MAKING MODERN LIVING POSSIBLE

Operating Instructions

VLT® Refrigeration Drive FC 103

75-630 kW

www.danfoss.com/drives

THE REAL DRIVE

Contents

1

1 Introduction

1.1 Purpose of the Manual

This manual provides detailed information for the installation and start-up of the frequency converter.
Chapter 3 Installation provides requirements for mechanical and electrical installation, including:

- Input
- Motor
- Control wiring
- Serial communication wiring
- Control terminal functions

Chapter 4 Start-up and Functional Testing provides detailed procedures for:

- Start-up
- Basic operational programming
- Functional testing

The remaining chapters provide supplementary details. These details include:

- User interface
- Detailed programming
- Application examples
- Start-up
- Troubleshooting
- Specifications.

VLT® is a registered trademark.

1.2 Additional Resources

Other resources are available to understand advanced frequency converter functions and programming.

- The *VLT® Refrigeration Drive FC 103 Programming Guide* provides greater detail on working with parameters and many application examples.
- The *VLT® Refrigeration Drive FC 103 Design Guide* provides detailed capabilities and functionality to design motor control systems.
- Supplemental publications and manuals are available from Danfoss.
  See *www.danfoss.com/BusinessAreas/DrivesSolutions/Documentations/VLT+Technical+Documentation.htm* for listings.
- Optional equipment is available that may change some of the procedures described. Refer to the instructions supplied with those options for specific requirements. Contact the local Danfoss supplier or visit the Danfoss website: *www.danfoss.com/BusinessAreas/DrivesSolutions/Documentations/VLT+Technical+Documentation.htm*, for downloads or additional information.

1.3 Approvals and Certifications

More approvals and certifications are available. Contact the local Danfoss partner.

The frequency converter complies with UL508C thermal memory retention requirements. For more information, refer to the section *Motor Thermal Protection* in the *Design Guide*.

For compliance with the European Agreement concerning International Carriage of Dangerous Goods by Inland Waterways (ADN), refer to *ADN-compliant Installation* in the *Design Guide*.

1.4 Disposal Instruction

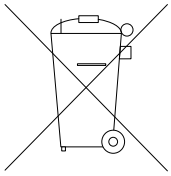

Do not dispose of equipment containing electrical components together with domestic waste.
Collect it separately in accordance with local and currently valid legislation.

1.5 Product Overview

A frequency converter is an electronic motor controller that converts DC into a variable AC waveform output. The frequency and voltage of the output are regulated to control the motor speed or torque. The frequency converter can vary the speed of the motor in response to system feedback, such as position sensors on a conveyor belt. The frequency converter can also regulate the motor by responding to remote commands from external controllers.

The frequency converter offers many control, monitoring and efficiency functions such as:

- Monitoring the system and motor status
- Issuing warnings or alarms for fault conditions
- Starting and stopping the motor
- Optimising energy efficiency

Operation and monitoring functions are available as status indications to an outside control system or serial communication network.

1.5.1 Interior Views

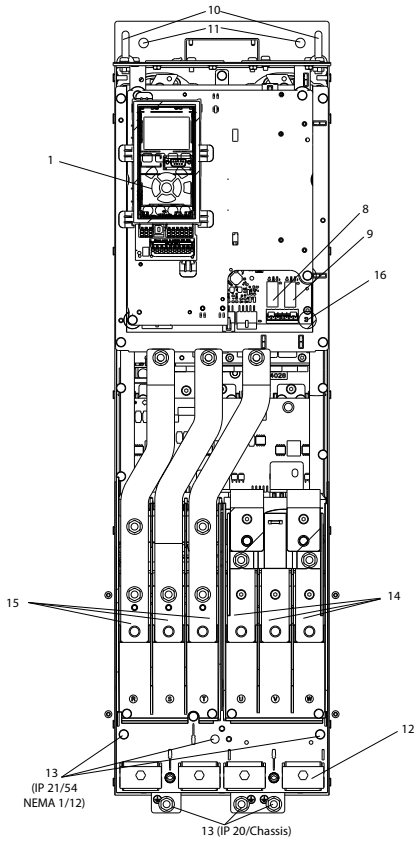

Illustration 1.1 Interior Components - Enclosure Type D

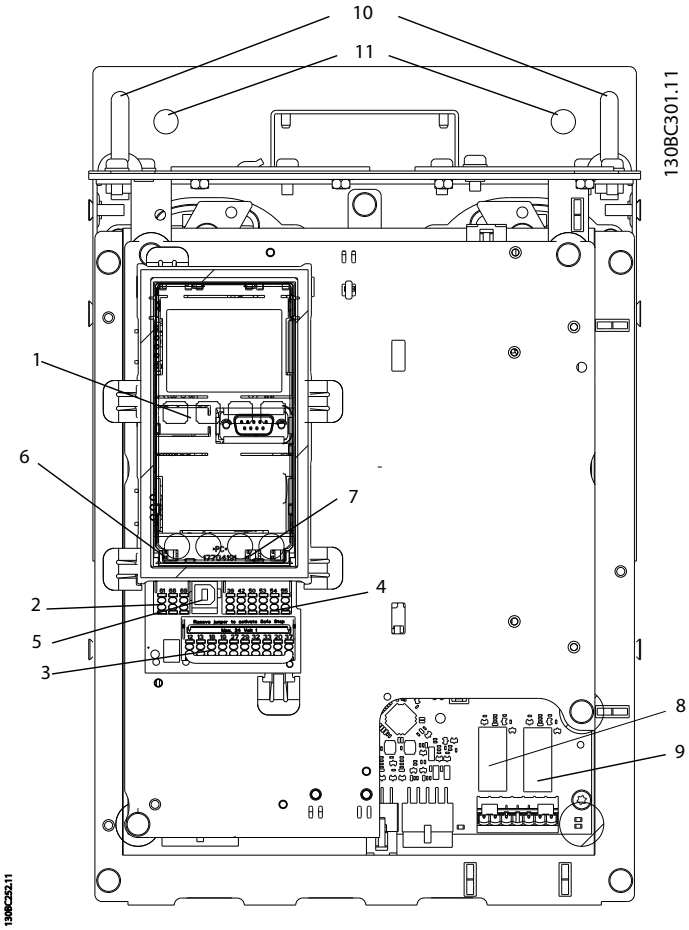

1	LCP (Local Control Panel)	9	Relay 2 (04, 05, 06)
2	RS-485 fieldbus connector	10	Lifting ring
3	Digital I/O and 24 V supply	11	Mounting slot
4	Analog I/O connector	12	Cable clamp (PE)
5	USB connector	13	Ground
6	Fieldbus terminal switch	14	Motor output terminals 96 (U), 97 (V), 98 (W)
7	Analog switches (A53), (A54)	15	Mains input terminals 91 (L1), 92 (L2), 93 (L3)
8	Relay 1 (01, 02, 03)	16	TB5 (IP21/54 only). Terminal block for anti-condensation heater

Illustration 1.2 Close-up View: LCP and Control Functions

1

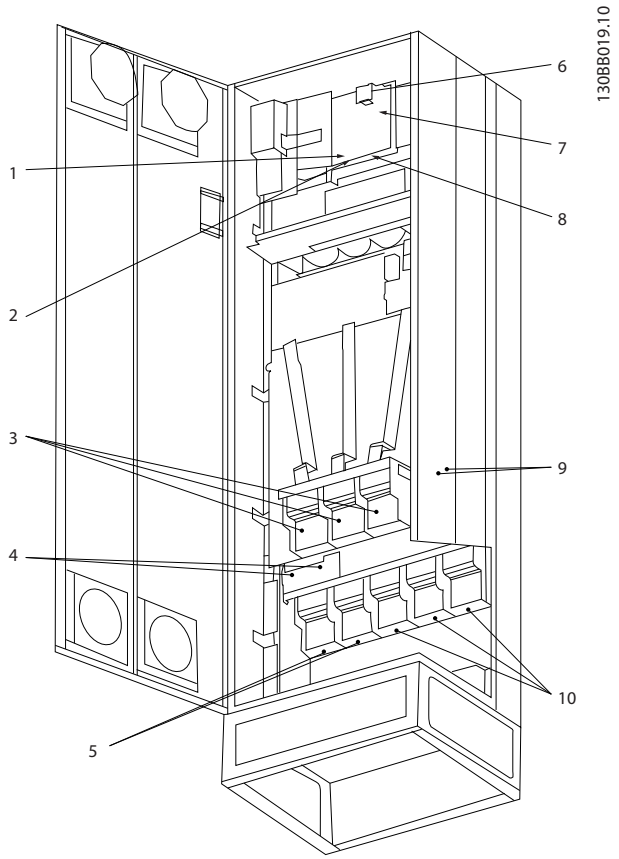

Illustration 1.3 Compact IP21 (NEMA 1) and IP54 (NEMA 12) Enclosure Type E1

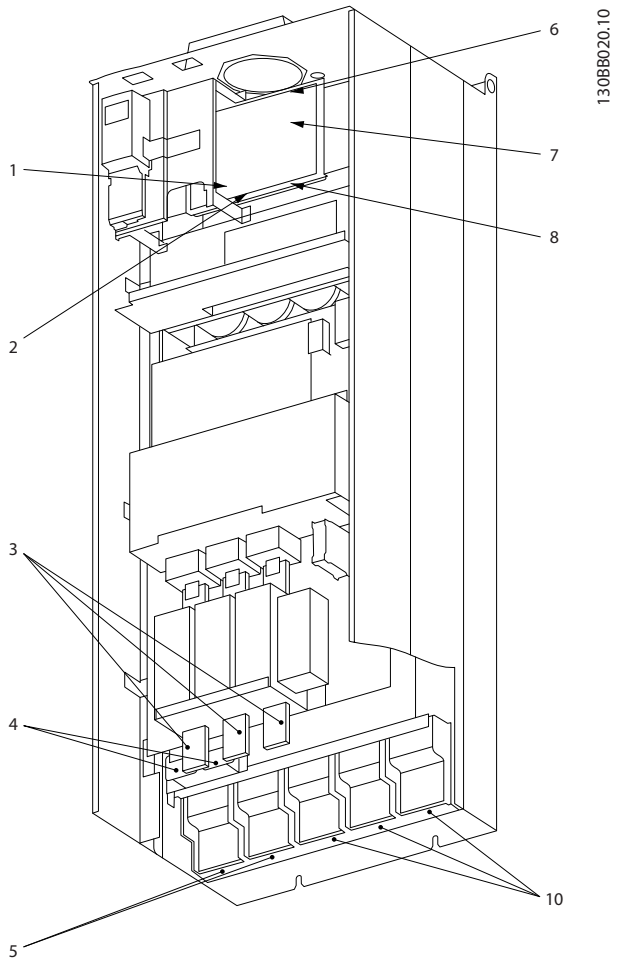

Illustration 1.4 Compact IP00 (Chassis) with Disconnect, Fuse and RFI Filter, Enclosure Type E2

1)	AUX relay	5)	Load sharing
	01 02 03		-DC +DC
	04 05 06		88 89
2)	Temp switch	6)	SMPS fuse
	106 104 105	7)	Fan fuse
3)	Mains	8)	AUX fan
	R S T		100 101 102 103
	91 92 93		L1 L2 L1 L2
	L1 L2 L3	9)	Mains ground
4)	Brake	10)	Motor
	-R +R		U V W
	81 82		96 97 98
			T1 T2 T3

Table 1.1 Legend to *Illustration 1.3* and *Illustration 1.4*

1.6 Internal Controller Functions

Illustration 1.5 is a block diagram of the frequency converter's internal components.

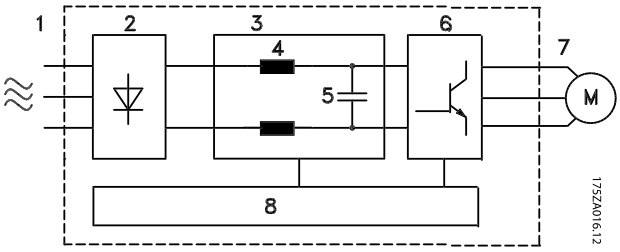

Illustration 1.5 Frequency Converter Block Diagram

Area	Title	Functions
1	Mains input	• 3-phase AC mains supply to the frequency converter
2	Rectifier	• The rectifier bridge converts the AC input to DC current to supply inverter power.
3	DC-bus	• Intermediate DC-bus circuit handles the DC current.
4	DC reactors	• Filter the intermediate DC circuit voltage. • Prove line transient protection. • Reduce RMS current. • Raise the power factor reflected back to the line. • Reduce harmonics on the AC input.
5	Capacitor bank	• Stores the DC power. • Provides ride-through protection for short power losses.
6	Inverter	• Converts the DC into a controlled PWM AC waveform for a controlled variable output to the motor.
7	Output to motor	• Regulated 3-phase output power to the motor
8	Control circuitry	• Input power, internal processing, output, and motor current are monitored to provide efficient operation and control. • User interface and external commands are monitored and performed. • Status output and control can be provided.

Table 1.2 Legend to *Illustration 1.5*

1

1.7 Enclosure Types and Power Ratings

Normal Over-load [kW]	55	75	90	110	132	160	200	250	315	355	400	450	500	560	630
400 V				D1h/ D3h/ D5h/ D6h	D1h/ D3h/ D5h/ D6h	D1h/D3h/ D5h/D6h	D2h/D4h/ D7h/D8h	D2h/ D4h/ D7h/ D8h	D2h/D4h/ D7h/D8h	E1/E2	E1/E2	E1/E2			
525 V	D1h/ D3h/ D5h/ D6h	D1h/ D3h/ D5h/ D6h	D1h/ D3h/ D5h/ D6h	D1h/ D3h/ D5h/ D6h	D1h/ D3h/ D5h/ D6h	D2h/D4h/ D7h/D8h	D2h/D4h/ D7h/D8h	D2h/ D4h/ D7h/ D8h	D2h/D4h/ D7h/D8h	E1/E2	E1/E2	E1/E2	E1/ E2		
690 V		D1h/ D3h/ D5h/ D6h	D1h/ D3h/ D5h/ D6h	D1h/ D3h/ D5h/ D6h	D1h/ D3h/ D5h/ D6h	D1h/D3h/ D5h/D6h	D2h/D4h/ D7h/D8h	D2h/ D4h/ D7h/ D8h	D2h/D4h/ D7h/D8h			E1/E2	E1/ E2	E1/E2	E1/E2

Table 1.3 kW Rated Frequency Converters

Normal Overload [hp]	75	100	125	150	200	250	300	350	400	450	500	550/ 600	600	650
460 V				D1h/D3h/ D5h/D6h	D1h/ D3h/ D5h/ D6h	D1h/ D3h/ D5h/ D6h	D2h/ D4h/ D7h/ D8h	D2h/ D4h/ D7h/ D8h		D2h/ D4h/ D7h/ D8h	E1/E2	E1/ E2	E1/E2	
575 V	D1h/D3h/ D5h/D6h	D1h/ D3h/ D5h/ D6h	D1h/D3h/ D5h/D6h	D1h/D3h/ D5h/D6h	D1h/ D3h/ D5h/ D6h	D2h/ D4h/ D7h/ D8h	D2h/ D4h/ D7h/ D8h	D2h/ D4h/ D7h/ D8h	D2h/ D4h/ D7h/ D8h	E1/E2	E1/E2		E1/E2	E1/E2

Table 1.4 Hp Rated Frequency Converters

2 Safety

The following symbols are used in this document:

⚠WARNING

Indicates a potentially hazardous situation which could result in death or serious injury.

⚠CAUTION

Indicates a potentially hazardous situation which could result in minor or moderate injury. It can also be used to alert against unsafe practices.

NOTICE

Indicates important information, including situations that can result in damage to equipment or property.

2.1 Qualified Personnel

Correct and reliable transport, storage, installation, operation, and maintenance are required for the trouble-free and safe operation of the frequency converter. Only qualified personnel are allowed to install or operate this equipment.

Qualified personnel are defined as trained staff, who are authorised to install, commission, and maintain equipment, systems, and circuits in accordance with pertinent laws and regulations. Additionally, the personnel must be familiar with the instructions and safety measures described in this document.

2.2 Safety Precautions

⚠WARNING

HIGH VOLTAGE

Frequency converters contain high voltage when connected to AC mains input, DC power supply, or load sharing. Failure to perform installation, start-up, and maintenance by qualified personnel can result in death or serious injury.

- **Installation, start-up, and maintenance must be performed by qualified personnel only.**

⚠WARNING

UNINTENDED START

When the frequency converter is connected to AC mains, or DC power supply, the motor may start at any time. Unintended start during programming, service or repair work can result in death, serious injury, or property damage. The motor can start by means of an external switch, a serial bus command, an input reference signal from the LCP, or after a cleared fault condition.
To prevent unintended motor start:

- **Disconnect the frequency converter from mains.**
- **Press [Off/Reset] on the LCP, before programming parameters.**
- **The frequency converter, motor, and any driven equipment must be fully wired and assembled when the frequency converter is connected to AC mains, or DC power supply.**

⚠WARNING

DISCHARGE TIME

The frequency converter contains DC-link capacitors, which can remain charged even when the frequency converter is not powered. Failure to wait the specified time after power has been removed before performing service or repair work, could result in death or serious injury.

- **Stop the motor.**
- **Disconnect the AC mains, permanent magnet type motors, and remote DC-link power supplies, including battery back-ups, UPS, and DC-link connections to other frequency converters.**
- **Wait for the capacitors to discharge fully before performing any service or repair work. The duration of waiting time is specified in *Table 2.1*.**

Voltage [V]	Minimum waiting time (minutes)	
	20	40
380-480	110-315 kW	355-450 kW
525-690	55-400 kW	450-630 kW
High voltage may be present even when the warning LED indicator lights are off.		

Table 2.1 Discharge Time

2

⚠WARNING

LEAKAGE CURRENT HAZARD

Leakage currents exceed 3.5 mA. Failure to ground the frequency converter properly can result in death or serious injury.

- **Ensure correct grounding of the equipment by a certified electrical installer.**

⚠WARNING

EQUIPMENT HAZARD

Contact with rotating shafts and electrical equipment can result in death or serious injury.

- **Ensure that only trained and qualified personnel perform installation, start up, and maintenance.**
- **Ensure that electrical work conforms to national and local electrical codes.**
- **Follow the procedures in this manual.**

⚠CAUTION

UNINTENDED MOTOR ROTATION WINDMILLING

Unintended rotation of permanent magnet motors can result in serious injury or equipment damage.

- **Ensure that permanent magnet motors are blocked to prevent unintended rotation.**

⚠CAUTION

INTERNAL FAILURE HAZARD

An internal failure in the frequency converter can result in serious injury, when the frequency converter is not properly closed.

- **Ensure that all safety covers are in place and securely fastened, before applying power.**

3 Installation

3.1 Pre-Installation

3.1.1 Planning the Installation Site

NOTICE

Plan the installation site of the frequency converter before commencing the installation. Neglecting this may result in extra work during and after installation.

Select the best possible operation site by considering the following (see details on the following pages and the respective *Design Guides*):

- Ambient operating temperature
- Installation method
- How to cool the unit
- Position of the frequency converter
- Cable routing
- Ensure that the power source supplies the correct voltage and necessary current.
- Ensure that the motor current rating is within the maximum current from the frequency converter.
- If the frequency converter is without built-in fuses, ensure that the external fuses are rated correctly.

Voltage [V]	Altitude restrictions
380-690	At altitudes above 2000 m, contact Danfoss regarding PELV

Table 3.1 Installation at High Altitudes

3.1.2 General Considerations

Wire access
Ensure that proper cable access is present including necessary bending allowance. As the IP00/IP20 enclosure is open to the bottom, cables must be fixed to the back panel of the enclosure where the frequency converter is mounted, i.e. by using cable clamps.

CAUTION

All cable lugs/shoes must mount within the width of the terminal bus bar.

Space
Ensure proper space above and below the frequency converter to allow airflow and cable access. In addition space in front of the unit must be considered to enable opening of the panel door, see *Illustration 3.1* to *Illustration 3.3*.

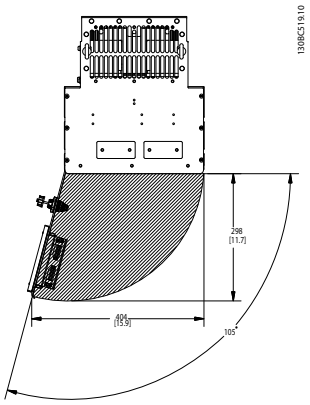

Illustration 3.1 Front Clearance of IP21/IP54 Rated Enclosure Types D1h, D5h, and D6h

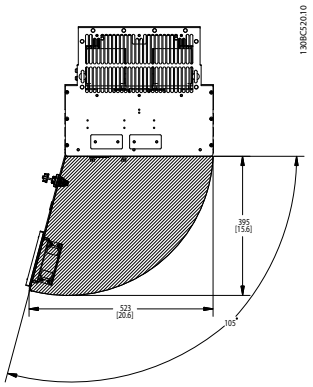

Illustration 3.2 Front Clearance of IP21/IP54 Rated Enclosure Types D2h, D7h, and D8h

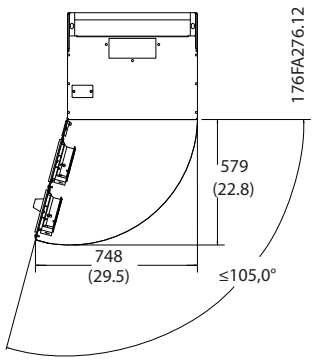

Illustration 3.3 Front Clearance of IP21/IP54 Rated Enclosure Type E1

3.1.3 Tools Required for Installation

- Drill with 10 or 12 mm drill
- Tape measure
- Wrench with relevant metric sockets (7-17 mm)
- Extensions to wrench
- Sheet metal punch for conduits or cable glands in IP21/Nema 1 and IP54 units
- Lifting bar to lift the unit (rod or tube max. Ø 5 mm (1 inch), able to lift minimum 400 kg (880 lbs).
- Crane or other lifting aid to place the frequency converter in position
- A Torx T50 tool is needed to install the E1 in IP21 and IP54 enclosure types.

3.2 Pre-installation Checklist

- Before unpacking the frequency converter, ensure that the packaging is intact. If any damage has occurred, immediately contact the shipping company to claim the damage.
- Unpack the frequency converter as close as possible to the final installation site.
- Ensure the model number number on the nameplate corresponds to the model number on the order.
- Ensure that each of the following are rated for the same voltage:
    - Mains (power)
    - Frequency converter
    - Motor
- Ensure that the frequency converter output current rating is equal to or greater than the motor full load current for peak motor performance.
    - Motor size and frequency converter power must match for proper overload protection.
    - If frequency converter rating is less than motor, full motor output cannot be achieved.

3.3 Mechanical Installation

3.3.1 Cooling

- Provide top and bottom clearance for air cooling. Generally, 225 mm (9 in) is required.
- Improper mounting can result in overheating and reduced performance.
- Consider derating for temperatures starting between 45 °C (113 °F) and 50 °C (122 °F) and elevation 1000 m (3300 ft) above sea level. See *VLT® Refrigeration Drive FC 103 Design Guide* for detailed information.

The high-power frequency converters utilise a back-channel cooling concept that removes heat sink cooling air. Approximately 90% of the heat is lead out of the back channel of the frequency converters. The back-channel air can be redirected from the panel or room using one of the kits below.

Duct cooling
A back-channel cooling kit is available to direct the heat sink cooling air out of the panel when an IP20/chassis frequency converter is installed in a Rittal enclosure. Use of this kit reduces the heat in the panel and smaller door fans can be specified on the enclosure.

Cooling out the back (top and bottom covers)
The back-channel cooling air can be ventilated out of the room so that the heat from the back channel is not dissipated into the control room.

NOTICE

A door fan(s) is required on the enclosure to remove the heat not contained in the back channel of the frequency converters and any additional losses generated by other components inside the enclosure. Calculate the total required air flow so that the appropriate fans can be selected. A cooling clearance of 225 mm is required above the frequency converter.

Airflow
Secure the necessary airflow over the heat sink. The flow rate is shown in *Table 3.2*.

NOTICE

The fan runs for the following reasons:

- **AMA**
- **DC hold**
- **Pre-mag**
- **DC brake**
- **60% of nominal current is exceeded**
- **Specific heat sink temperature exceeded (power size dependent)**
- **Specific power card ambient temperature exceeded (power size dependent)**
- **Specific control card ambient temperature exceeded**

Enclosure type	Door fan/top fan	Heat sink fan
D1h/D3h/D5h/D6h	102 m^3/hr (60 CFM)	420 m^3/hr (250 CFM)
D2h/D4h/D7h/D8h	204 m^3/hr (120 CFM)	840 m^3/hr (500 CFM)
E1 P450T7, P500T7	340 m^3/hr (200 CFM)	1105 m^3/hr (650 CFM)
E1 P355-P450T4, P560-P630T7	340 m^3/hr (200 CFM)	1445 m^3/hr (850 CFM)
E2 P450T7, P500T7	255 m^3/hr (150 CFM)	1105 m^3/hr (650 CFM)
E2 P355-P450T4, P560-P630T7	255 m^3/hr (150 CFM)	1445 m^3/hr (850 CFM)

Table 3.2 Airflow

3.3.2 Lifting

Always lift the frequency converter using the dedicated lifting eyes. Use a bar to avoid bending the lifting holes.

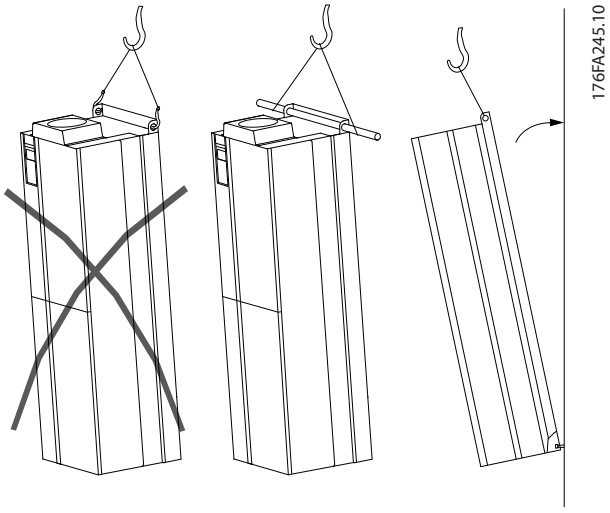

Illustration 3.4 Recommended Lifting Method

⚠WARNING

RISK OF INJURY OR DEATH

The lifting bar must be able to handle the weight of the frequency converter to ensure that it will not break during lifting.

- **See *Mechanical Dimensions* for the weight of the different enclosure types.**
- **Maximum diameter for bar is 2.5 cm (1 inch).**
- **The angle from the top of the frequency converter to the lifting cable should be 60° or greater.**

Failure to follow recommendations could result in death or serious injury.

3

3.3.3 Mechanical Dimensions

Enclosure type		D1h	D2h	D3h	D4h
		110-160 kW (380-480 V) 75-160 kW (525-690 V)	**200-315 kW (380-480 V) 200-400 kW (525-690 V)**	**110-160 kW (380-480 V) 75-160 kW (525-690 V)**	**200-315 kW (380-480 V) 200-400 kW (525-690 V)**
IP **NEMA**		21/54 Type 1/12	21/54 Type 1/12	20 Chassis	20 Chassis
Shipping dimensions [mm]	Height	587	587	587	587
	Width	997	1170	997	1170
	Depth	460	535	460	535
Drive dimensions [mm]	Height	901	1107	909	1122
	Width	325	420	250	350
	Depth	378	378	375	375
Max weight [kg]		98	164	98	164

Table 3.3 Mechanical Dimensions, Enclosure Types D1h-D4h

Enclosure type		D5h	D6h	D7h	D8h	E1	E2
		110-160 kW (380-480 V) 75-160 kW (525-690 V)	**110-160 kW (380-480 V) 75-160 kW (525-690 V)**	**200-315 kW (380-480 V) 200-400 kW (525-690 V)**	**200-315 kW (380-480 V) 200-400 kW (525-690 V)**	**355-450 kW (380-480 V) 450-630 kW (525-690 V)**	**355-450 kW (380-480 V) 450-630 kW (525-690 V)**
IP **NEMA**		21/54 Type 1/12	21/54 Type 1/12	21/54 Type 1/12	21/54 Type 1/12	21, 54 Type 12	00 Chassis
Shipping dimensions [mm]	Height	660	660	660	660	840	831
	Width	1820	1820	2470	2470	2197	1705
	Depth	510	510	590	590	736	736
Drive dimensions [mm]	Height	1324	1663	1978	2284	2000	1547
	Width	325	325	420	420	600	585
	Depth	381	381	386	406	494	498
Max weight [kg]		116	129	200	225	313	277

Table 3.4 Mechanical Dimensions, Enclosure Types D5h-D8h, E1-E2

All dimensions are in mm [in]

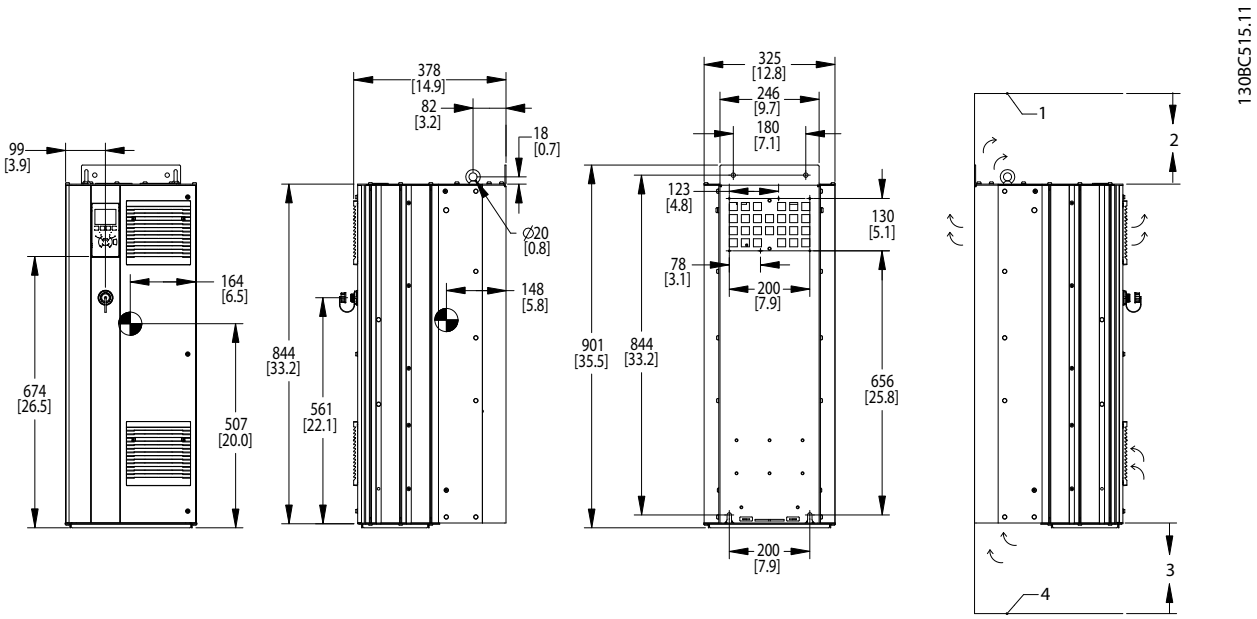

1	Ceiling
2	Air space outlet minimum 225 mm [8.9 in]
3	Air space inlet minimum 225 mm [8.9 in]
4	Floor

Illustration 3.5 Mechanical Dimensions, D1h

NOTICE

If using a kit to direct the airflow from the heat sink to the outside vent on the back of the frequency converter, the required ceiling clearance is 100 mm.

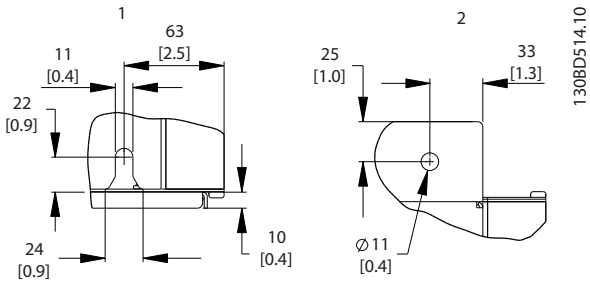

1	Bottom mounting slot detail
2	Top mounting hole detail

Illustration 3.6 Detail Dimensions, D1h

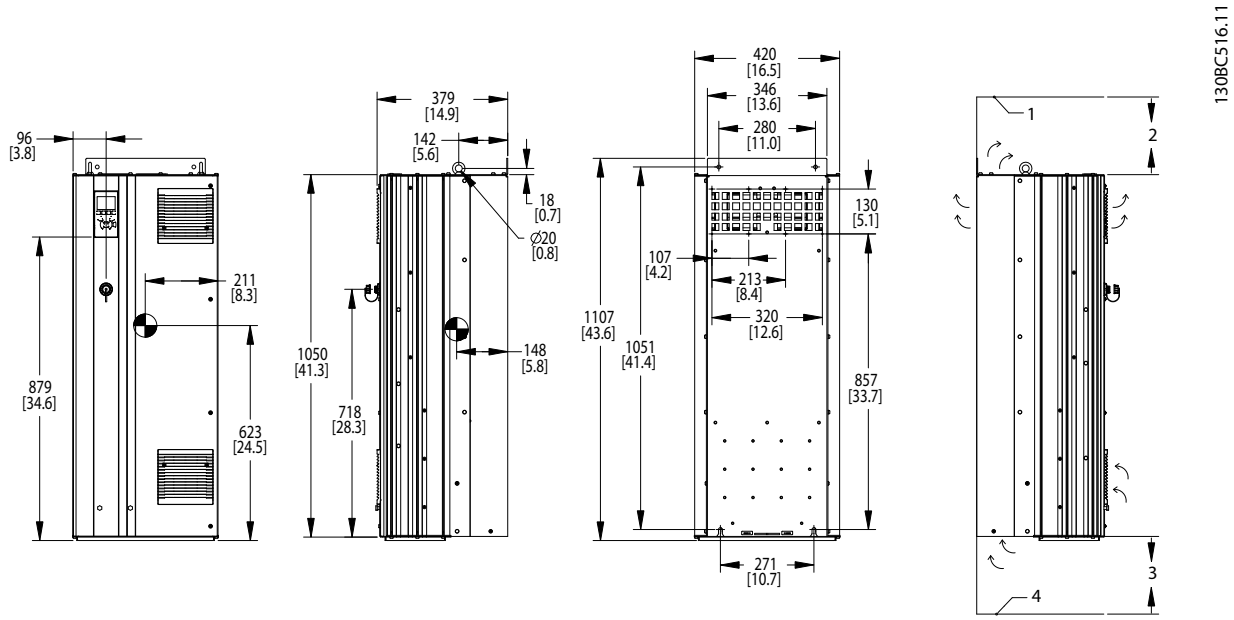

1	Ceiling
2	Air space outlet minimum 225 mm [8.9 in]
3	Air space inlet minimum 225 mm [8.9 in]
4	Floor

Illustration 3.7 Mechanical Dimensions, D2h

NOTICE

If using a kit to direct the airflow from the heat sink to the outside vent on the back of the frequency converter, the required ceiling clearance is 100 mm.

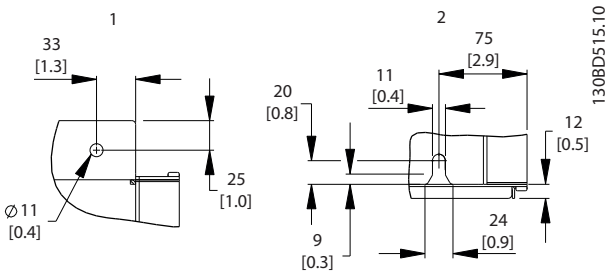

1	Top mounting hole detail
2	Bottom mounting slot detail

Illustration 3.8 Detail Dimensions, D2h

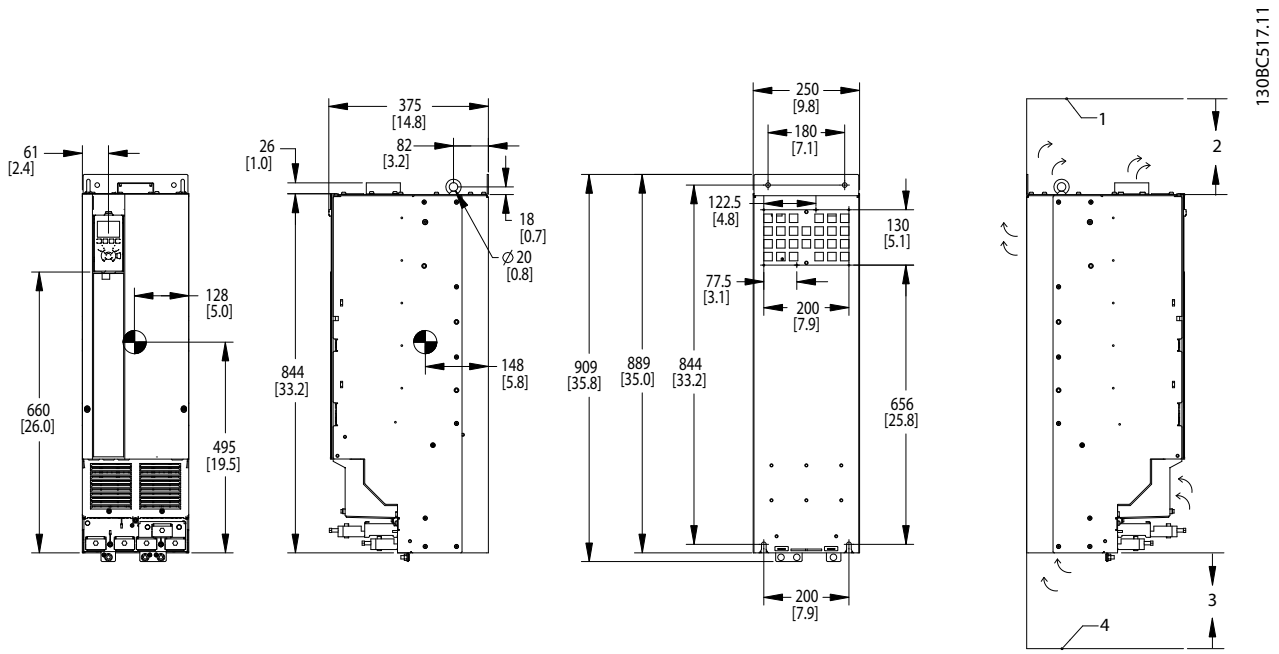

1	Ceiling
2	Air space outlet minimum 225 mm [8.9 in]
3	Air space inlet minimum 225 mm [8.9 in]
4	Floor

Illustration 3.9 Mechanical Dimensions, D3h

NOTICE

If using a kit to direct the airflow from the heat sink to the outside vent on the back of the frequency converter, the required ceiling clearance is 100 mm.

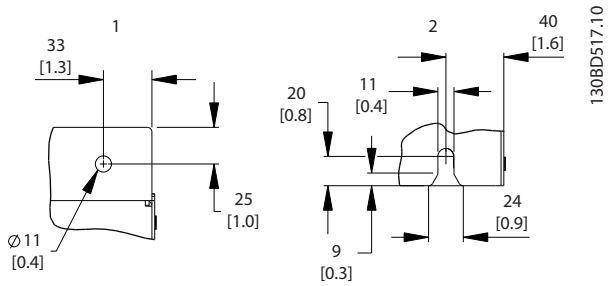

1	Top mounting hole detail
2	Bottom mounting slot detail

Illustration 3.10 Detail Dimensions, D3h

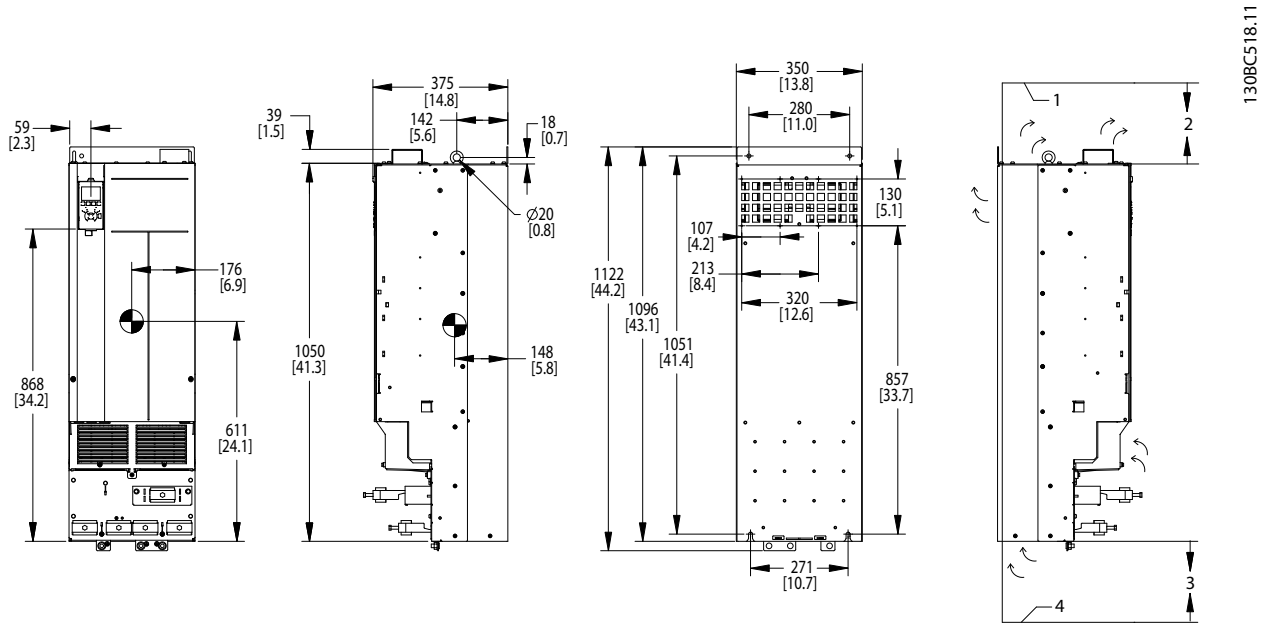

1	Ceiling
2	Air space outlet minimum 225 mm [8.9 in]
3	Air space inlet minimum 225 mm [8.9 in]
4	Floor

Illustration 3.11 Mechanical Dimensions, D4h

NOTICE

If using a kit to direct the airflow from the heat sink to the outside vent on the back of the frequency converter, the required ceiling clearance is 100 mm.

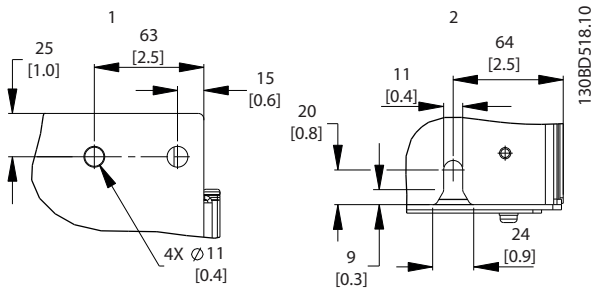

1	Top mounting hole detail
2	Bottom mounting slot detail

Illustration 3.12 Detail Dimensions, D4h

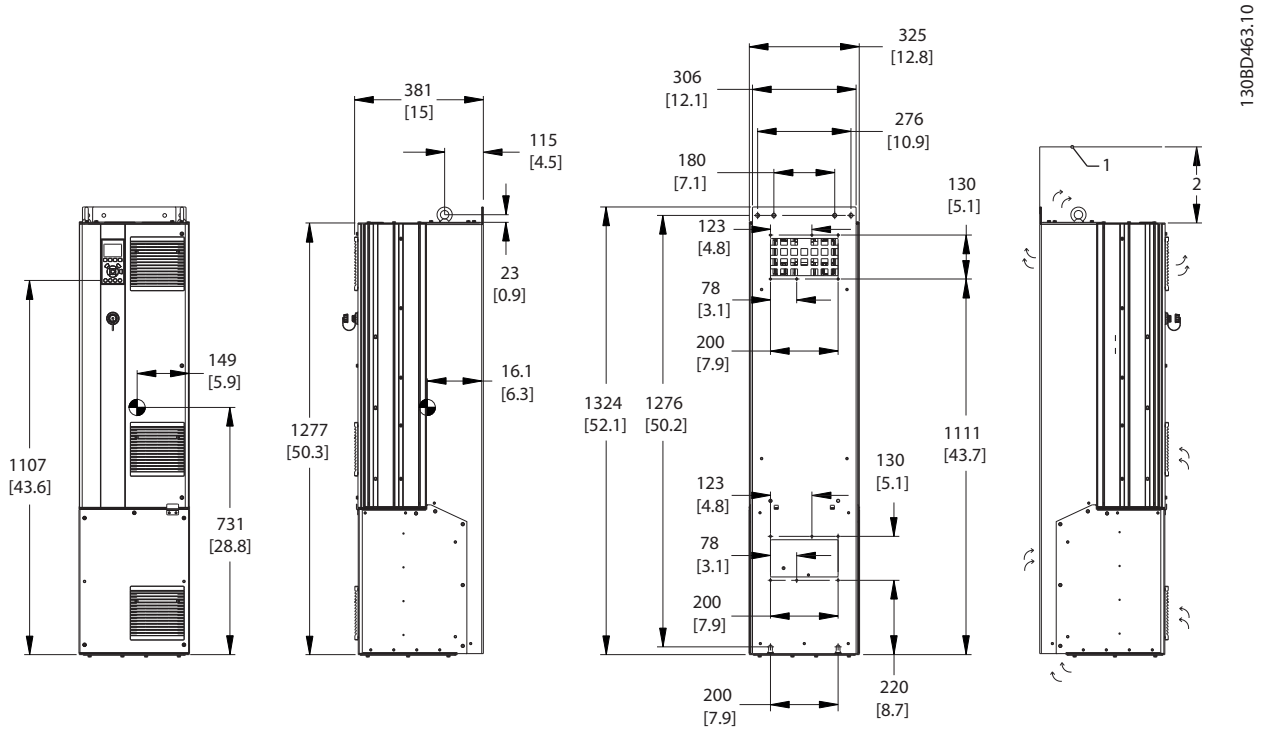

1	Ceiling
2	Air space outlet minimum 225 mm [8.9 in]

Illustration 3.13 Mechanical Dimensions, D5h

NOTICE

If using a kit to direct the airflow from the heat sink to the outside vent on the back of the frequency converter, the required ceiling clearance is 100 mm.

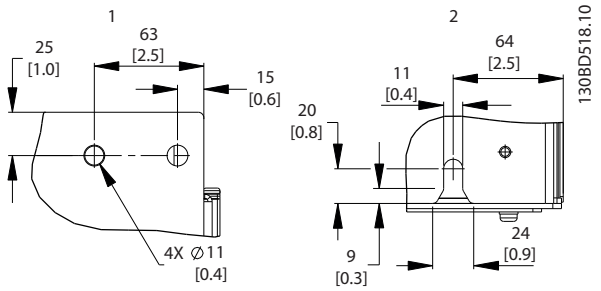

1	Top mounting hole detail
2	Bottom mounting slot detail

Illustration 3.14 Detail Dimensions, D5h

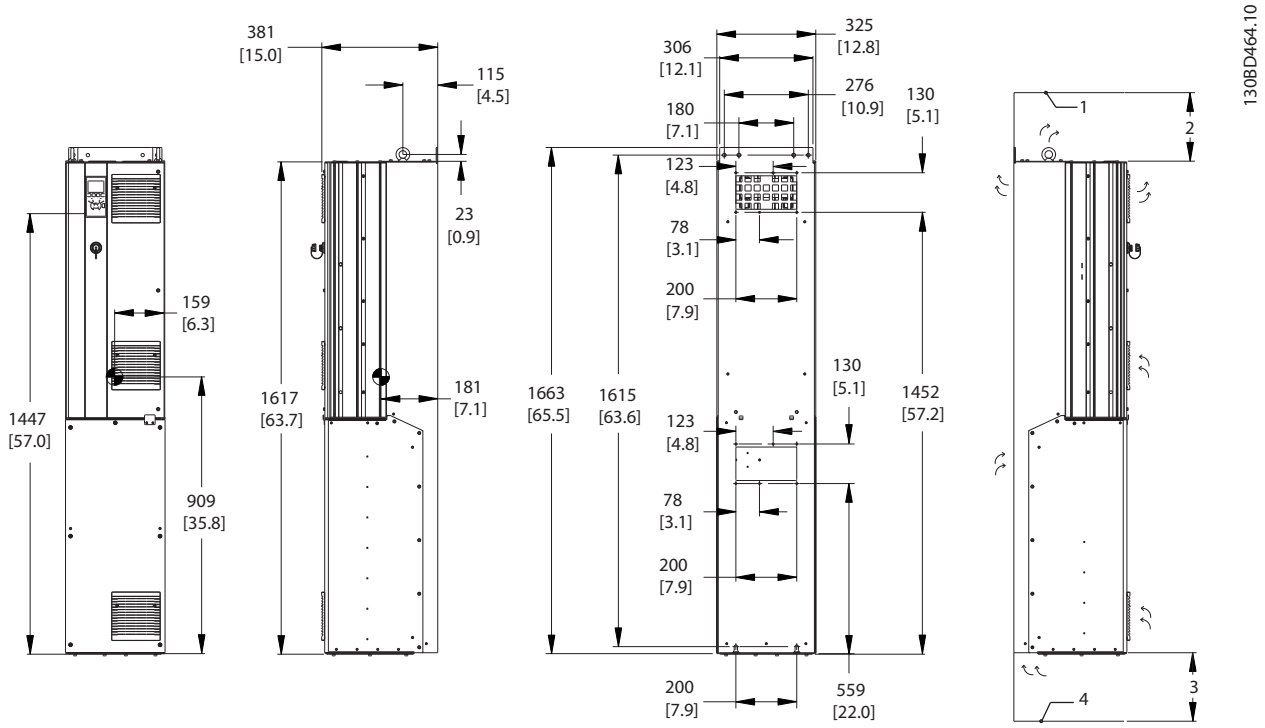

1	Ceiling
2	Air space outlet minimum 225 mm [8.9 in]
3	Air space intlet minimum 225 mm [8.9 in]
4	Floor

Illustration 3.15 Mechanical Dimensions, D6h

NOTICE

If using a kit to direct the airflow from the heat sink to the outside vent on the back of the frequency converter, the required ceiling clearance is 100 mm.

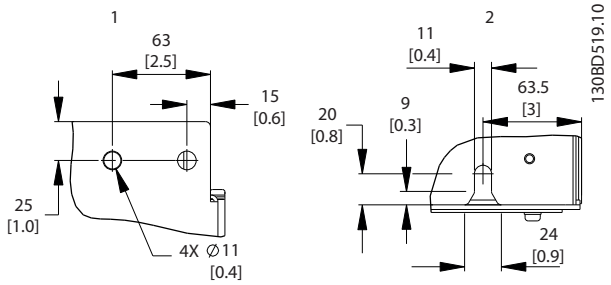

1	Top mounting hole detail
2	Bottom mounting slot detail

Illustration 3.16 Detail Dimensions, D6h

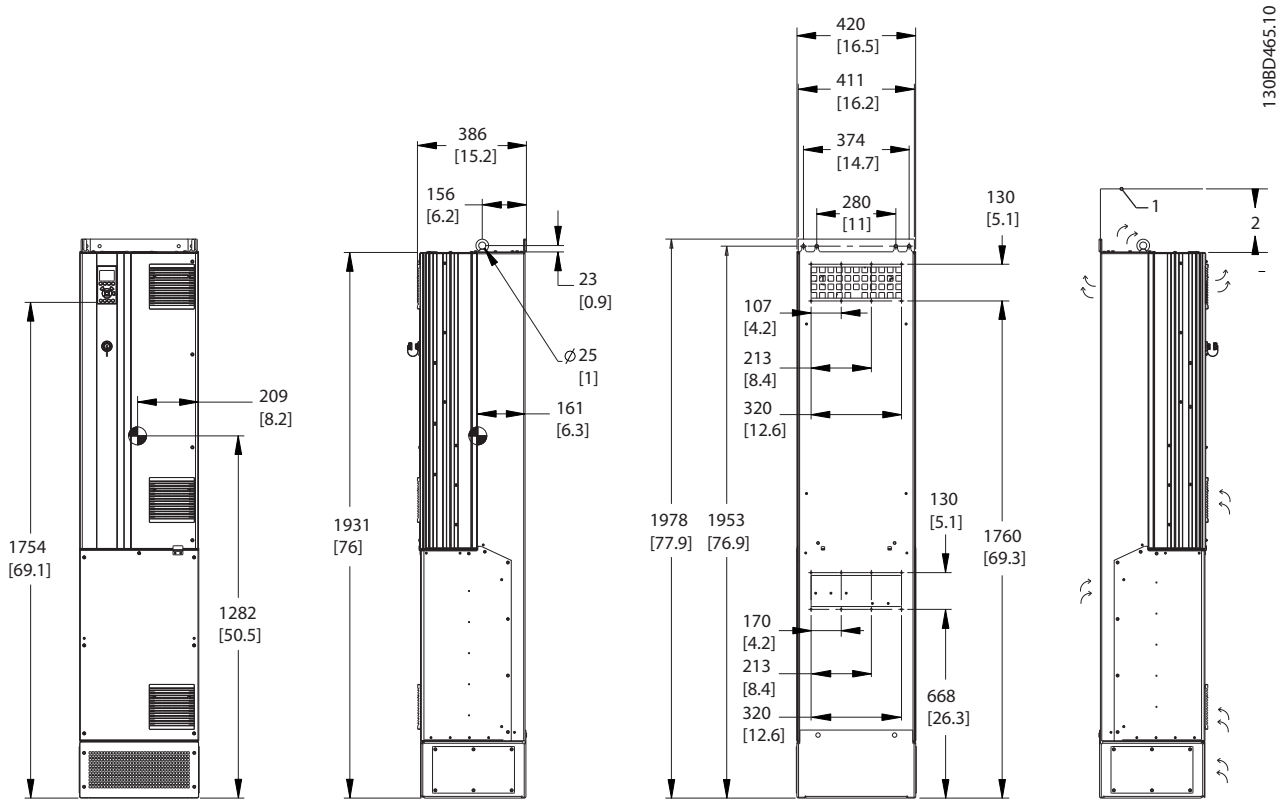

1	Ceiling
2	Air space outlet minimum 225 mm [8.9 in]

Illustration 3.17 Mechanical Dimensions, D7h

NOTICE

If using a kit to direct the airflow from the heat sink to the outside vent on the back of the frequency converter, the required ceiling clearance is 100 mm.

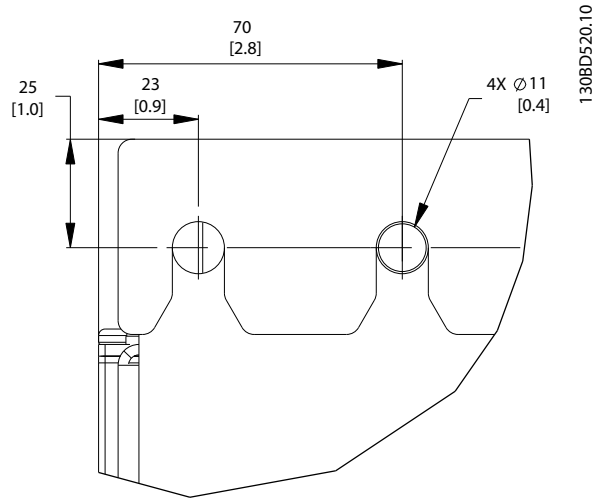

Illustration 3.18 Top Mounting Hole Dimension Detail, D7h

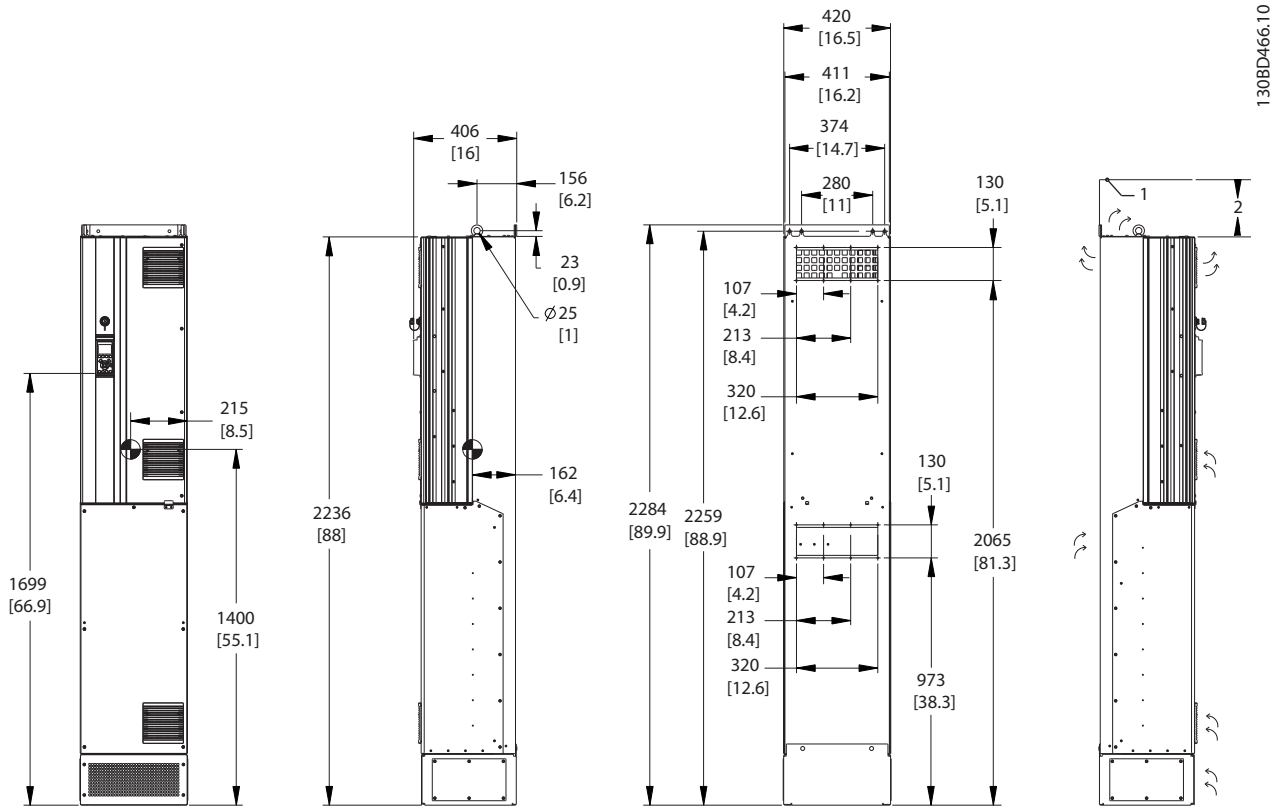

1	Ceiling
2	Air space outlet minimum 225 mm [8.9 in]

Illustration 3.19 Mechanical Dimensions, D8h

NOTICE

If using a kit to direct the airflow from the heat sink to the outside vent on the back of the frequency converter, the required ceiling clearance is 100 mm.

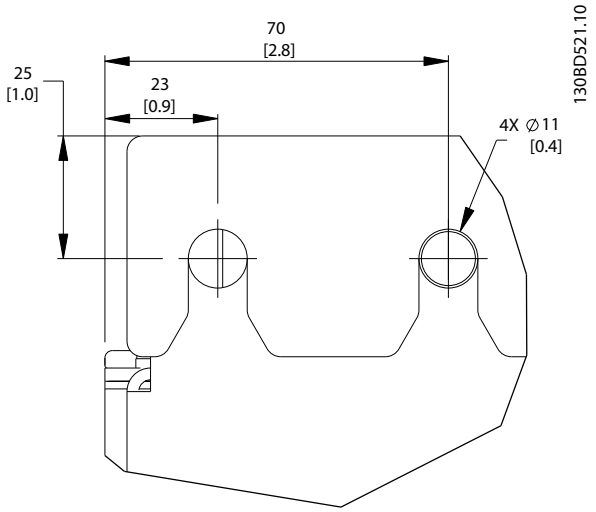

Illustration 3.20 Top Mounting Hole Dimension Detail, D8h

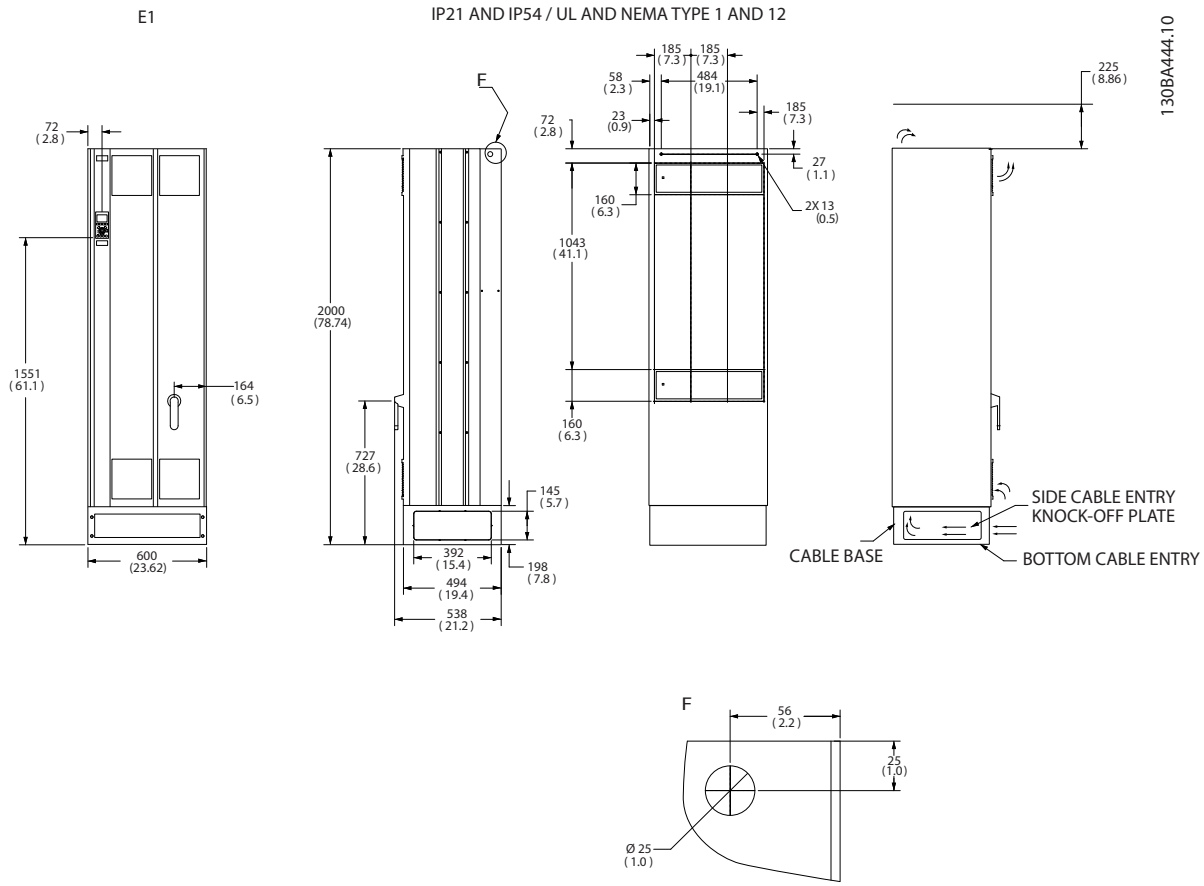

F	Lifting eye detail

Illustration 3.21 Mechanical Dimensions, E1

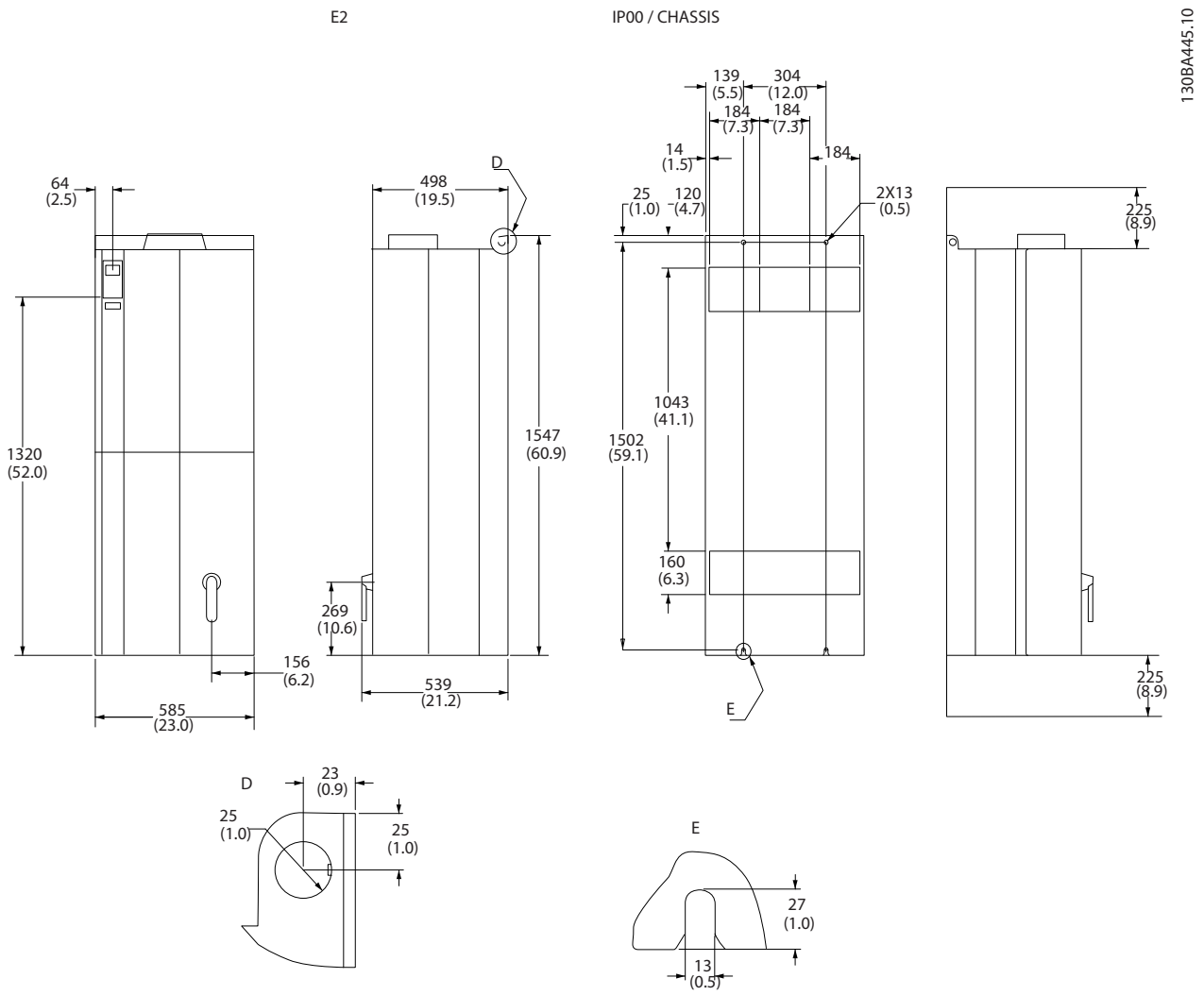

D	Lifting eye detail
E	Rear mounting slots

Illustration 3.22 Mechanical Dimensions, E2

3.4 Electrical Installation

3.4.1 General Requirements

This section contains detailed instructions for wiring the frequency converter. The following tasks are described:

- Wiring the motor to the frequency converter output terminals.
- Wiring the AC mains to the frequency converter input terminals.
- Connecting control and serial communication wiring.
- After power has been applied, checking input and motor power; programming control terminals for their intended functions.

⚠WARNING

EQUIPMENT HAZARD

Rotating shafts and electrical equipment can be hazardous. All electrical work must conform to national and local electrical codes. It is strongly recommended that installation, start up, and maintenance are performed only by trained and qualified personnel. Failure to follow these guidelines could result in death or serious injury.

⚠CAUTION

WIRING ISOLATION

Run input power, motor wiring, and control wiring in 3 separate metallic conduits, or use separated shielded cable for high frequency noise isolation. Failure to isolate power, motor, and control wiring could result in less than optimum performance of the frequency converter and associated equipment.

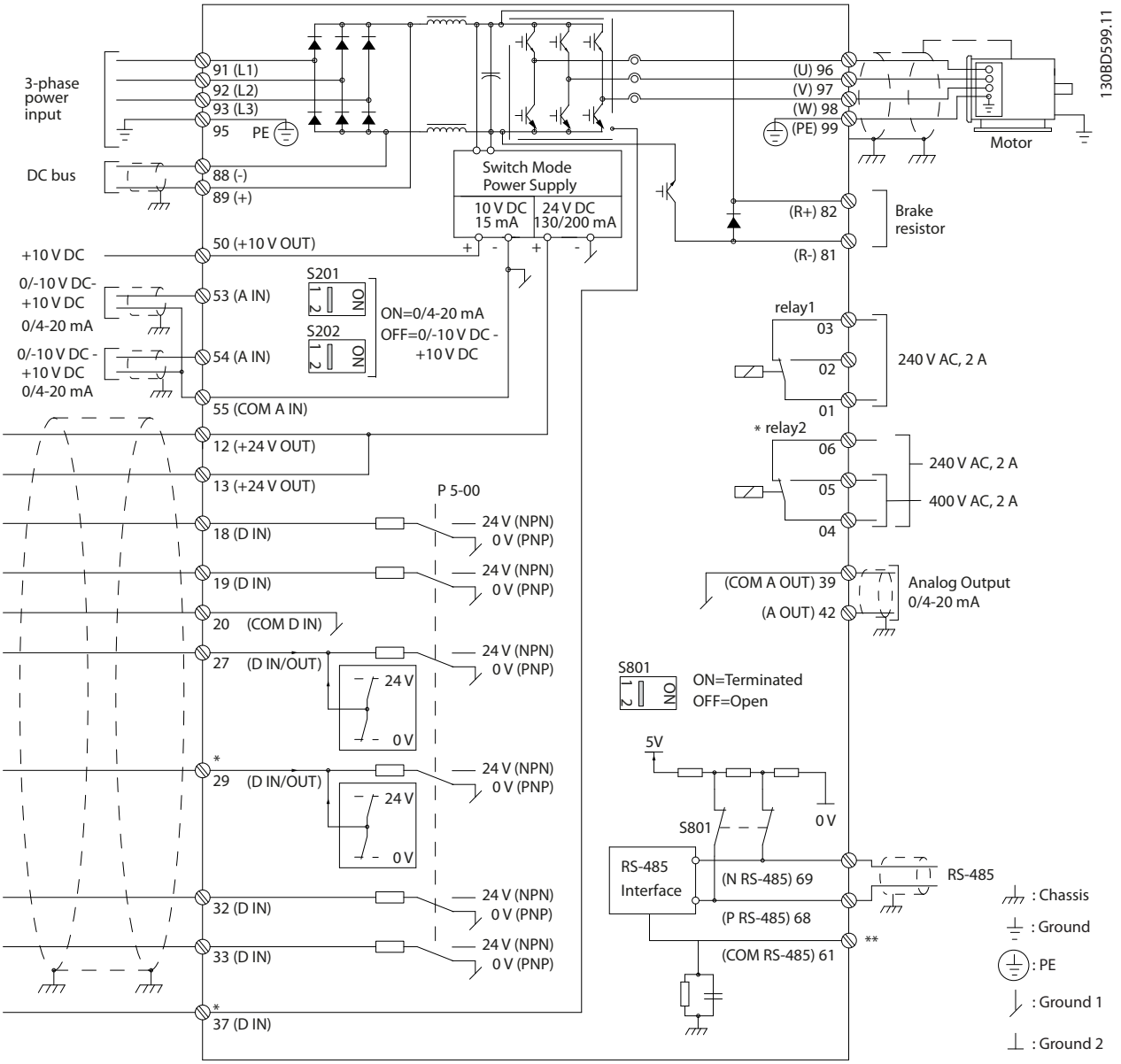

Illustration 3.23 Interconnect Diagram

A=Analog, D=Digital

*Terminal 37 (optional) is used for Safe Torque Off. For Safe Torque Off installation instructions, refer to the *VLT® Frequency Converters - Safe Torque Off Operating Instructions*.

**Do not connect cable screen.

For safety, comply with the following requirements:

- Electronic controls equipment is connected to hazardous mains voltage. Take extreme to protect against electrical hazards when applying power to the unit.
- Run motor cables from multiple frequency converters separately. Induced voltage from output motor cables run together can charge equipment capacitors, even with the equipment turned off and locked out.
- Field wiring terminals are not intended to receive a conductor one size larger.

Overload and equipment protection

- An electronically activated function within the frequency converter provides overload protection for the motor. The overload calculates the level of increase to activate timing for the trip (controller output stop) function. The higher the current draw, the quicker the trip response. The overload provides Class 20 motor protection. See *chapter 9 Warnings and Alarms* for details on the trip function.
- Because the motor wiring carries high frequency current, it is important that wiring for mains, motor power, and control are run separately. Use metallic conduit or separated shielded wire. See *Illustration 3.24*. Failure to isolate power, motor, and control wiring could result in less than optimum equipment performance.
- All frequency converters must be provided with short-circuit and overcurrent protection. Input fusing is required to provide this protection, see *Illustration 3.25*. If not factory supplied, fuses must be provided by the installer as part of installation. See maximum fuse ratings in *chapter 11.3.1 Protection*.

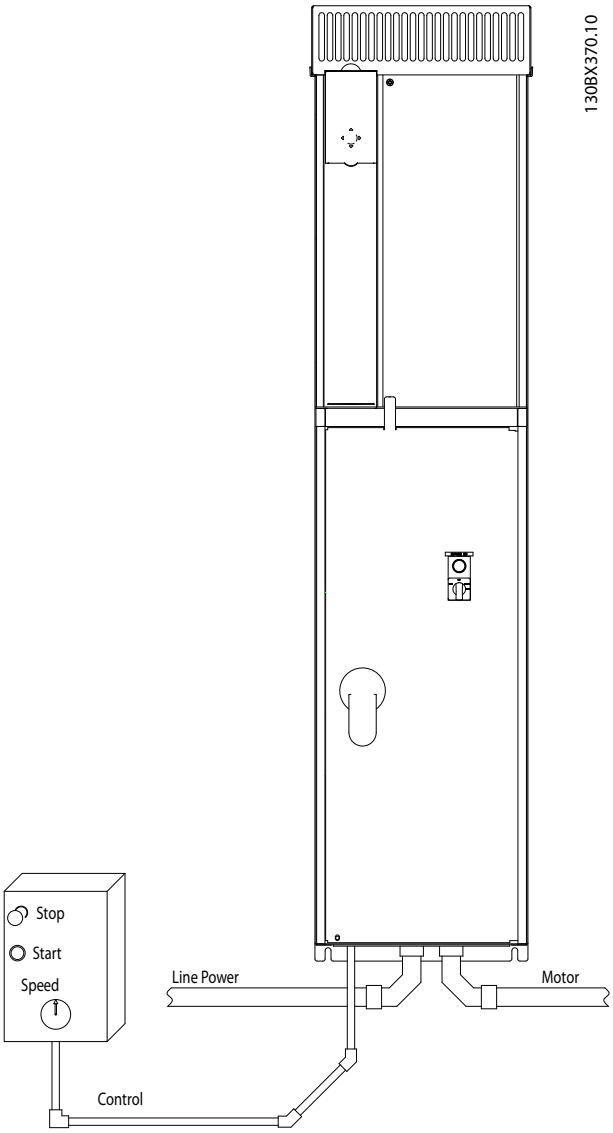

Illustration 3.24 Example of Proper Electrical Installation using Conduit

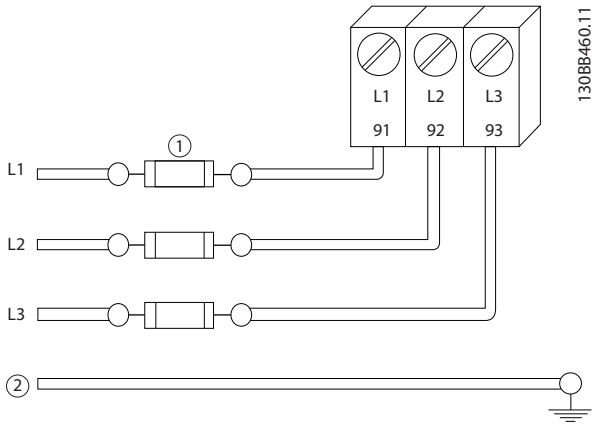

1	Fuses
2	Ground

Illustration 3.25 Frequency Converter Fuses

Wire Type and Ratings

- All wiring must comply with local and national regulations regarding cross-section and ambient temperature requirements.
- Danfoss recommends that all power connections are made with a minimum 75 °C rated copper wire.

3.4.2 Grounding Requirements

⚠WARNING

GROUNDING HAZARD

- **For operator safety, it is important to ground the frequency converter properly in accordance with national and local electrical codes as well as instructions contained within this document.**
- **Do not use conduit connected to the frequency converter as a replacement for proper grounding.**
- **Ground currents are higher than 3.5 mA.**

Failure to ground the frequency converter properly could result in death or serious injury.

NOTICE

It is the responsibility of the user or certified electrical installer to ensure correct grounding of the equipment in accordance with national and local electrical codes and standards.

- Follow all local and national electrical codes to ground electrical equipment properly.
- Proper protective earthing for equipment with ground currents higher than 3.5 mA must be established, see *chapter 3.4.2.1 Leakage Current (>3.5 mA)*.
- A dedicated ground wire is required for input power, motor power, and control wiring.
- Use the clamps provided with the equipment for proper ground connections.
- Do not ground one frequency converter to another in a daisy-chain fashion.
- Keep the ground wire connections as short as possible.
- Use high-strand wire to reduce electrical noise.
- Follow motor manufacturer wiring requirements.

3.4.2.1 Leakage Current (>3.5 mA)

Follow national and local codes regarding protective earthing of equipment with a leakage current >3.5 mA. Frequency converter technology implies high frequency switching at high power. This generates a leakage current in the ground connection. A fault current in the frequency converter at the output power terminals might contain a DC component, which can charge the filter capacitors and cause a transient ground current. The ground leakage current depends on various system configurations including RFI filtering, screened motor cables, and frequency converter power.

EN/IEC61800-5-1 (Power Drive System Product Standard) requires special care if the leakage current exceeds 3.5 mA. Grounding must be reinforced in one of the following ways:

- Ground wire of at least 10 mm^2
- 2 separate ground wires both complying with the dimensioning rules

See EN 60364-5-54 § 543.7 for further information.

3.4.2.2 Grounding

The frequency converter can be grounded using conduit or shielded cable. For grounding of the power connections, use the dedicated grounding points as shown in *Illustration 3.26* to *Illustration 3.28*.

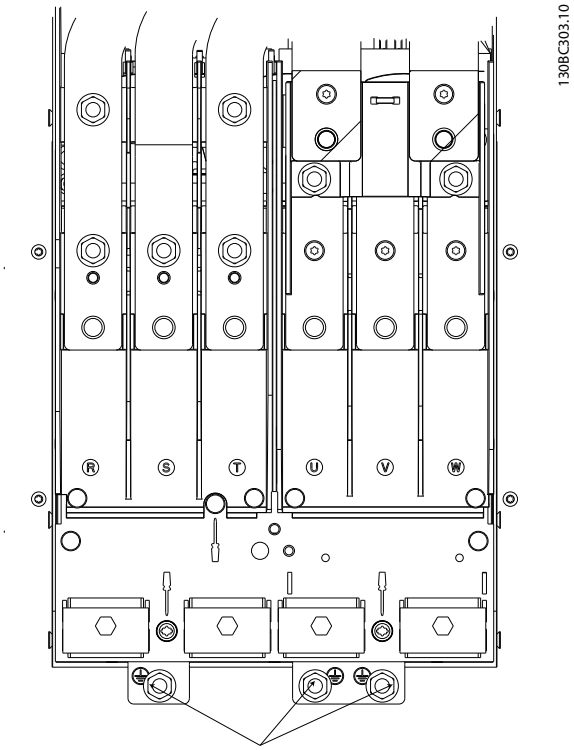

Illustration 3.26 Grounding Points for IP20 (Chassis) Enclosures

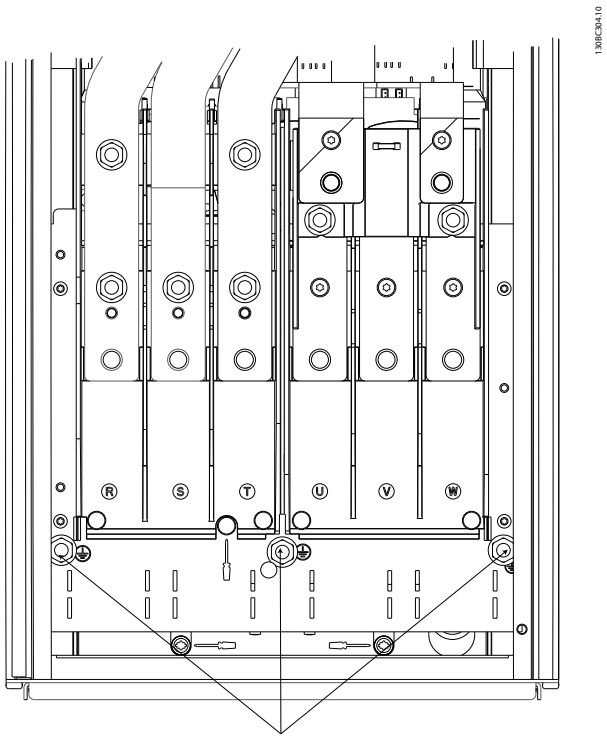

Illustration 3.27 Grounding for IP21/54 Enclosures.

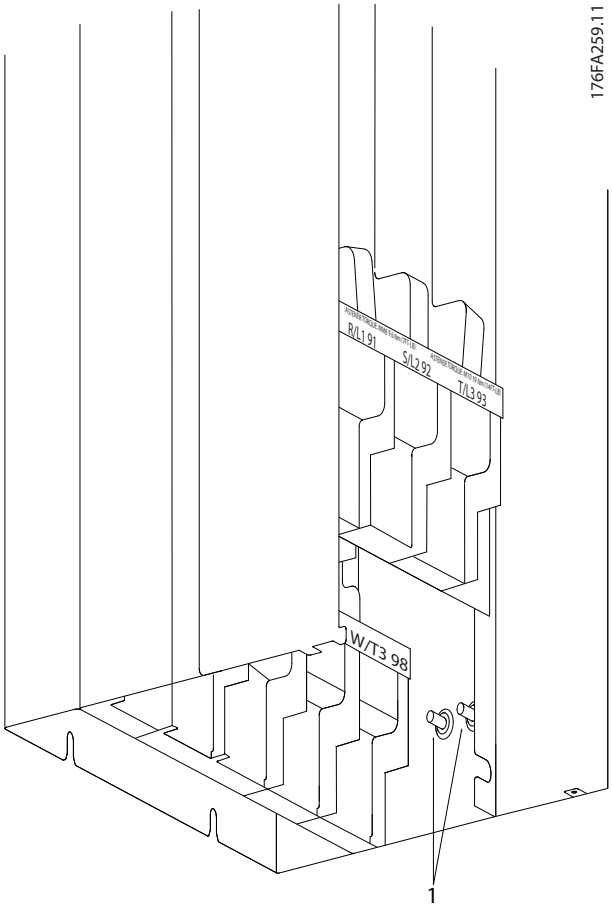

1	Ground terminals

Illustration 3.28 Position of Ground Terminals IP00, Enclosure Type E

3.4.3 Gland/Conduit Entry - IP21 (NEMA 1) and IP54 (NEMA 12)

Cables are connected through the gland plate from the bottom. Remove the plate and plan where to place the entry for the glands or conduits. *Illustration 3.29* to *Illustration 3.33* show the cable entry points viewed from the bottom of various frequency converters.

NOTICE

Fit the gland plate to the frequency converter to ensure the specified protection degree.

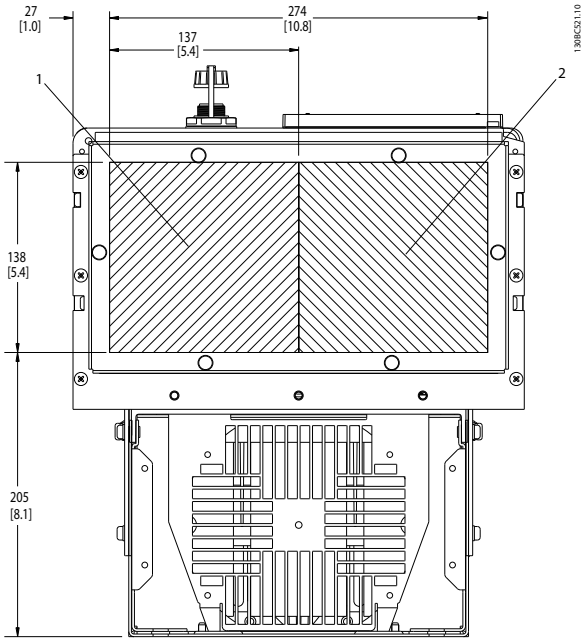

1	Mains side
2	Motor side

Illustration 3.29 D1h, Bottom View

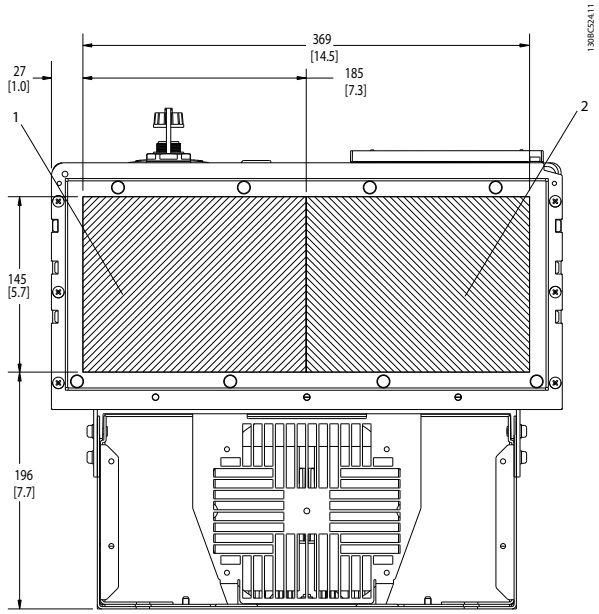

1	Mains side
2	Motor side

Illustration 3.30 D2h, Bottom View

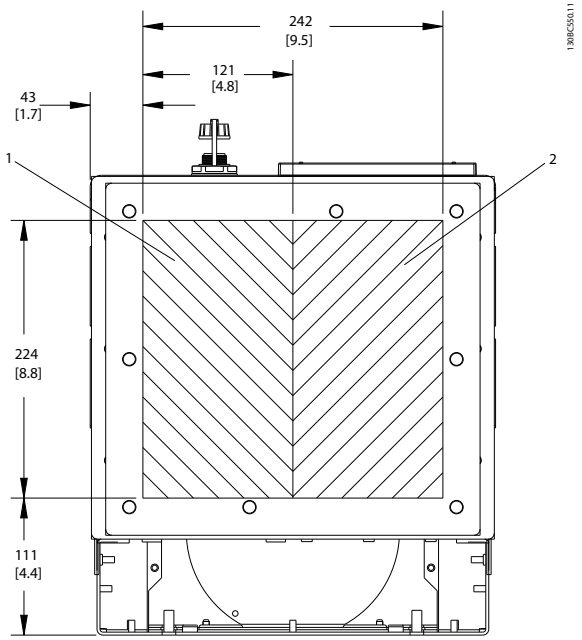

1	Mains side
2	Motor side

Illustration 3.31 D5h & D6h, Bottom View

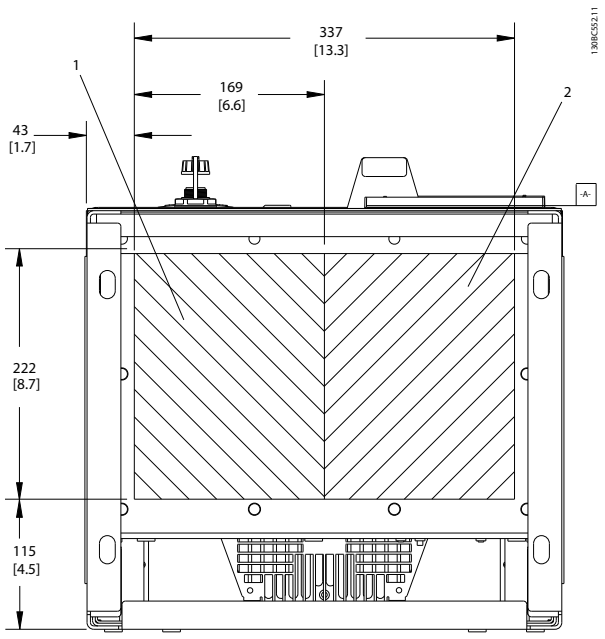

1	Mains side
2	Motor side

Illustration 3.32 D7h & D8h, Bottom View

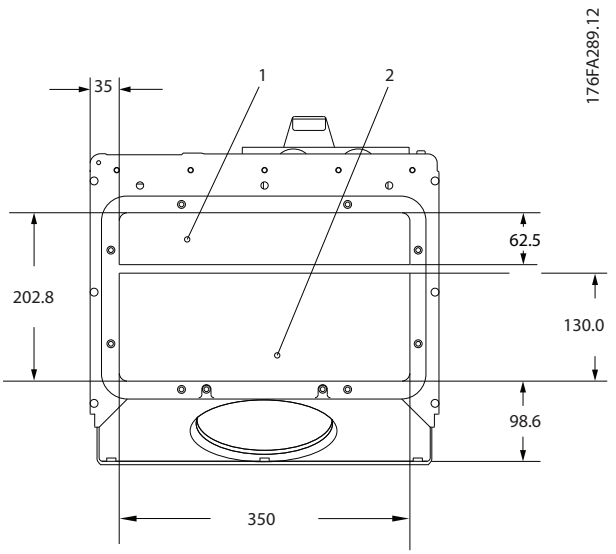

1	Mains side
2	Motor side

Illustration 3.33 E1, Bottom View

3.4.4 Motor Connection

⚠WARNING

INDUCED VOLTAGE

Induced voltage from output motor cables run together can charge equipment capacitors even with the equipment turned off and locked out.

- **Run output motor cables from multiple frequency converters separately.**

Failure to run output motor cables separately could result in death or serious injury.

- For maximum cable sizes, see *chapter 11.1 Power-dependent Specifications*.
- Comply with local and national electrical codes for cable sizes.
- Gland plates are provided at the base of IP21/54 and higher (NEMA 1/12) units.
- Do not install power factor correction capacitors between the frequency converter and the motor.
- Do not wire a starting or pole-changing device between the frequency converter and the motor.
- Connect the 3-phase motor wiring to terminals 96 (U), 97 (V), and 98 (W).
- Ground the cable in accordance with the instructions provided.
- Torque terminals in accordance with the information provided in *chapter 11.3.4 Connection Tightening Torques*.
- Follow motor manufacturer wiring requirements.

3.4.4.1 Terminal Locations: D1h-D4h

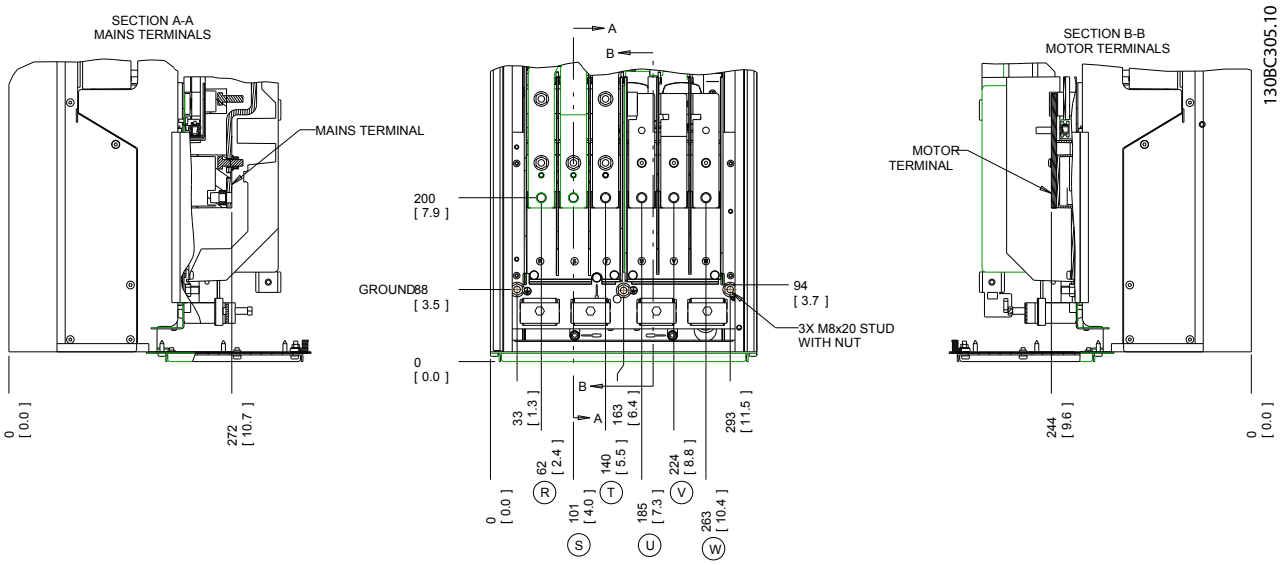

Illustration 3.34 Terminal Locations D1h

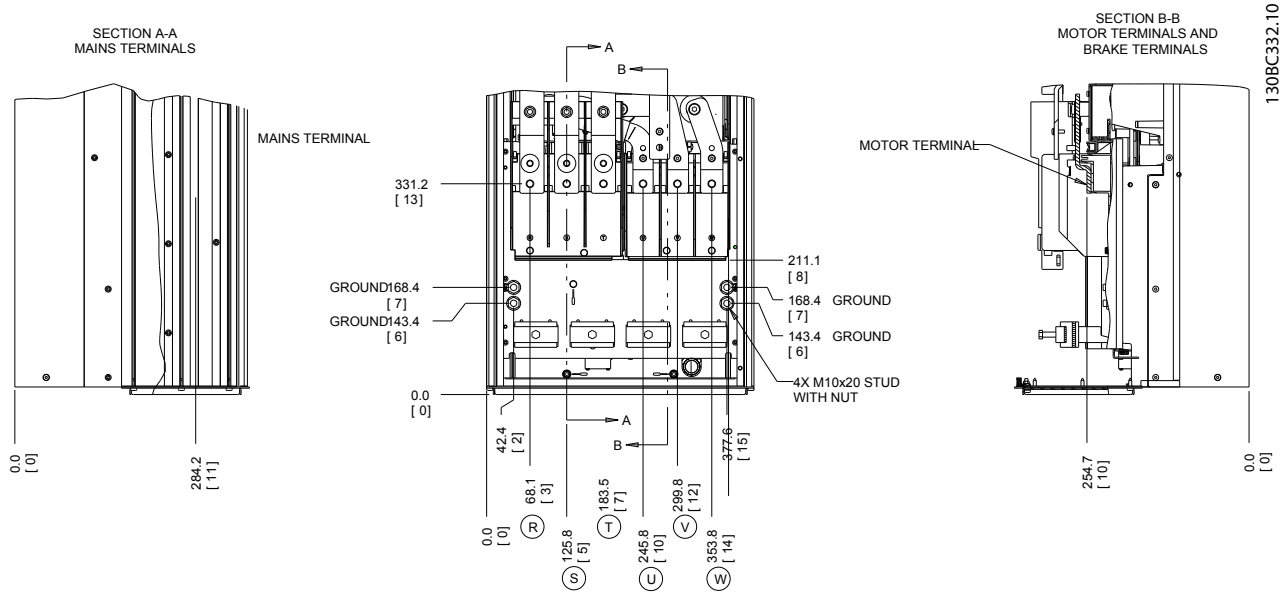

Illustration 3.35 Terminal Locations D2h

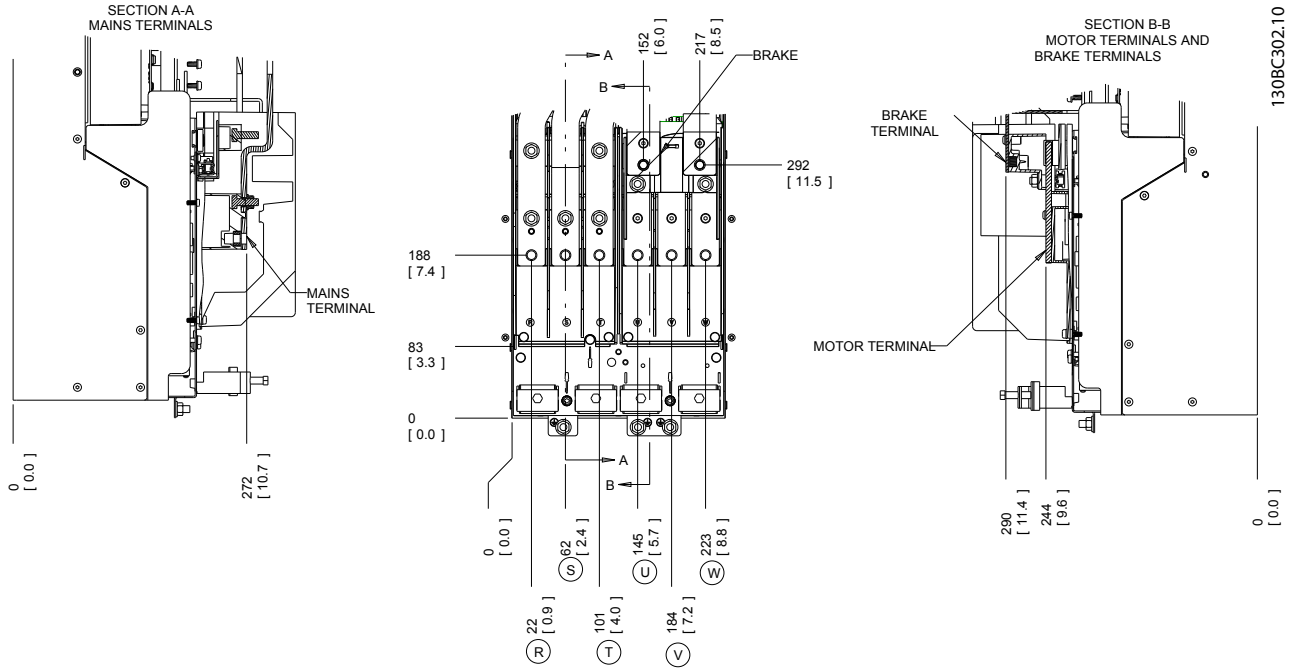

Illustration 3.36 Terminal Locations D3h

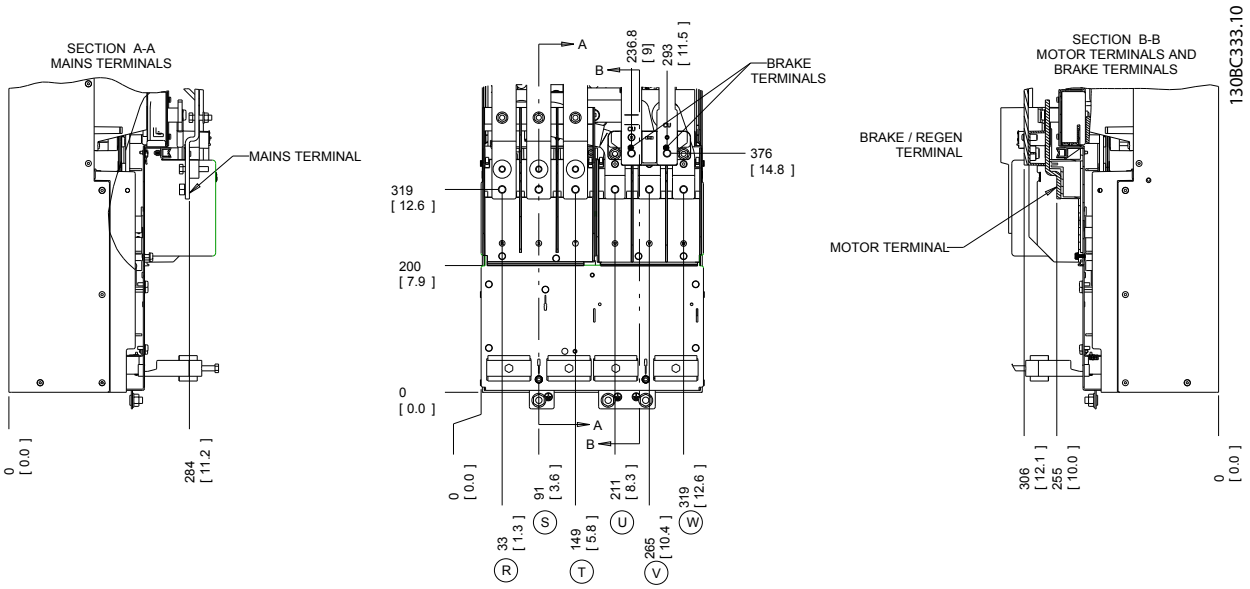

Illustration 3.37 Terminal Locations D4h

3.4.4.2 Terminal Locations: D5h-D8h

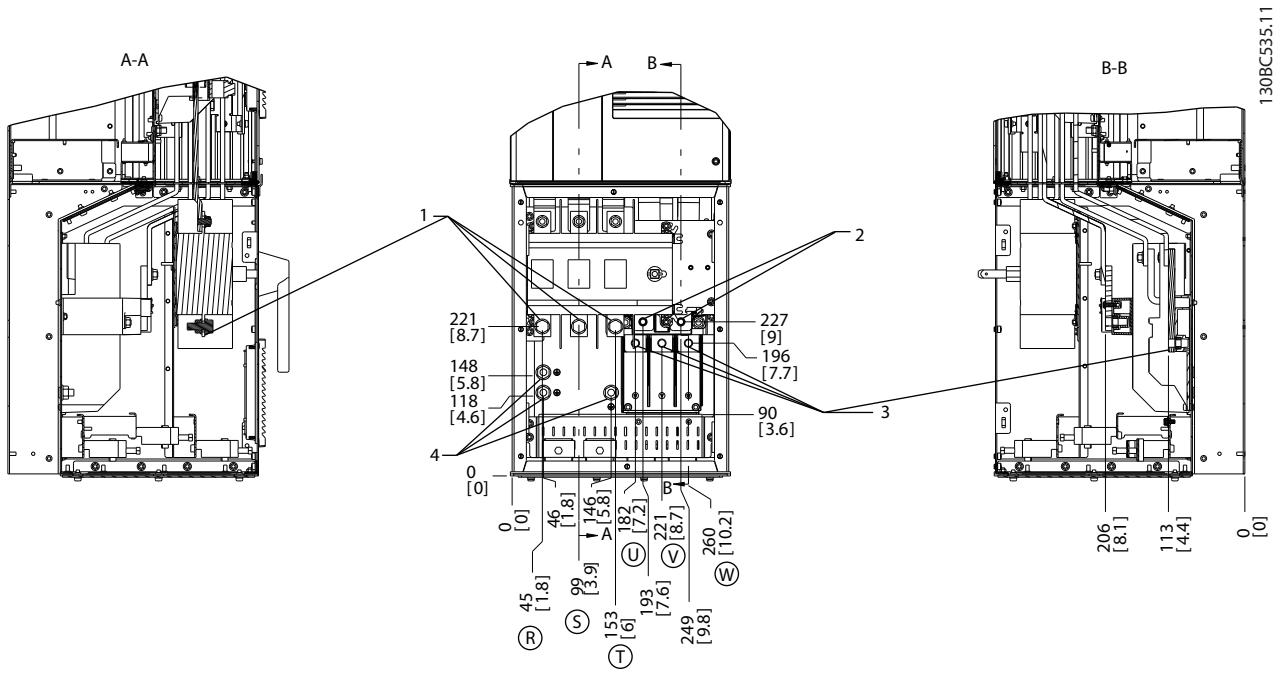

1	Mains terminals
2	Brake terminals
3	Motor terminals
4	Ground terminals

Illustration 3.38 Terminal Locations, D5h with Disconnect Option

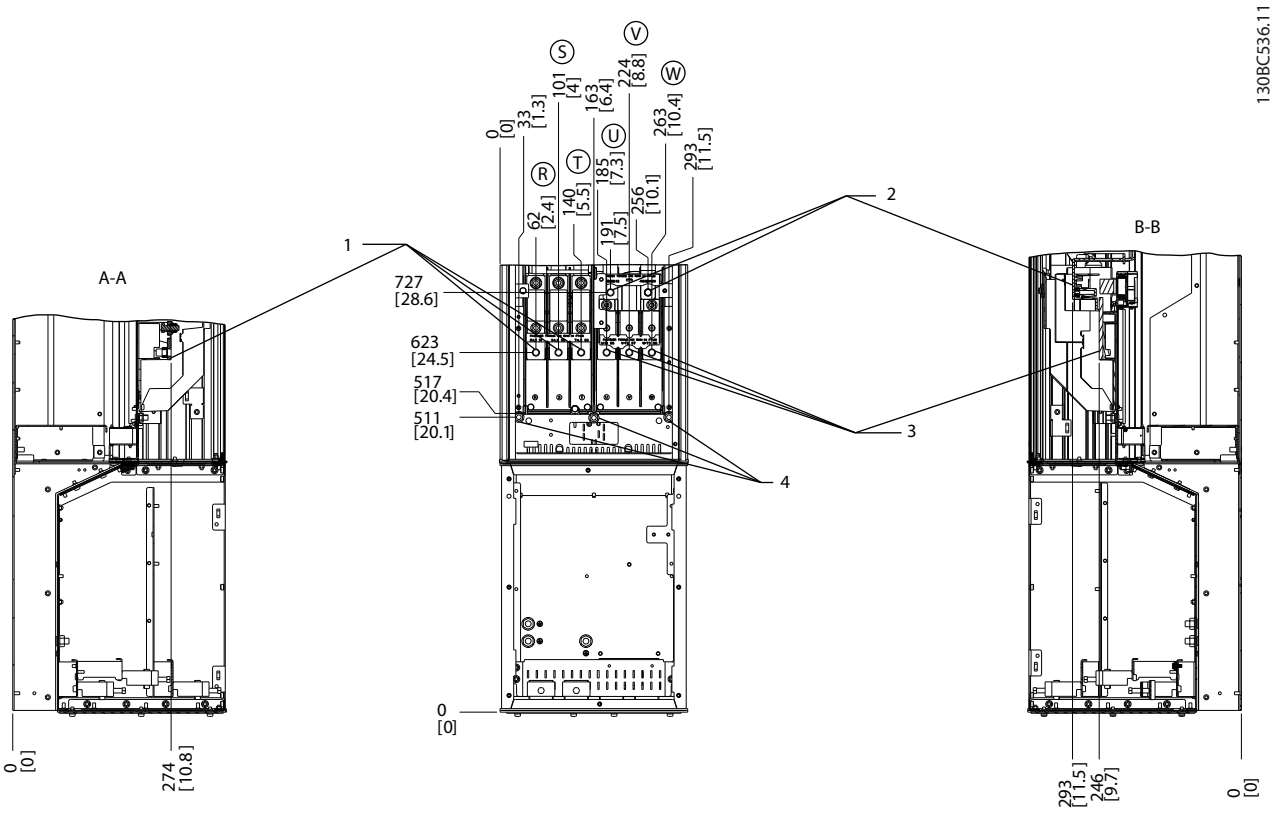

1	Mains terminals
2	Brake terminals
3	Motor terminals
4	Ground terminals

Illustration 3.39 Terminal Locations, D5h with Brake Option

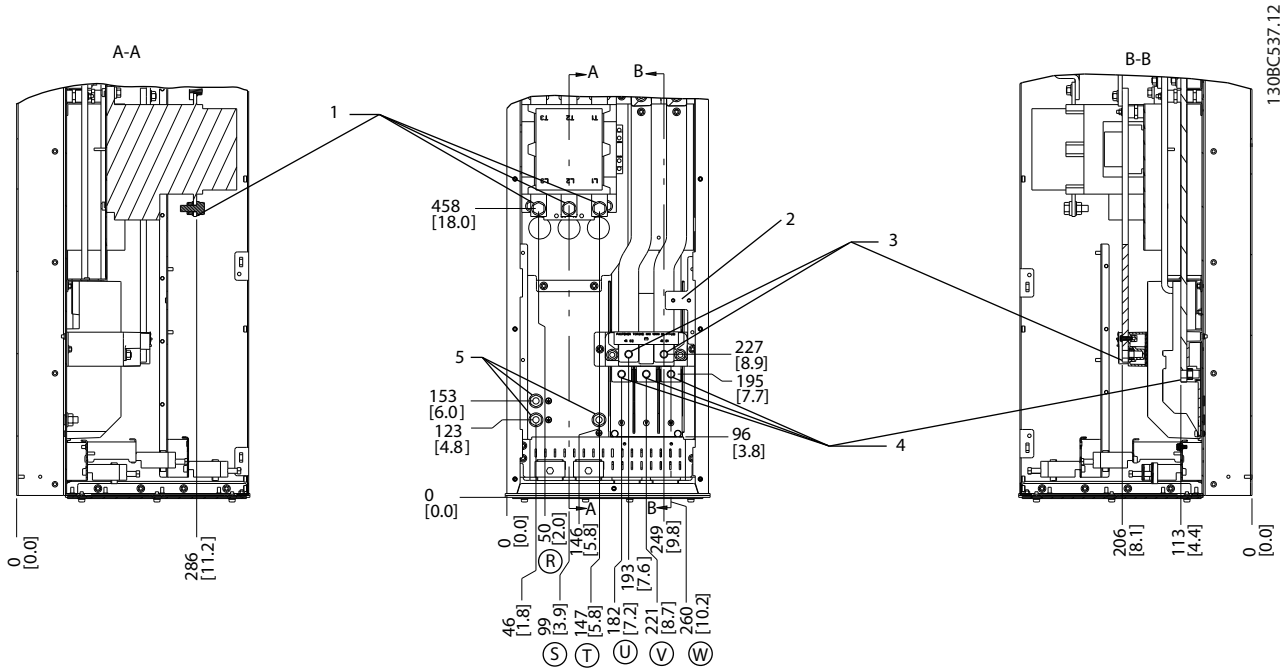

1	Mains terminals
2	TB6 terminal block for contactor
3	Brake terminals
4	Motor terminals
5	Ground terminals

Illustration 3.40 Terminal Locations, D6h with Contactor Option

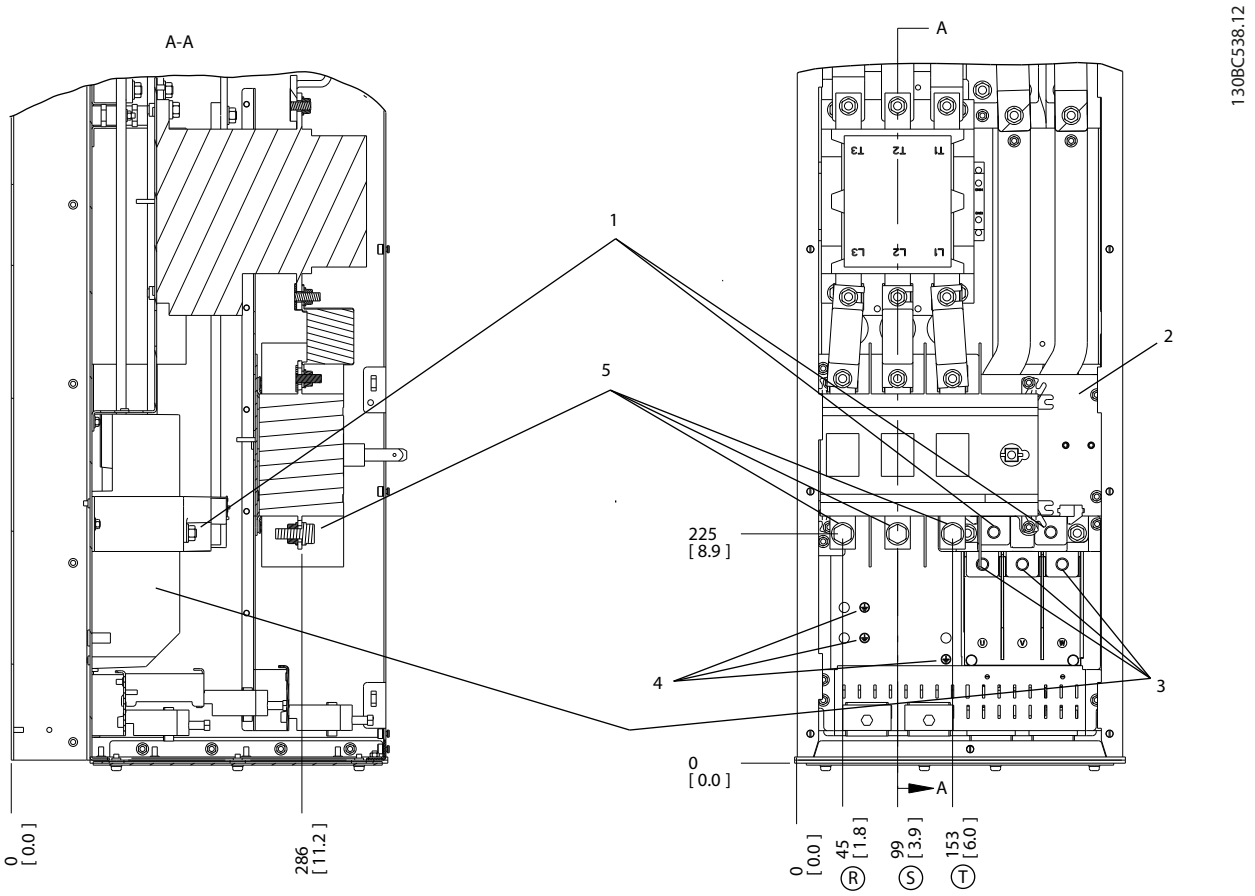

1	Brake terminals
2	TB6 terminal block for contactor
3	Motor terminals
4	Ground terminals
5	Mains terminals

Illustration 3.41 Terminal Locations, D6h with Contactor and Disconnect Options

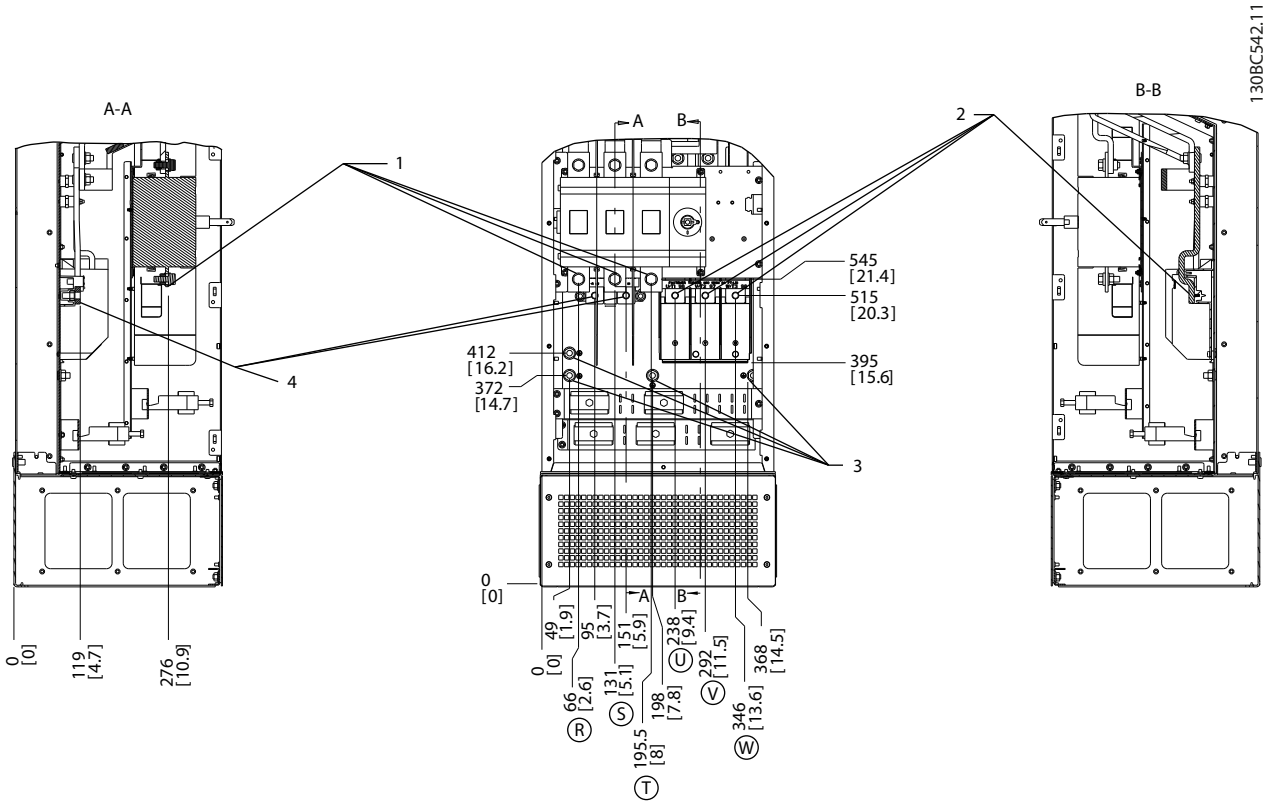

1	Mains terminals
2	Motor terminals
3	Ground terminals
4	Brake terminals

Illustration 3.42 Terminal Locations, D7h with Disconnect Option

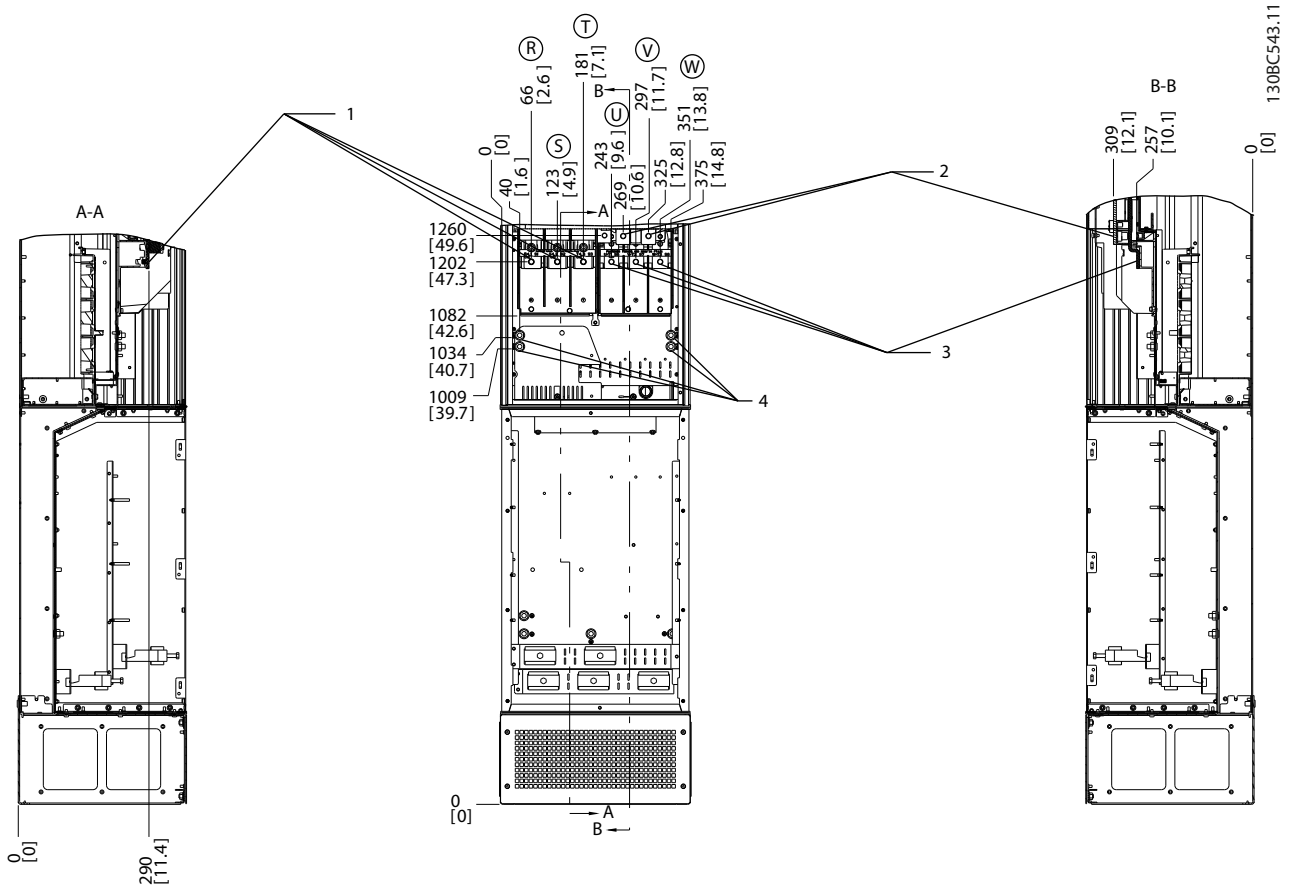

1	Mains terminals
2	Brake terminals
3	Motor terminals
4	Ground terminals

Illustration 3.43 Terminal Locations, D7h with Brake Option

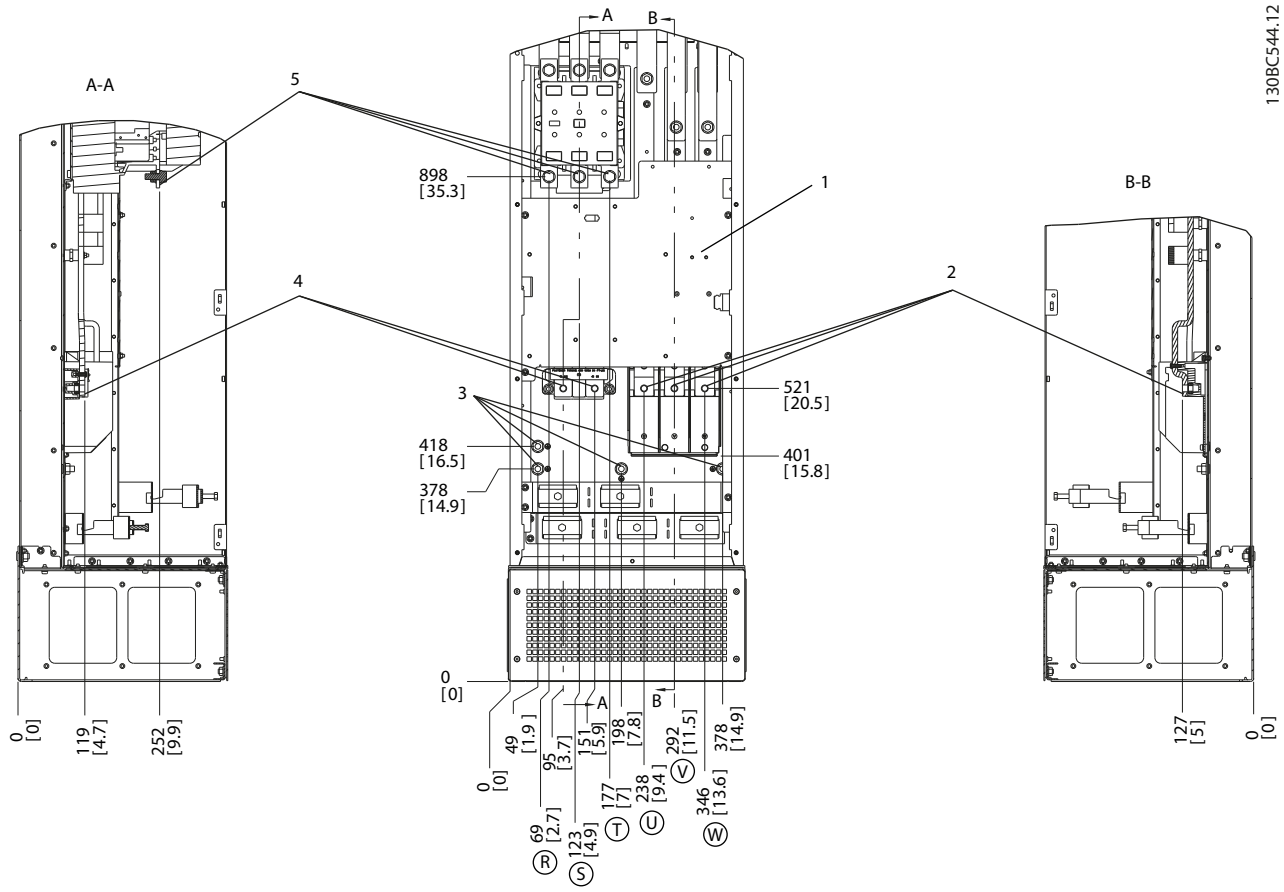

1	TB6 terminal block for contactor	4	Brake terminals
2	Motor terminals	5	Mains terminals
3	Ground terminals		

Illustration 3.44 Terminal Locations, D8h with Contactor Option

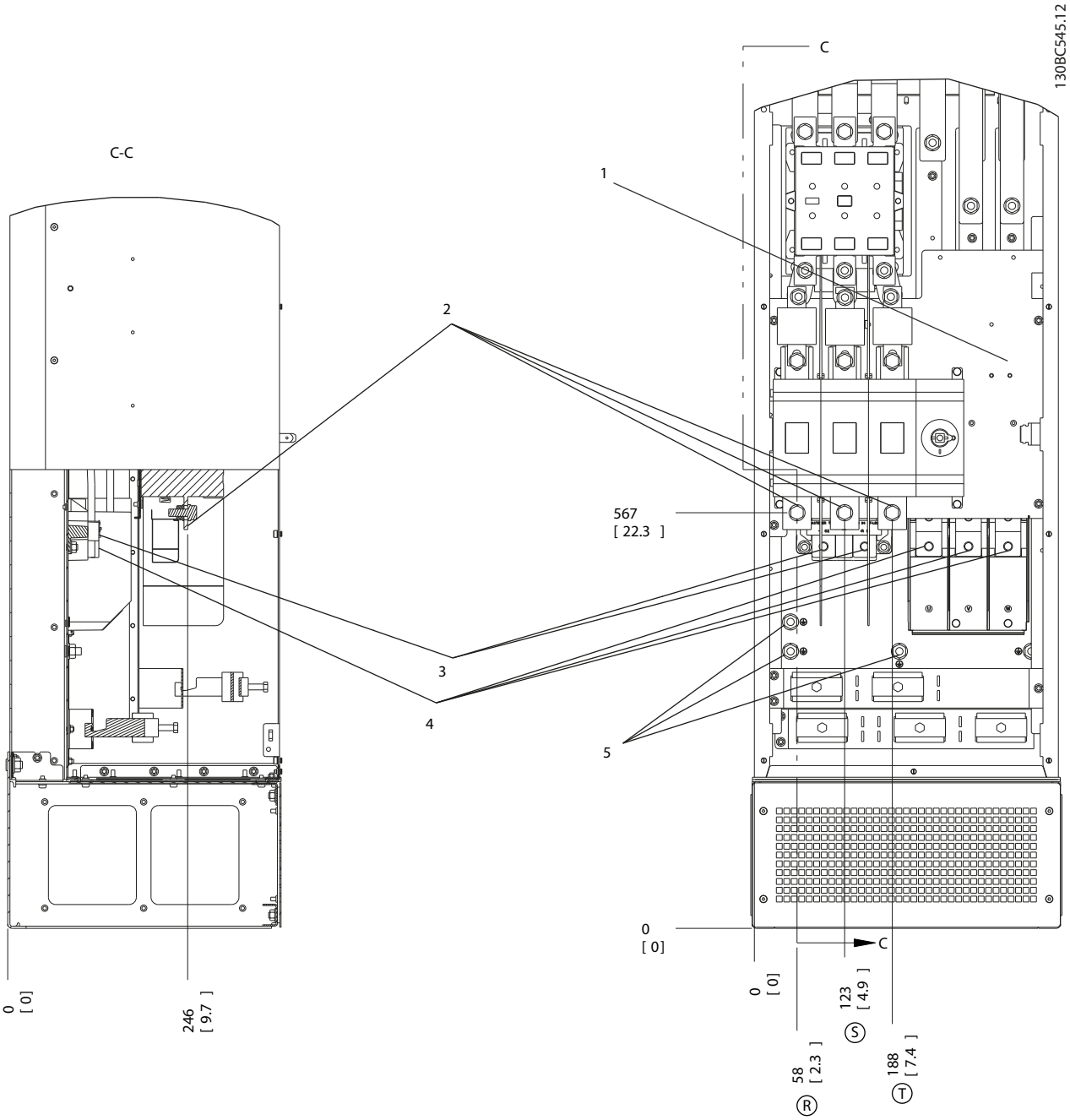

1	TB6 terminal block for contactor	4	Motor terminals
2	Mains terminals	5	Ground terminals
3	Brake terminals		

Illustration 3.45 Terminal Locations, D8h with Contactor and Disconnect Options

3.4.4.3 Terminal Locations: E1-E2

Terminal Locations - E1

Consider the following position of the terminals when designing the cable access.

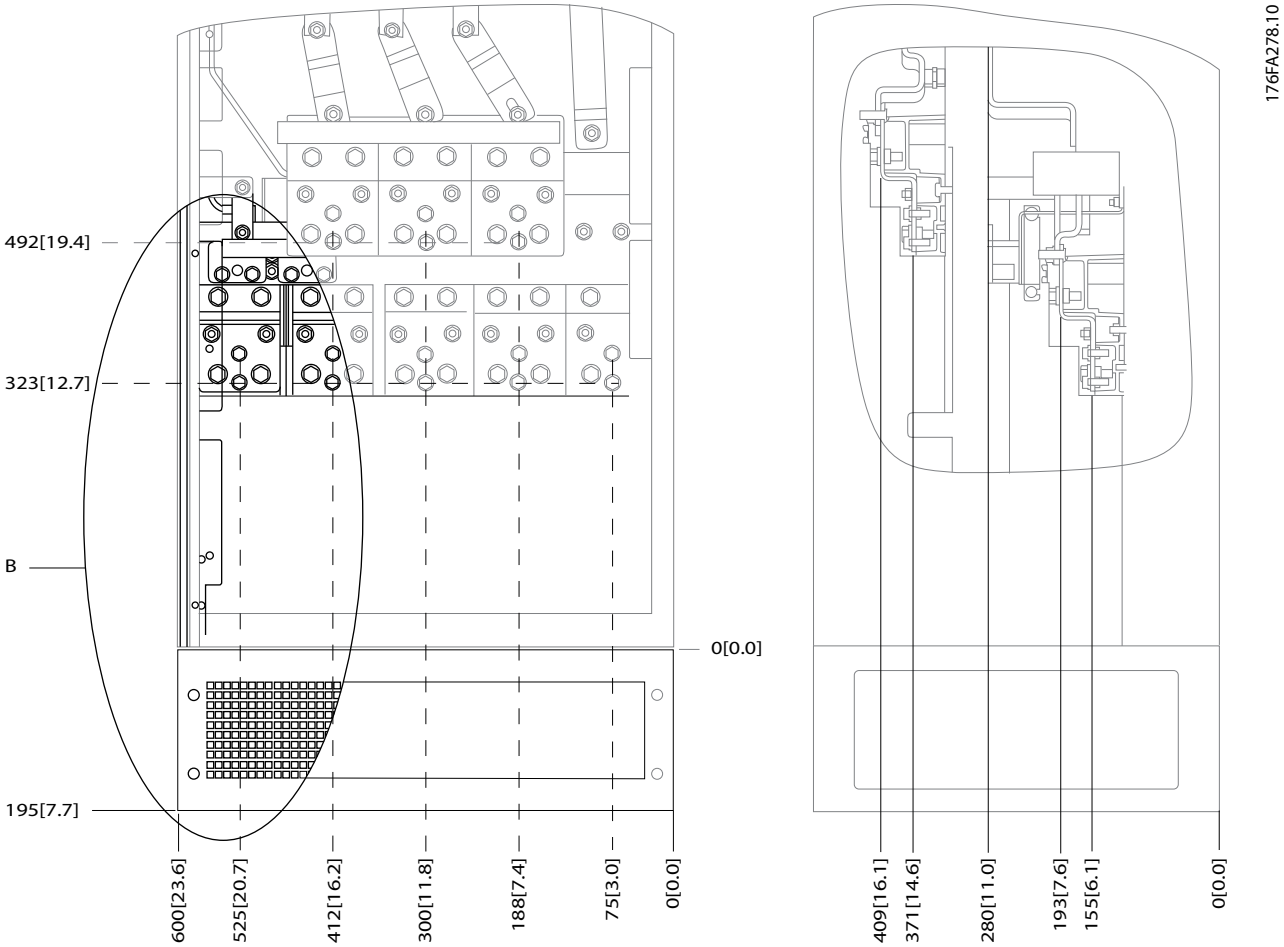

Illustration 3.46 IP21 (NEMA 1) and IP54 (NEMA 12) Enclosure Power Connection Positions

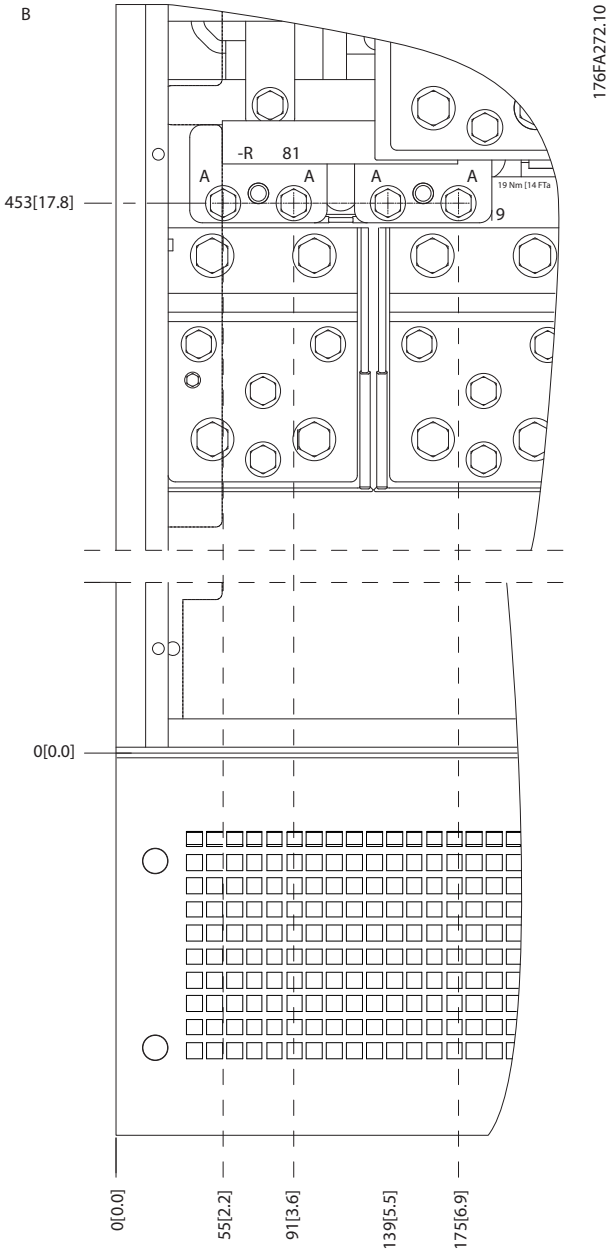

Illustration 3.47 IP21 (NEMA 1) and IP54 (NEMA 12) Enclosure Power Connection Positions (Detail B)

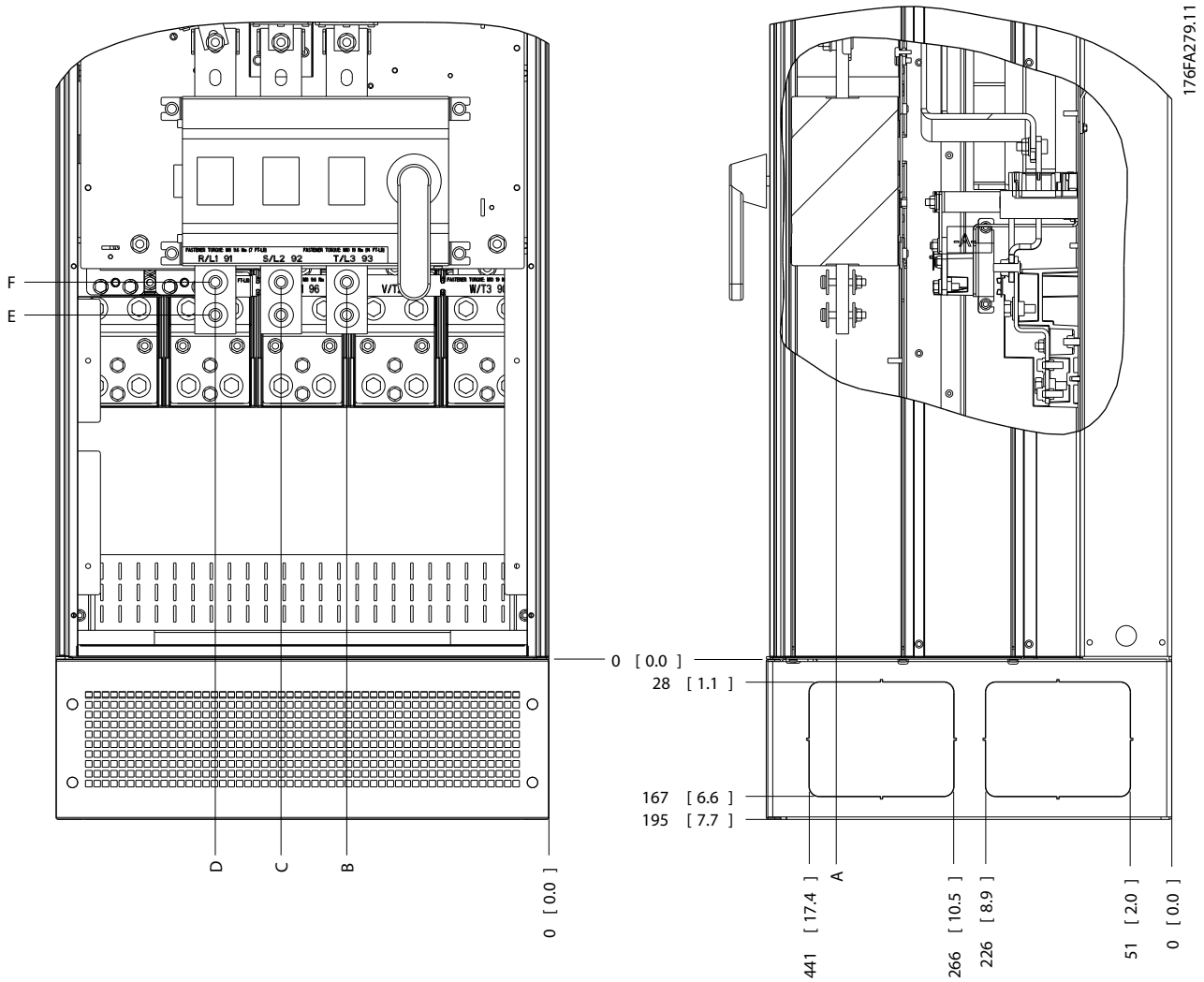

Illustration 3.48 IP21 (NEMA 1) and IP54 (NEMA 12) Enclosure Power Connection Position of Disconnect Switch

Enclosure types	Unit type	Dimensions [mm]/(inch)					
E1	IP54/IP21 UL AND NEMA1/NEMA12	A	B	C	D	E	F
	450-630 KW (690 V)	396 (15.6)	267 (10.5)	332 (13.1)	397 (15.6)	528 (20.8)	N/A
	355-450 kW (400 V)	408 (16.1)	246 (9.7)	326 (12.8)	406 (16.0)	419 (16.5)	459 (18.1)

Table 3.5 Dimensions for Disconnect Terminal

3

Terminal locations - enclosure type E2

Consider the following position of the terminals when designing the cable access.

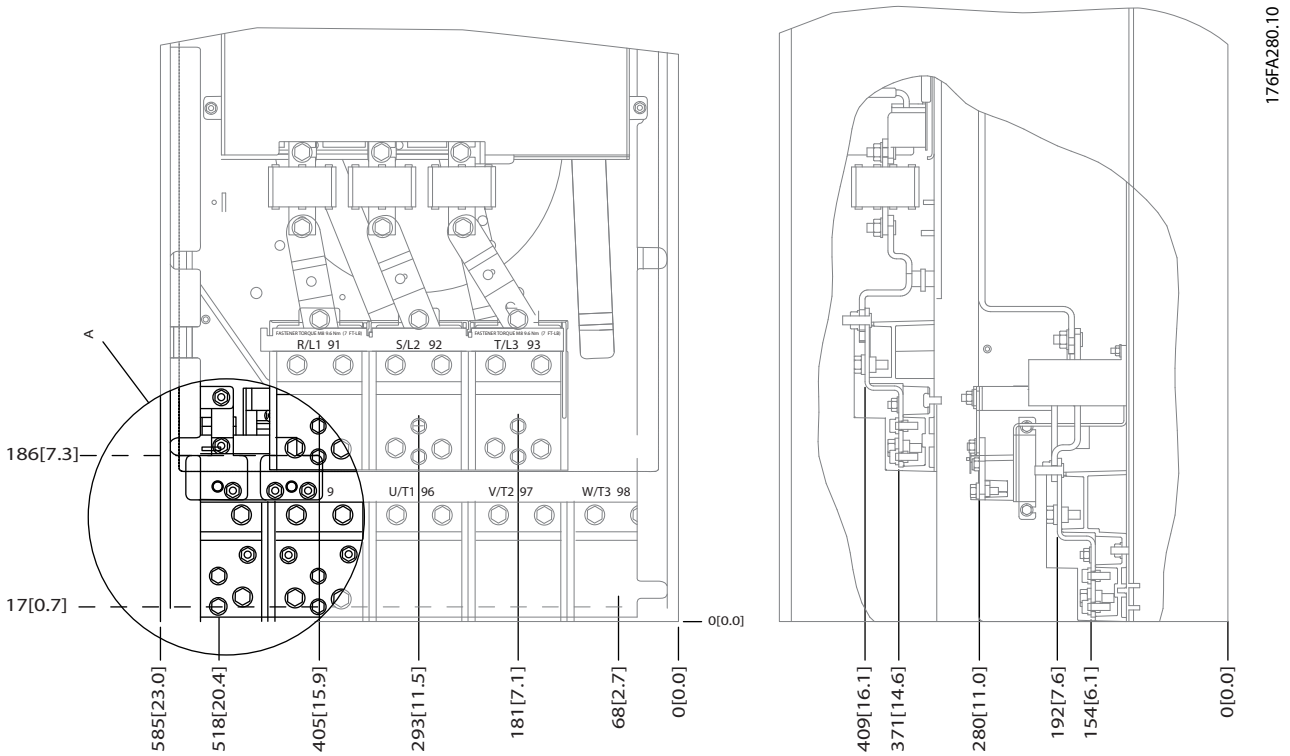

Illustration 3.49 IP00 Enclosure Power Connection Positions

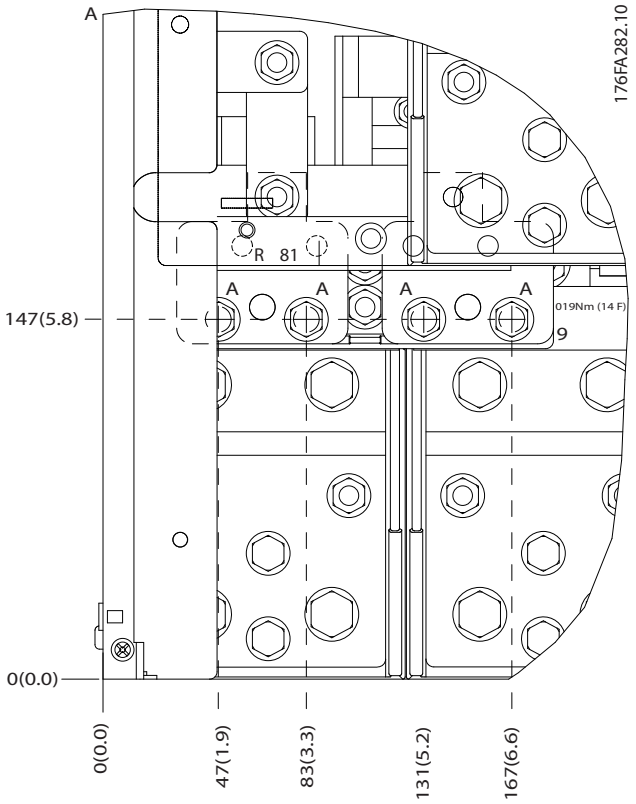

Illustration 3.50 IP00 Enclosure Power Connection Positions

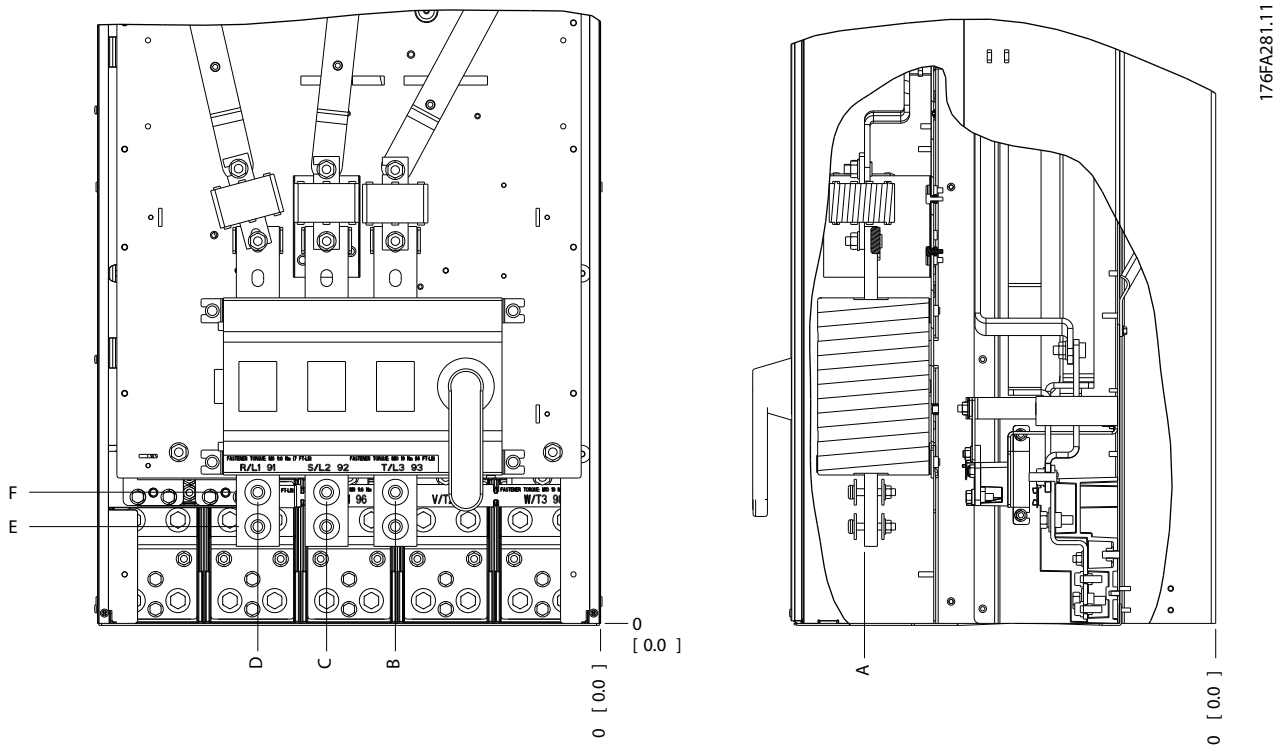

Illustration 3.51 IP00 Enclosure Power Connections Positions of Disconnect Switch

NOTICE

Power connections can be made to positions A or B

Enclosure type	Unit type	Dimensions [mm]/(inch)					
	IPOO/CHASSIS	A	B	C	D	E	F
E2	250/315 kW (400 V) AND 355/450-500/630 KW (690 V)	396 (15.6)	268 (10.6)	333 (13.1)	398 (15.7)	221 (8.7)	N/A
	315/355-400/450 kW (400 V)	408 (16.1)	239 (9.4)	319 (12.5)	399 (15.7)	113 (4.4)	153 (6.0)

Table 3.6 Dimensions for Disconnect Terminal

3.4.5 Motor Cable

Connect the motor to terminals U/T1/96, V/T2/97, W/T3/98. Ground to terminal 99. All types of 3-phase asynchronous standard motors can be used with a frequency converter unit. The factory setting is for clockwise rotation with the frequency converter output connected as follows:

Terminal no.	Function
96, 97, 98,	Mains U/T1, V/T2, W/T3
99	Ground

Table 3.7 Terminals for Motor Cable Connection

3

3.4.6 Motor Rotation Check

The direction of rotation can be changed by switching 2 phases in the motor cable, or by changing the setting of *4-10 Motor Speed Direction*.

- Terminal U/T1/96 connected to U-phase
- Terminal V/T2/97 connected to V-phase
- Terminal W/T3/98 connected to W-phase

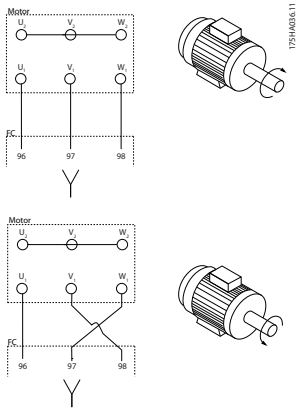

Table 3.8 Wiring for Changing Motor Direction

A motor rotation check can be performed using *1-28 Motor Rotation Check* and following the steps shown in the display.

3.4.7 AC Mains Connection

- All frequency converters may be used with an isolated input source as well as with ground reference power lines. When supplied from an isolated mains source (IT mains or floating delta) or TT/TN-S mains with a grounded leg (grounded delta), set *14-50 RFI Filter* to *[0] Off*. When off, the internal RFI filter capacitors between the chassis and the intermediate circuit are isolated. Isolating the capacitors prevents damage to the intermediate circuit and reduces ground capacity currents in accordance with IEC 61800-3.
- Size wiring is based upon the input current of the frequency converter.
- Comply with local and national electrical codes for cable sizes.

1. Ground the cable in accordance with the instructions provided.
2. Connect 3-phase AC input power wiring to terminals L1, L2, and L3 (see *Illustration 3.52*).

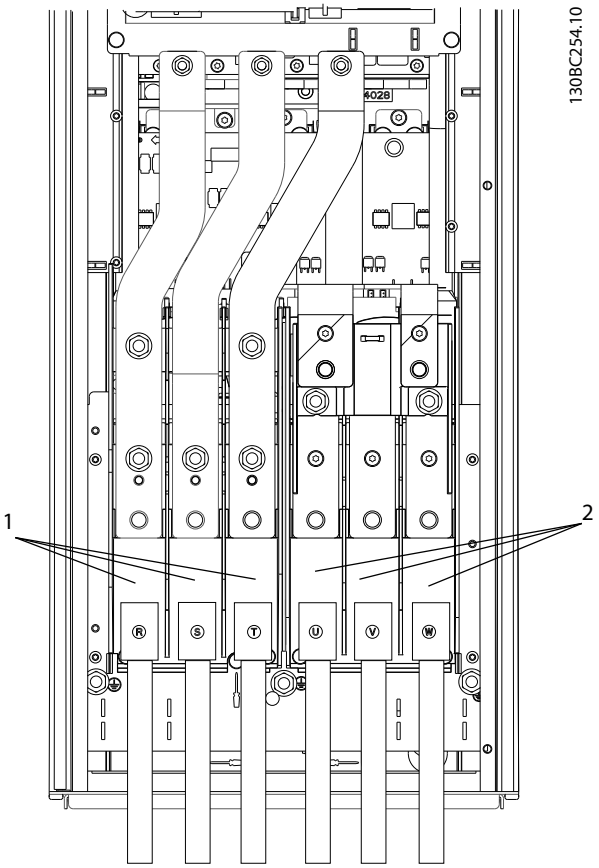

1	Mains connection
2	Motor connection

Illustration 3.52 Connecting to AC Mains

3.4.8 Shielding against Electrical Noise

To ensure best EMC performance, mount the EMC metal cover before mounting the mains power cable.

NOTICE

The EMC metal cover is only included in units with an RFI filter.

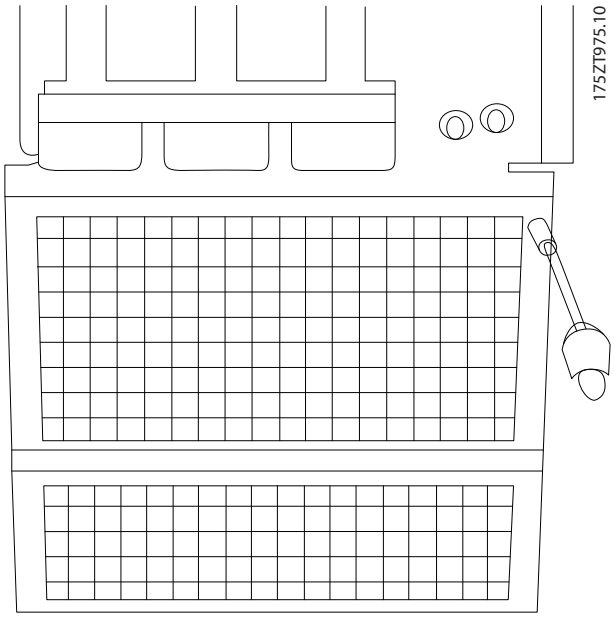

Illustration 3.53 Mounting of EMC Shield.

3.5 Control Wiring Connection

- Isolate control wiring from high power components in the frequency converter.
- If the frequency converter is connected to a thermistor for PELV isolation, optional thermistor control wiring must be reinforced/double insulated. A 24 V DC supply voltage is recommended.

3.5.1 Access

All terminals to the control cables are located underneath the LCP on the inside of the frequency converter. To access, open the door (IP21/54) or remove the front panel (IP20).

3.5.2 Using Screened Control Cables

Danfoss recommends braided screened/armoured cables to optimise EMC immunity of the control cables and the EMC emission from the motor cables.

The ability of a cable to reduce the incoming and outgoing radiation of electric noise depends on the transfer impedance (Z_T). The screen of a cable is normally designed to reduce the transfer of electric noise; however, a screen with a lower transfer impedance (Z_T) value is more effective than a screen with a higher transfer impedance (Z_T).

Transfer impedance (Z_T) is rarely stated by cable manufacturers, but it is often possible to estimate transfer impedance (Z_T) by assessing the physical design of the cable.

Transfer impedance (Z_T) can be assessed on the basis of the following factors:

- The conductibility of the screen material.
- The contact resistance between the individual screen conductors.
- The screen coverage, i.e. the physical area of the cable covered by the screen - often stated as a percentage value.
- Screen type, i.e. braided or twisted pattern.

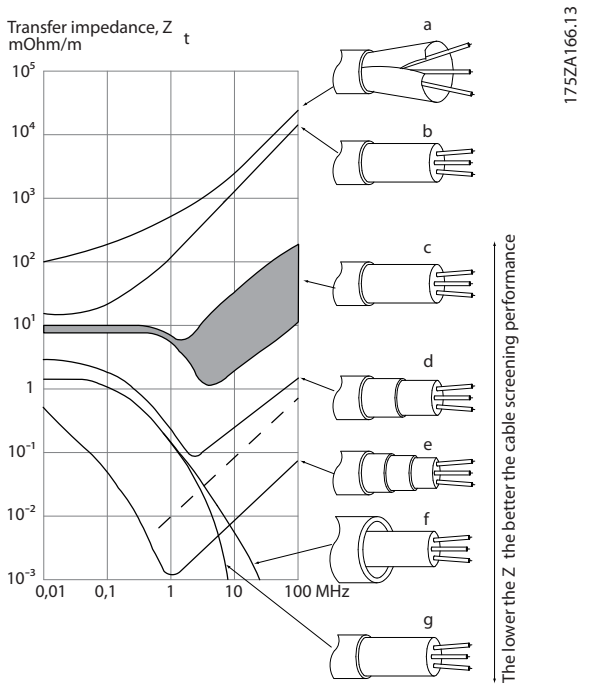

a	Aluminium-clad with copper wire
b	Twisted copper wire or armoured steel wire cable
c	Single-layer braided copper wire with varying percentage screen coverage (this is the typical Danfoss reference cable).
d	Double-layer braided copper wire
e	Twin layer of braided copper wire with a magnetic, screened/armoured intermediate layer
f	Cable that runs in copper tube or steel tube
g	Lead cable with 1.1 mm wall thickness

Illustration 3.54 Cable Screening Performance

3.5.3 Grounding of Screened Control Cables

Correct screening

The preferred method in most cases is to secure control and serial communication cables with screening clamps provided at both ends to ensure best possible high frequency cable contact. If the ground potential between the frequency converter and the PLC is different, electric noise may occur that disturbs the entire system. Solve this problem by fitting an equalizing cable next to the control cable. Minimum cable cross section: 16 mm^2.

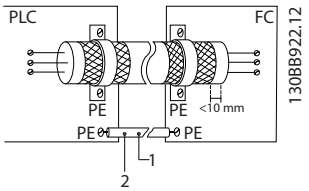

1	Min. 16 mm^2
2	Equalizing cable

Illustration 3.55 Correct Screening

50/60 Hz ground loops

With very long control cables, ground loops may occur. To eliminate ground loops, connect one end of the screen-to-ground with a 100 nF capacitor (keeping leads short).

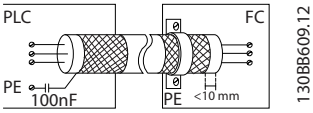

Illustration 3.56 Avoiding Ground Loops

Avoid EMC noise on serial communication

This terminal is connected to ground via an internal RC link. Use twisted-pair cables to reduce interference between conductors. The recommended method is shown below:

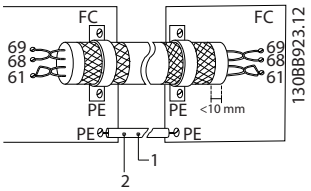

1	Min. 16 mm^2
2	Equalizing cable

Illustration 3.57 Avoiding EMC Noise

Alternatively, the connection to terminal 61 can be omitted:

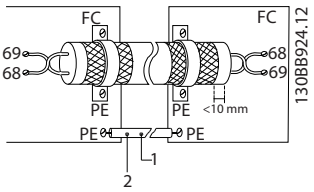

1	Min. 16 mm^2
2	Equalizing cable

Illustration 3.58 Screening without Using Terminal 61

3.5.4 Control Terminal Types

Terminal functions and default settings are summarised in *chapter 3.5.7 Control Terminal Functions*.

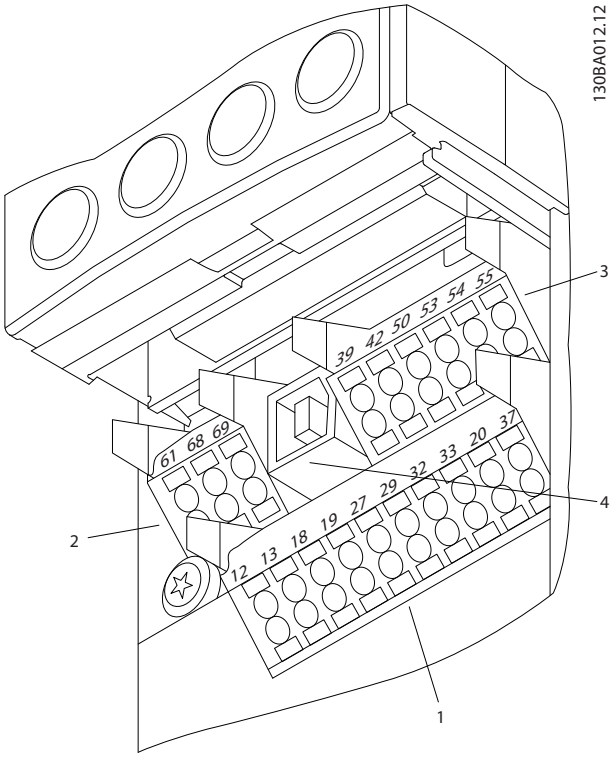

Illustration 3.59 Control Terminal Locations

- **Connector 1** provides:
  - 4 programmable digital input terminals
  - 2 additional digital terminals programmable as either input or output
  - 24 V DC terminal supply voltage
  - A common wire for optional customer supplied 24 V DC voltage
- **Connector 2** terminals (+)68 and (-)69 are for an RS-485 serial communications connection.
- **Connector 3** provides
  - 2 analog inputs
  - 1 analog output
  - 10 V DC supply voltage
  - Common wires for the inputs and output
- **Connector 4** is a USB port available for use with the MCT 10 Set-up Software.
- Also provided are 2 Form C relay outputs which are located on the power card.
- Some options available for ordering with the unit may provide additional terminals. See the manual provided with the equipment option.

3.5.5 Wiring to Control Terminals

Terminal plugs can be removed for easy access.

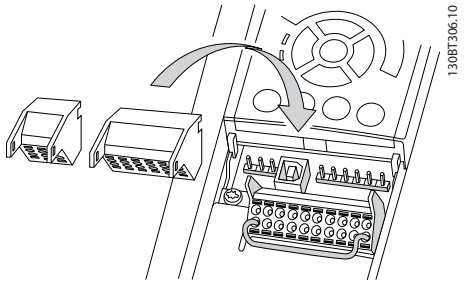

Illustration 3.60 Removal of Control Terminals

Tie down all control wires to the designated control cable routing as shown in *Illustration 3.60*. Remember to connect the shields in a way which ensures optimum electrical immunity.

Fieldbus connection
Connections are made to the relevant options on the control card. For details, see the relevant fieldbus instruction. The cable must be placed in the provided path inside the frequency converter and tied down with other control wires (see *Illustration 3.61*).

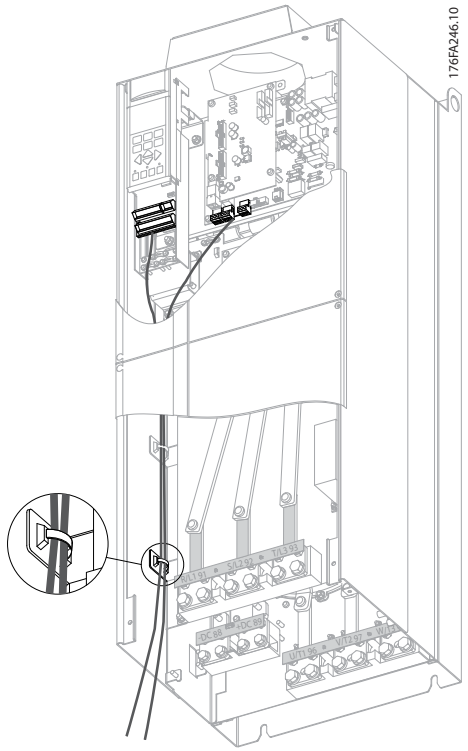

Illustration 3.61 Control Card Wiring Path for E-enclosures

In the Chassis (IP00) and NEMA 1 units, it is also possible to connect the fieldbus from the top of the unit. On the NEMA 1 unit, a cover plate must be removed.
Kit number for fieldbus top connection: 176F1742

3.5.6 Safe Torque Off (STO)

Safe Torque Off is an option. To run Safe Torque Off, additional wiring for the frequency converter is required. Refer to *VLT® Frequency Converters Safe Torque Off Operating Instructions* for further information.

3.5.7 Control Terminal Functions

Frequency converter functions are commanded by receiving control input signals.

- Each terminal must be programmed for the function it is supporting in the parameters associated with that terminal. See *chapter 6 Programming* and *chapter 7 Application Examples* for terminals and associated parameters.
- It is important to confirm that the control terminal is programmed for the correct function. See *chapter 6 Programming* for details on accessing parameters and programming.
- The default terminal programming is intended to initiate frequency converter functioning in a typical operational mode.

3.5.7.1 Terminal 53 and 54 Switches

- Analog input terminals 53 and 54 can select either voltage (0 to 10 V) or current (0/4-20 mA) input signals.
- Remove power to the frequency converter before changing switch positions.
- Set switches A53 and A54 to select the signal type. U selects voltage, I selects current.
- The switches are accessible when the LCP has been removed (see *Illustration 3.62*).

NOTICE

Some option cards available for the unit may cover these switches and must be removed to change switch settings. Always remove power to the unit before removing option cards. Observe the discharge time in *Table 2.1*.

- Terminal 53 default is for a speed reference signal in open loop, which is set in *16-61 Terminal 53 Switch Setting*
- Terminal 54 default is for a feedback signal in closed loop, which is set in *16-63 Terminal 54 Switch Setting*

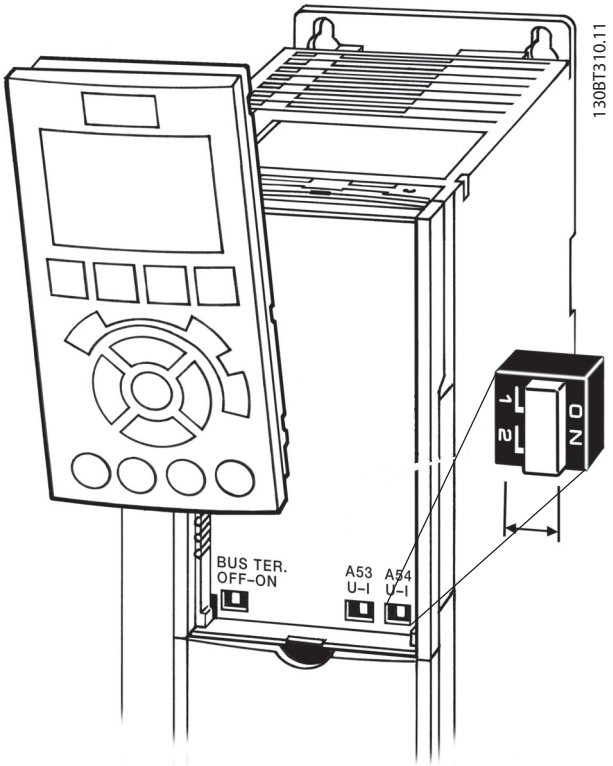

Illustration 3.62 Location of Terminals 53 and 54 Switches and Bus Termination Switch

3.6 Serial Communication

RS-485 is a 2-wire bus interface compatible with multi-drop network topology, i.e. nodes can be connected as a bus, or via drop cables from a common trunk line. A total of 32 nodes can be connected to 1 network segment.
Repeaters divide network segments. Each repeater functions as a node within the segment it is installed in. Each node connected within a given network must have a unique node address across all segments.

- Terminate each segment at both ends, using either the termination switch (S801) of the frequency converter or a biased termination resistor network.
- Always use screened twisted pair (STP) cable for bus cabling.
- Always follow good common installation practice.

Low-impedance ground connection of the screen at every node is important, including at high frequencies.

- Connect a large surface of the screen to ground, for example with a cable clamp or a conductive cable gland. It may be necessary to apply potential-equalizing cables to maintain the same ground potential throughout the network. Particularly in installations with long cables.
- To prevent impedance mismatch, always use the same type of cable throughout the entire network.
- When connecting a motor to the frequency converter, always use screened motor cable.

Cable	Screened twisted pair (STP)
Impedance	120 Ω
Max. cable length [m]	1200 (including drop lines) 500 station-to-station

Table 3.9 Cable Information

3.7 Optional Equipment

3.7.1 Anti-condensation Heater

An anti-condensation heater can be installed inside the frequency converter to prevent condensation from forming inside the enclosure when the unit is turned off. The heater is controlled by customer-supplied 230 V AC. For best results, only operate the heater when the unit is not running.

3.7.2 Mains Shield

The mains shield is a Lexan cover installed inside the enclosure to provide protection according to BGV A3 (former VBG-4) accident-prevention requirements.

NOTICE

Mains shield is only available for IP21/IP54 (NEMA 1/ NEMA 12).

4 Start-up and Functional Testing

4.1 Pre-start

4.1.1 Safety Inspection

4

⚠WARNING

HIGH VOLTAGE

If input and output connections have been connected improperly, there is potential for high voltage on these terminals. If power leads for multiple motors are improperly run in same conduit, there is potential for leakage current to charge capacitors within the frequency converter, even when disconnected from mains input.

- **For initial start-up, make no assumptions about power components.**
- **Follow pre-start procedures.**

Failure to follow pre-start procedures could result in personal injury or damage to equipment.

1. Switch off the Input power to the unit and ensure that it is locked out. Do not rely on the frequency converter disconnect switches for input power isolation.
2. Verify that there is no voltage on input terminals L1 (91), L2 (92), and L3 (93), phase-to-phase and phase-to-ground,
3. Verify that there is no voltage on output terminals 96 (U), 97 (V), and 98 (W), phase-to-phase and phase-to-ground.
4. Confirm continuity of the motor by measuring ohm values on U-V (96-97), V-W (97-98), and W-U (98-96).
5. Check for proper grounding of the frequency converter as well as the motor.
6. Inspect the frequency converter for loose connections on terminals.
7. Record the following motor-nameplate data
   - 7a Power
   - 7b Voltage
   - 7c Frequency
   - 7d Full load current
   - 7e Nominal speed.

   These values are needed to program the motor nameplate data later.
8. Confirm that the supply voltage matches the voltage of the frequency converter and the motor.

⚠CAUTION

Before applying power to the unit, inspect the entire installation as detailed in *Table 4.1*. Check mark those items when completed.

Inspect for	Description	☑
Auxiliary equipment	• Look for auxiliary equipment, switches, disconnects, or input fuses/circuit breakers on the input power side of the frequency converter or output side to the motor. Ensure that they are ready for full speed operation. • Check function and installation of any sensors used for feedback to the frequency converter. • Remove power factor correction caps on motors, if present.	

Inspect for	Description	☑
Cable routing	• Use separate metallic conduits for each of the following: - Input power - Motor wiring - Control wiring	
Control wiring	• Check for broken or damaged wires and loose connections. • Check that control wiring is isolated from power and motor wiring for noise immunity. • Check the voltage source of the signals, if necessary. • Use shielded or twisted pair cable. Ensure that the shield is terminated correctly.	
Cooling clearance	• Measure that top and bottom clearance is adequate to ensure proper air flow for cooling.	
EMC considerations	• Check for proper installation regarding electromagnetic compatibility.	
Environmental considerations	• See equipment label for the maximum ambient operating temperature limits. • Humidity levels must be 5–95%, non-condensing.	
Fusing and circuit breakers	• Check for proper fusing or circuit breakers. • Check that all fuses are inserted firmly and in operational condition and that all circuit breakers are in the open position.	
Grounding	• The unit requires a ground wire from its chassis to the building ground. • Check for good ground connections that are tight and free of oxidation. • Grounding to conduit or mounting the back panel to a metal surface is not sufficient.	
Input and output power wiring	• Check for loose connections. • Check that motor and mains are in separate conduit or separated screened cables.	
Panel interior	• Inspect that the unit interior is free of debris and corrosion.	
Switches	• Ensure that all switch and disconnect settings are in the proper positions.	
Vibration	• Check that the unit is mounted solidly or that shock mounts are used, as necessary. • Check for an unusual amount of vibration.	

Table 4.1 Start-up Checklist

4

4.2 Applying Power

⚠WARNING

HIGH VOLTAGE

Frequency converters contain high voltage when connected to AC mains.

- **Only qualified personnel should perform installation, start-up and maintenance.**

Failure to comply could result in death or serious injury.

⚠WARNING

UNINTENDED START

When the frequency converter is connected to AC mains, the motor may start at any time.

- **Ensure that the frequency converter, motor, and any driven equipment are in operational readiness.**

Failure to comply could result in death, serious injury, equipment, or property damage.

1. Confirm that the input voltage is balanced within 3%. If not, correct input voltage imbalance before proceeding. Repeat this procedure after the voltage correction.
2. Ensure that optional equipment wiring, if present, matches the installation application.
3. Ensure that all operator devices are in the OFF position. Panel doors should be closed or cover mounted.
4. Apply power to the unit. DO NOT start the frequency converter at this time. For units with a disconnect switch, turn to the ON position to apply power to the frequency converter.

NOTICE

If the status line at the bottom of the display reads AUTO REMOTE COASTING or *Alarm 60 External Interlock* is displayed, this indicates that the unit is ready to operate, but is missing an input signal on terminal 27.

4.3 Basic Operational Programming

4.3.1 Set-up Wizard

NOTICE

RISK OF EQUIPMENT DAMAGE

Always stop the frequency converter before using the wizard. Failure to stop the frequency converter may cause equipment damage.

The built-in *wizard* menu guides the installer through the set-up of the frequency converter in a clear and structured manner, and has been constructed with reference to the industries refrigeration engineers, to ensure that the text and language is known within that specific business area.
At start-up, the FC 103 asks the user to run the VLT® Drive Application Guide or to skip it (until it has been run, the FC 103 asks every time at start-up), thereafter in the event of power failure, the application guide is accessed via the Quick Menu screen.
If [Cancel] is pressed, the FC 103 returns to the status screen. An automatic timer cancels the wizard after 5 min. of inactivity (no keys pressed). The wizard must be re-entered via the Quick Menu when it has been run once. Answering the questions on the screens takes the user though a complete set-up for the FC 103. Most standard refrigeration applications can be set up by using this application guide. Access advanced features via the menu structure (Quick Menu or Main Menu) in the frequency converter.

The FC 103 Wizard covers all standard settings for:

- Compressors
- Single fan and pump
- Condenser fans

These applications are then further expanded to allow control of the frequency converter via its own internal PID controllers or from an external control signal.

After completing set-up, re-run the wizard or start the application

The application guide can be cancelled at any time by pressing [Back]. The application guide can be re-entered via the Quick Menu. When re-entering the application guide, either keep previous changes to the factory set-up or restore default values.

On power-up, the FC 103 launches an application guide. In the event of power failure, the application guide is accessed via the Quick Menu screen.

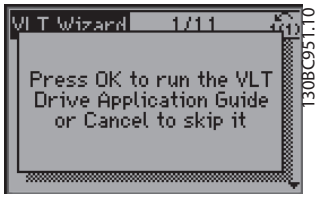

Illustration 4.1 Quick Menu Screen

If [Cancel] is pressed, the FC 103 returns to the status screen. An automatic timer cancels the wizard after 5 min. of inactivity (no keys pressed). Re-enter the wizard via the Quick Menu as described in this section.

If [OK] is pressed, the application guide starts with the following screen:

Illustration 4.2 Start-up of Application Guide

NOTICE

Numbering of steps in wizard (e.g. 1/12) can change depending on choices in the workflow.

This screen automatically changes to the first input screen of the application guide:

Illustration 4.3 Language Selection

Illustration 4.4 Application Selection

Compressor pack set-up

As an example, see screens below for a compressor pack set-up:

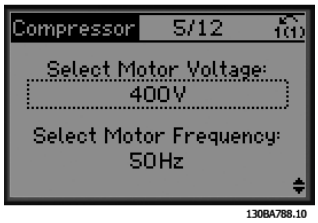

Illustration 4.5 Voltage and Frequency Set-up

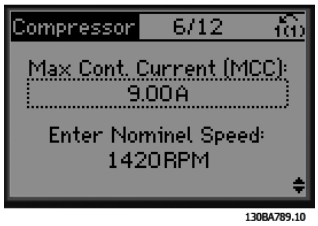

Illustration 4.6 Current and Nominal Speed Set-up

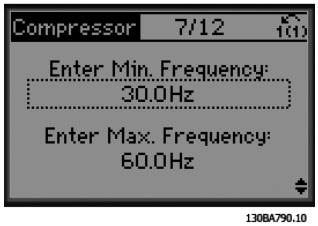

Illustration 4.7 Min. and Max. Frequency Set-up

Illustration 4.8 Min. Time between 2 Starts

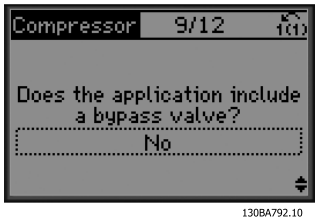

Illustration 4.9 Select with/without Bypass Valve

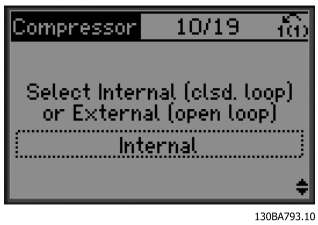

Illustration 4.10 Select Open Loop or Closed Loop

NOTICE

Internal/closed loop: The FC 103 controls the application directly using the internal PID control and needs an input from an external input, such as a temperature or other sensor, which is wired directly into the frequency converter and controls from the sensor signal.
External/open loop: The FC 103 takes its control signal from another controller (such as a pack controller), which gives the frequency converter e.g. 0-10 V, 4-20 mA or FC 103 Lon. The frequency converter changes its speed depending on this reference signal.

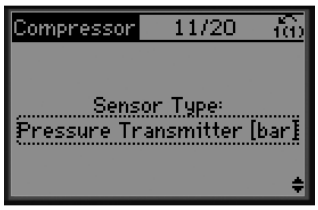

130BA794.10

Illustration 4.11 Select Sensor Type

130BA795.10

Illustration 4.12 Settings for Sensor

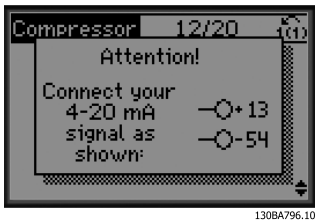

130BA796.10

Illustration 4.13 Info: 4-20 mA Feedback Chosen - Connect Accordingly

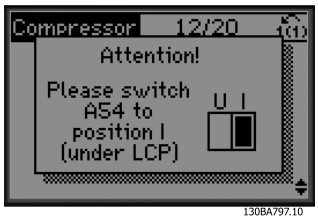

130BA797.10

Illustration 4.14 Info: Set Switch Accordingly

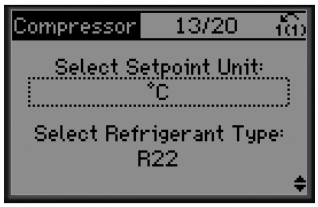

130BA798.10

Illustration 4.15 Select Unit and Conversion from Pressure

130BA799.10

Illustration 4.16 Select Fixed or Floating Setpoint

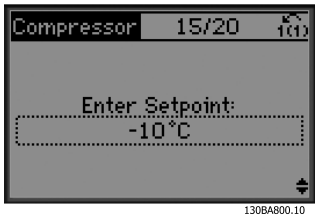

130BA800.10

Illustration 4.17 Set Setpoint

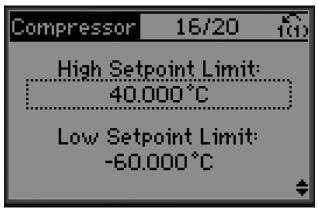

130BA801.10

Illustration 4.18 Set High/Low Limit for Setpoint

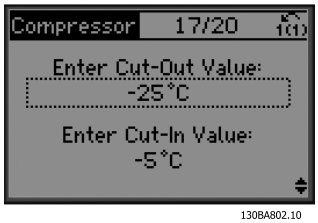

Illustration 4.19 Set Cut Out/In Value

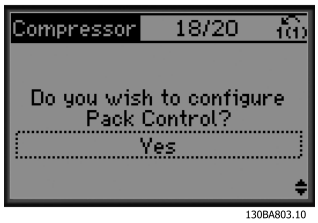

Illustration 4.20 Select Pack Control Set-up

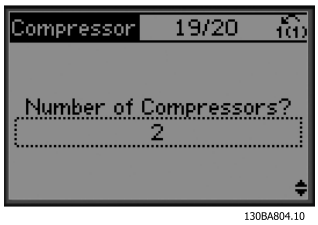

Illustration 4.21 Set Number of Compressors in Pack

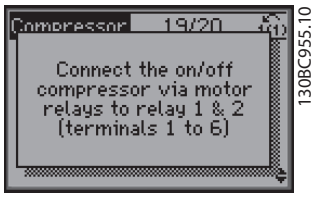

Illustration 4.22 Info: Connect Accordingly

Illustration 4.23 Info: Setup Completed

After completing set-up, re-run the wizard or start the application. Select between the following options:

- Re-run wizard
- Go to main menu
- Go to status
- Run AMA - Note this is a reduced AMA if compressor application is selected, and full AMA if single fan and pump is selected.
- If condenser fan is selected in application NO AMA can be run.
- Run application - this mode starts the frequency converter in either hand/local mode or via an external control signal if open loop is selected in an earlier screen.

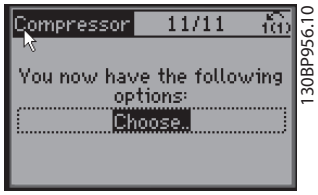

Illustration 4.24 Run Application

The application guide can be cancelled at any time by pressing [Back]. The application guide can be re-entered via the Quick Menu:

Illustration 4.25 Quick Menus

When re-entering the application guide, select between previous changes to the factory set-up or restore default values.

NOTICE

If the system requirement is to have the internal pack controller for 3 compressors plus bypass valve connected, specify FC 103 with the extra relay card (MCB 105) mounted inside the frequency converter.
Programme the bypass valve to operate from one of the extra relay outputs on the MCB 105 board.
This is needed because the standard relay outputs in the FC 103 are used to control the compressors in the pack.

4.3.2 Required Initial Frequency Converter Programming

NOTICE

If the wizard is run, ignore the following.

Frequency converters require basic operational programming before running for best performance. This requires entering motor-nameplate data for the motor being operated and the minimum and maximum motor speeds. Enter data in accordance with the following procedure. Parameter settings recommended are intended for start-up and checkout purposes. Application settings may vary. See *chapter 5 User Interface* for detailed instructions on entering data via the LCP.

Enter data with power ON, but before operating the frequency converter.

1. Press [Main Menu] twice on the LCP.
2. Press the navigation keys to scroll to parameter group *0-** Operation/Display* and press [OK].

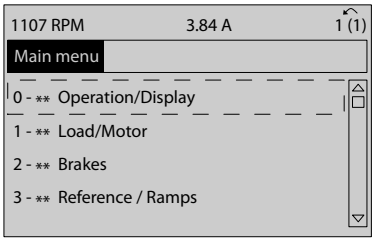

Illustration 4.26 Main Menu

3. Press the navigation keys to scroll to parameter group *0-0* Basic Settings* and press [OK].

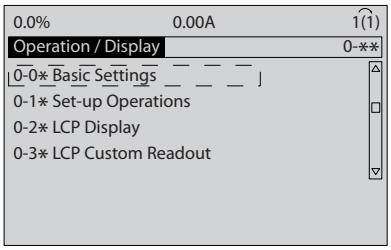

Illustration 4.27 Operation/Display

4. Press the navigation keys to scroll to *0-03 Regional Settings* and press [OK].

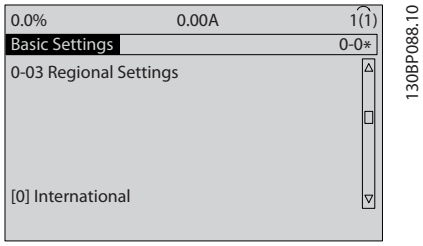

Illustration 4.28 Basic Settings

5. Press the navigation keys to select *[0] International* or *[1] North America* as appropriate and press [OK]. (This changes the default settings for a number of basic parameters. See *chapter 6.4 International/North American Default Parameter Settings* for a complete list.)
6. Press [Quick Menu] on the LCP.
7. Press the navigation keys to scroll to parameter group *Q2 Quick Setup* and press [OK].

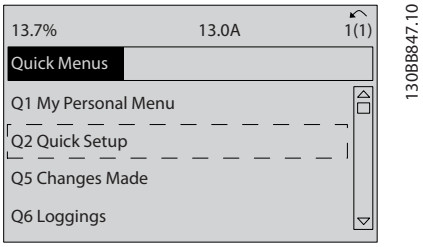

Illustration 4.29 Quick Menus

8. Select the language and press [OK].
9. A jumper wire should be in place between control terminals 12 and 27. If this is the case, leave *5-12 Terminal 27 Digital Input* at factory default. Otherwise select *No Operation*. For frequency converters with an optional Danfoss bypass, no jumper wire is required.
10. Set *3-02 Minimum Reference*
11. Set *3-03 Maximum Reference*
12. Set *3-41 Ramp 1 Ramp Up Time*
13. Set *3-42 Ramp 1 Ramp Down Time*
14. Set *3-13 Reference Site*. Linked to Hand/Auto* Local Remote.

4.4 Automatic Motor Adaptation

Automatic motor adaptation (AMA) is a test procedure, which measures the electrical characteristics of the motor to optimise compatibility between the frequency converter and the motor.

- The frequency converter builds a mathematical model of the motor for regulating output motor current. The procedure also tests the input phase balance of electrical power. It compares the motor characteristics with the data entered in parameters 1-20 to 1-25.
- The motor shaft does not turn and no harm is done to the motor while running the AMA.
- Some motors may be unable to run the complete version of the test. In that case, select *[2] Enable reduced AMA*.
- If an output filter is connected to the motor, select *Enable reduced AMA*.
- If warnings or alarms occur, see *chapter 9 Warnings and Alarms*
- Run this procedure on a cold motor for best results.

NOTICE

The AMA algorithm does not work when using PM motors.

To run AMA

1. Press [Main Menu] to access parameters.
2. Scroll to parameter group *1-** Load and Motor*.
3. Press [OK].
4. Scroll to parameter group *1-2* Motor Data*.
5. Press [OK].
6. Scroll to *1-29 Automatic Motor Adaptation (AMA)*.
7. Press [OK].
8. Select *[1] Enable complete AMA*.
9. Press [OK].
10. Follow the on-screen instructions.
11. The test runs automatically and indicates when it is complete.

4.5 Check Motor Rotation

Before running the frequency converter, check the motor rotation. The motor runs briefly at 5 Hz or the minimum frequency set in *4-12 Motor Speed Low Limit [Hz]*.

1. Press [Quick Menu].
2. Scroll to *Q2 Quick Setup*.
3. Press [OK].
4. Scroll to *1-28 Motor Rotation Check*.
5. Press [OK].
6. Scroll to *[1] Enable*.

The following text appears: *Note! Motor may run in wrong direction*.

7. Press [OK].
8. Follow the on-screen instructions.

To change the direction of rotation, remove power to the frequency converter and wait for the discharge time to elapse, see *Table 2.1*. Reverse the connection of any 2 of the 3 motor cables on the motor or frequency converter side of the connection.

4.6 Local-control Test

⚠CAUTION

MOTOR START

Ensure that the motor, system and any attached equipment are ready for start. It is the responsibility of the user to ensure safe operation under any condition. Failure to ensure that the motor, system, and any attached equipment is ready for start could result in personal injury or equipment damage.

NOTICE

The [Hand On] key provides a local start command to the frequency converter. The [Off] key provides the stop function.
When operating in local mode, [▲] and [▼] increase and decrease the speed output of the frequency converter. [◄] and [►] move the display cursor in the numeric display.

1. Press [Hand On].
2. Accelerate the frequency converter by pressing [▲] to full speed. Moving the cursor left of the decimal point provides quicker input changes.
3. Note any acceleration problems.
4. Press [Off].
5. Note any deceleration problems.

If acceleration problems were encountered:

- If warnings or alarms occur, see *chapter 9 Warnings and Alarms*.
- Check that motor data is entered correctly.
- Increase the ramp-up time in *3-41 Ramp 1 Ramp Up Time*.
- Increase the current limit in *4-18 Current Limit*.
- Increase the torque limit in *4-16 Torque Limit Motor Mode*.

If deceleration problems were encountered:

- If warnings or alarms occur, see *chapter 9 Warnings and Alarms*.
- Check that motor data is entered correctly.
- Increase the ramp-down time in *3-42 Ramp 1 Ramp Down Time*.
- Enable overvoltage control in *2-17 Over-voltage Control*.

See *chapter 5.1.1 Local Control Panel* for resetting the frequency converter after a trip.

NOTICE

***Chapter 4.2 Applying Power* and *chapter 4.3 Basic Operational Programming* conclude the procedures for applying power to the frequency converter, basic programming, set-up, and functional testing.**

4.7 System Start-up

The procedure in this section requires user-wiring and application programming to be completed. *Chapter 7 Application Examples* is intended to help with this task. Other aids to application set-up are listed in *chapter 1.2 Additional Resources*. The following procedure is recommended after application set-up by the user is completed.

⚠CAUTION

MOTOR START

Ensure that the motor, system and any attached equipment is ready for start. It is the responsibility of the user to ensure safe operation under any condition. Failure to do so could result in personal injury or equipment damage.

1. Press [Auto On].
2. Ensure that the external control functions are properly wired to the frequency converter and all programming is completed.
3. Apply an external run command.
4. Adjust the speed reference throughout the speed range.
5. Remove the external run command.
6. Note any problems.

If warnings or alarms occur, see *chapter 9 Warnings and Alarms*.

5 User Interface

5.1 Local Control Panel

The local control panel (LCP) is the combined display and keypad on the front of the unit. The LCP is the user interface to the frequency converter.

The LCP has several user functions.

- Start, stop, and control speed when in local control
- Display operational data, status, warnings and cautions
- Programming frequency converter functions
- Manually reset the frequency converter after a fault when auto-reset is inactive

An optional numeric LCP (NLCP) is also available. The NLCP operates in a manner similar to the LCP. See the *Programming Guide,* for details on use of the NLCP.

5.1.1 LCP Layout

The LCP is divided into 4 functional groups (see *Illustration 5.1*).

A. Display area

B. Display menu keys

C. Navigation keys and indicator lights (LEDs)

D. Operation keys and reset

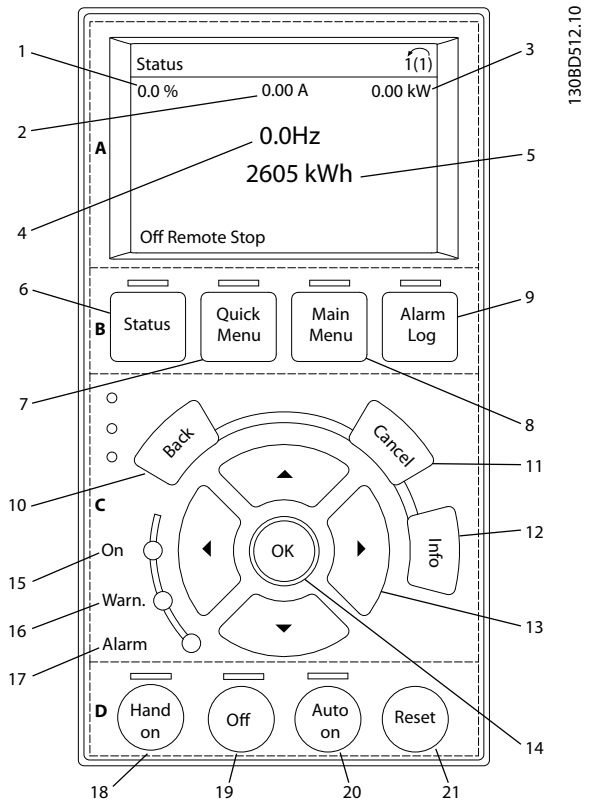

Illustration 5.1 Local Control Panel (LCP)

A. Display Area
The display area is activated when the frequency converter receives power from mains voltage, a DC bus terminal, or an external 24 V DC supply.

The information displayed on the LCP can be customised for user application. Select options in the Quick Menu *Q3-13 Display Settings*.

Callout	Display	Parameter number	Default setting
1	1.1	0-20	Reference %
2	1.2	0-21	Motor current
3	1.3	0-22	Power [kW]
4	2	0-23	Frequency
5	3	0-24	kWh counter

Table 5.1 Legend to *Illustration 5.1*, Display Area

B. Display Menu Keys

Menu keys are used for menu access for parameter set-up, toggling through status display modes during normal operation, and viewing fault log data.

Callout	Key	Function
6	Status	Shows operational information.
7	Quick Menu	Allows access to programming parameters for initial set-up instructions and many detailed application instructions.
8	Main Menu	Allows access to all programming parameters.
9	Alarm Log	Displays a list of current warnings, the last 10 alarms, and the maintenance log.

Table 5.2 Legend to *Illustration 5.1*, Display Menu Keys

C. Navigation Keys and Indicator Lights (LEDs)

Navigation keys are used for programming functions and moving the display cursor. The navigation keys also provide speed control in local (hand) operation. There are also 3 frequency converter status indicator lights in this area.

Callout	Key	Function
10	Back	Reverts to the previous step or list in the menu structure.
11	Cancel	Cancels the last change or command as long as the display mode has not changed.
12	Info	Press for a definition of the function being displayed.
13	Navigation keys	Press to move between items in the menu.
14	OK	Press to access parameter groups or to enable a choice.

Table 5.3 Legend to *Illustration 5.1*, Navigation Keys

Callout	Indicator	Light	Function
15	ON	Green	The ON light activates when the frequency converter receives power from mains voltage, a DC bus terminal, or an external 24 V supply.
16	WARN	Yellow	When a warning is issued, the yellow WARN light comes on and text appears in the display area identifying the problem.
17	ALARM	Red	A fault condition causes the red alarm light to flash and an alarm text is displayed.

Table 5.4 Legend to *Illustration 5.1*, Indicator Lights (LEDs)

D. Operation Keys and Reset

Operation keys are located at the bottom of the LCP.

Callout	Key	Function
18	Hand On	Starts the frequency converter in local control. • An external stop signal by control input or serial communication overrides the local hand on.
19	Off	Stops the motor but does not remove power to the frequency converter.
20	Auto On	Puts the system in remote operational mode. • Responds to an external start command by control terminals or serial communication.
21	Reset	Resets the frequency converter manually after a fault has been cleared.

Table 5.5 Legend to *Illustration 5.1*, Operation Keys and Reset

NOTICE

The display contrast can be adjusted by pressing [Status] and [▲]/[▼] keys.

5.1.2 Setting LCP Display Values

The display area is activated when the frequency converter receives power from mains voltage, a DC bus terminal, or an external 24 V DC supply.

The information displayed on the LCP can be customised for user application.

- Each display readout has a parameter associated with it.
- Options are selected in the quick menu *Q3-13 Display Settings*.
- Display 2 has an alternate larger display option.
- The frequency converter status at the bottom line of the display is generated automatically and is not selectable.

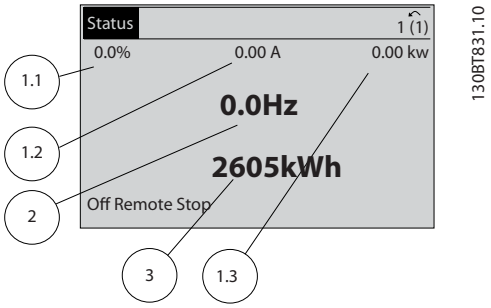

Display	Parameter number	Default setting
1.1	0-20	Reference %
1.2	0-21	Motor current
1.3	0-22	Power [kW]
2	0-23	Frequency
3	0-24	kWh counter

Illustration 5.2 Display Readouts

5.1.3 Display Menu Keys

Menu keys are used for menu access for parameter set-up, toggling through status display modes during normal operation, and viewing fault log data.

Illustration 5.3 Menu Keys

Key	Function
Status	Shows operational information. • In Auto mode, press to toggle between status readout displays. • Press repeatedly to scroll through each status display. • Press [Status] plus [▲] or [▼] to adjust the display brightness. • The symbol in the upper right corner of the display shows the direction of motor rotation and which set-up is active. This is not programmable.
Quick Menu	Allows access to programming parameters for initial set-up instructions and many detailed application instructions. • Press to access *Q2 Quick Set-up* for sequenced instructions to program the basic frequency controller set-up. • Follow the sequence of parameters as presented for the function set-up.
Main Menu	Allows access to all programming parameters. • Press twice to access top-level index. • Press once to return to the last location accessed. • Press to enter a parameter number for direct access to that parameter.
Alarm Log	Displays a list of current warnings, the last 10 alarms, and the maintenance log. • For details about the frequency converter before it entered the alarm mode, select the alarm number using the navigation keys and press [OK].

Table 5.6 Function Description Menu Keys

5

5.1.4 Navigation Keys

Navigation keys are used for programming functions and moving the display cursor. The navigation keys also provide speed control in local (hand) operation. There are also 3 frequency converter status indicator lights in this area.

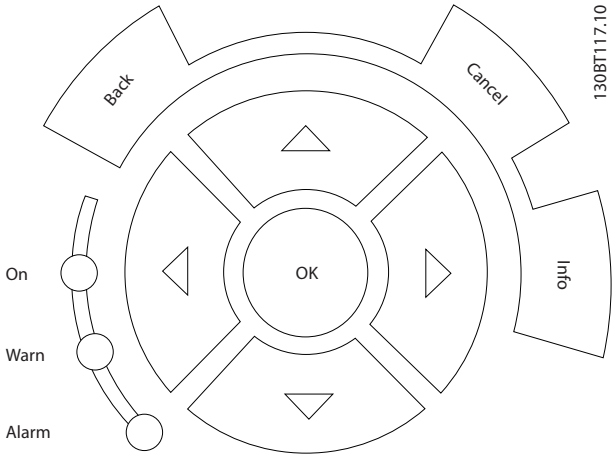

Illustration 5.4 Navigation Keys

Key	Function
Back	Reverts to the previous step or list in the menu structure.
Cancel	Cancels the last change or command as long as the display mode has not changed.
Info	Press for a definition of the function being displayed.
Navigation Keys	Press the 4 navigation keys to move between items in the menu.
OK	Press to access parameter groups or to enable a choice.

Table 5.7 Navigation Keys Functions

Light	Indicator	Function
Green	ON	The ON light activates when the frequency converter receives power from mains voltage, a DC bus terminal, or an external 24 V supply.
Yellow	WARN	When warning conditions are met, the yellow WARN light comes on and text appears in the display area identifying the problem.
Red	ALARM	A fault condition causes the red alarm light to flash and an alarm text is displayed.

Table 5.8 Indicator Lights Functions

5.1.5 Operation Keys

Operation keys are located at the bottom of the LCP.

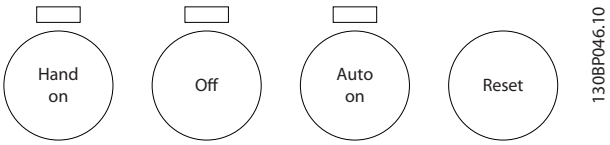

Illustration 5.5 Operation Keys

Key	Function
Hand On	Starts the frequency converter in local control. • Use the navigation keys to control frequency converter speed. • An external stop signal by control input or serial communication overrides the local hand on.
Off	Stops the motor, but does not remove power to the frequency converter.
Auto On	Puts the system in remote operational mode. • Responds to an external start command by control terminals or serial communication. • Speed reference is from an external source.
Reset	Resets the frequency converter manually after a fault has been cleared.

Table 5.9 Operation Keys Functions

5.2 Back-up and Copying Parameter Settings

Programming data is stored internally in the frequency converter.

- The data can be uploaded into the LCP memory as a storage back up.
- Once stored in the LCP, the data can be downloaded back into the frequency converter.
- Data can also be downloaded into other frequency converters by connecting the LCP into those units and downloading the stored settings. (This is a quick way to program multiple units with the same settings).
- Initialisation of the frequency converter to restore factory default settings does not change data stored in the LCP memory.

⚠WARNING

UNINTENDED START

When the frequency converter is connected to AC mains, or DC power supply, the motor may start at any time. Unintended start during programming, service or repair work can result in death, serious injury, or property damage. The motor can start by means of an external switch, a serial bus command, an input reference signal from the LCP, or after a cleared fault condition.
To prevent unintended motor start:

- **Disconnect the frequency converter from mains.**
- **Press [Off/Reset] on the LCP, before programming parameters.**
- **The frequency converter, motor, and any driven equipment must be fully wired and assembled when the frequency converter is connected to AC mains, or DC power supply.**

5.2.1 Uploading Data to the LCP

1. Press [Off] to stop the motor before uploading or downloading data.
2. Go to *0-50 LCP Copy*.
3. Press [OK].
4. Select *All to LCP*.
5. Press [OK]. A progress bar shows the uploading process.
6. Press [Hand On] or [Auto On] to return to normal operation.

5.2.2 Downloading Data from the LCP

1. Press [Off] to stop the motor before uploading or downloading data.
2. Go to *0-50 LCP Copy*.
3. Press [OK].
4. Select *All from LCP*.
5. Press [OK]. A progress bar shows the downloading process.
6. Press [Hand On] or [Auto On] to return to normal operation.

5.3 Restoring Default Settings

NOTICE

Initialisation restores the unit to factory default settings. Any programming, motor data, localisation, and monitoring records are lost. Uploading data to the LCP provides a back-up before initialisation.

Restoring the frequency converter parameter settings back to default values is done by initialisation of the frequency converter. Initialisation can be carried out via *14-22 Operation Mode* or manually.

- Initialisation using *14-22 Operation Mode* does not change frequency converter data such as operating hours, serial communication selections, personal menu settings, fault log, alarm log, and other monitoring functions.
- Using *14-22 Operation Mode* is generally recommended.
- Manual initialisation erases all motor, programming, localisation, and monitoring data and restores factory default settings.

5.3.1 Recommended Initialisation

1. Press [Main Menu] twice to access parameters.
2. Scroll to *14-22 Operation Mode*.
3. Press [OK].
4. Scroll to *Initialisation*.
5. Press [OK].
6. Remove power to the unit and wait for the display to turn off.
7. Apply power to the unit.

Default parameter settings are restored during start-up. This may take slightly longer than normal.

8. Alarm 80 is displayed.
9. Press [Reset] to return to operation mode.

5.3.2 Manual Initialisation

1. Remove power to the unit and wait for the display to turn off.
2. Press and hold [Status], [Main Menu], and [OK] at the same time and apply power to the unit.

Factory default parameter settings are restored during start-up. This may take slightly longer than normal.

Manual initialisation does not reset the following frequency converter information:

- *15-00 Operating hours*
- *15-03 Power Up's*
- *15-04 Over Temp's*
- *15-05 Over Volt's*

6 Programming

6.1 Introduction

The frequency converter is programmed for its application functions using parameters. Parameters are accessed by pressing either [Quick Menu] or [Main Menu] on the LCP. (See *chapter 5.1 Local Control Panel* for details on using the LCP function keys). Parameters may also be accessed via a PC using the MCT 10 Set-up Software (see *chapter 6.6.1 Remote Programming with MCT 10 Set-up Software*).

6

The Quick Menu is intended for initial start-up (*Q2-** Quick Set-up*) and detailed instructions for common frequency converter applications (*Q3-** Function Set-up*). Step-by-step instructions are provided. These instructions enable the user to walk through the parameters used for programming applications in their proper sequence. Data entered in a parameter can change the options available in the parameters following that entry. The Quick Menu presents easy guidelines for getting most systems up and running.

The Main Menu accesses all parameters and allows for advanced frequency converter applications.

6.2 Programming Example

Here is an example for programming the frequency converter for a common application in open loop using the Quick Menu.

- This procedure programs the frequency converter to receive a 0-10 V DC analog control signal on input terminal 53.
- The frequency converter responds by providing 6-60 Hz output to the motor proportional to the input signal (0-10 V DC=6-60 Hz).

Select the following parameters using the navigation keys to scroll to the titles and press [OK] after each action.

1. *3-15 Reference 1 Source*

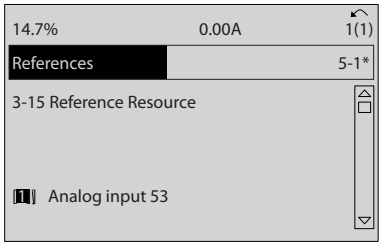

Illustration 6.1 Programming Example Step 1

2. *3-02 Minimum Reference*. Set the minimum internal frequency converter reference to 0 Hz. (This sets the minimum frequency converter speed at 0 Hz).

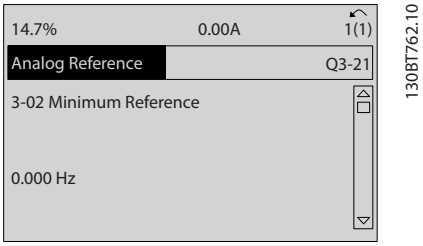

Illustration 6.2 Programming Example Step 2

3. *3-03 Maximum Reference*. Set the maximum internal frequency converter reference to 60 Hz. (This sets the maximum frequency converter speed at 60 Hz. Note that 50/60 Hz is a regional variation).

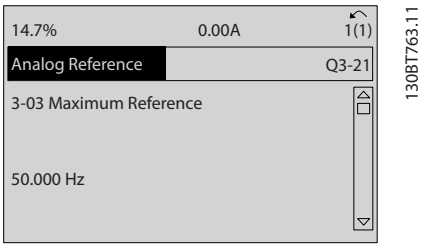

Illustration 6.3 Programming Example Step 3

4. *6-10 Terminal 53 Low Voltage*. Set the minimum external voltage reference on terminal 53 to 0 V. (This sets the minimum input signal at 0 V).

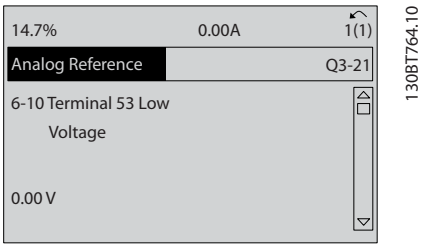

Illustration 6.4 Programming Example Step 4

5. *6-11 Terminal 53 High Voltage*. Set the maximum external voltage reference on Terminal 53 to 10 V. (This sets the maximum input signal at 10 V).

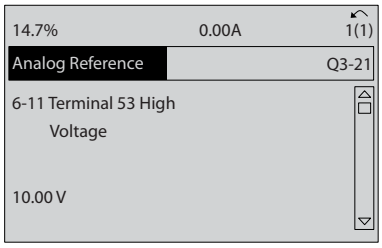

Illustration 6.5 Programming Example Step 5

6. *6-14 Terminal 53 Low Ref./Feedb. Value*. Set the minimum speed reference on terminal 53 to 6 Hz. (This tells the frequency converter that the minimum voltage received on terminal 53 (0 V) equals 6 Hz output).

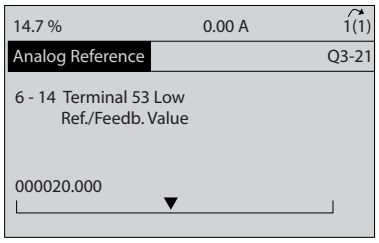

Illustration 6.6 Programming Example Step 6

7. *6-15 Terminal 53 High Ref./Feedb. Value*. Set the maximum speed reference on terminal 53 to 60 Hz. (This tells the frequency converter that the maximum voltage received on terminal 53 (10 V) equals 60 Hz output).

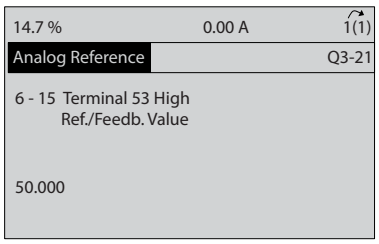

Illustration 6.7 Programming Example Step 7

With an external device providing a 0-10 V control signal connected to frequency converter terminal 53, the system is now ready for operation. Note that the scroll bar on the right in the last illustration of the display is at the bottom, indicating the procedure is complete.

Illustration 6.8 shows the wiring connections used to enable this set-up.

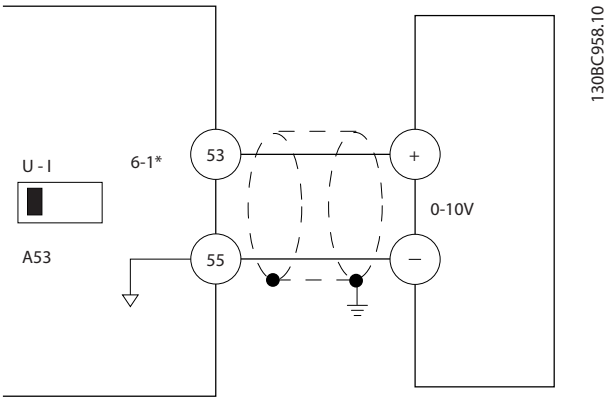

Illustration 6.8 Wiring Example for External Device Providing 0-10 V Control Signal (Frequency Converter Left, External Device Right)

6.3 Control Terminal Programming Examples

Control terminals can be programmed.

- Each terminal has specified functions it is capable of performing.
- Parameters associated with the terminal enable the function.
- For proper frequency converter functioning, the control terminals must be:
  - Wired properly
  - Programmed for the intended function
  - Receiving a signal

See *Table 6.1* for control terminal parameter number and default setting. (Default setting can change based on the selection in *0-03 Regional Settings*).

The following example shows accessing terminal 18 to see the default setting.

1. Press [Main Menu] twice, scroll to parameter group *5-** Digital In/Out Parameter Data Set* and press [OK].

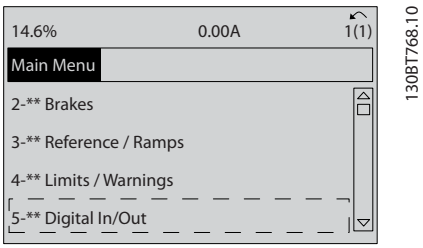

Illustration 6.9 Main Menu Display Example

6

2. Scroll to parameter group *5-1* Digital Inputs* and press [OK].

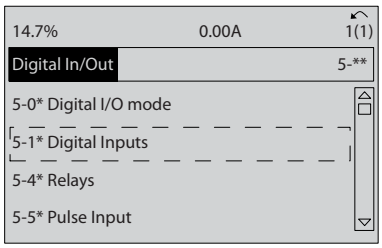

Illustration 6.10 Parameter Group Display Example

3. Scroll to *5-10 Terminal 18 Digital Input*. Press [OK] to access function choices. The default setting *Start* is shown.

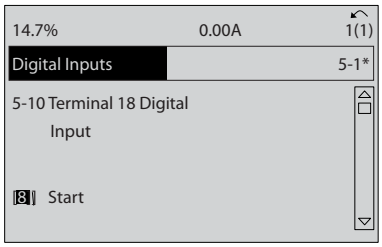

Illustration 6.11 Function Choice Display Example

6.4 International/North American Default Parameter Settings

Setting *0-03 Regional Settings* to *[0] International* or *[1] North America* changes the default settings for some parameters. *Table 6.1* lists those parameters that are effected.

Parameter	International default parameter value	North American default parameter value
0-03 Regional Settings	International	North America
0-71 Date Format	DD-MM-YYYY	MM/DD/YYYY
0-72 Time Format	24 h	12 h
1-20 Motor Power [kW]	See Note 1	See Note 1
1-21 Motor Power [HP]	See Note 2	See Note 2
1-22 Motor Voltage	230 V/400 V/575 V	208 V/460 V/575 V
1-23 Motor Frequency	50 Hz	60 Hz
3-03 Maximum Reference	50 Hz	60 Hz
3-04 Reference Function	Sum	External/Preset
4-13 Motor Speed High Limit [RPM] See Note 3	1500 RPM	1800 RPM
4-14 Motor Speed High Limit [Hz] See Note 4	50 Hz	60 Hz
4-19 Max Output Frequency	100 Hz	120 Hz
4-53 Warning Speed High	1500 RPM	1800 RPM
5-12 Terminal 27 Digital Input	Coast inverse	External interlock
5-40 Function Relay	[2] Drive ready	No alarm
6-15 Terminal 53 High Ref./Feedb. Value	50	60
6-50 Terminal 42 Output	Output frequency	Speed 4-20 mA
14-20 Reset Mode	Manual reset	Infinite auto reset
22-85 Speed at Design Point [RPM] See Note 3	1500 RPM	1800 RPM
22-86 Speed at Design Point [Hz]	50 Hz	60 Hz

Table 6.1 International/North American Default Parameter Settings

Note 1: 1-20 Motor Power [kW] is only visible when 0-03 Regional Settings is set to [0] International.
Note 2: 1-21 Motor Power [HP], is only visible when 0-03 Regional Settings is set to [1] North America.
Note 3: This parameter is only visible when 0-02 Motor Speed Unit is set to [0] RPM.
Note 4: This parameter is only visible when 0-02 Motor Speed Unit is set to [1] Hz.
Note 5: The default value depends on the number of motor poles. For a 4 poled motor, the international default value is 1500 RPM and for a 2 poled motor, 3000 RPM. The corresponding values for North America is 1800 and 3600 RPM.

Changes made to default settings are stored and available for viewing in the Quick Menu along with any programming entered into parameters.

1. Press [Quick Menu].
2. Scroll to *Q5 Changes Made* and press [OK].
3. Select *Q5-2 Since Factory Setting* to view all programming changes or *Q5-1 Last 10 Changes* for the most recent.

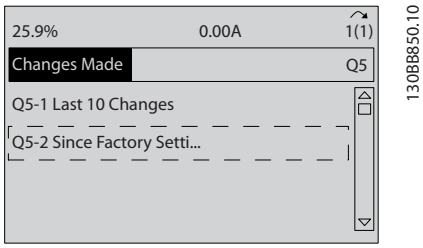

Illustration 6.12 Changes Made

6.4.1 Parameter Data Check

1. Press [Quick Menu].
2. Scroll to *Q5 Changes Made* and press [OK].

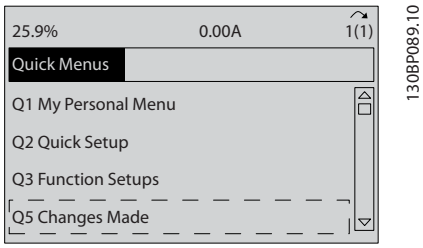

Illustration 6.13 Q5 Changes Made

3. Select *Q5-2 Since Factory Setting* to view all programming changes or *Q5-1 Last 10 Changes* for the most recent.

6.5 Parameter Menu Structure

Establishing the correct programming for applications often requires setting functions in several related parameters. These parameter settings provide the frequency converter with the system details it needs to operate properly. System details may include such things as:

- Input and output signal types
- Programming terminals
- Minimum and maximum signal ranges
- Custom displays
- Automatic restart
- Other features
- See the LCP display to view detailed parameter programming and setting options.
- Press [Info] in any menu location to view additional details for that function.
- Press and hold [Main Menu] to enter a parameter number for direct access to that parameter.
- Details for common application set-ups are provided in *chapter 7 Application Examples*.

6.5.1 Main Menu Structure

0-**	**Operation / Display**
0-0*	**Basic Settings**
0-01	Language
0-02	Motor Speed Unit
0-03	Regional Settings
0-04	Operating State at Power-up
0-05	Local Mode Unit
0-1*	**Set-up Operations**
0-10	Active Set-up
0-11	Programming Set-up
0-12	This Set-up Linked to
0-13	Readout: Linked Set-ups
0-14	Readout: Prog. Set-ups / Channel
0-2*	**LCP Display**
0-20	Display Line 1.1 Small
0-21	Display Line 1.2 Small
0-22	Display Line 1.3 Small
0-23	Display Line 2 Large
0-24	Display Line 3 Large
0-25	My Personal Menu
0-3*	**LCP Custom Readout**
0-30	Custom Readout Unit
0-31	Custom Readout Min Value
0-32	Custom Readout Max Value
0-37	Display Text 1
0-38	Display Text 2
0-39	Display Text 3
0-4*	**LCP Keypad**
0-40	[Hand on] Key on LCP
0-41	[Off] Key on LCP
0-42	[Auto on] Key on LCP
0-43	[Reset] Key on LCP
0-5*	**Copy/Save**
0-50	LCP Copy
0-51	Set-up Copy
0-6*	**Password**
0-60	Main Menu Password
0-61	Access to Main Menu w/o Password
0-65	Personal Menu Password
0-66	Access to Personal Menu w/o Password
0-67	Bus Password Access
0-7*	**Clock Settings**
0-70	Set Date and Time
0-71	Date Format
0-72	Time Format
0-74	DST/Summertime
0-76	DST/Summertime Start
0-77	DST/Summertime End
0-79	Clock Fault
0-81	Working Days
0-82	Additional Working Days
0-83	Additional Non-Working Days
0-89	Date and Time Readout
1-**	**Load and Motor**
1-0*	**General Settings**
1-00	Configuration Mode
1-03	Torque Characteristics
1-1*	**Motor Selection**
1-10	Motor Construction
1-1*	**VVC+ PM**
1-14	Damping Gain
1-15	Low Speed Filter Time Const.
1-16	High Speed Filter Time Const.
1-17	Voltage filter time const.
1-2*	**Motor Data**
1-20	Motor Power [kW]
1-21	Motor Power [HP]
1-22	Motor Voltage
1-23	Motor Frequency
1-24	Motor Current
1-25	Motor Nominal Speed
1-26	Motor Cont. Rated Torque
1-28	Motor Rotation Check
1-29	Automatic Motor Adaptation (AMA)
1-3*	**Adv. Motor Data**
1-30	Stator Resistance (Rs)
1-31	Rotor Resistance (Rr)
1-35	Main Reactance (Xh)
1-36	Iron Loss Resistance (Rfe)
1-37	d-axis Inductance (Ld)
1-39	Motor Poles
1-40	Back EMF at 1000 RPM
1-46	Position Detection Gain
1-5*	**Load Indep. Setting**
1-50	Motor Magnetisation at Zero Speed
1-51	Min Speed Normal Magnetising [RPM]
1-52	Min Speed Normal Magnetising [Hz]
1-58	Flystart Test Pulses Current
1-59	Flystart Test Pulses Frequency
1-6*	**Load Depen. Setting**
1-60	Low Speed Load Compensation
1-61	High Speed Load Compensation
1-62	Slip Compensation
1-63	Slip Compensation Time Constant
1-64	Resonance Dampening
1-65	Resonance Dampening Time Constant
1-66	Min. Current at Low Speed
1-7*	**Start Adjustments**
1-70	PM Start Mode
1-71	Start Delay
1-72	Start Function
1-73	Flying Start
1-74	Start Speed [RPM]
1-75	Start Speed [Hz]
1-76	Start Current
1-77	Compressor Start Max Speed [RPM]
1-78	Compressor Start Max Speed [Hz]
1-79	Compressor Start Max Time to Trip
1-8*	**Stop Adjustments**
1-80	Function at Stop
1-81	Min Speed for Function at Stop [RPM]
1-82	Min Speed for Function at Stop [Hz]
1-86	Compressor Min. Speed for Trip [RPM]
1-87	Compressor Min. Speed for Trip [Hz]
1-9*	**Motor Temperature**
1-90	Motor Thermal Protection
1-91	Motor External Fan
1-93	Thermistor Source
2-**	**Brakes**
2-0*	**DC-Brake**
2-00	DC Hold/Preheat Current
2-01	DC Brake Current
2-02	DC Braking Time
2-03	DC Brake Cut In Speed [RPM]
2-04	DC Brake Cut In Speed [Hz]
2-06	Parking Current
2-07	Parking Time
2-1*	**Brake Energy Funct.**
2-10	Brake Function
2-16	AC brake Max. Current
2-17	Over-voltage Control
3-**	**Reference / Ramps**
3-0*	**Reference Limits**
3-02	Minimum Reference
3-03	Maximum Reference
3-04	Reference Function
3-1*	**References**
3-10	Preset Reference
3-11	Jog Speed [Hz]
3-13	Reference Site
3-14	Preset Relative Reference
3-15	Reference 1 Source
3-16	Reference 2 Source
3-17	Reference 3 Source
3-19	Jog Speed [RPM]
3-4*	**Ramp 1**
3-41	Ramp 1 Ramp Up Time
3-42	Ramp 1 Ramp Down Time
3-5*	**Ramp 2**
3-51	Ramp 2 Ramp Up Time
3-52	Ramp 2 Ramp Down Time
3-8*	**Other Ramps**
3-80	Jog Ramp Time
3-81	Quick Stop Ramp Time
3-82	Starting Ramp Up Time
3-9*	**Digital Pot.Meter**
3-90	Step Size
3-91	Ramp Time
3-92	Power Restore
3-93	Maximum Limit
3-94	Minimum Limit
3-95	Ramp Delay
4-**	**Limits / Warnings**
4-1*	**Motor Limits**
4-10	Motor Speed Direction
4-11	Motor Speed Low Limit [RPM]
4-12	Motor Speed Low Limit [Hz]
4-13	Motor Speed High Limit [RPM]
4-14	Motor Speed High Limit [Hz]
4-16	Torque Limit Motor Mode
4-17	Torque Limit Generator Mode
4-18	Current Limit
4-19	Max Output Frequency
4-5*	**Adj. Warnings**
4-50	Warning Current Low
4-51	Warning Current High
4-52	Warning Speed Low
4-53	Warning Speed High
4-54	Warning Reference Low
4-55	Warning Reference High
4-56	Warning Feedback Low
4-57	Warning Feedback High
4-58	Missing Motor Phase Function
4-6*	**Speed Bypass**
4-60	Bypass Speed From [RPM]
4-61	Bypass Speed From [Hz]
4-62	Bypass Speed To [RPM]
4-63	Bypass Speed To [Hz]
4-64	Semi-Auto Bypass Set-up
5-**	**Digital In/Out**
5-0*	**Digital I/O mode**
5-00	Digital I/O Mode
5-01	Terminal 27 Mode
5-02	Terminal 29 Mode
5-1*	**Digital Inputs**
5-10	Terminal 18 Digital Input
5-11	Terminal 19 Digital Input
5-12	Terminal 27 Digital Input
5-13	Terminal 29 Digital Input
5-14	Terminal 32 Digital Input
5-15	Terminal 33 Digital Input
5-16	Terminal X30/2 Digital Input
5-17	Terminal X30/3 Digital Input
5-18	Terminal X30/4 Digital Input
5-19	Terminal 37 Safe Stop
5-3*	**Digital Outputs**
5-30	Terminal 27 Digital Output
5-31	Terminal 29 Digital Output
5-32	Term X30/6 Digi Out (MCB 101)
5-33	Term X30/7 Digi Out (MCB 101)
5-4*	**Relays**
5-40	Function Relay
5-41	On Delay, Relay
5-42	Off Delay, Relay
5-5*	**Pulse Input**
5-50	Term. 29 Low Frequency
5-51	Term. 29 High Frequency
5-52	Term. 29 Low Ref./Feedb. Value
5-53	Term. 29 High Ref./Feedb. Value
5-54	Pulse Filter Time Constant #29
5-55	Term. 33 Low Frequency
5-56	Term. 33 High Frequency
5-57	Term. 33 Low Ref./Feedb. Value
5-58	Term. 33 High Ref./Feedb. Value
5-59	Pulse Filter Time Constant #33
5-6*	**Pulse Output**
5-60	Terminal 27 Pulse Output Variable
5-62	Pulse Output Max Freq #27
5-63	Terminal 29 Pulse Output Variable
5-65	Pulse Output Max Freq #29
5-66	Terminal X30/6 Pulse Output Variable
5-68	Pulse Output Max Freq #X30/6
5-8*	**I/O Options**
5-80	AHF Cap Reconnect Delay
5-9*	**Bus Controlled**
5-90	Digital & Relay Bus Control
5-93	Pulse Out #27 Bus Control
5-94	Pulse Out #27 Timeout Preset
5-95	Pulse Out #29 Bus Control
5-96	Pulse Out #29 Timeout Preset
5-97	Pulse Out #X30/6 Bus Control
5-98	Pulse Out #X30/6 Timeout Preset
6-**	**Analog In/Out**
6-0*	**Analog I/O Mode**
6-00	Live Zero Timeout Time
6-01	Live Zero Timeout Function
6-02	Fire Mode Live Zero Timeout Function
6-1*	**Analog Input 53**
6-10	Terminal 53 Low Voltage
6-11	Terminal 53 High Voltage
6-12	Terminal 53 Low Current
6-13	Terminal 53 High Current
6-14	Terminal 53 Low Ref./Feedb. Value
6-15	Terminal 53 High Ref./Feedb. Value
6-16	Terminal 53 Filter Time Constant
6-17	Terminal 53 Live Zero
6-2*	**Analog Input 54**
6-20	Terminal 54 Low Voltage
6-21	Terminal 54 High Voltage
6-22	Terminal 54 Low Current
6-23	Terminal 54 High Current
6-24	Terminal 54 Low Ref./Feedb. Value
6-25	Terminal 54 High Ref./Feedb. Value
6-26	Terminal 54 Filter Time Constant
6-27	Terminal 54 Live Zero
6-3*	**Analog Input X30/11**
6-30	Terminal X30/11 Low Voltage
6-31	Terminal X30/11 High Voltage
6-34	Term. X30/11 Low Ref./Feedb. Value
6-35	Term. X30/11 High Ref./Feedb. Value
6-36	Term. X30/11 Filter Time Constant
6-37	Term. X30/11 Live Zero
6-4*	**Analog Input X30/12**
6-40	Terminal X30/12 Low Voltage
6-41	Terminal X30/12 High Voltage
6-44	Term. X30/12 Low Ref./Feedb. Value
6-45	Term. X30/12 High Ref./Feedb. Value
6-46	Term. X30/12 Filter Time Constant
6-47	Term. X30/12 Live Zero
6-5*	**Analog Output 42**
6-50	Terminal 42 Output
6-51	Terminal 42 Output Min Scale
6-52	Terminal 42 Output Max Scale
6-53	Terminal 42 Output Bus Control
6-54	Terminal 42 Output Timeout Preset
6-6*	**Analog Output X30/8**
6-60	Terminal X30/8 Output
6-61	Terminal X30/8 Min. Scale
6-62	Terminal X30/8 Max. Scale
6-63	Terminal X30/8 Output Bus Control

6-64	Terminal X30/8 Output Timeout Preset
8-**	**Comm. and Options**
8-0*	**General Settings**
8-01	Control Site
8-02	Control Source
8-03	Control Timeout Time
8-04	Control Timeout Function
8-05	End-of-Timeout Function
8-06	Reset Control Timeout
8-07	Diagnosis Trigger
8-1*	**Control Settings**
8-10	Control Profile
8-13	Configurable Status Word STW
8-3*	**FC Port Settings**
8-30	Protocol
8-31	Address
8-32	Baud Rate
8-33	Parity / Stop Bits
8-35	Minimum Response Delay
8-36	Maximum Response Delay
8-37	Maximum Inter-Char Delay
8-4*	**Adv. Protocol Set.**
8-40	Telegram Selection
8-42	PCD Write Configuration
8-43	PCD Read Configuration
8-45	BTM Transaction Command
8-46	BTM Transaction Status
8-47	BTM Timeout
8-5*	**Digital/Bus**
8-50	Coasting Select
8-52	DC Brake Select
8-53	Start Select
8-54	Reversing Select
8-55	Set-up Select
8-56	Preset Reference Select
8-8*	**FC Port Diagnostics**
8-80	Bus Message Count
8-81	Bus Error Count
8-82	Slave Message Count
8-83	Slave Error Count
8-9*	**Bus Jog / Feedback**
8-90	Bus Jog 1 Speed
8-91	Bus Jog 2 Speed
8-94	Bus Feedback 1
8-95	Bus Feedback 2
8-96	Bus Feedback 3
9-**	**PROFIdrive**
9-00	Setpoint
9-07	Actual Value
9-15	PCD Write Configuration
9-16	PCD Read Configuration
9-18	Node Address
9-22	Telegram Selection
9-23	Parameters for Signals
9-27	Parameter Edit
9-28	Process Control
9-44	Fault Message Counter
9-45	Fault Code
9-47	Fault Number
9-52	Fault Situation Counter
9-53	Profibus Warning Word
9-63	Actual Baud Rate
9-64	Device Identification
9-65	Profile Number
9-67	Control Word 1
9-68	Status Word 1
9-70	Programming Set-up
9-71	Profibus Save Data Values
9-72	ProfibusDriveReset
9-75	DO Identification
9-80	Defined Parameters (1)
9-81	Defined Parameters (2)
9-82	Defined Parameters (3)
9-83	Defined Parameters (4)
9-84	Defined Parameters (5)
9-90	Changed Parameters (1)
9-91	Changed Parameters (2)
9-92	Changed Parameters (3)
9-93	Changed Parameters (4)
9-94	Changed Parameters (5)
9-99	Profibus Revision Counter
11-**	**LonWorks**
11-2*	**LON Param. Access**
11-21	Store Data Values
11-9*	**AK LonWorks**
11-90	VLT Network Address
11-91	AK Service Pin
11-98	Alarm Text
11-99	Alarm Status
12-**	**Ethernet**
12-0*	**IP Settings**
12-00	IP Address Assignment
12-01	IP Address
12-02	Subnet Mask
12-03	Default Gateway
12-04	DHCP Server
12-05	Lease Expires
12-06	Name Servers
12-07	Domain Name
12-08	Host Name
12-09	Physical Address
12-1*	**Ethernet Link Parameters**
12-10	Link Status
12-11	Link Duration
12-12	Auto Negotiation
12-13	Link Speed
12-14	Link Duplex
12-8*	**Other Ethernet Services**
12-80	FTP Server
12-81	HTTP Server
12-82	SMTP Service
12-89	Transparent Socket Channel Port
12-9*	**Advanced Ethernet Services**
12-90	Cable Diagnostic
12-91	Auto Cross Over
12-92	IGMP Snooping
12-93	Cable Error Length
12-94	Broadcast Storm Protection
12-95	Broadcast Storm Filter
12-96	Port Config
12-98	Interface Counters
12-99	Media Counters
13-**	**Smart Logic**
13-0*	**SLC Settings**
13-00	SL Controller Mode
13-01	Start Event
13-02	Stop Event
13-03	Reset SLC
13-1*	**Comparators**
13-10	Comparator Operand
13-11	Comparator Operator
13-12	Comparator Value
13-2*	**Timers**
13-20	SL Controller Timer
13-4*	**Logic Rules**
13-40	Logic Rule Boolean 1
13-41	Logic Rule Operator 1
13-42	Logic Rule Boolean 2
13-43	Logic Rule Operator 2
13-44	Logic Rule Boolean 3
13-5*	**States**
13-51	SL Controller Event
13-52	SL Controller Action
14-**	**Special Functions**
14-0*	**Inverter Switching**
14-00	Switching Pattern
14-01	Switching Frequency
14-03	Overmodulation
14-04	PWM Random
14-1*	**Mains On/Off**
14-10	Mains Failure
14-11	Mains Voltage at Mains Fault
14-12	Function at Mains Imbalance
14-2*	**Reset Functions**
14-20	Reset Mode
14-21	Automatic Restart Time
14-22	Operation Mode
14-23	Typecode Setting
14-25	Trip Delay at Torque Limit
14-26	Trip Delay at Inverter Fault
14-28	Production Settings
14-29	Service Code
14-3*	**Current Limit Ctrl.**
14-30	Current Lim Ctrl, Proportional Gain
14-31	Current Lim Ctrl, Integration Time
14-32	Current Lim Ctrl, Filter Time
14-4*	**Energy Optimising**
14-40	VT Level
14-41	AEO Minimum Magnetisation
14-42	Minimum AEO Frequency
14-43	Motor Cosphi
14-5*	**Environment**
14-50	RFI Filter
14-51	DC Link Compensation
14-52	Fan Control
14-53	Fan Monitor
14-55	Output Filter
14-59	Actual Number of Inverter Units
14-6*	**Auto Derate**
14-60	Function at Over Temperature
14-61	Function at Inverter Overload
14-62	Inv. Overload Derate Current
15-**	**Drive Information**
15-0*	**Operating Data**
15-00	Operating hours
15-01	Running Hours
15-02	kWh Counter
15-03	Power Up's
15-04	Over Temp's
15-05	Over Volt's
15-06	Reset kWh Counter
15-07	Reset Running Hours Counter
15-08	Number of Starts
15-1*	**Data Log Settings**
15-10	Logging Source
15-11	Logging Interval
15-12	Trigger Event
15-13	Logging Mode
15-14	Samples Before Trigger
15-2*	**Historic Log**
15-20	Historic Log: Event
15-21	Historic Log: Value
15-22	Historic Log: Time
15-23	Historic log: Date and Time
15-3*	**Alarm Log**
15-30	Alarm Log: Error Code
15-31	Alarm Log: Value
15-32	Alarm Log: Time
15-33	Alarm Log: Date and Time
15-34	Alarm Log: Status
15-35	Alarm Log: Alarm Text
15-4*	**Drive Identification**
15-40	FC Type
15-41	Power Section
15-42	Voltage
15-43	Software Version
15-44	Ordered Typecode String
15-45	Actual Typecode String
15-46	Frequency Converter Ordering No
15-47	Power Card Ordering No
15-48	LCP Id No
15-49	SW ID Control Card
15-50	SW ID Power Card
15-51	Frequency Converter Serial Number
15-53	Power Card Serial Number
15-6*	**Option Ident**
15-60	Option Mounted
15-61	Option SW Version
15-62	Option Ordering No
15-63	Option Serial No
15-70	Option in Slot A
15-71	Slot A Option SW Version
15-72	Option in Slot B
15-73	Slot B Option SW Version
15-74	Option in Slot C0/E0
15-75	Slot C0/E0 Option SW Version
15-76	Option in Slot C1/E1
15-77	Slot C1/E1 Option SW Version
15-8*	**Operating Data II**
15-80	Fan Running Hours
15-81	Preset Fan Running Hours
15-9*	**Parameter Info**
15-92	Defined Parameters
15-93	Modified Parameters
15-99	Parameter Metadata
16-**	**Data Readouts**
16-0*	**General Status**
16-00	Control Word
16-01	Reference [Unit]
16-02	Reference [%]
16-03	Status Word
16-05	Main Actual Value [%]
16-09	Custom Readout
16-1*	**Motor Status**
16-10	Power [kW]
16-11	Power [hp]
16-12	Motor Voltage
16-13	Frequency
16-14	Motor current
16-15	Frequency [%]
16-16	Torque [Nm]
16-17	Speed [RPM]
16-18	Motor Thermal
16-22	Torque [%]
16-3*	**Drive Status**
16-30	DC Link Voltage
16-32	Brake Energy /s
16-33	Brake Energy /2 min
16-34	Heatsink Temp.
16-35	Inverter Thermal
16-36	Inv. Nom. Current
16-37	Inv. Max. Current
16-38	SL Controller State
16-39	Control Card Temp.
16-40	Logging Buffer Full
16-41	LCP Bottom Statusline
16-49	Current Fault Source
16-5*	**Ref. & Feedb.**
16-50	External Reference
16-52	Feedback[Unit]
16-53	Digi Pot Reference
16-54	Feedback 1 [Unit]
16-55	Feedback 2 [Unit]
16-56	Feedback 3 [Unit]
16-6*	**Inputs & Outputs**
16-60	Digital Input
16-61	Terminal 53 Switch Setting
16-62	Analog Input 53
16-63	Terminal 54 Switch Setting
16-64	Analog Input 54
16-65	Analog Output 42 [mA]
16-66	Digital Output [bin]
16-67	Pulse Input #29 [Hz]
16-68	Pulse Input #33 [Hz]
16-69	Pulse Output #27 [Hz]

16-70 Pulse Output #29 [Hz]
16-71 Relay Output [bin]
16-72 Counter A
16-73 Counter B
16-75 Analog In X30/11
16-76 Analog In X30/12
16-77 Analog Out X30/8 [mA]
16-8* Fieldbus & FC Port
16-80 Fieldbus CTW 1
16-82 Fieldbus REF 1
16-84 Comm. Option STW
16-85 FC Port CTW 1
16-86 FC Port REF 1
16-9* Diagnosis Readouts
16-90 Alarm Word
16-91 Alarm Word 2
16-92 Warning Word
16-93 Warning Word 2
16-94 Ext. Status Word
16-95 Ext. Status Word 2
16-96 Maintenance Word
18- Info and Readouts**
18-0* Maintenance Log
18-00 Maintenance Log: Item
18-01 Maintenance Log: Action
18-02 Maintenance Log: Time
18-03 Maintenance Log: Date and Time
18-1* Fire Mode Log
18-10 FireMode Log:Event
18-11 Fire Mode Log: Time
18-12 Fire Mode Log: Date and Time
18-3* Inputs & Outputs
18-30 Analog Input X42/1
18-31 Analog Input X42/3
18-32 Analog Input X42/5
18-33 Analog Out X42/7 [V]
18-34 Analog Out X42/9 [V]
18-35 Analog Out X42/11 [V]
20- Drive Closed Loop**
20-0* Feedback
20-00 Feedback 1 Source
20-01 Feedback 1 Conversion
20-02 Feedback 1 Source Unit
20-03 Feedback 2 Source
20-04 Feedback 2 Conversion
20-05 Feedback 2 Source Unit
20-06 Feedback 3 Source
20-07 Feedback 3 Conversion
20-08 Feedback 3 Source Unit
20-12 Reference/Feedback Unit
20-2* Feedback/Setpoint
20-20 Feedback Function
20-21 Setpoint 1
20-22 Setpoint 2
20-23 Setpoint 3
20-25 Setpoint Type
20-3* Feedback Adv. Conv
20-30 Refrigerant
20-31 User Defined Refrigerant A1
20-32 User Defined Refrigerant A2
20-33 User Defined Refrigerant A3
20-4* Thermostat/Pressostat
20-40 Thermostat/Pressostat Function
20-41 Cut-out Value
20-42 Cut-in Value
20-7* PID Autotuning
20-70 Closed Loop Type
20-71 PID Performance
20-72 PID Output Change
20-73 Minimum Feedback Level
20-74 Maximum Feedback Level
20-79 PID Autotuning
20-8* PID Basic Settings
20-81 PID Normal/ Inverse Control
20-82 PID Start Speed [RPM]
20-83 PID Start Speed [Hz]
20-84 On Reference Bandwidth
20-9* PID Controller
20-91 PID Anti Windup
20-93 PID Proportional Gain
20-94 PID Integral Time
20-95 PID Differentiation Time
20-96 PID Diff. Gain Limit
21- Ext. Closed Loop**
21-0* Ext. CL Autotuning
21-00 Closed Loop Type
21-01 PID Performance
21-02 PID Output Change
21-03 Minimum Feedback Level
21-04 Maximum Feedback Level
21-09 PID Autotuning
21-1* Ext. CL 1 Ref./Fb.
21-10 Ext. 1 Ref./Feedback Unit
21-11 Ext. 1 Minimum Reference
21-12 Ext. 1 Maximum Reference
21-13 Ext. 1 Reference Source
21-14 Ext. 1 Feedback Source
21-15 Ext. 1 Setpoint
21-17 Ext. 1 Reference [Unit]
21-18 Ext. 1 Feedback [Unit]
21-19 Ext. 1 Output [%]
21-2* Ext. CL 1 PID
21-20 Ext. 1 Normal/Inverse Control
21-21 Ext. 1 Proportional Gain
21-22 Ext. 1 Integral Time
21-23 Ext. 1 Differentation Time
21-24 Ext. 1 Dif. Gain Limit
21-3* Ext. CL 2 Ref./Fb.
21-30 Ext. 2 Ref./Feedback Unit
21-31 Ext. 2 Minimum Reference
21-32 Ext. 2 Maximum Reference
21-33 Ext. 2 Reference Source
21-34 Ext. 2 Feedback Source
21-35 Ext. 2 Setpoint
21-37 Ext. 2 Reference [Unit]
21-38 Ext. 2 Feedback [Unit]
21-39 Ext. 2 Output [%]
21-4* Ext. CL 2 PID
21-40 Ext. 2 Normal/Inverse Control
21-41 Ext. 2 Proportional Gain
21-42 Ext. 2 Integral Time
21-43 Ext. 2 Differentation Time
21-44 Ext. 2 Dif. Gain Limit
21-5* Ext. CL 3 Ref./Fb.
21-50 Ext. 3 Ref./Feedback Unit
21-51 Ext. 3 Minimum Reference
21-52 Ext. 3 Maximum Reference
21-53 Ext. 3 Reference Source
21-54 Ext. 3 Feedback Source
21-55 Ext. 3 Setpoint
21-57 Ext. 3 Reference [Unit]
21-58 Ext. 3 Feedback [Unit]
21-59 Ext. 3 Output [%]
21-6* Ext. CL 3 PID
21-60 Ext. 3 Normal/Inverse Control
21-61 Ext. 3 Proportional Gain
21-62 Ext. 3 Integral Time
21-63 Ext. 3 Differentation Time
21-64 Ext. 3 Dif. Gain Limit
22- Appl. Functions**
22-0* Miscellaneous
22-00 External Interlock Delay
22-2* No-Flow Detection
22-20 Low Power Auto Set-up
22-21 Low Power Detection
22-22 Low Speed Detection
22-23 No-Flow Function
22-24 No-Flow Delay
22-26 Dry Pump Function
22-27 Dry Pump Delay
22-3* No-Flow Power Tuning
22-30 No-Flow Power
22-31 Power Correction Factor
22-32 Low Speed [RPM]
22-33 Low Speed [Hz]
22-34 Low Speed Power [kW]
22-35 Low Speed Power [HP]
22-36 High Speed [RPM]
22-37 High Speed [Hz]
22-38 High Speed Power [kW]
22-39 High Speed Power [HP]
22-4* Sleep Mode
22-40 Minimum Run Time
22-41 Minimum Sleep Time
22-42 Wake-up Speed [RPM]
22-43 Wake-up Speed [Hz]
22-44 Wake-up Ref./FB Difference
22-45 Setpoint Boost
22-46 Maximum Boost Time
22-5* End of Curve
22-50 End of Curve Function
22-51 End of Curve Delay
22-6* Broken Belt Detection
22-60 Broken Belt Function
22-61 Broken Belt Torque
22-62 Broken Belt Delay
22-7* Short Cycle Protection
22-75 Short Cycle Protection
22-76 Interval between Starts
22-77 Minimum Run Time
22-78 Minimum Run Time Override
22-79 Minimum Run Time Override Value
22-8* Flow Compensation
22-80 Flow Compensation
22-81 Square-linear Curve Approximation
22-82 Work Point Calculation
22-83 Speed at No-Flow [RPM]
22-84 Speed at No-Flow [Hz]
22-85 Speed at Design Point [RPM]
22-86 Speed at Design Point [Hz]
22-87 Pressure at No-Flow Speed
22-88 Pressure at Rated Speed
22-89 Flow at Design Point
22-90 Flow at Rated Speed
23- Time-based Functions**
23-0* Timed Actions
23-00 ON Time
23-01 ON Action
23-02 OFF Time
23-03 OFF Action
23-04 Occurrence
23-1* Maintenance
23-10 Maintenance Item
23-11 Maintenance Action
23-12 Maintenance Time Base
23-13 Maintenance Time Interval
23-14 Maintenance Date and Time
23-1* Maintenance Reset
23-15 Reset Maintenance Word
23-16 Maintenance Text
23-5* Energy Log
23-50 Energy Log Resolution
23-51 Period Start
23-53 Energy Log
23-54 Reset Energy Log
23-6* Trending
23-60 Trend Variable
23-61 Continuous Bin Data
23-62 Timed Bin Data
23-63 Timed Period Start
23-64 Timed Period Stop
23-65 Minimum Bin Value
23-66 Reset Continuous Bin Data
23-67 Reset Timed Bin Data
23-8* Payback Counter
23-80 Power Reference Factor
23-81 Energy Cost
23-82 Investment
23-83 Energy Savings
23-84 Cost Savings
25- Pack Controller**
25-0* System Settings
25-00 Pack Controller
25-04 Compressor Cycling
25-06 Number of Compressors
25-2* Zone Settings
25-20 Neutral Zone [unit]
25-21 + Zone [unit]
25-22 - Zone [unit]
25-23 Fixed Speed neutral Zone [unit]
25-24 + Zone Delay
25-25 - Zone Delay
25-26 ++ Zone Delay
25-27 -- Zone Delay
25-3* Staging Functions
25-30 Destage At No-Flow
25-31 Stage Function
25-32 Stage Function Time
25-33 Destage Function
25-34 Destage Function Time
25-4* Staging Settings
25-42 Staging Threshold
25-43 Destaging Threshold
25-44 Staging Speed [RPM]
25-45 Staging Speed [Hz]
25-46 Destaging Speed [RPM]
25-47 Destaging Speed [Hz]
25-8* Status
25-80 Pack Status
25-81 Compressor Status
25-82 Lead Compressor
25-83 Relay Status
25-84 Compressor ON Time
25-85 Relay ON Time
25-86 Reset Relay Counters
25-87 Inverse Interlock
25-88 Pack capacity [%]
25-9* Service
25-90 Compressor Interlock
25-91 Manual Alternation
26- Analog I/O Option**
26-0* Analog I/O Mode
26-00 Terminal X42/1 Mode
26-01 Terminal X42/3 Mode
26-02 Terminal X42/5 Mode
26-1* Analog Input X42/1
26-10 Terminal X42/1 Low Voltage
26-11 Terminal X42/1 High Voltage
26-14 Term. X42/1 Low Ref./Feedb. Value
26-15 Term. X42/1 High Ref./Feedb. Value
26-16 Term. X42/1 Filter Time Constant
26-17 Term. X42/1 Live Zero
26-2* Analog Input X42/3
26-20 Terminal X42/3 Low Voltage
26-21 Terminal X42/3 High Voltage
26-24 Term. X42/3 Low Ref./Feedb. Value
26-25 Term. X42/3 High Ref./Feedb. Value
26-26 Term. X42/3 Filter Time Constant
26-27 Term. X42/3 Live Zero
26-3* Analog Input X42/5
26-30 Terminal X42/5 Low Voltage
26-31 Terminal X42/5 High Voltage
26-34 Term. X42/5 Low Ref./Feedb. Value
26-35 Term. X42/5 High Ref./Feedb. Value
26-36 Term. X42/5 Filter Time Constant

26-37	Term. X42/5 Live Zero
26-4*	**Analog Out X42/7**
26-40	Terminal X42/7 Output
26-41	Terminal X42/7 Min. Scale
26-42	Terminal X42/7 Max. Scale
26-43	Terminal X42/7 Bus Control
26-44	Terminal X42/7 Timeout Preset
26-5*	**Analog Out X42/9**
26-50	Terminal X42/9 Output
26-51	Terminal X42/9 Min. Scale
26-52	Terminal X42/9 Max. Scale
26-53	Terminal X42/9 Bus Control
26-54	Terminal X42/9 Timeout Preset
26-6*	**Analog Out X42/11**
26-60	Terminal X42/11 Output
26-61	Terminal X42/11 Min. Scale
26-62	Terminal X42/11 Max. Scale
26-63	Terminal X42/11 Bus Control
26-64	Terminal X42/11 Timeout Preset
28-**	**Compressor Functions**
28-1*	**Oil Return Management**
28-10	Oil Return Management
28-11	Low Speed Running Time
28-12	Fixed Boost Interval
28-13	Boost Duration
28-2*	**Discharge Temperature Monitor**
28-20	Temperature Source
28-21	Temperature Unit
28-24	Warning Level
28-25	Warning Action
28-26	Emergency Level
28-27	Discharge Temperature
28-7*	**Day/Night Settings**
28-71	Day/Night Bus Indicator
28-72	Enable Day/Night Via Bus
28-73	Night Setback
28-74	Night Speed Drop [RPM]
28-75	Night Speed Drop Override
28-76	Night Speed Drop [Hz]
28-8*	**P0 Optimization**
28-81	dP0 Offset
28-82	P0
28-83	P0 Setpoint
28-84	P0 Reference
28-85	P0 Minimum Reference
28-86	P0 Maximum Reference
28-87	Most Loaded Controller
28-9*	**Injection Control**
28-90	Injection On
28-91	Delayed Compressor Start
30-**	**Special Features**
30-2*	**Adv. Start Adjust**
30-22	Locked Rotor Protection
30-23	Locked Rotor Detection Time [s]
31-**	**Bypass Option**
31-00	Bypass Mode
31-01	Bypass Start Time Delay
31-02	Bypass Trip Time Delay
31-03	Test Mode Activation
31-10	Bypass Status Word
31-11	Bypass Running Hours
31-19	Remote Bypass Activation

6.6 Remote Programming with MCT 10 Set-up Software

Danfoss has a software program available for developing, storing, and transferring frequency converter programming. The MCT 10 Set-up Software allows the user to connect a PC to the frequency converter and perform live programming rather than using the LCP. Additionally, all frequency converter programming can be done off-line and simply downloaded to the frequency converter. Or the entire frequency converter profile can be loaded onto the PC for back-up storage or analysis.

The USB connector or RS-485 terminal are available for connecting the PC to the frequency converter.

7 Application Examples

7.1 Introduction

The examples in this section are intended as a quick reference for common applications.

- Parameter settings are the regional default values unless otherwise indicated (selected in *0-03 Regional Settings*).
- Parameters associated with the terminals and their settings are shown next to the drawings.
- Where switch settings for analog terminals A53 or A54 are required, these are also shown.

7.2 Application Examples

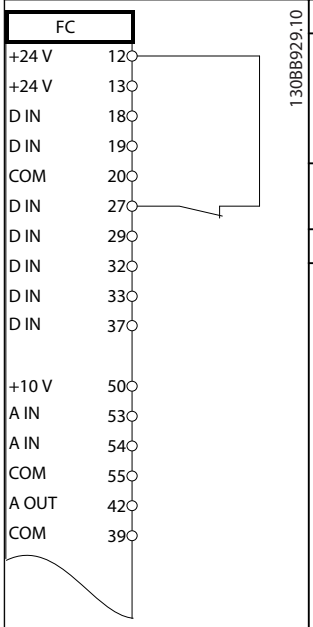

Parameters	
Function	**Setting**
1-29 Automatic Motor Adaptation (AMA)	[1] Enable complete AMA
5-12 Terminal 27 Digital Input	[2]* Coast inverse
* = Default Value	
Notes/comments: Parameter group 1-2* must be set according to motor. D IN 37 is an option.	

Table 7.1 AMA with T27 Connected

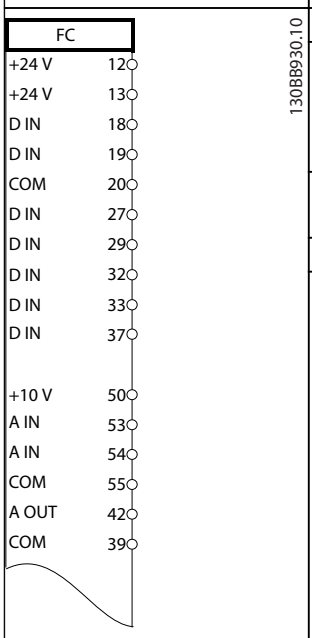

Parameters	
Function	**Setting**
1-29 Automatic Motor Adaptation (AMA)	[1] Enable complete AMA
5-12 Terminal 27 Digital Input	[0] No operation
* = Default Value	
Notes/comments: Parameter group 1-2* must be set according to motor. D IN 37 is an option.	

Table 7.2 AMA without T27 Connected

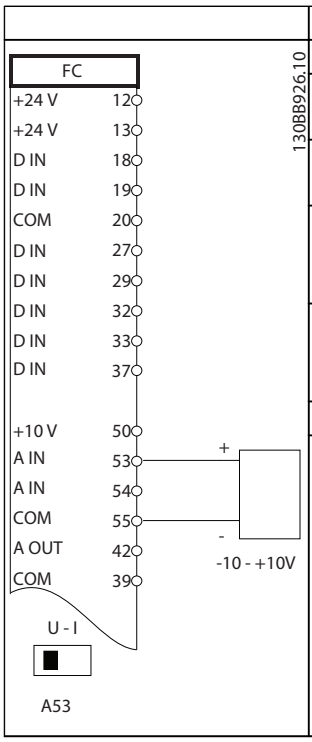

Parameters	
Function	**Setting**
6-10 Terminal 53 Low Voltage	0.07 V*
6-11 Terminal 53 High Voltage	10 V*
6-14 Terminal 53 Low Ref./Feedb. Value	0 Hz
6-15 Terminal 53 High Ref./Feedb. Value	50 Hz
* = Default Value	
Notes/comments: D IN 37 is an option.	

Table 7.3 Analog Speed Reference (Voltage)

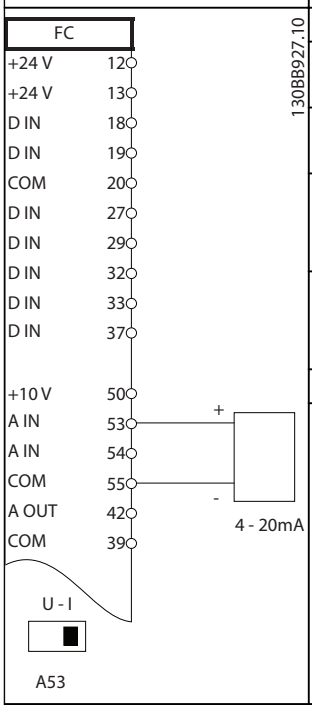

Parameters	
Function	**Setting**
6-12 Terminal 53 Low Current	4 mA*
6-13 Terminal 53 High Current	20 mA*
6-14 Terminal 53 Low Ref./Feedb. Value	0 Hz
6-15 Terminal 53 High Ref./Feedb. Value	50 Hz
* = Default Value	
Notes/comments: D IN 37 is an option.	

Table 7.4 Analog Speed Reference (Current)

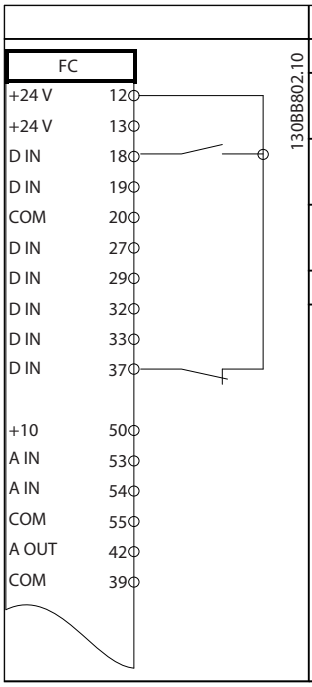

Parameters	
Function	**Setting**
5-10 Terminal 18 Digital Input	[8] Start*
5-12 Terminal 27 Digital Input	[0] No operation
5-19 Terminal 37 Safe Stop	[1] Safe Stop Alarm
* = Default Value	
Notes/comments: If *5-12 Terminal 27 Digital Input* is set to [0] *No operation*, a jumper wire to terminal 27 is not needed. D IN 37 is an option.	

Table 7.5 Start/Stop Command with Safe Torque Off Option

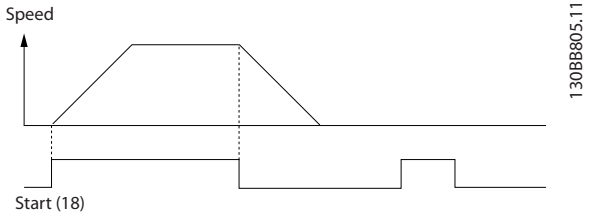

Illustration 7.1 Start/Stop Command with Safe Torque Off

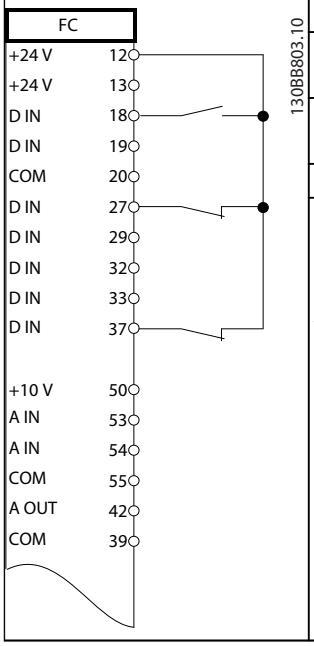

Parameters	
Function	**Setting**
5-10 Terminal 18 Digital Input	[9] Latched Start
5-12 Terminal 27 Digital Input	[6] Stop Inverse
* = Default Value	
Notes/comments: If *5-12 Terminal 27 Digital Input* is set to [0] *No operation*, a jumper wire to terminal 27 is not needed. D IN 37 is an option.	

Table 7.6 Pulse Start/Stop

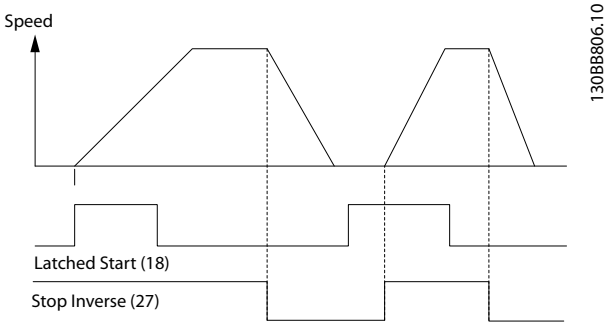

Illustration 7.2 Latched Start/Stop Inverse

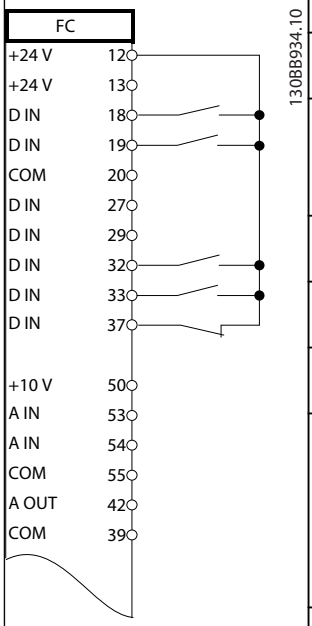

Parameters	
Function	**Setting**
5-10 Terminal 18 Digital Input	[8] Start
5-11 Terminal 19 Digital Input	[10] Reversing*
5-12 Terminal 27 Digital Input	[0] No operation
5-14 Terminal 32 Digital Input	[16] Preset ref bit 0
5-15 Terminal 33 Digital Input	[17] Preset ref bit 1
3-10 Preset Reference	
Preset ref. 0	25%
Preset ref. 1	50%
Preset ref. 2	75%
Preset ref. 3	100%
* = Default Value	
Notes/comments: D IN 37 is an option.	

Table 7.7 Start/Stop with Reversing and 4 Preset Speeds

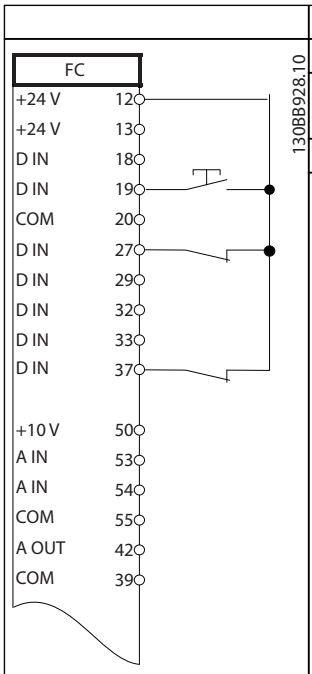

Parameters	
Function	**Setting**
5-11 Terminal 19 Digital Input	[1] Reset
* = Default Value	
Notes/comments: D IN 37 is an option.	

Table 7.8 External Alarm Reset

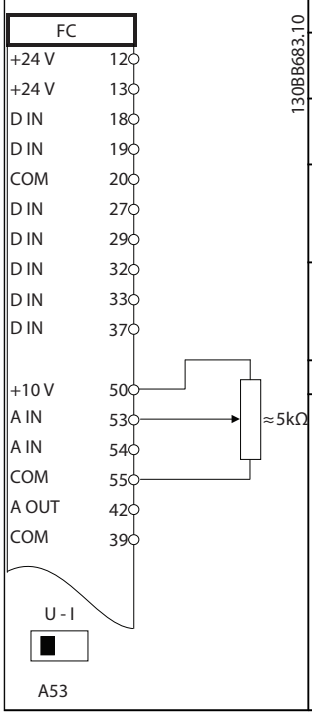

Parameters	
Function	**Setting**
6-10 Terminal 53 Low Voltage	0.07 V*
6-11 Terminal 53 High Voltage	10 V*
6-14 Terminal 53 Low Ref./Feedb. Value	0 Hz
6-15 Terminal 53 High Ref./Feedb. Value	1500 Hz
* = Default Value	
Notes/comments: D IN 37 is an option.	

Table 7.9 Speed Reference (using a Manual Potentiometer)

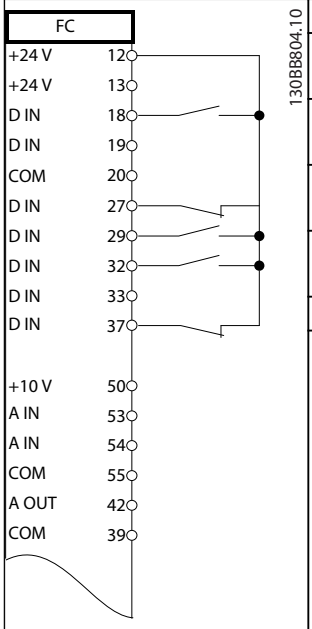

Parameters	
Function	**Setting**
5-10 Terminal 18 Digital Input	[8] Start*
5-12 Terminal 27 Digital Input	[19] Freeze Reference
5-13 Terminal 29 Digital Input	[21] Speed Up
5-14 Terminal 32 Digital Input	[22] Speed Down
* = Default Value	
Notes/comments: D IN 37 is an option.	

Table 7.10 Speed Up/Down

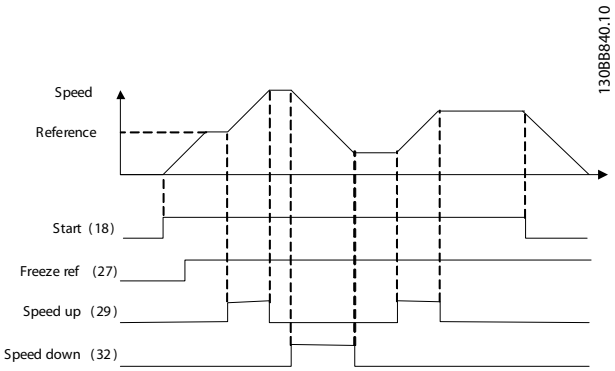

Illustration 7.3 Speed Up/Down

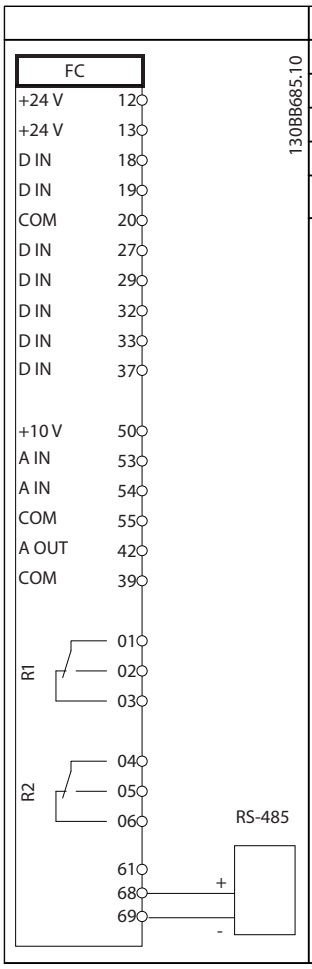

Parameters	
Function	**Setting**
8-30 Protocol	FC*
8-31 Address	1*
8-32 Baud Rate	9600*
* = Default Value	
Notes/comments: Select protocol, address and baud rate in the above mentioned parameters. D IN 37 is an option.	

Table 7.11 RS-485 Network Connection

CAUTION

Thermistors must use reinforced or double insulation to meet PELV insulation requirements.

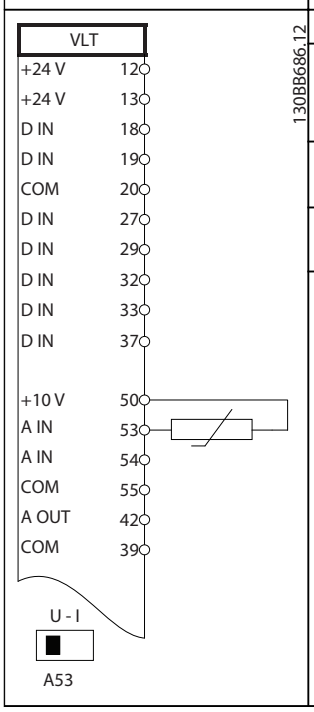

Parameters	
Function	**Setting**
1-90 Motor Thermal Protection	[2] Thermistor trip
1-93 Thermistor Source	[1] Analog input 53
* = Default Value	
Notes/comments: If only a warning is desired, *1-90 Motor Thermal Protection* should be set to [1] *Thermistor warning*. D IN 37 is an option. **NOTICE** **Danfoss recommends using 24 V DC as thermistor supply voltage.**	

Table 7.12 Motor Thermistor

8 Status Messages

8.1 Status Display

When the frequency converter is in *Status mode*, status messages are generated automatically and appear in the bottom line of the display (see *Illustration 8.1*).

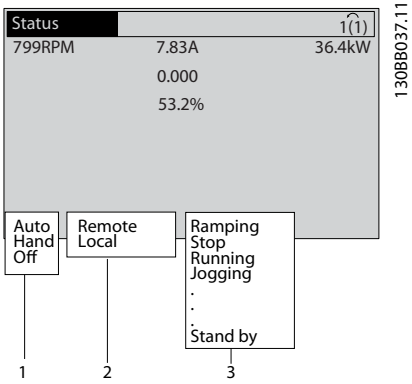

1	Operation mode (see *Table 8.1*)
2	Reference site (see *Table 8.2*)
3	Operation status (see *Table 8.3*)

Illustration 8.1 Status Display

8.2 Status Message Definitions

Table 8.1, *Table 8.2* and *Table 8.3* define the meaning of the status message display words.

Off	The frequency converter does not react to any control signal until [Auto On] or [Hand On] is pressed.
Auto On	The frequency converter is controlled from the control terminals and/or the serial communication.
Hand On	The frequency converter can be controlled by the navigation keys on the LCP. Stop commands, reset, reversing, DC brake, and other signals applied to the control terminals can override local control.

Table 8.1 Operation Mode

Remote	The speed reference is given from external signals, serial communication, or internal preset references.
Local	The frequency converter uses [Hand On] control or reference values from the LCP.

Table 8.2 Reference Site

AC Brake	AC Brake was selected in *2-10 Brake Function*. The AC brake overmagnetises the motor to achieve a controlled slow down.
AMA finish OK	Automatic motor adaptation (AMA) was carried out successfully.
AMA ready	AMA is ready to start. Press [Hand On] to start.
AMA running	AMA process is in progress.
Coast	• Coast inverse was selected as a function for a digital input (parameter group *5-1* Digital Inputs*). The corresponding terminal is not connected. • Coast activated by serial communication
Ctrl. Ramp-down	Control ramp-down was selected in *14-10 Mains Failure*. • The mains voltage is below the value set in *14-11 Mains Voltage at Mains Fault* at mains fault • The frequency converter ramps down the motor using a controlled ramp-down
Current High	The frequency converter output current is above the limit set in *4-51 Warning Current High*.
Current Low	The frequency converter output current is below the limit set in *4-52 Warning Speed Low*
DC Hold	DC hold is selected in *1-80 Function at Stop* and a stop command is active. The motor is held by a DC current set in *2-00 DC Hold/ Preheat Current*.
DC Stop	The motor is held with a DC current (*2-01 DC Brake Current*) for a specified time (*2-02 DC Braking Time*). • DC brake is activated in *2-03 DC Brake Cut In Speed [RPM]* and a stop command is active. • DC brake (inverse) is selected as a function for a digital input (parameter group *5-1* Digital Inputs*). The corresponding terminal is not active. • The DC brake is activated via serial communication.
Feedback high	The sum of all active feedbacks is above the feedback limit set in *4-57 Warning Feedback High*.
Feedback low	The sum of all active feedbacks is below the feedback limit set in *4-56 Warning Feedback Low*.

8

Freeze output	The remote reference is active, which holds the present speed. • Freeze output was selected as a function for a digital input (parameter group *5-1* Digital Inputs*). The corresponding terminal is active. Speed control is only possible via the terminal functions speed up and speed down. • Hold ramp is activated via serial communication.
Freeze output request	A freeze output command has been given, but the motor remains stopped until a run permissive signal is received.
Freeze ref.	*Freeze Reference* was selected as a function for a digital input (parameter group *5-1* Digital Inputs*). The corresponding terminal is active. The frequency converter saves the actual reference. Changing the reference is now only possible via terminal functions speed up and speed down.
Jog request	A jog command has been given, but the motor is stopped until a run permissive signal is received via a digital input.
Jogging	The motor is running as programmed in *3-19 Jog Speed [RPM]*. • *Jog* was selected as function for a digital input (parameter group *5-1* Digital Inputs*). The corresponding terminal (e.g. terminal 29) is active. • The *Jog* function is activated via the serial communication. • The *Jog* function was selected as a reaction for a monitoring function (e.g. No signal). The monitoring function is active.
Motor check	In *1-80 Function at Stop*, *Motor Check* was selected. A stop command is active. To ensure that a motor is connected to the frequency converter, a permanent test current is applied to the motor.
OVC control	Overvoltage control was activated in *2-17 Over-voltage Control*. The connected motor is supplying the frequency converter with generative energy. The overvoltage control adjusts the V/Hz ratio to run the motor in controlled mode and to prevent the frequency converter from tripping.
Power Unit Off	(For frequency converters with an external 24 V power supply installed only). Mains supply to the frequency converter is removed, but the control card is supplied by the external 24 V.
Protection md	Protection mode is active. The unit has detected a critical status (an overcurrent or overvoltage). • To avoid tripping, switching frequency is reduced to 4 kHz. • If possible, protection mode ends after approximately 10 s. • Protection mode can be restricted in *14-26 Trip Delay at Inverter Fault*.
Ramping	The motor is accelerating/decelerating using the active ramp-up/down. The reference, a limit value or a standstill is not yet reached.
Ref. high	The sum of all active references is above the reference limit set in *4-55 Warning Reference High*.
Ref. low	The sum of all active references is below the reference limit set in *4-54 Warning Reference Low*.
Run on ref.	The frequency converter is running in the reference range. The feedback value matches the setpoint value.
Run request	A start command has been given, but the motor is stopped until a run permissive signal is received via digital input.
Running	The motor is driven by the frequency converter.
Speed high	Motor speed is above the value set in *4-53 Warning Speed High*.
Speed low	Motor speed is below the value set in *4-52 Warning Speed Low*.
Standby	In Auto On mode, the frequency converter starts the motor with a start signal from a digital input or serial communication.
Start delay	In *1-71 Start Delay*, a delay starting time was set. A start command is activated and the motor starts after the start delay time expires.
Start fwd/rev	Start forward and start reverse were selected as functions for 2 different digital inputs (parameter group *5-1* Digital Inputs*). The motor starts in forward or reverse depending on which corresponding terminal is activated.
Stop	The frequency converter has received a stop command from the LCP, digital input, or serial communication.
Trip	An alarm occurred and the motor is stopped. Once the cause of the alarm is cleared, the frequency converter can be reset manually by pressing [Reset] or remotely by control terminals or serial communication.
Trip lock	An alarm occurred and the motor is stopped. Once the cause of the alarm is cleared, power must be cycled to the frequency converter. The frequency converter can then be reset manually by pressing [Reset] or remotely by control terminals or serial communication.

Table 8.3 Operation Status

9 Warnings and Alarms

9.1 System Monitoring

The frequency converter monitors the condition of its input power, output, and motor factors as well as other system performance indicators. A warning or alarm may not necessarily indicate a problem internal to the frequency converter itself. In many cases, it indicates failure conditions from input voltage, motor load or temperature, external signals, or other areas monitored by the frequency converter's internal logic. Be sure to investigate those areas exterior to the frequency converter as indicated in the alarm or warning.

9.2 Warning and Alarm Types

9.2.1 Warnings

A warning is issued when an alarm condition is impending, or when an abnormal operating condition is present and may result in the frequency converter issuing an alarm. A warning clears itself when the abnormal condition is removed.

9.2.2 Alarm Trip

An alarm is issued when the frequency converter is tripped, that is, the frequency converter suspends operation to prevent frequency converter or system damage. The motor coasts to a stop. The frequency converter logic continues to operate and monitor the frequency converter status. After the fault condition is corrected, the frequency converter can be reset. It is then ready to start operation again.

A trip can be reset in any of 4 ways:

- Pressing [Reset]
- Digital reset input command
- Serial communication reset input command
- Auto reset

9.2.3 Alarm Trip-lock

An alarm that causes the frequency converter to trip-lock requires that input power is cycled. The motor coasts to a stop. The frequency converter logic continues to operate and monitor the frequency converter status. Remove input power to the frequency converter and correct the cause of the fault, then restore power. This action puts the frequency converter into a trip condition as described above and may be reset in any of those 4 ways.

9.3 Warning and Alarm Displays

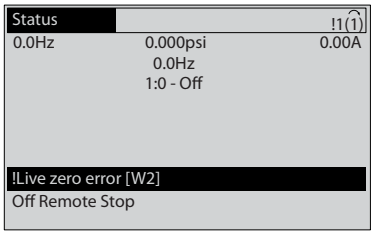

Illustration 9.1 Warning Display Example

An alarm or trip-lock alarm flashes in the display along with the alarm number.

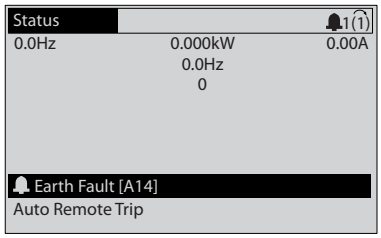

Illustration 9.2 Alarm Display Example

In addition to the text and alarm code on the frequency converter display, there are 3 status indicator lights.

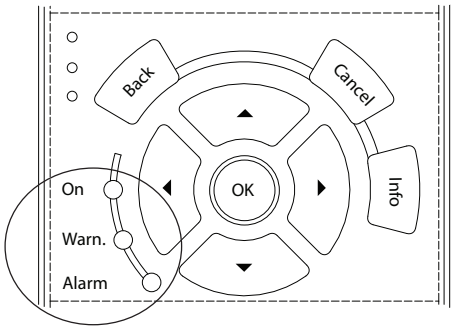

	Warn. LED	Alarm LED
Warning	ON	OFF
Alarm	OFF	ON (Flashing)
Trip-Lock	ON	ON (Flashing)

Illustration 9.3 Indicator Lights

9.4 Warning and Alarm Definitions

Table 9.1 defines whether a warning is issued before an alarm, and whether the alarm trips the unit or trip locks the unit.

No.	Description	Warning	Alarm/Trip	Alarm/Trip lock	Parameter reference
1	10 Volts low	X			
2	Live zero error	(X)	(X)		6-01 Live Zero Timeout Function
4	Mains phase loss	(X)	(X)	(X)	14-12 Function at Mains Imbalance
5	DC link voltage high	X			
6	DC link voltage low	X			
7	DC over voltage	X	X		
8	DC under voltage	X	X		
9	Inverter overloaded	X	X		
10	Motor ETR over temperature	(X)	(X)		1-90 Motor Thermal Protection
11	Motor thermistor over temperature	(X)	(X)		1-90 Motor Thermal Protection
12	Torque limit	X	X		
13	Over Current	X	X	X	
14	Earth (ground) fault	X	X	X	
15	Hardware mismatch		X	X	
16	Short Circuit		X	X	
17	Control word timeout	(X)	(X)		8-04 Control Timeout Function
18	Start Failed		X		*1-77 Compressor Start Max Speed [RPM],* *1-79 Pump Start Max Time to Trip*
19	Discharge Temperature High	X			*28-25 Warning Action* *28-26 Emergency Level*
23	Internal Fan Fault	X			
24	External Fan Fault	X			14-53 Fan Monitor
29	Drive over temperature	X	X	X	
30	Motor phase U missing	(X)	(X)	(X)	4-58 Missing Motor Phase Function
31	Motor phase V missing	(X)	(X)	(X)	4-58 Missing Motor Phase Function
32	Motor phase W missing	(X)	(X)	(X)	4-58 Missing Motor Phase Function
33	Inrush fault		X	X	
34	Fieldbus communication fault	X	X		
35	Out of frequency range	X	X		
36	Mains failure	X	X		
38	Internal fault		X	X	
39	Heatsink sensor		X	X	
40	Overload of Digital Output Terminal 27	(X)			5-00 Digital I/O Mode, 5-01 Terminal 27 Mode
41	Overload of Digital Output Terminal 29	(X)			5-00 Digital I/O Mode, 5-02 Terminal 29 Mode
42	Overload of Digital Output On X30/6	(X)			5-32 Term X30/6 Digi Out (MCB 101)
42	Overload of Digital Output On X30/7	(X)			5-33 Term X30/7 Digi Out (MCB 101)
46	Pwr. card supply		X	X	
47	24 V supply low	X	X	X	
48	1.8 V supply low		X	X	

No.	Description	Warning	Alarm/Trip	Alarm/Trip lock	Parameter reference
49	Speed limit	X	(X)		1-86 Trip Speed Low [RPM]
50	AMA calibration failed		X		
51	AMA check U_{nom} and I_{nom}		X		
52	AMA low I_{nom}		X		
53	AMA motor too big		X		
54	AMA motor too small		X		
55	AMA Parameter out of range		X		
56	AMA interrupted by user		X		
57	AMA timeout		X		
58	AMA internal fault	X	X		
59	Current limit	X			
60	External Interlock	X			
62	Output Frequency at Maximum Limit	X			
64	Voltage Limit	X			
65	Control board overtemperature	X	X	X	
66	Heat sink Temperature Low	X			
67	Option Configuration has Changed		X		
68	Safe Stop[1)]	(X)	(X)		*5-19 Terminal 37 Digital Input*
69	Pwr.card temp		X	X	
70	Illegal FC configuration			X	
77	Reduced Power Mode				
79	Illegal PS config		X	X	
80	Drive Initialized to Default Value		X		
91	Analog input 54 wrong settings			X	
92	NoFlow	X	X		22-2* No-Flow Detection
93	Dry Pump	X	X		22-2* No-Flow Detection
94	End of Curve	X	X		22-5* End of Curve
95	Broken Belt	X	X		22-6* Broken Belt Detection
96	Start Delayed	X			22-7* Short Cycle Protection
97	Stop Delayed	X			22-7* Short Cycle Protection
98	Clock Fault	X			0-7* Clock Settings
99	Locked rotor				
104	Mixing Fan Fault	X	X		*14-53 Fan Monitor*
250	New spare parts			X	
251	New Type Code		X	X	

Table 9.1 Alarm/Warning Code List

(X) Dependent on parameter

[1)] Cannot be Auto reset via 14-20 Reset Mode

9.5 Fault Messages

The following warning/alarm information defines each warning/alarm condition, provides the probable cause for the condition, and details a remedy or troubleshooting procedure.

WARNING 1, 10 Volts low

The control card voltage is below 10 V from terminal 50. Remove some of the load from terminal 50, as the 10 V supply is overloaded. Max. 15 mA or minimum 590 Ω.

This condition can be caused by a short in a connected potentiometer or improper wiring of the potentiometer.

Troubleshooting

- Remove the wiring from terminal 50. If the warning clears, the problem is with the customer wiring. If the warning does not clear, replace the control card.

WARNING/ALARM 2, Live zero error

This warning or alarm only appears if programmed by the user in *6-01 Live Zero Timeout Function*. The signal on one of the analog inputs is less than 50% of the minimum value programmed for that input. Broken wiring or faulty device sending the signal can cause this condition.

Troubleshooting

- Check connections on all the analog input terminals. Control card terminals 53 and 54 for signals, terminal 55 common. MCB 101 terminals 11 and 12 for signals, terminal 10 common. MCB 109 terminals 1, 3, 5 for signals, terminals 2, 4, 6 common).
- Check that the frequency converter programming and switch settings match the analog signal type.
- Perform an input terminal signal test.

WARNING/ALARM 3, No motor
No motor has been connected to the output of the frequency converter.

WARNING/ALARM 4, Mains phase loss
A phase is missing on the supply side, or the mains voltage imbalance is too high. This message also appears for a fault in the input rectifier on the frequency converter. Options are programmed in *14-12 Function at Mains Imbalance*.

Troubleshooting

- Check the supply voltage and supply currents to the frequency converter.

9

WARNING 5, DC link voltage high
The intermediate circuit voltage (DC) is higher than the high voltage warning limit. The limit is dependent on the frequency converter voltage rating. The unit is still active.

WARNING 6, DC link voltage low
The intermediate circuit voltage (DC) is lower than the low voltage warning limit. The limit is dependent on the frequency converter voltage rating. The unit is still active.

WARNING/ALARM 7, DC overvoltage
If the intermediate circuit voltage exceeds the limit, the frequency converter trips after a time.

Troubleshooting

- Connect a brake resistor.
- Extend the ramp time.
- Change the ramp type.
- Activate the functions in *2-10 Brake Function*.
- Increase the value in *14-26 Trip Delay at Inverter Fault*.

WARNING/ALARM 8, DC under voltage
If the intermediate circuit voltage (DC link) drops below the under voltage limit, the frequency converter checks if a 24 V DC back-up supply is connected. If no 24 V DC back-up supply is connected, the frequency converter trips after a fixed time delay. The time delay varies with unit size.

Troubleshooting

- Check that the supply voltage matches the frequency converter voltage.
- Perform an input voltage test.
- Perform a soft charge circuit test.

WARNING/ALARM 9, Inverter overload
The frequency converter is about to cut out because of an overload (too high current for too long). The counter for electronic, thermal inverter protection gives a warning at 98% and trips at 100%, while giving an alarm. The frequency converter *cannot* be reset until the counter is below 90%.
The fault is that the frequency converter is overloaded by more than 100% for too long.

Troubleshooting

- Compare the output current shown on the LCP with the frequency converter rated current.
- Compare the output current shown on the LCP with measured motor current.
- Display the Thermal Drive Load on the LCP and monitor the value. When running above the frequency converter continuous current rating, the counter should increase. When running below the frequency converter continuous current rating, the counter should decrease.

WARNING/ALARM 10, Motor overload temperature
According to the electronic thermal protection (ETR), the motor is too hot. Select whether the frequency converter gives a warning or an alarm when the counter reaches 100% in *1-90 Motor Thermal Protection*. The fault occurs when the motor is overloaded by more than 100% for too long.

Troubleshooting

- Check for motor overheating.
- Check if the motor is mechanically overloaded.
- Check that the motor current set in *1-24 Motor Current* is correct
- Ensure that motor data in parameters *1-20* to *1-25* are set correctly.
- If an external fan is in use, ensure that is is selected in *1-91 Motor External Fan*.
- Running AMA in *1-29 Automatic Motor Adaptation (AMA)* tunes the frequency converter to the motor more accurately and reduces thermal loading.

WARNING/ALARM 11, Motor thermistor over temp
The thermistor might be disconnected. Select whether the frequency converter gives a warning or an alarm in *1-90 Motor Thermal Protection*.

Troubleshooting

- Check for motor overheating.
- Check if the motor is mechanically overloaded.
- Check that the thermistor is connected correctly between either terminal 53 or 54 (analog voltage input) and terminal 50 (+10 V supply) and that

the terminal switch for 53 or 54 is set for voltage. Check *1-93 Thermistor Source* selects terminal 53 or 54.

- When using digital inputs 18 or 19, check that the thermistor is connected correctly between either terminal 18 or 19 (digital input PNP only) and terminal 50.
- If using a thermal switch or thermistor, check that the programming if matches sensor wiring.

WARNING/ALARM 12, Torque limit
The torque has exceeded the value in *4-16 Torque Limit Motor Mode* or the value in *4-17 Torque Limit Generator Mode*. *14-25 Trip Delay at Torque Limit* can change this from a warning only condition to a warning followed by an alarm.

Troubleshooting

- If the motor torque limit is exceeded during ramp up, extend the ramp up time.
- If the generator torque limit is exceeded during ramp down, extend the ramp down time.
- If torque limit occurs while running, possibly increase the torque limit. Be sure the system can operate safely at a higher torque.
- Check the application for excessive current draw on the motor.

WARNING/ALARM 13, Over current
The inverter peak current limit (approximately 200% of the rated current) is exceeded. The warning lasts about 1.5 s, then the frequency converter trips and issues an alarm. This fault may be caused by shock loading or fast acceleration with high inertia loads. If extended mechanical brake control is selected, trip can be reset externally.

Troubleshooting

- Remove power and check if the motor shaft can be turned.
- Check that the motor size matches the frequency converter.
- Check parameters *1-20* to *1-25* for correct motor data.

ALARM 14, Earth (ground) fault
There is current from the output phases to ground, either in the cable between the frequency converter and the motor or in the motor itself.

Troubleshooting:

- Remove power to the frequency converter and repair the ground fault.
- Check for ground faults in the motor by measuring the resistance to ground of the motor leads and the motor with a megohmmeter.
- Perform current sensor test.

ALARM 15, Hardware mismatch
A fitted option is not operational with the present control board hardware or software.

Record the value of the following parameters and contact the Danfoss supplier:

- *15-40 FC Type*
- *15-41 Power Section*
- *15-42 Voltage*
- *15-43 Software Version*
- *15-45 Actual Typecode String*
- *15-49 SW ID Control Card*
- *15-50 SW ID Power Card*
- *15-60 Option Mounted*
- *15-61 Option SW Version* (for each option slot)

ALARM 16, Short circuit
There is short-circuiting in the motor or motor wiring.

- Remove power to the frequency converter and repair the short circuit.

WARNING/ALARM 17, Control word timeout
There is no communication to the frequency converter. The warning is only active when *8-04 Control Timeout Function* is NOT set to OFF.
If *8-04 Control Timeout Function* is set to *[5] Stop and trip*, a warning appears and the frequency converter ramps down until it trips then displays an alarm.

Troubleshooting

- Check connections on the serial communication cable.
- Increase the value in *8-03 Control Timeout Time*.
- Check the operation of the communication equipment.
- Verify a proper installation based on EMC requirements.

ALARM 18, Start failed
The speed has not exceeded *1-77 Compressor Start Max Speed [RPM]* during start within the allowed time. (set in *1-79 Pump Start Max Time to Trip*). This may be caused by a blocked motor.

Warning/Alarm 19, Discharge Temperature High
Warning:
The discharge temperature exceeds the level programmed in *28-25 Warning Action*.

Alarm:
The discharge temperature exceeds the level programmed in *28-26 Emergency Level*.

WARNING 23, Internal fan fault
The fan warning function is an extra protective function that checks if the fan is running/mounted. The fan warning can be disabled in *14-53 Fan Monitor* (*[0] Disabled*).

Troubleshooting

- Check fan resistance.
- Check soft charge fuses.

WARNING 24, External fan fault

The fan warning function is an extra protective function that checks if the fan is running/mounted. The fan warning can be disabled in *14-53 Fan Monitor* (*[0] Disabled*).

Troubleshooting

- Check fan resistance.
- Check soft charge fuses.

ALARM 29, Heat Sink temp

The maximum temperature of the heat sink has been exceeded. The temperature fault does not reset until the temperature drops below a defined heat sink temperature. The trip and reset points are different based on the frequency converter power size.

Troubleshooting

Check for the following conditions

- Ambient temperature too high
- Motor cable too long
- Incorrect airflow clearance above and below the frequency converter
- Blocked airflow around the frequency converter
- Damaged heat sink fan
- Dirty heat sink

This alarm is based on the temperature measured by the heat sink sensor mounted inside the IGBT modules.

Troubleshooting

- Check fan resistance.
- Check soft charge fuses.
- Check IGBT thermal sensor.

ALARM 30, Motor phase U missing

Motor phase U between the frequency converter and the motor is missing.

Troubleshooting

- Remove power from the frequency converter and check motor phase U.

ALARM 31, Motor phase V missing

Motor phase V between the frequency converter and the motor is missing.

Troubleshooting

- Remove power from the frequency converter and check motor phase V.

ALARM 32, Motor phase W missing

Motor phase W between the frequency converter and the motor is missing.

Troubleshooting

- Remove power from the frequency converter and check motor phase W.

ALARM 33, Inrush fault

Too many power-ups have occurred within a short time period.

Troubleshooting

- Let the unit cool to operating temperature.

WARNING/ALARM 34, Fieldbus communication fault

The fieldbus on the communication option card is not working.

WARNING/ALARM 35, Option fault

Option fault. Please contact your supplier.

WARNING/ALARM 36, Mains failure

This warning/alarm is only active if the supply voltage to the frequency converter is lost and *14-10 Mains Failure* is NOT set to *[0] No Function*.

Troubleshooting

- Check the fuses to the frequency converter and mains power supply to the unit.

ALARM 38, Internal fault

When an internal fault occurs, a code number defined in *Table 9.2* is displayed.

Troubleshooting

- Cycle power.
- Check that the option is properly installed.
- Check for loose or missing wiring.

It may be necessary to contact the Danfoss supplier or service department. Note the code number for further troubleshooting directions.

No.	Text
0	Serial port cannot be initialised. Contact the Danfoss supplier or Danfoss Service Department.
256-258	Power EEPROM data is defective or too old.
512	Control board EEPROM data is defective or too old.
513	Communication time out reading EEPROM data
514	Communication time out reading EEPROM data
515	Application oriented control cannot recognize the EEPROM data.
516	Cannot write to the EEPROM because a write command is on progress.
517	Write command is under time-out.
518	Failure in the EEPROM
519	Missing or invalid barcode data in EEPROM
783	Parameter value outside of min/max limits
1024-1279	A CAN telegram that has to be sent can not be sent.
1281	Digital signal processor flash time-out
1282	Power micro software version mismatch
1283	Power EEPROM data version mismatch
1284	Cannot read digital signal processor software version.
1299	Option SW in slot A is too old.

No.	Text
1300	Option SW in slot B is too old.
1315	Option SW in slot A is not supported (not allowed).
1316	Option SW in slot B is not supported (not allowed).
1317	Option SW in slot C0 is not supported (not allowed).
1318	Option SW in slot C1 is not supported (not allowed).
1379	Option A did not respond when calculating platform version.
1380	Option B did not respond when calculating platform version.
1381	Option C0 did not respond when calculating platform version.
1382	Option C1 did not respond when calculating platform version.
1536	An exception in the application oriented control is registered. Debug information written in LCP.
1792	DSP watchdog is active. Debugging of power part data, motor oriented control data not transferred correctly.
2049	Power data restarted.
2064-2072	H081x: option in slot x has restarted.
2080-2088	H082x: option in slot x has issued a power-up-wait.
2096-2104	H983x: option in slot x has issued a legal power-up-wait.
2304	Could not read any data from power EEPROM.
2305	Missing SW version from power unit
2314	Missing power unit data from power unit
2315	Missing SW version from power unit
2316	Missint lo_statepage from power unit
2324	Power card configuration is determined to be incorrect at power-up.
2325	A power card has stopped communicating while main power is applied.
2326	Power card configuration is determined to be incorrect after the delay for power cards to register.
2327	Too many power card locations have been registered as present.
2330	Power size information between the power cards does not match.
2561	No communication from DSP to ATACD
2562	No communication from ATACD to DSP (state running)
2816	Stack overflow control board module
2817	Scheduler slow tasks
2818	Fast tasks
2819	Parameter thread
2820	LCP stack overflow
2821	Serial port overflow
2822	USB port overflow
2836	cfListMempool too small
3072-5122	Parameter value is outside its limits.
5123	Option in slot A: Hardware incompatible with control board hardware.
5124	Option in slot B: Hardware incompatible with Control board hardware.
5376-6231	Out of memory

Table 9.2 Internal Fault Code Numbers

ALARM 39, Heat sink sensor
No feedback from the heat sink temperature sensor.

The signal from the IGBT thermal sensor is not available on the power card. The problem could be on the power card, on the gate drive card, or the ribbon cable between the power card and gate drive card.

WARNING 40, Overload of digital output terminal 27
Check the load connected to terminal 27 or remove short-circuit connection. Check *5-00 Digital I/O Mode* and *5-01 Terminal 27 Mode*.

WARNING 41, Overload of digital output terminal 29
Check the load connected to terminal 29 or remove short-circuit connection. Check *5-00 Digital I/O Mode* and *5-02 Terminal 29 Mode*.

WARNING 42, Overload of digital output on X30/6 or overload of digital output on X30/7
For X30/6, check the load connected to X30/6 or remove the short-circuit connection. Check *5-32 Term X30/6 Digi Out (MCB 101)*.

For X30/7, check the load connected to X30/7 or remove the short-circuit connection. Check *5-33 Term X30/7 Digi Out (MCB 101)*.

ALARM 46, Power card supply
The supply on the power card is out of range.

There are 3 power supplies generated by the switch mode power supply (SMPS) on the power card: 24 V, 5 V, and ±18 V. When powered with 24 V DC with the MCB 107 option, only the 24 V and 5 V supplies are monitored. When powered with 3-phase mains voltage, all 3 supplies are monitored.

WARNING 47, 24 V supply low
The 24 V DC is measured on the control card. The external 24 V DC back-up power supply may be overloaded, otherwise contact Danfoss.

WARNING 48, 1.8 V supply low
The 1.8 V DC supply used on the control card is outside of allowable limits. The power supply is measured on the control card. Check for a defective control card. If an option card is present, check for an overvoltage condition.

WARNING 49, Speed limit
When the speed is not within the specified range in *4-11 Motor Speed Low Limit [RPM]* and *4-13 Motor Speed High Limit [RPM]*, the frequency converter shows a warning.

When the speed is below the specified limit in *1-86 Trip Speed Low [RPM]* (except when starting or stopping) the frequency converter trips.

ALARM 50, AMA calibration failed
Contact the Danfoss supplier or Danfoss Service Department.

ALARM 51, AMA check U_{nom} and I_{nom}
The settings for motor voltage, motor current, and motor power are wrong. Check the settings in parameters *1-20* to *1-25*.

ALARM 52, AMA low I_{nom}
The motor current is too low. Check the settings.

ALARM 53, AMA motor too big
The motor is too big for the AMA to operate.

ALARM 54, AMA motor too small
The motor is too small for the AMA to operate.

ALARM 55, AMA Parameter out of range
The parameter values of the motor are outside of the acceptable range. AMA does not run.

ALARM 56, AMA interrupted by user
The user has interrupted the AMA.

ALARM 57, AMA internal fault
Try to restart AMA again a number of times, until the AMA is carried out. Note that repeated runs may heat the motor to a level where the resistance R_s and R_r are increased. In most cases, however, this is not critical.

ALARM 58, AMA internal fault
Contact Danfoss.

WARNING 59, Current limit
The current is higher than the value in *4-18 Current Limit*.

Troubleshooting

- Ensure that motor data in parameters *1-20* to *1-25* are set correctly.
- Possibly increase the current limit. Be sure that the system can operate safely at a higher limit.

WARNING 60, External interlock
External interlock has been activated. To resume normal operation, apply 24 V DC to the terminal programmed for external interlock and reset the frequency converter (via serial communication, digital I/O, or by pressing [Reset]).

WARNING 61, Tracking error
An error has been detected between the calculated motor speed and the speed measurement from the feedback device. The function for Warning/Alarm/ Disable is set in *4-30 Motor Feedback Loss Function*, error setting in *4-31 Motor Feedback Speed Error*, and the allowed error time in *4-32 Motor Feedback Loss Timeout*. During a commissioning procedure the function may be effective.

WARNING 62, Output frequency at maximum limit
The output frequency is higher than the value set in *4-19 Max Output Frequency*.

ALARM 63, Mechanical brake low
The actual motor current has not exceeded the release brake current within the start delay time window.

ALARM 64, Voltage Limit
The load and speed combination demands a motor voltage higher than the actual DC-link voltage.

WARNING/ALARM 65, Control card over temperature
The control card has reached its trip temperature of 75 °C.

WARNING 66, Heat sink temperature low
The frequency converter is too cold to operate. This warning is based on the temperature sensor in the IGBT module.
Increase the ambient temperature of the unit. Also, a trickle amount of current can be supplied to the frequency converter whenever the motor is stopped by setting *2-00 DC Hold/Preheat Current* at 5% and *1-80 Function at Stop*

Troubleshooting

- The heat sink temperature measured as 0 °C could indicate that the temperature sensor is defective, causing the fan speed to increase to the maximum. If the sensor wire between the IGBT and the gate drive card is disconnected, this warning would result. Also, check the IGBT thermal sensor.

ALARM 67, Option module configuration has changed
One or more options have either been added or removed since the last power-down. Check that the configuration change is intentional and reset the unit.

ALARM 68, Safe Stop activated
Safe Torque Off has been activated.

Troubleshooting

- To resume normal operation, apply 24 V DC to terminal 37, then send a reset signal (via bus, digital I/O, or by pressing [Reset]).

ALARM 69, Power card temperature
The temperature sensor on the power card is either too hot or too cold.

Troubleshooting

- Check the operation of the door fans.
- Check that the filters for the door fans are not blocked.
- Check that the gland plate is properly installed on IP21/IP54 (NEMA 1/12) frequency converters.

ALARM 70, Illegal FC configuration
The control card and power card are incompatible.

Troubleshooting

- Contact the supplier with the type code of the unit from the nameplate and the part numbers of the cards to check compatibility.

WARNING 77, Reduced power mode
This warning indicates that the frequency converter is operating in reduced power mode (i.e. less than the allowed number of inverter sections). This warning is generated on power cycle when the frequency converter is set to run with fewer inverters and remains on.

ALARM 79, Illegal power section configuration
The scaling card is the incorrect part number or not installed. Also MK102 connector on the power card could not be installed.

ALARM 80, Drive initialised to default value
Parameter settings are initialised to default settings after a manual reset.

Troubleshooting
- Reset the unit to clear the alarm.

ALARM 91, Analog input 54 wrong settings
Switch S202 has to be set in position OFF (voltage input) when a KTY sensor is connected to analog input terminal 54.

ALARM 92, No flow
A no-flow condition has been detected in the system. *22-23 No-Flow Function* is set for alarm.

Troubleshooting
- Troubleshoot the system and reset the frequency converter after the fault has been cleared.

ALARM 93, Dry pump
A no-flow condition in the system with the frequency converter operating at high speed may indicate a dry pump. *22-26 Dry Pump Function* is set for alarm.

Troubleshooting
- Troubleshoot the system and reset the frequency converter after the fault has been cleared.

ALARM 94, End of curve
Feedback is lower than the set point. This may indicate leakage in the system. *22-50 End of Curve Function* is set for alarm.

Troubleshooting
- Troubleshoot the system and reset the frequency converter after the fault has been cleared.

ALARM 95, Broken belt
Torque is below the torque level set for no load, indicating a broken belt. *22-60 Broken Belt Function* is set for alarm.

Troubleshooting
- Troubleshoot the system and reset the frequency converter after the fault has been cleared.

ALARM 96, Start delayed
Motor start has been delayed due to short-cycle protection. *22-76 Interval between Starts* is enabled.

Troubleshooting
- Troubleshoot the system and reset the frequency converter after the fault has been cleared.

WARNING 97, Stop delayed
Stopping the motor has been delayed due to short -cycle protection. *22-76 Interval between Starts* is enabled.

Troubleshooting
- Troubleshoot the system and reset the frequency converter after the fault has been cleared.

WARNING 98, Clock fault
Time is not set or the RTC clock has failed.

Troubleshooting
- Reset the clock in *0-70 Date and Time*.

ALARM 99, Locked rotor
Rotor is blocked.

WARNING/ALARM 104, Mixing fan fault
The fan monitor checks that the fan is spinning at frequency converter power-up or whenever the mixing fan is turned on. If the fan is not operating, then the fault is annunciated. The mixing-fan fault can be configured as a warning or an alarm trip by *14-53 Fan Monitor*.

Troubleshooting
- Cycle power to the frequency converter to determine if the warning/alarm returns.

ALARM 220, Overload trip
Motor overload has tripped. Indicates excess motor load.

Troubleshooting
- Check motor and driven load.
- To reset, press [Off Reset].
- Then, to restart the system press [Auto on] or [Hand on].

WARNING 250, New spare part
A component in the frequency converter has been replaced. Reset the frequency converter for normal operation.

WARNING 251, New typecode
The power card or other components have been replaced and the typecode changed.

Troubleshooting
- Reset to remove the warning and resume normal operation.

10 Basic Troubleshooting

10.1 Start-up and Operation

Symptom	Possible cause	Test	Solution
Display dark/No function	Missing input power	See *Table 4.1*.	Check the input power source.
	Missing or open fuses or circuit breaker tripped	See *Open fuses* and *Tripped circuit breaker* in this table for possible causes.	Follow the recommendations provided.
	No power to the LCP	Check the LCP cable for proper connection or damage.	Replace the faulty LCP or connection cable.
	Shortcut on control voltage (terminal 12 or 50) or at control terminals	Check the 24 V control voltage supply for terminals 12/13 to 20-39 or 10 V supply for terminals 50 to 55.	Wire the terminals properly.
	Wrong LCP (LCP from VLT® 2800 or 5000/6000/8000/ FCD or FCM)		LCP 102 (P/N 130B1107)
	Wrong contrast setting		Press [Status] + [▲]/[▼] to adjust the contrast.
	Display (LCP) is defective	Test using a different LCP.	Replace the faulty LCP or connection cable.
	Internal voltage supply fault or SMPS is defective		Contact supplier.
Intermittent display	Overloaded power supply (SMPS) due to improper control wiring or a fault within the frequency converter	To rule out a problem in the control wiring, disconnect all control wiring by removing the terminal blocks.	If the display stays lit, then the problem is in the control wiring. Check the wiring for shorts or incorrect connections. If the display continues to cut out, follow the procedure for display dark.
Motor not running	Service switch open or missing motor connection	Check if the motor is connected and the connection is not interrupted (by a service switch or other device).	Connect the motor and check the service switch.
	No mains power with 24 V DC option card	If the display is functioning but no output, check that mains power is applied to the frequency converter.	Apply mains power to run the unit.
	LCP Stop	Check if [Off] has been pressed.	Press [Auto On] or [Hand On] (depending on operation mode) to run the motor.
	Missing start signal (Standby)	Check *5-10 Terminal 18 Digital Input* for correct setting for terminal 18 (use default setting).	Apply a valid start signal to start the motor.
	Motor coast signal active (Coasting)	Check . for correct setting for terminal 27 (use default setting).	Apply 24 V on terminal 27 or program this terminal to *no operation*.
	Wrong reference signal source	Check reference signal: Local, remote or bus reference? Preset reference active? Terminal connection correct? Scaling of terminals correct? Reference signal available?	Program correct settings. Check *3-13 Reference Site*. Set preset reference active in parameter group *3-1* References*. Check for correct wiring. Check scaling of terminals. Check reference signal.

Symptom	Possible cause	Test	Solution
Motor running in wrong direction	Motor rotation limit	Check that *4-10 Motor Speed Direction* is programmed correctly.	Program correct settings.
	Active reversing signal	Check if a reversing command is programmed for the terminal in parameter group *5-1* Digital inputs*.	Deactivate reversing signal.
	Wrong motor phase connection		See *chapter 3.4.6 Motor Rotation Check* in this manual.
Motor is not reaching maximum speed	Frequency limits set wrong	Check output limits in *4-13 Motor Speed High Limit [RPM]*, *4-14 Motor Speed High Limit [Hz]* and *4-19 Max Output Frequency*.	Program correct limits.
	Reference input signal not scaled correctly	Check reference input signal scaling in parameter groups *6-0* Analog I/O Mode* and *3-1* References*. Reference limits in parameter group *3-0* Reference Limit*.	Program correct settings.
Motor speed unstable	Possible incorrect parameter settings	Check the settings of all motor parameters, including all motor compensation settings. For closed loop operation, check PID settings.	Check settings in parameter group *1-6* Load Depen. Setting*. For closed loop operation, check settings in parameter group *20-0* Feedback*.
Motor runs rough	Possible overmagnetisation	Check for incorrect motor settings in all motor parameters.	Check motor settings in parameter groups *1-2* Motor Data, 1-3* Adv Motor Data*, and *1-5* Load Indep. Setting*.
Motor does not brake	Possible incorrect settings in the brake parameters. Possible too short ramp down times	Check brake parameters. Check ramp time settings.	Check parameter groups *2-0* DC Brake* and *3-0* Reference Limits*.
Open power fuses or circuit breaker trip	Phase-to-phase short	Motor or panel has a short phase to phase. Check motor and panel phase for shorts.	Eliminate any shorts detected.
	Motor overload	Motor is overloaded for the application.	Perform startup test and verify motor current is within specifications. If motor current is exceeding nameplate full load current, motor may run only with reduced load. Review the specifications for the application.
	Loose connections	Perform pre-start-up check for loose connections.	Tighten loose connections.
Mains current imbalance greater than 3%	Problem with mains power (See *Alarm 4 Mains phase loss* description)	Rotate input power leads into the frequency converter one position: A to B, B to C, C to A.	If imbalanced leg follows the wire, it is a power problem. Check mains power supply.
	Problem with the frequency converter	Rotate input power leads into the frequency converter one position: A to B, B to C, C to A.	If imbalance leg stays on same input terminal, it is a problem with the unit. Contact the supplier.
Motor current imbalance greater than 3%	Problem with motor or motor wiring	Rotate output motor leads one position: U to V, V to W, W to U.	If imbalanced leg follows the wire, the problem is in the motor or motor wiring. Check motor and motor wiring.
	Problem with the frequency converters	Rotate output motor leads one position: U to V, V to W, W to U.	If imbalance leg stays on same output terminal, it is a problem with the unit. Contact the supplier.

Symptom	Possible cause	Test	Solution
Acoustic noise or vibration (e.g. a fan blade is making noise or vibrations at certain frequencies)	Resonances, e.g. in the motor/fan system	Bypass critical frequencies by using parameters in parameter group *4-6* Speed Bypass*.	Check if noise and/or vibration have been reduced to an acceptable limit.
		Turn off overmodulation in *14-03 Overmodulation*.	
		Change switching pattern and frequency in parameter group 14-0* Inverter Switching.	
		Increase Resonance Dampening in *1-64 Resonance Damping*.	

Table 10.1 Troubleshooting

11 Specifications

11.1 Power-dependent Specifications

	N110	N132	N160	N200	N250	N315	P355	P400	P450
Normal Load*	**NO**	**NO**	**NO**	**NO**	**NO**	**NO**	**NO**	**NO**	**NO**
Typical Shaft output at 400 V [kW]	110	132	160	200	250	315	355	400	450
Typical Shaft output at 460 V [hp]	150	200	250	300	350	450	500	550	600
Enclosure IP21	D1h	D1h	D1h	D2h	D2h	D2h	E1	E1	E1
Enclosure IP54	D1h	D1h	D1h	D2h	D2h	D2h	E1	E1	E1
Enclosure IP20	D3h	D3h	D3h	D4h	D4h	D4h	-	-	-
Enclosure IP00	-	-	-	-	-	-	E2	E2	E2
Output current									
Continuous (at 400 V) [A]	212	260	315	395	480	588	658	745	800
Intermittent (60 s overload) (at 400 V)[A]	233	286	347	435	528	647	724	820	880
Continuous (at 460/480 V) [A]	190	240	302	361	443	535	590	678	730
Intermittent (60 s overload) (at 460/480 V) [kVA]	209	264	332	397	487	588	649	746	803
Continuous kVA (at 400 V) [kVA]	147	180	218	274	333	407	456	516	554
Continuous kVA (at 460 V) [kVA]	151	191	241	288	353	426	470	540	582
Max. Input current									
Continuous (at 400 V) [A]	204	251	304	381	463	567	647	733	787
Continuous (at 460/480 V) [A]	183	231	291	348	427	516	580	667	718
Max. external mains fuses [A]	315	350	400	550	630	800	900		
Max. cable size									
Max. cable size: mains, motor and load share mm (AWG)]	2 x95 (2x3/0)			2x185 (2x350)			4x240 (4x500 mcm)		
Max. cable size: brake mm (AWG)]	2 x95 (2x3/0)			2x185 (2x350)			2x185 (2x350 mcm)		
Estimated power loss at 400 V [W]	2555	2949	3764	4109	5129	6663	7532	8677	9473
Estimated power loss at 460 V [W]	2257	2719	3612	3561	4558	5703	6724	7819	8527
Weight, enclosure IP21, IP54 kg (lbs.)	62 (135)			125 (275)			270 (594)	272 (598)	277 (609)
Weight, enclosure IP20 kg (lbs.)	62 (135)			125 (275)			-	-	-
Weight, enclosure IP00 kg (lbs)	-						234 (515)	236 (519)	313 (689)
Efficiency	0.98								
Output frequency [Hz]	0-590 Hz								
Heat sink overtemp. trip [°C]	110								
Power card ambient trip [°C]	75						85		
*Normal overload=110% current for 60 s									

Table 11.1 Mains Supply 3x380-480 V AC

11

	N75K	N90K	N110	N132	N160	N200
Normal Load*	**NO**	**NO**	**NO**	**NO**	**NO**	**NO**
Typical Shaft output at 550 V [kW]	55	75	90	110	132	160
Typical Shaft output at 575 V [hp]	75	100	125	150	200	250
Typical Shaft ouptut at 690 V [kW]	75	90	110	132	160	200
Enclosure IP21	D1h	D1h	D1h	D1h	D1h	D2h
Enclosure IP54	D1h	D1h	D1h	D1h	D1h	D2h
Enclosure IP20	D3h	D3h	D3h	D3h	D3h	D4h
Enclosure IP00	-	-	-	-	-	-
Output current						
Continuous (at 550 V) [A]	90	113	137	162	201	253
Intermittent (60 s overload) (at 550 V)[A]	99	124	151	178	221	278
Continuous (at 575/690 V) [A]	86	108	131	155	192	242
Intermittent (60 s overload) (at 575/690 V) [kVA]	95	119	144	171	211	266
Continuous kVA (at 550 V) [kVA]	86	108	131	154	191	241
Continuous kVA (at 575 V) [kVA]	86	108	130	154	191	241
Continuous kVA (at 690 V) [kVA]	103	129	157	185	229	289
Max. Input current						
Continuous (at 550 V) [A]	89	110	130	158	198	245
Continuous (at 575 V) [A]	85	106	124	151	189	234
Continuous (at 690 V) [A]	87	109	128	155	197	240
Max. cable size: mains, motor and load share [mm (AWG)]	2x95 (2x3/0)					
Max. cable size: brake [mm (AWG)]	2x95 (2x3/0)					
Max. external mains fuses [A]	160	315	315	315	350	350
Estimated power loss at 575 V [W]	1161	1426	1739	2099	2646	3071
Estimated power loss at 690 V [W]	1203	1476	1796	2165	2738	3172
Weight, enclosure IP21, IP54 kg (lbs.)	62 (135)					125 (275)
Weight, enclosure IP20 kg (lbs.)	62 (135)					125 (275)
Weight, enclosure IP00 kg (lbs.)	-					
Efficiency	0.98					
Output frequency	0-590 Hz					
Heat sink overtemp. trip	110 °C					
Power card ambient trip	75 °C					
*Normal overload=110% current for 60 s						

Table 11.2 Mains Supply 3x525-690 V AC

	N250	N315	N400	P450	P500	P560	P630
Normal Load*	**NO**	**NO**	**NO**	**NO**	**NO**	**NO**	**NO**
Typical Shaft output at 550 V [kW]	200	250	315	355	400	450	500
Typical Shaft output at 575 V [hp]	300	350	400	450	500	600	650
Typical Shaft ouTput at 690 V [kW]	250	315	400	450	500	560	630
Enclosure IP21	D2h	D2h	D2h	E1	E1	E1	E1
Enclosure IP54	D2h	D2h	D2h	E1	E1	E1	E1
Enclosure IP20	D4h	D4h	D4h	-	-	-	-
Enclosure IP00	-	-	-	E2	E2	E2	E2
Output current							
Continuous (at 550 V) [A]	303	360	418	470	523	596	630
Intermittent (60 s overload) (at 550 V)[A]	333	396	460	517	575	656	693
Continuous (at 575/690 V) [A]	290	344	400	450	500	570	630
Intermittent (60 s overload) (at 575/690 V) [kVA]	319	378	440	495	550	627	693
Continuous kVA (at 550 V) [kVA]	289	343	398	448	498	568	600
Continuous kVA (at 575 V) [kVA]	289	343	398	448	498	568	627
Continuous kVA (at 690 V) [kVA]	347	411	478	538	598	681	753
Max. Input current							
Continuous (at 550 V) [A]	299	355	408	453	504	574	607
Continuous (at 575 V) [A]	286	339	390	434	482	549	607
Continuous (at 690 V) [A]	296	352	400	434	482	549	607
Max. cable size: mains, motor and load share, mm (AWG)	2x185 (2x350 mcm)						4x240 (4x500 mcm)
Max. cable size: brake, mm (AWG)	2x185 (2x350 mcm)						
Max. external mains fuses [A]	400	500	550	700	700	900	900
Estimated power loss at 575 V [W]	3719	4460	5023	5323	6010	7395	8209
Estimated power loss at 690 V [W]	3848	4610	5150	5529	6239	7653	8495
Weight, enclosure IP21, IP54 kg (lbs.)	125 (275)						
Weight, enclosure IP20 kg (lbs.)	125 (275)				-		
Weight, enclosure IP00 kg (lbs.)	-			221 (487)	221 (487)	236 (520)	277 (611)
Efficiency	0.98						
Output frequency [Hz]	0-590		0-525				
Heatsink overtemp. trip [°C]	110				95		110
Power card ambient trip [°C]	80			85			
*Normal overload=110% current for 60 s							

Table 11.3 Mains Supply 3x525-690 V AC

- The typical power loss is at nominal load conditions and expected to be within ±15% (tolerance relates to variety in voltage and cable conditions).
- The losses are based on the default switching frequency. The losses increase significantly at higher switching frequencies.

11.2 General Technical Data

Mains supply (L1, L2, L3)	
Supply voltage	380–480 V ±10%, 525–690 V ±10%

Mains voltage low/mains voltage drop-out:
During low mains voltage or a mains drop-out, the frequency converter continues until the intermediate circuit voltage drops below the minimum stop level, which corresponds typically to 15% below the frequency converter's lowest rated supply voltage. Power-up and full torque cannot be expected at mains voltage lower than 10% below the frequency converter's lowest rated supply voltage.

Supply frequency	50/60 Hz ±5%
Max. imbalance temporary between mains phases	3.0% of rated supply voltage
True power factor (λ)	≥0.9 nominal at rated load
Displacement power factor (cos Φ) near unity	(>0.98)
Switching on input supply L1, L2, L3 (power ups)	maximum one time/2 min
Environment according to EN60664-1	overvoltage category III/pollution degree 2

The unit is suitable for use on a circuit capable of delivering not more than 100000 RMS symmetrical Amperes, 480/600 V

Motor output (U, V, W)	
Output voltage	0-100% of supply voltage
Output frequency	0-590 Hz[1)]
Switching on output	Unlimited
Ramp times	0.01-3600 s

1) From software version 1.10 the output frequency of the frequency converter is limited to 590 Hz. Contact local Danfoss partner for further information.

Torque characteristics	
Starting torque (Constant torque)	maximum 110% for 60 s[1)]
Starting torque	maximum 135% up to 0.5 s[1)]
Overload torque (Constant torque)	maximum 110% for 60 s[1)]

1) Percentage relates to the frequency converter's nominal torque

Cable lengths and cross-sections	
Max. motor cable length, screened/armoured	150 m
Max. motor cable length, unscreened/unarmoured	300 m
Max. cross section to motor and mains[1)]	
Maximum cross section to control terminals, rigid wire	1.5 mm^2/16 AWG (2x0.75 mm^2)
Maximum cross section to control terminals, flexible cable	1 mm^2/18 AWG
Maximum cross section to control terminals, cable with enclosed core	0.5 mm^2/20 AWG
Minimum cross section to control terminals	0.25 mm^2

1) Depending on voltage and power.

Digital inputs	
Programmable digital inputs	4 (6)
Terminal number	18, 19, 27[1)], 29[1)], 32, 33
Logic	PNP or NPN
Voltage level	0-24 V DC
Voltage level, logic '0' PNP	<5 V DC
Voltage level, logic '1' PNP	>10 V DC
Voltage level, logic '0' NPN	>19 V DC
Voltage level, logic '1' NPN	<14V DC
Maximum voltage on input	28 V DC
Input resistance, R_i	aprrox. 4 kΩ

All digital inputs are galvanically isolated from the supply voltage (PELV) and other high-voltage terminals.
1) Terminals 27 and 29 can also be programmed as output.

Analog inputs	
Number of analog inputs	2
Terminal number	53, 54
Modes	Voltage or current
Mode select	Switches A53 and A54
Voltage mode	Switch A53/A54=(U)
Voltage level	0 V to 10 V (scaleable)
Input resistance, R_i	approx. 10 kΩ
Max. voltage	±20 V
Current mode	Switch A53/A54=(I)
Current level	0/4 to 20 mA (scaleable)
Input resistance, R_i	approx. 200 Ω
Max. current	30 mA
Resolution for analog inputs	10 bit (+sign)
Accuracy of analog inputs	Max. error 0.5% of full scale
Bandwidth	100 Hz

The analog inputs are galvanically isolated from the supply voltage (PELV) and other high-voltage terminals.

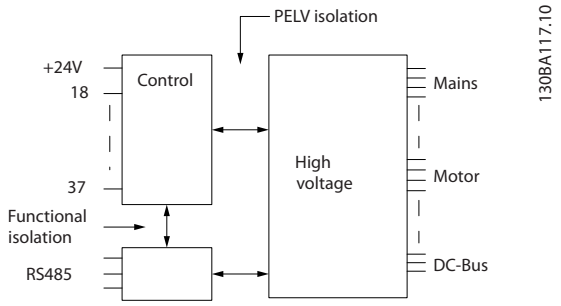

Illustration 11.1 PELV Isolation

Pulse inputs	
Programmable pulse inputs	2
Terminal number pulse	29, 33
Max. frequency at terminal, 29, 33	110 kHz (Push-pull driven)
Max. frequency at terminal, 29, 33	5 kHz (open collector)
Min. frequency at terminal 29, 33	4 Hz
Voltage level	see *chapter 11.2.1 Digital Inputs*
Maximum voltage on input	28 V DC
Input resistance, R_i	approx. 4 kΩ
Pulse input accuracy (0.1-1 kHz)	Max. error: 0.1% of full scale

Analog output	
Number of programmable analog outputs	1
Terminal number	42
Current range at analog output	0/4-20 mA
Max. resistor load to common at analog output	500 Ω
Accuracy on analog output	Max. error: 0.8% of full scale
Resolution on analog output	8 bit

The analog output is galvanically isolated from the supply voltage (PELV) and other high-voltage terminals.

Control card, RS-485 serial communication	
Terminal number	68 (P,TX+, RX+), 69 (N,TX-, RX-)
Terminal number 61	Common for terminals 68 and 69

The RS-485 serial communication circuit is functionally seated from other central circuits and galvanically isolated from the supply voltage (PELV).

Digital output	
Programmable digital/pulse outputs	2
Terminal number	27, 29 [1)]
Voltage level at digital/frequency output	0-24 V
Max. output current (sink or source)	40 mA
Max. load at frequency output	1 kΩ
Max. capacitive load at frequency output	10 nF
Minimum output frequency at frequency output	0 Hz
Maximum output frequency at frequency output	32 kHz
Accuracy of frequency output	Max. error: 0.1% of full scale
Resolution of frequency outputs	12 bit

1) Terminal 27 and 29 can also be programmed as input.
The digital output is galvanically isolated from the supply voltage (PELV) and other high-voltage terminals.

Control card, 24 V DC output	
Terminal number	12, 13
Max. load	200 mA

The 24 V DC supply is galvanically isolated from the supply voltage (PELV), but has the same potential as the analog and digital inputs and outputs.

Relay outputs	
Programmable relay outputs	2
Relay 01 Terminal number	1-3 (break), 1-2 (make)
Max. terminal load (AC-1)[1)] on 1-2 (NO) (Resistive load)[2),3)]	400 V AC, 2 A
Max. terminal load (AC-15)[1)] on 1-2 (NO) (Inductive load @ cosφ 0.4)	240 V AC, 0.2 A
Max. terminal load (DC-1)[1)] on 1-2 (NO) (Resistive load)	80 V DC, 2 A
Max. terminal load (DC-13)[1)] on 1-2 (NO) (Inductive load)	24 V DC, 0.1 A
Max. terminal load (AC-1)[1)] on 1-3 (NC) (Resistive load)	240 V AC, 2 A
Max. terminal load (AC-15)[1)] on 1-3 (NC) (Inductive load @ cosφ 0.4)	240 V AC, 0.2 A
Max. terminal load (DC-1)[1)] on 1-3 (NC) (Resistive load)	50 V DC, 2 A
Max. terminal load (DC-13)[1)] on 1-3 (NC) (Inductive load)	24 V DC, 0.1 A
Min. terminal load on 1-3 (NC), 1-2 (NO)	24 V DC 10 mA, 24V AC 2 mA
Environment according to EN 60664-1	overvoltage category III/pollution degree 2
Relay 02 Terminal number	4-6 (break), 4-5 (make)
Max. terminal load (AC-1)[1)] on 4-5 (NO) (Resistive load)[2)3)]	400 V AC, 2 A
Max. terminal load (AC-15)[1)] on 4-5 (NO) (Inductive load @ cosφ 0.4)	240 V AC, 0.2 A
Max. terminal load (DC-1)[1)] on 4-5 (NO) (Resistive load)	80 V DC, 2 A
Max. terminal load (DC-13)[1)] on 4-5 (NO) (Inductive load)	24 V DC, 0.1 A
Max. terminal load (AC-1)[1)] on 4-6 (NC) (Resistive load)	240 V AC, 2 A
Max. terminal load (AC-15)[1)] on 4-6 (NC) (Inductive load @ cosφ 0.4)	240 V AC, 0.2 A
Max. terminal load (DC-1)[1)] on 4-6 (NC) (Resistive load)	50 V DC, 2 A
Max. terminal load (DC-13)[1)] on 4-6 (NC) (Inductive load)	24 V DC, 0.1 A
Min. terminal load on 4-6 (NC), 4-5 (NO)	24 V DC 10 mA, 24V AC 2 mA
Environment according to EN 60664-1	overvoltage category III/pollution degree 2

1) IEC 60947 t 4 and 5
The relay contacts are galvanically isolated from the rest of the circuit by reinforced isolation (PELV).
2) Overvoltage Category II
3) UL applications 300 V AC 2 A

Control card, 10 V DC output	
Terminal number	50
Output voltage	10.5 V ±0.5 V
Max. load	25 mA

The 10 V DC supply is galvanically isolated from the supply voltage (PELV) and other high-voltage terminals.

Control characteristics	
Resolution of output frequency at 0-590 Hz	± 0.003 Hz
System response time (terminals 18, 19, 27, 29, 32, 33)	≤2 ms
Speed control range (open loop)	1:100 of synchronous speed
Speed accuracy (open loop)	30-4000 RPM: Maximum error of ±8 RPM

All control characteristics are based on a 4-pole asynchronous motor.

Surroundings	
Enclosure type D1h/D2h/D5h/D6h/D7h/D8h/E1	IP21/NEMA 1, IP54/NEMA 12
Enclosure type D3h/D4h	IP20/Chassis
Enclosure type E2	IP00
Vibration test all enclosures	1.0 g
Relative humidity	5%-95% (IEC 721-3-3; Class 3K3 (non-condensing) during operation
Aggressive environment (IEC 60068-2-43) H_2S test	class Kd
Test method according to IEC 60068-2-43 H2S (10 days)	
Ambient temperature (at 60 AVM switching mode)	
- with derating	max. 55°C[1)]
- with full output power of typical EFF2 motors (up to 90% output current)	max. 50 °C[1)]
- at full continuous FC output current	max. 45 °C[1)]

1) For more information on derating see the Design Guide, section on Special Conditions.

Minimum ambient temperature during full-scale operation	0 °C
Minimum ambient temperature at reduced performance	-10 °C
Temperature during storage/transport	-25 to +65/70 °C
Maximum altitude above sea level without derating	1000 m
Maximum altitude above sea level with derating	2000 m

1) For more information on derating see the Design Guide, section on Special Conditions.

EMC standards, Emission	EN 61800-3, EN 61000-6-3/4, EN 55011, IEC 61800-3
EMC standards, Immunity	EN 61800-3, EN 61000-6-1/2, EN 61000-4-2, EN 61000-4-3, EN 61000-4-4, EN 61000-4-5, EN 61000-4-6

See the Design Guide, section on Special Conditions.

Control card performance	
Scan interval	5 ms

Control card, USB Serial Communication	
USB standard	1.1 (Full speed)
USB plug	USB type B “device” plug

⚠CAUTION

Connection to PC is carried out via a standard host/device USB cable.
The USB connection is galvanically isolated from the supply voltage (PELV) and other high-voltage terminals.
The USB connection is not galvanically isolated from protection earth (ground). Use only isolated laptop/PC as connection to the USB connector on frequency converter or an isolated USB cable/converter.

Protection and Features

- Electronic thermal motor protection against overload.
- Temperature monitoring of the heat sink ensures that the frequency converter trips if the temperature reaches 95 °C ±5 °C. An overload temperature cannot be reset until the temperature of the heat sink is below 70 °C ±5 °C (Guideline - these temperatures may vary for different power sizes, enclosures etc.). The frequency converter has an auto derating function to avoid its heat sink reaching 95 °C.
- The frequency converter is protected against short-circuits on motor terminals U, V, W.
- If a mains phase is missing, the frequency converter trips or issues a warning (depending on the load).
- Monitoring of the intermediate circuit voltage ensures that the frequency converter trips if the intermediate circuit voltage is too low or too high.
- The frequency converter is protected against ground faults on motor terminals U, V, W.

11.3 Fuse Tables

11.3.1 Protection

Branch circuit protection
To protect the installation against electrical and fire hazard, all branch circuits in an installation, switch gear, machines etc., must be short-circuited and over-current protected according to national/international regulations.

Short-circuit protection
The frequency converter must be protected against short-circuit to avoid electrical or fire hazard. Danfoss recommends using the fuses mentioned below to protect service personnel and equipment in case of an internal failure in the frequency converter. The frequency converter provides full short-circuit protection in case of a short-circuit on the motor output.

Overcurrent protection
Provide overload protection to avoid fire hazard due to overheating of the cables in the installation. The frequency converter is equipped with an internal overcurrent protection that can be used for upstream overload protection (UL-applications excluded). See *4-18 Current Limit*. Moreover, fuses or circuit breakers can be used to provide the overcurrent protection in the installation. Over-current protection must always be carried out according to national regulations.

11.3.2 Fuse Selection

Non-UL compliance
Danfoss recommends using the following fuses, which ensure compliance with EN 50178. In case of malfunction, not following the recommendation may result in unnecessary damage to the frequency converter.

N110-N315	380–480 V	type aR
N75K–N400	525–690 V	type aR
P355-P450	380–480 V	type gG

Table 11.4 EN50178 Fuses

UL compliance
The fuses below are suitable for use on a circuit capable of delivering 100000 A_{rms} (symmetrical). With the proper fusing, the frequency converter Short Circuit Current Rating (SCCR) is 100000 A_{rms}.

Power Size	Fuse options							
	Bussman PN	Littelfuse PN	Littelfuse PN	Bussmann PN	Siba PN	Ferraz-Shawmut PN	Ferraz-Shawmut PN (Europe)	Ferraz-Shawmut PN (North America)
N110	170M2619	LA50QS300-4	L50S-300	FWH-300A	20 610 31.315	A50QS300-4	6,9URD31D08A0315	A070URD31KI0315
N132	170M2620	LA50QS350-4	L50S-350	FWH-350A	20 610 31.350	A50QS350-4	6,9URD31D08A0350	A070URD31KI0350
N160	170M2621	LA50QS400-4	L50S-400	FWH-400A	20 610 31.400	A50QS400-4	6,9URD31D08A0400	A070URD31KI0400
N200	170M4015	LA50QS500-4	L50S-500	FWH-500A	20 610 31.550	A50QS500-4	6,9URD31D08A0550	A070URD31KI0550
N250	170M4016	LA50QS600-4	L50S-600	FWH-600A	20 610 31.630	A50QS600-4	6,9URD31D08A0630	A070URD31KI0630
N315	170M4017	LA50QS800-4	L50S-800	FWH-800A	20 610 31.800	A50QS800-4	6,9URD32D08A0800	A070URD31KI0800
P355	170M6013				20 630 32.900		6.9URD33D08A0900	
P400	170M6013				20 630 32.900		6.9URD33D08A0900	
P450	170M6013				20 630 32.900		6.9URD33D08A0900	

Table 11.5 Fuse Options for 380-480 V Frequency Converters

OEM		Fuse options		
VLT Model	Bussmann PN	Siba PN	Ferraz-Shawmut European PN	Ferraz-Shawmut North American PN
N75k T7	170M2616	20 610 31.160	6,9URD30D08A0160	A070URD30KI0160
N90k T7	170M2619	20 610 31.315	6,9URD31D08A0315	A070URD31KI0315
N110 T7	170M2619	20 610 31.315	6,9URD31D08A0315	A070URD31KI0315
N132 T7	170M2619	20 610 31.315	6,9URD31D08A0315	A070URD31KI0315
N160 T7	170M2619	20 610 31.315	6,9URD31D08A0315	A070URD31KI0315
N200 T7	170M4015	20 620 31.550	6,9URD32D08A0550	A070URD32KI0550
N250 T7	170M4015	20 620 31.550	6,9URD32D08A0550	A070URD32KI0550
N315 T7	170M4015	20 620 31.550	6,9URD32D08A0550	A070URD32KI0550
N400 T7	170M4015	20 620 31.550	6,9URD32D08A0550	A070URD32KI0550
P450	170M4017	20 610 32.700	6.9URD31D08A0700	
P500	170M4017	20 610 32.700	6.9URD31D08A0700	
P560	170M6013	20 630 32.900	6.9URD33D08A0900	
P630	170M6013	20 630 32.900	6.9URD33D08A0900	

Table 11.6 Fuse Options for 525-690 V Frequency Converters

For UL compliance, for units supplied without a contactor-only option, the Bussmann 170M series fuses must be used.

11.3.3 Short Circuit Current Rating (SCCR)

The Short Circuit Current Rating (SCCR) of the frequency converters is 100,000 amps at all voltages (380–690 V).

If the frequency converter is supplied with a mains disconnect, the SCCR of the frequency converter is 100,000 amps at all voltages (380–690 V).

11.3.4 Connection Tightening Torques

When tightening all electrical connections it is very important to tighten with the correct torque. Too low or too high torque results in a bad electrical connection. Use a torque wrench to ensure correct torque. Always use a torque wrench to tighten the bolts.

Frame Size	Terminal	Torque [Nm] (in-lbs)	Bolt size
D1h/D3h/D5h/D6h	Mains Motor	19-40 (168-354)	M10
	Ground Brake	8.5-20.5 (75-181)	M8
D2h/D4h/D7h/D8h	Mains Motor Ground	19-40 (168-354)	M10
	Brake	8.5-20.5 (75-181)	M8
E1/E2	Mains Motor Ground	19-40 (168-354)	M10
	Brake	8.5-20.5 (75-181)	M8

Table 11.7 Torque for Terminals

Index

www.danfoss.com/drives

Danfoss A/S
Ulsnaes 1
DK-6300 Graasten
www.danfoss.com/drives

130R0414 MG16J202 Rev. 05/2014