ENGINEERING
TOMORROW

Operating Guide

VLT® HVAC Basic Drive FC 101 Liquid Cooled

vlt-drives.danfoss.com | VLT®

Contents

1 Introduction

1.1 Purpose of this Operating Guide

This Operating Guide provides information for safe installation and commissioning of the AC drive. It is intended for use by qualified personnel.

Read and follow the instructions to use the drive safely and professionally.

Pay particular attention to the safety instructions and general warnings. Always keep this Operating Guide with the drive.

VLT® is a registered trademark for Danfoss A/S.

1.2 Additional Resources

1.2.1 Other Resources

Other resources are available to understand advanced drive functions and programming.

- The VLT® HVAC Basic Drive FC 101 Programming Guide provides information on how to program and includes complete parameter descriptions.
- The VLT® HVAC Basic Drive FC 101 Design Guide provides all technical information about the drive. It also lists options and accessories.

The technical documentation is available in electronic form online at www.danfoss.com.

1.2.2 MCT 10 Setup Software Support

Download the software from the service and support section on www.danfoss.com.

During the installation process of the software, enter access code 81463800 to activate the VLT® HVAC Basic Drive FC 101 Liquid Cooled functionality. A license key is not required for using the VLT® HVAC Basic Drive FC 101 Liquid Cooled functionality.

The latest software does not always contain the latest updates for drives. Contact the local sales office for the latest drive updates (in the form of *.upd files), or download the drive updates from the service and support section on www.danfoss.com.

1.3 Document and Software Version

The Operating Guide is regularly reviewed and updated. All suggestions for improvement are welcome.

Table 1: Document and Software Version

Edition	Remarks	Software version
AQ304733610490, version 0201	Technical data are updated.	4.41

1.4 Product Identification

Type code

Locate the type code (T/C) on the product label. The product label is found on the top surface of the drive.

Table 2: Basic String Definition

Description	Position	Characters	Possible choice
Product group	Character 1-3	FC-	VLT® HVAC Drive FC-
VLT series	Character 4-6	101	101 [Basic version]
Power	Character 7	P	Power (standard design)
Power size	Character 8-10	7K5	7.5 kW/10 hp
		11K	11 kW/15 hp
		15K	15 kW/20 hp
Voltage	Character 11-12	T4	3-phase 380–480 V AC
Enclosure	Character 13-15	W20[(1)]	IP20/chassis

Description	Position	Characters	Possible choice
Hardware, RFI filter	Character 16-17	H4	RFI class A1 (C2)
Hardware, brake & stop	Character 18	X	No brake chopper
Hardware, display	Character 19	X	No display (blind cover)
Hardware, coating	Character 20	C	Coated PCB
Hardware, mains options	Character 21	X	No mains option
Hardware, adaptation A	Character 22	X	Standard cable entries
Hardware, adaptation B	Character 23	X	No adaptation
Software or hardware special version for specific customer	Character 24-27	SXXX	Latest release – std. software
Software, language set	Character 28	X	Standard language pack
Options A	Character 29-30	AX	No option
Options B	Character 31-32	BX	No option
Options C: C0/E0 options	Character 33-34	CX	No selection
Options C: C1 options/A/B in C option adaptor	Character 35	X	No selection
Options C: C option software/E1 options)	Character 36-37	XX	No software option
Options D	Character 38-39	DX	No option

[1] W units denote liquid cooled size variants.

Illustration 1: Example of Type Code

1.5 Disposal

Do not dispose of equipment containing electrical components together with domestic waste.
Collect it separately in accordance with local and currently valid legislation.

1.6 CE Declaration

ENGINEERING TOMORROW

Danfoss A/S
6430 Nordborg
Denmark
CVR nr.: 20 16 57 15

Telephone: +45 7488 2222
Fax: +45 7449 0949

EU DECLARATION OF CONFORMITY

Danfoss A/S

Danfoss Drives A/S

declares under our sole responsibility that the

Product category: Frequency Converter

Type designation(s): FC-101PXXXYY**********

Character XXX: K25, K37, K75, 1K5, 2K2, 3K0, 3K7, 4K0, 5K5, 7K5, 11K, 15K, 18K, 22K, 30K, 37K, 45K, 55K, 75K, 90K
Character YY: T2, T4, T6
* may be any number or letter indicating drive options which do not impact this DoC.
The meaning of the 39 characters in the type code string can be found in appendix 00729776.

Covered by this declaration is in conformity with the following directive(s), standard(s) or other normative document(s), provided that the product is used in accordance with our instructions.

Low Voltage Directive 2014/35/EU

EN61800-5-1:2007 + A1:2017	Adjustable speed electrical power drive systems – Part 5-1: Safety requirements – Electrical, thermal and energy.

EMC Directive 2014/30/EU

EN61800-3:2004 + A1:2012	Adjustable speed electrical power drive systems – Part 3: EMC requirements and specific test methods.

RoHS Directive 2011/65/EU including amendment 2015/863.

EN630000:2018	Technical documentation for the assessment of electrical and electronic products with respect to the restriction of hazardous substances

Date: 2020.09.15 Place of issue:	Issued by	Date: 2020.09.15 Place of issue:	Approved by
Graasten, DK	**Signature:** **Name: Gert Kjær** **Title: Senior Director, GDE**	Graasten, DK	**Signature:** **Name: Michael Termansen** **Title: VP, PD Center Denmark**

Danfoss only vouches for the correctness of the English version of this declaration. In the event of the declaration being translated into any other language, the translator concerned shall be liable for the correctness of the translation

ID No: 00730224
This doc. is managed by 500B0577

Revision No: A,5

Page 1 of 1

Classified as Business

2 Safety

2.1 Safety Symbols

The following symbols are used in this manual:

⚠ D A N G E R ⚠

Indicates a hazardous situation which, if not avoided, will result in death or serious injury.

⚠ W A R N I N G ⚠

Indicates a hazardous situation which, if not avoided, could result in death or serious injury.

⚠ C A U T I O N ⚠

Indicates a hazardous situation which, if not avoided, could result in minor or moderate injury.

N O T I C E

Indicates information considered important, but not hazard-related (for example, messages relating to property damage).

2.2 Qualified Personnel

To allow trouble-free and safe operation of the unit, only qualified personnel with proven skills are allowed to transport, store, assemble, install, program, commission, maintain, and decommission this equipment.

Persons with proven skills:

- Are qualified electrical engineers, or persons who have received training from qualified electrical engineers and are suitably experienced to operate devices, systems, plant, and machinery in accordance with pertinent laws and regulations.
- Are familiar with the basic regulations concerning health and safety/accident prevention.
- Have read and understood the safety guidelines given in all manuals provided with the unit, especially the instructions given in the Operating Guide.
- Have good knowledge of the generic and specialist standards applicable to the specific application.

2.3 Safety Precautions

⚠ W A R N I N G ⚠

HIGH VOLTAGE

AC drives contain high voltage when connected to AC mains input , DC supply , or load sharing. Failure to perform installation, start-up, and maintenance by qualified personnel can result in death or serious injury.

- Only qualified personnel must perform installation, start-up, and maintenance.

⚠ W A R N I N G ⚠

UNINTENDED START

When the drive is connected to AC mains, DC supply, or load sharing, the motor may start at any time. Unintended start during programming, service, or repair work can result in death, serious injury, or property damage. Start the motor with an external switch, a fieldbus command, an input reference signal from the local control panel (LCP), via remote operation using MCT 10 software, or after a cleared fault condition.

- Disconnect the drive from the mains.
- Press [Off/Reset] on the LCP before programming parameters.
- Ensure that the drive is fully wired and assembled when it is connected to AC mains, DC supply, or load sharing.

⚠ WARNING ⚠

DISCHARGE TIME

The drive contains DC-link capacitors, which can remain charged even when the drive is not powered. High voltage can be present even when the warning indicator lights are off.

Failure to wait the specified time after power has been removed before performing service or repair work could result in death or serious injury.

- Stop the motor.
- Disconnect AC mains, permanent magnet type motors, and remote DC-link supplies, including battery back-ups, UPS, and DC-link connections to other drives.
- Wait for the capacitors to discharge fully. The minimum waiting time is specified in the table *Discharge time* and is also visible on the nameplate on top of the drive.
- Before performing any service or repair work, use an appropriate voltage measuring device to make sure that the capacitors are fully discharged.

Table 3: Discharge Time

Voltage [V]	Power range [kW (hp)]	Minimum waiting time (minutes)
3x400	7.5 (10)	4
3x400	11 (15)	15
3x400	15 (20)	15

⚠ WARNING ⚠

LEAKAGE CURRENT HAZARD

Leakage currents exceed 3.5 mA. Failure to ground the drive properly can result in death or serious injury.

- Ensure the correct grounding of the equipment by a certified electrical installer.

⚠ WARNING ⚠

EQUIPMENT HAZARD

Contact with rotating shafts and electrical equipment can result in death or serious injury.

- Ensure that only trained and qualified personnel perform installation, start-up, and maintenance.
- Ensure that electrical work conforms to national and local electrical codes.
- Follow the procedures in this manual.

⚠ CAUTION ⚠

INTERNAL FAILURE HAZARD

An internal failure in the drive can result in serious injury when the drive is not properly closed.

- Ensure that all safety covers are in place and securely fastened before applying power.

2.4 Motor Thermal Protection

Procedure

1. Set *parameter 1-90 Motor Thermal Protection* to *[4] ETR trip 1* to enable the motor thermal protection function.

3 Installation

3.1 Mechanical Installation

3.1.1 Side-by-side Installation

The drive can be mounted side by side but requires clearance above and below for cooling.

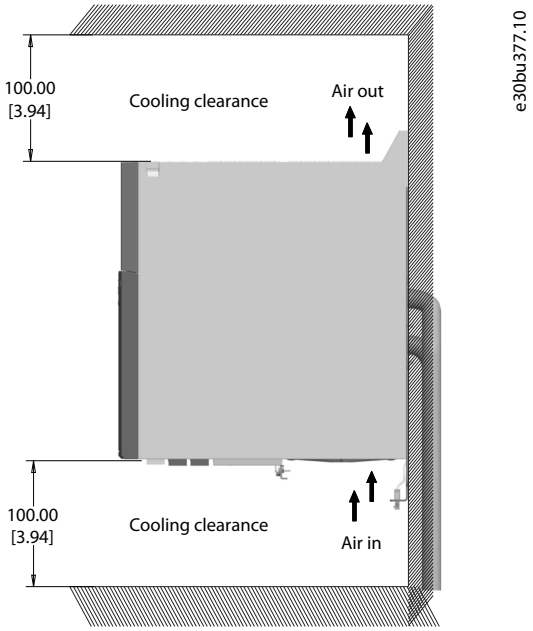

Illustration 2: Clearance Required for Cooling

Table 4: Clearance Required for Cooling

Size	IP class	3x380–480 V [kW (hp)]	Clearance above/below [mm (in)]
H3	IP20	7.5 (10)	100 (3.94)
H4	IP20	11–15 (15–20)	100 (3.94)

3.1.2 Drive Dimensions

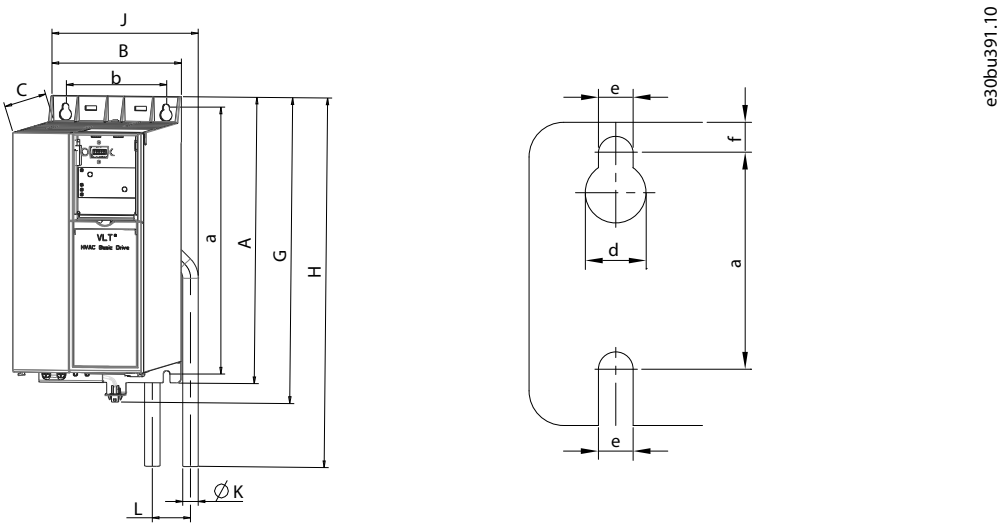

Illustration 3: Dimensions

Table 5: Dimensions, Enclosure Sizes H3–H4

Enclosure Size		H3	H4
IP class		IP20	IP20
Power [kW (hp)]	**3x380–480 V**	7.5 (10)	11–15 (15–20)
Height [mm (in)]	A	255 (10.0)	296 (11.7)
	a	240 (9.4)	275 (10.8)
	G	276.5 (10.9)	315 (12.4)
	H	333 (13.1)	382 (15.0)
Width [mm (in)]	B	100 (3.9)	135 (5.3)
	b	74 (2.9)	105 (4.1)
	J	114 (4.5)	149.5 (5.9)
Depth [mm (in)]	C	206 (8.1)	241 (9.5)
Mounting hole [mm (in)]	d	11 (0.43)	12.6 (0.50)
	e	5.5 (0.22)	7 (0.28)
	f	8.1 (0.32)	8.4 (0.33)
Copper tube [mm (in)]	K	9.6 (0.38)	15.9 (0.63)
	L	40 (1.57)	40 (1.57)
Maximum weight kg (lb)		4.4 (9.7)	7.8 (17.19)

The dimensions are only for the physical units.

⚠ C A U T I O N ⚠

DRIVE HANDLING

- Ensure that drive is not lifted by holding copper tube at any circumstances.

3.1.3 Drive Mounting Bracket Details

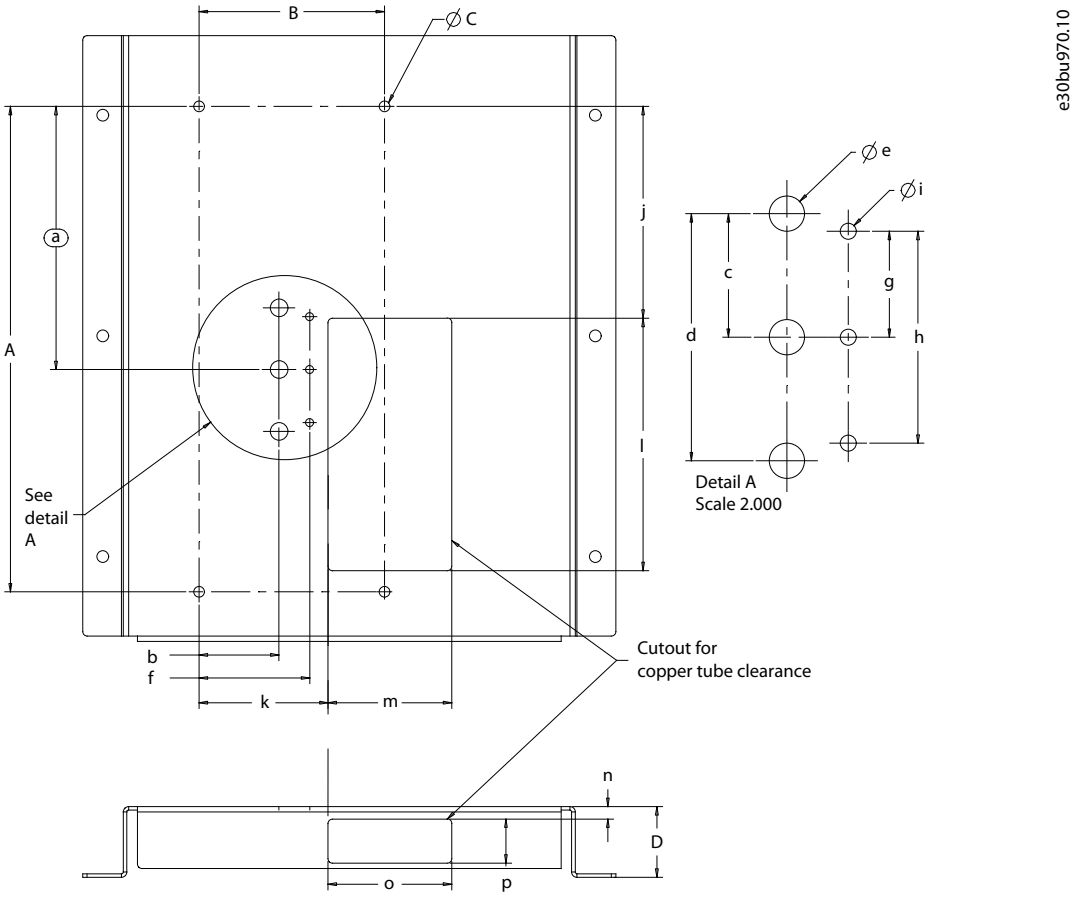

Illustration 4: Drive Mounting Bracket Details

Table 6: Drive Mounting Bracket Details

Enclosure size		H3	H4
IP class		IP20	IP20
Power [kW (hp)]	**3x380-480 V**	7.5 (10)	11–15 (15–20)
Drive mounting [mm (in)]	A	239.60 (9.43)	275 (10.83)
	B	74 (2.91)	105 (4.13)
	C	M5 x 0.8	M6 x 1.0
	D	35 (1.38)	40 (1.57)
Holder plate mounting [mm (in)]	a	142.1 (5.59)	149.1 (5.87)
	b	26.1 (1.03)	45.2 (1.78)
	c	25 (0.98)	35 (1.38)
	d	50 (1.97)	70 (2.76)
	e	10 (0.39)	10 (0.39)
	f	39.1 (1.54)	62.6 (2.46)
	g	20 (0.79)	30 (1.18)

Enclosure size		H3	H4
	h	40 (1.58)	60 (2.36)
	i	4.5 (0.18)	4.5 (0.18)
Clearance cutout [mm (in)]	j	122 (4.80)	120 (4.72)
	k	46.5 (1.83)	73 (2.87)
	l	108 (4.25)	143 (5.63)
	m	60 (2.36)	70 (2.76)
	n	8 (0.32)	7 (0.28)
	o	60 (2.36)	70 (2.76)
	p	20 (0.79)	25 (0.98)

N O T I C E

All the mounting screws need to be aligned before applying full torque.

3.1.4 Assembly

Procedure

1. Assemble the drive with mounting bracket.

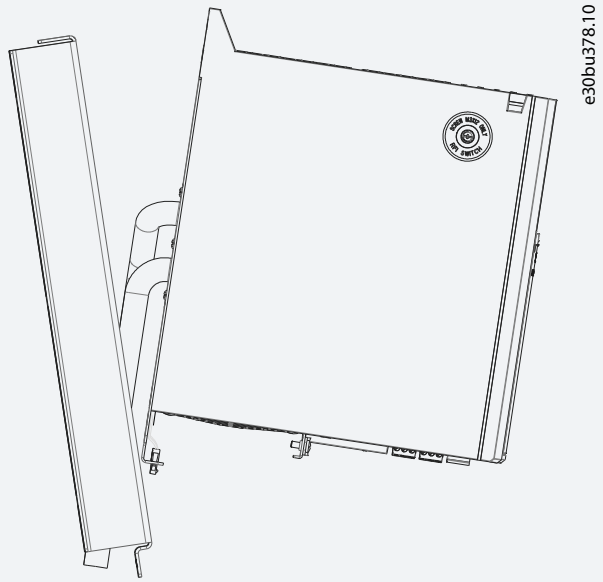

2. Fix the drive with 4xM5/M6 (H3/H4) screws.

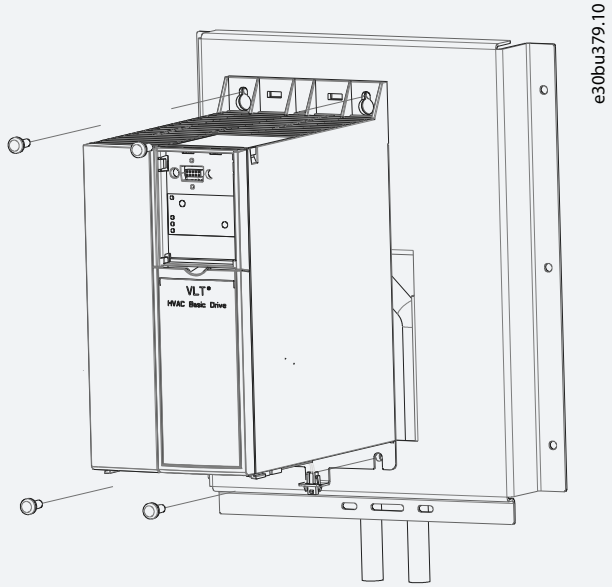

Table 7: Drive Mounting Torque Details

Enclosure size	H3	H4
IP class	IP20	IP20
Drive mounting screw	M5x0.8	M6x1.0
Torque [Nm (lb-in)]	2.5–3.5 (22.13–30.98)	4.0–6.0 (35.40–53.10)

3. Support the copper tube with the tie wrap and fix it with 3xM4 screws.

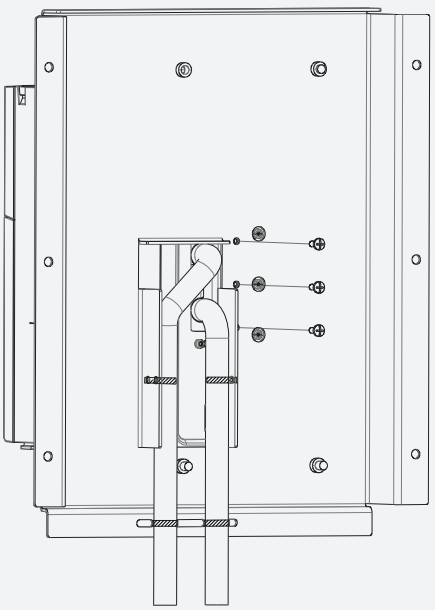

Table 8: Holder Plate Mounting Torque Details

Enclosure size	H3	H4
IP class	IP20	IP20
Holder plate mounting screw	M4x0.7	M4x0.7
Torque [Nm (lb-in)]	2.0 (17.70)	2.0 (17.70)

4. Remove the existing holder plate mounting screw.

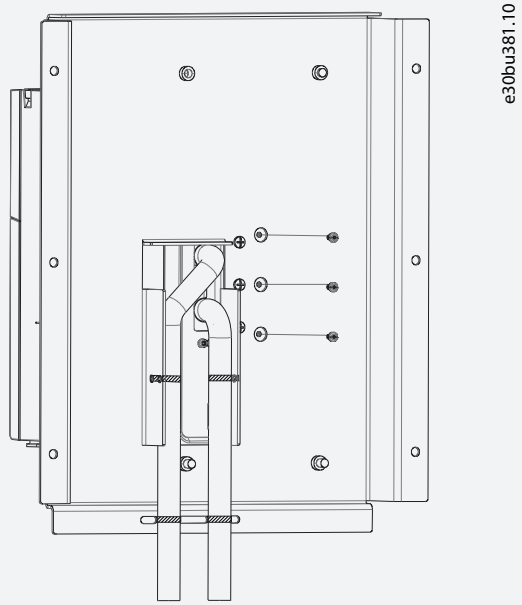

5. Mount the drive and connect it to the application.

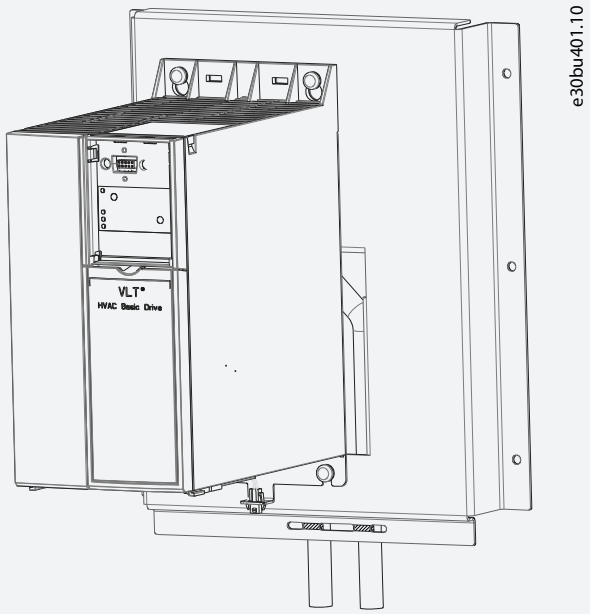

3.1.5 Thermal Switch Mating Connector Details (H3 & H4)

Table 9: Thermal Switch Mating Connector Details (H3 & H4)

Part Description	Manufacturer	Manufacturer P/N
Micro-fit 3.0 receptacle housing, single row, 2 circuits	Molex	0436450200
Micro-fit 3.0 crimp terminal, male, 20-24 AWG	Molex	0430310001

3.1.6 Liquid Cooling

Table 10: Liquid Cooling

Power [kW (hp)]	Cooling agent	Copper tube size [mm (in)]	Flow rate (Kg/Hr)	
			Minimum	Maximum
7.5 (10)	Refrigerant (R410-A)[1]	9.55 (0.375)	90	157.5
11 (15)		15.88 (0.625)	96	143.5
15 (20)		15.88 (0.625)	130	190

[1] Cooling agent for the system is in scope of customers.

⚠ C A U T I O N ⚠

BRAZING OF COPPER TUBE

During brazing of the drive copper tubes with the system, the temperature around IGBT and cold plate portion rises.

- Pay attention to the temperature during brazing of the copper tube, see the following illustration.
- Ensure that drive enclosure is not exposed to flame during brazing.

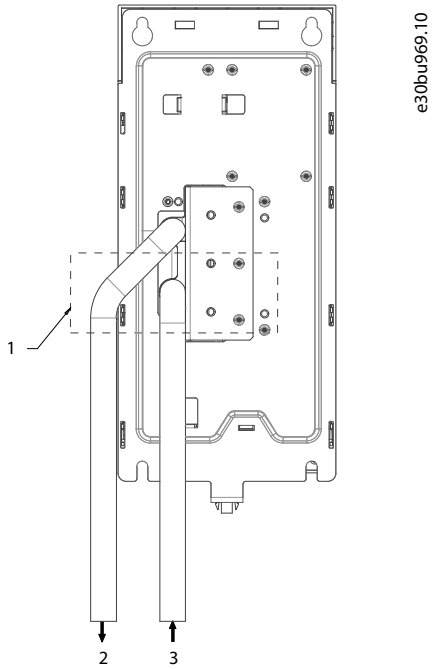

Illustration 5: Brazing

1	Brzaing temperature should not exceed 60 °C (140 °F)	3	Coolant in
2	Coolant out		

⚠ C A U T I O N ⚠

CONDENSATION

Avoid condensation on the cold plate and copper tube inside the drive.

– Ensure the drive inlet refrigerant temperature is above ambient temperature to avoid condensation.

3.1.7 Servicing the Drive

Procedure

1. Remove the drive mounting screws 4XM5/M6 (H3/H4).

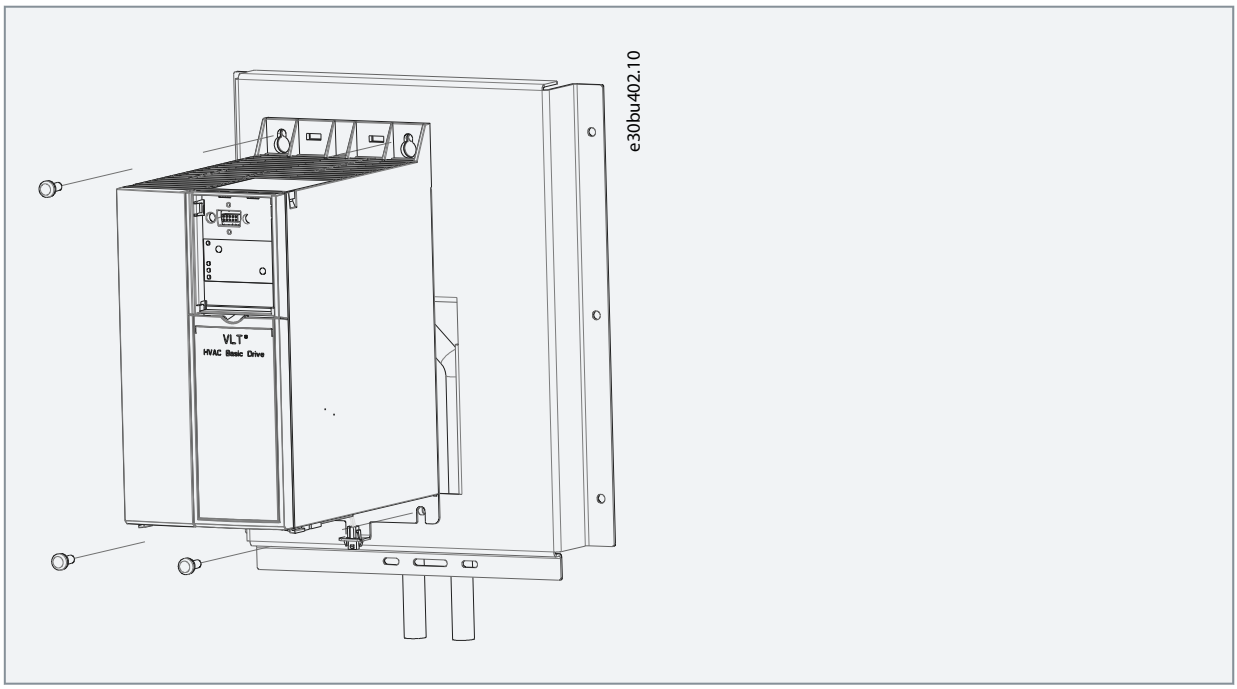

2. Pull the drive out.

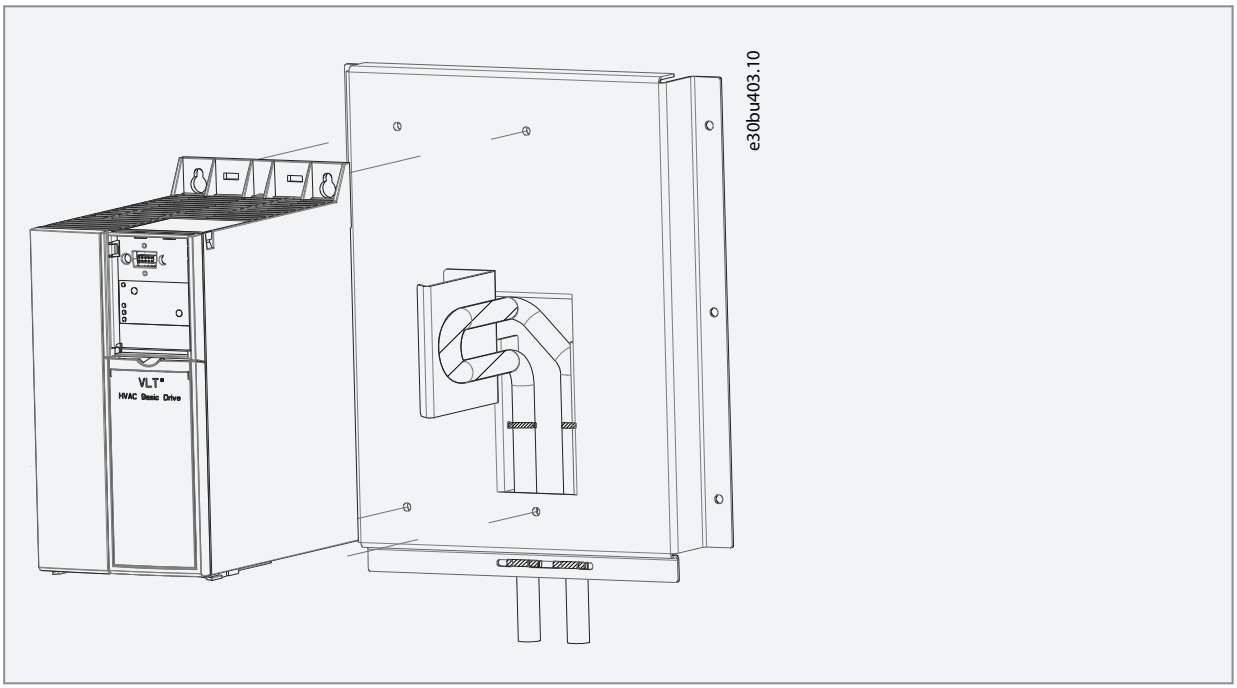

3. Apply adequate thermal paste in hatched section.

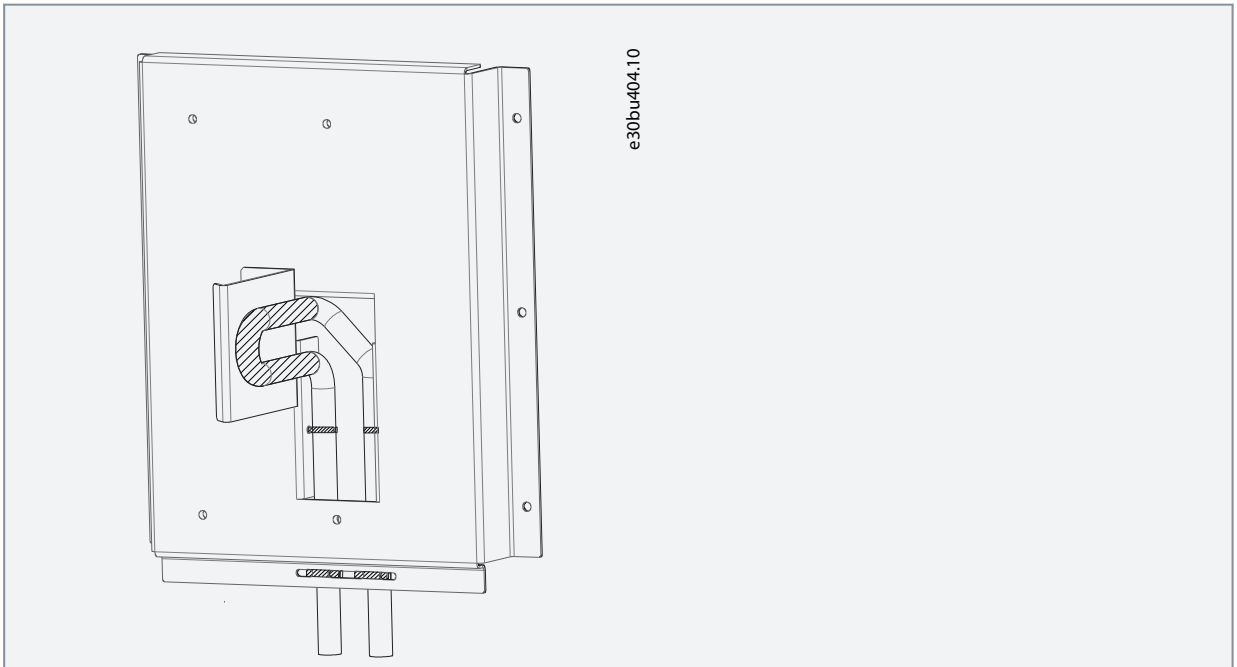

Table 11: Thermal Paste Quantity Details

Enclosure size	H3	H4
IP class	IP20	IP20
Quantity (g)	1.5–2.0	2.0–2.5

N O T I C E

When the drive is assembled back to the system, in case of excess paste quantity, mechanically it gets squeezed out and does not affect the drive performance.

4. Fix the new/repaired drive to the mounting bracket 4XM5/M6 (H3/H4).

Table 12: Drive Mounting Torque Details

Enclosure size	H3	H4
IP class	IP20	IP20
Drive mounting screw	M5x0.8	M6x1.0
Torque [Nm (lb-in)]	2.5–3.5 (22.13–30.98)	4.0–6.0 (35.40–53.10)

3.2 Electrical Installation

3.2.1 Tightening Torques

All cabling must comply with national and local regulations on cable cross-sections and ambient temperature. Copper conductors are required. 75 °C (167 °F) is recommended.

Table 13: Tightening Torques for Enclosure Sizes H3–H4, 3x380–480 V

Power [kW (hp)]				Torque [Nm (in-lb)]				
Enclosure size	**IP class**	**3x380–480 V**	**Mains**	**Motor**	**DC connection**	**Control terminals**	**Ground**	**Relay**
H3	IP20	7.5 (10)	0.8 (7)	0.8 (7)	0.8 (7)	0.5 (4)	0.8 (7)	0.5 (4)
H4	IP20	11–15 (15–20)	1.2 (11)	1.2 (11)	1.2 (11)	0.5 (4)	0.8 (7)	0.5 (4)

3.2.2 IT Mains

⚠ C A U T I O N ⚠

IT MAINS

Installation on isolated mains source, that is, IT mains.

– Ensure that the supply voltage does not exceed 440 V (3x380–480 V units) when connected to mains.

On IP20, 380–480 V 7.5 kW (10 hp), 11 kW (15 hp), 15 kW (20 hp) units, open the RFI switch by removing the screw on the side of the drive when at IT grid.

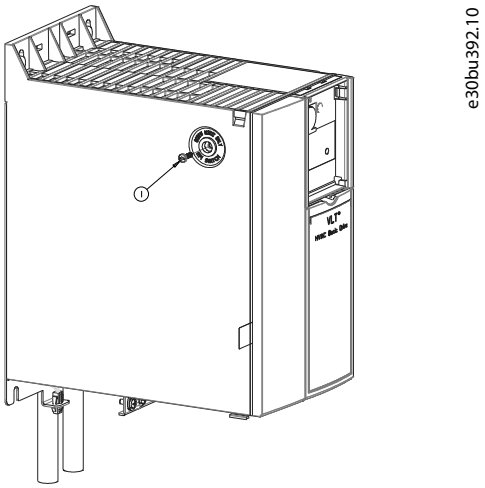

Illustration 6: IP20, 380–480 V 7.5 kW (10 hp), 11 kW (15 hp), 15 kW (20 hp)

1	EMC screw

3.2.3 Mains and Motor Connection

3.2.3.1 Introduction

The drive is designed to operate all standard 3-phase induction motors.

- Use a shielded/armored motor cable to comply with EMC emission specifications and connect this cable to both the decoupling plate and the motor.
- Keep the motor cable as short as possible to reduce the noise level and leakage currents.
- Also see EMC-Correct Installation in the Design Guide.

3.2.3.2 Connecting to Mains and Motor

1. Mount the ground cables to the ground terminal.
2. Connect the motor to terminals U, V, and W, and then tighten the screws according to the suggested tightening torques.
3. Connect the mains supply to terminals L1, L2, and L3, and then tighten the screws according to the suggested tightening torques.

3.2.3.3 Relays and Terminals on Enclosure Sizes H3–H4

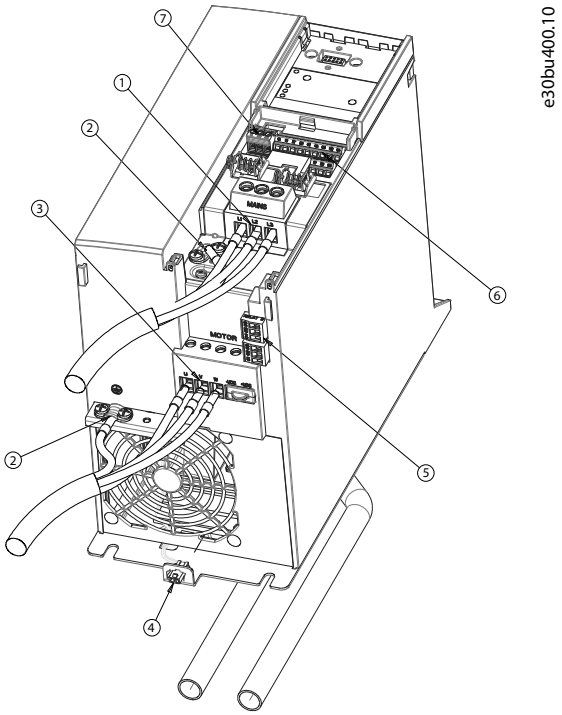

Illustration 7: Enclosure Sizes H3–H4, IP20, 380–480 V, 7.5 kW (10 hp), 11 kW (15 hp), 15 kW (20 hp)

1	Mains/input terminals	5	Relay output connectors
2	Ground terminals	6	Digital/analog I/O connector
3	Motor/output terminals	7	RS485 connector
4	Thermal switch connector		

3.2.4 Fuses and Circuit Breakers

3.2.4.1 Branch Circuit Protection

To prevent fire hazards, protect the branch circuits in an installation, switch gear, machines, and so on, against short circuits and overcurrent. Follow national and local regulations.

3.2.4.2 Short-circuit Protection

Danfoss recommends using the fuses and circuit breakers listed in this chapter to protect service personnel or other equipment in case of an internal failure in the unit or a short circuit on the DC link. The drive provides full short-circuit protection in case of a short circuit on the motor.

3.2.4.3 Overcurrent Protection

Provide overload protection to avoid overheating of the cables in the installation. Overcurrent protection must always be carried out according to local and national regulations. Design circuit breakers and fuses for protection in a circuit capable of supplying a maximum of 100000 A_{rms} (symmetrical), 480 V maximum.

3.2.4.4 CE Compliance

To ensure compliance with IEC 61800-5-1, use the circuit breakers or fuses listed in this chapter. Circuit breakers must be designed for protection in a circuit capable of supplying a maximum of 10000 A_{rms} (symmetrical), 480 V maximum.

3.2.4.5 Recommendation of Fuses and Circuit Breakers

NOTICE

In the event of malfunction, failure to follow the protection recommendation may result in damage to the drive.

Table 14: Fuses and Circuit Breakers (Non-UL)

Power [kW (hp)]	Circuit breaker	Maximum Fuse Type gG (A)
3x380–480 V IP20		
7.5 (10)	–	25
11 (15)	–	50
15 (20)	–	50

3.2.5 EMC-correct Electrical Installation

General points to be observed to ensure EMC-correct electrical installation:

- Use only shielded/armored motor cables and shielded/armored control cables.
- Ground the shield at both ends.
- Avoid installation with twisted shield ends (pigtails), because it reduces the shielding effect at high frequencies. Use the cable clamps provided.
- Ensure the same potential between the drive and the ground potential of PLC.
- It is important to ensure good electrical contact from the installation plate through the installation screws to the metal cabinet of the drive.
- Use star washers and galvanically conductive installation plates.

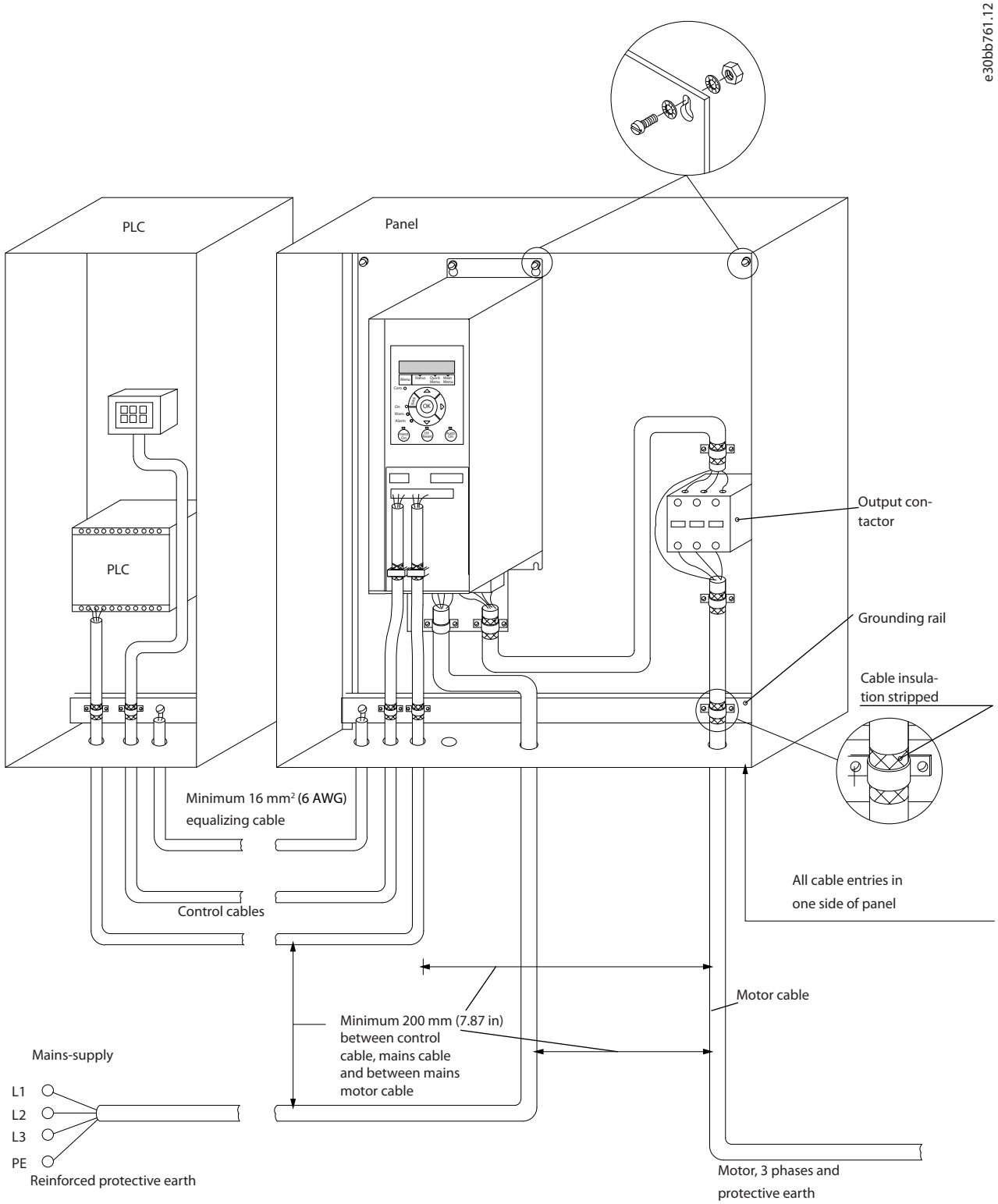

Illustration 8: EMC-correct Electrical Installation

3.2.6 Control Terminals

Remove the terminal cover to access the control terminals.

Use a flat-edged screwdriver to push down the lock lever of the terminal cover under the LCP, then remove the terminal cover as shown in the following illustration.

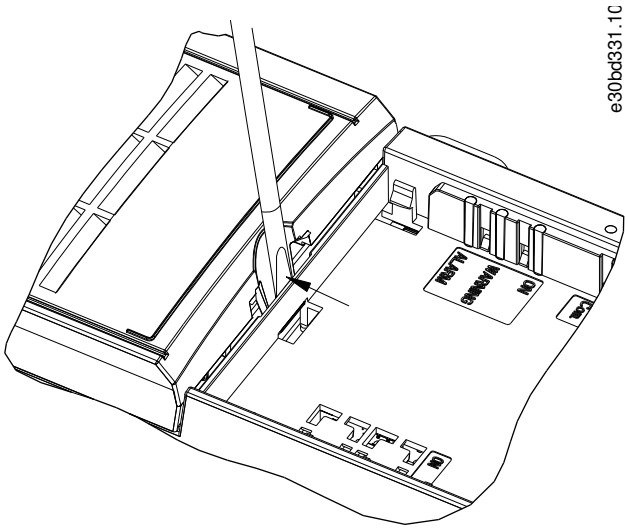

Illustration 9: Removing the Terminal Cover

The following illustration shows all the drive control terminals. Applying start (terminal 18), connection between terminals 12-27, and an analog reference (terminal 53 or 54, and 55) make the drive run.

The digital input mode of terminal 18, 19, and 27 is set in *parameter 5-00 Digital Input Mode* (PNP is default value). Digital input 29 mode is set in *parameter 5-03 Digital Input 29 Mode* (PNP is default value).

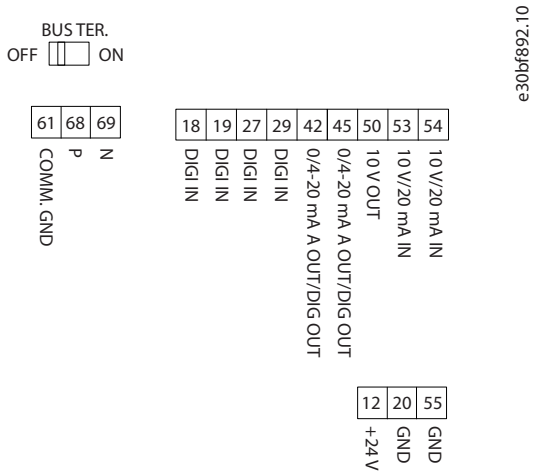

Illustration 10: Control Terminals

3.2.7 Electrical Wiring

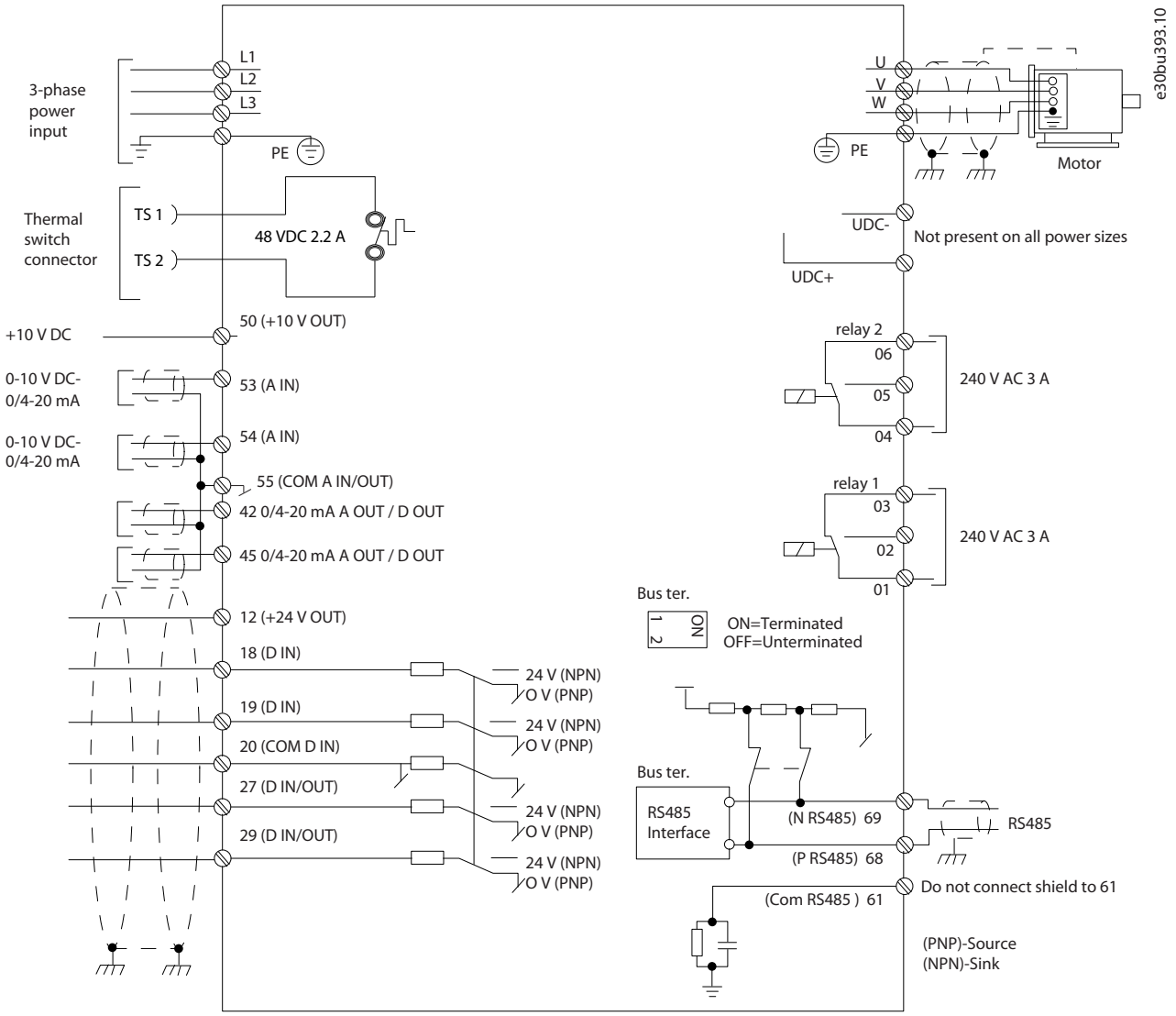

Illustration 11: Basic Wiring Schematic Drawing

3.2.8 Acoustic Noise or Vibration

If the motor or the equipment driven by the motor, for example, a fan, is making noise or vibrations at certain frequencies, configure the following parameters or parameter groups to reduce or eliminate the noise or vibrations:

- *Parameter group 4-6* Speed Bypass*.
- Set *parameter 14-03 Overmodulation* to *[0] Off*.
- Switching pattern and switching frequency *parameter group 14-0* Inverter Switching*.
- *Parameter 1-64 Resonance Dampening*.

4 Programming

4.1 Local Control Panel (LCP)

The LCP is divided into 4 functional sections.

- A. Display
- B. Menu key
- C. Navigation keys and indicator lights
- D. Operation keys and indicator lights

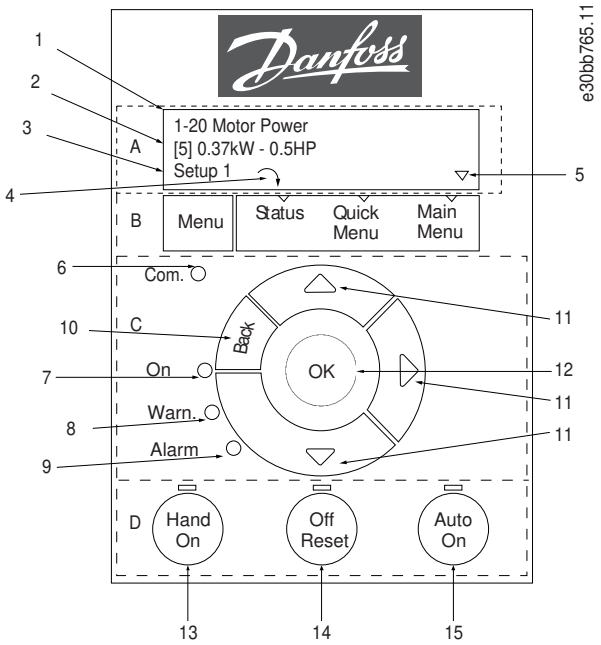

Illustration 12: Local Control Panel (LCP)

A. Display

The LCD display is illuminated with 2 alphanumeric lines. Table 15 describes the information that can be read from the display.

Table 15: Legend to Section A, Illustration 3

1	Parameter number and name.
2	Parameter value.
3	Setup number shows the active setup and the edit setup. If the same setup acts as both active and edit setup, only that setup number is shown (factory setting). When active and edit setup differ, both numbers are shown in the display (setup 12). The number flashing indicates the edit setup.
4	Motor direction is shown to the bottom left of the display – indicated by a small arrow pointing either clockwise or counter-clockwise.
5	The triangle indicates if the LCP is in Status, Quick Menu, or Main Menu.

B. Menu key

Press [Menu] to select among Status, Quick Menu, or Main Menu.

C. Navigation keys and indicator lights

Table 16: Legend to Section C, Illustration 3

6	Com. (yellow indicator): Flashes during bus communication.
7	On (green indicator): Control section is working correctly.

8	Warn. (yellow indicator): Indicates a warning.
9	Alarm (red indicator): Indicates an alarm.
10	[Back]: For moving to the previous step or layer in the navigation structure.
11	[▵] [▿] [▸]: For navigating among parameter groups and parameters, and within parameters. They can also be used for setting local reference.
12	[OK]: For selecting a parameter and for accepting changes to parameter settings.

D. Operation keys and indicator lights

Table 17: Legend to Section D, Illustration 3

13	[Hand On]: Starts the motor and enables control of the drive via the LCP. **N O T I C E** *[2] Coast inverse* is the default option for *parameter 5-12 Terminal 27 Digital Input*. If there is no 24 V supply to terminal 27, [Hand On] does not start the motor. Connect terminal 12 to terminal 27.
14	[Off/Reset]: Stops the compressor (Off). If in alarm mode, the alarm is reset.
15	[Auto On]: The drive is controlled either via control terminals or serial communication.

4.2 Set-up Wizard

4.2.1 Setup Wizard Introduction

The built-in wizard menu guides the installer through the setup of the drive in a clear and structured manner for open-loop and closed-loop applications, and for quick motor settings.

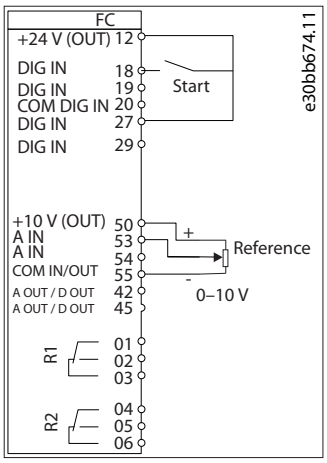

Illustration 13: Drive Wiring

The wizard can always be accessed again through the quick menu. Press [OK] to start the wizard. Press [Back] to return to the status view.

4.2.2 Set-up Wizard for Open-loop Applications

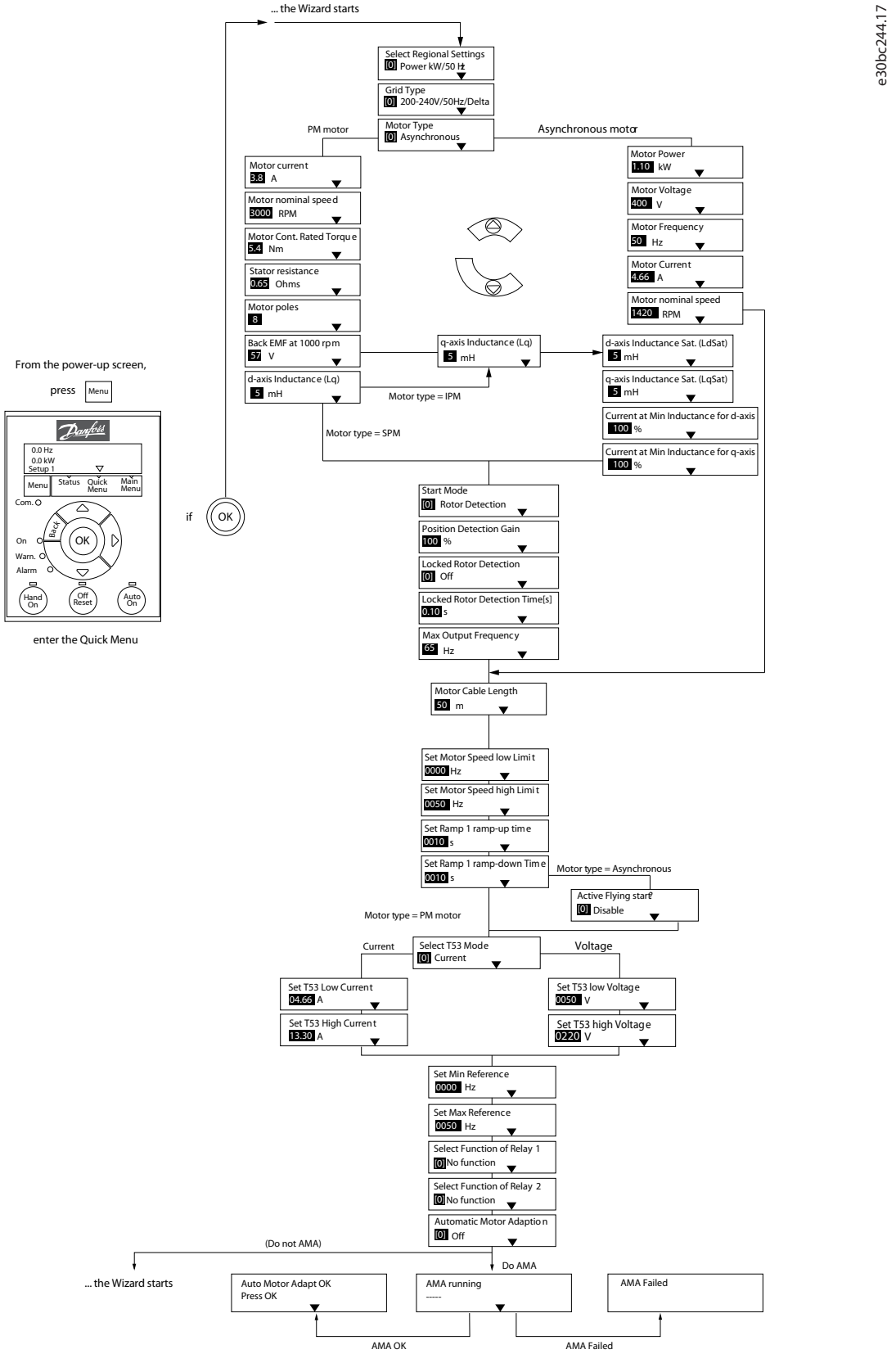

Illustration 14: Set-up Wizard for Open-loop Applications

Table 18: Set-up Wizard for Open-loop Applications

Parameter	Option	Default	Usage
Parameter 0-03 Regional Settings	• *[0] International* • *[1] US*	*[0] International*	–
Parameter 0-06 GridType	• *[10] 380–440 V/50 Hz/IT-grid* • *[11] 380–440 V/50 Hz/Delta* • *[12] 380–440 V/50 Hz* • *[20] 440–480 V/50 Hz/IT-grid* • *[21] 440–480 V/50 Hz/Delta* • *[22] 440–480 V/50 Hz* • *[110] 380–440 V/60 Hz/IT-grid* • *[111] 380–440 V/60 Hz/Delta* • *[112] 380–440 V/60 Hz* • *[120] 440–480 V/60 Hz/IT-grid* • *[121] 440–480 V/60 Hz/Delta* • *[122] 440–480 V/60 Hz*	Size related	Select the operating mode for restart after reconnection of the drive to mains voltage after power down.
Parameter 1-10 Motor Construction	• **[0] Asynchron* • *[1] PM, non-salient SPM* • *[3] PM, salient IPM*	*[0] Asynchron*	Setting the parameter value might change these parameters: • *Parameter 1-01 Motor Control Principle*. • *Parameter 1-03 Torque Characteristics*. • *Parameter 1-08 Motor Control Bandwidth*. • *Parameter 1-14 Damping Gain*. • *Parameter 1-15 Low Speed Filter Time Const*. • *Parameter 1-16 High Speed Filter Time Const*. • *Parameter 1-17 Voltage Filter Time Const*. • *Parameter 1-20 Motor Power*. • *Parameter 1-22 Motor Voltage*. • *Parameter 1-23 Motor Frequency*. • *Parameter 1-24 Motor Current*. • *Parameter 1-25 Motor Nominal Speed*. • *Parameter 1-26 Motor Cont. Rated Torque*. • *Parameter 1-30 Stator Resistance (Rs)*. • *Parameter 1-33 Stator Leakage Reactance (X1)*. • *Parameter 1-35 Main Reactance (Xh)*. • *Parameter 1-37 d-axis Inductance (Ld)*. • *Parameter 1-38 q-axis Inductance (Lq)*. • *Parameter 1-39 Motor Poles*.

Parameter	Option	Default	Usage
			• *Parameter 1-40 Back EMF at 1000 RPM.* • *Parameter 1-44 d-axis Inductance Sat. (LdSat).* • *Parameter 1-45 q-axis Inductance Sat. (LqSat).* • *Parameter 1-46 Position Detection Gain.* • *Parameter 1-48 Current at Min Inductance for d-axis.* • *Parameter 1-49 Current at Min Inductance for q-axis.* • *Parameter 1-66 Min. Current at Low Speed.* • *Parameter 1-70 PM Start Mode.* • *Parameter 1-72 Start Function.* • *Parameter 1-73 Flying Start.* • *Parameter 1-80 Function at Stop.* • *Parameter 1-82 Min Speed for Function at Stop [Hz].* • *Parameter 1-90 Motor Thermal Protection.* • *Parameter 2-00 DC Hold/Motor Preheat Current.* • *Parameter 2-01 DC Brake Current.* • *Parameter 2-02 DC Braking Time.* • *Parameter 2-04 DC Brake Cut In Speed.* • *Parameter 2-10 Brake Function.* • *Parameter 4-14 Motor Speed High Limit [Hz].* • *Parameter 4-19 Max Output Frequency.* • *Parameter 4-58 Missing Motor Phase Function.* • *Parameter 14-65 Speed Derate Dead Time Compensation.*
Parameter 1-20 Motor Power	*0.12–110 kW/0.16–150 hp*	Size related	Enter the motor power from the nameplate data.
Parameter 1-22 Motor Voltage	*50–1000 V*	Size related	Enter the motor voltage from the nameplate data.
Parameter 1-23 Motor Frequency	*20–400 Hz*	Size related	Enter the motor frequency from the nameplate data.
Parameter 1-24 Motor Current	*0.01–10000.00 A*	Size related	Enter the motor current from the nameplate data.
Parameter 1-25 Motor Nominal Speed	*50–9999 RPM*	Size related	Enter the motor nominal speed from the nameplate data.
Parameter 1-26 Motor Cont. Rated Torque	*0.1–1000.0 Nm*	Size related	This parameter is available when *parameter 1-10 Motor Construction* is set to options that enable permanent motor mode. **NOTICE** Changing this parameter affects the settings of other parameters.
Parameter 1-29 Automatic Motor Adaption (AMA)	See *parameter 1-29 Automatic Motor Adaption (AMA).*	*Off*	Performing an AMA optimizes motor performance.

Parameter	Option	Default	Usage
Parameter 1-30 Stator Resistance (Rs)	*0.000–99.990 Ω*	Size related	Set the stator resistance value.
Parameter 1-37 d-axis Inductance (Ld)	*0.000–1000.000 mH*	Size related	Enter the value of the d-axis inductance. Obtain the value from the permanent magnet motor datasheet.
Parameter 1-38 q-axis Inductance (Lq)	*0.000–1000.000 mH*	Size related	Enter the value of the q-axis inductance.
Parameter 1-39 Motor Poles	*2–100*	*4*	Enter the number of motor poles.
Parameter 1-40 Back EMF at 1000 RPM	*10–9000 V*	Size related	Line-line RMS back EMF voltage at 1000 RPM.
Parameter 1-42 Motor Cable Length	*0–100 m*	*50 m*	Enter the motor cable length.
Parameter 1-44 d-axis Inductance Sat. (LdSat)	*0.000–1000.000 mH*	Size related	This parameter corresponds to the inductance saturation of Ld. Ideally, this parameter has the same value as *parameter 1-37 d-axis Inductance (Ld)*. However, if the motor supplier provides an induction curve, enter the induction value, which is 200% of the nominal current.
Parameter 1-45 q-axis Inductance Sat. (LqSat)	*0.000–1000.000 mH*	Size related	This parameter corresponds to the inductance saturation of Lq. Ideally, this parameter has the same value as *parameter 1-38 q-axis Inductance (Lq)*. However, if the motor supplier provides an induction curve, enter the induction value, which is 200% of the nominal current.
Parameter 1-46 Position Detection Gain	*20–200%*	*100%*	Adjusts the height of the test pulse during position detection at start.
Parameter 1-48 Current at Min Inductance for d-axis	*20–200%*	*100%*	Enter the inductance saturation point.
Parameter 1-49 Current at Min Inductance for q-axis	*20–200%*	*100%*	This parameter specifies the saturation curve of the d- and q-inductance values. From 20–100% of this parameter, the inductances are linearly approximated due to *parameter 1-37 d-axis Inductance (Ld)*, *parameter 1-38 q-axis Inductance (Lq)*, *parameter 1-44 d-axis Inductance Sat. (LdSat)*, and *parameter 1-45 q-axis Inductance Sat. (LqSat)*.
Parameter 1-70 PM Start Mode	• *[0] Rotor Detection* • *[1] Parking*	*[0] Rotor Detection*	Select the PM motor start mode.
Parameter 1-73 Flying Start	• *[0] Disabled* • *[1] Enabled*	*[0] Disabled*	Select *[1] Enabled* to enable the drive to catch a motor spinning due to mains dropout. Select *[0] Disabled* if this function is not required. When this parameter is set to *[1] Enabled*, *parameter 1-71 Start Delay* and *parameter 1-72 Start Function* are not functional. *Parameter 1-73 Flying Start* is active in VVC$^+$ mode only.
Parameter 3-02 Minimum Reference	*-4999.000–4999.000*	*0*	The minimum reference is the lowest value obtainable by summing all references.
Parameter 3-03 Maximum Reference	*-4999.000–4999.000*	*50*	The maximum reference is the lowest obtainable by summing all references.

Parameter	Option	Default	Usage
Parameter 3-41 Ramp 1 Ramp Up Time	*0.05–3600.00 s*	Size related	If asynchronous motor is selected, the ramp-up time is from 0 to rated *parameter 1-23 Motor Frequency*. If PM motor is selected, the ramp-up time is from 0 to *parameter 1-25 Motor Nominal Speed*.
Parameter 3-42 Ramp 1 Ramp Down Time	*0.05–3600.00 s*	Size related	For asynchronous motors, the ramp-down time is from rated *parameter 1-23 Motor Frequency* to 0. For PM motors, the ramp-down time is from *parameter 1-25 Motor Nominal Speed* to 0.
Parameter 4-12 Motor Speed Low Limit [Hz]	*0.0–400.0 Hz*	*0 Hz*	Enter the minimum limit for low speed.
Parameter 4-14 Motor Speed High Limit [Hz]	*0.0–400.0 Hz*	*100 Hz*	Enter the maximum limit for high speed.
Parameter 4-19 Max Output Frequency	*0.0–400.0 Hz*	*100 Hz*	Enter the maximum output frequency value. If *parameter 4-19 Max Output Frequency* is set lower than *parameter 4-14 Motor Speed High Limit [Hz]*, *parameter 4-14 Motor Speed High Limit [Hz]* will be set equal to *parameter 4-19 Max Output Frequency* automatically.
Parameter 5-40 Function Relay	See *parameter 5-40 Function Relay*.	*[9] Alarm*	Select the function to control output relay 1.
Parameter 5-40 Function Relay	See *parameter 5-40 Function Relay*.	*[5] Drive running*	Select the function to control output relay 2.
Parameter 6-10 Terminal 53 Low Voltage	*0.00–10.00 V*	*0.07 V*	Enter the voltage that corresponds to the low reference value.
Parameter 6-11 Terminal 53 High Voltage	*0.00–10.00 V*	*10 V*	Enter the voltage that corresponds to the high reference value.
Parameter 6-12 Terminal 53 Low Current	*0.00–20.00 mA*	*4 mA*	Enter the current that corresponds to the low reference value.
Parameter 6-13 Terminal 53 High Current	*0.00–20.00 mA*	*20 mA*	Enter the current that corresponds to the high reference value.
Parameter 6-19 Terminal 53 mode	• *[0] Current* • *[1] Voltage*	*[1] Voltage*	Select if terminal 53 is used for current or voltage input.
Parameter 30-22 Locked Rotor Detection	• *[0] Off* • *[1] On*	*[0] Off*	–
Parameter 30-23 Locked Rotor Detection Time [s]	*0.05–1 s*	*0.10 s*	–

4.2.3 Set-up Wizard for Closed-loop Applications

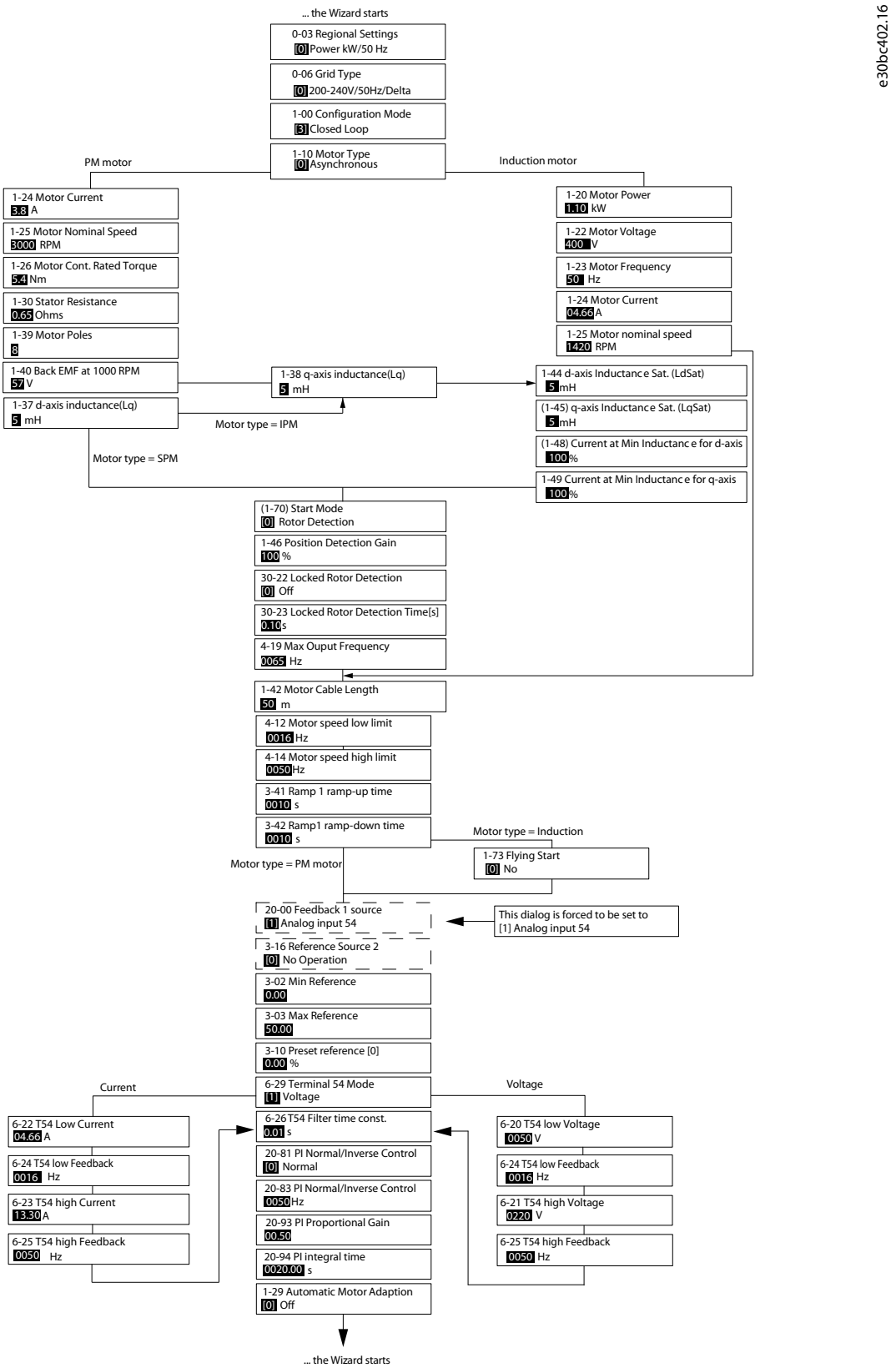

Illustration 15: Set-up Wizard for Closed-loop Applications

Table 19: Set-up Wizard for Closed-loop Applications

Parameter	Range	Default	Usage
Parameter 0-03 Regional Settings	• *[0] International* • *[1] US*	*[0] International*	–
Parameter 0-06 Grid-Type	• *[10] 380–440 V/50 Hz/IT-grid* • *[11] 380–440 V/50 Hz/Delta* • *[12] 380–440 V/50 Hz* • *[20] 440–480 V/50 Hz/IT-grid* • *[21] 440–480 V/50 Hz/Delta* • *[22] 440–480 V/50 Hz* • *[110] 380–440 V/60 Hz/IT-grid* • *[111] 380–440 V/60 Hz/Delta* • *[112] 380–440 V/60 Hz* • *[120] 440–480 V/60 Hz/IT-grid* • *[121] 440–480 V/60 Hz/Delta* • *[122] 440–480 V/60 Hz*	Size selected	Select the operating mode for restart after reconnection of the drive to mains voltage after power down.
Parameter 1-00 Configuration Mode	• *[0] Open loop* • *[3] Closed loop*	*[0] Open loop*	Select *[3] Closed loop*.
Parameter 1-10 Motor Construction	• **[0] Asynchron* • *[1] PM, non-salient SPM* • *[3] PM, salient IPM*	*[0] Asynchron*	Setting the parameter value might change these parameters: • *Parameter 1-01 Motor Control Principle*. • *Parameter 1-03 Torque Characteristics*. • *Parameter 1-08 Motor Control Bandwidth*. • *Parameter 1-14 Damping Gain*. • *Parameter 1-15 Low Speed Filter Time Const*. • *Parameter 1-16 High Speed Filter Time Const*. • *Parameter 1-17 Voltage Filter Time Const*. • *Parameter 1-20 Motor Power*. • *Parameter 1-22 Motor Voltage*. • *Parameter 1-23 Motor Frequency*. • *Parameter 1-24 Motor Current*. • *Parameter 1-25 Motor Nominal Speed*. • *Parameter 1-26 Motor Cont. Rated Torque*. • *Parameter 1-30 Stator Resistance (Rs)*. • *Parameter 1-33 Stator Leakage Reactance (X1)*. • *Parameter 1-35 Main Reactance (Xh)*. • *Parameter 1-37 d-axis Inductance (Ld)*.

Parameter	Range	Default	Usage
			• *Parameter 1-38 q-axis Inductance (Lq).* • *Parameter 1-39 Motor Poles.* • *Parameter 1-40 Back EMF at 1000 RPM.* • *Parameter 1-44 d-axis Inductance Sat. (LdSat).* • *Parameter 1-45 q-axis Inductance Sat. (LqSat).* • *Parameter 1-46 Position Detection Gain.* • *Parameter 1-48 Current at Min Inductance for d-axis.* • *Parameter 1-49 Current at Min Inductance for q-axis.* • *Parameter 1-66 Min. Current at Low Speed.* • *Parameter 1-70 PM Start Mode.* • *Parameter 1-72 Start Function.* • *Parameter 1-73 Flying Start.* • *Parameter 1-80 Function at Stop.* • *Parameter 1-82 Min Speed for Function at Stop [Hz].* • *Parameter 1-90 Motor Thermal Protection.* • *Parameter 2-00 DC Hold/Motor Preheat Current.* • *Parameter 2-01 DC Brake Current.* • *Parameter 2-02 DC Braking Time.* • *Parameter 2-04 DC Brake Cut In Speed.* • *Parameter 2-10 Brake Function.* • *Parameter 4-14 Motor Speed High Limit [Hz].* • *Parameter 4-19 Max Output Frequency.* • *Parameter 4-58 Missing Motor Phase Function.* • *Parameter 14-65 Speed Derate Dead Time Compensation.*
Parameter 1-20 Motor Power	*0.09–110 kW*	Size related	Enter the motor power from the nameplate data.
Parameter 1-22 Motor Voltage	*50–1000 V*	Size related	Enter the motor voltage from the nameplate data.
Parameter 1-23 Motor Frequency	*20–400 Hz*	Size related	Enter the motor frequency from the nameplate data.
Parameter 1-24 Motor Current	*0–10000 A*	Size related	Enter the motor current from the nameplate data.
Parameter 1-25 Motor Nominal Speed	*50–9999 RPM*	Size related	Enter the motor nominal speed from the nameplate data.
Parameter 1-26 Motor Cont. Rated Torque	*0.1–1000.0 Nm*	Size related	This parameter is available when *parameter 1-10 Motor Construction* is set to options that enable permanent motor mode. **NOTICE** Changing this parameter affects the settings of other parameters.

Parameter	Range	Default	Usage
Parameter 1-29 Automatic Motor Adaption (AMA)	–	*Off*	Performing an AMA optimizes motor performance.
Parameter 1-30 Stator Resistance (Rs)	*0–99.990 Ω*	Size related	Set the stator resistance value.
Parameter 1-37 d-axis Inductance (Ld)	*0.000–1000.000 mH*	Size related	Enter the value of the d-axis inductance. Obtain the value from the permanent magnet motor datasheet.
Parameter 1-38 q-axis Inductance (Lq)	*0.000–1000.000 mH*	Size related	Enter the value of the q-axis inductance.
Parameter 1-39 Motor Poles	*2–100*	*4*	Enter the number of motor poles.
Parameter 1-40 Back EMF at 1000 RPM	*10–9000 V*	Size related	Line-line RMS back EMF voltage at 1000 RPM.
Parameter 1-42 Motor Cable Length	*0–100 m*	*50 m*	Enter the motor cable length.
Parameter 1-44 d-axis Inductance Sat. (LdSat)	*0.000–1000.000 mH*	Size related	This parameter corresponds to the inductance saturation of Ld. Ideally, this parameter has the same value as *parameter 1-37 d-axis Inductance (Ld)*. However, if the motor supplier provides an induction curve, enter the induction value, which is 200% of the nominal current.
Parameter 1-45 q-axis Inductance Sat. (LqSat)	*0.000–1000.000 mH*	Size related	This parameter corresponds to the inductance saturation of Lq. Ideally, this parameter has the same value as *parameter 1-38 q-axis Inductance (Lq)*. However, if the motor supplier provides an induction curve, enter the induction value, which is 200% of the nominal current.
Parameter 1-46 Position Detection Gain	*20–200%*	*100%*	Adjusts the height of the test pulse during position detection at start.
Parameter 1-48 Current at Min Inductance for d-axis	*20–200%*	*100%*	Enter the inductance saturation point.
Parameter 1-49 Current at Min Inductance for q-axis	*20–200%*	*100%*	This parameter specifies the saturation curve of the d- and q-inductance values. From 20–100% of this parameter, the inductances are linearly approximated due to *parameter 1-37 d-axis Inductance (Ld)*, *parameter 1-38 q-axis Inductance (Lq)*, *parameter 1-44 d-axis Inductance Sat. (LdSat)*, and *parameter 1-45 q-axis Inductance Sat. (LqSat)*.
Parameter 1-70 PM Start Mode	• *[0] Rotor Detection* • *[1] Parking*	*[0] Rotor Detection*	Select the PM motor start mode.
Parameter 1-73 Flying Start	• *[0] Disabled* • *[1] Enabled*	*[0] Disabled*	Select *[1] Enabled* to enable the drive to catch a spinning motor in, for example, fan applications. When PM is selected, this parameter is enabled.
Parameter 3-02 Minimum Reference	*-4999.000–4999.000*	*0*	The minimum reference is the lowest value obtainable by summing all references.
Parameter 3-03 Maximum Reference	*-4999.000–4999.000*	*50*	The maximum reference is the highest value obtainable by summing all references.

Parameter	Range	Default	Usage
Parameter 3-10 Preset Reference	*-100–100%*	*0*	Enter the setpoint.
Parameter 3-41 Ramp 1 Ramp Up Time	*0.05–3600.0 s*	Size related	Ramp-up time from 0 to rated *parameter 1-23 Motor Frequency* for asynchronous motors. Ramp-up time from 0 to *parameter 1-25 Motor Nominal Speed* for PM motors.
Parameter 3-42 Ramp 1 Ramp Down Time	*0.05–3600.0 s*	Size related	Ramp-down time from rated *parameter 1-23 Motor Frequency* to 0 for asynchronous motors. Ramp-down time from *parameter 1-25 Motor Nominal Speed* to 0 for PM motors.
Parameter 4-12 Motor Speed Low Limit [Hz]	*0.0–400.0 Hz*	*0.0 Hz*	Enter the minimum limit for low speed.
Parameter 4-14 Motor Speed High Limit [Hz]	*0.0–400.0 Hz*	*100 Hz*	Enter the minimum limit for high speed.
Parameter 4-19 Max Output Frequency	*0.0–400.0 Hz*	*100 Hz*	Enter the maximum output frequency value. If *parameter 4-19 Max Output Frequency* is set lower than *parameter 4-14 Motor Speed High Limit [Hz]*, *parameter 4-14 Motor Speed High Limit [Hz]* will be set equal to *parameter 4-19 Max Output Frequency* automatically.
Parameter 6-20 Terminal 54 Low Voltage	*0.00–10.00 V*	*0.07 V*	Enter the voltage that corresponds to the low reference value.
Parameter 6-21 Terminal 54 High Voltage	*0.00–10.00 V*	*10.00 V*	Enter the voltage that corresponds to the high reference value.
Parameter 6-22 Terminal 54 Low Current	*0.00–20.00 mA*	*4.00 mA*	Enter the current that corresponds to the low reference value.
Parameter 6-23 Terminal 54 High Current	*0.00–20.00 mA*	*20.00 mA*	Enter the current that corresponds to the high reference value.
Parameter 6-24 Terminal 54 Low Ref./Feedb. Value	*-4999–4999*	*0*	Enter the feedback value that corresponds to the voltage or current set in *parameter 6-20 Terminal 54 Low Voltage/parameter 6-22 Terminal 54 Low Current*.
Parameter 6-25 Terminal 54 High Ref./Feedb. Value	*-4999–4999*	*50*	Enter the feedback value that corresponds to the voltage or current set in *parameter 6-21 Terminal 54 High Voltage/parameter 6-23 Terminal 54 High Current*.
Parameter 6-26 Terminal 54 Filter Time Constant	*0.00–10.00 s*	*0.01*	Enter the filter time constant.
Parameter 6-29 Terminal 54 mode	• *[0] Current* • *[1] Voltage*	*[1] Voltage*	Select if terminal 54 is used for current or voltage input.
Parameter 20-81 PI Normal/Inverse Control	• *[0] Normal* • *[1] Inverse*	*[0] Normal*	Select *[0] Normal* to set the process control to increase the output speed when the process error is positive. Select *[1] Inverse* to reduce the output speed.
Parameter 20-83 PI Start Speed [Hz]	*0–200 Hz*	*0 Hz*	Enter the motor speed to be attained as a start signal for commencement of PI control.

Parameter	Range	Default	Usage
Parameter 20-93 PI Proportional Gain	*0.00–10.00*	*0.01*	Enter the process controller proportional gain. Quick control is obtained at high amplification. However, if amplification is too high, the process may become unstable.
Parameter 20-94 PI Integral Time	*0.1–999.0 s*	*999.0 s*	Enter the process controller integral time. Obtain quick control through a short integral time, though if the integral time is too short, the process becomes unstable. An excessively long integral time disables the integral action.
Parameter 30-22 Locked Rotor Detection	• *[0] Off* • *[1] On*	*[0] Off*	–
Parameter 30-23 Locked Rotor Detection Time [s]	*0.05–1.00 s*	*0.10 s*	–

4.2.4 Motor Set-up

The motor set-up wizard guides users through the needed motor parameters.

Table 20: Motor Set-up Wizard Settings

Parameter	Range	Default	Usage
Parameter 0-03 Regional Settings	• *[0] International* • *[1] US*	*[0] International*	–
Parameter 0-06 GridType	• *[10] 380–440 V/50 Hz/IT-grid* • *[11] 380–440 V/50 Hz/Delta* • *[12] 380–440 V/50 Hz* • *[20] 440–480 V/50 Hz/IT-grid* • *[21] 440–480 V/50 Hz/Delta* • *[22] 440–480 V/50 Hz* • *[110] 380–440 V/60 Hz/IT-grid* • *[111] 380–440 V/60 Hz/Delta* • *[112] 380–440 V/60 Hz* • *[120] 440–480 V/60 Hz/IT-grid* • *[121] 440–480 V/60 Hz/Delta* • *[122] 440–480 V/60 Hz*	Size selected	Select the operating mode for restart after reconnection of the drive to mains voltage after power down.
Parameter 1-10 Motor Construction	• **[0] Asynchron* • *[1] PM, non-salient SPM* • *[3] PM, salient IPM*	*[0] Asynchron*	Setting the parameter value might change these parameters: • *Parameter 1-01 Motor Control Principle.* • *Parameter 1-03 Torque Characteristics.* • *Parameter 1-08 Motor Control Bandwidth.*

Parameter	Range	Default	Usage
			• *Parameter 1-14 Damping Gain.* • *Parameter 1-15 Low Speed Filter Time Const.* • *Parameter 1-16 High Speed Filter Time Const.* • *Parameter 1-17 Voltage Filter Time Const.* • *Parameter 1-20 Motor Power.* • *Parameter 1-22 Motor Voltage.* • *Parameter 1-23 Motor Frequency.* • *Parameter 1-24 Motor Current.* • *Parameter 1-25 Motor Nominal Speed.* • *Parameter 1-26 Motor Cont. Rated Torque.* • *Parameter 1-30 Stator Resistance (Rs).* • *Parameter 1-33 Stator Leakage Reactance (X1).* • *Parameter 1-35 Main Reactance (Xh).* • *Parameter 1-37 d-axis Inductance (Ld).* • *Parameter 1-38 q-axis Inductance (Lq).* • *Parameter 1-39 Motor Poles.* • *Parameter 1-40 Back EMF at 1000 RPM.* • *Parameter 1-44 d-axis Inductance Sat. (LdSat).* • *Parameter 1-45 q-axis Inductance Sat. (LqSat).* • *Parameter 1-46 Position Detection Gain.* • *Parameter 1-48 Current at Min Inductance for d-axis.* • *Parameter 1-49 Current at Min Inductance for q-axis.* • *Parameter 1-66 Min. Current at Low Speed.* • *Parameter 1-70 PM Start Mode.* • *Parameter 1-72 Start Function.* • *Parameter 1-73 Flying Start.* • *Parameter 1-80 Function at Stop.* • *Parameter 1-82 Min Speed for Function at Stop [Hz].* • *Parameter 1-90 Motor Thermal Protection.* • *Parameter 2-00 DC Hold/Motor Preheat Current.* • *Parameter 2-01 DC Brake Current.* • *Parameter 2-02 DC Braking Time.* • *Parameter 2-04 DC Brake Cut In Speed.* • *Parameter 2-10 Brake Function.* • *Parameter 4-14 Motor Speed High Limit [Hz].* • *Parameter 4-19 Max Output Frequency.* • *Parameter 4-58 Missing Motor Phase Function.* • *Parameter 14-65 Speed Derate Dead Time Compensation.*
Parameter 1-20 Motor Power	*0.12–110 kW/0.16–150 hp*	Size related	Enter the motor power from the nameplate data.
Parameter 1-22 Motor Voltage	*50–1000 V*	Size related	Enter the motor voltage from the nameplate data.

Parameter	Range	Default	Usage
Parameter 1-23 Motor Frequency	*20–400 Hz*	Size related	Enter the motor frequency from the nameplate data.
Parameter 1-24 Motor Current	*0.01–10000.00 A*	Size related	Enter the motor current from the nameplate data.
Parameter 1-25 Motor Nominal Speed	*50–9999 RPM*	Size related	Enter the motor nominal speed from the nameplate data.
Parameter 1-26 Motor Cont. Rated Torque	*0.1–1000.0 Nm*	Size related	This parameter is available when *parameter 1-10 Motor Construction* is set to options that enable permanent motor mode. **NOTICE** Changing this parameter affects the settings of other parameters.
Parameter 1-30 Stator Resistance (Rs)	*0–99.990 Ω*	Size related	Set the stator resistance value.
Parameter 1-37 d-axis Inductance (Ld)	*0.000–1000.000 mH*	Size related	Enter the value of the d-axis inductance. Obtain the value from the permanent magnet motor datasheet.
Parameter 1-38 q-axis Inductance (Lq)	*0.000–1000.000 mH*	Size related	Enter the value of the q-axis inductance.
Parameter 1-39 Motor Poles	*2–100*	*4*	Enter the number of motor poles.
Parameter 1-40 Back EMF at 1000 RPM	*10–9000 V*	Size related	Line-line RMS back EMF voltage at 1000 RPM.
Parameter 1-42 Motor Cable Length	*0–100 m*	*50 m*	Enter the motor cable length.
Parameter 1-44 d-axis Inductance Sat. (LdSat)	*0.000–1000.000 mH*	Size related	This parameter corresponds to the inductance saturation of Ld. Ideally, this parameter has the same value as *parameter 1-37 d-axis Inductance (Ld)*. However, if the motor supplier provides an induction curve, enter the induction value, which is 200% of the nominal current.
Parameter 1-45 q-axis Inductance Sat. (LqSat)	*0.000–1000.000 mH*	Size related	This parameter corresponds to the inductance saturation of Lq. Ideally, this parameter has the same value as *parameter 1-38 q-axis Inductance (Lq)*. However, if the motor supplier provides an induction curve, enter the induction value, which is 200% of the nominal current.
Parameter 1-46 Position Detection Gain	*20–200%*	*100%*	Adjusts the height of the test pulse during position detection at start.
Parameter 1-48 Current at Min Inductance for d-axis	*20–200%*	*100%*	Enter the inductance saturation point.
Parameter 1-49 Current at Min Inductance for q-axis	*20–200%*	*100%*	This parameter specifies the saturation curve of the d- and q-inductance values. From 20–100% of this parameter, the inductances are linearly approximated due to *parameter 1-37 d-axis Inductance (Ld)*, *parameter 1-38 q-axis Inductance (Lq)*, *pa-*

Parameter	Range	Default	Usage
			rameter 1-44 d-axis Inductance Sat. (LdSat), and *parameter 1-45 q-axis Inductance Sat. (LqSat)*.
Parameter 1-70 PM Start Mode	• *[0] Rotor Detection* • *[1] Parking*	*[0] Rotor Detection*	Select the PM motor start mode.
Parameter 1-73 Flying Start	• *[0] Disabled* • *[1] Enabled*	*[0] Disabled*	Select *[1] Enabled* to enable the drive to catch a spinning motor.
Parameter 3-41 Ramp 1 Ramp Up Time	*0.05–3600.0 s*	Size related	Ramp-up time from 0 to rated *parameter 1-23 Motor Frequency*.
Parameter 3-42 Ramp 1 Ramp Down Time	*0.05–3600.0 s*	Size related	Ramp-down time from rated *parameter 1-23 Motor Frequency* to 0.
Parameter 4-12 Motor Speed Low Limit [Hz]	*0.0–400.0 Hz*	*0.0 Hz*	Enter the minimum limit for low speed.
Parameter 4-14 Motor Speed High Limit [Hz]	*0.0–400.0 Hz*	*100.0 Hz*	Enter the maximum limit for high speed.
Parameter 4-19 Max Output Frequency	*0.0–400.0 Hz*	*100.0 Hz*	Enter the maximum output frequency value. If *parameter 4-19 Max Output Frequency* is set lower than *parameter 4-14 Motor Speed High Limit [Hz]*, *parameter 4-14 Motor Speed High Limit [Hz]* will be set equal to *parameter 4-19 Max Output Frequency* automatically.
Parameter 30-22 Locked Rotor Detection	• *[0] Off* • *[1] On*	*[0] Off*	–
Parameter 30-23 Locked Rotor Detection Time [s]	*0.05–1.00 s*	*0.10 s*	–

4.2.5 Changes Made Function

The changes made function lists all parameters changed from default settings.

- The list shows only parameters that have been changed in the current edit setup.
- Parameters that have been reset to default values are not listed.
- The message *Empty* indicates that no parameters have been changed.

4.2.6 Changing Parameter Settings

Procedure

1. To enter the Quick Menu, press the [Menu] key until the indicator in the display is placed above Quick Menu.
2. Press [▵] [▿] to select the wizard, closed-loop setup, motor setup, or changes made.
3. Press [OK].
4. Press [▵] [▿] to browse through the parameters in the Quick Menu.
5. Press [OK] to select a parameter.
6. Press [▵] [▿] to change the value of a parameter setting.
7. Press [OK] to accept the change.
8. Press either [Back] twice to enter Status, or press [Menu] once to enter the Main Menu.

4.2.7 Accessing All Parameters via the Main Menu

Procedure

1. Press the [Menu] key until the indicator in the display is placed above Main Menu.
2. Press [▵] [▿] to browse through the parameter groups.
3. Press [OK] to select a parameter group.
4. Press [▵] [▿] to browse through the parameters in the specific group.
5. Press [OK] to select the parameter.
6. Press [▵] [▿] to set/change the parameter value.
7. Press [OK] to accept the change.

4.3 Parameter List

0-**	**Operation / Display**
0-0*	**Basic Settings**
0-01	Language
0-03	Regional Settings
0-04	Operating State at Power-up
0-06	GridType
0-07	Auto DC Braking
0-1*	**Set-up Operations**
0-10	Active Set-up
0-11	Programming Set-up
0-12	Link Setups
0-3*	**LCP Custom Readout**
0-30	Custom Readout Unit
0-31	Custom Readout Min Value
0-32	Custom Readout Max Value
0-37	Display Text 1
0-38	Display Text 2
0-39	Display Text 3
0-4*	**LCP Keypad**
0-40	[Hand on] Key on LCP
0-42	[Auto on] Key on LCP
0-44	[Off/Reset] Key on LCP
0-5*	**Copy/Save**
0-50	LCP Copy
0-51	Set-up Copy
0-6*	**Password**
0-60	Main Menu Password
0-61	Access to Main Menu w/o Password
1-**	**Load and Motor**
1-0*	**General Settings**
1-00	Configuration Mode
1-01	Motor Control Principle
1-03	Torque Characteristics
1-06	Clockwise Direction
1-08	Motor Control Bandwidth
1-1*	**Motor Selection**
1-10	Motor Construction
1-14	Damping Gain
1-15	Low Speed Filter Time Const.
1-16	High Speed Filter Time Const.
1-17	Voltage filter time const.
1-2*	**Motor Data**
1-20	Motor Power
1-22	Motor Voltage
1-23	Motor Frequency
1-24	Motor Current
1-25	Motor Nominal Speed
1-26	Motor Cont. Rated Torque
1-29	Automatic Motor Adaption (AMA)
1-3*	**Adv. Motor Data**
1-30	Stator Resistance (Rs)
1-33	Stator Leakage Reactance (X1)
1-35	Main Reactance (Xh)
1-37	d-axis Inductance (Ld)
1-38	q-axis Inductance (Lq)
1-39	Motor Poles
1-4*	**Adv. Motor Data II**
1-40	Back EMF at 1000 RPM
1-42	Motor Cable Length
1-43	Motor Cable Length Feet
1-44	d-axis Inductance Sat. (LdSat)
1-45	q-axis Inductance Sat. (LqSat)
1-46	Position Detection Gain
1-48	Current at Min Inductance for d-axis
1-49	Current at Min Inductance for q-axis
1-5*	**Load Indep. Setting**
1-50	Motor Magnetisation at Zero Speed
1-52	Min Speed Normal Magnetising [Hz]
1-55	U/f Characteristic - U
1-56	U/f Characteristic - F
1-6*	**Load Depen. Setting**
1-62	Slip Compensation
1-63	Slip Compensation Time Constant
1-64	Resonance Dampening
1-65	Resonance Dampening Time Constant
1-66	Min. Current at Low Speed
1-7*	**Start Adjustments**
1-70	Start Mode
1-71	Start Delay
1-72	Start Function
1-73	Flying Start
1-8*	**Stop Adjustments**
1-80	Function at Stop
1-82	Min Speed for Function at Stop [Hz]
1-88	AC Brake Gain
1-9*	**Motor Temperature**
1-90	Motor Thermal Protection
1-93	Thermistor Source
2-**	**Brakes**
2-0*	**DC-Brake**
2-00	DC Hold/Motor Preheat Current
2-01	DC Brake Current
2-02	DC Braking Time
2-04	DC Brake Cut In Speed
2-06	Parking Current
2-07	Parking Time
2-1*	**Brake Energy Funct.**
2-10	Brake Function
2-16	AC Brake, Max current
2-17	Over-voltage Control
2-19	Over-voltage Gain
3-**	**Reference / Ramps**
3-0*	**Reference Limits**
3-02	Minimum Reference
3-03	Maximum Reference
3-1*	**References**
3-10	Preset Reference
3-11	Jog Speed [Hz]
3-14	Preset Relative Reference
3-15	Reference 1 Source
3-16	Reference 2 Source
3-17	Reference 3 Source
3-4*	**Ramp 1**
3-41	Ramp 1 Ramp Up Time
3-42	Ramp 1 Ramp Down Time
3-5*	**Ramp 2**
3-51	Ramp 2 Ramp Up Time
3-52	Ramp 2 Ramp Down Time
3-8*	**Other Ramps**
3-80	Jog Ramp Time
3-81	Quick Stop Ramp Time
4-**	**Limits / Warnings**
4-1*	**Motor Limits**
4-10	Motor Speed Direction
4-12	Motor Speed Low Limit [Hz]
4-14	Motor Speed High Limit [Hz]
4-18	Current Limit
4-19	Max Output Frequency
4-4*	**Adj. Warnings 2**
4-40	Warning Freq. Low
4-41	Warning Freq. High
4-5*	**Adj. Warnings**
4-50	Warning Current Low
4-51	Warning Current High
4-54	Warning Reference Low
4-55	Warning Reference High
4-56	Warning Feedback Low
4-57	Warning Feedback High
4-58	Missing Motor Phase Function
4-6*	**Speed Bypass**
4-61	Bypass Speed From [Hz]
4-63	Bypass Speed To [Hz]
4-64	Semi-Auto Bypass Set-up
5-**	**Digital In/Out**
5-0*	**Digital I/O mode**
5-00	Digital Input Mode
5-03	Digital Input 29 Mode
5-1*	**Digital Inputs**
5-10	Terminal 18 Digital Input
5-11	Terminal 19 Digital Input
5-12	Terminal 27 Digital Input
5-13	Terminal 29 Digital Input
5-3*	**Digital Outputs**
5-34	On Delay, Digital Output
5-35	Off Delay, Digital Output
5-4*	**Relays**
5-40	Function Relay
5-41	On Delay, Relay
5-42	Off Delay, Relay
5-5*	**Pulse Input**
5-50	Term. 29 Low Frequency
5-51	Term. 29 High Frequency
5-52	Term. 29 Low Ref./Feedb. Value
5-53	Term. 29 High Ref./Feedb. Value
5-9*	**Bus Controlled**
5-90	Digital & Relay Bus Control
6-**	**Analog In/Out**
6-0*	**Analog I/O Mode**
6-00	Live Zero Timeout Time
6-01	Live Zero Timeout Function
6-02	Fire Mode Live Zero Timeout Function
6-1*	**Analog Input 53**
6-10	Terminal 53 Low Voltage
6-11	Terminal 53 High Voltage
6-12	Terminal 53 Low Current
6-13	Terminal 53 High Current
6-14	Terminal 53 Low Ref./Feedb. Value
6-15	Terminal 53 High Ref./Feedb. Value
6-16	Terminal 53 Filter Time Constant
6-19	Terminal 53 mode
6-2*	**Analog Input 54**
6-20	Terminal 54 Low Voltage
6-21	Terminal 54 High Voltage
6-22	Terminal 54 Low Current
6-23	Terminal 54 High Current
6-24	Terminal 54 Low Ref./Feedb. Value
6-25	Terminal 54 High Ref./Feedb. Value
6-26	Terminal 54 Filter Time Constant
6-29	Terminal 54 mode
6-7*	**Analog/Digital Output 45**
6-70	Terminal 45 Mode
6-71	Terminal 45 Analog Output
6-72	Terminal 45 Digital Output
6-73	Terminal 45 Output Min Scale
6-74	Terminal 45 Output Max Scale
6-76	Terminal 45 Output Bus Control
6-9*	**Analog/Digital Output 42**
6-90	Terminal 42 Mode
6-91	Terminal 42 Analog Output
6-92	Terminal 42 Digital Output
6-93	Terminal 42 Output Min Scale
6-94	Terminal 42 Output Max Scale
6-96	Terminal 42 Output Bus Control
6-98	Drive Type
8-**	**Comm. and Options**
8-0*	**General Settings**
8-01	Control Site
8-02	Control Source
8-03	Control Timeout Time
8-04	Control Timeout Function
8-3*	**FC Port Settings**
8-30	Protocol
8-31	Address
8-32	Baud Rate
8-33	Parity / Stop Bits
8-35	Minimum Response Delay
8-36	Maximum Response Delay
8-37	Maximum Inter-char delay
8-4*	**FC MC protocol set**
8-42	PCD Write Configuration
8-43	PCD Read Configuration
8-5*	**Digital/Bus**
8-50	Coasting Select
8-51	Quick Stop Select
8-52	DC Brake Select
8-53	Start Select
8-54	Reversing Select
8-55	Set-up Select
8-56	Preset Reference Select
8-7*	**BACnet**
8-70	BACnet Device Instance
8-72	MS/TP Max Masters
8-73	MS/TP Max Info Frames
8-74	"I am" Service
8-75	Intialisation Password
8-79	Protocol Firmware version
8-8*	**FC Port Diagnostics**
8-80	Bus Message Count
8-81	Bus Error Count
8-82	Slave Messages Rcvd
8-83	Slave Error Count
8-84	Slave Messages Sent
8-85	Slave Timeout Errors
8-88	Reset FC port Diagnostics
8-9*	**Bus Feedback**
8-94	Bus Feedback 1
8-95	Bus Feedback 2
13-**	**Smart Logic**
13-0*	**SLC Settings**
13-00	SL Controller Mode
13-01	Start Event
13-02	Stop Event
13-03	Reset SLC
13-1*	**Comparators**
13-10	Comparator Operand
13-11	Comparator Operator
13-12	Comparator Value
13-2*	**Timers**
13-20	SL Controller Timer
13-4*	**Logic Rules**
13-40	Logic Rule Boolean 1
13-41	Logic Rule Operator 1
13-42	Logic Rule Boolean 2
13-43	Logic Rule Operator 2
13-44	Logic Rule Boolean 3
13-5*	**States**
13-51	SL Controller Event
13-52	SL Controller Action
14-**	**Special Functions**
14-0*	**Inverter Switching**
14-01	Switching Frequency
14-03	Overmodulation
14-07	Dead Time Compensation Level
14-08	Damping Gain Factor
14-09	Dead Time Bias Current Level
14-1*	**Mains Failure**
14-10	Mains Failure
14-11	Mains Fault Voltage Level
14-12	Response to Mains Imbalance
14-15	Kin. Back-up Trip Recovery Level
14-2*	**Reset Functions**
14-20	Reset Mode
14-21	Automatic Restart Time
14-22	Operation Mode
14-23	Typecode Setting
14-27	Action At Inverter Fault
14-28	Production Settings
14-29	Service Code
14-3*	**Current Limit Ctrl.**
14-30	Current Lim Ctrl, Proportional Gain
14-31	Current Lim Ctrl, Integration Time
14-32	Current Lim Ctrl, Filter Time
14-4*	**Energy Optimising**
14-40	VT Level
14-41	AEO Minimum Magnetisation

e30bu382.10

14-44	d-axis current optimization for IPM
14-5*	**Environment**
14-50	RFI Filter
14-51	DC-Link Voltage Compensation
14-52	Fan Control
14-53	Fan Monitor
14-55	Output Filter
14-6*	**Auto Derate**
14-61	Function at Inverter Overload
14-63	Min Switch Frequency
14-64	Dead Time Compensation Zero Current Level
14-65	Speed Derate Dead Time Compensation
14-9*	**Fault Settings**
14-90	Fault Level
15-**	**Drive Information**
15-0*	**Operating Data**
15-00	Operating hours
15-01	Running Hours
15-02	kWh Counter
15-03	Power Up's
15-04	Over Temp's
15-05	Over Volt's
15-06	Reset kWh Counter
15-07	Reset Running Hours Counter
15-3*	**Alarm Log**
15-30	Alarm Log: Error Code
15-31	InternalFaultReason
15-4*	**Drive Identification**
15-40	FC Type
15-41	Power Section
15-42	Voltage
15-43	Software Version
15-44	Ordered TypeCode
15-45	Actual Typecode String
15-46	Drive Ordering No
15-48	LCP Id No
15-49	SW ID Control Card
15-50	SW ID Power Card
15-51	Drive Serial Number
15-52	OEM Information
15-53	Power Card Serial Number
15-57	File Version
15-59	Filename
15-9*	**Parameter Info**
15-92	Defined Parameters
15-97	Application Type
15-98	Drive Identification
16-**	**Data Readouts**
16-0*	**General Status**
16-00	Control Word
16-01	Reference [Unit]
16-02	Reference [%]
16-03	Status Word
16-05	Main Actual Value [%]
16-09	Custom Readout
16-1*	**Motor Status**
16-10	Power [kW]
16-11	Power [hp]
16-12	Motor Voltage
16-13	Frequency
16-14	Motor current
16-15	Frequency [%]
16-16	Torque [Nm]
16-17	Speed [RPM]
16-18	Motor Thermal
16-22	Torque [%]
16-26	Power Filtered [kW]
16-27	Power Filtered [hp]
16-3*	**Drive Status**
16-30	DC Link Voltage
16-34	Heatsink Temp.
16-35	Inverter Thermal
16-36	Inv. Nom. Current
16-37	Inv. Max. Current
16-38	SL Controller State
16-5*	**Ref. & Feedb.**
16-50	External Reference
16-52	Feedback[Unit]
16-54	Feedback 1 [Unit]
16-55	Feedback 2 [Unit]
16-6*	**Inputs & Outputs**
16-60	Digital Input
16-61	Terminal 53 Setting
16-62	Analog input 53
16-63	Terminal 54 Setting
16-64	Analog input 54
16-65	Analog output 42 [mA]
16-66	Digital Output
16-67	Pulse input 29 [Hz]
16-71	Relay output
16-72	Counter A
16-73	Counter B
16-79	Analog output 45 [mA]
16-8*	**Fieldbus & FC Port**
16-86	FC Port REF 1
16-9*	**Diagnosis Readouts**
16-90	Alarm Word
16-91	Alarm Word 2
16-92	Warning Word
16-93	Warning Word 2
16-94	Ext. Status Word
16-95	Ext. Status Word 2
16-97	Alarm Word 3
16-98	Warning Word 3
18-**	**Info & Readouts**
18-1*	**Fire Mode Log**
18-10	FireMode Log:Event
18-5*	**Ref. & Feedb.**
18-50	Sensorless Readout [unit]
20-**	**Drive Closed Loop**
20-0*	**Feedback**
20-00	Feedback 1 Source
20-01	Feedback 1 Conversion
20-03	Feedback 2 Source
20-04	Feedback 2 Conversion
20-12	Reference/Feedback Unit
20-2*	**Feedback/Setpoint**
20-20	Feedback Function
20-21	Setpoint 1
20-6*	**Sensorless**
20-60	Sensorless Unit
20-69	Sensorless Information
20-8*	**PI Basic Settings**
20-81	PI Normal/ Inverse Control
20-83	PI Start Speed [Hz]
20-84	On Reference Bandwidth
20-9*	**PI Controller**
20-91	PI Anti Windup
20-93	PI Proportional Gain
20-94	PI Integral Time
20-97	PI Feed Forward Factor
22-**	**Appl. Functions**
22-0*	**Miscellaneous**
22-01	Power Filter Time
22-02	Sleepmode CL Control Mode
22-2*	**No-Flow Detection**
22-23	No-Flow Function
22-24	No-Flow Delay
22-3*	**No-Flow Power Tuning**
22-30	No-Flow Power
22-31	Power Correction Factor
22-33	Low Speed [Hz]
22-34	Low Speed Power [kW]
22-37	High Speed [Hz]
22-38	High Speed Power [kW]
22-4*	**Sleep Mode**
22-40	Minimum Run Time
22-41	Minimum Sleep Time
22-43	Wake-Up Speed [Hz]
22-44	Wake-Up Ref./FB Diff
22-45	Setpoint Boost
22-46	Maximum Boost Time
22-47	Sleep Speed [Hz]
22-48	Sleep Delay Time
22-49	Wake-Up Delay Time
22-6*	**Broken Belt Detection**
22-60	Broken Belt Function
22-61	Broken Belt Torque
22-62	Broken Belt Delay
22-8*	**Flow Compensation**
22-80	Flow Compensation
22-81	Square-linear Curve Approximation
22-82	Work Point Calculation
22-84	Speed at No-Flow [Hz]
22-86	Speed at Design Point [Hz]
22-87	Pressure at No-Flow Speed
22-88	Pressure at Rated Speed
22-89	Flow at Design Point
22-90	Flow at Rated Speed
24-**	**Appl. Functions 2**
24-0*	**Fire Mode**
24-00	FM Function
24-01	Fire Mode Configuration
24-05	FM Preset Reference
24-06	Fire Mode Reference Source
24-07	Fire Mode Feedback Source
24-09	FM Alarm Handling
24-1*	**Drive Bypass**
24-10	Drive Bypass Function
24-11	Drive Bypass Delay Time
30-**	**Special Features**
30-2*	**Adv. Start Adjust**
30-22	Locked Rotor Protection
30-23	Locked Rotor Detection Time [s]
30-5*	**Unit Configuration**
30-58	LockPassword

e30bu383.10

5 Warnings and Alarms

5.1 List of Warnings and Alarms

Table 21: Warnings and Alarms

Fault number	Alarm/ warning bit number	Fault text	Warning	Alarm	Trip locked	Cause of problem
2	16	Live zero error	X	X	–	Signal on terminal 53 or 54 is less than 50% of the value set in *parameter 6-10 Terminal 53 Low Voltage*, *parameter 6-12 Terminal 53 Low Current*, *parameter 6-20 Terminal 54 Low Voltage*, or *parameter 6-22 Terminal 54 Low Current*. See also *parameter group 6-0* Analog I/O Mode*.
4	14	Mains ph. loss	X	X	X	Missing phase on the supply side or too high voltage imbalance. Check the supply voltage. See *parameter 14-12 Function at Mains Imbalance*.
7	11	DC over volt	X	X	–	DC-link voltage exceeds the limit.
8	10	DC under volt	X	X	–	DC-link voltage drops below voltage warning low-limit.
9	9	Inverter overload	X	X	–	More than 100% load for a long time.
10	8	Motor ETR over	X	X	–	Motor is too hot due to more than 100% load for a long time. See *parameter 1-90 Motor Thermal Protection*.
11	7	Motor th over	X	X	–	Thermistor or thermistor connection is disconnected. See *parameter 1-90 Motor Thermal Protection*.
13	5	Over Current	X	X	X	Inverter peak current limit is exceeded.
14	2	Earth Fault	–	X	X	Discharge from output phases to ground.
16	12	Short Circuit	–	X	X	Short circuit in motor or on motor terminals.
17	4	Ctrl. word TO	X	X	–	No communication to drive. See *parameter group 8-0* General Settings*.
24	50	Fan Fault	X	X	–	The heat sink cooling fan is not working.
30	19	U phase loss	–	X	X	Motor phase U is missing. Check the phase. See *parameter 4-58 Missing Motor Phase Function*.
31	20	V phase loss	–	X	X	Motor phase V is missing. Check the phase. See *parameter 4-58 Missing Motor Phase Function*.
32	21	W phase loss	–	X	X	Motor phase W is missing. Check the phase. See *parameter 4-58 Missing Motor Phase Function*.
38	17	Internal fault	–	X	X	Contact the local Danfoss supplier.
44	28	Earth Fault	–	X	X	Discharge from output phases to ground, using the value of *parameter 15-31 Alarm Log Value* if possible.
46	33	Control Voltage Fault	–	X	X	Control voltage is low. Contact the local Danfoss supplier.
47	23	24 V supply low	X	X	X	24 V DC supply may be overloaded.

Fault number	Alarm/ warning bit number	Fault text	Warning	Alarm	Trip locked	Cause of problem
50	–	AMA calibration failed	–	X	–	Contact the local Danfoss supplier.
51	15	AMA Unom, Inom	–	X	–	The setting of motor voltage, motor current, and motor power is wrong. Check the settings.
52	–	AMA low Inom	–	X	–	The motor current is too low. Check the settings.
53	–	AMA big motor	–	X	–	The motor is too big to perform AMA.
54	–	AMA small mot	–	X	–	The motor is too small to perform AMA.
55	–	AMA par. range	–	X	–	The parameter values found from the motor are outside the acceptable range.
56	–	AMA user interrupt	–	X	–	The AMA has been interrupted by the user.
57	–	AMA timeout	–	X	–	Try to start the AMA again a number of times, until the AMA is carried out. **NOTICE** Repeated runs may heat the motor to a level where the resistance R_s and R_r are increased. In most cases, however, this is not critical.
58	–	AMA internal	X	X	–	Contact the local Danfoss supplier.
59	25	Current limit	X	–	–	The current is higher than the value in *parameter 4-18 Current Limit*.
60	44	External Interlock	–	X	–	External interlock has been activated. To resume normal operation, apply 24 V DC to the terminal programmed for external interlock and reset the drive (via serial communication, digital I/O, or by pressing [Reset] button on the LCP).
66	26	Heat sink Temperature Low	X	–	–	This warning is based on the temperature sensor in the IGBT module.
69	1	Pwr. Card Temp	X	X	X	The temperature sensor on the power card exceeds the upper or lower limits.
70	36	Illegal FC configuration	–	X	X	The control card and power card are not matched.
79	–	Illegal power section configuration	X	X	–	Internal fault. Contact the local Danfoss supplier.
80	29	Drive initialised	–	X	–	All parameter settings are initialized to default settings.

Fault number	Alarm/ warning bit number	Fault text	Warning	Alarm	Trip locked	Cause of problem
87	47	Auto DC Braking	X	–	–	The drive is auto DC braking.
95	40	Broken Belt	X	X	–	Torque is below the torque level set for no load, indicating a broken belt. See *parameter group 22-6* Broken Belt Detection*.
126	–	Motor Rotating	–	X	–	High back EMF voltage. Stop the rotor of the PM motor.
200	–	Fire Mode	X	–	–	Fire mode has been activated.
202	–	Fire Mode Limits Exceeded	X	–	–	Fire mode has suppressed 1 or more warranty voiding alarms.
250	–	New sparepart	–	X	X	The power or switch mode power supply has been exchanged. Contact the local Danfoss supplier.
251	–	New Typecode	–	X	X	The drive has a new type code. Contact the local Danfoss supplier.

6 Specifications

6.1 Mains Supply 3x380–480 V AC

Table 22: 3x380–480 V AC, 7.5–15 kW (10–20 hp), Enclosure Sizes H3–H4

Drive	P7K5	P11K	P15K
Typical shaft output [kW]	7.5	11	15
Typical shaft output [hp]	10	15	20
Protection rating IP20	H3	H4	H4
Maximum cable size in terminals (mains, motor) [mm^2 (AWG)]	4 (10)	16 (6)	16 (6)
Output current at 40°C (104°F) ambient temperature and 45°C (113°F) refrigerant temperature			
Continuous (3x380–440 V)[A]	15.5	23	31
Intermittent (3x380–440 V) [A]	17.1	25.3	34
Continuous (3x441–480 V) [A]	14	21	27
Intermittent (3x441–480 V) [A]	15.4	23.1	29.7
Maximum input current			
Continuous (3x380–440 V) [A]	15.1	22.1	29.9
Intermittent (3x380–440 V) [A]	16.6	24.3	32.9
Continuous (3x441–480 V) [A]	12.6	18.4	24.7
Intermittent (3x441–480 V) [A]	13.9	20.2	27.2
Maximum mains fuses	See chapter Fuses and Circuit Breakers.		
Estimated power loss [W], best case/typical[1]	159/198	248/274	353/379
Weight enclosure protection rating IP20 [kg (lb)]	4.4 (9.7)	7.4 (16.3)	7.4 (16.3)
Efficiency [%], best case/typical[2]	98.2/97.8	98.1/97.9	98/97.8
Output current at 50°C (122°F) ambient temperature and 45°C (113°F) refrigerant temperature			
Continuous (3x380–440 V) [A]	14	20.9	28
Intermittent (3x380–440 V) [A]	15.4	23	30.8
Continuous (3x441–480 V) [A]	12.6	19.1	24
Intermittent (3x441–480 V) [A]	13.9	21	26.4

[1] Applies for dimensioning of drive cooling. If the switching frequency is higher than the default setting, the power losses may increase. LCP and typical control card power consumptions are included. For power loss data according to EN 50598-2, refer to drives.danfoss.com/knowledge-center/energy-efficiency-directive/#/.

[2] Typical: under rated condition. Best case: the optimal condition is adopted, such as the higher input voltage and lower switching frequency.

6.2 EMC Emission Test Results

The following test results have been obtained using a system with a drive, a shielded control cable, a control box with potentiometer, and a shielded motor cable.

Table 23: EMC Emission Test Results

RFI filter type	Conduct emission. Maximum shielded cable length [m (ft)]						Radiated emission [m (ft)]			
	Industrial environment									
EN 55011	**Class A Group 2** Industrial environment		**Class A Group 1** Industrial environment		**Class B** Housing, trades, and light industries		**Class A Group 1** Industrial environment		**Class B** Housing, trades, and light industries	
EN/IEC 61800-3	**Category C3** Second environment Industrial		**Category C2** First environment Home and office		**Category C1** First environment Home and office		**Category C2** First environment Home and office		**Category C1** First environment Home and office	
	Without external filter	**With external filter**	**Without external filter**	**With external filter**	**Without external filter**	**With external filter**	**Without external filter**	**With external filter**	**Without external filter**	**With external filter**
H4 RFI filter (EN55011 A1, EN/IEC61800-3 C2)										
7.5–15 kW (10–20 hp) 3x380–480 V IP20	–	–	5 (16.4)	50 (164)	–	20 (66)	1.5 (4.92)	Yes	–	No

6.3 Special Conditions

6.3.1 Derating for Ambient Temperature and Switching Frequency

Ensure that the ambient temperature measured over 24 hours is at least 5 °C (9 °F) lower than the maximum ambient temperature that is specified for the drive. If the drive is operated at a high ambient temperature, decrease the continuous output current.

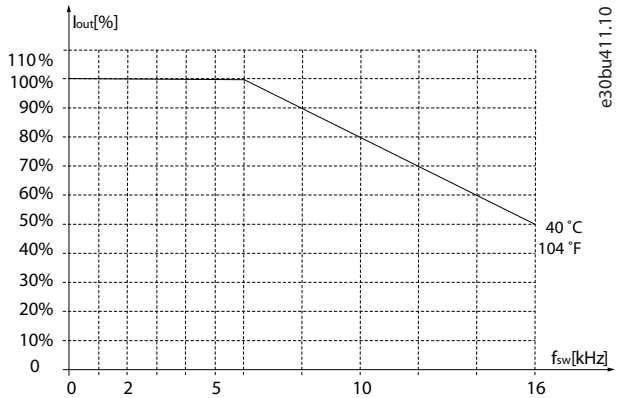

Illustration 16: 400 V IP20 H3 7.5 kW (10 hp)

45°C (113 °F) is the refrigerant temperature.

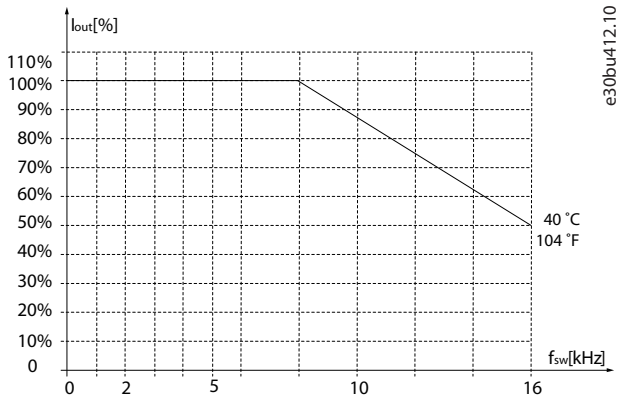

Illustration 17: 400 V IP20 H4 11–15 kW (15–20 hp)

45°C (113 °F) is the refrigerant temperature.

6.3.2 Derating for Low Air Pressure and High Altitudes

The cooling capability of air is decreased at low air pressure. For altitudes above 2000 m (6562 ft), contact Danfoss regarding PELV. Below 1000 m (3281 ft) altitude, derating is not necessary. For altitudes above 1000 m (3281 ft), decrease the ambient temperature or the maximum output current. Decrease the output by 1% per 100 m (328 ft) altitude above 1000 m (3281 ft) or reduce the maximum ambient cooling air temperature by 1 °C (1.8 °F) per 200 m (656 ft).

6.4 General Technical Data

6.4.1 Protection and Features

- Electronic motor thermal protection against overload.
- Temperature monitoring of the heat sink ensures that the drive trips if there is overtemperature.
- The drive is protected against short circuits between motor terminals U, V, W.
- When a motor phase is missing, the drive trips and issues an alarm.
- When a mains phase is missing, the drive trips or issues a warning (depending on the load).
- Monitoring of the DC-link voltage ensures that the drive trips when the DC-link voltage is too low or too high.
- The drive is protected against ground faults on motor terminals U, V, W.

6.4.2 Mains Supply (L1, L2, L3)

Supply voltage	380–480 V ±10%
Supply frequency	50/60 Hz
Maximum imbalance temporary between mains phases	3.0% of rated supply voltage
True power factor (λ)	≥0.9 nominal at rated load
Displacement power factor (cosφ) near unity	(>0.98)
Switching on the input supply L1, L2, L3 (power-ups) enclosure sizes H3–H4	Maximum 1 time/30 s
Environment according to EN 60664-1	Overvoltage category III/pollution degree 2

The unit is suitable for use on a circuit capable of delivering not more than 100000 A_{rms} symmetrical Amperes, 240/480 V maximum.

6.4.3 Motor Output (U, V, W)

Output voltage	0–100% of supply voltage
Output frequency	0–200 Hz (VVC^+), 0–400 Hz (u/f)
Switching on output	Unlimited
Ramp times	0.05–3600 s

6.4.4 Cable Length and Cross-section

Maximum motor cable length, shielded/armored (EMC-correct installation)	See chapter EMC Emission Test Results
Maximum motor cable length, unshielded/unarmoured	50 m (164 ft)
Maximum cross-section to motor, mains	See chapter Mains Supply 3x380–480 V AC for more information.
Cross-section DC terminals for filter feedback on enclosure sizes H3	4 mm^2/11 AWG
Cross-section DC terminals for filter feedback on enclosure sizes H4	16 mm^2/6 AWG
Maximum cross-section to control terminals, rigid wire	2.5 mm^2/14 AWG
Maximum cross-section to control terminals, flexible cable	2.5 mm^2/14 AWG
Minimum cross-section to control terminals	0.05 mm^2/30 AWG
Minimum cross-section of thermal switch wires with mating connector	0.22 mm^2/24 AWG
Maximum cross-section of thermal switch wires with mating connector	0.52 mm^2/20 AWG

6.4.5 Digital Inputs

Programmable digital inputs	4
Terminal number	18, 19, 27, 29
Logic	PNP or NPN
Voltage level	0–24 V DC
Voltage level, logic 0 PNP	<5 V DC
Voltage level, logic 1 PNP	>10 V DC
Voltage level, logic 0 NPN	>19 V DC
Voltage level, logic 1 NPN	<14 V DC
Maximum voltage on input	28 V DC
Input resistance, R_i	Approximately 4 kΩ
Digital input 29 as thermistor input	Fault: >2.9 kΩ and no fault: <800 Ω
Digital input 29 as pulse input	Maximum frequency 32 kHz push-pull-driven & 5 kHz (O.C.)

The digital inputs are galvanically isolated from the supply voltage (PELV) and other high-voltage terminals.

6.4.6 Analog Inputs

Number of analog inputs	2
Terminal number	53, 54
Terminal 53 mode	Parameter 6-19 Terminal 53 mode: 1=voltage, 0=current
Terminal 54 mode	Parameter 6-29 Terminal 54 mode: 1=voltage, 0=current
Voltage level	0–10 V
Input resistance, R_i	Approximately 10 kΩ
Maximum voltage	20 V
Current level	0/4–20 mA (scalable)
Input resistance, R_i	<500 Ω
Maximum current	29 mA
Resolution on analog input	10 bit

6.4.7 Analog Outputs

Number of programmable analog outputs	2

Terminal number	42, 45[1]
Current range at analog output	0/4–20 mA
The load resistor to common at analog out	≤ 500 Ω
Maximum voltage at analog output	17 V
Accuracy on analog output	Maximum error: 0.4% of full scale
Resolution on analog output	10 bit

[1] Terminals 42 and 45 can also be programmed as digital outputs.

6.4.8 Digital Output

Number of digital outputs	4
Terminals 27 and 29	
Terminal number	27, 29[1]
Voltage level at digital output	0–24 V
Maximum output current (sink and source)	40 mA
Terminals 42 and 45	
Terminal number	42, 45[2]
Voltage level at digital output	17 V
Maximum output current at digital output	20 mA
The load resistor at digital output	≥ 1 kΩ

[1] Terminals 27 and 29 can also be programmed as input.

[2] Terminals 42 and 45 can also be programmed as analog output.

The digital outputs are galvanically isolated from the supply voltage (PELV) and other high-voltage terminals.

6.4.9 RS485 Serial Communication

Terminal number	68 (P, TX+, RX+), 69 (N, TX-, RX-)
Terminal number	61 common for terminals 68 and 69

The RS485 serial communication outputs are galvanically isolated from the supply voltage (PELV) and other high-voltage terminals.

6.4.10 24 V DC Output

Terminal number	12
Maximum load	80 mA

The 24 V DC output is galvanically isolated from the supply voltage (PELV) and other high-voltage terminals.

6.4.11 Relay Output

Programmable relay output	2
Relay 01 and 02	01–03 (NC), 01–02 (NO), 04–06 (NC), 04–05 (NO)
Maximum terminal load (AC-1)[1] on 01–02/04–05 (NO) (Resistive load)	250 V AC, 3 A
Maximum terminal load (AC-15)[1] on 01–02/04–05 (NO) (Inductive load @ cosφ 0.4)	250 V AC, 0.2 A
Maximum terminal load (DC-1)[1] on 01–02/04–05 (NO) (Resistive load)	30 V DC, 2 A
Maximum terminal load (DC-13)[1] on 01–02/04–05 (NO) (Inductive load)	24 V DC, 0.1 A
Maximum terminal load (AC-1)[1] on 01–03/04–06 (NC) (Resistive load)	250 V AC, 3 A

Maximum terminal load (AC-15)[1] on 01–03/04–06 (NC) (Inductive load @ cosφ 0.4)	250 V AC, 0.2 A
Maximum terminal load (DC-1)[1] on 01–03/04–06 (NC) (Resistive load)	30 V DC, 2 A
Minimum terminal load on 01–03 (NC), 01–02 (NO)	24 V DC 10 mA, 24 V AC 20 mA
Environment according to EN 60664-1	Overvoltage category III/pollution degree 2

[1] IEC 60947 parts 4 and 5. Endurance of the relay varies with different load type, switching current, ambient temperature, driving configuration, working profile, and so forth. It is recommended to mount a snubber circuit when connecting inductive loads to the relays.

NOTICE

Relay is only for resistive load. Non-resistive load cannot be connected with relay contacts.

6.4.12 10 V DC Output

Terminal number	50
Output voltage	10.5 V ±0.5 V
Maximum load	25 mA

The 10 V DC output is galvanically isolated from the supply voltage (PELV) and other high-voltage terminals.

6.4.13 Ambient Conditions

Enclosure protection rating	IP20
Enclosure kit available	IP21, TYPE 1
Vibration test	1.0 g & 1.14 g RMS
Maximum relative humidity	5–95% (IEC 60721-3-3; Class 3K3 (non-condensing) during operation)
Aggressive environment (IEC 60721-3-3), coated (standard) enclosure sizes H3–H4	Class 3C3
Test method according to IEC 60068-2-43 H2S (10 days)	
Ambient temperature	See maximum output current at 40/50 °C (104/122 °F) in chapter Mains Supply 3x380–480 V AC.
Minimum ambient temperature during full-scale operation	0 °C (32 °F)
Temperature during storage/transport	-30 to +65/70 °C (-22 to +149/158°F)
Safety standards	EN/IEC 61800-5-1
EMC standards, Emission	EN 61800-3, EN 61000-6-3/4, EN 55011, IEC 61800-3
EMC standards, Immunity	EN 61800-3, EN 61000-3-12, EN 61000-6-1/2, EN 61000-4-2, EN 61000-4-3, EN 61000-4-4, EN 61000-4-5, EN 61000-4-6
Energy efficiency class[1]	IE2
Maximum ambient temperature with derating	50 °C (122 °F)
Maximum ambient temperature without derating	40 °C (104 °F)
Maximum refrigerant temperature without derating	45 °C (113 °F)

[1] Determined according to EN 50598-2 at:

- Rated load.
- 90% rated frequency.
- Switching frequency factory setting.
- Switching pattern factory setting.

6.4.14 Thermal Switch (Fan Failure Detection)

Maximum terminal load	48 V DC/2.2 A

Index

ENGINEERING
TOMORROW

Danfoss A/S
Ulsnaes 1
DK-6300 Graasten
vlt-drives.danfoss.com

130R0902