ENGINEERING
TOMORROW

Operating Guide

VLT® AutomationDrive FC 302
315-710 kW, Enclosure Sizes E1h-E4h

drives.danfoss.com | VLT®

ENGINEERING TOMORROW

Danfoss A/S
6430 Nordborg
Denmark
CVR nr.: 20 16 57 15

Telephone: +45 7488 2222
Fax: +45 7449 0949

EU DECLARATION OF CONFORMITY

Danfoss A/S

Danfoss Drives A/S

declares under our sole responsibility that the

Product category: Frequency Converter

Type designation(s): FC-302XYYYZZ**********

Character X: N or P
Character YYY: K25, K37, K55, K75, 1K1, 1K5, 2K2, 3K0, 3K7, 4K0, 5K5, 7K5, 11K, 15K, 18K, 22K, 30K, 37K, 45K, 55K, 75K, 90K, 110, 132, 150, 160, 200, 250, 315, 355, 400, 450, 500, 560, 630, 710, 800, 900, 1M0, 1M2
Character ZZ: T2, T5, T6, T7
* may be any number or letter indicating drive options which do not impact this DoC.
The meaning of the 39 characters in the type code string can be found in appendix 00729776.

Covered by this declaration is in conformity with the following directive(s), standard(s) or other normative document(s), provided that the product is used in accordance with our instructions.

Low Voltage Directive 2014/35/EU

EN61800-5-1:2007 + A1:2017	Adjustable speed electrical power drive systems – Part 5-1: Safety requirements – Electrical, thermal and energy.

EMC Directive 2014/30/EU

EN61800-3:2004 + A1:2012	Adjustable speed electrical power drive systems – Part 3: EMC requirements and specific test methods.

RoHS Directive 2011/65/EU including amendment 2015/863.

EN63000:2018	Technical documentation for the assessment of electrical and electronic products with respect to the restriction of

Date: 2020.09.15 **Place of issue:**	**Issued by**	Date: 2020.09.15 **Place of issue:**	**Approved by**
Graasten, DK	**Signature:** **Name: Gert Kjær** **Title: Senior Director, GDE**	Graasten, DK	**Signature:** **Name: Michael Termansen** **Title: VP, PD Center Denmark**

Danfoss only vouches for the correctness of the English version of this declaration. In the event of the declaration being translated into any other language, the translator concerned shall be liable for the correctness of the translation

Classified as Business

hazardous substances

For products including available Safe Torque Off (STO) function according to unit typecode on the nameplate: **X, B or R at character 18 of the typecode.**

Machine Directive 2006/42/EC

EN/IEC 61800-5-2:2007 (Safe Stop function conforms with STO – Safe Torque Off, SIL 2 Capability)	Adjustable speed electrical power drive systems – Part 5-2: Safety requirements – Functional

Other standards considered:

EN ISO 13849-1:2015 (Safe Stop function, PL d (MTTFd=14000 years, DC=90%, Category 3)	Safety of machinery - Safety-related parts of control systems - Part 1: General principles for design
EN/IEC 61508-1:2011, EN/IEC 61508-2:2011 (Safe Stop function, SIL 2 (PFH = 1E-10/h, 1E-8/h for specific variants, PFD = 1E-10, 1E-4 for specific variants, SFF>99%, HFT=0))	Functional safety of electrical/electronic/ programmable electronic safety-related systems Part 1: General requirements Part 2: Requirements for electrical/ electronic / programmable electronic safety-related systems
EN/IEC 62061:2005 + A1:2013 (Safe Stop function, SILCL 2)	Safety of machinery - Functional safety of safety-related electrical, electronic and programmable electronic control systems
EN/IEC 60204-1:2006 + A1:2009 (Stop Category 0)	Safety of machinery - Electrical equipment of machines - Part 1: General requirements

For products including ATEX option, it requires STO function in the products. The products can have the VLT PTC Thermistor Card MCB112 installed from factory **(2 at character 32 in the typecode)**, or it can be separately installed as an additional part.

2014/34/EU - Equipment for explosive atmospheres (ATEX)

Based on EU harmonized standard:	
EN 50495: 2010	Safety devices required for safe functioning of equipment with respect to explosion risks.

Notified Body:
PTB Physikalisch-Technische Bundesanstalt, Bundesallee 100, 38116 Braunschweig,
has assessed the conformity of the "ATEX certified motor thermal protection systems" of Danfoss FC VLT Drives with Safe Torque Off function and has issued the certificate PTB 14 ATEX 3009.

Contents

1 Introduction 7
1.1 Purpose of this Operating Guide 7
1.2 Additional Resources 7
1.3 Manual and Software Version 7
1.4 Trademarks 7
1.5 Approvals and Certifications 7
1.6 Disposal 8

2 Safety 9
2.1 Safety Symbols 9
2.2 Qualified Personnel 9
2.3 Safety Precautions 9

3 Product Overview 12
3.1 Intended Use 12
3.2 Power Ratings, Weights, and Dimensions for E1h–E4h Enclosures 12
3.3 Interior View of Enclosure E1h/E2h 13
3.4 Interior View of Enclosure E3h/E4h 15
3.5 Control Shelf 16
3.6 Local Control Panel (LCP) 17
3.7 LCP Menu 19

4 Mechanical Installation 22
4.1 Items Supplied 22
4.2 Tools Needed 22
4.3 Storing the Drive 23
4.4 Operating Environment 23
4.4.1 Overview 23
4.4.2 Gases 23
4.4.3 Dust 24
4.4.4 Potentially Explosive Atmospheres 24
4.5 Installation Requirements 25
4.6 Cooling Requirements 25
4.7 E1h-E4h Airflow Rates 26
4.8 Lifting the Drive 26
4.9 E1h/E2h Mechanical Installation 27
4.9.1 Securing the Pedestal to the Floor 27
4.9.2 Attaching an E1h/E2h to the Pedestal 28
4.9.3 Creating Cable Openings for an E1h/E2h 30
4.10 E3h/E4h Mechanical Installation 30

4.10.1 Attaching the E3h/E4h to a Mounting Plate or Wall 31
4.10.2 Creating Cable Openings for an E3h/E4h 31
4.10.3 Installing Load share/Regen Terminals to an E3h/E4h 34

5 Electrical Installation 35
5.1 Safety Instructions 35
5.2 EMC-compliant Installation 36
5.3 Wiring Schematic 40
5.4 Connecting the Motor 41
5.5 Connecting the AC Mains 42
5.6 Connecting to Ground 45
5.7 E1h Terminal Dimensions 47
5.8 E2h Terminal Dimensions 49
5.9 E3h Terminal Dimensions 51
5.10 E4h Terminal Dimensions 54
5.11 Control Wiring 56
5.11.1 Control Cable Access 56
5.11.2 Routing Control Cables 57
5.11.3 Control Terminal Types 58
5.11.4 Relay Terminals 59
5.11.5 Connecting the Control Cable to the Control Terminals 60
5.11.6 Disconnecting the Control Cable from the Control Terminals 61
5.11.7 Enabling Motor Operation 61
5.11.8 Configuring RS485 Serial Communication 62
5.11.9 Safe Torque Off (STO) Wiring 63
5.11.10 Space Heater Wiring 63
5.11.11 Auxiliary Contact Wiring for Disconnects 63
5.11.12 Wiring the Brake Resistor Temperature Switch 64
5.11.13 Selecting the Voltage/Current Input Signal 64

6 Starting the Drive 66
6.1 Pre-start Check List 66
6.2 Applying Power to the Drive 67
6.3 Programming the Drive 68
6.3.1 Parameter Overview 68
6.3.2 Parameter Navigation 68
6.3.3 Entering System Information 68
6.3.4 Configuring Automatic Energy Optimization 69
6.3.5 Configuring Automatic Motor Adaptation 70
6.4 Testing Before System Start Up 70
6.4.1 Testing Motor Rotation 70
6.4.2 Testing Encoder Rotation 71

6.5 Starting Up the Drive for the First Time 71
6.6 Parameter Settings 72
6.6.1 Parameter Setting Overview 72
6.6.2 Uploading and Downloading Parameter Settings 72
6.6.3 Restoring Factory Default Settings Using the Recommended Initialization 73
6.6.4 Restoring Factory Default Settings Using Manual Initialization 73

7 Wiring Configuration Examples 74
7.1 Application Examples 74
7.1.1 Programming a Closed-loop Drive System 74
7.1.2 Wiring Configuration for Automatic Motor Adaptation (AMA) 76
7.1.3 Wiring Configuration for Automatic Motor Adaptation without T27 76
7.1.4 Wiring Configuration: Speed 77
7.1.5 Wiring Configuration: Feedback 79
7.1.6 Wiring Configuration: Run/Stop 82
7.1.7 Wiring Configuration: Start/Stop 85
7.1.8 Wiring Configuration: External Alarm Reset 88
7.1.9 Wiring Configuration: RS485 89
7.1.10 Wiring Configuration: Motor Thermistor 89
7.1.11 Wiring for Regen 91
7.1.12 Wiring Configuration for a Relay Setup with Smart Logic Control 92
7.1.13 Wiring Configuration: Mechanical Brake Control 93
7.1.14 Wiring Configuration for the Encoder 94
7.1.15 Wiring Configuration for Torque and Stop Limit 95

8 Maintenance, Diagnostics, and Troubleshooting 97
8.1 Maintenance and Service 97
8.2 Heat Sink Service 97
8.2.1 Heat Sink Access Panel 97
8.2.2 Removing Dust Buildup from the Heat Sink 97
8.3 Status Messages 98
8.3.1 Status Message Overview 98
8.3.2 Status Messages - Operating Mode 99
8.3.3 Status Messages - Reference Site 99
8.3.4 Status Messages - Operation Status 100
8.4 Warnings and Alarms 102
8.5 Troubleshooting 127

9 Specifications 130
9.1 Electrical Data 130
9.1.1 Electrical Data, 380–500 V AC 130
9.1.2 Electrical Data, 525–690 V AC 132
9.2 Mains Supply 135

9.3 Motor Output and Torque Characteristics 135
9.3.1 Motor Output (U, V, W) 135
9.3.2 Torque Characteristics 136
9.4 Ambient Conditions 136
9.5 Cable Specifications 137
9.6 Control Input/Output and Control Data 137
9.6.1 Digital Inputs 137
9.6.2 STO Terminal 37 137
9.6.3 Analog Inputs 138
9.6.4 Pulse/encoder Inputs 138
9.6.5 Analog Output 139
9.6.6 Control Card, RS485 Serial Communication 139
9.6.7 Digital Outputs 139
9.6.8 Control Card, 24 V DC Output 140
9.6.9 Relay Outputs 140
9.6.10 Control Card, +10 V DC Output 141
9.6.11 Control Characteristics 141
9.6.12 Control Card Performance 141
9.6.13 Control Card, USB Serial Communication 141
9.7 Fuses 141
9.8 Enclosure Dimensions 143
9.8.1 E1h Exterior Dimensions 143
9.8.2 E2h Exterior Dimensions 147
9.8.3 E3h Exterior Dimensions 151
9.8.4 E4h Exterior Dimensions 155
9.9 Enclosure Airflow 159
9.10 Fastener Torque Ratings 159

10 Appendix 161

10.1 Conventions 161
10.2 Abbreviations 161
10.3 International/North American Default Parameter Settings 163

1 Introduction

1.1 Purpose of this Operating Guide

This operating guide provides information for safe installation and commissioning of the AC drive. It is intended for use by qualified personnel. Read and follow the instructions to use the drive safely and professionally. Pay particular attention to the safety instructions and general warnings. Always keep this operating guide available with the drive.

1.2 Additional Resources

Other resources are available to understand advanced drive functions and programming.

- The programming guide provides greater detail on working with parameters and shows many application examples.
- The design guide provides detailed information about capabilities and functionality to design motor control systems.
- The Safe Torque Off Operating Guide provides detailed specifications, requirements, and installation instructions for the Safe Torque Off function.
- Supplementary publications and manuals are available from Danfoss.

See https://www.danfoss.com/en/search/?filter=type%3Adocumentation.

1.3 Manual and Software Version

This manual is regularly reviewed and updated. All suggestions for improvement are welcome.

Table 1: Manual and Software Version

Manual version	Remarks	Software version
AQ275652476278xx-xx01-01	Updated power losses in Electrical Data table. Created *Starting the Drive* chapter by combining *Commissioning* and *Pre-start Check List* chapters.	8.43
MG38A2xx	Previous version.	7.51

1.4 Trademarks

VLT® is a registered trademark for Danfoss A/S.

1.5 Approvals and Certifications

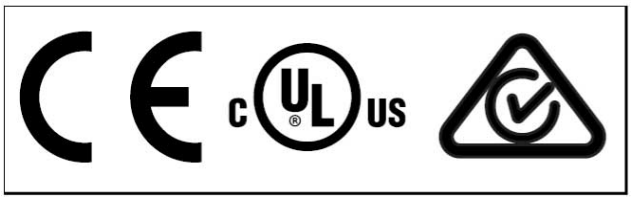

Illustration 1: Approvals and Certifications

More approvals and certifications are available. Contact the local Danfoss office or partner. Drives of voltage T7 (525–690 V) are UL certified for only 525–600 V.

Thermal memory retention requirement

The drive complies with UL 61800-5-1 thermal memory retention requirements. For more information, refer to the *Motor Thermal Protection* section in the product-specific design guide.

NOTICE

OUTPUT FREQUENCY LIMIT

From software version 6.72 onwards, the output frequency of the drive is limited to 590 Hz due to export control regulations. Software versions 6.xx also limit the maximum output frequency to 590 Hz, but these versions cannot be flashed, that is, neither downgraded nor upgraded.

ADN-compliance

For more information on compliance with the European Agreement concerning International Carriage of Dangerous Goods by Inland Waterways (ADN), refer to the *ADN-compliant Installation* section in the product-specific design guide.

1.6 Disposal

Do not dispose of equipment containing electrical components together with domestic waste. Collect it separately in accordance with applicable local regulations.

2 Safety

2.1 Safety Symbols

The following symbols are used in this manual:

⚠ DANGER ⚠

Indicates a hazardous situation which, if not avoided, will result in death or serious injury.

⚠ WARNING ⚠

Indicates a hazardous situation which, if not avoided, could result in death or serious injury.

⚠ CAUTION ⚠

Indicates a hazardous situation which, if not avoided, could result in minor or moderate injury.

NOTICE

Indicates information considered important, but not hazard-related (for example, messages relating to property damage).

2.2 Qualified Personnel

To allow trouble-free and safe operation of the unit, only qualified personnel with proven skills are allowed to transport, store, assemble, install, program, commission, maintain, and decommission this equipment.

Persons with proven skills:

- Are qualified electrical engineers, or persons who have received training from qualified electrical engineers and are suitably experienced to operate devices, systems, plant, and machinery in accordance with pertinent laws and regulations.
- Are familiar with the basic regulations concerning health and safety/accident prevention.
- Have read and understood the safety guidelines given in all manuals provided with the unit, especially the instructions given in the Operating Guide.
- Have good knowledge of the generic and specialist standards applicable to the specific application.

2.3 Safety Precautions

The following safety precautions must be followed when performing installation, start up, and maintenance/service of the drive.

⚠ WARNING ⚠

HIGH VOLTAGE

AC drives contain high voltage when connected to AC mains input, DC supply, or load sharing. Failure to perform installation, start-up, and maintenance by qualified personnel can result in death or serious injury.

- Only qualified personnel must perform installation, start-up, and maintenance.

⚠ CAUTION ⚠

HOT SURFACES

The drive contains metal components that are still hot even after the drive has been powered off. Failure to observe the high temperature symbol (yellow triangle) on the drive can result in serious burns.

- Be aware that internal components, such as busbars, may be extremely hot even after the drive has been powered off.
- Do not touch exterior areas that are marked by the high temperature symbol (yellow triangle). These areas are hot while the drive is in use and immediately after being powered off.

⚠ WARNING ⚠

DISCHARGE TIME (40 MINUTES)

The drive contains DC-link capacitors, which can remain charged even when the drive is not powered. High voltage can be present even when the warning indicator lights are off.

Failure to wait 40 minutes after power has been removed before performing service or repair work can result in death or serious injury.

- Stop the motor.
- Disconnect AC mains, permanent magnet type motors, and remote DC-link supplies, including battery back-ups, UPS, and DC-link connections to other drives.
- Wait 40 minutes for the capacitors to discharge fully before performing any service or repair work.
- Measure the voltage level to verify full discharge.

⚠ WARNING ⚠

UNINTENDED START

When the drive is connected to the AC mains, DC supply, or load sharing, the motor may start at any time, causing risk of death, serious injury, and equipment or property damage. The motor may start by activation of an external switch, a fieldbus command, an input reference signal from the LCP or LOP, via remote operation using MCT 10 Set-up software, or after a cleared fault condition.

- Press [Off] on the LCP before programming parameters.
- Disconnect the drive from the mains whenever personal safety considerations make it necessary to avoid unintended motor start.
- Check that the drive, motor, and any driven equipment are in operational readiness.

⚠ WARNING ⚠

ROTATING SHAFTS

Contact with rotating shafts and electrical equipment can result in death or serious injury.

- Ensure that only trained and qualified personnel perform installation, start-up, and maintenance.
- Ensure that electrical work conforms to national and local electrical codes.
- Follow the procedures in this guide.

⚠ WARNING ⚠

LEAKAGE CURRENT HAZARD

Leakage currents exceed 3.5 mA. Failure to ground the drive properly can result in death or serious injury.

- Ensure the correct grounding of the equipment by a certified electrical installer.

⚠ CAUTION ⚠

INTERNAL FAILURE HAZARD

An internal failure in the drive can result in serious injury when the drive is not properly closed.

- Ensure that all safety covers are in place and securely fastened before applying power.

NOTICE

MAINS SHIELD SAFETY OPTION

A mains shield option is available for enclosures with a protection rating of IP21/IP 54 (Type 1/Type 12). The mains shield is a Lexan cover installed inside the enclosure to protect against the accidental touch of the power terminals, according to BGV A2, VBG 4.

3 Product Overview

3.1 Intended Use

NOTICE

OUTPUT FREQUENCY LIMIT

Due to export control regulations, the output frequency of the drive is limited to 590 Hz. For demands exceeding 590 Hz, contact Danfoss.

The drive is an electronic motor controller that converts AC mains input into a variable AC waveform output. The frequency and voltage of the output are regulated to control the motor speed or torque. The drive is designed to:

- Regulate motor speed in response to system feedback or remote commands from external controllers.
- Monitor system and motor status.
- Provide motor overload protection.

Depending on the configuration, the drive can be used in standalone applications or form part of a larger system or installation.

The drive is allowed for use in industrial and commercial environments in accordance with local laws and standards. Do not use the drive in applications which are non-compliant with specified operating conditions and environments.

3.2 Power Ratings, Weights, and Dimensions for E1h–E4h Enclosures

Table 2: Power Ratings, Weights, and Dimensions for E1h–E4h Enclosures (Standard Configurations)

Enclosure size	E1h	E2h	E3h	E4h
Rated power at 380–500 V [kW (hp)]	315–400 (450–550)	450–500 (600–650)	315–400 (450–550)	450–500 (600–650)
Rated power at 525–690 V [kW (hp)]	355–560 (400–600)	630–710 (650–950)	355–560 (400–600)	630–710 (650–750)
Enclosure protection rating [1]	IP21/Type 1 IP54/ Type 12	IP21/Type 1 IP54/ Type 12	IP20/Chassis	IP20/Chassis
Unit dimensions				
Height [mm (in)]	2043 (80.4)	2043 (80.4)	1578 (62.1)	1578 (62.1)
Width [mm (in)]	602 (23.7)	698 (27.5)	506 (19.9)	604 (23.89)
Depth [mm (in)]	513 (20.2)	513 (20.2)	482 (19.0)	482 (19.0)
Weight [kg (lb)]	295 (650)	318 (700)	272 (600)	295 (650)
Shipping dimensions				
Height [mm (in)]	2191 (86.3)	2191 (86.3)	1759 (69.3)	1759 (69.3)
Width [mm (in)]	768 (30.2)	768 (30.2)	746 (29.4)	746 (29.4)
Depth [mm (in)]	870 (34.3)	870 (34.3)	794 (31.3)	794 (31.3)
Weight [kg (lb)]	–	–	–	–

[1] *Type 1 and Type 12 are UL designations.*

3.3 Interior View of Enclosure E1h/E2h

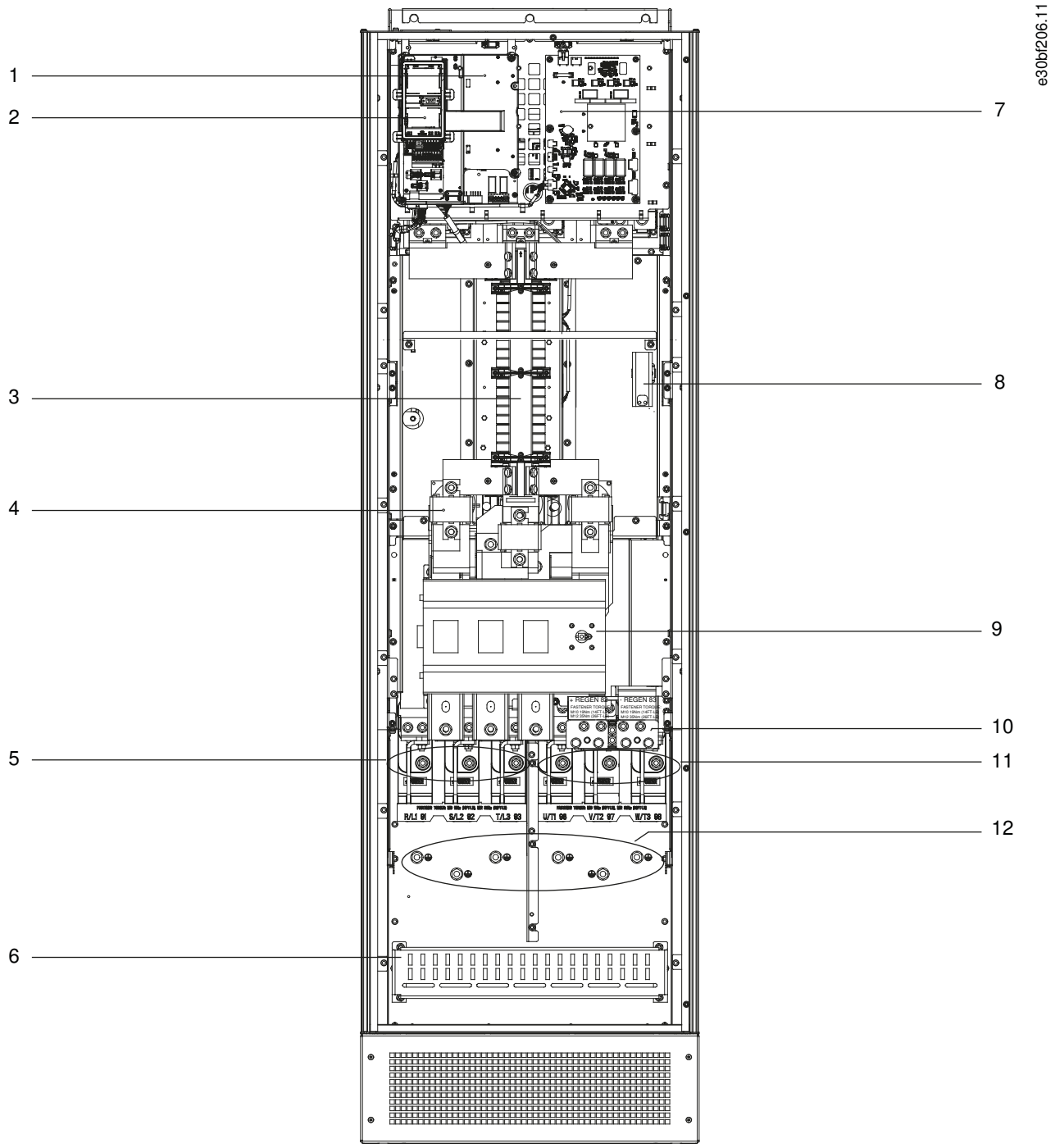

1	Control shelf (see illustration 4)	**2**	Local control panel (LCP) cradle
3	RFI filter (optional)	**4**	Mains fuses (required for UL Compliance, but otherwise optional)
5	Mains terminals	**6**	RFI shield termination
7	Fan power card		

9 Mains disconnect (optional)	**8** Space heater (optional)
11 Motor terminals	**10** Brake/regeneration terminals (optional)
	12 Ground terminals

Illustration 2: Interior View of Enclosure E1h (Enclosure E2h is Similar)

3.4 Interior View of Enclosure E3h/E4h

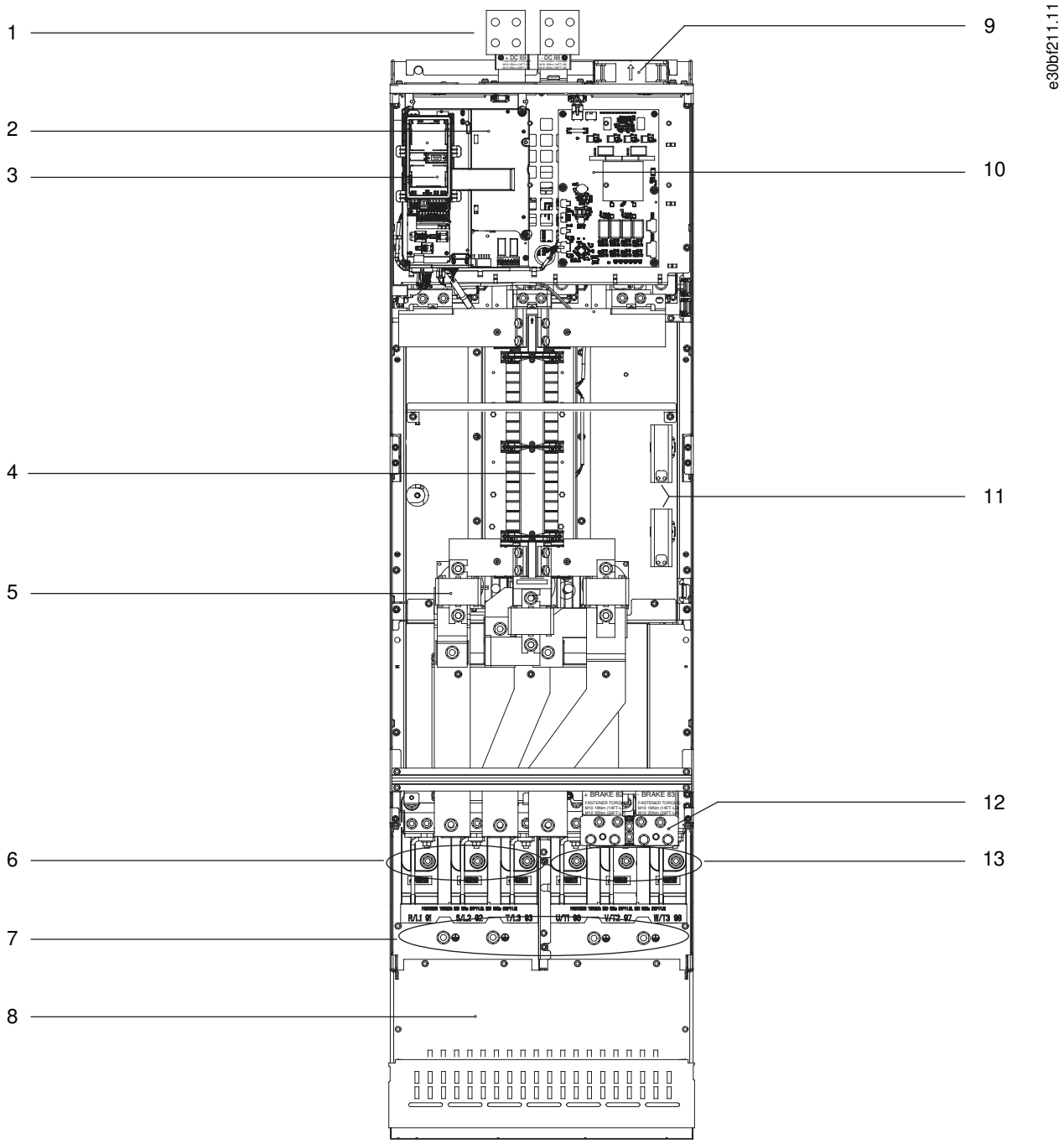

1	Load share/regeneration terminals (optional)	**2**	Control shelf (see illustration 4)
3	Local control panel (LCP) cradle	**4**	RFI filter (optional)
5	Mains fuses (optional)	**6**	Mains terminals
7	Ground terminals		

9 Fans (used to cool the front section of enclosure)	**8** RFI shield termination (optional, but is standard when RFI filter is ordered)
11 Space heater (optional)	**10** Fan power card
13 Motor terminals	**12** Brake terminals (optional)

Illustration 3: Interior View of Enclosure E3h (Enclosure E4h is Similar)

3.5 Control Shelf

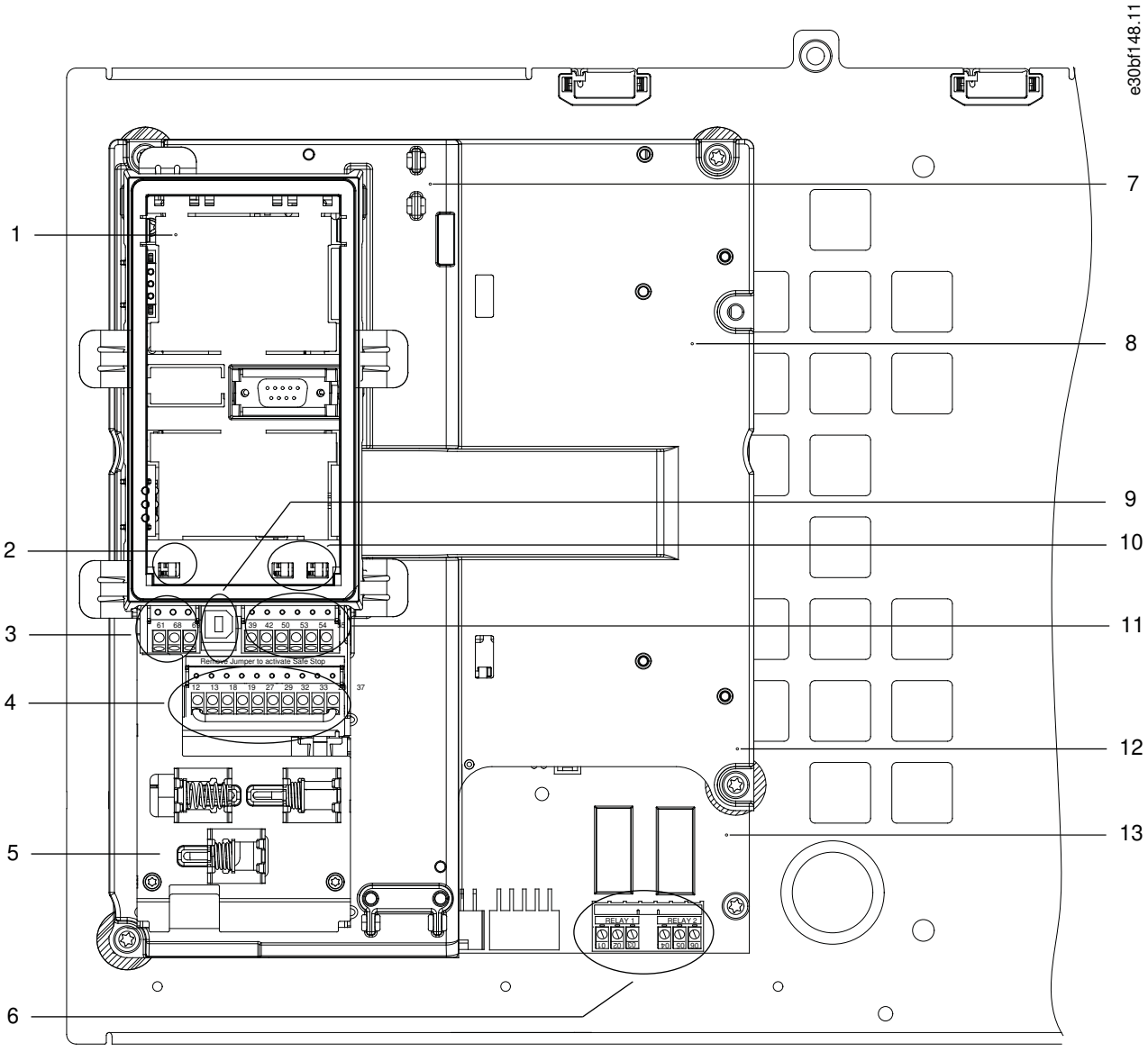

1 LCP cradle (LCP not shown)	**2** Bus terminal switch (see 5.11.8.2 Configuring RS485 Serial Communication)
3 Serial communication terminals (see table 10)	**4** Digital input/output terminals (see table 11)

5 Cable/EMC clamps	**6** Relay 1 and relay 2 (see 5.11.4 Relay Terminals)
7 Control card (underneath LCP and control terminals)	**8** Control shelf
9 USB port	**10** Analog input switches A53/A54 (see 5.11.13 Selecting the Voltage/Current Input Signal)
11 Analog input/output terminals (see table 12)	**12** Brake resistor terminals, 104–106 (on power card underneath control shelf)
13 Power card (underneath the control shelf)	

Illustration 4: View of Control Shelf

3.6 Local Control Panel (LCP)

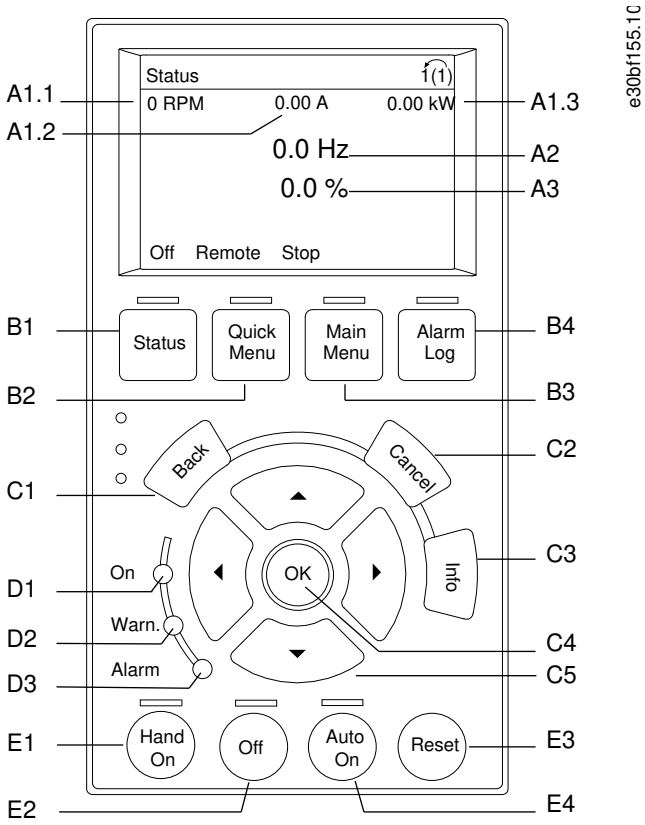

Illustration 5: Graphical Local Control Panel (LCP)

The local control panel (LCP) is the combined display and keypad on the front of the drive. The LCP is used to:

- Control the drive and motor.
- Access drive parameters and program the drive.
- Display operational data, drive status, and warnings.

A numeric local control panel (NLCP) is available as an option. The NLCP operates in a manner similar to the LCP, but there are differences. For details on how to use the NLCP, see the product-specific programming guide.

A. Display area

Each display readout has a parameter associated with it. See table 3. The information shown on the LCP can be customized for specific applications. Refer to *My Personal Menu* in the *LCP Menu* section.

Table 3: LCP Display Area

Callout	Parameter	Default setting
A1.1	*Parameter 0-20 Display Line 1.1 Small*	Speed [RPM]
A1.2	*Parameter 0-21 Display Line 1.2 Small*	Motor current [A]
A1.3	*Parameter 0-22 Display Line 1.3 Small*	Power [kW]
A2	*Parameter 0-23 Display Line 2 Large*	Frequency [Hz]
A3	*Parameter 0-24 Display Line 3 Large*	Reference [%]

B. Menu keys

Menu keys are used to access the menu for setting up parameters, toggling through status display modes during normal operation, and viewing fault log data.

Table 4: LCP Menu Keys

Callout	Key	Function
B1	Status	Shows operational information.
B2	Quick Menu	Allows access to parameters for initial set-up instructions. Also provides detailed application steps. Refer to *Quick Menu mode* in the *LCP Menu* section.
B3	Main Menu	Allows access to all parameters. Refer to *Main Menu mode* in the *LCP Menu* section.
B4	Alarm Log	Shows a list of current warnings and the last 10 alarms.

C. Navigation keys

Navigation keys are used for programming functions and moving the display cursor. The navigation keys also provide speed control in local (hand) operation. The display brightness can be adjusted by pressing [Status] and [▵]/[▿] keys.

Table 5: LCP Navigation Keys

Callout	Key	Function
C1	Back	Reverts to the previous step or list in the menu structure.
C2	Cancel	Cancels the last change or command as long as the display mode has not changed.
C3	Info	Shows a definition of the function being shown.
C4	OK	Accesses parameter groups or enables an option.
C5	[▵][▹] [▿] [◃]	Moves between items in the menu.

D. Indicator lights

Indicator lights identify the drive status and provide a visual notification of warning or fault conditions.

Table 6: LCP Indicator Lights

Callout	Indicator	LED	Function
D1	On	Green	Activates when the drive receives power from the mains voltage or a 24 V external supply.
D2	Warn.	Yellow	Activates when warning conditions are active. Text appears in the display area identifying the problem.
D3	Alarm	Red	Activates during a fault condition. Text appears in the display area identifying the problem.

E. Operation keys and reset

The operation keys are found toward the bottom of the local control panel.

Table 7: LCP Operation Keys and Reset

Callout	Key	Function
E1	[Hand On]	Starts the drive in local control. An external stop signal by control input or serial communication overrides the local [Hand On].
E2	Off	Stops the motor but does not remove power to the drive.
E3	Reset	Resets the drive manually after a fault has been cleared.
E4	Auto On	Puts the system in remote operational mode so it can respond to an external start command by control terminals or serial communication.

3.7 LCP Menu

Quick Menus

The *Quick Menus* mode provides a list of menus used to configure and operate the drive. Select the *Quick Menus* mode by pressing the [Quick Menu] key. The resulting readout appears on the LCP display.

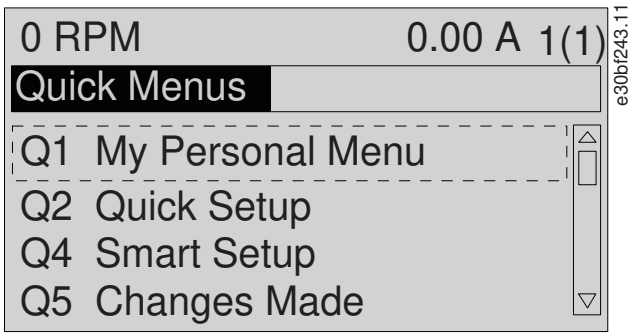

Illustration 6: Quick Menu View

Q1 My Personal Menu

The *Personal Menu* is used to determine what is shown in the display area. Refer to 3.6 Local Control Panel (LCP). This menu can also show up to 50 pre-programmed parameters. These 50 parameters are manually entered using *parameter 0-25 My Personal Menu*.

Q2 Quick Setup

The parameters found in the *Q2 Quick Setup* contain basic system and motor data that are always necessary for configuring the drive. See 6.3.3 Entering System Information for the setup procedures.

Q4 Smart Setup

Q4 Smart Setup guides the user through typical parameter settings used to configure 1 of the following 3 applications:

- Mechanical brake.
- Conveyor.
- Pump/fan.

The [Info] key can be used to see help information for various selections, settings, and messages.

Q5 Changes Made

Select *Q5 Changes Made* for information about:

- The 10 most recent changes.
- Changes made from default setting.

Q6 Loggings

Use *Q6 Loggings* for fault finding. To get information about the display line readout, select *Loggings*. The information is shown as graphs. Only parameters selected in *parameter 0-20 Display Line 1.1 Small* through *parameter 0-24 Display Line 3 Large* can be viewed. It is possible to store up to 120 samples in the memory for later reference.

Table 8: Logging Parameter Examples

Q6 Loggings	
Parameter 0-20 Display Line 1.1 Small	Speed [RPM]
Parameter 0-21 Display Line 1.2 Small	Motor Current
Parameter 0-22 Display Line 1.3 Small	Power [kW]
Parameter 0-23 Display Line 2 Large	Frequency
Parameter 0-24 Display Line 3 Large	Reference %

Q7 Motor Setup

The parameters found in the *Q7 Motor Setup* contain basic and advanced motor data that are always necessary for configuring the drive. This option also includes parameters for encoder setup.

Main Menu

The *Main Menu* mode is used to:

- List the parameter groups available to the drive and drive options.
- Change parameter values.

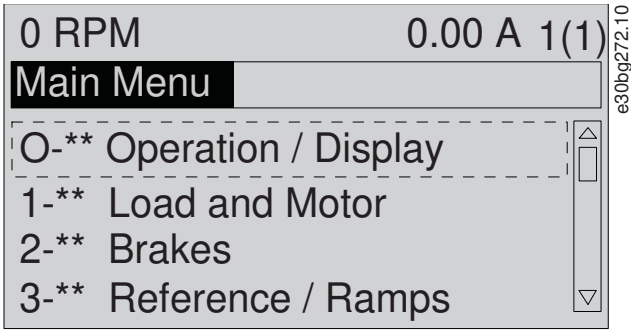

Illustration 7: Main Menu View

4 Mechanical Installation

4.1 Items Supplied

Items supplied can vary according to product configuration.

- Make sure that the items supplied and the information on the nameplate correspond to the order confirmation.
- Visually check the packaging and the drive for damage caused by inappropriate handling during shipment. File any claim for damage with the carrier. Retain damaged parts for clarification.

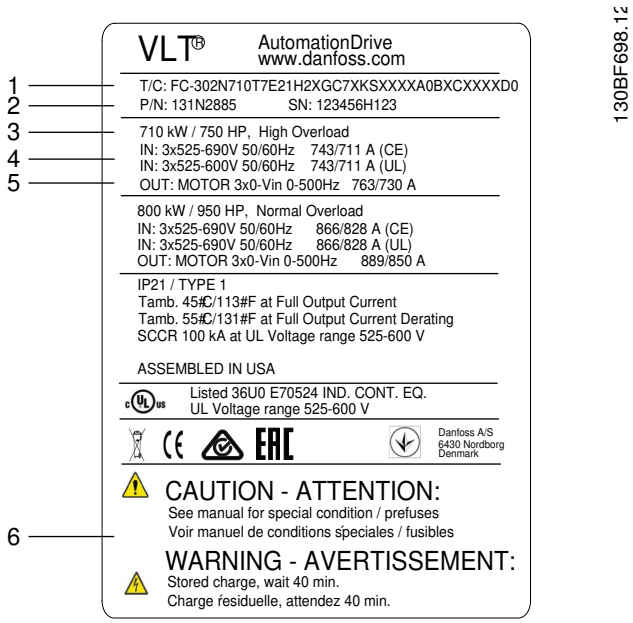

130BF698.12

1	Type code	**2**	Part number and serial number
3	Power rating	**4**	Input voltage, frequency, and current (at low/high voltages)
5	Output voltage, frequency, and current (at low/high voltages)	**6**	Discharge time

Illustration 8: Product Nameplate for E2h Enclosure (Example)

NOTICE

WARRANTY

Removing the nameplate from the drive can result in the loss of warranty.

4.2 Tools Needed

- I-beam and hooks rated to lift the weight of the drive. Refer to the *Power Ratings, Weights, and Dimensions* section.
- Crane or other lifting aid to place the unit into position.

- Drill with 10 mm or 12-mm drill bits.
- Tape measurer.
- Various sizes of Phillips and flat bladed screwdrivers.
- Wrench with relevant metric sockets (7–17 mm).
- Wrench extensions.
- Torx drives (T25 and T50).
- Sheet metal punch for cable entry plate.

4.3 Storing the Drive

Store the drive in a dry location. Keep the equipment sealed in its packaging until installation. Refer to the *Ambient Conditions* section for recommended ambient temperature.

Periodic forming (capacitor charging) is not necessary during storage unless storage exceeds 12 months.

4.4 Operating Environment

4.4.1 Overview

In environments with airborne liquids, particles, or corrosive gases, ensure that the IP/NEMA protection rating of the equipment matches the installation environment. Refer to the *Ambient Conditions* section.

NOTICE

CONDENSATION

Moisture can condense on the electronic components and cause short circuits.

- Avoid installation in areas subject to frost.
- Install an optional space heater when the unit is colder than the ambient air.
- Operating in standby mode reduces the risk of condensation as long as the power dissipation keeps the circuitry free of moisture.

NOTICE

EXTREME AMBIENT CONDITIONS

Hot or cold temperatures compromise unit performance and longevity.

- Do not operate in environments where the ambient temperature exceeds 55 °C (131 °F).
- The unit can operate at temperatures down to -10 °C (14 °F). However, proper operation at rated load is only guaranteed at 0 °C (32 °F) or higher. Also, temperature feedback is not shown when temperatures are below 0 °C (32 °F).
- Provide extra air conditioning for the cabinet or installation site when the temperature exceeds ambient temperature limits.

4.4.2 Gases

Aggressive gases, such as hydrogen sulphide, chlorine, or ammonia can damage the electrical and mechanical components. The unit uses conformal-coated circuit boards to reduce the effects of aggressive gases.

For conformal coating class specifications and ratings, see the *Ambient Conditions* section.

4.4.3 Dust

When installing the unit in a dusty environment, keep the following free from dust buildup:

- Electronic components.
- Heat sink.
- Fans.

Keep the heat sink and fans free from dust buildup. When dust accumulates on electronic components, it acts as a layer of insulation. This layer reduces the cooling capacity of the components, and the components become warmer. The hotter environment decreases the life of the electronic components. Dust can also accumulate on fan blades, causing an imbalance which prevents the fan from properly cooling the unit. Dust buildup can also damage fan bearings and cause premature fan failure.

For more information, refer to the *Maintenance and Service* section.

4.4.4 Potentially Explosive Atmospheres

⚠ WARNING ⚠

EXPLOSIVE ATMOSPHERE

Installing the drive in a potentially explosive atmosphere can lead to death, personal injury, or property damage.

- Install the unit in a cabinet outside of the potentially explosive area.
- Use a motor with an appropriate ATEX protection class.
- Install a PTC temperature sensor to monitor the motor temperature.
- Install short motor cables.
- Use sine-wave output filters when shielded motor cables are not used.

As required by the EU Directive 2014/34/EU, any electrical or electronic device intended for use in an environment with a potentially explosive mixture of air, flammable gas, or dust must be ATEX-certified. Systems operated in this environment must fulfill the following special conditions to comply with the ATEX protection class:

- Class d specifies that if a spark occurs, it is contained in a protected area.
- Class e prohibits any occurrence of a spark.

Motors with class d protection

Does not require approval. Special wiring and containment are required.

Motors with class e or class n protection

When combined with an ATEX-approved PTC monitoring device like the VLT® PTC Thermistor Card MCB 112, installation does not need an individual approval from an approbated organization.

Motors with class d/e protection

The motor itself has an e ignition protection class, while the motor cabling and connection environment are in compliance with the d classification. To attenuate the high peak voltage, use a sine-wave filter at the drive output.

NOTICE

MOTOR THERMISTOR SENSOR MONITORING

VLT® AutomationDrive units with the VLT® PTC Thermistor Card MCB 112 option are PTB-certified for potentially explosive atmospheres.

4.5 Installation Requirements

NOTICE

OVERHEATING

Improper mounting can result in overheating and reduced performance.

- Install the drive according to the installation and cooling requirements.

- Locate the unit as near to the motor as possible. See 9.5 Cable Specifications for the maximum motor cable length.
- Ensure unit stability by mounting the unit to a solid surface.
- Enclosures E3h and E4h can be mounted:
  - Vertically on the back plate of the panel (the typical installation).
  - Vertically upside down on the back plate of the panel. Consult the factory.
  - Horizontally on its back, mounted on the back plate of the panel. Consult the factory.
  - Horizontally on its side, mounted on floor of the panel. Consult the factory.
- Ensure that the strength of the mounting location supports the unit weight.
- Ensure that there is enough space around the unit for proper cooling. Refer to 9.9 Enclosure Airflow.
- Ensure enough access to open the door.
- Ensure cable entry from the bottom.

4.6 Cooling Requirements

NOTICE

OVERHEATING

Improper mounting can result in overheating and reduced performance.

- Install the drive following the installation and cooling requirements.

- Ensure that top and bottom clearance for air cooling is provided. Clearance requirement: 225 mm (9 in).
- Provide sufficient airflow flow rate. See 4.7 E1h-E4h Airflow Rates.
- Consider derating for temperatures starting between 45 °C (113 °F) and 55 °C (131 °F) and elevation 1000 m (3300 ft) above sea level. For more information, see the product-specific design guide.

The drive utilizes a back-channel cooling concept that removes heat sink cooling air. The heat sink cooling air carries approximately 90% of the heat out of the back channel of the drive. Redirect the back-channel air from the panel or the room by using either:

- Duct cooling.
- Back-wall cooling.

Duct cooling

Back-channel cooling kits are available to direct the heat sink cooling air out of the panel when IP20/Chassis drives are installed in Rittal enclosures. Use of these kits reduce the heat in the panel and smaller door fans can be specified.

Back-wall cooling

Installing top and bottom covers to the unit allows the back-channel cooling air to be ventilated out of the room.

4.7 E1h-E4h Airflow Rates

For E3h and E4h enclosures (IP20/Chassis), at least 1 door fan is required on the enclosure to remove the heat not contained in the back-channel of the drive. It also removes any additional losses generated by other components inside the drive. To select the appropriate fan size, calculate the total required airflow as shown in table 9.

Table 9: Airflow Rates

Drive	Door fan/top fan [m^3/hr (cfm)]	Heat sink fan [m^3/hr (cfm)]
E1h	510 (300)	994 (585)
E2h	552 (325)	1053–1206 (620–710)
E3h	595 (350)	994 (585)
E4h	629 (370)	1053–1206 (620–710)

4.8 Lifting the Drive

⚠ WARNING ⚠

LIFTING HEAVY LOAD

The weight of the drive is heavy and failure to follow local safety regulations for lifting heavy weights may cause death, personal injury, or property damage.

- Ensure that the lifting equipment is in proper working condition.
- Check the weight of the drive and verify that the lifting equipment can safely lift the weight.
- Maximum diameter for the lifting bar: 20 mm (0.8 in).
- The angle from the top of the drive to the lifting cable: 60° or greater.
- Test lift the drive approximately 610 mm (24 in) to verify the proper center of gravity lift point. Reposition the lifting point if the unit is not level.

Always lift the drive using a lifting bar inserted into the lifting eyes. See illustration 9.

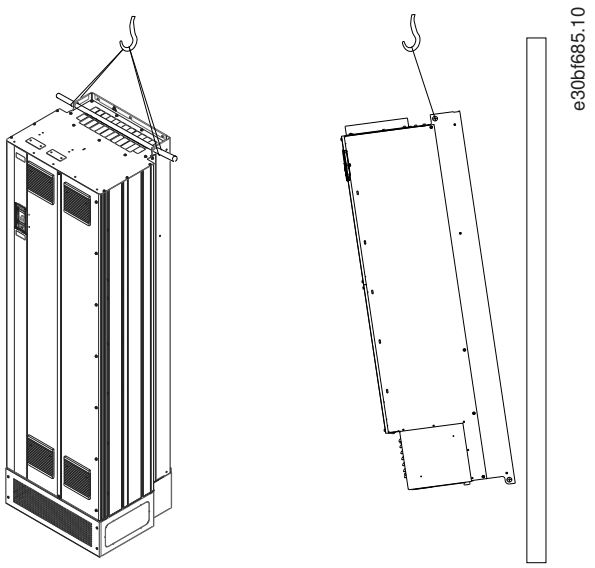

Illustration 9: Recommended Lifting Method

4.9 E1h/E2h Mechanical Installation

The E1h and E2h enclosure size is intended only for floor installation, and is shipped with a pedestal and a cable entry plate. The pedestal and cable entry plate must be installed for proper installation.

The pedestal is 200 mm (7.9 in) and has an opening in the front to allow airflow necessary to cool the power components of the drive.

The cable entry plate is necessary to provide cooling air to the control components of the drive via the door fan, and to maintain the IP21/Type 1 or IP54/Type 12 protection rating.

4.9.1 Securing the Pedestal to the Floor

Procedure

1. Determine proper placement of the unit, concerning operating conditions and cable access.
2. Access the mounting holes by removing the front panel of the pedestal.
3. Set the pedestal on the floor and secure using 6 bolts through the mounting holes.

Example:

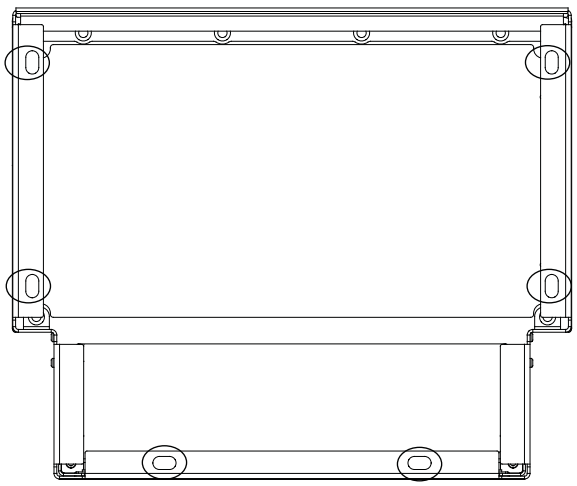

Illustration 10: Pedestal to Floor Mounting Points (Circled)

4.9.2 Attaching an E1h/E2h to the Pedestal

Prerequisites:

The pedestal must be secured to the floor using 6 bolts before installing the enclosure.

Procedure

1. Lift the drive and position it on the pedestal. There are 2 bolts in the rear of the pedestal that slide into the 2 slotted holes in the rear of the enclosure. Position the drive by adjusting the bolts up or down. Loosely secure with 2 M10 nuts and locking brackets. See illustration 11.
2. Verify that there is 225 mm (9 in) top clearance for air exhaust.
3. Verify that the air intake at the bottom front of the unit is not obstructed.
4. Around the top of the pedestal, secure the enclosure using 6 M10x30 fasteners. Refer to illustration 12. Loosely tighten each bolt until all bolts are installed.
5. Fasten each bolt securely and torque to 19 Nm (169 in-lb).
6. Torque the 2 M10 nuts at the rear of the enclosure to 19 Nm (169 in-lb).

Example:

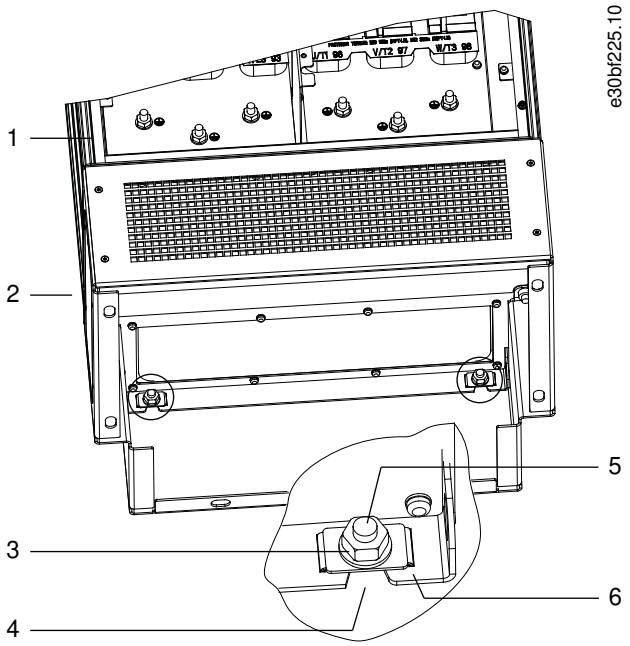

1	Enclosure	**2**	Pedestal
3	M10 nut	**4**	Slotted hole in enclosure
5	Bolt at rear of pedestal	**6**	Locking bracket

Illustration 11: Pedestal to Enclosure Back Mounting Points

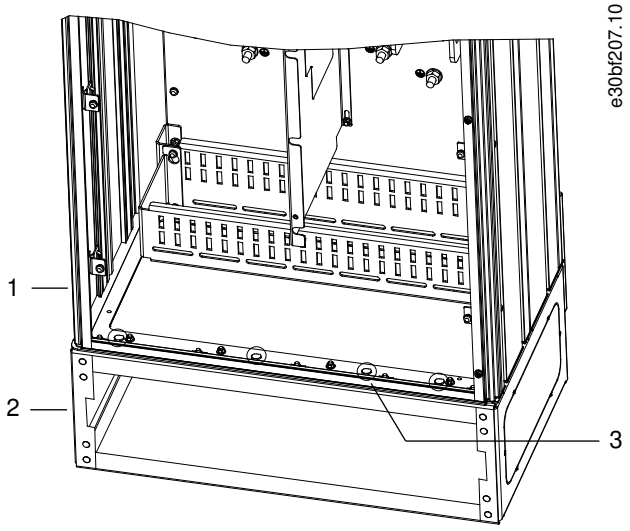

1	Enclosure	**2**	Pedestal
3	M10x30 fasteners (rear corner bolts not shown)		

Illustration 12: Pedestal to Enclosure Mounting Points

4.9.3 Creating Cable Openings for an E1h/E2h

Context:

The cable entry plate is a sheet of metal with studs along the outer edge. The cable entry plate provides cable entry and cable termination points, and must be installed to maintain the IP21/IP54 (Type 1/Type 12) protection rating. The plate is placed between the drive enclosure and the pedestal. Depending on stud orientation, the plate can be installed from inside the enclosure or inside the pedestal. For cable entry plate dimensions, see 9.8.1 E1h Exterior Dimensions and 9.8.2 E2h Exterior Dimensions.

Procedure

1. Create cable entry holes in the cable entry plate using a sheet metal punch.
2. Insert the cable entry plate using 1 of the following methods:
   To insert the cable entry plate through the pedestal, slide the cable entry plate through the slot (4) in the front of the pedestal.
   To insert the cable entry plate through the enclosure, angle the cable entry plate until it can be slid under the slotted brackets.
3. Align the studs on the cable entry plate to the holes in the pedestal and secure with 10 M5 nuts (2).
4. Torque each nut to 2.3 Nm (20 in-lb).

Example:

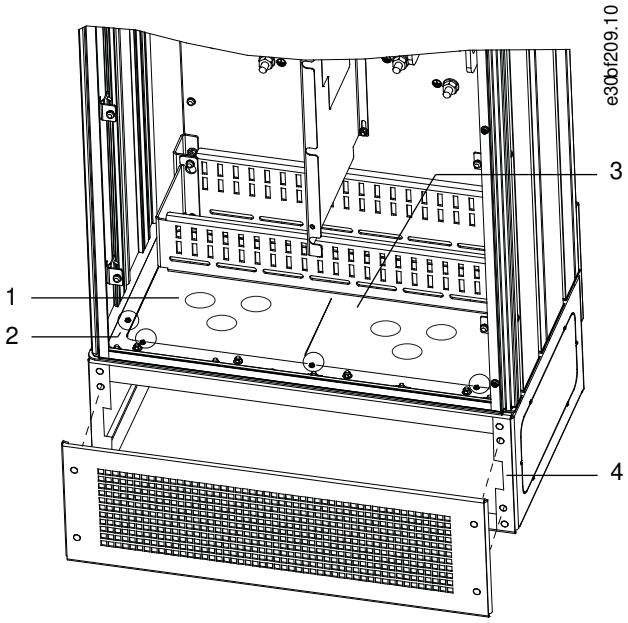

1	Cable entry hole	**2**	M5 nut
3	Cable entry plate	**4**	Slot in pedestal base
5	Front cover/grill		

Illustration 13: Installing the Cable Entry Plate

4.10 E3h/E4h Mechanical Installation

The E3h and E4h enclosure sizes are intended to be mounted on a wall or on a mounting panel within an enclosure. A plastic cable entry plate is installed on the enclosure. It is designed to prevent unintentional access to the terminals in an IP20/protected chassis unit.

NOTICE

Regeneration/Load share Option

Due to the exposed terminals at the top of the enclosure, units with the regeneration/load share option have an IP00 protection rating.

4.10.1 Attaching the E3h/E4h to a Mounting Plate or Wall

Procedure

1. Drill the mounting holes according to the enclosure size. Refer to 9.8.3 E3h Exterior Dimensions and 9.8.4 E4h Exterior Dimensions.
2. Secure the top of the drive enclosure to the mounting plate or wall.
3. Secure the base of the drive enclosure to the mounting plate or wall.

4.10.2 Creating Cable Openings for an E3h/E4h

Context:

The cable entry plate covers the bottom part of the drive enclosure and must be installed to maintain the IP20/ Chassis protection rating. The cable entry plate consists of plastic squares that can be cut out to provide cable access to the terminals. See illustration 14.

Procedure

1. Remove the bottom panel and terminal cover. See illustration 15.
   - **A** Detach the bottom panel by removing 4 T25 screws.
   - **B** Remove 5 T20 screws that secure the bottom of the drive to the top of the terminal cover, and then pull the terminal cover straight out.
2. Determine the size and position of the motor, mains, and ground cables. Note their position and measurements.
3. Based on the measurement and positions of the cables, create openings in the plastic cable entry plate by cutting out the necessary squares.
4. Slide the plastic cable entry plate (7) onto the bottom rails of the terminal cover.
5. Tilt the front of the terminal cover downward until the fastener points (8) rest on the slotted drive brackets (6).
6. Make sure that the side panels of the terminal cover are on the outside track guide (5).
7. Push the terminal cover until it is up against the slotted drive bracket.
8. Tilt the front of the terminal cover upward until the fastener hole in the bottom of the drive aligns with the keyhole opening (9) in the terminal. Secure with 2 T25 screws and torque to 2.3 Nm (20 in-lb).
9. Secure the bottom panel with 3 T25 screws and torque to 2.3 Nm (20 in-lb).

Example:

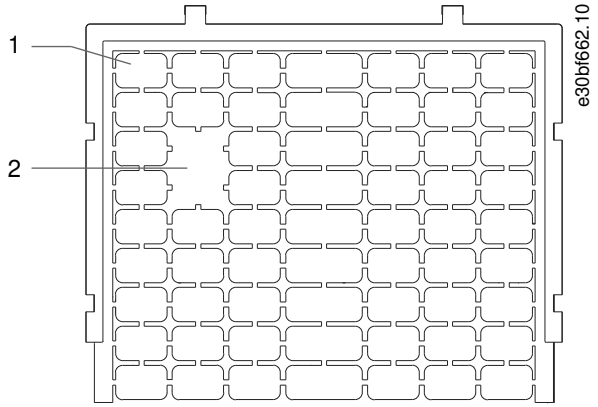

1 Plastic square	**2** Squares removed for cable access

Illustration 14: Plastic Cable Entry Plate

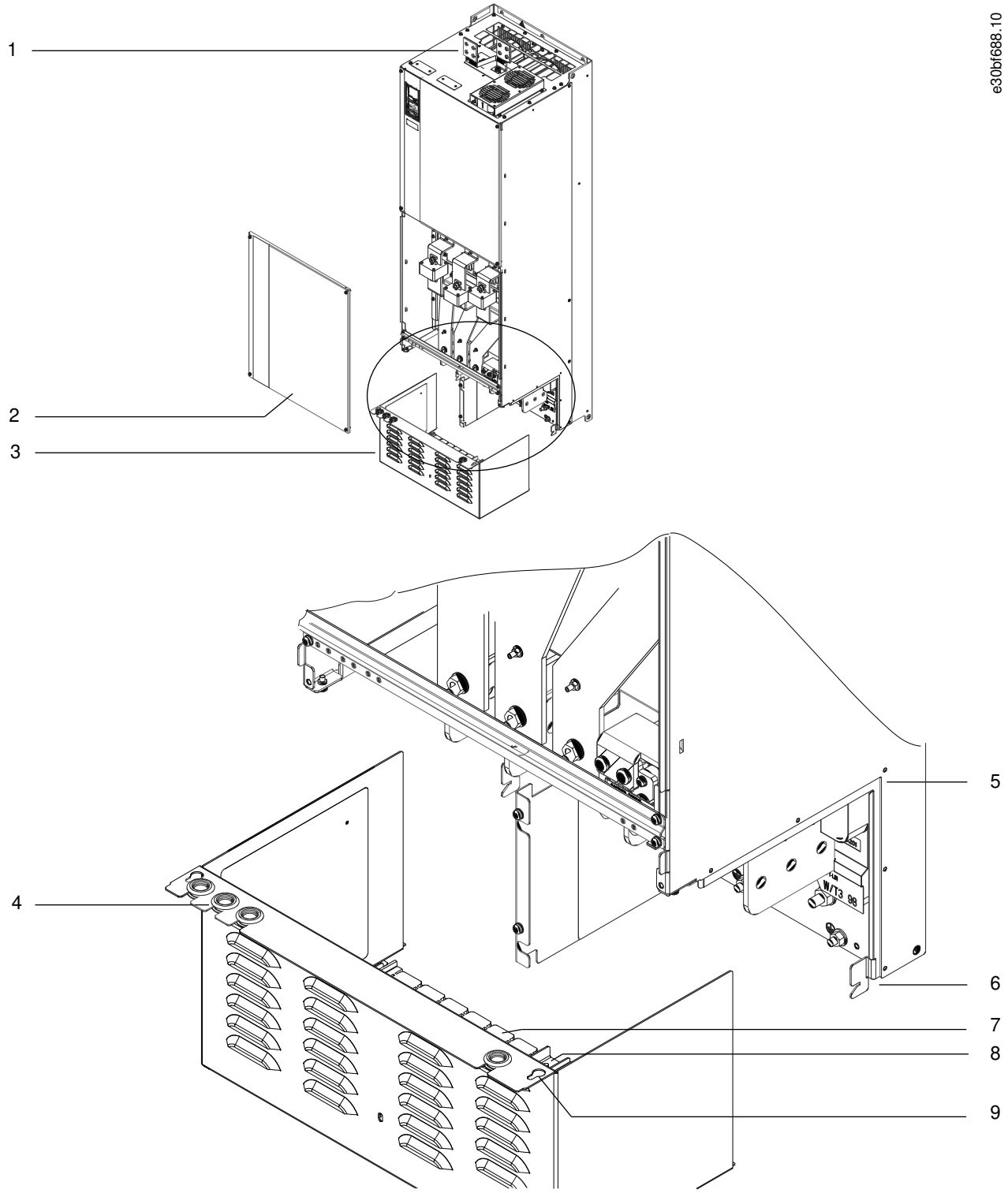

1	Load share/regen terminals (optional)	**2**	Bottom panel
3	Terminal cover	**4**	Grommet access hole for control wiring
5	Track guide	**6**	Slotted drive bracket

7 Plastic cable entry plate (installed)	**8** Fastener point
9 Keyhole opening	

Illustration 15: Assembling the Cable Entry Plate and Terminal Cover

4.10.3 Installing Load share/Regen Terminals to an E3h/E4h

Context:

The load share/regen terminals, on the top of the drive, are not installed from the factory to prevent damage during shipping.

Procedure

1. Remove the terminal plate, 2 terminals, label, and fasteners from the accessory bag included with the drive.
2. Remove the cover from the load share/ regen opening on the top of the drive. Put aside the 2 M5 fasteners for reuse later.
3. Remove the plastic backing and install the terminal plate over the load share/regen opening. Secure with the 2 M5 fasteners and torque to 2.3 Nm (20 in-lb).
4. Install both the terminals to the terminal plate using 1 M10 fastener per terminal. Torque to 19 Nm (169 in-lb).
5. Install the label on the front of the terminals as shown in illustration 16. Secure with 2 M4 screws and torque to 1.2 Nm (10 in-lb).

Example:

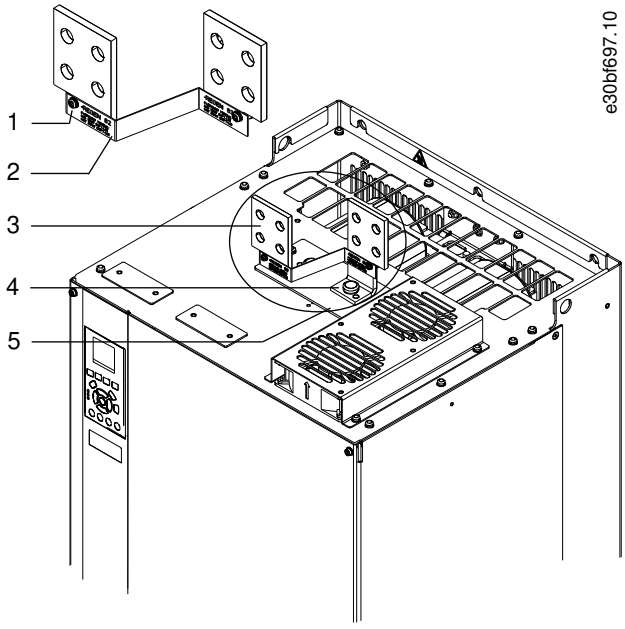

1 Label fastener, M4	**2** Label
3 Load share/regen terminal	**4** Terminal fastener, M10
5 Terminal plate with 2 openings	

Illustration 16: Load share/Regen Terminals

5 Electrical Installation

5.1 Safety Instructions

See the *Safety Precautions* section for general safety warnings.

NOTICE

EXCESSIVE HEAT AND PROPERTY DAMAGE

Overcurrent can generate excessive heat within the drive. Failure to provide overcurrent protection can result in risk of fire and property damage.

- Additional protective equipment such as shortcircuit protection or motor thermal protection between drive and motor is required for applications with multiple motors.
- Input fusing is required to provide short circuit and overcurrent protection. If fuses are not factory-supplied, the installer must provide them. See maximum fuse ratings in the *Specifications* chapter.

NOTICE

WIRE TYPE AND RATINGS

All wiring must comply with local and national regulations regarding cross-section and ambient temperature requirements. For power connections, minimum 75 °C (167 °F) rated copper wire is recommended. Refer to the the *Specifications* chapter.

⚠ WARNING ⚠

INDUCED VOLTAGE

Induced voltage from output motor cables from different drives that are run together can charge equipment capacitors even with the equipment turned off and locked out. Failure to run output motor cables separately or use shielded cables could result in death or serious injury.

- Run output motor cables separately or use shielded cables.
- Simultaneously lock out all the drives.

⚠ WARNING ⚠

SHOCK HAZARD

The drive can cause a DC current in the PE conductor. Failure to use a Type B residual current-operated protective device (RCD) may lead to the RCD not providing the intended protection and therefore may result in death or serious injury.

- When an RCD is used for protection against electrical shock, only a Type B device is allowed on the supply side.

NOTICE

PROPERTY DAMAGE

Protection against motor overload is not included in the default setting. For the North American market, the ETR function provides class 20 motor overload protection in accordance with NEC. Failure to set the ETR function means that motor overload protection is not provided and property damage can occur if the motor overheats.

- Enable the ETR function by setting *parameter 1-90 Motor Thermal Protection* to *[ETR trip]* or *[ETR warning]*.

5.2 EMC-compliant Installation

To obtain an EMC-compliant installation, refer to the wiring schematics and follow the instructions provided for:

- Connecting the motor.
- Connecting the AC mains.
- Connecting to ground.
- Control wiring.

Also, remember to practice the following:

- When using relays, control cables, a signal interface, fieldbus, or brake, connect the shield to the enclosure at both ends. If the ground path has high impedance, is noisy, or is carrying current, break the shield connection on 1 end to avoid ground current loops.
- Convey the currents back to the unit using a metal mounting plate. Ensure good electrical contact from the mounting plate through the mounting screws to the drive chassis.
- Use shielded cables for motor output cables. An alternative is unshielded motor cables within metal conduit.
- Ensure that motor and brake cables are as short as possible to reduce the interference level from the entire system.
- Avoid placing cables with a sensitive signal level alongside motor and brake cables.
- For communication and command/control lines, follow the particular communication protocol standards. For example, USB must use shielded cables, but RS485/ethernet can use shielded UTP or unshielded UTP cables.
- Ensure that all control terminal connections are PELV.

NOTICE

TWISTED SHIELD ENDS (PIGTAILS)

Twisted shield ends increase the shield impedance at higher frequencies, which reduces the shield effect and increases the leakage current.

- Use integrated shield clamps instead of twisted shield ends.

NOTICE

SHIELDED CABLES

If shielded cables or metal conduits are not used, the unit and the installation do not meet regulatory limits on radio frequency (RF) emission levels.

NOTICE

EMC INTERFERENCE

Failure to isolate power, motor, and control cables can result in unintended behavior or reduced performance.

- Use shielded cables for motor and control wiring.
- Use separate cables for mains input, motor, and control wiring.
- Provide a minimum 200 mm (7.9 in) separation between mains input cables, motor cables, and control cables.

NOTICE

INSTALLATION AT HIGH ALTITUDE

There is a risk for overvoltage. Isolation between components and critical parts could be insufficient, and may not comply with PELV requirements.

- Use external protective devices or galvanic isolation. For installations above 2000 m (6500 ft) altitude, contact Danfoss regarding PELV compliance.

NOTICE

PELV COMPLIANCE

Prevent electric shock by using protective extra low voltage (PELV) electrical supply and complying with local and national PELV regulations.

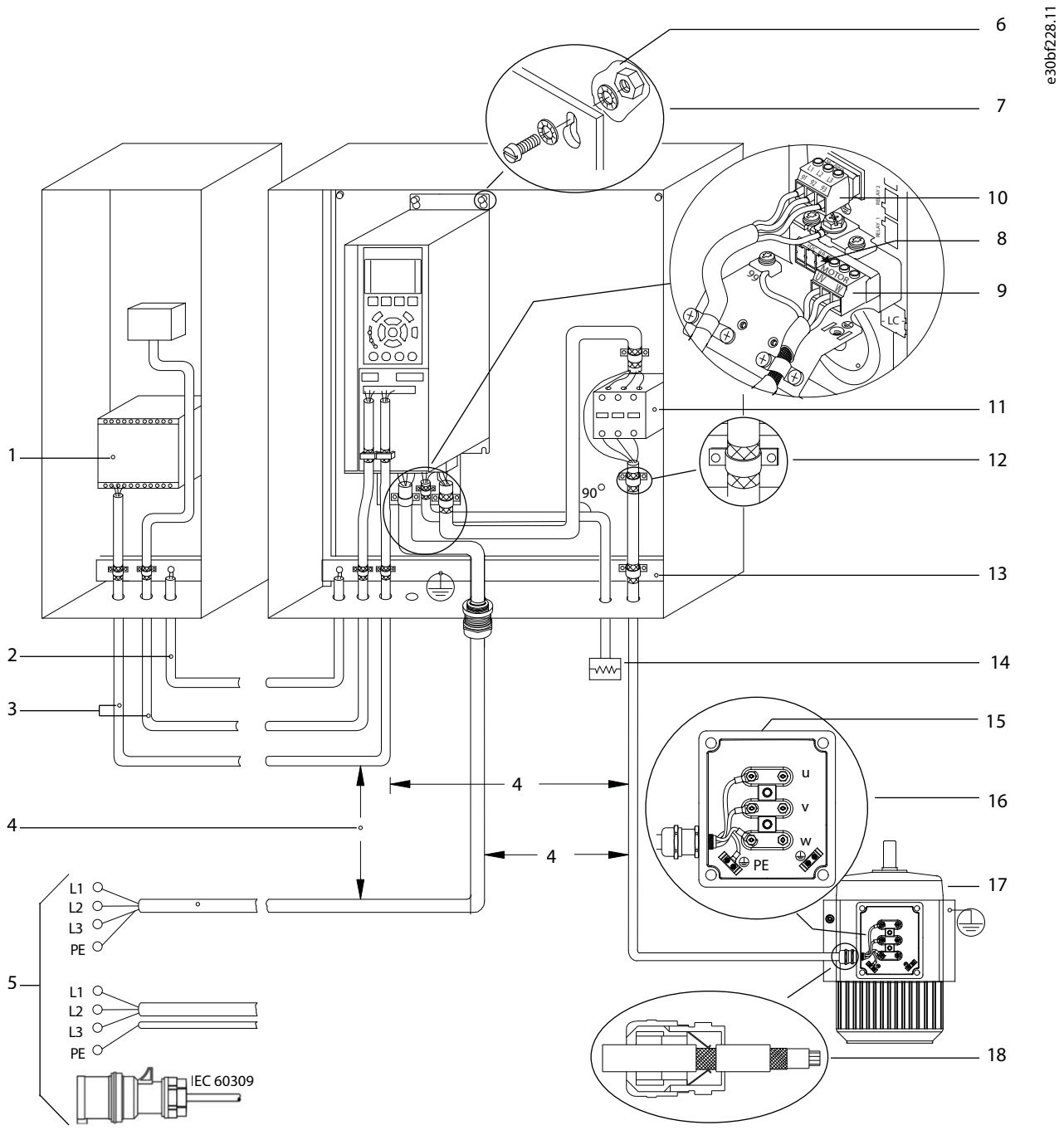

1 PLC	**2** Minimum 16 mm^2 (6 AWG)equalizing cable
3 Control cables	**4** Minimum 200 mm (7.9 in) between control cables, motor cables, and mains cables.
5 Mains supply	**6** Bare (unpainted) surface
7 Star washers	**8** Brake cable (shielded)
9 Motor cable (shielded)	**10** Mains cable (unshielded)

11	Output contactor, and so on	**12**	Cable insulation stripped
13	Common ground busbar. Follow local and national requirements for cabinet grounding.	**14**	Brake resistor
15	Metal box	**16**	Connection to motor
17	Motor	**18**	EMC cable gland

Illustration 17: Example of Proper EMC Installation

5.3 Wiring Schematic

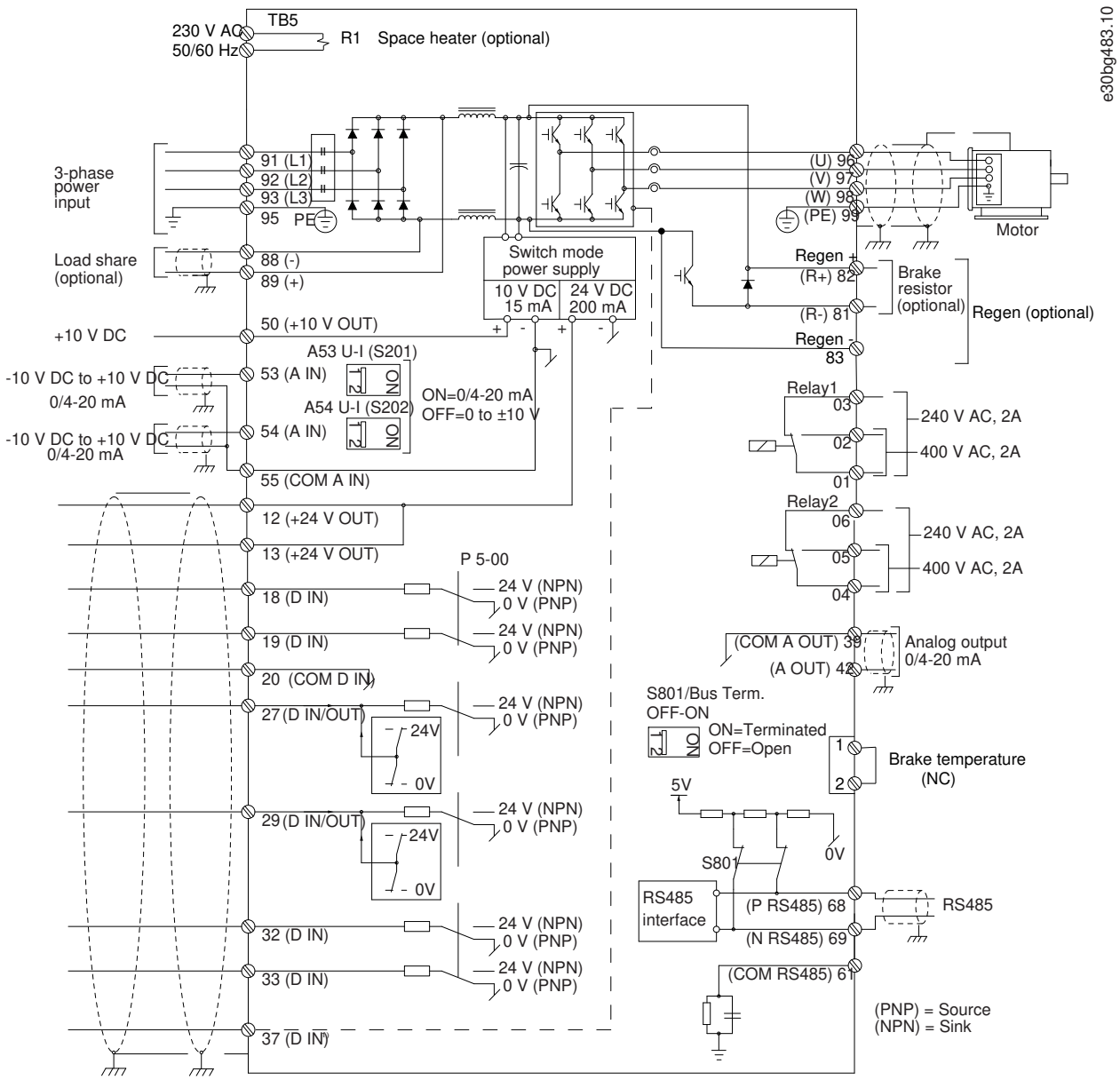

1 Terminal 37 (optional) is used for Safe Torque Off. Refer to the *VLT® FC Series - Safe Torque Off Operating Guide* for installation instructions.

Illustration 18: Basic Wiring Schematic

5.4 Connecting the Motor

Context:

⚠ WARNING ⚠

INDUCED VOLTAGE

Induced voltage from output motor cables that run together can charge equipment capacitors, even with the equipment turned off and locked out. Failure to run output motor cables separately or to use shielded cables could result in death or serious injury.

- Run output motor cables separately or use shielded cables.
- Simultaneously lock out all the drives.

- Comply with local and national electrical codes for cable sizes. For maximum wire sizes, see the *Electrical Data* section.
- Follow motor manufacturer wiring requirements.
- Motor wiring knockouts or access panels are provided on the pedestal of IP21/IP54 (Type 1/Type 12) units.
- Do not wire a starting or pole-changing device (for example, Dahlander motor or slip ring induction motor) between the drive and the motor.

Procedure

1. Strip a section of the outer cable insulation.
2. Establish mechanical fixation and electrical contact between the cable shield and ground by positioning the stripped wire under the cable clamp.
3. Connect the ground wire to the nearest grounding terminal in accordance with the grounding instructions provided in 5.6 Connecting to Ground.
4. Connect the 3-phase motor wiring to terminals 96 (U), 97 (V), and 98 (W). See illustration 19.
5. Tighten the terminals in accordance with the specifications shown in 9.10 Fastener Torque Ratings.

Example:

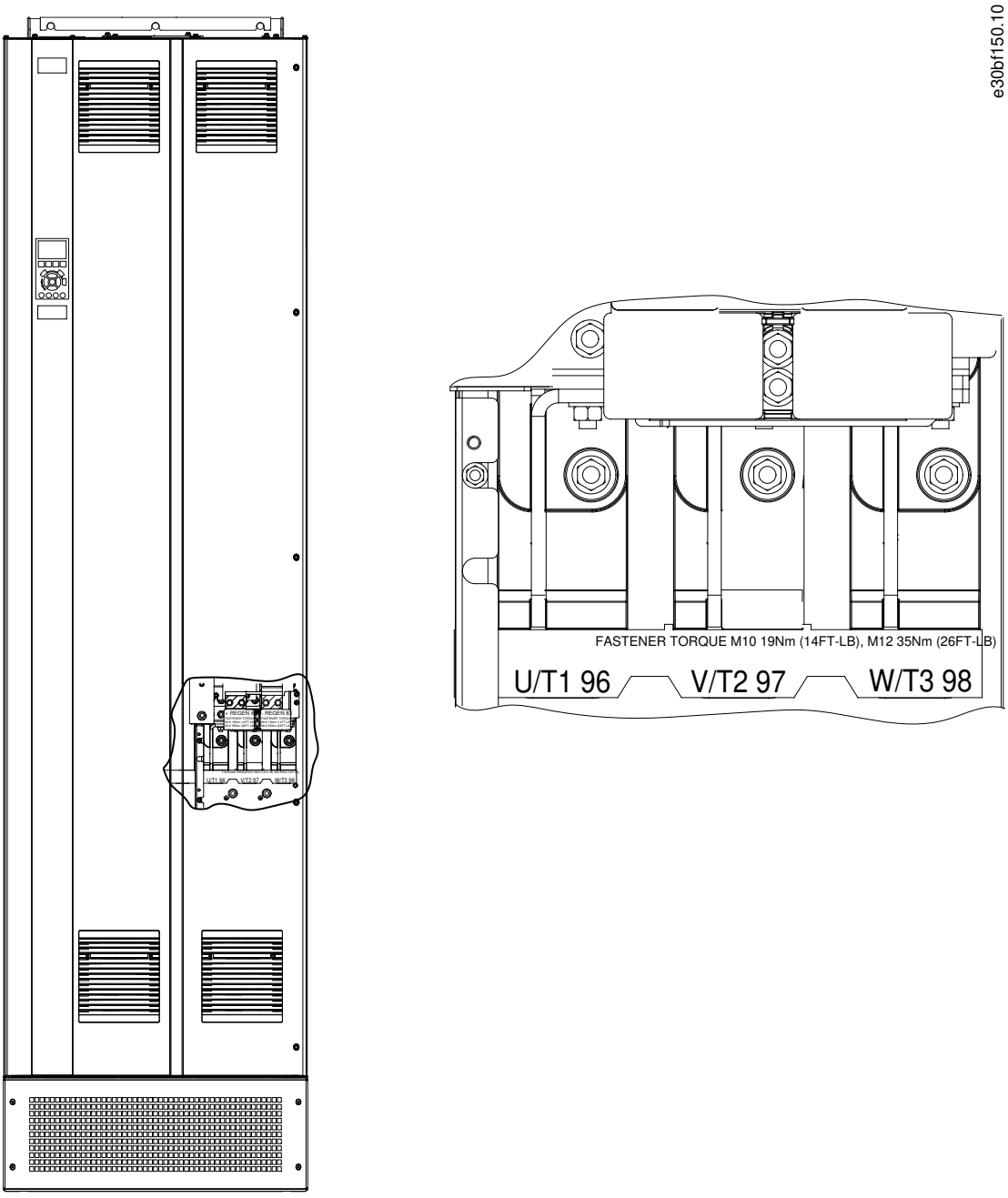

Illustration 19: AC Motor Terminals (E1h shown).

5.5 Connecting the AC Mains

Context:

- Size the wiring according to the input current of the drive. For maximum wire sizes, see the *Electrical Data* section.
- Comply with local and national electrical codes for cable sizes.

NOTICE

OUTPUT CONTACTOR

Danfoss does not recommend using an output contactor on 525-690 V drives that are connected to an IT mains network.

Procedure

1. Strip a section of the outer cable insulation.
2. Establish mechanical fixation and electrical contact between the cable shield and ground by positioning the stripped wire under the cable clamp.
3. Connect the ground wire to the nearest grounding terminal in accordance with the grounding instructions provided in 5.6 Connecting to Ground.
4. Connect the 3-phase AC input power wiring to terminals R, S, and T. See illustration 20.
5. Tighten the terminals in accordance with the specifications shown in 9.10 Fastener Torque Ratings.
6. When supplied from an isolated mains source (IT mains or floating delta) or TT/TN-S mains with a grounded leg (grounded delta), ensure that *parameter 14-50 RFI Filter* is set to *[0] Off* to avoid damage to the DC link and to reduce ground capacity currents.

Example:

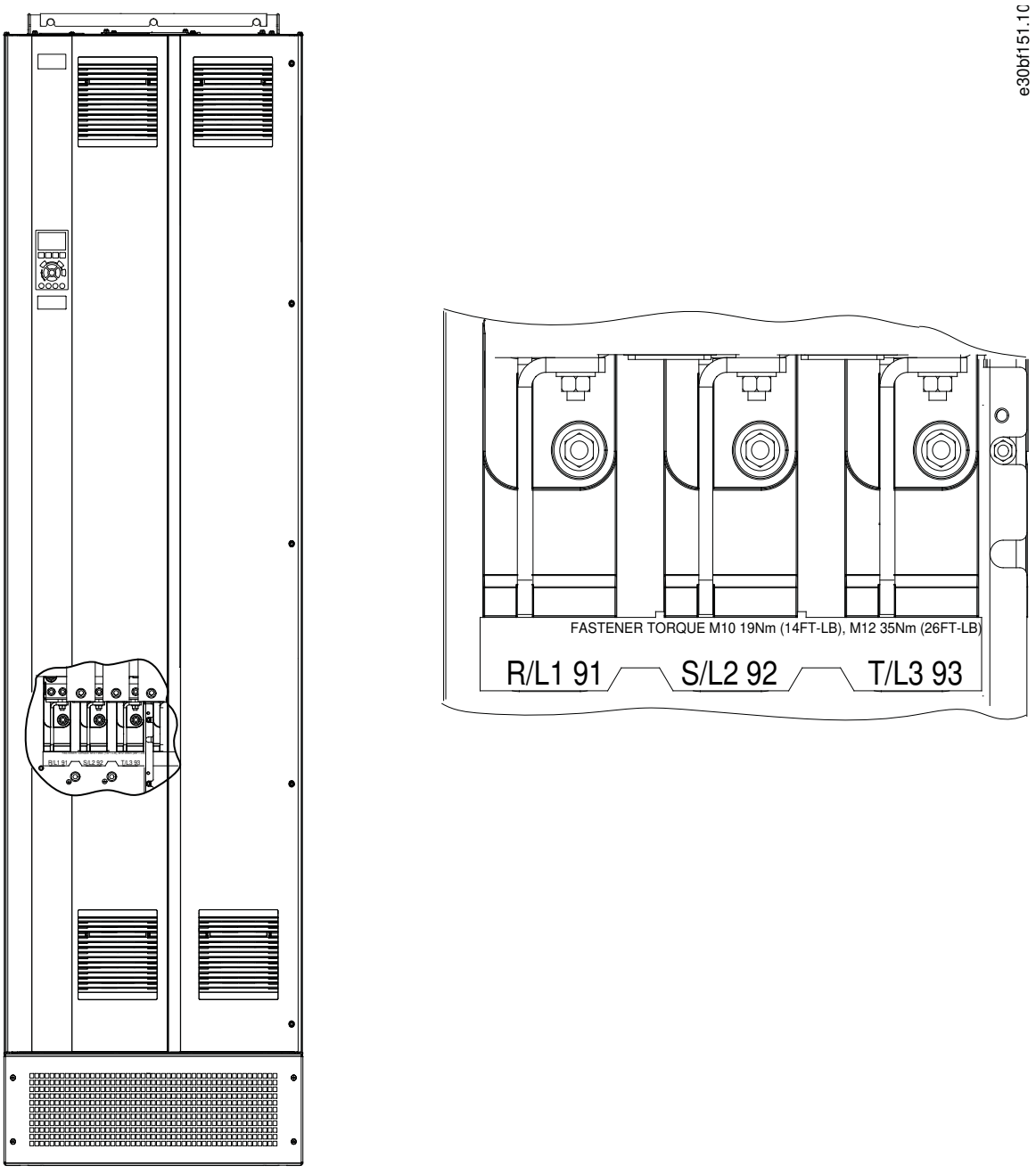

Illustration 20: AC Mains Terminals (E1h shown).

5.6 Connecting to Ground

Context:

⚠ WARNING ⚠

LEAKAGE CURRENT HAZARD

Leakage currents exceed 3.5 mA. Failure to ground the drive properly can result in death or serious injury.

- Ensure the correct grounding of the equipment by a certified electrical installer.

For electrical safety:

- Ground the drive in accordance with applicable standards and directives.
- Use a dedicated ground wire for input power, motor power, and control wiring.
- Do not ground 1 drive to another in a daisy chain fashion.
- Keep the ground wire connections as short as possible.
- Follow motor manufacturer wiring requirements.
- Minimum cable cross-section: 10 mm^2 (6 AWG) (or 2 rated ground wires terminated separately).
- Tighten the terminals in accordance with the information provided in 9.10 Fastener Torque Ratings.

For EMC-compliant installation:

- Establish electrical contact between the cable shield and the drive enclosure by using metal cable glands or by using the clamps provided on the equipment.
- Reduce burst transient by using high-strand wire.
- Do not use twisted shield ends (pigtails).

NOTICE

POTENTIAL EQUALIZATION

There is a risk of burst transient when the ground potential between the drive and the control system is different.

- Install equalizing cables between the system components. Recommended cable cross-section: 16 mm^2 (5 AWG).

Example:

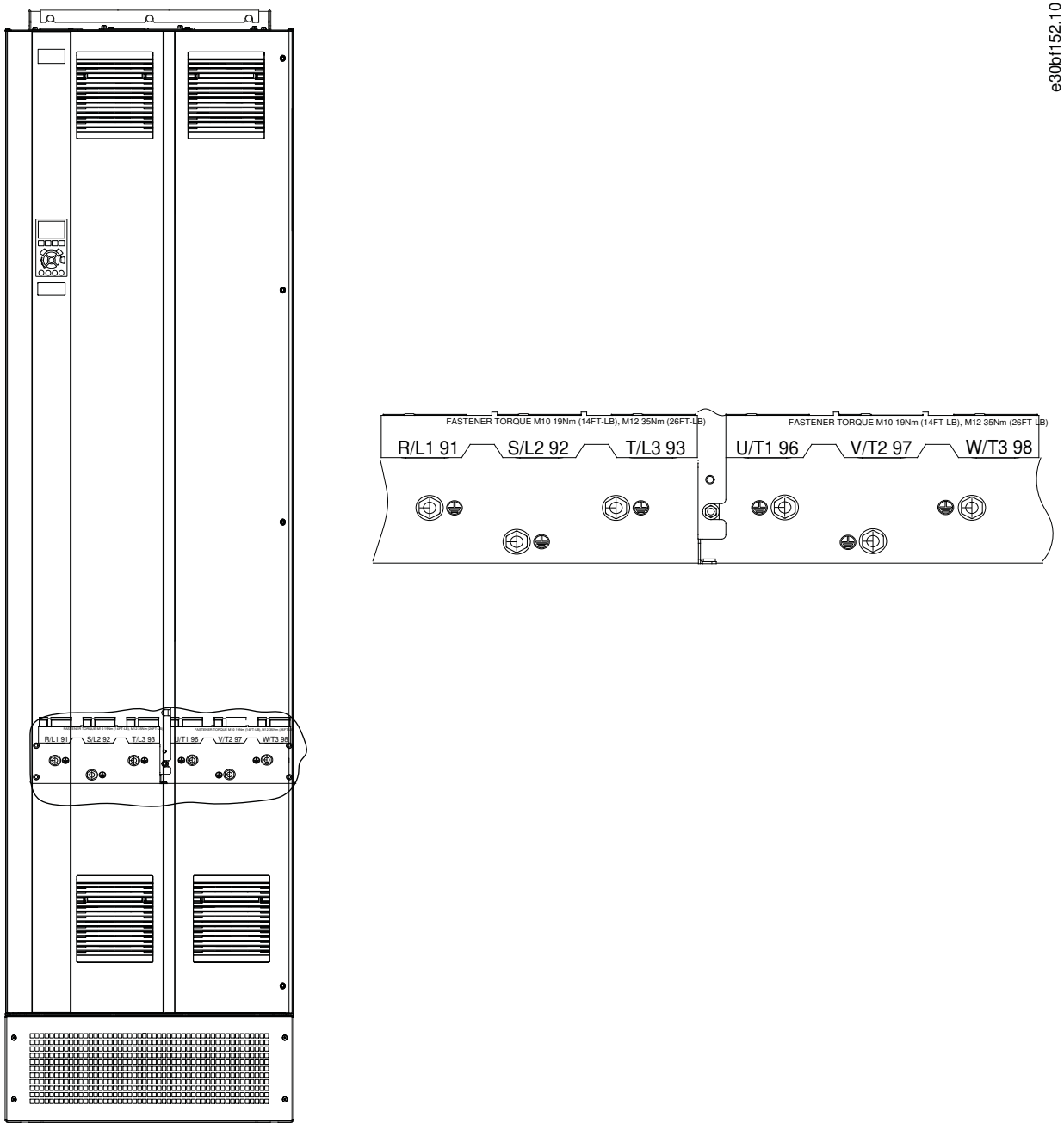

Illustration 21: Ground Terminals (E1h shown).

5.7 E1h Terminal Dimensions

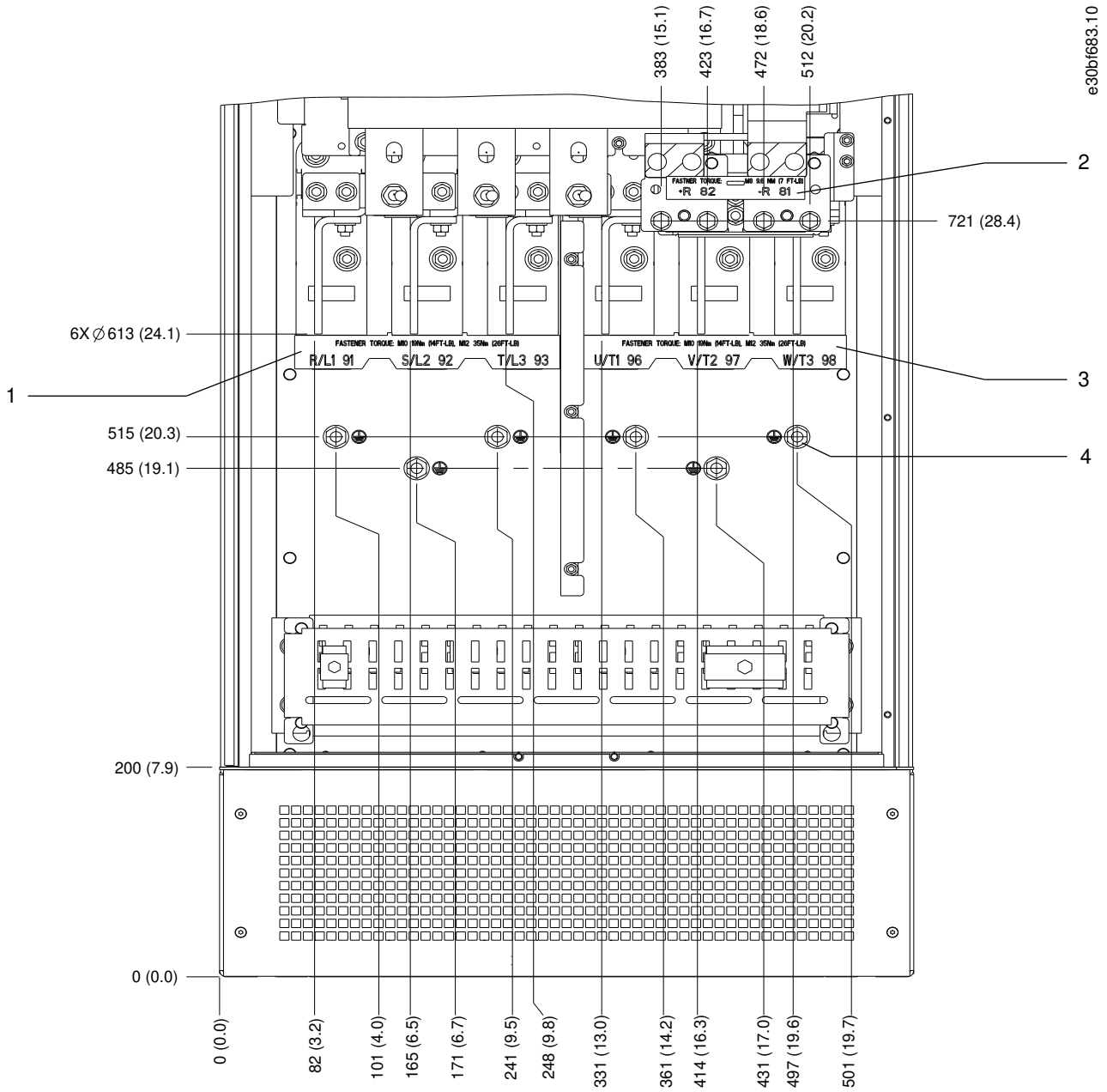

1 Mains terminals	**2** Brake or regen terminals
3 Motor terminals	**4** Ground terminals, M10 nut Terminal dimensions

Illustration 22: E1h Terminal Dimensions (Front View)

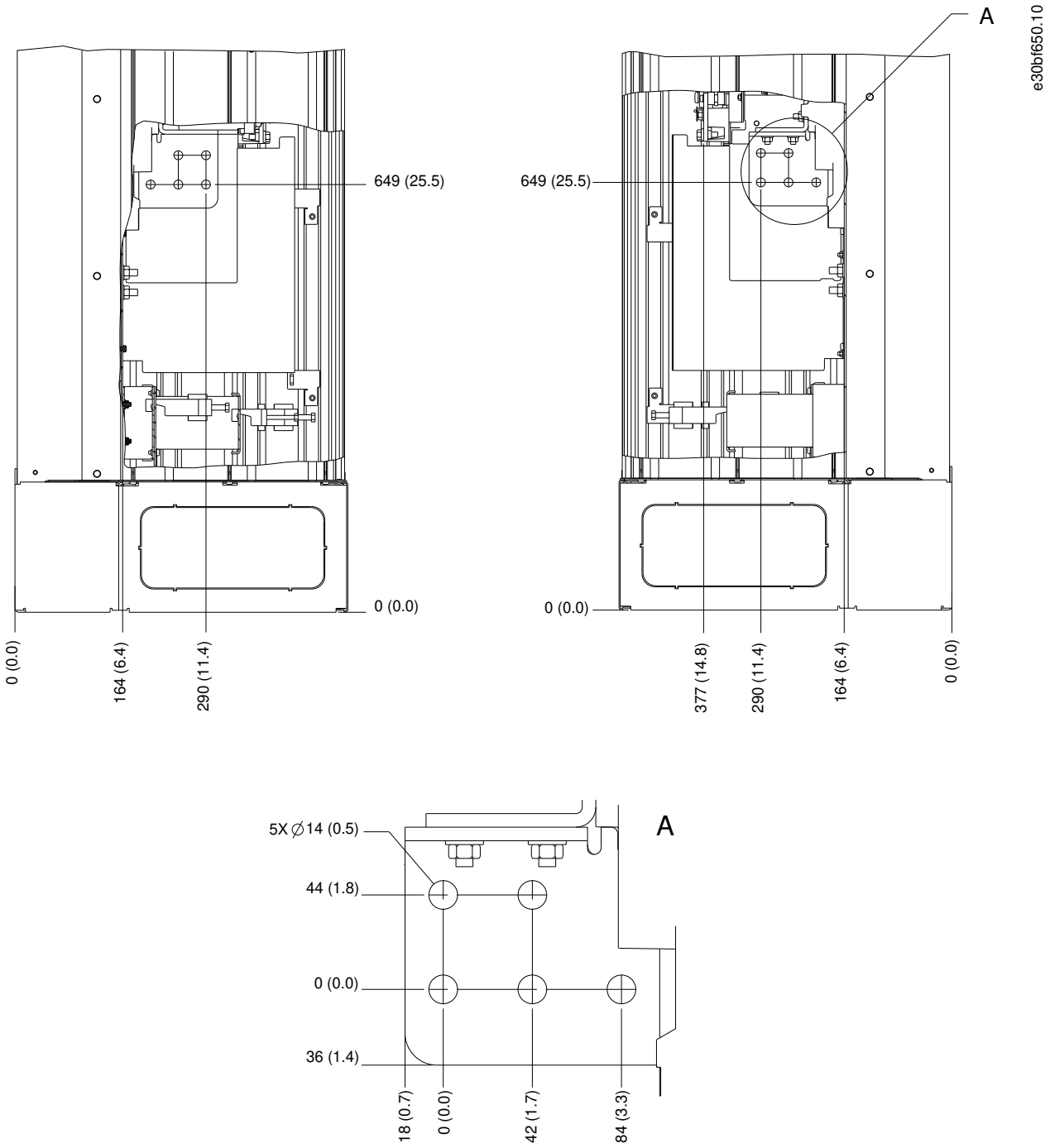

Illustration 23: E1h Terminal Dimensions (Side Views)

5.8 E2h Terminal Dimensions

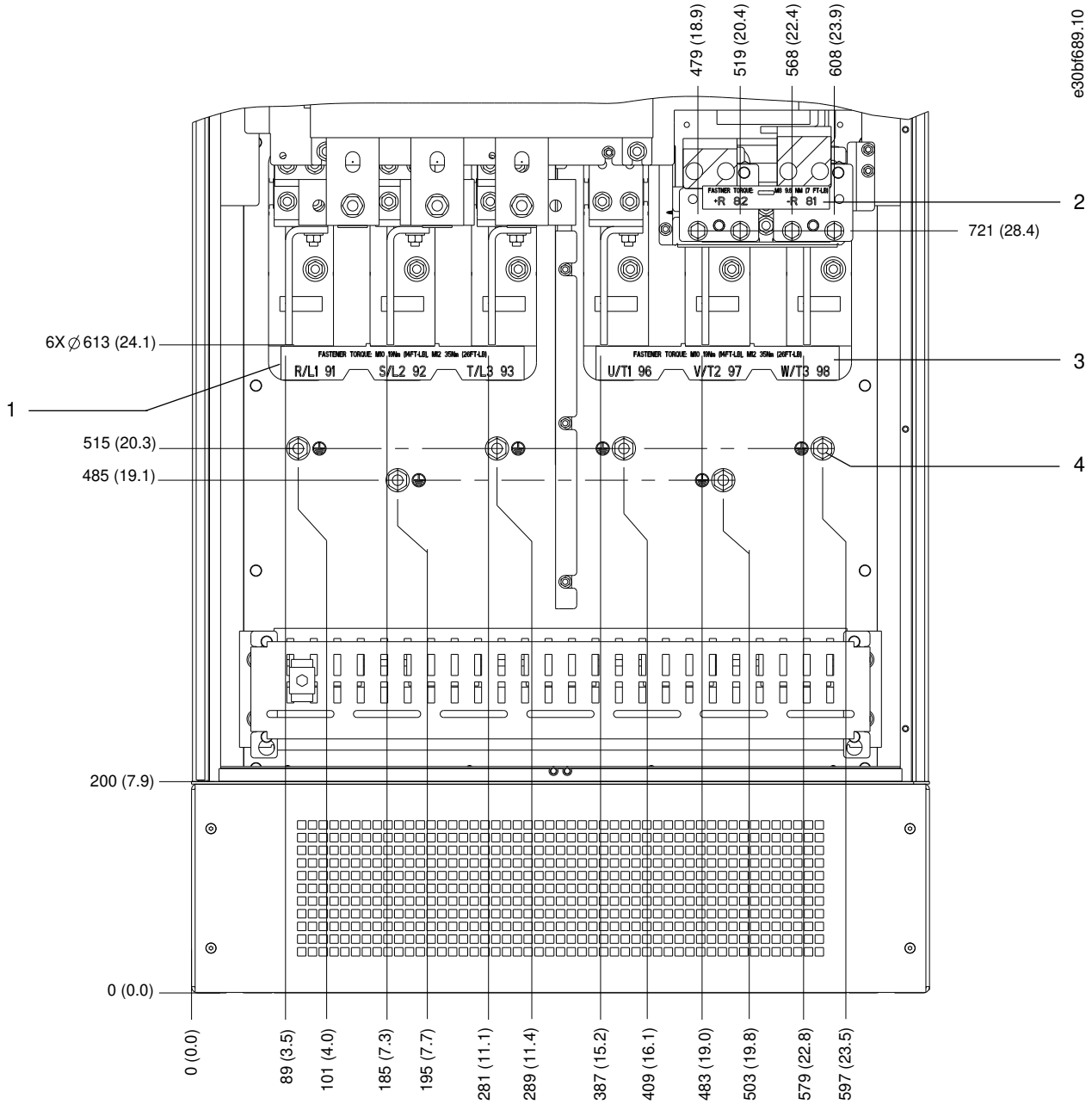

1 Mains terminals	**2** Brake or regen terminals
3 Motor terminals	**4** Ground terminals, M10 nut

Illustration 24: E2h Terminal Dimensions (Front View)

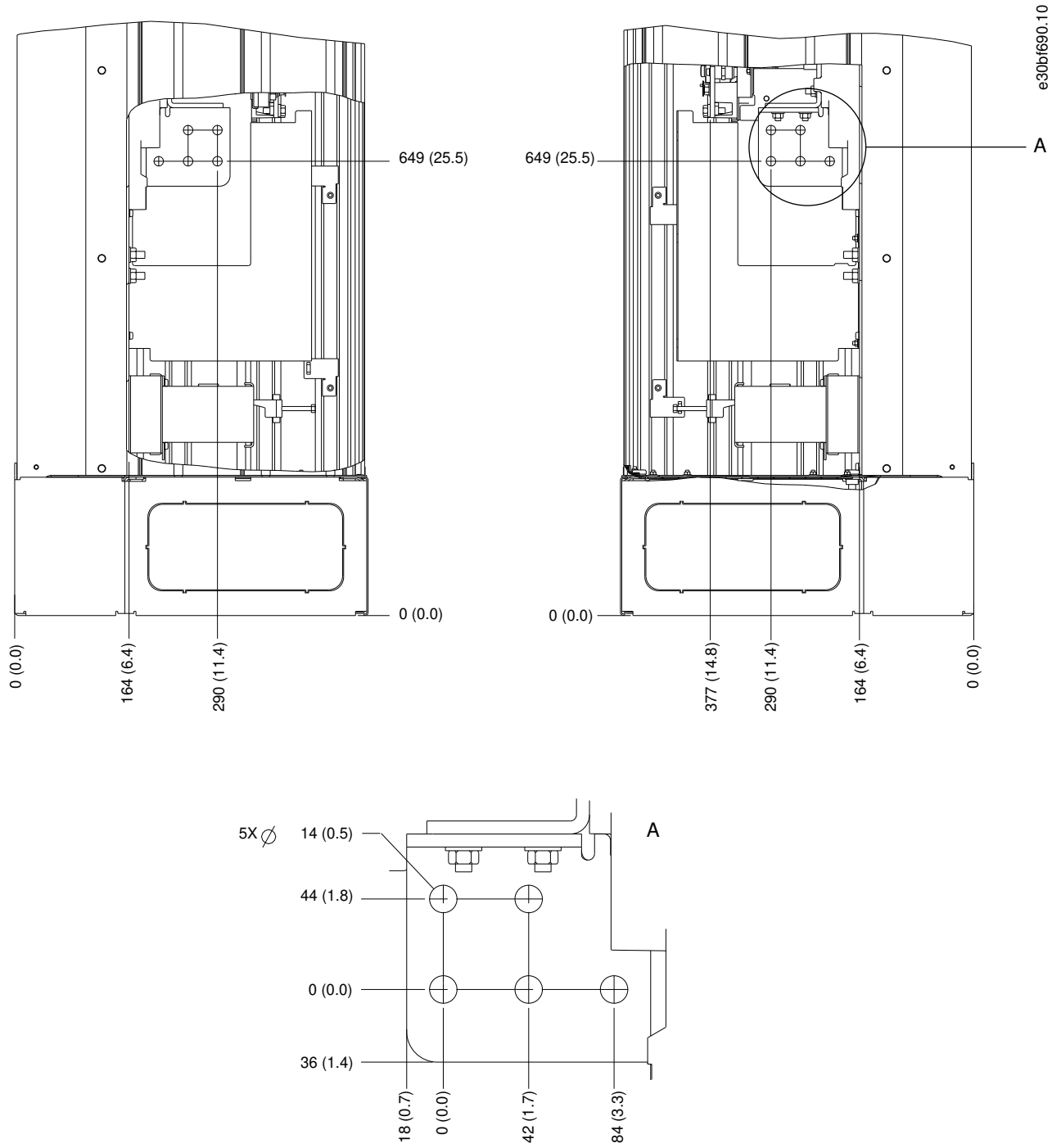

Illustration 25: E2h Terminal Dimensions (Side Views)

5.9 E3h Terminal Dimensions

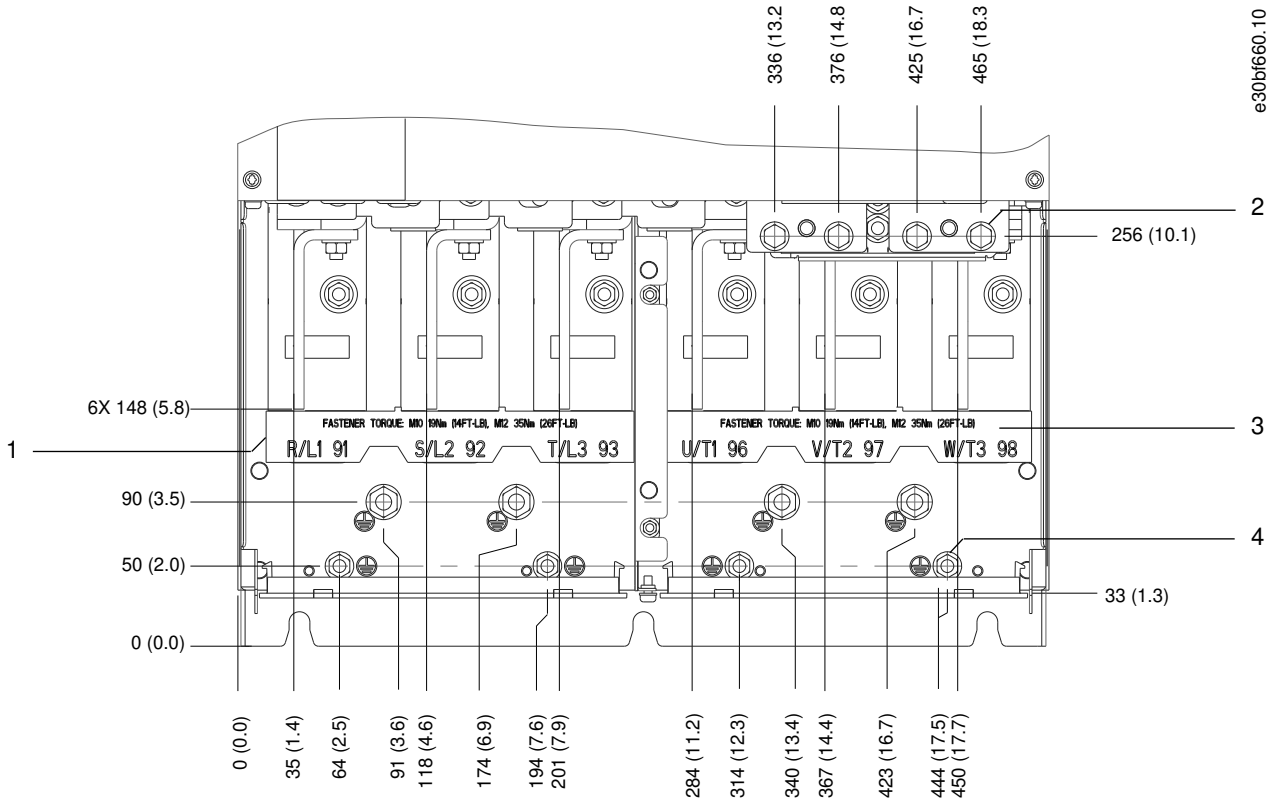

1 Mains terminals	**2** Brake or regen terminals
3 Motor terminals	**4** Ground terminals, M8 and M10 nuts

Illustration 26: E3h Terminal Dimensions (Front View)

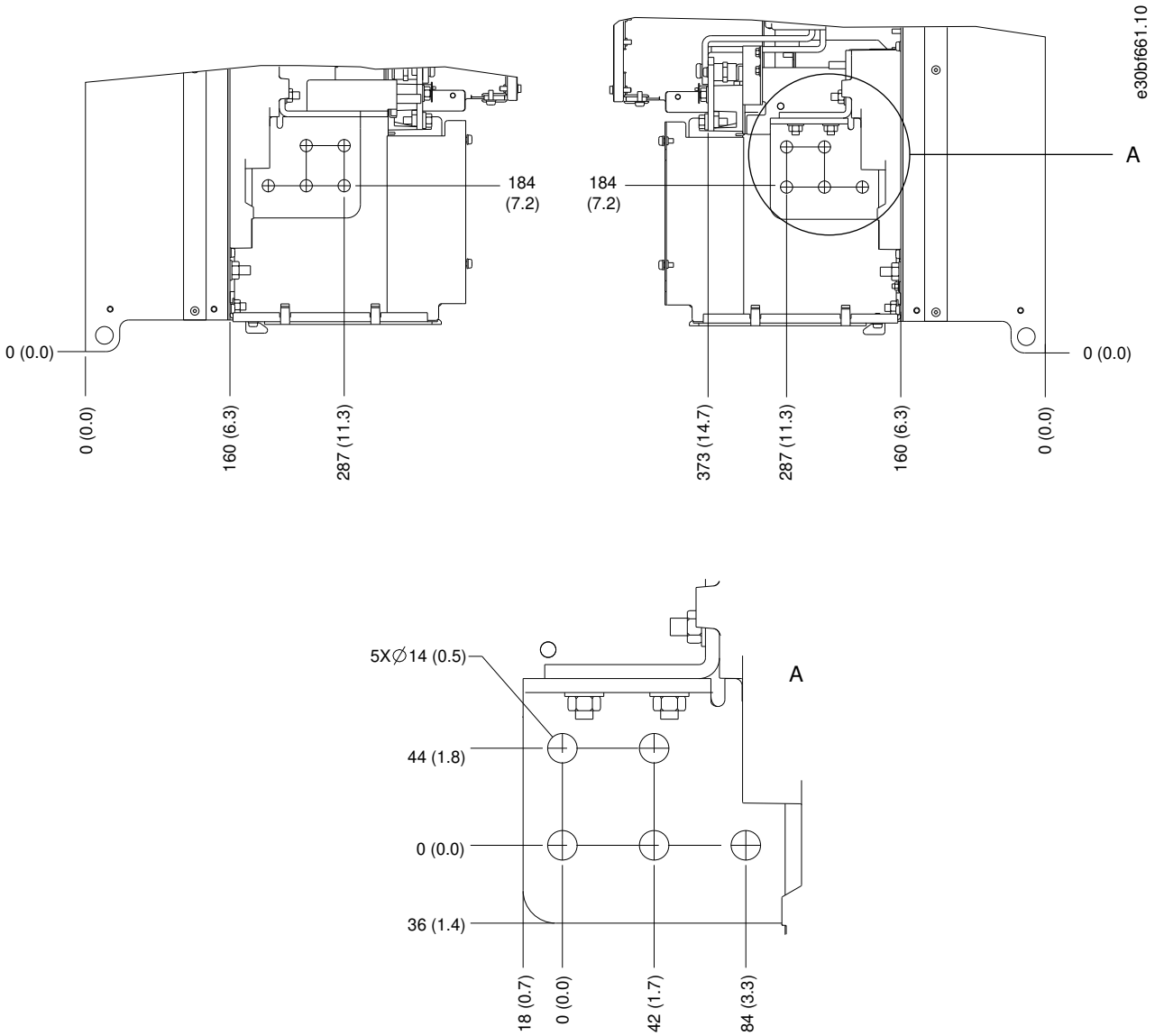

Illustration 27: E3h Mains, Motor, and Ground Terminal Dimensions (Side Views)

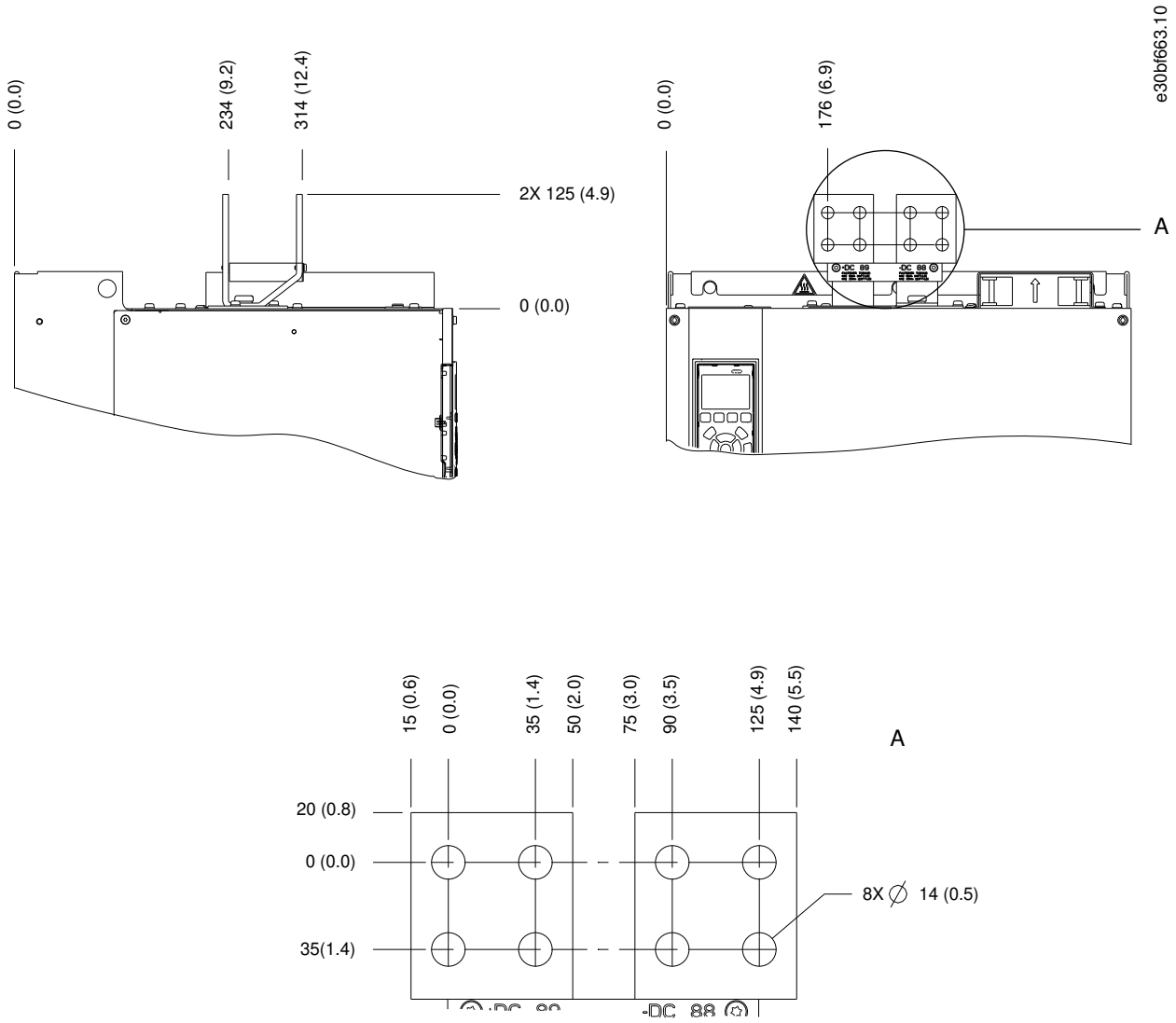

Illustration 28: E3h Load Share/Regen Terminal Dimensions (Side Views)

5.10 E4h Terminal Dimensions

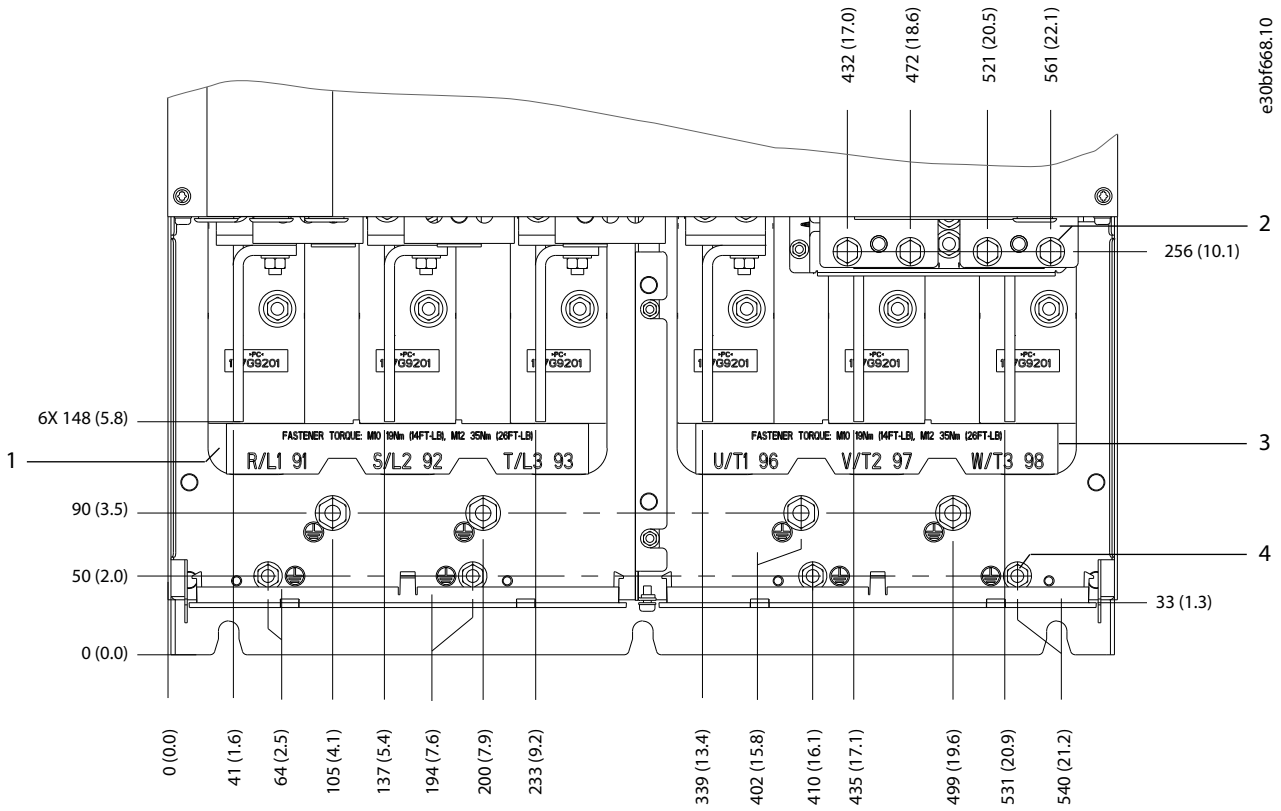

1 Mains terminals	**2** Brake or regen terminals
3 Motor terminals	**4** Ground terminals, M8 and M10 nuts

Illustration 29: E4h Terminal Dimensions (Front View)

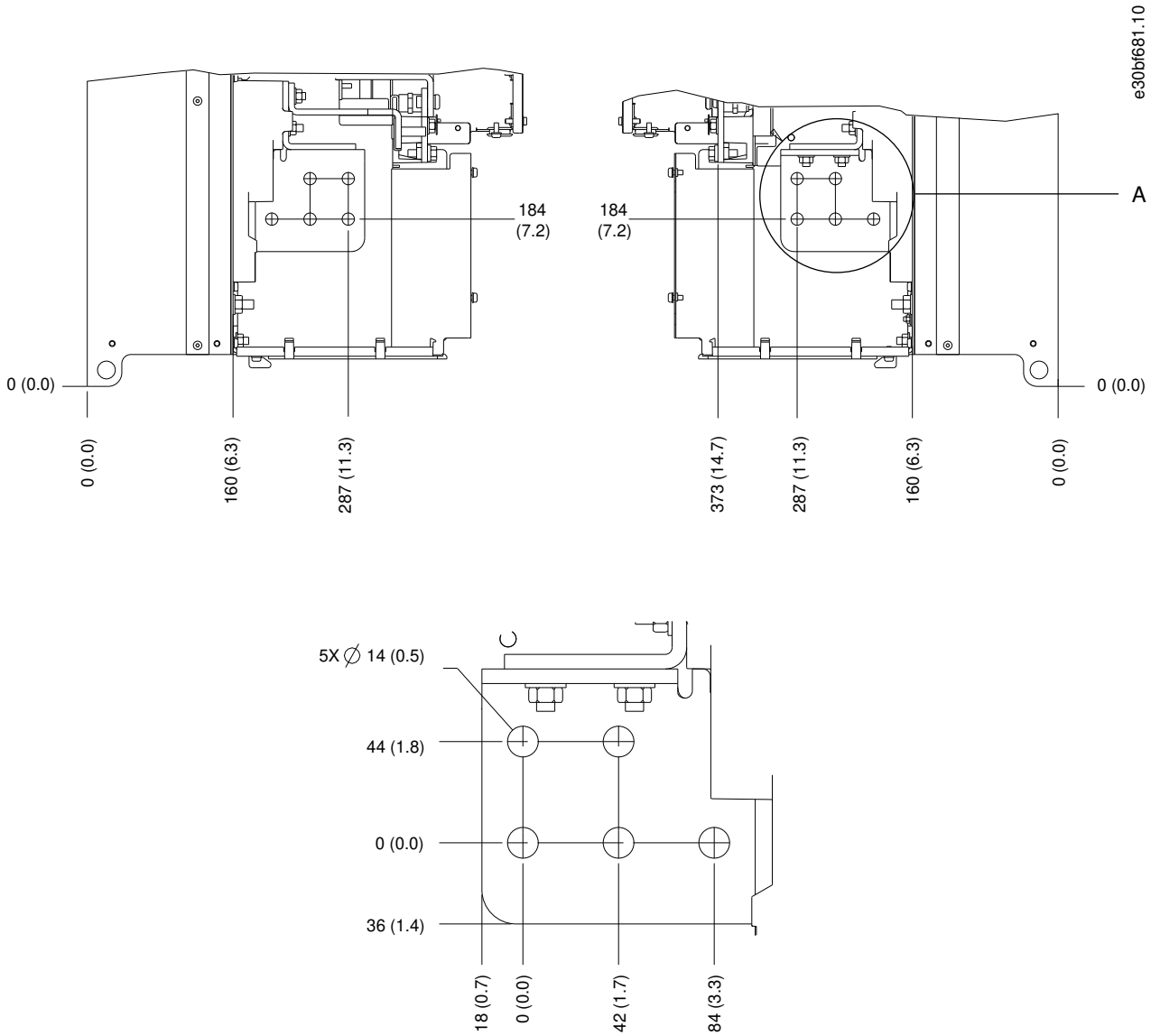

Illustration 30: E4h Mains, Motor, and Ground Terminal Dimensions (Side Views)

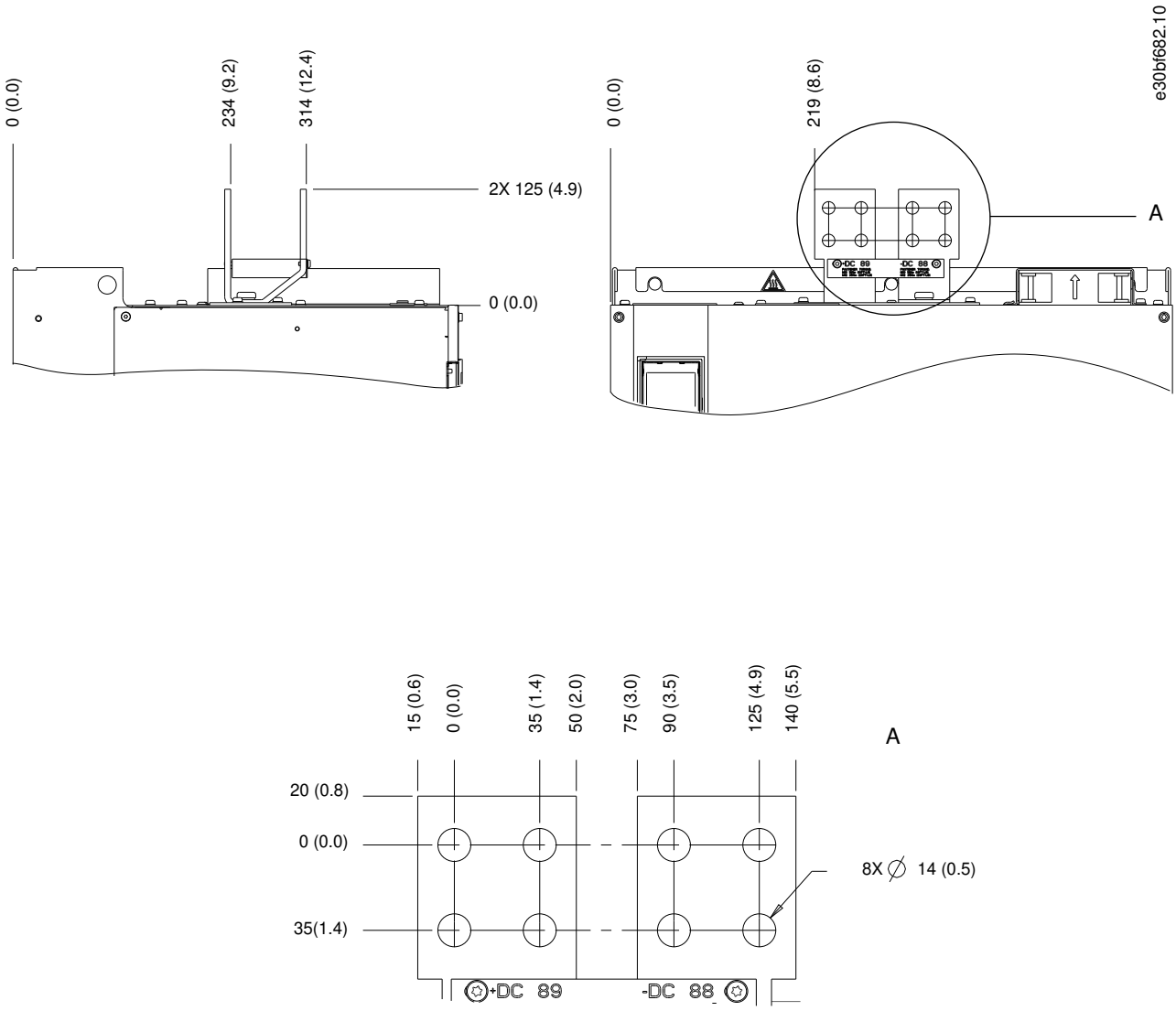

Illustration 31: E4h Load Share/Regen Terminal Dimensions (Side Views)

5.11 Control Wiring

5.11.1 Control Cable Access

All terminals to the control cables are inside the drive below the LCP. To access, either open the door or remove the front panel.

5.11.2 Routing Control Cables

Procedure

1. Tie down and route all control cables down the left side of the enclosure. See illustration 32.
2. Isolate control cables from high-power cables in the drive.
3. Connect the shields in a proper way to ensure optimum electrical immunity.
4. When the drive is connected to a thermistor, ensure that the thermistor control cable is shielded and reinforced/double insulated. A 24 V DC supply is recommended.
5. Connect the control cables to the relevant options on the control card. For more detail, see the relevant fieldbus instructions. The fieldbus cable must be tied down and routed along with the other control cables inside the unit

Example:

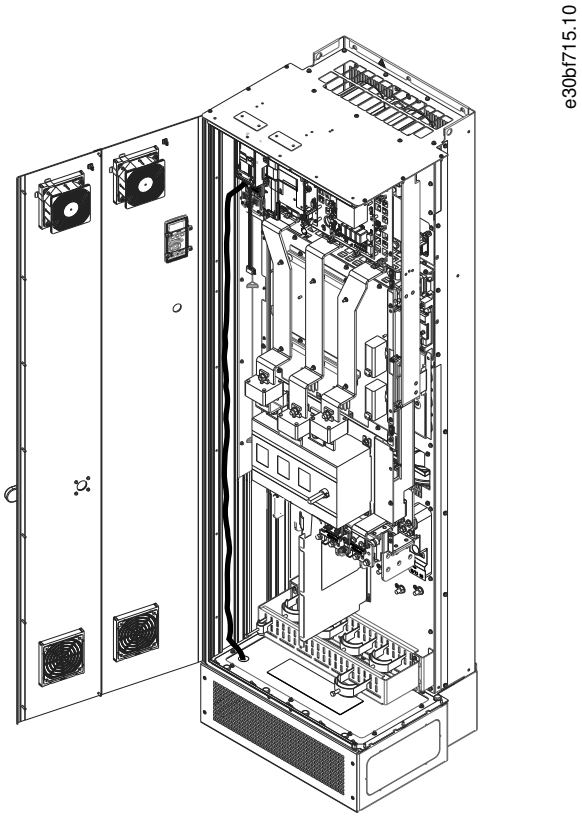

Illustration 32: Control Card Cable Routing

5.11.3 Control Terminal Types

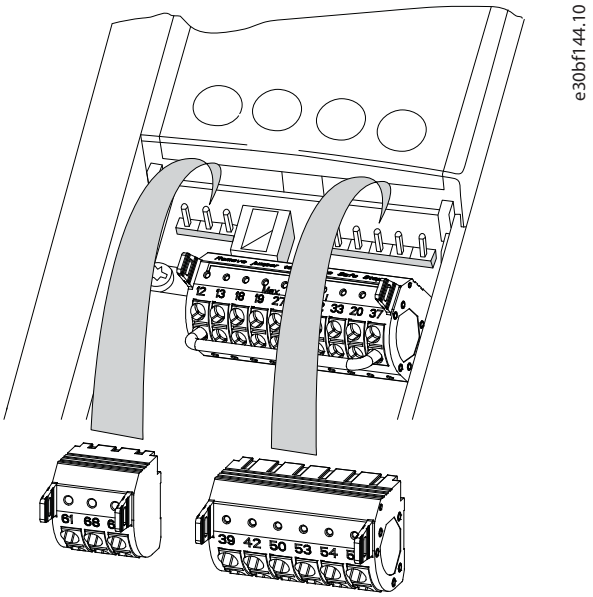

Illustration 33: Control Terminal Locations

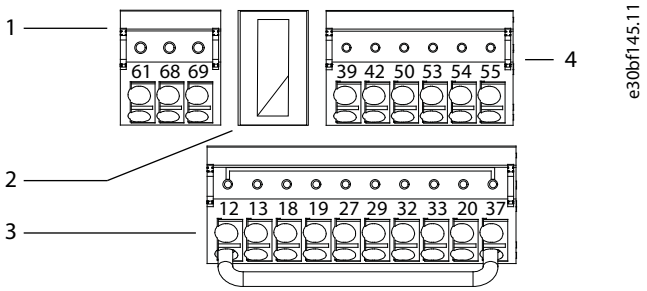

1 Serial communication terminals	**2** Digital input/output terminals
3 Analog input/output terminals	

Illustration 34: Terminal Numbers Located on the Connectors

Table 10: Serial Communication Terminals

Terminal	Parameter	Default Setting	Description
61	–	–	Integrated RC-filter for cable shield. ONLY for connecting the shield if EMC problems exist.
68	*Parameter group 8-3* FC Port Settings*	–	RS485 interface. A switch (BUS TER.) is provided on the control card for bus termination resistance. See illustration 39.
69	*Parameter group 8-3* FC Port Settings*	–	

Table 11: Digital Input/Output Terminal Descriptions

Terminal	Parameter	Default setting	Description
12, 13	–	+24 V DC	24 V DC supply voltage for digital inputs and external transducers. Maximum output current 200 mA for all 24 V loads.
18	*Parameter 5-10 Terminal 18 Digital Input*	*[8] Start*	Digital inputs.
19	*Parameter 5-11 Terminal 19 Digital Input*	*[10] Reversing*	
32	*Parameter 5-14 Terminal 32 Digital Input*	*[0] No operation*	
33	*Parameter 5-15 Terminal 33 Digital Input*	*[0] No operation*	
27	*Parameter 5-12 Terminal 27 Digital Input*	*[2] Coast inverse*	For digital input or output. Default setting is input.
29	*Parameter 5-13 Terminal 29 Digital Input*	*[14] JOG*	
20	–	–	Common for digital inputs and 0 V potential for 24 V supply.
37	–	STO	When not using the optional STO feature, a jumper wire is required between terminal 12 (or 13) and terminal 37. This setup allows the drive to operate with factory default programming values.

Table 12: Analog Input/Output Terminal Descriptions

Terminal	Parameter	Default setting	Description
39	–	–	Common for analog output.
42	*Parameter 6-50 Terminal 42 Output*	*[0] No operation*	Programmable analog output. 0–20 mA or 4–20 mA at a maximum of 500 Ω.
50	–	+10 V DC	10 V DC analog supply voltage for potentiometer or thermistor. 15 mA maximum.
53	*Parameter group 6-1* Analog Input 1*	Reference	Analog input. For voltage (V) or current (mA).
54	*Parameter group 6-2* Analog Input 2*	Feedback	
55	–	–	Common for analog input.

5.11.4 Relay Terminals

- Relays 1 and 2 are standard relay terminals included on all drives. The location of the outputs depends on the drive configuration. See the *Control Shelf* section.
- If a drive is configured with built-in optional equipment, more terminals may be included. Refer to the manual provided with the optional equipment.

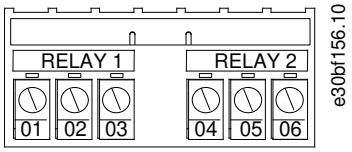

Illustration 35: Relay 1 and Relay 2 Terminals

Table 13: Relay Terminal Descriptions

Terminal	Parameter	Default setting	Description
01, 02, 03	*Parameter 5-40 Function Relay [0]*	*[0] No operation*	Form C relay output. For AC or DC voltage and resistive or inductive loads.
04, 05, 06	*Parameter 5-40 Function Relay [1]*	*[0] No operation*	

5.11.5 Connecting the Control Cable to the Control Terminals

Context:

The control terminals are located near the LCP. The control terminal connectors can be unplugged from the drive for convenience when wiring, as shown in illustration 33. Either solid or flexible wire can be connected to the control terminals. For minimum and maximum control cable cross-section, refer to 9.5 Cable Specifications.

NOTICE

ELECTRICAL INTERFERENCE

Minimize interference by keeping control wires as short as possible and separate from high-power cables.

Procedure

1. Strip 10 mm (0.4 in) of the outer plastic layer from the end of the wire.
2. Insert the control wire into the terminal.

   For a solid wire, push the bare wire into the contact.

   For a flexible wire, open the contact by inserting a small screwdriver into the slot between the terminal holes and push the screwdriver inward. Then insert the stripped wire into the contact, and remove the screwdriver.
3. Pull gently on the wire to ensure that the contact is firmly established.

   Loose control cable can cause equipment faults or reduced performance.

Example:

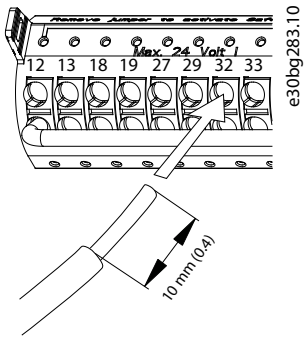

Illustration 36: Connecting a Solid Control Cable to the Terminal Box

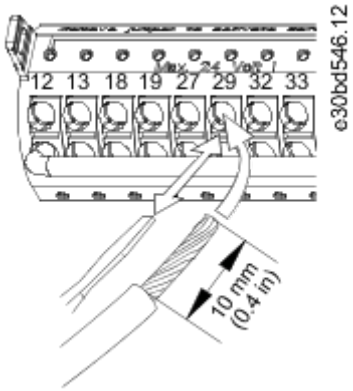

Illustration 37: Connecting a Flexible Control Cable to the Terminal Box

5.11.6 Disconnecting the Control Cable from the Control Terminals

Procedure

1. To open the contact, insert a small screwdriver into the slot between the terminal holes and push the screwdriver inward.
2. Pull gently on the wire to free it from the control terminal contact.

5.11.7 Enabling Motor Operation

Context:

If the status line at the bottom of the LCP reads AUTO REMOTE COAST, the unit is ready to operate, but is missing an input signal on terminal 27. Digital input terminal 27 is designed to receive a 24 V DC external interlock command that allows the drive to operate when using factory default programming values.

NOTICE

FACTORY-INSTALLED OPTIONAL EQUIPMENT

Do not remove factory-installed wiring to terminal 27. If the drive does not run, refer to the documentation for the optional equipment that is wired into terminal 27.

Procedure

1. When no interlock device is used, wire a jumper between control terminal 12 (recommended) or 13 to terminal 27.

   This wire provides an internal 24 V signal on terminal 27. The drive is ready for operation.

5.11.8 Configuring RS485 Serial Communication

5.11.8.1 RS485 Features

RS485 is a 2-wire bus interface compatible with multi-drop network topology. This interface contains the following features:

- Either Danfoss FC or Modbus RTU communication protocol can be used.
- Functions can be programmed remotely using the protocol software and RS485 connection or in *parameter group 8-** Communications and Options*.
- Selecting a specific communication protocol changes various default parameter settings to match the specifications of the protocol, making more protocol-specific parameters available.
- Option cards for the drive are available to provide more communication protocols. See the option card documentation for installation and operation instructions.
- A switch (BUS TER) is provided on the control card for bus termination resistance.

5.11.8.2 Configuring RS485 Serial Communication

Procedure

1. Connect RS485 serial communication wiring to terminals (+)68 and (-)69.
   - **A** Use shielded serial communication cable (recommended).
   - **B** See the *Connecting to Ground* section for proper grounding.
2. Select the following parameter settings:
   - **A** Protocol type in *parameter 8-30 Protocol*.
   - **B** Drive address in *parameter 8-31 Address*.
   - **C** Baud rate in *parameter 8-32 Baud Rate*.

Example:

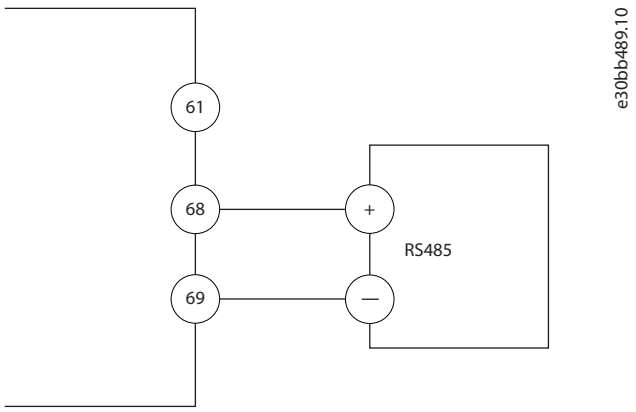

Illustration 38: Serial Communication Wiring Diagram

5.11.9 Safe Torque Off (STO) Wiring

The Safe Torque Off (STO) function is a component in a safety control system. STO prevents the unit from generating the voltage required to rotate the motor. To run the STO function, more wiring for the drive is required. Refer to the *VLT® FC Series - Safe Torque Off Operating Guide*.

5.11.10 Space Heater Wiring

The space heater is an option used to prevent condensation from forming inside the enclosure when the unit is turned off. It is field wired and controlled by an HVAC management system.

Specifications:

- Nominal voltage: 100–240
- Wire size: 12–24 AWG (4–0.25 mm^2)

5.11.11 Auxiliary Contact Wiring for Disconnects

The disconnect is an option that is installed at the factory. The auxiliary contacts, which are signal accessories used with the disconnect, are not installed at the factory to allow more flexibility during installation. The contacts snap into place without the need for tools.

Contacts must be installed in specific locations on the disconnect depending on their functions. Refer to the datasheet included in the accessory bag that comes with the drive.

Specifications:

- U_i/[V]: 690
- U_{imp}/[kV]: 4
- Pollution degree: 3
- I_{th}/[A]: 16
- Cable size: 1...2x18...14 AWG (0.75...2.5 mm^2)
- Maximum fuse: 16 A/gG
- NEMA: A600, R300, wire size: 18–14 AWG (0.75–2.5 mm^2), 1(2)

5.11.12 Wiring the Brake Resistor Temperature Switch

Context:

The brake resistor terminal block is on the power card and allows for the connection of an external brake resistor temperature switch. The switch can be configured as normally closed or normally open. If the input changes, a signal trips the drive and shows *alarm 27, Brake chopper fault* on the LCP display. At the same time, the drive stops braking and the motor coasts.

1. Locate the brake resistor terminal block (terminals 104–106) on the power card. See the *Wiring Schematic* section.
2. Remove the M3 screws that hold the jumper to the power card.
3. Remove the jumper and wire the brake resistor temperature switch in 1 of the following configurations:

   Normally closed. Connect to terminals 104 and 106.

   Normally open. Connect to terminals 104 and 105.
4. Secure the switch wires with the M3 screws. Torque to 0.5–0.6 Nm (5 in-lb).

5.11.13 Selecting the Voltage/Current Input Signal

Context:

The analog input terminals 53 and 54 allow setting of input signal to voltage (0–10 V) or current (0/4–20 mA).

- Terminal 53: Speed reference signal in open loop (see *parameter 16-61 Terminal 53 Switch Setting*).
- Terminal 54: Feedback signal in closed loop (see *parameter 16-63 Terminal 54 Switch Setting*).

Procedure

1. Disconnect power to the drive.
2. Remove the LCP (local control panel). See the *Local Control Panel (LCP)* section.
3. Remove any optional equipment covering the switches.
4. Set switches A53 and A54 to select the signal type (U = voltage, I = current). See illustration 39.

Example:

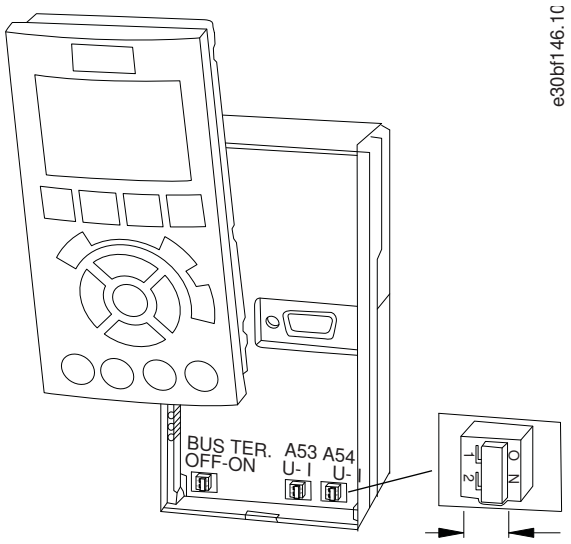

Illustration 39: Location of Switches A53 and A54

6 Starting the Drive

6.1 Pre-start Check List

Table 14: Pre-start Check List

Inspect	✓	Check for
Motor		Confirm continuity of the motor by measuring ohm values on U–V (96–97), V–W (97–98), and W–U (98–96).
		Confirm that the supply voltage matches the voltage of the drive and the motor.
Switches		Ensure that all switch and disconnect settings are in the proper positions.
Auxiliary equipment		Look for auxiliary equipment, switches, disconnects, or input fuses/circuit breakers that reside on the input power side of the drive or output side to the motor. Ensure that they are ready for full-speed operation.
		Check function and installation of any sensors used for feedback to the drive.
		Remove any power factor correction caps on motor.
		Adjust any power factor correction caps on the mains side and ensure that they are dampened.
Cable routing		Check that all cable glands are firmly tightened.
		Ensure that motor wiring, brake wiring (if equipped), and control wiring are separated or shielded, or in 3 separate metallic conduits for high-frequency interference isolation.
Control cables		Check for broken or damaged wires and loose connections.
		Check that control wiring is isolated from high-power wiring for noise immunity.
		Check the voltage source of the signals, if necessary.
		Use shielded cable or twisted pair and ensure that the shield is terminated correctly.
Input/output cables		Check for loose connections.
		Check that motor and mains are in separate conduit or separated shielded cables.
Grounding		Check for good ground connections that are tight and free of oxidation.
		Grounding to conduit, or mounting the back panel to a metal surface, is not a suitable grounding.
Fuses and circuit breakers		Check for proper fusing or circuit breakers
		Check that all fuses are inserted firmly and are in operational condition and that all circuit breakers (if used) are in the open position.
Cooling		Look for any obstructions in the airflow path.
		Measure top and bottom clearance of the drive to verify adequate airflow for cooling, see the *Cooling Requirements* section.
Ambient conditions		Check that requirements for ambient conditions are met. See the *Ambient Conditions* section.
Interior of the drive		Inspect that the unit interior is free of dirt, metal chips, moisture, and corrosion.
		Verify that all installation tools have been removed from unit interior.
		For E3h and E4h enclosures, ensure that the unit is mounted on an unpainted, metal surface.
Vibration		Check that the unit is mounted solidly, or that shock mounts are used, if necessary.
		Check for an unusual amount of vibration.

6.2 Applying Power to the Drive

Context:

⚠ WARNING ⚠

HIGH VOLTAGE

AC drives contain high voltage when connected to AC mains input, DC supply, or load sharing. Failure to perform installation, start-up, and maintenance by qualified personnel can result in death or serious injury.

- Only qualified personnel must perform installation, start-up, and maintenance.

⚠ WARNING ⚠

UNINTENDED START

When the drive is connected to the AC mains, DC supply, or load sharing, the motor may start at any time, causing risk of death, serious injury, and equipment or property damage. The motor may start by activation of an external switch, a fieldbus command, an input reference signal from the LCP or LOP, via remote operation using MCT 10 Set-up software, or after a cleared fault condition.

- Press [Off] on the LCP before programming parameters.
- Disconnect the drive from the mains whenever personal safety considerations make it necessary to avoid unintended motor start.
- Check that the drive, motor, and any driven equipment are in operational readiness.

NOTICE

MISSING SIGNAL

If the status line at the bottom of the LCP reads AUTO REMOTE COASTING, or *alarm 60, External interlock* is shown, it indicates that the unit is ready to operate but is missing an input signal on, for example, terminal 27.

- See 5.11.7 Enabling Motor Operation for details.

Procedure

1. Before applying power to the drive, verify that the drive and any associated equipment is ready for operation. Refer to the *Pre-start Check List*.
2. Ensure that all operated devices are in the OFF position.
3. Ensure that input power to the unit is OFF and locked out. Do not rely on the drive disconnect switches for input power isolation.
4. Verify that there is no voltage on input terminals L1 (91), L2 (92), and L3 (93), phase-to-phase, and phase-to-ground.
5. Verify that there is no voltage on output terminals 96 (U), 97 (V), and 98 (W), phase-to phase, and phase-to-ground.
6. Ensure that any optional equipment wiring matches the installation requirements.
7. Close and securely fasten all covers and doors on the drive.
8. Confirm that the input voltage is balanced within 3%. If not balanced, correct the input voltage imbalance before proceeding. Repeat this procedure after the voltage correction.
9. Apply power to the unit, but do not start the drive. For units with a disconnect switch, turn the switch to the ON position to apply power to the drive.

6.3 Programming the Drive

6.3.1 Parameter Overview

Parameters contain various settings that are used to configure and operate the drive and motor. These parameter settings are programmed into the local control panel (LCP) through the different LCP menus. For more detail on parameters, see the programming guide.

Parameter settings are assigned a default value at the factory, but can be configured for their unique application. Each parameter has a name and number that remain the same regardless of the programming mode.

In the *Main Menu* mode, the parameters are divided into groups. The 1st digit of the parameter number (from the left) indicates the parameter group number. The parameter group is then broken down into subgroups, if necessary. For example:

Table 15: Example of Parameter Group Hierarchy

Example	Description
*0–** Operation/Display*	Parameter group
0–0 Basic Settings*	Parameter subgroup
Parameter 0-01 Language	Parameter
Parameter 0-02 Motor Speed Unit	Parameter
Parameter 0-03 Regional Settings	Parameter

6.3.2 Parameter Navigation

Use the following LCP keys to navigate through the parameters.

- Press [▲] [▼] to scroll up or down.
- Press [◄] [►] to shift a space to the left or right of a decimal point while editing a decimal parameter value.
- Press [OK] to accept the change.
- Press [Cancel] to disregard the change and exit edit mode.
- Press [Back] twice to show the status view.
- Press [Main Menu] once to go back to the main menu.

6.3.3 Entering System Information

Context:

The following steps are used to enter basic system information into the drive. Recommended parameter settings are intended for start-up and checkout purposes. Application settings vary.

Although these steps assume that an induction motor is used, a permanent magnet motor can also be used. For more information on specific motor types, see the product-specific programming guide.

NOTICE

SOFTWARE DOWNLOAD

For commissioning via a PC, install VLT® Motion Control Tool MCT 10 set-up software. A basic version, which is sufficient for most applications, is available for download. An advanced version, which can commission multiple drives at once, can be ordered.

- See https://www.danfoss.com/en/service-and-support/downloads/?sort=title_asc&filter=download-type%3Dtools.

Procedure

1. Press [Main Menu] on the LCP.
2. Select *0–** Operation/Display* and press [OK].
3. Select *0–0* Basic Settings* and press [OK].
4. Select *parameter 0-03 Regional Settings* and press [OK].
5. Select *[0] International* or *[1] North America* as appropriate and press [OK]. (This action changes the default settings for some basic parameters).
6. Press [Quick Menus] on the LCP and then select *02 Quick Setup*.
7. If needed, change the following parameter settings. Motor data is found on the motor nameplate.
   - **A** *Parameter 0-01 Language* (English)
   - **B** *Parameter 1-20 Motor Power [kW]* (4.00 kW)
   - **C** *Parameter 1-22 Motor Voltage* (400 V)
   - **D** *Parameter 1-23 Motor Frequency* (50 Hz)
   - **E** *Parameter 1-24 Motor Current* (9.00 A)
   - **F** *Parameter 1-25 Motor Nominal Speed* (1420 RPM)
   - **G** *Parameter 5-12 Terminal 27 Digital Input* (Coast Inverse)
   - **H** *Parameter 3-02 Minimum Reference* (0.000 RPM)
   - **I** *Parameter 3-03 Maximum Reference* (1500.000 RPM)
   - **J** *Parameter 3-41 Ramp 1 Ramp up Time* (3.00 s)
   - **K** *Parameter 3-42 Ramp 1 Ramp Down Time* (3.00 s)
   - **L** *Parameter 3-13 Reference Site* (Linked to Hand/Auto)
   - **M** *Parameter 1-29 Automatic Motor Adaptation (AMA)* (Off)

6.3.4 Configuring Automatic Energy Optimization

Context:

Automatic energy optimization (AEO) is a procedure that minimizes voltage to the motor, reducing energy consumption, heat, and noise.

Procedure

1. Press [Main Menu].
2. Select *1–** Load and Motor* and press [OK].
3. Select *1–0* General Settings* and press [OK].
4. Select *parameter 1-03 Torque Characteristics* and press [OK].
5. Select either *[2] Auto Energy Optim CT* or *[3] Auto Energy Optim VT* and press [OK].

6.3.5 Configuring Automatic Motor Adaptation

Context:

Automatic motor adaptation (AMA) is a procedure that optimizes compatibility between the drive and the motor.

The drive builds a mathematical model of the motor for regulating output motor current. The procedure also tests the input phase balance of electrical power. It compares the motor characteristics with the data entered in *parameters 1–20* to *1–25*.

NOTICE

Some motors are unable to run the complete version of the test and will trigger an alarm.

- In that case, or if an output filter is connected to the motor, select *[2] Enable reduced AMA*.

Procedure

1. Press [Main Menu].
2. Select *1–** Load and Motor* and press [OK].
3. Select *1–2* Motor Data* and press [OK].
4. Select *parameter 1-29 Automatic Motor Adaptation (AMA)* and press [OK].
5. Select *[1] Enable complete AMA* and press [OK].
6. Press [Hand On] and then [OK].

   The test runs automatically and indicates when it is complete.

6.4 Testing Before System Start Up

Context:

⚠ WARNING ⚠

MOTOR START

Failure to ensure that the motor, system, and any attached equipment are ready for start can result in personal injury or equipment damage. Before start,

- Ensure that equipment is safe to operate under any condition.
- Ensure that the motor, system, and any attached equipment are ready for start.

6.4.1 Testing Motor Rotation

Context:

NOTICE

INCORRECT MOTOR ROTATION

If the motor runs in the wrong direction, it can damage equipment.

- Before running the unit, check the motor rotation by briefly running the motor.

Procedure

1. Press [Hand On].
2. Move the left cursor to the left of the decimal point by using the left arrow key.
3. Enter an RPM that slowly rotates the motor and press [OK].

   The motor runs briefly at either 5 Hz or the minimum frequency set in *parameter 4-12 Motor Speed Low Limit [Hz]*.
4. If the motor rotation is wrong, set *parameter 1-06 Clockwise Direction* to *[1] Inverse*.

6.4.2 Testing Encoder Rotation

Context:

Use this procedure if encoder feedback is used. For more information on the encoder option, refer to the option manual.

Procedure

1. Select *[0] Open Loop* in *parameter 1-00 Configuration Mode*.
2. Select *[1] 24 V encoder* in *parameter 7-00 Speed PID Feedback Source*.
3. Press [Hand On].
4. Press [▶] for positive speed reference (*parameter 1-06 Clockwise Direction* at *[0] Normal*).
5. Check feedback in *parameter 16-57 Feedback [RPM]*.

   - If feedback is positive, the test was successful.

   - If feedback is negative, the encoder connection is wrong. Use either *parameter 5-71 Term 32/33 Encoder Direction* or *parameter 17-60 Feedback Direction* to inverse the direction, or reverse the encoder cables. *Parameter 17-60 Feedback Direction* is only available with the VLT® Encoder Input MCB 102 option.

6.5 Starting Up the Drive for the First Time

Context:

The procedure in this section requires user-wiring and application programming to be completed. The following procedure is recommended after application setup is completed.

⚠ WARNING ⚠

MOTOR START

Starting the drive can cause the motor to start. Failure to ensure that the motor, system, and any attached equipment are ready for start can result in personal injury or equipment damage.

- Ensure that equipment is safe to operate under any condition.
- Ensure that the motor, system, and any attached equipment are ready for start.

1. Press [Auto On].

   If warnings or alarms occur, see the *Warnings and Alarms* section.

2. Apply an external run command. Examples of external run commands are a switch, button, or programmable logic controller (PLC).
3. Adjust the speed reference throughout the speed range.
4. Ensure that the system is working as intended by checking the sound and vibration levels of the motor.
5. Remove the external run command.

6.6 Parameter Settings

6.6.1 Parameter Setting Overview

Parameters are operational settings accessed through the LCP that are used to configure and operate the drive and motor for specific applications.

Some parameters have different default settings for international or North America. For a list of the different default values, see the *International/North American Default Parameter Settings* section.

Parameter settings are stored internally in the drive, allowing the following advantages:

- Parameter settings can be uploaded into the LCP memory and stored as a back-up.
- Multiple units can be programmed quickly by connecting the LCP to the unit and downloading the stored parameter settings.
- Settings that are stored in the LCP are not changed when restoring factory default settings.
- Changes made to default settings and parameter variables are stored and available for viewing in the quick menu. See the *LCP Menu* section.

6.6.2 Uploading and Downloading Parameter Settings

Context:

The drive operates using parameters stored on the control card, which is located within the drive. The upload and download functions move the parameters between the control card and the LCP.

Procedure

1. Press [Off].
2. Go to *parameter 0-50 LCP Copy* and press [OK].
3. Select 1 of the following:

   - To upload data from the control card to the LCP, select *[1] All to LCP*.
   - To download data from the LCP to the control card, select *[2] All from LCP*.

4. Press [OK].

   A progress bar shows the uploading or downloading process.

5. Press [Hand On] or [Auto On].

6.6.3 Restoring Factory Default Settings Using the Recommended Initialization

Context:

NOTICE

LOSS OF DATA

Restoring default settings results in a loss of programming, motor data, localization, and monitoring records.

- To create a back-up, upload data to the LCP before initialization. See 6.6.2 Uploading and Downloading Parameter Settings.

1. Press [Main Menu] twice to access parameters.
2. Go to *parameter 14-22 Operation Mode* and press [OK].

   Parameter 14-22 Operation Mode does not reset the following settings:
   - Running hours.
   - Serial communication options.
   - Personal menu settings.
   - Fault log, alarm log, and other monitoring functions.
3. Scroll to Initialization and press [OK].
4. Remove power to the unit and wait for the display to turn off.
5. Apply power to the unit. Default parameter settings are restored during start-up. Start-up takes slightly longer than normal.
6. After *alarm 80, Drive initialized* appears, press [Reset].

6.6.4 Restoring Factory Default Settings Using Manual Initialization

Context:

NOTICE

LOSS OF DATA

Restoring default settings results in a loss of programming, motor data, localization, and monitoring records.

- To create a back-up, upload data to the LCP before initialization. See 6.6.2 Uploading and Downloading Parameter Settings.

Procedure

1. Remove power to the unit and wait for the display to turn off.
2. Press and hold [Status], [Main Menu], and [OK] simultaneously while applying power to the unit (approximately 5 s or until an audible click sounds and the fan starts).

   Manually initializing does not reset the following parameter settings:
   - *Parameter 15-00 Operating Hours*
   - *Parameter 15-03 Power Up's*
   - *Parameter 15-04 Over Temp's*
   - *Parameter 15-05 Over Volt's*

   Start-up takes slightly longer than normal.

7 Wiring Configuration Examples

7.1 Application Examples

The examples in this section are intended as a quick reference for common applications.

- Parameter settings are the regional default values unless otherwise indicated (selected in *parameter 0-03 Regional Settings*).
- Parameters associated with the terminals and their settings are shown next to the drawings.
- Required switch settings for analog terminals A53 or A54 are also shown.

7.1.1 Programming a Closed-loop Drive System

A closed-loop drive system usually consists of:

- Motor.
- Drive.
- Encoder (as feedback system).
- Mechanical brake.
- Brake resistor (for dynamic braking).
- Transmission.
- Gear box.
- Load.

Applications demanding mechanical brake control typically need a brake resistor.

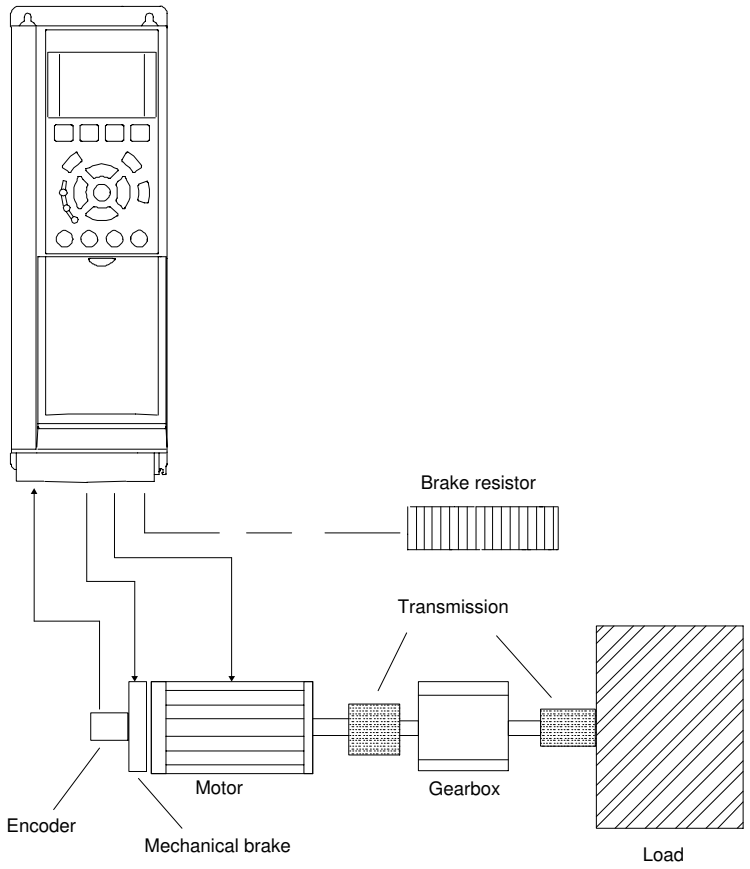

Illustration 40: Basic Set-up for Closed-loop Speed Control

7.1.2 Wiring Configuration for Automatic Motor Adaptation (AMA)

Table 16: Wiring Configuration for AMA with T27 Connected

	Parameters	
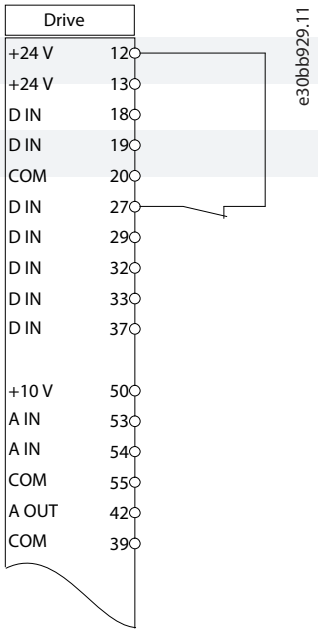	**Function**	**Setting**
	Parameter 1-29 Automatic Motor Adaptation (AMA)	*[1] Enable complete AMA*
	Parameter 5-12 Terminal 27 Digital Input	*[2]* Coast inverse*
	*=Default value	
	Notes/comments: Set *parameter group 1-2* Motor Data* according to motor nameplate.	

7.1.3 Wiring Configuration for Automatic Motor Adaptation without T27

Table 17: AMA without T27 Connected

	Parameters	
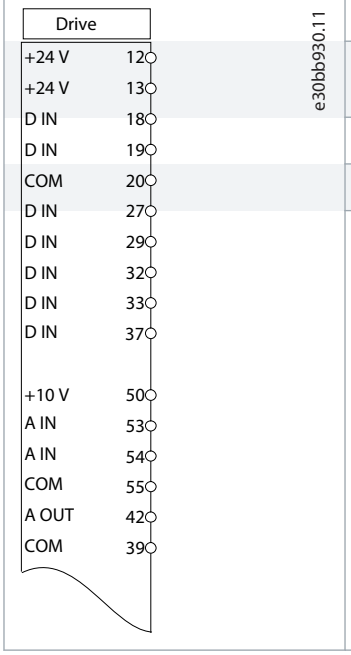	**Function**	**Setting**
	Parameter 1-29 Automatic Motor Adaptation (AMA)	*[1] Enable complete AMA*
	Parameter 5-12 Terminal 27 Digital Input	*[0] No operation*
	*=Default value	
	Notes/comments: *Parameter group 1-2* Motor Data* must be set according to motor.	

7.1.4 Wiring Configuration: Speed

Table 18: Analog Speed Reference (Voltage)

	Parameters	
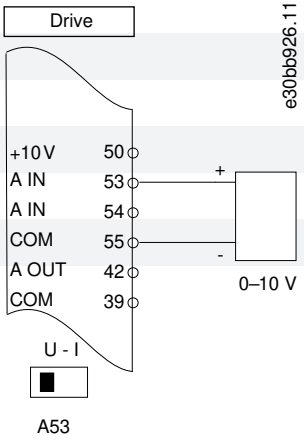	**Function**	**Setting**
	Parameter 6-10 Terminal 53 Low Voltage	0.07 V*
	Parameter 6-11 Terminal 53 High Voltage	10 V*
	Parameter 6-14 Terminal 53 Low Ref./Feedb. value	0 Hz
	Parameter 6-15 Terminal 53 High Ref./Feedb. Value	50 Hz
	*=Default value	
	Notes/comments: D IN 37 is an option.	

Table 19: Analog Speed Reference (Current)

	Parameters	
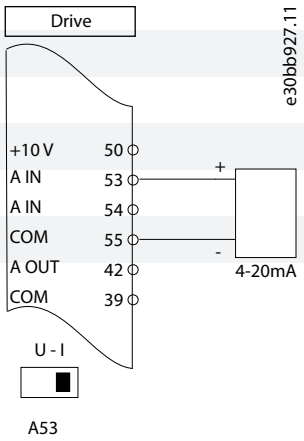	**Function**	**Setting**
	Parameter 6-12 Terminal 53 Low Current	4 mA*
	Parameter 6-13 Terminal 53 High Current	20 mA*
	Parameter 6-14 Terminal 53 Low Ref./Feedb. value	0 Hz
	Parameter 6-15 Terminal 53 High Ref./Feedb. Value	50 Hz
	*=Default value	
	Notes/comments: D IN 37 is an option.	

Table 20: Speed Reference (Using a Manual Potentiometer)

	Parameters	
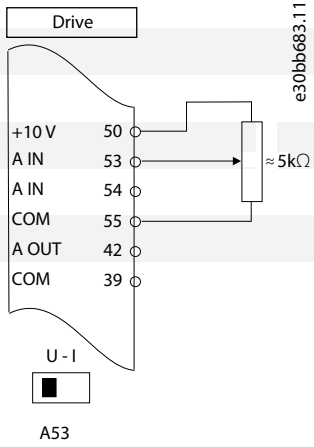	**Function**	**Setting**
	Parameter 6-10 Terminal 53 Low Voltage	0.07 V*
	Parameter 6-11 Terminal 53 High Voltage	10 V*
	Parameter 6-14 Terminal 53 Low Ref./Feedb. value	0 Hz
	Parameter 6-15 Terminal 53 High Ref./Feedb. Value	50 Hz
	*=Default value	
	Notes/comments: D IN 37 is an option.	

Table 21: Speed Up/Down

	Parameter	
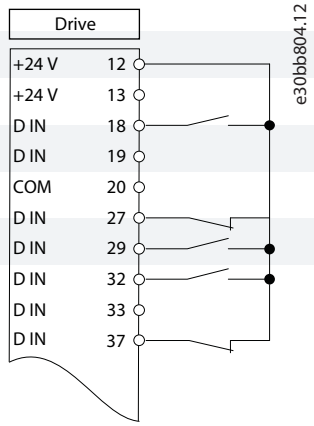	**Function**	**Setting**
	Parameter 5-10 Terminal 18 Digital Input	*[8] Start**
	Parameter 5-12 Terminal 27 Digital Input	*[19] Freeze Reference*
	Parameter 5-13 Terminal 29 Digital Input	*[21] Speed Up*
	Parameter 5-14 Terminal 32 Digital Input	*[22] Speed Down*
	*=Default value	
	Notes/comments: D IN 37 is an option.	

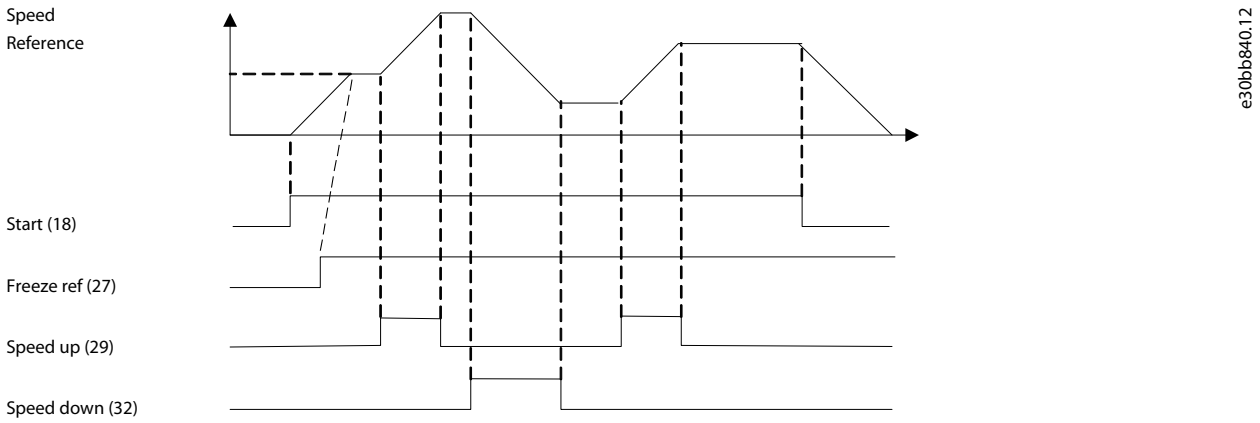

Illustration 41: Speed Up/Down

7.1.5 Wiring Configuration: Feedback

Table 22: Analog Current Feedback Transducer (2-wire)

	Parameters	
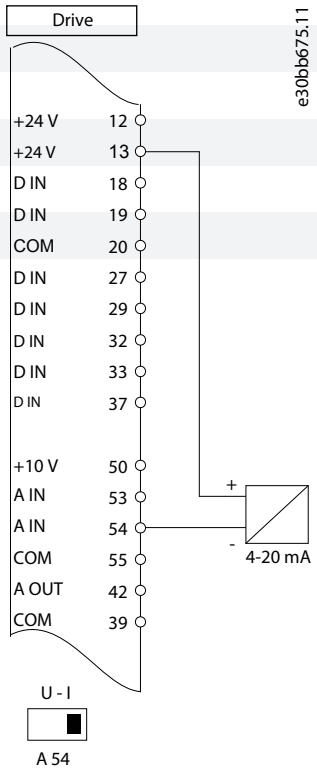	**Function**	**Setting**
	Parameter 6-22 Terminal 54 Low Current	4 mA*
	Parameter 6-23 Terminal 54 High Current	20 mA*
	Parameter 6-24 Terminal 54 Low Ref./Feedb. value	0*
	Parameter 6-25 Terminal 54 High Ref./Feedb. Value	50*
	*=Default value	
	Notes/comments: D IN 37 is an option.	

Table 23: Analog Voltage Feedback Transducer (3-wire)

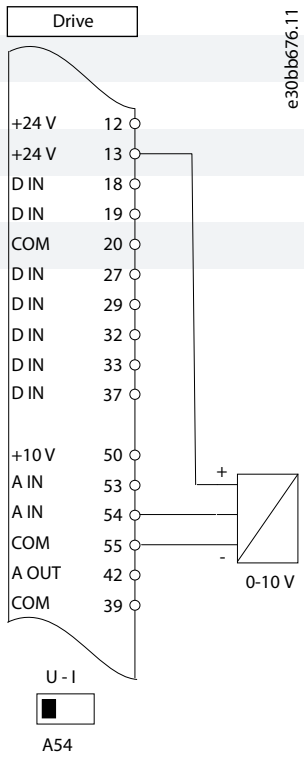

	Parameters	
	Function	**Setting**
	Parameter 6-20 Terminal 54 Low Voltage	0.07 V*
	Parameter 6-21 Terminal 54 High Voltage	10 V*
	Parameter 6-24 Terminal 54 Low Ref./Feedb. value	0*
	Parameter 6-25 Terminal 54 High Ref./Feedb. Value	50*
	*=Default value	
	Notes/comments: D IN 37 is an option.	

Table 24: Analog Voltage Feedback Transducer (4-wire)

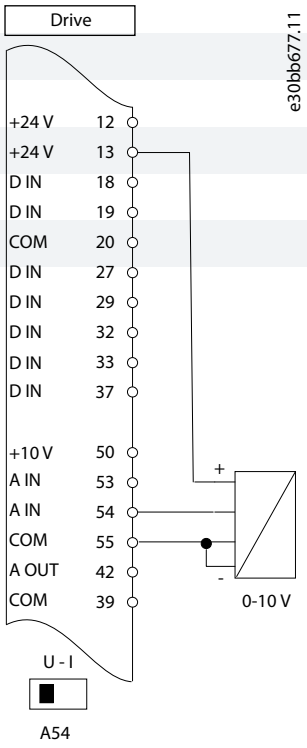

	Parameters	
	Function	**Setting**
	Parameter 6-20 Terminal 54 Low Voltage	0.07 V*
	Parameter 6-21 Terminal 54 High Voltage	10 V*
	Parameter 6-24 Terminal 54 Low Ref./Feedb. value	0*
	Parameter 6-25 Terminal 54 High Ref./Feedb. Value	50*
	*=Default value	
	Notes/comments: D IN 37 is an option.	

7.1.6 Wiring Configuration: Run/Stop

Table 25: Run/Stop Command with External Interlock

<table>
<tr><th colspan="2"></th><th colspan="2">Parameter</th></tr>
<tr><td colspan="2" rowspan="4"> 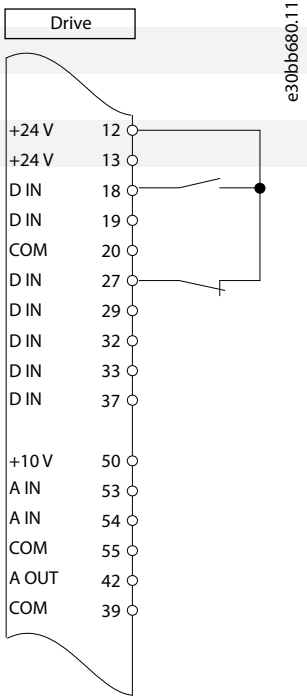
</td><td>Function</td><td>Setting</td></tr>
<tr><td>Parameter 5-10 Terminal 18 Digital Input</td><td>[8] Start*</td></tr>
<tr><td>Parameter 5-12 Terminal 27 Digital Input</td><td>[7] External interlock</td></tr>
<tr><td colspan="2">*=Default value</td></tr>
<tr><td colspan="2"></td><td colspan="2">Notes/comments:

D IN 37 is an option.</td></tr>
</table>

Table 26: Run/Stop Command without External Interlock

	Parameter	
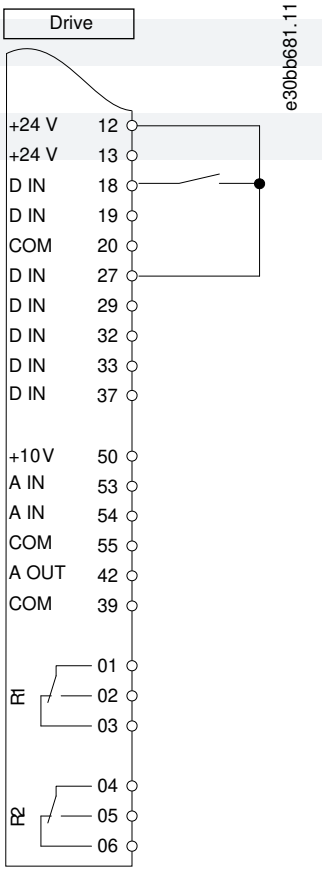	**Function**	**Setting**
	Parameter 5-10 Terminal 18 Digital Input	*[8] Start**
	Parameter 5-12 Terminal 27 Digital Input	*[7] External interlock*
	*=Default value	
	Notes/comments: If *parameter 5-12 Terminal 27 Digital Inputs* is set to *[0] No operation*, a jumper wire to terminal 27 is not needed. D IN 37 is an option.	

Table 27: Run Permissive

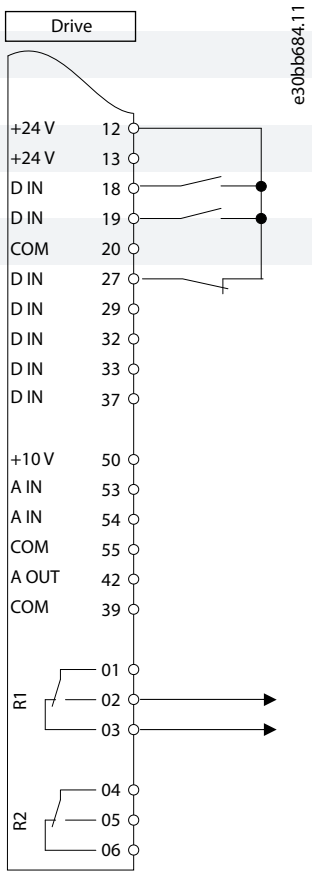

Parameter	
Function	**Setting**
Parameter 5-10 Terminal 18 Digital Input	*[8] Start**
Parameter 5-11 Terminal 19 Digital Input	*[52] Run permissive*
Parameter 5-12 Terminal 27 Digital Input	*[7] External interlock*
Parameter 5-40 Function Relay	*[167] Start command act.*
*=Default value	
Notes/comments: D IN 37 is an option.	

7.1.7 Wiring Configuration: Start/Stop

Table 28: Start/Stop Command with Safe Torque Off Option

	Parameter	
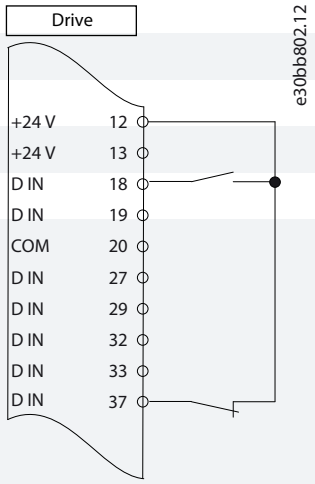	**Function**	**Setting**
	Parameter 5-10 Terminal 18 Digital Input	*[Start]**
	Parameter 5-12 Terminal 27 Digital Input	*[0] No operation*
	Parameter 5-19 Terminal 37 Safe Stop	*[1] Safe Stop Alarm*
	*=Default value	
	Notes/comments: If *parameter 5-12 Terminal 27 Digital Input* is set *[0] No operation*, a jumper wire to terminal 27 is not needed. D IN 37 is an option.	

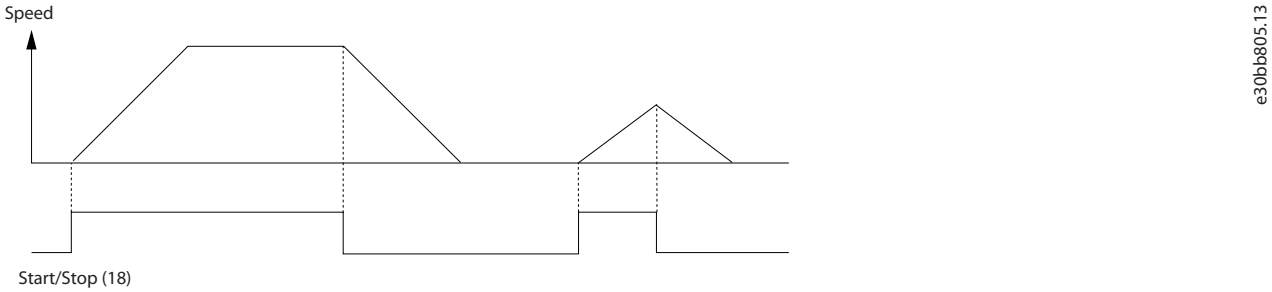

Illustration 42: Start/Stop Command with Safe Torque Off

Table 29: Pulse Start/Stop

	Parameter	
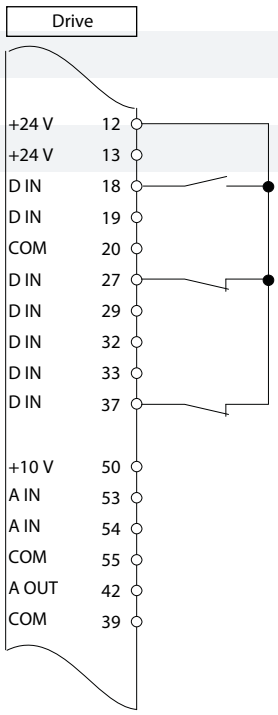	**Function**	**Setting**
	Parameter 5-10 Terminal 18 Digital Input	*[9] Latched Start*
	Parameter 5-12 Terminal 27 Digital Input	*[6] Stop Inverse*
	*=Default value	
	Notes/comments: If *parameter 5-12 Terminal 27 Digital Input* is set *[0] No operation*, a jumper wire to terminal 27 is not needed. D IN 37 is an option.	

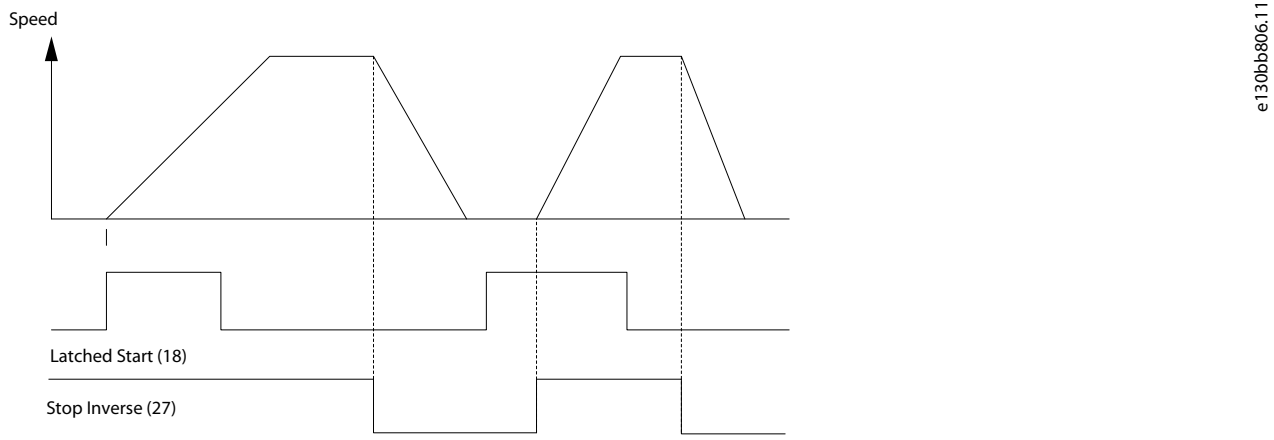

Illustration 43: Latched Start/Stop Inverse

Table 30: Start/Stop with Reversing and 4 Preset Speeds

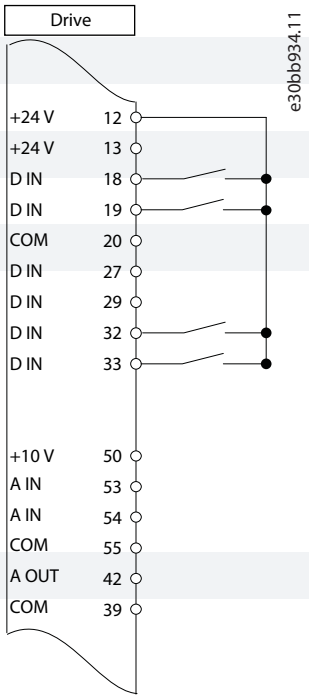

Parameters	
Function	**Setting**
Parameter 5-10 Terminal 18 Digital Input	*[8] Start*
Parameter 5-11 Terminal 19 Digital Input	*[10] Reversing**
Parameter 5-12 Terminal 27 Digital Input	*[0] No operation*
Parameter 5-14 Terminal 32 Digital Input	*[16] Preset ref bit 0*
Parameter 5-15 Terminal 33 Digital Input	*[17] Preset ref bit 1*
Parameter 3-10 Preset Reference	
Preset ref. 0	25%
Preset ref. 1	50%
Preset ref. 2	75%
Preset ref. 3	100%
*=Default value	
Notes/comments: D IN 37 is an option.	

7.1.8 Wiring Configuration: External Alarm Reset

Table 31: External Alarm Reset

	Parameter	
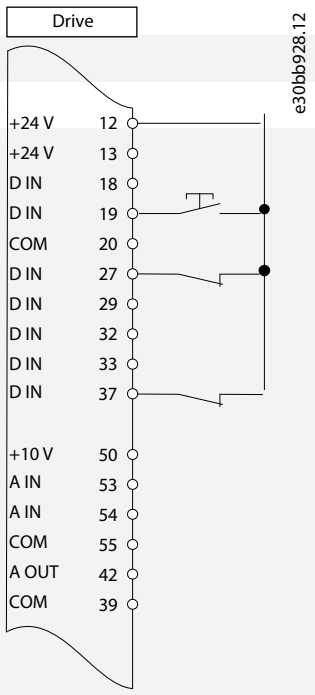	**Function**	**Setting**
	Parameter 5-11 Terminal 19 Digital Input	*[1] Reset*
	*=Default value	
	Notes/comments: D IN 37 is an option.	

7.1.9 Wiring Configuration: RS485

Table 32: RS485 Network Connection

	Parameter	
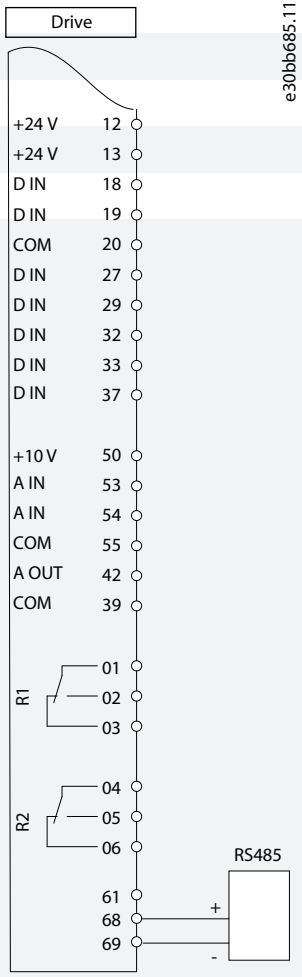	**Function**	**Setting**
	Parameter 8-30 Protocol	FC*
	Parameter 8-31 Address	1*
	Parameter 8-32 Baud Rate	9600*
	*=Default value	
	Notes/comments: Select protocol, address, and baud rate in the above-mentioned parameters. D IN 37 is an option.	

7.1.10 Wiring Configuration: Motor Thermistor

⚠ CAUTION ⚠

THERMISTOR INSULATION

Risk of personal injury or equipment damage.

- To meet PELV insulation requirements, use only thermistors with reinforced or double insulation.

Table 33: Motor Thermistor

	Parameters	
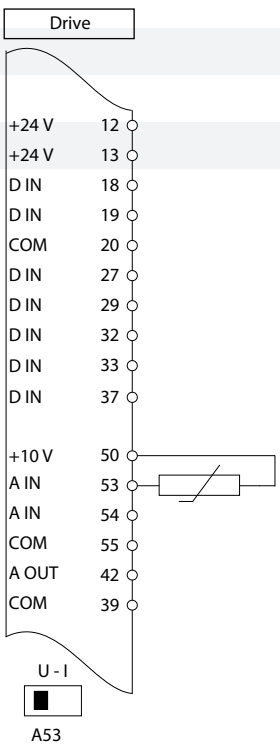	**Function**	**Setting**
	Parameter 1-90 Motor Thermal Protection	*[2] Thermistor trip*
	Parameter 1-93 Thermistor Source	*[1] Analog input 53*
	* = Default value	
	If only a warning is required, set *parameter 1-90 Motor Thermal Protection* to *[1] Thermistor warning*. D IN 37 is an option.	

7.1.11 Wiring for Regen

Table 34: Regen

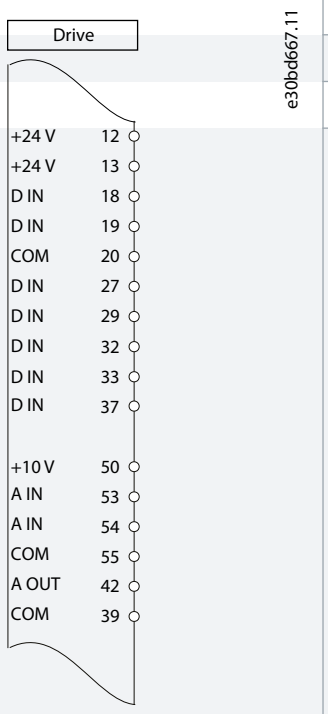

Parameters	
Function	**Setting**
Parameter 1-90 Motor Thermal Protection	100%*
* = Default value	
To disable regen, decrease *parameter 1-90 Motor Thermal Protection* to 0%. If the application uses motor brake power and regen is not enabled, the unit trips.	

7.1.12 Wiring Configuration for a Relay Setup with Smart Logic Control

Table 35: Wiring Configuration for a Relay Setup with Smart Logic Control

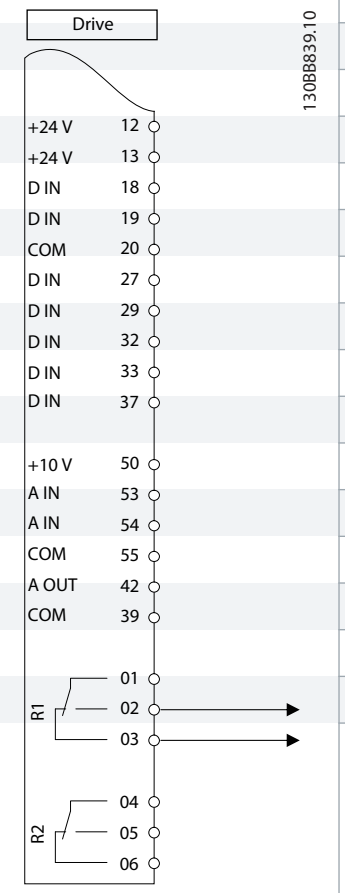

Parameters	
Function	**Setting**
Parameter 4-30 Motor Feedback Loss Function	*[1] Warning*
Parameter 4-31 Motor Feedback Speed Error	100 RPM
Parameter 4-32 Motor Feedback Loss Timeout	5 s
Parameter 7-00 Speed PID Feedback Source	*[2] MCB 102*
Parameter 17-11 Resolution (PPR)	1024*
Parameter 13-00 SL Controller Mode	*[1] On*
Parameter 13-01 Start Event	*[19] Warning*
Parameter 13-02 Stop Event	*[44] Reset key*
Parameter 13-10 Comparator Operand	*[21] Warning no.*
Parameter 13-11 Comparator Operator	*[1] ≈ (equal)**
Parameter 13-12 Comparator Value	90
Parameter 13-51 SL Controller Event	*[22] Comparator 0*
Parameter 13-52 SL Controller Action	*[32] Set digital out A low*
Parameter 5-40 Function Relay	*[80] SL digital output A*
*=Default value	
Notes/comments: If the limit in the feedback monitor is exceeded, *warning 90, Feedback Mon.* is issued. The SLC monitors *warning 90, Feedback Mon.* and if the warning becomes true, relay 1 is triggered. External equipment may require service. If the feedback error goes below the limit again within 5 s, the drive continues and the warning disappears. Reset relay 1 by pressing [Reset] on the LCP.	

7.1.13 Wiring Configuration: Mechanical Brake Control

Table 36: Mechanical Brake Control

	Parameters	
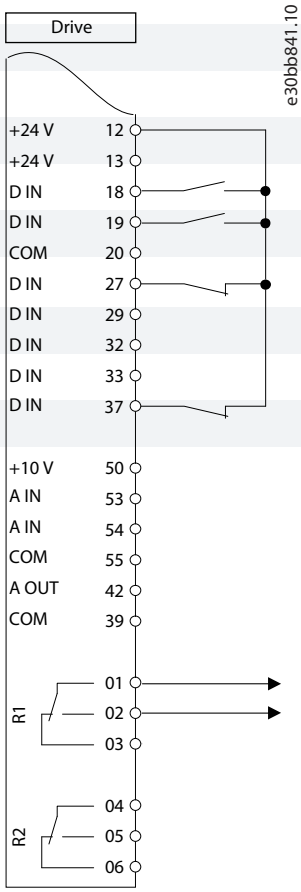	**Function**	**Setting**
	Parameter 5-40 Function Relay	*[32] Mech. brake ctrl.*
	Parameter 5-10 Terminal 18 Digital Input	*[8] Start**
	Parameter 5-11 Terminal 19 Digital Input	*[11] Start reversing*
	Parameter 1-71 Start Delay	0.2
	Parameter 1-72 Start Function	*[5] VVC+/ FLUX Clockwise*
	Parameter 1-76 Start Current	$I_{m,n}$
	Parameter 2-20 Release Brake Current	Application dependent
	Parameter 2-21 Activate Brake Speed [RPM]	Half of nominal slip of the motor
	* = Default value	
	–	

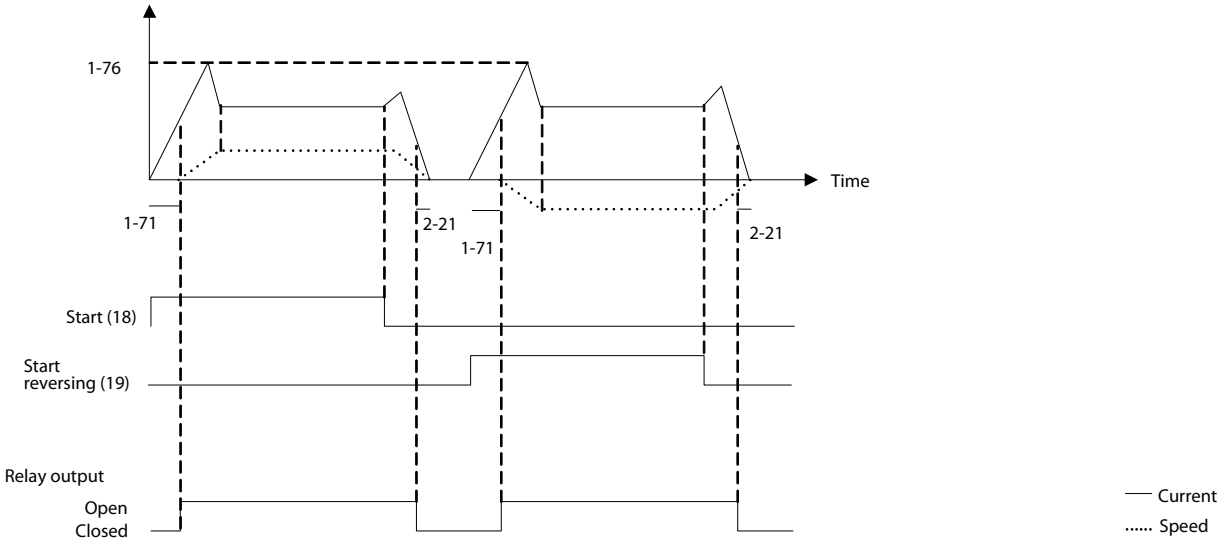

Illustration 44: Mechanical Brake Control

7.1.14 Wiring Configuration for the Encoder

The direction of the encoder, identified by looking into the shaft end, is determined by which order the pulses enter the drive.

- Clockwise (CW) direction means channel A is 90 electrical degrees before channel B.
- Counterclockwise (CCW) direction means channel B is 90 electrical degrees before A.

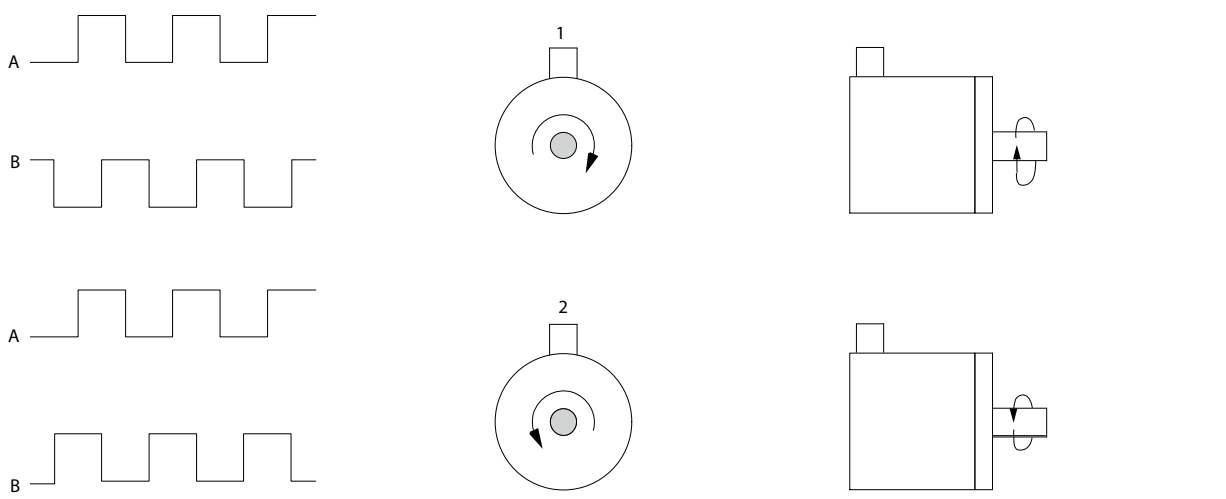

Illustration 45: Determining Encoder Direction

NOTICE

Maximum cable length is 5 m (16 ft.)

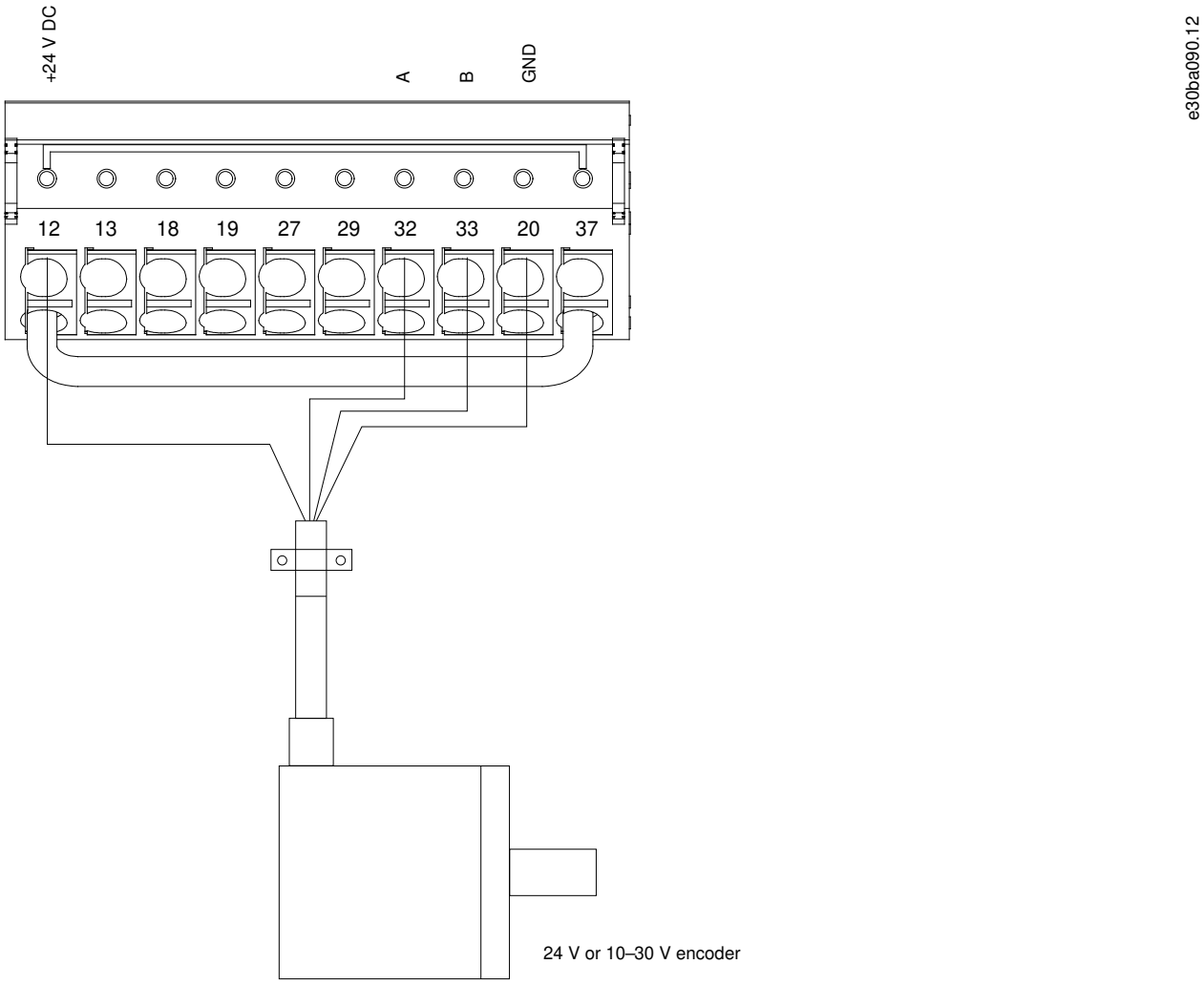

Illustration 46: Wire Configuration for the Encoder

7.1.15 Wiring Configuration for Torque and Stop Limit

In applications with an external electro-mechanical brake, such as hoisting applications, it is possible to stop the drive via a standard stop command and simultaneously activate the external electro-mechanical brake. Illustration 12.8 shows the programming of these drive connections.

If a stop command is active via terminal 18 and the drive is not at the torque limit, the motor ramps down to 0 Hz. If the drive is at the torque limit and a stop command is activated, the system activates terminal 29 output (programmed to *[27] Torque limit & stop*). The signal to terminal 27 changes from logic 1 to logic 0 and the motor starts to coast. This process ensures that the hoist stops even if the drive itself cannot handle the required torque, for example due to excessive overload.

To program the stop and torque limit, connect to the following terminals:

- Start/stop via terminal 18 (*Parameter 5-10 Terminal 18 Digital Input [8] Start*).
- Quick stop via terminal 27 (*Parameter 5-12 Terminal 27 Digital Input [2] Coasting Stop, Inverse*).
- Terminal 29 output (*Parameter 5-02 Terminal 29 Mode [1] Terminal 29 Mode Output* and *parameter 5-31 Terminal 29 Digital Output [27] Torque limit & stop*).
- Relay output [0] (Relay 1) (*Parameter 5-40 Function Relay [32] Mechanical Brake Control*).

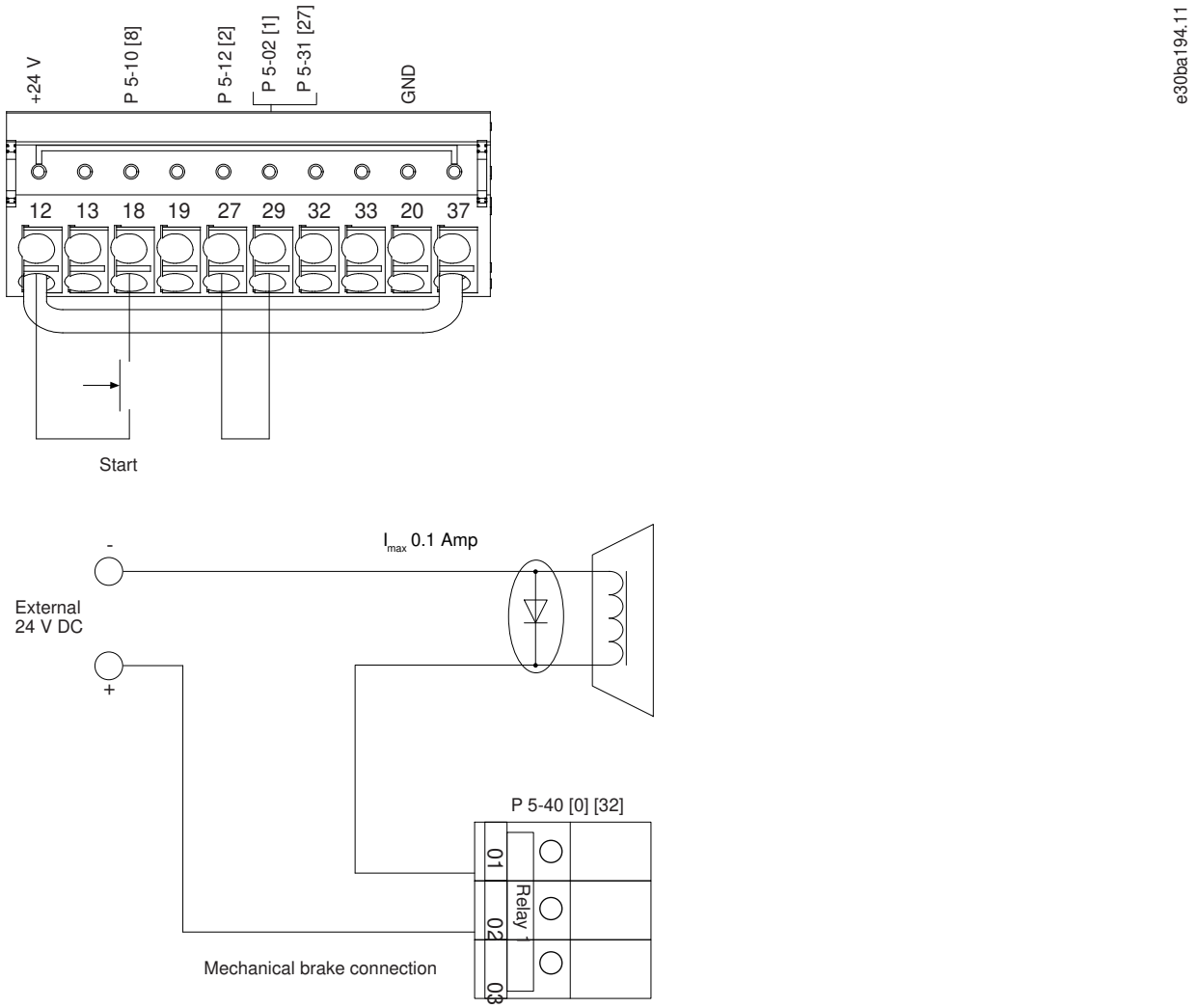

Illustration 47: Wire Configuration for Torque and Stop Limit

8 Maintenance, Diagnostics, and Troubleshooting

8.1 Maintenance and Service

Under normal operating conditions and load profiles, the drive is maintenance-free throughout its designed lifetime. To prevent breakdown, danger, and damage, examine the drive for loose terminal connections, excessive dust buildup, and so on, at regular intervals. Replace worn or damaged parts with Danfoss authorized parts. For service and support, contact the local Danfoss supplier.

⚠ WARNING ⚠

UNINTENDED START

When the drive is connected to the AC mains, DC supply, or load sharing, the motor may start at any time, causing risk of death, serious injury, and equipment or property damage. The motor may start by activation of an external switch, a fieldbus command, an input reference signal from the LCP or LOP, via remote operation using MCT 10 Set-up software, or after a cleared fault condition.

- Press [Off] on the LCP before programming parameters.
- Disconnect the drive from the mains whenever personal safety considerations make it necessary to avoid unintended motor start.
- Check that the drive, motor, and any driven equipment are in operational readiness.

8.2 Heat Sink Service

8.2.1 Heat Sink Access Panel

The drive can be ordered with an optional access panel in the back of the unit. This access panel provides access to the heat sink and allows the heat sink to be cleaned of any dust buildup.

8.2.2 Removing Dust Buildup from the Heat Sink

Context:

NOTICE

DAMAGE TO HEAT SINK

Using fasteners that are longer than the fasteners originally supplied with the heat sink panel can damage the heat sink cooling fins.

Procedure

1. Remove power from the drive and wait 40 minutes for the capacitors to discharge completely. Refer to 2.3 Safety Precautions.
2. Position the drive so that the back of the drive is fully accessible.
3. Remove the 8 M5 fasteners securing the access panel to the back of the enclosure using a 3 mm hex bit.
4. Inspect the leading edge of the heat sink for damage or debris.
5. Remove material or debris with a vacuum.
6. Reinstall the panel and secure it to the back of the enclosure with the 8 fasteners. Tighten the fasteners according to 9.10 Fastener Torque Ratings.

Example:

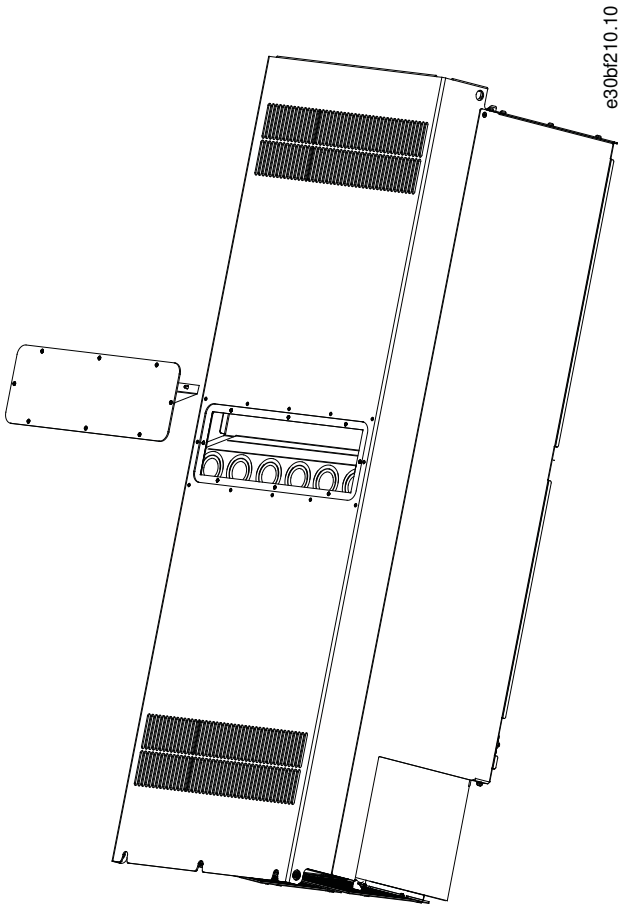

Illustration 48: Heat Sink Access Panel Removed from the Rear of the Drive

8.3 Status Messages

8.3.1 Status Message Overview

When the drive is in status mode, status messages automatically appear in the bottom line of the LCP display. See illustration 49.

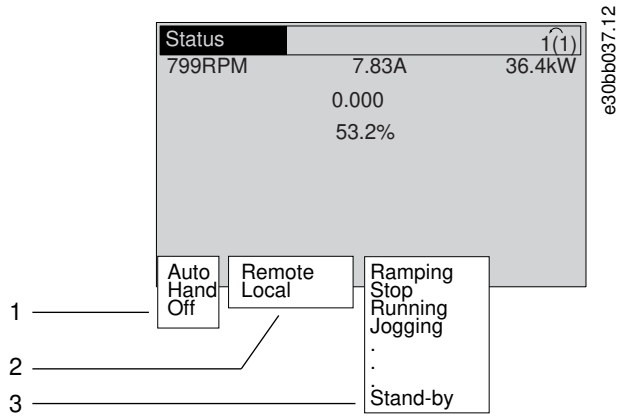

1 Operating mode. Refer to 8.3.2 Status Messages - Operating Mode.	**2** Reference site. Refer to 8.3.3 Status Messages - Reference Site.
3 Operation status. Refer to 8.3.4 Status Messages - Operation Status.	

Illustration 49: Status Display

8.3.2 Status Messages - Operating Mode

Table 37: Operating Mode

Operating mode	Description
Off	The drive does not react to any control signal until [Auto On] or [Hand On] is pressed.
Auto	The drive requires external commands to execute functions. The start/stop commands are sent via the control terminals and/or the serial communication.
Hand	The navigation keys on the LCP can be used to control the drive. Stop commands, reset, reversing, DC brake, and other signals applied to the control terminals override local control.

8.3.3 Status Messages - Reference Site

Table 38: Reference Site

Reference site	Description
Remote	The speed reference is given from: • External signals. • Serial communication. • Internal preset references.
Local	The drive uses reference values from the LCP.

8.3.4 Status Messages - Operation Status

Table 39: Operation Status

Operation status	Description
AC brake	AC brake was selected in *parameter 2-10 Brake Function*. The AC brake overmagnetizes the motor to achieve a controlled slow down.
AMA finish OK	Automatic motor adaptation (AMA) was carried out successfully.
AMA ready	AMA is ready to start. To start, press [Hand On].
AMA running	AMA process is in progress.
Braking	The brake chopper is in operation. The brake resistor absorbs the generative energy.
Coast	• *[2] Coast inverse* was selected as a function for a digital input (*parameter group 5–1* Digital Inputs*). The corresponding terminal is not connected. • Coast activated by serial communication.
Ctrl. ramp-down	*[1] Ctrl. ramp-down* was selected in *parameter 14-10 Mains Failure*. • The mains voltage is below the value set in *parameter 14-11 Mains Voltage at Mains Fault*. • The drive ramps down the motor in a controlled manner.
Current high	The drive output current is above the limit set in *parameter 4-51 Warning Current High*.
Current low	The drive output current is below the limit set in *parameter 4-52 Warning Speed Low*.
DC hold	DC hold is selected in *parameter 1-80 Function at Stop* and a stop command is active. The motor is held by a DC current set in *parameter 2-00 DC Hold Current*.
DC stop	The motor is held with a DC current (*parameter 2-01 DC Brake Current*) for a specified time (*parameter 2-02 DC Braking Time*). • DC brake is activated in *parameter 2-03 DC Brake Cut In Speed [RPM]* and a stop command is active. • DC brake (inverse) is selected as a function for a digital input (*parameter group 5–1* Digital Inputs*). The corresponding terminal is not active. • The DC brake is activated via serial communication.
Feedback high	The sum of all active feedback is above the feedback limit set in *parameter 4-57 Warning Feedback High*.
Feedback low	The sum of all active feedback is below the feedback limit set in *parameter 4-56 Warning Feedback Low*.
Freeze output	The remote reference is active, which holds the present speed. • *[20] Freeze Output* was selected as a function for a digital input (*parameter group 5–1* Digital Inputs*). The corresponding terminal is active. Speed control is only possible via the terminal functions speed up and speed down. • Hold ramp is activated via serial communication.
Freeze output request	A freeze output command has been given, but the motor remains stopped until a run permissive signal is received.
Freeze ref.	*[19] Freeze Reference* was selected as a function for a digital input (*parameter group 5–1* Digital Inputs*). The corresponding terminal is active. The drive saves the actual reference. Changing the reference is now only possible via terminal functions speed up and speed down.
Jog request	A jog command has been given, but the motor is stopped until a run permissive signal is received via a digital input.

Operation status	Description
Jogging	The motor is running as programmed in *parameter 3-19 Jog Speed [RPM]*. • *[14] Jog* was selected as function for a digital input (*parameter group 5–1* Digital Inputs*). The corresponding terminal (for example, terminal 29) is active. • The jog function is activated via the serial communication. • The jog function was selected as a reaction for a monitoring function (for example, No signal). The monitoring function is active.
OVC control	Overvoltage control was activated by *[2] Enabled* in *parameter 2-17 Over-voltage Control*. The connected motor is supplying the drive with generative energy. The overvoltage control adjusts the V/Hz ratio to run the motor in controlled mode and to prevent the drive from tripping.
Power unit off	(For drives with a 24 V external supply installed only.) Mains supply to the drive is removed, but the control card is supplied by the external 24 V.
Protection md	Protection mode is active. The unit has detected a critical status (an overcurrent or overvoltage). • To avoid tripping, the switching frequency is reduced to 1.5 kHz if *parameter 14-55 Output Filter* is set to *[2] Sine-Wave Filter Fixed*. Otherwise, the switching frequency is reduced to 1.0 kHz. • If possible, protection mode ends after approximately 10 s. • Protection mode can be restricted in *parameter 14-26 Trip Delay at Inverter Fault*.
Qstop	The motor is decelerating using *parameter 3-81 Quick Stop Ramp Time*. • *[4] Quick stop inverse* was selected as a function for a digital input (*parameter group 5–1* Digital Inputs*). The corresponding terminal is not active. • The quick stop function was activated via serial communication.
Ramping	The motor is accelerating/decelerating using the active ramp up/down. The reference, a limit value, or a standstill is not yet reached.
Ref. high	The sum of all active references is above the reference limit set in *parameter 4-55 Warning Reference High*.
Ref. low	The sum of all active references is below the reference limit set in *parameter 4-54 Warning Reference Low*.
Run on ref.	The drive is running in the reference range. The feedback value matches the setpoint value.
Run request	A start command has been given, but the motor is stopped until a run permissive signal is received via digital input.
Running	The drive is driving the motor.
Sleep mode	The energy-saving function is enabled. This function being enabled means that now the motor has stopped, but that it restarts automatically when required.
Speed high	The motor speed is above the value set in *parameter 4-53 Warning Speed High*.
Speed low	The motor speed is below the value set in *parameter 4-52 Warning Speed Low*.
Standby	In auto-on mode, the drive starts the motor with a start signal from a digital input or serial communication.
Start delay	In *parameter 1-71 Start Delay*, a delay starting time was set. A start command is activated and the motor starts after the start delay time expires.
Start fwd/rev	*[12] Enable Start Forward* and *[13] Enable Start Reverse* were selected as functions for 2 different digital inputs (*parameter group 5–1* Digital Inputs*). The motor starts in forward or reverse depending on which corresponding terminal is activated.
Stop	The drive has received a stop command from 1 of the following: • LCP. • Digital input. • Serial communication.

Operation status	Description
Trip	An alarm occurred and the motor is stopped. Once the cause of the alarm is cleared, reset the drive using 1 of the following: • Pressing [Reset]. • Remotely by control terminals. • Via serial communication.
Trip lock	An alarm occurred and the motor is stopped. Once the cause of the alarm is cleared, cycle power to the drive. Reset the drive manually by 1 of the following: • Pressing [Reset]. • Remotely by control terminals. • Via serial communication.

8.4 Warnings and Alarms

8.4.1 Warning and Alarm Types

Alarm

An alarm indicates a fault that requires immediate attention. The fault always triggers a trip or trip lock. Reset the drive after an alarm using 1 of the following methods:

- Press [Reset]/[Off/Reset].
- Digital reset input command.
- Serial communication reset input command.
- Auto reset.

Warning

A state entered in fault situations, for example if the drive is subject to an overtemperature or when the drive is protecting the motor, process, or mechanism. The drive prevents a restart until the cause of the fault has disappeared. To cancel the trip state, restart the drive. Do not use the trip state for personal safety.

Trip

When tripping, the drive suspends operation to prevent damage to the drive and other equipment. When a trip occurs, the motor coasts to a stop. The drive logic continues to operate and monitor the drive status. After the fault condition is remedied, the drive is ready for a reset.

Trip lock

The drive enters this state in fault situations to protect itself. The drive requires physical intervention, for example when there is a short circuit on the output. A trip lock can only be canceled by disconnecting mains, removing the cause of the fault, and reconnecting the drive. Restart is prevented until the trip state is canceled by activating reset or, sometimes, by being programmed to reset automatically. Do not use the trip lock state for personal safety.

LCP notification

When a fault is triggered, the LCP indicates the type of fault (alarm, warning, or trip lock) and shows the alarm or warning number in the display.

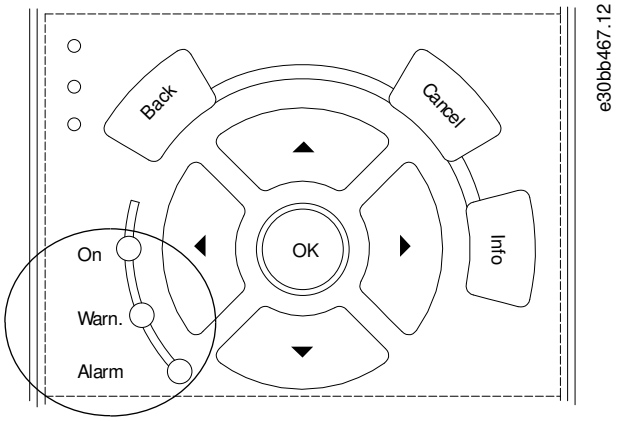

Illustration 50: Status Indicator Lights

Table 40: Fault Types

Type of fault	Warning indicator light	Alarm indicator light
Warning	On	Off
Alarm	Off	On (flashing)
Trip lock	On	On (flashing)

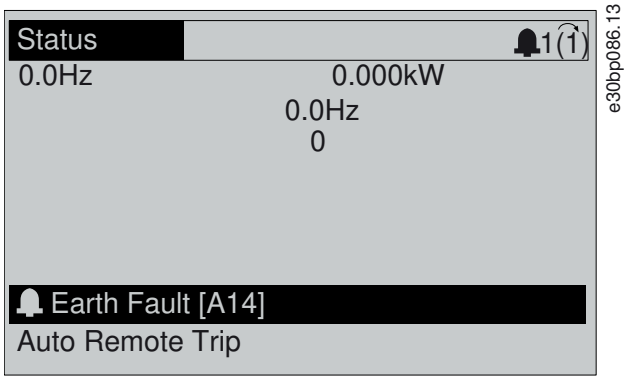

Illustration 51: Alarm Example

8.4.2 WARNING 1, 10 Volts Low

Cause

The control card voltage is less than 10 V from terminal 50. Remove some of the load from terminal 50, as the 10 V supply is overloaded. Maximum 15 mA or minimum 590 Ω.

A short circuit in a connected potentiometer or incorrect wiring of the potentiometer can cause this condition.

Troubleshooting

- Remove the wiring from terminal 50. If the warning clears, the problem is with the wiring. If the warning does not clear, replace the control card.

8.4.3 WARNING/ALARM 2, Live Zero Error

Cause

This warning or alarm only appears if programmed in *parameter 6-01 Live Zero Timeout Function*. The signal on 1 of the analog inputs is less than 50% of the minimum value programmed for that input. Broken wiring or a faulty device sending the signal can cause this condition.

Troubleshooting

- Check connections on all analog mains terminals.
  - Control card terminals 53 and 54 for signals, terminal 55 common.
  - VLT® General Purpose I/O MCB 101 terminals 11 and 12 for signals, terminal 10 common.
  - VLT® Analog I/O Option MCB 109 terminals 1, 3, and 5 for signals, terminals 2, 4, and 6 common.
- Check that the drive programming and switch settings match the analog signal type.
- Perform an input terminal signal test.

8.4.4 WARNING/ALARM 3, No Motor

Cause

No motor is connected to the output of the drive.

8.4.5 WARNING/ALARM 4, Mains Phase Loss

Cause

A phase is missing on the supply side, or the mains voltage imbalance is too high. This message also appears for a fault in the input rectifier. Options are programmed in *parameter 14-12 Function at Mains Imbalance*.

Troubleshooting

- Check the supply voltage and supply currents to the drive.

8.4.6 WARNING 5, DC Link Voltage High

Cause

The DC-link voltage (DC) is higher than the high-voltage warning limit. The limit depends on the drive voltage rating. The unit is still active.

8.4.7 WARNING 6, DC Link Voltage Low

Cause

The DC-link voltage (DC) is lower than the low voltage warning limit. The limit depends on the drive voltage rating. The unit is still active.

8.4.8 WARNING/ALARM 7, DC Overvoltage

Cause

If the DC-link voltage exceeds the limit, the drive trips after a certain time.

Troubleshooting

- Extend the ramp time.
- Change the ramp type.
- Activate the functions in *parameter 2-10 Brake Function*.
- Increase *parameter 14-26 Trip Delay at Inverter Fault*.
- If the alarm/warning occurs during a power sag, use kinetic back-up (*parameter 14-10 Mains Failure*).
- Connect a brake resistor.

8.4.9 WARNING/ALARM 8, DC Undervoltage

Cause

If the DC-link voltage drops below the undervoltage limit, the drive checks for 24 V DC back-up supply. If no 24 V DC back-up supply is connected, the drive trips after a fixed time delay. The time delay varies with unit size.

Troubleshooting

- Check that the supply voltage matches the drive voltage.
- Perform an input voltage test.
- Perform a soft-charge circuit test.

8.4.10 WARNING/ALARM 9, Inverter Overload

Cause

The drive has run with more than 100% overload for too long and is about to cut out. The counter for electronic thermal inverter protection issues a warning at 98% and trips at 100% with an alarm. The drive cannot be reset until the counter is below 90%.

Troubleshooting

- Compare the output current shown on the LCP with the drive rated current.
- Compare the output current shown on the LCP with the measured motor current.
- Show the thermal drive load on the LCP and monitor the value. When running above the drive continuous current rating, the counter increases. When running below the drive continuos current rating, the counter decreases.

8.4.11 WARNING/ALARM 10, Motor Overload Temperature

Cause

According to the electronic thermal protection (ETR), the motor is too hot.

Select 1 of these options:

- The drive issues a warning or an alarm when the counter is >90% if *parameter 1-90 Motor Thermal Protection* is set to warning options.
- The drive trips when the counter reaches 100% if *parameter 1-90 Motor Thermal Protection* is set to trip options.

The fault occurs when the motor runs with more than 100% overload for too long.

Troubleshooting

- Check for motor overheating.
- Check if the motor is mechanically overloaded.
- Check that the motor current set in *parameter 1-24 Motor Current* is correct.
- Ensure that the motor data in *parameters 1-20* to *1-25* is set correctly.
- If an external fan is in use, check that it is selected in *parameter 1-91 Motor External Fan*.
- Running AMA in *parameter 1-29 Automatic Motor Adaptation (AMA)* tunes the drive to the motor more accurately and reduces thermal loading.

8.4.12 WARNING/ALARM 11, Motor Thermistor Overtemp

The motor thermistor indicates that the motor temperature is too high.

Troubleshooting

- Check for motor overheating.
- Check that the thermistor is securely connected.
- Check if the motor is mechanically overloaded.
- When using terminal 53 or 54, check that the thermistor is connected correctly between either terminal 53 or 54 (analog voltage input) and terminal 50 (+10 V supply). Also check that the terminal switch for 53 and 54 is set for voltage. Check that *parameter 1-93 Thermistor Resource* selects 53 or 54.
- When using terminal 18, 19, 31, 32, or 33 (digital inputs), check that the thermistor is connected correctly between the digital input terminal used (digital input PNP only) and terminal 50. Select the terminal to use in *parameter 1-93 Thermistor Resource*.

8.4.13 WARNING/ALARM 12, Torque Limit

Cause

The torque has exceeded the value in *parameter 4-16 Torque Limit Motor Mode* or the value in *parameter 4-17 Torque Limit Generator Mode*. *Parameter 14-25 Trip Delay at Torque Limit* can change this warning from a warning-only condition to a warning followed by an alarm.

Troubleshooting

- If the motor torque limit is exceeded during ramp-up, extend the ramp-up time.
- If the generator torque limit is exceeded during ramp-down time, extend the ramp-down time.
- If torque limit occurs while running, increase the torque limit. Make sure that the system can operate safely at a higher torque.
- Check the application for excessive current draw on the motor.

8.4.14 WARNING/ALARM 13, Overcurrent

Cause

The inverter peak current limit (approximately 200% of the rated current) is exceeded. The warning lasts approximately 1.5 s, then the drive trips and issues an alarm. Shock loading or quick acceleration with high-inertia loads can cause this fault. If the acceleration during ramp-up is quick, the fault can also appear after kinetic back-up. If extended mechanical brake control is selected, a trip can be reset externally.

Troubleshooting

- Remove power and check if the motor shaft can be turned.
- Check that the motor size matches the drive.
- Check that the motor data is correct in *parameters 1-20* to *1-25*.

8.4.15 ALARM 14, Earth (Ground) Fault

Cause

There is current from the output phase to ground, either in the cable between the drive and the motor, or in the motor itself. The current transducers detect the ground fault by measuring current going out from the drive and current going into the drive from the motor. Ground fault is issued if the deviation of the 2 currents is too large. The current going out of the drive must be the same as the current going into the drive.

Troubleshooting

- Remove power to the drive and repair the ground fault.
- Check for ground faults in the motor by measuring the resistance to ground of the motor cables and the motor with a megohmmeter.
- Reset any potential individual offset in the 3 current transducers in the drive. Perform a manual initialization or perform a complete AMA. This method is most relevant after changing the power card.

8.4.16 ALARM 15, Hardware Mismatch

Cause

A fitted option is not operational with the present control card hardware or software.

Troubleshooting

Record the value of the following parameters and contact Danfoss.

- *Parameter 15-40 FC Type*.
- *Parameter 15-41 Power Section*.
- *Parameter 15-42 Voltage*.
- *Parameter 15-43 Software Version*.
- *Parameter 15-45 Actual Typecode String*.
- *Parameter 15-49 SW ID Control Card*.
- *Parameter 15-50 SW ID Power Card*.
- *Parameter 15-60 Option Mounted*.
- *Parameter 15-61 Option SW Version* (for each option slot).

8.4.17 ALARM 16, Short Circuit

Cause

There is short-circuiting in the motor or motor wiring.

Troubleshooting

⚠ WARNING ⚠

HIGH VOLTAGE

AC drives contain high voltage when connected to AC mains input, DC supply, or load sharing. Failure to perform installation, start-up, and maintenance by qualified personnel can result in death or serious injury.

- Only qualified personnel must perform installation, start-up, and maintenance.

- Disconnect power before proceeding.
- Remove the power to the drive and repair the short circuit.

8.4.18 WARNING/ALARM 17, Control Word Timeout

Cause

There is no communication to the drive. The warning is only active when *parameter 8-04 Control Word Timeout Function* is NOT set to *[0] Off*.

If *parameter 8-04 Control Word Timeout Function* is set to *[5] Stop and trip*, a warning appears, and the drive ramps down to a stop and shows an alarm.

Troubleshooting

- Check the connections on the serial communication cable.
- Increase *parameter 8-03 Control Word Timeout Time*.
- Check the operation of the communication equipment.
- Verify that proper EMC installation was performed.

8.4.19 WARNING/ALARM 20, Temp. Input Error

Cause

The temperature sensor is not connected.

8.4.20 WARNING/ALARM 21, Parameter Error

Cause

The parameter is out of range. The parameter number is shown in the display.

Troubleshooting

- Set the affected parameter to a valid value.

8.4.21 WARNING/ALARM 22, Hoist Mechanical Brake

Cause

The value of this warning/alarm shows the type of warning/alarm.

0 = The torque reference was not reached before timeout (*parameter 2-27 Torque Ramp Up Time*).

1 = Expected brake feedback was not received before timeout (*parameter 2-23 Activate Brake Delay*, *parameter 2-25 Brake Release Time*).

8.4.22 WARNING 23, Internal Fan Fault

Cause

The fan warning function is a protective function that checks if the fan is running/mounted. The fan warning can be disabled in *parameter 14-53 Fan Monitor* (*[0] Disabled*).

For drives with DC fans, a feedback sensor is mounted in the fan. If the fan is commanded to run and there is no feedback from the sensor, this alarm appears. For drives with AC fans, the voltage to the fan is monitored.

Troubleshooting

- Check for proper fan operation.
- Cycle power to the drive and check that the fan operates briefly at start-up.
- Check the sensors on the control card.

8.4.23 WARNING 24, External Fan Fault

Cause

The fan warning function is a protective function that checks if the fan is running/mounted. The fan warning can be disabled in *parameter 14-53 Fan Monitor* (*[0] Disabled*).

For drives with DC fans, a feedback sensor is mounted in the fan. If the fan is commanded to run and there is no feedback from the sensor, this warning appears. For drives with AC fans, the voltage to the fan is monitored.

Troubleshooting

- Check for proper fan operation.
- Cycle power to the drive and check that the fan operates briefly at start-up.
- Check the sensors on the heat sink.

8.4.24 WARNING 25, Brake Resistor Short Circuit

Cause

The brake resistor is monitored during operation. If a short circuit occurs, the brake function is disabled and the warning appears. The drive is still operational, but without the brake function.

Troubleshooting

- Remove the power to the drive and replace the brake resistor (refer to *parameter 2-15 Brake Check*).

8.4.25 WARNING/ALARM 26, Brake Resistor Power Limit

Cause

The power transmitted to the brake resistor is calculated as a mean value over the last 120 s of run time. The calculation is based on the DC-link voltage and the brake resistor value set in *parameter 2-16 AC Brake Max. Current*. The warning is active when the dissipated braking power is higher than 90% of the brake resistor power. If option *[2] Trip* is selected in *parameter 2-13 Brake Power Monitoring*, the drive trips when the dissipated braking power reaches 100%.

8.4.26 WARNING/ALARM 27, Brake Chopper Fault

Cause

The brake transistor is monitored during operation, and if a short circuit occurs, the brake function is disabled, and a warning is issued. The drive is still operational, but since the brake transistor has short-circuited, substantial power is transmitted to the brake resistor, even if it is inactive.

Troubleshooting

- Remove the power to the drive and remove the brake resistor.

8.4.27 WARNING/ALARM 28, Brake Check Failed

Cause

The brake resistor is not connected or not working.

Troubleshooting

- Check *parameter 2-15 Brake Check*.

8.4.28 ALARM 29, Heat Sink Temp

Cause

The maximum temperature of the heat sink is exceeded. The temperature fault is not reset until the temperature drops below a defined heat sink temperature. The trip and reset points are different based on the drive power size.

Troubleshooting

- The ambient temperature is too high.
- The motor cables are too long.
- Incorrect airflow clearance above and below the drive.
- Blocked airflow around the drive.
- Damaged heat sink fan.
- Dirty heat sink.

8.4.29 ALARM 30, Motor Phase U Missing

Cause

Motor phase U between the drive and the motor is missing.

Troubleshooting

⚠ WARNING ⚠

HIGH VOLTAGE

AC drives contain high voltage when connected to AC mains input, DC supply, or load sharing. Failure to perform installation, start-up, and maintenance by qualified personnel can result in death or serious injury.

- Only qualified personnel must perform installation, start-up, and maintenance.

- Disconnect power before proceeding.
- Remove the power from the drive and check motor phase U.

8.4.30 ALARM 31, Motor Phase V Missing

Cause

Motor phase V between the drive and the motor is missing.

Troubleshooting

⚠ WARNING ⚠

HIGH VOLTAGE

AC drives contain high voltage when connected to AC mains input, DC supply, or load sharing. Failure to perform installation, start-up, and maintenance by qualified personnel can result in death or serious injury.

- Only qualified personnel must perform installation, start-up, and maintenance.

- Disconnect power before proceeding.
- Remove the power from the drive and check motor phase V.

8.4.31 ALARM 32, Motor Phase W Missing

Cause

Motor phase W between the drive and the motor is missing.

Troubleshooting

⚠ WARNING ⚠

HIGH VOLTAGE

AC drives contain high voltage when connected to AC mains input, DC supply, or load sharing. Failure to perform installation, start-up, and maintenance by qualified personnel can result in death or serious injury.

- Only qualified personnel must perform installation, start-up, and maintenance.

- Disconnect power before proceeding.
- Remove the power from the drive and check motor phase W.

8.4.32 ALARM 33, Inrush Fault

Cause

Too many power-ups have occurred within a short time period.

Troubleshooting

- Let the unit cool to operating temperature.
- Check potential DC-link fault to ground.

8.4.33 WARNING/ALARM 34, Fieldbus Communication Fault

Cause

The fieldbus on the communication option card is not working.

8.4.34 WARNING/ALARM 35, Option Fault

Cause

An option alarm is received. The alarm is option-specific. The most likely cause is a power-up or a communication fault.

8.4.35 WARNING/ALARM 36, Mains Failure

Cause

This warning/alarm is only active if the supply voltage to the drive is lost and *parameter 14-10 Mains Failure* is not set to *[0] No Function*.

Troubleshooting

- Check the fuses to the drive and mains supply to the unit.

8.4.36 ALARM 37, Phase Imbalance

Cause

There is a current imbalance between the power units.

8.4.37 ALARM 38, Internal Fault

Cause

When an internal fault occurs, a code number defined in table 41 is shown.

Troubleshooting

- Cycle power.
- Check that the option is properly installed.
- Check for loose or missing wiring.

It may be necessary to contact the Danfoss supplier or service department. Note the code number for further troubleshooting directions.

Table 41: Internal Fault Codes

Number	Text
0	The serial port cannot be initialized. Contact the Danfoss supplier or Danfoss service department.
256-258	The power EEPROM data is defective or too old. Replace the power card.
512-519	Internal fault. Contact the Danfoss supplier or Danfoss service department.
783	Parameter value outside of minimum/maximum limits.
1024-1284	Internal fault. Contact the Danfoss supplier or Danfoss service department.
1299	The option software in slot A is too old.
1300	The option software in slot B is too old.
1302	The option software in slot C1 is too old.
1315	The option software in slot A is not supported/allowed.
1316	The option software in slot B is not supported/ allowed.
1318	The option software in slot C1 is not supported/ allowed.
1379-2819	Internal fault. Contact the Danfoss supplier or Danfoss service department.
1792	Hardware reset of digital signal processor.
1793	Motor-derived parameters not transferred correctly to the digital signal processor.
1794	Power data not transferred correctly at power-up to the digital signal processor.
1795	The digital signal processor has received too many unknown SPI telegrams. The AC drive also uses this fault code if the MCO does not power up correctly. This situation can occur due to poor EMC protection or improper grounding.
1796	RAM copy error.
2561	Replace the control card.
2820	LCP stack overflow.
2821	Serial port overflow.
2822	USB port overflow.
3072-5122	Parameter value is outside its limits.
5123	Option in slot A: Hardware incompatible with the control board hardware.
5124	Option in slot B: Hardware incompatible with the control board hardware.
5125	Option in slot C0: Hardware incompatible with the control board hardware.
5126	Option in slot C1: Hardware incompatible with the control board hardware.
5376-6231	Internal fault. Contact the Danfoss supplier or Danfoss service department.

8.4.38 ALARM 39, Heat Sink Sensor

Cause

No feedback from the heat sink temperature sensor.

The signal from the IGBT thermal sensor is not available on the power card. The problem could be on the power card, on the gatedrive card, or on the ribboncable between the power card and the gatedrive card.

8.4.39 WARNING 40, Overload of Digital Output Terminal 27

Troubleshooting

- Check the load connected to terminal 27 or remove the short-circuit connection.
- Check *parameter 5-00 Digital I/O Mode* and *parameter 5-01 Terminal 27 Mode*.

8.4.40 WARNING 41, Overload of Digital Output Terminal 29

Troubleshooting

- Check the load connected to terminal 29 or remove the short-circuit connection.
- Check *parameter 5-00 Digital I/O Mode* and *parameter 5-02 Terminal 29 Mode*.

8.4.41 WARNING 42, Ovrld X30/6-7

Troubleshooting

For terminal X30/6:

- Check the load connected to the terminal, or remove the short-circuit connection.
- Check *parameter 5-32 Term X30/6 Digi out (MCB 101)* (VLT® General Purpose I/O MCB 101).

For terminal X30/7:

- Check the load connected to the terminal, or remove the short-circuit connection.
- Check *parameter 5-33 Term X30/7 Digi Out (MCB 101)* (VLT® General Purpose I/O MCB 101).

8.4.42 ALARM 43, Ext. Supply

Either connect a 24 V DC external supply or specify that no external supply is used via *parameter 14-80 Option Supplied by External 24VDC*, *[0] No*. A change in *parameter 14-80 Option Supplied by External 24VDC* requires a power cycle.

Cause

VLT® Extended Relay Option MCB 113 is mounted without 24 V DC.

Troubleshooting

Choose 1 of the following:

- Connect a 24 V DC external supply.
- Specify that no external supply is used via *parameter 14-80 Option Supplied by External 24VDC*, *[0] No*. A change in *parameter 14-80 Option Supplied by External 24VDC* requires a power cycle.

8.4.43 ALARM 45, Earth Fault 2

Cause

Ground fault.

Troubleshooting

- Check for proper grounding and loose connections.
- Check for proper wire size.
- Check the motor cables for short circuits or leakage currents.

8.4.44 ALARM 46, Power Card Supply

Cause

The supply on the power card is out of range. Another reason can be a defective heat sink fan.

There are 3 supplies generated by the switch mode supply (SMPS) on the power card:

- 24 V.
- 5 V.
- ±18 V.

When powered with VLT® 24 V DC Supply MCB 107, only 24 V and 5 V supplies are monitored. When powered with 3-phase mains voltage, all 3 supplies are monitored.

Troubleshooting

- Check for a defective power card.
- Check for a defective control card.
- Check for a defective option card.
- If a 24 V DC supply is used, verify proper supply power.
- Check for a defective heat sink fan.

8.4.45 WARNING 47, 24 V Supply Low

Cause

The supply on the power card is out of range.

There are 3 supplies generated by the switch mode supply (SMPS) on the power card:

- 24 V
- 5 V
- ±18 V

Troubleshooting

- Check for a defective power card.

8.4.46 WARNING 48, 1.8 V Supply Low

Cause

The 1.8 V DC supply used on the control card is outside of the allowed limits. The supply is measured on the control card.

Troubleshooting

- Check for a defective control card.
- If an option card is present, check for overvoltage.

8.4.47 WARNING 49, Speed Limit

Cause

The warning is shown when the speed outside of the specified range in *parameter 4-11 Motor Speed Low Limit [RPM]* and *parameter 4-13 Motor Speed High Limit [RPM]*. When the speed is below the specified limit in *parameter 1-86 Trip Speed Low [RPM]* (except when starting or stopping), the drive trips.

8.4.48 ALARM 50, AMA Calibration Failed

Troubleshooting

- Contact the Danfoss supplier or service department.

8.4.49 ALARM 51, AMA Check Unom and Inom

Cause

The settings for motor voltage, motor current, and motor power are wrong.

Troubleshooting

- Check settings in *parameters 1-20* to *1-25*.

8.4.50 ALARM 52, AMA Low Inom

Cause

The motor current is too low.

Troubleshooting

- Check the settings in *parameter 1-24 Motor Current*.

8.4.51 ALARM 53, AMA Motor Too Big

Cause

The motor is too big for the AMA to operate.

8.4.52 ALARM 54, AMA Motor Too Small

Cause

The motor is too small for the AMA to operate.

8.4.53 ALARM 55, AMA Parameter Out of Range

Cause

The AMA cannot run because the paramenter values of the motor are out of the acceptable range.

8.4.54 ALARM 56, AMA Interrupted by User

Cause

The AMA is manually interrupted.

8.4.55 ALARM 57, AMA Internal Fault

Cause

Try to restart the AMA. Repeated restarts can overheat the motor.

8.4.56 ALARM 58, AMA Internal Fault

Troubleshooting

Contact the Danfoss supplier.

8.4.57 WARNING 59, Current Limit

Cause

The current is higher than the value in *parameter 4-18 Current Limit*.

Troubleshooting

- Ensure that the motor data in *parameters 1-20* to *1-25* is set correctly.
- Increase the current limit if necessary. Ensure that the system can operate safely at a higher limit.

8.4.58 WARNING 60, External Interlock

Cause

A digital input signal indicates a fault condition external to the drive. An external interlock has commanded the drive to trip.

Troubleshooting

- Clear the external fault condition.
- To resume normal operation, apply 24 V DC to the terminal programmed for external interlock.
- Reset the drive.

8.4.59 WARNING/ALARM 61, Feedback Error

Cause

An error between calculated speed and speed measurement from feedback device.

Troubleshooting

- Check the settings for warning/alarm/disabling in *parameter 4-30 Motor Feedback Loss Function*.
- Set the tolerable error in *parameter 4-31 Motor Feedback Speed Error*.
- Set the tolerable feedback loss time in *parameter 4-32 Motor Feedback Loss Timeout*.

8.4.60 WARNING 62, Output Frequency at Maximum Limit

Cause

The output frequency has reached the value set in *parameter 4-19 Max Output Frequency*.

Troubleshooting

- Check the application for possible causes.
- Increase the output frequency limit. Be sure that the system can operate safely at a higher output frequency.

The warning clears when the output drops below the maximum limit.

8.4.61 ALARM 63, Mechanical Brake Low

Cause

The actual motor current has not exceeded the release brake current within the start delay time window.

8.4.62 WARNING 64, Voltage Limit

Cause

The load and speed combination demands a motor voltage higher than the actual DC-link voltage.

8.4.63 WARNING/ALARM 65, Control Card Overtemperature

Cause

The cutout temperature of the control card has exceeded the upper limit.

Troubleshooting

- Check that the ambient operating temperature is within the limits.
- Check for clogged filters.
- Check the fan operation.
- Check the control card.

8.4.64 WARNING 66, Heat Sink Temperature Low

Cause

The drive is too cold to operate. This warning is based on the temperature sensor in the IGBT module.

Troubleshooting

- Increase the ambient temperature of the unit.
- Supply a trickle amount of current to the drive whenever the motor is stopped by setting *parameter 2-00 DC Hold/Preheat Current* to 5% and *parameter 1-80 Function at Stop*.

8.4.65 ALARM 67, Option Module Configuration has Changed

Cause

One or more options have either been added or removed since the last power-down.

Troubleshooting

- Check that the configuration change is intentional and reset the unit.

8.4.66 ALARM 68, Safe Stop Activated

Cause

Safe Torque Off (STO) has been activated.

Troubleshooting

- To resume normal operation, apply 24 V DC to terminal 37, then send a reset signal (via bus, digital, or by pressing [Reset]).

8.4.67 ALARM 69, Power Card Temperature

Cause

The temperature sensor on the power card is either too hot or too cold.

Troubleshooting

- Check that the ambient operating temperature is within the limits.
- Check for clogged filters.
- Check fan operation.
- Check the power card.

8.4.68 ALARM 70, Illegal FC Configuration

Cause

The control card and power card are incompatible.

Troubleshooting

- To check compatibility, contact the Danfoss supplier with the type code from the unit nameplate and the part numbers on the cards.

8.4.69 ALARM 71, PTC 1 Safe Stop

Cause

Because the motor is too warm, the VLT® PTC Thermistor Card MCB 112 activated the Safe Torque Off (STO).

Troubleshooting

- Once the motor temperature reaches an acceptable level and the digital input from MCB 112 is deactivated,send a reset signal via bus or digital I/O, or press [Reset].

8.4.70 ALARM 72, Dangerous Failure

Cause

Safe Torque Off (STO) with trip lock.

Troubleshooting

An unexpected combination of STO commands has occurred:

- VLT® PTC Thermistor Card MCB 112 enables X44/10, but STO is not enabled.
- MCB 112 is the only device using STO (specified through selection *[4] PTC 1 alarm* or *[5] PTC 12 warning* in *parameter 5-19 Terminal 37 Safe Stop*). STO is activated, but X44/10 is not activated.

8.4.71 WARNING 73, Safe Stop Auto Restart

Cause

STO activated.

Troubleshooting

- With automatic restart enabled, the motor can start when the fault is cleared.

8.4.72 ALARM 74, PTC Thermistor

Cause

The PTC is not working. Alarm is related to VLT® PTC Thermistor Card MCB 112.

8.4.73 ALARM 75, Illegal Profile Sel.

Cause

Do not write the parameter value while the motor is running.

Troubleshooting

- Stop the motor before writing the MCO profile to *parameter 8-10 Control Word Profile*.

8.4.74 Warning 76, Power Unit Setup

Cause

The required number of power units do not match the detected number of active power units.

Troubleshooting

- When replacing an F-frame module, this will occur if the power specific data in the module power card does not match the rest of the drive. Confirm the spare part and its power card are the correct part number.

8.4.75 WARNING 77, Reduced Power Mode

Cause

The drive is operating in reduced power mode (less than allowed number of inverter sections). The warning is generated on power cycle when the drive is set to run with fewer inverters and remains on.

8.4.76 ALARM 78, Tracking Error

Cause

The difference between setpoint value and actual value exceeds the value in *parameter 4-35 Tracking Error*.

Troubleshooting

- Disable the function or select an alarm/warning in *parameter 4-34 Tracking Error Function*.
- Investigate the mechanics around the load and motor. Check feedback connections from motor encoder to drive.
- Select motor feedback function in *parameter 4-30 Motor Feedback Loss Function*.
- Adjust the tracking error band in *parameter 4-35 Tracking Error* and *parameter 4-37 Tracking Error Ramping*.

8.4.77 ALARM 79, Illegal Power Section Configuration

Cause

The scaling card has an incorrect part number or is not installed. The MK102 connector on the power card could not be installed.

8.4.78 ALARM 80, Drive Initialized to Default Value

Cause

Parameter settings are initialized to default settings after a manual reset. To clear the alarm, reset the unit.

8.4.79 ALARM 81, CSIV Corrupt

Cause

The CSIV file has syntax errors.

8.4.80 ALARM 82, CSIV Parameter Error

Cause

CSIV failed to initialize a parameter.

8.4.81 ALARM 83, Illegal Option Combination

Cause

The mounted options are incompatible.

8.4.82 ALARM 84, No Safety Option

Cause

The safety option was removed without applying a general reset.

Troubleshooting

Reconnect the safety option.

8.4.83 ALARM 85, Dang Fail PB

Cause

PROFIBUS/PROFIsafe error.

8.4.84 ALARM 88, Option Detection

Cause

A change in the option layout is detected. *Parameter 14-89 Option Detection* is set to *[0] Frozen configuration* and the option layout has been changed.

Troubleshooting

- To apply the change, enable option layout changes in *parameter 14-89 Option Detection*.
- Alternatively, restore the correct option configuration.

8.4.85 WARNING 89, Mechanical Brake Sliding

Cause

The hoist brake monitor detects a motor speed exceeding 10 RPM.

8.4.86 ALARM 90, Feedback Monitor

Troubleshooting

- Check the connection to the encoder/resolver option and, if necessary, replace the VLT® Encoder Input MCB 102 or VLT® Resolver Input MCB 103.

8.4.87 ALARM 91, Analog Input 54 Wrong Settings

Troubleshooting

- Set switch S202 in position OFF (voltage input) when a KTY sensor is connected to analog input terminal 54.

8.4.88 ALARM 99, Locked Rotor

Cause

The rotor is blocked.

Troubleshooting

- Check if the motor shaft is locked.
- Check if the start current triggers the current limit set in *parameter 4-18 Current Limit*.
- Check if it increases the value in *parameter 30-23 Locked Rotor Detection Time [s]*.

8.4.89 WARNING/ALARM 104, Mixing Fan Fault

Cause

The fan is not operating. The fan monitor checks that the fan is spinning at power-up or whenever the mixing fan is turned on. The mixing fan fault can be configured as a warning or an alarm in *parameter 14-53 Fan Monitor*.

Troubleshooting

- Cycle power to the drive to determine if the warning/alarm returns.

8.4.90 WARNING/ALARM 122, Mot. Rotat. Unexp.

Cause

The drive performs a function that requires the motor to be at standstill, for example DC hold for PM motors.

8.4.91 WARNING 163, ATEX ETR Cur.Lim.Warning

Cause

The drive has run above the characteristic curve for more than 50 s. The warning is activated at 83% and deactivated at 85% of the allowed thermal overload.

8.4.92 ALARM 164, ATEX ETR Cur.Lim.Alarm

Cause

Running above the characteristic curve for more than 60 s within a period of 600 s activates the alarm, and the drive trips.

8.4.93 WARNING 165, ATEX ETR Freq.Lim.Warning

Cause

The drive has run for more than 50 s below the allowed minimum frequency (*parameter 1-98 ATEX ETR Interpol. Points Freq.*).

8.4.94 ALARM 166, ATEX ETR Freq.Lim.Alarm

The drive has run for more than 60 s (in a period of 600 s) below the allowed minimum frequency (*parameter 1-98 ATEX ETR Interpol. Points. Freq.*).

8.4.95 ALARM 244, Heat Sink Temperature

Cause

The maximum temperature of the heat sink has been exceeded. The temperature fault cannot reset until the temperature drops below the defined heat sink temperature. The trip and reset points are different based on the power size. This alarm is equivalent to *Alarm 29, Heat Sink Temp*.

Troubleshooting

Check for the following:

- Ambient temperature too high.
- Motor cables too long.
- Incorrect airflow clearance above or below the AC drive.
- Blocked airflow around the unit.
- Damaged heat sink fan.
- Dirty heat sink.

8.4.96 WARNING 251, New Typecode

Cause

The power card or other components have been replaced, and the typecode has changed.

8.4.97 ALARM 421, Temperature Fault

Cause

A fault caused by the on-board temperature sensor is detected on the fan power card.

Troubleshooting

- Check wiring.
- Check the on-board temperature sensor.
- Replace fan power card.

8.4.98 ALARM 423, FPC Updating

Cause

The alarm is generated when the fan power card reports it has an invalid PUD. The control card attempts to update the PUD. A subsequent alarm can result depending on the update. See *Alarm 424, FPC Update Successful* and *Alarm 425 FPC Update Failure*.

8.4.99 ALARM 424, FPC Update Successful

Cause

This alarm is generated when the control card has successfully updated the fan power card PUD.

Troubleshooting

- Press [Reset] to stop the alarm.

8.4.100 ALARM 425, FPC Update Failure

Cause

This alarm is generated after the control card failed to update the fan power card PUD.

Troubleshooting

- Check the fan power card wiring.
- Replace fan power card.
- Contact supplier.

8.4.101 ALARM 426, FPC Config

Cause

The number of found fan power cards does not match the number of configured fan power cards. See *parameter group 15-6* Option Ident* for the number of configured fan power cards.

Troubleshooting

- Check fan power card wiring.
- Replace fan power card.

8.4.102 ALARM 427, FPC Supply

Cause

Supply voltage fault (5 V, 24 V, or 48 V) on fan power card is detected.

Troubleshooting

- Check fan power card wiring.
- Replace fan power card.

8.5 Troubleshooting

Table 42: Troubleshooting

Symptom	Possible cause	Test	Solution
Display dark/No function	Missing input power.	Check for loose connections.	Check the input power source.
	Missing or open fuses.	See *Open power fuses* in this table for possible causes.	Follow the recommendations provided.
	No power to the LCP.	Check the LCP cable for proper connection or damage.	Replace the faulty LCP or connection cable.
	Short circuit on control voltage (terminal 12 or 50) or at control terminals.	Check the 24 V control voltage supply for terminal 12/13 to 20–39, or 10 V supply for terminals 50–55.	Wire the terminals properly.
	Incompatible LCP (LCP from VLT® 2800 or 5000/6000/8000/FCD or FCM).	–	Use only LCP 101 (P/N 130B1124) or LCP 102 (P/N. 130B1107).
	Wrong contrast setting.	–	To adjust the contrast, press [Status] + [▲]/[▼].
	Display (LCP) is defective.	Test using a different LCP.	Replace the faulty LCP or connection cable.
	Internal voltage supply fault or SMPS is defective.	–	Contact supplier.
Intermittent display	Overloaded supply (SMPS) due to improper control wiring or a fault within the AC drive.	To rule out a problem in the control wiring, disconnect all control wiring by removing the terminal blocks.	If the display stays lit, the problem is in the control wiring. Check the wiring for shorts or incorrect connections. If the display continues to cut out, follow the procedure for *Display dark\No function*.
Motor not running	Service switch open or missing motor connection.	–	Connect the motor and check the service switch.
	No mains power with 24 V DC option card.	–	Apply mains power.
	LCP stop.	–	Depending on the operating mode, press [Auto On] or [Hand On].
	Missing start signal (Standby).	–	Apply a valid start signal.
	Motor coast signal active (Coasting).	–	Apply 24 V on terminal 27 or program this terminal to *[0] No operation*.
	Wrong reference signal source.	Check reference signal: • Local • Remote or bus reference? • Preset reference active? • Terminal connection correct? • Scaling of terminals correct? • Reference signal available?	Program correct settings. Check *parameter 3-13 Reference Site*. Set preset reference active in *parameter group 3-1* References*. Check for correct wiring. Check scaling of terminals. Check reference signal.

Symptom	Possible cause	Test	Solution
Motor running in wrong direction	Motor rotation limit.	Check that *parameter 4-10 Motor Speed Direction* is programmed correctly.	Program correct settings.
	Active reversing signal.	Check if a reversing command is programmed for the terminal in *parameter group 5-1* Digital inputs*.	Deactivate reversing signal.
	Wrong motor phase connection.	–	Correct motor phase connection, or set *parameter 1-06 Clockwise Direction* to *[1] Inverse*.
Motor is not reaching maximum speed	Frequency limits set wrong.	Check output limits in *parameter 4-13 Motor Speed High Limit [RPM]*, *parameter 4-14 Motor Speed High Limit [Hz]*, and *parameter 4-19 Max Output Frequency*.	Program correct limits.
	Reference input signal not scaled correctly.	Check reference input signal scaling in *parameter group 6-0* Analog I/O mode* and *parameter group 3-1* References*.	Program correct settings.
Motor speed unstable	Possible incorrect parameter settings.	Check the settings of all motor parameters, including all motor compensation settings. For closed-loop operation, check PID settings.	Check settings in *parameter group 1-6* Load Depen. Setting*. For closed-loop operation, check settings in *parameter group 20-0* Feedback*.
Motor runs rough	Possible overmagnetization.	Check for incorrect motor settings in all motor parameters.	Check motor settings in *parameter groups 1-2* Motor data*, *1-3* Adv Motor Data*, and *1-5* Load Indep. Setting*.
Motor does not brake	Possible incorrect settings in the brake parameters. Ramp-down times may be too short.	Check brake parameters. Check ramp time settings.	Check *parameter groups 2-0* DC Brake* and *3-0* Reference Limits*.
Open power fuses	Phase-to-phase short.	Motor or panel has a short phase-to-phase. Check motor and panel phases for shorts.	Eliminate any shorts detected.
	Motor overload.	Motor is overloaded for the application.	Perform start-up test and verify that motor current is within specifications. If motor current is exceeding the nameplate full load current, the motor can run only with reduced load. Review the specifications for the application.
	Loose connections.	Perform pre-start-up check for loose connections.	Tighten loose connections.
Mains current imbalance greater than 3%	Problem with mains power (see *Alarm 4, Mains phase loss* description).	Rotate input power leads into the 1 position: A to B, B to C, C to A.	If imbalanced leg follows the wire, it is a power problem. Check the mains supply.
	Problem with the AC drive.	Rotate input power leads into the AC drive 1 position: A to B, B to C, C to A.	If the imbalanced leg stays on same input terminal, it is a problem with the AC drive. Contact the supplier.

Symptom	Possible cause	Test	Solution
Motor current imbalance greater than 3%	Problem with motor or motor wiring.	Rotate output motor cables 1 position: U to V, V to W, W to U.	If the imbalanced leg follows the wire, the problem is in the motor or motor wiring. Check motor and motor wiring.
	Problem with AC drive.	Rotate output motor cables 1 position: U to V, V to W, W to U.	If the imbalanced leg stays on same output terminal, it is a problem with the unit. Contact the supplier.
AC drive acceleration problems	Motor data are entered incorrectly.	If warnings or alarms occur, refer to the *Warnings and Alarms* section. Check that motor data are entered correctly.	Increase the ramp-up time in *parameter 3-41 Ramp 1 Ramp Up Time*. Increase current limit in *parameter 4-18 Current Limit*. Increase torque limit in *parameter 4-16 Torque Limit Motor Mode*.
AC drive deceleration problems	Motor data are entered incorrectly.	If warnings or alarms occur, refer to the *Warnings and Alarms* section. Check that motor data are entered correctly.	Increase the ramp-down time in *parameter 3-42 Ramp 1 Ramp Down Time*. Enable overvoltage control in *parameter 2-17 Over-voltage Control*.

9 Specifications

9.1 Electrical Data

9.1.1 Electrical Data, 380–500 V AC

Table 43: Electrical Data, Mains Supply 3x380–500 V AC

FC 302	N315		N355		N400	
High/normal overload High overload=150% or 160% torque for a duration of 60 s. Normal overload=110% torque for a duration of 60 s.	**HO**	**NO**	**HO**	**NO**	**HO**	**NO**
Typical shaft output at 400 V [kW]	315	355	355	400	400	450
Typical shaft output at 460 V [hp]	450	500	500	550	550	600
Typical shaft output at 500 V [kW]	355	400	400	500	500	530
Enclosure size	E1h/E3h		E1h/E3h		E1h/E3h	
Output current (3-phase)						
Continuous (at 400 V) [A]	600	658	658	745	695	800
Intermittent (60 s overload) (at 400 V) [A]	900	724	987	820	1043	880
Continuous (at 460/500 V) [A]	540	590	590	678	678	730
Intermittent (60 s overload) (at 460/500 V) [A]	810	649	885	746	1017	803
Continuous kVA (at 400 V) [kVA]	416	456	456	516	482	554
Continuous kVA (at 460 V) [kVA]	430	470	470	540	540	582
Continuous kVA (at 500 V) [kVA]	468	511	511	587	587	632
Maximum input current						
Continuous (at 400 V) [A]	578	634	634	718	670	771
Continuous (at 460/500 V) [A]	520	569	569	653	653	704
Maximum number and size of cables per phase (E1h)						
- Mains and motor without brake [mm^2 (AWG)]	5x240 (5x500 mcm)		5x240 (5x500 mcm)		5x240 (5x500 mcm)	
- Mains and motor with brake [mm^2 (AWG)]	4x240 (4x500 mcm)		4x240 (4x500 mcm)		4x240 (4x500 mcm)	
- Brake or regen [mm^2 (AWG)]	2x185 (2x350 mcm)		2x185 (2x350 mcm)		2x185 (2x350 mcm)	
Maximum number and size of cables per phase (E3h)						
- Mains and motor [mm^2 (AWG)]	6x240 (6x500 mcm)		6x240 (6x500 mcm)		6x240 (6x500 mcm)	
- Brake [mm^2 (AWG)]	2x185 (2x350 mcm)		2x185 (2x350 mcm)		2x185 (2x350 mcm)	
- Load share or regen [mm^2 (AWG)]	4x185 (4x350 mcm)		4x185 (4x350 mcm)		4x185 (4x350 mcm)	
Maximum external mains fuses [A] *(1)*	800		800		800	
Estimated power loss at 400 V [W] *(2) (3)*	6178	6928	6851	8036	7297	8783

FC 302	N315		N355		N400	
Estimated power loss at 460 V [W] [2] [3]	5322	5910	5846	6933	7240	7969
Efficiency [3]	0.98		0.98		0.98	
Output frequency [Hz]	0–590		0–590		0–590	
Heat sink overtemperature trip [°C (°F)]	110 (230)		110 (230)		110 (230)	
Control card overtemperature trip [°C (°F)]	80 (176)		80 (176)		80 (176)	
Power card overtemperature trip [°C (°F)]	85 (185)		85 (185)		85 (185)	
Fan power card overtemperature trip [°C (°F)]	85 (185)		85 (185)		85 (185)	
Active in-rush card overtemperature trip [°C (°F)]	85 (185)		85 (185)		85 (185)	

[1] *For fuse ratings, see 9.7 Fuses.*

[2] *Typical power loss is at normal conditions and expected to be within ±15% (tolerance relates to variety in voltage and cable conditions.) These values are based on a typical motor efficiency (IE/IE3 border line). Lower efficiency motors add to the power loss in the drive. Applies for dimensioning of drive cooling. If the switching frequency is higher than the default setting, the power losses can increase. LCP and typical control card power consumptions are included. For power loss data according to EN 50598-2, refer to http://ecos-mart.danfoss.com/#/app/intro. Options and customer load can add up to 30 W to the losses, though usually a fully loaded control card and options for slots A and B each add only 4 W.*

[3] *Measured using 5 m (16.4 ft) shielded motor cables at rated load and rated frequency. Efficiency measured at nominal current. For energy efficiency class, see 9.4 Ambient Conditions. For part load losses, see http://ecosmart.danfoss.com/#/app/intro.*

Table 44: Electrical Data, Mains Supply 3x380–500 V AC

FC 302	N450		N500	
High/normal overload High overload=150% or 160% torque for a duration of 60 s. Normal overload=110% torque for a duration of 60 s.	**HO**	**NO**	**HO**	**NO**
Typical shaft output at 400 V [kW]	450	500	500	560
Typical shaft output at 460 V [hp]	600	650	650	750
Typical shaft output at 500 V [kW]	530	560	560	630
Enclosure size	E2h/E4h		E2h/E4h	
Output current (3-phase)				
Continuous (at 400 V) [A]	800	880	880	990
Intermittent (60 s overload) (at 400 V) [A]	1200	968	1320	1089
Continuous (at 460/500 V) [A]	730	780	780	890
Intermittent (60 s overload) (at 460/500 V) [A]	1095	858	1170	979
Continuous kVA (at 400 V) [kVA]	554	610	610	686
Continuous kVA (at 460 V) [kVA]	582	621	621	709
Continuous kVA (at 500 V) [kVA]	632	675	675	771
Maximum input current				
Continuous (at 400 V) [A]	771	848	848	954
Continuous (at 460/500 V) [A]	704	752	752	858

FC 302	N450		N500	
Maximum number and size of cables per phase (E2h)				
- Mains and motor without brake [mm² (AWG)]	6x240 (6x500 mcm)		6x240 (6x500 mcm)	
- Mains and motor with brake [mm² (AWG)]	5x240 (4x500 mcm)		5x240 (4x500 mcm)	
- Brake or regen [mm² (AWG)]	2x185 (2x350 mcm)		2x185 (2x350 mcm)	
Maximum number and size of cables per phase (E4h)				
- Mains and motor [mm² (AWG)]	6x240 (6x500 mcm)		6x240 (6x500 mcm)	
- Brake [mm² (AWG)]	2x185 (2x350 mcm)		2x185 (2x350 mcm)	
- Load share or regen [mm² (AWG)]	4x185 (4x350 mcm)		4x185 (4x350 mcm)	
Maximum external mains fuses [A] (1)	1200		1200	
Estimated power loss at 400 V [W] (2) (3)	8352	9473	9449	11102
Estimated power loss at 460 V [W] (2) (3)	7182	7809	7771	9236
Efficiency (3)	0.98		0.98	
Output frequency [Hz]	0–590		0–590	
Heat sink overtemperature trip [°C (°F)]	110 (230)		100 (212)	
Control card overtemperature trip [°C (°F)]	80 (176)		80 (176)	
Power card overtemperature trip [°C (°F)]	85 (185)		85 (185)	
Fan power card overtemperature trip [°C (°F)]	85 (185)		85 (185)	
Active in-rush card overtemperature trip [°C (°F)]	85 (185)		85 (185)	

[1] *For fuse ratings, see 9.7 Fuses.*

[2] *Typical power loss is at normal conditions and expected to be within ±15% (tolerance relates to variety in voltage and cable conditions.) These values are based on a typical motor efficiency (IE/IE3 border line). Lower efficiency motors add to the power loss in the drive. Applies for dimensioning of drive cooling. If the switching frequency is higher than the default setting, the power losses can increase. LCP and typical control card power consumptions are included. For power loss data according to EN 50598-2, refer to http://ecos-mart.danfoss.com/#/app/intro. Options and customer load can add up to 30 W to the losses, though usually a fully loaded control card and options for slots A and B each add only 4 W.*

[3] *Measured using 5 m (16.4 ft) shielded motor cables at rated load and rated frequency. Efficiency measured at nominal current. For energy efficiency class, see 9.4 Ambient Conditions. For part load losses, see http://ecosmart.danfoss.com/#/app/intro.*

9.1.2 Electrical Data, 525–690 V AC

Table 45: Electrical Data, Mains Supply 3x525–690 V AC

FC 302	N355		N400		N500	
High/normal overload High overload=150% or 160% torque for a duration of 60 s. Normal overload=110% torque for a duration of 60 s.	**HO**	**NO**	**HO**	**NO**	**HO**	**NO**
Typical shaft output at 525 V [kW]	315	355	355	400	400	450
Typical shaft output at 575 V [hp]	400	450	400	500	500	600

FC 302	N355		N400		N500	
Typical shaft output at 690 V [kW]	355	450	400	500	500	560
Enclosure size	E1h/E3h		E1h/E3h		E1h/E3h	
Output current (3-phase)						
Continuous (at 525 V) [A]	395	470	429	523	523	596
Intermittent (60 s overload) (at 525 V) [A]	593	517	644	575	785	656
Continuous (at 575/690 V) [A]	380	450	410	500	500	570
Intermittent (60 s overload) (at 575/690 V) [A]	570	495	615	550	750	627
Continuous kVA (at 525 V) [kVA]	359	427	390	476	476	542
Continuous kVA (at 575 V) [kVA]	378	448	408	498	498	568
Continuous kVA (at 690 V) [kVA]	454	538	490	598	598	681
Maximum input current						
Continuous (at 525 V) [A]	381	453	413	504	504	574
Continuous (at 575/690 V) [A]	366	434	395	482	482	549
Maximum number and size of cables per phase (E1h)						
- Mains and motor without brake [mm^2 (AWG)]	5x240 (5x500 mcm)		5x240 (5x500 mcm)		5x240 (5x500 mcm)	
- Mains and motor with brake [mm^2 (AWG)]	4x240 (4x500 mcm)		4x240 (4x500 mcm)		4x240 (4x500 mcm)	
- Brake or regen [mm^2 (AWG)]	2x185 (2x350 mcm)		2x185 (2x350 mcm)		2x185 (2x350 mcm)	
Maximum number and size of cables per phase (E3h)						
- Mains and motor [mm^2 (AWG)]	6x240 (6x500 mcm)		6x240 (6x500 mcm)		6x240 (6x500 mcm)	
- Brake [mm^2 (AWG)]	2x185 (2x350 mcm)		2x185 (2x350 mcm)		2x185 (2x350 mcm)	
- Load share or regen [mm^2 (AWG)]	4x185 (4x350 mcm)		4x185 (4x350 mcm)		4x185 (4x350 mcm)	
Maximum external mains fuses [A] [1]	800		800		800	
Estimated power loss at 600 V [W] [2] [3]	4763	5758	5164	6516	6480	7629
Estimated power loss at 690 V [W] [2] [3]	4917	5935	5329	6711	6673	7846
Efficiency [3]	0.98		0.98		0.98	
Output frequency [Hz]	0–590		0–590		0–590	
Heat sink overtemperature trip [°C (°F)]	110 (230)		110 (230)		110 (230)	
Control card overtemperature trip [°C (°F)]	80 (176)		80 (176)		80 (176)	
Power card overtemperature trip [°C (°F)]	85 (185)		85 (185)		85 (185)	
Fan power card overtemperature trip [°C (°F)]	85 (185)		85 (185)		85 (185)	
Active in-rush card overtemperature trip [°C (°F)]	85 (185)		85 (185)		85 (185)	

[1] *For fuse ratings, see 9.7 Fuses.*

[2] *Typical power loss is at normal conditions and expected to be within ±15% (tolerance relates to variety in voltage and cable conditions.) These values are based on a typical motor efficiency (IE/IE3 border line). Lower efficiency motors add to the power loss in the drive. Applies for dimensioning of drive cooling. If the switching frequency is higher than the default*

setting, the power losses can increase. LCP and typical control card power consumptions are included. For power loss data according to EN 50598-2, refer to http://ecos-mart.danfoss.com/#/app/intro. Options and customer load can add up to 30 W to the losses, though usually a fully loaded control card and options for slots A and B each add only 4 W.

[3] *Measured using 5 m (16.4 ft) shielded motor cables at rated load and rated frequency. Efficiency measured at nominal current. For energy efficiency class, see* *9.4 Ambient Conditions**. For part load losses, see http://ecosmart.danfoss.com/#/app/intro.*

Table 46: Electrical Data, Mains Supply 3x525–690 V AC

FC 302	N560		N630		N710	
High/normal overload High overload=150% or 160% torque for a duration of 60 s. Normal overload=110% torque for a duration of 60 s.	**HO**	**NO**	**HO**	**NO**	**HO**	**NO**
Typical shaft output at 525 V [kW]	450	500	500	560	560	670
Typical shaft output at 575 V [hp]	600	650	650	750	750	950
Typical shaft output at 690 V [kW]	560	630	630	710	710	800
Enclosure size	E1h/E3h		E2h/E4h		E2h/E4h	
Output current (3-phase)						
Continuous (at 525 V) [A]	596	630	659	763	763	889
Intermittent (60 s overload) (at 525 V) [A]	894	693	989	839	1145	978
Continuous (at 575/690 V) [A]	570	630	630	730	730	850
Intermittent (60 s overload) (at 575/690 V) [A]	855	693	945	803	1095	935
Continuous kVA (at 525 V) [kVA]	542	573	599	694	694	808
Continuous kVA (at 575 V) [kVA]	568	627	627	727	727	847
Continuous kVA (at 690 V) [kVA]	681	753	753	872	872	1016
Maximum input current						
Continuous (at 525 V) [A]	574	607	635	735	735	857
Continuous (at 575/690 V) [A]	549	607	607	704	704	819
Maximum number and size of cables per phase (E1h/E2h)						
- Mains and motor without brake [mm^2 (AWG)]	5x240 (5x500 mcm)		6x240 (5x500 mcm)		6x240 (5x500 mcm)	
- Mains and motor with brake [mm^2 (AWG)]	4x240 (4x500 mcm)		5x240 (4x500 mcm)		5x240 (4x500 mcm)	
- Brake or regen [mm^2 (AWG)]	2x185 (2x350 mcm)		2x185 (2x350 mcm)		2x185 (2x350 mcm)	
Maximum number and size of cables per phase (E3h/E4h)						
- Mains and motor [mm^2 (AWG)]	6x240 (6x500 mcm)		6x240 (6x500 mcm)		6x240 (6x500 mcm)	
- Brake [mm^2 (AWG)]	2x185 (2x350 mcm)		2x185 (2x350 mcm)		2x185 (2x350 mcm)	
- Load share or regen [mm^2 (AWG)]	4x185 (4x350 mcm)		4x185 (4x350 mcm)		4x185 (4x350 mcm)	
Maximum external mains fuses [A] (1)	800		1200		1200	
Estimated power loss at 600 V [W] (2) (3)	7624	8676	8054	9709	9661	11848
Estimated power loss at 690 V [W] (2) (3)	7842	8915	8357	10059	10010	12253

FC 302	N560	N630	N710
Efficiency [3]	0.98	0.98	0.98
Output frequency [Hz]	0–590	0–590	0–590
Heat sink overtemperature trip [°C (°F)]	110 (230)	110 (230)	110 (230)
Control card overtemperature trip [°C (°F)]	80 (176)	80 (176)	80 (176)
Power card overtemperature trip [°C (°F)]	85 (185)	85 (185)	85 (185)
Fan power card overtemperature trip [°C (°F)]	85 (185)	85 (185)	85 (185)
Active in-rush card overtemperature trip [°C (°F)]	85 (185)	85 (185)	85 (185)

[1] *For fuse ratings, see 9.7 Fuses.*

[2] *Typical power loss is at normal conditions and expected to be within ±15% (tolerance relates to variety in voltage and cable conditions.) These values are based on a typical motor efficiency (IE/IE3 border line). Lower efficiency motors add to the power loss in the drive. Applies for dimensioning of drive cooling. If the switching frequency is higher than the default setting, the power losses can increase. LCP and typical control card power consumptions are included. For power loss data according to EN 50598-2, refer to http://ecos-mart.danfoss.com/#/app/intro. Options and customer load can add up to 30 W to the losses, though usually a fully loaded control card and options for slots A and B each add only 4 W.*

[3] *Measured using 5 m (16.4 ft) shielded motor cables at rated load and rated frequency. Efficiency measured at nominal current. For energy efficiency class, see 9.4 Ambient Conditions. For part load losses, see http://ecosmart.danfoss.com/#/app/intro.*

9.2 Mains Supply

The unit is suitable for use on a circuit capable of delivering not more than 100 kA short circuit current rating (SCCR) at 480/600 V.

Supply terminals	L1, L2, L3
Supply voltage [1]	380–480/500 V ±10%, 525–690 V ±10%
Supply frequency	50/60 Hz ±5%
Maximum imbalance temporary between mains phases	3.0% of rated supply voltage [2]
True power factor (λ)	≥0.9 nominal at rated load
Displacement power factor (cos Φ)	Near unity (>0.98)
Switching on the input supply L1, L2, and L3 (power-ups)	Maximum 1 time/2 minutes
Environment according to EN 60664-1	Overvoltage category III/pollution degree 2

[1] *Mains voltage low/mains drop-out: During low mains voltage or a mains drop-out, the drive continues until the DC-link voltage drops below the minimum stop level, which corresponds typically to 15% below the drive's lowest rated supply voltage. Power-up and full torque cannot be expected at mains voltage lower than 10% below the drive's lowest rated supply voltage.*

[2] *Calculations based on UL/IEC 61800-3.*

9.3 Motor Output and Torque Characteristics

9.3.1 Motor Output (U, V, W)

Voltage output	0–100% of supply voltage output
Output frequency	0–590 Hz [1]
Output frequency in flux mode	0–300 Hz
Switching on output	Unlimited

Ramp times	0.01–3600 s

[1] *Dependent on voltage and power.*

9.3.2 Torque Characteristics

The torque response time depends on application and load but as a rule, the torque step from 0 to reference is 4–5 x torque rise time.

Starting torque (constant torque)	Maximum 150% for 60 s once in 10 minutes. (1)
Overload torque (constant torque)	Maximum 150% for 60 s once in 10 minutes. (1)
Torque rise time in FLUX (for 5 kHz fsw)	1 ms
Torque rise time in VVC+ (independent of fsw)	10 ms

[1] *Percentage relates to the drive's nominal current.*

9.4 Ambient Conditions

Enclosure	IP20/Chassis, IP21/Type 1, IP54/Type 12
Vibration test (standard/ruggedized)	0.7 g/1.0 g
Relative humidty	5%-95% (IEC 721-3-3; Class 3K3 (non-condensing) during operation)
Aggressive environment (IEC 60068-2-43) H_2S test	Class Kd
Aggressive gases (IEC 60721-3-3)	Class 3C3
Test method according to IEC 60068-2-43	H2S (10 days)
Ambient temperature (at SFAVM switching mode)	
- with derating	Maximum 55° C (131° F) (1)
- with full output power of typical EFF2 motors (up to 90% output current)	Maximum 50° C (122° F) (1)
- at full continuous FC output current	Maximum 45° C (113° F) (1)
Minimum ambient temperature during full-scale operation	0 °C (32 °F)
Minimum ambient temperature at reduced speed performance	-10 °C (14 °F)
Temperature during storage/transport	-25 to +65/70 °C (-13 to +149/158 °F)
Maximum altitude above sea level without derating	1000 m (3280 ft)
Maximum altitude above sea level with derating	3000 m (9842 ft)
EMC standards, Emission	IEC/EN 61800-3
EMC standards, Immunity	IEC/EN 61800-3
Energy efficiency class	IE2 (2)

[1] *For more information, see the Derating section in the design guide.*

[2] *Determined according to IEC 61800-9-2 (EN 50598-2) at:*

- *Rated load.*
- *90% rated frequency.*
- *Switching frequency factory setting.*
- *Switching pattern factory setting.*

9.5 Cable Specifications

Maximum motor cable length, shielded	150 m (492 ft)
Maximum motor cable length, unshielded	300 m (984 ft)
Maximum cross-section to control terminals, rigid wire	1.5 mm^2/16 AWG
Maximum cross-section to control terminals, flexible cable	1 mm^2/18 AWG
Maximum cross-section to control terminals, cable with enclosed core	0.5 mm^2/20 AWG
Minimum cross-section to control terminals	0.25 mm^2/24 AWG

9.6 Control Input/Output and Control Data

9.6.1 Digital Inputs

All digital inputs are galvanically isolated from the supply voltage (PELV) and other high-voltage terminals.

Programmable digital inputs	4 (6)
Terminal number[1]	18, 19, 27, 29, 32, 33
Logic	PNP or NPN
Voltage level	0–24 V DC
Voltage level, logic 0 PNP	<5 V DC
Voltage level, logic 1, PNP	>10 V DC
Voltage level, logic 0 NPN	>19 V DC
Voltage level, logic 1 NPN	<14 V DC
Maximum voltage on input	28 V DC
Pulse frequency range	0–110 kHz
(Duty cycle) minimum pulse width	4.5 ms
Input resistance, R_i	Approximately 4 kΩ

[1] *Terminals 27 and 29 can also be programmed as output.*

9.6.2 STO Terminal 37

STO terminal 37 (terminal 37 is fixed PNP logic)

Voltage level	0–24 V DC
Voltage level, logic 0 PNP	<4 V DC
Voltage level, logic 1 PNP	>20 V DC
Maximum voltage on input	28 V DC
Typical input current at 24 V	50 mA rms
Typical input current at 20 V	60 mA rms
Input capacitance	400 nF

All digital inputs are galvanically isolated from the supply voltage (PELV) and other high-voltage terminals.

For further information about terminal 37 and Safe Torque Off, see the *VLT® FC Series- Safe Torque Off Operating Guide*.

When using a contactor with a DC coil inside with STO, it is important to make a return way for the current from the coil when turning it off. The return way can be created by using a freewheel diode (or, alternatively, a 30 V or 50 V MOV for quicker response time) across the coil. Typical contactors can be bought with this diode.

9.6.3 Analog Inputs

Number of analog inputs	2
Terminal number	53 (201), 54 (202)
Modes	Voltage or current
Mode select	Switch A53 (S201) and switch A54 (S202)
Voltage mode	Switch A53 (S201)/A54 (S202) = OFF (U)
Voltage level	-10 V to +10 V (scaleable)
Input resistance, R_i	Approximately 10 kΩ
Maximum voltage	±20 V
Current mode	Switch A53 (S201)/A54 (S202) = ON (I)
Current level	0/4 to 20 mA (scaleable)
Input resistance, R_i	Approximately 200 Ω
Maximum current	30 mA
Resolution for analog inputs	10 bit (+ sign)
Accuracy of analog inputs	Maximum error 0.5% of full scale
Bandwidth	100 Hz

The analog inputs are galvanically isolated from the supply voltage (PELV) and other high-voltage terminals.

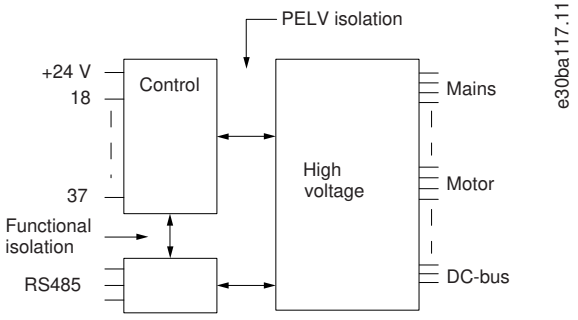

Illustration 52: PELV Isolation

9.6.4 Pulse/encoder Inputs

Programmable pulse/encoder inputs	2/1
Terminal number (pulse)	29 (1), 33
Terminal number (encoder)	32, 33 (2)
Maximum frequency at terminals 29, 32, 33	110 kHz (Push-pull driven)
Maximum frequency at terminals 29, 32, 33	5 kHz (Open collector)
Maximum frequency at terminals 29, 32, 33	4 Hz
Voltage level	See *Digital Inputs*.

Maximum voltage on input	28 V DC
Input resistance, R_i	Approximately 4 kΩ
Pulse input accuracy (0.1–1 kHz)	Maximum error: 0.1% of full scale
Encoder input accuracy (1–11 kHz)	Maximum error: 0.05% of full scale

[1] *FC 302 only.*

[2] *Encoder inputs: 32=A and 33=B.*

9.6.5 Analog Output

Number of programmable outputs	1
Terminal number	42
Current range at analog output	0/4 to 20 mA
Maximum load GND - analog output less than	500 Ω
Accuracy on analog output	Maximum error: 0.8% of full scale
Resolution of analog output	8 bit

The analog output is galvanically isolated from the supply voltage (PELV) and other high-voltage terminals.

9.6.6 Control Card, RS485 Serial Communication

Terminal number	68 (P, TX+, RX+), 69 (N, TX-, RX-)
Terminal number 61	Common for terminals 68 and 69

The RS485 serial communication circuit is galvanically isolated from the supply voltage (PELV).

9.6.7 Digital Outputs

Programmable digital/pulse outputs	2
Terminal number [1]	27, 29
Voltage level at digital/frequency output	0–24 V
Maximum output current (sink or source)	40 mA
Maximum load at frequency output	1 kΩ
Maximum capacitive load at frequency output	10 nF
Minimum output frequency at frequency output	0 Hz
Maximum output frequency at frequency output	32 kHz
Accuracy of frequency output	Maximum error: 0.1% of full scale
Resolution of frequency outputs	12 bit

[1] *Terminals 27 and 29 can also be programmed as input.*

The digital output is galvanically isolated from the supply voltage (PELV) and other high-voltage terminals.

9.6.8 Control Card, 24 V DC Output

Terminal number	12, 13
Output voltage	24 V +1, -3 V
Maximum load	200 mA

The 24 V DC supply is galvanically isolated from the supply voltage (PELV), but has the same potential as the analog and digital inputs and outputs.

9.6.9 Relay Outputs

Programmable relay outputs	2
Maximum wire cross-section to relay terminals	2.5 mm^2 (12 AWG)
Minimum wire cross-section to relay terminals	0.2 mm^2 (30 AWG)
Length of stripped wire	8 mm (0.3 in)
Relay 01 terminal number	1–3 (break), 1–2 (make)
Maximum terminal load (AC-1) [1] on 1–2 (NO) (Resistive load) [2] [3]	400 V AC, 2 A
Maximum terminal load (AC-15) [1] 1–2 (NO) (Inductive load @ cosφ 0.4)	240 V AC, 0.2 A
Maximum terminal load (DC-1) [1] on 1–2 (NO) (Resistive load)	80 V DC, 2 A
Maximum terminal load (DC-13) [1] on 1–2 (NO) (Inductive load)	24 V DC, 0.1 A
Maximum terminal load (AC-1) [1] on 1–3 (NC) (Resistive load)	240 V AC, 2 A
Maximum terminal load (AC-15) [1] 1–3 (NC) (Inductive load @ cosφ 0.4)	240 V AC, 0.2 A
Maximum terminal load (DC-1) [1] on 1–3 (NC) (Resistive load)	50 V DC, 2 A
Maximum terminal load (DC-13) [1] on 1–3 (NC) (Inductive load)	24 V DC, 0.1 A
Minimum terminal load on 1–3 (NC), 1–2 (NO)	24 V DC 10 mA, 24 V AC 2 mA
Environment according to EN 60664-1	Overvoltage category III/pollution degree 2
Relay 02 terminal number	4–6 (break), 4–5 (make)
Maximum terminal load (AC-1) [1] on 4–5 (NO) (Resistive load) [2] [3]	400 V AC, 2 A
Maximum terminal load (AC-15) [1] 4–5 (NO) (Inductive load @ cosφ 0.4)	240 V AC, 0.2 A
Maximum terminal load (DC-1) [1] on 4–5 (NO) (Resistive load)	80 V DC, 2 A
Maximum terminal load (DC-13) [1] on 4–5 (NO) (Inductive load)	24 V DC, 0.1 A
Maximum terminal load (AC-1) [1] on 4–6 (NC) (Resistive load)	240 V AC, 2 A
Maximum terminal load (AC-15) [1] 4–6 (NC) (Inductive load @ cosφ 0.4)	240 V AC, 0.2 A
Maximum terminal load (DC-1) [1] on 4–6 (NC) (Resistive load)	50 V DC, 2 A
Maximum terminal load (DC-13) [1] on 4–6 (NC) (Inductive load)	24 V DC, 0.1 A
Minimum terminal load on 4–6 (NC), 4–5 (NO)	24 V DC 10 mA, 24 V AC 2 mA
Environment according to EN 60664-1	Overvoltage category III/pollution degree 2

[1] *IEC 60947 parts 4 and 5.*

[2] *Overvoltage Category II*

[3] *UL applications 300 V AC 2 A.*

The relay contacts are galvanically isolated from the rest of the circuit by reinforced isolation (PELV).

9.6.10 Control Card, +10 V DC Output

Terminal number	50
Output voltage	10.5 V ±0.5 V
Maximum load	25 mA

The 10 V DC supply is galvanically isolated from the supply voltage (PELV) and other high-voltage terminals.

9.6.11 Control Characteristics

Resolution of output frequency at 0–1000 Hz	±0.003 Hz
Repeat accuracy of precise start/stop (terminals 18, 19)	≤±0.1 ms
System response time (terminals 18, 19, 27, 29, 32, 33)	≤2 ms
Speed control range (open loop)	1:100 of synchronous speed
Speed control range (closed loop)	1:1000 of synchronous speed
Speed accuracy (open loop)	30–4000 RPM: Error ±8 RPM
Speed accuracy (closed loop), depending on resolution of feedback device	0–6000 RPM: Error ±0.15 RPM
Torque control accuracy (speed feedback)	Maximum error ±5% of rated torque

All control characteristics are based on a 4-pole asynchronous motor.

9.6.12 Control Card Performance

Scan interval	5 ms

9.6.13 Control Card, USB Serial Communication

USB standard	1.1 (full speed) [1]
USB plug	USB type B plug [2] [3]

[1] *Connection to PC is carried out via a standard host/device USB cable.*

[2] *The USB connection is galvanically isolated from the supply voltage (PELV) and other high-voltage terminals.*

[3] *The USB connection is not galvanically isolated from ground. Use only isolated laptop/PC as connection to the USB connector on the drive or an isolated USB cable/converter.*

9.7 Fuses

Fuses installed on the supply side ensure that if a component breakdown (first fault) occurs inside the drive, any potential damage is contained inside the drive enclosure. To ensure compliance with EN 50178, use identical Bussmann fuses as replacements. Refer to table 47.

NOTICE

IEC 60364 (CE) and NEC 2009 (UL) COMPLIANCE

Drives without supply side fuses do not meet IEC 60364 (CE) and NEC 2009 (UL) compliant installation standards.

- Install specified fuses on the supply side of the installation.

Table 47: Fuse Options

Input voltage (V)	Model	Bussmann part number
380–500	N315–N355	170M6014
380–500	N400–N500	170M7309
525–690	All	170M7342

The fuses listed in table 47 are suitable for use on a circuit capable of delivering 100000 A_{rms} (symmetrical), depending on the drive voltage rating. With the proper fusing, the drive short-circuit current rating (SCCR) is 100000 A_{rms}. E1h and E2h drives are supplied with internal drive fusing to meet the 100 kA SCCR. E3h and E4h drives must be fitted with Type aR fuses to meet the 100 kA SCCR.

NOTICE

DISCONNECT SWITCH SCCR REQUIREMENTS

All units ordered and supplied with a factory-installed disconnect switch require Class L branch circuit fusing to meet the 100 kA SCCR for the drive.

- If a circuit breaker is used, the SCCR rating is 42 kA. The input voltage and power rating of the drive determines the specific Class L fuse. The input voltage and power rating are found on the product nameplate.

Table 48: Disconnect Switch SCCR Requirements

Input voltage (V)	Model	Short circuit rating (A)	Required protection
380–500	N315–N400	42000	Circuit breaker
		100000	Class L fuse, 800 A
380–500	N450–N500	42000	Circuit breaker
		100000	Class L fuse, 1200 A
525–690	N355–N560	42000	Circuit breaker
		100000	Class L fuse, 800 A
525–690	N630–N710	42000	Circuit breaker
		100000	Class L fuse, 1200 A

9.8 Enclosure Dimensions

9.8.1 E1h Exterior Dimensions

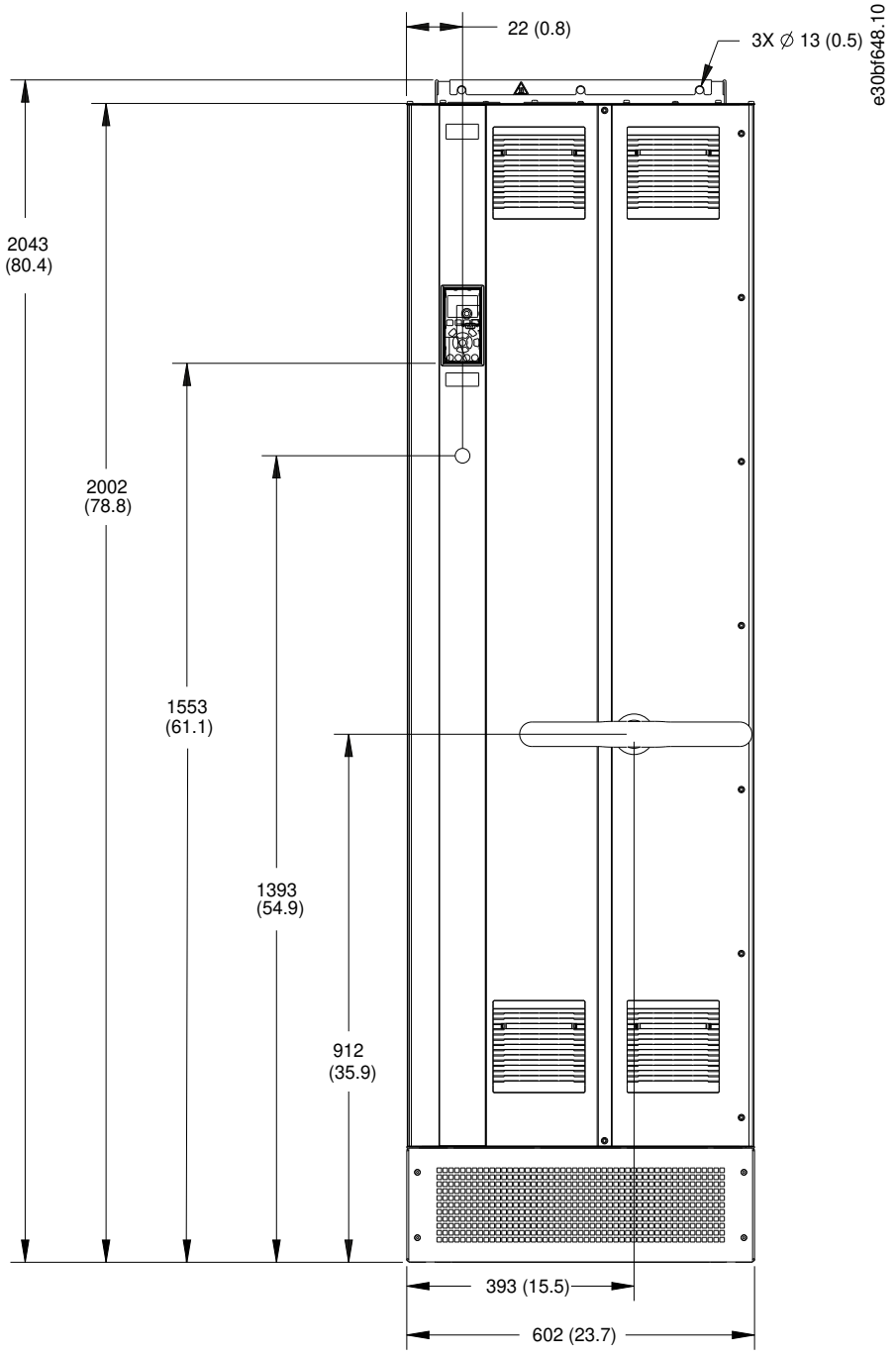

Illustration 53: Front View of E1h

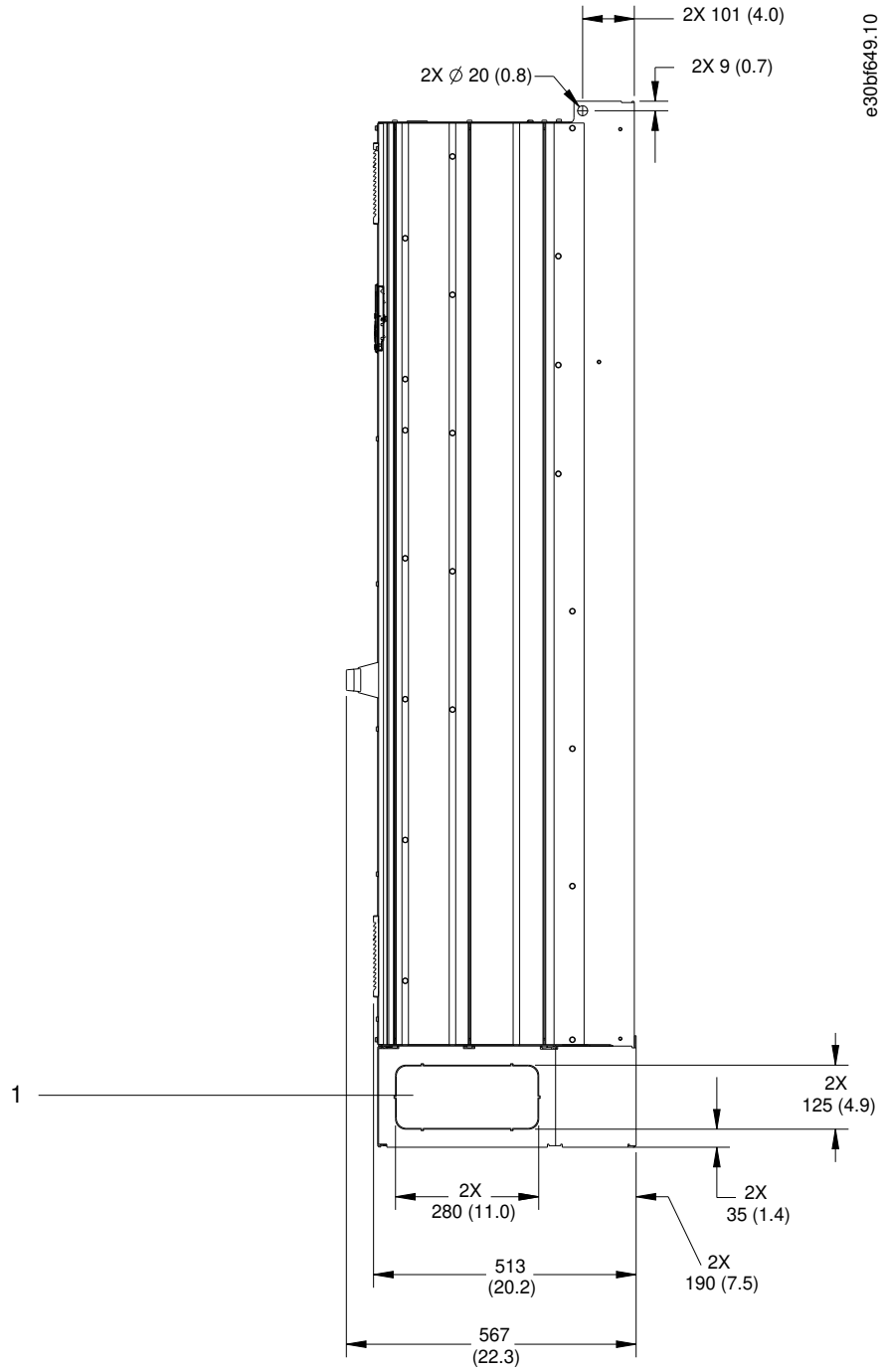

1	Knockout panel

Illustration 54: Side View of E1h

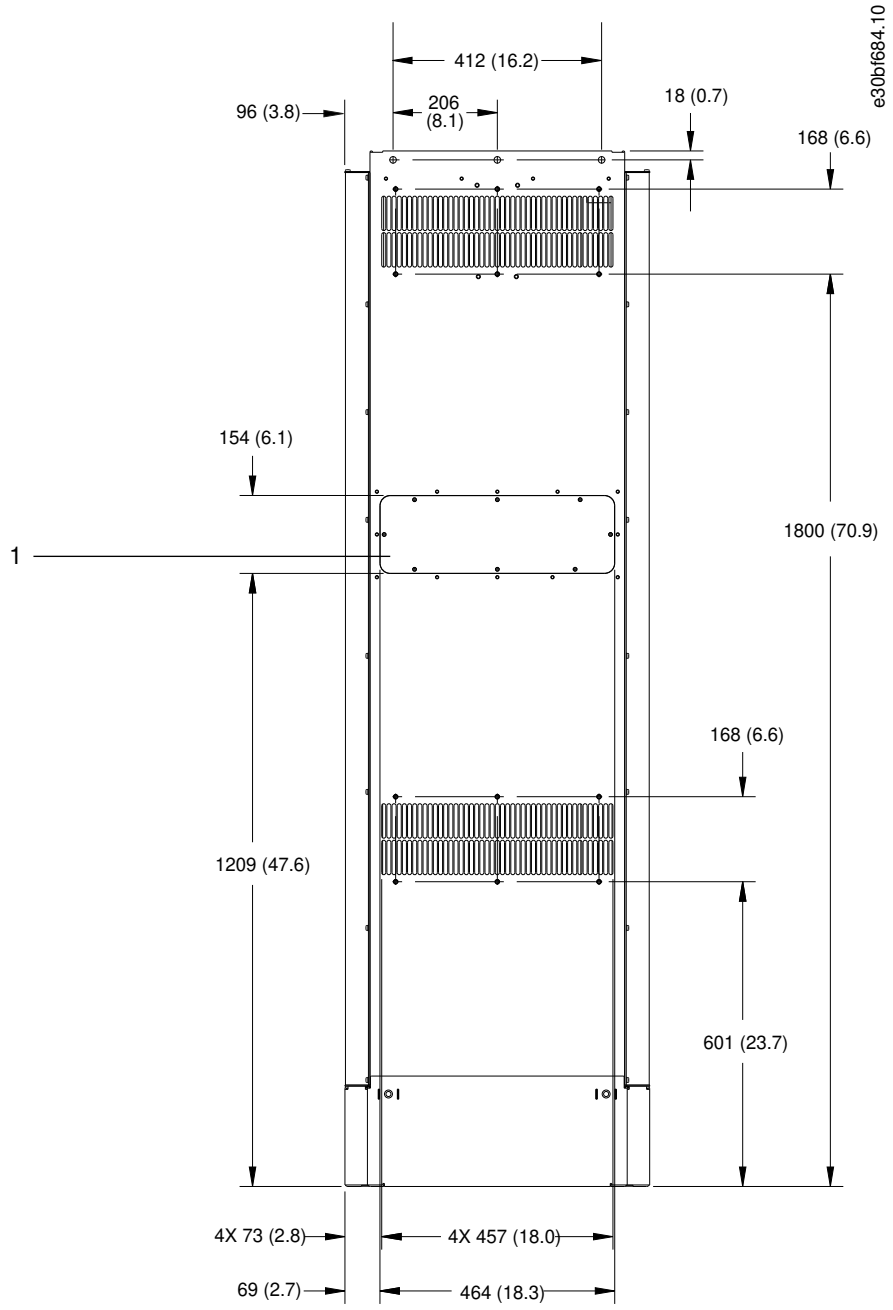

1	Heat sink access panel (optional)

Illustration 55: Back View of E1h

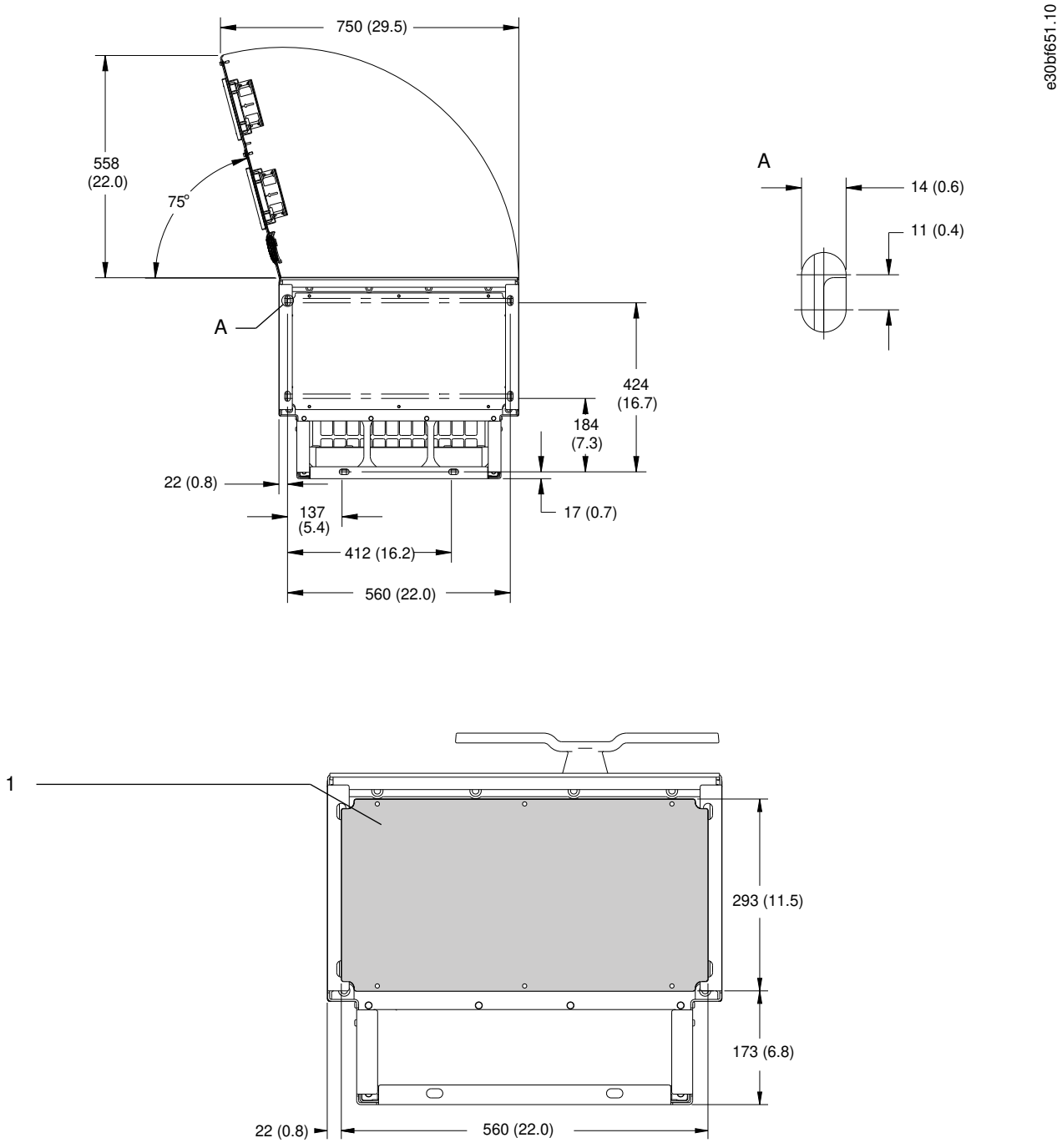

1	Cable entry plate

Illustration 56: Door Clearance and Cable Entry Plate Dimensions for E1h

9.8.2 E2h Exterior Dimensions

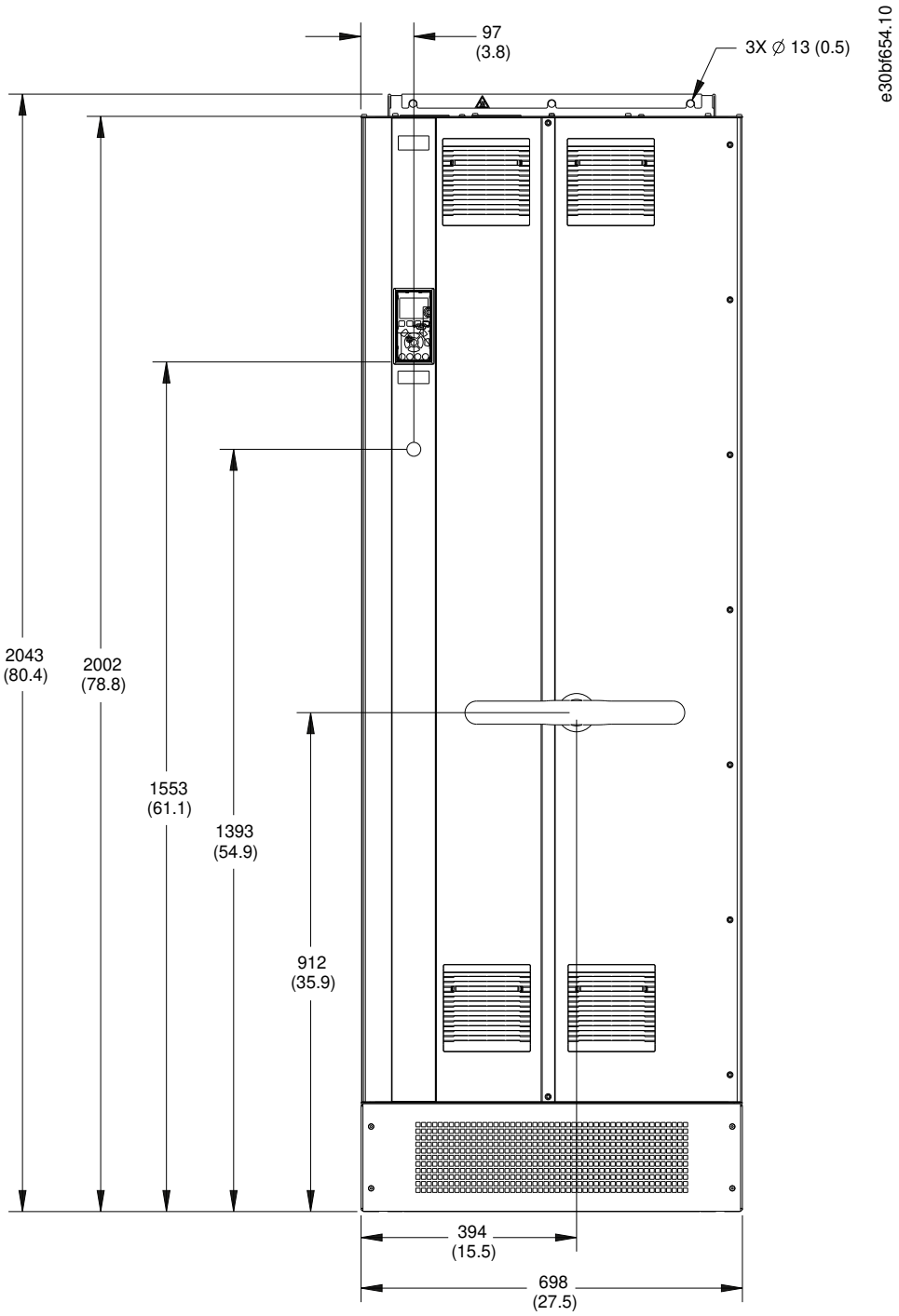

Illustration 57: Front View of E2h

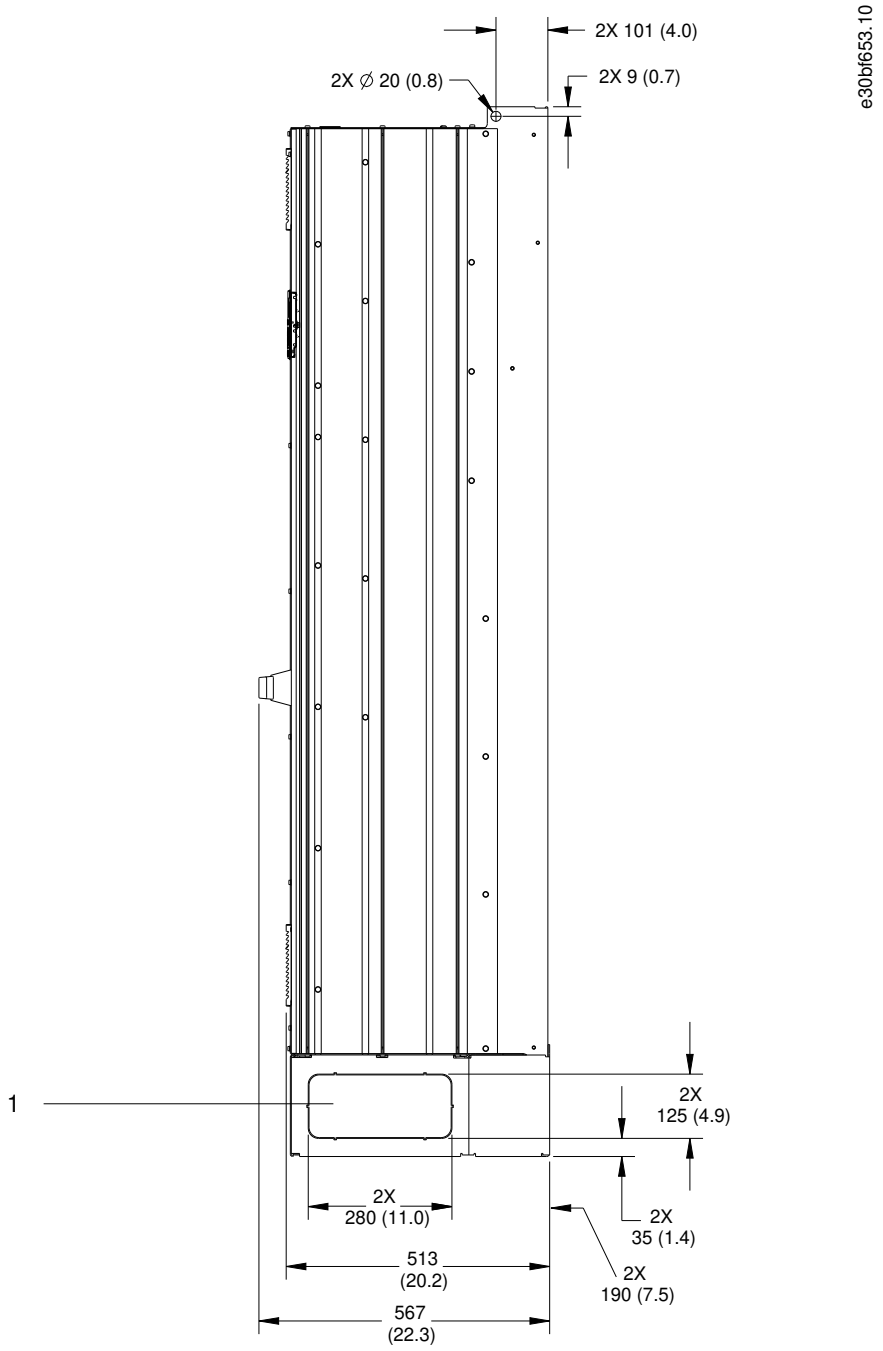

1	Knockout panel

Illustration 58: Side View of E2h

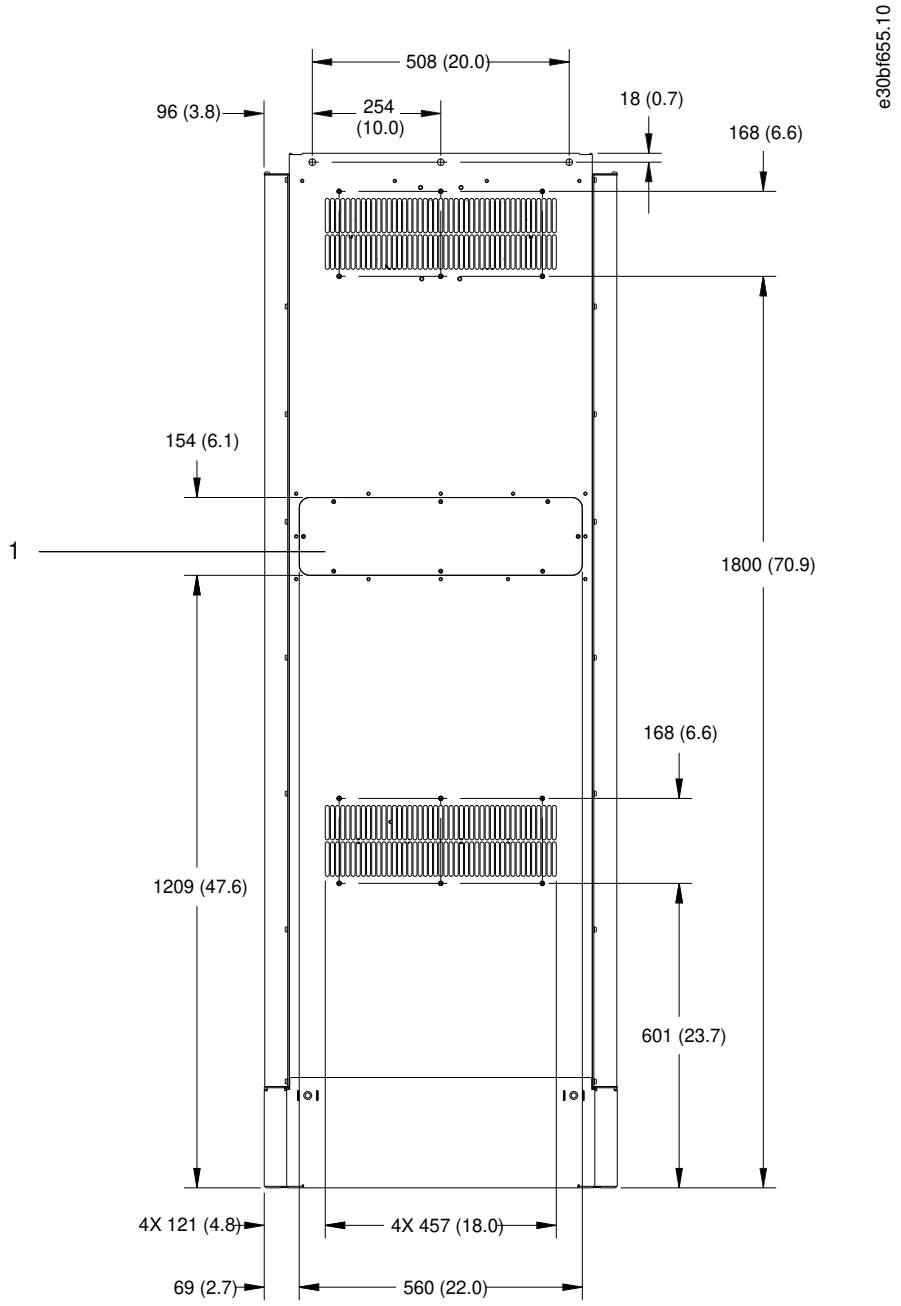

1	Heat sink access panel (optional)

Illustration 59: Back View of E2h

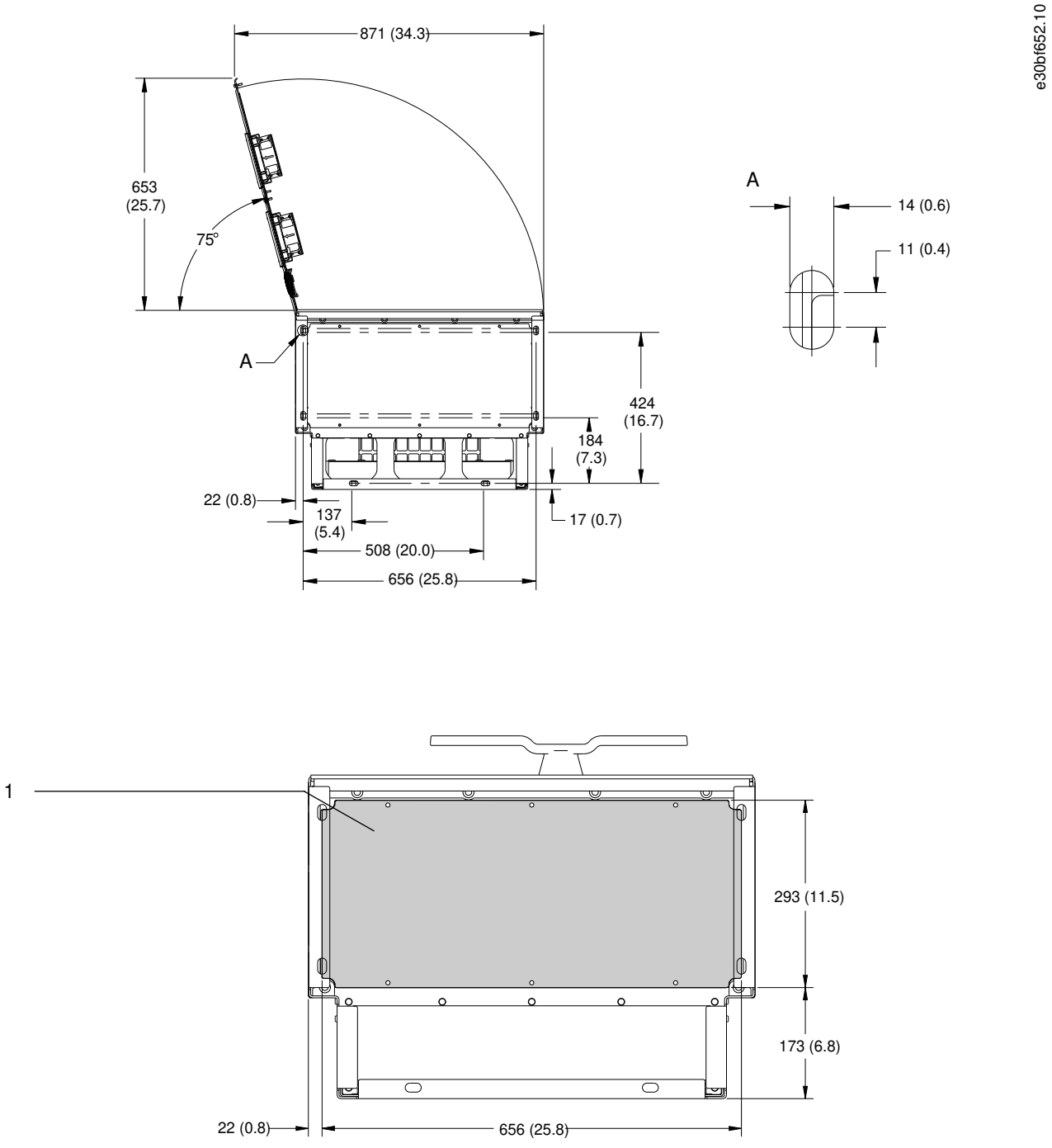

1	Cable entry plate

Illustration 60: Door Clearance and Cable Entry Plate Dimensions for E2h

9.8.3 E3h Exterior Dimensions

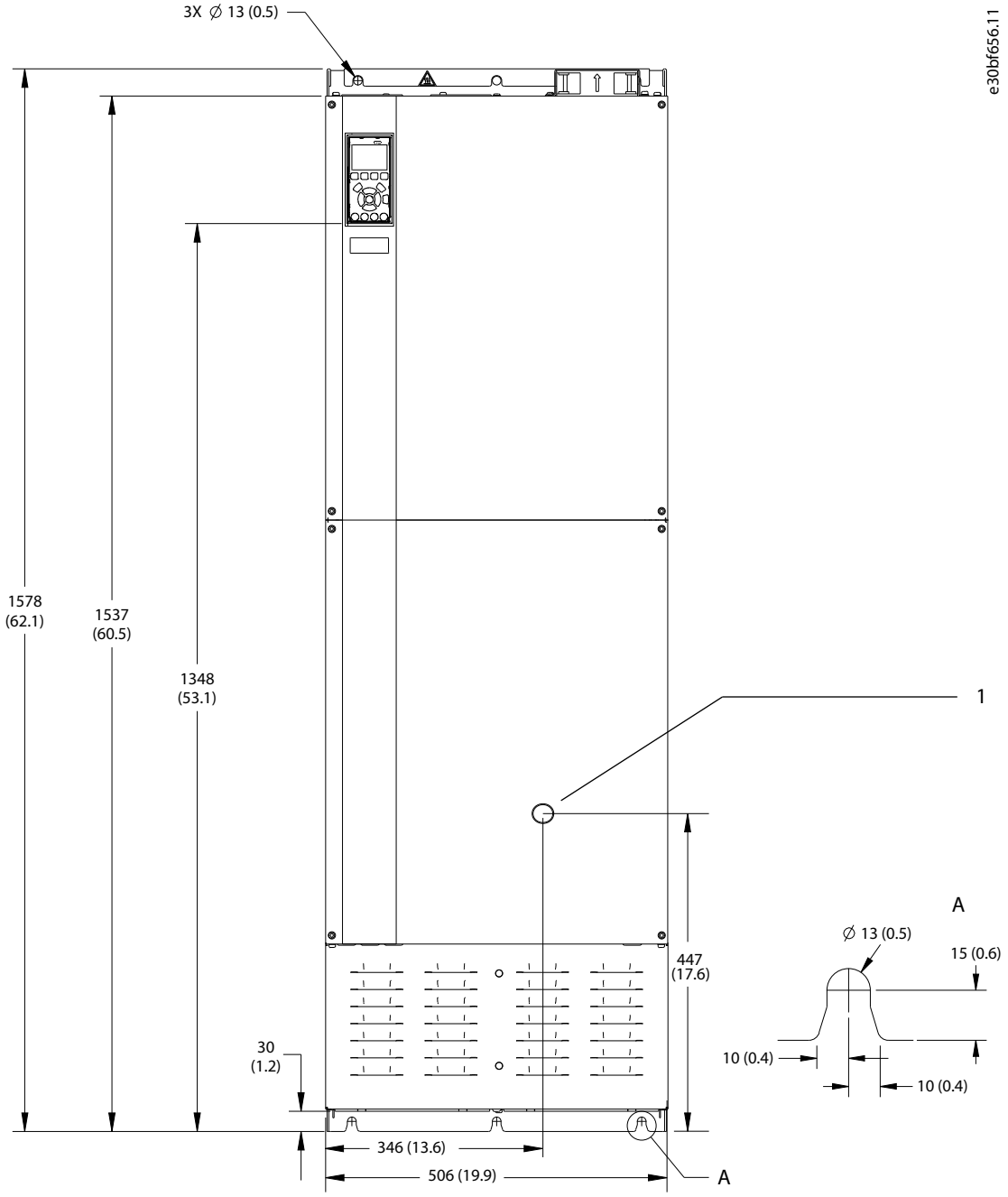

1	Disconnect option only

Illustration 61: Front View of E3h

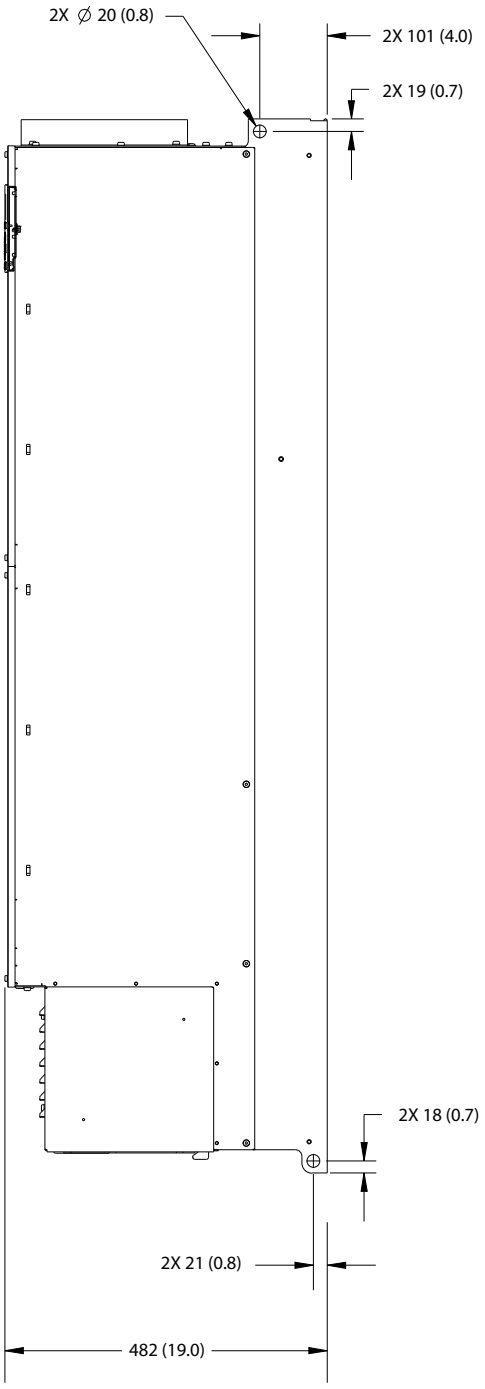

Illustration 62: Side View of E3h

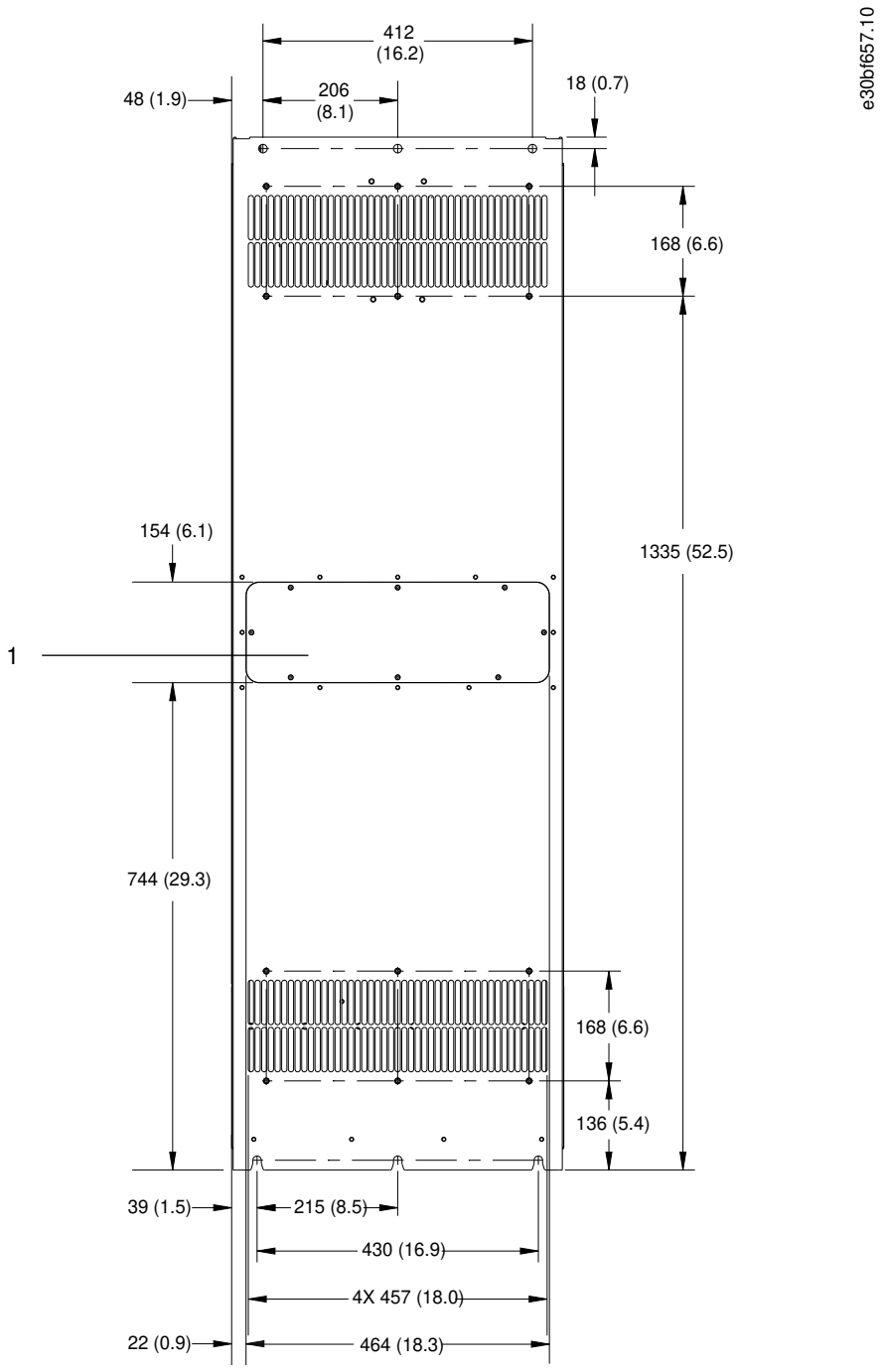

1	Heat sink access panel (optional)

Illustration 63: Back View of E3h

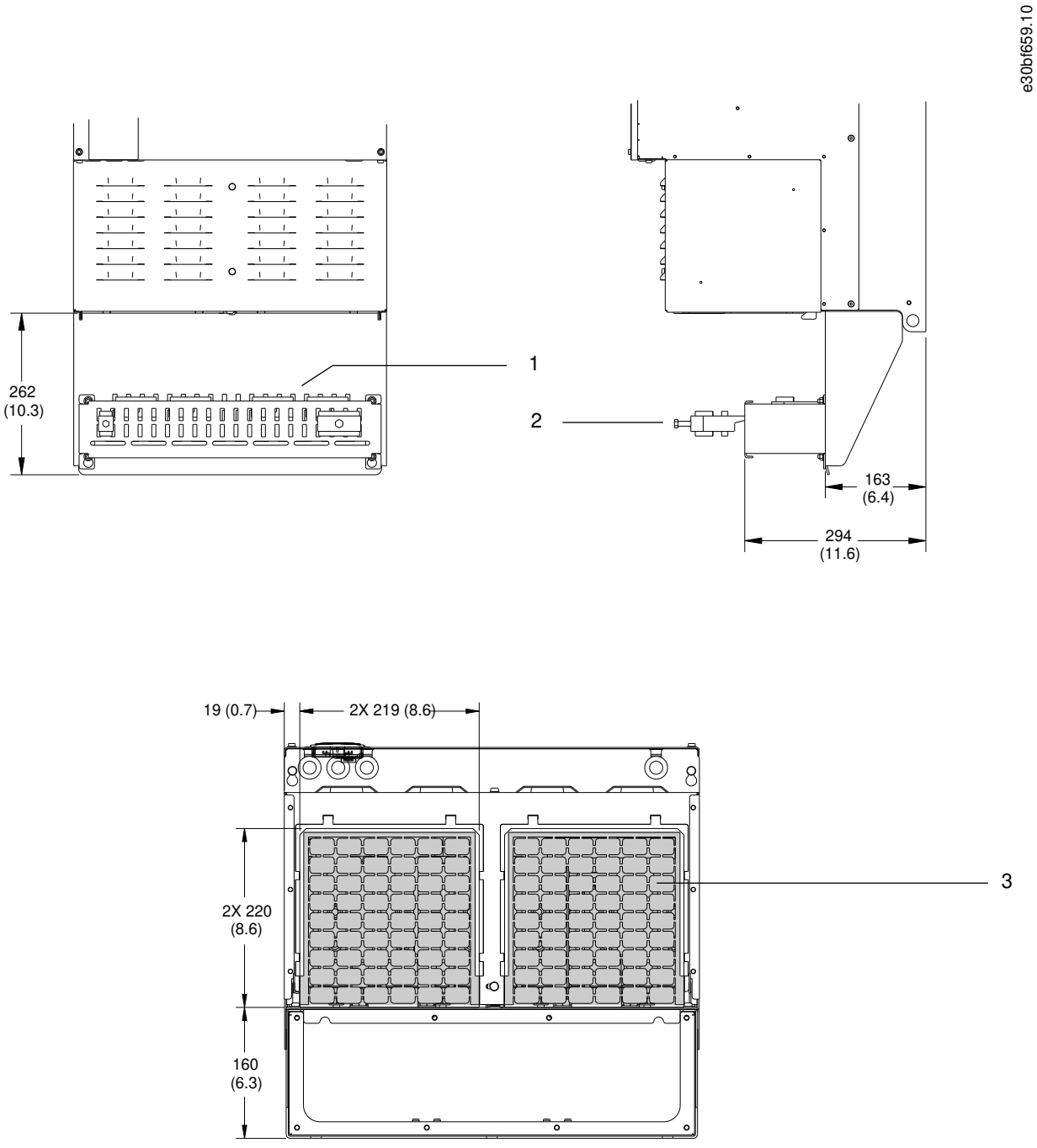

1 RFI shield termination (standard with RFI option)	**2** Cable/EMC clamp
3 Cable entry plate	

Illustration 64: RFI Shield Termination and Cable Entry Plate Dimensions for E3h

9.8.4 E4h Exterior Dimensions

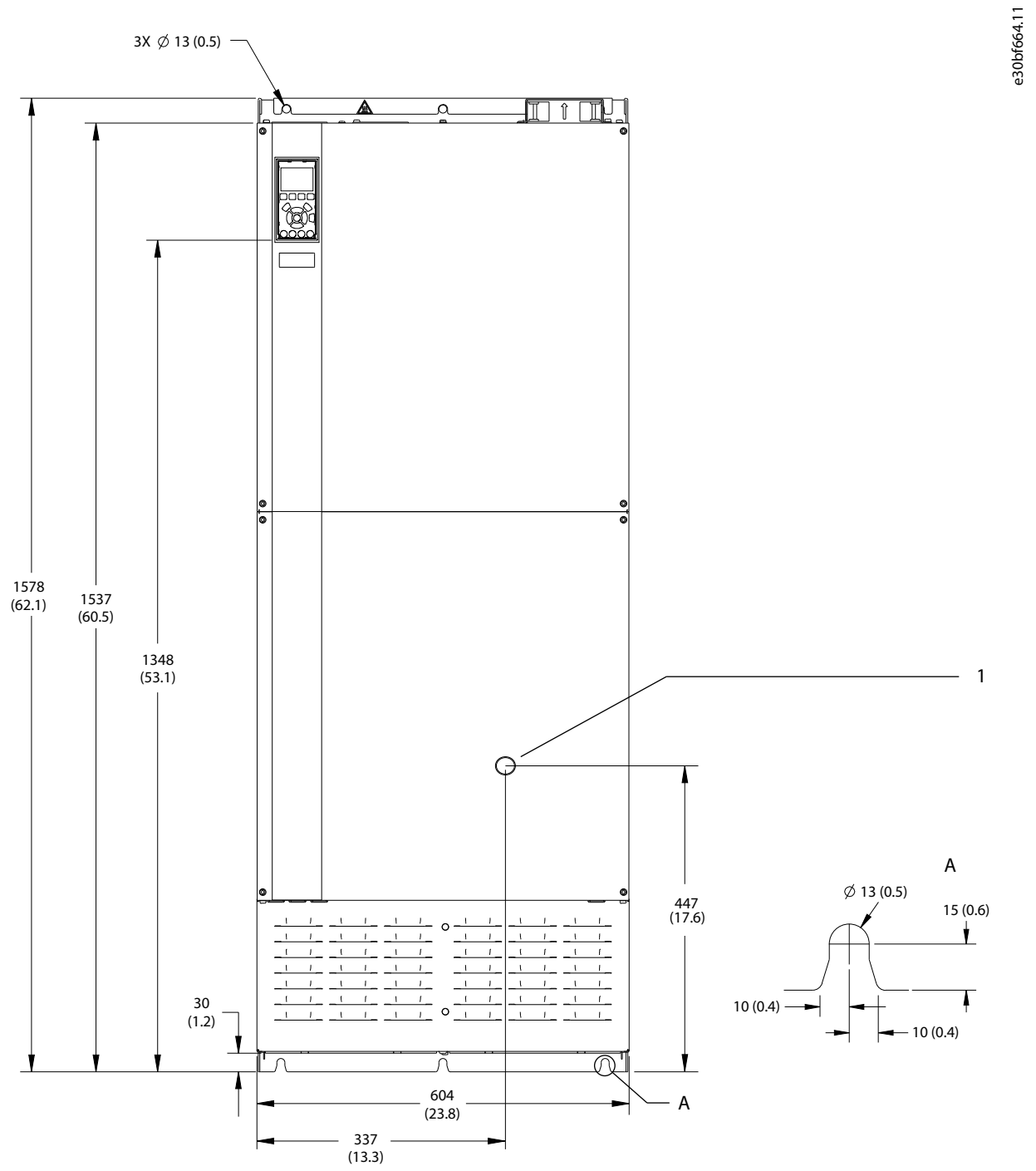

1	Disconnect option only

Illustration 65: Front View of E4h

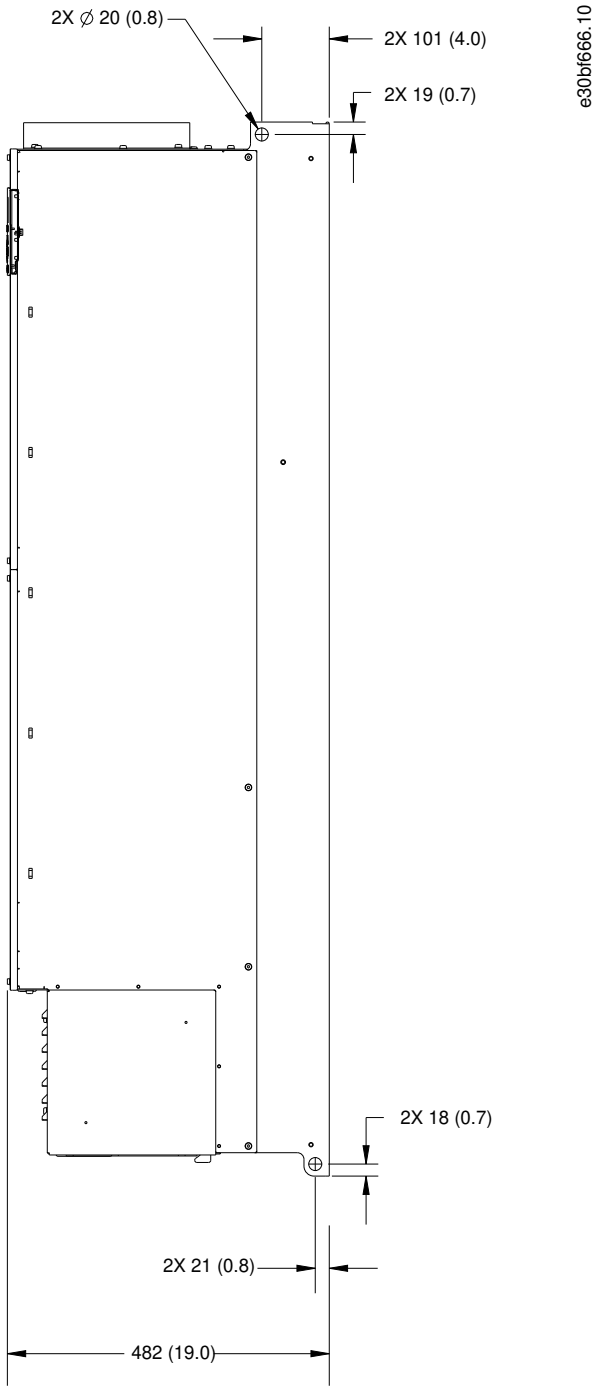

Illustration 66: Side View of E4h

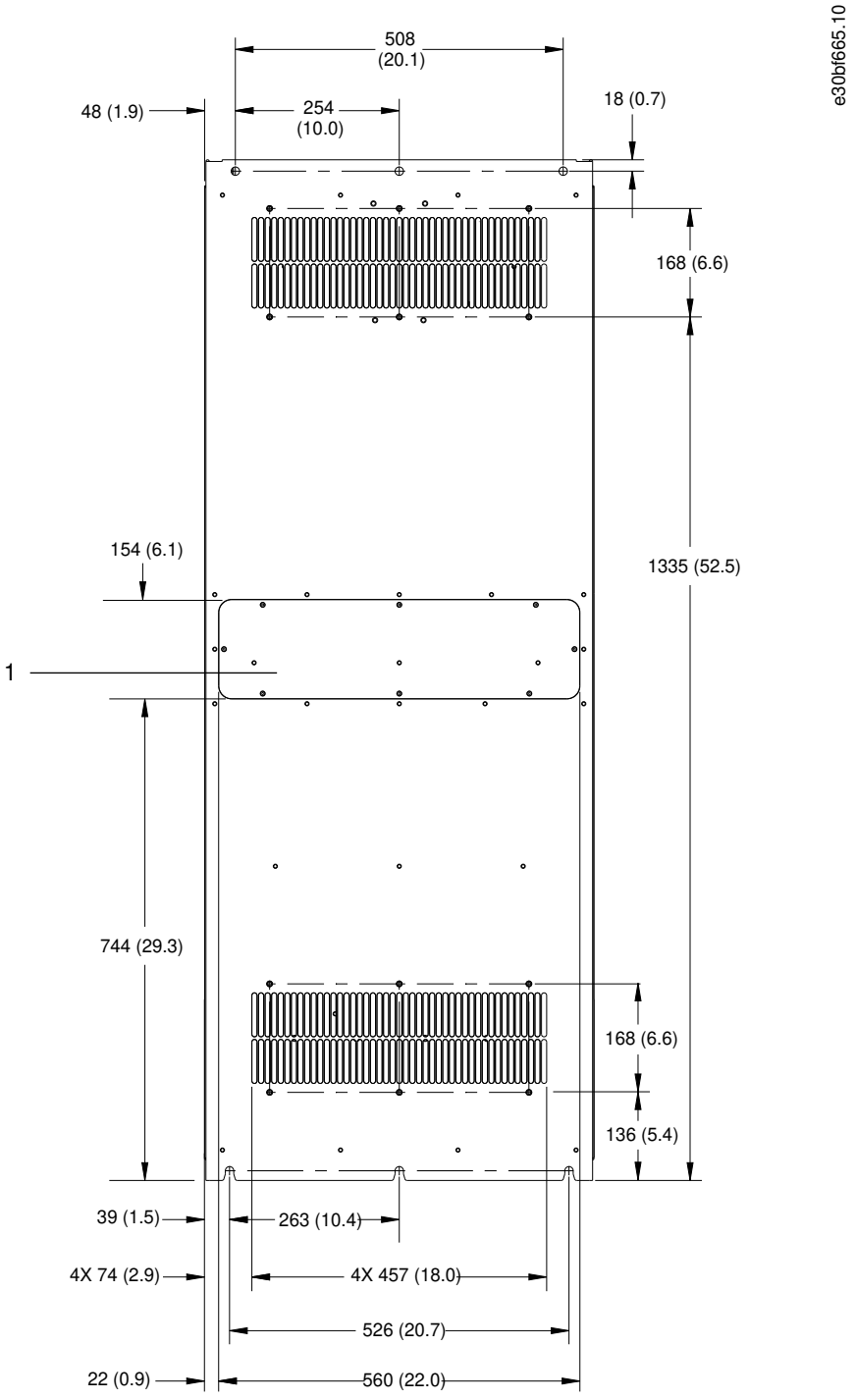

1	Heat sink access panel (optional)

Illustration 67: Back View of E4h

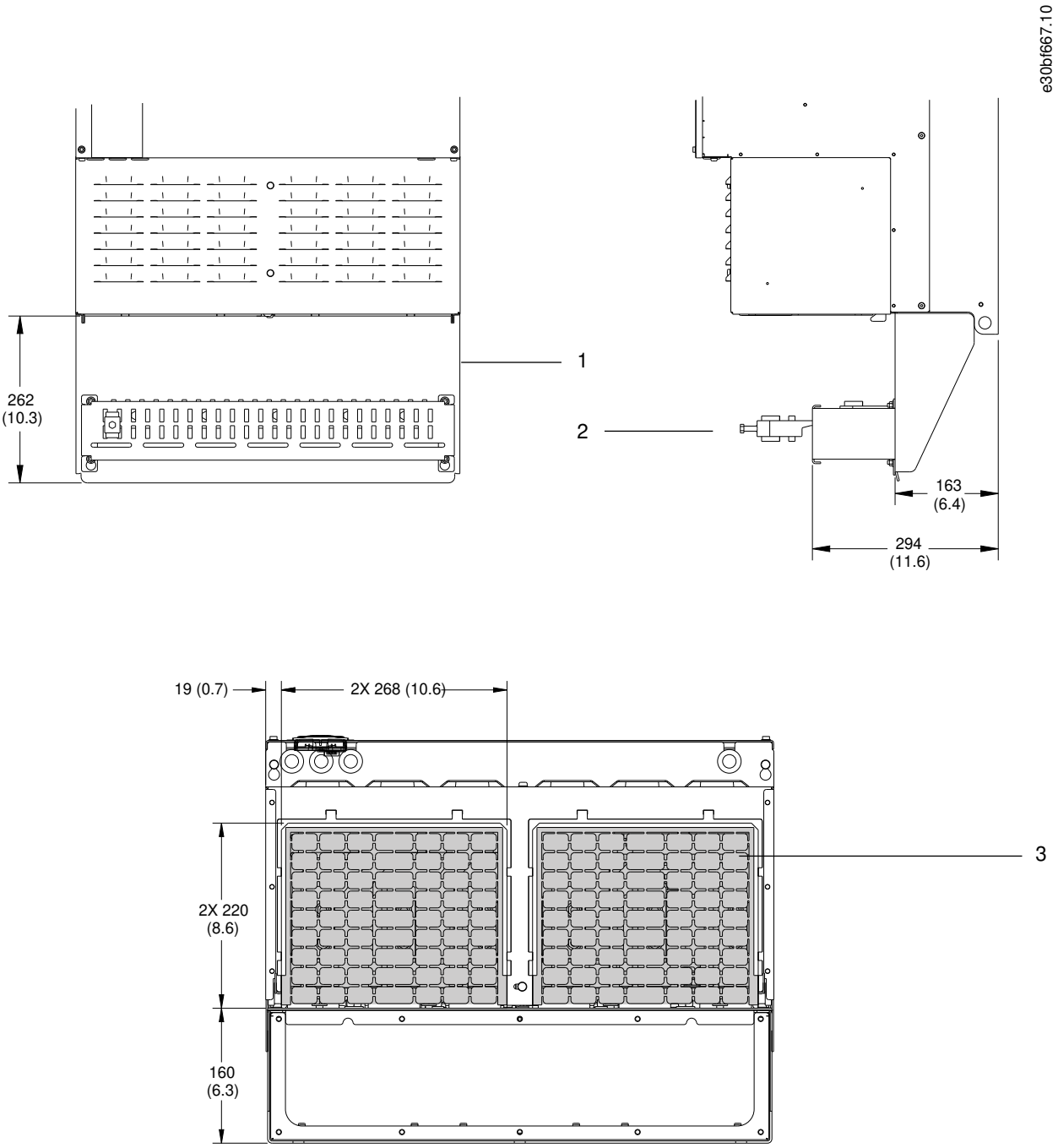

1 RFI shield termination (standard with RFI option)	**2** Cable/EMC clamp
3 Cable entry plate	

Illustration 68: RFI Shield Termination and Cable Entry Plate Dimensions for E4h

9.9 Enclosure Airflow

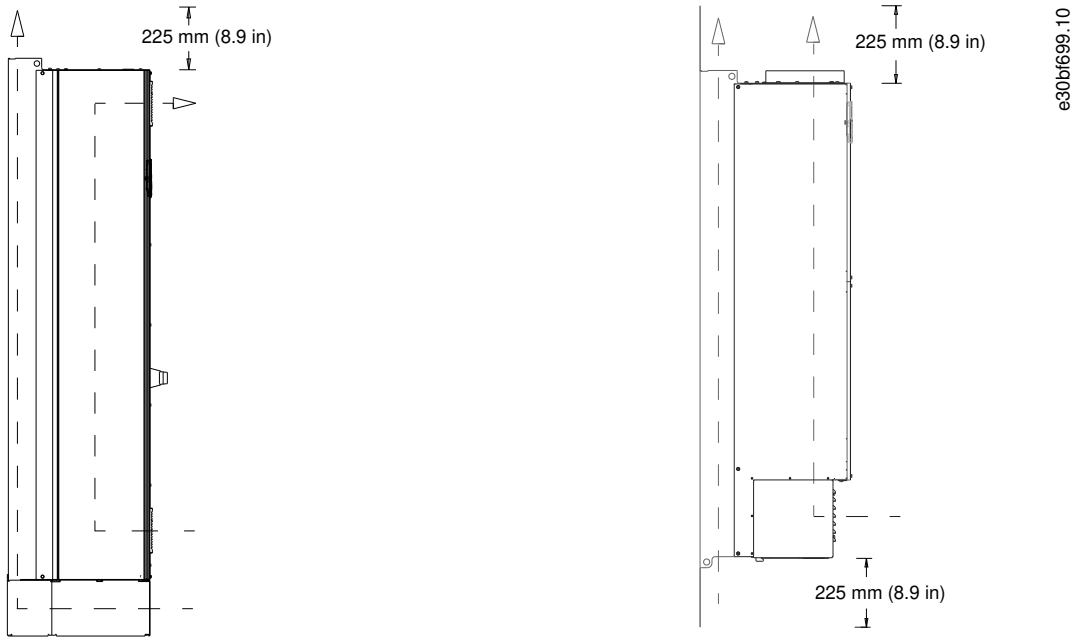

Illustration 69: Airflow for E1h/E2h (Left) and E3h/E4h (Right)

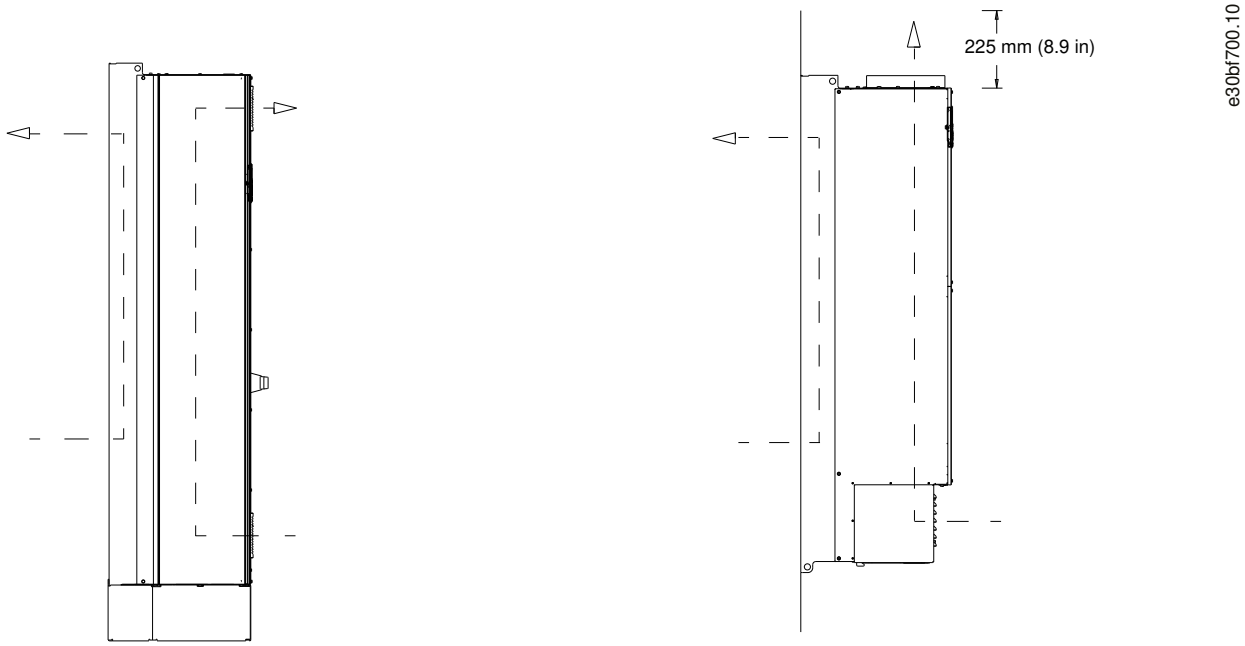

Illustration 70: Airflow Using Back-wall Cooling Kits on E1h/E2h (Left) and E3h/E4h (Right)

9.10 Fastener Torque Ratings

Apply the correct torque when tightening fasteners in the locations that are listed in table 49. Too low or too high torque when fastening an electrical connection results in a bad electrical connection. To ensure correct torque, use a torque wrench.

Table 49: Fastener Torque Ratings

Location	Bolt size	Torque [Nm (in-lb)]
Mains terminals	M10/M12	19 (168)/37 (335)
Motor terminals	M10/M12	19 (168)/37 (335)
Ground terminals	M8/M10	9.6 (84)/19.1 (169)
Brake terminals	M8	9.6 (84)
Load sharing terminals	M10/M12	19 (168)/37 (335)
Regen terminals (Enclosures E1h/E2h)	M8	9.6 (84)
Regen terminals (Enclosures E3h/E4h)	M10/M12	19 (168)/37 (335)
Relay terminals	–	0.5 (4)
Door/panel cover	M5	2.3 (20)
Cable entry plate	M5	2.3 (20)
Heat sink access panel	M5	2.3 (20)
Serial communication cover	M5	2.3 (20)

10 Appendix

10.1 Conventions

- Numbered lists indicate procedures.
- Bullet lists indicate other information and description of illustrations.
- Italicized text indicates:
  - Cross reference.
  - Link.
  - Footnote.
  - Parameter name.
  - Parameter group name.
  - Parameter option.
- All dimensions are in mm (inch).

10.2 Abbreviations

Table 50: Abbreviations, Acronyms, and Symbols

Term	Definition
°C	Degrees Celsius
°F	Degrees Fahrenheit
Ω	Ohm
AC	Alternating current
AEO	Automatic energy optimization
ACP	Application control processor
AMA	Automatic motor adaptation
AWG	American wire gauge
CPU	Central processing unit
CSIV	Customer-specific initialization values
CT	Current transformer
DC	Direct current
DVM	Digital voltmeter
EEPROM	Electrically erasable programmable read-only memory
EMC	Electromagnetic compatibility
EMI	Electromagnetic interference
ESD	Electrostatic discharge
ETR	Electronic thermal relay
$f_{M,N}$	Nominal motor frequency
FPC	Fan power card

Term	Definition
HF	High frequency
HVAC	Heating, ventilation, and air conditioning
Hz	Hertz
I_{LIM}	Current limit
I_{INV}	Rated inverter output current
$I_{M,N}$	Nominal motor current
$I_{VLT,MAX}$	Maximum output current
$I_{VLT,N}$	Rated output current supplied by the drive
IEC	International Electrotechnical Commission
IGBT	Insulated-gate bipolar transistor
I/O	Input/output
IP	Ingress protection
kHz	Kilohertz
kW	Kilowatt
L_d	Motor d-axis inductance
L_q	Motor q-axis inductance
LC	Inductor-capacitor
LCP	Local control panel
LED	Light-emitting diode
LOP	Local operation pad
mA	Milliamp
MCB	Miniature circuit breakers
MCCB	Molded-case circuit breaker
MCO	Motion control option
MCP	Motor control processor
MCT	Motion control tool
MDCIC	Multi-drive control interface card
mV	Millivolts
NEMA	National Electrical Manufacturers Association
NTC	Negative temperature coefficient
$P_{M,N}$	Nominal motor power
PCB	Printed circuit board
PE	Protective earth
PELV	Protective extra low voltage

Term	Definition
PHF	Passive harmonic filter
PID	Proportional integral derivative
PLC	Programmable logic controller
P/N	Part number
PROM	Programmable read-only memory
PS	Power section
PTC	Positive temperature coefficient
PWM	Pulse width modulation
R_S	Stator resistance
RAM	Random-access memory
RCD	Residual current device
Regen	Regenerative terminals
RFI	Radio frequency interference
RMS	Root means square (cyclically alternating electric current)
RPM	Revolutions per minute
SCR	Silicon-controlled rectifier
SMPS	Switch mode power supply
S/N	Serial number
STO	Safe Torque Off
T_{LIM}	Torque limit
$U_{M,N}$	Nominal motor voltage
V	Volt
VVC	Voltage vector control
X_h	Motor main reactance

10.3 International/North American Default Parameter Settings

Setting *parameter 0-03 Regional Settings* to *[0] International* or *[1] North America* changes the default settings for some parameters.

Table 51: International/North American Default Parameter Settings

Parameter	International default parameter value	North American default parameter value
Parameter 0-03 Regional Settings	International	North America
Parameter 0-71 Date Format	DD-MM-YYYY	MM/DD/YYYY
Parameter 0-72 Time Format	24 h	12 h
Parameter 1-20 Motor Power [kW] (1)	–	–

Parameter	International default parameter value	North American default parameter value
Parameter 1-21 Motor Powr [HP] [2]	–	–
Parameter 1-22 Motor Voltage [V]	230/400/575	208/460/575
Parameter 1-23 Motor Frequency	50 Hz	60 Hz
Parameter 3-03 Maximum Reference	50 Hz	60 Hz
Parameter 3-04 Reference Function	Sum	External/Preset
Parameter 4-13 Motor Speed High Limit [3]	1500 RPM	1800 RPM
Parameter 4-14 Motor Speed High Limit [Hz] [4]	50 Hz	60 Hz
Parameter 4-19 Max Output Frequency	100 Hz	120 Hz
Parameter 4-53 Warning Speed High	1500 RPM	1800 RPM
Parameter 5-12 Terminal 27 Digital Input	Coast inverse	External interlock
Parameter 5-40 Function Relay	Alarm	No alarm
Parameter 6-15 Terminal 53 High Ref./Feedb. Value	50 Hz	60 Hz
Parameter 6-50 Terminal 42 Output	Speed 0-HighLim	Speed 4–20 mA
Parameter 14-20 Reset Mode	Manual reset	Infinite auto reset
Parameter 22-85 Speed at Design Point (RPM)	1500 RPM	1800 RPM
Parameter 22-86 Speed at Design Point (Hz)	50 Hz	60 Hz
Parameter 24-04 Fire Mode Max Reference	50 Hz	60 Hz

[1] *Visible only when parameter 0-03 Regional Settings is set to [0] International.*

[2] *Visible only when parameter 0-03 Regional Settings is set to [1] North America.*

[3] *Visible only when parameter 0-02 Motor Speed Unit is set to [0] RPM.*

[4] *Visible only when parameter 0-02 Motor Speed Unit is set to [1] RPM.*

Index

A

A53/A54 switches ... 17, 138
Abbreviations ... 161
AC mains ... 42
  See Mains
Additional resources ... 7
ADN compliance ... 8
Airflow
  Enclosure configuration ... 159
  Rates ... 26
Alarms
  Definition ... 102
  Indicator light ... 19, 103
  List of ... 103
  Log ... 18
  Reset ... 102
AMA ... 70
  See Automatic motor adaptation
Ambient conditions
  Overview ... 23
  Specifications ... 136
Analog
  Input specifications ... 138
  Input/output descriptions ... 59
  Input/output terminal locations ... 17, 58
  Output specifications ... 139
Approvals and certifications ... 8
ATEX ... 24
Auto on ... 19, 99
Automatic energy optimization ... 69
Automatic motor adaptation
  Alarms ... 116
  Configuring ... 70
  Preventing motor overheating ... 106
  Wiring example ... 76
Auxiliary contacts ... 63

B

Back-wall cooling ... 26
Brake
  Terminal dimensions ... 47, 49, 51, 54
  Terminal location ... 14, 16
  Terminal torque rating ... 160
  Wiring configuration ... 93
Brake resistor
  Terminal location ... 17
  Warning ... 110
  Wiring schematic ... 40
  Wiring the temperature switch ... 64
Burst transient ... 45
Bus termination switch ... 16

C

Cable entry plate
  Description ... 30
  Dimensions for E1h ... 146
  Dimensions for E2h ... 150
  Dimensions for E3h ... 154
  Dimensions for E4h ... 158
  Torque rating ... 160
Cables
  Cable length and cross-section ... 137
  Control ... 60
  Creating openings for ... 30, 31
  Installation warning ... 35
  Mains ... 42
  Motor ... 41
  Routing ... 57
  Shielded ... 36
  Specifications ... 137
Capacitor storage ... 23
Circuit breakers ... 142
Closed loop
  Basic set-up ... 74
  Specifications ... 141
  Troubleshooting ... 128
Condensation ... 23
Control
  Cable routing ... 57
  Cables ... 56, 60
  Characteristics ... 141
  Input/output descriptions ... 58
  Shelf location ... 13, 15, 17
Control card
  Location ... 17
  Overtemperature trip point ... 131, 133

Cooling
Airflow rates ... 26
Dust ... 24
Requirements ... 25
Current
Leakage hazard ... 45
Limits ... 130, 133
Selecting input signal ... 64

D
DC overvoltage ... 105
Depth ... 12
Design guide ... 136
Digital
Input ... 137
Input/output descriptions ... 59
Input/output terminal locations ... 16, 58
Output specifications ... 139
Disconnect switch ... 67
Disposal instructions ... 8
Door clearance
E1h ... 146
E2h ... 150
Door/panel cover torque rating ... 160
Drive
Clearance requirements ... 25
Definition ... 12
Dimensions ... 12
Initialization ... 73, 73
Mounting configurations ... 25
Status ... 98
Duct cooling ... 26

E
Electrical specifications, 380–500 V ... 130
Electrical specifications, 525–690 V ... 132
Electromagnetic compatibility (EMC) ... 36
Electronic thermal relay (ETR) ... 35
EN 60664-1 ... 135, 140
EN 61800-3 ... 136
Encoder ... 71
Energy efficiency class ... 136
Environment ... 23, 136
Exterior dimensions
E1h ... 143
E2h ... 147
E3h ... 151
E4h ... 155
External alarm reset ... 88
External interlock ... 82, 117

F
Factory default settings ... 73
Fan power card
Location ... 13, 16
Overtemperature trip point ... 131, 133
Warning ... 125, 126
Fans
Dust ... 24
External fault ... 109
Internal fault ... 109
Location ... 16
Mixing fan fault ... 123
Required airflow ... 26
Fault log ... 18
Fieldbus ... 36, 112
Floating delta ... 43
Fuses
Location ... 13, 15
Overcurrent protection ... 35
Specifications ... 130, 133, 141
Warning ... 112

G
Gases ... 23
Glossary ... 161
Ground
Connecting to ... 45
Floating delta ... 43
Grounded delta ... 43
Isolated mains ... 43
Terminal dimensions ... 47, 49, 51, 54
Terminal location ... 14, 15
Terminal torque rating ... 160

H
Hand on ... 19, 99
Heat sink
Cleaning ... 97
E1h access panel dimensions ... 145
E2h access panel dimensions ... 149

E3h access panel dimensions 153
E4h access panel dimensions 157
Overtemperature trip point 131, 133
Warning 114
Heater
Location 14, 16
Usage 23
Wiring of 63
Wiring schematic 40
Height 12

I

IEC 60068-2-43 136
IEC 61800-3 136
IEC 721-3-3 136
Indicator lights 18, 103
Initial set-up 67
Input
Voltage 67
Installation
Electrical 35
EMC-compliant 36, 45
Initialization 73, 73
Load share/regen terminals 34
Mechanical 27, 30
Qualified personnel 9
Quick set-up 69
Requirements 25
Start up 71
Tools required 22
Interference
EMC 36
Radio 12
Interior view 13, 15
Interlock 61
Isolated mains 43

L

L1, L2, L3 135
See Mains
Label 22
LCP
Display 17
Indicator light 18
Location 13, 15
Menu 19
Troubleshooting 127
Leakage current 11, 45
Lifting 22, 26
Load share
Terminal location 15
Terminal torque rating 160
Wiring schematic 40

M

Main menu 18, 20
Mains
Cable specifications 130, 133
Connecting 42
Specifications 135
Terminal dimensions 47, 49, 51, 54
Terminal location 13, 15
Terminal torque rating 160
Warning 104, 112
Mains fuses 13
See Fuses
Maintenance 24, 97
Measurements 12
Mechanical brake control 93, 106
Menu
Description of 19
Keys 18
Motor
Cable specifications 130, 133
Class protection 24
Connecting 41
Interlock 61
Output 135
Setup 20
Terminal dimensions 47, 49, 51, 54
Terminal location 14, 16
Terminal torque rating 160
Testing rotation 71
Torque 136
Troubleshooting 127
Warning 106, 106, 110, 111, 111
Wiring thermistor 90
Mounting configurations 25

N

Nameplate 22
Navigation keys 18

O

Open-loop speed control configurations 77
Optional equipment 67
Overcurrent protection 35
Overvoltage 130, 132

P

Parameters 18, 19
Pedestal 27
PELV 90
Periodic forming 23
Phase imbalance 112
Pigtails 36
Potential equalization 45
Potentiometer 59
Power card
  Location 17
  Overtemperature trip point 131, 133
Power rating 12, 22, 130, 132
Pre-start Check List 67
Programming 18, 19
Pulse start/stop wiring configuration 86
Pulse/encoder input specifications 138

Q

Qualified personnel 7, 9
Quick menu 18, 19

R

Ramp up/down time 130, 132
Recycling 8
Regen
  Terminal location 15
  Terminal torque rating 160
  Wiring configuration 91
Regional settings 163
Relay
  Description 60
  Location 17
  Output specifications 140
  Terminal torque rating 160
Reset 19, 119
RFI
  E3h shield dimensions 154
  E4h shield dimensions 158
  Location 13, 16
RS485 ..... 58, 62, 89, 139, 160
Run/stop command 83
Run/stop wiring configuration 82

S

S201/S202 switches 138
Safe Torque Off
  Terminal 37 specifications 137
  Warning 119, 120, 120, 120
  Wiring schematic 40
Safety instructions 35
Serial communication
  Configuring RS485 62
  Descriptions and default settings 58
  Terminal locations 16
Service 97
Setup 18
Short circuit
  Alarm 107
  Short circuit current ratings (SCCR) 142
Sleep mode 101
Software version number 7
Space heater 14
  See Heater
Speed reference 77
Start/stop command 85
Status messages 98, 99, 99
Storage 23
Supply voltage 135
Switches
  A53 and A54 ..... 40, 64, 138
  Brake resistor temperature 40, 64
  Bus termination 16, 40, 58, 62
  Disconnect 10, 40, 67, 97, 142
Symbols 9

T

Temperature 23
Terminals
  Analog input/output descriptions 59
  Control locations 58
  Digital input/output descriptions 59
  E1h dimensions (front and side views) 47
  E2h dimensions (front and side views) 49
  E3h dimensions (front and side views) 51

E4h dimensions (front and side views) 54
Relays 59
Serial communication descriptions 58
Terminal 27 ..... 59, 62
Terminal 37 59
Thermal protection 8
Thermistor
Cable routing 57
Terminal description 59
Warning 120
Wiring configuration 90
Tools 23
Torque
Characteristics 136
Fastener ratings 160
Troubleshooting 129
Warning 106
Transducers 59
Trip lock 102
Troubleshooting 127

U

UL certification 8
Unintended start 10, 67, 97
USB
Port location 17
Specifications 141

V

Version number 7
Voltage
Safety warning 9, 67, 108, 111, 111, 111
Selecting input signal 64
Voltage level 137

W

Warnings
Definition 102
Indicator light 19
List of 103
Website 7
Weight 12
Width 12
Wires
Access 56
Wiring configurations
External alarm reset 88
Open loop 77
Regen 91
Start/stop 85
Thermistor 90
Wiring schematic 40

ENGINEERING
TOMORROW

Danfoss can accept no responsibility for possible errors in catalogues, brochures and other printed material. Danfoss reserves the right to alter its products without notice. This also applies to products already on order provided that such alterations can be made without subsequential changes being necessary in specifications already agreed. All trademarks in this material are property of the respective companies. Danfoss and the Danfoss logotype are trademarks of Danfoss A/S. All rights reserved.

Danfoss A/S
Ulsnaes 1
DK-6300 Graasten
vlt-drives.danfoss.com

Danfoss A/S © 2019.12 M0015901 AQ275652476278en-000101/ 130R0709