ENGINEERING
TOMORROW

Danfoss

Motorized control valves

Let motorized intelligence solve your **application challenges**

For HVAC, central heating, district heating and cooling systems.

More than

100,000

Danfoss MVCs have been installed globally over the past two years.

www.heating.danfoss.com

Perfect control and efficiency for every building and application

Based on decades of experience, changing customer needs and global energy-efficiency trends, we are developing the motorized control technology of tomorrow.

Danfoss Motorized Control Valves (MCV) for district heating and cooling, HVAC and central heating systems ensure stable and accurate control of water, glycol mixtures and steam. This in turn improves temperature control and reliability while increasing the energy efficiency of the system. All of which adds up to enhanced comfort for the end-user.

The MCV range comprises both regular and pressure-relieved control valves designed to operate in the most demanding applications.

Danfoss Commercial Controls offers a comprehensive range of control valves and actuators for virtually every application: central and decentralized heating systems, domestic hot-water systems, district heating and steam.

For maximum versatility, our control valves and actuators come in different sizes, materials and connection options. They also offer a range of different functions and features to suit each specific application.

With a global reputation for quality and reliability, our latest solutions are available at different price points to suit the budgetary needs of every project.

The benefits of choosing Danfoss Motorized Control Valves

Years of customer insights and product development for district heacting, HVAC and central heating applications have enabled us to create a flawless product that perfectly complies with all current requirements and future trends. Here are some of the highlights.

Excellent control performance

The control capabilities of the MCV range are based on different characteristics, including split characteristics for DHW applications using heat exchangers, as well as linear and logarithmic characteristics. This means that even the most difficult control requirements in district heating can be met, while still providing instantaneous hot water.

For DHW systems, the low slope of the split characteristic in this part of the stroke ensures stable control of the valve in the critical area near the closing position. On the other hand, the steeper part of the curve (large flow) enables fast and stable control.

Relative characteristic comparison

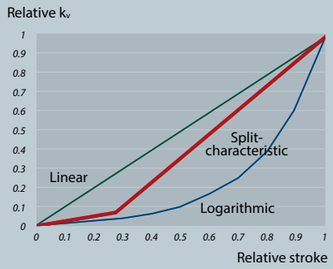

Features

- Anti-oscillation
- Control ratio
- Stroke limitation
- Split characteristics
- Modification of controls characteristic (65X actuators)

Proven **lifetime cost effectiveness**

Thanks to easy selection, installation, commissioning and maintenance, Danfoss MCVs simply cost you less time, money and effort.

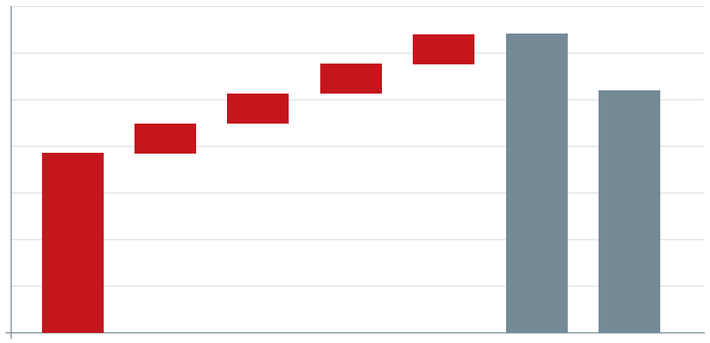

Your benefits at a glance

- Auto detection of control signal
- Speed selection
- LED signalization
- Option to operate as either 3-point or modulating
- Fast connection
- Easy wiring procedure
- Free positioning
- Anti-oscillation function
- Split characteristic of DHW valves

Easy handling and installation

Danfoss MCVs are easy to handle, easy to operate and easy to understand. Quick connection to actuator and valve is enabled by a threaded coupling, which also allows for rotation after mounting. External LED visualization and signaling save time and effort during installation and commissioning of MCVs.

Features

- Easy wiring with the option to prewire the actuators
- Selectable features available on jumpers
- LED signalization
- 360° installation without compromising IP
- Top-down and side-in mounting of actuator – compact design

Increased reliability and operational safety

All new products feature built-in thermic and overload protection of the electromotor. This radically reduces the risk of operational failure in either the valve or the system as a whole.

Features

- Thermic and overload protection
- 360° installation without compromising IP
- Direct inverse functionality
- Safety function (TUV certified) – Spring up (SU), Spring down (SD)

Expand your perspective
on motorized control valves

FOR
DISTRICT HEATING APPLICATIONS

ELECTRICAL ACTUATORS
FUNCTIONS AND FEATURES

- Power supply 24 / 230 V
- Control signal modulating / 3-point
- Speed range 2 - 24 s/mm
- Force range 250 - 5000 N
- Stroke range 5.5 - 50 mm
- Safety function with DIN TUV available

SEATED CONTROL VALVES
FUNCTIONS AND FEATURES

- DN 15 - 250 mm
- PN 16 - 25 bar
- Temperature (-10 …2)*…200°C
- Kvs 0.25 - 900 m³/h
- Media water, water with glycol, steam
- Thread / Flange
- 2 way

** with steam heater*

FOR
HEATING AND COOLING APPLICATIONS

ELECTRICAL ACTUATORS
FUNCTIONS AND FEATURES

- Power supply 24 / 230 V
- Control signal modulating / 3-point
- Speed range 1 - 24 s/mm
- Force range 200 - 15000 N
- Stroke range 5.5 - 80 mm
- Safety function available

SEATED CONTROL VALVES
FUNCTIONS AND FEATURES

- DN 15 - 300 mm
- PN 6 - 16 bar
- Temperature (-10 …2)*…200°C
- Kvs 0.63 - 1350 m³/h
- Media water, water with glycol
- Thread / Flange
- 2 and 3 way

** with steam heater*

FOR
TERMINAL AND ZONE APPLICATIONS

ELECTRICAL ACTUATORS
FUNCTIONS AND FEATURES

- Power supply 24 / 230 V
- Control signal modulating / 2, 3-point
- Speed range 12 - 24 s/mm
- Force range 105 - 300 N
- Stroke range 2.8 - 5.5 mm
- Safety function available

SEATED CONTROL VALVES
FUNCTIONS AND FEATURES

- DN 15 - 20 mm
- PN 16 bar
- Temperature 2…120°C
- Kvs 0.25 - 4 m³/h
- Media water, water with glycol
- Thread
- 2, 3, 4 way with bypass

FOR
CENTRAL HEATING APPLICATIONS

ELECTRICAL ACTUATORS
FUNCTIONS AND FEATURES

- Power supply 24 / 230 V
- Control signal modulating / 3-point
- Speed range 15 - 480 s/90°
- Torque 5 - 15 Nm
- Rotation angle 90°
- Internal auxiliary switch available

ROTARY VALVES
FUNCTIONS AND FEATURES

- DN 15 - 150 mm
- PN 6 - 10 bar
- Temperature 2…110°C
- Kvs 0.4 - 400 m³/h
- Rotation angle 90 °
- Thread / Flange
- 2 , 3, 4 way

FOR
CENTRAL HEATING AND HVAC APPLICATIONS

ZONE VALVES
FUNCTIONS AND FEATURES

- Power supply 24 / 230 V
- Control signal 2-point
- Speed range 30 and 60 s/90°
- DN 15 - 50 mm
- Temperature 2…130°C
- dP 6 bar
- Thread
- 2 and 3 way

DAMPER ACTUATORS
FUNCTIONS AND FEATURES

- Power supply 24 / 230 V
- Control signal modulating / 2, 3 point
- Speed range 40 - 150 s/90°
- Torque 3 - 40 Nm
- Safety function available
- Optional auxiliary switch

Applicable combinations for **district heating**

Applicable combinations for **district heating** and **HVAC**

Single house with direct system

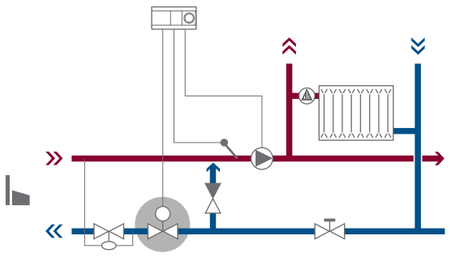

Recommended combination

Valve type	Suitable actuators
VS2	AMV 150, AMV(E) 10/13, AMV(E) 20/23, AMV(E) 30/33
VM2/VB2	AMV(E) 10/13, AMV(E) 20/23/30/33

Single house with indirect system

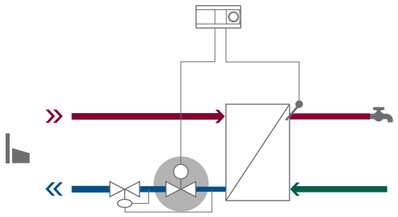

Recommended combination

Valve type	Suitable actuators
VS2	AMV(E) 10/13, AMV(E) 20/23, AMV(E) 30/33
VM2/VB2	AMV(E) 10/13, AMV(E) 20/23/30/33

Residential/commercial building system

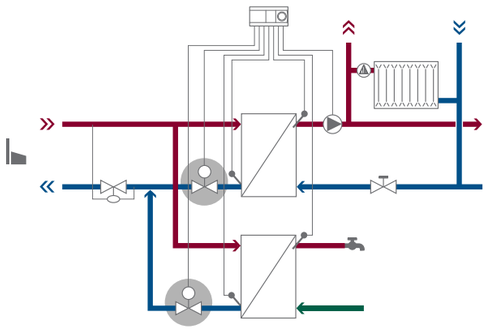

Valve type	Suitable actuators
VM2/VB2	AMV(E) 10/13, AMV(E) 20/23/30/33
VFM2	AMV(E) 655, 658 SD, 659 SD

Central/distribution station system

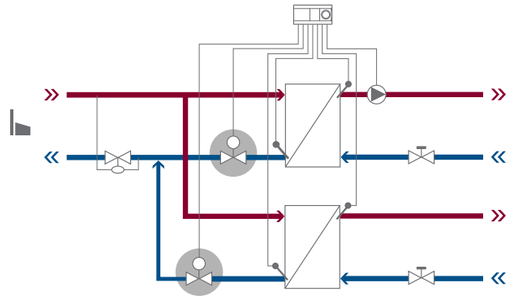

Recommended combination

Valve type	Suitable actuators
VFM2	AMV(E) 655, 658 SD, 659 SD

Fan coil units

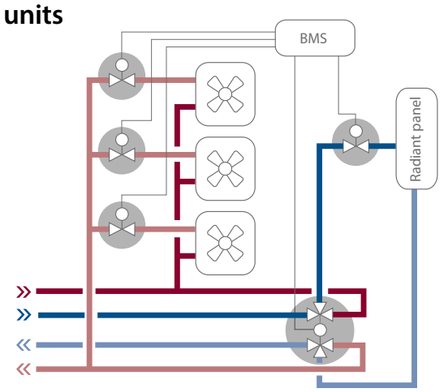

Constant flow

Valve type	Suitable actuators
VZL3	AMV(E)130/140, AMV(E)130H/140H
6-way change-over valve*	

Variable flow

Valve type	Suitable actuators
AB-QM	AMV(E) 110/120NL/ NovoCon*

* Available in second half of 2015

Air handling units

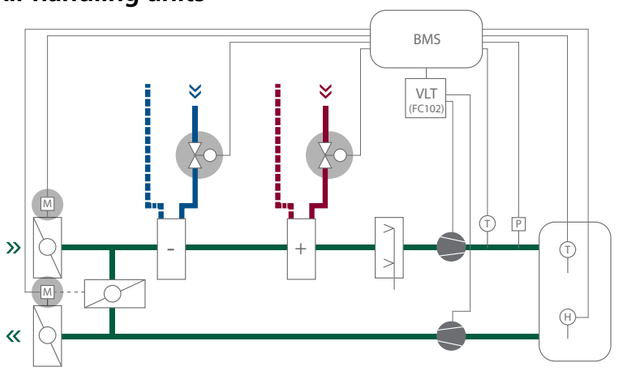

Constant flow

Valve type	Suitable actuators
VRB3	AMV(E) 435, AMV(E) 438SU
VF3	AMV(E) 435, AMV(E) 438SU

Variable flow

Valve type	Suitable actuators
AB-QM	AME 110NL/435QM/ NovoCon*

***** Available in second half of 2015

AMD – damper actuators available with or without spring return function.

Applicable combinations for **HVAC** and **central heating**

Applicable combinations for **central heating**

Chiller application

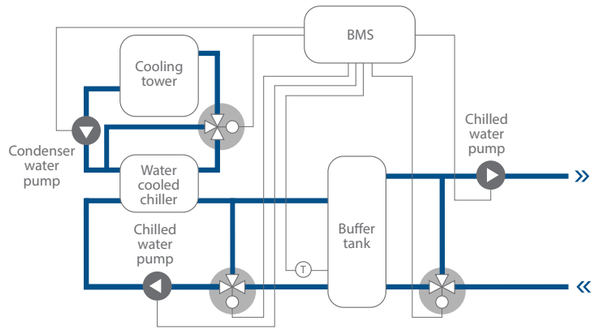

Recommended combination

Constant flow

Valve type	Suitable actuators
VF3	AMV(E) 435, AMV(E) 438SU, AMV(E) 55/56, AMV(E) 655, 658SU, AMV(E) 685*

* Available in second half of 2015

Variable flow

Valve type	Suitable actuators
AB-QM	AME 435, AME 55, AME 85QM

Recommended combination

Valve type	Suitable actuators
HRB3	AMB 162/182
HFE3	AMB 162/182

Heat pump application

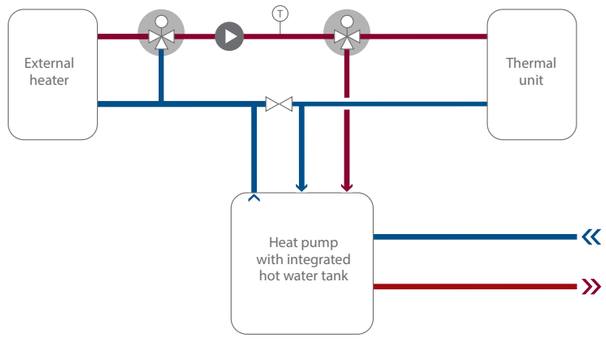

Passive cooling application

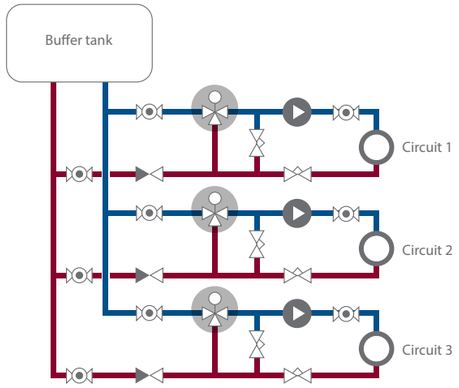

Valve type	Suitable actuators
VRB3	AMV(E) 435, AMV(E) 438SU
VF3	AMV(E) 435, AMV(E) 438SU

Valve type	Suitable actuators
HRB3	AMB 162/182
HRE3	AMB 162/182

Solar application

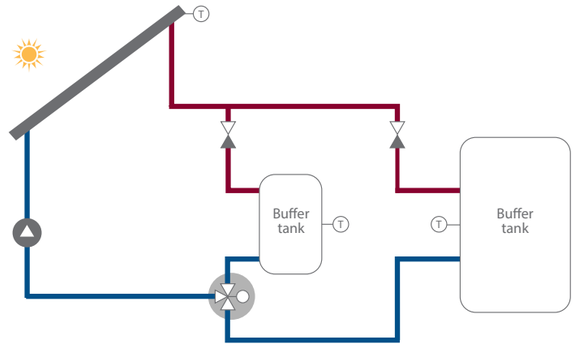

Boiler applications

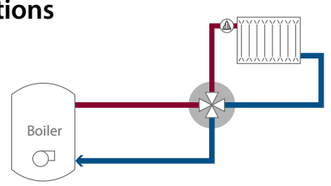

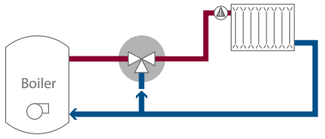

Valve type	Suitable actuators
HRB4	AMB162/182
HRE4	AMB162/182
HRB3	AMB162/182
HFE3*	AMB182

* boiler house

Valve type	Suitable actuators
ON/OFF Zone	AMZ 113
HRB3	AMB 162/182

Priority control of DHW and heating systems

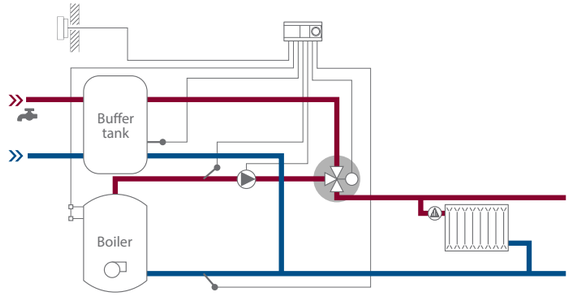

Danfoss Motorized Control Valves

Product range overview and characteristics

1) H – manual operation button
2) Yes – with AM-PBU 25 battery pack
3) 2(-10)-130 up to dimensions DN 100; 2(-10)-150 from DN 125-150
4) This is a general overview: for detailed dP over different DNs, please see datasheet
5) This is 2-point control
6) Hybrid version: modulating and BACnet MS/TP Digital version: BACnet MS/TP only
7) QM version is recommended

ACTUATORS

Type	Electrical actuators for district heating applications									Actuators for HVAC applications														
	AMV(E) 655	AMV(E) 658 SU/SD; AMV(E) 659 SD	AMV(E) 33	AMV(E) 30	AMV(E) 23(SU)	AMV(E) 20	AMV(E) 13(SU)	AMV(E) 10	AMV 150(AS)	AME 855	AMV(E) 685	AMV(E) 85(QM)/86	AMV(E) 55(QM)/56	AMV(E) 435(QM)	AMV(E) 438 SU	AMV(E) 35	AMV(E) 25 (SU/SD)	AMV(E) 130(H)/140(H) [1]	TWA-ZL/Z	ABN A5	ABNM	AMV/E 110NL	AMI 140 [5]	NovoCon
Voltage 24 V	AC/DC	AC/DC	AC	AC	AC	AC	AC	AC	AC	AC	AC/DC	AC	AC	AC/DC	AC	AC	AC	AC	AC/DC	AC/DC	AC/DC	AC	AC	AC/DC
Voltage 230 V	AC/DC	AC/DC	AC	AC	AC	AC	AC	AC	AC	AC	AC	AC	AC	AC	AC	AC	AC	AC	AC	AC	no	no	AC	no
3 point control	AMV	AMV	AMV	AMV	AMV	AMV	AMV	AMV	AMV	yes	AMV	AMV	AMV	AMV	AMV	AMV	AMV	AMV	no	no	no	yes	no	no
Modulating control	AME	AME	AME	AME	AME	AME	AME	AME	no	AME	AME	AME	AME	AME	AME	AME	AME	AME	no	no	yes	yes	no	yes [6]
Safety function	no	yes	yes (SD)	no	yes (SU/SD)	no	yes (SU/SD)	no	no	no		no [2]	no [2]	no	yes SU	no	yes (SU/SD)	no	no	yes	yes	no	no	no
Speed (s/mm)	2 or 6	2 or 6	3	3	15	15	14	14	24	2		8 / 3	8 / 4	15 or 7.5	15	3	11 / 15	24 / 12	app. 60	30	30	24 / 12	12	24 / 3
Force / torque	2000 N	2000 N	450 N	450 N	450 N	450 N	300 N	300 N	250 N	15000 N	5000 N	5000 N	2000 N / 1500 N	400 N	450 N	600 N	1000 N / 450 N	200 N	90	95	95	130	200	90
Stroke (mm)	50	50	10	10	10	10	5.5	5.5	5	80	80	40	40	20	15	15	15	5.5	2.8	5	5 / 6.5	5.5	5.5	7

VALVES

PN (bar)	Temp. (°C)		Type	Ports	DN	Stroke (mm)	Kvs / Q (m^3/h)	dP [4] (bar)	dP [4] (bar)	dP [4] (bar)	dP [4] (bar)	dP [4] (bar)	dP [4] (bar)	dP [4] (bar)	dP [4] (bar)	dP [4] (bar)	dP [4] (bar)	dP [4] (bar)	dP [4] (bar)	dP [4] (bar)	dP [4] (bar)	dP [4] (bar)	dP [4] (bar)	dP [4] (bar)	dP [4] (bar)	dP [4] (bar)	dP [4] (bar)	dP [4] (bar)	dP [4] (bar)
16	2-130	District heating	VS	2	15-25	4-5	0.25-4			10	10	10	10	10 (DN15)	10 (DN15)	10 (DN15)													
25	2-150	District heating	VM	2	15-50	5-10	0.25-25			16-25	16-25	16-25	16-25	16-25 (DN15-25)	16-25 (DN15-25)														
25	2-150	District heating	VB	2	15-50	5-10	0.25-40			16	16	16	16	16 (DN15-20)	16 (DN15-20)														
25	2(-10)-200	District heating	VFS	2	15-100	15-40	0.4-145	1.5-4.5 (DN65-100)	1.5-4.5 (DN65-100)									5-13 (DN65-100)	1.5-4.5 / 1-3 (DN65-100)			2-25 (DN15-50)	**25:** 3-25 (DN15-50) **25 SU/SD:** 0.5-22 (DN15-50)						
16	2(-10)-150	District heating	VFM	2	65-250	30-50	63-900	3-8										5-10 (DN150-250)											
16	2-120	District heating	AHQM	2	15-100	5-15	0.035-38							4 (DN15-32)	4 (DN15-32)					4 (DN-100)			**25 SU/SD:** 4 (D40-100) (SD version only)	4 (DN15-32)						
16, 25	2-150	District heating	AVQM	2	15-50	5-10	0.015-15			12-20	12-20	**23:** 12-20	12-20	12-20 (DN15)	12-20 (DN15)	12-20 (DN15)													
16, 25	2-150	District heating	AFQM	2	40-250	8-27	2.2-420	15-20 (DN65-125)	15-20 (DN65-125)									10-12 (DN150-250)	15-16 (PN 16; DN65-125)										
16	2-120	HVAC	VZ	2/3/4	15-20	5.5	0.25-4							**13 SU:** 2.5-3.5										2.5-3.5					
16	2-120	HVAC	VZL	2/3/4	15-20	2.8	0.25-3.5 (A-AB), 0.25-2.5 (B-AB)							**13 SU:** 1-2.5										1-2.5	1-2.5	1-2.5			
16	2(-10)-130	HVAC	VRB	2/3	15-50	10-15	0.63-40													4 (2-way + mixing) / 1 (diverting)									
16	2(-10)-130	HVAC	VRG	2/3	15-50	10-15	0.63-40													4 (2-way + mixing) / 1 (diverting)									
6	2(-10)-120	HVAC	VL	2/3	15-100	10-30	0.63-145	0.3-1 (DN100)	0.3-1 (DN100)										**55:** 1 (2-way + mixing) / 0.3 (diverting) (DN 100)	2.5-4 (2-way+mixing) / 0.6-1 (diverting) (DN15-80)	4 (2-way + mixing) / 1 (diverting) (DN15-80)								
16	2(-10)-130/200 [3]	HVAC	VF	2/3	15-300	10-80	0.63-1350	0.5-1.5 (2-way + mixing) / 0.3-0.5 (diverting) (DN100-150)									1,5-3,7 (2-way+ mixing) / 1-2 (diverting) (DN200-300)	0,8-2,3 (2-way + mixing) / 0,7-1,5 (diverting)	1.5-3 (2-way + mixing) / 0.6 (diverting) (DN125-150)	**55:** 0.5-1.5 (2-way + mixing) / 0.3-0.5 (diverting); **56:** 1 (2-way + mixing) / 0.3 (diverting) (DN100-150)	2.5-4 (2-way+mixing) / 0.6-1 (diverting) (DN15-80)	4 (2-way + mixing) / 1 (diverting) (DN15-50)								
16	2(-10)-120	HVAC	AB-QM S	2	15-32	2.25-4.5	0.03-3.2							4	4									4	4	4	4	4	4	4
16	2(-10)-120	HVAC	AB-QM M/L/XL	2	40-250	10-27	7.5-370	4 (DN125-150)	4 (DN125-150)									4 (DN200-250)	4 (DN200-250) [7]	4 (DN125-150) [7]	4 (DN40-100) [7]		**25SU/SD:** 4 (DN40-100)						

Product range overview continued

ACTUATORS

	Acturator for central heating			
	AMZ 112 actuator	**AMZ 113 actuator**	**AMB 162**	**AMB 182**
Voltage 24 V	AC	AC	AC and AC/DC	AC and AC/DC
Voltage 230 V	AC	AC	AC	AC
Control	2 point	2 point	3 point/modulating	3 point/modulating
Safety function	no	no	no	no
Speed (s/90°)	30, 60 [2]	30, 60 [2]	15, 30, 60, 90,120, 480 [1]	60, 90, 120, 240 [1]
Torque (Nm)	5, 10 [3]	5, 15 [3]	5 Nm	10 or 15 Nm
AUX. Switch	yes	yes	yes (optional)	yes (optional)
Angle of rotation	90°	90°	90°	90°

VALVES

PN (bar)	Temperature (°C)	Type			Ports	DN	Rotation angle (°)	Kvs (m³/h)	dP[1] (bar)	dP[1] (bar)	dP[1] (bar)	dP[1] (bar)
10	2 - 110	Central heating	HRB		3/4	15 - 50	90	0.4 - 40			2 (diverting) / 1 (mixing)	2 (diverting) / 1 (mixing)
6	2 - 110	Central heating	HRE		3/4	15 - 50	90	6.3 - 40			1	1
6	2 - 110	Central heating	HFE		3	20 - 150	90	12 - 400			0.5	0.5
40	-20…130[4]	Central heating	AMZ 112 valve		2	15	90	17	6	6		
						20		41	6	6		
						25		70	6	6		
						32		121	6	6		
25	-20…130[4]					40		200	6	6		
						50		292	6	6		
40	-20…130[4]	Central heating	AMZ 113 valve		3	15	90	17	6	6		
						20		41	6	6		
						25		70	6	6		
						32		121	6	6		

1) This is a general overview: for detailed dP over different DNs, speeds, please see datasheet
2) **30s version** is used with 5 Nm – AMZ 112 up to DN 25 and AMZ 113 up to DN 25 – **60s version** is used with 10/15 Nm – AMZ 112 DN 32-50 and AMZ 113 DN 32
3) **5 Nm** only for AMZ 112 DN 15-20 and AMZ 113 DN 15 – **10 Nm** only for AMZ 112 DN 25-50 and AMZ 113 DN 20-25 – **15 Nm** only for AMZ 113 DN 32
4) This information is valid for valve only: for minimum temperature information about AMZ112/113 products, please contact Danfoss

DAMPER ACTUATORS

	DAMPER actuators – non spring return													DAMPER actuators – with spring return							
Type	**AMD 210**	**AMD 220**	**AMD 310**	**AMD 320**	**AMD 420**	**AMD 510**	**AMD 520**	**AMD 610**	**AMD 620**	**AMD 710**	**AMD 720**	**AMD 810**	**AMD 820**	**AMD 113**	**AMD 123**	**AMD 213**	**AMD 223**	**AMD 413**	**AMD 423**	**AMD 613**	**AMD 623**
Voltage 24 V	AC/DC	AC/DC	AC/DC	AC/DC	AC/DC	AC/DC	AC/DC	AC/DC	AC/DC	AC/DC	AC/DC	AC/DC	AC/DC	AC/DC	AC/DC	AC/DC	AC/DC	AC/DC	AC/DC	AC/DC	AC/DC
Voltage 230 V	AC/DC	no	AC/DC	no	no	AC/DC	no	AC/DC	no	AC/DC	no	AC/DC	no	AC/DC	no	AC/DC	no	AC/DC	no	AC/DC	no
2/3 point control	yes[5]	no	yes[5]	no	no	yes[5]	no	yes[5]	no	yes[5]	no	yes[5]	no	2 point	no	2 point	no	2 point	no	2 point	no
Modulating control	no	yes	no	yes	yes	no	yes	no	yes	no	yes	no	yes	no	yes	no	yes	no	yes	no	yes
Safety function	no	no	no	no	no	no	no	no	no	no	no	no	no	yes	yes	yes	yes	yes	yes	yes	yes
Speed (s/90°)	60-120	100	60-120	60-120	100 or 150[6]	60-120 or 150[6]	100 or 150[6]	150	150	150	150	150	150	40/20[7]	100/20[7]	75/20[7]	100/20[7]	75/20[7]	150/20[7]	150/20[7]	150/20[7]
Torque (Nm)	5	5	8	8	10	15	15	20	20	30	30	40	40	3	3	5	5	10	10	20	20
AUX switch	1[8]	1[8]	1[8]	1[8]	1[8]	1[8]	1[8]	2[8]	2[8]	2[8]	2[8]	2[8]	2[8]	2[8]	2[8]	2[8]	2[8]	2[8]	2[8]	2[8]	2[8]

5) Depends on wiring
6) With AUX switch, lower speed is valid
7) Operational speed / safety function speed
8) Optional

Quality is...

...one of the reasons why our customers **stay with us for decades**

ENGINEERING
TOMORROW

Long-lasting quality to the core
Danfoss valves

System reliability, building and occupant safety are crucial when it comes to district heating and cooling applications. This is why we give special attention to design and material selection used in our products. Valve bodies are made of high quality red bronze and cast iron or steel. Critical internal parts are made from well-proven stainless steel 1.4404 /1.4571 /1.4021. In combination with a specially designed valve seat and cone, this ensures resistance to cavitation and corrosion. Danfoss products will ensure trouble-free operation, low maintenance and operational costs.

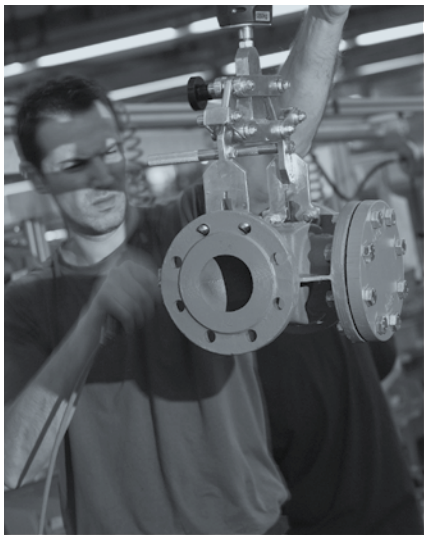

About Danfoss
For more than 75 years Danfoss has been supplying innovative heating solutions that cover everything from individual components to complete district heating systems. Danfoss engineers technologies that enable the world of tomorrow to do more with less. We employ 42,000 people and serve customers in more than 100 countries. Driven by our customers' needs, we build on years of experience to be at the forefront of innovation, continually supplying components, expertise and complete systems for climate and energy applications.

Today, our advanced, reliable and user-friendly technology helps to keep people comfortable and companies competitive across the world.

We play an active role in the main growth themes in a world that is rapidly changing: infrastructure, food, energy and climate are the focus of our business. Cities for millions that touch the sky. A richer harvest to feed a growing world. Keeping food fresh and our children warm in a world that can make more out of less. This is how we are Engineering Tomorrow.

Read more online at
www.danfoss.com

Valve Ruler App

A selection tool that helps you choose the right combination of valve and actuator.

Scan QR code and download app.

Danfoss A/S
Climate Solutions • danfoss.com • +45 7488 2222

Any information, including, but not limited to information on selection of product, its application or use, product design, weight, dimensions, capacity or any other technical data in product manuals, catalogues descriptions, advertisements, etc. and whether made available in writing, orally, electronically, online or via download, shall be considered informative, and is only binding if and to the extent, explicit reference is made in a quotation or order confirmation. Danfoss cannot accept any responsibility for possible errors in catalogues, brochures, videos and other material.
Danfoss reserves the right to alter its products without notice. This also applies to products ordered but not delivered provided that such alterations can be made without changes to form, fit or function of the product.
All trademarks in this material are property of Danfoss A/S or Danfoss group companies. Danfoss and the Danfoss logo are trademarks of Danfoss A/S. All rights reserved.

© Copyright Danfoss | Pravda.dk | 2023.06