ENGINEERING
TOMORROW

Catalogue

Industrial Refrigeration
Components and Controls



www.danfoss.com/ir

ENGINEERING TOMORROW

Catalogue

Industrial Refrigeration
Components and Controls

Shut-off and regulating valves — **Page**

Shut-off valve — SVA-S / SVA-L, 52 bar — 3
Shut-off valve — SVA-S / SVA-L, 65 bar — 25
Shut-off valve in stainless steel — SVA-SS / SVA-L SS — 41
Shut-off valve — SVA-DL / SVA-DH — 55
Regulating valve, 52 bar (754 psi) — REG-SA / REG-SB, 52 bar — 65
Regulating valve, 65 bar (943 psi) — REG-SA / REG-SB, 65 bar — 87
Regulating valve in stainless steel — REG-SS — 103
Gauge valve — SNV-ST / SNV-SS — 117
Shut-off valve — QDV — 127

Pressure and temperature regulators

Pilot-operated servo valve — ICS — 135
Pilot valve — Pilot valves — 207
Motor operated valve and actuator — ICM / ICAD — 221
Motor operated valve and actuator — ICMTS / ICAD 600TS — 305
Pressure control valve — KDC — 323
Temperature regulating valve — ORV — 335
Pressure regulating valve — OFV / OFV-SS — 347
Constant pressure valve — CVMD — 359

Switches and thermostats

Thermostat — KP — 363
Pressure switch — KP — 375
Differential thermostat — RT — 387
Differential pressure switch — RT — 403
Differential pressure switch — MP 54-55 / MP 55A — 417
Liquid level switch — AKS 38 — 425

Liquid level regulating valves

Float valve — HFI — 433
Float valve — SV 1 and 3 — 447
Float valve — SV 4, 5 and 6 — 457
Liquid level regulating valve — PMFL / PMFH, SV — 469
Liquid level alarm — RT280A, RT281A — 483
Sight glass — LLG — 489

Valve stations

Valve station — ICF — 499
Valve station in stainless steel — ICF SS — 549
FA + solenoid valve — ICF 15/20 EVRAT — 575

Check valves

Check and stop valve / Check valve — SCA-X / CHV-X, 52 bar — 583
Check and stop valve / Check valve — SCA-X / CHV-X, 65 bar — 599
Check and stop valve / Check valve in stainless steel — SCA-SS / CHV-SS — 613
Check valves — NRVA — 621
Check valves — NRVS — 657

Strainers — **Page**

Strainer — FIA 15-200, 52 bar — 663
Strainer — FIA 250-300, 52 bar — 677
Strainer — FIA 15-200, 65 bar — 685
Strainer in stainless steel — FIA SS — 697
Strainer — FA — 705
Filter drier — DCR — 711

Solenoid valves

2-step solenoid valve — ICLX — 723
Dual position solenoid valve — ICSH — 751
Solenoid valve — EVRA / EVRAT — 775
Solenoid valve in stainless steel — EVRS / EVRST — 793
Solenoid coil — BB / BE / BF / BG / BN — 807

Sensors

Liquid level sensor — AKS 4100 / AKS 4100U — 815
Gas detection unit — Basic — 835
Gas detection unit — Premium — 845
Gas detection unit — Heavy Duty — 857
Gas detection — Controller unit — 867
Gas detection — Expansion module — 875
Gas detection — Warning module — 881
Gas detection — PC tool — 887

Safety valves

Safety relief valve — SFA — 893
Safety relief valve — SFV — 905
Change-over valve — DSV 1 / DSV 2 — 917
Safety relief valve — BSV — 927
Pressure relief valve — POV — 939

Expansion valves

Thermostatic expansion valve — TEA — 957
Desuperheating valve — TEAT — 965
Electric expansion valve — AKVA — 971

Electronic controllers and transmitters

Liquid Level Controller — EKE 347 — 987
Media temperature controller — EKC 361 — 1007
Interface — EKC 366 — 1023
Superheat controller — EKC 315A — 1033
Temperature controller — EKC 319A — 1049
Capacity controller — EKC 331 — 1059
Capacity controller — EKC 331T — 1069
Temperature sensors — AKS 11/12/21 / AK-HS 1000 — 1081
Pressure transmitters — AKS 32/33/32R / AKS 2050 — 1085

Type	Page
A	
AKS 11	1081
AKS 12	1081
AKS 21	1081
AK-HS 1000	1081
AKS 32	1085
AKS 33	1085
AKS 32R	1085
AKS 2050	1085
AKS 38	425
AKS 4100	815
AKS 4100U	815
AKVA	971
B	
BSV	927
C	
Coils	807
CVC	207
CVE	207
CVH	207
CVMD	359
CVP	207
CVPP	207
D	
DCR	711
DSV 1 / DSV 2	917
E	
EKC 315A	1033
EKC 319A	1049
EKC 331	1059
EKC 331T	1069
EKC 361	1007
EKC 366	1023
EKE 347	987
EVM	207
EVRA / EVRAT	775
EVRS / EVRST	793
F	
FA	705
FIA 15-200, 52 bar	663
FIA 15-200, 65 bar	685
FIA 250-300, 52 bar	677
FIA SS	697
G	
GD Basic	835
GD Controller unit	867
GD Expansion module	875
GD Heavy Duty	857
GD PC tool	887
GD Premium	845
GD Warning module	881
H	
HFI	433
I	
ICF	499
ICF SS	549
ICF 15/20 EVRAT	575
ICLX	723
ICM / ICAD	221
ICMTS / ICAD 600TS	305
ICS	135
ICSH	751

Type	Page
K	
KDC	323
KP	363
L	
LLG	489
M	
MP 54-55 / MP 55A	417
N	
NRVA	621
NRVS	657
O	
OFV / OFV-SS	347
ORV	335
P	
Pilot valves	207
PMFL / PMFH, SV	469
POV	939
Q	
QDV	127
R	
REG-SA / REG-SB, 52 bar	65
REG-SA / REG-SB, 65 bar	87
REG-SS	103
RT	387
RT280A, RT281A	483
S	
SCA-SS / CHV-SS	613
SCA-X / CHV-X, 52 bar	583
SCA-X / CHV-X, 65 bar	599
SFA	893
SFV	905
SNV-ST / SNV-SS	117
SV 1 and 3	447
SV 4, 5 and 6	457
SVA-DL / SVA-DH	55
SVA-S / SVA-L, 52 bar	3
SVA-S / SVA-L, 65 bar	25
SVA-SS	41
T	
TEA	957
TEAT	965

ENGINEERING
TOMORROW

Shut-off valves
Types SVA-S and SVA-L, 52 bar (754 psi)

Contents **Page**

Features 5
Design 6
Technical data 7
Connections 7
Material specification 9
Dimensions and weights 15
Ordering 21

AI242886444057en-000201 | 2017.08

ENGINEERING
TOMORROW

Shut-off valves
Types SVA-S and SVA-L, 52 bar (754 psi)



SVA shut-off valves are available in angleway and straightway versions and with Standard neck (SVA-S) and Long neck (SVA-L)

The shut-off valves are designed to meet all industrial refrigeration application requirements and are designed to give favourable flow characteristics and are easy to dismantle and repair when necessary.

The valve cone is designed to ensure perfect closing and withstand a high system pulsation and vibration, which can be present specifically in the discharge line.

Features

- Applicable to HCFC, HFC, R717 (Ammonia), R744 (CO_2) and all flammable refrigerants.
- Modular Concept:
  - Each valve housing is available with several different connection types and sizes.
  - Possible to convert SVA-S or SVA-L to any other product in the Flexline™ SVL family (hand operated regulating valve, check & stop valve, check valve or strainer) just by replacing the complete top part.
- Fast and easy valve overhaul service. It is easy to replace the top part and no welding is needed
- Optional accessories:
  - Heavy duty industrial hand wheel for frequent operation.
  - Cap for infrequent operation.
- Available in angleway and straightway versions with Standard neck or Long neck (DN 15 to DN 40) for insulated systems
- Each valve type is clearly marked with type, size and performance range
- The valves and caps are prepared for sealing, to prevent operation by unauthorized persons, using a seal wire
- Internal metal backseating:
  – DN 6 - 65 (¼ – 2 ½ in)
  Internal PTFE backseating:
  – DN 80 - 200 (3 – 8 in)
- Can accept flow in both directions.
- Housing and bonnet material is low temperature steel according to requirements of the Pressure Equipment Directive and other international classification authorities.
- Equipped with stainless steel bolts.
- Max. working pressure:
  52 bar g / 754 psi g
- Temperature range:
  -60 – 150 °C / -76 – 302 °F
- Classification: DNV, CRN, BV, EAC etc.
  To get an updated list of certification on the products please contact your local Danfoss Sales Company

Design

Connections
Available with the following connections:

- Butt-weld DIN (EN 10220)
- Butt-weld ANSI (B 36.10 Schedule 80), DN 6 - 40 (¼ – 1 ½ in)
- Butt-weld ANSI (B 36.10 Schedule 40), DN 50 - 200 (2 – 8 in)
- Butt-weld GOST, (8734-75 and 8732-78) DN 10 - 150 (⅜ – 6 in)
- Socket Weld (ANSI B 16.11), DN 15 - DN 50 (½ – 2 in)
- Outside pipe thread G ½ in – G 2 ⅜ in (ISO 228/1)
- FPT Female Pipe Thread, NPT (ANSI/ASME B 1.20.1), DN 15 – 32 (½ – 1 ¼ in)

Housing
Made of special, cold resistant steel.

Valve cone
The valve cone can be turned on the spindle, thus there will be no friction between the cone and the seat when the valve is opened and closed and the special design will avoid cone spin due to pulsation and vibration when the valve is in open position. A teflon tightening ring provides perfect sealing with minimum closing force.

Spindle
Made of polished stainless steel, ideal for leap seal sealing.

Packing gland
The low temperature packing gland ensures a perfect tightness in the range: -60/+150 °C (-76/+302 °F). The packing glands are equipped with a scraper ring to prevent penetration of dirt and ice into the packing gland.

Pressure Equipment Directive (PED)
SVA valves are approved according to the European standard specified in the Pressure Equipment Directive and are CE marked.

For further details / restrictions - see Installation Instruction.

Installation
It is recommended that the valves be installed in the direction of flow indicated by the arrow on the valve body. The valve can be installed in the opposite direction but this slightly reduces the k_v-value (C_v-value).

The valve is designed to withstand high internal pressure. However, the piping system in general should be designed to avoid liquid traps and reduce the risk of hydraulic pressure caused by thermal expansion.

For further information refer to installation instructions for SVA.

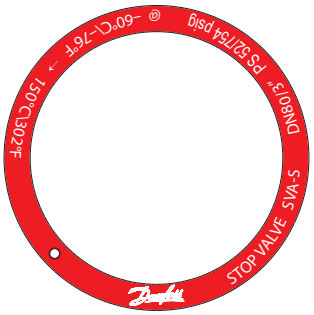

Example of Marking Ring

	SVA		
Nominal bore	DN≤ 25 mm (1 in)	DN32 – 80 mm (1¼ – 3 in)	DN100 – 200 mm (4 – 8 in)
Classified for	Fluid group I		
Category	Article 3, paragraph 3	II	III

Technical data

- Refrigerants
  Applicable to HCFC, HFC, R717 (Ammonia), R744 (CO_2) and all flammable refrigerants.
- Temperature range
  -60 – 150 °C / -76 – 302 °F.
- Max. working pressure
  52 bar g / 754 psi g.

Connections

DIN

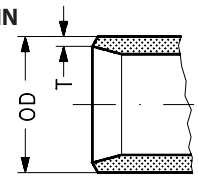

Size [mm]	Size [in]	OD [mm]	T [mm]	OD [in]	T [in]			k_v-angle [m^3/h]	k_v-straight [m^3/h]	C_v-angle [USgal/min]	C_v-straight [USgal/min]
Butt-weld DIN (EN 10220)											
6	¼	13.5	2.3	0.531	0.091			2.9	2.0	3.4	2.4
10	⅜	17.2	2.3	0.677	0.091			4.5	3.2	5.2	3.6
15	½	21.3	2.3	0.839	0.091			7.0	4.9	8.1	5.7
20	¾	26.9	2.3	1.059	0.091			14.6	10.2	16.9	11.8
25	1	33.7	2.6	1.327	0.103			24.8	17.4	28.8	20.2
32	1 ¼	42.4	2.6	1.669	0.102			42.6	29.8	49.4	34.6
40	1 ½	48.3	2.6	1.902	0.103			45.2	31.6	52.4	36.7
50	2	60.3	2.9	2.37	0.11			80	65	93	76
65	2 ½	76.1	2.9	3	0.11			120	97	140	113
80	3	88.9	3.2	3.50	0.13			182	152	211	176
100	4	114.3	3.6	4.50	0.14			313	278	363	323
125	5	139.7	4.0	5.50	0.16			514	470	596	545
150	6	168.3	4.5	6.63	0.18			785	597	911	693
200	8	219.1	6.3	8.63	0.25			1168	1024	1355	1188

ANSI

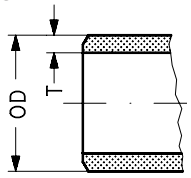

Size [mm]	Size [in]	OD [mm]	T [mm]	OD [in]	T [in]			k_v-angle [m^3/h]	k_v-straight [m^3/h]	C_v-angle [USgal/min]	C_v-straight [USgal/min]
Butt-weld ANSI (B 36.10 Schedule 80)											
6	¼	13.5	3.0	0.531	0.118			2.9	2.03	3.4	2.4
10	⅜	17.2	3.2	0.677	0.126			4.5	3.15	5.2	3.6
15	½	21.3	3.7	0.839	0.146			7.0	4.9	8.1	5.7
20	¾	26.9	4.0	1.059	0.158			14.6	10.2	16.9	11.8
25	1	33.7	4.6	1.327	0.181			24.8	17.4	28.8	20.2
32	1 ¼	42.4	4.9	1.669	0.193			42.6	29.8	49.4	34.6
40	1 ½	48.3	5.1	1.902	0.201			45.2	31.6	52.4	36.7
Butt-weld ANSI (B 36.10 Schedule 40)											
50	2	60.3	3.9	2.37	0.15			80	65	93	76
65	2 ½	73.0	5.2	2.87	0.20			120	97	140	113
80	3	88.9	5.5	3.50	0.22			182	152	211	176
100	4	114.3	6.0	4.50	0.24			313	278	363	323
125	5	141.3	6.6	5.56	0.26			514	470	596	545
150	6	168.3	7.1	6.63	0.28			785	597	911	693
200	8	219.1	8.2	8.63	0.32			1168	1024	1355	1188

GOST

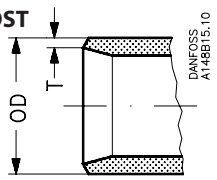

Size [mm]	Size [in]	OD [mm]	T [mm]	OD [in]	T [in]			k_v-angle [m^3/h]	k_v-straight [m^3/h]	C_v-angle [USgal/min]	C_v-straight [USgal/min]
Butt-weld GOST (8734-75 and 8732-78)											
10	⅜	14	2	0.551	0.079			4.5	3.2	5.2	3.6
15	½	18	2	0.709	0.079			7	4.9	8.1	5.7
20	¾	25	2.5	0.984	0.098			14.6	10.2	16.9	11.8
25	1	32	3	1.260	0.118			24.8	17.4	28.8	20.2
32	1 ¼	38	3	1.496	0.118			42.6	29.8	49.4	34.6
40	1 ½	45	3	1.772	0.118			45.2	31.6	52.4	36.7
50	2	57	3.5	2.244	0.138			80	65	93	76
65	2 ½	76.1	2.9	3	0.11			120	97	140	113
80	3	88.9	3.2	3.50	0.13			182	152	211	176
100	4	108	4	4.252	0.157			313	278	363	323
125	5	133	4	5.236	0.157			514	470	596	545
150	6	159	4.5	6.260	0.177			785	597	911	693

Shut-off valves, types SVA-S and SVA-L, 52 bar (754 psi)

Connections

SOC

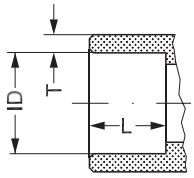

Size [mm]	Size [in]	ID [mm]	T [mm]	ID [in]	T [in]	L [mm]	L [in]	k_v-angle [m³/h]	k_v-straight [m³/h]	C_v-angle [USgal/min]	C_v-straight [USgal/min]
Socket welding ANSI (B 16.11)											
15	½	21.8	6.0	0.858	0.235	10	0.39	7.0	4.9	8.1	5.7
20	¾	27.2	4.6	1.071	0.181	13	0.51	14.6	10.9	16.9	11.8
25	1	33.9	7.2	1.335	0.284	13	0.51	24.8	17.4	28.8	20.2
32	1¼	42.7	6.1	1.743	0.240	13	0.51	42.6	29.8	49.4	34.6
40	1½	48.8	6.6	1.921	0.260	13	0.51	45.2	31.6	52.4	36.7
50	2	61.2	6.2	2.41	0.24	16	0.63	80	65	93	76

FPT

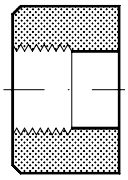

Size [mm]	Size [in]	Inside pipe tread			k_v-angle [m³/h]	k_v-straight [m³/h]	C_v-angle [USgal/min]	C_v-straight [USgal/min]
FPT inside pipe thread, NPT (ANSI/ASME B 1.20.1)								
15	½	(½ × 14 NPT)			8.5	6.0	9.9	7.0
20	¾	(¾ × 14 NPT)			10	7.0	11.6	8.1
25	1	(1 × 11.5 NPT)			32	22.4	37.1	26.0
32	1¼	(1¼ × 11.5 NPT)			36	25.2	41.8	29.3

Connections - SVA 6

T

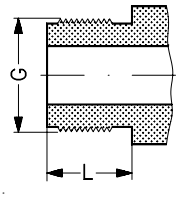

Size [mm]	Size [in]	Outside pipe thread	L [mm]	L [in]	K_V-angle [m³/h]	K_V-str. [m³/h]	C_V-angle [USgal/min]	C_V-str [USgal/min]
T outside pipe thread, (ISO 228/1)								
6	¼	G 1/2	16	0.63	2.5	2.0	2.9	2.0

ND

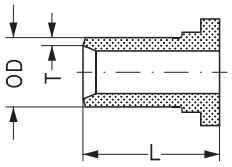

Nipples for T outside pipe thread, (ISO 228/1)

Size [mm]	Size [in]	OD [mm]	T [mm]	OD [in]	T [in]	L [mm]	L [in]	Inside pipe thread			
ND welding nipples, (DIN 2448)											
6	¼	13.5	2.3	0.531	0.091	60	2.36	G 1/2			

NA

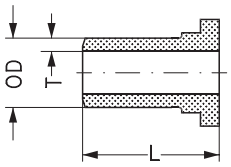

Size [mm]	Size [in]	OD [mm]	T [mm]	OD [in]	T [in]	L [mm]	L [in]	Inside pipe thread			
NA welding nipples, ANSI (B 36.10 Schedule 80)											
6	¼	13.5	3.0	0.531	0.118	60	2.36	G 1/2			

Material specification

SVA-S 6-10 (1/4 – 3/8 in)

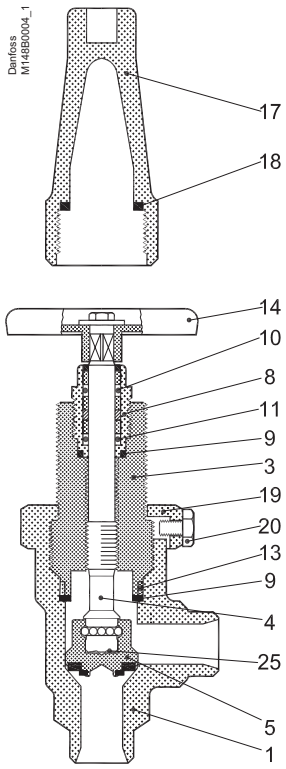

SVA-S 15-20 (1/2 – 3/4 in)

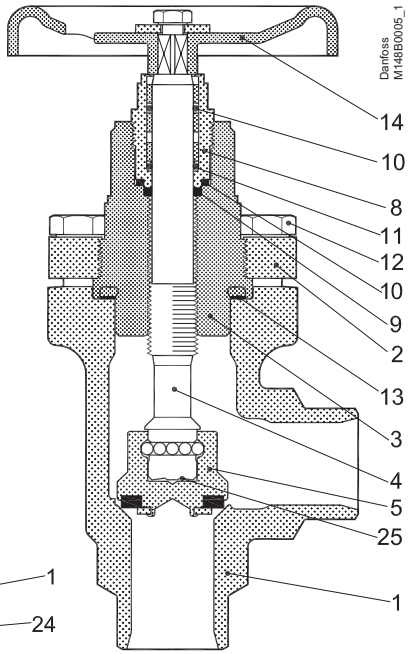

Welding nipple

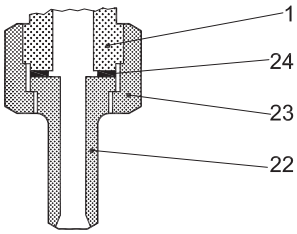

No.	Part	Material	EN	ISO	ASTM
1	Housing	Steel	G20Mn5QT, 10213-3 --- P285QH+QT, 10222-4		LCC, A352 --- LF2, A350
2	Bonnet, Flange	Steel	G20Mn5QT, 10213-3 --- P285QH+QT, 10222-4 --- P275NL, 10028-3		LCC, A352 --- LF2, A350
3	Bonnet, Insert	Steel	11SMn30 10087	Type 2 R 683/9	AISI 1213
4	Spindle	Stainless steel	X8CrNiS18-9 10088	Type 17 683/13	AISI 303
5	Cone	Steel	11SMn30 10087	Type 2 R 683/9	AISI 1213
8	Packing gland	Stainless steel	X8CrNiS18-9 10088	Type 17 683/13	AISI 303
9	Packing washer	Aluminium			
10	O-ring	Cloroprene (Neoprene)			
11	Spring loaded Teflon ring	PTFE			
12	Bolts	Stainless steel	A2-70	A2-70	Type 308
13	Gasket	Fiber, Non-asbestos			
14	Handwheel	Steel			
17	Cap	Aluminium			
18	Gasket for cap	Nylon			
19	Locking nut	Steel			
20	Screw	Steel			
22	Welding nipple	Steel	S235JRG2 10025	Fe260B, 630	Grade C, A 283
23	Nut	Steel	11SMn30 10087	Type 2 R 683/9	AISI 1213
24	Packing washer	Non-asbestos			
25	Disk spring	Steel			

Material specification

SVA-S 25-40 (1 – 1 ½ in)

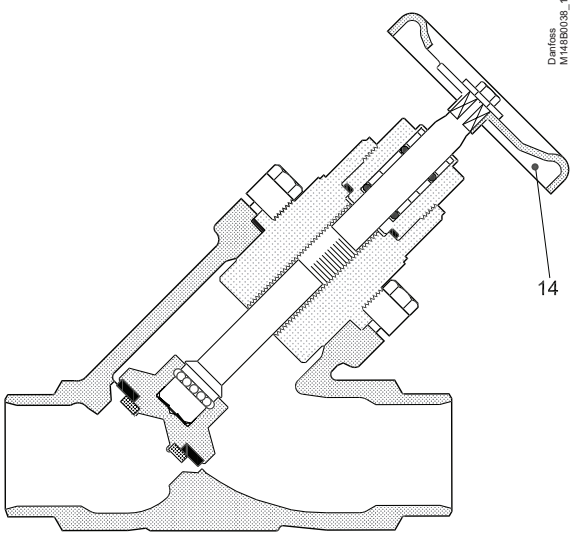

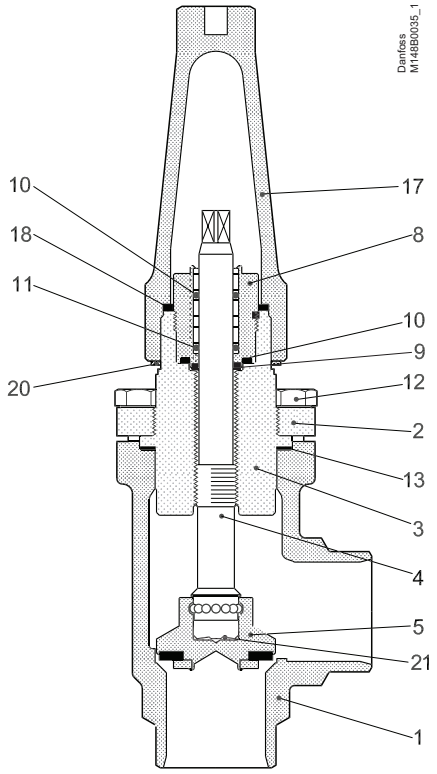

No.	Part	Material	EN	ISO	ASTM
1	Housing	Steel	G20Mn5QT, 10213-3 --- P285QH+QT, 10222-4		LCC, A352 --- LF2, A350
2	Bonnet, Flange	Steel	G20Mn5QT, 10213-3 --- P285QH+QT, 10222-4 --- P275NL, 10028-3		LCC, A352 --- LF2, A350
3	Bonnet, Insert	Steel	11SMn30 10087	Type 2 R 683/9	AISI 1213
4	Spindle	Stainless steel	X8CrNiS18-9 10088	Type 17 683/13	AISI 303
5	Cone	Steel	11SMn30 10087	Type 2 R 683/9	AISI 1213
8	Packing gland	Stainless steel	X8CrNiS18-9 10088	Type 17 683/13	AISI 303
9	Packing washer	Aluminium			
10	O-ring	Cloroprene (Neoprene)			
11	Spring loaded Teflon ring	PTFE			
12	Bolts	Stainless steel	A2-70	A2-70	Type 308
13	Gasket	Fiber, Non-asbestos			
14	Handwheel	Steel			
17	Cap	Aluminium			
18	Gasket for cap	Nylon			
20	Identification ring	Stainless steel			
21	Disk spring	Steel			

Material specification

SVA-L 15 - 40 (½ – 1 ½ in)

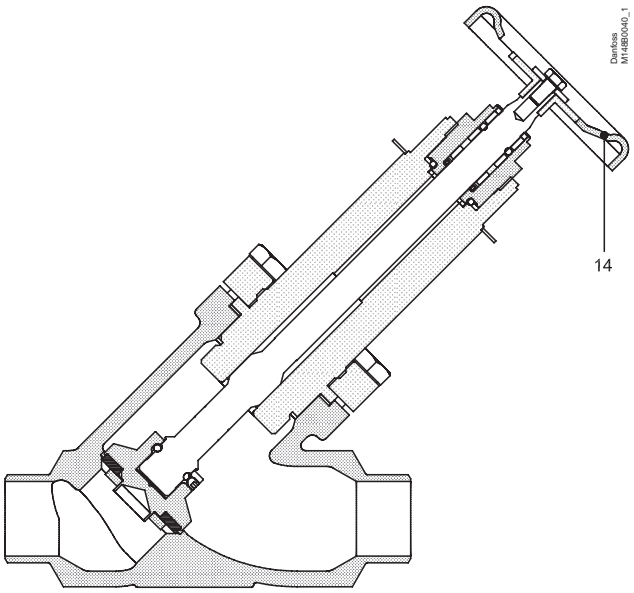

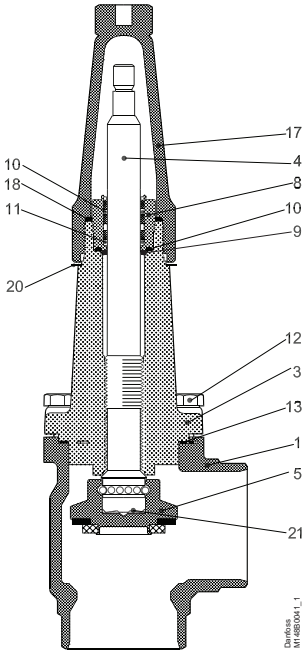

No.	Part	Material	EN	ISO	ASTM
1	Housing	Steel	G20Mn5QT, 10213-3 --- P285QH+QT, 10222-4		LCC, A352 --- LF2, A350
3	Valve bonnet	Steel	G20Mn5QT, 10213-3 --- P285QH+QT, 10222-4		LCC, A352 --- LF2, A350
4	Spindle	Stainless steel	X8CrNiS18-9 10088	Type 17 683/13	AISI 303
5	Cone	Steel	11SMn30 10087	Type 2 R 683/9	AISI 1213
8	Packing gland	Stainless steel	X8CrNiS18-9 10088	Type 17 683/13	AISI 303
9	Packing washer	Aluminium			
10	O-ring	Cloroprene (Neoprene)			
11	Spring loaded Teflon ring	PTFE			
12	Bolts	Stainless steel	A2-70	A2-70	Type 308
13	Gasket	Fiber, Non-asbestos			
14	Hand wheel	Steel			
17	Cap	Aluminium			
18	Gasket for cap	Nylon (PA6)			
20	Identification ring	Stainless steel			
21	Disk spring	Steel			

Material specification

SVA-S 50-65 (2 – 2 ½ in)

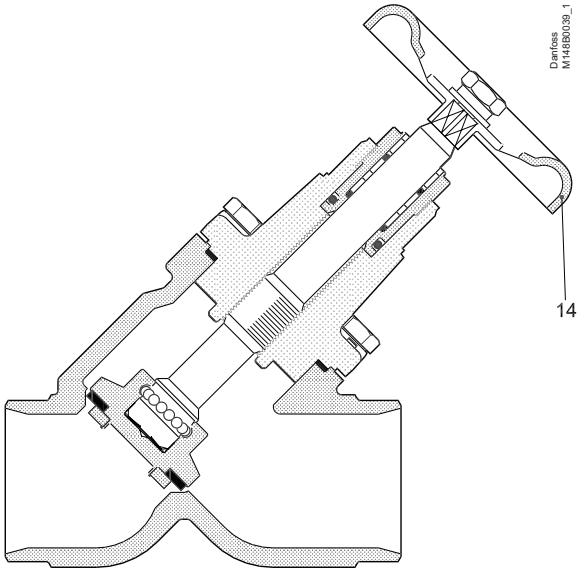

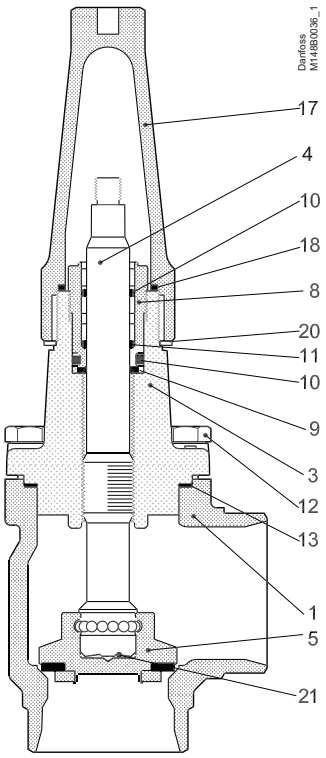

No.	Part	Material	EN	ISO	ASTM
1	Housing	Steel	G20Mn5QT, 10213-3 --- P285QH+QT, 10222-4		LCC, A352 --- LF2, A350
3	Valve bonnet	Steel	G20Mn5QT, 10213-3 --- P285QH+QT, 10222-4		LCC, A352 --- LF2, A350
4	Spindle	Stainless steel	X8CrNiS18-9 10088 DIN 17440 (SVA-SS only)	Type 17 683/13	AISI 303
5	Cone	Steel	11SMn30 10087	Type 2 R 683/9	AISI 1213
8	Packing gland	Stainless steel	X8CrNiS18-9 10088	Type 17 683/13	AISI 303
9	Packing washer	Aluminium			
10	O-ring	Cloroprene (Neoprene)			
11	Spring loaded Teflon ring	PTFE			
12	Bolts	Stainless steel	A2-70	A2-70	Type 308
13	Gasket	Fiber, Non-asbestos			
14	Handwheel	Steel			
17	Cap	Aluminium			
18	Gasket for cap	Nylon			
19	Locking nut	Steel			
20	Identification ring	Stainless steel			
21	Disk spring	Steel			

Material specification

SVA-S 80 - 150 (3 – 6 in)

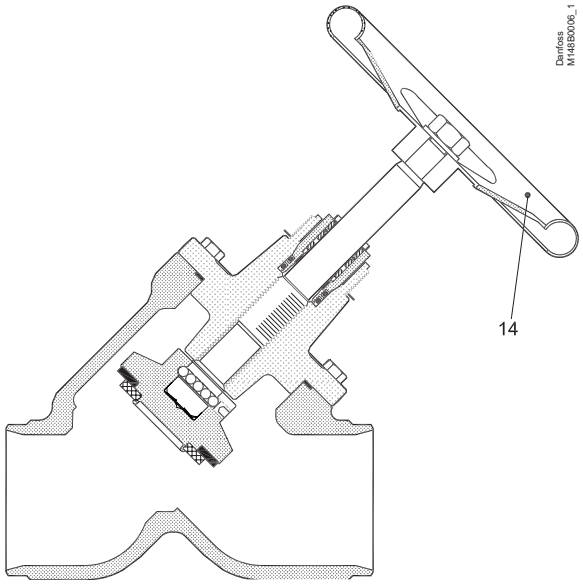

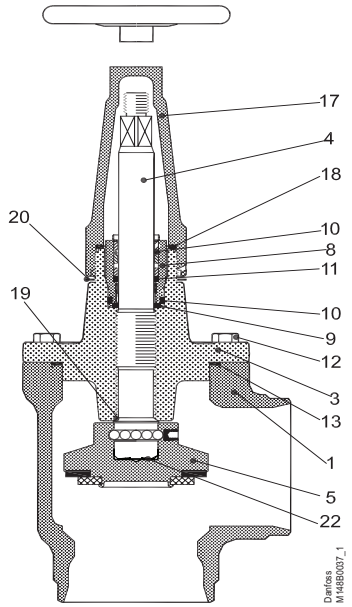

No.	Part	Material	EN	ISO	ASTM
1	Housing	Steel	G20Mn5QT 10213-3		LCC A352
3	Valve bonnet	Steel	SVA 80: G20Mn5QT SVA 100: P285QH+QT SVA 125: P285QH+QT SVA 150: P285QH+QT		SVA 80: LCC, A352 SVA 100: LF2, A350 SVA 125: LF2, A350 SVA 150: LF2, A350
4	Spindle	Stainless steel	X5CrNi18-10 10088	Type 11, R 683/13	AISI 304, A276
5	Cone Cone seal	Steel Teflon (PTFE)	11SMn30 10087	Type 2, R 683/9	AISI 1213
8	Packing gland	Stainless steel	X8CrNiS18-9 10088	Type 17 R 683/13	AISI 303
9	Packing washer	Aluminium			
10	O-ring	Cloroprene (Neoprene)			
11	Spring loaded Teflon ring	PTFE			
12	Bolts	Stainless steel	A2-70	A2-70	Type 308
13	Gasket	Fiber, Non-asbestos			
14	Hand wheel	Steel			
17	Cap	Aluminium			
18	Gasket for cap	Nylon (PA 6)			
19	Soft backseat	Teflon (PTFE)			
20	Identification ring	Stainless steel			
22	Disk spring	Steel			

Material specification

SVA-S 200 (8 in)

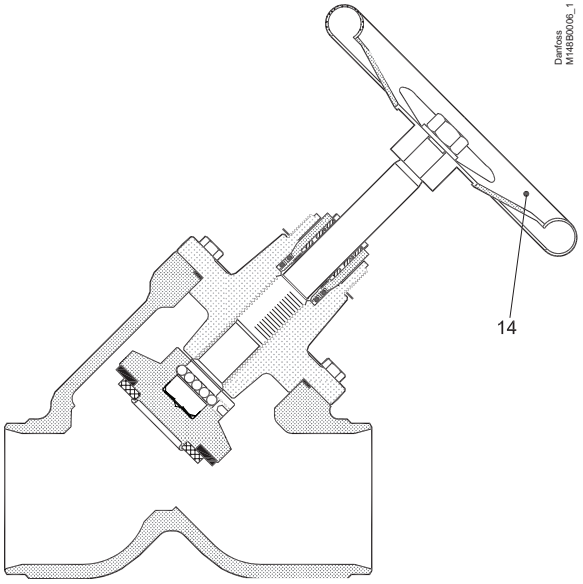

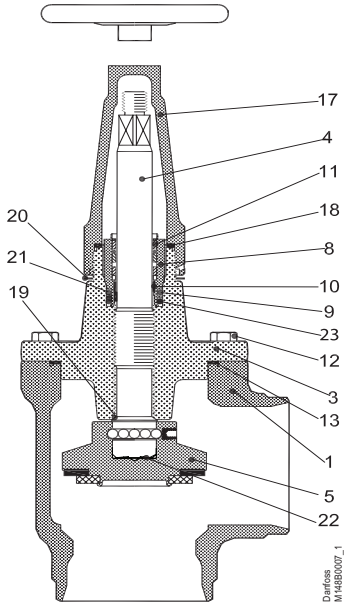

No.	Part	Material	EN	ISO	ASTM
1	Housing	Steel	G20Mn5QT 10213-3		LCC A352
3	Valve bonnet	Steel	G20Mn5QT, 10213-3 --- P285QH+QT, 10222-4		LCC, A352 --- LF2, A350
4	Spindle	Stainless steel	X5CrNi18-10 10088	Type 11, R 683/13	AISI 304, A276
5	Cone Cone seal	Steel Teflon (PTFE)	11SMn30 10087	Type 2, R 683/9	AISI 1213
8	Packing gland	Stainless steel	X8CrNiS18-9 10088	Type 17 R 683/13	AISI 303
9	O-ring	Cloroprene (Neoprene)			
10	Spring loaded Teflon ring	PTFE			
11	O-ring	Cloroprene (Neoprene)			
12	Bolts	Stainless steel	A2-70	A2-70	Type 308
13	Gasket	Fiber, Non-asbestos			
14	Hand wheel	Steel			
15	Washer	Stainless steel			
16	Nut	Stainless steel			
17	Cap	Aluminium			
18	Gasket for cap	Nylon (PA 6)			
19	Soft backseat	Teflon (PTFE)			
20	Identification ring	Stainless steel			
21	Wear ring	Teflon (PTFE)			
22	Disk spring	Steel			
23	O-ring	PTFE/Cloroprene (Neoprene)			

Dimensions and weights

SVA 6 -10 in angle execution with handwheel

SVA 6-10

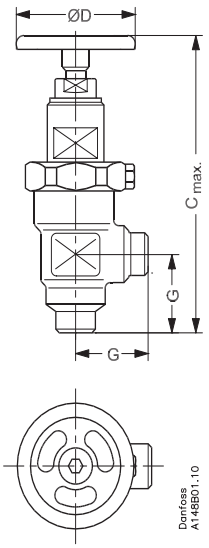

Valve size		$C_{max.}$	G	ØD	□H	Weight
SVA 6	[mm]	128	30	50		0.7 kg
	[in]	5.04	1.18	1.97		
SVA 10	[mm]	173	45	60	60	1.4 kg
	[in]	6.81	1.77	2.36	2.36	

SVA 6 - 10 in angle execution with cap

SVA 6-10

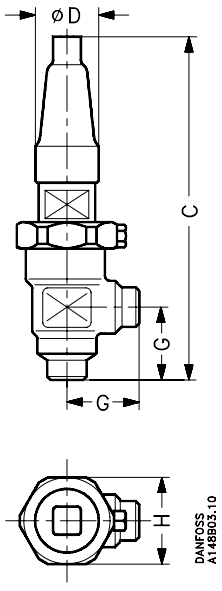

Valve size		C	G	ØD	□H	Weight
SVA 6	[mm]	139	30	30	48	0.8 kg
	[in]	5.47	1.18	1.18	1.89	
SVA 10	[mm]	182	45	38	60	1.4 kg
	[in]	7.17	1.77	1.50	2.36	

Specified weights are approximate values only.

Dimensions and weights

SVA 6-10

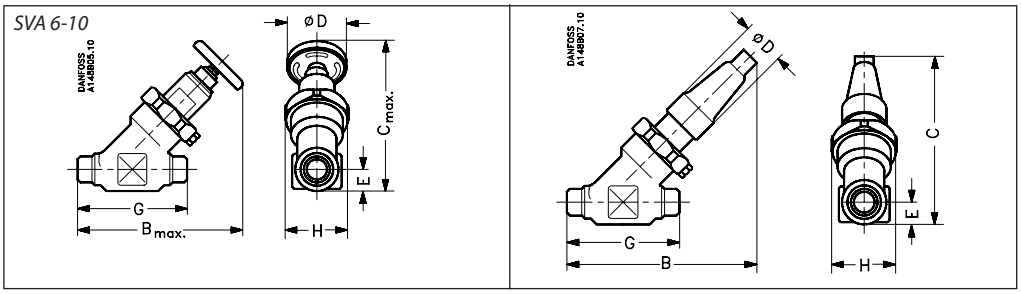

SVA 6 - 10 in straight-way execution with handwheel

Valve size		$C_{max.}$	$B_{max.}$	E	G	ØD	□H	Weight
SVA 6	[mm]	110	120	13	70	50	48	0.7 kg
	[in]	4.33	4.72	0.49	2.76	1.97	1.89	
SVA 10	[mm]	145	160	20	120	60	60	2.0 kg
	[in]	5.71	6.30	0.79	4.72	2.36	2.36	

SVA 6 - 10 in straight-way execution with cap

Valve size		C	B	E	G	ØD	□H	Weight
SVA 6	[mm]	110	120	13	70	30	48	0.8 kg
	[in]	4.33	4.72	0.49	2.76	1.16	1.89	
SVA 10	[mm]	145	155	20	120	38	60	2.0 kg
	[in]	5.71	6.10	0.79	4.72	1.50	2.36	

Specified weights are approximate values only.

SVA 15 - 40 (½ – 1 ½ in) in angleway version with cap / hand wheel

SVA-xx x x ANG CAP

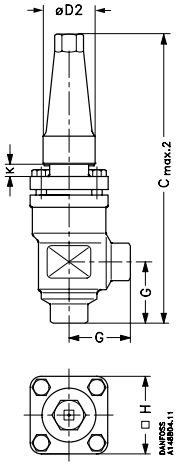

SVA-xx x x ANG H-WHEEL

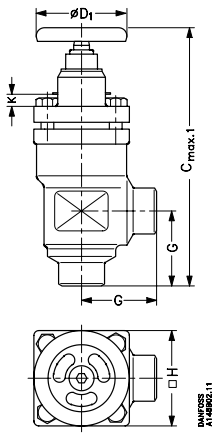

Valve size		K	$C_{max.1}$	$C_{max.2}$	G	$ØD_1$	$ØD_2$	□H	Weight
SVA-S									
SVA 15 - 20	[mm]	4	178	189	45	60	38	60	1.4 kg
SVA (½ - ¾)	[in]	0.16	7.00	7.44	1.77	2.36	1.5	2.36	3.1 lb
SVA 25 - 40	[mm]	12	234	268	55	80	50	70	2.4 kg
SVA (1 - 1 ½)	[in]	0.47	9.21	10.55	2.17	3.15	1.97	2.76	5.3 lb
SVA-S, Socket weld									
SVA 32 - 40	[mm]	12	241	275	62	80	50	70	2.9 kg
SVA (1 ¼ - 1 ½)	[in]	0.47	9.49	10.83	2.44	3.15	1.97	2.76	6.4 lb
SVA-L									
SVA 15 - 20	[mm]	63	237	248	45	60	38	60	1.4 kg
SVA (½ - ¾)	[in]	2.48	9.33	9.76	1.77	2.36	1.5	2.36	3.1 lb
SVA 25 - 40	[mm]	74	296	330	55	80	50	70	2.4 kg
SVA (1 - 1 ½)	[in]	2.91	11.65	12.99	2.17	3.15	1.97	2.76	5.3 lb
SVA-L, Socket weld									
SVA 32 - 40	[mm]	74	303	337	62	80	50	70	2.9 kg
SVA (1 ¼ - 1 ½)	[in]	2.91	11.93	13.27	2.44	3.15	1.97	2.76	6.4 lb

Specified weights are approximate values only.

Dimensions and weights

SVA 15 - 40 (½ - 1 ½ in) straightway version with cap / hand wheel

SVA-xx x x STR CAP

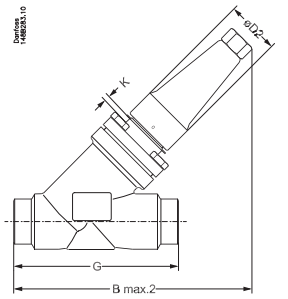

SVA-xx x x STR H-WHEEL

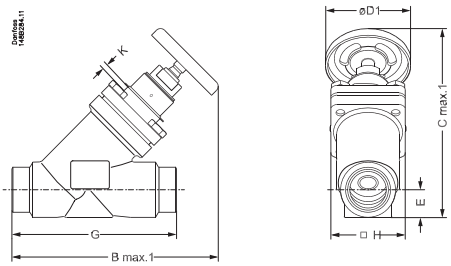

Valve size		K	$C_{max.1}$	$C_{max.2}$	$B_{max.1}$	$B_{max.2}$	E	G	$\varnothing D_1$	$\varnothing D_2$	□H	Weight
SVA-S												
SVA 15 - 20	[mm]	4	146	141	160	156	20	120	60	38	60	2.0 kg
SVA (½ - ¾)	[in]	0.16	5.74	5.55	6.30	6.14	0.79	4.72	2.36	1.50	2.36	4.4 lb
SVA 25 - 40	[mm]	12	199	208	212	222	26	155	80	50	70	3.0 kg
SVA (1 - 1½)	[in]	0.47	7.83	8.19	8.35	8.74	1.02	6.10	3.15	1.97	2.76	6.6 lb
SVA-S, Socket weld												
SVA 32	[mm]	12	200	209	212	222	27.4	155	80	50	70	3.0 kg
SVA (1 ¼)	[in]	0.47	7.87	8.23	8.35	8.74	1.08	6.10	3.15	1.97	2.76	6.6 lb
SVA 40	[mm]	12	204	213	212	222	31.0	155	80	50	70	3.0 kg
SVA (1½)	[in]	0.47	8.03	8.39	8.35	8.74	1.22	6.10	3.15	1.97	2.76	6.6 lb
SVA-L												
SVA 15 - 20	[mm]	63	188	184	202	198	20	120	60	38	60	2.0 kg
SVA (½ - ¾)	[in]	2.48	7.40	7.24	7.95	7.80	0.79	4.72	2.36	1.50	2.36	4.4 lb
SVA 25 - 40	[mm]	74	243	252	256	265	26	155	80	50	70	3.0 kg
SVA (1 - 1 ½)	[in]	2.91	9.57	9.92	10.08	10.43	1.02	6.10	3.15	1.97	2.76	6.6 lb
SVA-L, Socket weld												
SVA 32	[mm]	74	244	253	256	265	27.4	155	80	50	70	3.0 kg
SVA (1 ¼)	[in]	2.91	9.61	9.96	10.08	10.43	1.08	6.10	3.15	1.97	2.76	6.6 lb
SVA 40	[mm]	74	248	257	256	265	31.0	155	80	50	70	3.0 kg
SVA (1 ½)	[in]	2.91	9.76	10.12	10.08	10.43	1.22	6.10	3.15	1.97	2.76	6.6 lb

Specified weights are approximate values only.

Dimensions and weights

SVA 50 - 65 (2 – 2 ½ in) in angleway version with cap / hand wheel

SVA-xx x x ANG CAP

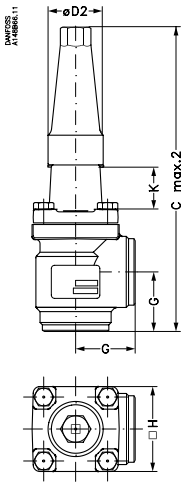

SVA-xx x x ANG H-WHEEL

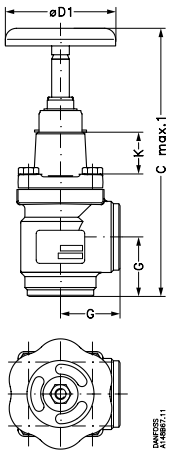

Valve size		K		$C_{max.1}$	$C_{max.2}$		G	$\varnothing D_1$	$\varnothing D_2$	□H		Weight
SVA-S												
SVA 50	[mm]	70		284	315		60	100	50	77		3.2 kg
SVA (2)	[in]	2.76		11.18	12.40		2.36	3.94	1.97	3.03		7.1 lb
SVA 65	[mm]	70		310	335		70	100	50	90		4.8 kg
SVA (2 ½)	[in]	2.76		12.20	13.19		2.76	3.94	1.97	3.54		10.6 lb
SVA-S, Socket weld												
SVA 50	[mm]	70		289	320		65	100	50	77		4.1 kg
SVA (2)	[in]	2.76		11.38	12.60		2.56	3.94	1.97	3.03		9.0 lb

Specified weights are approximate values only.

Dimensions and weights

SVA 50 - 65 (2 - 2 ½ in) in straightway version with cap / hand wheel

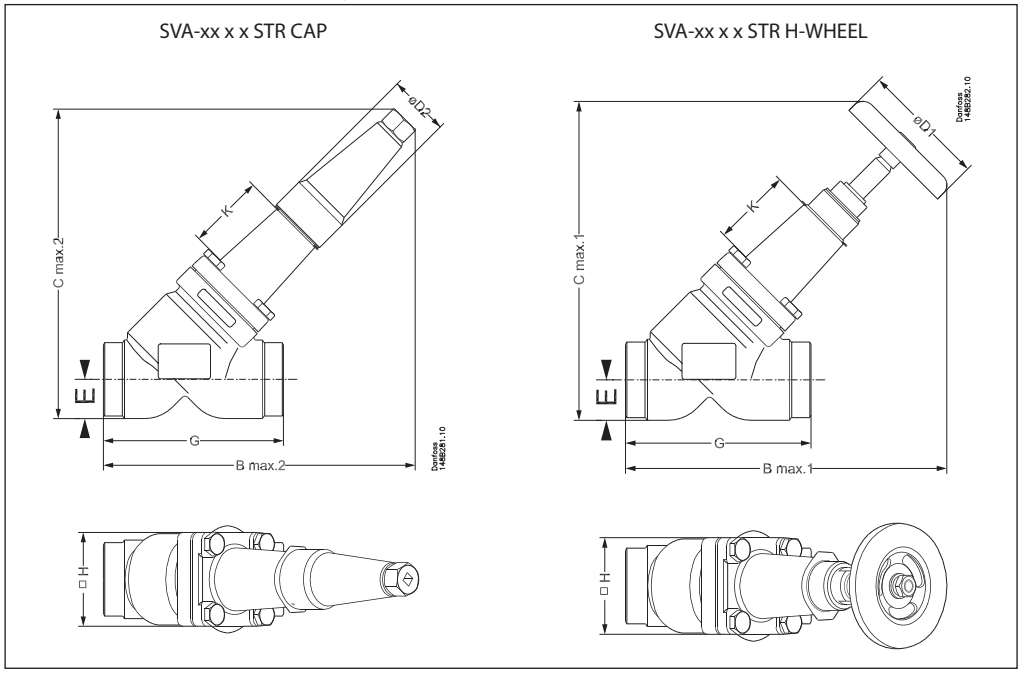

Valve size		K	$B_{max.1}$	$B_{max.2}$	$C_{max.1}$	$C_{max.2}$	E	G	$\varnothing D_1$	$\varnothing D_2$	□H	Weight
SVA-S												
SVA 50	[mm]	70	259	259	257	257	32	148	100	50	77	4.2 kg
SVA (2)	[in]	2.76	10.20	10.20	10.12	10.12	1.26	5.83	3.94	1.97	3.03	9.3 lb
SVA 65	[mm]	70	284	280	284	280	40	176	100	50	90	6.3 kg
SVA (2½)	[in]	2.76	11.18	11.02	11.18	11.02	1.57	6.93	3.94	1.97	3.54	13.9 lb
SVA-S, Socket weld												
SVA 50	[mm]	70	266	266	261	261	37	162	100	50	77	5.1 kg
SVA (2)	[in]	2.76	10.47	10.47	10.28	10.28	1.26	6.38	3.94	1.97	3.03	11.2 lb

Specified weights are approximate values only.

Dimensions and weights

SVA 80 - 200 (3 - 8 in) angleway version with cap / hand wheel

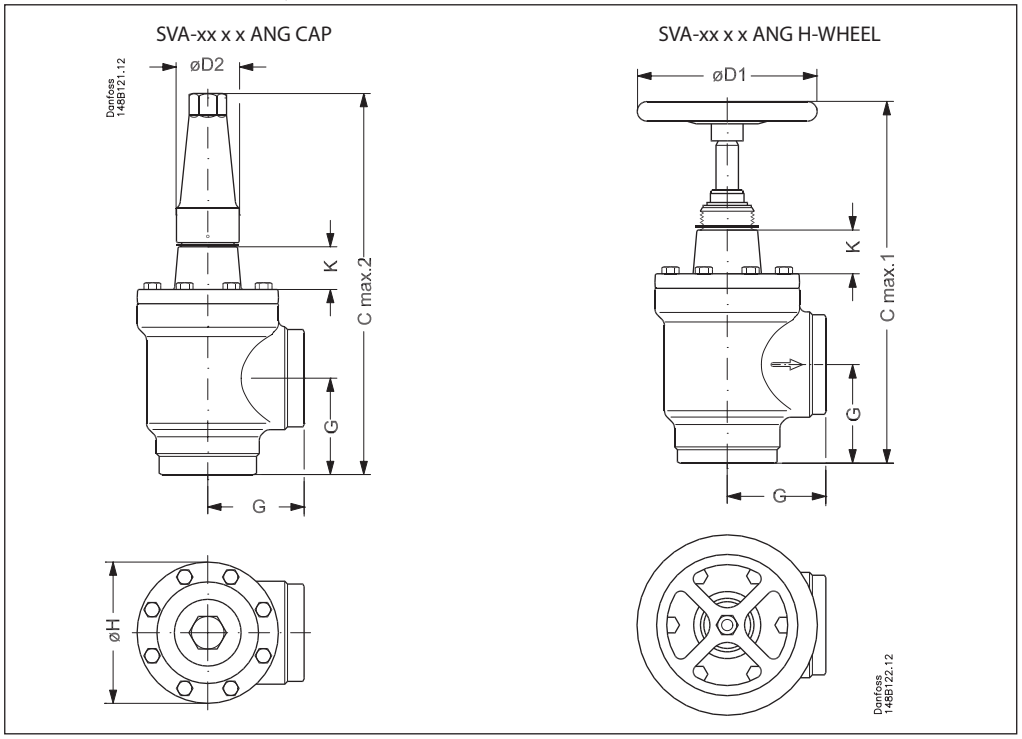

Valve size		K	$C_{max.1}$	$C_{max.2}$	G	$ØD_1$	$ØD_2$	ØH	Weight
SVA-S									
SVA 80	[mm]	76	373	388	90	200	58	129	9.7 kg
SVA (3)	[in]	3.00	14.69	15.28	3.54	7.87	2.28	5.08	21.4 lb
SVA 100	[mm]	90	432	437	106	250	58	156	15.3 kg
SVA (4)	[in]	3.54	17.00	17.20	4.17	9.84	2.28	6.14	33.7 lb
SVA 125	[mm]	90	517	533	128	315	74	193	28.1 kg
SVA (5)	[in]	3.54	20.35	20.98	5.04	12.40	2.91	7.60	61.9 lb
SVA 150	[mm]	90	564	568	145	315	74	219	39.7 kg
SVA (6)	[in]	3.54	22.20	22.36	5.71	12.40	2.91	8.62	87.5 lb
SVA 200	[mm]	90	677	678	180	400	86	276	79.5 kg
SVA (8)	[in]	3.54	26.63	26.69	7.09	15.75	3.39	10.87	175.3 lb

Specified weights are approximate values only.

Dimensions and weights

SVA 80 - 200 (3 - 8 in) straightway version with cap / hand wheel

SVA-xx x x STR CAP

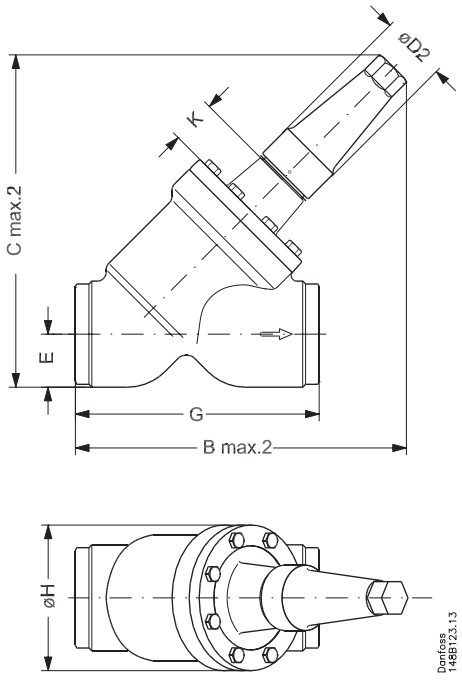

SVA-xx x x STR H-WHEEL

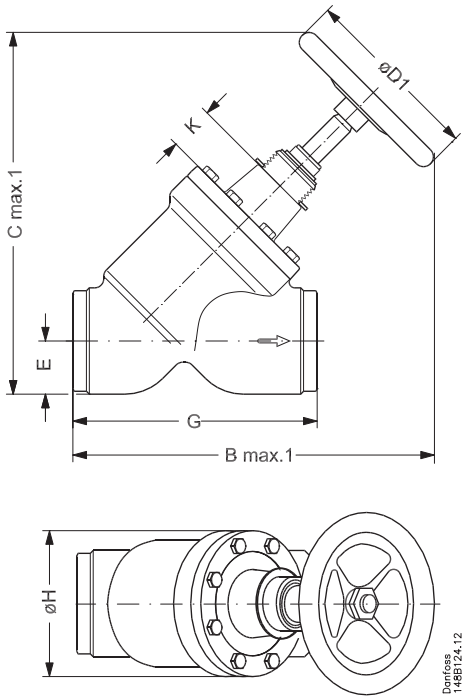

Valve size		K	$B_{max.1}$	$B_{max.2}$	$C_{max.1}$	$C_{max.2}$	E	G	$\varnothing D_1$	$\varnothing D_2$	$\varnothing H$	Weight
SVA-S												
SVA 80	[mm]	76	365	321	367	322	48	216	200	58	129	10.9 kg
SVA (3)	[in]	3.00	14.37	12.64	14.45	12.72	1.89	8.50	7.87	2.28	5.08	24.0 lb
SVA 100	[mm]	90	435	367	443	375	60	264	250	58	156	18.2 kg
SVA (4)	[in]	3.54	17.13	14.45	17.44	14.76	2.36	10.39	9.84	2.28	6.14	40.1 lb
SVA 125	[mm]	90	526	444	538	456	74	322	315	74	193	32.8 kg
SVA (5)	[in]	3.54	20.71	17.48	21.18	17.95	2.91	12.68	12.40	2.91	7.60	72.3 lb
SVA 150	[mm]	90	572	483	594	505	91	370	315	74	219	60.0 kg
SVA (6)	[in]	3.54	22.52	19.02	23.39	19.88	3.58	14.57	12.40	2.91	8.62	132.3 lb
SVA 200	[mm]	90	692	579	726	613	117	464	400	86	276	111.5 kg
SVA (8)	[in]	3.54	27.24	22.80	28.58	24.13	4.61	18.27	15.75	3.39	10.87	245.8 lb

Specified weights are approximate values only.

Ordering

Available connection sizes

SVA-**S**:
The **S** means **S**tandard bonnet length (sizes from DN50 to DN200 are insulation friendly)

SVA-**L**:
The **L** means **L**ong bonnet length (insulation friendly)

Size	SVA-S	SVA-L
6	x	
10	x	
15	x	x
20	x	x
25	x	x
32	x	x
40	x	x
50	x	
65	x	
80	x	
100	x	
125	x	
150	x	
200	x	

Please note that the type codes only serve to identify the valves, some of which may not form part of the standard product range. For further information please contact your local Danfoss Sales Company.

Type codes

Valve type	SVA	Shut-off valve					
Nominal size in mm			Available connections				
			A/D	G	SOC	FPT	T
(valve size measured on the connection diameter)	**6**	DN 6 (1/4)	x				x
	10	DN 10 (3/8)	x	x			
	15	DN 15 (½)	x	x	x	x	
	20	DN 20 (¾)	x	x	x	x	
	25	DN 25 (1)	x	x	x	x	
	32	DN 32 (1¼)	x	x	x	x	
	40	DN 40 (1½)	x	x	x		
	50	DN 50 (2)	x	x	x		
	65	DN 65 (2½)	x				
	80	DN 80 (3)	x				
	100	DN 100 (4)	x	x			
	125	DN 125 (5)	x	x			
	150	DN 150 (6)	x	x			
	200	DN 200 (8)	x				
Connections	**A**	Butt-weld connection: ANSI B 36.10 schedule 80, DN 15 - 40 (½ - 1½ in)					
		Butt-weld connection: ANSI B 36.10 schedule 40, DN 50 - 200 (2 - 8 in)					
	D	Butt-weld connection: DIN EN 10220					
	G	Butt-weld connection: GOST (8734-75 and 8732-78)					
	SOC	Socket weld: ANSI B 16.11					
	FPT	Female Pipe Thread NPT: ANSI/ASME B 1.20.1					
	T	Outside threaded connections ISO 228/1 Pipe thread					
Valve housing	**ANG**	Angle flow					
	STR	Straight flow					
Other equipment	**H-WHEEL**	Hand wheel					
	CAP	Cap					

Important!
Where products need to be certified according to specific certification societies or where higher pressures are required, the relevant information should be included at the time of order.

Ordering SVA-S complete valves

Example:
SVA-S 20 DIN angleway with hand wheel = **148B5300**

Important!
Where products need to be certified according to specific certification societies or where higher pressures are required, the relevant information should be included at the time of order.

ANG = Angleway
STR = Straightway

CAP = Cap
H-WHEEL = Hand wheel

SVA-S Angleway

Size [mm]	Size [in]	Type	MWP [bar]	MWP [psi]	Code number
Butt-weld DIN (EN 10220)					
6	¼	SVA-S 6 D ANG H-WHEEL	52	754	**148B5000**
6	¼	SVA-S 6 D ANG CAP	52	754	**148B5001**
10	3⁄8	SVA-S 10 D ANG H-WHEEL	52	754	**148B5100**
10	3⁄8	SVA-S 10 D ANG CAP	52	754	**148B5101**
15	½	SVA-S 15 D ANG H-WHEEL	52	754	**148B5200**
15	½	SVA-S 15 D ANG CAP	52	754	**148B5201**
20	¾	SVA-S 20 D ANG H-WHEEL	52	754	**148B5300**
20	¾	SVA-S 20 D ANG CAP	52	754	**148B5301**
25	1	SVA-S 25 D ANG H-WHEEL	52	754	**148B5400**
25	1	SVA-S 25 D ANG CAP	52	754	**148B5401**
32	1 ¼	SVA-S 32 D ANG H-WHEEL	52	754	**148B5500**
32	1 ¼	SVA-S 32 D ANG CAP	52	754	**148B5501**
40	1 ½	SVA-S 40 D ANG H-WHEEL	52	754	**148B5600**
40	1 ½	SVA-S 40 D ANG CAP	52	754	**148B5601**
50	2	SVA-S 50 D ANG H-WHEEL	52	754	**148B5700**
50	2	SVA-S 50 D ANG CAP	52	754	**148B5701**
65	2 ½	SVA-S 65 D ANG H-WHEEL	52	754	**148B5800**
65	2 ½	SVA-S 65 D ANG CAP	52	754	**148B5801**
80	3	SVA-S 80 D ANG H-WHEEL	52	754	**148B5900**
80	3	SVA-S 80 D ANG CAP	52	754	**148B5901**
100	4	SVA-S 100 D ANG H-WHEEL	52	754	**148B6000**
100	4	SVA-S 100 D ANG CAP	52	754	**148B6001**
125	5	SVA-S 125 D ANG H-WHEEL	52	754	**148B6100**
125	5	SVA-S 125 D ANG CAP	52	754	**148B6101**
150	6	SVA-S 150 D ANG H-WHEEL	52	754	**148B6200**
150	6	SVA-S 150 D ANG CAP	52	754	**148B6201**
200	8	SVA-S 200 D ANG H-WHEEL	52	754	**148B6300**
200	8	SVA-S 200 D ANG CAP	52	754	**148B6301**
Butt-weld ANSI (B 36.10 Schedule 80)					
6	¼	SVA-S 6 A ANG H-WHEEL	52	754	**148B5020**
6	¼	SVA-S 6 A ANG CAP	52	754	**148B5021**
10	3⁄8	SVA-S 10 A ANG H-WHEEL	52	754	**148B5120**
10	3⁄8	SVA-S 10 A ANG CAP	52	754	**148B5121**
15	½	SVA-S 15 A ANG H-WHEEL	52	754	**148B5220**
15	½	SVA-S 15 A ANG CAP	52	754	**148B5221**
20	¾	SVA-S 20 A ANG H-WHEEL	52	754	**148B5320**
20	¾	SVA-S 20 A ANG CAP	52	754	**148B5321**
25	1	SVA-S 25 A ANG H-WHEEL	52	754	**148B5420**
25	1	SVA-S 25 A ANG CAP	52	754	**148B5421**
32	1 ¼	SVA-S 32 A ANG H-WHEEL	52	754	**148B5520**
32	1 ¼	SVA-S 32 A ANG CAP	52	754	**148B5521**
40	1 ½	SVA-S 40 A ANG H-WHEEL	52	754	**148B5620**
40	1 ½	SVA-S 40 A ANG CAP	52	754	**148B5621**
Butt-weld ANSI (B 36.10 Schedule 40)					
50	2	SVA-S 50 A ANG H-WHEEL	52	754	**148B5720**
50	2	SVA-S 50 A ANG CAP	52	754	**148B5721**
65	2 ½	SVA-S 65 A ANG H-WHEEL	52	754	**148B5820**
65	2 ½	SVA-S 65 A ANG CAP	52	754	**148B5821**
80	3	SVA-S 80 A ANG H-WHEEL	52	754	**148B5920**
80	3	SVA-S 80 A ANG CAP	52	754	**148B5921**
100	4	SVA-S 100 A ANG H-WHEEL	52	754	**148B6020**
100	4	SVA-S 100 A ANG CAP	52	754	**148B6021**
125	5	SVA-S 125 A ANG H-WHEEL	52	754	**148B6120**
125	5	SVA-S 125 A ANG CAP	52	754	**148B6121**
150	6	SVA-S 150 A ANG H-WHEEL	52	754	**148B6220**
150	6	SVA-S 150 A ANG CAP	52	754	**148B6221**
200	8	SVA-S 200 A ANG H-WHEEL	52	754	**148B6320**
200	8	SVA-S 200 A ANG CAP	52	754	**148B6321**
Butt-weld, GOST					
150	6	SVA-S 150 G ANG H-WHEEL	52	754	**148B6240**
150	6	SVA-S 150 G ANG CAP	52	754	**148B6241**
Socket welding ANSI (B 16.11)					
15	½	SVA-S 15 SOC ANG H-WHEEL	52	754	**148B5222**
15	½	SVA-S 15 SOC ANG CAP	52	754	**148B5223**
20	¾	SVA-S 20 SOC ANG H-WHEEL	52	754	**148B5322**
20	¾	SVA-S 20 SOC ANG CAP	52	754	**148B5323**
25	1	SVA-S 25 SOC ANG H-WHEEL	52	754	**148B5422**
25	1	SVA-S 25 SOC ANG CAP	52	754	**148B5423**
32	1 ¼	SVA-S 32 SOC ANG H-WHEEL	52	754	**148B5522**
32	1 ¼	SVA-S 32 SOC ANG CAP	52	754	**148B5523**
40	1 ½	SVA-S 40 SOC ANG H-WHEEL	52	754	**148B5622**
40	1 ½	SVA-S 40 SOC ANG CAP	52	754	**148B5623**
50	2	SVA-S 50 SOC ANG H-WHEEL	52	754	**148B5722**
50	2	SVA-S 50 SOC ANG CAP	52	754	**148B5723**

SVA-S Straightway

Size [mm]	Size [in]	Type	MWP [bar]	MWP [psi]	Code number
Butt-weld DIN (EN 10220)					
6	¼	SVA-S 6 D STR H-WHEEL	52	754	**148B5010**
6	¼	SVA-S 6 D STR CAP	52	754	**148B5011**
10	3⁄8	SVA-S 10 D STR H-WHEEL	52	754	**148B5110**
10	3⁄8	SVA-S 10 D STR CAP	52	754	**148B5111**
15	½	SVA-S 15 D STR H-WHEEL	52	754	**148B5210**
15	½	SVA-S 15 D STR CAP	52	754	**148B5211**
20	¾	SVA-S 20 D STR H-WHEEL	52	754	**148B5310**
20	¾	SVA-S 20 D STR CAP	52	754	**148B5311**
25	1	SVA-S 25 D STR H-WHEEL	52	754	**148B5410**
25	1	SVA-S 25 D STR CAP	52	754	**148B5411**
32	1 ¼	SVA-S 32 D STR H-WHEEL	52	754	**148B5510**
32	1 ¼	SVA-S 32 D STR CAP	52	754	**148B5511**
40	1 ½	SVA-S 40 D STR H-WHEEL	52	754	**148B5610**
40	1 ½	SVA-S 40 D STR CAP	52	754	**148B5611**
50	2	SVA-S 50 D STR H-WHEEL	52	754	**148B5710**
50	2	SVA-S 50 D STR CAP	52	754	**148B5711**
65	2 ½	SVA-S 65 D STR H-WHEEL	52	754	**148B5810**
65	2 ½	SVA-S 65 D STR CAP	52	754	**148B5811**
80	3	SVA-S 80 D STR H-WHEEL	52	754	**148B5910**
80	3	SVA-S 80 D STR CAP	52	754	**148B5911**
100	4	SVA-S 100 D STR H-WHEEL	52	754	**148B6010**
100	4	SVA-S 100 D STR CAP	52	754	**148B6011**
125	5	SVA-S 125 D STR H-WHEEL	52	754	**148B6110**
125	5	SVA-S 125 D STR CAP	52	754	**148B6111**
150	6	SVA-S 150 D STR H-WHEEL	52	754	**148B6210**
150	6	SVA-S 150 D STR CAP	52	754	**148B6211**
200	8	SVA-S 200 D STR H-WHEEL	52	754	**148B6310**
200	8	SVA-S 200 D STR CAP	52	754	**148B6311**
Butt-weld ANSI (B 36.10 Schedule 80)					
6	¼	SVA-S 6 A STR H-WHEEL	52	754	**148B5030**
6	¼	SVA-S 6 A STR CAP	52	754	**148B5031**
10	3⁄8	SVA-S 10 A STR H-WHEEL	52	754	**148B5130**
10	3⁄8	SVA-S 10 A STR CAP	52	754	**148B5131**
15	½	SVA-S 15 A STR H-WHEEL	52	754	**148B5230**
15	½	SVA-S 15 A STR CAP	52	754	**148B5231**
20	¾	SVA-S 20 A STR H-WHEEL	52	754	**148B5330**
20	¾	SVA-S 20 A STR CAP	52	754	**148B5331**
25	1	SVA-S 25 A STR H-WHEEL	52	754	**148B5430**
25	1	SVA-S 25 A STR CAP	52	754	**148B5431**
32	1 ¼	SVA-S 32 A STR H-WHEEL	52	754	**148B5530**
32	1 ¼	SVA-S 32 A STR CAP	52	754	**148B5531**
40	1 ½	SVA-S 40 A STR H-WHEEL	52	754	**148B5630**
40	1 ½	SVA-S 40 A STR CAP	52	754	**148B5631**
Butt-weld ANSI (B 36.10 Schedule 40)					
50	2	SVA-S 50 A STR H-WHEEL	52	754	**148B5730**
50	2	SVA-S 50 A STR CAP	52	754	**148B5731**
65	2 ½	SVA-S 65 A STR H-WHEEL	52	754	**148B5830**
65	2 ½	SVA-S 65 A STR CAP	52	754	**148B5831**
80	3	SVA-S 80 A STR H-WHEEL	52	754	**148B5930**
80	3	SVA-S 80 A STR CAP	52	754	**148B5931**
100	4	SVA-S 100 A STR H-WHEEL	52	754	**148B6030**
100	4	SVA-S 100 A STR CAP	52	754	**148B6031**
125	5	SVA-S 125 A STR H-WHEEL	52	754	**148B6130**
125	5	SVA-S 125 A STR CAP	52	754	**148B6131**
150	6	SVA-S 150 A STR H-WHEEL	52	754	**148B6230**
150	6	SVA-S 150 A STR CAP	52	754	**148B6231**
200	8	SVA-S 200 A STR H-WHEEL	52	754	**148B6330**
200	8	SVA-S 200 A STR CAP	52	754	**148B6331**
Butt-weld, GOST					
150	6	SVA-S 150 G STR H-WHEEL	52	754	**148B6250**
150	6	SVA-S 150 G STR CAP	52	754	**148B6251**
Socket welding ANSI (B 16.11)					
15	½	SVA-S 15 SOC STR H-WHEEL	52	754	**148B5232**
15	½	SVA-S 15 SOC STR CAP	52	754	**148B5233**
20	¾	SVA-S 20 SOC STR H-WHEEL	52	754	**148B5332**
20	¾	SVA-S 20 SOC STR CAP	52	754	**148B5333**
25	1	SVA-S 25 SOC STR H-WHEEL	52	754	**148B5432**
25	1	SVA-S 25 SOC STR CAP	52	754	**148B5433**
32	1 ¼	SVA-S 32 SOC STR H-WHEEL	52	754	**148B5532**
32	1 ¼	SVA-S 32 SOC STR CAP	52	754	**148B5533**
40	1 ½	SVA-S 40 SOC STR H-WHEEL	52	754	**148B5632**
40	1 ½	SVA-S 40 SOC STR CAP	52	754	**148B5633**
50	2	SVA-S 50 SOC STR H-WHEEL	52	754	**148B5732**
50	2	SVA-S 50 SOC STR CAP	52	754	**148B5733**

Ordering SVA-S complete valves

ANG = Angleway
STR = Straightway

CAP = Cap
H-WHEEL = Hand wheel

FPT inside pipe thread, NPT (ANSI/ASME B 1.20.1)

15	½	SVA-S 15 FPT ANG H-WHEEL	52	754	**148B5224**
15	½	SVA-S 15 FPT ANG CAP	52	754	**148B5225**
20	¾	SVA-S 20 FPT ANG H-WHEEL	52	754	**148B5324**
20	¾	SVA-S 20 FPT ANG CAP	52	754	**148B5325**
25	1	SVA-S 25 FPT ANG H-WHEEL	52	754	**148B5424**
25	1	SVA-S 25 FPT ANG CAP	52	754	**148B5425**
32	1 ¼	SVA-S 32 FPT ANG H-WHEEL	52	754	**148B5524**
32	1 ¼	SVA-S 32 FPT ANG CAP	52	754	**148B5525**

T outside pipe thread, (ISO 228/1)

6	¼	SVA-S 6 T ANG CAP	52	754	**148B5032**

FPT inside pipe thread, NPT (ANSI/ASME B 1.20.1)

15	½	SVA-S 15 FPT STR H-WHEEL	52	754	**148B5234**
15	½	SVA-S 15 FPT STR CAP	52	754	**148B5235**
20	¾	SVA-S 20 FPT STR H-WHEEL	52	754	**148B5334**
20	¾	SVA-S 20 FPT STR CAP	52	754	**148B5335**
25	1	SVA-S 25 FPT STR H-WHEEL	52	754	**148B5434**
25	1	SVA-S 25 FPT STR CAP	52	754	**148B5435**
32	1 ¼	SVA-S 32 FPT STR H-WHEEL	52	754	**148B5534**
32	1 ¼	SVA-S 32 FPT STR CAP	52	754	**148B5535**

Ordering SVA-L complete valves

Example:
SVA-L 20 DIN angleway with hand wheel = **148B5340**

Important!
Where products need to be certified according to specific certification societies or where higher pressures are required, the relevant information should be included at the time of order.

ANG = Angleway
STR = Straightway

CAP = Cap
H-WHEEL = Hand wheel

SVA-L Angleway

Size [mm]	Size [in]	Type	MWP [bar]	MWP [psi]	Code number
Butt-weld DIN (EN 10220)					
15	½	SVA-L 15 D ANG H-WHEEL	52	754	**148B5240**
15	½	SVA-L 15 D ANG CAP	52	754	**148B5241**
20	¾	SVA-L 20 D ANG H-WHEEL	52	754	**148B5340**
20	¾	SVA-L 20 D ANG CAP	52	754	**148B5341**
25	1	SVA-L 25 D ANG H-WHEEL	52	754	**148B5440**
25	1	SVA-L 25 D ANG CAP	52	754	**148B5441**
32	1 ¼	SVA-L 32 D ANG H-WHEEL	52	754	**148B5540**
32	1 ¼	SVA-L 32 D ANG CAP	52	754	**148B5541**
40	1 ½	SVA-L 40 D ANG H-WHEEL	52	754	**148B5640**
40	1 ½	SVA-L 40 D ANG CAP	52	754	**148B5641**
Butt-weld ANSI (B 36.10 Schedule 80)					
15	½	SVA-L 15 A ANG H-WHEEL	52	754	**148B5260**
15	½	SVA-L 15 A ANG CAP	52	754	**148B5261**
20	¾	SVA-L 20 A ANG H-WHEEL	52	754	**148B5360**
20	¾	SVA-L 20 A ANG CAP	52	754	**148B5361**
25	1	SVA-L 25 A ANG H-WHEEL	52	754	**148B5460**
25	1	SVA-L 25 A ANG CAP	52	754	**148B5461**
32	1 ¼	SVA-L 32 A ANG H-WHEEL	52	754	**148B5560**
32	1 ¼	SVA-L 32 A ANG CAP	52	754	**148B5561**
40	1 ½	SVA-L 40 A ANG H-WHEEL	52	754	**148B5660**
40	1 ½	SVA-L 40 A ANG CAP	52	754	**148B5661**
Socket welding ANSI (B 16.11)					
15	½	SVA-L 15 SOC ANG H-WHEEL	52	754	**148B5262**
15	½	SVA-L 15 SOC ANG CAP	52	754	**148B5263**
20	¾	SVA-L 20 SOC ANG H-WHEEL	52	754	**148B5362**
20	¾	SVA-L 20 SOC ANG CAP	52	754	**148B5363**
25	1	SVA-L 25 SOC ANG H-WHEEL	52	754	**148B5462**
25	1	SVA-L 25 SOC ANG CAP	52	754	**148B5463**
32	1 ¼	SVA-L 32 SOC ANG H-WHEEL	52	754	**148B5562**
32	1 ¼	SVA-L 32 SOC ANG CAP	52	754	**148B5563**
40	1 ½	SVA-L 40 SOC ANG H-WHEEL	52	754	**148B5662**
40	1 ½	SVA-L 40 SOC ANG CAP	52	754	**148B5663**
FPT inside pipe thread, NPT (ANSI/ASME B 1.20.1)					
15	½	SVA-L 15 FPT ANG H-WHEEL	52	754	**148B5264**
15	½	SVA-L 15 FPT ANG CAP	52	754	**148B5265**
20	¾	SVA-L 20 FPT ANG H-WHEEL	52	754	**148B5364**
20	¾	SVA-L 20 FPT ANG CAP	52	754	**148B5365**
25	1	SVA-L 25 FPT ANG H-WHEEL	52	754	**148B5464**
25	1	SVA-L 25 FPT ANG CAP	52	754	**148B5465**
32	1 ¼	SVA-L 32 FPT ANG H-WHEEL	52	754	**148B5564**
32	1 ¼	SVA-L 32 FPT ANG CAP	52	754	**148B5565**

SVA-L Straightway

Size [mm]	Size [in]	Type	MWP [bar]	MWP [psi]	Code number
Butt-weld DIN (EN 10220)					
15	½	SVA-L 15 D STR H-WHEEL	52	754	**148B5250**
15	½	SVA-L 15 D STR CAP	52	754	**148B5251**
20	¾	SVA-L 20 D STR H-WHEEL	52	754	**148B5350**
20	¾	SVA-L 20 D STR CAP	52	754	**148B5351**
25	1	SVA-L 25 D STR H-WHEEL	52	754	**148B5450**
25	1	SVA-L 25 D STR CAP	52	754	**148B5451**
32	1 ¼	SVA-L 32 D STR H-WHEEL	52	754	**148B5550**
32	1 ¼	SVA-L 32 D STR CAP	52	754	**148B5551**
40	1 ½	SVA-L 40 D STR H-WHEEL	52	754	**148B5650**
40	1 ½	SVA-L 40 D STR CAP	52	754	**148B5651**
Butt-weld ANSI (B 36.10 Schedule 80)					
15	½	SVA-L 15 A STR H-WHEEL	52	754	**148B5270**
15	½	SVA-L 15 A STR CAP	52	754	**148B5271**
20	¾	SVA-L 20 A STR H-WHEEL	52	754	**148B5370**
20	¾	SVA-L 20 A STR CAP	52	754	**148B5371**
25	1	SVA-L 25 A STR H-WHEEL	52	754	**148B5470**
25	1	SVA-L 25 A STR CAP	52	754	**148B5471**
32	1 ¼	SVA-L 32 A STR H-WHEEL	52	754	**148B5570**
32	1 ¼	SVA-L 32 A STR CAP	52	754	**148B5571**
40	1 ½	SVA-L 40 A STR H-WHEEL	52	754	**148B5670**
40	1 ½	SVA-L 40 A STR CAP	52	754	**148B5671**
Socket welding ANSI (B 16.11)					
15	½	SVA-L 15 SOC STR H-WHEEL	52	754	**148B5272**
15	½	SVA-L 15 SOC STR CAP	52	754	**148B5273**
20	¾	SVA-L 20 SOC STR H-WHEEL	52	754	**148B5372**
20	¾	SVA-L 20 SOC STR CAP	52	754	**148B5373**
25	1	SVA-L 25 SOC STR H-WHEEL	52	754	**148B5472**
25	1	SVA-L 25 SOC STR CAP	52	754	**148B5473**
32	1 ¼	SVA-L 32 SOC STR H-WHEEL	52	754	**148B5572**
32	1 ¼	SVA-L 32 SOC STR CAP	52	754	**148B5573**
40	1 ½	SVA-L 40 SOC STR H-WHEEL	52	754	**148B5672**
40	1 ½	SVA-L 40 SOC STR CAP	52	754	**148B5673**
FPT inside pipe thread, NPT (ANSI/ASME B 1.20.1)					
15	½	SVA-L 15 FPT STR H-WHEEL	52	754	**148B5274**
15	½	SVA-L 15 FPT STR CAP	52	754	**148B5275**
20	¾	SVA-L 20 FPT STR H-WHEEL	52	754	**148B5374**
20	¾	SVA-L 20 FPT STR CAP	52	754	**148B5375**
25	1	SVA-L 25 FPT STR H-WHEEL	52	754	**148B5474**
25	1	SVA-L 25 FPT STR CAP	52	754	**148B5475**
32	1 ¼	SVA-L 32 FPT STR H-WHEEL	52	754	**148B5574**
32	1 ¼	SVA-L 32 FPT STR CAP	52	754	**148B5575**

Accessories

6T Nipple Kit solution

Code no.	
148B4245	ACCESSORY WELD.NIPPLE DN6 A + UNION NUT
148B4184	ACCESSORY WELD.NIPPLE DN6 D + UNION NUT

Ordering SVA-S from the parts programme

Example
(select from table 1 and 2)

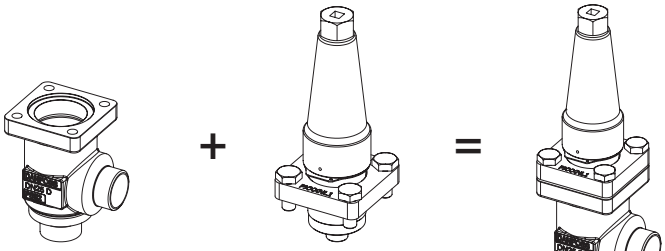

Valve housing, size 25 (1 in), DIN butt weld, angleway, **148B5452**
Table 1

Top part, SVA-S size 25 (1 in) with cap **148B5476**
Table 2

Table 1
SVL valve housings w/different connections

Please note:
Not all sizes available for SVA-L - see table 2.

DN 6-10 mm (¼ - ⅜ in)	*DN 15-65 mm (½ - 2½ in)*	*DN 80-125 mm (3 - 5 in)*

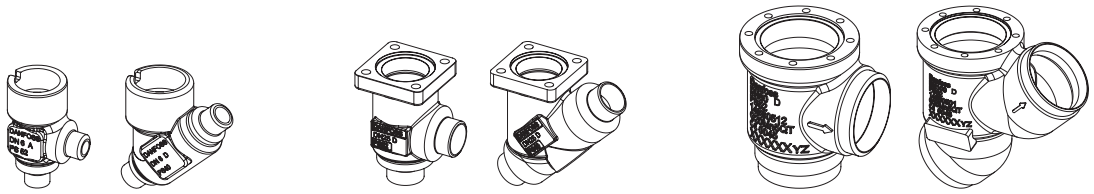

Sizes [DN]		Valve Housing SVL										
		DIN-Butt weld		ANSI-Butt weld		GOST-Butt-weld		SOC		FPT		T
[mm]	[in]	ANG	STR	ANG	STR	ANG	STR	ANG	STR	ANG	STR	ANG
6	¼	148B5002	148B5003	148B5004	148B5005							148B5012
10	⅜	148B5122	148B5123	148B5124	148B5125	148B5134	148B5135					
15	½	148B5252	148B5253	148B5254	148B5255	148B5391	148B5392	148B5256	148B5257	148B5258	148B5259	
20	¾	148B5352	148B5353	148B5354	148B5355	148B5393	148B5394	148B5356	148B5357	148B5358	148B5359	
25	1	148B5452	148B5453	148B5454	148B5455	148B5498	148B5499	148B5456	148B5457	148B5458	148B5459	
32	1¼	148B5576	148B5577	148B5578	148B5579	148B5593	148B5594	148B5580	148B5581	148B5582	148B5583	
40	1½	148B5652	148B5653	148B5654	148B5655	148B5681	148B5682	148B5656	148B5657			
50	2	148B5741	148B5742	148B5743	148B5744	148B5759	148B5760	148B5745	148B5746			
65	2½	148B5816	148B5817	148B5818	148B5819	148B5816	148B5817					
80	3	148B5912	148B5913	148B5914	148B5915	148B5912	148B5913					
100	4	148B6014	148B6015	148B6016	148B6017	148B6033	148B6034					
125	5	148B6112	148B6113	148B6114	148B6115	148B6133	148B6134					

Table 2
SVA complete top part including gaskets and bolts

SVA-S 6-10 with cap	SVA-S 6-10 with h-wheel	SVA-S 15-65 with cap	SVA-S 15-65 with h-wheel	SVA-S 80-125 with cap	SVA-S 80-125 with h-wheel	SVA-L 15-40 with cap	SVA-L 15-40 with h-wheel

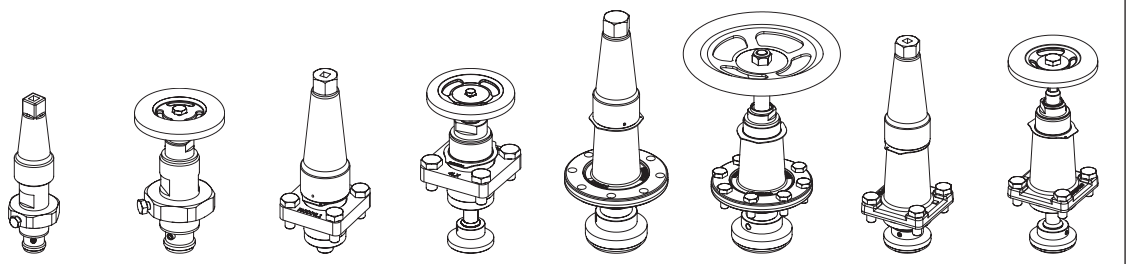

Sizes [DN]		Complete top part			
[mm]	[in]	SVA-S CAP	SVA-S H-WHEEL	SVA-L CAP	SVA-L H-WHEEL
6	¼	148B5013	148B5014		
10	⅜				
15	½	148B5276	148B5277	148B5278	148B5279
20	¾				
25	1	148B5476	148B5477	148B5478	148B5479
32	1¼				
40	1½				
50	2	148B5728	148B5729		
65	2½	148B5822	148B5823		
80	3	148B5916	148B5917		
100	4	148B6012	148B6018		
125	5	148B6116	148B6117		

ENGINEERING
TOMORROW

Shut-off valves
Types SVA-S and SVA-L, 65 bar (943 psi)

Contents **Page**

Features 27
Technical data 28
Design 28
Material specification 29
Dimensions and weights 35
Connections 40
Ordering 40

AI273641142831en-000102 | 2018.08

ENGINEERING TOMORROW

Shut-off valves
Types SVA-S and SVA-L, 65 bar (943 psi)



SVA shut-off valves are available in angleway and straightway versions and with Standard neck (SVA-S) and Long neck (SVA-L)

The shut-off valves are designed to meet all industrial refrigeration and ammonia heat pump application requirements and are designed to give favourable
flow characteristics and are easy to dismantle and repair when necessary.

The valve cone is designed to ensure perfect closing and withstand a high system pulsation and vibration, which can be present specifically in the discharge line.

Features

- Modular Concept:
  - Each valve housing is available with DIN and ANSI butt weld connection and in several different sizes.
  - Possible to convert SVA-S or SVA-L to any other product in the Flexline™ SVL family (regulating valve, check & stop valve, check valve or strainer) just by replacing the complete top part.
- Fast and easy valve overhaul service. It is easy to replace the top part and no welding is needed.
- Optional accessories:
  - Heavy duty industrial hand wheel for frequent operation.
  - Cap for infrequent operation.
- Available in angleway and straightway versions with Standard neck or Long neck (DN 15 to DN 40) for insulated systems.
- Each valve type is clearly marked with type, size and performance range.
- The valves and caps are prepared for sealing, to prevent operation by unauthorized persons, using a seal wire.
- Internal metal backseating:
  - DN 6 - 65 (¼ - 2½ in.)

  Internal PTFE backseating:
  - DN 80 - 200 (3 - 8 in.)
- Can accept flow in both directions.
- Housing and bonnet material is low temperature steel according to requirements of the Pressure Equipment Directive and other international classification authorities.
- Equipped with 42CrMo5 bolts to withstand high pressure.
- Classification: DNV, CRN, BV, EAC etc.
  To get an updated list of certification on the products please contact your local Danfoss Sales Company.

Technical data

- *Refrigerants*
  Applicable to HCFC, HFC, R717 (Ammonia), R744 (CO_2) and flammable refrigerants.
  For further information please see installation guide for SVA.
- *Temperature range*
  –60/+150°C (–76/+302°F).
- *Max. working pressure*
  65 bar (943 psi)

Design

Housing
Made of special, cold resistant steel.

Valve cone
The valve cone can be turned on the spindle, thus there will be no friction between the cone and the seat when the valve is opened and closed and the special design will avoid cone spin due to pulsation and vibration when the valve is in open position. A teflon tightening ring provides perfect sealing with minimum closing force.

Spindle
Made of polished stainless steel, ideal for leap seal sealing.

Packing gland
The low temperature packing gland ensures a perfect tightness in the range: –60/+150°C (–76/+302°F). The packing glands are equipped with a scraper ring to prevent penetration of dirt and ice into the packing gland.

Installation
It is recommended that the valves be installed in the direction of flow indicated by the arrow on the valve body. The valve can be installed in the opposite direction but this slightly reduces the k_v-value (C_v-value).

The valve is designed to withstand high internal pressure. However, the piping system in general should be designed to avoid liquid traps and reduce the risk of hydraulic pressure caused by thermal expansion.

For further information refer to installation instructions for SVA.

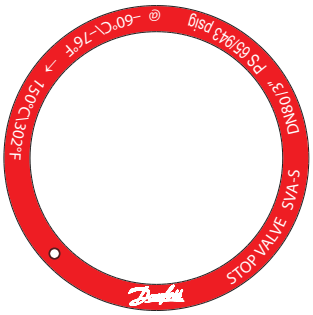

Example of Marking Ring

Pressure Equipment Directive (PED)
SVL valves are approved according to the European standard specified in the Pressure Equipment Directive and are CE marked.

For further details / restrictions - see Installation guide.

	SVL		
Nominal bore	DN≤ 25 mm (1 in.)	DN32-80 mm (1¼ - 3 in.)	DN100 - 200 mm (4-8 in.)
Classified for	Fluid group I		
Category	Article 3, paragraph 3	II	III

Material specification

SVA-S 6-10 (1/4 - 3/8 in.)

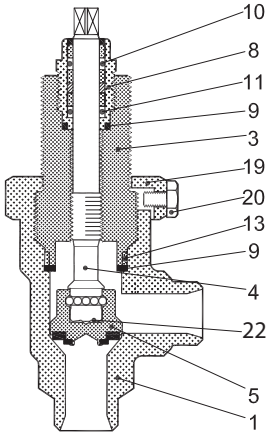

SVA-S 15-20 (1/2 - 3/4 in.)

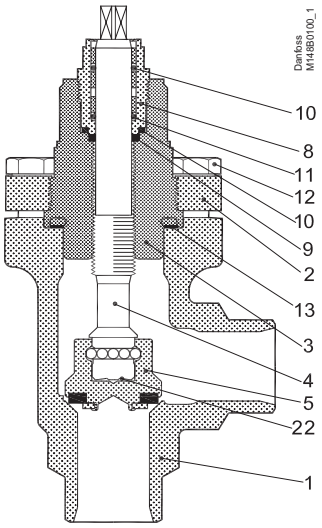

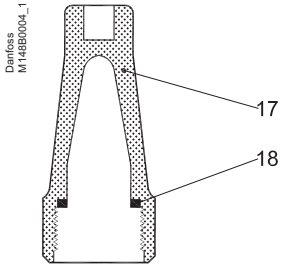

No.	Part	Material	EN	ISO	ASTM
1	Housing	Steel	G20Mn5QT, 10213-3 --- P285QH+QT, 10222-4		LCC, A352 --- LF2, A350
2	Bonnet, Flange	Steel	G20Mn5QT, 10213-3 --- P285QH+QT, 10222-4 --- P275NL, 10028-3		LCC, A352 --- LF2, A350
3	Bonnet, Insert	Steel	11SMn30 10087	Type 2 R 683/9	AISI 1213
4	Spindle	Stainless steel	X8CrNiS18-9 10088	Type 17 683/13	AISI 303
5	Cone	Steel	11SMn30 10087	Type 2 R 683/9	AISI 1213
8	Packing gland	Stainless steel	X8CrNiS18-9 10088	Type 17 683/13	AISI 303
9	Packing washer	Aluminium			
10	O-ring	Cloroprene (Neoprene)			
11	Spring loaded Teflon ring	PTFE			
12	Bolts	High temperature steel	42CrMo5 10269		A193
13	Gasket	Fiber, Non-asbestos			
17	Cap	Aluminium			
18	Gasket for cap	Nylon			
19	Locking nut	Steel			
20	Screw	Steel			
22	Disk spring	Steel			

Material specification

SVA-S 25-40 (1 - 1½ in.)

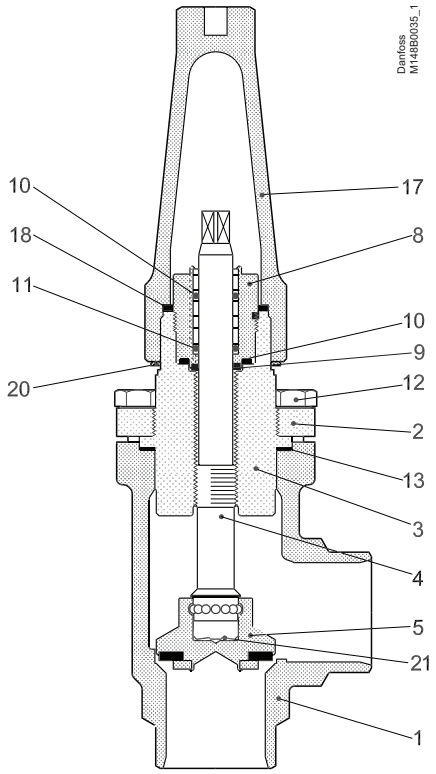

No.	Part	Material	EN	ISO	ASTM
1	Housing	Steel	G20Mn5QT, 10213-3 --- P285QH+QT, 10222-4		LCC, A352 --- LF2, A350
2	Bonnet, Flange	Steel	G20Mn5QT, 10213-3 --- P285QH+QT, 10222-4 --- P275NL, 10028-3		LCC, A352 --- LF2, A350
3	Bonnet, Insert	Steel	11SMn30 10087	Type 2 R 683/9	AISI 1213
4	Spindle	Stainless steel	X8CrNiS18-9 10088	Type 17 683/13	AISI 303
5	Cone	Steel	11SMn30 10087	Type 2 R 683/9	AISI 1213
8	Packing gland	Stainless steel	X8CrNiS18-9 10088	Type 17 683/13	AISI 303
9	Packing washer	Aluminium			
10	O-ring	Cloroprene (Neoprene)			
11	Spring loaded Teflon ring	PTFE			
12	Bolts	High temperature steel	42CrMo5 10269		A193
13	Gasket	Fiber, Non-asbestos			
17	Cap	Aluminium			
18	Gasket for cap	Nylon			
20	Identification ring	Stainless steel			
21	Disk spring	Steel			

Material specification

SVA-L 15 - 40 (½ - 1½ in.)

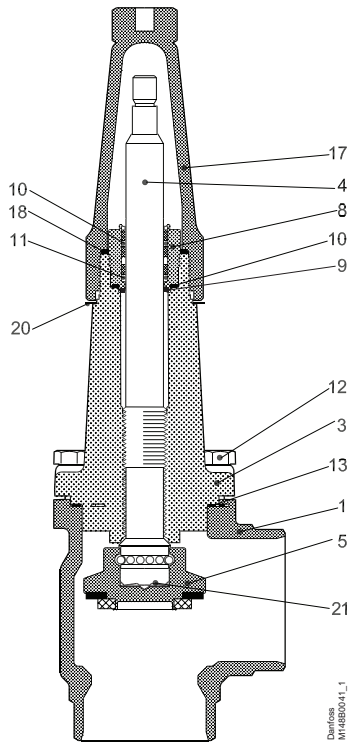

No.	Part	Material	EN	ISO	ASTM
1	Housing	Steel	G20Mn5QT, 10213-3 ---------- P285QH+QT, 10222-4		LCC, A352 ---------- LF2, A350
3	Valve bonnet	Steel	G20Mn5QT, 10213-3 ---------- P285QH+QT, 10222-4		LCC, A352 ---------- LF2, A350
4	Spindle	Stainless steel	X8CrNiS18-9 10088	Type 17 683/13	AISI 303
5	Cone	Steel	11SMn30 10087	Type 2 R 683/9	AISI 1213
8	Packing gland	Stainless steel	X8CrNiS18-9 10088	Type 17 683/13	AISI 303
9	Packing washer	Aluminium			
10	O-ring	Cloroprene (Neoprene)			
11	Spring loaded Teflon ring	PTFE			
12	Bolts	High temperature steel	42CrMo5 10269		A193
13	Gasket	Fiber, Non-asbestos			
17	Cap	Aluminium			
18	Gasket for cap	Nylon (PA6)			
20	Identification ring	Stainless steel			
21	Disk spring	Steel			

Material specification

SVA-S 50-65 (2 - 2½ in.)

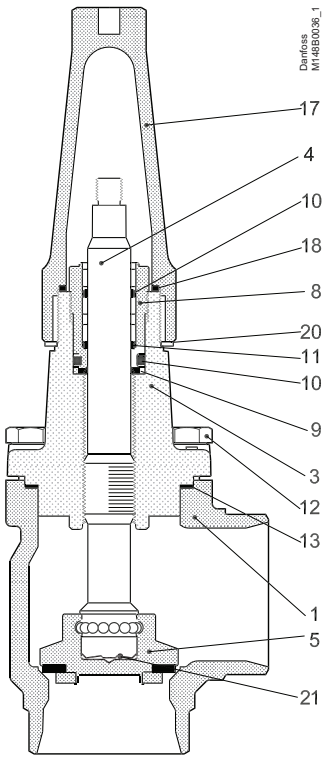

No.	Part	Material	EN	ISO	ASTM
1	Housing	Steel	G20Mn5QT, 10213-3 --- P285QH+QT, 10222-4		LCC, A352 --- LF2, A350
3	Valve bonnet	Steel	G20Mn5QT, 10213-3 --- P285QH+QT, 10222-4		LCC, A352 --- LF2, A350
4	Spindle	Stainless steel	X8CrNiS18-9 10088	Type 17 683/13	AISI 303
5	Cone	Steel	11SMn30 10087	Type 2 R 683/9	AISI 1213
8	Packing gland	Stainless steel	X8CrNiS18-9 10088	Type 17 683/13	AISI 303
9	Packing washer	Aluminium			
10	O-ring	Cloroprene (Neoprene)			
11	Spring loaded Teflon ring	PTFE			
12	Bolts	High temperature steel	42CrMo5 10269		A193
13	Gasket	Fiber, Non-asbestos			
17	Cap	Aluminium			
18	Gasket for cap	Nylon			
19	Locking nut	Steel			
20	Identification ring	Stainless steel			
21	Disk spring	Steel			

Material specification

SVA-S 80 - 150 (3 - 6 in.)

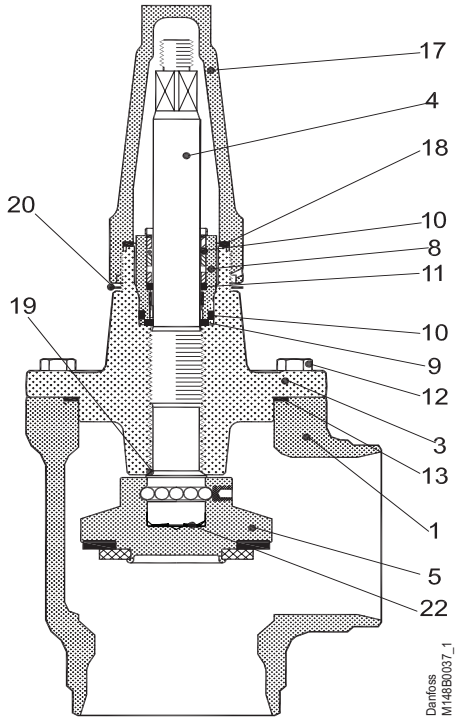

No.	Part	Material	EN	ISO	ASTM
1	Housing	Steel	G20Mn5QT 10213-3		LCC A352
3	Valve bonnet	Steel	G20Mn5QT, 10213-3 ---------- P285QH+QT, 10222-4		LCC, A352 ---------- LF2, A350
4	Spindle	Stainless steel	X5CrNi18-10 10088	Type 11, R 683/13	AISI 304, A276
5	Cone Cone seal	Steel Teflon (PTFE)	11SMn30 10087	Type 2, R 683/9	AISI 1213
8	Packing gland	Stainless steel	X8CrNiS18-9 10088	Type 17 R 683/13	AISI 303
9	Packing washer	Aluminium			
10	O-ring	Cloroprene (Neoprene)			
11	Spring loaded Teflon ring	PTFE			
12	Bolts	High temperature steel	42CrMo5 10269		A193
13	Gasket	Fiber, Non-asbestos			
17	Cap	Aluminium			
18	Gasket for cap	Nylon (PA 6)			
19	Soft backseat	Teflon (PTFE)			
20	Identification ring	Stainless steel			
22	Disk spring	Steel			

Material specification

SVA-S 200 (8 in.)

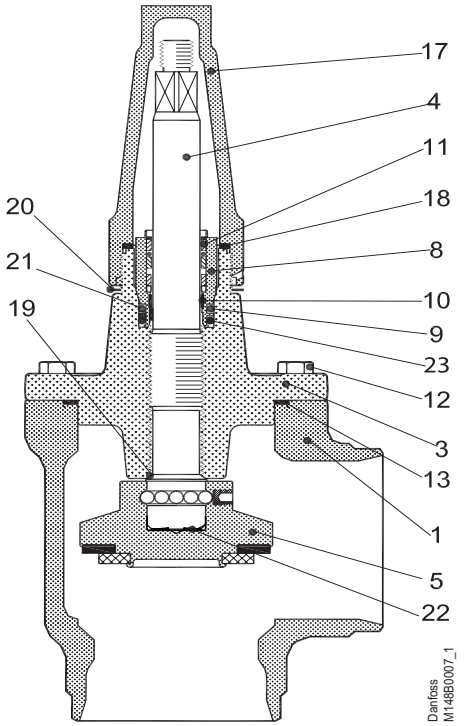

No.	Part	Material	EN	ISO	ASTM
1	Housing	Steel	G20Mn5QT 10213-3		LCC A352
3	Valve bonnet	Steel	G20Mn5QT, 10213-3 ---------- P285QH+QT, 10222-4		LCC, A352 ---------- LF2, A350
4	Spindle	Stainless steel	X5CrNi18-10 10088	Type 11, R 683/13	AISI 304, A276
5	Cone Cone seal	Steel Teflon (PTFE)	11SMn30 10087	Type 2, R 683/9	AISI 1213
8	Packing gland	Stainless steel	X8CrNiS18-9 10088	Type 17 R 683/13	AISI 303
9	O-ring	Cloroprene (Neoprene)			
10	Spring loaded Teflon ring	PTFE			
11	O-ring	Cloroprene (Neoprene)			
12	Bolts	High temperature steel	42CrMo5 10269		A193
13	Gasket	Fiber, Non-asbestos			
15	Washer	Stainless steel			
16	Nut	Stainless steel			
17	Cap	Aluminium			
18	Gasket for cap	Nylon (PA 6)			
19	Soft backseat	Teflon (PTFE)			
20	Identification ring	Stainless steel			
21	Wear ring	Teflon (PTFE)			
22	Disk spring	Steel			
23	O-ring	PTFE/Cloroprene (Neoprene)			

Dimensions and weights

SVA 6 - 10 in angle execution with cap

SVA 6-10

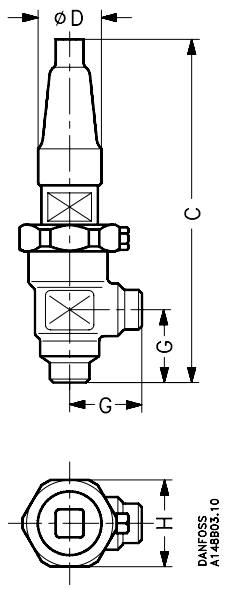

Valve size			C		G		∅D		□H		Weight
SVA 6	mm in.		139 5.47		30 1.18		30 1.18		48 1.89		0.8 kg
SVA 10	mm in.		182 7.17		45 1.77		38 1.50		60 2.36		1.4 kg

Specified weights are approximate values only.

SVA 6-10

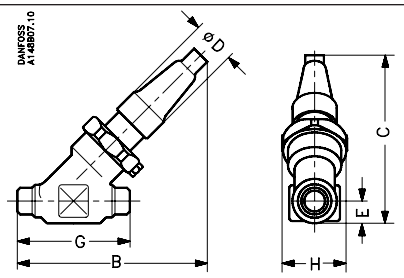

SVA 6 - 10 in straight-way execution with cap

Valve size			C	B	E	G	∅D		□H		Weight
SVA 6	mm in.		110 4.33	120 4.72	13 0.49	70 2.76	30 1.16		48 1.89		0.8 kg
SVA 10	mm in.		145 5.71	155 6.10	20 0.79	120 4.72	38 1.50		60 2.36		2.0 kg

Specified weights are approximate values only.

Dimensions and weights

SVA 15 - 40 (½ - 1½ in.) in angleway version with cap

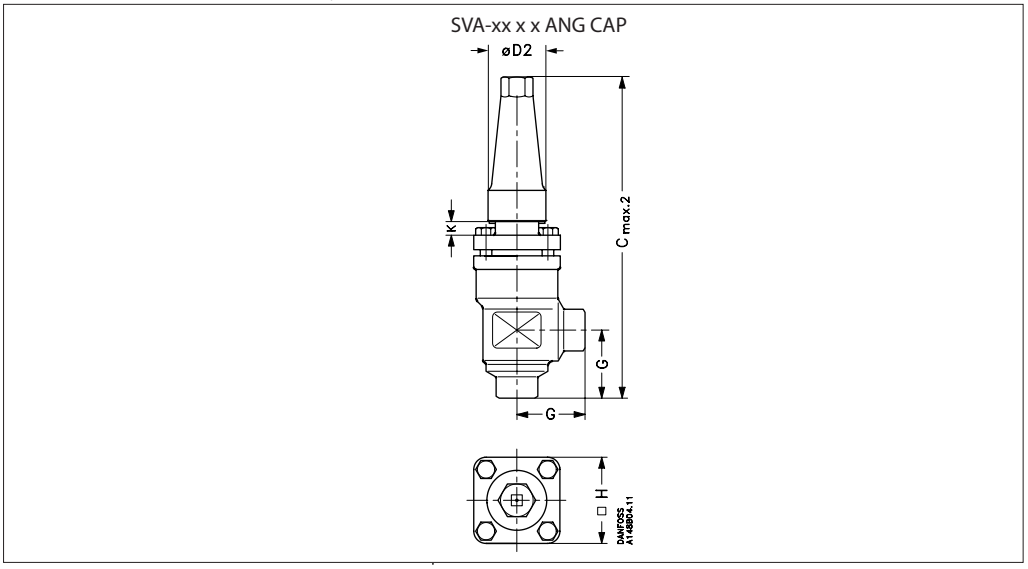

Valve size		K			$C_{max.2}$	G			$\varnothing D_2$	□H		Weight
SVA-S												
SVA 15 - 20	mm	4			189	45			38	60		1.4 kg
SVA (½ - ¾)	in.	0.16			7.44	1.77			1.5	2.36		3.1 lb
SVA 25 - 40	mm	12			268	55			50	70		2.4 kg
SVA (1 - 1½)	in.	0.47			10.55	2.17			1.97	2.76		5.3 lb
SVA-L												
SVA 15 - 20	mm	63			248	45			38	60		1.4 kg
SVA (½ - ¾)	in.	2.48			9.76	1.77			1.5	2.36		3.1 lb
SVA 25 - 40	mm	74			330	55			50	70		2.4 kg
SVA (1 - 1½)	in.	2.91			12.99	2.17			1.97	2.76		5.3 lb

Specified weights are approximate values only.

SVA 15 - 40 (½ - 1½ in.) straightway version with cap

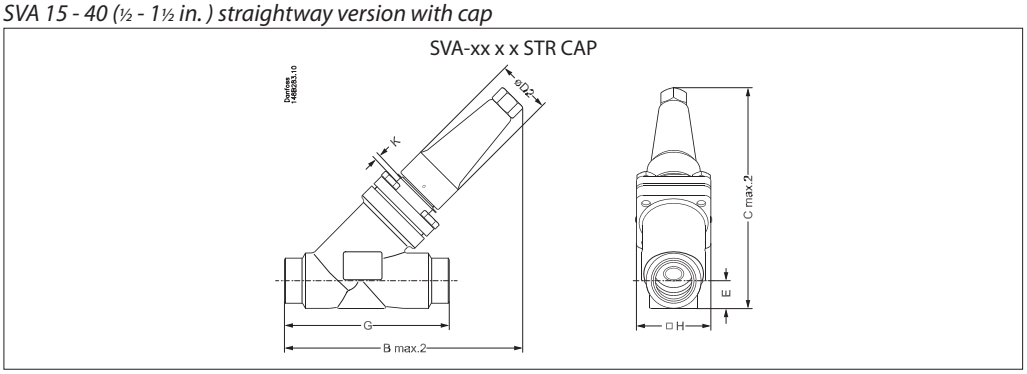

Valve size		K		$C_{max.2}$		$B_{max.2}$	E	G		$\varnothing D_2$	□H	Weight
SVA-S												
SVA 15 - 20	mm	4		141		156	20	120		38	60	2.0 kg
SVA (½ - ¾)	in.	0.16		5.55		6.14	0.79	4.72		1.50	2.36	4.4 lb
SVA 25 - 40	mm	12		208		222	26	155		50	70	3.0 kg
SVA (1 - 1½)	in.	0.47		8.19		8.74	1.02	6.10		1.97	2.76	6.6 lb
SVA-L												
SVA 15 - 20	mm	63		184		198	20	120		38	60	2.0 kg
SVA (½ - ¾)	in.	2.48		7.24		7.80	0.79	4.72		1.50	2.36	4.4 lb
SVA 25 - 40	mm	74		252		265	26	155		50	70	3.0 kg
SVA (1 - 1½)	in.	2.91		9.92		10.43	1.02	6.10		1.97	2.76	6.6 lb

Specified weights are approximate values only.

Dimensions and weights

SVA 50 - 65 (2 - 2½ in.) in angleway version with cap

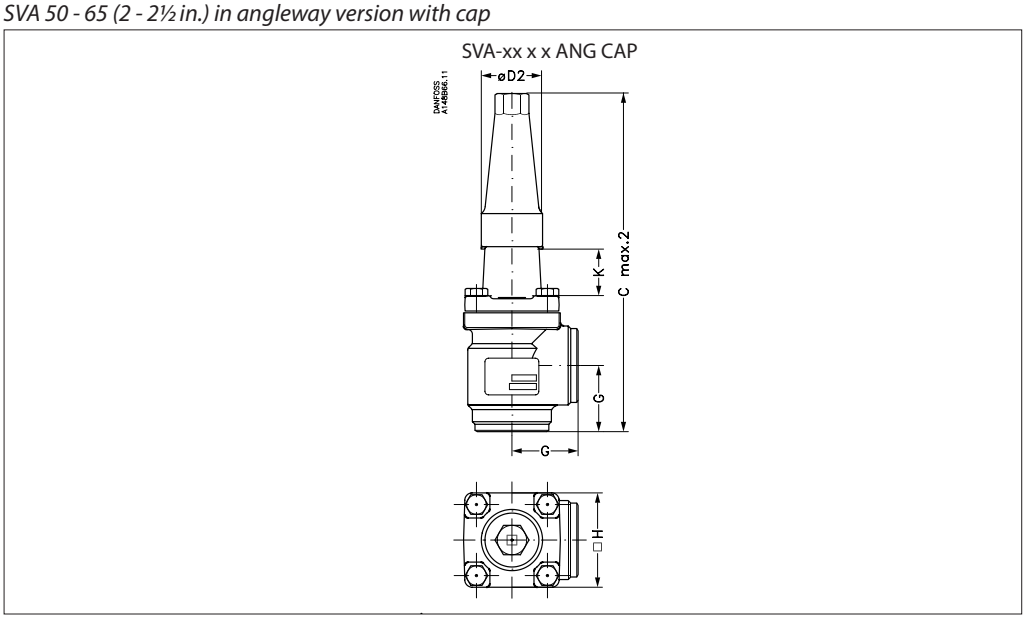

Valve size		K			$C_{max.2}$		G		$\varnothing D_2$	□H		Weight
SVA-S												
SVA 50	mm	70			315		60		50	77		3.2 kg
SVA (2)	in.	2.76			12.40		2.36		1.97	3.03		7.1 lb
SVA 65	mm	70			335		70		50	90		4.8 kg
SVA (2½)	in.	2.76			13.19		2.76		1.97	3.54		10.6 lb

Specified weights are approximate values only.

SVA 50 - 65 (2 - 2½ in.) in straightway version with cap

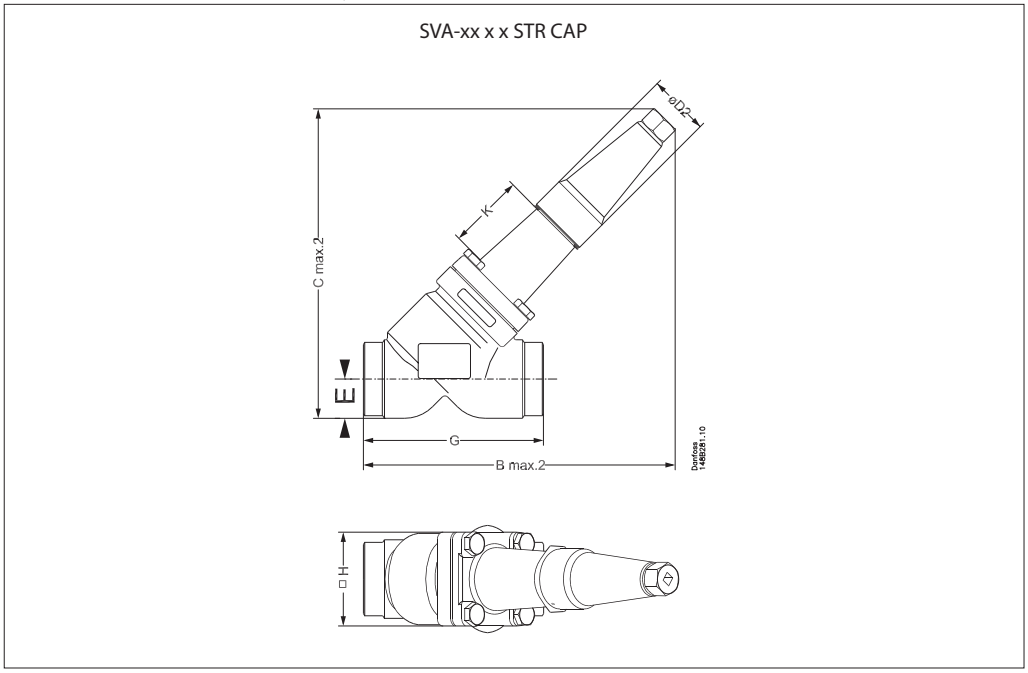

Valve size		K		$B_{max.2}$		$C_{max.2}$	E	G		$\varnothing D_2$	□H	Weight
SVA-S												
SVA 50	mm	70		259		257	32	148		50	77	4.2 kg
SVA (2)	in.	2.76		10.20		10.12	1.26	5.83		1.97	3.03	9.3 lb
SVA 65	mm	70		280		280	40	176		50	90	6.3 kg
SVA (2½)	in.	2.76		11.02		11.02	1.57	6.93		1.97	3.54	13.9 lb

Specified weights are approximate values only.

Dimensions and weights

SVA 80 - 200 (3 - 8 in.) angleway version with cap

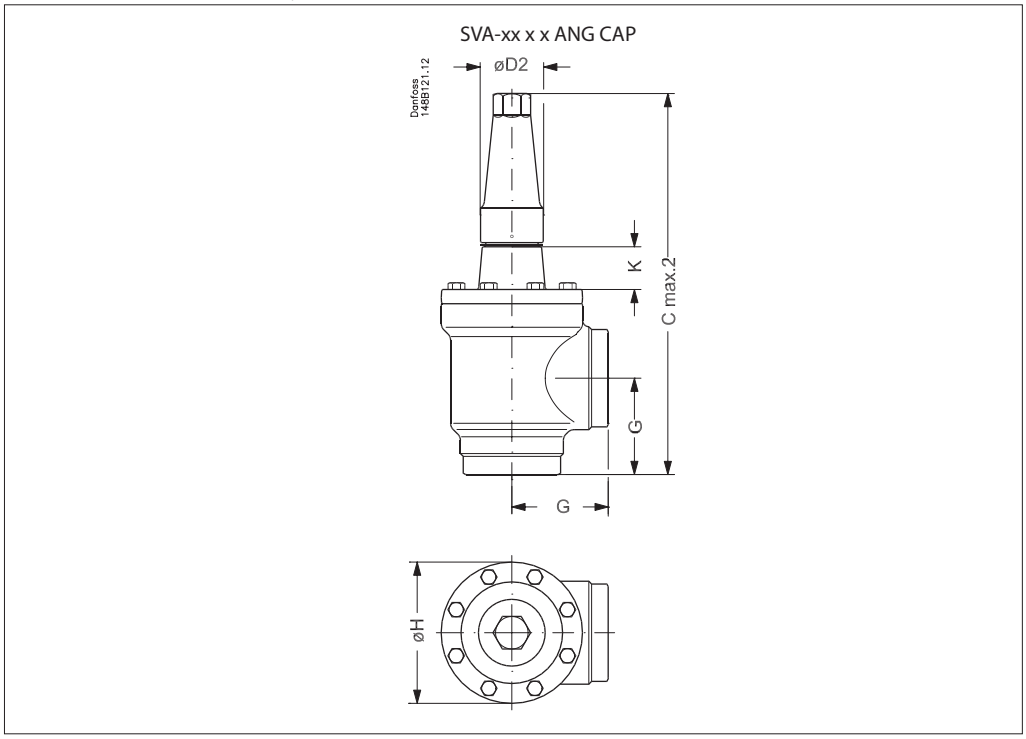

Valve size		K			$C_{max.2}$		G		$\varnothing D_2$		ØH	Weight
SVA-S												
SVA 80	mm	76			388		90		58		129	9.7 kg
SVA (3)	in.	3.00			15.28		3.54		2.28		5.08	21.4 lb
SVA 100	mm	90			437		106		58		156	15.3 kg
SVA (4)	in.	3.54			17.20		4.17		2.28		6.14	33.7 lb
SVA 125	mm	90			533		128		74		193	28.1 kg
SVA (5)	in.	3.54			20.98		5.04		2.91		7.60	61.9 lb
SVA 150	mm	90			568		145		74		219	39.7 kg
SVA (6)	in.	3.54			22.36		5.71		2.91		8.62	87.5 lb
SVA 200	mm	90			678		180		86		276	79.5 kg
SVA (8)	in.	3.54			26.69		7.09		3.39		10.87	175.3 lb

Specified weights are approximate values only.

Dimensions and weights

SVA 80 - 200 (3 - 8 in.) straightway version with cap

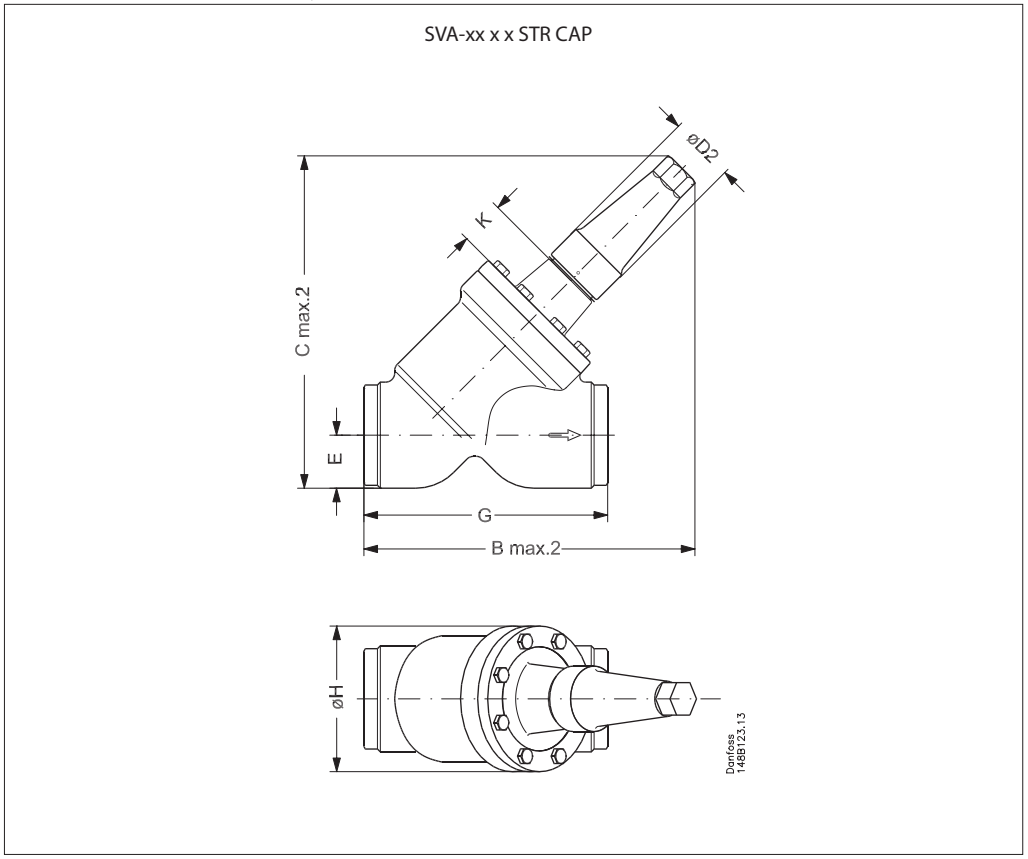

Valve size		K		$B_{max.2}$		$C_{max.2}$	E	G		$\varnothing D_2$	∅H	Weight
SVA-S												
SVA 80	mm	76		321		322	48	216		58	129	10.9 kg
SVA (3)	in.	3.00		12.64		12.72	1.89	8.50		2.28	5.08	24.0 lb
SVA 100	mm	90		367		375	60	264		58	156	18.2 kg
SVA (4)	in.	3.54		14.45		14.76	2.36	10.39		2.28	6.14	40.1 lb
SVA 125	mm	90		444		456	74	322		74	193	32.8 kg
SVA (5)	in.	3.54		17.48		17.95	2.91	12.68		2.91	7.60	72.3 lb
SVA 150	mm	90		483		505	91	370		74	219	60.0 kg
SVA (6)	in.	3.54		19.02		19.88	3.58	14.57		2.91	8.62	132.3 lb
SVA 200	mm	90		579		613	117	464		86	276	111.5 kg
SVA (8)	in.	3.54		22.80		24.13	4.61	18.27		3.39	10.87	245.8 lb

Specified weights are approximate values only.

Connections

DIN

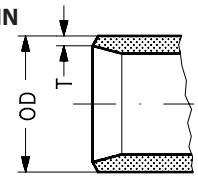

Size mm	Size in.	OD mm	T mm	OD in.	T in.			k_v-angle m^3/h	k_v-straight m^3/h	C_v-angle USgal/min	C_v-straight USgal/min
Butt-weld DIN (EN 10220)											
6	¼	13.5	2.3	0.531	0.091			2.9	2.0	3.4	2.4
10	⅜	17.2	2.3	0.677	0.091			4.5	3.2	5.2	3.6
15	½	21.3	2.3	0.839	0.091			7.0	4.9	8.1	5.7
20	¾	26.9	2.3	1.059	0.091			14.6	10.2	16.9	11.8
25	1	33.7	2.6	1.327	0.103			24.8	17.4	28.8	20.2
32	1¼	42.4	2.6	1.669	0.102			42.6	29.8	49.4	34.6
40	1½	48.3	2.6	1.902	0.103			45.2	31.6	52.4	36.7
50	2	60.3	2.9	2.37	0.11			80	65	93	76
65	2½	76.1	2.9	3	0.11			120	97	140	113
80	3	88.9	3.2	3.50	0.13			182	152	211	176
100	4	114.3	3.6	4.50	0.14			313	278	363	323
125	5	139.7	4.0	5.50	0.16			514	470	596	545
150	6	168.3	4.5	6.63	0.18			785	597	911	693
200	8	219.1	6.3	8.63	0.25			1168	1024	1355	1188

ANSI

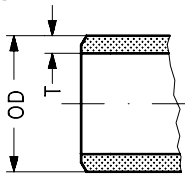

Size mm	Size in.	OD mm	T mm	OD in.	T in.			k_v-angle m^3/h	k_v-straight m^3/h	C_v-angle USgal/min	C_v-straight USgal/min
Butt-weld ANSI (B 36.10 Schedule 80)											
6	¼	13.5	3.0	0.531	0.118			2.9	2.03	3.4	2.4
10	⅜	17.2	3.2	0.677	0.126			4.5	3.15	5.2	3.6
15	½	21.3	3.7	0.839	0.146			7.0	4.9	8.1	5.7
20	¾	26.9	4.0	1.059	0.158			14.6	10.2	16.9	11.8
25	1	33.7	4.6	1.327	0.181			24.8	17.4	28.8	20.2
32	1¼	42.4	4.9	1.669	0.193			42.6	29.8	49.4	34.6
40	1½	48.3	5.1	1.902	0.201			45.2	31.6	52.4	36.7
Butt-weld ANSI (B 36.10 Schedule 40)											
50	2	60.3	3.9	2.37	0.15			80	65	93	76
65	2½	73.0	5.2	2.87	0.20			120	97	140	113
80	3	88.9	5.5	3.50	0.22			182	152	211	176
100	4	114.3	6.0	4.50	0.24			313	278	363	323
125	5	141.3	6.6	5.56	0.26			514	470	596	545
150	6	168.3	7.1	6.63	0.28			785	597	911	693
200	8	219.1	8.2	8.63	0.32			1168	1024	1355	1188

Ordering

Size [DN]	Parts Program					
	Housing				Top complete	
	ANG		STR		SVA-S (cap)	SVA-L (cap)
	DIN	ANSI	DIN	ANSI		
6	148B6689	148B6687	148B6693	148B6691	148B6695	
10	148B6690	148B6688	148B6694	148B6692		
15	148B6622	148B6612	148B6642	148B6632	148B6652	148B6659
20	148B6623	148B6613	148B6643	148B6633	148B6652	148B6659
25	148B6624	148B6614	148B6644	148B6634	148B6653	148B6660
32	148B6625	148B6615	148B6645	148B6635	148B6653	148B6660
40	148B6626	148B6616	148B6646	148B6636	148B6653	148B6660
50	148B6627	148B6617	148B6647	148B6637	148B6654	
65	148B6628	148B6618	148B6648	148B6638	148B6655	
80	148B6629	148B6619	148B6649	148B6639	148B6656	
100	148B6630	148B6620	148B6650	148B6640	148B6657	
125	148B6631	148B6621	148B6651	148B6641	148B6658	
150						
200						

Size [DN]	Complete valve			
	SVA-S (cap)			
	ANG		STR	
	DIN	ANSI	DIN	ANSI
6				
10				
15				
20				
25				
32				
40				
50				
65				
80				
100				
125				
150	148B6665	148B6667	148B6666	148B6668
200	148B6673	148B6675	148B6674	148B6676

ENGINEERING
TOMORROW

Shut-off valves in stainless steel
Type SVA-S SS

Contents **Page**

Features ... 43
Pressure and temperature range ... 44
Design ... 44
Technical data ... 44
Connections ... 45
Material specification ... 46
Dimensions and weights ... 50
Ordering ... 53

AI234986440234en-000701 | 2017.06

ENGINEERING
TOMORROW

Shut-off valves in stainless steel
Type SVA-S SS and SVA-L SS



In certain specific areas such as outdoor applications and corrosive atmospheres, such as coastal installations, there is a need for high surface protection to prevent failure due to corrosion.

Today's food safety standards often call for daily treatment with detergents to protect against bacteria growth, again producing a need for high surface protection.

SVA-S SS are angleway and straightway stainless steel shut-off valves, which are designed to meet all industrial refrigeration application requirements.

The valves are designed to give favourable flow characteristics and are easy to dismantle and repair when necessary. The valve cone is designed to ensure perfect closing.

Features

- Applicable to HCFC, HFC, R717 (Ammonia), R744 (CO_2) and all flammable refrigerants.
- Optional accessories:
  - Heavy duty industrial hand wheel for frequent operation.
  - Cap for infrequent operation.
- Available in angleway and straightway versions with Standard neck or Long neck (DN 15 to DN 40) for insulated systems.
- Designed to give favourable flow conditions.
- Internal backseating enables replacement of the spindle seal whilst the valve is active, i.e. under pressure.
- Housing is made of stainless steel approved for low temperature operations.
- Easy to disassemble for inspection and service.
- SVA-S/L SS shut-off valves can accept flow in either direction.
- Butt-weld DIN and ANSI connections.
- Maximum allowable working pressure and temperature range:

DN 15-65	52 bar (754 psi) at –60°C/+50°C (–76°F/+122°F)
DN 80-125	50 bar (725 psi) at –60°C/+50°C (–76°F/+122°F)

  For SVA-S/L SS see the relation between PS and temperature in the curve on page 44.
- Temperature range: –60/+150°C (–76 +302°F).
- Compact and light valves for easy handling and installation.
- Classification: DNV, CRN, BV, EAC etc. To get an updated list of certification on the products please contact your local Danfoss Sales Company.

Pressure and temperature range

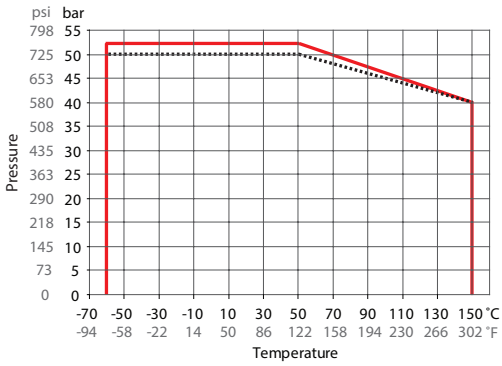

SVA-S/L SS DN15-DN65
SVA-S SS DN80 - DN125

Design

Connections
Available with the following connections:

- Butt-weld DIN (EN 10220)
  DN 15 - 125 (½ - 5 in.)
- Butt-weld ANSI (B 36.19M)
  DN 15 - 100 (½ - 4 in.)

Housing
Made of stainless steel approved for low temperature operations.

Valve cone
The valve cone can be turned on the spindle, thus there will be no friction between the cone and the seat, when the valve is opened and closed. A teflon tightening ring provides perfect sealing at a minimum closing momentum.

Spindle
Made of polished stainless steel, ideal for O-ring sealing. Furthermore, parts of the spindle are heat treated to obtain anti-abrasive/adhesive properties.

Packing gland
The stainless steel packing gland comprises a spring loaded seal packing gland which ensures a perfect tightness in the range: –60/+150°C (–76/+302°F).
The packing glands are equipped with a scraper ring to prevent penetration of dirt and ice into the packing gland.

Pressure Equipment Directive (PED)
The stainless steel valves are approved and CE marked in accordance with the Pressure Equipment Directive - 97/23/EC.

Installation
It is recommended that the valves be installed in the direction of flow indicated by the arrow on the valve body. The valve can be installed in the opposite direction but this slightly reduces the k_v-value (C_v-value).

The valve is designed to withstand high internal pressure. However, the piping system in general should be designed to avoid liquid traps and reduce the risk of hydraulic pressure caused by thermal expansion.

For further information refer to installation instructions for SVA-S/L SS.

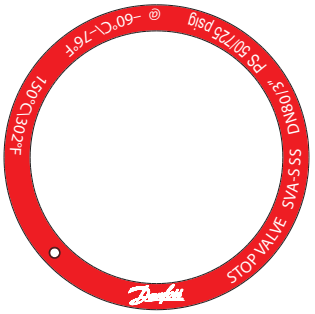

Example of Marking Ring

SVA-S/L SS			
Nominal bore	DN≤ 25 mm (1 in.)	DN32-80 mm (1¼ - 3 in.)	DN100 - 125 mm (4-5 in.)
Classified for	Fluid group I		
Category	Article 3, paragraph 3	II	III

Technical data

- *Refrigerants*
  Applicable to HCFC, HFC, R717 (Ammonia), R744 (CO_2) and all flammable refrigerants. For further information please contact your local Danfoss Sales Company.
- *Temperature Range*
  –60/+150°C (–76/+302°F).
- *Pressure range*
  The valves are designed for max. working pressure 52 bar g (754 psi g).

Connections

DIN

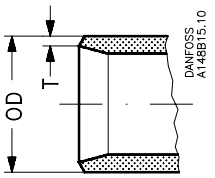

ANSI

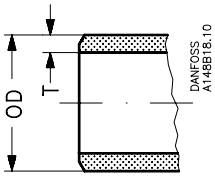

Size		OD	T
Butt-weld DIN (EN 10220)			
15	mm	21.3	2.3
½	in.	0.839	0.091
20	mm	26.9	2.3
¾	in	1.059	0.091
25	mm	33.7	2.6
1	in.	1.327	0.103
32	mm	42.4	2.6
1¼	in.	1.669	0.102
40	mm	48.3	2.6
1½	in.	1.902	0.103
50	mm	60.3	2.9
2	in.	2.37	0.11
65	mm	76.1	2.9
2½	in.	3	0.11
80	mm	88.9	3.2
3	in.	3.50	0.13
100	mm	114.3	3.6
4	in.	4.50	0.14
125	mm	139.7	4.0
5	in.	5.50	0.16

Size		OD	T
Butt-weld ANSI (B 36.19M, SCHEDULE 40)			
15	mm	21.3	2.8
½	in.	0.839	0.11
20	mm	26.9	2.9
¾	in	1.06	0.11
25	mm	33.7	3.5
1	in.	1.33	0.14
32	mm	42.4	3.6
1¼	in.	1.67	0.14
40	mm	48.3	3.7
1½	in.	1.9	0.15
Butt-weld ANSI (B 36.19M, SCHEDULE 10)			
50	mm	60.3	2.8
2	in.	2.37	0.11
65	mm	73	3.1
2½	in.	2.87	0.12
80	mm	88.9	3.1
3	in.	3.5	0.12
100	mm	114.3	3.1
4	in.	4.5	0.12

Material specification

SVA-S SS 15-40 (½ - 1½ in.)

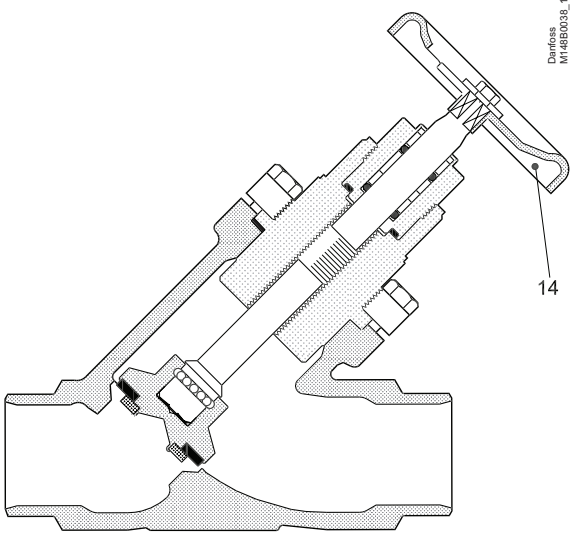

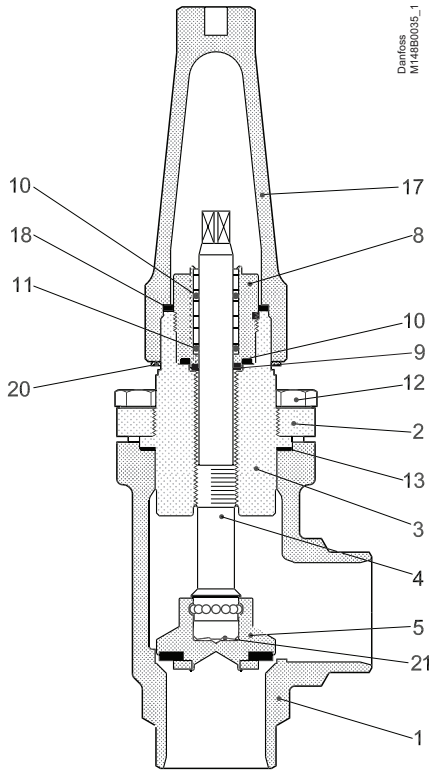

No.	Part	Material	EN	ISO	ASTM
1	Housing	Stainless steel	GX5CrNi19-10 EN10213-4		AISI 304
2	Bonnet, Flange	Stainless steel	X5CrNi18-10 EN10088		AISI 304
3	Bonnet, Insert	Stainless steel	X8CrNiS18-9 DIN 17440		AISI 303
4	Spindle	Stainless steel	X8CrNiS18-9 DIN 17440	Type 17, 683/13	AISI 303
5	Cone	Steel			
8	Packing gland	Stainless steel	X8CrNiS18-9 10088	Type 17 683/13	AISI 303
9	Packing washer	Aluminium			
10	O-ring	Cloroprene (Neoprene)			
11	Spring loaded Teflon ring	PTFE			
12	Bolts	Stainless steel	A2-70	A2-70	Type 308
13	Gasket	Fiber, Non-asbestos			
14	Handwheel	Steel			
17	Cap	Aluminium			
18	Gasket for cap	Nylon			
20	Identification ring	Stainless steel			
21	Disk spring	Steel			

Material specification

SVA-L SS 15 - 40 (½ - 1½ in.)

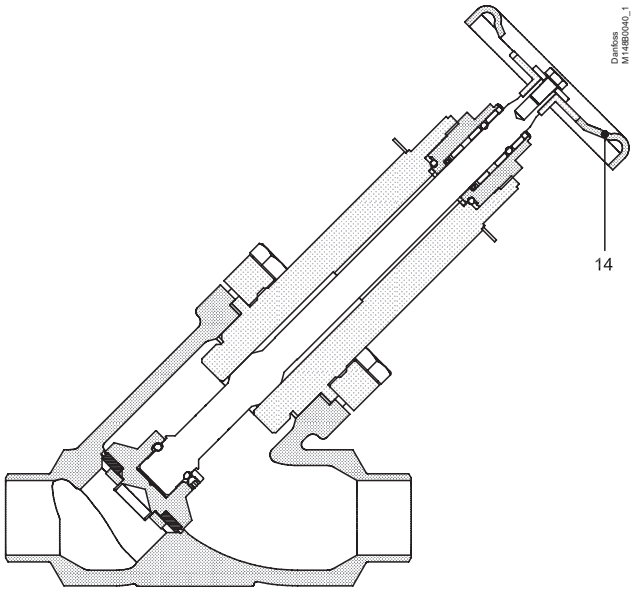

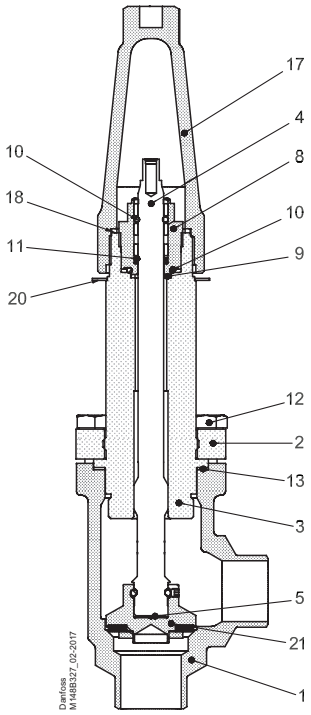

No.	Part	Material	EN	ISO	ASTM
1	Housing	Stainless steel	GX5CrNi19-10 EN10213-4		AISI 304
2	Bonnet, Flange	Stainless steel	X5CrNi18-10 EN10088		AISI 304
3	Bonnet, Insert	Stainless steel	X8CrNiS18-9 DIN 17440		AISI 303
4	Spindle	Stainless steel	X8CrNiS18-9 DIN 17440	Type 17, 683/13	AISI 303
5	Cone	Steel			
8	Packing gland	Stainless steel	X8CrNiS18-9 10088	Type 17 683/13	AISI 303
9	Packing washer	Aluminium			
10	O-ring	Cloroprene (Neoprene)			
11	Spring loaded Teflon ring	PTFE			
12	Bolts	Stainless steel	A2-70	A2-70	Type 308
13	Gasket	Fiber, Non-asbestos			
14	Handwheel	Steel			
17	Cap	Aluminium			
18	Gasket for cap	Nylon			
20	Identification ring	Stainless steel			
21	Disk spring	Steel			

Material specification

SVA-S SS 50-65 (2 - 2½ in.)

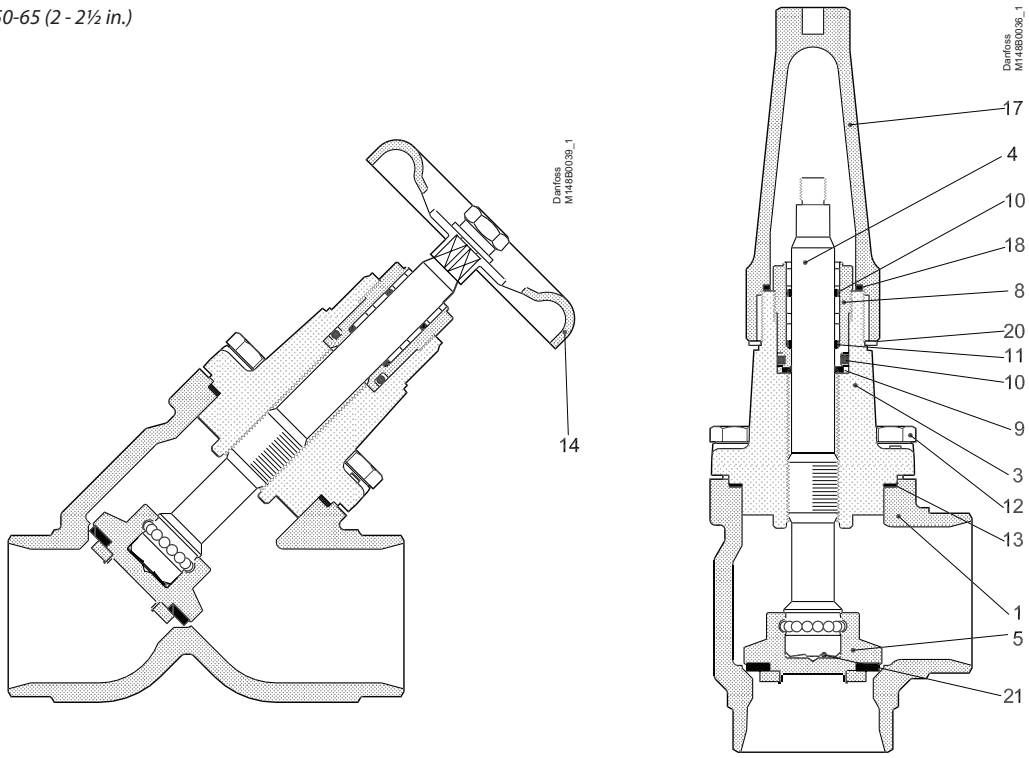

No.	Part	Material	EN	ISO	ASTM
1	Housing	Stainless steel	GX5CrNi19-10 EN10213-4		AISI 304
3	Valve bonnet	Stainless steel	GX5CrNi19-10 EN10213-4		AISI 304
4	Spindle	Stainless steel	X8CrNiS18-9 DIN 17440	Type 17, 683/13	AISI 303
5	Cone	Steel			
8	Packing gland	Stainless steel	X8CrNiS18-9 10088	Type 17 683/13	AISI 303
9	Packing washer	Aluminium			
10	O-ring	Cloroprene (Neoprene)			
11	Spring loaded Teflon ring	PTFE			
12	Bolts	Stainless steel	A2-70	A2-70	Type 308
13	Gasket	Fiber, Non-asbestos			
14	Handwheel	Steel			
17	Cap	Aluminium			
18	Gasket for cap	Nylon			
19	Locking nut	Steel			
20	Identification ring	Stainless steel			
21	Disk spring	Steel			

Material specification

SVA-S SS 80 - 125 (3 - 5 in.)

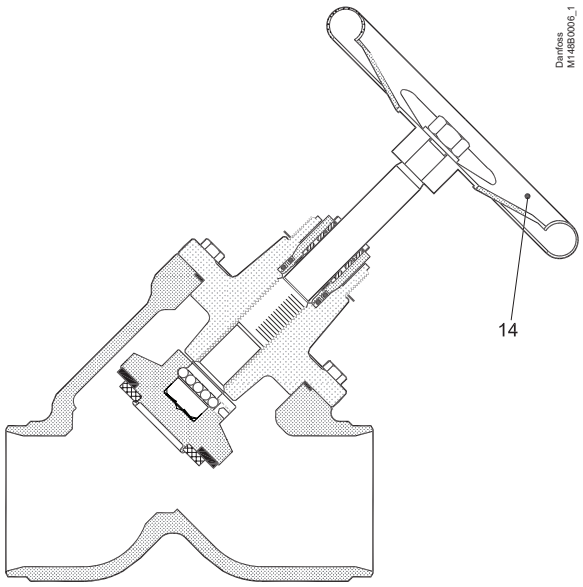

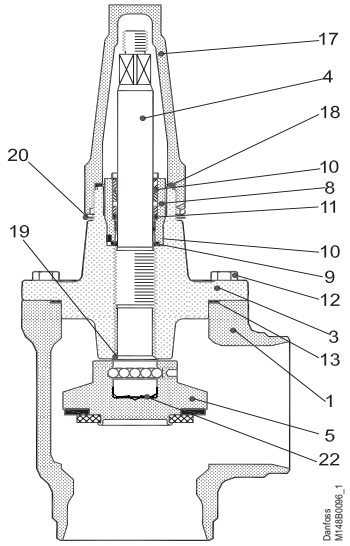

No.	Part	Material	EN	ISO	ASTM
1	Housing	Stainless steel	GX5CrNi19-10 EN10213-4		AISI 304
3	Valve bonnet	Stainless steel	GX5CrNiMo19-11-2 EN10213-4		AISI 304
4	Spindle	Stainless steel	X5CrNi18-10 DIN 17440	Type 17, 683/13	AISI 303
5	Cone Cone seal	Steel Teflon (PTFE)			
8	Packing gland	Stainless steel	X8CrNiS18-9 10088	Type 17 R 683/13	AISI 303
9	Packing washer	Aluminium			
10	O-ring	Cloroprene (Neoprene)			
11	Spring loaded Teflon ring	PTFE			
12	Bolts	Stainless steel	A2-70	A2-70	Type 308
13	Gasket	Fiber, Non-asbestos			
14	Hand wheel	Steel			
17	Cap	Aluminium			
18	Gasket for cap	Nylon (PA 6)			
19	Soft backseat	Teflon (PTFE)			
20	Identification ring	Stainless steel			
22	Disk spring	Steel			

Dimensions and weights

SVA S SS 15 - 40 (½ - 1½ in.) in angleway version with cap / hand wheel

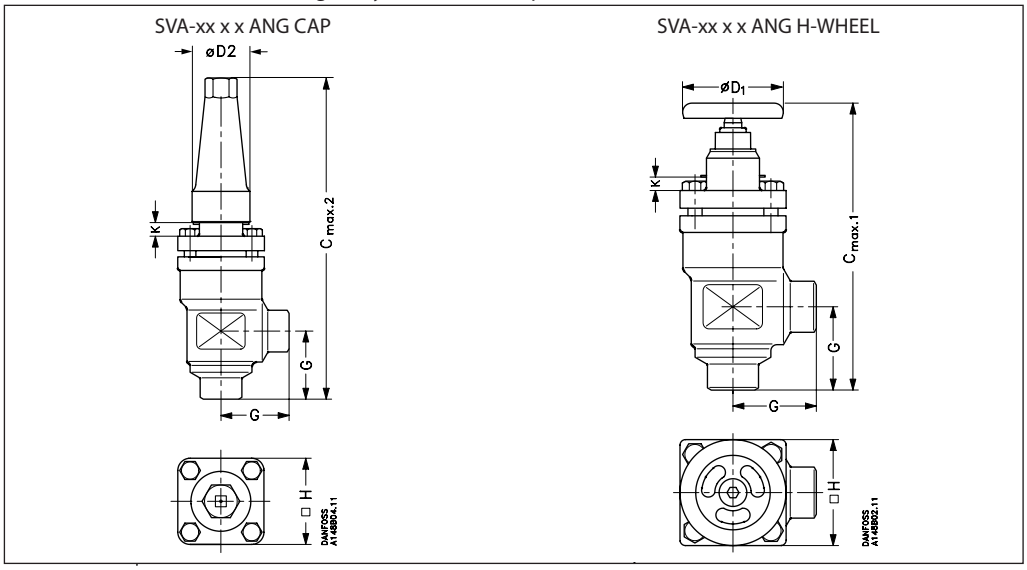

Valve size		K	$C_{max.1}$	$C_{max.2}$	G	$ØD_1$	$ØD_2$	□H	Weight
SVA-S SS									
SVA-S SS 15-20	mm	4	178	189	45	60	38	60	1.4 kg
SVA-S SS $^1/_2$ - $^3/_4$"	in.	0.16	7.00	7.44	1.77	2.36	1.5	2.36	3.1 lbs
SVA-S SS 25-40	mm	12	234	268	55	80	50	70	2.4 kg
SVA-S SS 1 - 1$^1/_2$"	in.	0.47	9.21	10.55	2.17	3.15	1.97	2.76	5.3 lbs

Specified weights are approximate values only.

SVA-S/L SS 15 - 40 (½ - 1½ in.) straightway version with cap / hand wheel

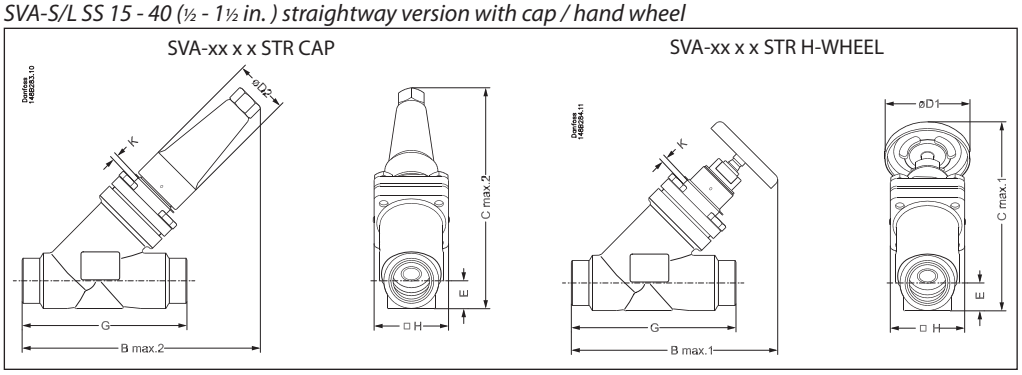

Valve size		K	$C_{max.1}$	$C_{max.2}$	$B_{max.1}$	$B_{max.2}$	E	G	$ØD_1$	$ØD_2$	□H	Weight
SVA-S SS												
SVA-S SS 15 - 20	mm	4	146	141	160	156	20	120	60	38	60	2.0 kg
SVA-S SS (½ - ¾)	in.	0.16	5.74	5.55	6.30	6.14	0.79	4.72	2.36	1.50	2.36	4.4 lb
SVA-S SS 25 - 40	mm	12	199	208	212	222	26	155	80	50	70	3.0 kg
SVA-S SS (1 - 1½)	in.	0.47	7.83	8.19	8.35	8.74	1.02	6.10	3.15	1.97	2.76	6.6 lb
SVA-L SS												
SVA-L SS 15 - 20	mm	63	188	184	202	198	20	120	60	38	60	2.0 kg
SVA-L SS (½ - ¾)	in.	2.48	7.40	7.24	7.95	7.80	0.79	4.72	2.36	1.50	2.36	4.4 lb
SVA-L SS 25 - 40	mm	74	243	252	256	265	26	155	80	50	70	3.0 kg
SVA-L SS (1 - 1½)	in.	2.91	9.57	9.92	10.08	10.43	1.02	6.10	3.15	1.97	2.76	6.6 lb

Specified weights are approximate values only.

Dimensions and weights

SVA-S SS 50 - 65 (2 - 2½ in.) in angleway version with cap / hand wheel

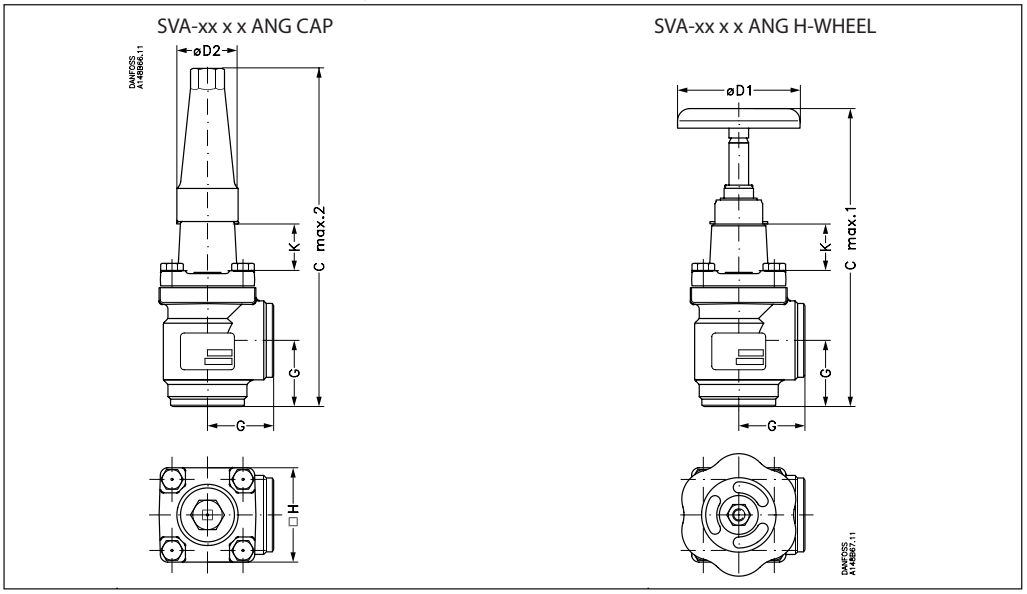

Valve size		K		$C_{max.1}$	$C_{max.2}$		G	$\varnothing D_1$	$\varnothing D_2$	□H		Weight
SVA-S SS												
SVA-S SS 50	mm	70		284	315		60	100	50	77		3.2 kg
SVA-S SS (2)	in.	2.76		11.18	12.40		2.36	3.94	1.97	3.03		7.1 lb
SVA-S SS 65	mm	70		310	335		70	100	50	90		4.8 kg
SVA-S SS (2½)	in.	2.76		12.20	13.19		2.76	3.94	1.97	3.54		10.6 lb

Specified weights are approximate values only.

SVA-S SS 50 - 65 (2 - 2½ in.) in straightway version with cap / hand wheel

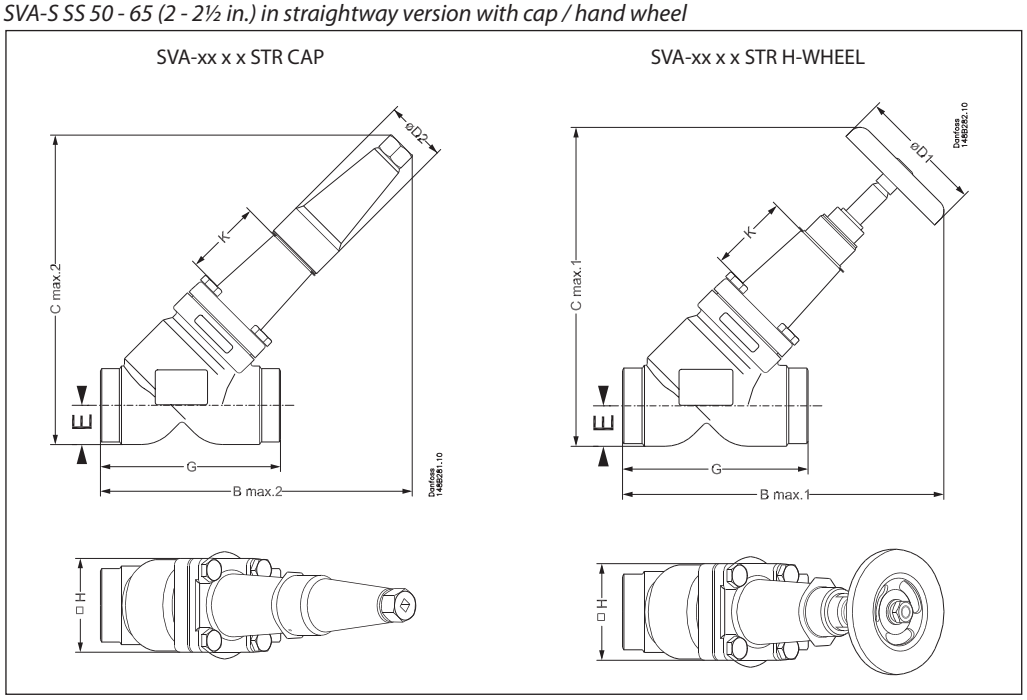

Valve size		K	$B_{max.1}$	$B_{max.2}$	$C_{max.1}$	$C_{max.2}$	E	G	$\varnothing D_1$	$\varnothing D_2$	□H	Weight
SVA-S SS												
SVA-S SS 50	mm	70	259	259	257	257	32	148	100	50	77	4.2 kg
SVA-S SS (2)	in.	2.76	10.20	10.20	10.12	10.12	1.26	5.83	3.94	1.97	3.03	9.3 lb
SVA-S SS 65	mm	70	284	280	284	280	40	176	100	50	90	6.3 kg
SVA-S SS (2½)	in.	2.76	11.18	11.02	11.18	11.02	1.57	6.93	3.94	1.97	3.54	13.9 lb

Specified weights are approximate values only.

Dimensions and weights

SVA-S SS 80 - 125 (3 - 5 in.) angleway version with cap / hand wheel

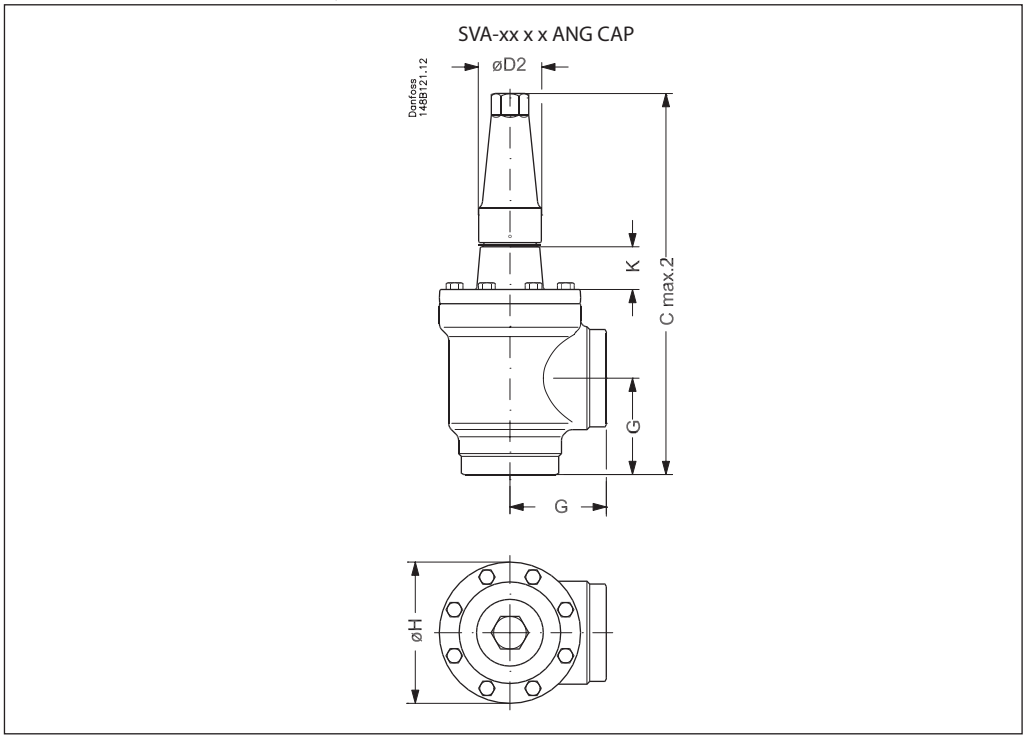

Valve size		K	$C_{max.2}$	G	$∅D_1$	$∅D_2$	∅H	Weight
SVA-S SS								
SVA-S SS 80	mm	76	388	90	200	58	129	9.7 kg
SVA-S SS (3)	in.	3.00	15.28	3.54	7.87	2.28	5.08	21.4 lb
SVA-S SS 100	mm	90	437	106	250	58	156	15.3 kg
SVA-S SS (4)	in.	3.54	17.20	4.17	9.84	2.28	6.14	33.7 lb
SVA-S SS 125	mm	90	533	128	315	74	193	28.1 kg
SVA-S SS (5)	in.	3.54	20.98	5.04	12.40	2.91	7.60	61.9 lb

Specified weights are approximate values only.

Ordering

Please note that the type codes only serve to identify the valves, some of which may not form part of the standard product range. For further information please contact your local Danfoss Sales Company.

Type codes

Valve type	SVA-S/L SS	Shut-off valve		
Nominal size in mm			Available connections	
			D	A
(valve size measured on the connection diameter)	**15**	DN 15 (½)	x	x
	20	DN 20 (¾)	x	x
	25	DN 25 (1)	x	x
	32	DN 32 (1¼)	x	x
	40	DN 40 (1½)	x	x
	50	DN 50 (2)	x	x
	65	DN 65 (2½)	x	x
	80	DN 80 (3)	x	x
	100	DN 100 (4)	x	x
	125	DN 125 (5)	x	
Connections	**D** **A**	Butt-weld connection: DIN EN 10220 Butt-weld connection: ANSI B 36.19M		
Valve housing	**ANG** **STR**	Angle flow Straight flow		
Other equipment	**H-WHEEL** **CAP**	Hand wheel Cap		

Important!
Where products need to be certified according to specific certification societies or where higher pressures are required, the relevant information should be included at the time of order.

Ordering SVA-S/L SS

Example:
SVA-S SS 20 DIN angleway with hand wheel = **148B5377**

Important!
Where products need to be certified according to specific certification societies or where higher pressures are required, the relevant information should be included at the time of order.

ANG = Angleway
STR = Straightway

CAP = Cap
H-WHEEL = Hand wheel

SVA-S SS Angleway

Size mm	Size in.	Type	MWP bar	MWP psi	Code number
Butt-weld DIN (EN 10220)					
15	½	SVA-S SS 15 D ANG H-WHEEL	52	754	**148B5289**
15	½	SVA-S SS 15 D ANG CAP	52	754	**148B5290**
20	¾	SVA-S SS 20 D ANG H-WHEEL	52	754	**148B5377**
20	¾	SVA-S SS 20 D ANG CAP	52	754	**148B5378**
25	1	SVA-S SS 25 D ANG H-WHEEL	52	754	**148B5486**
25	1	SVA-S SS 25 D ANG CAP	52	754	**148B5487**
32	1¼	SVA-S SS 32 D ANG H-WHEEL	52	754	**148B5566**
32	1¼	SVA-S SS 32 D ANG CAP	52	754	**148B5567**
40	1½	SVA-S SS 40 D ANG H-WHEEL	52	754	**148B5646**
40	1½	SVA-S SS 40 D ANG CAP	52	754	**148B5647**
50	2	SVA-S SS 50 D ANG H-WHEEL	52	754	**148B5753**
50	2	SVA-S SS 50 D ANG CAP	52	754	**148B5754**
65	2½	SVA-S SS 65 D ANG H-WHEEL	52	754	**148B5847**
65	2½	SVA-S SS 65 D ANG CAP	52	754	**148B5848**
80	3	SVA-S SS 80 D ANG CAP	50	725	**148B5928**
100	4	SVA-S SS 100 D ANG CAP	50	725	**148B6032**
125	5	SVA-S SS 125 D ANG CAP	50	725	**148B6126**

Size mm	Size in.	Type	MWP bar	MWP psi	Code number
Butt-weld ANSI (B 36.19M SCHEDULE 40)					
15	½	SVA-S SS 15 A40 ANG CAP	52	754	**148B5396**
20	¾	SVA-S SS 20 A40 ANG CAP	52	754	**148B5395**
25	1	SVA-S SS 25 A40 ANG CAP	52	754	**148B6477**
32	1¼	SVA-S SS 32 A40 ANG CAP	52	754	**148B5595**
40	1½	SVA-S SS 40 A40 ANG CAP	52	754	**148B5683**

Size mm	Size in.	Type	MWP bar	MWP psi	Code number
Butt-weld ANSI (B 36.19M SCHEDULE 10)					
50	2	SVA-S SS 50 D/A10 ANG CAP	52	754	**148B5754**
65	2½	SVA-S SS 65 A10 ANG CAP	52	754	**148B6448**
80	3	SVA-S SS 80 D/A10 ANG CAP	52	754	**148B5928**
100	4	SVA-S SS 100 A10 ANG CAP	52	754	**148B6035**

SVA-S SS Straightway

Size mm	Size in.	Type	MWP bar	MWP psi	Code number
Butt-weld DIN (EN 10220)					
15	½	SVA-S SS 15 D STR H-WHEEL	52	754	**148B5291**
15	½	SVA-S SS 15 D STR CAP	52	754	**148B5292**
20	¾	SVA-S SS 20 D STR H-WHEEL	52	754	**148B5379**
20	¾	SVA-S SS 20 D STR CAP	52	754	**148B5380**
25	1	SVA-S SS 25 D STR H-WHEEL	52	754	**148B5488**
25	1	SVA-S SS 25 D STR CAP	52	754	**148B5489**
32	1¼	SVA-S SS 32 D STR H-WHEEL	52	754	**148B5568**
32	1¼	SVA-S SS 32 D STR CAP	52	754	**148B5569**
40	1½	SVA-S SS 40 D STR H-WHEEL	52	754	**148B5648**
40	1½	SVA-S SS 40 D STR CAP	52	754	**148B5649**
50	2	SVA-S SS 50 D STR H-WHEEL	52	754	**148B5755**
50	2	SVA-S SS 50 D STR CAP	52	754	**148B5756**
65	2½	SVA-S SS 65 D STR H-WHEEL	52	754	**148B5849**
65	2½	SVA-S SS 65 D STR CAP	52	754	**148B5850**

Size mm	Size in.	Type	MWP bar	MWP psi	Code number
Butt-weld ANSI (B 36.19M SCHEDULE 40)					
15	½	SVA-S SS 15 A40 STR CAP	52	754	**148B5397**
20	¾	SVA-S SS 20 A40 STR CAP	52	754	**148B5398**
25	1	SVA-S SS 25 A40 STR CAP	52	754	**148B5399**
32	1¼	SVA-S SS 32 A40 STR CAP	52	754	**148B5596**
40	1½	SVA-S SS 40 A40 STR CAP	52	754	**148B5684**

Size mm	Size in.	Type	MWP bar	MWP psi	Code number
Butt-weld ANSI (B 36.19M SCHEDULE 10)					
50	2	SVA-S SS 50 D/A10 STR CAP	52	754	**148B5756**
65	2½	SVA-S SS 65 A10 STR CAP	52	754	**148B6449**

Ordering

ANG = Angleway
STR = Straightway

CAP = Cap
H-WHEEL = Hand wheel

SVA-L SS Angleway

Size		Type	MWP		Code number
mm	in.		bar	psi	
Butt-weld DIN (EN 10220)					
15	½	SVA-L SS 15 D ANG H-WHEEL	52	754	**148B6546**
15	½	SVA-L SS 15 D ANG CAP	52	754	**148B6547**
20	¾	SVA-L SS 20 D ANG H-WHEEL	52	754	**148B6550**
20	¾	SVA-L SS 20 D ANG CAP	52	754	**148B6551**
25	1	SVA-L SS 25 D ANG H-WHEEL	52	754	**148B6554**
25	1	SVA-L SS 25 D ANG CAP	52	754	**148B6555**
32	1¼	SVA-L SS 32 D ANG H-WHEEL	52	754	**148B6558**
32	1¼	SVA-L SS 32 D ANG CAP	52	754	**148B6559**
40	1½	SVA-L SS 40 D ANG H-WHEEL	52	754	**148B6562**
40	1½	SVA-L SS 40 D ANG CAP	52	754	**148B6563**

SVA-L SS Straightway

Size		Type	MWP		Code number
mm	in.		bar	psi	
Butt-weld DIN (EN 10220)					
15	½	SVA-L SS 15 D STR H-WHEEL	52	754	**148B6548**
15	½	SVA-L SS 15 D STR CAP	52	754	**148B6549**
20	¾	SVA-L SS 20 D STR H-WHEEL	52	754	**148B6552**
20	¾	SVA-L SS 20 D STR CAP	52	754	**148B6553**
25	1	SVA-L SS 25 D STR H-WHEEL	52	754	**148B6556**
25	1	SVA-L SS 25 D STR CAP	52	754	**148B6557**
32	1¼	SVA-L SS 32 D STR H-WHEEL	52	754	**148B6560**
32	1¼	SVA-L SS 32 D STR CAP	52	754	**148B6561**
40	1½	SVA-L SS 40 D STR H-WHEEL	52	754	**148B6564**
40	1½	SVA-L SS 40 D STR CAP	52	754	**148B6565**

ENGINEERING
TOMORROW

Shut-off valves
Types SVA-DL and SVA-DH 250-300

Contents **Page**

Features ... 57
Design ... 58
Technical data ... 59
Function ... 60
Material specification ... 61
Connections ... 63
Dimensions and weights ... 63
Ordering ... 64

AI177086432445en-000701 | 2015.11

ENGINEERING TOMORROW

Shut-off valves
Types SVA-DL and SVA-DH 250-300



SVA-DL and SVA-DH are angleway shut-off valves designed to meet all industrial refrigeration application requirements.

SVA-DL (**D**elta pressure **L**ow)
is designed with a restriction in the opening function. High differential pressure can be applied from the side port and reduced pressure can be applied from bottom port. SVA-DL is a two-step valve for pressure relief.

SVA-DH (**D**elta pressure **H**igh)
is designed without restriction in the opening function. As a result of its balanced design this valve is able to open at all differential pressures with limited torque.
The angleway shut-off valves are carefully designed to give favourable flow conditions. Easy to dismantle for inspection and repair.

Both SVA-DL & DH shut-off valves have internal backseating enabling the spindle seal to be replaced with the valve still under pressure.

The valves are designed to give favourable flow characteristics and are easy to dismantle for servicing. The valve cone is designed to ensure perfect closing.

Features

- Applicable to HC, HCFC, HFC, R717 (Ammonia) and R744 (CO_2)
- Optional accessories:
  - Heavy duty industrial handwheel for frequent operation
  - Vented cap for infrequent operation
- Available in angleway version with extended bonnet for insulated systems
- The valve caps can be wire-sealed, to prevent operation by unauthorised persons
- Internal PTFE backseating
- The bonnet is suitable for installation in insulated low temperature applications
- The housing and bonnet are made from low temperature steel in accordance with the requirements of the Pressure Equipment Directive and other international classification authorities
- Classification: DNV, CRN, BV, EAC etc.
  To get an updated list of certification on the products please contact your local Danfoss Sales Company

Design

Connections
Available with the following connections:
Butt-weld DIN 2448
Butt-weld ANSI B 36.10
- DN250: Schedule 40
- DN300: STD

Housing and bonnet
Made from special, cold-resistant steel approved for low temperature operations.

Bolts
Stainless steel, Quality A2-70

Valve cone assembly
The valve cone assembly can be turned on the spindle, thus there is no friction between cone and seat when the valve is opened and closed. A Teflon tightening ring provides perfect sealing at a minimum closing torque.

Spindle
Made of polished stainless steel, ideal for O-ring sealing.

Packing gland
The packing gland comprises a spring loaded seal packing which ensures perfect tightness in the range: -60 – 150 °C / -76 – 302 °F. Furthermore, the packing glands incorporate a scraper ring to prevent the penetration of dirt and ice.

Marking
Each valve type is clearly marked with type, size and performance range.

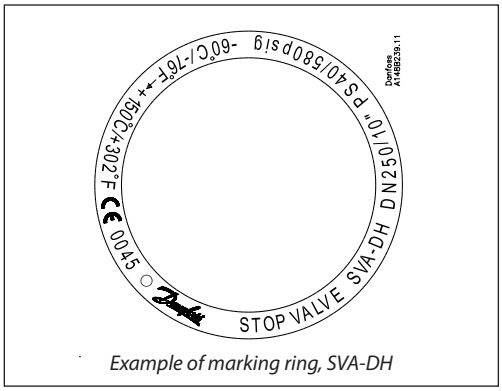

Example of marking ring, SVA-DH

Pressure Equipment Directive (PED)
SVA-DL and DH valves are approved and CE marked in accordance with the Pressure Equipment Directive - 97/23/EC.

For further details / restrictions - see Installation Instruction.

SVA-DL & DH valves		
Nominal bore	DN 250 mm (10 in)	DN 300 mm (12 in)
Classified for	Fluid group I	
Category	III	IV

Technical data

Refrigerants
Applicable to HC, HCFC, HFC, R717 (Ammonia) and R744 (CO_2)
For further information please see installation instruction for SVA-DL and SVA-DH.

Temperature range
SVA-DL and SVA-DH
-60 – 150 °C / -76 – 302 °F

Pressure range
SVA-DL and SVA-DH
40 bar g / 580 psi g at -60 – 60 °C / -76 °F – 140 °F
36 bar g / 522 psi g at 60 – 80 °C / 140 – 176 °F
32 bar g / 464 psi g at 80 – 120 °C / 176 – 248 °F
28 bar g / 406 psi g at 120 – 150 °C / 248 – 302 °F

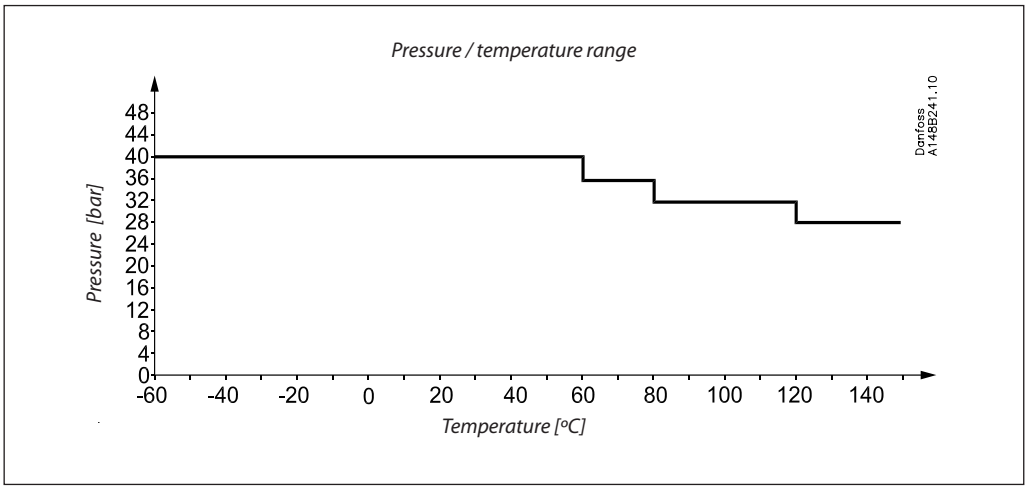

Function

SVA-DL
The SVA-DL shut-off valve is designed with a restriction in the flow direction (differential pressure). To ensure the most favourable valve performance the flow must be directed from the side port towards the valve cone. Operation of the valve with flow in this direction is made possible by the two-step opening valve cone as illustrated below.
The sketches below give the maximum pressures at which the the valve can be operated manually and tightness can be achieved.

SVA-DH
The SVA-DH shut-off valve is designed without restrictions in either flow direction or differential pressure. Due to the balanced valve cone design the torque required to operate the valve is minimized and the valve can be opened and closed against high pressure with flow in any direction.

Pressure

SVA-DL

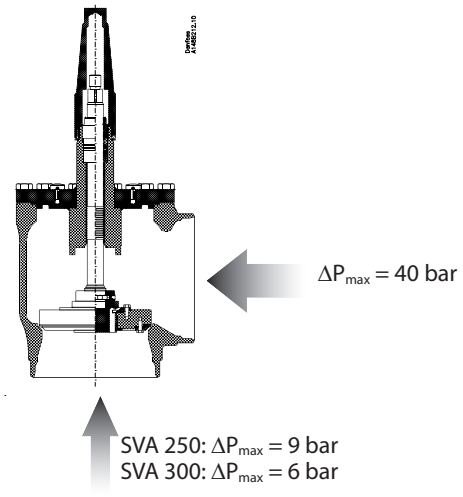

SVA-DH

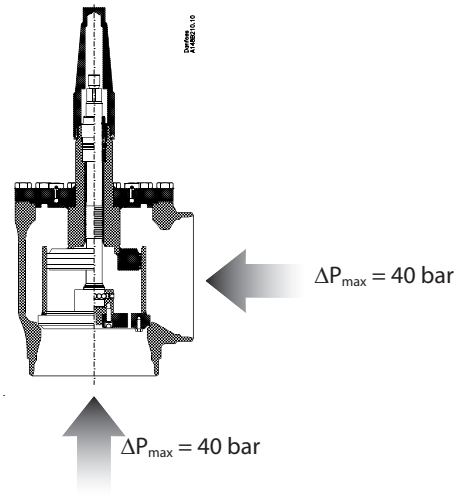

Flow

SVA-DL

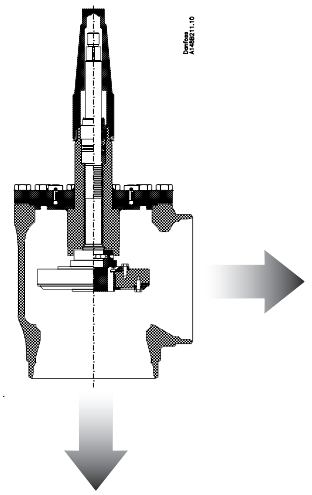

SVA-DH

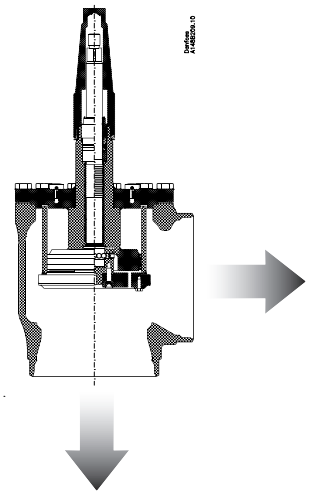

Material specification

SVA-DL 250 - 300

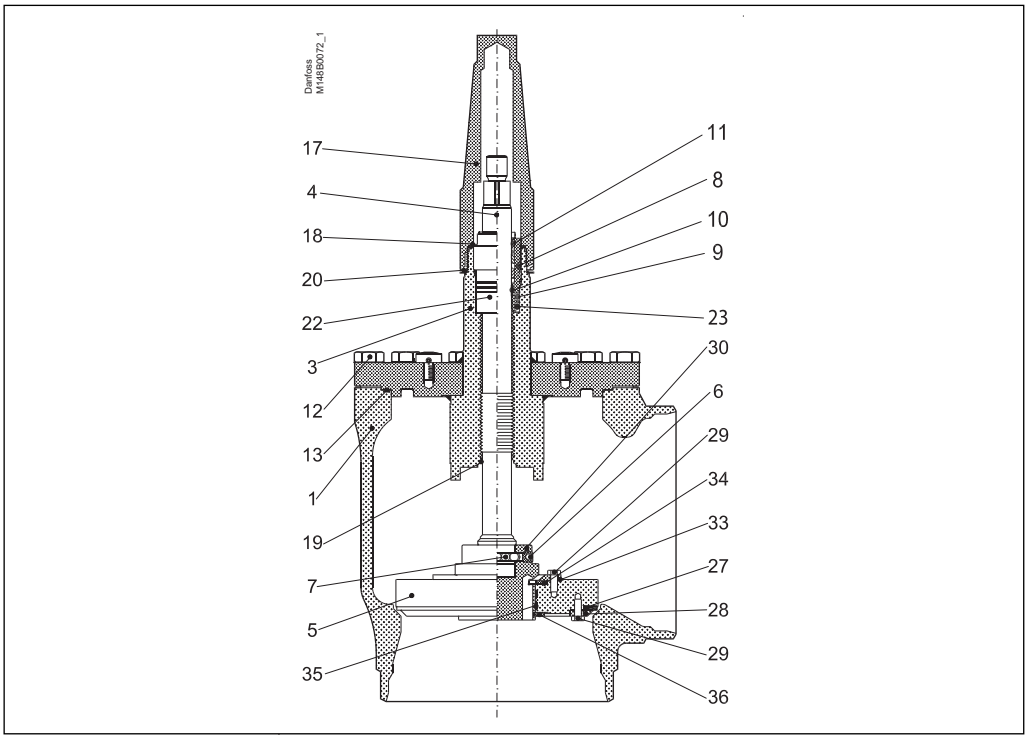

No.	Part	Material	EN	ASTM
1	Housing	Steel	G20Mn5 QT, EN 10213-3	LCC, A352
3	Bonnet	Steel	P275NL1, EN 10028-3 G20Mn5QT EN 10213-3	Grade A, A662 LCC, A352
4	Spindle	Steel	X5CrNi18-10, EN10088	AISI 304
5	Cone	Steel	P275NL1, EN 10028-3	Grade A, A662
6	Set screw	Steel	Quality 8.8	Grade 5
7	Balls	Stainless steel		
8	Packing Gland	Stainless steel	X8CrNiS18-9 10088	AISI 303
9	O-ring	Cloroprene (Neoprene)		
10	Spring loaded Teflon ring	PTFE		
11	O-ring	Cloroprene (Neoprene)		
12	Bolts	Stainless steel	A2-70	Type 308
13	Gasket	Fiber, Non-asbestos		
14	Handwheel	Steel		
15	Washer	Stainless steel		
16	Lock nut	Stainless steel+nylon		
17	Cap	Aluminium	AlMgSi1	
18	Gasket for cap	Nylon (PA 6)		
19	Soft backseat	Teflon (PTFE)		
20	Identification ring	Stainless steel		
22	Guide for spindle	Steel	11SMn30	Grade1213, A29
23	O-ring	PTFE/FKM		
27	Gasket	Teflon (PTFE)		
28	Front for valve cone	Steel	S235JRG2, EN10025	Grade C, A283
29	Bolts	Steel	Quality 8.8	Grade 5
30	Insert, valve cone	Spheroidal graphite cast iron	EN-GJS-250	Class 40B
31	Lifting eye bolts	Steel		
33	Backing for valve cone	Steel	S235JRG2, EN10025	Grade C, A283
34	Gasket	Teflon (PTFE)		
35	Wear ring	Teflon (PTFE)		
36	Retaining ring	Spring steel		

Material specification

SVA-DH 250 - 300

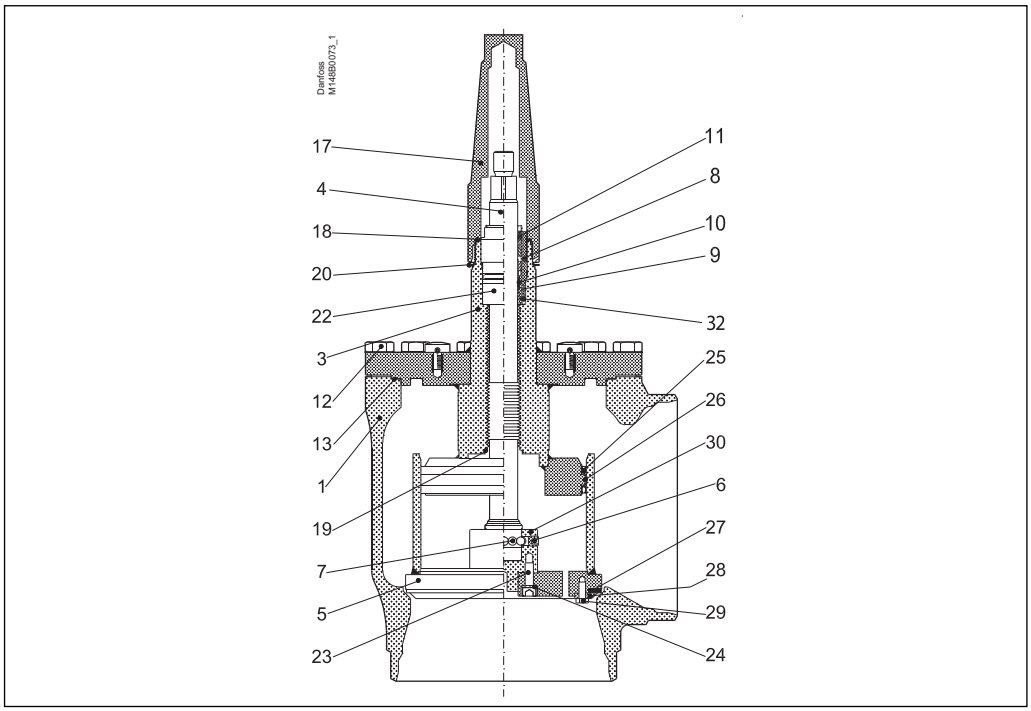

No.	Part	Material	EN	ASTM
1	Housing	Steel	G20Mn5 QT, EN 10213-3	LCC, A352
3	Bonnet	Steel	P275NL1, EN 10028-3 G20Mn5 QT, EN 10213-3	Grade A, A662 LCC, A352
4	Spindle	Steel	X5CrNi18-10 DIN 17440	
5	Cone	Steel	P275NL1, EN 10028-3	Grade A, A662
6	Set screw	Steel	Quality 8.8	Grade 5
7	Balls	Stainless steel		
8	Packing Gland	Stainless steel	X8CrNiS18-9 10088	AISI 303
9	O-ring	Cloroprene (Neoprene)		
10	Spring loaded Teflon ring	PTFE		
11	O-ring	Cloroprene (Neoprene)		
12	Bolts	Stainless steel	A2-70	Type 308
13	Gasket	Fiber, Non-asbestos		
14	Handwheel	Steel		
15	Washer	Stainless steel		
16	Lock nut	Stainless steel+nylon		
17	Cap	Aluminium	AlMgSi1	
18	Gasket for cap	Nylon (PA 6)		
19	Soft backseat	Teflon (PTFE)		
20	Identification ring	Stainless steel		
22	Guide for spindle	Steel	11SMn30	Grade 1213, A29
23	Bolts	Steel	Quality 8.8	Grade 5
24	Washer	Steel		
25	U-sleeve sealing	Teflon (PTFE) +Stainless steel		
26	Wear ring	Teflon (PTFE)		
27	Gasket	Teflon (PTFE)		
28	Front for valve cone	Steel	S235JRG2, EN10025	Grade C, A283
29	Bolts	Steel	Quality 8.8	Grade 5
30	Insert, valve cone	Spheroidal graphite cast iron	EN-GJS-250	Class 40B
31	Lifting eye bolts	Steel		
32	O-ring	PTFE/FKM		

Connections

DIN

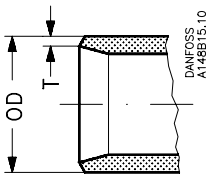

Size [mm]	Size [in]	OD [mm]	T [mm]	OD [in]	T [in]
Welding DIN (2448)					
250	10	273	6.3	10.75	0.25
300	12	323.9	7.1	12.75	0.28

Type	K_V [m³/h]	C_V [USgal/min]
SVA-DH	1405	1630
SVA-DL	1610	1868
SVA-DH	1870	2169
SVA-DL	2082	2415

ANSI

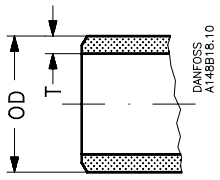

Size [mm]	Size [in]	OD [mm]	T [mm]	OD [in]	T [in]
Welding ANSI (B 36.10)					
250	10	273	9.3	10.75	0.25
300	12	323.9	9.5	12.75	0.28

Type	K_V [m³/h]	C_V [USgal/min]
SVA-DH	1405	1630
SVA-DL	1610	1868
SVA-DH	1870	2169
SVA-DL	2082	2415

Dimensions and weights

SVA-DH, SVA-DL 250 -300, angleway version

With handwheel

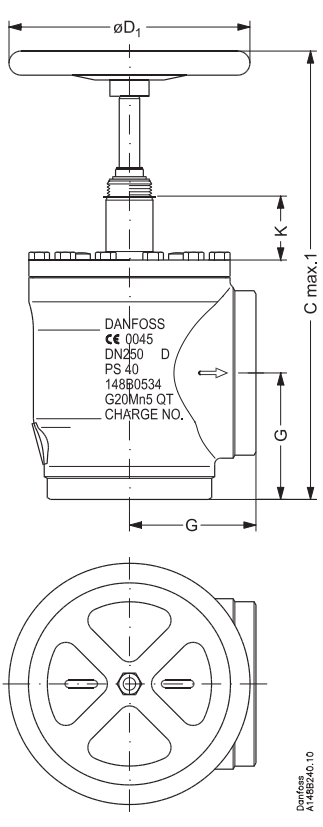

With vented cap

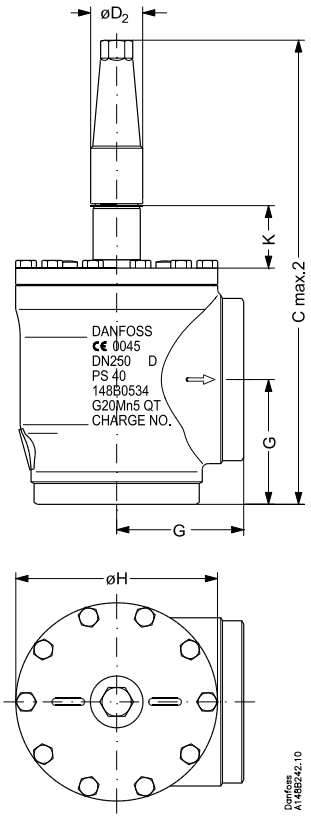

Valve size		K	Cmax. 1	Cmax. 2	G	øD₁	øD₂	øH	Weight
SVA-DL / SVA-DH									
SVA 250	[mm]	102	745	782	210	400	86	334	130 kg
SVA (10)	[in]	4	29.33	30.79	8.27	15.75	3.39	13.14	287 lb
SVA 300	[mm]	102	852	842	240	500	86	384	190 kg
SVA (12)	[in]	4	33.54	33.14	9.45	19.69	3.39	15.12	419 lb

Specified weights are approximate values only

Ordering

The table below can be used to identify the valve required.

Please note that the type codes only serve to identify the valves, some of which may not form part of the standard product range.

For further information please contact your local Danfoss Sales Company.

Type codes

Valve type Nominal size in mm	SVA-DL SVA-DH	Shut-off valve Shut-off valve	(Δp Low) (Δp High)	
			Available connections	
			D	A
(Valve size measured on the	250	DN250	X	X
connection diameter)	300	DN300	X	X
Connections	D	Butt weld connection: DIN 2448		
	A	Butt weld connections: ANSI B 36.10 DN250: Schedule 40 DN300: STD		
Other euipment	CAP	Aluminum cap		
	H-WHEEL	Steel handweel		

Important!
Where products need to be certified according to specific certification societies or where higher pressures are required, the relevant information should be included at the time of ordering.

Code numbers

Size [mm]	Size [in]	Type	Code number
250	10	SVA-DL 250 D CAP	**148B3760**
250	10	SVA-DL 250 D H-HEEL	**148B3761**
250	10	SVA-DL 250 A CAP	**148B3762**
250	10	SVA-DL 250 A H-WHEEL	**148B3763**
250	10	SVA-DH 250 D CAP	**148B3764**
250	10	SVA-DH 250 D H-WHEEL	**148B3765**
250	10	SVA-DH 250 A CAP	**148B3766**
250	10	SVA-DH 250 A H-WHEEL	**148B3767**
300	12	SVA-DL 300 D CAP	**148B3770**
300	12	SVA-DL 300 D H-WHEEL	**148B3771**
300	12	SVA-DL 300 A CAP	**148B3772**
300	12	SVA-DL 300 A H-WHEEL	**148B3773**
300	12	SVA-DH 300 D CAP	**148B3774**
300	12	SVA-DH 300 D H-WHEEL	**148B3775**
300	12	SVA-DH 300 A CAP	**148B3776**
300	12	SVA-DH 300 A H-WHEEL	**148B3777**

A = ANSI butt-weld
D = DIN butt-weld

H-WHEEL: Handwheel
CAP: Vented cap

ENGINEERING
TOMORROW

Hand operated regulating valves
Types REG-SA and REG-SB, 52 bar (754 psi)

Contents **Page**

Features 67
Design 68
Technical data 68
Computation and selection 69
Material specification 78
Connections 79
Dimensions and weights 80
Ordering 82

AI189386433903en-001002 | 2018.11

ENGINEERING TOMORROW

Hand operated regulating valves
Types REG-SA and REG-SB, 52 bar (754 psi)



REG-SA and REG-SB are angleway and straightway hand operated regulating valves, which act as normal shut-off valves in closed position.

The valves are available in two different versions – REG-SA and REG-SB designed for regulation purposes in liquid and expansion lines.

The valves are designed to meet the strict quality requirements on refrigerating installations specified by the international classification societies and are carefully designed to present favourable flow conditions and accurate linear characteristics.

REG-SA and REG-SB are equipped with vented cap and internal backseating enables replacement of the spindle seal whilst the valve is active, i.e. under pressure.

Features

- Applicable to HCFC, HFC, R717 (Ammonia), R744 (CO_2), Propane, Butane, Iso-Butane and Ethane.
  R717 Heat Pump and Propylene applications with replaced O-ring.
- Modular Concept:
  - Each valve housing is available with several different connection types and sizes.
  - Possible to convert REG-SA or REG-SB to any other product in the Flexline™ SVL family (shut-off valve, check & stop valve, check valve or strainer) just by replacing the complete top part.
- Fast and easy valve overhaul service. It is easy to replace the top part and no welding is needed.
- Designed to ensure perfect regulation
- Internal backseating enables replacement of the spindle seal whilst the valve is active, i.e. under pressure.
- Easy to disassemble for inspection and possible repair.
- Long neck versions (DN 15 to DN 40) for insulated systems available from parts programme.
- Max. operating pressure:
  52 bar g (754 psi g)
- Temperature range:
  –60/+150°C (–76/+302°F)
- Acts as a normal shut-off valve in closed position.
- Housing and bonnet material is low temperature steel according to requirements of the Pressure Equipment Directive and other international classification authorities.
- Exact capacity and setting of the valve can be calculated for all refrigerants by means of Coolselector®2 (Danfoss calculation and selection software).
- Classification: DNV, CRN, BV, EAC etc.
  To get an updated list of certification on the products please contact your local Danfoss Sales Company.

Design

Housing
Housing is Standard SVA angleway or straightway housing allowing other inserts from the SVL platform to be installed.
Material is special, cold resistant steel

Connections
Available with the following connections:

- Butt-weld DIN (EN 10220)
  – DN 10 - 65 ($^3/_8$ - 2 ½ in)
- Butt-weld ANSI (B 36.10 Schedule 80)
  – DN 10 - 40 ($^3/_8$ - 1 ½ in)
- Butt-weld ANSI (B 36.10 Schedule 40)
  – DN 50 - 65 (2 - 2 ½ in)
- Butt-weld GOST, (8734-75 and 8732-78)
  – DN 10 - 65 (⅜ - 2 ½ in)
- Socket weld (ANSI B 16.11)
  – DN 15 - 40 (½ - 1 ½ in)
- FPT inside pipe thread, NPT (ANSI/ASME B 1.20.1)
  – DN 15 - 32 (½ - 1 ¼ in)

The cone
The valves are available in two different versions – REG-SA with an A cone and REG-SB with a B cone. The A cone is designed for expansion lines, while the B cone is designed for regulating purposes e.g. liquid lines.

The valve cone is designed to ensure perfect regulation and provide an extensive regulating area. Irrespective of the refrigerant used, it is easy to obtain the correct capacity. A cone seal ring provides perfect sealing at a minimum closing momentum.

The valve cone can be turned on the spindle, thus there will be no friction between the cone and the seat when the valve is opened and closed.
Spindle
The spindle is made of polished stainless steel, which is ideal for O-ring sealing.

Packing gland - REG-SA and REG-SB
The "full temperature range" packing gland ensures perfect tightness in the whole range: -60 – 150 °C / -76 – 302 °F. The packing glands are equipped with a scraper ring to prevent penetration of dirt and ice.

Installation
Install the valve with the spindle up or in horizontal position. The flow must be directed towards the cone.

The valve is designed to withstand high internal pressure. However, the piping system in general should be designed to avoid liquid traps and reduce the risk of hydraulic pressure caused by thermal expansion.

For further information refer to product instruction for REG-SA and REG-SB.

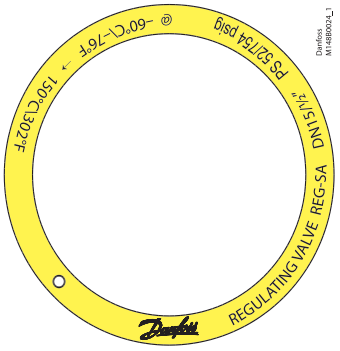

Example of marking ring, REG-SA

Pressure Equipment Directive (PED)
REG valves are approved according to the European standard specified in the Pressure Equipment Directive and are CE marked.

REG-SA and REG-SB valves			
Nominal bore	DN = < 25 mm (1 in)	DN32-80 mm (1 ¼ - 3 in)	DN100 - 125 mm (4 - 5 in)
Classified for	Fluid group I		
Category	Article 3, paragraph 3	II	III

Technical data

- *Refrigerants*
  Applicable to HCFC, HFC, R717 (Ammonia), R744 (CO_2), Propane, Butane, Iso-Butane and Ethane.
  R717 Heat Pump and Propylene applications with replaced O-ring.
- *Temperature range*
  –60/+150°C (–76/+302°F)
- *Max working pressure*
  52 bar g (754 psi g)
- *Flow coefficients*
  Flow coefficients for fully opened valves from k_v = 0.15 to 80 m^3/h (C_v = 0.17 to 92.5 USgal/min).

Computation and selection

Introduction
In refrigeration plants, hand operated regulating valves are primarily used in liquid lines in order to regulate the flow of refrigerant. The valves can, however, also be used as expansion valves. From a calculation point of view the two fields of application are very different.

Normal flow is the term used to describe the general case where the flow through the valve is proportional to the square root of the pressure drop across it and inversely proportional to the density of the refrigerant (Bernouillis equation).

This relationship between mass flow, pressure drop and density satisfies the majority of all valve applications with refrigerants and brines.

Normal flow is characterised by turbulent flow through the valve without any phase change. The following capacity curves are based on the above mentioned assumption.

Application of the hand operated regulating valves outside the normal flow area will reduce the capacity of the valve considerably. In such cases it is recommended to use Coolselector®2 (Danfoss calculation and selection software).

Location of valve in system (marked with grey)

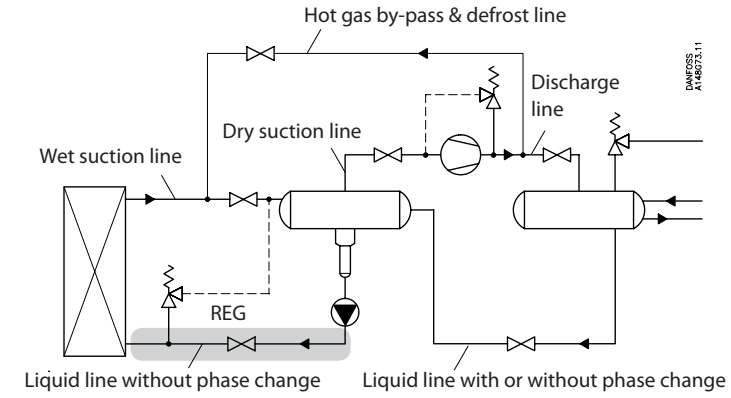

Sizing hand operated regulating valve for liquid flow
Liquid refrigerants: Use the liquid tables, fig. 6 - 10. For other refrigerants and brines, "Normal flow" (Turbulent flow); see below and use the flow coefficient tables (fig. 1 - 5).

SI-units

Mass flow:

$$k_v = \frac{G}{\sqrt{\rho \times 1000 \times \Delta p}} = G \times C_A \,[m^3/h]$$

Volume flow:

$$k_v = \frac{\dot{V}}{\sqrt{\frac{1000 \times \Delta p}{\rho}}} \,[m^3/h]$$

Imperial units

Mass flow:

$$C_v = \frac{0.95 \times G}{\sqrt{\rho \times \Delta p}} = 31.6 \times G \times C_A \,[USgal/min.]$$

Volume flow:

$$C_v = \frac{0.127 \times \dot{V}}{\sqrt{\frac{\Delta p}{\rho}}} \,[USgal/min.]$$

k_v	[m^3/h]	Quantity [m^3/h] of water flowing through a valve at a pressure loss of 1 bar (according to VDE/VDI Norm 2173).
P_1	[bar]	Pressure before the valve (upstream).
P_2	[bar]	Pressure after the valve (downstream).
Δp	[bar]	Actual pressure loss across the valve (P_1–P_2).
G	[kg/h]	Mass flow through the valve.
$\dot{V}$	[m^3/h]	Volume flow through the valve.
ρ	[kg/m^3]	Density of the refrigerant before the valve.
C_A		Calculation factor (fig. 11).

C_v	[US gal/min]	Quantity [US gal/min] of water flowing through a valve at a pressure loss of 1 psi.
P_1	[psi]	Pressure before the valve (upstream).
P_2	[psi]	Pressure after the valve (downstream).
Δp	[psi]	Actual pressure loss across the valve (P_1–P_2).
G	[lb/min]	Mass flow through the valve.
$\dot{V}$	[US gal/min]	Volume flow through the valve.
ρ	[lb/ft^3]	Density of the refrigerant before the valve
C_A		Calculation factor (fig. 11).

Computation and selection

Flow coefficient

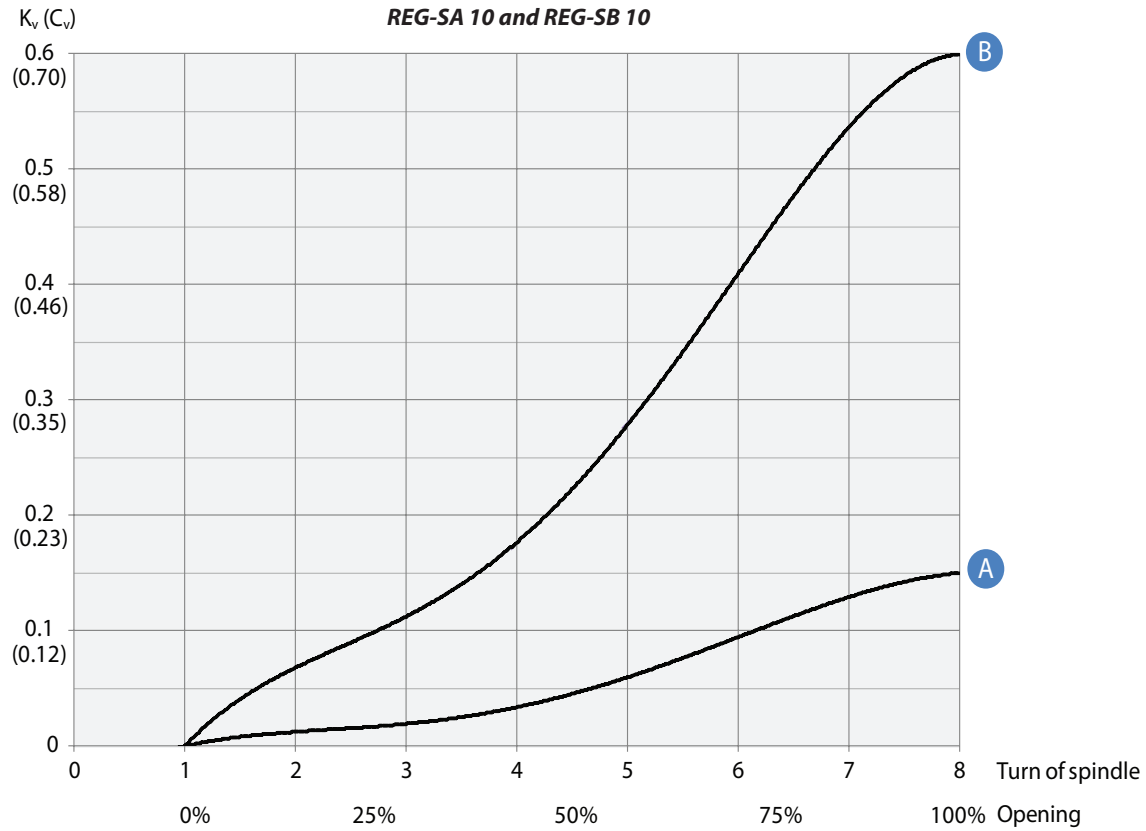

Fig. 1

Flow coefficient

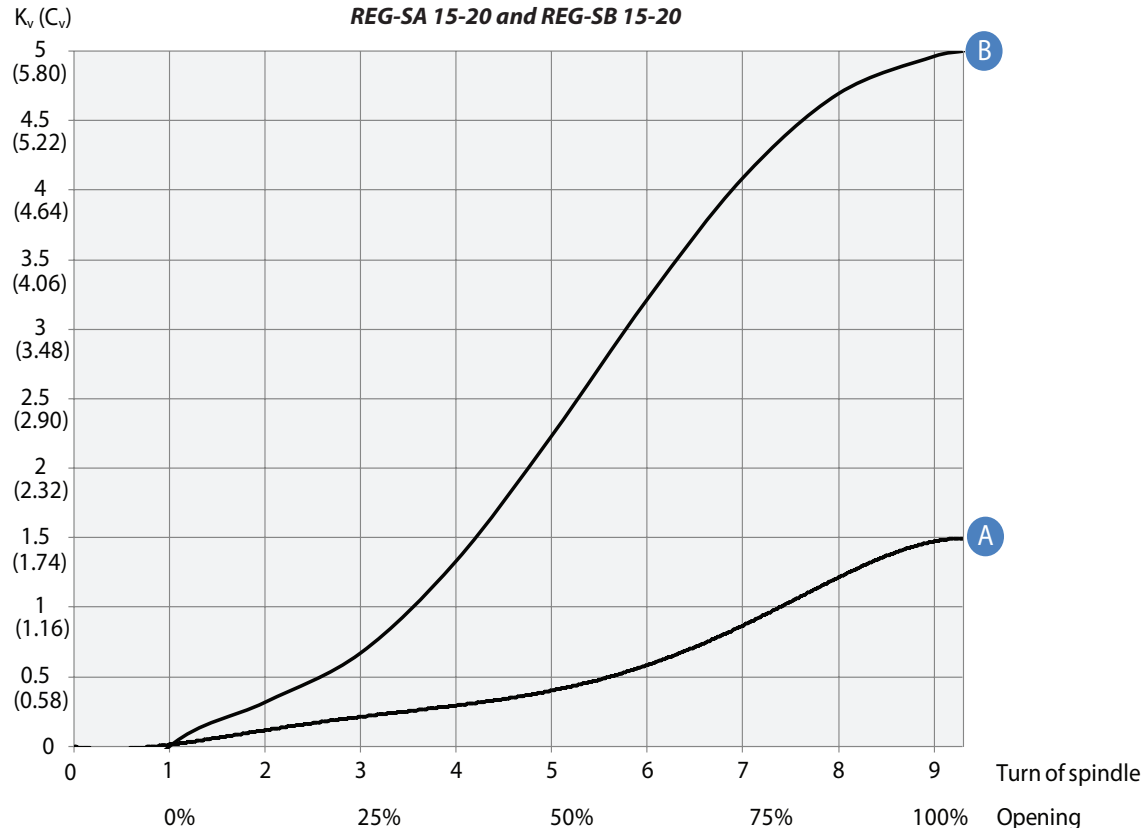

Fig. 2

Computation and selection *(Continued)*

Flow coefficient

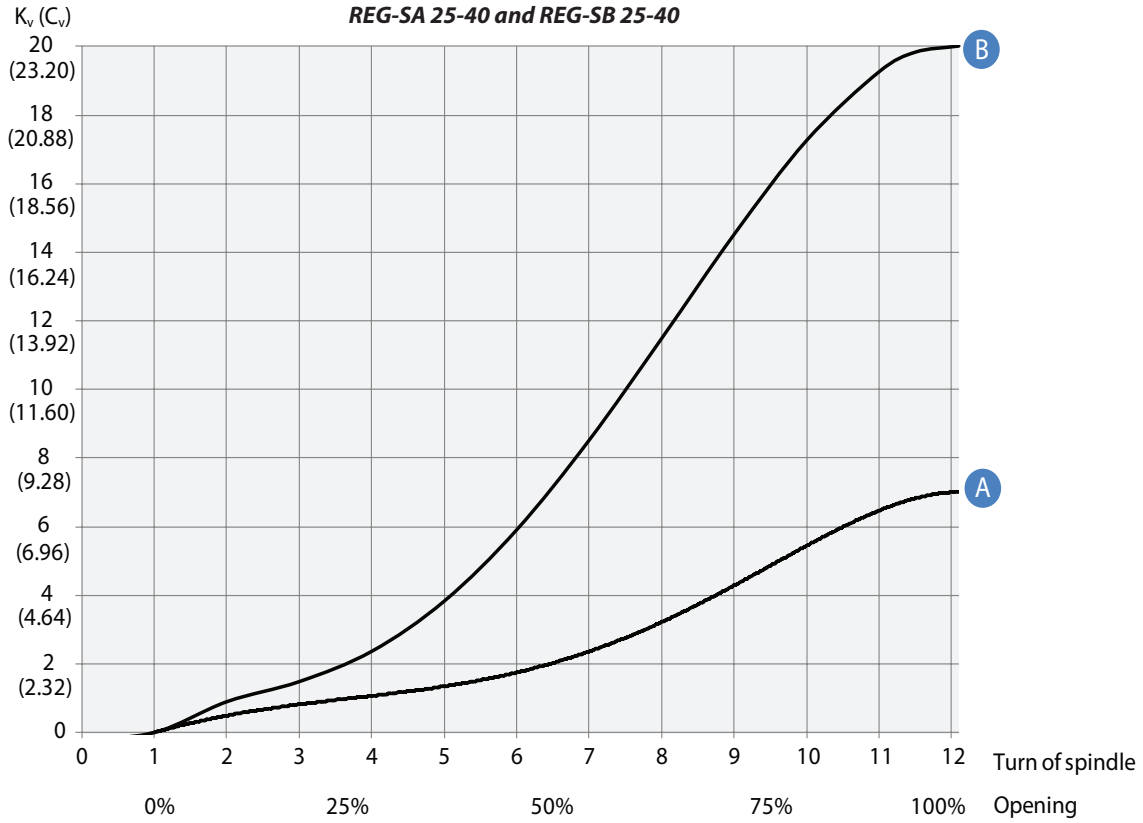

Fig. 3

Flow coefficient

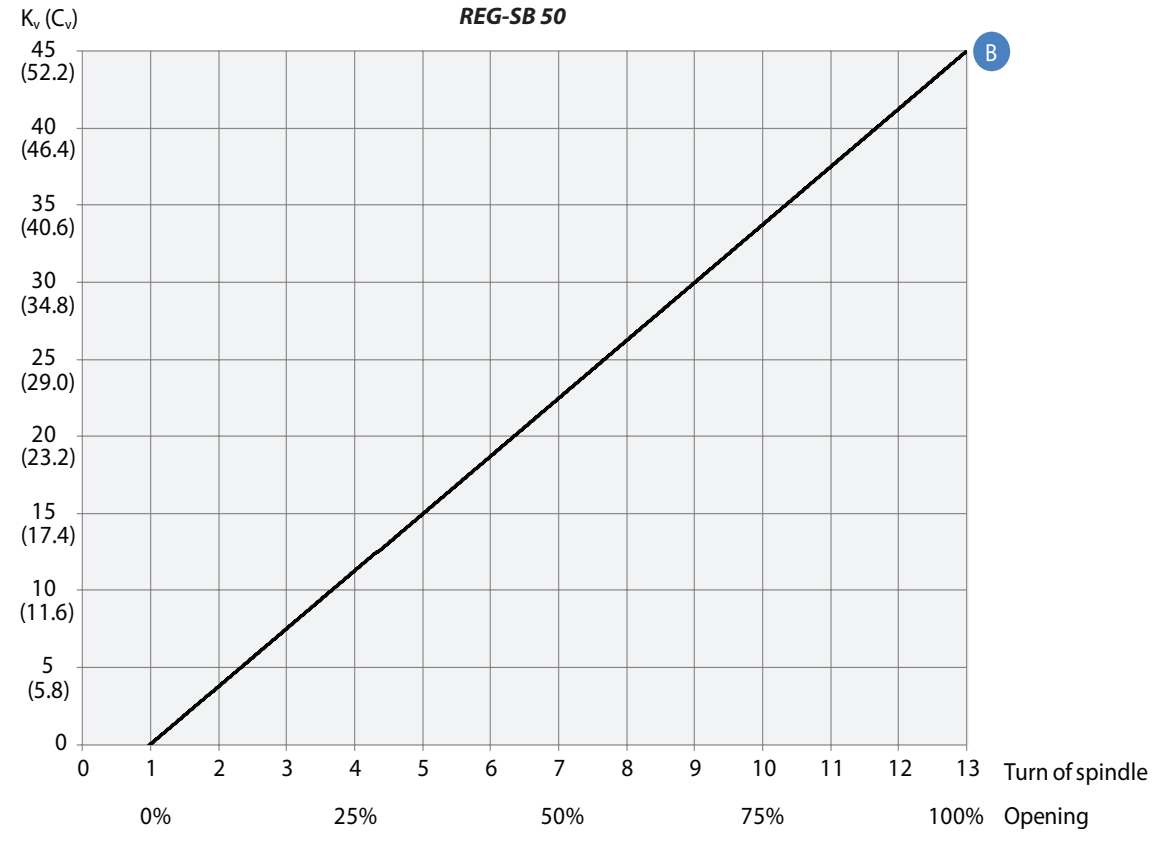

Fig. 4

Computation and selection *(Continued)*

Flow coefficient

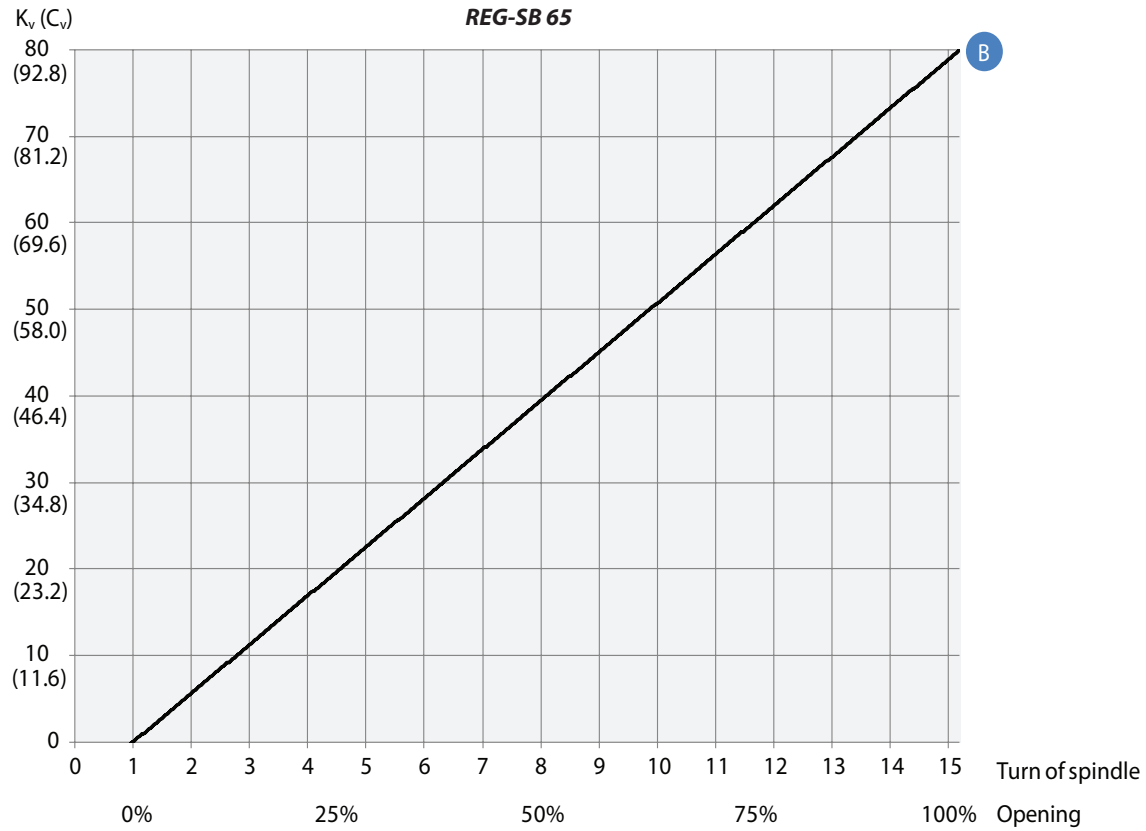

Fig. 5

Computation and selection
(Continued)

Liquid R 717, density: 670 kg/m³ [42 lb/ft³]

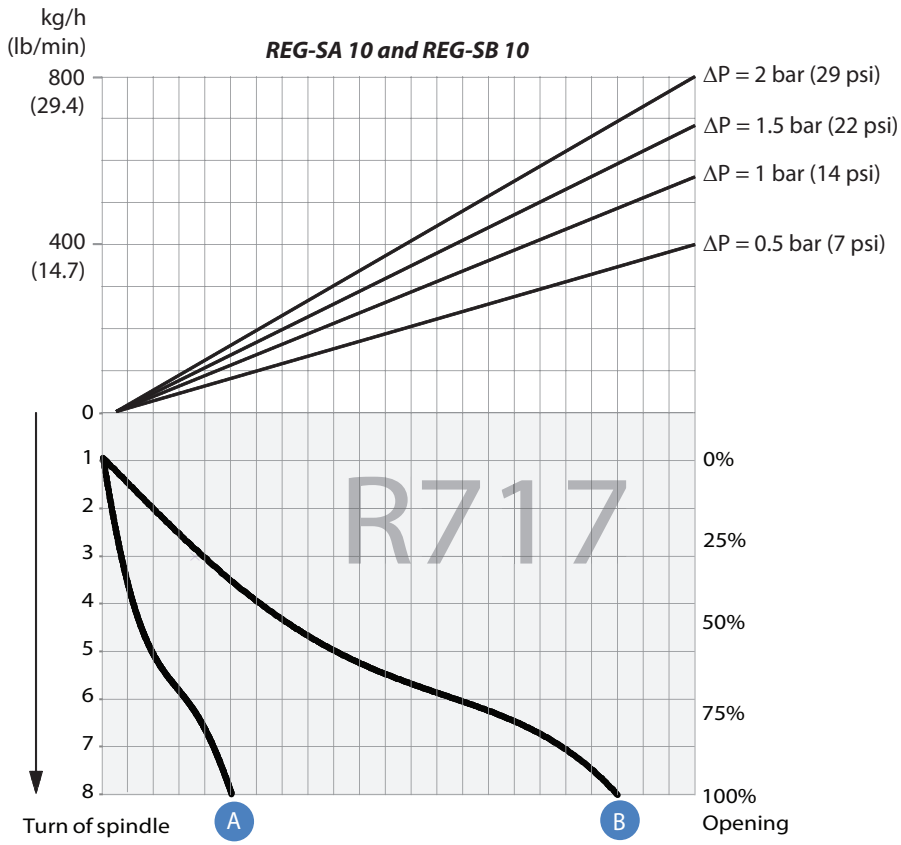

Fig. 6

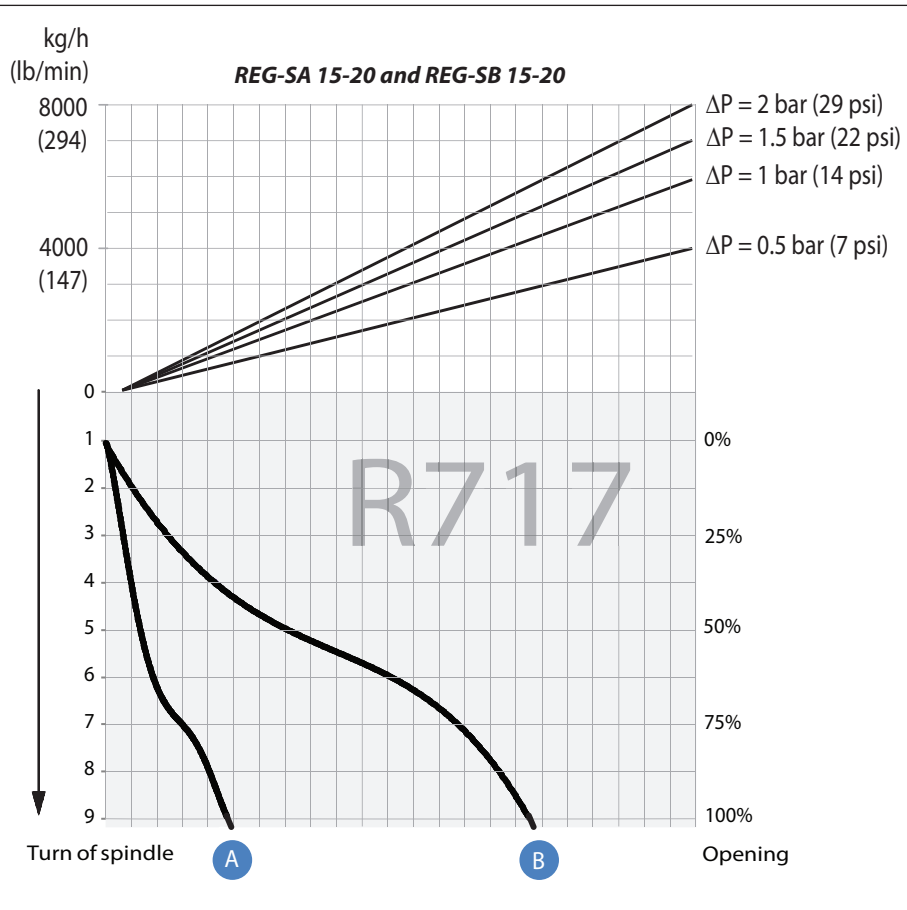

Fig. 7

For choice of valve size and connection see "Connections".

Computation and selection
(Continued)

Liquid R 717, density: 670 kg/m³ [42 lb/ft³]

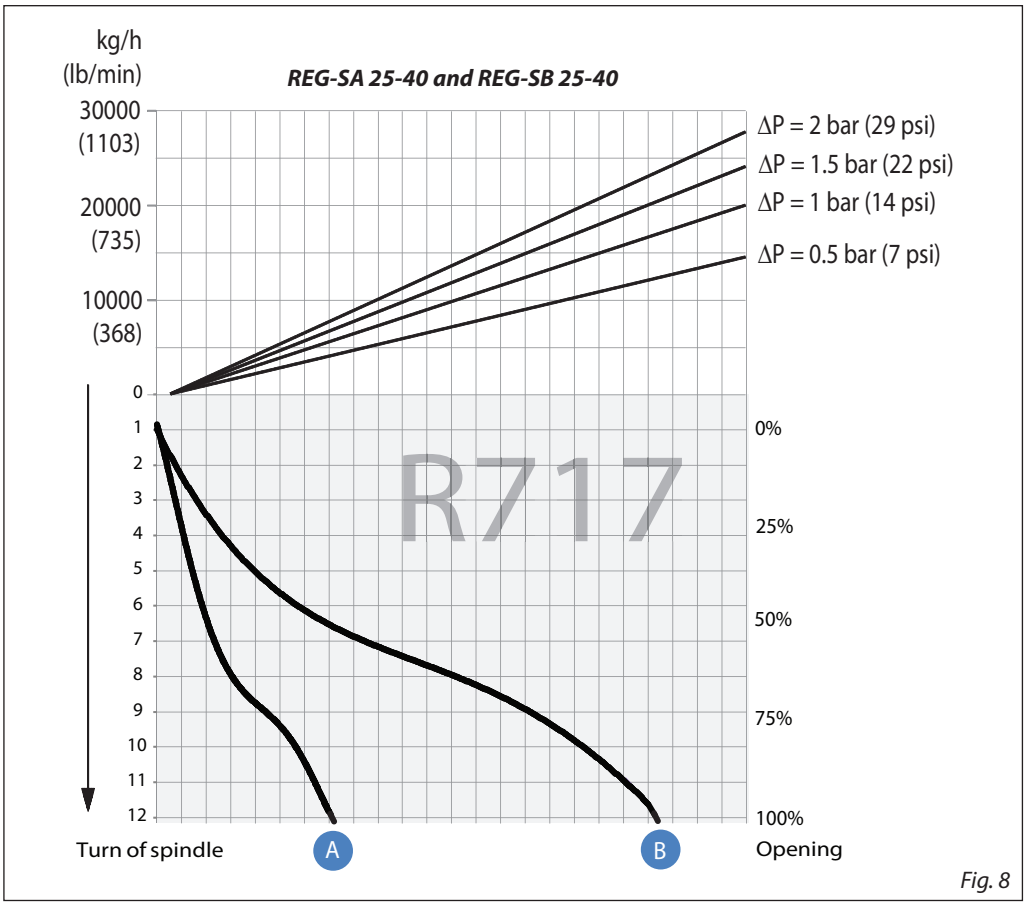

Fig. 8

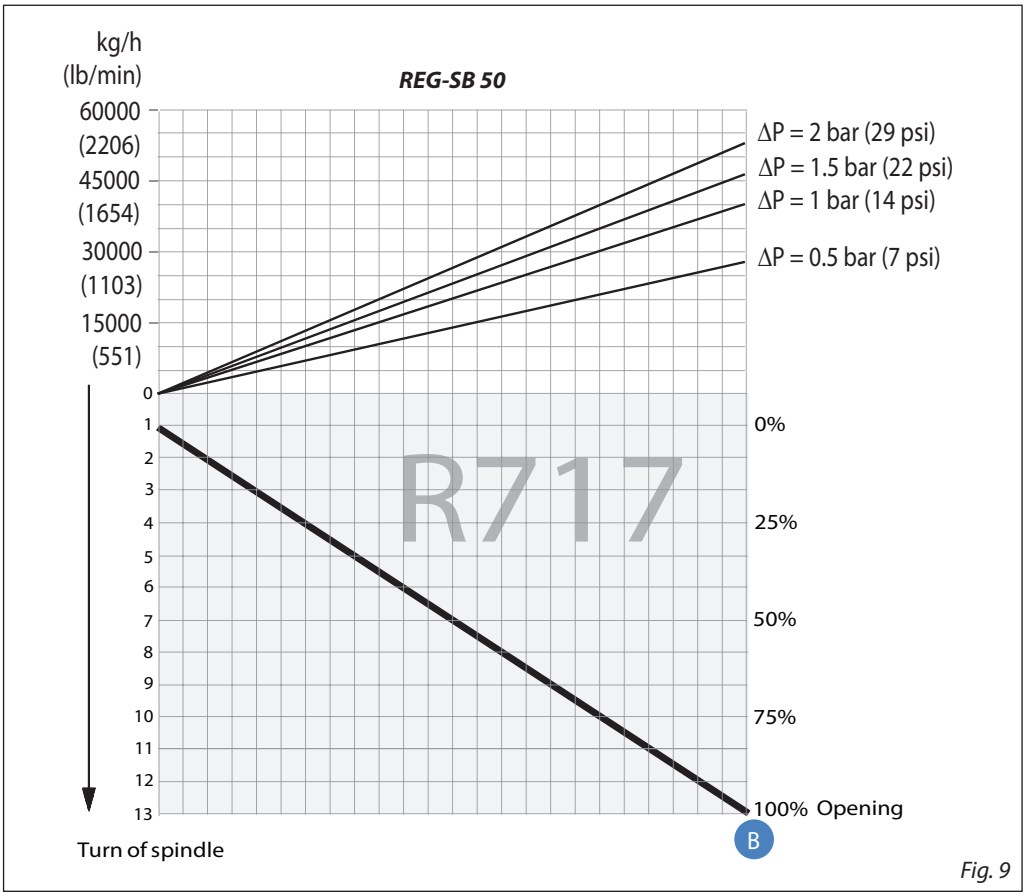

Fig. 9

For choice of valve size and connection see "Connections".

Computation and selection
(Continued)

Liquid R 717, density: 670 kg/m³ [42 lb/ft³]

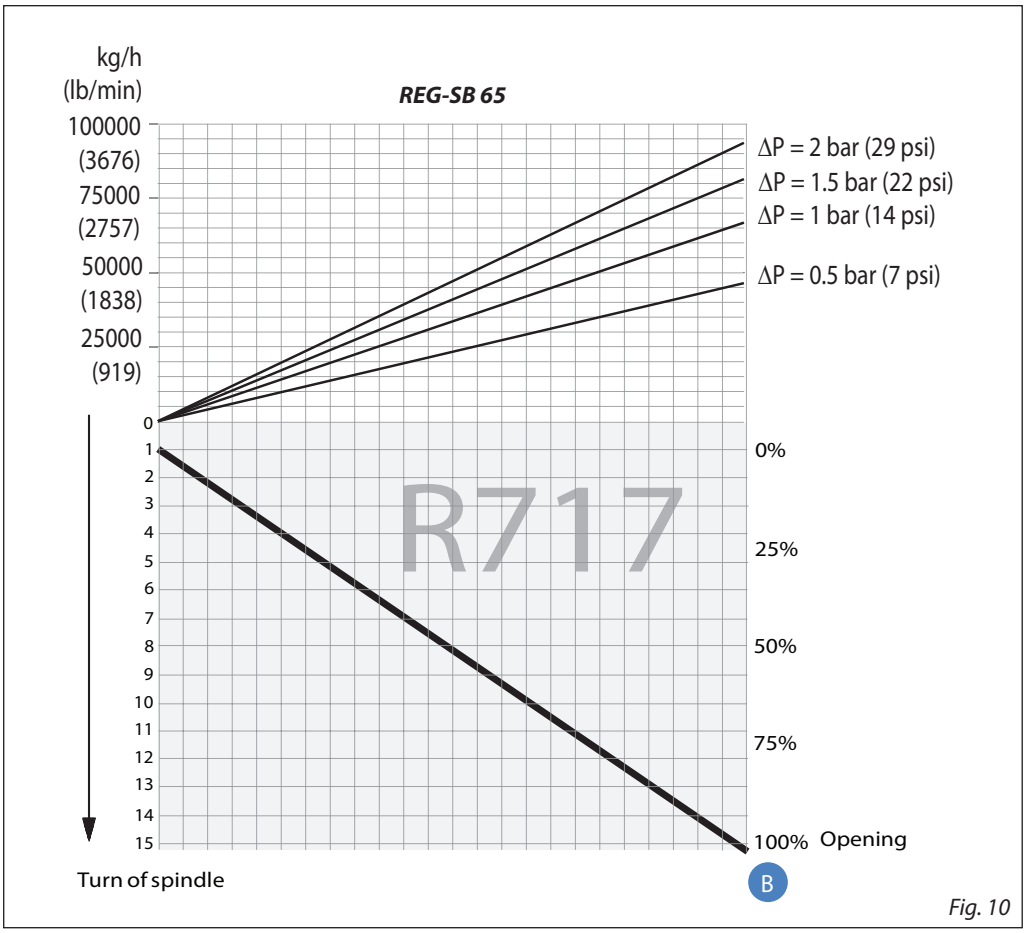

Fig. 10

Calculation factor C_A

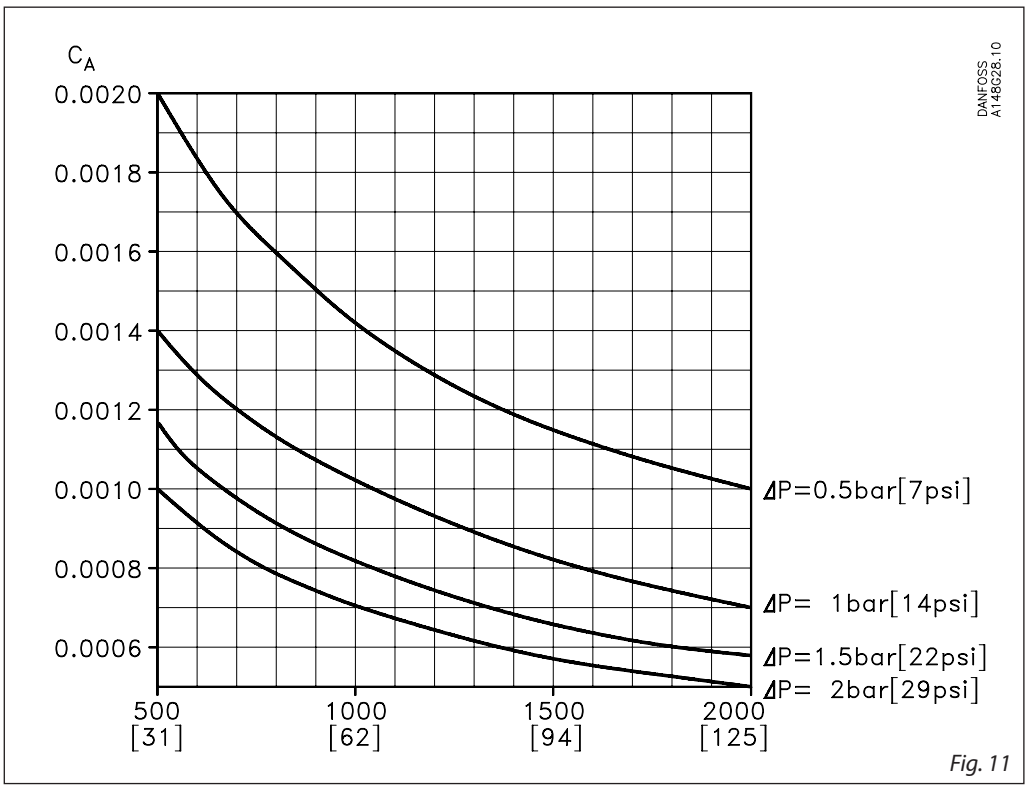

Fig. 11

For choice of valve size and connection see "Connections".

Computation and selection
Example 1.

Refrigerant: R 717
Refrigerant flow: 2200 kg/h
Pressure drop: Δp = 0.5 bar

The above mentioned example is illustrated on the following flow rate diagram and shows that REG-SB 15 and 20 with cone B can be used. The main rule is that nominal regulation range should be below 85% opening degree. If the arrowline is crossing 2 cone curves, the smaller cone should be selected if opening degree < 85%.

The example is only correct if the density of the refrigerant is approx. 670 (kg/m³), and there must be no build-up of flash gas in the valve.

Flow rate diagram

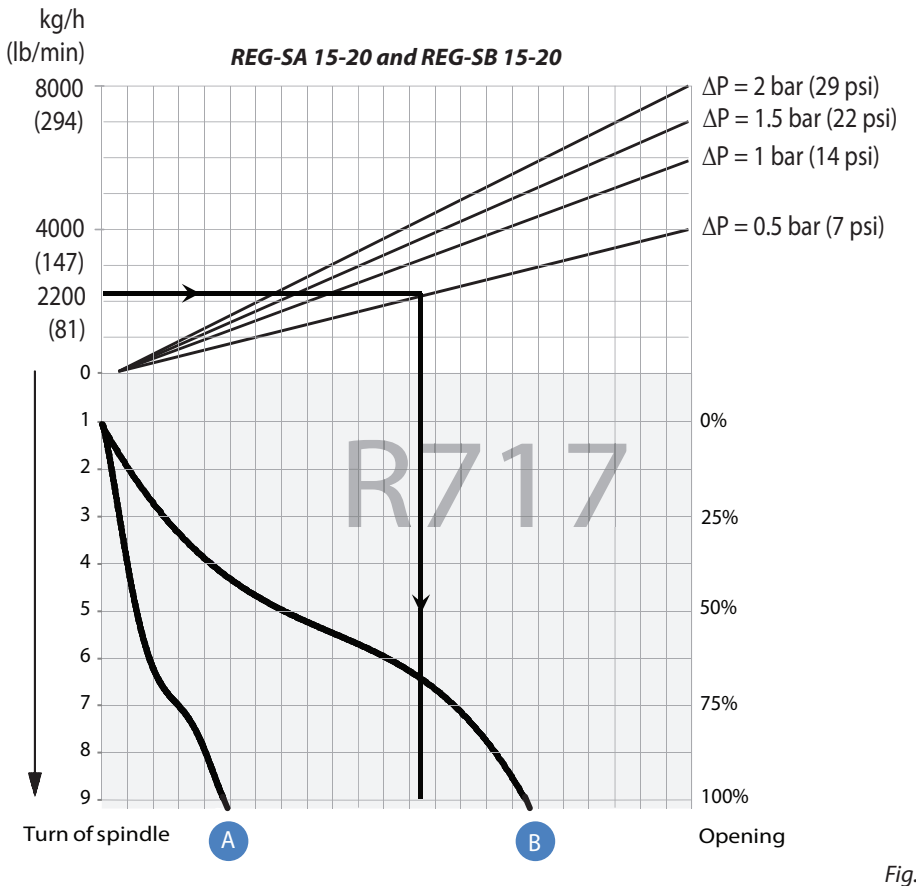

Fig. 12

Computation and selection
Example 2.

Brine, density	ρ:	1150	[kg/m³]
Brine flow	G:	2,700	[kg/h]
Pressure drop	Δp:	0.5	[bar]

In this example it is not possible to use the selection diagrams (fig. 6 - 10) as the refrigerant in question is not included.

Use the curves of the k_v-values instead (fig. 1 - 5) and calculate the required k_v by means of the formulas in the "Introduction" passage at the beginning of this chapter. Alternatively calculate the k_v-values by means of the calculation factor C_A (fig. 13) and the flow rate diagram (in this example: fig. 14) as per the following calculation example.

Calculation example:

Required k_v-value
C_A = 0.00132 (from fig. 18)
k_v = $C_A \times G$
k_v = 0.00132 × 2,700 [kg/h]
= 3.56 [m³/h]

Calculation factor C_A

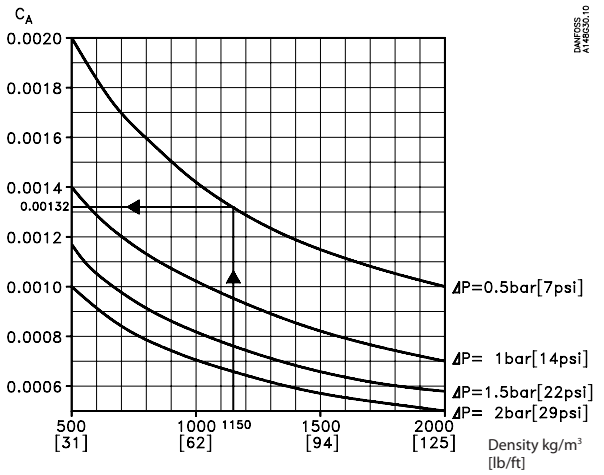

Fig. 13

Flow rate diagram

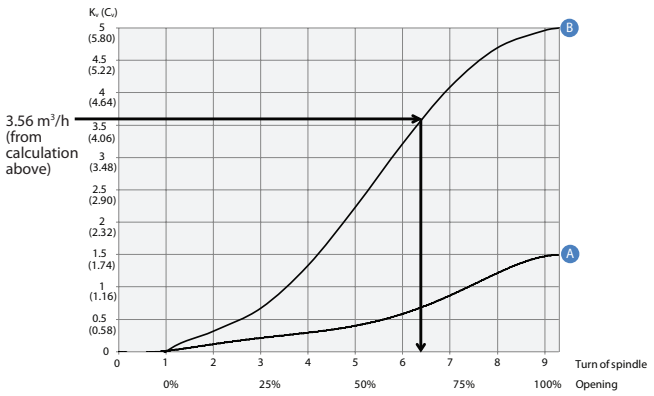

Fig. 14

REG-SB 15 and REG-SB 20 with cone B can be used.

Material specification

REG-SA and REG-SB 10

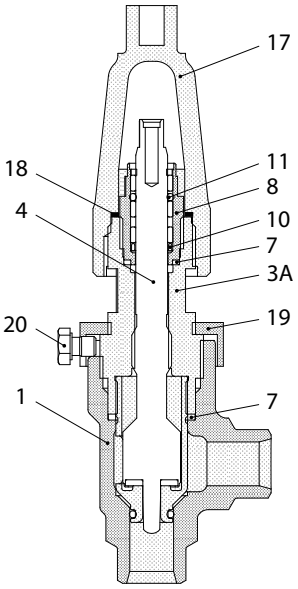

REG-SA and REG-SB 15 - 40

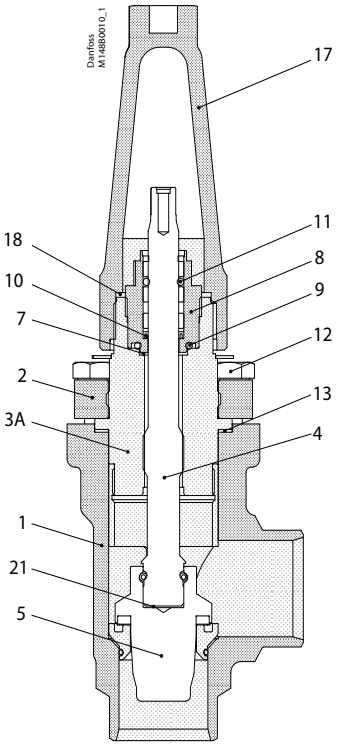

REG-SA and REG-SB 50 - 65

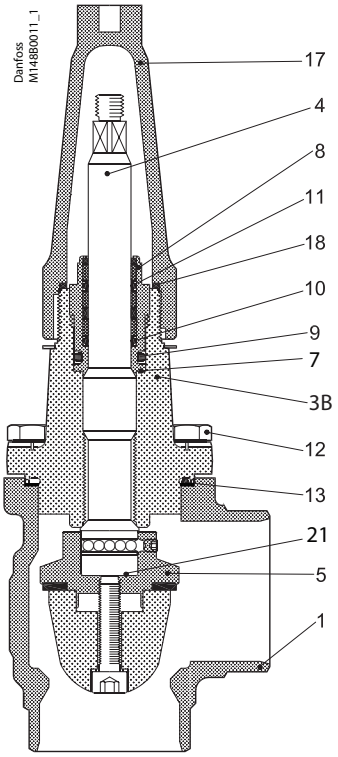

No.	Part	Material	EN	ISO	ASTM
1	Housing	Steel	G20Mn5QT, 10213-3 --- P285QH+QT, 10222-4		LCC, A352 --- LF2, A350
2	DN 15 - 40 (½ - 1 ½ in) – Bonnet, Flange	Steel	P275 NL EN10028-3		A A662
3A	DN 10 - 40 ($^3/_8$ - 1 ½ in) – Bonnet, Insert	Steel	11SMn30 10087	Type 2, R 683-9	1213 SAE J403
3B	DN 50 - 65 (2 - 2 ½ in) – Bonnet, Flange	Steel	P285QH+QT 10222-4		LF2 A350
4	Spindle DN 10 - 65 (¼ - 2 ½ in)	Stainless steel	X8CrNiS 18-9, 17440	Type 17, 683/13	AISI 303
5	Cone	Steel			
7	Packing washer	Aluminium			
8	Packing gland	Stainless Steel	X8CrNiS 18-9, 10088	Type 17, 683/13	AISI 303
9	O-ring	Cloroprene (Neoprene)			
10	Spring loaded Teflon ring	PTFE			
11	O-ring	Cloroprene (Neoprene)			
12	Bolts	Stainless steel	A2-70	A2-70	Type 308
13	Gasket	Fiber, non asbestos			
14	Bottom insert	Steel			
17	Seal cap	Aluminium			
18	Gasket f. seal cap	Nylon			
19	Locking nut	Steel			
20	Screw	Steel			
21	Disk spring	Steel			

Connections

DIN

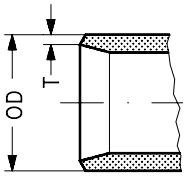

Butt-weld DIN (EN 10220)

	Size [mm]	Size [in]	OD [mm]	T [mm]	OD [in]	T [in]	Cone
REG-SA / SB	10	3/8	17.2	2.3	0.677	0.091	A and B
REG-SA / SB	15 20	1/2 3/4	21.3 26.9	2.3 2.3	0.839 1.059	0.091 0.091	A and B
REG-SA / SB	25 32 40	1 1 1/4 1 1/2	33.7 42.4 48.3	2.6 2.6 2.6	1.327 1.669 1.902	0.103 0.102 0.103	A and B
REG-SB	50	2	60.3	2.9	2.37	0.11	B
REG-SB	65	2 1/2	76.1	2.9	3	0.11	B

ANSI

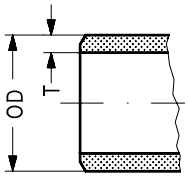

Butt-weld ANSI (B 36.10 Schedule 80)

REG-SA / SB	10	3/8	17.2	3.2	0.677	0.126	A and B
REG-SA / SB	15 2	1/2 3/4	21.3 26.9	3.7 4.0	0.839 1.059	0.146 0.158	A and B
REG-SA / SB	25 32 40	1 1 1/4 1 1/2	33.7 42.4 48.3	4.6 4.9 5.1	1.327 1.669 1.902	0.181 0.193 0.201	A and B

Butt-weld ANSI (B 36.10 Schedule 40)

REG-SB	50	2	60.3	3.9	2.37	0.15	B
REG-SB	65	2 1/2	73.0	5.2	2.87	0.20	B

GOST

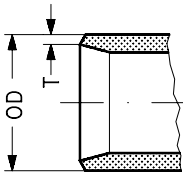

	Size [mm]	Size [in]	OD [mm]	T [mm]	OD [in]	T [in]	Cone

Butt-weld GOST (8734-75 and 8732-78)

REG-SA / SB	10	3⁄8	14	2	0.551	0.079	A and B
REG-SA / SB	15 20	½ ¾	18 25	2 2.5	0.709 0.984	0.079 0.098	A and B
REG-SA / SB	25 32 40	1 1¼ 1½	32 38 45	3 3 3	1.260 1.496 1.772	0.118 0.118 0.118	A and B
REG-SB	50	2	57	3.5	2.244	0.138	B
REG-SB	65	2½	76.1	2.9	3	0.11	B

SOC

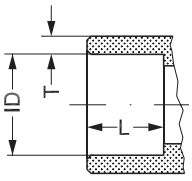

	Size [mm]	Size [in]	ID [mm]	T [mm]	ID [in]	T [in]	L [mm]	L [in]	Cone

Socket welding ANSI (B 16.11)

REG-SA / SB	15 20	1/2 3/4	21.8 27.2	6.0 7.6	0.858 1.071	0.235 0.299	10 13	0.39 0.51	A and B
REG-SA / SB	25 32 40	1 1 1/4 1 1/2	33.9 42.7 48.8	7.2 6.1 6.6	1.335 1.743 1.921	0.284 0.240 0.260	13 13 13	0.51 0.51 0.51	A and B
REG-SB	50	2	61.2	6.2	2.41	0.24	16	0.63	B

FPT

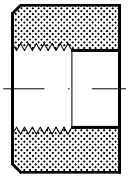

	Size [mm]	Size [in]	Inside pipe thread	Cone

FPT inside pipe thread, NPT (ANSI/ASME B 1.20.1)

REG-SA / SB	15 20	1/2 3/4	(1/2 × 14 NPT) (3/4 × 14 NPT)	A and B
REG-SA / SB	25 32	1 1 1/4	(1 × 11.5 NPT) (1 1/4 × 11.5 NPT)	A and B

Dimensions and weights

REG-SA and REG-SB 10 - 65 in angleway version

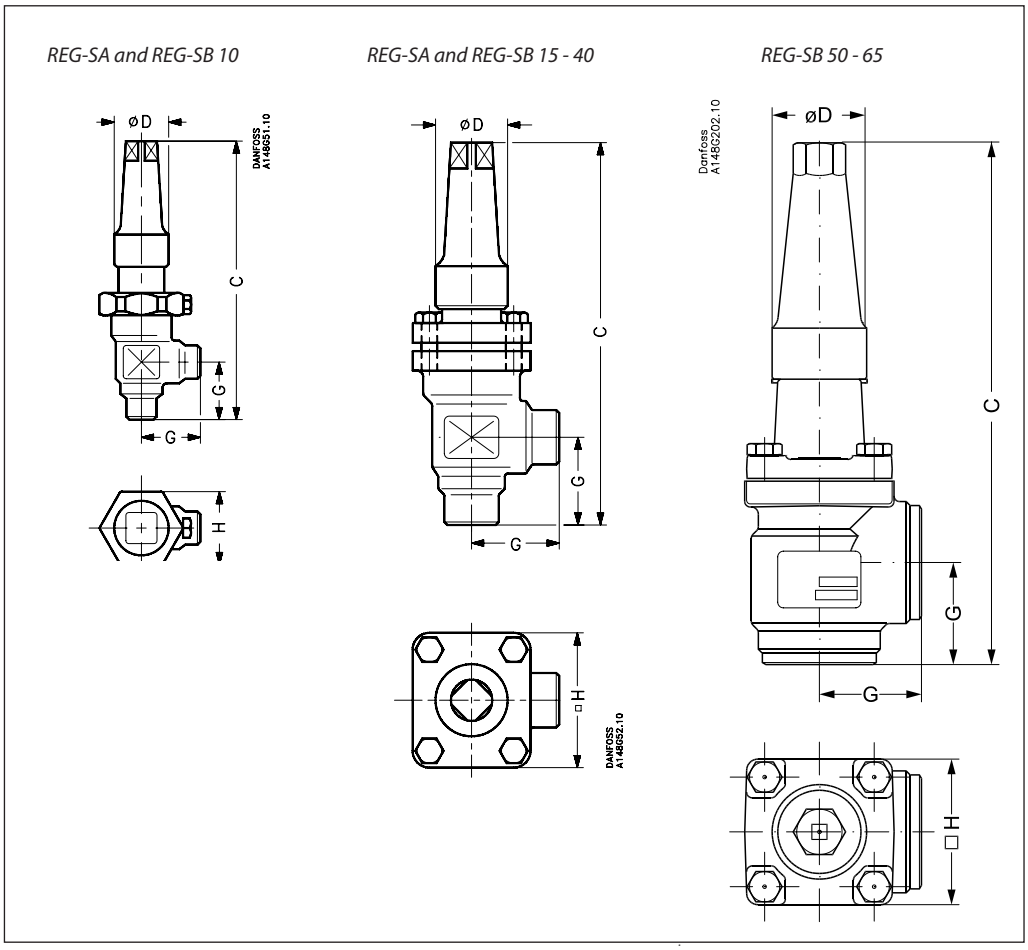

Valve size		C	G	∅D	□H	Weight
REG-SA/SB 10	[mm]	139	30	30	36	0.8 kg
REG-SA/SB (3/8)	[in]	5.47	1.18	1.18	1.42	1.8 lb
REG-SA/SB 15-20	[mm]	182	45	38	60	1.4 kg
REG-SA/SB (½ – ¾)	[in]	7.17	1.77	1.50	2.36	3.1 lb
REG-SA/SB 25-40	[mm]	237	55	50	70	2.4 kg
REG-SA/SB (1 – 1 ½)	[in]	9.33	2.17	1.97	2.76	5.3 lb
REG-SB 50	[mm]	315	60	50	77	3.2 kg
REG-SB (2 in)	[in]	12.4	2.36	1.97	3.03	7.1 lb
REG-SB 65	mm	335	70	50	90	4.8 kg
REG-SB (2 ½ in)	[in]	13.19	2.76	1.97	3.54	10.6 lb
REG-SA/SB 32 SOC	[mm]	275	62	50	70	2.9 kg
REG-SA/SB (1 ¼ in) SOC	[in]	10.83	2.44	1.97	2.76	6.4 lb
REG-SA/SB 40 SOC	[mm]	275	62	50	70	2.9 kg
REG-SA/SB (1 ½ in) SOC	[in]	10.83	2.44	1.97	2.76	6.4 lb
REG-SB 50 SOC	mm.	320	65	50	77	4.1 kg
REG-SB (2 in) SOC	[in]	12.60	2.56	1.97	3.03	9.0 lb

Specified weights are approximate values only.

Dimensions and weights
(cont.)

REG-SA and REG-SB 10 - 65 in straightway version

REG-SA and REG-SB 10

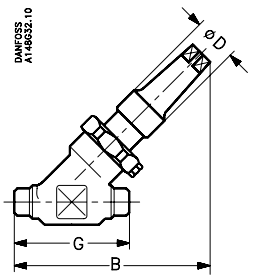

REG-SA and REG-SB 15 - 40

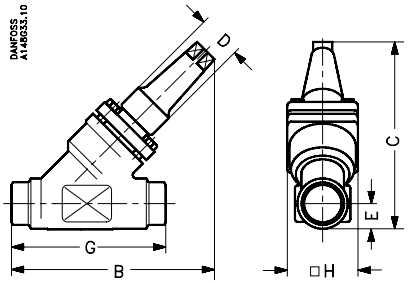

REG-SB 50-65

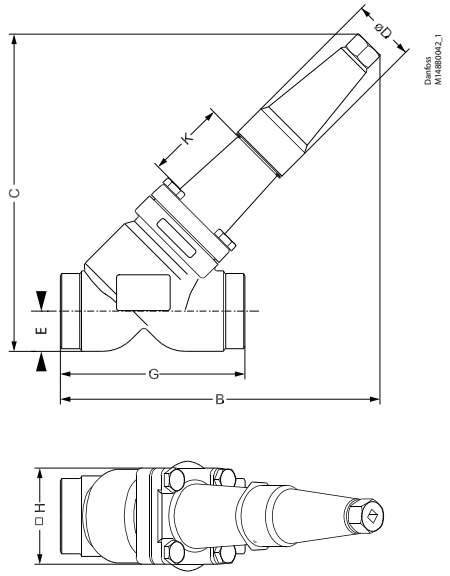

Valve size		C	B	E	G		∅D		□H		Weight
REG-SA/SB 10	[mm]	110	120	13	70		30		36		0.8 kg
REG-SA/SB (3/8)	[in]	4.33	4.72	0.51	2.76		1.18		1.42		1.8 lb
REG-SA/SB 15-20	[mm]	145	155	20	120		38		60		2.0 kg
REG-SA/SB (½ – ¾)	[in]	5.71	6.10	0.79	4.72		1.50		2.36		4.4 lb
REG-SA/SB 25-40	[mm]	200	215	26	155		50		70		3.0 kg
REG-SA/SB (1 – 1 ½)	[in]	7.87	8.46	1.02	6.10		1.97		2.76		6.6 lb
REG-SB 50	[mm]	257	250	32	148		50		77		4.2 kg
REG-SB (2 in)	[in]	10.12	10.20	1.26	5.83		1.97		3.03		9.3 lb
REG-SB 65	[mm]	280	284	40	176		50		90		6.3 kg
REG-SB (2 ½ in)	[in]	11.02	11.18	1.57	6.93		1.97		3.54		13.9 lb
REG 32 SOC	[mm]	209	222	27.4	155		50		70		3.0 kg
REG (1 ¼) SOC	[in]	8.23	8.74	1.08	6.10		1.97		2.76		6.6 lb
REG 40 SOC	[mm]	213	222	31.0	155		50		70		3.0 kg
REG (1 ½) SOC	[in]	8.39	8.74	1.22	6.10		1.97		2.76		6.6 lb
REG-SB 50 SOC	[mm]	261	266	37	162		50		77		5.1 kg
REG-SB (2 in) SOC	[in]	10.28	10.47	1.26	6.38		6.38		3.03		11.2 lb

Specified weights are approximate values only.

Ordering

How to order

The table below is used to indentify the valve required.

Please note that the type codes only serve to identify the valves, some of which may not form part of the standard product range. For further information please contact your local Danfoss Sales Company.

Type codes

Valve type	REG	Hand operated regulating valves					
Nominal size in mm			Available connection types				
			A	D	G	SOC	FPT
(Valve size measured on the connection diameter)	**10**	DN 10	x	x	x		
	15	DN 15	x	x	x	x	x
	20	DN 20	x	x	x	x	x
	22	DN 22					
	25	DN 25	x	x	x	x	x
	32	DN 32	x	x	x	x	x
	40	DN 40	x	x	x	x	
	50	DN 50	x	x	x	x	
	65	DN 65	x	x			
Connections	**A**	Welding branches: ANSI B 36.10 schedule 80, 15 - 40 (½ – 1 ½ in) Welding branches: ANSI B 36.10 schedule 40, 50 - 65 (2 – 2 ½ in)					
	D	Welding branches: EN 10220					
	G	Welding branches: GOST (8734-75 and 8732-78)					
	SOC	Socket weld: ANSI B 16.11					
	FPT	NPT inside pipe thread: ANSI/ASME B1.20.1					
Valve housing	**ANG**	Angle flow					
	STR	Straight flow					
Cone A	Size:	Flow area [mm²]					
	DN 10	3.02					
	DN 15	36.5					
	DN 20	36.5					
	DN 25	178					
	DN 32	178					
	DN 40	178					
Cone B	Size:	Flow area [mm²]					
	DN 10	16					
	DN 15	115					
	DN 20	115					
	DN 25	531					
	DN 32	531					
	DN 40	531					
	DN 50	822					
	DN 65	1978					

Available combination between valve size, cone type and valve connection

Size	**DN 10 (3/8")**		**DN 15 (½")**		**DN 20 (¾")**		**DN 22 (7/8")**		**DN 25 (1")**		**DN 32 (1¼")**		**DN 40 (1½")**		**DN 50 (2")**		**DN 65 (2½")**	
Cone type	**A**	**B**	**A**	**B**	**A**	**B**	**A**	**B**	**A**	**B**	**A**	**B**	**A**	**B**	**A**	**B**	**A**	**B**
DIN	×	×	×	×	×	×			×	×	×	×	×	×		×		×
ANSI	×	×	×	×	×	×			×	×	×	×	×	×		×		×
GOST	×	×	×	×	×	×			×	×	×	×	×	×		×		
SOC			×	×	×	×			×	×	×	×	×	×		×		
FPT			×	×	×	×			×	×	×	×						

× **= available**

Ordering
(continued)

Example:
REG-SA (Cone A) 15 DIN angleway = **148B5226**

Important!
Where products need to be certified according to specific certification societies or where higher pressures are required, the relevant information should be included at the time of order.

D = Butt-weld DIN
A = Butt-weld ANSI
SOC = Socket weld
FPT = Inside pipe thread

ANG = Angleway
STR = Straightway

Complete REG-SA (Cone type A)

Butt-weld DIN (EN 10220)

Size [mm]	Size [in]	Type	Code no.
Angleway *- REG-SA with cone type A*			
10	3/8	REG-SA 10 D ANG	**148B5102**
15	1/2	REG-SA 15 D ANG	**148B5226**
20	3/4	REG-SA 20 D ANG	**148B5326**
25	1	REG-SA 25 D ANG	**148B5426**
32	1 1/4	REG-SA 32 D ANG	**148B5527**
40	1 1/2	REG-SA 40 D ANG	**148B5627**

Butt-weld DIN (EN 10220)

Size [mm]	Size [in]	Type	Code no.
Straightway *- REG-SA with cone type A*			
10	3/8	REG-SA 10 D STR	**148B5104**
15	1/2	REG-SA 15 D STR	**148B5228**
20	3/4	REG-SA 20 D STR	**148B5328**
25	1	REG-SA 25 D STR	**148B5428**
32	1 1/4	REG-SA 32 D STR	**148B5528**
40	1 1/2	REG-SA 40 D STR	**148B5629**

Butt-weld ANSI (B 36.10 Schedule 80)

Size [mm]	Size [in]	Type	Code no.
Angleway *- REG-SA with cone type A*			
10	3/8	REG-SA 10 A ANG	**148B5106**
15	1/2	REG-SA 15 A ANG	**148B5202**
20	3/4	REG-SA 20 A ANG	**148B5302**
25	1	REG-SA 25 A ANG	**148B5402**
32	1 1/4	REG-SA 32 A ANG	**148B5502**
40	1 1/2	REG-SA 40 A ANG	**148B5602**

Butt-weld ANSI (B 36.10 Schedule 80)

Size [mm]	Size [in]	Type	Code no.
Straightway *- REG-SA with cone type A*			
10	3/8	REG-SA 10 A STR	**148B5116**
15	1/2	REG-SA 15 A STR	**148B5212**
20	3/4	REG-SA 20 A STR	**148B5312**
25	1	REG-SA 25 A STR	**148B5412**
32	1 1/4	REG-SA 32 A STR	**148B5512**
40	1 1/2	REG-SA 40 A STR	**148B5612**

Socket welding ANSI (B 16.11)

Size [mm]	Size [in]	Type	Code no.
Angleway *- REG-SA with cone type A*			
15	1/2	REG-SA 15 SOC ANG	**148B5204**
20	3/4	REG-SA 20 SOC ANG	**148B5304**
25	1	REG-SA 25 SOC ANG	**148B5404**
32	1 1/4	REG-SA 32 SOC ANG	**148B5504**
40	1 1/2	REG-SA 40 SOC ANG	**148B5604**

Socket welding ANSI (B 16.11)

Size [mm]	Size [in]	Type	Code no.
Straightway *- REG-SA with cone type A*			
15	1/2	REG-SA 15 SOC STR	**148B5214**
20	3/4	REG-SA 20 SOC STR	**148B5314**
25	1	REG-SA 25 SOC STR	**148B5414**
32	1 1/4	REG-SA 32 SOC STR	**148B5514**
40	1 1/2	REG-SA 40 SOC STR	**148B5614**

FPT inside pipe thread, NPT (ANSI/ASME B 1.20.1)

Size [mm]	Size [in]	Type	Code no.
Angleway *- REG-SA with cone type A*			
15	1/2	REG-SA 15 FTP ANG	**148B5206**
20	3/4	REG-SA 20 FTP ANG	**148B5306**
25	1	REG-SA 25 FTP ANG	**148B5406**
32	1 1/4	REG-SA 32 FTP ANG	**148B5506**

FPT inside pipe thread, NPT (ANSI/ASME B 1.20.1)

Size [mm]	Size [in]	Type	Code no.
Straightway *- REG-SA with cone type A*			
15	1/2	REG-SA 15 FTP STR	**148B5216**
20	3/4	REG-SA 20 FTP STR	**148B5316**
25	1	REG-SA 25 FTP STR	**148B5416**
32	1 1/4	REG-SA 32 FTP STR	**148B5516**

Ordering
(continued)

Example:
REG-SB (Cone B) 15 DIN angleway = **148B5227**

Important!
Where products need to be certified according to specific certification societies or where higher pressures are required, the relevant information should be included at the time of order.

Complete REG-SB (Cone type B)

Butt-weld DIN (EN 10220)

Size [mm]	Size [in]	Type	Code no.
Angleway *- REG-SB with cone type B*			
10	3/8	REG-SB 10 D ANG	**148B5103**
15	1/2	REG-SB 15 D ANG	**148B5227**
20	3/4	REG-SB 20 D ANG	**148B5327**
25	1	REG-SB 25 D ANG	**148B5427**
32	1 1/4	REG-SB 32 D ANG	**148B5526**
40	1 1/2	REG-SB 40 D ANG	**148B5626**
50	2	REG-SB 50 D ANG	**148B5726**
65	2 1/2	REG-SB 65 D ANG	**148B5826**

Butt-weld DIN (EN 10220)

Size [mm]	Size [in]	Type	Code no.
Straightway *- REG-SB with cone type B*			
10	3/8	REG-SB 10 D STR	**148B5105**
15	1/2	REG-SB 15 D STR	**148B5229**
20	3/4	REG-SB 20 D STR	**148B5329**
25	1	REG-SB 25 D STR	**148B5429**
32	1 1/4	REG-SB 32 D STR	**148B5529**
40	1 1/2	REG-SB 40 D STR	**148B5628**

Butt-weld ANSI (B 36.10 Schedule 80)

Size [mm]	Size [in]	Type	Code no.
Angleway *- REG-SB with cone type B*			
10	3/8	REG-SB 10 A ANG	**148B5107**
15	1/2	REG-SB 15 A ANG	**148B5203**
20	3/4	REG-SB 20 A ANG	**148B5303**
25	1	REG-SB 25 A ANG	**148B5403**
32	1 1/4	REG-SB 32 A ANG	**148B5503**
40	1 1/2	REG-SB 40 A ANG	**148B5603**

Butt-weld ANSI (B 36.10 Schedule 80)

Size [mm]	Size [in]	Type	Code no.
Straightway *- REG-SB with cone type B*			
10	3/8	REG-SB 10 A STR	**148B5117**
15	1/2	REG-SB 15 A STR	**148B5213**
20	3/4	REG-SB 20 A STR	**148B5313**
25	1	REG-SB 25 A STR	**148B5413**
32	1 1/4	REG-SB 32 A STR	**148B5513**
40	1 1/2	REG-SB 40 A STR	**148B5613**

Butt-weld ANSI (B 36.10 Schedule 40)

Size [mm]	Size [in]	Type	Code no.
Angleway *- REG-SB with cone type B*			
50	2	REG-SB 50 A ANG	**148B5706**
65	2 1/2	REG-SB 65 A ANG	**148B5806**

Butt-weld ANSI (B 36.10 Schedule 40)

Size [mm]	Size [in]	Type	Code no.
Straightway *- REG-SB with cone type B*			
50	2	REG-SB 50 A STR	**148B5724**
65	2 1/2	REG-SB 65 A STR	**148B5809**

Socket welding ANSI (B 16.11)

Size [mm]	Size [in]	Type	Code no.
Angleway *- REG-SB with cone type B*			
15	1/2	REG-SB 15 SOC ANG	**148B5205**
20	3/4	REG-SB 20 SOC ANG	**148B5305**
25	1	REG-SB 25 SOC ANG	**148B5405**
32	1 1/4	REG-SB 32 SOC ANG	**148B5505**
40	1 1/2	REG-SB 40 SOC ANG	**148B5605**
50	2	REG-SB 50 SOC ANG	**148B5727**

Socket welding ANSI (B 16.11)

Size [mm]	Size [in]	Type	Code no.
Straightway *- REG-SB with cone type B*			
15	1/2	REG-SB 15 SOC STR	**148B5215**
20	3/4	REG-SB 20 SOC STR	**148B5315**
25	1	REG-SB 25 SOC STR	**148B5415**
32	1 1/4	REG-SB 32 SOC STR	**148B5515**
40	1 1/2	REG-SB 40 SOC STR	**148B5615**
50	2	REG-SB 50 SOC STR	**148B5725**

FPT inside pipe thread, NPT (ANSI/ASME B 1.20.1)

Size [mm]	Size [in]	Type	Code no.
Angleway *- REG-SB with cone type B*			
15	1/2	REG-SB 15 FTP ANG	**148B5207**
20	3/4	REG-SB 20 FTP ANG	**148B5307**
25	1	REG-SB 25 FTP ANG	**148B5407**
32	1 1/4	REG-SB 32 FTP ANG	**148B5507**

FPT inside pipe thread, NPT (ANSI/ASME B 1.20.1)

Size [mm]	Size [in]	Type	Code no.
Straightway *- REG-SB with cone type B*			
15	1/2	REG-SB 15 FTP STR	**148B5217**
20	3/4	REG-SB 20 FTP STR	**148B5317**
25	1	REG-SB 25 FTP STR	**148B5417**
32	1 1/4	REG-SB 32 FTP STR	**148B5517**

D = Butt-weld DIN
A = Butt-weld ANSI
SOC = Socket weld
FPT = Inside pipe thread

ANG = Angleway
STR = Straightway

Ordering REG-SA/SB from the parts programme

Example
(select from table 1 and 2)

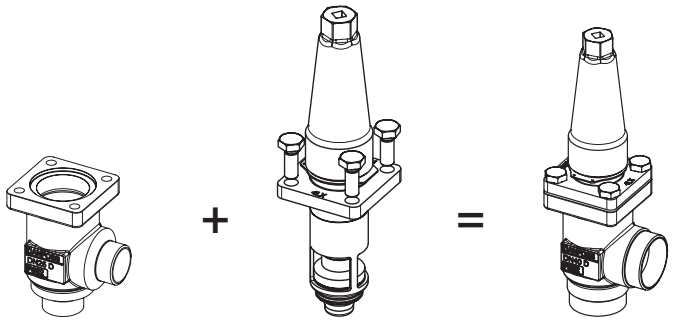

Valve housing, size 25 (1 in.), DIN butt weld, angleway, **148B5452**
Table 1

Top part, REG-SA size 25 (1 in.) **148B5480**
Table 2

Table 1
SVL valve housings w/different connections

DN 10 mm (⅜ in.) | *DN 15-65 mm (½ - 2½ in.)*



Sizes [DN]		Valve Housing SVL										
		DIN-Butt weld		ANSI-Butt weld		GOST-Butt-weld		SOC		FPT		T
mm	in.	ANG	STR	ANG	STR	ANG	STR	ANG	STR	ANG	STR	ANG
10	⅜	148B5122	148B5123	148B5124	148B5125	148B5134	148B5135					
15	½	148B5252	148B5253	148B5254	148B5255	148B5391	148B5392	148B5256	148B5257	148B5258	148B5259	
20	¾	148B5352	148B5353	148B5354	148B5355	148B5393	148B5394	148B5356	148B5357	148B5358	148B5359	
25	1	148B5452	148B5453	148B5454	148B5455	148B5498	148B5499	148B5456	148B5457	148B5458	148B5459	
32	1¼	148B5576	148B5577	148B5578	148B5579	148B5593	148B5594	148B5580	148B5581	148B5582	148B5583	
40	1½	148B5652	148B5653	148B5654	148B5655	148B5681	148B5682	148B5656	148B5657			
50	2	148B5741	148B5742	148B5743	148B5744	148B5759	148B5760	148B5745	148B5746			
65	2½	148B5816	148B5817	148B5818	148B5819	148B5816	148B5817	148B5816	148B5817			

Table 2
REG complete top part including gaskets and bolts

REG-SA/SB 10 | REG-SA/SB 15-65 | REG-LA/LB 15-40

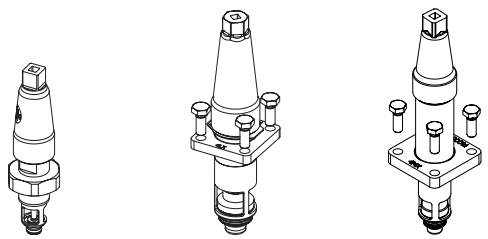

Sizes [DN]		Complete top part			
mm	in.	REG-SA	REG-SB	REG-LA	REG-LB
10	⅜	148B5112	148B5113		
15	½	148B5280	148B5281	148B6401	148B6402
20	¾				
25	1	148B5480	148B5481	148B6403	148B6404
32	1¼				
40	1½				
50	2		148B5734		
65	2½		148B5824		

Replacement kit (O-ring replacement) for R717 Ammonia Heat Pump and Propylene applications (including ID tag)*

Size (DN)		O-ring kit for	
mm	in.	R717 Heat pump	R1270 Propylene
10	⅜	148B6084	148B6085
15	½	148B6070	148B6077
20	¾		
25	1	148B6071	148B6078
32	1¼		
40	1½		

* Replacement kits for R717 Ammonia Heat Pump is applicable for continuous operating temperature between +100°C to 150°C (212°F to 302°F)

ENGINEERING
TOMORROW

Hand regulating valves
Types REG-SA and REG-SB, 65 bar (943 psi)

Contents **Page**

Features ... 89
Technical data ... 90
Design ... 90
Computation and selection ... 91
Material specification ... 99
Dimensions and weights ... 100
Connections ... 102
Ordering ... 102

AI273641142831en-000102 | 2018.08

ENGINEERING TOMORROW

Hand regulating valves
Types REG-SA and REG-SB, 65 bar (943 psi)



REG-SA and REG-SB are angleway and straightway hand regulating valves, which act as normal stop valves in closed position.

The valves are available in two different versions – REG-SA and REG-SB designed for regulation purposes in liquid and expansion lines.

The valves are designed to meet the strict quality requirements on refrigerating/heat pump installations specified by the international classification societies and are carefully designed to present favourable flow conditions and accurate linear characteristics.

REG-SA and REG-SB are equipped with vented cap and internal backseating enables replacement of the spindle seal whilst the valve is active, i.e. under pressure.

Features

- Modular Concept:
  - Each valve housing is available with DIN and ANSI butt weld connection and in several different sizes.
  - Possible to convert REG-SA or REG-SB to any other product in the FlexlineTM SVL family (shut-off valve, check & stop valve, check valve or strainer) just by replacing the complete top part.
- Fast and easy valve overhaul service. It is easy to replace the top part and no welding is needed.
- Designed to ensure perfect regulation
- Internal backseating enables replacement of the spindle seal whilst the valve is active, i.e. under pressure.
- Easy to disassemble for inspection and possible repair.
- Acts as a normal stop valve in closed position.
- Housing and bonnet material is low temperature steel according to requirements of the Pressure Equipment Directive and other international classification authorities.
- Exact capacity and setting of the valve can be calculated for all refrigerants by means of Coolselector™.
- Classification: DNV, CRN, BV, EAC etc.
  To get an updated list of certification on the products please contact your local Danfoss Sales Company.
- Equipped with 42CrMo5 bolts to withstand high pressure.
- Service kits with replacement O-rings for R717 Heat Pump and R1270 Propylene include separate ID-ring for ID of application

Technical data

- *Refrigerants*
  Applicable to HCFC, HFC, R717 (Ammonia), R744 (CO_2) and flammable refrigerants.
  For further information refer to the product instruction for REG-SA and REG-SB.
- *Temperature range*
  –60/+150°C (–76/+302°F).
- *Max. working pressure*
  65 bar (943 psig).
  With O-ring replaced for valves up to DN40 (Service kit):
  Heat pump configuration: R717 - 65 bar (943 psi) @ +100°C to +150°C (+212°F to +302°F) continuous.
  Propylene configuration: R1270 - 65 bar (943 psi) @ -60°C to 150°C (-76°F to 302°F).

Design

Housing
Housing is Standard SVA angleway or straightway housing allowing other inserts from the SVL platform to be installed.
Material is special, cold resistant steel

The cone
The valves are available in two different versions – REG-SA with an A cone and REG-SB with a B cone. The A cone is designed for expansion lines, while the B cone is designed for regulating purposes e.g. liquid lines.

The valve cone is designed to ensure perfect regulation and provide an extensive regulating area. Irrespective of the refrigerant used, it is easy to obtain the correct capacity. A cone seal ring provides perfect sealing at a minimum closing momentum.

The valve cone can be turned on the spindle, thus there will be no friction between the cone and the seat when the valve is opened and closed.
Spindle
The spindle is made of polished stainless steel, which is ideal for O-ring sealing.

Packing gland - REG-SA and REG-SB
The "full temperature range" packing gland ensures perfect tightness in the whole range: –60/+150°C (–76/+302°F). The packing glands are equipped with a scraper ring to prevent penetration of dirt and ice.

Installation
Install the valve with the spindle up or in horizontal position. The flow must be directed towards the cone.

The valve is designed to withstand high internal pressure. However, the piping system in general should be designed to avoid liquid traps and reduce the risk of hydraulic pressure caused by thermal expansion.

For further information refer to product instruction for REG-SA and REG-SB.

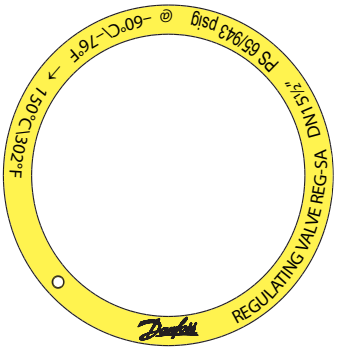

Example of marking ring, REG-SA

ID ring for special application
After converting a REG-SA/SB (DN 10-40) valve for Heat Pump/Propylene applications (replacing O-ring) the color marked ID tag included in the service kit must be fixed to the valve as shown in figure to the right.

The ID tag indicates the special application and identifies the installed O-ring.

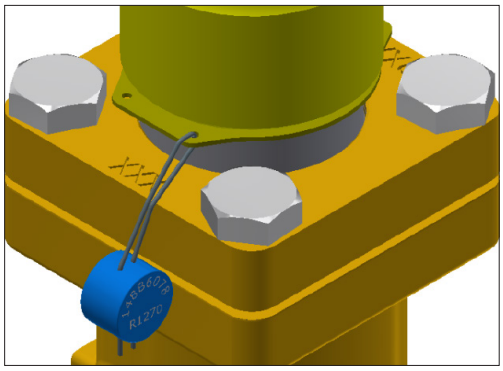

Pressure Equipment Directive (PED)
SVL valves are approved according to the European standard specified in the Pressure Equipment Directive and are CE marked.

For further details / restrictions - see Installation guide.

	SVL		
Nominal bore	DN≤ 25 mm (1 in.)	DN32-80 mm (1¼ - 3 in.)	DN100 - 200 mm (4-8 in.)
Classified for	Fluid group I		
Category	Article 3, paragraph 3	II	III

Computation and selection

Introduction
In refrigeration plants, regulating valves are primarily used in liquid lines in order to regulate the flow of refrigerant. The valves can, however, also be used as expansion valves. From a calculation point of view the two fields of application are very different.

Normal flow is the term used to describe the general case where the flow through the valve is proportional to the square root of the pressure drop across it and inversely proportional to the density of the refrigerant (Bernouillis equation).

This relationship between mass flow, pressure drop and density satisfies the majority of all valve applications with refrigerants and brines.

Normal flow is characterised by turbulent flow through the valve without any phase change. The following capacity curves are based on the above mentioned assumption.

Application of the regulating valves outside the normal flow area will reduce the capacity of the valve considerably. In such cases it is recommended to use Coolselector®2.

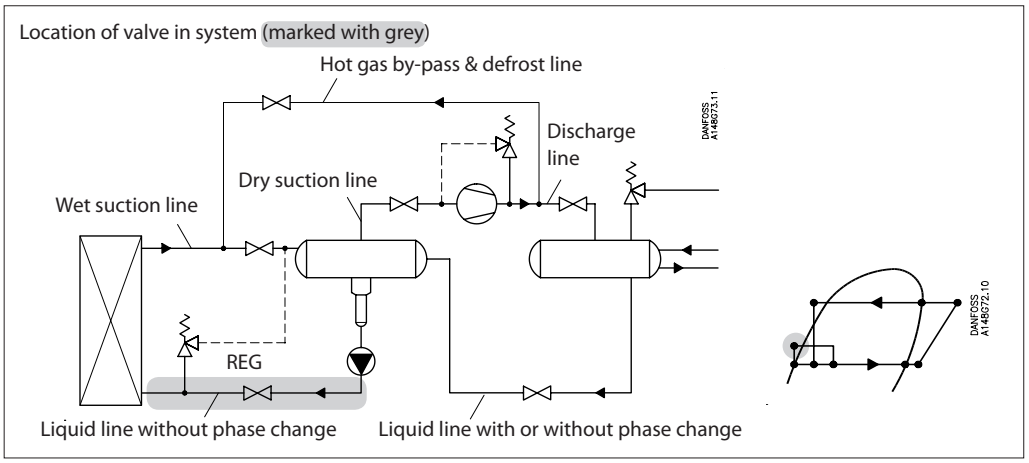

Sizing regulating valve for liquid flow
Liquid refrigerants: Use the liquid tables, fig. 6 - 10. For other refrigerants and brines, "Normal flow" (Turbulent flow); see below and use the flow coefficient tables (fig. 1 - 5).

SI-units

Mass flow:

$$k_v = \frac{G}{\sqrt{\rho \times 1000 \times \Delta p}} = G \times C_A \,[m^3/h]$$

Volume flow:

$$k_v = \frac{\dot{V}}{\sqrt{\frac{1000 \times \Delta p}{\rho}}} \,[m^3/h]$$

Imperial units

Mass flow:

$$C_v = \frac{0.95 \times G}{\sqrt{\rho \times \Delta p}} = 31.6 \times G \times C_A \,[USgal/min.]$$

Volume flow:

$$C_v = \frac{0.127 \times \dot{V}}{\sqrt{\frac{\Delta p}{\rho}}} \,[USgal/min.]$$

k_v	[m³/h]	Quantity [m³/h] of water flowing through a valve at a pressure loss of 1 bar (according to VDE/VDI Norm 2173).
P_1	[bar]	Pressure before the valve (upstream).
P_2	[bar]	Pressure after the valve (downstream).
Δp	[bar]	Actual pressure loss across the valve (P_1–P_2).
G	[kg/h]	Mass flow through the valve.
$\dot{V}$	[m³/h]	Volume flow through the valve.
ρ	[kg/m³]	Density of the refrigerant before the valve.
C_A		Calculation factor (fig. 11).

C_v	[US gal/min]	Quantity [US gal/min] of water flowing through a valve at a pressure loss of 1 psi.
P_1	[psi]	Pressure before the valve (upstream).
P_2	[psi]	Pressure after the valve (downstream).
Δp	[psi]	Actual pressure loss across the valve (P_1–P_2).
G	[lb/min]	Mass flow through the valve.
$\dot{V}$	[US gal/min]	Volume flow through the valve.
ρ	[lb/ft³]	Density of the refrigerant before the valve
C_A		Calculation factor (fig. 11).

Computation and selection

Flow coefficient

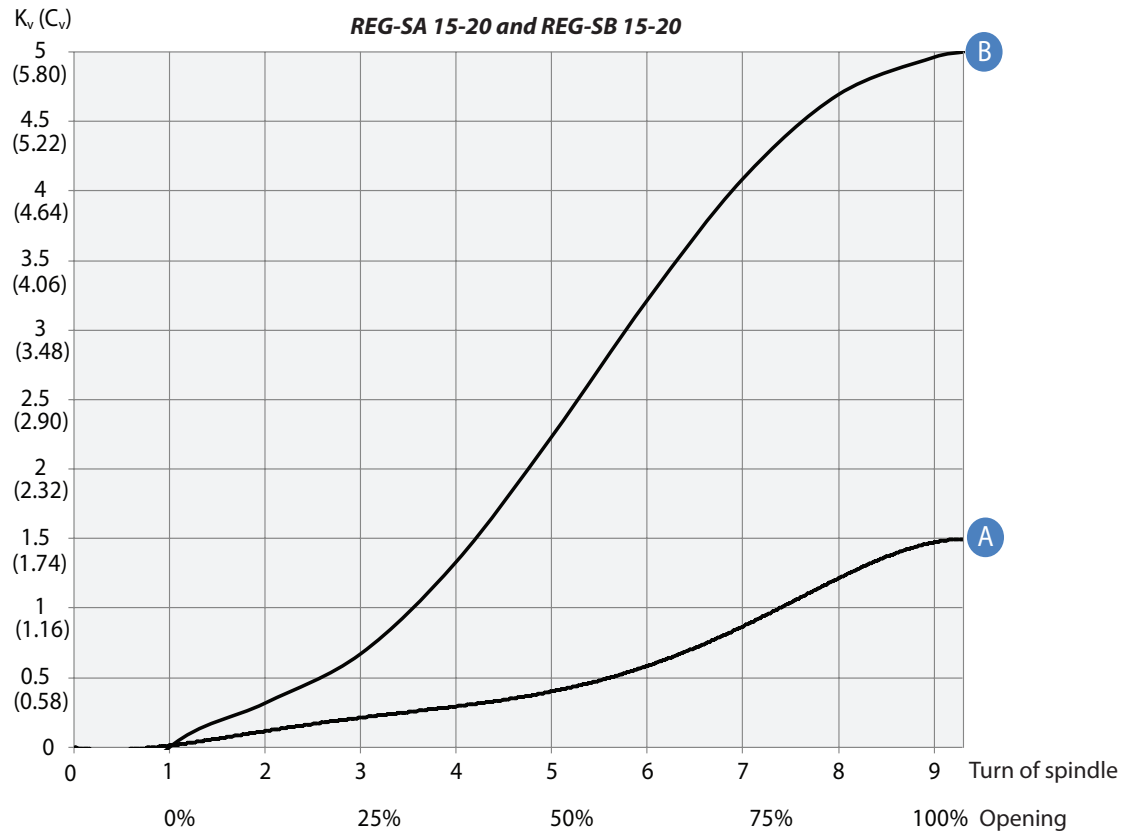

Fig. 1

Flow coefficient

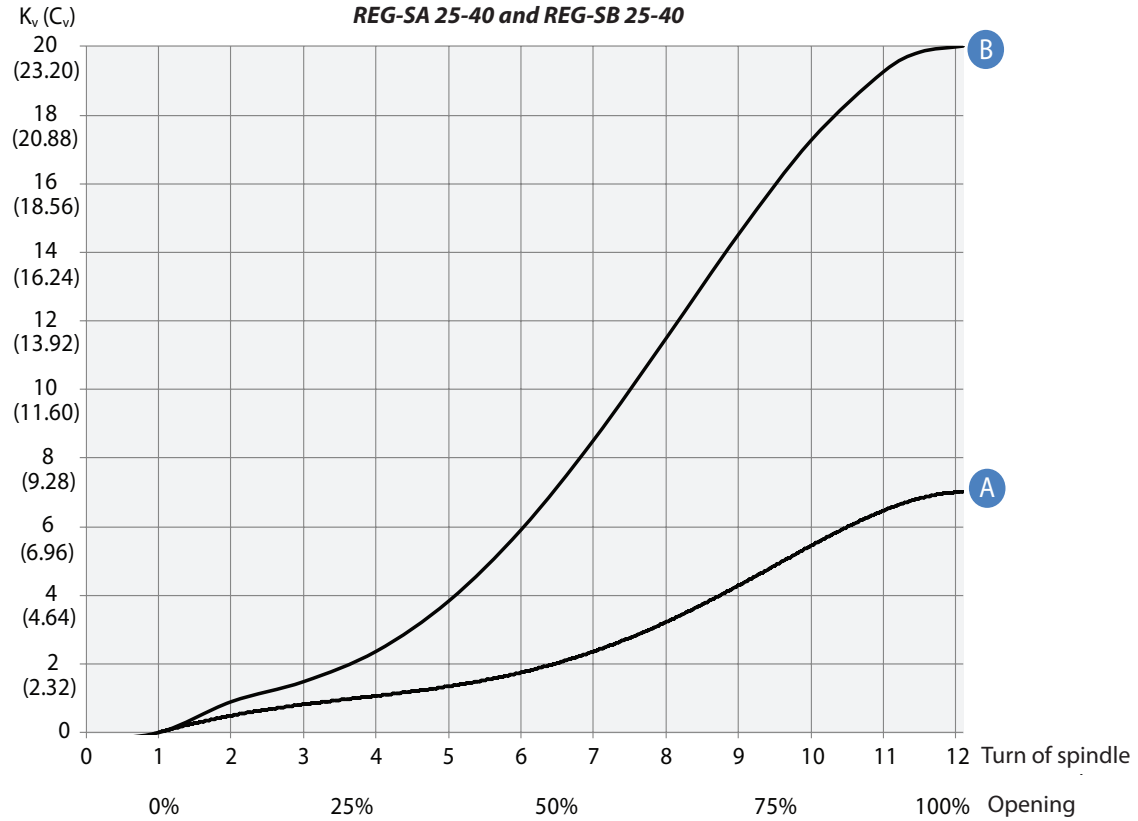

Fig. 2

Computation and selection *(Continued)*

Flow coefficient

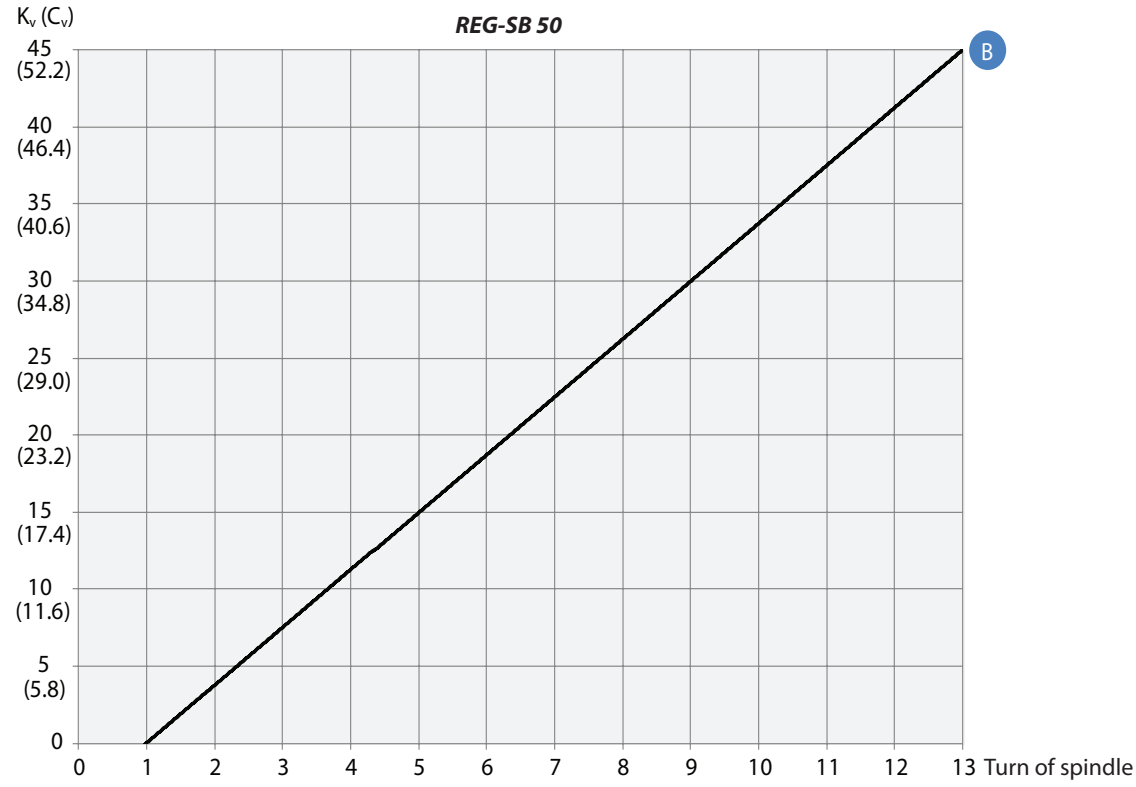

Fig. 3

Flow coefficient

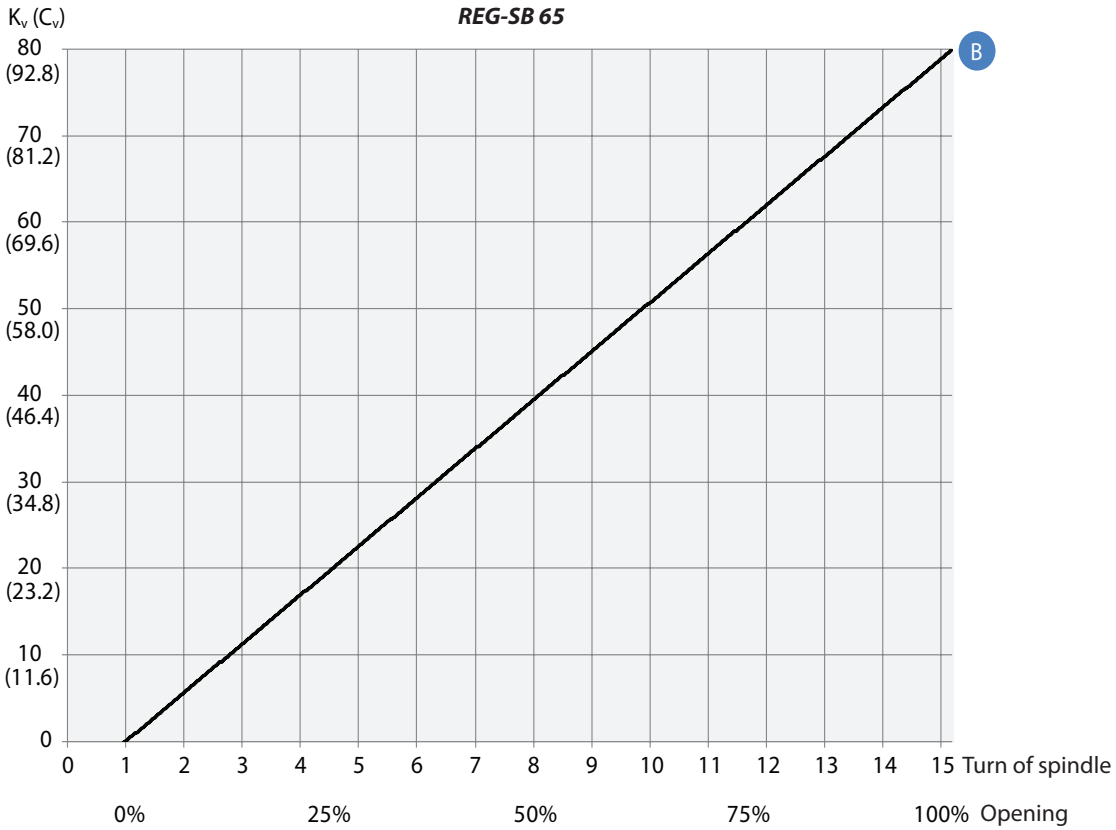

Fig. 4

Computation and selection
(Continued)

Liquid R 717, density: 670 kg/m³ [42 lb/ft³]

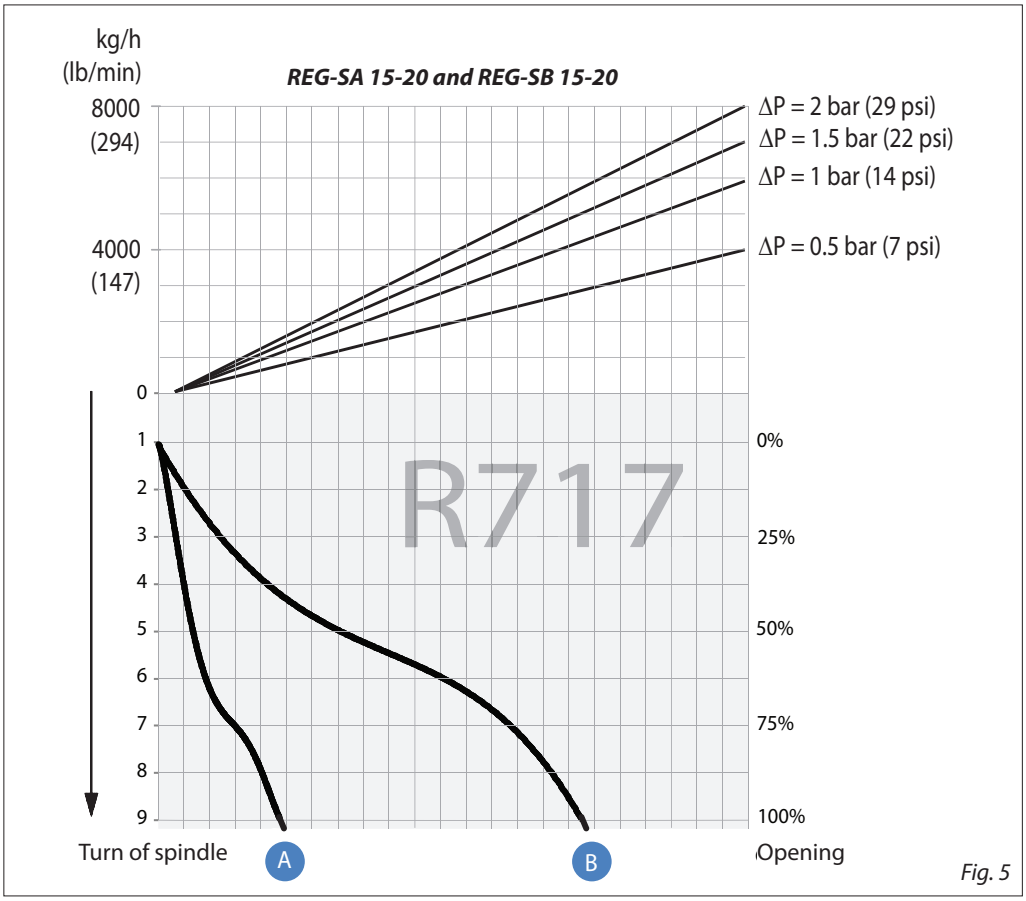

Fig. 5

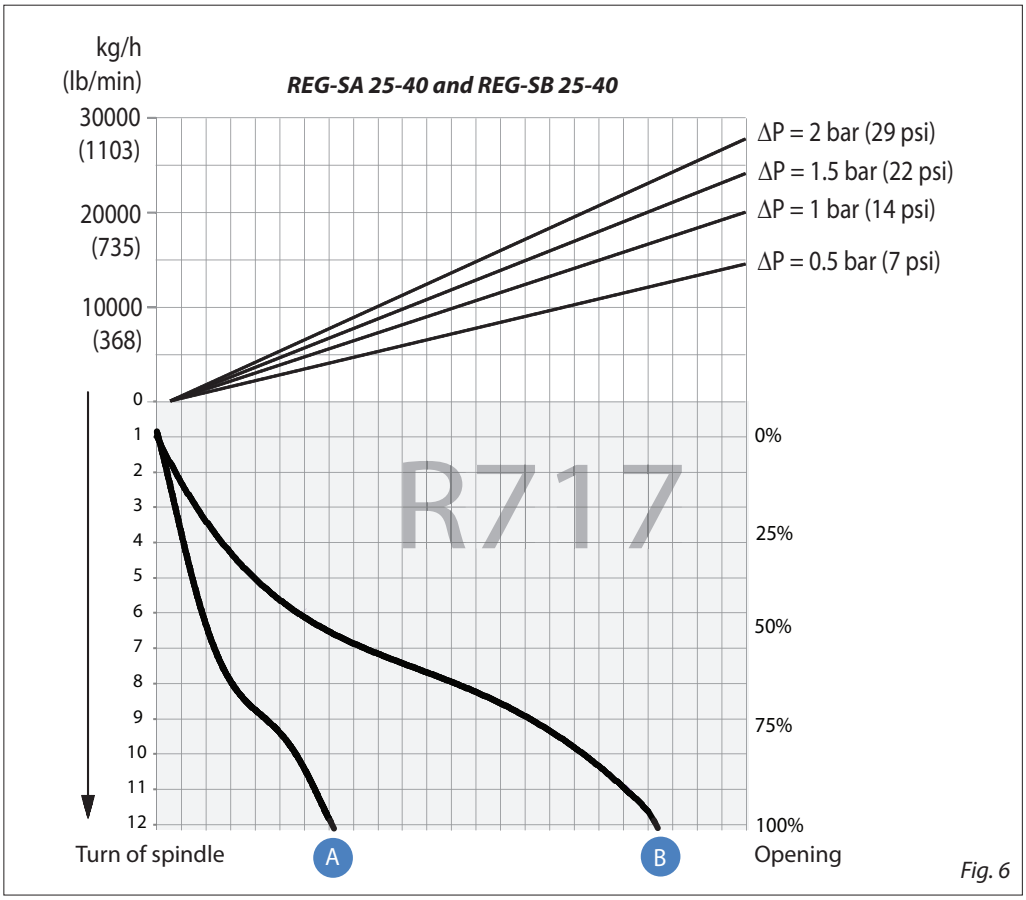

Fig. 6

For choice of valve size and connection see "Connections".

Computation and selection
(Continued)

Liquid R 717, density: 670 kg/m³ [42 lb/ft³]

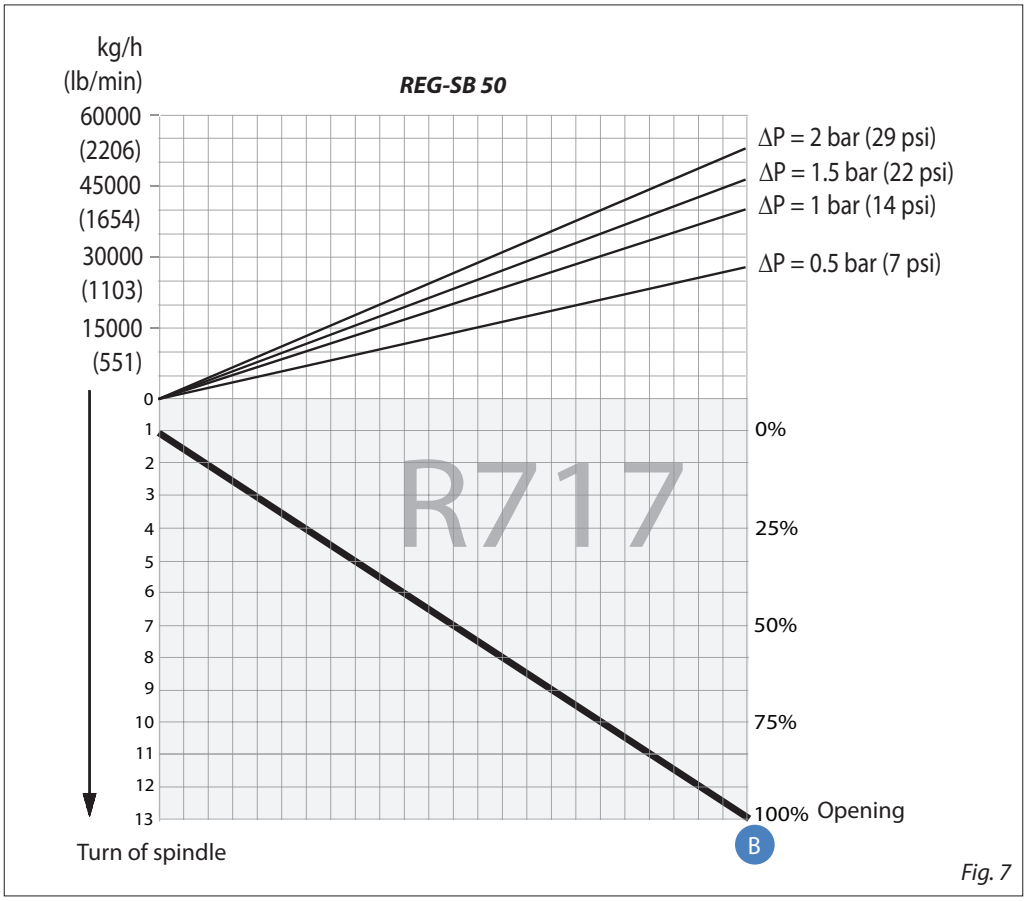

Fig. 7

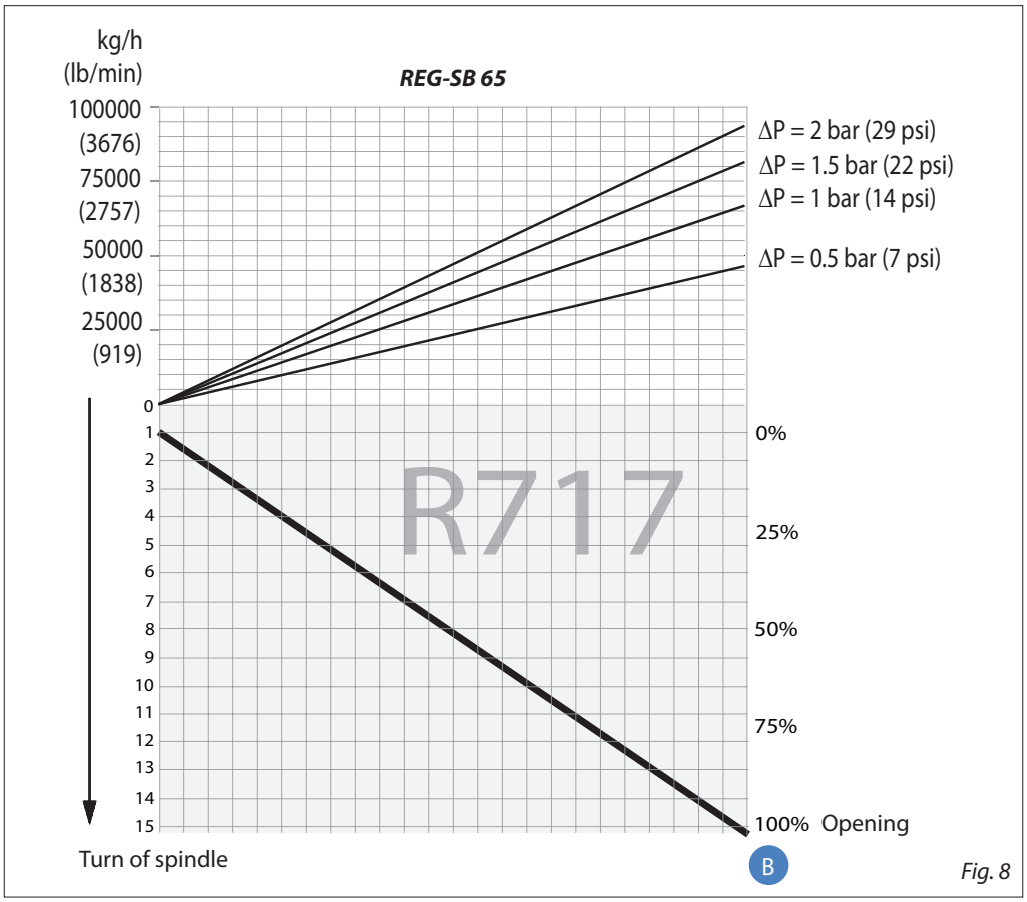

Fig. 8

For choice of valve size and connection see "Connections".

Computation and selection
(Continued)

Liquid R 717, density: 670 kg/m³ [42 lb/ft³]

Calculation factor C_A

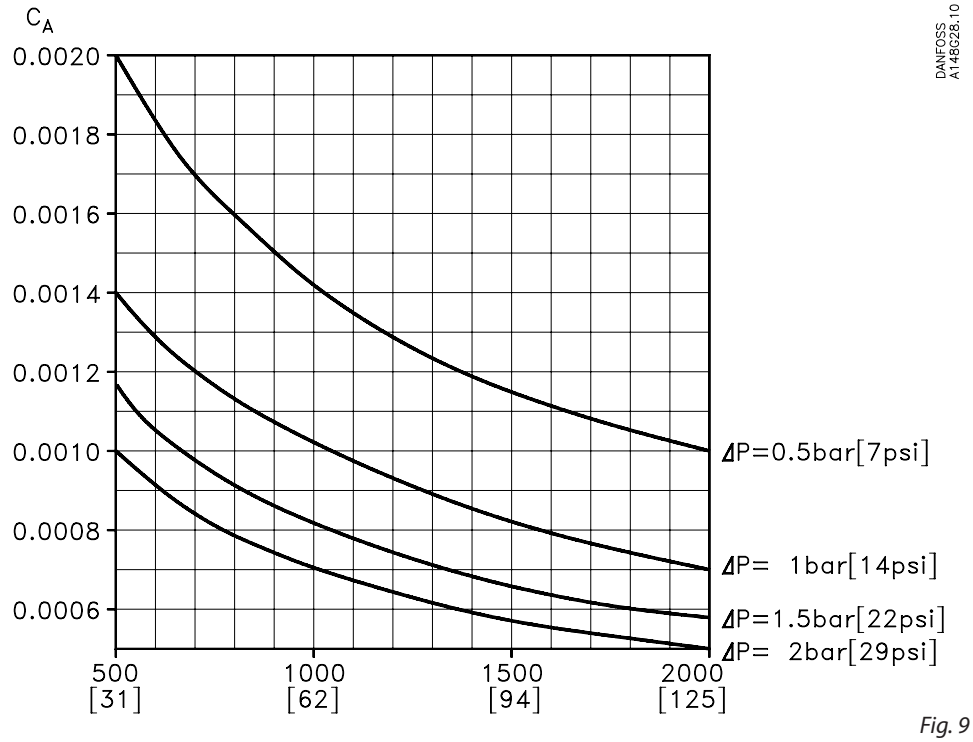

Fig. 9

For choice of valve size and connection see "Connections".

Computation and selection
Example 1.

Refrigerant: R 717
Refrigerant flow: 2200 kg/h
Pressure drop: Δp = 0.5 bar

The above mentioned example is illustrated on the following flow rate diagram and shows that REG-SB 15 and 20 with cone B can be used. The main rule is that nominal regulation range should be below 85% opening degree. If the arrowline is crossing 2 cone curves, the smaller cone should be selected if opening degree < 85%.

The example is only correct if the density of the refrigerant is approx. 670 (kg/m³), and there must be no build-up of flash gas in the valve.

Flow rate diagram

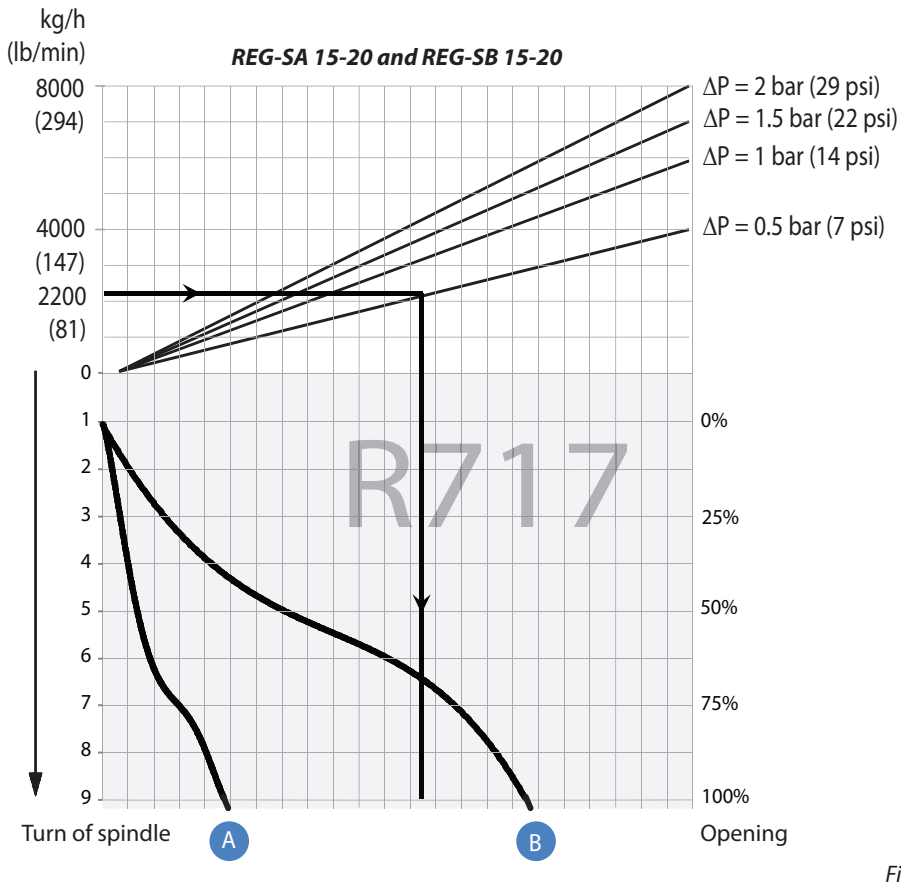

Fig. 10

Computation and selection
Example 2.

Brine, density ρ: 1150 [kg/m³]
Brine flow G: 2,700 [kg/h]
Pressure drop Δp: 0.5 [bar]

In this example it is not possible to use the selection diagrams (fig. 5 - 8) as the refrigerant in question is not included.

Use the curves of the k_v-values instead (fig. 1 - 4) and calculate the required k_v by means of the formulas in the "Introduction" passage at the beginning of this chapter. Alternatively calculate the k_v-values by means of the calculation factor C_A (fig. 11) and the flow rate diagram (in this example: fig. 12) as per the following calculation example.

Calculation example:

Required k_v-value
C_A = 0.00132 (from fig. 18)
k_v = $C_A \times G$
k_v = 0.00132 × 2,700 [kg/h]
= 3.56 [m³/h]

Calculation factor C_A

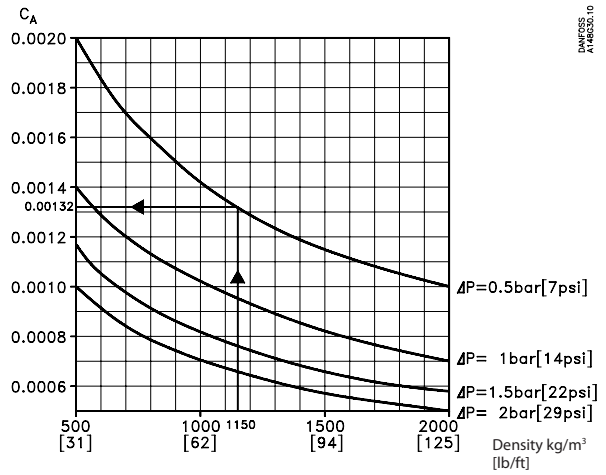

Fig. 11

Flow rate diagram

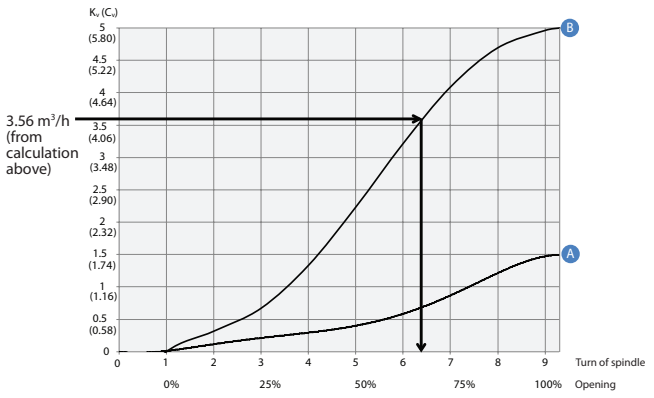

Fig. 12

REG-SB 15 and REG-SB 20 with cone B can be used.

Material specification

REG-SA and REG-SB 10

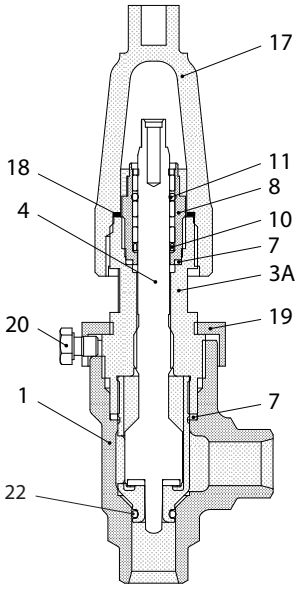

REG-SA and REG-SB 15 - 40

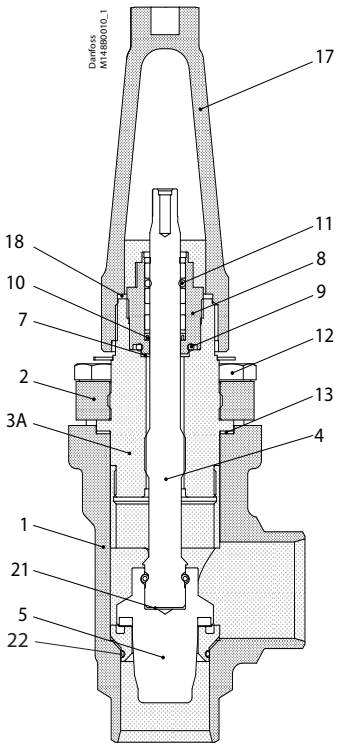

REG-SB 50 - 65

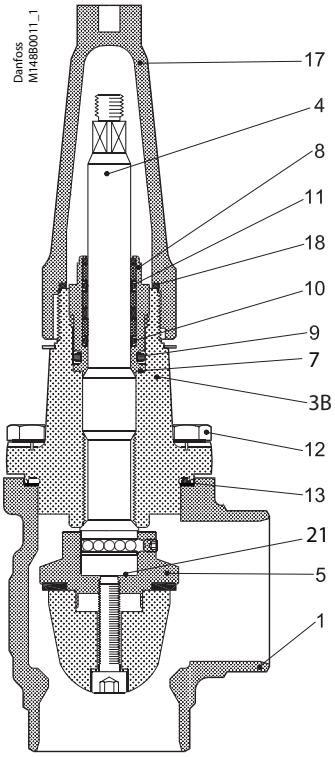

No.	Part	Material	EN	ISO	ASTM
1	Housing	Steel	G20Mn5QT, 10213-3 --- P285QH+QT, 10222-4		LCC, A352 --- LF2, A350
2	DN 15 - 40 (½ - 1½ in.) – Bonnet, Flange	Steel	P275NL1 or 2 EN10028-3		A, A662
3A	DN 15 - 40 ($^3/_8$ - 1½ in.) – Bonnet, Insert	Steel	11SMn30 10087	Type 2, R 683-9	1213 SAE J403
3B	DN 50 - 65 (2 - 2½ in.) – Bonnet, Flange	Steel	P285QH+QT 10222-4		LF2 A350
4	Spindle DN 15 - 65 (¼ - 2½ in.)	Stainless steel	X8CrNiS 18-9, 17440	Type 17, 683/13	AISI 303
5	Cone	Steel			
7	Packing washer	Aluminium			
8	Packing gland	Stainless Steel	X8CrNiS 18-9, 10088	Type 17, 683/13	AISI 303
9	O-ring	Cloroprene (Neoprene)			
10	Spring loaded Teflon ring	PTFE			
11	O-ring	Cloroprene (Neoprene)			
12	Bolts	High temperature steel	42CrMo5 10269		A193
13	Gasket	Fiber, non asbestos			
14	Bottom insert	Steel			
17	Seal cap	Aluminium			
18	Gasket f. seal cap	Nylon			
19	Locking nut	Steel			
20	Screw	Steel			
21	Disk spring	Steel			
22	O-ring	Cloroprene (Neoprene)*			

*To be replaced in R717 Heat Pump and R1270 Propylene applications.

Dimensions and weights

REG-SA and REG-SB 15 - 65 in angleway version

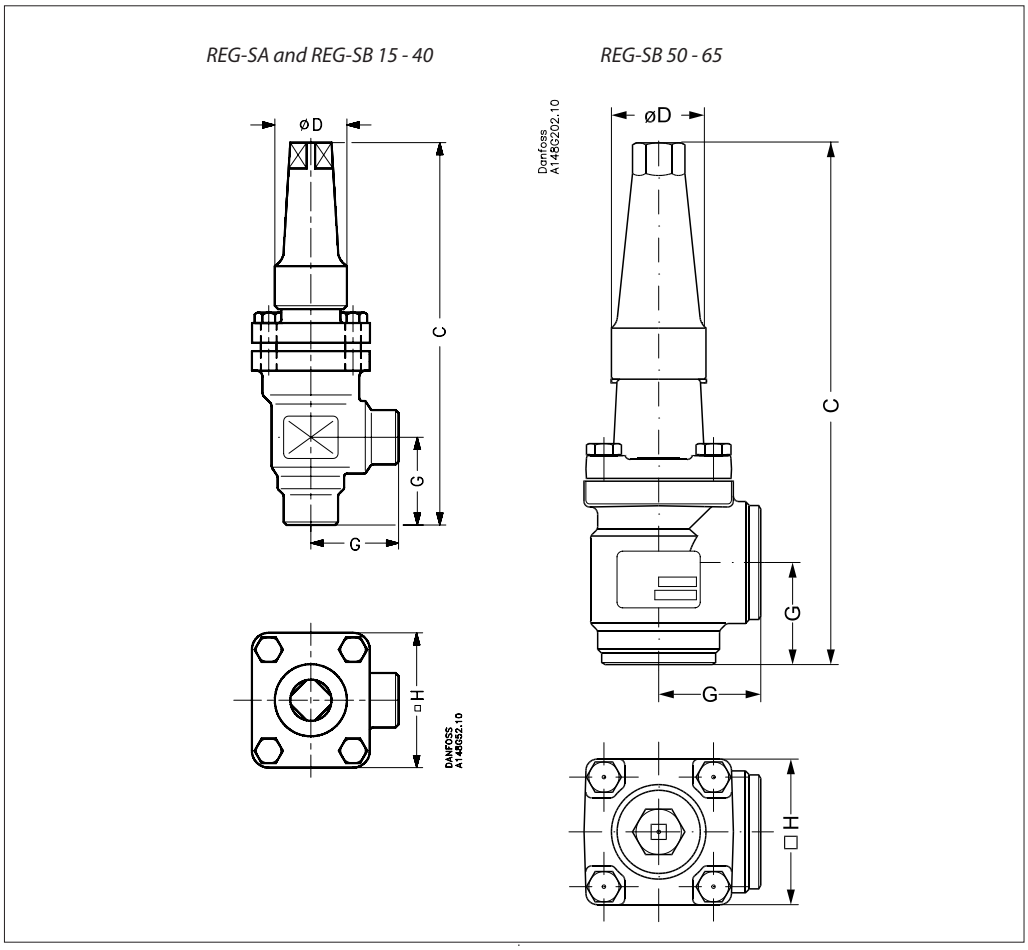

Valve size		C		G		∅D		□H		Weight
REG-SA/SB 15-20	mm	182		45		38		60		1.4 kg
REG-SA/SB (½-¾)	in.	7.17		1.77		1.50		2.36		3.1 lb
REG-SA/SB 25-40	mm	237		55		50		70		2.4 kg
REG-SA/SB (1-1½)	in.	9.33		2.17		1.97		2.76		5.3 lb
REG-SB 50	mm	315		60		50		77		3.2 kg
REG-SB (2 in.)	in.	12.4		2.36		1.97		3.03		7.1 lb
REG-SB 65	mm	335		70		50		90		4.8 kg
REG-SB (2½ in.)	in.	13.19		2.76		1.97		3.54		10.6 lb

Specified weights are approximate values only.

Dimensions and weights
(Continued.)

REG-SA and REG-SB 15 - 65 in straightway version

REG-SA and REG-SB 15 - 40

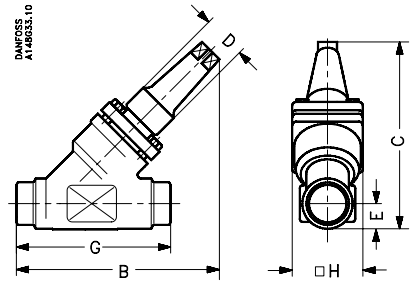

REG-SB 50-65

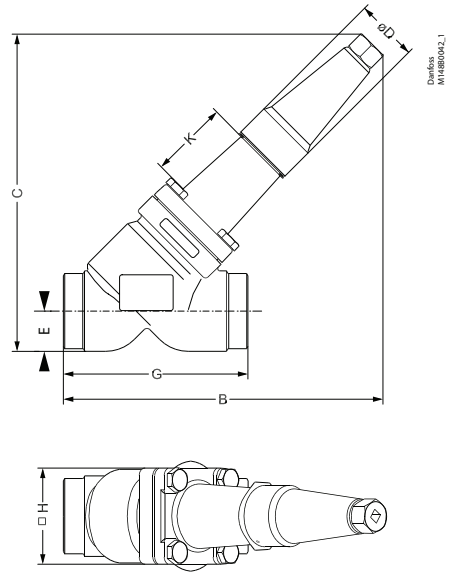

Valve size		C	B	E	G		∅D		□H		Weight
REG-SA/SB 15-20	mm	145	155	20	120		38		60		2.0 kg
REG-SA/SB (½-¾)	in.	5.71	6.10	0.79	4.72		1.50		2.36		4.4 lb
REG-SA/SB 25-40	mm	200	215	26	155		50		70		3.0 kg
REG-SA/SB (1-1½)	in.	7.87	8.46	1.02	6.10		1.97		2.76		6.6 lb
REG-SB 50	mm	257	250	32	148		50		77		4.2 kg
REG-SB (2 in.)	in.	10.12	10.20	1.26	5.83		1.97		3.03		9.3 lb
REG-SB 65	mm	280	284	40	176		50		90		6.3 kg
REG-SB (2½ in.)	in.	11.02	11.18	1.57	6.93		1.97		3.54		13.9 lb

Specified weights are approximate values only.

Connections

DIN

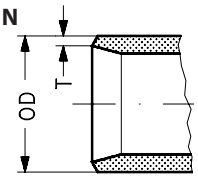

Size mm	Size in.	OD mm	T mm	OD in.	T in.			k_v-angle m^3/h	k_v-straight m^3/h	C_v-angle USgal/min	C_v-straight USgal/min
Butt-weld DIN (EN 10220)											
10	3/8	17.2	2.3	0.677	0.091			4.5	3.2	5.2	3.6
15	½	21.3	2.3	0.839	0.091			7.0	4.9	8.1	5.7
20	¾	26.9	2.3	1.059	0.091			14.6	10.2	16.9	11.8
25	1	33.7	2.6	1.327	0.103			24.8	17.4	28.8	20.2
32	1¼	42.4	2.6	1.669	0.102			42.6	29.8	49.4	34.6
40	1½	48.3	2.6	1.902	0.103			45.2	31.6	52.4	36.7
50	2	60.3	2.9	2.37	0.11			80	65	93	76
65	2½	76.1	2.9	3	0.11			120	97	140	113

ANSI

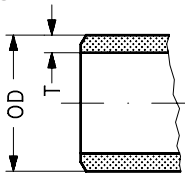

Size mm	Size in.	OD mm	T mm	OD in.	T in.			k_v-angle m^3/h	k_v-straight m^3/h	C_v-angle USgal/min	C_v-straight USgal/min
Butt-weld ANSI (B 36.10 Schedule 80)											
10	3/8	17.2	3.2	0.677	0.126			4.5	3.15	5.2	3.6
15	½	21.3	3.7	0.839	0.146			7.0	4.9	8.1	5.7
20	¾	26.9	4.0	1.059	0.158			14.6	10.2	16.9	11.8
25	1	33.7	4.6	1.327	0.181			24.8	17.4	28.8	20.2
32	1¼	42.4	4.9	1.669	0.193			42.6	29.8	49.4	34.6
40	1½	48.3	5.1	1.902	0.201			45.2	31.6	52.4	36.7
Butt-weld ANSI (B 36.10 Schedule 40)											
50	2	60.3	3.9	2.37	0.15			80	65	93	76
65	2½	73.0	5.2	2.87	0.20			120	97	140	113

Ordering

Size [DN]	Parts Program					
	Housing				Top complete	
	ANG		STR		REG-SA	REG-SB
	DIN	ANSI	DIN	ANSI		
6						
10	148B6690	148B6688	148B6694	148B6692	148B5761	148B5764
15	148B6622	148B6612	148B6642	148B6632	148B5762	148B5765
20	148B6623	148B6613	148B6643	148B6633	148B5762	148B5765
25	148B6624	148B6614	148B6644	148B6634	148B5763	148B5766
32	148B6625	148B6615	148B6645	148B6635	148B5763	148B5766
40	148B6626	148B6616	148B6646	148B6636	148B5763	148B5766
50	148B6627	148B6617	148B6647	148B6637		148B5767
65	148B6628	148B6618	148B6648	148B6638		148B5768
80						
100						
125						
150						
200						

Size [DN]	Service kit*	
	O-ring kit for	
	R717 Heat Pump	R1270 Propylene
6		
10	148B6084	148B6085
15	148B6070	148B6077
20	148B6070	148B6077
25	148B6071	148B6078
32	148B6071	148B6078
40	148B6071	148B6078
50		
65		
80		
100		
125		
150		
200		

ENGINEERING
TOMORROW

Hand-operated regulating valves in stainless steel
Types REG-SA SS and REG-SB SS

Contents **Page**

Features ... 105
Pressure and temperature range ... 105
Design ... 106
Technical data ... 106
Connections ... 106
Computation and selection ... 107
Material specification ... 113
Dimensions and weights ... 114
Ordering ... 115

AI234986440271en-000502 | 2018.11

ENGINEERING TOMORROW

Hand-operated regulating valves in stainless steel
Types REG-SA SS and REG-SB SS



In certain specific areas such as outdoor applications and corrosive atmospheres, such as coastal installations, there is a need for high surface protection to prevent failure due to corrosion.

Today's food safety standards often call for daily treatment with detergents to protect against bacteria growth, again producing a need for high surface protection.

REG-SA SS and REG-SB SS are angle-way and straight-way hand-operated regulating valves, which act as normal stop valves in closed position.

The valves are designed to meet the strict quality requirements on refrigerating installations specified by the international classification societies and are carefully designed to present favourable flow conditions and accurate linear characteristics.

The valves are equipped with vented cap and have internal backseating enabling the spindle seal to be replaced with the valve still under pressure.

Features

- Applicable to HCFC, HFC, R717 (Ammonia), R744 (CO_2), Propane, Butane, Iso-Butane and Ethane.
  R717 Heat Pump and Propylene applications with replaced O-ring.
- Designed to give favourable flow conditions.
- Internal backseating enables replacement of the spindle seal whilst the valve is active, i.e. under pressure
- Housing is made of special cold resistant stainless steel approved for low temperature operations.
- Easy to disassemble for inspection and service.
- Butt-weld DIN and ANSI connections.
- Max. operating pressure:
  52 bar g (754 psig)
- Temperature range:
  –60/+150°C (–76 +302°F).
- Compact and light valves for easy handling and installation.
- Classification: DNV, CRN, BV, EAC etc.
  To get an updated list of certification on the products please contact your local Danfoss Sales Company.

Pressure and temperature range

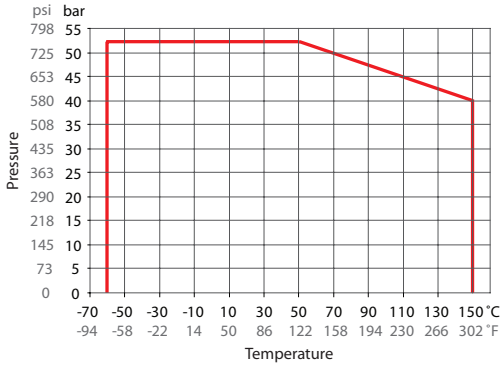

REG-SA SS/REG-SB SS DN15-DN40

Design

Housing
Made of stainless steel approved for low temperature operations.

Connections
Available with the following connections:

- Butt-weld DIN (EN 10220)
  DN 15 - 40 (½ - 1½ in.)
- Butt-weld ANSI (B 36.19M)
  DN 15 - 40 (½ - 1½ in.)

The cone
The valves are available in two different versions – REG-SA SS with an A cone and REG-SB SS with a B cone. The A cone is designed for expansion lines, while the B cone is designed for regulating purposes e.g. liquid lines.

The valve cone is designed to ensure perfect regulation and provide an extensive regulating area. Irrespective of the refrigerant used, it is easy to obtain the correct capacity. A cone seal ring provides perfect sealing at a minimum closing momentum.

The valve cone can be turned on the spindle, thus there will be no friction between the cone and the seat when the valve is opened and closed.

Made of polished stainless steel, ideal for O-ring sealing. Furthermore, parts of the spindle are heat treated to obtain anti-abrasive/adhesive properties.

Packing gland - REG-SA SS and REG-SB SS
The stainless steel packing gland comprises a spring loaded seal packing gland which ensures a perfect tightness in the range: –60/+150°C (–76/+302°F).

The packing glands are equipped with a scraper ring to prevent penetration of dirt and ice into the packing gland.

Installation
Install the valve with the spindle up or in horizontal position. The flow must be directed towards the cone.

The valve is designed to withstand high internal pressure. However, the piping system in general should be designed to avoid liquid traps and reduce the risk of hydraulic pressure caused by thermal expansion.

For further information refer to product instruction for REG-SA SS and REG-SB SS.

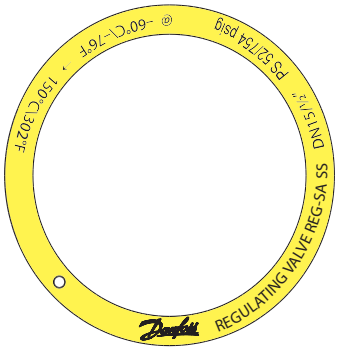

Example of marking ring, REG-SA SS

Pressure Equipment Directive (PED)
REG-SA/SB SS valves are approved according to the European standard specified in the Pressure Equipment Directive and are CE marked.

REG-SA SS and REG-SB SS valves		
Nominal bore	DN = < 25 mm (1 in.)	DN32-40 mm (1¼ - 1½ in.)
Classified for	Fluid group I	
Category	Article 3, paragraph 3	II

Technical data

- *Refrigerants*
  Applicable to HCFC, HFC, R717 (Ammonia), R744 (CO_2), Propane, Butane, Iso-Butane and Ethane. R717 Heat Pump and Propylene applications with replaced O-ring.

  For further information please contact your local Danfoss Sales Company.
- *Temperature range*
  –60/+150°C (–76/+302°F)
- *Max working pressure*
  52 bar g (754 psi g)
- *Flow coefficients*
  Flow coefficients for fully opened valves from k_v = 0.15 to 80 m³/h (C_v = 0.17 to 92.5 USgal/min).

Connections

DIN

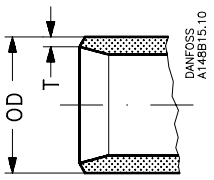

ANSI

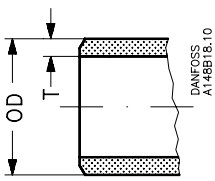

Size		OD	T
Butt-weld DIN (EN 10220)			
15	mm	21.3	2.3
½	in.	0.839	0.091
20	mm	26.9	2.3
¾	in	1.059	0.091
25	mm	33.7	2.6
1	in.	1.327	0.103
32	mm	42.4	2.6
1¼	in.	1.669	0.102
40	mm	48.3	2.6
1½	in.	1.902	0.103

Size		OD	T
Butt-weld ANSI (B 36.19M, SCHEDULE 40)			
15	mm	21.3	2.8
½	in.	0.839	0.11
20	mm	26.9	2.9
¾	in	1.06	0.11
25	mm	33.7	3.5
1	in.	1.33	0.14
32	mm	42.4	3.6
1¼	in.	1.67	0.14
40	mm	48.3	3.7
1½	in.	1.9	0.15

Computation and selection

Introduction
In refrigeration plants, regulating valves are primarily used in liquid lines in order to regulate the flow of refrigerant. The valves can, however, also be used as expansion valves. From a calculation point of view the two fields of application are very different.

Normal flow is the term used to describe the general case where the flow through the valve is proportional to the square root of the pressure drop across it and inversely proportional to the density of the refrigerant (Bernouillis equation).

This relationship between mass flow, pressure drop and density satisfies the majority of all valve applications with refrigerants and brines.

Normal flow is characterised by turbulent flow through the valve without any phase change. The following capacity curves are based on the above mentioned assumption.

Application of the regulating valves outside the normal flow area will reduce the capacity of the valve considerably. In such cases it is recommended to use "DIRcalc™" (Danfoss Industrial Refrigeration calculation programme).

Location of valve in system (marked with grey)

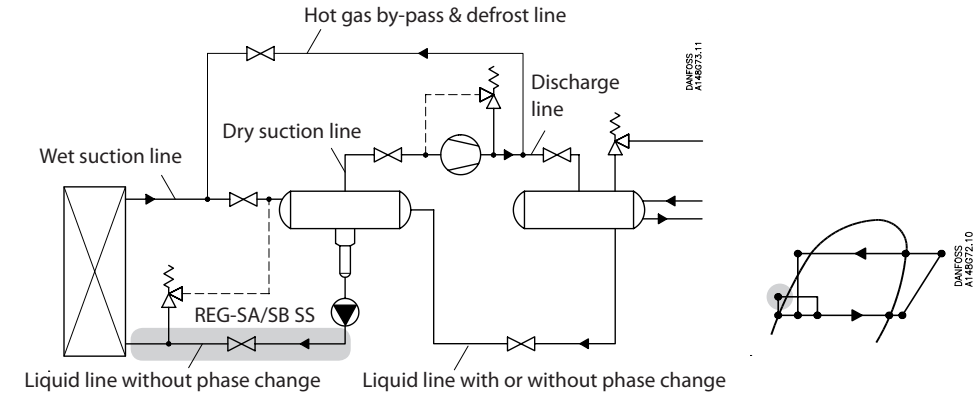

Sizing regulating valve for liquid flow
Liquid refrigerants: Use the liquid tables, fig. 6 - 10. For other refrigerants and brines, "Normal flow" (Turbulent flow); see below and use the flow coefficient tables (fig. 1 - 2).

SI-units

Mass flow:

$$k_v = \frac{G}{\sqrt{\rho \times 1000 \times \Delta p}} = G \times C_A \, [m^3/h]$$

Volume flow:

$$k_v = \frac{\dot{V}}{\sqrt{\frac{1000 \times \Delta p}{\rho}}} \, [m^3/h]$$

Imperial units

Mass flow:

$$C_v = \frac{0.95 \times G}{\sqrt{\rho \times \Delta p}} = 31.6 \times G \times C_A \, [USgal/min.]$$

Volume flow:

$$C_v = \frac{0.127 \times \dot{V}}{\sqrt{\frac{\Delta p}{\rho}}} \, [USgal/min.]$$

k_v	[m^3/h]	Quantity [m^3/h] of water flowing through a valve at a pressure loss of 1 bar (according to VDE/VDI Norm 2173).
P_1	[bar]	Pressure before the valve (upstream).
P_2	[bar]	Pressure after the valve (downstream).
Δp	[bar]	Actual pressure loss across the valve (P_1–P_2).
G	[kg/h]	Mass flow through the valve.
$\dot{V}$	[m^3/h]	Volume flow through the valve.
ρ	[kg/m^3]	Density of the refrigerant before the valve.
C_A		Calculation factor (fig. 5).

C_v	[US gal/min]	Quantity [US gal/min] of water flowing through a valve at a pressure loss of 1 psi.
P_1	[psi]	Pressure before the valve (upstream).
P_2	[psi]	Pressure after the valve (downstream).
Δp	[psi]	Actual pressure loss across the valve (P_1–P_2).
G	[lb/min]	Mass flow through the valve.
$\dot{V}$	[US gal/min]	Volume flow through the valve.
ρ	[lb/ft^3]	Density of the refrigerant before the valve
C_A		Calculation factor (fig. 5).

Computation and selection *(Continued)*

Flow coefficient

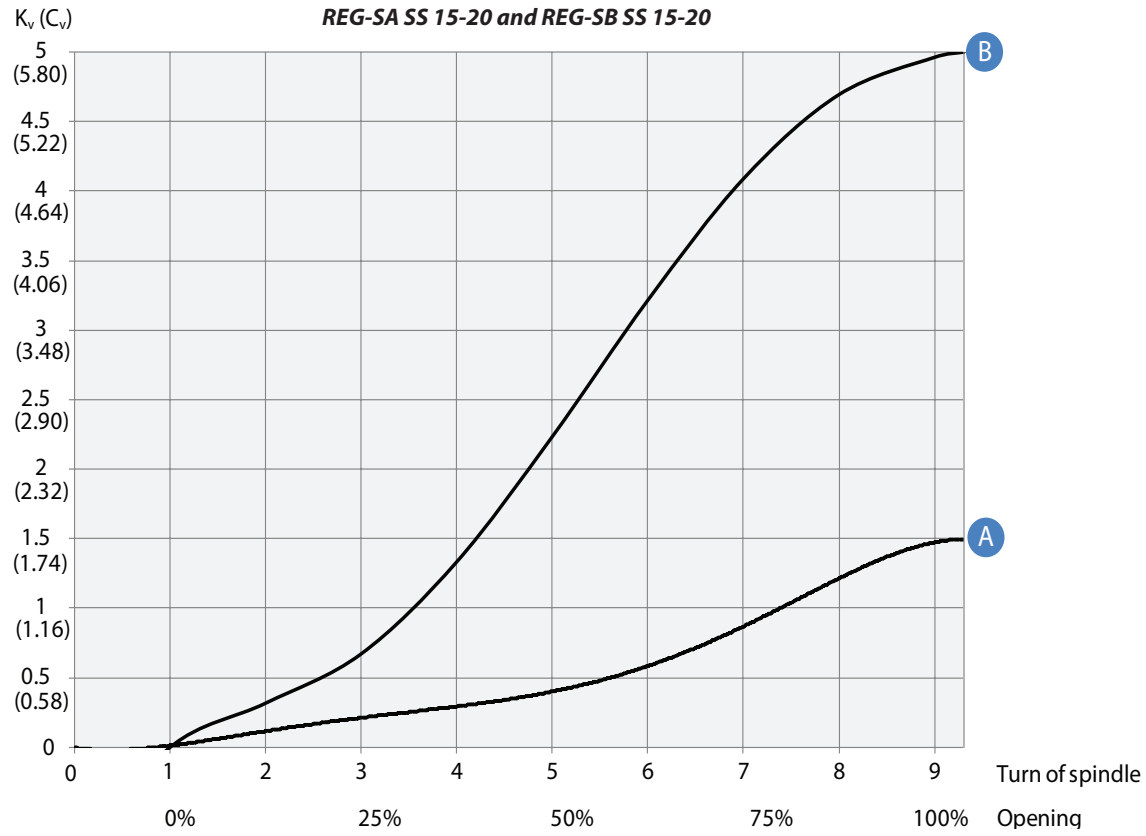

Fig. 1

Flow coefficient

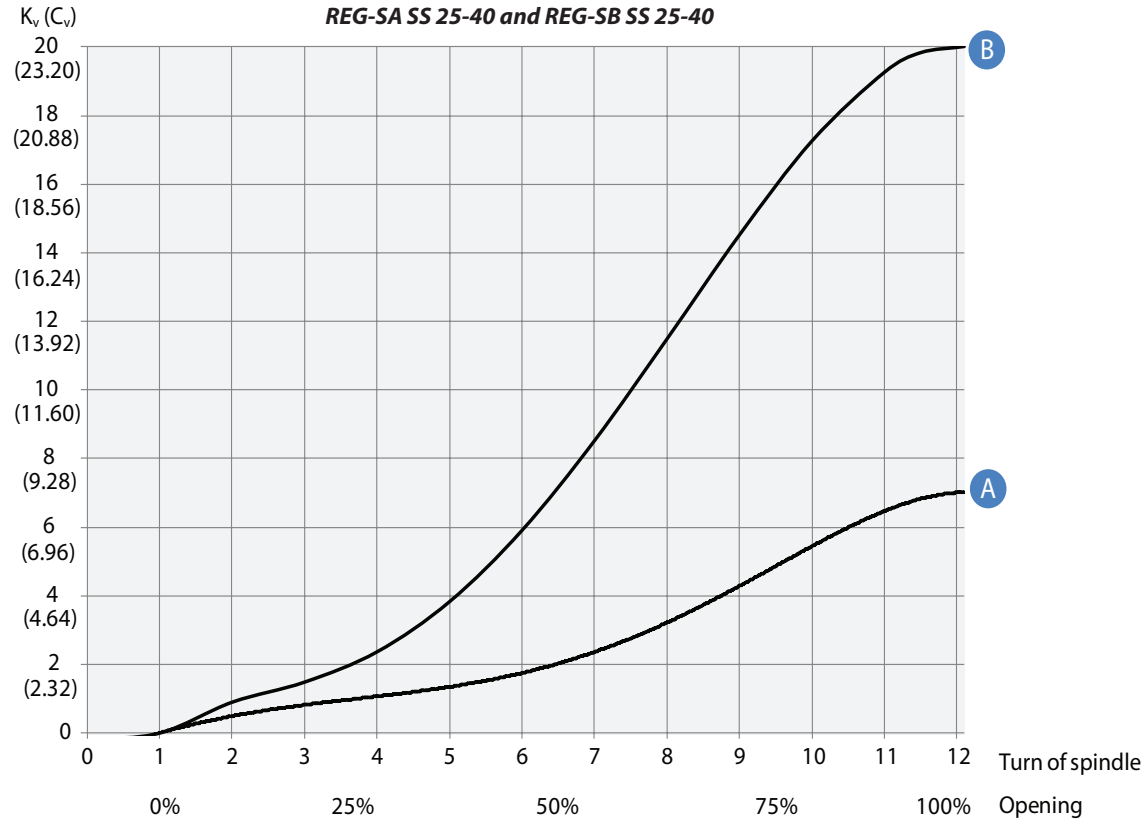

Fig. 2

Computation and selection
(Continued)

Liquid R 717, density: 670 kg/m³ [42 lb/ft³]

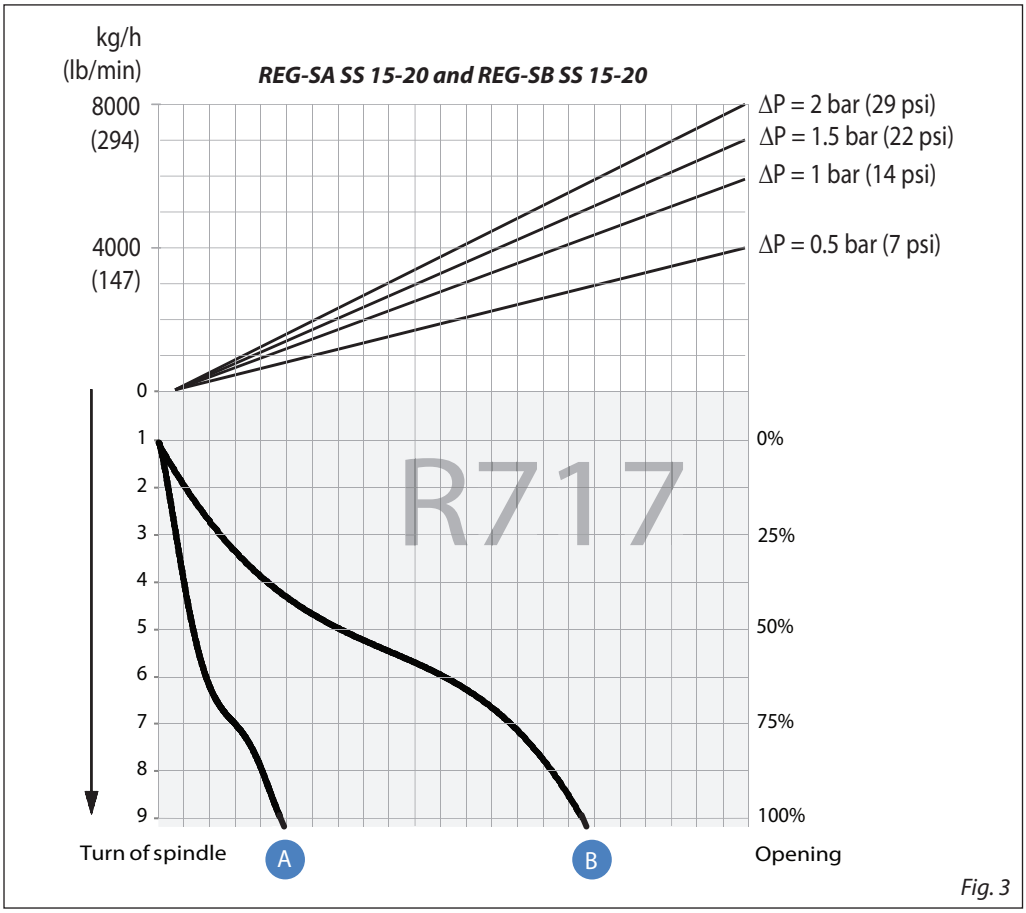

Fig. 3

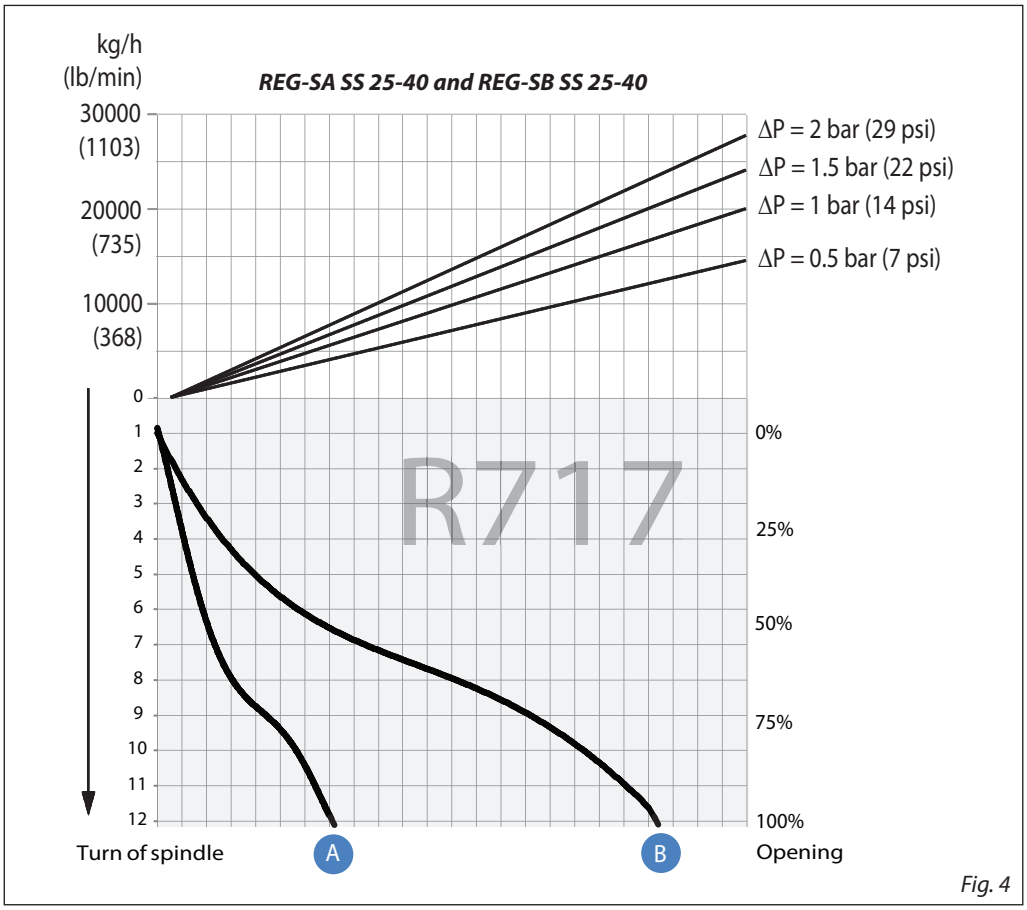

Fig. 4

For choice of valve size and connection see "Connections".

Computation and selection
(Continued)

Calculation factor C_A

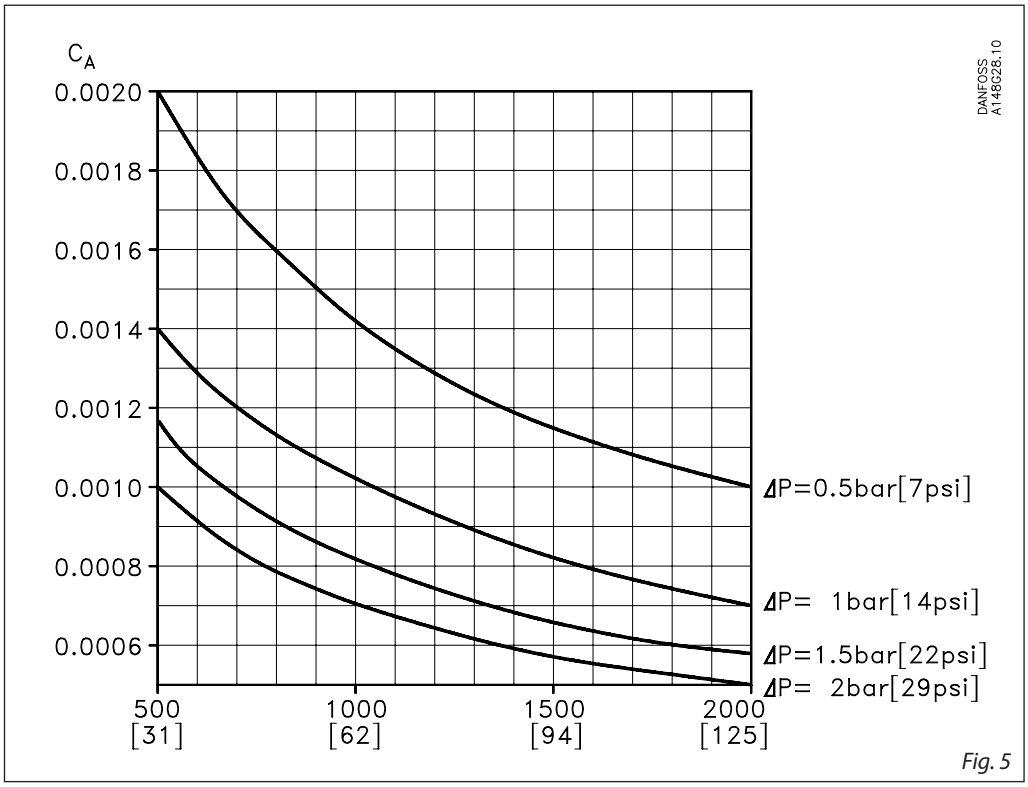

Fig. 5

For choice of valve size and connection see "Connections".

Computation and selection
Example 1.

Refrigerant: R 717
Refrigerant flow: 2200 kg/h
Pressure drop: Δp = 0.5 bar

The above mentioned example is illustrated on the following flow rate diagram and shows that REG-SB SS 15 and 20 with cone B can be used. The main rule is that nominal regulation range should be below 85% opening degree. If the arrowline is crossing 2 cone curves, the smaller cone should be selected if opening degree < 85%.

The example is only correct if the density of the refrigerant is approx. 670 (kg/m³), and there must be no build-up of flash gas in the valve.

Flow rate diagram

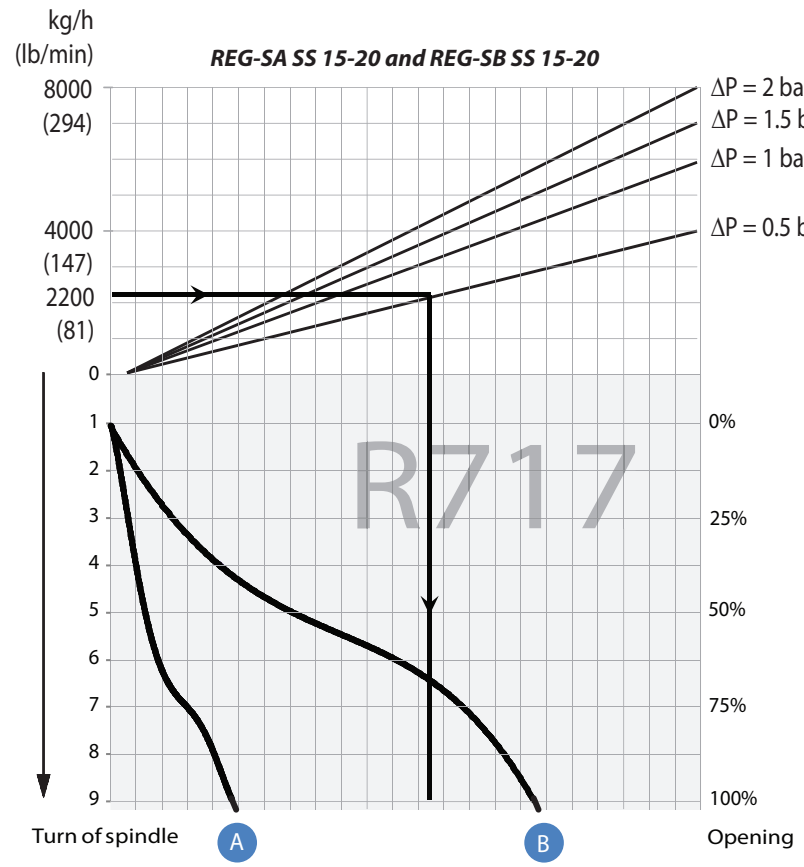

Fig. 6

Computation and selection
Example 2.

Brine, density	ρ:	1150	[kg/m³]
Brine flow	G:	2,700	[kg/h]
Pressure drop	Δp:	0.5	[bar]

In this example it is not possible to use the selection diagrams (fig. 3 and 4) as the refrigerant in question is not included.

Use the curves of the k_v-values instead (fig. 1 - 2) and calculate the required k_v by means of the formulas in the "Introduction" passage at the beginning of this chapter. Alternatively calculate the k_v-values by means of the calculation factor C_A (fig. 7) and the flow rate diagram (in this example: fig. 8) as per the following calculation example.

Calculation example:

Required k_v-value
C_A = 0.00132 (from fig. 18)
k_v = $C_A \times G$
k_v = 0.00132 × 2,700 [kg/h]
= 3.56 [m³/h]

Calculation factor C_A

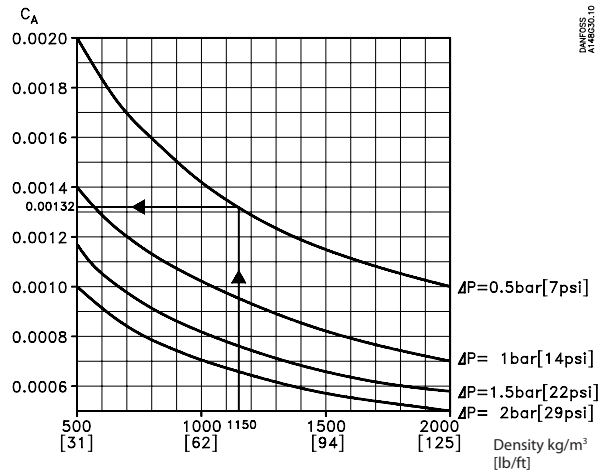

Fig. 7

Flow rate diagram

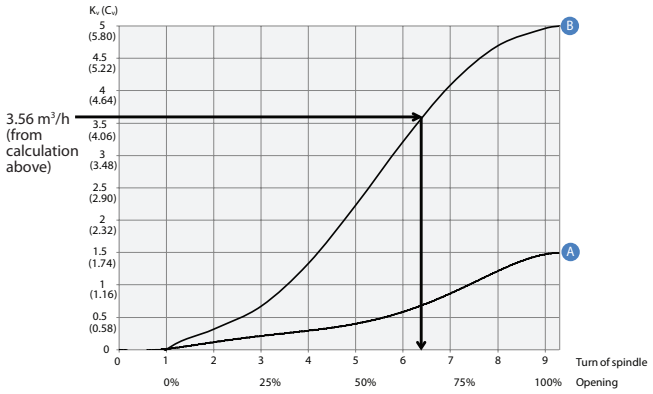

Fig. 8

REG-SB SS 15 and REG-SB SS 20 with cone B can be used.

Material specification

REG-SA SS and REG-SB SS 15 - 40

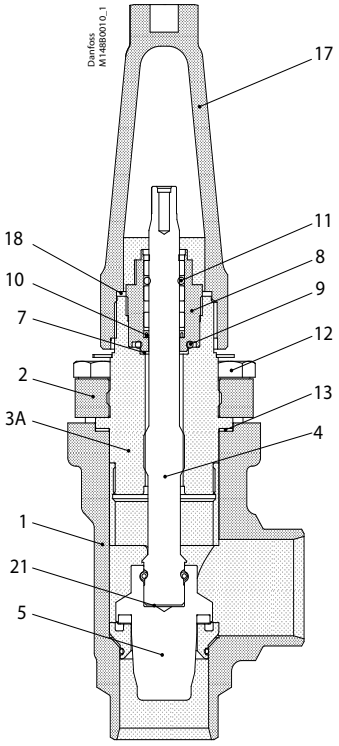

No.	Part	Material	EN	ISO	ASTM
1	Housing	Stainless steel	GX5CrNi19-10 EN10213-4		AISI 304
2	Bonnet, Flange	Stainless steel	X5CrNi18-10 EN10088		AISI 304
3A	Bonnet, Insert	Stainless steel	X8CrNiS18-9 DIN 17440		AISI 303
4	Spindle	Stainless steel	X8CrNiS 18-9, DIN 17440	Type 17, 683/13	AISI 303
5	Cone	Steel			
7	Packing washer	Aluminium			
8	Packing gland	Stainless Steel	X8CrNiS 18-9, 10088	Type 17, 683/13	AISI 303
9	O-ring	Cloroprene (Neoprene)			
10	Spring loaded Teflon ring	PTFE			
11	O-ring	Cloroprene (Neoprene)			
12	Bolts	Stainless steel	A2-70	A2-70	Type 308
13	Gasket	Fiber, non asbestos			
14	Bottom insert	Steel			
17	Seal cap	Aluminium			
18	Gasket f. seal cap	Nylon			
19	Locking nut	Steel			
20	Screw	Steel			
21	Disk spring	Steel			

Dimensions and weights

REG-SA SS and REG-SB SS 15 - 40 in angleway version

REG-SA SS and REG-SB SS 15 - 40

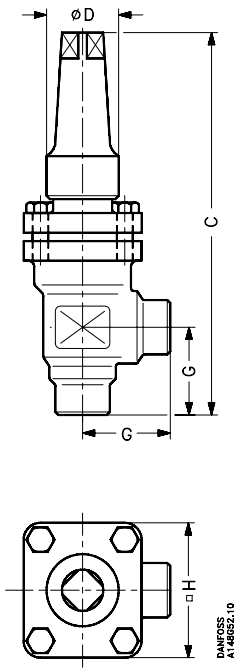

Valve size		C		G		∅D		□H		Weight
REG-SA SS/SB SS 15-20 [mm] REG-SA SS/SB SS (½-¾) [in]		182 7.17		45 1.77		38 1.50		60 2.36		1.4 kg 3.1 lb
REG-SA SS/SB SS 25-40 [mm] REG-SA SS/SB SS (1-1 ½) [in]		237 9.33		55 2.17		50 1.97		70 2.76		2.4 kg 5.3 lb

Specified weights are approximate values only.

REG-SA SS and REG-SB SS 10 - 65 in straightway version

REG-SA SS and REG-SB SS 15 - 40

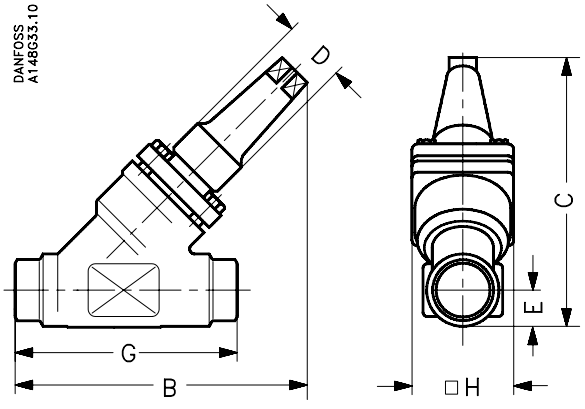

Valve size	C	B	E	G		∅D		□H		Weight
REG-SA SS/SB SS 15-20 [mm] REG-SA SS/SB SS (½-¾) [in]	145 5.71	155 6.10	20 0.79	120 4.72		38 1.50		60 2.36		2.0 kg 4.4 lb
REG-SA SS/SB SS 25-40 [mm] REG-SA SS/SB SS (1-1 ½) [in]	200 7.87	215 8.46	26 1.02	155 6.10		50 1.97		70 2.76		3.0 kg 6.6 lb

Specified weights are approximate values only.

Ordering

How to order
The table below is used to indentify the valve required.

Please note that the type codes only serve to identify the valves, some of which may not form part of the standard product range. For further information please contact your local Danfoss Sales Company.

Type codes

Valve type	**REG SA SS** **REG-SB SS**	Regulating Valves		
Nominal size in mm (Valve size measured on the connection diameter)			Available connection types D	 A
	15	DN 15	x	x
	20	DN 20	x	x
	25	DN 25	x	x
	32	DN 32	x	x
	40	DN 40	x	x
Connections	**D**	Butt-weld connection: DIN EN 10220		
	A	Butt-weld connection: ANSI B 36.19M		
Valve housing	**ANG**	Angle flow		
	STR	Straight flow		
Cone A	Size:	Flow area [mm²]		
	DN 15	36.5		
	DN 20	36.5		
	DN 25	178		
	DN 32	178		
	DN 40	178		
Cone B	Size:	Flow area [mm²]		
	DN 15	115		
	DN 20	115		
	DN 25	531		
	DN 32	531		
	DN 40	531		

Example:
REG-SA SS (Cone B) 15 DIN angleway = **148B5387**

Important!
Where products need to be certified according to specific certification societies or where higher pressures are required, the relevant information should be included at the time of order.

D = Butt-weld DIN
A = Butt-weld ANSI
ANG = Angleway
STR = Straightway

Complete REG-SA SS (Cone type A)

Butt-weld DIN (EN 10220)

Size mm	Size in.	Type	Code no.
Angleway *- REG-SA SS with cone type A*			
15	½	REG-SA SS 15 D ANG	**148B5297**
20	¾	REG-SA SS 20 D ANG	**148B5385**
25	1	REG-SA SS 25 D ANG	**148B5494**
32	1¼	REG-SA SS 32 D ANG	**148B5589**
40	1½	REG-SA SS 40 D ANG	**148B5674**

Butt-weld DIN (EN 10220)

Size mm	Size in.	Type	Code no.
Straightway *- REG-SA SS with cone type A*			
15	½	REG-SA SS 15 D STR	**148B5298**
20	¾	REG-SA SS 20 D STR	**148B5386**
25	1	REG-SA SS 25 D STR	**148B5495**
32	1¼	REG-SA SS 32 D STR	**148B5590**
40	1½	REG-SA SS 40 D STR	**148B5675**

Butt-weld ANSI (B 36.19M SCHEDULE 40)

Size mm	Size in.	Type	Code no.
Angleway *- REG-SA SS with cone type A*			
15	½	REG-SA SS 15 A40 ANG	**148B6482**
25	1	REG-SA SS 25 A40 ANG	**148B6483**
32	1¼	REG-SA SS 32 A40 ANG	**148B6484**

Butt-weld ANSI (B 36.19M SCHEDULE 40)

Size mm	Size in.	Type	Code no.
Straightway *- REG-SA SS with cone type A*			
15	½	REG-SA SS 15 A40 STR	**148B5299**
25	1	REG-SA SS 25 A40 STR	**148B6485**
32	1¼	REG-SA SS 32 A40 STR	**148B6486**

Ordering

Complete REG-SB SS (Cone type B)

Butt-weld DIN (EN 10220)

Size		Type	Code no.
mm	in.		
Angleway *- REG-SB SS with cone type B*			
15	½	REG-SB SS 15 D ANG	**148B5387**
20	¾	REG-SB SS 20 D ANG	**148B5389**
25	1	REG-SB SS 25 D ANG	**148B5496**
32	1¼	REG-SB SS 32 D ANG	**148B5591**
40	1½	REG-SB SS 40 D ANG	**148B5676**

Butt-weld DIN (EN 10220)

Size		Type	Code no.
mm	in.		
Straightway *- REG-SB SS with cone type B*			
15	½	REG-SB SS 15 D STR	**148B5388**
20	¾	REG-SB SS 20 D STR	**148B5390**
25	1	REG-SB SS 25 D STR	**148B5497**
32	1¼	REG-SB SS 32 D STR	**148B5592**
40	1½	REG-SB SS 40 D STR	**148B5677**

Butt-weld ANSI (B 36.19M SCHEDULE 40)

Size		Type	Code no.
mm	in.		
Angleway *- REG-SB SS with cone type B*			
20	¾	REG-SB SS 20 A40 ANG	**148B6487**
40	1½	REG-SB SS 40 A40 ANG	**148B5686**

Butt-weld ANSI (B 36.19M SCHEDULE 40)

Size		Type	Code no.
mm	in.		
Straightway *- REG-SB SS with cone type B*			
20	¾	REG-SB SS 20 A40 STR	**148B6488**
25	1	REG-SB SS 25 A40 STR	**148B6479**
40	1½	REG-SB SS 40 A40 STR	**148B5685**

D = Butt-weld DIN
A = Butt-weld ANSI
ANG = Angleway
STR = Straightway

Replacement kit (O-ring replacement) for R717 Ammonia Heat Pump and Propylene applications (including ID tag)*

Size		O-ring kit for	
mm	in.	R717 Heat pump	R1270 Propylene
10	3/8	**148B6084**	**148B6085**
15	½	**148B6070**	**148B6077**
20	¾		
25	1	**148B6071**	**148B6078**
32	1¼		
40	1½		

* Replacement kits for R717 Ammonia Heat Pump is applicable for continuous operating temperature between +100°C to 150°C (212°F to 302°F)

ENGINEERING
TOMORROW

Gauge valves
Type SNV-ST and SNV-SS

Contents **Page**

Features 119
Technical data 120
Design 120
Connections 121
Material specification 122
Dimensions and weights 123
Ordering 124

AI244986497087en-000808 | 2017.11

ENGINEERING TOMORROW

Gauge valves
Type SNV-ST and SNV-SS



SNV-ST and SNV-SS valves are designed to meet all industrial refrigeration application requirements. Designed as service valves they provide favourable flow characteristics.

Features

- Applicable to HCFC, non flammable HFC, R717 (Ammonia) and R744 (CO_2).
- Suitable for "heavy duty" industrial applications having a very sturdy and safe design including high pressures and wide temperature range.
- The SNV-ST and SNV-SS valves have backseating (metal to metal).
- Compact and light valve for easy handling and installation
- No special flow direction required.
- Provide high flow characteristics.
- Each valve type is clearly marked with type and size.
- Housing and bonnet material is low temperature steel (stainless steel for SNV-SS) according to requirements of the Pressure Equipment Directive and other international classification authorities.
- Valve safety is enhanced with the spindle being secured such that it cannot be unscrewed.
- Max. operating pressure:
  52 bar g / 754 psig
  Valves for higher operating pressure available on request
- Full temperature range:
  -60 – 150 °C / -76 – 302 °F
- Classification: DNV, CRN, BV, EAC etc.
  To get an updated list of certification on the products please contact your local Danfoss Sales Company.

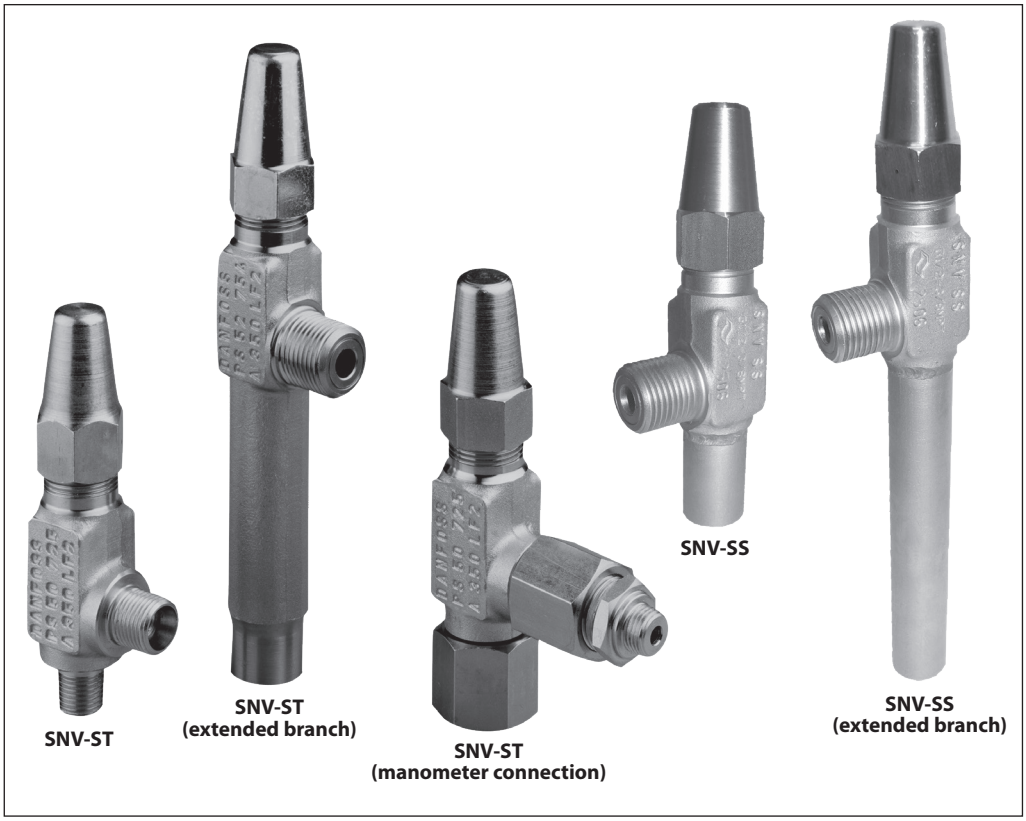

Technical data

- *Refrigerants*
  Applicable to HCFC, non flammable HFC, R717 (Ammonia) and R744 (CO_2). For further information please see installation instruction for SNV-ST.

  For further information please contact your local Danfoss Sales Company.
- *Temperature range*
  -60 – 150 °C / -76 – 302 °F.
- *Maximum working pressure*
  The valve is designed for: Maximum operating pressure of 52 bar g / 754 psig.
  Valves for higher operating pressure available on request.

Design

Connections
Available with the following connections:

- CD Cutting ring
- MPT Male NPT (ANSI/ASME B1.20.1)
- FPT Female NPT (ANSI/ASME B1.20.1)
- R Male (ISO 7-1)
- RC Female (ISO 7-1)
- G
- W Welding connection

Housing
Made of special steel, approved for low temperature operations.

Spindle
Equipped with stainless steel spindle, which is ideal for O-ring sealing.

Installation
No special flow direction is required. The valve is designed to withstand high internal pressures. However, the piping system in general should be designed to avoid liquid traps and reduce the risk of hydraulic pressure caused by thermal expansion. For further information refer to installation instruction for SNV-ST and SNV-SS.

Connections

CD 6
CD10

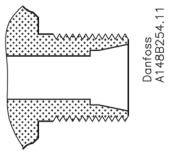

Cutting ring, DIN 3861 & DIN 3901 class L,
d_u = 6 mm

Cutiing ring, DIN 3861 & DIN 3901 class L,
d_u = 10 mm

¼ MPT
3/8 MPT

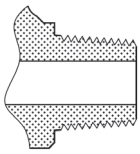

¼" male NPT ANSI/ASME B1.20.1
3/8" male NPT ANSI/ASME B1.20.1

¼ FPT
3/8 FPT

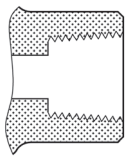

¼" female NPT ANSI/ASME B1.20.1
3/8" female NPT ANSI/ASME B1.20.1

¼ R
3/8 R

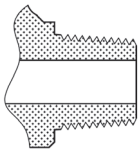

¼" male ISO 7-1
3/8" male ISO 7-1

¼ RC
3/8 RC

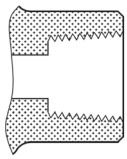

¼" female ISO 7-1
3/8" female ISO 7-1

G ½

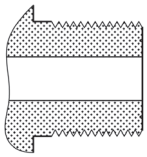

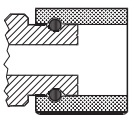

G ½"

W

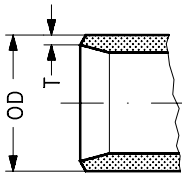

½" welding connection
OD = 21.3 mm / 0.839 in.
T = 2.3 mm / 0.091 in.

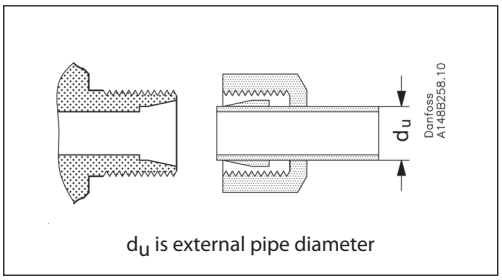

d_u is external pipe diameter

Note: Fittings not included

Material specification

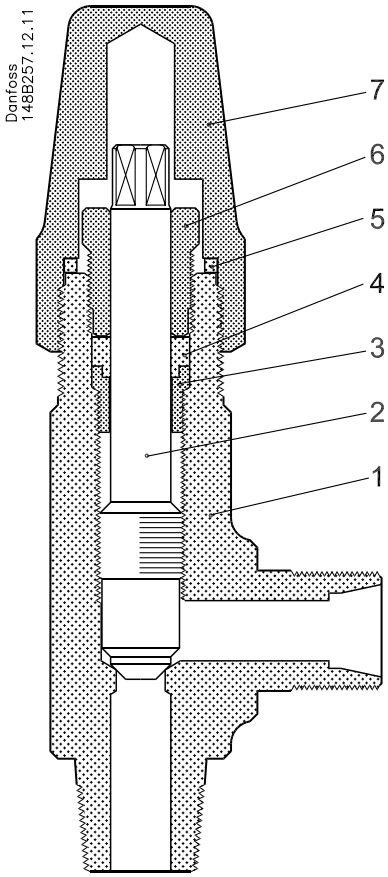

SNV-ST

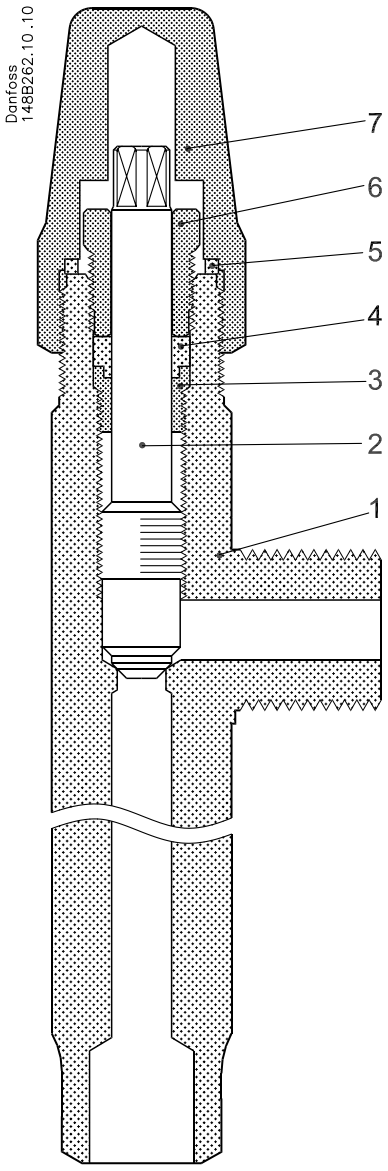

SNV-ST and SNV-SS (extended branch)

No.	Part	Material	EN	JIS	ASTM
1	Housing	Steel	P285QH EN 10222-4	SFL 2 G 3205	LF2 A350
		Stainless steel (SNV-SS)	XSCrNi18-10, 10088		AISI 304
2	Spindle	Stainless steel	X8CrNiS 18-9 EN 10088' DIN 17440 (SNV-SS only)	SUS 303	AISI 303
3	Locking ring	Steel			
4	Sealing ring	Teflon			
5	Seal cap gasket	Nylon			
6	Gland nut	Steel			
7	Seal cap	Steel			

Dimensions and weights

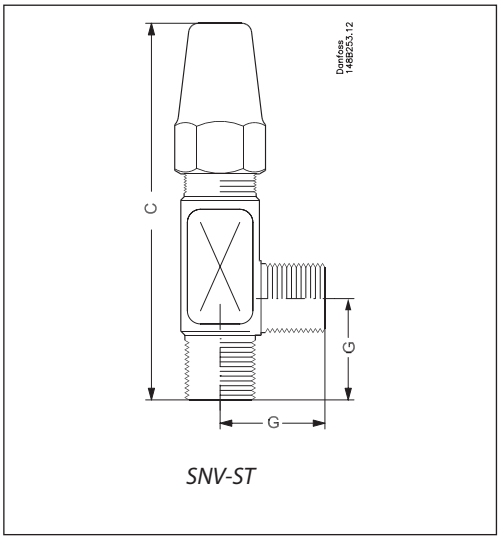

SNV-ST

Type		C	G	Weight
SNV-ST	mm	115	32	0.36 kg
	in.	4.53	1.26	0.79 lb

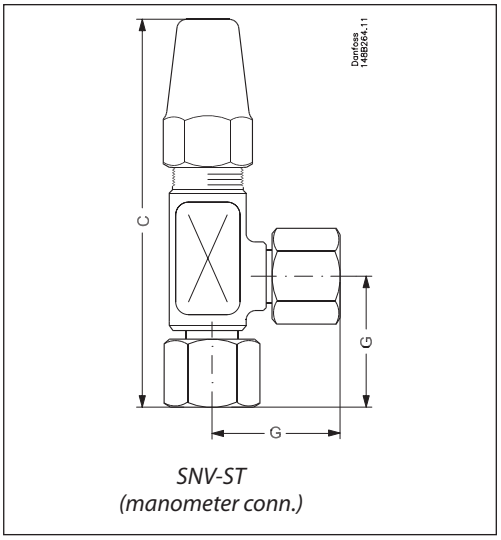

SNV-ST
(manometer conn.)

Type		C	G	Weight
SNV-ST (Man.)	mm	127	45	0.56 kg
	in.	5.00	1.77	1.22 lb

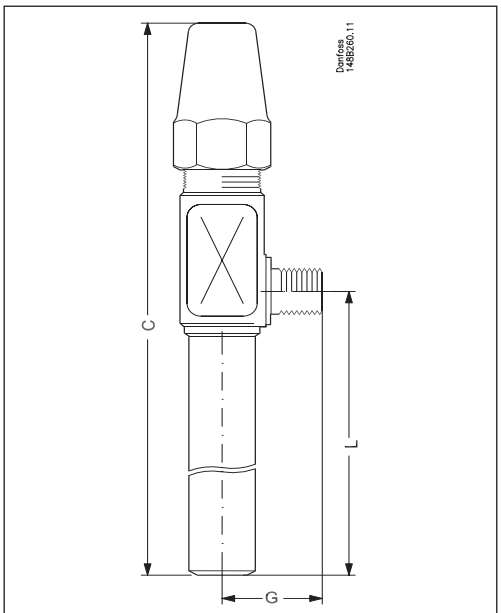

SNV-ST / SNV-SS
(extended branch)

Type		C	G	L	Weight
SNV-ST, SNV-SS Ext.branch	mm	131	32	50	0.60 kg
	in.	5.16	1.26	1.97	1.32 lb
SNV-ST Ext.branch	mm	181	32	100	0.60 kg
	in.	7.13	1.26	3.94	1.32 lb
SNV-ST Ext.branch	mm	206	32	125	0.60 kg
	in.	8.11	1.26	4.92	1.32 lb
SNV-SS Ext.branch	mm	231	32	150	0.60 kg
	in.	9.09	1.26	5.91	1.32 lb

Specified weights are approximate values only.

Ordering

How to order
The table below is used to identify the valve required.

Please note that the type codes only serve to identify the valves, some of which may not form part of the standard product range. For further information please contact your local Danfoss Sales Company.

Important!
Where products need to be certified according to specific certification societies or where higher pressures are required, the relevant information should be included at the time of order.

See figure 1

SNV-ST

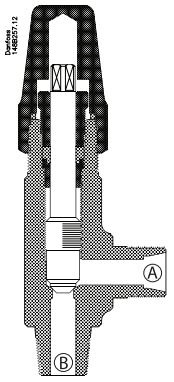

Fig. 1

SNV-ST / SNV-SS (extended branch)

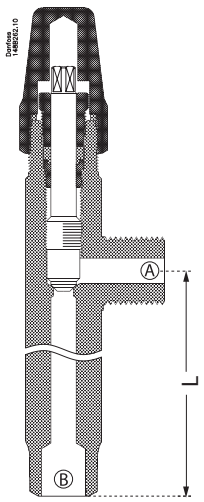

Fig. 2

SNV-ST (manometer connection)

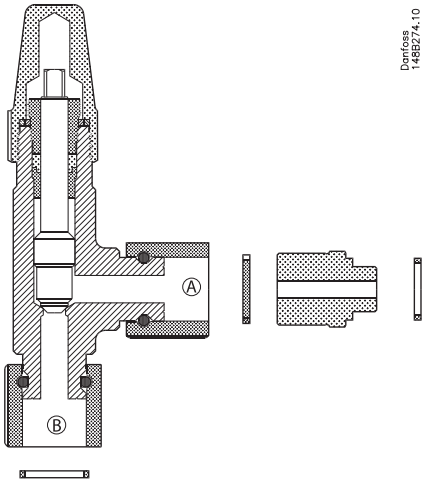

Fig. 3

Side branch connection Ⓐ	Bottom branch connection Ⓑ	Type	Quantity	Code No.
CD 10	CD 10	SNV-ST CD10-CD10	1 pc.	**148B3740**
CD 10	CD 10	SNV-ST CD10-CD10	30 pcs.	**148B4177**
CD 10	¼ MPT	SNV-ST CD10-1/4MPT	1 pc.	**148B3741**
CD 6	¼ MPT	SNV-ST CD6-1/4MPT	1 pc.	**148B3742**
CD 10	3/8 MPT	SNV-ST CD10-3/8MPT	1 pc.	**148B3743**
CD 6	3/8 MPT	SNV-ST CD6-3/8MPT	1 pc.	**148B3744**
G ½ (external)	G ½ (external)	SNV-ST G1/2-G1/2	1 pc.	**148B3745**
G ½ (external)	G ½ (external)	SNV-ST G1/2-G1/2	30 pcs.	**148B4179**
¼ FPT	¼ MPT	SNV-ST 1/4FPT-1/4MPT	1 pc.	**148B3746**
¼ FPT	¼ MPT	SNV-ST 1/4FPT-1/4MPT	30 pcs.	**148B4180**
¼ FPT	¼ MPT	SNV-SS 1/4FPT-1/4MPT	1 pc.	**148B4771**
¼ FPT	¼ MPT	SNV-ST 1/4FPT-1/4MPT**	1 pc.	**148B4772**
¼ FPT	¼ FPT	SNV-ST 1/4FPT-1/4FPT	1 pc.	**148B4568**
¼ FPT	¼ FPT	SNV-ST 1/4FPT-1/4FPT	30 pcs.	**148B4223**
3/8 FPT	3/8 MPT	SNV-ST 3/8FPT-3/8MPT	1 pc.	**148B3747**
3/8 FPT	3/8 MPT	SNV-ST 3/8FPT-3/8MPT	30 pcs.	**148B4181**
3/8 FPT	3/8 MPT	SNV-SS 3/8FPT-3/8MPT	1 pc.	**148B3750**
3/8 FPT	½ MPT	SNV-ST 3/8FPT-1/2MPT	1.pc.	**148B4565**
3/8 FPT	½ MPT	SNV-ST 3/8FPT-1/2MPT	30 pcs.	**148B4233**
3/8 FPT	3/8 FPT	SNV-ST 3/8FPT-3/8FPT	1 pc.	**148B4572**
3/8 FPT	3/8 FPT	SNV-ST 3/8FPT-3/8FPT	30 pcs.	**148B4225**
½ MPT	½ MPT	SNV-ST 1/2MPT-1/2MPT	1 pc.	**148B4564**
½ MPT	½ MPT	SNV-ST 1/2MPT-1/2MPT	30 pcs.	**148B4224**
½ MPT	3/8 FPT	SNV-ST 1/2MPT-3/8FPT	30 pcs.	**148B4226**
CD 6	¼ MPT	SNV-ST CD6-1/4MPT*	30 pcs.	**148B4216**
7/16 UNF	¼ MPT	SNV-ST 7/16UNF-1/4MPT	1 pc.	**148B4566**
7/16 UNF	¼ MPT	SNV-ST 7/16UNF-1/4MPT	30 pcs.	**148B4230**
3/8 RC	3/8 R	SNV-ST 3/8RC-3/8R	30 pcs.	**148B4227**
¼ RC	3/8 R	SNV-ST 1/4RC-3/8R	30 pcs.	**148B4228**
¼ RC	¼ R	SNV-ST 1/4RC-1/4R	30 pcs.	**148B4229**

* With handwheel
** Including adaptor for connection to ICS/PM/ICFD valve (¼ in. NPT – G¼)

Ordering

See figure 2
L50 = 50 mm / 2 in.
L100 = 100 mm / 4 in.
L125 = 125 mm / 5 in.
L150 = 150 mm / 6 in.

Extended Branch

Side branch connection Ⓐ	Bottom branch connection Ⓑ	Type	Quantity	Code No.
CD10	W½ L100	SNV-ST CD10-W1/2 L100	1 pc.	**148B3768**
CD10	W½ L100	SNV-ST CD10-W1/2 L100	30 pcs.	**148B4210**
G ½ (external)	W½ L50	SNV-ST G1/2-W1/2 L50	1 pc.	**148B4570**
G ½ (external)	W½ L50	SNV-ST G1/2-W1/2 L50	30 pcs.	**148B4218**
G ½ (external)	W½ L100	SNV-ST G1/2-W1/2 L100	1 pc.	**148B3769**
G ½ (external)	W½ L100	SNV-ST G1/2-W1/2 L100	30 pcs.	**148B4211**
G ½ (external)	W½ L125	SNV-ST G1/2-W1/2 L125	30 pcs.	**148B4219**
¼ FPT	¼ MPT L100	SNV-ST 1/4FPT-1/4MPT L100	1 pc.	**148B4567**
¼ FPT	¼ MPT L100	SNV-ST 1/4FPT-1/4MPT L100	30 pcs.	**148B4232**
¼ FPT	W½ L100	SNV-ST 1/4FTP-W1/2 L100	20 pcs.	**148B4495**
G ½ (external)	W½L50	SNV-SS G1/2-W1/2 L50	1 pc.	**148B4265**
G ½ (external)	W½L50	SNV-SS G1/2-W1/2 L50	30 pcs.	**148B4263**
G ½ (external)	W½L150	SNV-SS G1/2-W1/2 L150	1 pc.	**148B4266**
G ½ (external)	W½L150	SNV-SS G1/2-W1/2 L150	30 pcs.	**148B4264**

See figure 3

Manometer connection

Side branch connection	Bottom branch connection	Type	Quantity	Code No.
G ½	G ½	SNV-ST G½ Man	1 pc.	**148B3778** **
G ½	G ½	SNV-SS G½ Man	1 pc.	**148B6545** ***

** Including adaptor for connection to ICS/PM valve (G½ - G¼)
*** Including adaptor for connection to ICF valve (G½ - G3/8).

Valves for 65 bar

Side branch connection Ⓐ	Bottom branch connection Ⓑ	Type	Quantity	Code No.
CD10	CD 10	SNV-ST CD10-CD10	1 pc.	**148B6400**
CD10	W½ L100	SNV-ST CD10-W1/2 L100	30 pcs.	**148B4223**
G ½ (external)	W½ L50	SNV-SS G1/2-W1/2 L50	1 pc.	**148B4581**
G ½ (external)	W½ L150	SNV-SS G1/2-W1/2 L150	1 pc.	**148B4582**

Accessories

Type		Connection type	Quantity	Code no.
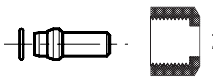	Weld nipple incl. union nut and O-ring	CD 10	1 pc.	**148B3729**
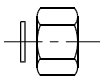	Blind nut incl. gasket	G 1/2	1 pc.	**148H3450**
	Blind nut SS incl. gasket			**148B4317**
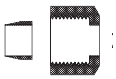	CD 6 Cutting ring + union nut	CD 6	1 pc.	**148B4182**
			60 pcs.	**148B4217**
	CD 10 Cutting ring + union nut	CD 10	1 pc.	**148B4183**
			60 pcs.	**148B4186**
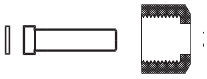	Welding nipple incl. aluminium gasket	G½-ND6	2 pcs.	**148B4184**
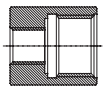	Al gaskets included	¼" FPT – ½" G	1 pc.	**148B3860**
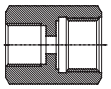	Al gaskets included	3/8" G - ½" G	1 pc.	**148B3861**
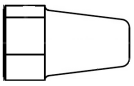	Seal cap & gasket - SNV-ST Seal cap & gasket - SNV-SS		1 pc. 1 pc.	**148B4576** **148B3269**
	Plug and gasket	G½" (external)	1 pc.	**148H3462**

ENGINEERING
TOMORROW

Shut-off valve
Type QDV

Contents **Page**

Features 129
Design 130
Technical data 130
Material specification 131
Connections 132
Dimensions 133
Ordering 133

AI183386419531en-000201 | 2016.01

ENGINEERING
TOMORROW

Shut-off valve
Type QDV



QDV is a shut-off valve, designed particularly for draining oil from systems containing refrigerant (ammonia) under pressure.

The valve will close immediately on release of the handle, thus protecting user and environment against unnecessary refrigerant leaks. The valve should as a rule be installed as illustrated in fig. 1.

In order to prevent hydraulic pressure building up between the stop valve and the QDV an integral relief device is included as part of the cone arrangement, which will open at approx. 16 bar / 232 psig.

QDV is designed to meet the safety demands specified by national and international authorities within industrial refrigeration.

Features

- Applicable to R717 (ammonia).
- Meets the safety demands within industrial refrigeration
- Handle can be positioned 360°
- Built-in integral relief device opening over 16 bar g (proventing hydraulic pressure building up between shut-off valve and QDV)
- Can be supplied together with a stop valve for quick on site mounting (fig. 1)
- Max. operating pressure: 40 bar g / 580 psi g
- Temperature range: -50 – 150 °C / -58 – 302 °F
- Classification: DNV, CRN, BV, EAC etc. To get an updated list of certification on the products please contact your local Danfoss Sales Company

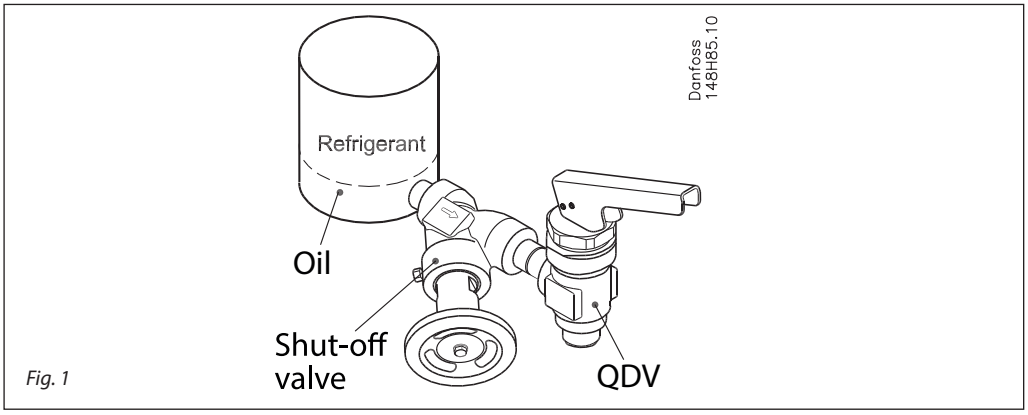

Fig. 1

Design

Connections
Available with the following connections:

- Inlet: Welding DIN (EN 10220)
  ½ in FPT
  ¾ in FPT
- Outlet: G ¾ in pipe thread (ISO 228/1)
  ½ in FPT
  ¾ in FPT

Optional extras for outlet:
– Welding nipple DIN (EN 10220)
– Hose connection

Other types of connection are available on request.

QDV - SVA combinations
Combinations of the QDV together with a dedicated SVA have been established for easy selection. Please study page 133 to find the code numbers for these combinations.

Installation
For further information refer to installation instruction for QDV.

Technical data

- Refrigerants
  Applicable to R717 (ammonia).
- QDV is a backpressure dependent valve. If any tube or hose is mounted on the outlet of the QDV it has to be calculated to prevent blackpressure building up when relieving.
- For further information please see installation instruction for QDV.
  Flammable hydrocarbons are not recommended, for further information please contact your local Danfoss Sales Company.
- Temperature range
  -50 – 150 °C / -58 – 302 °F.
- Pressure
  The valve is designed for:
  Maximum operating pressure of 40 bar g / 580 psi g

Material specification

QDV 15

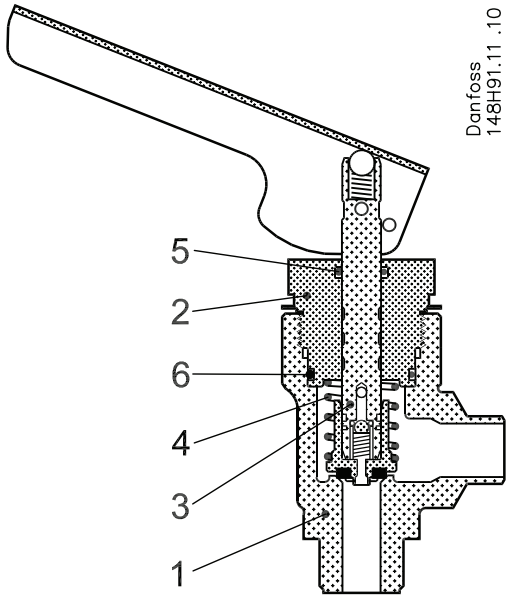

No.	Part	Material	DIN/EN	ASTM
1	Housing	Steel	G20Mn5QT EN10213-3	LCC A352
2	Bonnet	Steel St37-2	S235JR EN 10025	AISI 1015
3	Spindle / Cone	Stainless steel X10CrNiS18-9	S189 EN 10088-3	AISI 303
4	Spring	Steel		
5	O-ring	Cloroprene		
6	O-ring	Cloroprene		

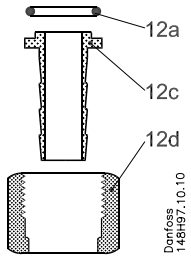

Hose connection for outlet

No.	Part	Material
12a	O-rings	Cloroprene (Neoprene)
12c	Stub for hose - OD Ø15 mm	Steel
12d	Union nut - G ¾"	Steel

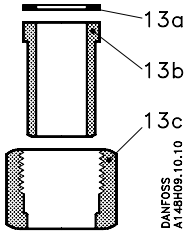

Welding nipple connection for outlet

No.	Part	Material
13a	Al-packing	Aluminium
13b	Welding nipple - OD Ø21.3 mm	Steel (S235JR)
13c	Union nut - G ¾"	Steel

Connections

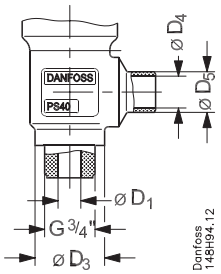

		ØD1	ØD3	ØD4	ØD5
QDV 15 DIN 15	[mm]	12	36.5	16.7	21.3
	[in]	0.47	1.44	0.66	0.84

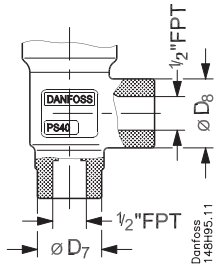

		ØD7	ØD8
QDV 15 ½" FPT	[mm]	34	36.5
	[in]	1.34	1.44

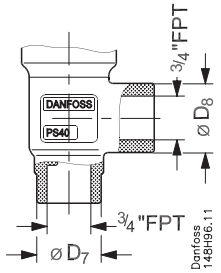

		ØD7	ØD8
QDV 15 ¾" FPT	[mm]	34	36.5
	[in]	1.34	1.44

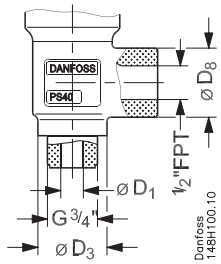

		ØD1	ØD3	ØD8
QDV 15 DIN 15	[mm]	12	36.5	34
	[in]	0.47	1.44	1.34

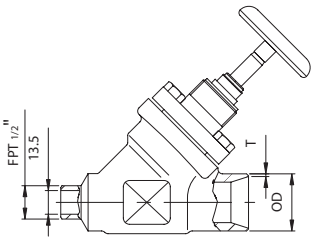

		OD	T	k_v-straight [m³/h]	C_v-straight [USgal/min]
SVA-ST DIN 15	[mm]	21.3	2.3	4.9	5.7
	[in]	0.839	0.091		

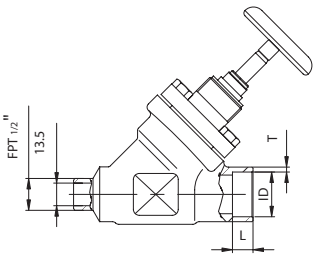

		ID	T	L	k_v-straight [m³/h]	C_v-straight [USgal/min]
SVA-ST SOC ½ in	[mm]	21.8	6.0	10	4.9	5.7
	[in]	0.858	0.235	0.39		

Dimensions

QDV 15 (stand alone)

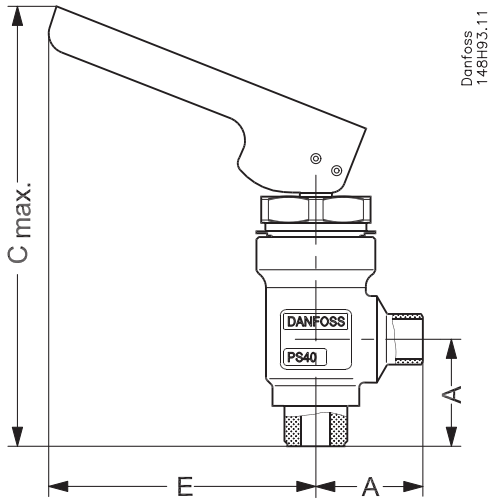

QDV 15 mounted on SVA valve

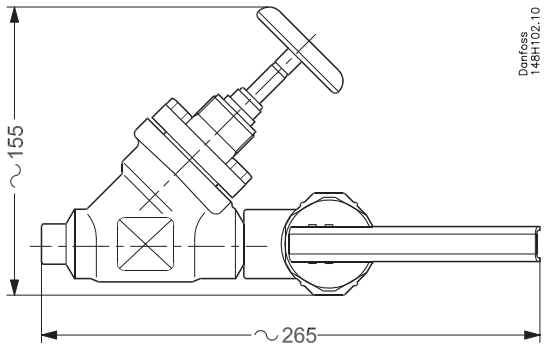

Valve size		A	C_{max}	E
QDV 15	[mm]	45	185	109
	[in]	1.77	7.28	4.29

Ordering

How to order

The table below is used to identify the valve required.

Type	Inlet	Outlet	**Code no.**
QDV 15 DN 15	DN 15	G ¾ in	**148H3272**
QDV 15 ½ in FPT	½ in FPT	½ in FPT	**148H3273**
QDV 15 $^3/_4$ in FPT	¾ in FPT	¾ in FPT	**148H3274**
QDV 15 DN 15 + SVA-ST DN 15 H-WHEEL*	DN 15	G ¾ in	**148H3310**
QDV 15 ½ in FPT + SVA-ST SOC ½ in H-WHEEL*	½ in SOC	½ in FPT	**148H3311**
Fittings for hose connection - G ¾"			**148H3451**
Fittings for welding connection - G ¾"			**148H3452**

* Two valves are supplied in one box and should be mounted on site.
The indicated inlet is for the stop valve - The indicated outlet is for the oil drain valve.

Important!

Where products need to be certified according to specific certification societies or where higher pressures are required, the relevant information should be included at the time of order.

ENGINEERING
TOMORROW

Pilot-operated servo valve
Type ICS

Contents **Page**

Features ... 137
Design ... 138
Technical data ... 138
The ICS Concept ... 139
Function ... 141
Material specification - ICS 25, 32, 40, 50, 65 ... 143
Material specification - ICS 100, 125, 150 ... 144
Configuration examples ... 145
Nominal capacities ... 154
Ordering from the parts programme ... 188
Accessories ... 193
Connections ... 205

AI241186442033en-001003 | 2018.10

ENGINEERING
TOMORROW

Pilot-operated servo valve
Type ICS



ICS pilot-operated servo valves belong to the ICV (Industrial Control Valve) family.

The valve comprises three main components: valve body, function module and top cover.

ICS pilot-operated servo valves are pilot operated valves for regulating pressure, temperature and ON / OFF function in refrigeration systems. ICS valves are designed for low and high-pressure refrigerants.

ICS valves can be used on the high and low-pressure sides, in wet and dry suction lines and in liquid lines without phase change (i.e. where no expansion takes place in the valve).

The function of ICS valves is dependent on the pilot pressure applied from either a pilot valve or external pilot pressure source.

ICS 1 pilot has one pilot pressure connection and ICS 3 pilot has three pilot pressure connections.

Features

- Designed for industrial refrigeration applications for a maximum working pressure of 52 bar g / 754 psi g
- Applicable to HCFC, HFC, R717 (Ammonia) and R744 (CO_2)
- Direct coupled connections
- Connection types include butt weld, socket weld, solder and threaded connections
- Low temperature steel body
- Low weight and compact design
- V-port regulating cone ensures optimum regulating accuracy particularly at part load
- Function module has a QPQ surface treated insert and a steel piston ring ensuring precise control accuracy
- ICV 4 in, 5 in and 6 in ANSI with NPT threaded pressure outlet in the outlet of the valve
- Replaceable Teflon valve seat for ICS 25-80
- Maintenance spare part kit available for ICS 100-150
- Modular Concept:
  - Each valve body is available with several different connection types and sizes.
  - Valve overhaul on ICS 25-80 is done by replacing the function module.
  - Possible to convert ICS pilot-operated servo valve to ICM motor operated valve.
- Manual opening
- The ICS valve is a multifunction valve where several pilot valves can be mounted into the pilot ports
- The standard range of pilot valves can be used on all sizes of ICS valves. Pilot valves can be either screwed directly into the ICS valve, thus eliminating the need for solder / weld connections or external pilot lines
- Pressure gauge connection port to measure valve inlet pressure
- The top cover can be rotated into any possible position without affecting the operation of the valve
- Classification: DNV, CRN, BV, EAC etc.
  To get an updated list of certification on the products please contact your local Danfoss Sales Company.

Design

ICS valves are designed as pilot operated valves requiring minimal pressure differential to open. If the pressure difference is 0 bar / 0 psi, the ICS valve will be closed. If the pressure difference is 0.2 bar / 3 psi or more, the ICS valve will be fully open. At pressure differences between 0.07 bar / 1 psi and 0.2 bar /3 psi, the opening degree will be correspondingly proportional.

The ICS is available for use with either one or three pilot valves.

Two of the three pilot pressure connections (S1 and S2) are connected in series whilst the third (P) is connected in parallel to S1 and S2. This allows different combinations of pilot valves to be used, thus providing numerous variations in control functions.

Connections
There is a very wide range of connection types available with ICS valves:

- D: Butt weld, DIN (2448)
- A: Butt weld, ANSI (B 36.10)
- J: Butt weld, JIS (B S 602)
- SOC: Socket weld, ANSI (B 16.11)
- SD: Solder connection, DIN (2856)
- SA: Solder connection, ANSI (B 16.22)
- FPT: Female pipe thread (ANSI/ASME B 1.20.1)

Approvals
The ICV valve concept is designed to fulfill global refrigeration requirements.
For specific approval information, please contact Danfoss.

The ICS valves are approved in accordance with the European standard specified in the Pressure Equipment Directive and are CE marked.
For further details / restrictions - see Installation Instruction

Valve body and top cover material
Low temperature steel

CE

ICS valves			
Nominal bore	DN≤ 25 (1 in)	DN 32-65 (1 ¼ – 2 ½ in)	DN 80-125 (3 – 5 in)
Classified for	Fluid group I		
Category	Article 3, paragraph 3	II	III

Technical data

- *Refrigerants*
  Applicable to HCFC, HFC, R717(Ammonia) and R744 (CO_2).
  Use with flammable hydrocarbons cannot be recommended; please contact Danfoss.
- *Temperature range*
  -60 – 120 °C / -76 – 248 °F.
- *Surface protection*
  ICS 25-150:
  The external surface is zinc-chromated to provide good corrosion protection.
- *Pressure range*
  The valve is designed for:
  Max. working pressure: 52 bar g / 754 psig

  Opening differential pressure:
  Fully open: Min. 0.2 bar g (min. 3 psig)
  Max. Opening Pressure Differential (MOPD), solenoid valves only - at nominal conditions.
  – 10 W AC up to 21 bar / 305 psi
  – 20 W AC up to 40 bar / 580 psi

The ICS Concept

The ICS concept is developed around a modular principle. This gives the possibility of combining function modules and top covers with special valve body size that is available in a variety of connection possibilities.

- There are eight valve bodies available.

	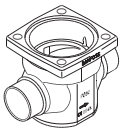	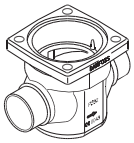	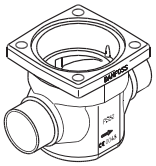	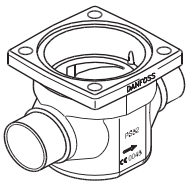
ICV 25	ICV 32	ICV 40	ICV 50	ICV 65

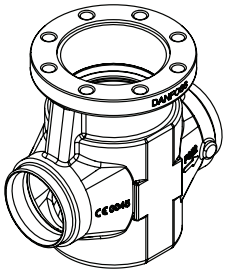	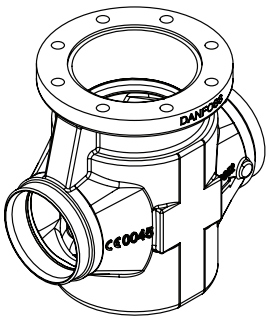	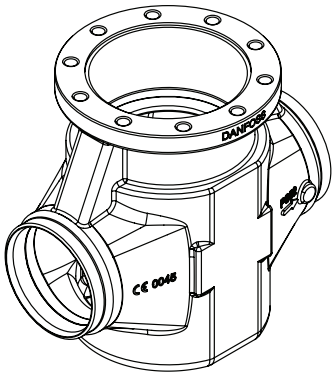
ICV 100	ICV 125	ICV 150

- Valve bodies in the sizes ICV 20-ICV65 are available with a range of undersizes through oversized connection sizes and types.
  ICV 100 - ICV 150 are available in butt-weld DIN and butt-weld ANSI nominal sizes

D	A	J	SOC	SD	SA	FPT
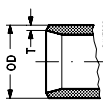	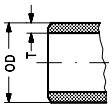	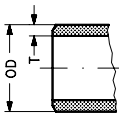	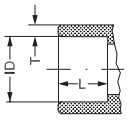	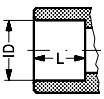	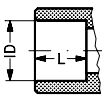	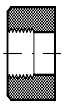
Butt-weld DIN	Butt-weld ANSI	Butt-weld JIS	Socket weld ANSI	Solder DIN	Solder ANSI	Female Pipe Thread

- Each valve body may be fitted with a 1 pilot or 3 pilot top cover.

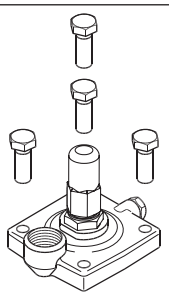	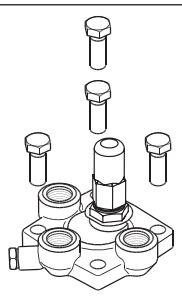

The ICS Concept
(continued)

In ICS, multiple inserts (function modules) are available to give different capacities.

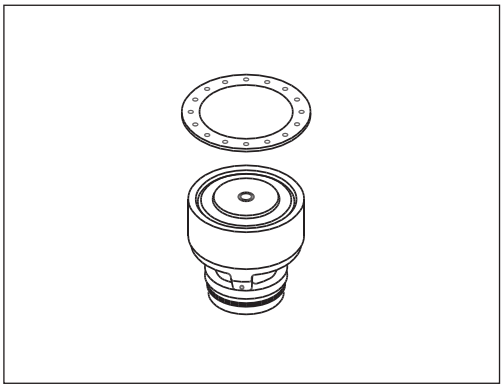

Type	Valve body size	K_v [m³/h]	C_v [USgal/min]
ICS 25-5	25	1.7	2.0
ICS 25-10		3.5	4.1
ICS 25-15		6.0	7.0
ICS 25-20		8	9.3
ICS 25-25		11.5	13.3
ICS 32	32	17	20
ICS 40	40	27	31
ICS 50	50	44	51
ICS 65	65	70	81
ICS 80	80	85	98
ICS 100	100	142	165
ICS 125	125	207	240
ICS 150	150	354	410

Function

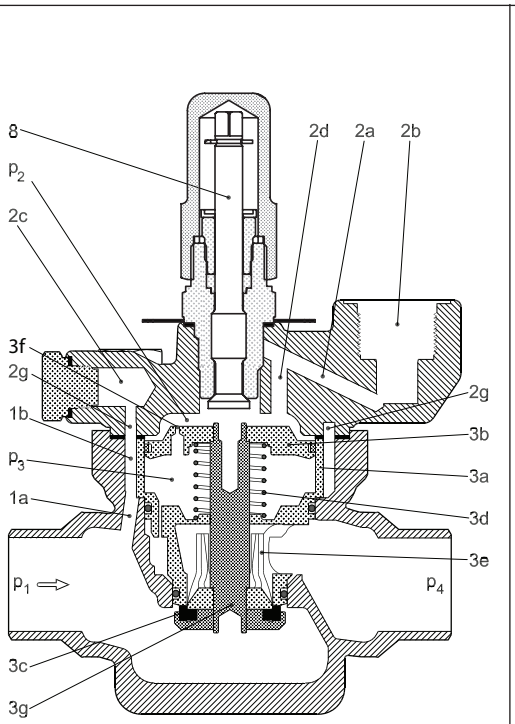

ICS 1 Pilot Fig. 1

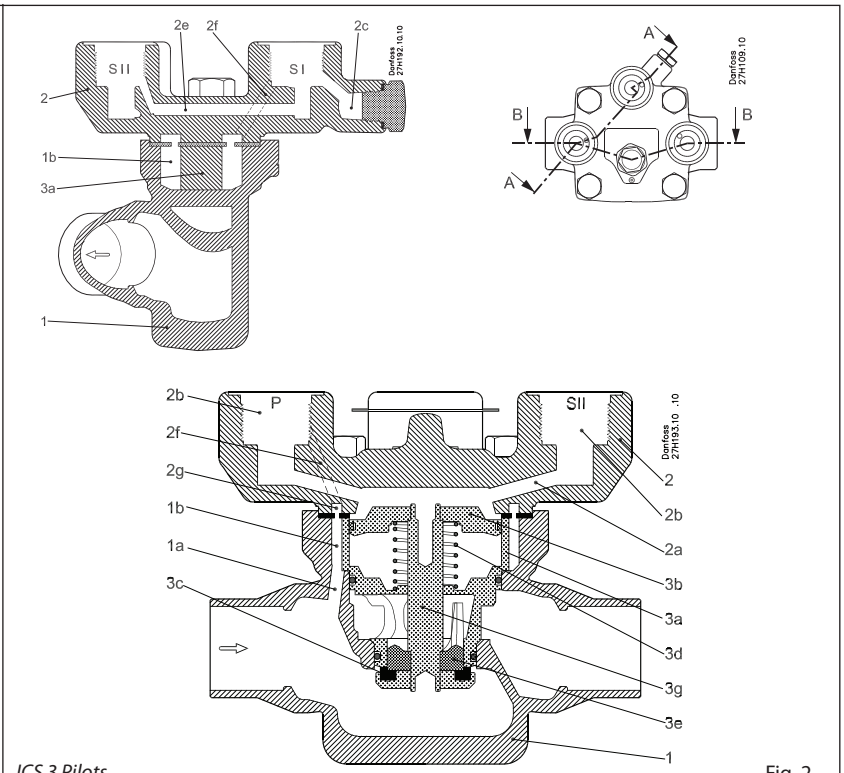

ICS 3 Pilots Fig. 2

ICS 1 Pilot and ICS 3 Pilot

1.	Body
1a	Pilot channel to inlet side
1b	Circular gap between house and module
2.	Top cover
2a	Pilot channels in top cover
2b	Pilot insertion hole
2c	Pressure gauge connection
2d	Piston top inlet channel
2e	Cross channel SI to SII
2f	Inlet channel
2g	Circular groove
3	Function module
3a	Cylinder
3b	Piston
3c	Valve plate
3d	Spring
3e	Cone
3f	Equalisation orifice
3g	Piston rod

p_1	Inlet pressure
p_2	Pressure on piston
p_3	Pressure underneath piston
p_4	Outlet pressure
8	Manual operating spindle

The ICS main valve is a pilot operated valve. The types of pilot valves used determine the function. The ICS main valve with pilot valve(s) controls refrigerant flow by modulation or on/off in accordance with the pilot valve and main valve status. The manual spindle can be used to open the valve plate.

The opening degree of the main valve is determined by the pressure difference (differential pressure) between pressure p_2, which acts on top of the servo piston (3b), and pressure p_3, which acts on the underside of the servo piston.

If this pressure difference is 0, the main valve will be fully closed.
If the pressure difference is 0.2 bar (3 psi) or greater, the main valve will be fully open.
At pressure differences (p_2 - p_3) between 0.07 bar (1 psi) and 0.2 bar (3 psi), the degree of opening will be correspondingly proportional.

The port of the throttle cone (3e) is V-shaped, which provide good regulation characteristic to pilot operated main valves even at low loads.
P_3 pressure is equal to the valve outlet pressure (P_4), due to a clearance between the piston rod (3g) and the function module. The opening degree of the ICS valve is therefore controlled by the application of P_2 pressure acting on top of the servo piston, which is equal to or greater than valve outlet pressure (P_4).

$p_2 = p_4$ ~ closed
$p_2 = p_4 + 0.2$ bar (3 psi)~ fully open
$p_4 \leq p_2 \leq p_4 + 0.2$ bar (3 psi) ~ proportional degree of opening.

The maximum pressure (p_2) can act on the top of the servo piston (3b). p_2 normally corresponds to the pressure, p_1 - ICS main valve inlet pressure. Inlet pressure p_1 is led, via the drilled channels (1a, 1b, 2f, 2b (pilot), 2a, 2d) in the valve body (1) and cover (2) through the individual pilot valves and onto the top of the servo piston (3b).

The degree of opening of the individual pilot valves determines the magnitude of pressure p_2 and thus the degree of opening of the main valve. The equalisation hole (3f) in the servo piston (3b) ensures that pressure p_2 is balanced in accordance with the degree of opening of the pilot valve.

Note:
When ICS valves with 3 pilot ports are used with external pressure connector (fig. 2, pos. 61), the valve port inlet pressure will be isolated.

The ICS can be fitted with just a single screwed-in pilot valve or external pilot connection. The degree of opening of the main valve will be in accordance with the control status of the pilot valve or external pilot flow control.
ICS main valve with one pilot connection is fully closed when the pilot valve is fully closed and fully open when the pilot valve is fully open. Otherwise the degree of opening of the main valve is proportional to the degree of opening of the pilot valve.

The ICS 3 pilot version can be fitted with one, two, or three pilot valves so that up to three regulating functions are possible. If the external pilot connection is used, more functions can be added.

Function *(continued)*

In the ICS three pilot version, the pilot ports are related as follows:

- The pilot valves fitted in ports SI and SII are connected in series.
  The ICS 3 pilot operated main valve will be fully closed if just one of the series-connected pilot valves is closed. The main valve can only open if both pilot valves are open at the same time.
- The pilot valve fitted in port P is connected in parallel to the pilot valves in ports SI and SII.

The ICS valve will be fully open if the pilot valve in P is fully open, irrespective of the degree of opening of pilot valves SI and SII.
The ICS valve will be fully closed if the pilot valve in P is fully closed and at least one of the valves in SI or SII is fully closed at the same time. The relation between the pilot valves in ports SI, SII and P is shown in the table on the next page.

If the ICS is not fitted with three pilot valves, the unused port(s) must be sealed with a blanking plug. If the blanking plug is fitted as an assembled unit, A + B, the channels from the specific port will be closed. (See illustration below)

If only the top part, A, of the plug is fitted, the channels from the ports in question will be open. If the degree of opening of the ICS main valve is not to be a function of the main valve inlet pressure, or if more than three regulating functions are required, ports SI, SII or P can be fitted with a nipple for the connection of external pilot pressure. This applies to all ICS versions.

The pressure to which the external pilot line is connected will then determine pressure p_2 on top of the servo piston. The pilot valves fitted in that external pilot line will determine the main valve function. Pilot valves installed in external lines must be mounted in a type CVH housing.

Depending on the function of the pilot valves, the ICS regulating characteristic becomes:

- on / off
- proportional
- integral or
- cascade.

ICS main valves are therefore especially suitable for all forms of temperature and pressure regulating systems.

An overview of the types of pilot valves available can be found in the literature "Pilot valves for operated main valves" (AI248786497190).

On the following pages, a number of configuration examples can be found. These are only for explanatory purpose. However, by using the literature regarding pilot valves these examples are easier to comprehend.

Pilot valve port			ICS valve
SI	SII	P	
Open	Open	Closed	Open
Open	Open	Open	Open
Open	Closed	Closed	Closed
Open	Closed	Open	Open
Closed	Open	Closed	Closed
Closed	Open	Open	Open
Closed	Closed	Closed	Closed
Closed	Closed	Open	Open

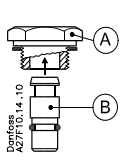

Blanking plug A + B

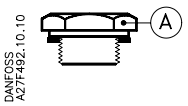

Blanking plug A

Example (ICS with 3 pilot valves)

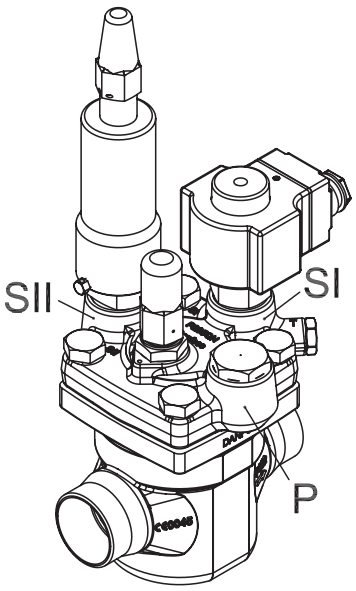

Material specification - ICS 25, 32, 40, 50, 65

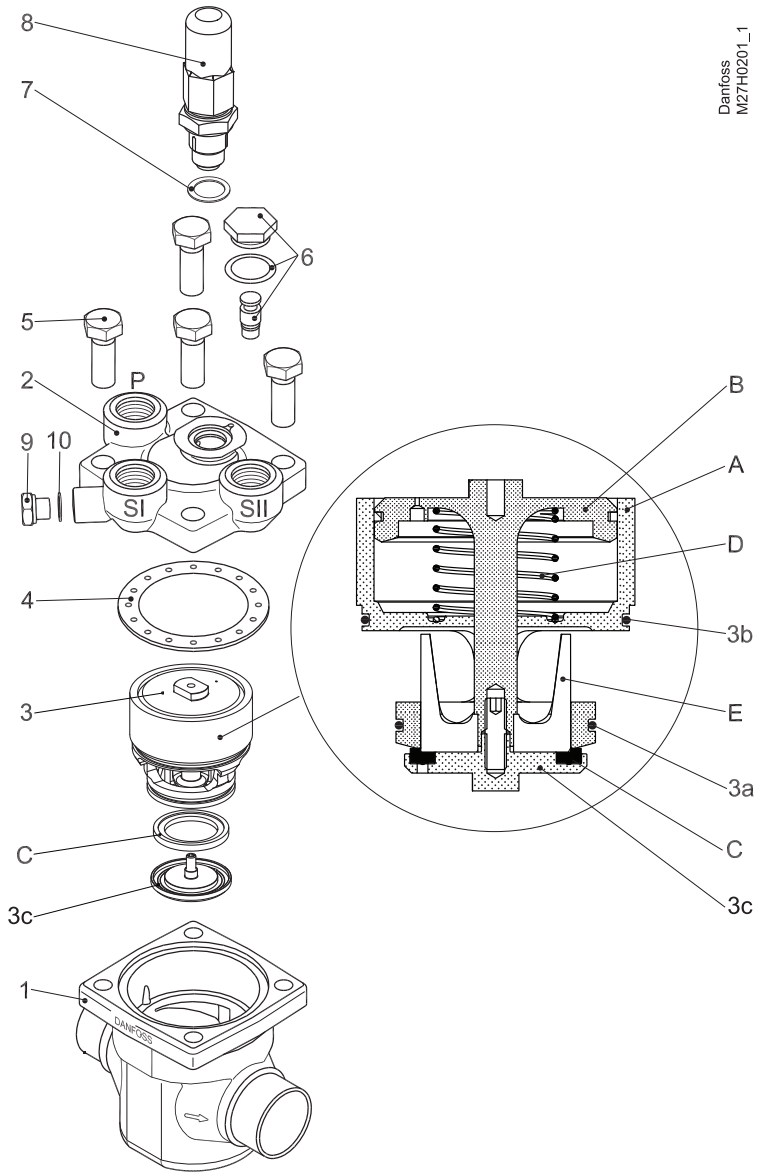

Type and size of Bolt (pos. 5)

Type	Screw
ICS 25	M12 × 30 A2-70 DIN 933
ICS 32	M14 × 35 A2-70 DIN 933
ICS 40	M14 × 40 A2-70 DIN 933
ICS 50	M16 × 40 A2-70 DIN 933
ICS 65	M16 × 50 A2-70 DIN 933

No.	Part	Material	EN	ASTM	JIS
1	Body	Low temperature steel	G20Mn5QT, EN 10213-3	LCC A352	SCPL1 G5151
2	Top cover	Low temperature steel	G20Mn5QT, EN 10213-3 P285QH+QT 10222-4	LCC A352 LF2, A350	SCPL1 G5151
3	Function module (assembled)				
3a	o-ring	Cloroprene (Neoprene)			
3b	o-ring	Cloroprene (Neoprene)			
3c	Washer plate	Steel			
A	Cylinder	Steel			
B	Piston	Steel			
C	Valve plate	PTFE			
D	Spring	Steel			
E	Cone	Steel			
4	Gasket	Fiber, non-asbestos			
5	Bolts	Stainless steel	A2-70, EN 1515-1	Grade B8 A320	A2-70, B 1054
6	Plug	Steel			
7	Gasket	Aluminium			
8	Manual operating spindle	Steel			
9	Plug	Steel			
10	Gasket	Aluminium			

Material specification - ICS 100, 125, 150

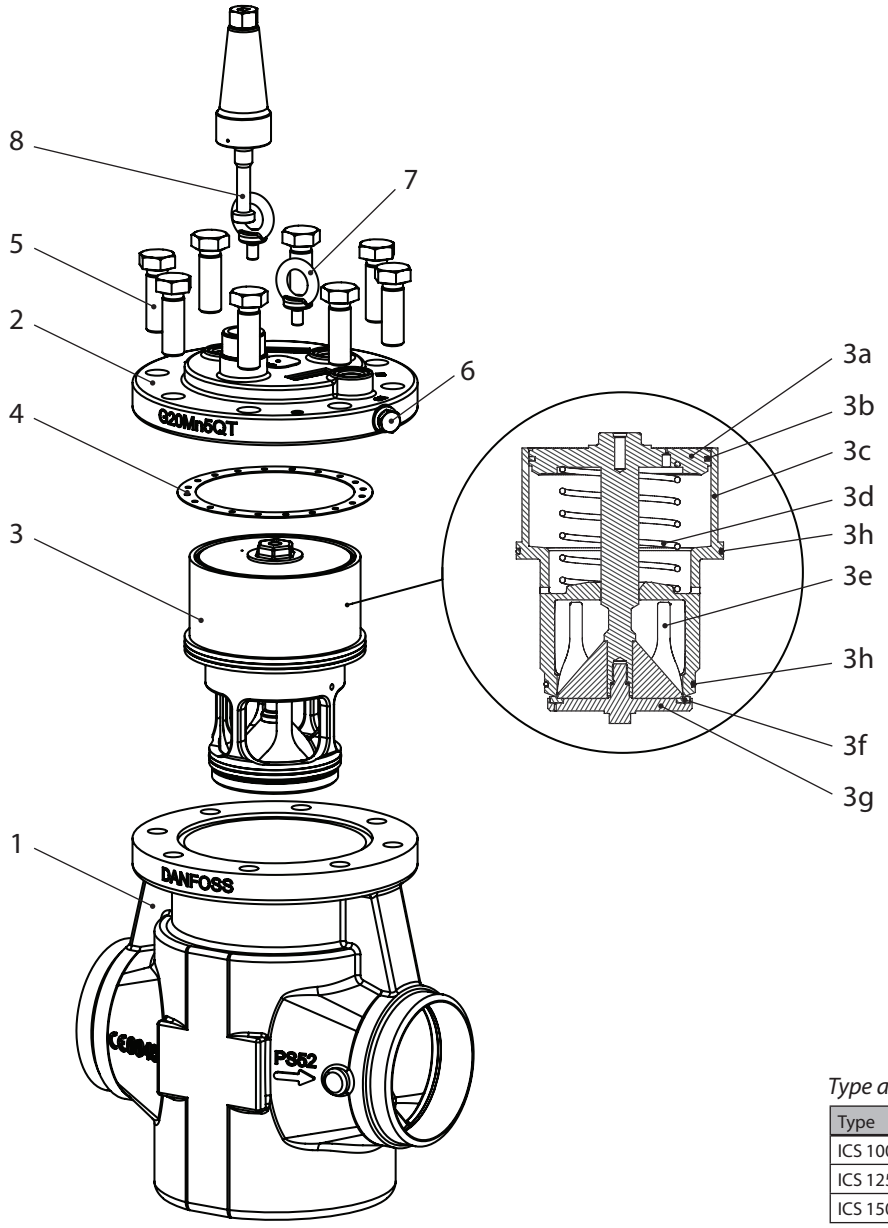

Type and size of Bolt (pos. 5)

Type	Screw
ICS 100	M20 × 60 A2-70 DIN 933
ICS 125	M20 × 60 A2-70 DIN 933
ICS 150	M20 × 70 A2-70 DIN 933

No.	Part	Material	EN	ASTM	JIS
1	Body	Low temperature steel	G20Mn5QT, EN 10213-3	LCC A352	SCPL1 G5151
2	Top cover	Low temperature steel	G20Mn5QT, EN 10213-3	LCC A352	SCPL1 G5151
3	Function module (assembled)				
3a	Piston / rod	Stainless steel / steel			
3b	Piston ring	Steel			
3c	Insert	Steel			
3d	Spring	Steel			
3e	Cone	Stainless steel / steel			
3f	Teflon plate	Teflon unfilled			
3g	Washer plate	PTFE			
3h	o-ring	Cloroprene (Neoprene)			
4	Gasket	Fiber, non-asbestos			
5	Bolts	Stainless steel	A2-70, EN 1515-1	Grade B8 A320	A2-70, B 1054
6	Plug	Steel			
7	Eye bolt	Galvanized steel			
8	Manual operating spindle	Steel			

Configuration examples

Example no. 1-1		*Products*		*Products*	
Constant pressure regulation • CVP-L (-0.66 to 7 bar g) (19.5 in. Hg to 102 psig) • CVP-M (4 to 28 bar g) (58 to 406 psig) • CVP-H (25 to 52 bar g) (363 to 754 psig)	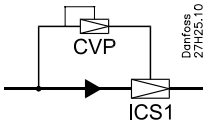	1 × ICS 1 Pilot 1 × CVP-L/M/H	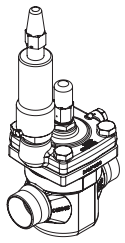	1 × ICS 3 Pilots 1 × CVP-L/M/H 2 × Blanking plugs SI: A + B SII: A	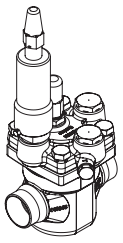

Example no. 1-2		*Products*		*Products*	
Differential pressure regulation • CVPP-L (0.66 to 7 bar g) (19.5 in. Hg to 102 psig) • CVPP-M (4 to 28 bar g) (58 to 406 psig)	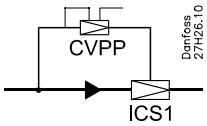	1 × ICS 1 Pilot 1 × CVPP-L/M	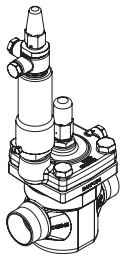	1 × ICS 3 Pilots 1 × CVPP-L/M 2 × Blanking plugs SI: A + B SII: A	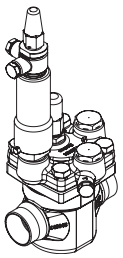

Example no. 1-3		*Products*		*Products*	
On/off regulation (solenoid valve)	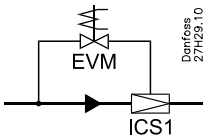	1 × ICS 1 Pilot 1 × EVM 1 × coil	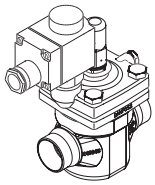	1 × ICS 3 Pilots 1 × EVM 1 × coil 2 × Blanking plugs SI: A + B SII: A	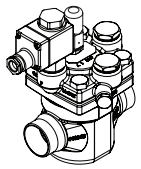

Example no. 1-4		*Products*		*Products*	
Regulation with external control pressure	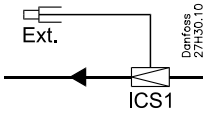	1 × ICS 1 Pilot 1 × nipple for external control pressure	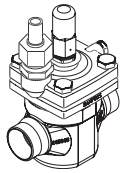	1 × ICS 3 Pilots 1 × nipple for external control pressure 2 × Blanking plugs SI: A + B SII: A	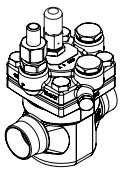

Example no. 1-5		*Products*		*Products*	
On/off regulation (solenoid valve)	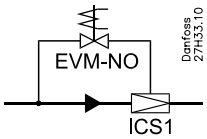	1 × ICS 1 Pilot 1 × EVM-NO (12 W coil)	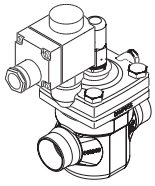	1 × ICS 3 Pilots 1 × EVM-NO (12 W coil) 2 × Blanking plugs SI: A + B SII: A	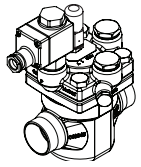

Configuration examples *(continued)*

Example no. 1-6	
Crankcase pressure regulation. (Max. suction pressure regulation) • -0.45 to 7 bar g (13.3 in. Hg to 102 psig)	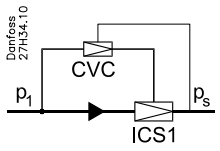

Products		*Products*	
1 × ICS 1 Pilot 1 × CVC-L	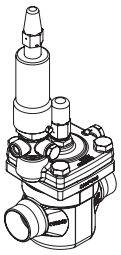	1 × ICS 3 Pilots 1 × CVC-L 2 × Blanking plugs SI: A + B SII: A	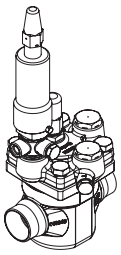

Example no. 1-7	
Electronically controlled media temperature regulation • -0.66 to 8 bar g (19.5 in. Hg to 116 psig)	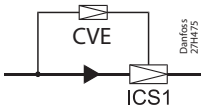

Products		*Products*	
1 × ICS 1 Pilot 1 × CVE	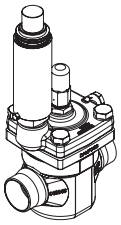	1 × ICS 3 Pilots 1 × CVE 2 × Blanking plugs SI: A + B SII: A	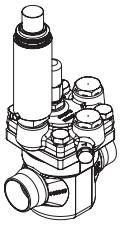

Configuration examples *(continued)*

Example no. 2-1

Constant pressure regulation combined with electrical shut off

- –0.66 to 7 bar g (19.5 in. Hg to 102 psig)

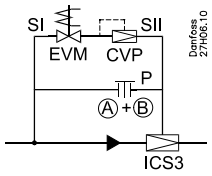

Products

1 × ICS 3 Pilots
1 × blanking plug (A + B)
1 × CVP-L
1 × EVM
1 × coil

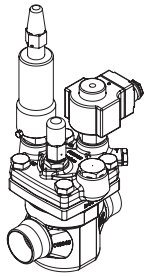

Example no. 2-2

Constant pressure regulation combined with electrical wide open

- –0.66 to 7 bar g (19.5 in. Hg to 102 psig)

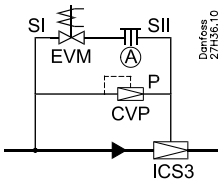

Products

1 × ICS 3 Pilots
1 × blanking plug (A)
1 × CVP-L
1 × EVM

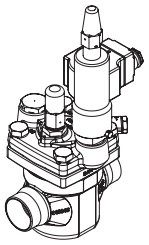

Example no. 2-3

Constant pressure regulation combined with electrical shut off and wide open

- –0.66 to 7 bar g (19.5 in. Hg to 102 psig)

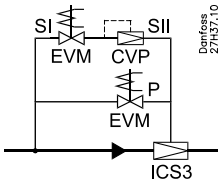

Products

1 × ICS 3 Pilots
1 × CVP-L
2 × EVM
2 × coils

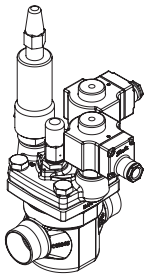

Example no. 2-4

Constant pressure regulation with change-over between two preset evaporating pressures

- –0.66 to 7 bar g (19.5 in. Hg to 102 psig)

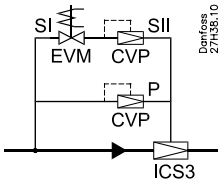

Products

1 × ICS 3 Pilots
2 × CVP-L
1 × EVM
1 × coil

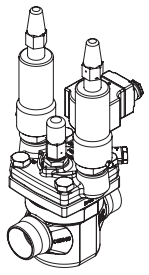

Example no. 2-5

External control pressure with electrical shut off combined with constant pressure regulation

- –0.66 to 7 bar g (19.5 in. Hg to 102 psig)

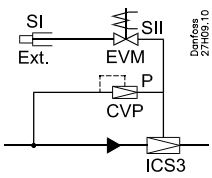

Products

1 × ICS 3 Pilots
1 × nipple for external control pressure
1 × CVP-L
1 × EVM
1 × coil

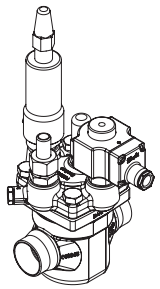

Configuration examples *(continued)*

Example no. 2-6	
Constant pressure regulation with external control pressure combined with electrical wide open • –0.66 to 7 bar g (19.5 in. Hg to 102 psig)	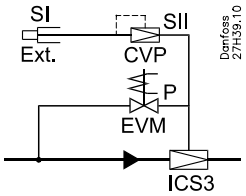

Products	
1 × ICS 3 Pilots 1 × nipple for external control pressure 1 × CVP-L 1 × EVM 1 × coil	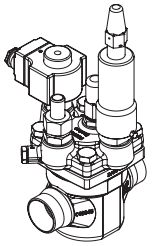

Example no. 2-7	
Constant pressure regulation with electrical shut off combined with external control pressure • –0.66 to 7 bar g (19.5 in. Hg to 102 psig)	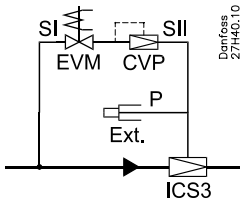

Products	
1 × ICS 3 Pilots 1 × nipple for external control pressure 1 × CVP-L 1 × EVM 1 × coil	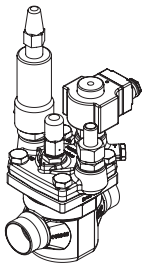

Example no. 2-8	
Solenoid valve with external control pressure for small pressure drops	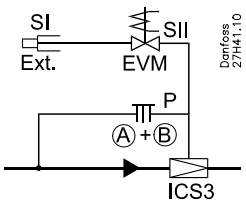

Products	
1 × ICS 3 1 × blanking plug (A + B) 1 × nipple for external control pressure 1 × EVM 1 × coil	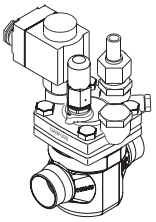

Example no. 2-9	
Differential pressure regulation combined with electrical shut off • CVPP-L (0.66 to 7 bar g) (19.5 in. Hg to 102 psig)	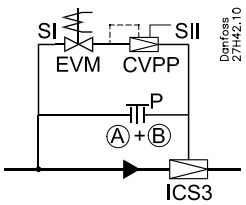

Products	
1 × ICS 3 1 × blanking plug (A + B) 1 × CVPP-L 1 × EVM 1 × coil	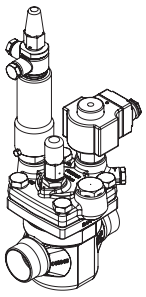

Configuration examples *(continued)*

Example no. 2-10

Differential pressure regulation combined with electrical wide open

- CVPP-L (0.66 to 7 bar g) (19.5 in. Hg to 102 psig)

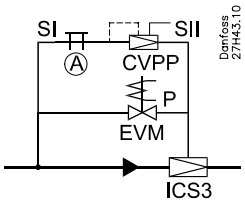

Products

1 × ICS 3 Pilots
1 × blanking plug (A)
1 × CVPP-L
1 × EVM
1 × coil

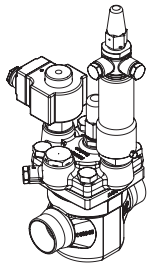

Example no. 2-11

Differential pressure regulation combined with electrical wide open and shut off

- CVPP-L (0.66 to 7 bar g) (19.5 in. Hg to 102 psig)

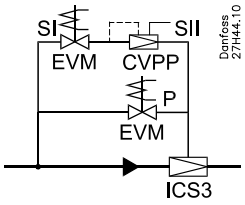

Products

1 × ICS 3 Pilots
1 × CVPP-L
2 × EVM
2 × coils

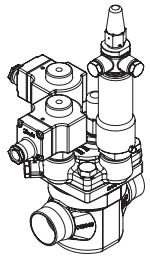

Example no. 2-12

Constant pressure regulation combined with electrical shut off

- CVP-L (-0.66 to 7 bar g) (19.5 in. Hg to 102 psig)
- CVP-M (4 to 28 bar g) (58 to 406 psig)
- CVP-H (25 to 52 bar g) (363 to 754 psig)

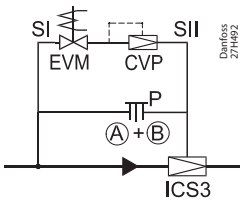

Products

1 × ICS 3 Pilots
1 × blanking plug (A + B)
1 × CVP-L/M/H
1 × EVM
1 × coil

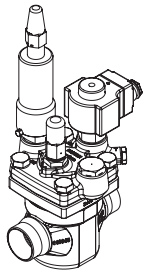

Example no. 2-13

Constant pressure regulation combined with electrical wide open

- CVP-L (-0.66 to 7 bar g) (19.5 in. Hg to 102 psig)
- CVP-M (4 to 28 bar g) (58 to 406 psig)
- CVP-H (25 to 52 bar g) (363 to 754 psig)

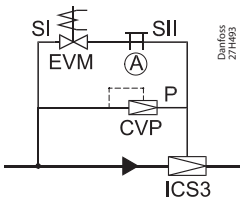

Products

1 × ICS 3 Pilots
1 × blanking plug (A)
1 × CVP-L/M/H
1 × EVM
1 × coil

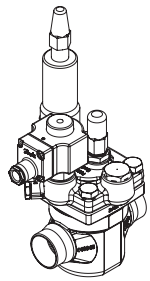

Example no. 2-14

Constant pressure regulation combined with electrical shut off and wide open

- CVP-L (-0.66 to 7 bar g) (19.5 in. Hg to 102 psig)
- CVP-M (4 to 28 bar g) (58 to 406 psig)
- CVP-H (25 to 52 bar g) (363 to 754 psig)

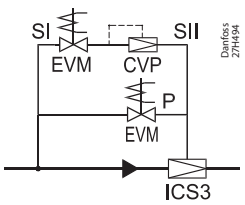

Products

1 × ICS 3 Pilots
1 × CVP-L/M/H
2 × EVM
2 × coils

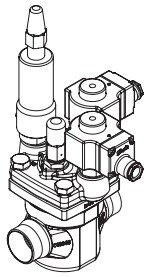

Configuration examples *(continued)*

Example no. 2-15		*Products*	
Constant pressure regulation with change-over between two preset evaporating pressures • CVP-L (-0.66 to 7 bar g) (19.5 in. Hg to 102 psig) • CVP-M (4 to 28 bar g) (58 to 406 psig) • CVP-H (25 to 52 bar g) (363 to 754 psig)	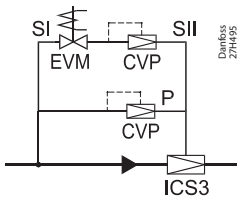	1 × ICS 3 Pilots 2 × CVP-L/M/H 1 × EVM 1 × coil	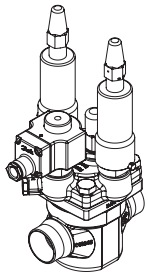

Example no. 2-16		*Products*	
Differential pressure regulation combined with electrical shut off • CVPP-L (-0.66 to 7 bar g) (19.5 in. Hg to 102 psig) • CVPP-M (4 to 28 bar g) (58 to 406 psig)	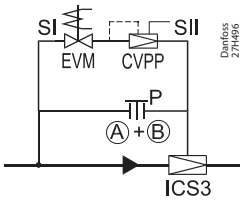	1 × ICS 3 Pilots 1 × blanking plug (A + B) 1 × CVPP-L/M 1 × EVM 1 × coil	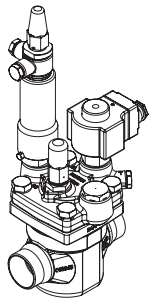

Example no. 2-17		*Products*	
Differential pressure regulation combined with electrical wide open • CVPP-L (-0.66 to 7 bar g) (19.5 in. Hg to 102 psig) • CVPP-M (4 to 28 bar g) (58 to 406 psig)	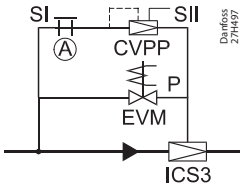	1 × ICS 3 Pilots 1 × blanking plug (A) 1 × CVPP-L/M 1 × EVM 1 × coil	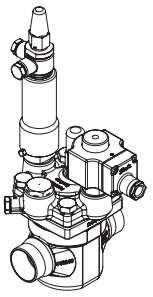

Example no. 2-18		*Products*	
Differential pressure regulation combined with electrical wide open and shut off • CVPP-L (-0.66 to 7 bar g) (19.5 in. Hg to 102 psig) • CVPP-M (4 to 28 bar g) (58 to 406 psig)	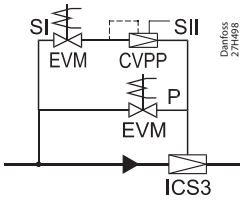	1 × ICS 3 Pilots 1 × CVPP-L/M 2 × EVM 2 × coils	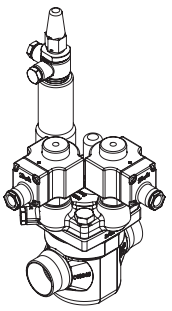

Example no. 2-19		*Products*	
Constant pressure regulation combined with electrical wide open and shut off • CVP-L (-0.66 to 7 bar g) (19.5 in. Hg to 102 psig) • CVP-M (4 to 28 bar g) (58 to 406 psig) • CVP-H (25 to 52 bar g) (363 to 754 psig)	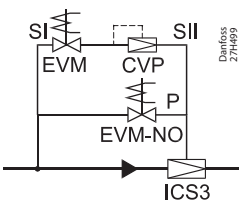	1 × ICS 3 Pilots 1 × CVP-L/M/H 1 × EVM 1 × EVM-NO (12 W coil) 2 × coils	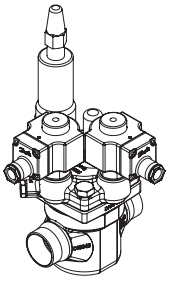

Configuration examples *(continued)*

Example no. 2-20

Crankcase pressure regulation (max. suction pressure regulation) combined with shut off

- –0.45 to 7 bar g (13.3 in. Hg to 102 psig)

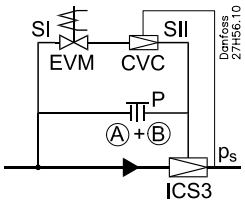

Products

1 × ICS 3 Pilots
1 × blanking plug (A + B)
1 × CVC-L
1 × EVM
1 × coil

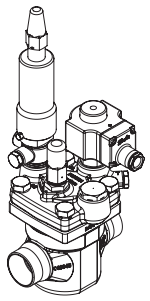

Example no. 2-21

Crankcase pressure regulation (max. suction pressure regulation) combined with evaporating pressure regulation

- –0.66 to 28 bar g (19.5 in. Hg to 406 psig).

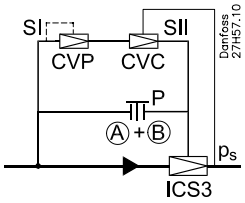

Products

1 × ICS 3 Pilots
1 × blanking plug (A + B)
1 × CVC-L/M
1 × CVP-L/M

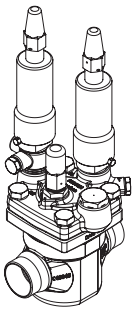

Example no. 2-22

Crankcase pressure regulation (max. suction pressure regulation) at low pressure drops across the valve

- –0.45 to 7 bar g (13.3 in. Hg to 102 psig)

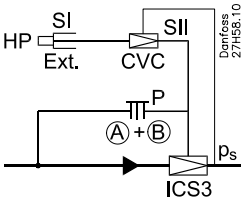

Products

1 × ICS 3 Pilots
1 × blanking plug (A + B)
1 × nipple for external control pressure
1 × CVC-L

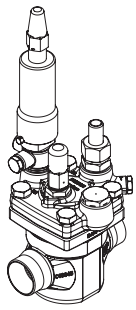

Example no. 2-23

Crankcase pressure regulation (max. suction pressure regulation) combined with constant pressure regulation and electrical shut off.

- –0.66 to 7 bar g (19.5 in. Hg to 102 psig).

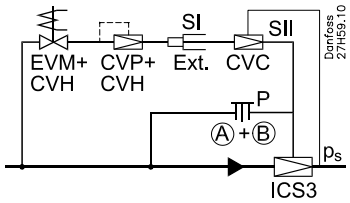

Products

1 × ICS 3 Pilots
1 × blanking plug (A + B)
1 × nipple for external control pressure
1 × CVP-L
1 × EVM
1 × coil
2 × CVH
1 × CVC-L

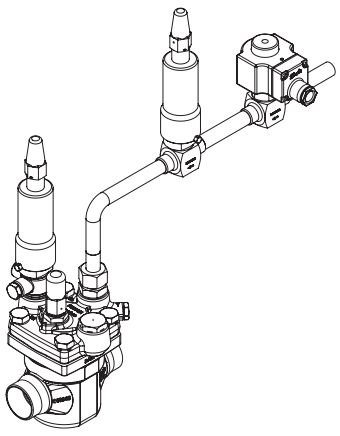

Example no. 2-24

Hot gas bypass regulation combined with electrical shut off

- –0.45 to 7 bar g (13.3 in. Hg to 102 psig)

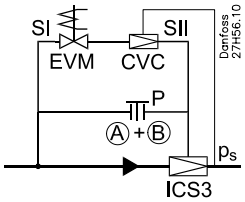

Products

1 × ICS 3 Pilots
1 × blanking plug (A + B)
1 × CVC-L
1 × EVM
1 × coil

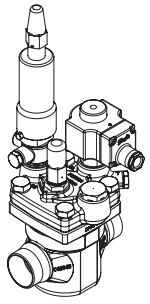

Configuration examples *(continued)*

Example no. 2-25		*Products*	
Constant pressure regulation with electrical shut off and protection against high pressure when suction line is closed • –0.66 to 28 bar g (19.5 in. Hg to 406 psig).	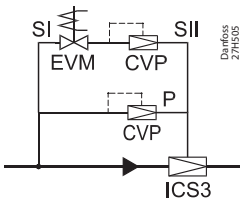	1 × ICS 3 Pilots 1 × CVP-L 1 × EVM 1 × coil 1 × CVP-M	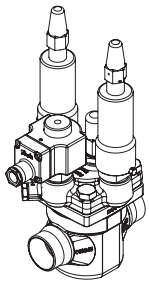

Example no. 2-26		*Products*	
Electronically controlled media temperature regulation combined with electrical shut off • –1 to 8 bar g (0 in. Hg to 116 psig).	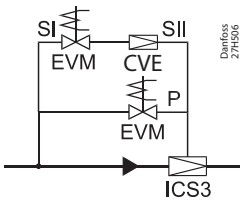	1 × ICS 3 Pilots 1 × blanking plug (A + B) 1 × CVE 1 × EVM 1 × coil	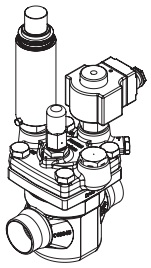

Example no. 2-27		*Products*	
Electronically controlled media temperature regulation combined with electrical shut off and wide open • –1 to 8 bar g (0 in. Hg to 116 psig).	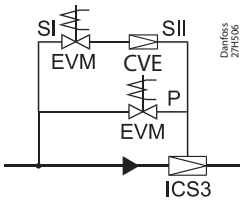	1 × ICS 3 Pilots 1 × CVE 2 × EVM 2 × coils	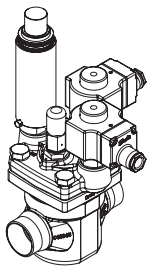

Example no. 2-28		*Products*	
Electronically controlled media temperature regulation combined with electrical shut off and changeover to constant pressure regulation • –1 to 8 bar g (0 in. Hg to 116 psig).	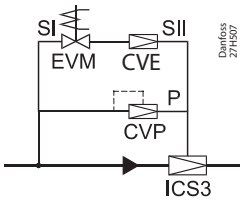	1 × ICS 3 Pilots 1 × CVQ 1 × CVP-L 1 × EVM 1 × coil	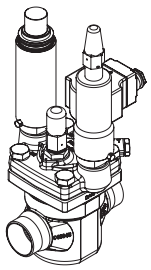

Example no. 2-29		*Products*	
Electronically controlled media temperature regulation with low evaporating pressure protection combined with wide open • –1 to 8 bar g (0 in. Hg to 116 psig).	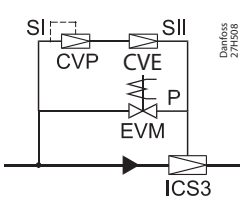	1 × ICS 3 Pilots 1 × CVE 1 × CVP-L 1 × EVM 1 × coil	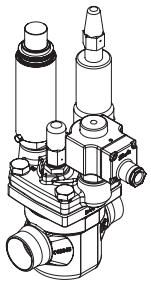

Configuration examples *(continued)*

Example no. 2-30	
Electronically controlled media temperature regulation with low evaporating pressure protection combined with changeover to constant pressure regulation • –1 to 8 bar g (0 in. Hg to 116 psig).	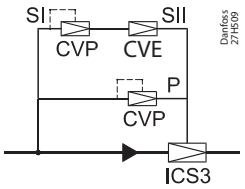

Products	
1 × ICS 3 Pilots 1 × CVE 2 × CVP-L	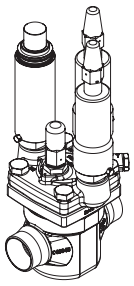

Nominal capacities

Liquid line with / without phase change

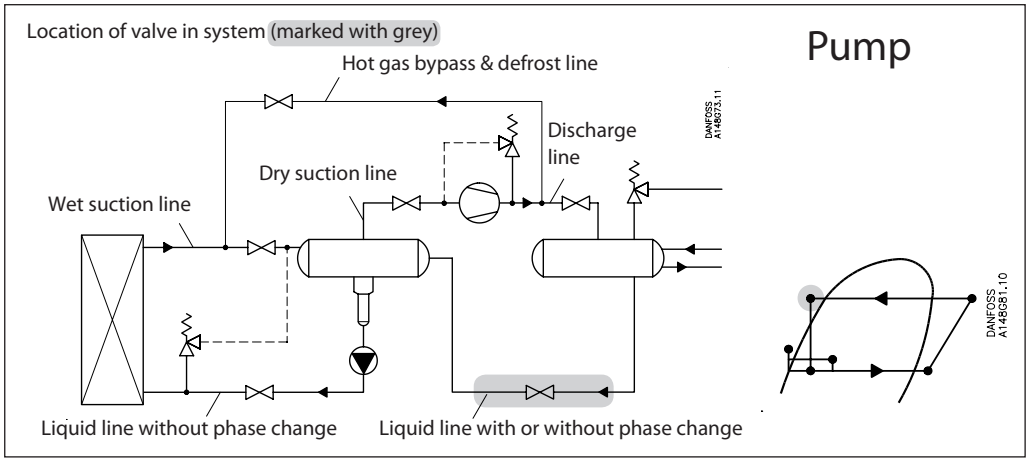

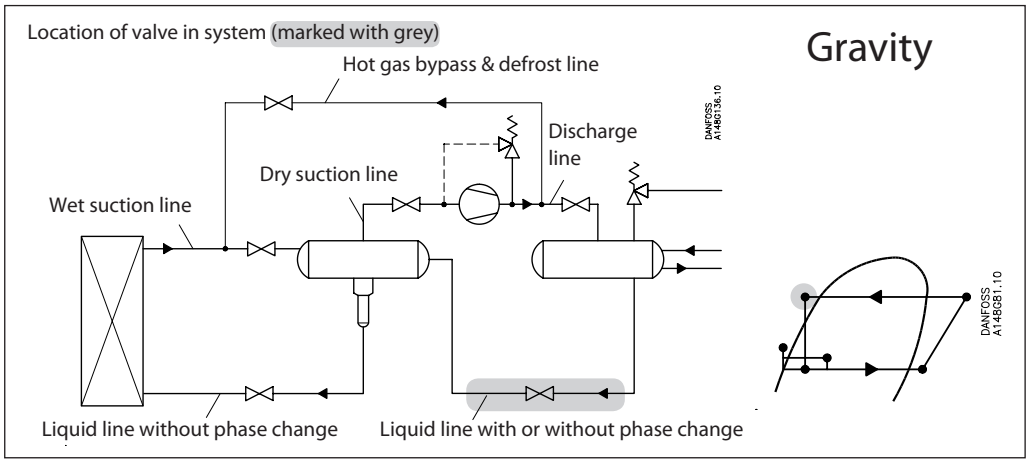

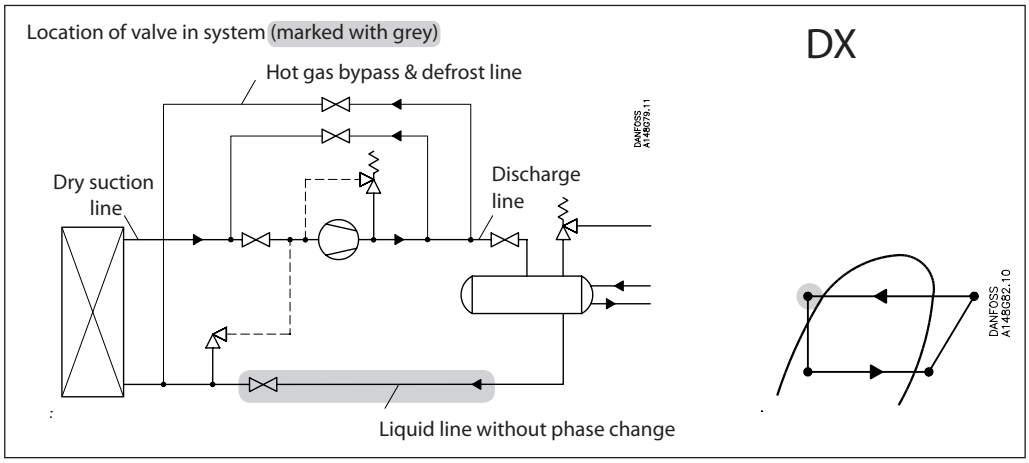

Nominal capacities

Liquid line with / without phase change

SI units

Calculation example (R 717 capacities):

Running conditions in a plant are as follows:
- T_e = -20 °C
- Q_o = 250 kW
- T_{liq} = 10 °C
- Max. Δp = 0.3 bar

The capacity table is based on nominal condition (pressure drop Δp = 0.2 bar, T_{liq} = 30 °C)

Therefore the actual capacity must be corrected to nominal condition by means of correction factors.

Correction factor for Δp 0.3 bar $f_{\Delta p} = 0.82$
Correction factor for liquid temperature $f_{Tliq} = 0.92$

$Q_n = Q_o \times f_{\Delta p} \times f_{Tliq} = 250 \times 0.82 \times 0.92 = 189$ kW

From the capacity table a ICS 25-10 with Q_n capacity 366 kW is selected.

US units

Calculation example (R 717 capacities):

Running conditions in a plant are as follows:
- T_e = -20 °F
- Q_o = 130 TR
- Liquid temperature = 50 °F
- Max. Δp = 4 psi

The capacity table is based on nominal condition (pressure drop Δp = 3 psi, T_{liq} = 90 °F)

Therefore the actual capacity must be corrected to nominal condition by means of correction factors.

Correction factor for Δp 4 psi, $f_{\Delta p} = 0.87$
Correction factor for liquid temperature $f_{Tliq} = 0.92$

$Q_n = Q_o \times f_{\Delta p} \times f_{Tliq} = 130 \times 0.87 \times 0.92 = 104$ TR

From the capacity table a ICS25-15 with Q_n capacity 175 TR is selected.

Nominal capacities

Liquid line with/without phase change

SI units

Capacity table for nominal conditions, Q_N [kW],
T_{liq} = 30 °C,
ΔP = 0.2 bar

R 717

Type	Valve body size	K_v [m³/h]	Evaporating temperature [°C]						
			-50	-40	-30	-20	-10	0	10
ICS25-5	25	1.7	169	171	174	176	178	180	181
ICS25-10		3.5	347	353	358	362	366	370	372
ICS25-15		6	595	604	613	621	628	633	638
ICS25-20		8	794	806	818	828	838	845	852
ICS25-25		11.5	1140	1158	1175	1190	1203	1216	1223
ICS32	32	17	1687	1710	1738	1760	1777	1795	1810
ICS40	40	27	2675	2720	2760	2795	2825	2850	2875
ICS50	50	44	4365	4430	4500	4550	4600	4650	4685
ICS65	65	70	6940	7050	7150	7250	7325	7400	7450
ICS80	80	85	8432	8559	8690	8797	8893	8982	9046
ICS100	100	142	14086	14299	14517	14696	14857	15005	15112
ICS125	125	207	20533	20845	21162	21424	21658	21873	22029
ICS150	150	354	35115	35647	36191	36638	37038	37406	37673

Correction factor for ΔP ($f_{\Delta P}$)

ΔP (bar)	Correction factor
0.2	1.00
0.25	0.89
0.3	0.82
0.4	0.71
0.5	0.63
0.6	0.58

Correction factor for liquid temperature (T_{liq})

Liquid temperature [°C]	Correction factor
-20	0.82
-10	0.86
0	0.88
10	0.92
20	0.96
30	1.00
40	1.04
50	1.09

US units

Capacity table for nominal conditions, Q_N [Tons of Refrigeration],
T_{liq} = 90 °F,
ΔP = 3 psi

R 717

Type	Valve body size	C_v [USgal/min]	Evaporating temperature [°F]						
			-60	-40	-20	0	20	40	60
ICS25-5	25	2	48.0	48.8	49.6	50.6	51.0	51.4	52.0
ICS25-10		4.1	99.0	100	102	104	105	106	107
ICS25-15		7	169	172	175	178	180	181	183
ICS25-20		9.3	226	230	233	237	240	242	244
ICS25-25		13.3	324	330	335	341	345	348	351
ICS32	32	20	480	488	496	503	509	514	518
ICS40	40	31	762	775	788	799	808	816	822
ICS50	50	51	1242	1262	1285	1302	1317	1330	1340
ICS65	65	81	1975	2010	2043	2070	2095	2115	2130
ICS80	80	98	2377	2416	2456	2496	2524	2546	2568
ICS100	100	165	4002	4068	4135	4202	4249	4287	4324
ICS125	125	240	5820	5916	6015	6113	6181	6235	6289
ICS150	150	410	9943	10107	10275	10443	10559	10651	10745

Correction factor for ΔP ($f_{\Delta P}$)

ΔP (psi)	Correction factor
3	1.00
4	0.87
5	0.79
6	0.72
7	0.66
8	0.62

Correction factor for liquid temperature (T_{liq})

Liquid temperature [°F]	Correction factor
-10	0.82
10	0.85
30	0.88
50	0.92
70	0.96
90	1.00
110	1.04
130	1.09

Nominal capacities

Liquid line with / without phase change

SI units

Capacity table for nominal conditions, Q_N [kW],
T_{liq} = 10 °C,
ΔP = 0.2 bar

R 744

Type	Valve body size	K_v [m³/h]	Evaporating temperature [°C]						
			-40	-30	-20	-10	0	10	20
ICS25-5	25	1.7	41.0	41.0	41.0	41.0	41.0	40.0	39.0
ICS25-10		3.5	84.0	85.0	85.0	85.0	85.0	83.0	80.0
ICS25-15		6	144	145	146	146	145	142	137
ICS25-20		8	193	194	195	195	194	190	183
ICS25-25		11.5	277	278	280	281	278	273	263
ICS32	32	17	409	412	415	415	411	403	388
ICS40	40	27	650	654	658	659	654	641	617
ICS50	50	44	1058	1065	1073	1073	1065	1044	1005
ICS65	65	70	1685	1695	1707	1708	1694	1661	1598
ICS80	80	85	2045	2058	2068	2070	2057	2015	1943
ICS100	100	142	3417	3438	3456	3458	3436	3365	3246
ICS125	125	207	4981	5011	5037	5040	5009	4906	4732
ICS150	150	354	8519	8570	8615	8620	8567	8390	8092

Correction factor for ΔP ($f_{\Delta P}$)

ΔP (bar)	Correction factor
0.2	**1.00**
0.25	0.89
0.3	0.82
0.4	0.71
0.5	0.63
0.6	0.58

Correction factor for liquid temperature (T_{liq})

Liquid temperature [°C]	Correction factor
-20	0.52
-10	0.67
0	0.91
10	**1.00**
15	1.09

US units

Capacity table for nominal conditions, Q_N [Tons of Refrigeration],
T_{liq} = 50 °F,
ΔP = 3 psi

R 744

Type	Valve body size	C_v [USgal/min]	Evaporating temperature [°F]						
			-60	-40	-20	0	20	40	60
ICS25-5	25	2	11.7	11.9	12.0	12.0	11.9	11.6	10.9
ICS25-10		4.1	24.2	24.6	24.8	24.8	24.5	23.8	22.4
ICS25-15		7	41.5	42.1	42.5	42.5	42.0	40.8	38.4
ICS25-20		9.3	55.3	56.2	56.7	56.7	56.0	54.4	51.0
ICS25-25		13.3	79.5	81.8	81.5	81.5	80.5	78.0	73.5
ICS32	32	20	118	119	120	120	119	115	109
ICS40	40	31	187	190	191	191	189	184	173
ICS50	50	51	304	309	312	312	308	299	281
ICS65	65	81	484	492	496	496	490	476	448
ICS80	80	98	582	592	596	596	589	572	539
ICS100	100	165	980	997	1004	1004	992	964	907
ICS125	125	240	1426	1450	1460	1460	1444	1402	1319
ICS150	150	410	2436	2477	2494	2494	2466	2395	2254

Correction factor for ΔP ($f_{\Delta P}$)

ΔP (psi)	Correction factor
3	**1.00**
4	0.87
5	0.79
6	0.72
7	0.66
8	0.62

Correction factor for liquid temperature (T_{liq})

Liquid temperature [°F]	Correction factor
-10	0.48
10	0.64
30	0.88
50	**1.00**

Nominal capacities

Liquid line with/without phase change

SI units

Capacity table for nominal conditions, Q_N [kW],
T_{liq} = 30 °C,
ΔP = 0.2 bar

R 134a

Type	Valve body size	K_v	Evaporating temperature [°C]						
		[m³/h]	-40	-30	-20	-10	0	10	20
ICS25-5	25	1.7	30.0	32.0	33.0	34.0	36.0	37.0	38.0
ICS25-10		3.5	62.0	65.0	68.0	71.0	74.0	77.0	79.0
ICS25-15		6	107	112	117	122	127	131	136
ICS25-20		8	142	149	156	1625	169	175	181
ICS25-25		11.5	205	214	224	233	243	251	260
ICS32	32	17	303	317	331	345	358	372	384
ICS40	40	27	481	503	526	548	569	590	610
ICS50	50	44	783	820	857	893	928	962	994
ICS65	65	70	1246	1305	1363	1420	1476	1530	1582
ICS80	80	85	1511	1585	1655	1722	1795	1858	1919
ICS100	100	142	2525	2648	2765	2877	2999	3104	3206
ICS125	125	207	3680	3861	4030	4194	4371	4525	4674
ICS150	150	354	6294	6602	6892	7173	7475	7739	7992

Correction factor for ΔP ($f_{\Delta P}$)

ΔP (bar)	Correction factor
0.2	**1.00**
0.25	0.89
0.3	0.82
0.4	0.71
0.5	0.63
0.6	0.58

Correction factor for liquid temperature (T_{liq})

Liquid temperature [°C]	Correction factor
-20	0.66
-10	0.70
0	0.76
10	0.82
20	0.90
30	**1.00**
40	1.13
50	1.29

US units

Capacity table for nominal conditions, Q_N [Tons of Refrigeration],
T_{liq} = 90 °F,
ΔP = 3 psi

R 134a

Type	Valve body size	C_v	Evaporating temperature [°F]						
		[USgal/min]	-40	-20	0	20	40	60	80
ICS25-5	25	2	8.5	9.0	9.4	9.8	10.3	10.7	11.1
ICS25-10		4.1	17.5	18.4	19.4	20.3	21.2	22.0	22.8
ICS25-15		7	30.0	31.6	33.2	34.7	36.2	37.7	39.0
ICS25-20		9.3	40.0	42.1	44.3	46.3	48.4	50.3	52.0
ICS25-25		13.3	57.4	60.6	63.6	66.5	69.5	72.3	75.0
ICS32	32	20	85	89	94	98.5	103	107	111
ICS40	40	31	135	142	149	156	163	170	176
ICS50	50	51	220	232	244	255	266	277	287
ICS65	65	81	350	369	387	405	423	440	456
ICS80	80	98	421	443	466	487	509	530	549
ICS100	100	165	709	747	784	820	857	892	924
ICS125	125	240	1031	1086	1141	1193	1247	1297	1344
ICS150	150	410	1761	1855	1949	2038	2131	2216	2296

Correction factor for ΔP ($f_{\Delta P}$)

ΔP (psi)	Correction factor
3	**1.00**
4	0.87
5	0.79
6	0.72
7	0.66
8	0.62

Correction factor for liquid temperature (T_{liq})

Liquid temperature [°F]	Correction factor
-10	0.64
10	0.68
30	0.74
50	0.81
70	0.89
90	**1.00**
110	1.15
130	1.35

Nominal capacities

Liquid line with/without phase change

SI units

Capacity table for nominal conditions, Q_N [kW],
T_{liq} = 30 °C,
ΔP = 0.2 bar

R 404A

Type	Valve body size	K_v [m³/h]	Evaporating temperature [°C]						
			-50	-40	-30	-20	-10	0	10
ICS25-5	25	1.7	19.6	21.0	22.3	23.7	25.0	26.1	27.3
ICS25-10		3.5	40.3	43.0	46.0	49.0	51.3	54.0	56.0
ICS25-15		6	69.0	74.0	79.0	84.0	88.0	92.0	96.0
ICS25-20		8	92.0	99.0	105	111	117	123	128
ICS25-25		11.5	133	142	151	160	169	177	185
ICS32	32	17	196	210	223	237	249	261	274
ICS40	40	27	311	333	354	375	396	415	432
ICS50	50	44	507	542	577	612	645	676	705
ICS65	65	70	806	863	918	973	1025	1077	1120
ICS80	80	85	979	1049	1116	1184	1246	1307	1363
ICS100	100	142	1636	1752	1864	1978	2082	2183	2277
ICS125	125	207	2385	2554	2717	2883	3035	3182	3319
ICS150	150	354	4079	4367	4647	4931	5191	5442	5675

Correction factor for ΔP ($f_{\Delta P}$)

ΔP (bar)	Correction factor
0.2	**1.00**
0.25	0.89
0.3	0.82
0.4	0.71
0.5	0.63
0.6	0.58

Correction factor for liquid temperature (T_{liq})

Liquid temperature [°C]	Correction factor
-20	0.55
-10	0.60
0	0.66
10	0.74
20	0.85
30	**1.00**
40	1.23
50	1.68

US units

Capacity table for nominal conditions, Q_N [Tons of Refrigeration],
T_{liq} = 90 °F,
ΔP = 3 psi

R 404A

Type	Valve body size	C_v [USgal/min]	Evaporating temperature [°F]						
			-60	-40	-20	0	20	40	60
ICS25-5	25	2	5.4	5.8	6.2	6.6	7.0	7.4	7.8
ICS25-10		4.1	11.0	11.9	12.8	13.7	14.5	15.3	16.0
ICS25-15		7	18.9	20.4	22.0	23.4	24.9	26.2	27.4
ICS25-20		9.3	25.2	27.2	29.2	31.3	33.0	35.0	36.5
ICS25-25		13.3	36.1	39.1	42.0	45.0	47.6	50.0	52.5
ICS32	32	20	53.5	57.8	62.0	66.4	70.4	74.0	77.6
ICS40	40	31	85.0	92.0	99.0	106	112	118	123
ICS50	50	51	138	150	161	172	182	192	201
ICS65	65	81	220	238	256	274	290	306	320
ICS80	80	98	265	287	308	329	348	367	385
ICS100	100	165	446	483	518	554	587	619	648
ICS125	125	240	649	702	754	806	853	900	942
ICS150	150	410	1109	1199	1288	1377	1458	1537	1609

Correction factor for ΔP ($f_{\Delta P}$)

ΔP (psi)	Correction factor
3	**1.00**
4	0.87
5	0.79
6	0.72
7	0.66
8	0.62

Correction factor for liquid temperature (T_{liq})

Liquid temperature [°F]	Correction factor
-10	0.52
10	0.57
30	0.63
50	0.72
70	0.83
90	**1.00**
110	1.29
130	1.92

Nominal capacities

Liquid line with/without phase change

SI units

Capacity table for nominal conditions, Q_N [kW],
T_{liq} = 30 °C,
ΔP = 0.2 bar

R 22

Type	Valve body size	K_v [m³/h]	Evaporating temperature [°C]						
			-50	-40	-30	-20	-10	0	10
ICS25-5	25	1.7	33.7	34.8	35.8	36.8	37.8	38.6	39.4
ICS25-10		3.5	69.3	71.7	73.8	75.8	77.8	79.6	81.2
ICS25-15		6	119	123	127	130	133	136	139
ICS25-20		8	158	164	169	173	178	182	186
ICS25-25		11.5	228	235	242	249	255	261	267
ICS32	32	17	337	348	358	368	378	386	394
ICS40	40	27	535	553	569	585	600	614	626
ICS50	50	44	871	901	928	953	977	1000	1021
ICS65	65	70	1386	1433	1476	1516	1555	1591	1624
ICS80	80	85	1684	1741	1792	1841	1888	1931	1972
ICS100	100	142	2813	2908	2994	3075	3154	3226	3294
ICS125	125	207	4100	4239	4365	4482	4598	4703	4802
ICS150	150	354	7012	7249	7465	7665	7864	8042	8212

Correction factor for ΔP ($f_{\Delta P}$)

ΔP (bar)	Correction factor
0.2	**1.00**
0.25	0.89
0.3	0.82
0.4	0.71
0.5	0.63
0.6	0.58

Correction factor for liquid temperature (T_{liq})

Liquid temperature [°C]	Correction factor
-20	0.71
-10	0.75
0	0.80
10	0.86
20	0.92
30	**1.00**
40	1.09
50	1.22

US units

Capacity table for nominal conditions, Q_N [Tons of Refrigeration],
T_{liq} = 90 °F,
ΔP = 3 psi

R 22

Type	Valve body size	C_v [USgal/min]	Evaporating temperature [°F]						
			-60	-40	-20	0	20	40	60
ICS25-5	25	2	9.5	9.8	10.1	10.5	10.7	11.0	11.3
ICS25-10		4.1	19.5	20.2	20.9	21.5	22.1	22.7	23.2
ICS25-15		7	33.5	34.6	35.9	37.0	38.0	39.0	39.8
ICS25-20		9.3	44.5	46.2	47.8	49.2	50.6	52.0	53.0
ICS25-25		13.3	64.0	66.4	68.6	71.0	73.0	75.0	76.0
ICS32	32	20	95.0	98.0	101	105	108	110	112
ICS40	40	31	151	156	161	166	171	175	179
ICS50	50	51	245	254	263	271	279	285	291
ICS65	65	81	390	404	418	431	443	454	464
ICS80	80	98	470	486	502	519	533	546	558
ICS100	100	165	791	818	846	874	897	920	939
ICS125	125	240	1150	1190	1230	1271	1305	1338	1366
ICS150	150	410	1965	2033	2102	2171	2230	2286	2333

Correction factor for ΔP ($f_{\Delta P}$)

ΔP (psi)	Correction factor
3	**1.00**
4	0.87
5	0.79
6	0.72
7	0.66
8	0.62

Correction factor for liquid temperature (T_{liq})

Liquid temperature [°F]	Correction factor
-10	0.73
10	0.77
30	0.82
50	0.87
70	0.93
90	**1.00**
110	1.09
130	1.20

Nominal capacities

Liquid line without phase change

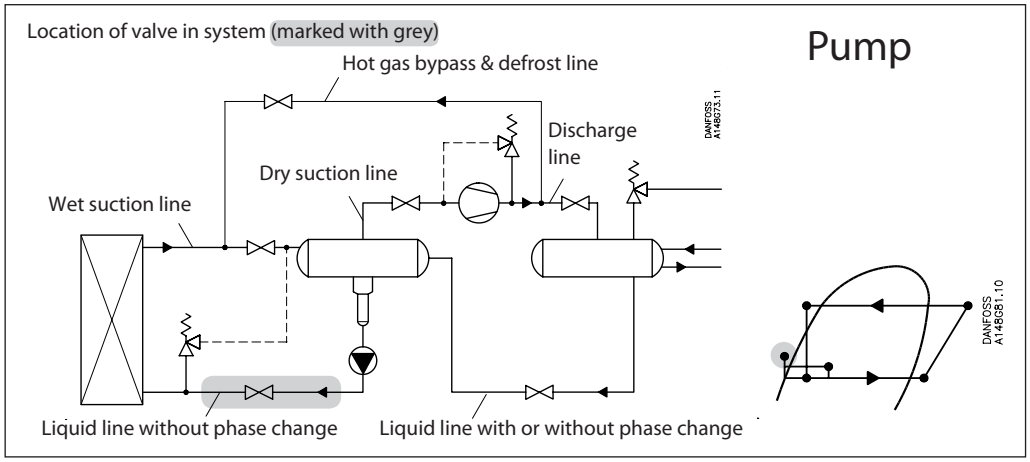

SI units

Calculation example (R 717 capacities):

Running conditions in a plant are as follows:

T_e = -20 °C
Q_o = 180 kW
Circulation rate = 3
Max. Δp = 0.3 bar

The capacity table is based on nominal condition (pressure drop Δp = 0.2 bar, circulation rate = 4)

Therefore the actual capacity must be corrected to nominal condition by means of correction factors.

Correction factor for Δp 0.3 bar $f_{\Delta p}$ = 0.82
Correction factor for circulation rate f_{rec} = 0.75

$Q_n = Q_o \times f_{\Delta p} \times f_{rec} = 180 \times 0.82 \times 0.75 = 111$ kW

From the capacity table a ICS 25-10 with Q_n capacity 117 kW is selected.

US units

Calculation example (R 717 capacities):

Running conditions in a plant are as follows:

T_e = -20 °F
Q_o = 130 TR
Circulation rate = 3
Max. Δp = 4 psi

The capacity table is based on nominal condition (pressure drop Δp = 3 psi, circulation rate = 4)

Therefore the actual capacity must be corrected to nominal condition by means of correction factors.

Correction factor for Δp 4 psi, $f_{\Delta p}$ = 0.87
Correction factor for circulation rate f_{rec} = 0.75

$Q_n = Q_o \times f_{\Delta p} \times f_{rec} = 130 \times 0.87 \times 0.75 = 85$ TR

From the capacity table a ICS 25 with Q_n capacity 114 TR is selected.

Nominal capacities

Liquid line without phase change

SI units

Capacity table for nominal conditions, Q_N [kW], circulation rate = 4, ΔP = 0.2 bar

R 717

Type	Valve body size	K_v [m³/h]	Evaporating temperature [°C]							
			-50	-40	-30	-20	-10	0	10	20
ICS25-5	25	1.7	63.0	61.0	59.0	56.6	55.0	52.5	50.3	48.0
ICS25-10		3.5	128	124	121	117	112	108	104	99.0
ICS25-15		6	219	213	207	200	193	185	178	169
ICS25-20		8	292	284	276	266	257	247	237	226
ICS25-25		11.5	419	408	396	383	369	355	340	325
ICS32	32	17	620	603	585	566	546	525	503	480
ICS40	40	27	985	959	930	900	868	833	798	761
ICS50	50	44	1605	1560	1515	1465	1413	1360	1300	1242
ICS65	65	70	2550	2485	2410	2330	2248	2160	2070	1976
ICS80	80	85	3106	3020	2932	2832	2732	2624	2516	2400
ICS100	100	142	5190	5045	4898	4730	4563	4383	4204	4009
ICS125	125	207	7565	7354	7140	6896	6652	6390	6128	5844
ICS150	150	354	12938	12576	12210	11793	11376	10928	10479	9994

Correction factor for ΔP ($f_{\Delta P}$)

ΔP (bar)	Correction factor
0.2	**1.00**
0.25	0.89
0.3	0.82
0.4	0.71
0.5	0.63
0.6	0.58

Correction factor for circulation rate (f_{rec})

Circulation rate	Correction factor
2	0.5
3	0.75
4	**1**
6	1.5
8	2
10	2.5

US units

Capacity table for nominal conditions, Q_N [Tons of Refrigeration], circulation rate = 4, ΔP = 3 psi

R 717

Type	Valve body size	C_v [USgal/min]	Evaporating temperature [°F]							
			-60	-40	-20	0	20	40	60	80
ICS25-5	25	2	18.0	17.4	16.9	16.2	15.6	14.9	14.2	13.4
ICS25-10		4.1	37.0	35.9	34.7	33.4	32.0	30.6	29.6	27.6
ICS25-15		7	63.4	61.5	59.4	57.3	55.0	52.5	50.0	47.3
ICS25-20		9.3	84.5	82.0	79.3	76.3	73.3	70.0	66.6	63.0
ICS25-25		13.3	122	118	114	110	105	102	95.7	91.0
ICS32	32	20	180	174	169	162	156	149	142	134
ICS40	40	31	285	276	267	258	247	236	225	213
ICS50	50	51	465	451	436	420	403	385	366	347
ICS65	65	81	740	717	694	668	641	613	583	552
ICS80	80	98	891	863	835	804	771	738	703	664
ICS100	100	165	1499	1453	1406	1353	1298	1243	1183	1118
ICS125	125	240	2181	2113	2045	1968	1889	1808	1721	1627
ICS150	150	410	3726	3609	3493	3363	3226	3088	2941	2779

Correction factor for ΔP ($f_{\Delta P}$)

ΔP (psi)	Correction factor
3	**1.00**
4	0.87
5	0.79
6	0.72
7	0.66
8	0.62

Correction factor for circulation rate (f_{rec})

Circulation rate	Correction factor
2	0.5
3	0.75
4	**1**
6	1.5
8	2
10	2.5

Nominal capacities

Liquid line without phase change

SI units

Capacity table for nominal conditions, Q_N [kW], circulation rate = 4, ΔP = 0.2 bar

R 744

Type	Valve body size	K_v [m³/h]	Evaporating temperature [°C]							
			-50	-40	-30	-20	-10	0	10	20
ICS25-5	25	1.7	19.0	18.0	16.6	15.2	13.6	12.0	9.8	7.1
ICS25-10		3.5	39.3	37.0	34.2	31.3	28.0	24.4	20.0	14.7
ICS25-15		6	68.0	63.0	59.0	54.0	48.0	42.0	36.0	25.0
ICS25-20		8	90.0	85.0	78.0	72.0	64.0	56.0	46.0	34.0
ICS25-25		11.5	129	121	112	103	92.0	80.0	66.0	48.0
ICS32	32	17	191	179	166	152	136	118	98	72
ICS40	40	27	303	285	264	241	216	188	155	113
ICS50	50	44	494	464	430	393	352	306	252	185
ICS65	65	70	787	738	685	626	560	487	401	294
ICS80	80	85	955	897	831	761	680	593	490	357
ICS100	100	142	1596	1499	1388	1271	1136	991	819	596
ICS125	125	207	2326	2185	2023	1853	1656	1444	1194	869
ICS150	150	354	3978	3736	3460	3170	2832	2470	2043	1486

Correction factor for ΔP ($f_{\Delta P}$)

ΔP (bar)	Correction factor
0.2	**1.00**
0.25	0.89
0.3	0.82
0.4	0.71
0.5	0.63
0.6	0.58

Correction factor for circulation rate (f_{rec})

Circulation rate	Correction factor
2	0.5
3	0.75
4	**1**
6	1.5
8	2
10	2.5

US units

Capacity table for nominal conditions, Q_N [Tons of Refrigeration], circulation rate = 4, ΔP = 3 psi

R 744

Type	Valve body size	C_v [USgal/min]	Evaporating temperature [°F]							
			-60	-40	-20	0	20	40	60	80
ICS25-5	25	2	5.6	5.8	4.8	4.3	3.8	3.2	2.4	1.4
ICS25-10		4.1	11.4	10.7	9.8	8.8	7.8	6.5	5.0	2.8
ICS25-15		7	19.6	18.3	16.8	15.2	13.3	11.2	8.6	4.8
ICS25-20		9.3	26.1	24.4	22.4	20.2	17.7	14.9	11.4	6.3
ICS25-25		13.3	37.6	35.0	32.2	29.0	25.5	21.4	16.4	9.1
ICS32	32	20	55.5	51.8	47.6	43.0	37.7	31.6	24.2	13.5
ICS40	40	31	88.0	82.0	75.5	68.0	60.0	50.2	38.5	21.4
ICS50	50	51	144	134	123	111	98.0	82.0	62.7	35.0
ICS65	65	81	229	213	196	177	155	130	100	55.4
ICS80	80	98	275	260	236	213	187	157	120	67
ICS100	100	165	463	438	397	358	315	264	202	113
ICS125	125	240	674	637	578	521	458	384	294	164
ICS150	150	410	1152	1087	987	889	783	656	502	281

Correction factor for ΔP ($f_{\Delta P}$)

ΔP (psi)	Correction factor
3	**1.00**
4	0.87
5	0.79
6	0.72
7	0.66
8	0.62

Correction factor for circulation rate (f_{rec})

Circulation rate	Correction factor
2	0.5
3	0.75
4	**1**
6	1.5
8	2
10	2.5

Nominal capacities

Liquid line without phase change

SI units

Capacity table for nominal conditions, Q_N [kW], circulation rate = 4, ΔP = 0.2 bar

R 134a

Type	Valve body size	K_v	Evaporating temperature [°C]						
		[m³/h]	-40	-30	-20	-10	0	10	20
ICS25-5	25	1.7	14.0	13.5	13.0	12.4	11.9	11.2	10.6
ICS25-10		3.5	28.9	27.8	26.8	25.6	24.4	23.2	21.8
ICS25-15		6	49.5	47.7	45.9	43.9	41.8	39.7	37.4
ICS25-20		8	65.9	63.5	61.1	58.5	55.8	52.9	49.8
ICS25-25		11.5	94.8	91.3	87.9	84.1	80.2	76.1	71.6
ICS32	32	17	140	135	130	124	119	112	106
ICS40	40	27	223	214	206	197	188	179	168
ICS50	50	44	363	349	336	322	307	291	274
ICS65	65	70	577	556	535	512	488	463	436
ICS80	80	85	701	675	650	621	593	562	529
ICS100	100	142	1171	1127	1085	1038	991	939	885
ICS125	125	207	1707	1643	1582	1513	1444	1369	1289
ICS150	150	354	2919	2810	2706	2587	2470	2341	2205

Correction factor for ΔP ($f_{\Delta P}$)

ΔP (bar)	Correction factor
0.2	**1.00**
0.25	0.89
0.3	0.82
0.4	0.71
0.5	0.63
0.6	0.58

Correction factor for circulation rate (f_{rec})

Circulation rate	Correction factor
2	0.5
3	0.75
4	**1**
6	1.5
8	2
10	2.5

US units

Capacity table for nominal conditions, Q_N [Tons of Refrigeration], circulation rate = 4, ΔP = 3 psi

R 134a

Type	Valve body size	C_v	Evaporating temperature [°F]						
		[USgal/min]	-40	-20	0	20	40	60	80
ICS25-5	25	2	4.1	4.0	3.8	3.6	3.4	3.2	3.0
ICS25-10		4.1	8.5	8.1	7.7	7.4	7.0	6.6	6.1
ICS25-15		7	14.4	13.8	13.2	12.6	11.9	11.2	10.4
ICS25-20		9.3	19.2	18.4	17.6	16.7	15.8	14.9	13.8
ICS25-25		13.3	27.4	26.3	25.1	23.9	22.7	21.3	19.8
ICS32	32	20	41.2	39.5	37.8	35.9	34.1	32.0	29.8
ICS40	40	31	63.9	61.2	58.6	55.7	52.8	49.6	46.1
ICS50	50	51	105	101	96.3	91.6	86.9	81.5	75.9
ICS65	65	81	167	160	153	146	138	130	121
ICS80	80	98	202	194	185	176	167	157	146
ICS100	100	165	340	326	312	297	281	264	246
ICS125	125	240	495	475	453	432	409	384	357
ICS150	150	410	845	811	774	737	698	657	611

Correction factor for ΔP ($f_{\Delta P}$)

ΔP (psi)	Correction factor
3	**1.00**
4	0.87
5	0.79
6	0.72
7	0.66
8	0.62

Correction factor for circulation rate (f_{rec})

Circulation rate	Correction factor
2	0.5
3	0.75
4	**1**
6	1.5
8	2
10	2.5

Nominal capacities

Liquid line without phase change

SI units

Capacity table for nominal conditions, Q_N [kW], circulation rate = 4, ΔP = 0.2 bar

R 404A

Type	Valve body size	K_v [m³/h]	Evaporating temperature [°C]							
			-50	-40	-30	-20	-10	0	10	20
ICS25-5	25	1.7	12.4	12.0	11.3	10.7	10.0	9.5	9.0	8.1
ICS25-10		3.5	25.4	24.4	23.2	22.0	21.0	19.7	18.2	17.0
ICS25-15		6	44.0	42.0	40.0	38.0	36.0	34.0	31.0	29.0
ICS25-20		8	58.0	56.0	53.0	51.0	48.0	45.0	42.0	38.0
ICS25-25		11.5	84.0	80.0	76.0	73.0	69.0	65.0	60.0	55.0
ICS32	32	17	124	119	113	107	102	95.0	89.0	81.0
ICS40	40	27	196	189	179	170	161	151	141	129
ICS50	50	44	320	307	291	277	263	247	229	210
ICS65	65	70	509	488	463	441	418	393	365	334
ICS80	80	85	619	594	564	537	508	478	444	407
ICS100	100	142	1034	993	942	897	849	798	742	680
ICS125	125	207	1507	1448	1373	1307	1237	1163	1081	991
ICS150	150	354	2578	2475	2347	2235	2116	1989	1849	1694

Correction factor for ΔP ($f_{\Delta P}$)

ΔP (bar)	Correction factor
0.2	**1.00**
0.25	0.89
0.3	0.82
0.4	0.71
0.5	0.63
0.6	0.58

Correction factor for circulation rate (f_{rec})

Circulation rate	Correction factor
2	0.5
3	0.75
4	**1**
6	1.5
8	2
10	2.5

US units

Capacity table for nominal conditions, Q_N [Tons of Refrigeration], circulation rate = 4, ΔP = 3 psi

R 404A

Type	Valve body size	C_v [USgal/min]	Evaporating temperature [°F]							
			-60	-40	-20	0	20	40	60	80
ICS25-5	25	2	3.6	3.5	3.2	3.0	2.9	2.7	2.4	2.2
ICS25-10		4.1	7.4	7.0	6.7	6.3	5.9	5.5	5.0	4.5
ICS25-15		7	12.5	12.1	11.4	10.8	10.1	9.4	8.6	7.7
ICS25-20		9.3	16.9	16.1	15.2	14.4	13.5	12.6	11.5	10.3
ICS25-25		13.3	24.2	23.2	21.9	20.7	19.4	18.0	16.5	14.7
ICS32	32	20	35.8	34.2	32.3	30.6	28.8	26.7	24.4	21.8
ICS40	40	31	57.0	54.4	51.3	48.6	45.6	42.5	38.8	34.6
ICS50	50	51	93.0	88.6	84.0	79.0	74.4	69.0	63.0	56.5
ICS65	65	81	147	141	133	126	118	110	101	90.0
ICS80	80	98	177	170	160	151	142	132	121	108
ICS100	100	165	299	286	270	255	240	223	203	182
ICS125	125	240	435	416	392	370	348	324	295	265
ICS150	150	410	742	711	670	633	595	554	505	453

Correction factor for ΔP ($f_{\Delta P}$)

ΔP (psi)	Correction factor
3	**1.00**
4	0.87
5	0.79
6	0.72
7	0.66
8	0.62

Correction factor for circulation rate (f_{rec})

Circulation rate	Correction factor
2	0.5
3	0.75
4	**1**
6	1.5
8	2
10	2.5

Nominal capacities

Liquid line without phase change

SI units

Capacity table for nominal conditions, Q_N [kW], circulation rate = 4, ΔP = 0.2 bar

R 22

Type	Valve body size	K_v [m³/h]	Evaporating temperature [°C]							
			-50	-40	-30	-20	-10	0	10	20
ICS25-5	25	1.7	15.1	14.6	14.1	13.5	12.9	12.3	11.6	10.9
ICS25-10		3.5	31.2	30.1	29.0	27.9	26.6	25.3	24.0	22.5
ICS25-15		6	53.4	51.6	49.7	47.7	45.6	43.4	41.1	38.6
ICS25-20		8	71.2	68.8	66.3	63.7	60.8	57.8	54.7	51.4
ICS25-25		11.5	102	98.9	95.3	91.5	87.4	83.1	78.7	73.9
ICS32	32	17	151	146	141	135	129	123	116	109
ICS40	40	27	240	232	224	215	205	195	185	174
ICS50	50	44	392	378	365	350	334	318	301	283
ICS65	65	70	623	602	580	557	532	506	479	450
ICS80	80	85	756	731	705	676	646	614	582	546
ICS100	100	142	1263	1221	1177	1130	1079	1027	971	913
ICS125	125	207	1841	1779	1716	1647	1572	1496	1416	1330
ICS150	150	354	3148	3043	2935	2816	2689	2559	2422	2275

Correction factor for ΔP ($f_{\Delta P}$)

ΔP (bar)	Correction factor
0.2	**1.00**
0.25	0.89
0.3	0.82
0.4	0.71
0.5	0.63
0.6	0.58

Correction factor for circulation rate (f_{rec})

Circulation rate	Correction factor
2	0.5
3	0.75
4	**1**
6	1.5
8	2
10	2.5

US units

Capacity table for nominal conditions, Q_N [Tons of Refrigeration], circulation rate = 4, ΔP = 3 psi

R 22

Type	Valve body size	C_v [USgal/min]	Evaporating temperature [°F]							
			-60	-40	-20	0	20	40	60	80
ICS25-5	25	2	4.4	4.2	4.1	3.9	3.7	3.5	3.2	3.0
ICS25-10		4.1	9.0	8.7	8.3	8.0	7.6	7.1	6.7	6.2
ICS25-15		7	15.5	14.9	14.3	13.6	13.0	12.2	11.5	10.6
ICS25-20		9.3	20.6	19.9	19.1	18.2	17.3	16.3	15.3	14.2
ICS25-25		13.3	29.7	28.6	27.4	26.2	24.9	23.5	22.0	20.4
ICS32	32	20	44.0	42.2	40.5	38.7	36.8	34.6	32.5	30.2
ICS40	40	31	70.0	67.0	64.3	61.4	58.3	55.0	51.6	47.8
ICS50	50	51	114	109	105	100	95.0	90.0	84.0	78.0
ICS65	65	81	181	174	167	159	151	143	134	124
ICS80	80	98	218	209	201	192	182	172	161	149
ICS100	100	165	366	352	338	323	307	289	271	251
ICS125	125	240	533	512	492	470	446	421	394	365
ICS150	150	410	910	875	841	802	763	719	673	624

Correction factor for ΔP ($f_{\Delta P}$)

ΔP (psi)	Correction factor
3	**1.00**
4	0.87
5	0.79
6	0.72
7	0.66
8	0.62

Correction factor for circulation rate (f_{rec})

Circulation rate	Correction factor
2	0.5
3	0.75
4	**1**
6	1.5
8	2
10	2.5

Nominal capacities

Wet suction line

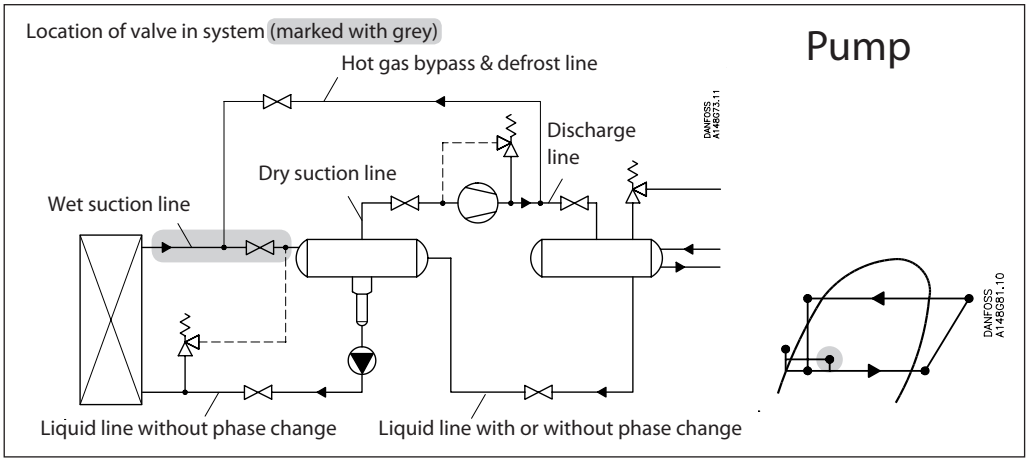

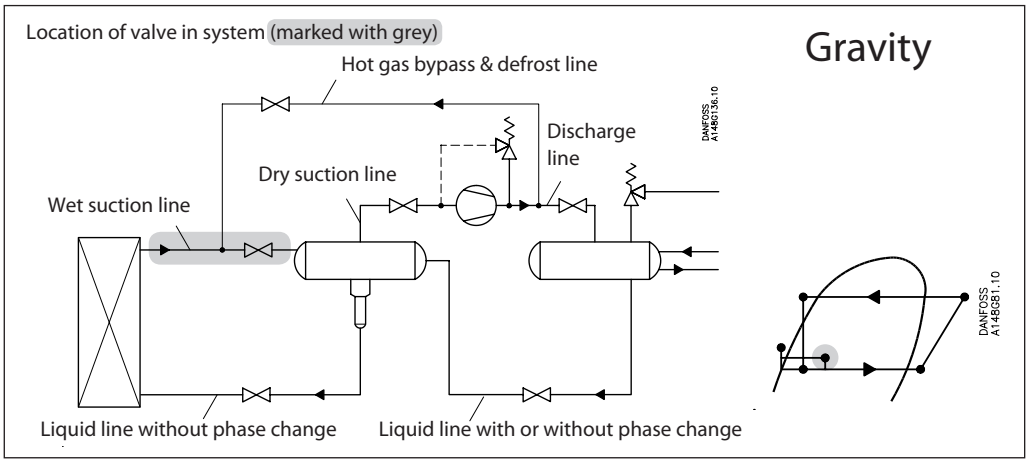

Nominal capacities

Wet suction line

SI units

Calculation example (R 717 capacities):

An application has following running conditions:

T_e = -20 °C
Q_o = 80 kW
Circulation rate = 3
Max. Δp = 0.3 bar

The capacity table is based on nominal condition (pressure drop Δp = 0.2 bar, circulation rate = 4)

Therefore the actual capacity must be corrected to nominal condition by means of correction factors.

Correction factor for Δp 0.3 bar $f_{\Delta p} = 0.82$
Correction factor for circulation rate $f_{rec} = 0.9$

$Q_n = Q_o \times f_{\Delta p} \times f_{rec} = 80 \times 0.82 \times 0.9 = 59$ kW

From the capacity table a ICS 32 with Q_n capacity 60 kW is selected.

US units

Calculation example (R 717 capacities):

An application has following running conditions:

T_e = -20 °F
Q_o = 8 TR
Circulation rate = 3
Max. Δp = 4 psi

The capacity table is based on nominal condition (pressure drop Δp = 3 psi, circulation rate = 4)

Therefore the actual capacity must be corrected to nominal condition by means of correction factors.

Correction factor for Δp 4 psi, $f_{\Delta p} = 0.87$
Correction factor for circulation rate $f_{rec} = 0.9$

$Q_n = Q_o \times f_{\Delta p} \times f_{rec} = 8 \times 0.87 \times 0.9 = 6.3$ TR

From the capacity table a ICS 25-20 with Q_n capacity 6.8 TR is selected.

Nominal capacities

Wet suction line

SI units

Capacity table for nominal conditions, Q_N [kW], circulation rate = 4, ΔP = 0.2 bar

R 717

Type	Valve body size	K_v [m³/h]	Evaporating temperature [°C]							
			-50	-40	-30	-20	-10	0	10	20
ICS25-5	25	1.7	2.4	3.7	4.9	6.0	7.2	8.5	9.7	11.0
ICS25-10		3.5	5.0	7.6	9.9	12.4	15.0	17.4	20.0	23.0
ICS25-15		6	8.6	13.0	17.0	21.0	25.5	30.0	34.0	39.0
ICS25-20		8	11.4	17.3	23.0	28.0	34.0	40.0	46.0	52.0
ICS25-25		11.5	18.5	25.0	33.0	41.0	49.0	57.0	66.0	75.0
ICS32	32	17	24.4	37.0	48.0	60.0	72.0	85.0	97.0	110.0
ICS40	40	27	38.7	58.0	77.0	95.0	115	134	154	176
ICS50	50	44	63.1	95	125	155	186	219	252	286
ICS65	65	70	100	152	200	247	297	348	401	455
ICS80	80	85	123	184	242	300	361	423	486	553
ICS100	100	142	206	308	405	501	603	707	812	924
ICS125	125	207	300	449	590	730	880	1031	1183	1347
ICS150	150	354	513	767	1009	1248	1504	1764	2023	2303

Correction factor for ΔP ($f_{\Delta P}$)

ΔP (bar)	Correction factor
0.2	**1.00**
0.25	0.89
0.3	0.82
0.4	0.71
0.5	0.63
0.6	0.58

Correction factor for circulation rate (f_{rec})

Circulation rate	Correction factor
2	0.77
3	0.90
4	**1**
6	1.13
8	1.20
10	1.25

US units

Capacity table for nominal conditions, Q_N [Tons of Refrigeration], circulation rate = 4, ΔP = 3 psi

R 717

Type	Valve body size	C_v [USgal/min]	Evaporating temperature [°F]							
			-60	-40	-20	0	20	40	60	80
ICS25-5	25	2	0.6	1.1	1.4	1.8	2.2	2.6	3.0	3.5
ICS25-10		4.1	1.3	2.2	3.0	3.7	4.5	5.4	6.2	7.1
ICS25-15		7	2.3	3.7	5.1	6.4	7.8	9.2	10.7	12.2
ICS25-20		9.3	3.0	5.0	6.8	8.5	10.3	12.3	14.2	16.2
ICS25-25		13.3	4.4	7.1	9.7	12.2	14.9	17.6	20.4	23.3
ICS32	32	20	6.5	10.5	14.3	18.1	22.0	26.0	30.0	34.5
ICS40	40	31	10.3	16.8	22.8	28.8	35.0	41.4	48.0	55.0
ICS50	50	51	16.8	27.3	37.0	47.0	57.0	67.0	78.0	89.0
ICS65	65	81	26.8	43.5	59.0	75.0	91.0	107	124	142
ICS80	80	98	32	53	71	90	109	129	149	171
ICS100	100	165	53	88	120	151	184	217	251	288
ICS125	125	240	78	129	174	219	267	316	366	419
ICS150	150	410	133	220	297	375	456	540	625	716

Correction factor for ΔP ($f_{\Delta P}$)

ΔP (psi)	Correction factor
3	**1.00**
4	0.87
5	0.79
6	0.72
7	0.66
8	0.62

Correction factor for circulation rate (f_{rec})

Circulation rate	Correction factor
2	0.77
3	0.90
4	**1**
6	1.13
8	1.20
10	1.25

Nominal capacities

Wet suction line

SI units

Capacity table for nominal conditions, Q_N [kW], circulation rate = 4, ΔP = 0.2 bar

R 744

Type	Valve body size	K_v	Evaporating temperature [°C]							
		[m³/h]	-50	-40	-30	-20	-10	0	10	20
ICS25-5	25	1.7	5.2	6.0	6.7	7.4	8.0	8.3	8.4	7.7
ICS25-10		3.5	10.7	12.2	13.8	15.0	16.3	17.0	17.2	16.0
ICS25-15		6	18.3	21.0	23.6	26.0	28.0	29.2	29.5	27.3
ICS25-20		8	24.4	28.0	31.5	35.0	37.0	39.0	39.3	36.5
ICS25-25		11.5	35.0	40.0	45.0	50.0	54.0	56.0	56.5	52.0
ICS32	32	17	52.0	59.0	67.0	74.0	79.0	83.0	84.0	77.0
ICS40	40	27	82.0	94.0	106	117	126	132	133	123
ICS50	50	44	134	154	173	190	205	215	216	200
ICS65	65	70	213	244	275	303	326	342	344	318
ICS80	80	85	259	297	334	369	396	415	418	386
ICS100	100	142	433	496	558	616	662	693	699	645
ICS125	125	207	631	723	814	898	966	1010	1019	941
ICS150	150	354	1079	1236	1392	1535	1651	1726	1742	1609

Correction factor for ΔP ($f_{\Delta P}$)

ΔP (bar)	Correction factor
0.2	**1.00**
0.25	0.89
0.3	0.82
0.4	0.71
0.5	0.63
0.6	0.58

Correction factor for circulation rate (f_{rec})

Circulation rate	Correction factor
2	0.77
3	0.90
4	**1**
6	1.13
8	1.20
10	1.25

US units

Capacity table for nominal conditions, Q_N [Tons of Refrigeration], circulation rate = 4, ΔP = 3 psi

R 744

Type	Valve body size	C_v	Evaporating temperature [°F]							
		[USgal/min]	-60	-40	-20	0	20	40	60	80
ICS25-5	25	2	1.5	1.7	2.0	2.2	2.3	2.4	2.4	1.8
ICS25-10		4.1	3.0	3.5	4.0	4.5	4.8	5.0	4.8	3.7
ICS25-15		7	5.2	6.0	6.9	7.7	8.2	8.6	8.3	6.4
ICS25-20		9.3	6.9	8.1	9.2	10.2	11.0	11.4	11.1	8.5
ICS25-25		13.3	10.0	11.6	13.2	14.7	15.8	16.4	15.9	12.3
ICS32	32	20	14.7	17.2	19.4	21.7	23.3	24.2	23.5	18.2
ICS40	40	31	23.3	27.3	31.0	34.5	37.0	38.5	37.3	28.8
ICS50	50	51	38.0	44.5	50.5	56.0	60.5	62.7	60.8	47.0
ICS65	65	81	60.5	71.0	80.0	89.0	96.0	100	96.7	75.0
ICS80	80	98	73	85	97	108	115	120	117	90
ICS100	100	165	123	143	163	181	194	202	196	151
ICS125	125	240	179	208	237	264	282	294	286	220
ICS150	150	410	305	355	405	451	483	502	488	375

Correction factor for ΔP ($f_{\Delta P}$)

ΔP (psi)	Correction factor
3	**1.00**
4	0.87
5	0.79
6	0.72
7	0.66
8	0.62

Correction factor for circulation rate (f_{rec})

Circulation rate	Correction factor
2	0.77
3	0.90
4	**1**
6	1.13
8	1.20
10	1.25

Nominal capacities

Wet suction line

SI units

Capacity table for nominal conditions, Q_N [kW], circulation rate = 4, ΔP = 0.2 bar

R 134a

Type	Valve body size	K_v [m³/h]	Evaporating temperature [°C]						
			-40	-30	-20	-10	0	10	20
ICS25-5	25	1.7	1.1	1.6	1.9	2.3	2.7	3.1	3.4
ICS25-10		3.5	2.3	3.2	4.0	4.8	5.6	6.4	7.1
ICS25-15		6	4.0	5.5	6.8	8.2	9.5	10.9	12.2
ICS25-20		8	5.4	7.3	9.1	10.9	12.7	14.5	16.2
ICS25-25		11.5	7.7	10.5	13.1	15.7	18.2	20.9	23.3
ICS32	32	17	11.4	15.5	19.4	23.2	27.0	30.8	34.5
ICS40	40	27	18.1	24.6	30.8	36.8	42.8	49.0	54.8
ICS50	50	44	29.5	40.2	50.2	60.0	69.8	79.8	89.3
ICS65	65	70	47.0	63.9	79.9	95.5	111	127	142
ICS80	80	85	57	78	97	116	135	154	172
ICS100	100	142	95	130	161	194	225	258	288
ICS125	125	207	138	190	235	282	329	376	419
ICS150	150	354	236	324	403	483	562	643	717

Correction factor for ΔP ($f_{\Delta P}$)

ΔP (bar)	Correction factor
0.2	**1.00**
0.25	0.89
0.3	0.82
0.4	0.71
0.5	0.63
0.6	0.58

Correction factor for circulation rate (f_{rec})

Circulation rate	Correction factor
2	0.77
3	0.90
4	**1**
6	1.13
8	1.20
10	1.25

US units

Capacity table for nominal conditions, Q_N [Tons of Refrigeration], circulation rate = 4, ΔP = 3 psi

R 134a

Type	Valve body size	C_v [USgal/min]	Evaporating temperature [°F]						
			-40	-20	0	20	40	60	80
ICS25-5	25	2	0.3	0.5	0.6	0.7	0.8	1.0	1.1
ICS25-10		4.1	0.6	1.0	1.2	1.5	1.7	2.0	2.2
ICS25-15		7	1.0	1.6	2.1	2.5	2.9	3.4	3.8
ICS25-20		9.3	1.4	2.2	2.8	3.3	3.9	4.5	5.1
ICS25-25		13.3	2.0	3.1	3.9	4.8	5.6	6.4	7.2
ICS32	32	20	3.0	4.7	5.9	7.2	8.4	9.7	10.9
ICS40	40	31	4.6	7.2	9.2	11.1	13.1	15.0	16.8
ICS50	50	51	7.6	11.9	15.1	18.3	21.5	24.6	27.7
ICS65	65	81	12.1	18.9	24.1	29.1	34.1	39.1	44.0
ICS80	80	98	15	23	29	35	41	48	53
ICS100	100	165	25	39	49	59	69	80	90
ICS125	125	240	36	57	71	86	100	117	130
ICS150	150	410	61	97	122	147	171	199	223

Correction factor for ΔP ($f_{\Delta P}$)

ΔP (psi)	Correction factor
3	**1.00**
4	0.87
5	0.79
6	0.72
7	0.66
8	0.62

Correction factor for circulation rate (f_{rec})

Circulation rate	Correction factor
2	0.77
3	0.90
4	**1**
6	1.13
8	1.20
10	1.25

Nominal capacities

Wet suction line

SI units

Capacity table for nominal conditions, Q_N [kW], circulation rate = 4, ΔP = 0.2 bar

R 404A

Type	Valve body size	K_v [m³/h]	Evaporating temperature [°C]							
			-50	-40	-30	-20	-10	0	10	20
ICS25-5	25	1.7	1.5	1.9	2.2	2.6	3.0	3.3	3.7	4.0
ICS25-10		3.5	3.0	3.8	4.5	5.3	6.1	6.9	7.6	8.2
ICS25-15		6	5.2	6.5	7.8	9.1	10.4	11.7	13.0	14.0
ICS25-20		8	6.9	8.7	10.4	12.2	14.0	15.7	17.3	18.8
ICS25-25		11.5	10.0	12.5	15.0	17.5	20.0	22.6	25.0	27.0
ICS32	32	17	14.7	18.5	22.0	26.0	29.7	33.2	37.0	40.0
ICS40	40	27	23.3	29.3	35.0	41.0	47.0	53.0	59.0	63.0
ICS50	50	44	38.0	48.0	57.0	67.0	77.0	86.0	95.0	103
ICS65	65	70	60.0	76.0	91.0	106	122	137	152	164
ICS80	80	85	74	93	110	129	148	166	185	199
ICS100	100	142	123	155	184	216	248	278	308	333
ICS125	125	207	179	226	268	315	361	405	449	485
ICS150	150	354	306	386	459	539	618	693	769	830

Correction factor for ΔP ($f_{\Delta P}$)

ΔP (bar)	Correction factor
0.2	**1.00**
0.25	0.89
0.3	0.82
0.4	0.71
0.5	0.63
0.6	0.58

Correction factor for circulation rate (f_{rec})

Circulation rate	Correction factor
2	0.77
3	0.90
4	**1**
6	1.13
8	1.20
10	1.25

US units

Capacity table for nominal conditions, Q_N [Tons of Refrigeration], circulation rate = 4, ΔP = 3 psi

R 404A

Type	Valve body size	C_v [USgal/min]	Evaporating temperature [°F]							
			-60	-40	-20	0	20	40	60	80
ICS25-5	25	2	0.4	0.5	0.7	0.8	0.9	1.0	1.1	1.2
ICS25-10		4.1	0.8	1.1	1.3	1.6	1.8	2.1	2.3	2.3
ICS25-15		7	1.4	1.9	2.3	2.7	3.2	3.6	3.9	2.5
ICS25-20		9.3	1.9	2.5	3.1	3.6	4.2	4.8	5.3	5.7
ICS25-25		13.3	2.8	3.6	4.4	5.2	6.0	6.8	7.5	8.1
ICS32	32	20	4.1	5.3	6.5	7.7	8.9	10.1	11.1	12.0
ICS40	40	31	6.5	8.5	10.3	12.2	14.2	16.0	17.7	19.1
ICS50	50	51	10.6	13.8	16.8	19.9	23.0	26.0	29.0	31.0
ICS65	65	81	16.9	22.0	26.7	31.7	36.7	41.5	46.0	49.5
ICS80	80	98	20	26	32	38	44	50	55	56
ICS100	100	165	34	44	55	64	74	84	93	95
ICS125	125	240	49	64	79	94	108	123	135	138
ICS150	150	410	84	110	136	160	185	209	231	236

Correction factor for ΔP ($f_{\Delta P}$)

ΔP (psi)	Correction factor
3	**1.00**
4	0.87
5	0.79
6	0.72
7	0.66
8	0.62

Correction factor for circulation rate (f_{rec})

Circulation rate	Correction factor
2	0.77
3	0.90
4	**1**
6	1.13
8	1.20
10	1.25

Nominal capacities

Wet suction line

SI units

Capacity table for nominal conditions, Q_N [kW], circulation rate = 4, ΔP = 0.2 bar

R 22

Type	Valve body size	K_v [m³/h]	Evaporating temperature [°C]							
			-50	-40	-30	-20	-10	0	10	20
ICS25-5	25	1.7	1.4	1.8	2.2	2.6	3.0	3.4	3.8	4.2
ICS25-10		3.5	2.8	3.7	4.6	5.4	6.2	7.0	7.9	8.7
ICS25-15		6	4.8	6.3	7.8	9.2	10.6	12.0	13.5	14.8
ICS25-20		8	6.4	8.4	10.4	12.2	14.2	16.0	17.9	19.8
ICS25-25		11.5	9.2	12.0	15.0	17.6	20.4	23.0	25.8	28.4
ICS32	32	17	13.6	17.8	22.1	26.0	30.1	34.0	38.1	42.0
ICS40	40	27	21.5	28.3	35.1	41.3	47.8	54.0	60.6	66.7
ICS50	50	44	35.1	46.1	57.2	67.3	77.9	88.0	98.7	109
ICS65	65	70	55.8	73.3	91.0	107	124	140	157	173
ICS80	80	85	68	89	111	130	150	170	191	210
ICS100	100	142	114	149	185	217	251	284	319	351
ICS125	125	207	166	217	269	317	366	414	464	512
ICS150	150	354	284	372	461	542	627	708	794	875

Correction factor for ΔP ($f_{\Delta P}$)

ΔP (bar)	Correction factor
0.2	**1.00**
0.25	0.89
0.3	0.82
0.4	0.71
0.5	0.63
0.6	0.58

Correction factor for circulation rate (f_{rec})

Circulation rate	Correction factor
2	0.77
3	0.90
4	**1**
6	1.13
8	1.20
10	1.25

US units

Capacity table for nominal conditions, Q_N [Tons of Refrigeration], circulation rate = 4, ΔP = 3 psi

R 22

Type	Valve body size	C_v [USgal/min]	Evaporating temperature [°F]							
			-60	-40	-20	0	20	40	60	80
ICS25-5	25	2	0.2	0.5	0.7	0.8	0.9	1.1	1.2	1.3
ICS25-10		4.1	0.5	1.1	1.3	1.6	1.9	2.2	2.4	2.7
ICS25-15		7	0.8	1.8	2.3	2.8	3.2	3.7	4.1	4.6
ICS25-20		9.3	1.1	2.4	3.0	3.7	4.3	4.9	5.5	6.1
ICS25-25		13.3	1.6	3.5	4.4	5.2	6.1	7.0	7.9	8.7
ICS32	32	20	2.4	5.2	6.5	7.9	9.2	10.5	11.9	13.1
ICS40	40	31	3.7	8.1	10.1	12.2	14.3	16.3	18.4	20.3
ICS50	50	51	6.1	13.3	16.7	20.1	23.5	26.9	30.2	33.4
ICS65	65	81	9.69	21.1	26.5	31.9	37.3	42.7	48.0	53.0
ICS80	80	98	11	25	32	39	45	52	58	64
ICS100	100	165	19	43	54	65	76	88	98	108
ICS125	125	240	28	62	79	95	110	127	142	157
ICS150	150	410	48	107	135	162	188	217	243	269

Correction factor for ΔP ($f_{\Delta P}$)

ΔP (psi)	Correction factor
3	**1.00**
4	0.87
5	0.79
6	0.72
7	0.66
8	0.62

Correction factor for circulation rate (f_{rec})

Circulation rate	Correction factor
2	0.77
3	0.90
4	**1**
6	1.13
8	1.20
10	1.25

Nominal capacities

Dry suction line

Pump

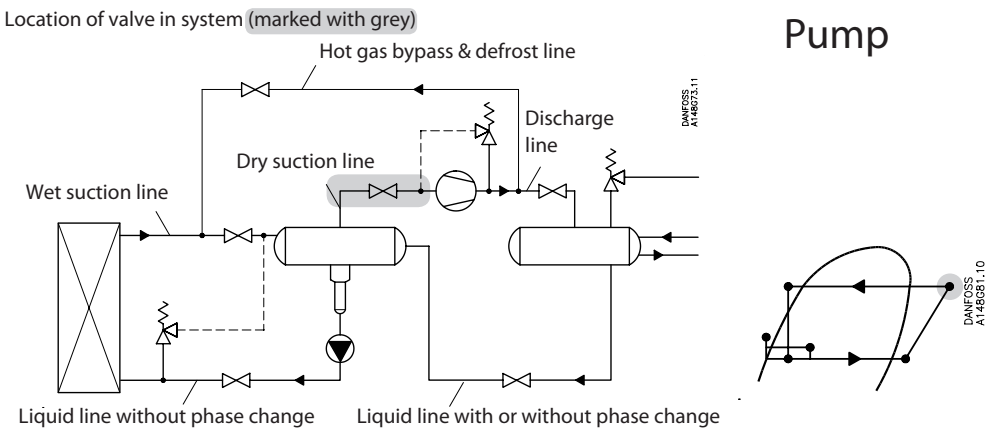

Gravity

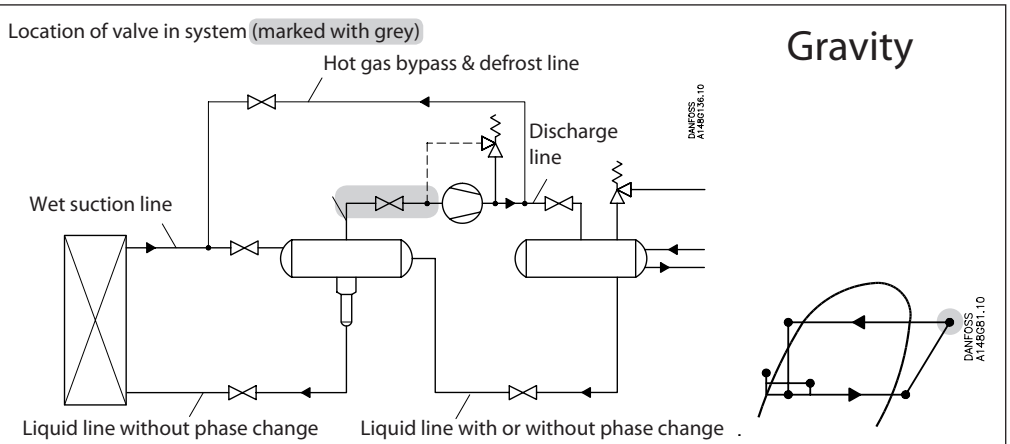

DX

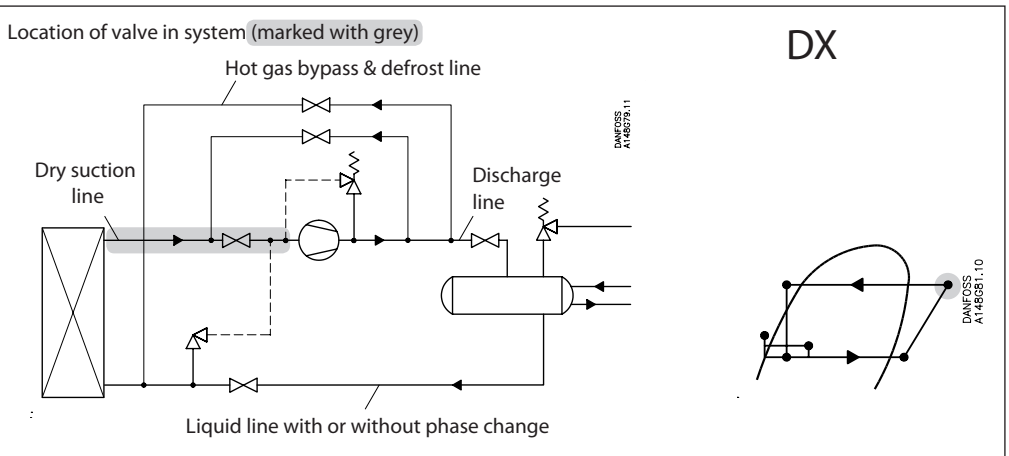

Nominal capacities

Dry suction line

SI units

Calculation example (R 717 capacities):

An application has following running conditions:

T_e = -20 °C
Q_o = 90 kW
T_{liq} = 10 °C
Max. Δp = 0.3 bar

The capacity table is based on nominal condition (pressure drop Δp = 0.2 bar, T_{liq} = 30 °C)

Therefore the actual capacity must be corrected to nominal condition by means of correction factors.

Correction factor for Δp 0.3 bar $f_{\Delta p}$ = 0.82
Correction factor for liquid temperature f_{Tliq} = 0.92
$Q_n = Q_o \times f\,\Delta p \times f_{Tliq} = 90 \times 0.82 \times 0.92 = 67.9$kW
From the capacity table a ICS 32 with Q_n capacity 92 kW is selected.

US units

Calculation example (R 717 capacities):

An application has following running conditions:

T_e = 0 °F
Q_o = 20 TR
T_{liq} = 50 °F
Max. Δp = 4 psi

The capacity table is based on nominal condition (pressure drop Δp = 3 psi, T_{liq} = 90 °F)

Therefore the actual capacity must be corrected to nominal condition by means of correction factors.

Correction factor for Δp 4 psi, T_{liq} = 0.87
Correction factor for liquid temperature f_{Tliq} = 0.92

$Q_n = Q_o \times f_{\Delta p} \times f_{Tliq} = 20 \times 0.87 \times 0.92 = 16$ TR

From the capacity table a ICS 25-25 with Q_n capacity 18.7 TR is selected.

Nominal capacities

Dry suction line

SI units

Capacity table for nominal conditions, Q_N [kW],
T_{liq} = 30 °C,
ΔP = 0.2 bar
Superheating = 8 °C

R 717

Type	Valve body size	K_v [m³/h]	Evaporating temperature [°C]							
			-50	-40	-30	-20	-10	0	10	20
ICS25-5	25	1.7	4.4	5.7	7.3	9.2	11.4	14.0	16.5	19.6
ICS25-10		3.5	9.0	11.7	15.0	19.0	23.5	28.5	34.0	40.0
ICS25-15		6	15.5	20.0	26.0	32.5	40.0	49.0	59.0	69.0
ICS25-20		8	20.6	27.0	34.0	43.3	54.0	65.0	78.0	92.0
ICS25-25		11.5	29.7	38.0	49.0	63.0	77.0	94	112	132
ICS32	32	17	44.0	57.0	73.0	92.0	114	139	166	196
ICS40	40	27	70.0	90.0	116	146	181	220	263	311
ICS50	50	44	113	147	189	239	295	359	429	507
ICS65	65	70	181	234	301	380	470	570	682	807
ICS80	80	85	219	284	365	461	570	694	829	978
ICS100	100	142	367	475	609	770	952	1159	1384	1634
ICS125	125	207	534	692	888	1123	1388	1690	2018	2381
ICS150	150	354	914	1183	1519	1921	2374	2890	3451	4072

Correction factor for ΔP ($f_{\Delta P}$)

ΔP (bar)	Correction factor
0.2	**1.00**
0.25	0.89
0.3	0.82
0.4	0.71
0.5	0.63
0.6	0.58

Correction factor for liquid temperature (T_{liq})

Liquid temperature [°C]	Correction factor
-20	0.82
-10	0.86
0	0.88
10	0.92
20	0.96
30	**1.00**
40	1.04
50	1.09

US units

Capacity table for nominal conditions, Q_N [Tons of Refrigeration],
T_{liq} = 90 °F,
ΔP = 3 psi
Superheating = 12 °F

R 717

Type	Valve body size	C_v [USgal/min]	Evaporating temperature [°F]							
			-60	-40	-20	0	20	40	60	80
ICS25-5	25	2	1.3	1.6	2.2	2.8	3.5	4.3	5.2	6.2
ICS25-10		4.1	2.5	3.4	4.4	5.7	7.2	8.9	10.7	12.8
ICS25-15		7	4.2	5.7	7.6	9.8	12.3	15.2	18.4	22.0
ICS25-20		9.3	5.6	7.6	10.1	13.0	16.4	20.2	24.5	29.3
ICS25-25		13.3	8.1	11.0	14.5	18.7	23.6	29.0	35.3	42.0
ICS32	32	20	12.0	16.2	21.5	27.7	35.0	43.0	52.0	62.0
ICS40	40	31	19.0	25.8	34.2	44.0	55.5	68.0	83.0	99.0
ICS50	50	51	30.9	42.0	55.7	72.0	90.0	111	135	161
ICS65	65	81	48.2	67.0	89.0	114	144	177	215	256
ICS80	80	98	60	80	107	137	173	213	258	308
ICS100	100	165	101	135	180	231	291	358	435	519
ICS125	125	240	146	197	261	336	424	521	632	754
ICS150	150	410	250	336	447	575	724	891	1080	1288

Correction factor for ΔP ($f_{\Delta P}$)

ΔP (psi)	Correction factor
3	**1.00**
4	0.87
5	0.79
6	0.72
7	0.66
8	0.62

Correction factor for superheat (T_S)

T_s	Correction factor
10	1.00
14	1.00
18	1.00
20	1.00

Correction factor for liquid temperature (T_{liq})

Liquid temperature [°F]	Correction factor
-10	0.82
10	0.85
30	0.88
50	0.92
70	0.96
90	**1.00**
110	1.04
130	1.09

Nominal capacities

SI units

Capacity table at nominal conditions, Q_N [kW],
T_{liq} = 10 °C,
Δp = 0.2 bar
Superheating = 8 °C

Dry suction line

R 744

Type	Valve body size	K_v [m³/h]	Evaporating temperature [°C]							
			-50	-40	-30	-20	-10	0	10	20
ICS25-5	25	1.7	6.0	7.3	8.8	10.4	12.0	14.0	15.8	17.7
ICS25-10		3.5	12.3	15.0	18.0	21.5	25.0	28.6	32.5	36.5
ICS25-15		6	21.0	26.0	31.0	37.0	43.0	49.0	56.0	63.0
ICS25-20		8	28.0	34.0	41.0	49.0	57.0	67.0	75.0	84.0
ICS25-25		11.5	40.0	49.0	59.0	70.0	82.0	94.0	107	120
ICS32	32	17	60.0	73.0	88.0	104	121	139	158	177
ICS40	40	27	95.0	116	139	165	192	221	251	281
ICS50	50	44	154	189	227	268	313	360	409	459
ICS65	65	70	245	300	361	427	498	573	650	730
ICS80	80	85	298	365	438	520	605	697	791	887
ICS100	100	142	498	609	732	869	1011	1165	1322	1482
ICS125	125	207	726	888	1067	1266	1474	1699	1927	2161
ICS150	150	354	1242	1518	1824	2166	2520	2905	3295	3696

Correction factor for ΔP ($f_{\Delta P}$)

ΔP (bar)	Correction factor
0.2	**1.00**
0.25	0.89
0.3	0.82
0.4	0.71
0.5	0.63
0.6	0.58

Correction factor for liquid temperature (T_{liq})

Liquid temperature [°C]	Correction factor
-20	0.52
-10	0.67
0	0.91
10	**1.00**
15	1.09

US units

Capacity table at nominal conditions, Q_N [Tons of Refrigeration],
T_{liq} = 50 °F,
Δp = 3 psi
Superheating = 12 °F

R 744

Type	Valve body size	C_v [USgal/min]	Evaporating temperature [°F]							
			-60	-40	-20	0	20	40	60	80
ICS25-5	25	2	1.7	2.1	2.6	3.1	3.7	4.2	4.9	5.4
ICS25-10		4.1	3.4	4.3	5.3	6.4	7.5	8.7	10.0	11.2
ICS25-15		7	5.9	7.4	9.1	10.9	12.9	15.0	17.0	19.2
ICS25-20		9.3	7.9	9.9	12.1	14.5	17.2	20.0	22.8	25.5
ICS25-25		13.3	11.3	14.2	17.4	21.0	24.7	28.6	32.8	36.7
ICS32	32	20	16.7	21.0	25.7	31.0	36.5	42.4	48.5	54.3
ICS40	40	31	26.6	33.3	41.0	49.0	58.0	67.0	77.0	86.0
ICS50	50	51	43.3	54.3	66.5	80.0	94.0	110	125	141
ICS65	65	81	69.0	86.5	106	127	150	174	199	223
ICS80	80	98	83	104	128	153	181	210	240	269
ICS100	100	165	140	175	215	258	305	353	404	453
ICS125	125	240	203	255	313	375	443	513	588	658
ICS150	150	410	347	435	534	641	757	877	1005	1124

Correction factor for ΔP ($f_{\Delta P}$)

ΔP (psi)	Correction factor
3	**1.00**
4	0.87
5	0.79
6	0.72
7	0.66
8	0.62

Correction factor for superheat (T_S)

T_s [°F]	Correction factor
10	1.00
14	1.00
18	1.00
20	1.00

Correction factor for liquid temperature (T_{liq})

Liquid temperature [°F]	Correction factor
-10	0.48
10	0.64
30	0.88
50	**1.00**

Nominal capacities

Dry suction line

SI units

Capacity table for nominal conditions, Q_N [kW],
T_{liq} = 30 °C,
ΔP = 0.2 bar
Superheating = 8 °C

R 134a

Type	Valve body size	K_v [m³/h]	Evaporating temperature [°C]						
			-40	-30	-20	-10	0	10	20
ICS25-5	25	1.7	1.5	1.9	2.5	3.2	4.0	4.9	5.9
ICS25-10		3.5	3.0	4.0	5.2	6.5	8.2	10.0	12.1
ICS25-15		6	5.2	6.9	8.9	11.2	14.0	17.2	20.8
ICS25-20		8	6.9	9.1	11.9	15.0	18.6	23.0	28.0
ICS25-25		11.5	9.9	13.1	17.1	22.0	27.0	33.0	40.0
ICS32	32	17	14.7	19.0	25.0	32.0	40.0	49.0	59.0
ICS40	40	27	23.0	31.0	40.0	51.0	63.0	77.0	94.0
ICS50	50	44	38.0	50.0	65.0	82.0	103	126	153
ICS65	65	70	60.0	80.0	104	131	163	200	243
ICS80	80	85	73	97	126	160	199	244	295
ICS100	100	142	123	161	210	267	332	407	493
ICS125	125	207	179	235	307	389	484	594	719
ICS150	150	354	305	402	524	665	828	1015	1230

Correction factor for ΔP ($f_{\Delta P}$)

ΔP (bar)	Correction factor
0.2	**1.00**
0.25	0.89
0.3	0.82
0.4	0.71
0.5	0.63
0.6	0.58

Correction factor for liquid temperature (T_{liq})

Liquid temperature [°C]	Correction factor
-20	0.66
-10	0.70
0	0.76
10	0.82
20	0.90
30	**1.00**
40	1.13
50	1.29

US units

Capacity table for nominal conditions, Q_N [Tons of Refrigeration],
T_{liq} = 90 °F,
ΔP = 3 psi
Superheating=12 °F

R 134a

Type	Valve body size	C_v [USgal/min]	Evaporating temperature [°F]						
			-40	-20	0	20	40	60	80
ICS25-5	25	2	0.5	0.6	0.8	1.0	1.3	1.6	1.9
ICS25-10		4.1	0.9	1.2	1.6	2.0	2.6	3.2	4.0
ICS25-15		7	1.5	2.0	2.7	3.5	4.4	5.5	6.8
ICS25-20		9.3	2.0	2.7	3.6	4.7	5.9	7.4	9.1
ICS25-25		13.3	2.9	3.9	5.2	6.7	8.5	10.6	13.0
ICS32	32	20	4.2	5.8	7.7	9.9	12.6	15.7	19.3
ICS40	40	31	6.7	9.2	12.2	15.7	20.0	25.0	30.6
ICS50	50	51	11.0	15.0	19.8	25.7	32.5	40.6	50.0
ICS65	65	81	17.4	23.7	31.5	40.8	52.0	64.6	79.0
ICS80	80	98	21	29	38	49	63	78	95
ICS100	100	165	36	48	64	83	105	131	161
ICS125	125	240	53	70	94	120	153	191	234
ICS150	150	410	90	120	160	205	262	325	399

Correction factor for ΔP ($f_{\Delta P}$)

ΔP (psi)	Correction factor
3	**1.00**
4	0.87
5	0.79
6	0.72
7	0.66
8	0.62

Correction factor for superheat (T_S)

T_s [°F]	Correction factor
10	1.00
14	1.00
18	1.00
20	1.00

Correction factor for liquid temperature (T_{liq})

Liquid temperature [°F]	Correction factor
-10	0.64
10	0.68
30	0.74
50	0.81
70	0.89
90	**1.00**
110	1.15
130	1.35

Nominal capacities

Dry suction line

SI units

Capacity table for nominal conditions, Q_N [kW],
T_{liq} = 30 °C,
ΔP = 0.2 bar
Superheat = 8 °C

R 404A

Type	Valve body size	K_v [m³/h]	Evaporating temperature [°C]							
			-50	-40	-30	-20	-10	0	10	20
ICS25-5	25	1.7	1.4	1.8	2.4	3.0	3.8	4.6	5.7	6.8
ICS25-10		3.5	2.8	3.7	4.8	6.2	7.7	9.5	11.6	14.0
ICS25-15		6	4.8	6.4	8.3	10.6	13.2	16.4	20.0	24.0
ICS25-20		8	6.4	8.5	11.0	14.0	17.7	22.0	26.5	32.0
ICS25-25		11.5	9.1	12.2	16.0	20.3	25.5	31.3	38.0	46.0
ICS32	32	17	13.5	18.0	23.5	30.0	37.5	46.0	56.0	68.0
ICS40	40	27	21.5	28.5	37.0	47.5	60.0	74.0	90.0	108
ICS50	50	44	35.0	47.0	61.0	78.0	97.0	120	146	175
ICS65	65	70	55.0	74.0	97.0	123.0	155	190	232	280
ICS80	80	85	68	90	118	150	188	232	282	340
ICS100	100	142	113	151	197	250	314	387	471	568
ICS125	125	207	165	220	287	365	458	564	687	827
ICS150	150	354	283	375	490	624	783	964	1175	1415

Correction factor for ΔP ($f_{\Delta P}$)

ΔP (bar)	Correction factor
0.2	**1.00**
0.25	0.89
0.3	0.82
0.4	0.71
0.5	0.63
0.6	0.58

Correction factor for liquid temperature (T_{liq})

Liquid temperature [°C]	Correction factor
-20	0.55
-10	0.60
0	0.66
10	0.74
20	0.85
30	**1.00**
40	1.23
50	1.68

US units

Capacity table for nominal conditions, Q_N [Tons of Refrigeration],
T_{liq} = 90 °F,
ΔP = 3 psi
Superheat =12 °F

R 404A

Type	Valve body size	C_v [USgal/min]	Evaporating temperature [°F]							
			-60	-40	-20	0	20	40	60	80
ICS25-5	25	2	0.4	0.5	0.7	0.9	1.1	1.4	1.8	2.1
ICS25-10		4.1	0.7	1.0	1.4	1.8	2.3	2.9	3.6	4.4
ICS25-15		7	1.3	1.8	2.4	3.1	4.0	5.0	6.2	7.5
ICS25-20		9.3	1.7	2.3	3.1	4.1	5.3	6.6	8.2	10.0
ICS25-25		13.3	2.4	3.4	4.5	5.9	7.6	9.6	11.8	14.4
ICS32	32	20	3.6	5.0	6.7	8.8	11.2	14.1	17.5	21.3
ICS40	40	31	5.7	7.9	10.6	13.9	17.8	22.4	27.7	34.0
ICS50	50	51	9.3	12.9	17.3	22.7	29.0	36.6	45.1	55.0
ICS65	65	81	14.8	20.5	27.5	36.0	46.2	58.0	72.0	88.0
ICS80	80	98	18	25	33	43	55	70	87	105
ICS100	100	165	30	42	56	73	93	118	146	177
ICS125	125	240	44	60	82	107	136	171	213	258
ICS150	150	410	75	103	139	182	232	292	363	441

Correction factor for ΔP ($f_{\Delta P}$)

ΔP (psi)	Correction factor
3	**1.00**
4	0.87
5	0.79
6	0.72
7	0.66
8	0.62

Correction factor for superheat (T_S)

T_s [°F]	Correction factor
10	1.00
14	1.00
18	1.00
20	1.00

Correction factor for liquid temperature (T_{liq})

Liquid temperature [°F]	Correction factor
-10	0.52
10	0.57
30	0.63
50	0.72
70	0.83
90	**1.00**
110	1.29
130	1.92

Nominal capacities

Dry suction line

R 22

SI units

Capacity table for nominal conditions, Q_N [kW],
T_{liq} = 30 °C,
ΔP = 0.2 bar
Superheat = 8 °C

Type	Valve body size	K_v [m³/h]	Evaporating temperature [°C]							
			-50	-40	-30	-20	-10	0	10	20
ICS25-5	25	1.7	1.7	2.3	2.9	3.6	4.4	5.3	6.2	7.4
ICS25-10		3.5	3.6	4.7	5.9	7.4	9.0	10.9	12.9	15.2
ICS25-15		6	6.2	8.0	10.1	12.6	15.4	18.6	22.0	26.0
ICS25-20		8	8.2	10.7	13.5	16.8	20.6	24.8	29.4	34.6
ICS25-25		11.5	11.8	15.3	19.4	24.2	29.6	35.7	42.2	49.8
ICS32	32	17	17.5	22.7	28.7	35.7	43.7	52.7	62.4	73.6
ICS40	40	27	27.8	36.0	45.5	56.7	69.4	83.7	99.1	117
ICS50	50	44	45.3	58.6	74.2	92.4	113	136	162	190
ICS65	65	70	72.0	93.3	118	147	180	217	257	303
ICS80	80	85	87	114	144	179	219	264	312	368
ICS100	100	142	146	190	240	299	365	441	521	615
ICS125	125	207	212	277	349	436	533	642	760	897
ICS150	150	354	363	473	598	745	911	1098	1300	1534

Correction factor for ΔP ($f_{\Delta P}$)

ΔP (bar)	Correction factor
0.2	**1.00**
0.25	0.89
0.3	0.82
0.4	0.71
0.5	0.63
0.6	0.58

Correction factor for liquid temperature (T_{liq})

Liquid temperature [°C]	Correction factor
-20	0.71
-10	0.75
0	0.80
10	0.86
20	0.92
30	**1.00**
40	1.09
50	1.22

R 22

US units

Capacity table for nominal conditions, Q_N [Tons of Refrigeration],
T_{liq} = 90 °F,
ΔP = 3 psi
Superheat =12 °F

Type	Valve body size	C_v [USgal/min]	Evaporating temperature [°F]							
			-60	-40	-20	0	20	40	60	80
ICS25-5	25	2	0.5	0.7	0.8	1.1	1.3	1.6	2.0	2.3
ICS25-10		4.1	1.0	1.3	1.7	2.2	2.7	3.4	4.0	4.8
ICS25-15		7	1.7	2.3	3.0	3.8	4.7	5.7	6.9	8.2
ICS25-20		9.3	2.3	3.0	3.9	5.0	6.2	7.6	9.2	10.9
ICS25-25		13.3	3.2	4.3	5.6	7.2	8.9	10.9	13.1	15.6
ICS32	32	20	4.9	6.5	8.5	10.8	13.4	16.4	19.8	23.5
ICS40	40	31	7.5	10.1	13.1	16.7	20.8	25.4	30.6	36.4
ICS50	50	51	12.4	16.6	21.6	27.5	34.2	41.8	50.4	59.9
ICS65	65	81	19.7	26.4	34.3	43.6	54.3	66.4	80.0	95.1
ICS80	80	98	24	32	41	53	65	80	97	115
ICS100	100	165	40	54	69	89	110	135	163	193
ICS125	125	240	59	79	101	130	160	196	237	281
ICS150	150	410	100	134	172	222	273	335	405	480

Correction factor for ΔP ($f_{\Delta P}$)

ΔP (psi)	Correction factor
3	**1.00**
4	0.87
5	0.79
6	0.72
7	0.66
8	0.62

Correction factor for superheat (T_S)

T_s [°F]	Correction factor
10	1.00
14	1.00
18	1.00
20	1.00

Correction factor for liquid temperature (T_{liq})

Liquid temperature [°F]	Correction factor
-10	0.73
10	0.77
30	0.82
50	0.87
70	0.93
90	**1.00**
110	1.09
130	1.20

Nominal capacities

Discharge line

Pump

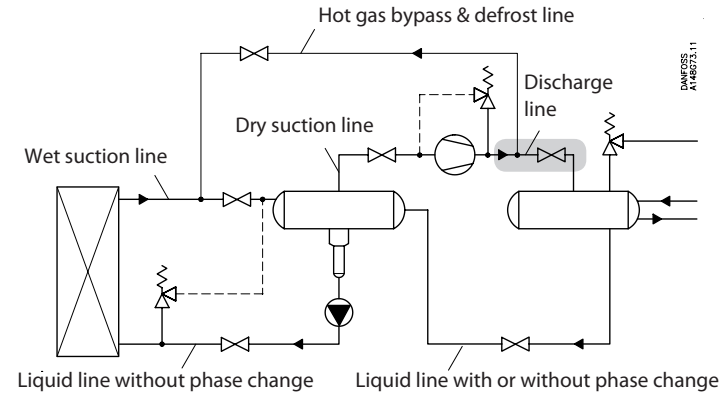

Gravity

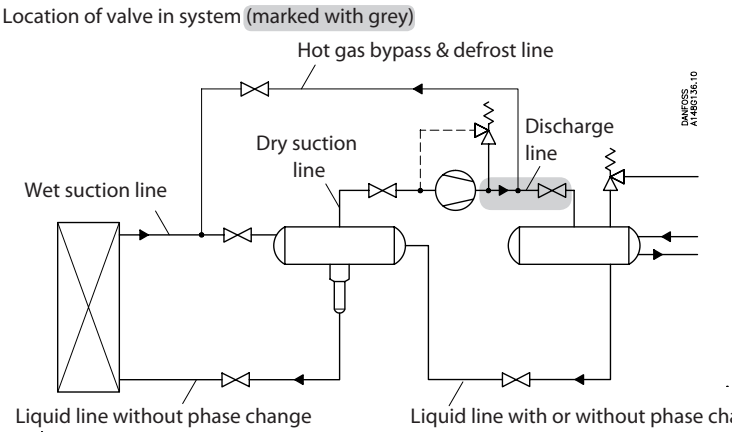

DX

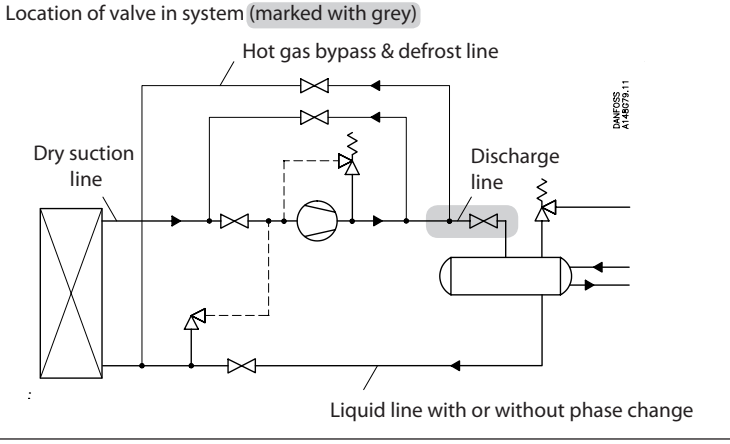

Nominal capacities

Discharge line

SI units

Calculation example (R 717 capacities):

An application has following running conditions:

T_e = -20 °C
Q_o = 90 kW
T_{liq} = 10 °C
Max. Δp = 0.4 bar
$T_{disch.}$ = 60 °C

The capacity table is based on nominal condition (Δp = 0.2 bar, T_{liq} = 30 °C, $P_{disch.}$= 12 bar, $T_{disch.}$= 80 °C)
Therefore the actual capacity must be corrected to nominal condition by means of correction factors.

Correction factor for Δp 0.4 bar $f_{\Delta p}$ = 0.71
Correction factor for liquid temperature f_{Tliq} = 0.92
Correction factor for $T_{disch.}$ 60 °C , $f_{disch.}$ = 0.97

$Q_n = Q_o \times f_{\Delta p} \times f_{Tliq} \times f_{Tdisch.} =$
$90 \times 0.71 \times 0.92 \times 0.97 = 57$ kW

From the capacity table a ICS 25-15 with Q_n capacity 73 kW is selected.

US units

Calculation example (R 717 capacities):

An application has following running conditions:

T_e = 0 °F
Q_o = 18 TR
T_{liq} = 50 °F
Max. Δp = 5.8 psi
$T_{disch.}$ = 120 °F

The capacity table is based on nominal conditions (Δp = 3 psi, T_{liq} = 90 °F, $P_{disch.}$= 185 psi, $T_{disch.}$= 180 °F)

Therefore the actual capacity must be corrected to nominal condition by means of correction factors.

Correction factor for Δp 5.8 psi, $f_{\Delta p}$ = 0.72
Correction factor for liquid temperature f_{Tliq} = 0.92
Correction factor for $T_{disch.}$ 120 °C , $f_{disch.}$ = 0.95

$Q_n = Q_o \times f_{\Delta p} \times f_{Tliq} \times f_{Tdisch.} =$
$18 \times 0.72 \times 0.92 \times 0.95 = 11.3$ TR

From the capacity table a ICS 25-10 with Q_n capacity 12.0 TR is selected.

Nominal capacities

Discharge line

SI units

Capacity table for nominal conditions, Q_N [kW],
T_{liq} = 30 °C,
$P_{disch.}$ = 12 bar,
ΔP = 0.2 bar,
$T_{disch.}$ = 80 °C
Superheat = 8 °C

R 717

Type	Valve body size	K_v [m³/h]	Evaporating temperature [°C]							
			-50	-40	-30	-20	-10	0	10	20
ICS25-5	25	1.7	19.8	20.2	20.5	20.7	20.9	21.1	21.3	21.5
ICS25-10		3.5	40.8	41.5	42.0	42.5	43.0	43.5	44.0	44.2
ICS25-15		6	70.0	71.0	72.0	73.0	74.0	74.8	75.4	76.0
ICS25-20		8	93.0	95.0	96.0	97.5	99.0	99.7	101	101
ICS25-25		11.5	134	136	138	140	142	143	144	145
ICS32	32	17	199	201	205	207	209	211	213	215
ICS40	40	27	315	320	325	329	333	336	339	341
ICS50	50	44	514	521	529	536	542	548	553	556
ICS65	65	70	817	829	843	854	864	872	879	885
ICS80	80	85	991	1007	1022	1035	1048	1058	1067	1074
ICS100	100	142	1656	1682	1707	1729	1750	1767	1783	1794
ICS125	125	207	2414	2453	2489	2521	2551	2575	2600	2616
ICS150	150	354	4129	4194	4257	4311	4363	4404	4446	4473

Correction factor for ΔP ($f_{\Delta P}$)

ΔP (bar)	Correction factor
0.2	**1.00**
0.25	0.89
0.3	0.82
0.4	0.71
0.5	0.63
0.6	0.58

Correction factor for discharge temperature (T_{disch}).

Discharge temperature [°C]	Correction factor
50	0.96
60	0.97
80	**1.00**
90	1.01
100	1.03
110	1.04
120	1.06

Correction factor for liquid temperature (T_{liq}).

Liquid temperature [°C]	Correction factor
-20	0.82
-10	0.86
0	0.88
10	0.92
20	0.96
30	**1.00**
40	1.04
50	1.09

US units

Capacity table for nominal conditions, Q_N [Tons of Refrigeration],
T_{liq} = 90 °F,
ΔP = 2.9 psi,
$P_{disch.}$ = 185 psi,
$T_{disch.}$ = 180 °F
Superheat = 12 °F

R 717

Type	Valve body size	C_v [USgal/min]	Evaporating temperature [°F]							
			-60	-40	-20	0	20	40	60	80
ICS25-5	25	2	5.6	5.7	5.8	5.8	5.9	6.0	6.0	6.0
ICS25-10		4.1	11.4	11.6	11.8	12.0	12.1	12.3	12.3	12.4
ICS25-15		7	19.6	20.0	20.3	20.6	20.8	21.0	21.2	21.3
ICS25-20		9.3	26.2	26.6	27.0	27.4	27.8	28.0	28.2	28.3
ICS25-25		13.3	37.6	38.3	39.0	39.4	39.9	40.3	40.5	40.8
ICS32	32	20	55.5	56.5	57.5	58.3	59.0	59.5	60.0	60.3
ICS40	40	31	88.0	90.0	91.0	92.5	94.0	94.5	95.0	95.7
ICS50	50	51	144	146	149	151	153	154	155	156
ICS65	65	81	229	233	237	240	243	245	247	248
ICS80	80	98	275	280	285	289	292	295	297	298
ICS100	100	165	464	472	480	486	492	497	500	502
ICS125	125	240	674	687	698	707	716	723	727	731
ICS150	150	410	1152	1173	1192	1207	1223	1235	1242	1248

Correction factor for ΔP ($f_{\Delta P}$)

ΔP (psi)	Correction factor
3	**1.00**
4	0.87
5	0.79
6	0.72
7	0.66
8	0.62

Correction factor for discharge temperature (T_{disch}).

Discharge temperature [°F]	Correction factor
120	0.95
140	0.97
180	1.00
200	1.02
210	1.02
230	1.04
250	1.06

Correction factor for liquid temperature (T_{liq}).

Liquid temperature [°F]	Correction factor
-10	0.82
10	0.85
30	0.88
50	0.92
70	0.96
90	1.00
110	1.04
130	1.09

Nominal capacities

Discharge line

SI units

Capacity table for nominal conditions, Q_N [kW],
T_{liq} = 10 °C,
P_{disch} = 10 bar,
ΔP = 0.2 bar
T_{disch} = 80 °C
Superheat = 8 °C

R 744

Type	Valve body size	K_v [m^3/h]	Evaporating temperature [°C]							
			-50	-40	-30	-20	-10	0	10	20
ICS25-5	25	1.7	12.5	12.7	12.8	12.9	12.9	12.9	12.5	12.8
ICS25-10		3.5	25.7	26.2	26.5	26.6	26.6	26.3	25.8	26.4
ICS25-15		6	44.0	45.0	45.3	45.6	45.5	45.1	44.2	45.0
ICS25-20		8	59.0	60.0	60.2	60.7	60.7	60.1	59.0	60.0
ICS25-25		11.5	85.0	86.0	87.0	87.4	87.3	86.5	85.0	87.0
ICS32	32	17	125	127	128	129	129	128	125	128
ICS40	40	27	199	202	204	205	205	203	199	203
ICS50	50	44	324	329	332	334	334	331	324	331
ICS65	65	70	515	523	529	532	531	526	516	527
ICS80	80	85	626	636	642	646	645	640	626	640
ICS100	100	142	1045	1062	1072	1078	1078	1069	1046	1069
ICS125	125	207	1524	1549	1562	1572	1571	1558	1525	1558
ICS150	150	354	2605	2649	2672	2688	2687	2664	2608	2664

Correction factor for ΔP ($f_{\Delta P}$)

ΔP (bar)	Correction factor
0.2	**1.00**
0.25	0.89
0.3	0.82
0.4	0.71
0.5	0.63
0.6	0.58

Correction factor for discharge temperature (T_{disch}).

Discharge temperature [°C]	Correction factor
50	0.96
60	0.97
80	**1.00**
90	1.01
100	1.03
110	1.04
120	1.06

Correction factor for liquid temperature (T_{liq}).

Liquid temperature [°C]	Correction factor
-20	0.52
-10	0.67
0	0.91
10	**1.00**
15	1.09

US units

Capacity table for nominal conditions, Q_N [Tons of Refrigeration],
T_{liq} = 90 °F,
ΔP = 3 psi
P_{disch} = 120 psi,
T_{disch} = 180 °F
Superheat = 12 °F

R 744

Type	Valve body size	C_v [USgal/min]	Evaporating temperature [°F]							
			-60	-40	-20	0	20	40	60	80
ICS25-5	25	2	3.4	3.4	3.5	3.5	3.4	3.3	3.2	3.1
ICS25-10		4.1	6.9	7.0	7.1	7.1	7.0	6.8	6.6	6.4
ICS25-15		7	11.9	12.1	12.2	12.2	12.0	11.7	11.3	11.0
ICS25-20		9.3	15.8	16.1	16.2	16.2	16.0	15.6	15.1	14.7
ICS25-25		13.3	22.8	23.1	23.3	23.3	23.0	22.4	21.8	21.1
ICS32	32	20	33.7	34.1	34.5	34.5	34.0	33.1	32.2	31.2
ICS40	40	31	53.4	54.3	54.7	54.7	54.0	52.5	51.0	49.6
ICS50	50	51	87.0	88.4	89.0	89.0	88.0	85.5	83.3	80.8
ICS65	65	81	138	141	142	142	140	136	132	129
ICS80	80	98	167	169	171	171	168	164	159	154
ICS100	100	165	281	285	288	288	284	276	268	260
ICS125	125	240	408	414	419	419	412	401	389	378
ICS150	150	410	698	708	715	715	705	685	665	646

Correction factor for ΔP ($f_{\Delta P}$)

ΔP (psi)	Correction factor
3	**1.00**
4	0.87
5	0.79
6	0.72
7	0.66
8	0.62

Correction factor for discharge temperature (T_{disch}).

Discharge temperature [°F]	Correction factor
120	0.95
140	0.97
180	**1.00**
200	1.02
210	1.02
230	1.04
250	1.05

Correction factor for liquid temperature (T_{liq}).

Liquid temperature [°F]	Correction factor
-10	0.48
10	0.64
30	0.88
50	**1.00**

Nominal capacities

Discharge line

SI units

Capacity table for nominal conditions, Q_N [kW],
T_{liq} = 30 °C,
P_{disch} = 8 bar,
ΔP = 0.2 bar
T_{disch} = 80 °C
Superheat = 8 °C

R 134a

Type	Valve body size	K_v [m³/h]	Evaporating temperature [°C]						
			-40	-30	-20	-10	0	10	20
ICS25-5	25	1.7	5.1	5.4	5.6	5.9	6.1	6.3	6.5
ICS25-10		3.5	10.6	11.0	11.6	12.0	12.5	13.0	13.4
ICS25-15		6	18.1	19.0	19.8	20.6	21.5	22.3	23.0
ICS25-20		8	24.1	25.3	26.4	27.5	28.6	29.7	30.7
ICS25-25		11.5	34.7	36.0	38.0	39.6	41.0	42.7	44.0
ICS32	32	17	51.0	54.0	56.0	58.5	61.0	63.0	65.0
ICS40	40	27	82.0	85.0	89.0	93.0	97.0	100	104
ICS50	50	44	133	139	145	151	157	163	169
ICS65	65	70	211	221	231	241	251	260	269
ICS80	80	85	256	268	280	293	304	315	326
ICS100	100	142	428	448	469	489	508	527	544
ICS125	125	207	624	654	683	712	741	768	794
ICS150	150	354	1068	1118	1168	1218	1267	1313	1357

Correction factor for ΔP ($f_{\Delta P}$)

ΔP (bar)	Correction factor
0.2	**1.00**
0.25	0.89
0.3	0.82
0.4	0.71
0.5	0.63
0.6	0.58

Correction factor for discharge temperature (T_{disch}).

Discharge temperature [°C]	Correction factor
50	0.96
60	0.97
80	**1.00**
90	1.01
100	1.03
110	1.04
120	1.06

Correction factor for liquid temperature (T_{liq}).

Liquid temperature [°C]	Correction factor
-20	0.66
-10	0.70
0	0.76
10	0.82
20	0.90
30	**1.00**
40	1.13
50	1.29

US units

Capacity table for nominal conditions, Q_N [Tons of Refrigeration],
T_{liq} = 90 °F,
ΔP = 3 psi
P_{disch} = 120 psi,
T_{disch} = 180 °F
Superheat = 12 °F

R 134a

Type	Valve body size	C_v [USgal/min]	Evaporating temperature [°F]						
			-40	-20	0	20	40	60	80
ICS25-5	25	2	1.4	1.5	1.5	1.6	1.7	1.7	1.8
ICS25-10		4.1	2.3	3.0	3.1	3.3	3.4	3.6	3.7
ICS25-15		7	4.9	5.1	5.4	5.6	5.9	6.1	6.3
ICS25-20		9.3	6.5	6.8	7.2	7.5	7.8	8.1	8.4
ICS25-25		13.3	9.3	9.8	10.3	10.8	11.3	11.7	12.1
ICS32	32	20	13.8	14.5	15.2	16.0	16.6	17.3	18.0
ICS40	40	31	21.9	23.0	24.2	25.3	26.5	27.5	28.5
ICS50	50	51	35.6	37.5	39.4	41.3	43.0	44.8	46.5
ICS65	65	81	56.7	59.7	62.9	65.7	68.5	71.3	74.0
ICS80	80	98	67	72	75	79	83	86	89
ICS100	100	165	113	121	127	133	139	144	150
ICS125	125	240	164	176	184	194	202	210	218
ICS150	150	410	280	301	315	331	345	358	372

Correction factor for ΔP ($f_{\Delta P}$)

ΔP (psi)	Correction factor
3	**1.00**
4	0.87
5	0.79
6	0.72
7	0.66
8	0.62

Correction factor for discharge temperature (T_{disch}).

Discharge temperature [°F]	Correction factor
120	0.95
140	0.97
180	**1.00**
200	1.02
210	1.02
230	1.04
250	1.05

Correction factor for liquid temperature (T_{liq}).

Liquid temperature [°F]	Correction factor
-10	0.64
10	0.68
30	0.74
50	0.81
70	0.89
90	**1.00**
110	1.15
130	1.35

Nominal capacities

Discharge line

SI units

Capacity table for nominal conditions, Q_N [kW],
T_{liq} = 30 °C,
P_{disch} = 12 bar
ΔP = 0.2 bar,
T_{disch} = 80 °C
Superheat = 8 °C

R 404A

Type	Valve body size	K_v [m³/h]	Evaporating temperature [°C]							
			-50	-40	-30	-20	-10	0	10	20
ICS25-5	25	1.7	4.8	5.1	5.4	5.7	6.0	6.3	6.6	6.8
ICS25-10		3.5	9.8	10.4	11.1	11.8	12.4	13.0	13.6	14.1
ICS25-15		6	16.7	18.0	19.0	20.2	21.3	22.3	23.3	24.2
ICS25-20		8	22.3	24.0	25.4	27.0	28.3	29.7	31.0	32.0
ICS25-25		11.5	32.0	34.0	36.5	38.5	40.7	42.7	44.6	46.0
ICS32	32	17	48.0	51.0	54.0	57.0	60.0	63.0	66.0	69.0
ICS40	40	27	75.0	81.0	86.0	91.0	96.0	100	105	109
ICS50	50	44	123	131	140	148	156	163	171	177
ICS65	65	70	195	208	222	235	248	260	271	282
ICS80	80	85	238	254	270	286	301	315	330	342
ICS100	100	142	397	424	451	477	503	527	551	571
ICS125	125	207	579	618	657	696	733	768	803	833
ICS150	150	354	990	1057	1124	1190	1254	1313	1374	1424

Correction factor for ΔP ($f_{\Delta P}$)

ΔP (bar)	Correction factor
0.2	**1.00**
0.25	0.89
0.3	0.82
0.4	0.71
0.5	0.63
0.6	0.58

Correction factor for discharge temperature (T_{disch}).

Discharge temperature [°C]	Correction factor
50	0.96
60	0.97
80	**1.00**
90	1.01
100	1.03
110	1.04
120	1.06

Correction factor for liquid temperature (T_{liq}).

Liquid temperature [°C]	Correction factor
-20	0.55
-10	0.60
0	0.66
10	0.74
20	0.85
30	**1.00**
40	1.23
50	1.68

US units

Capacity table for nominal conditions, Q_N [Tons of Refrigeration],
T_{liq} = 90 °F,
ΔP = 3 psi,
P_{disch} = 120 psi,
T_{disch} = 180 °F
Superheat = 12 °F

R 404A

Type	Valve body size	C_v [USgal/min]	Evaporating temperature [°F]							
			-60	-40	-20	0	20	40	60	80
ICS25-5	25	2	1.2	1.3	1.4	1.5	1.6	1.7	1.8	1.8
ICS25-10		4.1	2.5	2.7	2.9	3.1	3.3	3.5	3.7	3.8
ICS25-15		7	4.4	4.7	5.0	5.4	5.7	6.0	6.3	6.5
ICS25-20		9.3	5.8	6.2	6.7	7.2	7.6	8.0	8.4	8.7
ICS25-25		13.3	8.4	8.9	9.6	10.3	10.9	11.5	12.0	12.5
ICS32	32	20	12.4	13.2	14.2	15.2	16.1	17.0	17.8	18.4
ICS40	40	31	19.6	21.0	22.6	24.1	25.6	27.0	28.2	29.3
ICS50	50	51	32.0	34.2	36.8	39.3	41.7	44.0	46.0	47.7
ICS65	65	81	51.0	54.3	58.5	62.5	66.3	70.0	73.0	76.0
ICS80	80	98	61	65	70	75	80	84	88	91
ICS100	100	165	103	110	118	127	134	142	149	153
ICS125	125	240	149	160	172	184	195	206	216	223
ICS150	150	410	255	273	294	315	334	352	369	381

Correction factor for ΔP ($f_{\Delta P}$)

ΔP (psi)	Correction factor
3	**1.00**
4	0.87
5	0.79
6	0.72
7	0.66
8	0.62

Correction factor for discharge temperature (T_{disch}).

Discharge temperature [°F]	Correction factor
120	0.95
140	0.97
180	**1.00**
200	1.02
210	1.02
230	1.04
250	1.05

Correction factor for liquid temperature (T_{liq}).

Liquid temperature [°F]	Correction factor
-10	0.52
10	0.57
30	0.63
50	0.72
70	0.83
90	**1.00**
110	1.29
130	1.92

Nominal capacities

Discharge line

SI units

Capacity table for nominal conditions, Q_N [kW],
T_{liq} = 30 °C,
P_{disch} = 12 bar
ΔP = 0.2 bar,
T_{disch} = 80 °C
Superheat = 8 °C

R 22

Type	Valve body size	K_v [m³/h]	Evaporating temperature [°C]							
			-50	-40	-30	-20	-10	0	10	20
ICS25-5	25	1.7	6.4	6.6	6.8	7.0	7.2	7.4	7.5	7.7
ICS25-10		3.5	13.2	13.7	14.1	14.5	14.8	15.2	15.5	15.8
ICS25-15		6	22.6	23.4	24.1	24.8	25.4	26.0	26.6	27.1
ICS25-20		8	30.2	31.2	32.1	33.0	33.8	34.6	35.4	36.1
ICS25-25		11.5	43.4	44.9	46.2	47.5	48.6	49.8	50.9	51.9
ICS32	32	17	64.1	66.3	68.2	70.2	71.9	73.6	75.3	76.7
ICS40	40	27	102	105	108	111	114	117	120	122
ICS50	50	44	166	172	177	182	186	190	195	199
ICS65	65	70	264	273	281	289	296	303	310	316
ICS80	80	85	321	331	341	351	359	368	376	384
ICS100	100	142	536	554	570	586	600	615	629	641
ICS125	125	207	781	807	831	855	875	897	917	935
ICS150	150	354	1335	1381	1421	1461	1497	1534	1568	1599

Correction factor for ΔP ($f_{\Delta P}$)

ΔP (bar)	Correction factor
0.2	**1.00**
0.25	0.89
0.3	0.82
0.4	0.71
0.5	0.63
0.6	0.58

Correction factor for discharge temperature (T_{disch}).

Discharge temperature [°C]	Correction factor
50	0.96
60	0.97
80	**1.00**
90	1.01
100	1.03
110	1.04
120	1.06

Correction factor for liquid temperature (T_{liq}).

Liquid temperature [°C]	Correction factor
-20	0.71
-10	0.75
0	0.80
10	0.86
20	0.92
30	**1.00**
40	1.09
50	1.22

US units

Capacity table for nominal conditions, Q_N [Tons of Refrigeration],
T_{liq} = 90 °F,
ΔP = 3 psi,
P_{disch} = 120 psi,
T_{disch} = 180 °F
Superheat = 12 °F

R 22

Type	Valve body size	C_v [USgal/min]	Evaporating temperature [°F]							
			-60	-40	-20	0	20	40	60	80
ICS25-5	25	2	1.8	1.9	2.0	2.0	2.1	2.1	2.2	2.2
ICS25-10		4.1	3.7	3.9	4.0	4.1	4.3	4.4	4.5	4.6
ICS25-15		7	6.4	6.6	6.8	7.1	7.3	7.4	7.6	7.8
ICS25-20		9.3	8.5	8.8	9.1	9.4	9.6	9.9	10.1	10.3
ICS25-25		13.3	12.1	12.6	13.0	13.4	13.8	14.2	14.5	14.8
ICS32	32	20	18.2	18.9	19.6	20.2	20.7	21.3	21.8	22.2
ICS40	40	31	28.3	29.3	30.3	31.3	32.1	33.0	33.8	34.4
ICS50	50	51	46.5	48.2	49.9	51.4	52.9	54.3	55.5	56.7
ICS65	65	81	73.9	76.6	79.2	81.7	84.0	86.2	88.2	90.0
ICS80	80	98	89	93	96	99	102	104	107	109
ICS100	100	165	150	156	162	166	172	175	180	183
ICS125	125	240	218	227	235	242	250	255	262	267
ICS150	150	410	373	388	402	413	426	436	447	456

Correction factor for ΔP ($f_{\Delta P}$)

ΔP (psi)	Correction factor
3	**1.00**
4	0.87
5	0.79
6	0.72
7	0.66
8	0.62

Correction factor for discharge temperature (T_{disch}).

Discharge temperature [°F]	Correction factor
120	0.95
140	0.97
180	**1.00**
200	1.02
210	1.02
230	1.04
250	1.05

Correction factor for liquid temperature (T_{liq}).

Liquid temperature [°F]	Correction factor
-10	0.73
10	0.77
30	0.82
50	0.87
70	0.93
90	**1.00**
110	1.09
130	1.20

ICS 25

Ordering from the parts programme

Example (select from table I, II and III)

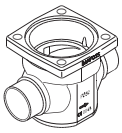

Valve body 25 D (1 in.)
027H2120
Table I

+

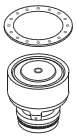

Function module ICS 25-15
027H2203
Table II

+

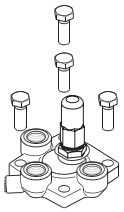

Top cover 3 pilots
027H2173
Table III

=

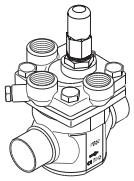

ICV 25 valve body w/different connections *Table I*



20 D (¾ in.)	25 D (1 in.)	32 D (1¼ in.)	40 D (1½ in.)
027H2128	**027H2120**	**027H2129**	**027H2135**
35 SD (1⅜ in. SA)	28 SA (1⅛ in.)	22 SA (⅞ in.)	28 SD (1⅛ in.)
027H2134	**027H2126**	**027H2125**	**027H2124**
22 SD (⅞ in.)	20 A (¾ in.)	25 A (1 in.)	32 A (1¼ in.)
027H2123	**027H2131**	**027H2121**	**027H2130**
20 SOC (¾ in.)	25 SOC (1 in.)	20 FPT (½ in.)	25 FPT (1 in.)
027H2132	**027H2122**	**027H2133**	**027H2127**

ICS 25 function module *Table II*

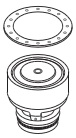

Description	Code Number
ICS 25-5	**027H2201** *)
ICS 25-10	**027H2202** *)
ICS 25-15	**027H2203** *)
ICS 25-20	**027H2204** *)
ICS 25-25	**027H2200** *)

*) Including gasket and O-rings

ICS 25 top cover *Table III*

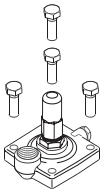

ICS 1

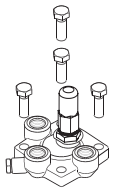

ICS 3

Description	Code Number
Top cover 1 Pilot	**027H2172** *)
Top cover 3 Pilots	**027H2173** **)

*) Including bolts
**) including bolts and one blanking plug

D = Butt-weld DIN ; A = Butt-weld ANSI ; J = Butt-weld JIS ; SOC = Socket weld ANSI ; SD = Solder DIN ; SA = Solder ANSI ; FPT = Female Pipe Thread

Ordering complete factory assembled valve

(body, function module and top cover)

Table A

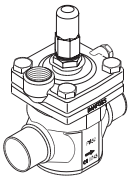

1 pilot

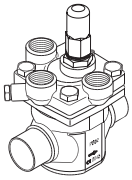

3 pilots

		Available connections							
		20 D (¾ in.)	25 D (1 in.)	32 D (1¼ in.)	40 D (1½ in.)	35 SD (1⅜ in. SA)	28 SA (1⅛ in.)	22 SA (⅞ in.)	28 SD (1⅛ in.)
ICS 25-5	1 Pilot	**027H2028**	**027H2020**				**027H2026**	**027H2025**	**027H2024**
	3 Pilots *)	**027H2078**	**027H2070**				**027H2076**	**027H2075**	**027H2074**
ICS 25-10	1 Pilot	**027H2038**	**027H2030**				**027H2036**	**027H2035**	**027H2034**
	3 Pilots *)	**027H2088**	**027H2080**				**027H2086**	**027H2085**	**027H2084**
ICS 25-15	1 Pilot	**027H2048**	**027H2040**				**027H2046**	**027H2045**	**027H2044**
	3 Pilots *)	**027H2098**	**027H2090**				**027H2096**	**027H2095**	**027H2094**
ICS 25-20	1 Pilot	**027H2058**	**027H2050**				**027H2056**	**027H2055**	**027H2054**
	3 Pilots *)	**027H2108**	**027H2100**				**027H2106**	**027H2105**	**027H2104**
ICS 25-25	1 Pilot	**027H2068**	**027H2060**				**027H2066**	**027H2065**	**027H2064**
	3 Pilots *)	**027H2118**	**027H2110**				**027H2116**	**027H2115**	**027H2114**

		22 SD (⅞ in.)	20 A (¾ in.)	25 A (1 in.)	32 A (1¼ in.)	20 SOC (¾ in.)	25 SOC (1 in.)	20 FPT (½ in.)	25 FPT (1 in.)
ICS 25-5	1 Pilot	**027H2023**	**027H2029**	**027H2021**		**027H2140**			
	3 Pilots *)	**027H2073**	**027H2079**	**027H2071**		**027H2145**			
ICS 25-10	1 Pilot	**027H2033**	**027H2039**	**027H2031**					
	3 Pilots *)	**027H2083**	**027H2089**	**027H2081**		**027H2146**			
ICS 25-15	1 Pilot	**027H2043**	**027H2049**	**027H2041**		**027H2142**			
	3 Pilots *)	**027H2093**	**027H2099**	**027H2091**					
ICS 25-20	1 Pilot	**027H2053**	**027H2059**	**027H2051**		**027H2143**			
	3 Pilots *)	**027H2103**	**027H2109**	**027H2101**		**027H2148**			
ICS 25-25	1 Pilot	**027H2063**		**027H2061**			**027H2062**		
	3 Pilots *)	**027H2113**		**027H2111**			**027H2112**		

Select from parts programme

*) Including one blanking plug (A+B)

ICS 32

Ordering from the parts programme

Example (select from table I, II and III)



Valve body 32 D (1¼ in.)
027H3120
Table I

Function module ICS 32
027H3200
Table II

Top cover 3 pilots
027H3173
Table III

ICV 32 valve body w/different connections *Table I*

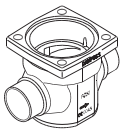

32 D (1¼ in.)	40 D (1½ in.)	42 SA (1⅝ in.)	42 SD (1⅝ in.)
027H3120	**027H3125**	**027H3127**	**027H3128**

35 SD (1⅜ in. SA)	32 A (1¼ in.)	32 SOC (1¼ in.)	40 A (1½ in.)
027H3123	**027H3121**	**027H3122**	**027H3126**

D = Butt-weld DIN ; A = Butt-weld ANSI ; J = Butt-weld JIS ; SOC = Socket weld ANSI ;
SD = Solder DIN ; SA = Solder ANSI ; FPT = Female Pipe Thread

ICS 32 function module *Table II*

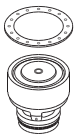

Description	Code Number
ICS 32	**027H3200** *)

*) Including gasket and O-rings

ICS 32 top cover *Table III*

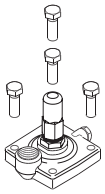

ICS 1

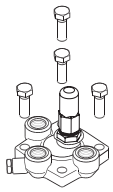

ICS 3

Description	Code Number
Top cover 1 Pilot	**027H3172** *)
Top cover 3 Pilots	**027H3173** **)

*) Including bolts
**) including bolts and one blanking plug

Ordering complete factory assembled valve

(body, function module and top cover) *Table A*

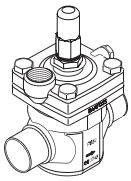

1 pilot

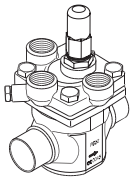

3 pilots

		Available connections							
		32 D (1¼ in.)	40 D (1½ in.)	42 SA (1⅝ in.)	42 SD (1⅝ in.)	35 SD (1⅜ in. SA)	32 A (1¼ in.)	32 SOC (1¼ in.)	40 A (1½ in.)
ICS 32	1 Pilot	**027H3020**				**027H3023**	**027H3021**	**027H3022**	
	3 Pilots *)	**027H3030**				**027H3033**	**027H3031**	**027H3032**	

Select from parts programme

*) Including one blanking plug (A+B)

ICS 40

Ordering from the parts programme

Example (select from table I, II and III)



Valve body 50 D (2 in.)
027H4126
Table I

Function module ICS 40
027H4200
Table II

Top cover 1 pilot
027H4172
Table III

ICV 40 valve body w/different connections *Table I*



40 D (1½ in.)	50 D (2 in.)	42 SA (1⅝ in.)	42 SD (1⅝ in.)
027H4120	**027H4126**	**027H4124**	**027H4123**

40 A (1½ in.)	40 SOC (1½ in.)	50 A (2 in.)	
027H4121	**027H4122**	**027H4127**	

D = Butt-weld DIN ; A = Butt-weld ANSI ; J = Butt-weld JIS ; SOC = Socket weld ANSI ;
SD = Solder DIN ; SA = Solder ANSI ; FPT = Female Pipe Thread

ICS 40 function module *Table II*

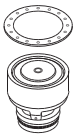

Description	Code Number
ICS 40	**027H4200** *)

*) Including gasket and O-rings

ICS 40 top cover *Table III*

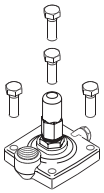

ICS 1

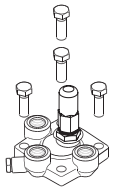

ICS 3

Description	Code Number
Top cover 1 Pilot	**027H4172** *)
Top cover 3 Pilots	**027H4173** **)

*) Including bolts
**) including bolts and one blanking plug

Ordering complete factory assembled valve

(body, function module and top cover) *Table A*

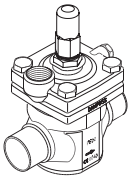

1 pilot

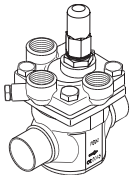

3 pilots

		Available connections						
		40 D (1½ in.)	50 D (2 in.)	42 SA (1⅝ in.)	42 SD (1⅝ in.)	40 A (1½ in.)	40 SOC (1½ in.)	50 A (2 in.)
ICS 40	1 Pilot	**027H4020**		**027H4024**	**027H4023**	**027H4021**	**027H4022**	
	3 Pilots *)	**027H4030**		**027H4034**	**027H4033**	**027H4031**	**027H4032**	

Select from parts programme

*) Including one blanking plug (A+B)

ICS 50

Ordering from the parts programme

Example (select from table I, II and III)



Valve body 65 D (2½ in.)
027H5124
Table I

Function module ICS 40
027H5200
Table II

Top cover 1 pilot
027H5172
Table III

ICV 50 valve body w/different connections *Table I*

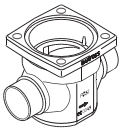

50 D (2 in.)	65 D (2½ in.)	54 SD (2⅛ in. SA)	50 A (2 in.)
027H5120	**027H5124**	**027H5123**	**027H5121**

50 SOC (2 in.)	65 A (21/2 in.)		
027H5122	**027H5125**		

D = Butt-weld DIN ; A = Butt-weld ANSI ; J = Butt-weld JIS ; SOC = Socket weld ANSI ;
SD = Solder DIN ; SA = Solder ANSI ; FPT = Female Pipe Thread

ICS 50 function module *Table II*

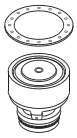

Description	Code Number
ICS 50	**027H5200** *)

*) Including gasket and O-rings

ICS 50 top cover *Table III*

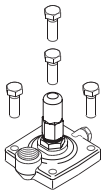

ICS 1

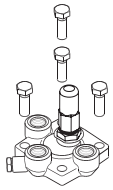

ICS 3

Description	Code Number
Top cover 1 Pilot	**027H5172** *)
Top cover 3 Pilots	**027H5173** **)

*) Including bolts
**) including bolts and one blanking plug

Ordering complete factory assembled valve

(body, function module and top cover) *Table A*

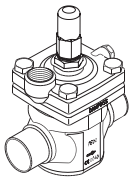

1 pilot

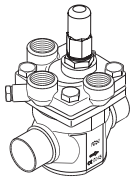

3 pilots

		Available connections					
		50 D (2 in.)	65 D (2½ in.)	54 SD (2⅛ in. SA)	65 A (2½ in.)	50 A (2 in.)	50 SOC (2 in.)
ICS 50	1 Pilot	**027H5020**		**027H5023**		**027H5021**	**027H5022**
	3 Pilots *)	**027H5030**		**027H5033**		**027H5031**	**027H5032**

Select from parts programme

*) Including one blanking plug (A+B)

ICS 65 and ICS 80

Ordering from the parts programme

Example (select from table I, II and III)



Valve body 76 SD (2¾ in.)
027H6124
Table I

Function module
ICS 65 **027H6200**
ICS 80 **027H8200**
Table II

Top cover 3 pilots
027H6173
Table III

ICV 65 valve body w/different connections *Table I*



65 D (2½ in.)	65 A (2½ in.)	65 J (2½ in.)	80 D (3 in.)
027H6120	**027H6121**	**027H6122**	**027H6126**

80 A (3 in.)	67 SA (2 ⅝ in.)	76 SD (3 in.)	65 SOC (2½ in.)
027H6127	**027H6125**	**027H6124**	**027H6123**

D = Butt-weld DIN ; A = Butt-weld ANSI ; J = Butt-weld JIS ; SOC = Socket weld ANSI ;
SD = Solder DIN ; SA = Solder ANSI ; FPT = Female Pipe Thread

ICS 65 and ICS 80 function module *Table II*

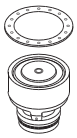

Description	Code Number
ICS 65	**027H6200** *)
ICS 80	**027H8200** *)

*) Including gasket and O-rings

ICS 65/80 top cover *Table III*

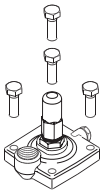

ICS 1

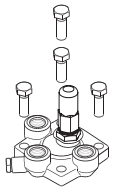

ICS 3

Description	Code Number
Top cover 1 Pilot (65)	**027H6172** *)
Top cover 3 Pilots (65)	**027H6173** **)
Top cover 1 Pilot (80)	**027H8192** *)
Top cover 3 Pilots (80)	**027H8193** **)

*) Including bolts
**) Including bolts and one blanking plug

Ordering complete factory assembled valve

(body, function module and top cover)

Table A

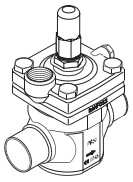

1 pilot

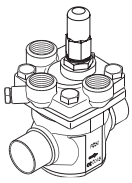

3 pilots

		Available connections							
		65 D (2½ in.)	65 A (2½ in.)	65 SOC (2½ in.)	80 D (3 in.)	80 A (3 in.)	67 SA (2⅝ in.)	76 SD (3 in.)	65 J (2½ in.)
ICS 65	1 Pilot	**027H6020**	**027H6021**	**027H6023**			**027H6025**	**027H6024**	
	3 Pilots *)	**027H6030**	**027H6031**	**027H6033**			**027H6035**	**027H6034**	
ICS 80	1 Pilot				**027H8020**	**027H8021**			
	3 Pilots *)				**027H8030**	**027H8031**			

Select from parts programme

*) Including one blanking plug (A+B)

Note:
The capacity of the ICS 80 module can only be achieved when using the valve body with 80 D or A (3 in) connections.
If any other ICV 65 valve body is used the capacity of the complete valve will be reduced by approximately 6%.

ICS 100 - 150

Ordering complete factory assembled valve
(body, function module and top cover)

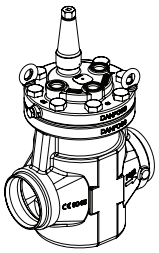

	Connections		
	100 D (4 in.)	100 A (4 in.)	100 A (4 in.) with ⅜ in. NPT pressure outlet
ICS 100 *)	**027H7120**	**027H7121**	**027H7122**

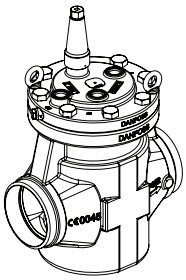

	Connections		
	125 D (5 in.)	125 A (5 in.)	125 A (5 in.) with ⅜ in. NPT pressure outlet
ICS 125 *)	**027H7140**	**027H7141**	**027H7142**

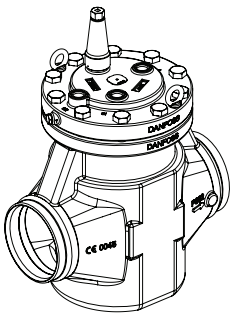

	Connections		
	150 D (6 in.)	150 A (6 in.)	150 A (6 in.) with ⅜ in. NPT pressure outlet
ICS 150 *)	**027H7160**	**027H7161**	**027H7162**

*) Including two blanking plugs (A) and one sealing plug (B)

Spare parts: Please see AI245486497115

Accessories

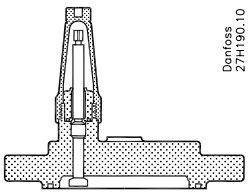

Top covers		
Consist of: Top cover complete with manuel spindle, and gasket	Size	**Code number**
	ICS 100	**027H7123**
	ICS 125	**027H7143**
	ICS 150	**027H7163**

Accessories

ICV PM flanged valve housings
ICV PM flanged valve housings can replace the PM valves on already installed refrigeration systems.

Pressure range
The ICV PM valve housing is designed for a max. working pressure of 28 bar g (406 psig) and therefore a suitable replacement for PM valves in the service market. They also offer the same drop-in dimensions as the PM valves.

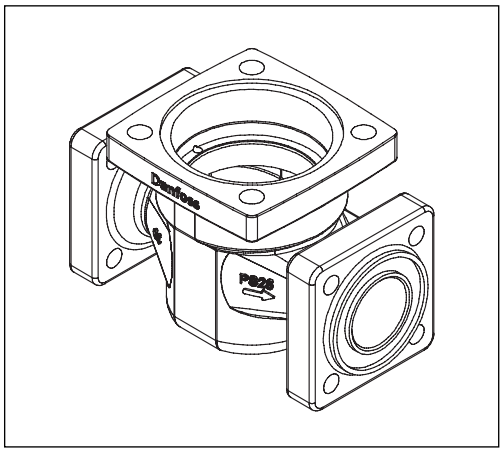

Description	Code no.
ICV 25 PM Valve housing	**027H2119** *)
ICV 32 PM Valve housing	**027H3129** *)
ICV 40 PM Valve housing	**027H4128** *)
ICV 50 PM Valve housing	**027H5127** **)
ICV 65 PM Valve housing	**027H6128** **)

*) Includes ICV PM valve housing, flange gaskets and flange bolts.
**) Includes ICV PM valve housing, flange gaskets, flange bolts and flange nuts.

Function modules and top covers must be ordered separately (see the section “Ordering”).

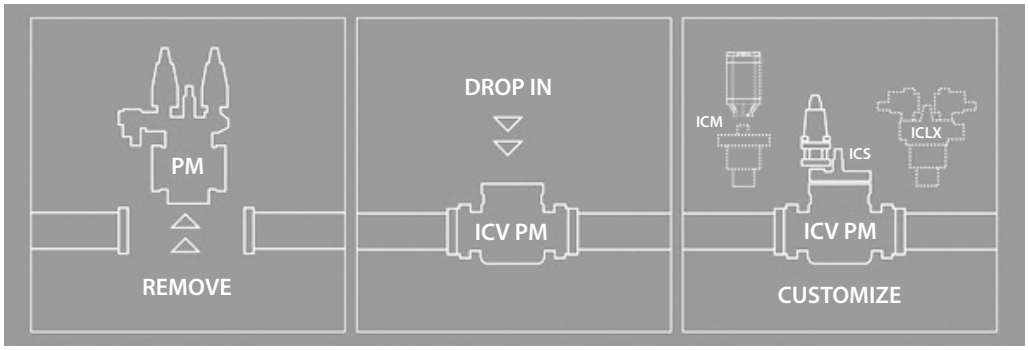

Accessories

ICV (H)A4A flanged valve housings
ICV (H)A4A flanged valve housings can replace the (H)A4A valves on already installed refrigeration systems.

Pressure range
The ICV (H)A4A valve housing is designed for a max. working pressure of 28 bar g (406 psig) and therefore a suitable replacement for (H)A4A valves in the service market. They also offer the same drop-in dimensions as the (H)A4A valves.

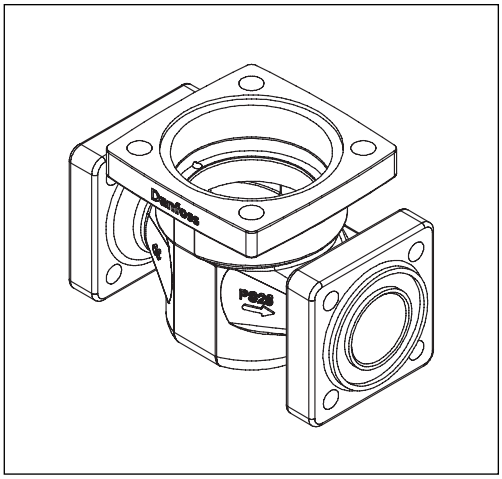

Description	Code no.
ICV 25 (H)A4A Valve housing	**027H2304** *)
ICV 32 A4A Valve housing	**027H3130** *)
ICV 32 HA4A Valve housing	**027H3131** *)
ICV 40 (H)A4A Valve housing	**027H4129** *)
ICV 50 (H)A4A Valve housing	**027H5128** *)
ICV 65 (H)A4A Valve housing	**027H6129** *)

*) Includes ICV (H)A4A valve housing, flange gaskets, flange bolts and flange nuts.

Function modules and top covers must be ordered separately (see the section "Ordering").

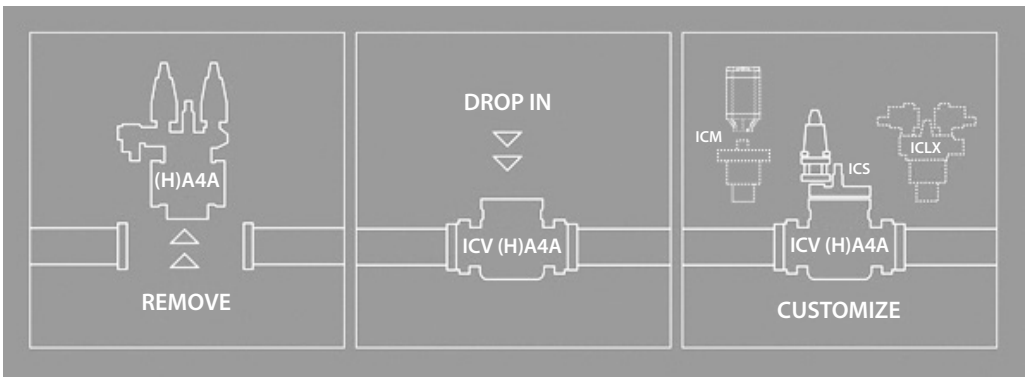

Pressure gauge connection (weld / solder).

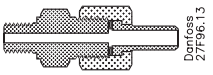

Description	Code no.
∅ 6.5 mm / ∅ 10 mm (∅ 0.26 in. / ∅ 0.39 in.) weld / solder	**027B2035**

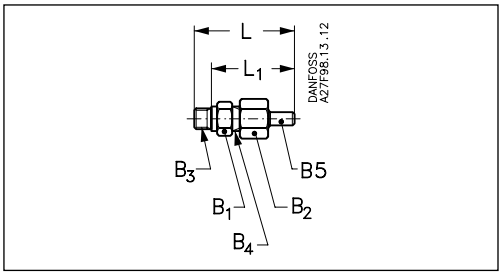

Accessories		L	L_1	B_1	B_2	B_3	B_4	B_5
Pressure gauge connection (weld / solder)								
	mm in.	66 2.60	54 2.13	AF 19	AF 22	G 1/4 A	G 3/4 A	∅6.5 / ∅10

Accessories
(continued)

Pressure gauge connection, 1/4 in flare (self-closing)
Must not be used in R 717 plant.

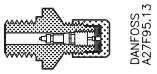

Description	Code no.
¼ in flare	**027B2041**

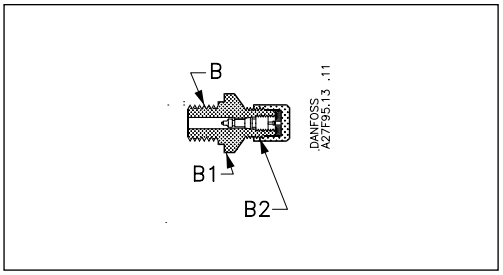

Accessories						B	B_1	B_2
Pressure gauge connection, 1/4 in flare (self-closing)								
¼ in flare						G ¼ A	AF 19	¼ in flare

Pressure gauge connection (cutting ring).

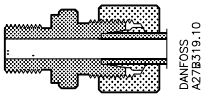

Description	Code no.
Cutting ring connection, 6 mm	**027B2063**
Cutting ring connection, 10 mm	**027B2064**

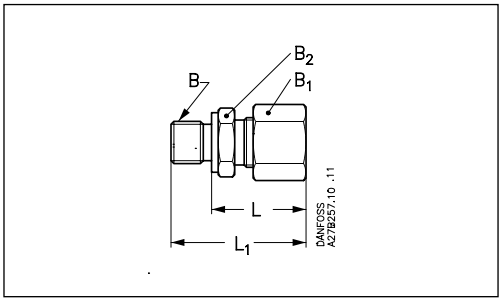

Accessories			L	L_1		B	B_1	B_2
Pressure gauge connection (cutting ring)								
6 mm	[mm] [in]		27 1.06	39 1.54		G ¼ A	AF 19	AF 14
10 mm	[mm] [in]		29 1.14	40 1.57		G ¼ A	AF 19	AF 14

Multi-function tool

Description	Code no.
Multi-function tool for ICS 25-65	**027H0180 / 027H0181**

The multi-funktion tool can be used for:
- Removing the ICS function module
- Operating the manual spindle

For further information please see the instruction PIHU0A.

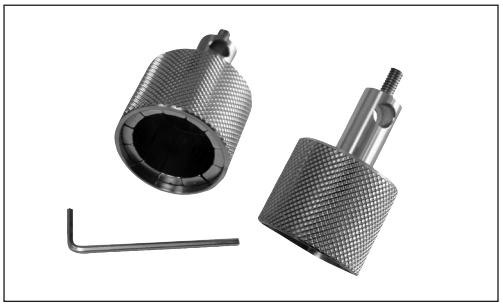

Pressure gauge connection.

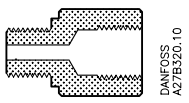

Description	Code no.
1/4 FPT	**027B2062**

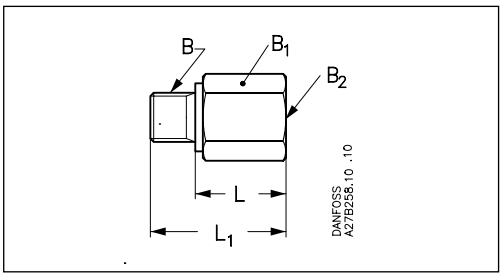

Accessories			L	L_1		B	B_1	B_2
Pressure gauge connection								
	[mm] [in]		23 0.91	35.5 1.40		G ¼ A	AF 22	¼ FPT

Accessories
(continued)

External pilot connection.

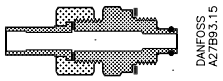

ICS	Description	Code no.
5 - 80	External pilot connection (incl. damping orifice, D: 1.0 mm)	**027F1048**
5 - 150	Accessory bag with seal and O-ring for pilot valve	**027F0666**
100 - 150	External pilot connection (incl. damping orifice, D: 1.8 mm)	**027F1049**

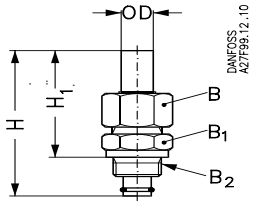

Accessories			H	H_1	OD	B	B_1	B_2
External pilot connection								
	[mm] [in]		90 3.54	66 2.60	18 0.71	AF 32	AF 32	M 24 × 1.5

Blanking plug for pilot valves.



Description	Code no.
Blanking plug	**027F1046**

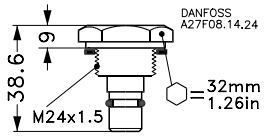

Recommended filters							Filter element for liquid line		Filter element for suction line	
							150 mesh	100 mesh	72 mesh	38 mesh
	Filter Type	Size	D	A	FPT	SOC	100 my	150 my	250 my	500 my
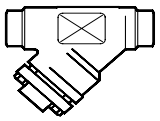	FIA Straightway	20 (¾ in)	**148B5343**	**148B5347**	**148B5349**	**148B5348**	**148H3122**	**148H3124**	**148H3126**	**148H3128**
	FIA Straightway	25 (1 in)	**148B5443**	**148B5447**	**148B5449**	**148B5448**	**148H3123**	**148H3125**	**148H3127**	**148H3129**
	FIA Straightway	32 (1 ¼ in)	**148B5544**	**148B5552**	**148B5549**	**148B5548**	**148H3123**	**148H3125**	**148H3127**	**148H3129**
	FIA Straightway	40 (1 ½ in)	**148B5625**	**148B5644**		**148B5645**	**148H3123**	**148H3125**	**148H3127**	**148H3129**
	FIA Straightway	50 (2 in)	**148B5713**	**148B5716**		**148B5717**	**148H3157**	**148H3130**	**148H3138**	**148H3144**
	FIA Straightway	65 (2 ½ in)	**148B5813**	**148B5815**				**148H3131**	**148H3139**	**148H3145**
	FIA Straightway	80 (3 in)	**148B5906**	**148B5908**				**148H3119**	**148H3120**	**148H3121**
	FIA Straightway	100 (4 in)	**148B6007**	**148B6009**				**148H3132**	**148H3140**	**148H3146**
	FIA Straightway	125 (5 in)	**148B6106**	**148B6108**				**148H3133**	**148H3141**	**148H3147**
	FIA Straightway	150 (6 in)	**148B6203**	**148B6205**				**148H3134**	**148H3142**	**148H3148**

Dimensions and weights - **ICS 25-5 to ICS 25-25**

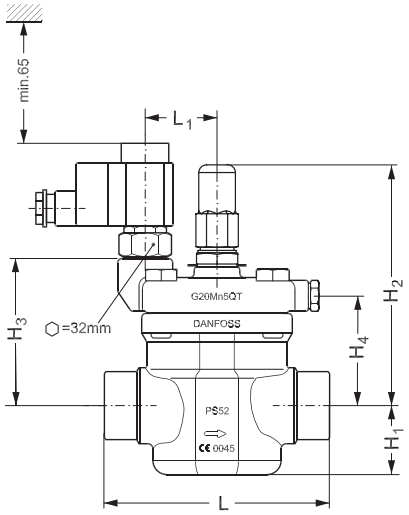

ICS 1 pilot

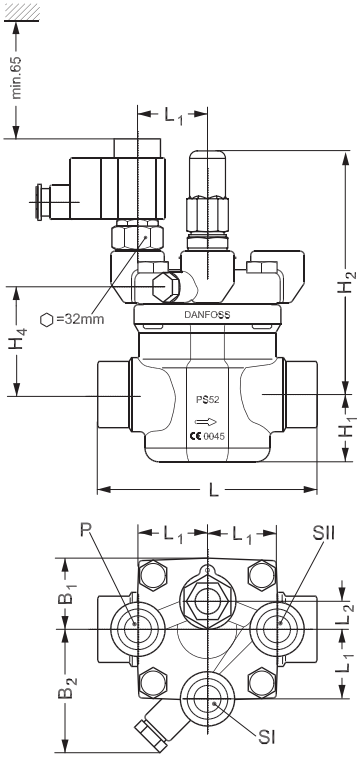

ICS 3 Pilots

Connection		H_1	H_2	H_3	H_4	L	L_1	L_2	B_1	B_2	Weight ICS 1 Pilot	Weight ICS 3 Pilots
20 D (¾ in.)	mm	37	145	86	60	135	42	15	42	87	3 kg	3.6 kg
	in.	1.46	5.71	3.39	2.36	5.31	1.65	0.59	1.65	3.43	6.6 lb.	7.92 lb.
25 D (1 in.)	mm	37	145	86	60	135	42	15	42	87	3 kg	3.6 kg
	in.	1.46	5.71	3.39	2.36	5.31	1.65	0.59	1.65	3.43	6.6 lb.	7.92 lb.
32 D (1¼ in.)	mm	37	145	86	60	135	42	15	42	87	3 kg	3.6 kg
	in.	1.46	5.71	3.39	2.36	5.31	1.65	0.59	1.65	3.43	6.6 lb.	7.92 lb.
40 D (1½ in.)	mm	37	145	86	60	135	42	15	42	87	3 kg	3.6 kg
	in.	1.46	5.71	3.39	2.36	5.31	1.65	0.59	1.65	3.43	6.6 lb.	7.92 lb.
20 A (¾ in.)	mm	37	145	86	60	135	42	15	42	87	3 kg	3.6 kg
	in.	1.46	5.71	3.39	2.36	5.31	1.65	0.59	1.65	3.43	6.6 lb.	7.92 lb.
25 A (1 in.)	mm	37	145	86	60	135	42	15	42	87	3 kg	3.6 kg
	in.	1.46	5.71	3.39	2.36	5.31	1.65	0.59	1.65	3.43	6.6 lb.	7.92 lb.
32 A (1¼ in.)	mm	37	145	86	60	135	42	15	42	87	3 kg	3.6 kg
	in.	1.46	5.71	3.39	2.36	5.31	1.65	0.59	1.65	3.43	6.6 lb.	7.92 lb.
20 SOC (¾ in.)	mm	37	145	86	60	135	42	15	42	87	3 kg	3.6 kg
	in.	1.46	5.71	3.39	2.36	5.31	1.65	0.59	1.65	3.43	6.6 lb.	7.92 lb.
25 SOC (1 in.)	mm	37	145	86	60	147	42	15	42	87	3 kg	3.6 kg
	in.	1.46	5.71	3.39	2.36	5.79	1.65	0.59	1.65	3.43	6.6 lb.	7.92 lb.
22 SD (⅞ in.)	mm	37	145	86	60	135	42	15	42	87	3 kg	3.6 kg
	in.	1.46	5.71	3.39	2.36	5.31	1.65	0.59	1.65	3.43	6.6 lb.	7.92 lb.
28 SD (1⅛ in.)	mm	37	145	86	60	147	42	15	42	87	3 kg	3.6 kg
	in.	1.46	5.71	3.39	2.36	5.78	1.65	0.59	1.65	3.43	6.6 lb.	7.92 lb.
22 SA (⅞ in.)	mm	37	145	86	60	135	42	15	42	87	3 kg	3.6 kg
	in.	1.46	5.71	3.39	2.36	5.31	1.65	0.59	1.65	3.43	6.6 lb.	7.92 lb.
28 SA (1⅛ in.)	mm	37	145	86	60	147	42	15	42	87	3 kg	3.6 kg
	in.	1.46	5.71	3.39	2.36	5.78	1.65	0.59	1.65	3.43	6.6 lb.	7.92 lb.
35 SA (1⅜ in.)	mm	37	145	86	60	147	42	15	42	87	3 kg	3.6 kg
	in.	1.46	5.71	3.39	2.36	5.78	1.65	0.59	1.65	3.43	6.6 lb.	7.92 lb.
20 FPT (¾ in.)	mm	37	145	86	60	135	42	15	42	87	3 kg	3.6 kg
	in.	1.46	5.71	3.39	2.36	5.31	1.65	0.59	1.65	3.43	6.6 lb.	7.92 lb.
25 FPT (1 in.)	mm	37	145	86	60	135	42	15	42	87	3 kg	3.6 kg
	in.	1.46	5.71	3.39	2.36	5.31	1.65	0.59	1.65	3.43	6.6 lb.	7.92 lb.

D = Butt-weld DIN ; A = Butt-weld ANSI ; J = Butt-weld JIS ; SOC = Socket weld ANSI ; SD = Solder DIN ; SA = Solder ANSI ; FPT = Female Pipe Thread

Dimensions and weights - ICS 32

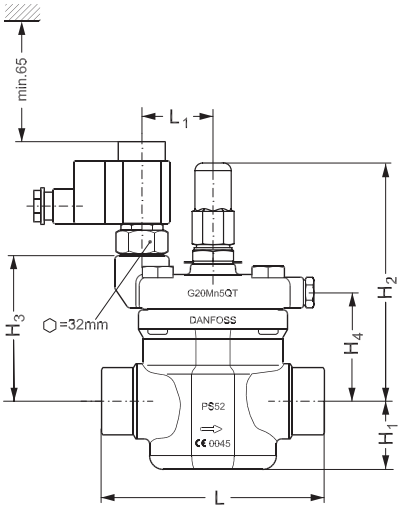

ICS 1 pilot

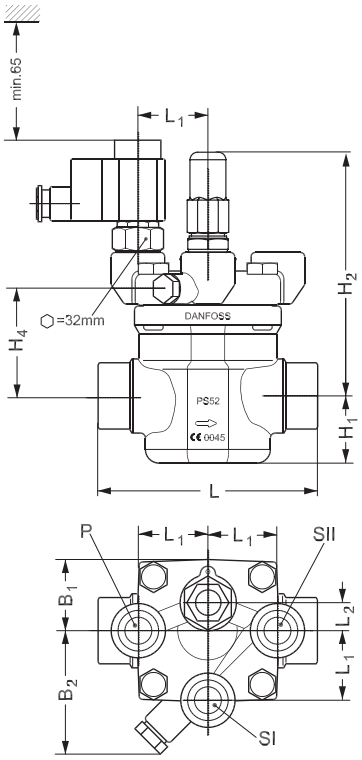

ICS 3 Pilots

Connection		H_1	H_2	H_3	H_4	L	L_1	L_2	B_1	B_2	Weight ICS 1 Pilot	Weight ICS 3 Pilots
32 D (1¼ in.)	mm	40	160	100	74	145	51	15	51	87	4.5 kg	5 kg
	in.	1.57	6.30	3.93	2.91	5.71	2.00	0.59	2.00	3.43	9.9 lb.	11 lb.
40 D (1½ in.)	mm	40	160	100	74	145	51	15	51	87	4.5 kg	5 kg
	in.	1.57	6.30	3.93	2.91	5.71	2.00	0.59	2.00	3.43	9.9 lb.	11 lb.
32 A (1¼ in.)	mm	40	160	100	74	145	51	15	51	87	4.5 kg	5 kg
	in.	1.57	6.30	3.93	2.91	5.71	2.00	0.59	2.00	3.43	9.9 lb.	11 lb.
40 A (1½ in.)	mm	40	160	100	74	145	51	15	51	87	4.5 kg	5 kg
	in.	1.57	6.30	3.93	2.91	5.71	2.00	0.59	2.00	3.43	9.9 lb.	11 lb.
32 SOC (1¼ in.)	mm	40	160	100	74	148	51	15	51	87	4.5 kg	5 kg
	in.	1.57	6.30	3.93	2.91	5.83	2.00	0.59	2.00	3.43	9.9 lb.	11 lb.
35 SD (1⅜ in. SA)	mm	40	160	100	74	148	51	15	51	87	4.5 kg	5 kg
	in.	1.57	6.30	3.93	2.91	5.83	2.00	0.59	2.00	3.43	9.9 lb.	11 lb.
42 SD (1⅝ in.)	mm	40	160	100	74	148	51	15	51	87	4.5 kg	5 kg
	in.	1.57	6.30	3.93	2.91	5.83	2.00	0.59	2.00	3.43	9.9 lb.	11 lb.
42 SA (1⅝ in.)	mm	40	160	100	74	148	51	15	51	87	4.5 kg	5 kg
	in.	1.57	6.30	3.93	2.91	5.83	2.00	0.59	2.00	3.43	9.9 lb.	11 lb.

D = Butt-weld DIN ; A = Butt-weld ANSI ; J = Butt-weld JIS ; SOC = Socket weld ANSI ; SD = Solder DIN ; SA = Solder ANSI ; FPT = Female Pipe Thread

Dimensions and weights - ICS 40

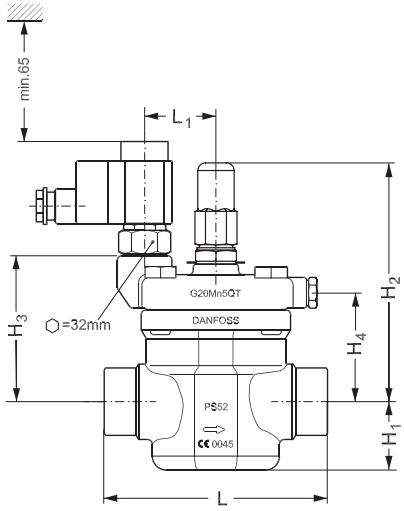

ICS 1 pilot

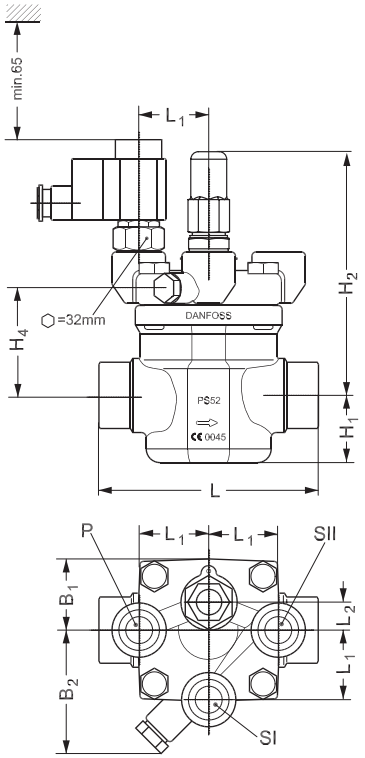

ICS 3 Pilots

Connection		H_1	H_2	H_3	H_4	L	L_1	L_2	B_1	B_2	Weight ICS 1 Pilot	Weight ICS 3 Pilots
40 D (1½ in.)	mm	49	166	105	78	160	51	15	54	87	5.9 kg	6.3 kg
	in.	1.93	6.54	4.13	3.07	6.30	2.00	0.59	2.13	3.43	13.0 lb.	13.9 lb.
50 D (2 in.)	mm	49	166	105	78	180	51	15	54	87	5.9 kg	6.3 kg
	in.	1.93	6.54	4.13	3.07	7.09	2.00	0.59	2.13	3.43	13.0 lb.	13.9 lb.
40 A (1½ in.)	mm	49	166	105	78	160	51	15	54	87	5.9 kg	6.3 kg
	in.	1.93	6.54	4.13	3.07	6.30	2.00	0.59	2.13	3.43	13.0 lb.	13.9 lb.
50 A (2 in.)	mm	49	166	105	78	180	51	15	54	87	5.9 kg	6.3 kg
	in.	1.93	6.54	4.13	3.07	7.09	2.00	0.59	2.13	3.43	13.0 lb.	13.9 lb.
40 SOC (1½ in.)	mm	49	166	105	78	180	51	15	54	87	5.9 kg	6.3 kg
	in.	1.93	6.54	4.13	3.07	7.09	2.00	0.59	2.13	3.43	13.0 lb.	13.9 lb.
42 SD (1⅝ in.)	mm	49	166	105	78	180	51	15	54	87	5.9 kg	6.3 kg
	in.	1.93	6.54	4.13	3.07	7.09	2.00	0.59	2.13	3.43	13.0 lb.	13.9 lb.
42 SA (1⅝ in.)	mm	49	166	105	78	180	51	15	54	87	5.9 kg	6.3 kg
	in.	1.93	6.54	4.13	3.07	7.09	2.00	0.59	2.13	3.43	13.0 lb.	13.9 lb.

D = Butt-weld DIN ; A = Butt-weld ANSI ; J = Butt-weld JIS ; SOC = Socket weld ANSI ; SD = Solder DIN ; SA = Solder ANSI ; FPT = Female Pipe Thread

Dimensions and weights - ICS 50

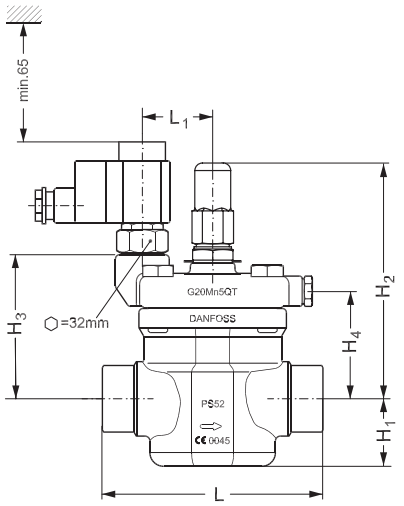

ICS 1 pilot

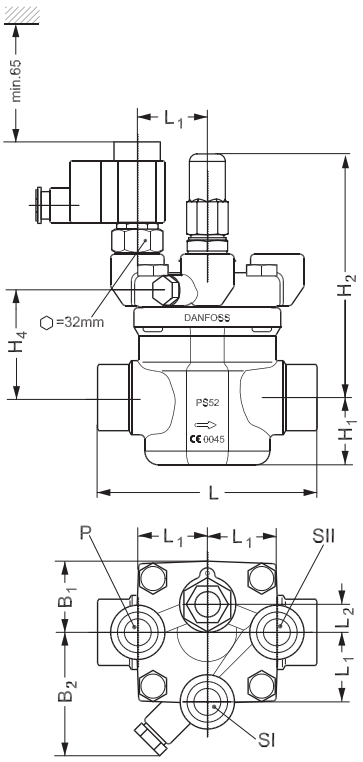

ICS 3 Pilots

Connection		H_1	H_2	H_3	H_4	L	L_1	L_2	B_1	B_2	Weight ICS 1 Pilot	Weight ICS 3 Pilots
50 D (2 in.)	mm	59	181	120	93	200	51	15	63	91	8.9 kg	9.2 kg
	in.	2.32	7.13	4.72	3.66	7.87	2.00	0.59	2.48	3.58	19.6 lb.	20.2 lb.
65 D (2½ in.)	mm	59	181	120	93	210	51	15	63	91	8.9 kg	9.2 kg
	in.	2.32	7.13	4.72	3.66	8.27	2.00	0.59	2.48	3.58	19.6 lb.	20.2 lb.
50 A (2 in.)	mm	59	181	120	93	200	51	15	63	91	8.9 kg	9.2 kg
	in.	2.32	7.13	4.72	3.66	7.87	2.00	0.59	2.48	3.58	19.6 lb.	20.2 lb.
65 A (2½ in.)	mm	59	181	120	93	210	51	15	63	91	8.9 kg	9.2 kg
	in.	2.32	7.13	4.72	3.66	8.27	2.00	0.59	2.48	3.58	19.6 lb.	20.2 lb.
50 SOC (2 in.)	mm	59	181	120	93	216	51	15	63	91	8.9 kg	9.2 kg
	in.	2.32	7.13	4.72	3.66	8.50	2.00	0.59	2.48	3.58	19.6 lb.	20.2 lb.
54 SD (2⅛ in. SA)	mm	59	181	120	93	216	51	15	63	91	8.9 kg	9.2 kg
	in.	2.32	7.13	4.72	3.66	8.50	2.00	0.59	2.48	3.58	19.6 lb.	20.2 lb.

D = Butt-weld DIN ; A = Butt-weld ANSI ; J = Butt-weld JIS ; SOC = Socket weld ANSI ; SD = Solder DIN ; SA = Solder ANSI ; FPT = Female Pipe Thread

Dimensions and weights - ICS 65/ ICS 80

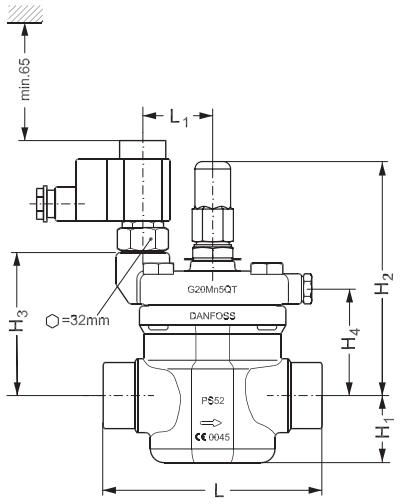

ICS 1 pilot

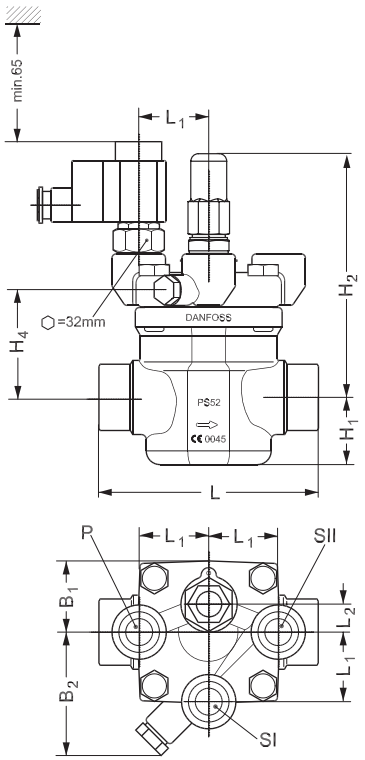

ICS 3 Pilots

Connection		H_1	H_2	H_3	H_4	L	L_1	L_2	B_1	B_2	Weight ICS 1 Pilot	Weight ICS 3 Pilots
65 D (2½ in.)	mm	65	202	140	115	230	51	15	70	91	13.4 kg	13.5 kg
	in.	2.56	7.95	5.51	4.53	9.06	2.00	0.59	2.76	3.58	29.48 lb.	29.7 lb.
80 D (3 in.)	mm	65	202	140	115	245	51	15	70	91	13.4 kg	13.5 kg
	in.	2.56	7.95	5.51	4.53	9.65	2.00	0.59	2.76	3.58	29.48 lb.	29.7 lb.
65 A (2½ in.)	mm	65	202	140	115	230	51	15	70	91	13.4 kg	13.5 kg
	in.	2.56	7.95	5.51	4.53	9.06	2.00	0.59	2.76	3.58	29.48 lb.	29.7 lb.
80 A (3 in.)	mm	65	202	140	115	245	51	15	70	91	13.4 kg	13.5 kg
	in.	2.56	7.95	5.51	4.53	9.65	2.00	0.59	2.76	3.58	29.48 lb.	29.7 lb.
65 J (2½ in.)	mm	65	202	140	115	230	51	15	70	91	13.4 kg	13.5 kg
	in.	2.56	7.95	5.51	4.53	9.06	2.00	0.59	2.76	3.58	29.48 lb.	29.7 lb.
65 SOC (2½ in.)	mm	65	202	140	115	230	51	15	70	91	13.4 kg	13.5 kg
	in.	2.56	7.95	5.51	4.53	9.06	2.00	0.59	2.76	3.58	29.48 lb.	29.7 lb.
76 SD (3 in.)	mm	65	202	140	115	245	51	15	70	91	13.4 kg	13.5 kg
	in.	2.56	7.95	5.51	4.53	9.65	2.00	0.59	2.76	3.58	29.48 lb.	29.7 lb.
67 SA (2⅝ in.)	mm	65	202	140	115	245	51	15	70	91	13.4 kg	13.5 kg
	in.	2.56	7.95	5.51	4.53	9.65	2.00	0.59	2.76	3.58	29.48 lb.	29.7 lb.

D = Butt-weld DIN ; A = Butt-weld ANSI ; J = Butt-weld JIS ; SOC = Socket weld ANSI ; SD = Solder DIN ; SA = Solder ANSI ; FPT = Female Pipe Thread

Dimensions and weights - ICS 100

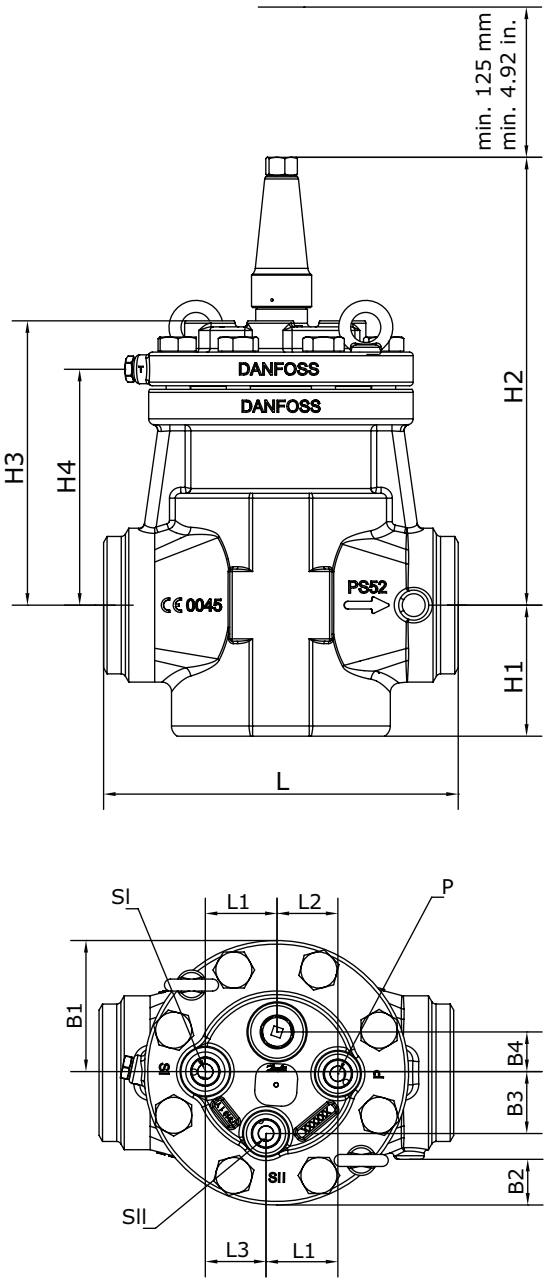

Connection		H1	H2	H3	H4	L	L1	L2	L3	B1	B2	B3	B4	Weight
100 D or A (4 in)	[mm]	109	372	237	196	295	60	51	50	109	38	52	33	45 kg
	[in]	4.3	14.7	9.3	7.7	11.6	2.4	2.0	2.0	4.3	1.5	2.1	1.3	99.2 lb.

D = Butt-weld DIN ; A = Butt-weld ANSI

Dimensions and weights - ICS 125

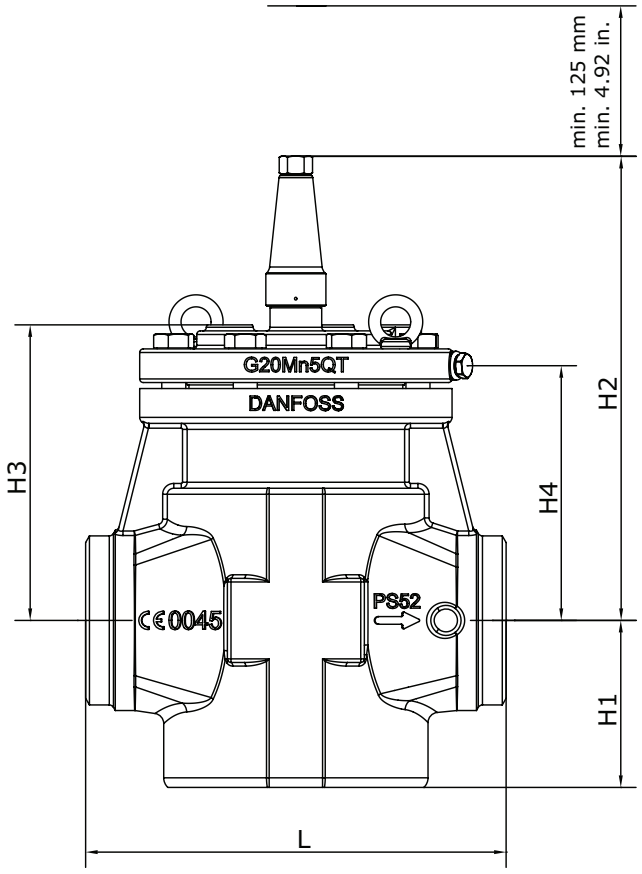

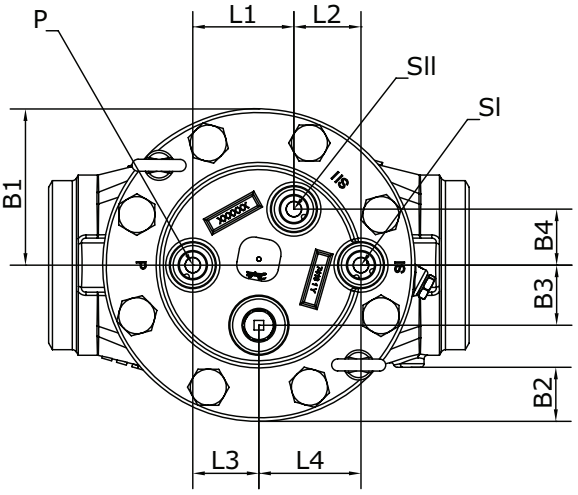

Connection		H1	H2	H3	H4	L	L1	L2	L3	L4	B1	B2	B3	B4	Weight
125 D or A (5 in)	[mm]	139	386	246	212	350	84	56	55	85	130	45	50	47	68 kg
	[in]	5.5	15.2	9.7	8.4	13.8	3.3	2.2	2.2	3.4	5.1	1.8	2.0	1.9	149.9 lb.

D = Butt-weld DIN ; A = Butt-weld ANSI

Dimensions and weights - ICS 150

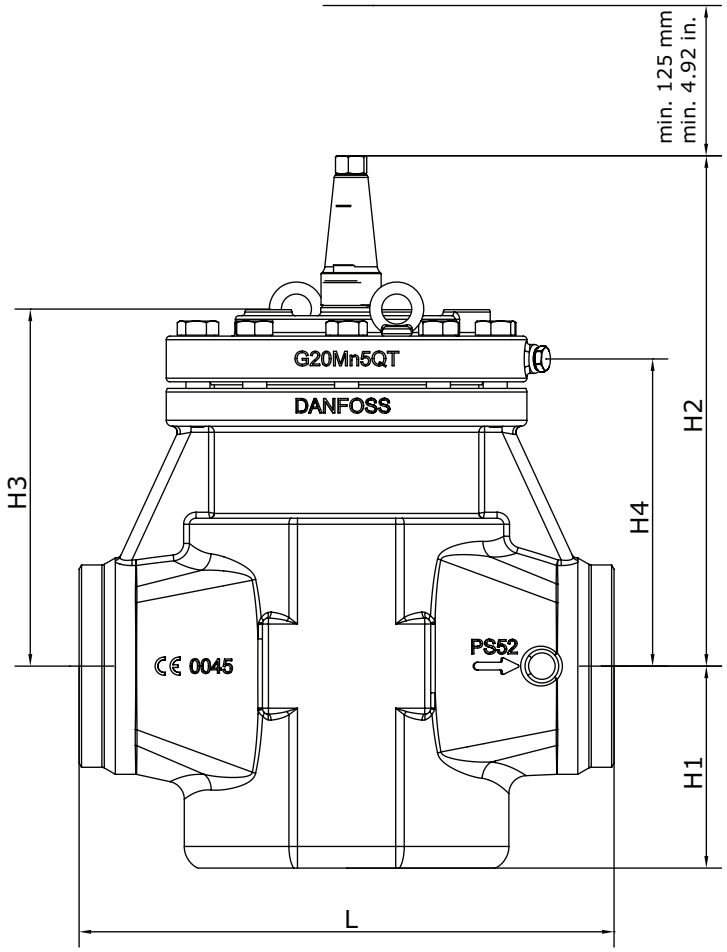

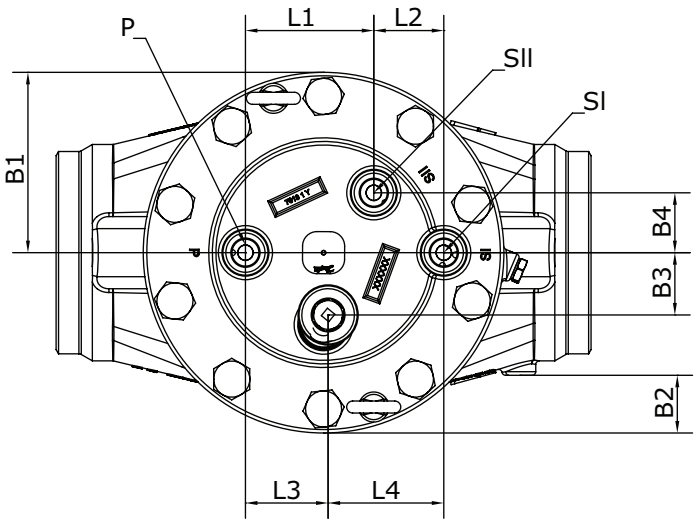

Connection		H1	H2	H3	H4	L	L1	L2	L3	L4	B1	B2	B3	B4	Weight
150 D or A (6 in)	[mm]	168	425	297	256	445	107	58	69	96	150	48	52	50	115 kg
	[in]	6.6	16.7	11.7	10.1	17.5	4.2	2.3	2.7	3.8	5.9	1.9	2.1	2.0	253.5 lb.

D = Butt-weld DIN ; A = Butt-weld ANSI

Connections

D: *Butt-weld DIN (2448)*

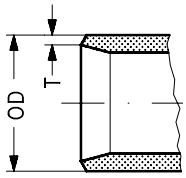

Size [mm]	Size [in]	OD [mm]	T [mm]	OD [in]	T [in]		
20	¾	26.9	2.3	1.059	0.091		
25	1	33.7	2.6	1.327	0.103		
32	1 ¼	42.4	2.6	1.669	0.102		
40	1 ½	48.3	2.6	1.902	0.103		
50	2	60.3	2.9	2.37	0.11		
65	2 ½	76.1	2.9	3	0.11		
80	3	88.9	3.2	3.50	0.13		
100	4	114.3	3.6	4.5	0.14		
125	5	140.7	4	5.5	0.16		
150	6	168.3	6.3	6.6	0.25		

A: *Butt-weld ANSI (B 36.10)*

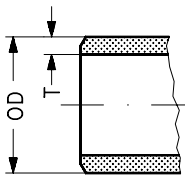

Size [mm]	Size [in]	OD [mm]	T [mm]	OD [in]	T [in]	Schedule	
(20)	¾	26.9	4.0	1.059	0.158	80	
(25)	1	33.7	4.6	1.327	0.181	80	
(32)	1 ¼	42.4	4.9	1.669	0.193	80	
(40)	1 ½	48.3	5.1	1.902	0.201	80	
(50)	2	60.3	3.9	2.37	0.15	40	
(65)	2 ½	73.0	5.2	2.87	0.20	40	
(80)	3	88.9	5.5	3.50	0.22	40	
(100)	4	114.3	6	4.5	0.24		
(125)	5	140.7	6.5	5.5	0.26		
(150)	6	168.3	7.1	6.6	0.28		

J: *Butt-weld JIS*

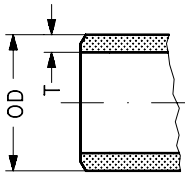

Size [mm]	Size [in]	OD [mm]	T [mm]	OD [in]	T [in]		
(20)	¾	26.9	4.0	1.059	0.158		
(25)	1	33.7	4.6	1.327	0.181		
(32)	1¼	42.4	4.9	1.669	0.193		
(40)	1½	48.3	5.1	1.902	0.201		
(50)	2	60.3	3.9	2.37	0.15		
(65)	2½	76.3	5.2	3.0	0.20		

SOC:
Socket welding ANSI (B 16.11)

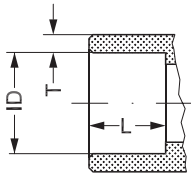

Size [mm]	Size [in]	ID [mm]	T [mm]	ID [in]	T [in]	L [mm]	L [in]
(20)	¾	27.2	4.6	1.071	0.181	13	0.51
(25)	1	33.9	7.2	1.335	0.284	13	0.51
(32)	1¼	42.7	6.1	1.743	0.240	13	0.51
(40)	1½	48.8	6.6	1.921	0.260	13	0.51
(50)	2	61.2	6.2	2.41	0.24	16	0.63
(65)	2½	74	8.8	2.91	0.344	16	0.63

SD: *Soldering (DIN 2856)*

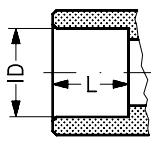

Size [mm]	Size [in]	ID [mm]		ID [in]		L [mm]	L [in]
22		22.08				16.5	
28		28.08				26	
35		35.07				25	
42		42.07				28	
54		54.09				33	
76		76.1				33	

Connections *(continued)*

SA: Soldering (ANSI B 16.22)

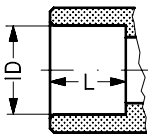

	⅞			0.875			0.650
	1⅛			1.125			1.024
	1⅜			1.375			0.984
	1⅝			1.625			1.102
	2⅛			2.125			1.300
	2⅝			2.625			1.300

FPT:
Female pipe thread,
(ANSI/ASME B 1.20.1)

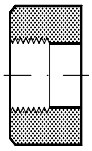

Size [mm]	Size [in]	Inside pipe thread		
(20)	¾	(¾ × 14 NPT)		
(25)	1	(1 × 11.5 NPT)		
(32)	1¼	(1¼ × 11.5 NPT)		

ENGINEERING
TOMORROW

Pilot valves
Types CVP, CVPP, CVC, CVE, EVM and CVH

Contents **Page**

Features . . . 209
Design . . . 209
Technical data . . . 209
Constant-pressure pilot valve, type CVP . . . 210
Differential-pressure pilot valve, type CVPP . . . 212
Pressure-operated pilot valve with reference pressure connection, type CVC . . . 214
Electronically operated constant-pressure (constant pressure difference) pilot valve, type CVE . . . 217
Solenoid pilot valve, type EVM (NC) . . . 219
Solenoid pilot valve, type EVM (NO) . . . 219
Housing for pilot valves, type CVH, for mounting in external pilot lines . . . 220

AI248786497190en-000202 | 2018.10

ENGINEERING TOMORROW

Pilot valves
Types CVP, CVPP, CVC, CVE, EVM and CVH

Pilot valves for direct mounting in main valves



Pilot valves are intended for mechanical control of a main valve and are ready for direct installation in the top cover of the main valve.

Small capacities can be controlled by the pilot valve directly without a main valve when installed in the matching CVH housing.

The extensive range of Danfoss pilot valves include:

- Constant-pressure pilot valve, type CVP
- Differential-pressure pilot valve, type CVPP
- Pressure-operated pilot valve with reference pressure connection, type CVC
- Electronically operated constant-pressure pilot valve, type CVE
- Solenoid pilot valve, type EVM (NC)
- Solenoid pilot valve, type EVM (NO)
- Housing, type CVH for pilot valves, for mounting in external pilot lines

Features

- Applicable to HCFC, non flammable HFC, R717 (Ammonia) and R744 (CO_2). The use of Pilots with flammable hydrocarbons is not recommended
- Extremely accurate pressure and temperature control.
- The pilot valves can be screwed directly into the main valve, thus avoiding the necessity of welding, soldering and separate pilot lines.
- The pilot valves can be mounted directly in the ICS, PM or ICF valve or it can be connected via an external pilot line and a CVH housing.
- All pilot valves can be used on all sizes of main valves.
- Several pilot valves can be connected in series or in parallel to provide many functions in the same ICS or ICF valve.
- All pilot valves are delivered with gaskets.

Design

Each pilot valve is designed to give the optimum control accuracy within the specific function range of the valve.

Several pilot valves can be mounted in series and/or in parallel on the main valve (ICS, ICF or the discontinued PM) to suit numerous applications.

Mounted in a CVH housing, the pilot valves can be used in external lines, either as independently operating valves or as external control valves for the main valve.

The pilot valves can be used for all sizes of ICS and for ICF 50/65.

Technical data

Refrigerants
Applicable to HCFC, non flammable HFC, R717 (Ammonia) and R744 (CO_2). The use of pilot valves with flammable hydrocarbons is not recommended

Temperature range:
-60/+120°C (-76/+248°F)

Pressure range:
The pilot valves are designed for a max. working pressure of 52 bar g (754 psig)
Pressure setting ranges are given separately for the specific pilot valve.

For further information please see installation guides for ICS or ICF valves.

Constant-pressure pilot valve, type CVP

Design and function

CVP



CVP is a constant-pressure pilot valve for a max. working pressure (MWP) of 52 bar (754 psi) and with 3 setting ranges covering settings of -0.66 to 52 bar (19.5 in. Hg to 754 psi).

This pilot valve is used for maintaining a constant pressure on the inlet side of the main valve.

When a CVP is mounted in a CVH housing, it can be used as a separate constant-pressure valve or a pressure relief valve (e.g. to prevent hydraulic overpressure in an entrapped liquid).

Please note:
The CVP pilot can be used for most applications in the refrigeration system including hot gas relief systems.

Technical data

Valve type	Max. working pressure		k_v / C_v value		Temperature range		Pressure range		Code no.
	[bar]	[psi]	[m³/h]	[US gal/min]	[°C]	[°F]	[bar]	[psi]	
CVP-L	52	754	0.40	0.46	-60/+120	-76/+248	-0.66 - 7	19.5 in Hg to 102	027B0920
CVP-M	52	754	0.40	0.46	-60/+120	-76/+248	4 - 28	58 - 406	027B0921
CVP-H	52	754	0.40	0.46	-60/+120	-76/+248	25 - 52	363 - 754	027B0922

The k_v/C_v value is measured with the pilot valve mounted in a CVH housing for external pilot lines. The value can vary slightly, depending on the setting value.

P-band for a valve system regulated by CVP and ICS or PM main valve: < 0.2 bar g (2.9 psi g)

Dimensions and weights

CVP

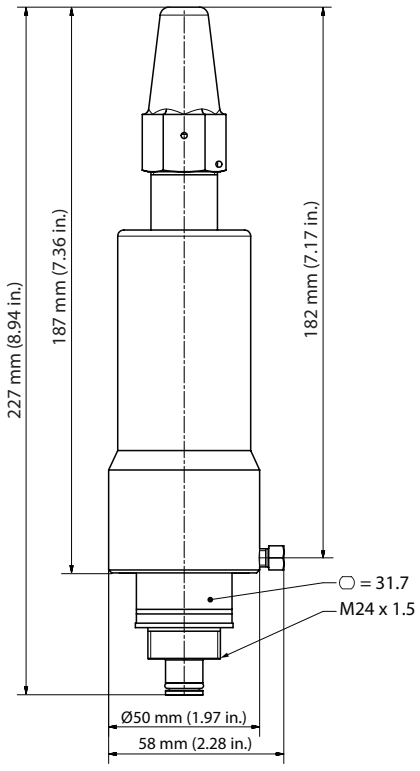

Weight: Approx. 1.46 kg (3.22 lbs)

Constant-pressure pilot valve, type CVP - *continued*

Material specification - CVP

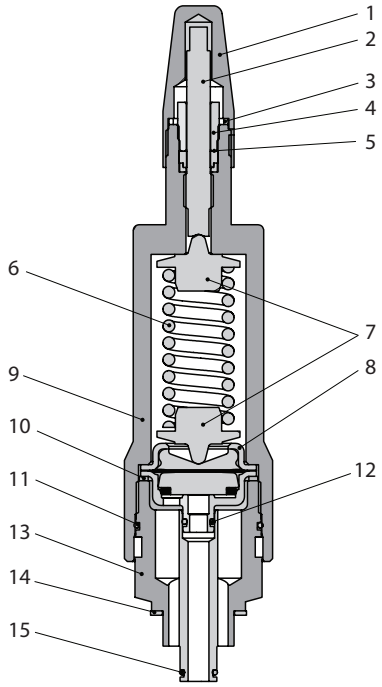

No.	Part	Material
1	Protective cap	Steel
2	Setting spindle	Stainless steel
3	Cap seal	Nylon
4	Packing gland	Steel
5	Seal	Teflon
6	Spring	Steel
7	Spring plate	Steel
8	Diaphragm assembly	Stainless steel
9	Valve bonnet	Steel
10	Cover seal	Alu
11	Back up O-ring	
12	O-ring	
13	Base part	Steel
14	Seal	Fiber gasket
15	O-ring	

Differential-pressure pilot valve, type CVPP

Design and function

CVPP



CVPP is a differential-pressure pilot valve for a max. working pressure (MWP) of 52 bar (754 psi) and with 2 setting ranges covering settings of -0.66 to 28 bar (19.5 in. Hg to 406 psi).

The pilot valve is used for maintaining a constant differential pressure between the CVPP valve reference pressure connection and the main valve inlet pressure.

CVPP incorporates a diaphragm so that the reference pressure and the refrigerant in the valve are physically separated. The pilot valve can therefore also be used as a pneumatic control valve either to control a main valve or as a separate pneumatic valve mounted in a CVH housing.

Technical data

Valve type	Max. working pressure		k_v / C_v value		Temperature range		Pressure range		Code no.
	[bar]	[psi]	[m³/h]	[US gal/min]	[°C]	[°F]	[bar]	[psi]	
CVPP-L	52	754	0.40	0.46	-60/+120	-76/+248	-0.66 - 7	19.5 in Hg to 102	027B0930
CVPP-M	52	754	0.40	0.46	-60/+120	-76/+248	4 - 28	58 - 406	027B0931

The k_v/C_v value is measured with the pilot valve mounted in a CVH housing for external pilot lines. The value can vary slightly, depending on the setting value.

P-band for a valve system regulated by CVPP and ICS, ICF or PM main valve: <0.2 bar g (2.9 psi g).

Dimensions and weights

CVPP

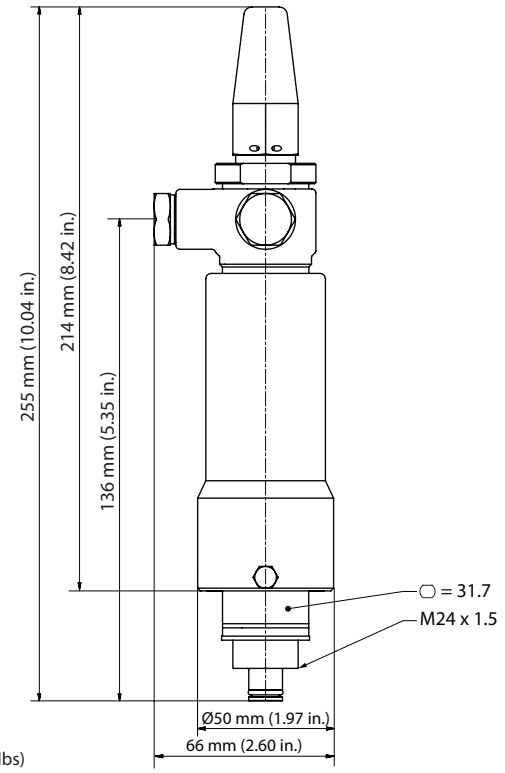

Weight: Approx. 1.75 kg (3.86 lbs)

Differential-pressure pilot valve, type CVPP) - *continued*

Material specification - CVPP

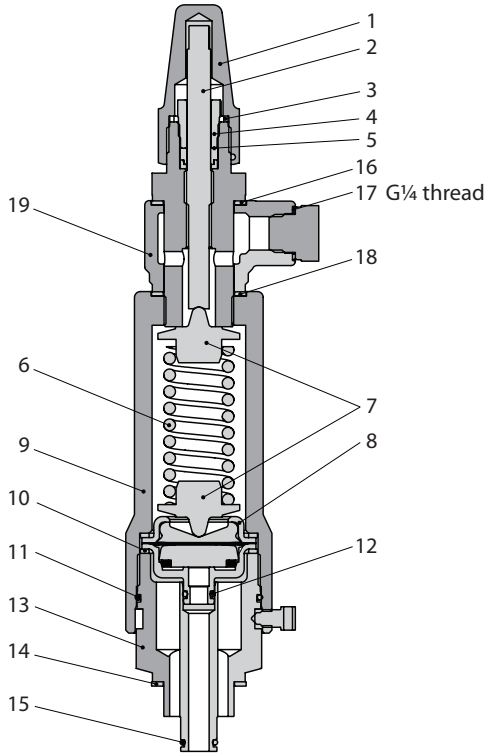

No.	Part	Material
1	Protective cap	Steel
2	Setting spindle	Stainless steel
3	Cap seal	Nylon
4	Packing gland	Steel
5	Seal	Teflon
6	Spring	Steel
7	Spring plate	Steel
8	Diaphragm assembly	Stainless steel
9	Valve bonnet	Steel
10	Cover seal	Alu
11	Back up O-ring	
12	O-ring	
13	Base part	Steel
14	Seal	Fiber gasket
15	O-ring	
16	Seal	Fiber gasket
17	Plug for external pressure G¼	Steel
18	Seal	Fiber gasket
19	Banjo	Steel

Pilot welding connector (included in the box)
Use code number to order as accessory

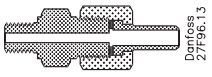

Description	Code no.
∅ 6.5 mm / ∅ 10 mm (∅ 0.26 in. / ∅ 0.39 in.) weld / solder	**027B2035**

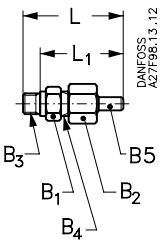

	L	L_1	B_1	B_2	B_3	B_4	B_5
mm in.	66 2.60	54 2.13	AF 19	AF 22	G 1/4 A	G 3/8 A	∅6.5 / ∅10 ∅0.26/ ∅0.39

Pressure-operated pilot valve with reference pressure connection, type CVC

Design and function

CVC



CVC is a constant pressure pilot valve at an external reference point for a max. working pressure (MWP) of 52 bar (754 psi) and with 2 setting ranges covering settings of -0.66 to 28 bar (19.5 in. Hg to 406 psi).

The CVC-pilot is designed to maintain a constant pressure at an external reference point in the system.

CVC pilot valve installed in an ICS servo valve are used for e.g.:

- Outlet pressure regulator to regulate max. suction pressure, e.g. as a compressor crankcase pressure regulator;
- Outlet pressure regulator as a pressure limiter, e.g. for hot gas defrost of hot gas lines.

The reference pressure must be connected to the low-pressure side of the system.

The k_v/C_v value is measured with the pilot valve mounted in a CVH housing for external pilot lines. The value can vary slightly, depending on the setting value.

Technical data

Valve type	Max. working pressure		k_v / C_v value		Temperature range		Pressure range		Code no.
	[bar]	[psi]	[m³/h]	[US gal/min]	[°C]	[°F]	[bar]	[psi]	
CVC-L	52	754	0.20	0.23	-60/+120	-76/+248	-0.66 - 7	19.5 in Hg to 102	027B0940
CVC-M	52	754	0.20	0.23	-60/+120	-76/+248	4 - 28	58 - 406	027B0941

P-band for a valve system regulated by CVC and ICS/PM/PMC: < 0.3 bar g (4.4 psi g)

Dimensions and weights

CVC

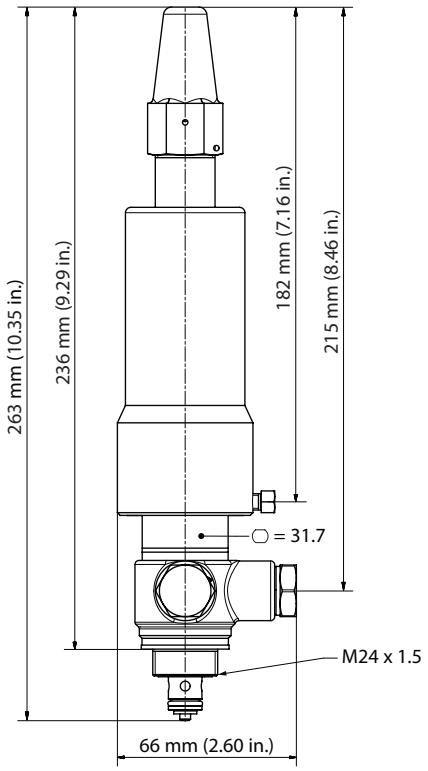

Weight: Approx. 1.78 kg (3.92 lbs)

Pressure-operated pilot valve with reference pressure connection, type CVC - *continued*

Material specification - CVC

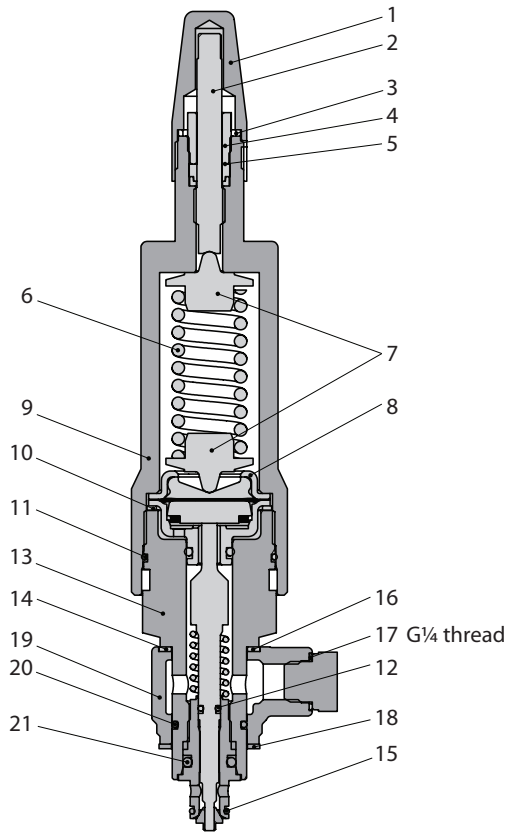

No.	Part	Material
1	Protective cap	Steel
2	Setting spindle	Stainless steel
3	Cap seal	Nylon
4	Packing gland	Steel
5	Seal	Teflon
6	Spring	Steel
7	Spring plate	Steel
8	Diaphragm assembly	Stainless steel
9	Valve bonnet	Steel
10	Cover seal	Alu
11	Back up O-ring	
12	O-ring	
13	Base part	Steel
14	Seal	Fiber gasket
15	O-ring	
16	Seal	Fiber gasket
17	Plug for external pressure G¼	Steel
18	Seal	Fiber gasket
19	Banjo	Steel
20	O-ring	
21	O-ring	

Pressure-operated pilot valve with reference pressure connection, type CVC - *continued*

Pilot welding connector (included in the box)
Use code number to order as accessory

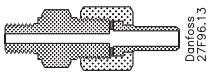

Description	Code no.
∅ 6.5 mm / ∅ 10 mm (∅ 0.26 in. / ∅ 0.39 in.) weld / solder	**027B2035**

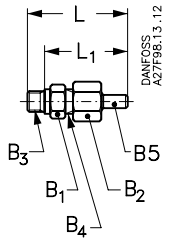

	L	L_1	B_1	B_2	B_3	B_4	B_5
mm in.	66 2.60	54 2.13	AF 19	AF 22	G 1/4 A	G 3/8 A	∅6.5 / ∅10 ∅0.26/ ∅0.39

Electronically operated constant-pressure (constant pressure difference) pilot valve, type CVE

Design and function

CVE



CVE is, when fitted with the ICAD 1200A stepper motor, a constant pressure pilot valve with electronic change of set-point for a max. working pressure (MWP) of 52 bar (754 psi) and with electronic controlled full range settings of -0.66 to 8 bar gauge (19.5 in. Hg to 116 psi). The CVE interface to the ICAD is hermetic closed and rotation force is transferred from the ICAD by magnetic forces.

The CVE pilot valve is designed to maintain a constant and very accurate inlet pressure of an ICS servo valve, e.g. evaporator pressure regulation.

The CVE/ICAD unit can be either stand-alone or connected to a remote EKE 347 or PLC with appropriate controller function.

The stand-alone arrangement allows the on-site ICAD setting - and the remote wiring allows remote setting of the desired set pressure.

Technical data

The k_v/C_v value is measured with the pilot valve mounted in a CVH housing for external pilot lines. The value can vary slightly, depending on the setting value.

Valve type	Max. working pressure		k_v / C_v value		Temperature range		Pressure range		Code no.
	[bar]	[psi]	[m³/h]	[US gal/min]	[°C]	[°F]	[bar]	[psi]	
CVE-L	52	754	0.40	0.46	-60/+120	-76/+248	-0.66 - 8	19.5 in. Hg to 116	027B0980

ICAD 1200A is the suitable stepper motor for CVE

ICAD 1200A with 1.5 m. / 60 in. cables	ICAD 1200A without cable
027H9077	027H9122

Dimensions and weights

CVE

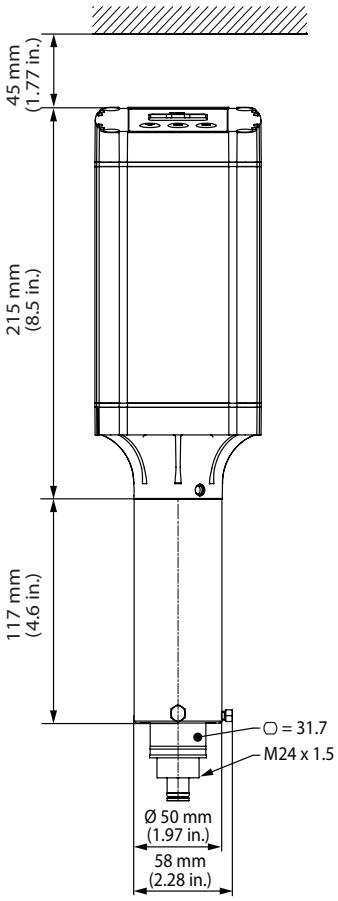

Weight: Approx. 1.75 kg (3.86 lbs)

Electronically operated constant-pressure (constant pressure difference) pilot valve, type CVE - *continued*

CVE Pressure setting (see the installation guide AN213086423355 for ICAD setup)

barg	-0.66	0	1	2	3	4	5	6	7	8
psig	19.5 in. Hg	0	14.5	29.0	43.5	58.0	72.5	87.0	101.5	116.0
mA	18.3	17.1	15.9	14.7	13.5	12.3	11.1	9.9	8.7	7.5
ICAD reading %	90%	83%	75%	67%	60%	53%	45%	37%	30%	23%

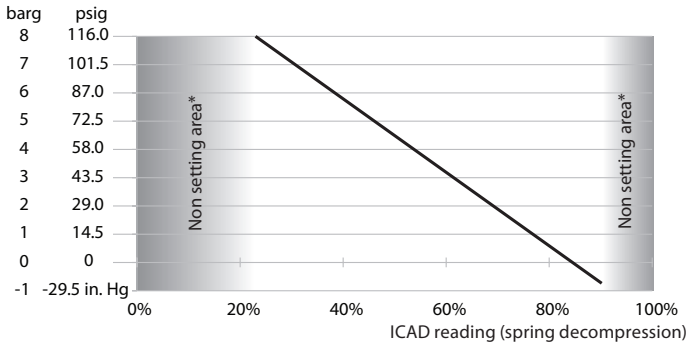

* These areas are dedicated regulation band for the pilot valve. It is recommended not to exceed the limits in above table

Material specification - CVE

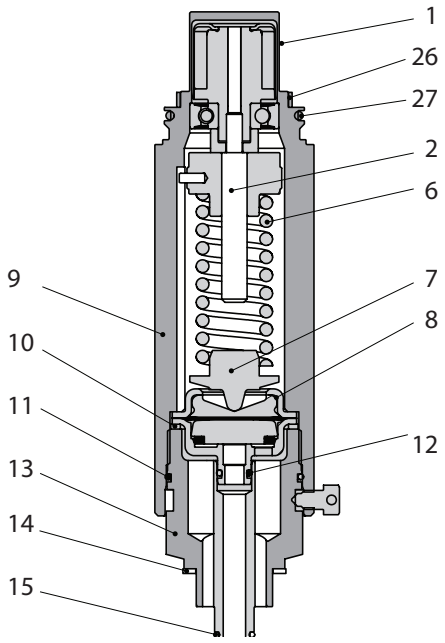

No.	Part	Material
1	Adapter	Stainless steel
2	Setting spindle	Stainless steel
6	Spring	Steel
7	Spring plate	Steel
8	Diaphragm assembly	Stainless steel
9	Valve bonnet	Stainless steel
10	Cover seal	Alu
11	Back up O-ring	
12	O-ring	
13	Base part	Steel
14	Seal	Fiber gasket
15	O-ring	
26	Seal	Teflon
27	O-ring	Cloroprene (Neoprene)

Solenoid pilot valve, type EVM (NC)

Solenoid pilot valve, type EVM (NO)

Design and function

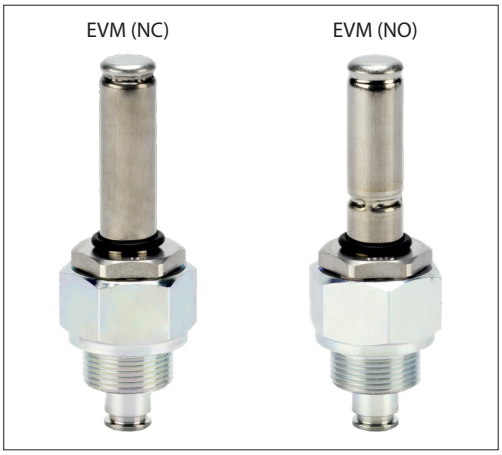

EVM is a solenoid pilot valve for use when on/off operation of the main valve is required. EVM valves are intended for use with Danfoss solenoid valve coils ("Coils for solenoid valves", data sheet DKRCC.PD.BS0.F).

Together with CVH, an EVM can also be used as an independent solenoid valve.

Technical data

The k_v/C_v value is measured with the pilot valve mounted in a CVH housing for external pilot lines.

MOPD: Maximum opening differential pressure with a 10 W a.c. coil.

With:
20 W a.c. coil: 40 bar (580 psi)
20 W d.c. coil: 14 bar (203 psi)

MCPD: Maximum closing differential pressure with a 10/12 W a.c. coil or a 20 W d.c.coil.

Valve type	Max. working pressure		k_v / C_v value		Temperature range		Pressure range MOPD/MCPD		Code no.
	[bar]	[psi]	[m³/h]	[US gal/min]	[°C]	[°F]	[bar]	[psi]	
EVM NC	65	940	0.28	0.32	-60/+120	-76/+248	21	305	027B1120
EVM NO	52	754	0.12	0.14	-60/+120	-76/+248	19	276	027B1130
EVM NO	52	754	0.12	0.14	-60/+120	-76/+248	40	580	027B1132

Dimensions and weights

EVM

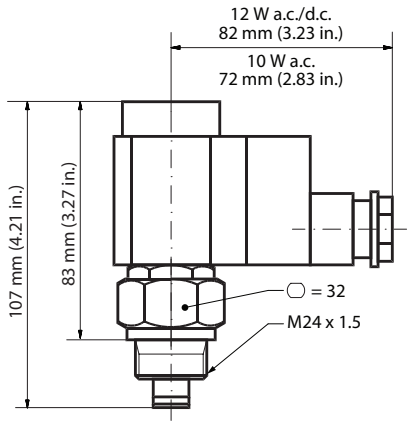

Weight: Approx. 0.25 kg (0.6 lbs) - without coil

Material specification

EVM

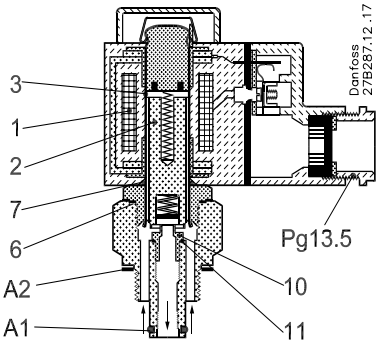

No.	Part	Material
1	Coil	
2	Armature	Stainless steel
3	Armature tube	Stainless steel
A2	Seal	Non-asbestos
A1	O-ring	Cloroprene (Neoprene)
6	Seal	Aluminium
7	Spacing ring	
8	Nut	
9	Lock button	
10	Valve body	Steel
11	Valve seat	Teflon (PTFE)

Housing for pilot valves, type CVH, for mounting in external pilot lines



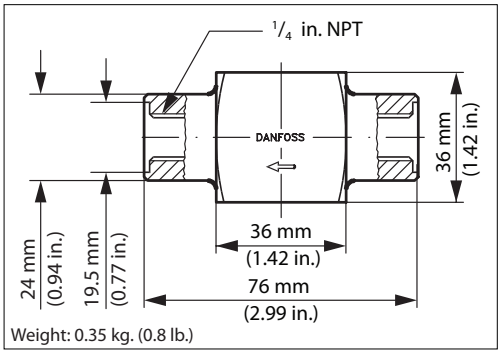

Weight: 0.35 kg. (0.8 lb.)

DN	Standard	Material	Code no.
Internal pipe thread			
6	ANSI/ASME B1.20.1	DIN 9SMnPb 28 W no. 1.0718	027F1159

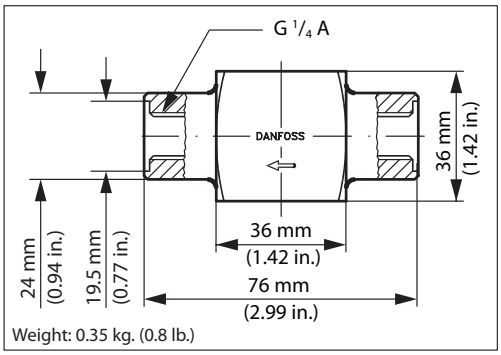

Weight: 0.35 kg. (0.8 lb.)

DN	Standard	Material	Code no.
Internal pipe thread			
6	ISO 228-1	DIN 9SMnPb 28 W no. 1.0718	027F1160

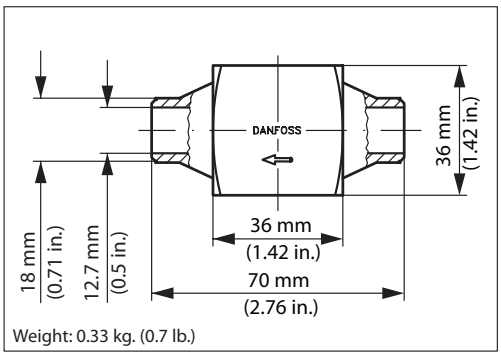

Weight: 0.33 kg. (0.7 lb.)

DN	Standard	Material	Code no.
3/8 in. butt weld			
10	ASME B 36.10M SCHEDULE 80	DIN. CK 15. W no. 1.1141	027F1047

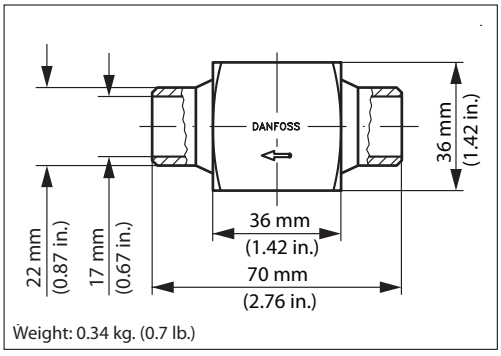

Weight: 0.34 kg. (0.7 lb.)

DN	Standard	Material	Code no.
½ in. butt weld			
15	ASME B 36.10M SCHEDULE 80	DIN. CK 15. W no. 1.1141	027F1090

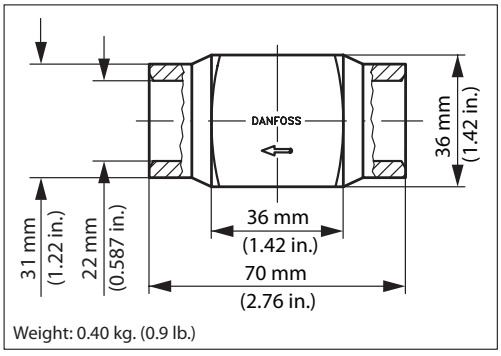

Weight: 0.40 kg. (0.9 lb.)

DN	Standard	Material	Code no.
½ in. socket weld			
15	ASME B 16.11	DIN. CK 15. W no. 1.1141	027F1091

ENGINEERING
TOMORROW

Motor operated valves and Actuators
Type ICM and ICAD

Contents **Page**

Features (valve) ... 223
The ICM Concept ... 225
Design (valve) ... 227
Technical data (valve) ... 227
Function (valve) ... 228
Features (actuator) ... 229
Technical data (actuator) ... 229
Approvals ... 231
Function (actuator) ... 231
ICAD protection cap ... 232
ICAD-UPS for ICM 20-150 ... 232
Material specification ... 234
ICM Application ... 235
Nominal capacities ... 236
Ordering from the parts programme ... 277
Spare parts and accessories ... 284
Dimensions ... 289
Connections ... 298
General operation ... 300
Alarms ... 301
Parameter list ... 302
Reset to factory setting ... 303

AI236186442940en-000407 | 2018.10

ENGINEERING TOMORROW

Motor operated valves and Actuators
Type ICM and ICAD



ICM motor operated valves belong to the ICV family and are one of two product groups.

ICV types
– ICS - Pilot operated servo valve
– ICM - Motor operated vave

The motor operated valve comprises four main components: Valve body, top cover, function module and Actuator. On ICM 20-65 the top cover and function module will be combined. ICM are motor operated valves driven by actuator type ICAD.

ICM valves are designed to regulate an expansion process in liquid lines with or without phase change or control pressure or temperature in dry and wet suction lines and hot gas lines. ICM valves are designed so that the opening and closing forces are balanced, therefore, only two sizes of ICAD actuators are needed for the complete range of ICM from DN 20 to DN 150. The ICM motor operated valve and ICAD actuator assembly offers a very compact unit with small dimensions.

Features (valve)

- Designed for Industrial Refrigeration applications for a maximum working pressure of 52 bar g / 754 psi g
- Applicable to HCFC, HFC, R717 (Ammonia) and R744 (CO_2)
- Direct coupled connections
- Connection types include butt weld, socket weld, solder and threaded connections
- Low temperature steel body
- Low weight and compact design
- V-port regulating cone ensures optimum regulating accuracy particularly at part load
- Cavitation resistant valve seat on A cones
- Modular Concept
  - Each valve body is available with several different connection types and sizes.
  - Valve overhaul is performed by replacing the function module (ICM 20-65).
  - Possible to convert ICM motor operated valve to ICS pilot operated servo valve.
  - Spare parts available for ICM 100-150.
- Manual opening possible via ICAD or Multi-function tool
- PTFE seat provides excellent valve tightness
- Magnet coupling - real hermetic sealing
- ICAD 600A/1200A include encoder function that will provide a true valve position feedback to Danfoss controller or non-Danfoss control systems
- Classification: DNV, CRN, BV, EAC etc. To get an updated list of certification on the products please contact your local Danfoss Sales Company

Introduction

The ICM motor operated valve and ICAD actuator combinations are as follows:

Actuator	ICAD 600A	ICAD 1200A
Valve size	ICM 20	ICM 40
	ICM 25	ICM 50
	ICM 32	ICM 65
		ICM 100
		ICM 125
		ICM 150

ICAD 600A / ICAD 1200A
ICAD actuators can be controlled using the following signals:

- 0 – 20 mA
- 4 – 20 mA (default)
- 0 – 10 V
- 2 – 10 V
- One or two digital Input

ICAD actuators can operate an ICM valve as an On / Off function supported by one digital input.

ICAD actuators can operate an ICM valve as Neutral zone / 3 point control supported by two digital inputs.

The ICM valve can be operated manually via the ICAD actuator or the Multi-function tool for ICM (see the ordering section).

Fail Safe supply options
In the event of a power failure, multiple fail safe options are possible, provided that a ICAD-UPS or similar is used.
During power failure, ICM can be selected to:
- Close ICM
- Open ICM
- Stay in the same position, as when power failure occurs
- Go to a specific ICM valve opening degree

See the section ICAD UPS for further information.

Please note: a fail safe supply (battery or UPS) is required.

The ICM Concept

The ICM concept is developed around a modular principle. This gives the possibility of combining function modules and top covers with special valve body size that is available in a variety of connection possibilities.

- There are nine valve bodies available.

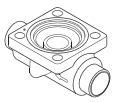		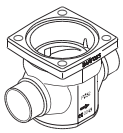	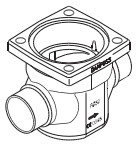	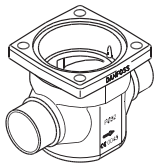	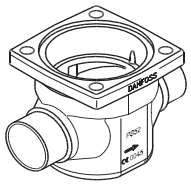
ICV 20	ICV 25	ICV 32	ICV 40	ICV 50	ICV 65

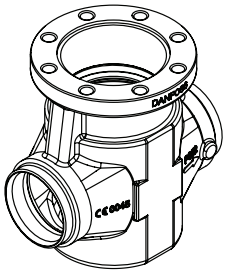	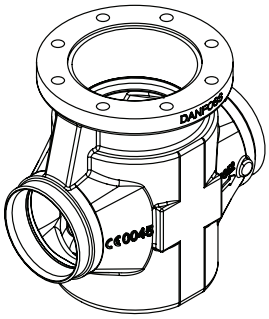	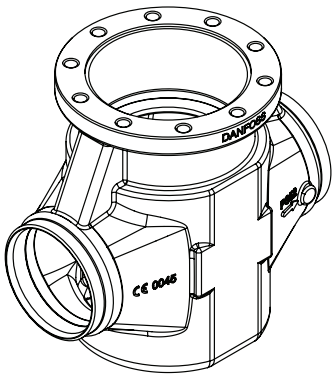
ICV 100	ICV 125	ICV 150

- Valve bodies in the sizes ICV 20 – ICV65 are available with a range of undersizes through oversized connection sizes and types.
  ICV 100 – ICV 150 are available in butt-weld DIN and butt-weld ANSI nominal sizes

D	A	J	SOC	SD	SA	FPT
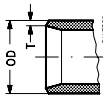	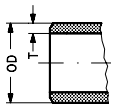	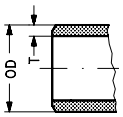	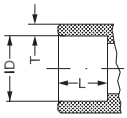	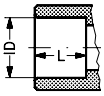	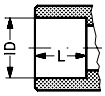	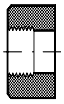
Butt-weld DIN	Butt-weld ANSI	Butt-weld JIS	Socket weld ANSI	Solder DIN	Solder ANSI	Female Pipe Thread

The ICM Concept
(continued)

- Each body may be fitted with multiple function / top cover to give different capacities.

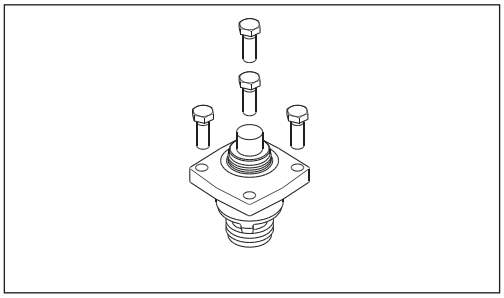

Type	Valve body size	K_v (m^3/h)	C_v (USgal/min)
ICM 20A-33	20	0.2	0.23
ICM 20-A		0.6	0.7
ICM 20-B66		1.6	1.9
ICM 20-B		2.4	2.8
ICM 20-C		4.6	5.3
ICM 25-A	25	6	7.0
ICM 25-A33		2	2.3
ICM 25-B		12	13.9
ICM 32-A	32	9	10.4
ICM 32-B		17	20
ICM 40-A	40	15	17
ICM 40-B		26	30
ICM 50-A	50	23	27
ICM 50-B		40	46
ICM 65-A	65	35	41
ICM 65-B		70	81
ICM 100-B	100	142	167
ICM 125-B	125	223	260
ICM 150-B	150	370	430

A magnetic coupled actuator is easily installed.
Only two actuators are needed to cover the entire ICM program

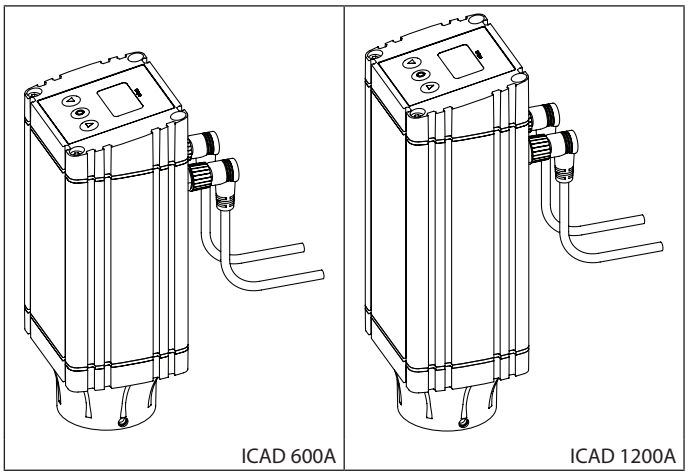

Design (valve)

Connections
There is a very wide range of connection types available with ICM valves:

- D: Butt weld, EN 10220
- A: Butt weld, ANSI (B 36.10)
- J: Butt weld, JIS (B S 602)
- SOC: Socket weld, ANSI (B 16.11)
- SD: Solder connection, EN 1254-1
- SA: Solder connection, ANSI (B 16.22)
- FPT: Female pipe thread (ANSI/ASME B 1.20.1)

Approvals
The ICV valve concept is designed to fulfil global refrigeration requirements.

ICM is CE, UL and CRN approved

For specific approval information, please contact Danfoss.

The ICM valves are approved in accordance with the European standard specified in the Pressure Equipment Directive and are CE marked.
For further details / restrictions - see Installation Instruction.

Valve body and top cover material
Low temperature steel

ICM valves			
Nominal bore	DN≤ 25 (1 in)	DN 32-65 (1 ¼ – 2 ½ in)	DN 80-125 (3 – 5 in)
Classified for	Fluid group I		
Category	Article 3, paragraph 3	II	III

Technical data (valve)

- *Refrigerants*
  ICM 20, ICM 100, ICM 125 and ICM 150:
  Applicable to HCFC, non flammable HFC, R717 (Ammonia) and R744 (CO_2)
  ICM 25-65:
  Applicable to HCFC, non flammable HFC, R717 (Ammonia), R744 (CO_2) and R1234ze
  Use with flammable hydrocarbons cannot be recommended. For further information please contact your local Danfoss sales company.
- *Temperature range:*
  Media: -60 – 120 °C / -76 – 248 °F.
  When used in liquid refrigerant above 75 °C / 167 °F, please contact Danfoss
- *Pressure*
  The valve is designed for:
  Max. working pressure: 52 bar g / 754 psi g
- *Surface protection*
  ICM 20-150:
  The external surface is zinc-chromated to provide good corrosion protection.
- Max. openening pressure differential (MOPD)
  - ICM 20-32: 52 bar / 750 psi
  - ICM 40: 40 bar / 580 psi
  - ICM 50: 30 bar / 435 psi
  - ICM 65: 20 bar / 290 psi
  - ICM 100 20 bar / 290 psi
  - ICM 125 20 bar / 290 psi
  - ICM 150 20 bar / 290 psi
- Time to move from Closed to Open position or in reverse order with maximum selected speed at ICAD.
  - ICM 20: 3 Sec. ICM 65: 13 Sec.
  - ICM 25: 7 Sec. ICM 100: 25 Sec.
  - ICM 32: 8 Sec. ICM 125: 35 Sec.
  - ICM 40: 10 Sec. ICM 150: 45 Sec.
  - ICM 50: 13 Sec.

Function (valve)

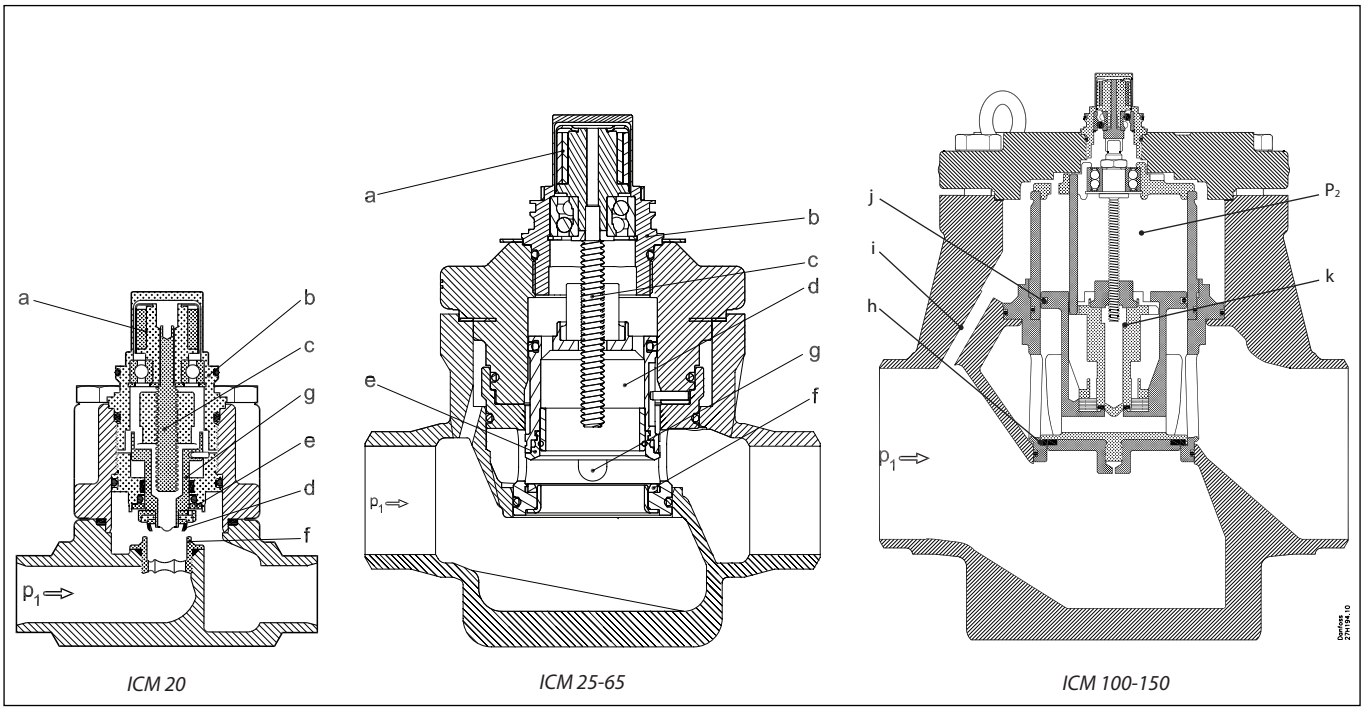

ICM 20 *ICM 25-65* *ICM 100-150*

ICM, motor operated valves are designed for use with the ICAD actuator with Display.

The driving force from the actuator is transferred via a magnetic coupling (a) through the stainless steel top housing (b) and thus eliminates the need for a packing gland. The rotational movement of the magnetic coupling (a) is transferred to a spindle (c) which in turn provides the vertical movement of the piston (d) and the valve seat (e), to open and close the valve. The closing force of the actuator, combined with the the valve seat (e) and PTFE valve plate (f), provides an effective seal to prevent leakage across the valve port, when the valve is in the closed position. To prevent damage to the PTFE valve seat (e) and plate (f) from system debris, it is recommended that a filter is installed upstream of the valve. Please refer to page 235 for filter sizing and application recommendations.

ICM 20-65:
Valve inlet pressure (P_1) acting on the underside of the PTFE valve seat (e) also passes through the hollow piston assembly (d) on to the top of the piston (d) and balances the pressure acting on the piston (d). Any trapped liquid across the throttle cone (g) is allowed to equalise down to the valve outlet without affecting the valve performance.

ICM 100-150:
Valve inlet pressure (P1) acting on the underside of the PTFE valve plate (h) also passes through the equalization hole (i) and ensures that the servo piston (j) is pressure balanced. This will equalize P1 and P2. During an opening operation of the valve, the pilot piston (k) will be raised from its valve seat inside the servo piston (j). This allows the P2 pressure to escape through the servo piston (j) to the outlet of the valve. The pressure P1 will act on the underside of the servo piston (j) and force it to open. This will close the gap between the pilot piston (k) and the servo piston (j) until the pressures P1 and P2 are equalized again. When there is no pressure difference between P1 and the outlet of the valve the pilot piston (k) is attached to the servo piston (j) ensuring it to open up.

ICAD
There are two sizes of ICAD actuator that covers the range of valves from ICM 20 to ICM 150. The actuators have a fully weather protected enclosure with none of the moving parts exposed to the environment.

The fast acting actuators and balanced valve design results in the valve being able to move from the fully closed to the fully open position in between 3 to 45 seconds depending on valve size and ICAD setup.

ICAD

Actuator types ICAD 600A and 1200A are dedicated for use with ICM motor operated valves. There are only two sizes of ICAD actuators that cover the range of valves from ICM 20 to ICM 150.

The ICAD is controlled via a modulating analogue signal (e.g. 4 – 20 mA/2 – 10 V) or a digital ON / OFF signal. ICAD incorporates an advanced MMI (Man Machine Interface), including continuous display of Opening Degree, which gives the user a very advanced and flexible setup procedure that can meet many different applications.

Features (actuator)

- Designed for industrial refrigeration installations.
- Advanced and high speed Digital Stepper Motor Technology
- Seven segment LCD display and three programming keys included
- Valve opening degree can be observed continuously.
- Can easily be configured to different applications on-site (change speed, ON / OFF, Fail Safe operation, modulating valve, etc..)
- Open – Close time: 3-45 seconds depending on valve size
- Modulating, ON / OFF operation or Neutral zone / 3 point control
- Multiple speed selection during operation
- Logging of old alarms
- Password protection
- Control input signal :
  4 – 20 mA, 0 – 20 mA, 0 – 10 V, 2 – 10 V.
  One or two digital inputs.
- Position feed back : 0 – 20 mA, 4 – 20 mA (ICM)
- 3 Digital ON / OFF feedback
- Resolution: 20 micron/step
  (0.02 mm stroke pr. step)
- Total steps: 250 – 3650 depending on size
- Auto Calibration, Neutral zone
- In the event of a power failure, multiple fail safe options are possible. During power failure, ICM can be selected to:
  Close ICM,
  Open ICM,
  Stay in the same position, as when power failure occurs
  Go to a specific ICM valve opening degree
- Hermetic magnetic motor
- Enclosure: IP67 ~ NEMA 6
- Approvals: CE, UL, CRN
- Connectors for easy installation and servicing
- ICAD 600A/1200A ensures an acurate feedback on the valve position.

Technical data (actuator)

ICAD 600A and ICAD 1200A can be used together with following Danfoss valves.

ICAD 600A	ICAD 1200A
ICM 20	ICM 40
ICM 25	ICM 50
ICM 32	ICM 65
	ICM 100
	ICM 125
	ICM 150

- *Materials*
  Housing
  Aluminium
  Top part of ICAD
  PBT thermo plastic
- *Weight*
  ICAD 600A: 1.2 kg (2.64 lb)
  ICAD 1200A: 1.9 kg (4.19 lb)
- *Temperature range (ambient)*
  -30 °C – 50 °C / -22 – 122 °F
- *Enclosure*
  IP 67 (~NEMA 6)
  Electrical connection
  Connection to ICAD is done via M12 connectors. ICAD has two M12 male connectors build-in:
  Power supply:
  4 poled M12 male connector
  Control signals:
  8 poled M12 male connector

  ICAD can be delivered with (1.5 m. (60 in)) or without cables with M12 female connectors:
  Power Supply cable with 4 poled M12 female connector: 3 x 0.34 mm² (3 x ~22 AWG)
  Control cable with 8 poled M12 female connector: 7 x 0.25 mm² (7 x ~24 AWG)

  Cable set with M12 female connectors in other lengths are available. See the section "Spare parts and accessories".

Electrical data



Please observe cable voltage drop
Distance between the applied DC transformer and the ICAD terminal box may cause a voltage drop. Cross section of cables and size of DC transformer must be calculated so that the voltage at all time **at the ICAD terminal box***, both during standstill and during operation of ICAD, is within this range:

Prefabricated ICAD cable length Code number		1.5 m 027H0426	3 m 027H0438	10 m 027H0427	15 m 027H0435
Voltage ICAD terminal	Min.	21	22	23	24
(600A/1200A) [V DC]	Max.	26.4			

* Do not measure inside the ICAD itself.

Supply voltage is galvanic isolated from Input / Output.

Supply voltage: See above table
Load: ICAD 600A: 1.2 A
ICAD 1200A: 2.0 A

Fail safe supply: See above table
Load: ICAD 600A: 1.2 A
ICAD 1200A: 2.0 A

Analogue Input - Current or Voltage
Current: 0/4 – 20 mA
Load: 200 Ω
Voltage: 0/2 – 10 V DC
Load : 10 kΩ

Analogue Output: 0/4 – 20 mA
Load : ≤ 250 Ω

Digital Input - Digital ON / OFF input by means of volt-free contact (Signal / Telecom relays with gold-plated contacts recommended) – Voltage input used
ON: Contact impedance < 50 Ω)
OFF: Contact impedance > 100 k Ω

Digital Output - 3 pcs. NPN transistor output
External supply: 5 – 24 V DC
(Same supply as for ICAD can be used, but please note that the galvanically isolated system will then be spoiled)
Output load: 50 Ω
Load: Max. 50 mA

Battery capacity:
For each open/closed cycle

	Speed Parameter i04	ICM 20	ICM 25	ICM 32
ICAD 600A	Max. (i04 = 100)	2 mAh	5 mAh	5 mAh
	Min. (i04 = 1)	200 mAh	467 mAh	533 mAh
	Speed Parameter i04	**ICM 40**	**ICM 50**	**ICM 65**
ICAD 1200A	Max. (i04 = 100)	17 mAh	22 mAh	22 mAh
	Min. (i04 = 1)	1667 mAh	2167 mAh	2167 mAh
	Speed Parameter i04	**ICM 100**	**ICM 125**	**ICM 150**
ICAD 1200A	Max. (i04 = 100)	54 mAh	65 mAh	76 mAh
	Min. (i04 = 1)	5318 mAh	6351 mAh	7501 mAh

Cable connection
Two 1.5 m (60 in) cables pre-mounted

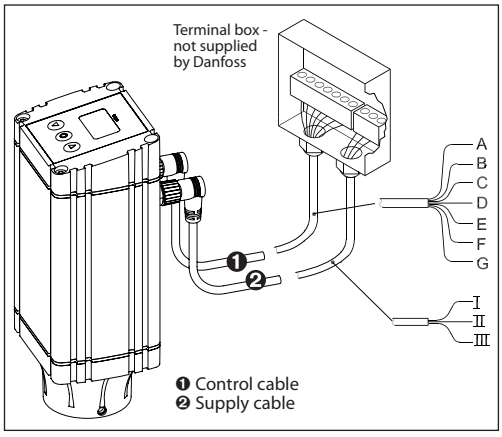

Ref.	Colour		Description	
A	Black	–	Common Alarm	Digital Ouput
B	Brown	–	ICM fully open	
C	Red	–	ICM fully closed	
D	Orange	–	GND ground	
E	Yellow	+	0/4 – 20 mA Input ***	Analogue In/Output
F	Green	+	0/2 – 10 V Input **	
G	Blue	+	0/4 – 20 mA Output ***	

I	Black	+	Fail safe supply Battery / UPS* 19 V DC
II	White	+	Supply voltage 24 V DC
III	Brown	–	

* Uninterruptable Power Supply
** Also used with D (GND, ground) for DI1 - Digital ON-OFF operation.
*** If Neutral zone / 3 point control is selected (parameter i02 = 3) then E and G are used as DI2 - Digital ON/OFF input.
Note: Colour code changed when compared to older colour wiring diagram.

Cable connection
Two 1.5 m (60 in) cables pre-mounted (continued)

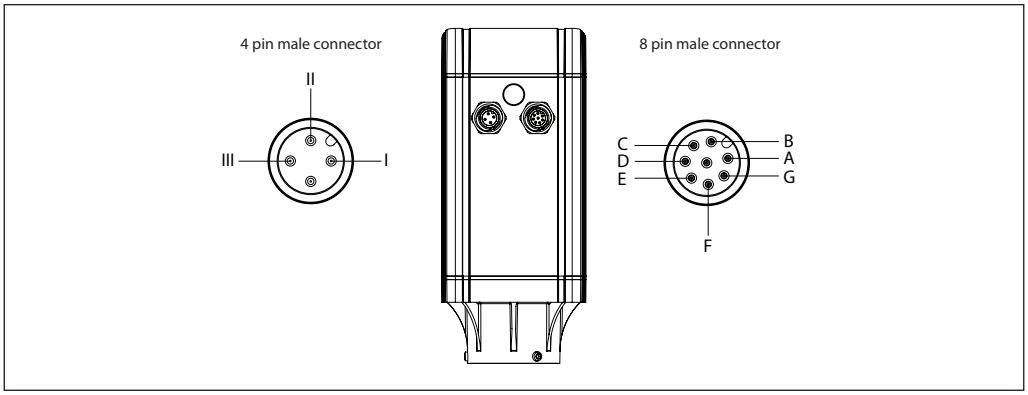

Approvals

CE according to 89/336 EEC (EMC)
Emission : EN61000-6-3
Immunity:EN61000-6-2

c UL us

Function (actuator)

The design of ICAD is based on a digital stepper motor technology combined with an advanced MMI (Man Machine Interface), that gives excellent possibilities for having a high degree of flexibility with the same type of ICAD actuator.

At the ICAD display the Opening Degree (0 – 100%) of the actual ICM valve installed can be continuously observed.

The advanced menu system will allow several parameters to be ajusted to obtain the required function.

Many different parameters can be configurated, among these:

- Modulating, ON / OFF operation or Neutral zone / 3 point control
- Analog input
  0 – 20 mA or 4 – 20 mA
  0 – 10 V or 2 – 10 V
- Digital Input
  ICAD can be configured to support one or two digital inputs.
  When using one digital input, 0 – 10 V can not be used at the same time.
  By using two digital inputs at Neutral zone / 3 point control, the analog input (0/2 – 10 V, 0/4 – 20 mA) and Analog Output (0/4 – 20 mA) can not be used at the same time.
- Analog output
  0 – 20 mA or 4 – 20 mA
- Automatic or manual control
- Change of ICM valve speed
- Automatic calibration
- Multiple Fail Safe set-up options during power cut

For service all Input and Output signals can be recalled and observed from the ICAD display.

A password protection has been linked to the parameter of entering the correct ICM valve to avoid unintentional and non-authorised operation.

ICAD can manage and display different alarms. If an alarm has been detected the display will alternate between showing: Actual alarm present and Opening Degree of ICM valve. If more than one alarm is active at the same time the alarm with the highest priority will take preference. The alarm with the highest priority is shown on the display.
All alarms will automatically reset when disappearing.

Previous alarms can be recalled for traceability and service purposes.

Any active alarm will activate the common digital alarm output.
All alarms will automatically reset when disappearing.

ICAD provides two digital output signals to 3rd party control equipment (e.g. PLC) indicating if the ICM valve is completely open or completely closed.

The hermetic magnetic motor coupling makes it easy to dismount the ICAD from ICM valve.

ICAD protection cap

For all outdoor applications or where extra protection of the display and keyboard is needed, Danfoss recommends using the ICAD protection cap.

The protection cap will give the ICAD display and keyboard an extra protection against e.g. sun radiation or other impacts from the surrounding environment. Furthermore it protects the cable connectors against inappropriate loads.

The special designed protection cap can be mounted on all ICAD 600A/1200A.

The installation of the protection cap is done by sliding the protection cap down on the top of the ICAD. To secure the protection cap, tie it to the connector cables using the hole in the protection cap.

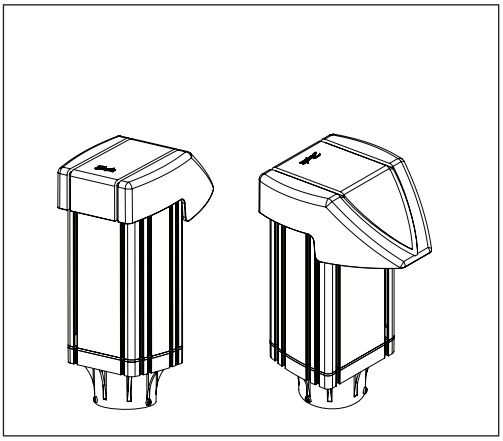

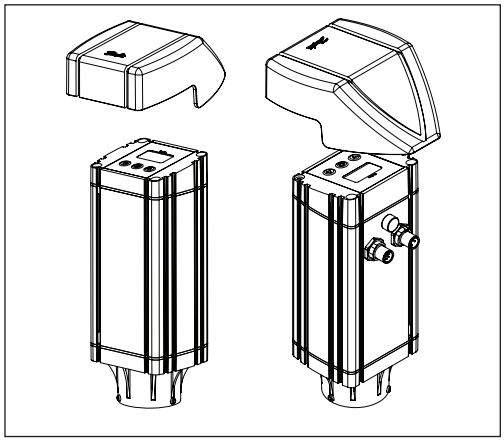

ICAD-UPS for ICM 20-150



ICAD-UPS is dedicated for use along with ICM sizes 20 - 150 installed with ICAD 600A and ICAD 1200A actuators.

In the event of power failure, there is a need to make sure that the ICM goes to a safe position.

ICAD-UPS can be connected to the ICAD 600A/1200A.

The solution ICM with ICAD connected to ICAD-UPS will give one of the following possibilities in the event of power failure:
– close ICM
– open ICM
– stay
– go to a specefic ICM Opening Degree

When power supply has been re-established the system will automatically return to normal operation.

Facts and features

- Industrial product.
- *Can support up to*
  – 3 pcs. of ICAD 1200A or
  – 8 pcs. of ICAD 600A
- Integrated solution - battery and UPS.
- *Industrial approvals:*
  CE, UL, GL (Germanisher Lloyd).
- DIN rail mounting.
- *LED indication*
  – Green (Power ON)
  – Yellow (Flashing:charging, Constant:
  – Buffer mode (Failsafe supply to ICAD))
  – Red (Battery fully discharged/Battery faulty)
- 24 V DC supply → Same transformer as for ICAD can be used. Only +0,5 A extra load on the transformer.
- Check of battery every 60 sec.
- Adjustable buffer time*. (1, 2, 3, 5, 10, 15, 20, 30 or infinity) = Ensures longer life time of the battery.
- Forced remote shutdown in buffer mode via digital input.
- 3 digital volt free relay change over contacts for signals to PLC systems. (Power OK, Buffer mode (failsafe supply to ICAD), Alarm).

* Buffer time is defined as the period where ICAD is only powered from the ICAD-UPS (i.e. not from main supply). On ICAD-UPS there is an adjustable buffer time setting (1, 2, 3, 5, 10, 15, 20, 30 min. or infinity). If set to 3, ICAD-UPS will switch off power to connected ICAD 600A/1200A, 3 minutes after the power failure occurs. This ensures that the internal battery inside ICAD-UPS do not fully discharge.

Code number: **027H0182**

For further information please see the instruction PI.HV0.B.

ICAD-UPS applications

Seperate 24 V DC tranformer for both ICAD-UPS and ICAD 600A/1200A

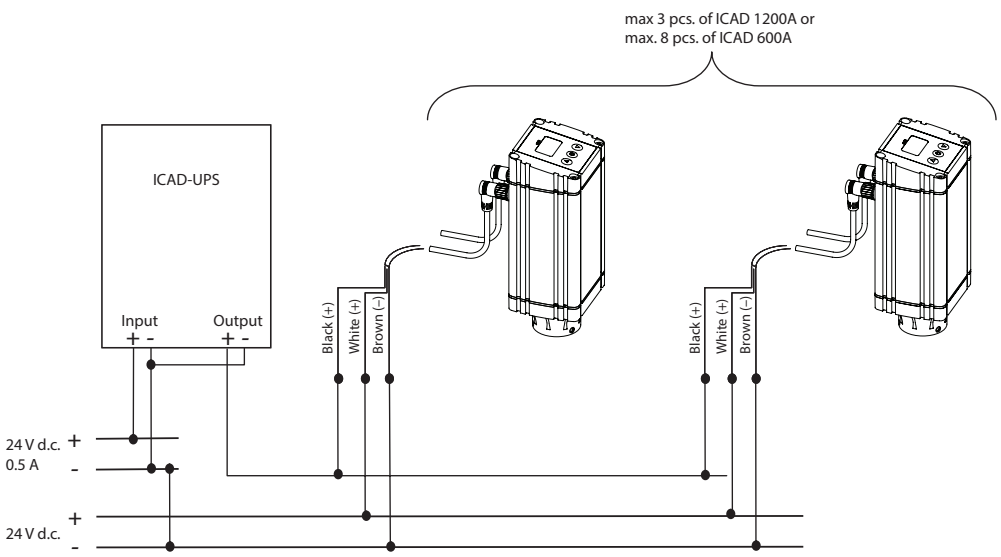

One 24 V DC tranformer for ICAD-UPS and ICAD 600A/1200A

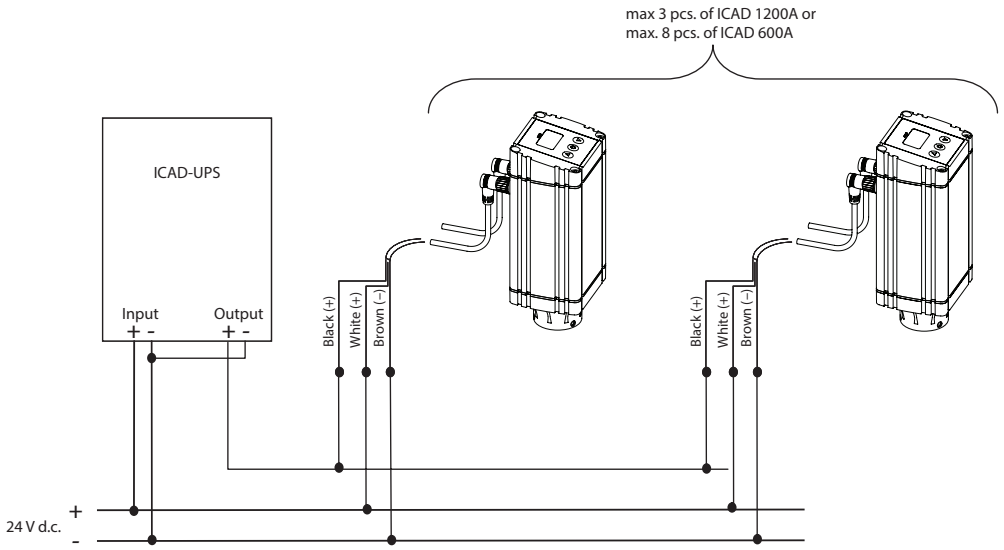

Material specification

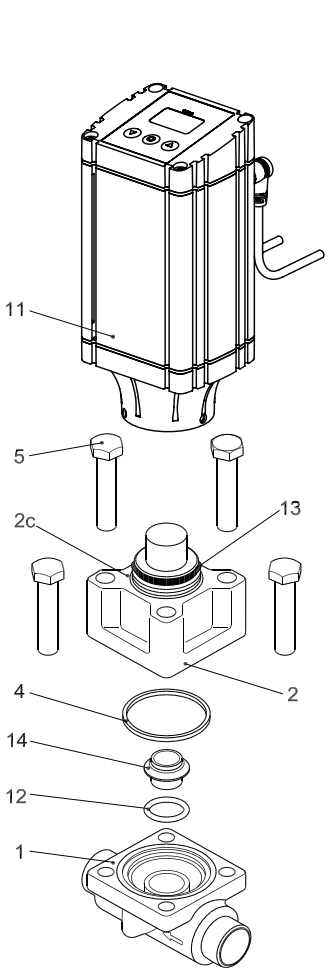

ICM 20

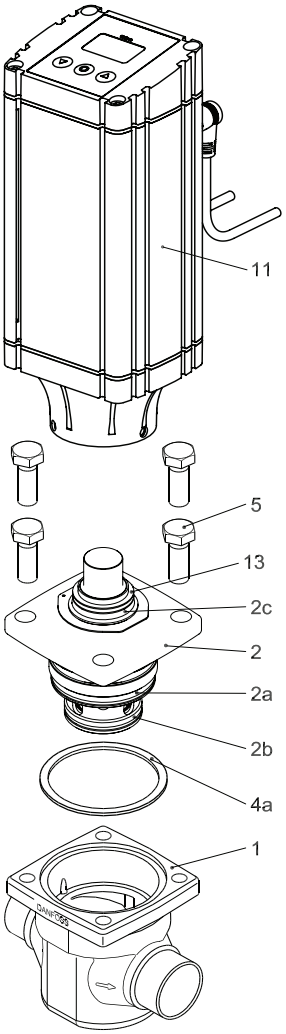

ICM 25-65

Bolt sizes (pos. 5)

Type	Screw
ICM 20	M10 × 55 A2-70 DIN 931
ICM 25	M12 × 30 A2-70 DIN 933
ICM 32	M14 × 35 A2-70 DIN 933
ICM 40	M14 × 35 A2-70 DIN 933
ICM 50	M16 × 40 A2-70 DIN 933
ICM 65	M16 × 40 A2-70 DIN 933

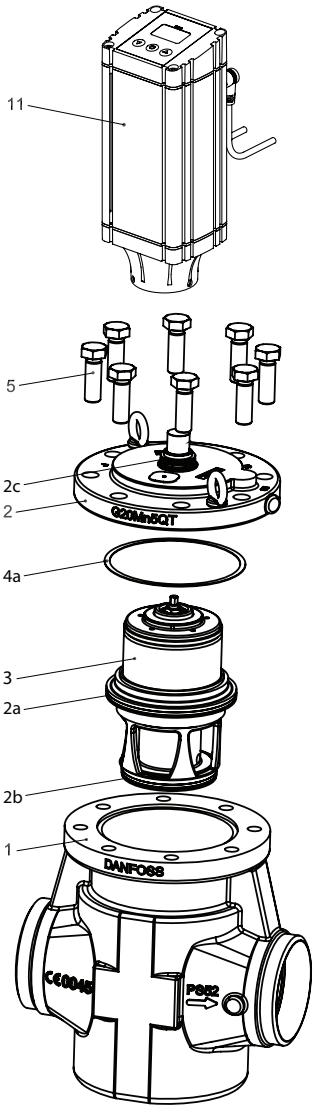

ICM 100-150

Bolt sizes (pos. 5)

Type	Screw
ICM 100	M20 × 60 A2-70 DIN 933
ICM 125	M20 × 60 A2-70 DIN 933
ICM 150	M20 × 70 A2-70 DIN 933

No.	Part	Material	EN	ASTM	JIS
1	Housing	Low temperature steel	G20Mn5QT, EN 10213-3	LCC, A352	SCPL1, G5151
2	Top cover	Low temperature steel	G20Mn5QT, EN 10213-3	LCC, A352	SCPL1, G5151
2a	O-ring	Cloroprene (Neoprene)			
2b	O-ring	Cloroprene (Neoprene)			
2c	O-ring	Cloroprene (Neoprene)			
3	Function module				
4	Gasket	Cloroprene (Neoprene)			
4a	Gasket	Fiber, non-asbestos			
5	Bolts	Stainless steel	A2-70, EN 1515-1	Grade B8 A320	A2-70, B 1054
11	Actuator				
12	O-ring	Cloroprene (Neoprene)			
13	O-ring	Cloroprene (Neoprene)			
14	Seat	High density polymer			

ICM Application

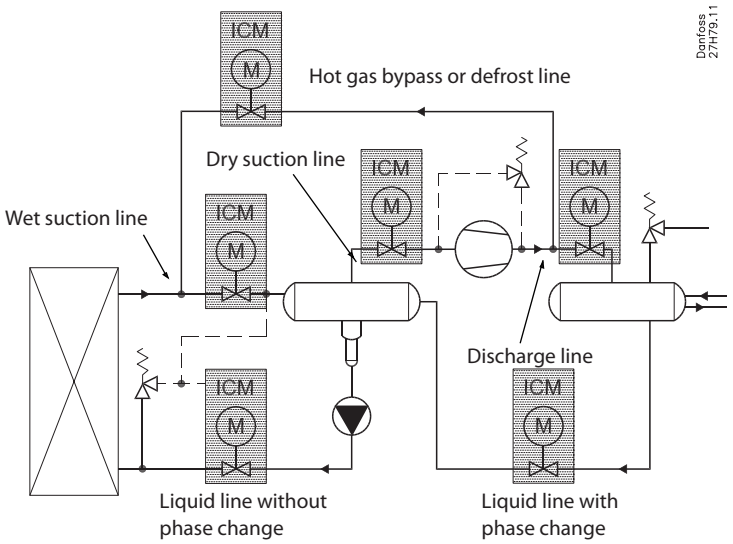

ICM can be used for pressure and temperature regulation in dry and wet suction lines, in hot gas lines and in liquid lines with or without phase change (i.e. where no expansion occurs in the valve).

Valve capacities for different refrigerants and applications are given in the following tables. Selection of ICM / ICS valves will be available with the DIRcalc ver. 1.3 selection program and later. The resultant valve selections will be:- ICM-EXP for expansion valve functions and where the selection criteria has been predefined for expansion valve application: ICM will be for control valve functions and will include for all available function modules as valve pressure drop is the main consideration for valve selection.

The process for identifying the ICM valve solution can be determined from the ordering pages. Initially select the nominal valve size, identify the required valve body and connection types, followed by the module insert and then the correct actuator to suit the module insert and valve body.

As the ICM and ICS valves use a common body it is possible to install the body without having previously determined whether a servo or motor function is required. A blank top cover complete with fixing screws can be supplied to allow for pressure testing.

In applications where the ICM is used to control pressure / temperature at differing operating conditions e.g. dual temperature store, the ICM must be selected so that the full operating conditions (minimum and maximum capacity / summer and winter conditions) are within the control range of the selected ICM valve.

It is particularly important to ensure that the ICM valve selection is not oversized and as a consequence operates at a minimum opening degree, which can result in a hunting condition and continuous recalibration of the ICM valve.

Note:
ICM valves should be sized to suit required capacity and operating conditions. ICM valves should not be line sized.

For ICM 20-65 applications it is recommended that the valve opening degree at the minimum operating conditions is greater than 5%.

For ICM 100-150 applications it is recommended that the valve opening degree at the minimum operating conditions is greater than 10%.

Recommended filters							Filter element for liquid line		Filter element for suction line	
							150 mesh	100 mesh	72 mesh	38 mesh
	Filter Type	Size	D	A	FPT	SOC	100 my	150 my	250 my	500 my
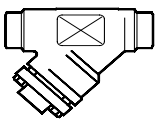	FIA Straightway	20 (¾ in)	**148B5343**	**148B5347**	**148B5349**	**148B5348**	**148H3122**	**148H3124**	**148H3126**	**148H3128**
	FIA Straightway	25 (1 in)	**148B5443**	**148B5447**	**148B5449**	**148B5448**	**148H3123**	**148H3125**	**148H3127**	**148H3129**
	FIA Straightway	32 (1 ¼ in)	**148B5544**	**148B5552**	**148B5549**	**148B5548**	**148H3123**	**148H3125**	**148H3127**	**148H3129**
	FIA Straightway	40 (1 ½ in)	**148B5625**	**148B5644**		**148B5645**	**148H3123**	**148H3125**	**148H3127**	**148H3129**
	FIA Straightway	50 (2 in)	**148B5713**	**148B5716**		**148B5717**	**148H3157**	**148H3130**	**148H3138**	**148H3144**
	FIA Straightway	65 (2 ½ in)	**148B5813**	**148B5815**				**148H3131**	**148H3139**	**148H3145**
	FIA Straightway	80 (3 in)	**148B5906**	**148B5908**				**148H3119**	**148H3120**	**148H3121**
	FIA Straightway	100 (4 in)	**148B6007**	**148B6009**				**148H3132**	**148H3140**	**148H3146**
	FIA Straightway	125 (5 in)	**148B6106**	**148B6108**				**148H3133**	**148H3141**	**148H3147**
	FIA Straightway	150 (6 in)	**148B6203**	**148B6205**				**148H3134**	**148H3142**	**148H3148**

Nominal capacities

Liquid line with/without phase change

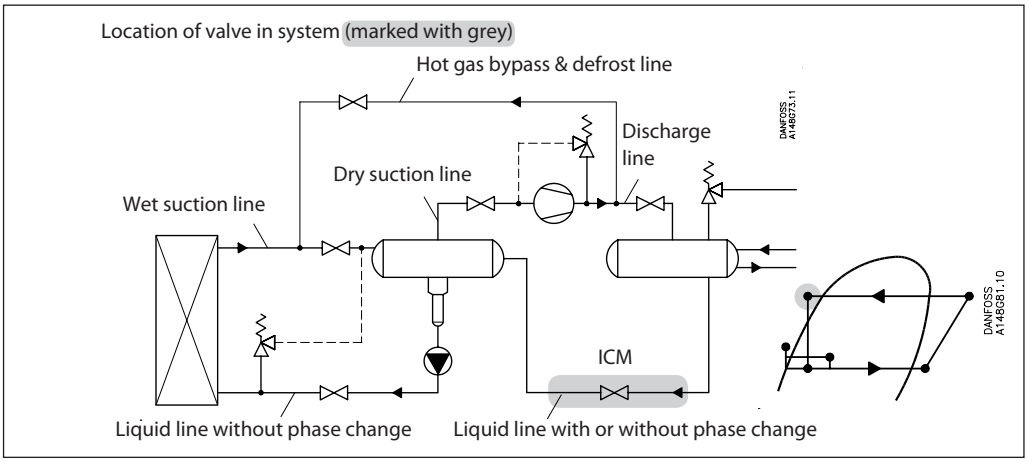

SI units

Calculation example (R717 capacities):

An application has following running conditions:

T_e = -20 °C
Q_o = 250 kW
T_{liq} = 10 °C
Max. Δp = 0.3 bar
Connection: DN20

The capacity table is based on nominal condition (pressure drop Δp = 0.2 bar, T_{liq} = 30 °C)

Therefore the actual capacity must be corrected to nominal condition by means of correction factors.
Correction factor for Δp 0.3 bar $f_{\Delta p}$ = 0.82
Correction factor for liquid tempereature f_{Tliq} = 0.92

$Q_n = Q_o \times f_{\Delta p} \times f_{Tliq} = 250 \times 0.82 \times 0.92 = 189$ kW

From the capacity table a ICM 20-B with Q_n capacity 249 kW is selected.

US units

Calculation example (R717 capacities):

An application has following running conditions:

T_e = -20 °F
Q_o = 130 TR
T_{liq} = 50 °F
Max. Δp = 3.5 psi
Connection: $^3/_4$"

The capacity table is based on nominal condition (pressure drop Δp = 3 psi, T_{liq} = 90 °F)

Therefore the actual capacity must be corrected to nominal condition by means of correction factors.
Correction factor for Δp 3.5 psi $f_{\Delta p}$ = 0.91
Correction factor for liquid tempereature f_{Tliq} = 0.92

$Q_n = Q_o \times f_{\Delta p} \times f_{Tliq} = 130 \times 0.91 \times 0.92 = 109$ TR

From the capacity table a ICM 20-C with Q_n capacity 134 TR is selected.

Nominal capacities

Liquid line with / without phase change

SI units

Capacity table for nominal conditions, Q_N [kW],
T_{liq} = 30 °C,
ΔP = 0.2 bar

R 717

Type	Valve body size	K_v [m³/h]	Evaporating temperature [°C]							
			-50	-40	-30	-20	-10	0	10	20
ICM20-A33	20	0.2	19.8	20.2	20.5	20.7	21.0	21.1	21.3	21.4
ICM20-A		0.6	59.5	60.5	61.4	62.2	62.9	63.4	63.9	64.2
ICM20-B		2.4	238	242	245	249	251	254	256	257
ICM20-C		4.6	457	464	471	477	482	486	490	493
ICM25-A	25	6	595	605	614	622	629	634	639	642
ICM25-B		12	1191	1210	1227	1243	1257	1269	1278	1285
ICM32-A	32	9	893	907	921	933	943	952	959	964
ICM32-B		17	1687	1714	1739	1761	1781	1797	1811	1820
ICM40-A	40	15	1489	1512	1534	1554	1571	1586	1598	1606
ICM40-B		26	2580	2622	2659	2694	2724	2749	2769	2784
ICM50-A	50	23	2283	2319	2353	2383	2409	2432	2450	2463
ICM50-B		40	3970	4033	4091	4145	4190	4229	4260	4283
ICM65-A	65	35	3473	3529	3580	3627	3666	3700	3728	3748
ICM65-B		70	6947	7058	7160	7253	7333	7401	7455	7495
ICM100	100	142	14091	14318	14524	14717	14875	15013	15127	15205
ICM125	125	223	22129	22485	22810	23112	23361	23577	23756	23877
ICM150	150	370	36717	37306	37845	38347	38760	39119	39415	39617

Correction factor for ΔP ($f_{\Delta P}$)

ΔP (bar)	Correction factor
0.05	2.00
0.1	1.41
0.2	**1.00**
0.3	0.82
0.4	0.71
0.5	0.63

Correction factor for liquid temperature (T_{liq})

Liquid temperature [°C]	Correction factor
-20	0.82
-10	0.86
0	0.88
10	0.92
20	0.96
30	**1.00**
40	1.04
50	1.09

US units

Capacity table for nominal conditions, Q_N [Tons of Refrigeration],
T_{liq} = 90 °F,
ΔP = 3 psi

R 717

Type	Valve body size	C_v [USgal/min]	Evaporating temperature [°F]							
			-60	-40	-20	0	20	40	60	80
ICM20-A33	20	0.23	5.6	5.7	5.8	5.9	6.0	6.0	6.1	6.1
ICM20-A		0.7	17.1	17.4	17.7	17.9	18.1	18.3	18.4	18.5
ICM20-B		2.8	68.3	69.5	70.7	71.7	72.5	73.2	73.7	74.0
ICM20-C		5.3	129	132	134	136	137	139	140	140
ICM25-A	25	7	171	174	177	179	181	183	184	185
ICM25-B		14	342	348	353	358	363	366	369	370
ICM32-A	32	10	244	248	252	256	259	261	263	264
ICM32-B		20	488	497	505	512	518	523	527	529
ICM40-A	40	17	415	422	429	435	440	445	448	450
ICM40-B		30	732	745	757	768	777	784	790	793
ICM50-A	50	27	659	670	681	691	699	706	711	714
ICM50-B		46	1122	1142	1161	1177	1191	1203	1211	1216
ICM65-A	65	41	1000	1018	1035	1049	1061	1072	1080	1084
ICM65-B		81	1976	2011	2044	2073	2098	2118	2133	2142
ICM100	100	165	4026	4099	4165	4223	4271	4315	4345	4362
ICM125	125	259	6320	6433	6538	6629	6705	6773	6820	6846
ICM150	150	430	10493	10681	10855	11006	11132	11245	11323	11367

Correction factor for ΔP ($f_{\Delta P}$)

ΔP (psi)	Correction factor
0.75	1.97
1.5	1.39
3	**1.00**
3.5	0.91
4	0.85
4.5	0.81

Correction factor for liquid temperature (T_{liq})

Liquid temperature [°F]	Correction factor
-10	0.82
10	0.85
30	0.88
50	0.92
70	0.96
90	**1.00**
110	1.04
130	1.09

Nominal capacities

Liquid line with / without phase change

SI units

Capacity table for nominal conditions, Q_N [kW],
T_{liq} = 10 °C,
ΔP = 0.2 bar

R 744

Type	Valve body size	K_v [m³/h]	Evaporating temperature [°C]							
			-50	-40	-30	-20	-10	0	10	20
ICM20-A33	20	0.2	19.8	20.2	20.5	20.7	21.0	21.1	21.3	21.4
ICM20-A		0.6	14.4	14.6	14.8	14.8	14.7	14.4	13.8	12.8
ICM20-B		2.4	57.8	58.6	59.0	59.1	58.7	57.5	55.3	51.1
ICM20-C		4.6	111	112	113	113	112	110	106	97.8
ICM25-A	25	6	144	146	148	148	147	144	138	128
ICM25-B		12	289	293	295	296	293	288	277	255
ICM32-A	32	9	217	220	221	222	220	216	207	191
ICM32-B		17	409	415	418	419	416	408	392	362
ICM40-A	40	15	361	366	369	369	367	360	346	319
ICM40-B		26	626	634	640	640	636	623	599	553
ICM50-A	50	23	554	561	566	566	562	551	530	489
ICM50-B		40	963	976	984	985	978	959	922	851
ICM65-A	65	35	3473	3529	3580	3627	3666	3700	3728	3748
ICM65-B		70	1685	1708	1722	1724	1711	1678	1613	1489
ICM100	100	142	14091	14318	14524	14717	14875	15013	15127	15205
ICM125	125	223	22129	22485	22810	23112	23361	23577	23756	23877
ICM150	150	370	36717	37306	37845	38347	38760	39119	39415	39617

Correction factor for ΔP ($f_{\Delta P}$)

ΔP (bar)	Correction factor
0.05	2.00
0.1	1.41
0.2	**1.00**
0.3	0.82
0.4	0.71
0.5	0.63

Correction factor for liquid temperature (T_{liq})

Liquid temperature [°C]	Correction factor
-20	0.52
-10	0.67
0	0.91
10	**1.00**
15	1.09

US units

Capacity table for nominal conditions, Q_N [Tons of Refrigeration],
T_{liq} = 50 °F,
ΔP = 3 psi

R 744

Type	Valve body size	C_v [USgal/min]	Evaporating temperature [°F]						
			-60	-40	-20	0	20	40	60
ICM20-A33	20	0.23	1.4	1.4	1.4	1.4	1.4	1.4	1.3
ICM20-A		0.7	4.2	4.2	4.3	4.3	4.2	4.1	3.9
ICM20-B		2.8	16.7	17.0	17.1	17.1	16.9	16.5	15.5
ICM20-C		5.3	31.7	32.2	32.5	32.5	32.1	31.1	29.3
ICM25-A	25	7	41.8	42.5	42.9	42.9	42.3	41.1	38.7
ICM25-B		14	83.7	85.0	85.7	85.7	84.7	82.3	77.3
ICM32-A	32	10	59.8	60.7	61.2	61.2	60.5	58.8	55.2
ICM32-B		20	120	121	122	122	121	118	110
ICM40-A	40	17	102	103	104	104	103	100	94
ICM40-B		30	179	182	184	184	181	176	166
ICM50-A	50	27	161	164	165	165	163	159	149
ICM50-B		46	275	279	282	282	278	270	254
ICM65-A	65	41	245	249	251	251	248	241	227
ICM65-B		81	484	492	496	496	490	476	448
ICM100	100	165	987	1000	1010	1010	997	970	912
ICM125	125	259	1549	1570	1586	1586	1565	1522	1432
ICM150	150	430	2571	2607	2633	2633	2598	2527	2377

Correction factor for ΔP ($f_{\Delta P}$)

ΔP (psi)	Correction factor
0.75	1.97
1.5	1.39
3	**1.00**
3.5	0.91
4	0.85
4.5	0.81

Correction factor for liquid temperature (T_{liq})

Liquid temperature [°F]	Correction factor
-10	0.48
10	0.64
30	0.88
50	**1.00**

Nominal capacities

Liquid line with / without phase change

SI units

Capacity table for nominal conditions, Q_N [kW],
T_{liq} = 30 °C,
ΔP = 0.2 bar

R 134a

Type	Valve body size	K_v [m³/h]	Evaporating temperature [°C]						
			-40	-30	-20	-10	0	10	20
ICM20-A33	20	0.2	3.6	3.7	3.9	4.1	4.2	4.4	4.5
ICM20-A		0.6	10.7	11.2	11.7	12.2	12.7	13.1	13.6
ICM20-B		2.4	42.7	44.7	46.7	48.7	50.6	52.5	54.2
ICM20-C		4.6	81.9	85.8	89.6	93.3	97.0	101	104
ICM25-A	25	6	107	112	117	122	127	131	136
ICM25-B		12	214	224	234	243	253	262	271
ICM32-A	32	9	160	168	175	183	190	197	203
ICM32-B		17	303	317	331	345	358	372	384
ICM40-A	40	15	267	280	292	304	316	328	339
ICM40-B		26	463	485	506	527	548	568	588
ICM50-A	50	23	409	429	448	467	485	503	520
ICM50-B		40	712	746	779	811	843	874	904
ICM65-A	65	35	623	653	682	710	738	765	791
ICM65-B		70	1246	1305	1363	1420	1476	1530	1582
ICM100	100	142	2529	2649	2766	2882	2996	3105	3210
ICM125	125	223	3971	4160	4343	4525	4704	4876	5041
ICM150	150	370	6589	6902	7206	7509	7805	8090	8364

Correction factor for ΔP ($f_{\Delta P}$)

ΔP (bar)	Correction factor
0.05	2.00
0.1	1.41
0.2	**1.00**
0.3	0.82
0.4	0.71
0.5	0.63

Correction factor for liquid temperature (T_{liq})

Liquid temperature [°C]	Correction factor
-20	0.66
-10	0.70
0	0.76
10	0.82
20	0.90
30	**1.00**
40	1.13
50	1.29

US units

Capacity table for nominal conditions, Q_N [Tons of Refrigeration],
T_{liq} = 90 °F,
ΔP = 3 psi

R 134a

Type	Valve body size	C_v [USgal/min]	Evaporating temperature [°F]						
			-40	-20	0	20	40	60	80
ICM20-A33	20	0.23	1.0	1.0	1.1	1.2	1.2	1.2	1.3
ICM20-A		0.7	3.0	3.2	3.3	3.5	3.7	3.8	3.9
ICM20-B		2.8	12.1	12.7	13.4	14.0	14.6	15.2	15.8
ICM20-C		5.3	22.9	24.1	25.3	26.5	27.7	28.8	29.8
ICM25-A	25	7	30.2	31.8	33.4	35.0	36.6	38.0	39.4
ICM25-B		14	60.4	63.7	66.9	70.1	73.1	76.0	78.8
ICM32-A	32	10	43.1	45.5	47.8	50.1	52.2	54.3	56.3
ICM32-B		20	86.3	91.0	95.6	100	104	109	113
ICM40-A	40	17	73.4	77.3	81.2	85.1	88.8	92.3	95.7
ICM40-B		30	129	136	143	150	157	163	169
ICM50-A	50	27	117	123	129	135	141	147	152
ICM50-B		46	198	209	220	230	240	250	259
ICM65-A	65	41	177	186	196	205	214	223	231
ICM65-B		81	350	369	387	406	423	440	456
ICM100	100	165	712	751	787	825	862	897	928
ICM125	125	259	1117	1178	1236	1296	1354	1407	1457
ICM150	150	430	1855	1956	2052	2151	2247	2336	2420

Correction factor for ΔP ($f_{\Delta P}$)

ΔP (psi)	Correction factor
0.75	1.97
1.5	1.39
3	**1.00**
3.5	0.91
4	0.85
4.5	0.81

Correction factor for liquid temperature (T_{liq})

Liquid temperature [°F]	Correction factor
-10	0.64
10	0.68
30	0.74
50	0.81
70	0.89
90	**1.00**
110	1.15
130	1.35

Nominal capacities

Liquid line with / without phase change

SI units

Capacity table for nominal conditions, Q_N [kW],
T_{liq} = 30 °C,
ΔP = 0.2 bar

R 404A

Type	Valve body size	K_v	Evaporating temperature [°C]							
		[m³/h]	-50	-40	-30	-20	-10	0	10	20
ICM20-A33	20	0.2	2.3	2.5	2.6	2.8	2.9	3.1	3.2	3.3
ICM20-A		0.6	6.9	7.4	7.9	8.3	8.8	9.2	9.6	10.0
ICM20-B		2.4	27.7	29.6	31.5	33.4	35.2	36.9	38.5	39.9
ICM20-C		4.6	53.0	56.7	60.4	64.0	67.5	70.8	73.8	76.5
ICM25-A	25	6	69.2	74.0	78.8	83.5	88.0	92.3	96.3	100
ICM25-B		12	138	148	158	167	176	185	193	200
ICM32-A	32	9	104	111	118	125	132	138	144	150
ICM32-B		17	196	210	223	237	249	262	273	283
ICM40-A	40	15	173	185	197	209	220	231	241	249
ICM40-B		26	300	321	341	362	381	400	417	432
ICM50-A	50	23	265	284	302	320	337	354	369	382
ICM50-B		40	461	493	525	557	587	615	642	665
ICM65-A	65	35	403	432	460	487	513	538	562	582
ICM65-B		70	807	863	919	974	1027	1077	1123	1164
ICM100	100	142	1637	1752	1865	1975	2082	2184	2278	2362
ICM125	125	223	2571	2751	2928	3102	3270	3430	3578	3710
ICM150	150	370	4265	4564	4859	5147	5426	5691	5936	6156

Correction factor for ΔP ($f_{\Delta P}$)

ΔP (bar)	Correction factor
0.05	2.00
0.1	1.41
0.2	**1.00**
0.3	0.82
0.4	0.71
0.5	0.63

Correction factor for liquid temperature (T_{liq})

Liquid temperature [°C]	Correction factor
-20	0.55
-10	0.60
0	0.66
10	0.74
20	0.85
30	**1.00**
40	1.23
50	1.68

US units

Capacity table for nominal conditions, Q_N [Tons of Refrigeration],
T_{liq} = 90 °F,
ΔP = 3 psi

R 404A

Type	Valve body size	C_v	Evaporating temperature [°F]							
		[USgal/min]	-60	-40	-20	0	20	40	60	80
ICM20-A33	20	0.23	0.6	0.7	0.7	0.8	0.8	0.9	0.9	0.9
ICM20-A		0.7	1.9	2.1	2.2	2.4	2.5	2.6	2.8	2.9
ICM20-B		2.8	7.6	8.2	8.8	9.5	10.0	10.6	11.0	11.4
ICM20-C		5.3	14.4	15.6	16.8	17.9	19.0	20.0	20.9	21.7
ICM25-A	25	7	19.0	20.6	22.1	23.6	25.1	26.4	27.6	28.6
ICM25-B		14	38.0	41.1	44.2	47.3	50.1	52.8	55.2	57.2
ICM32-A	32	10	27.2	29.4	31.6	33.8	35.8	37.7	39.4	40.9
ICM32-B		20	54.3	58.8	63.2	67.5	71.6	75.5	78.9	81.7
ICM40-A	40	17	46.2	50.0	53.7	57.4	60.9	64.1	67.1	69.5
ICM40-B		30	81.5	88.1	94.8	101	107	113	118	123
ICM50-A	50	27	73.3	79.3	85.3	91.2	96.7	102	107	110
ICM50-B		46	125	135	145	155	165	174	181	188
ICM65-A	65	41	111	121	129	139	147	155	162	168
ICM65-B		81	220	238	256	274	290	306	320	331
ICM100	100	165	448	486	521	558	591	622	651	675
ICM125	125	259	703	762	818	876	927	976	1022	1060
ICM150	150	430	1168	1266	1357	1454	1539	1621	1697	1759

Correction factor for ΔP ($f_{\Delta P}$)

ΔP (psi)	Correction factor
0.75	1.97
1.5	1.39
3	**1.00**
3.5	0.91
4	0.85
4.5	0.81

Correction factor for liquid temperature (T_{liq})

Liquid temperature [°F]	Correction factor
-10	0.52
10	0.57
30	0.63
50	0.72
70	0.83
90	**1.00**
110	1.29
130	1.92

Nominal capacities

Liquid line with / without phase change

SI units

Capacity table for nominal conditions, Q_N [kW],
T_{liq} = 30 °C,
ΔP = 0.2 bar

R 22

Type	Valve body size	K_v [m³/h]	Evaporating temperature [°C]							
			-50	-40	-30	-20	-10	0	10	20
ICM20-A33	20	0.2	4.0	4.1	4.2	4.3	4.4	4.5	4.6	4.7
ICM20-A		0.6	11.9	12.3	12.7	13.0	13.3	13.6	13.9	14.2
ICM20-B		2.4	47.6	49.1	50.6	52.0	53.3	54.5	55.7	56.7
ICM20-C		4.6	91.3	94.2	97.0	100	102	105	107	109
ICM25-A	25	6	119	123	127	130	133	136	139	142
ICM25-B		12	238	246	253	260	267	273	278	283
ICM32-A	32	9	179	184	190	195	200	205	209	213
ICM32-B		17	337	348	358	368	378	386	394	401
ICM40-A	40	15	298	307	316	325	333	341	348	354
ICM40-B		26	516	532	548	563	578	591	603	614
ICM50-A	50	23	456	471	485	498	511	523	534	543
ICM50-B		40	794	819	843	866	889	909	928	945
ICM65-A	65	35	695	717	738	758	777	796	812	827
ICM65-B		70	1389	1433	1476	1516	1555	1591	1624	1653
ICM100	100	142	2818	2908	2996	3077	3154	3228	3294	3355
ICM125	125	223	4425	4566	4704	4832	4953	5069	5173	5269
ICM150	150	370	7342	7576	7805	8017	8217	8410	8583	8743

Correction factor for ΔP ($f_{\Delta P}$)

ΔP (bar)	Correction factor
0.2	**1.00**
0.25	0.89
0.3	0.82
0.4	0.71
0.5	0.63
0.6	0.58

Correction factor for liquid temperature (T_{liq})

Liquid temperature [°C]	Correction factor
-20	0.71
-10	0.75
0	0.80
10	0.86
20	0.92
30	**1.00**
40	1.09
50	1.22

US units

Capacity table for nominal conditions, Q_N [Tons of Refrigeration],
T_{liq} = 90 °F,
ΔP = 3 psi

R 22

Type	Valve body size	C_v [USgal/min]	Evaporating temperature [°F]							
			-60	-40	-20	0	20	40	60	80
ICM20-A33	20	0.23	1.1	1.1	1.2	1.2	1.3	1.3	1.3	1.3
ICM20-A		0.7	3.4	3.5	3.6	3.7	3.8	3.9	4.0	4.1
ICM20-B		2.8	13.5	14.0	14.4	14.9	15.3	15.7	16.0	16.3
ICM20-C		5.3	25.5	26.4	27.4	28.2	29.0	29.7	30.4	30.9
ICM25-A	25	7	33.7	34.9	36.1	37.2	38.3	39.2	40.1	40.8
ICM25-B		14	67.4	69.8	72.2	74.5	76.6	78.5	80.2	81.6
ICM32-A	32	10	48.1	49.9	51.6	53.2	54.7	56.0	57.3	58.3
ICM32-B		20	96.3	100	103	106	109	112	115	117
ICM40-A	40	17	81.9	84.8	87.7	90.5	93.0	95.3	97.4	99.1
ICM40-B		30	144	150	155	160	164	168	172	175
ICM50-A	50	27	130	135	139	144	148	151	155	157
ICM50-B		46	221	229	237	245	252	258	264	268
ICM65-A	65	41	197	205	211	218	224	230	235	239
ICM65-B		81	390	404	418	431	443	454	464	472
ICM100	100	165	795	824	851	878	902	924	946	962
ICM125	125	259	1247	1293	1335	1377	1416	1450	1484	1510
ICM150	150	430	2071	2146	2217	2287	2350	2408	2464	2507

Correction factor for ΔP ($f_{\Delta P}$)

ΔP (psi)	Correction factor
3	**1.00**
4	0.87
5	0.79
6	0.72
7	0.66
8	0.62

Correction factor for liquid temperature (T_{liq})

Liquid temperature [°F]	Correction factor
-10	0.73
10	0.77
30	0.82
50	0.87
70	0.93
90	**1.00**
110	1.09
130	1.20

Nominal capacities

Liquid line without phase change

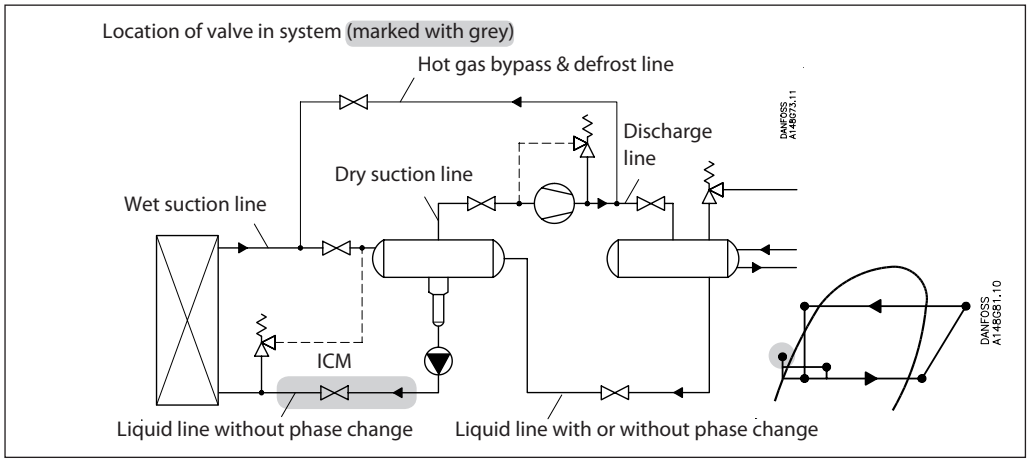

SI units

Calculation example (R717 capacities):

An application has following running conditions:

T_e = -20 °C
Q_o = 180 kW
Circulation rate = 3
Max. Δp = 0.3 bar
Connection: DN20

The capacity table is based on nominal condition (pressure drop Δp = 0.2 bar, circulation rate = 4)

Therefore the actual capacity must be corrected to nominal condition by means of correction factors.
Correction factor for Δp 0.3 bar $f_{\Delta p}$ = 0.82
Correction factor for circulation rate f_{rec} = 0.75

$Q_n = Q_o \times f_{\Delta p} \times f_{rec} = 180 \times 0.82 \times 0.75 = 111$ kW

From the capacity table a ICM 20-C with Q_n capacity 153 kW is selected.

US units

Calculation example (R717 capacities):

An application has following running conditions:

T_e = -20 °F
Q_o = 130 TR
Circulation rate = 3
Max. Δp = 3.5 psi
Connection: 1 1/4"

The capacity table is based on nominal condition (pressure drop Δp = 3 psi, circulation rate = 4)

Therefore the actual capacity must be corrected to nominal condition by means of correction factors.
Correction factor for Δp 3.5 psi $f_{\Delta p}$ = 0.91
Correction factor for circulation rate f_{rec} = 0.75

$Q_n = Q_o \times f_{\Delta p} \times f_{rec} = 130 \times 0.91 \times 0.75 = 89$ TR

From the capacity table a ICM 32-B with Q_n capacity 171 TR is selected.

Nominal capacities

Liquid line without phase change

SI units

Capacity table at nominal conditions, Q_N [kW], Circulation rate = 4, Δp = 0.2 bar

R 717

Type	Valve body size	K_v [m³/h]	Evaporating temperature [°C]							
			-50	-40	-30	-20	-10	0	10	20
ICM20A-33	20	0.2	7.3	7.1	6.9	6.7	6.4	6.2	5.9	5.6
ICM20-A		0.6	21.9	21.3	20.7	20.0	19.3	18.5	17.8	16.9
ICM20-B		2.4	87.6	85.2	82.7	80.0	77.1	74.2	71.0	67.8
ICM20-C		4.6	168	163	159	153	148	142	136	130
ICM25-A	25	6	219	213	207	200	193	185	178	169
ICM25-B		12	438	426	413	400	386	371	355	339
ICM32-A	32	9	329	320	310	300	289	278	266	254
ICM32-B		17	621	604	586	567	546	525	503	480
ICM40-A	40	15	548	533	517	500	482	464	444	424
ICM40-B		26	949	923	896	867	836	803	770	734
ICM50-A	50	23	840	817	793	767	739	711	681	650
ICM50-B		40	1460	1421	1378	1333	1286	1236	1184	1130
ICM65-A	65	35	1278	1243	1207	1167	1125	1081	1036	988
ICM65-B		70	2555	2486	2412	2333	2250	2163	2072	1977
ICM100	100	142	5185	5042	4895	4733	4565	4386	4204	4009
ICM125	125	223	8143	7919	7687	7433	7168	6888	6601	6296
ICM150	150	370	13510	13139	12755	12332	11894	11429	10953	10446

Correction factor for ΔP ($f_{\Delta P}$)

ΔP (bar)	Correction factor
0.05	2.00
0.1	1.41
0.2	**1.00**
0.3	0.82
0.4	0.71
0.5	0.63

Correction factor for circulation rate (f_{rec})

Circulation rate	Correction factor
2	0.5
3	0.75
4	**1**
6	1.5
8	2
10	2.5

US units

Capacity table at nominal conditions, Q_N [Tons of Refrigeration], Circulation rate = 4, Δp = 3 psi

R 717

Type	Valve body size	C_v [USgal/min]	Evaporating temperature [°F]							
			-60	-40	-20	0	20	40	60	80
ICM20-A33	20	0.23	2.1	2.0	2.0	1.9	1.8	1.7	1.7	1.6
ICM20-A		0.7	6.4	6.2	6.0	5.8	5.5	5.3	5.0	4.8
ICM20-B		2.8	25.6	24.8	24.0	23.1	22.2	21.2	20.2	19.1
ICM20-C		5.3	48.4	46.9	45.3	43.7	41.9	40.1	38.1	36.1
ICM25-A	25	7	64.0	62.0	59.9	57.7	55.4	53.0	50.4	47.7
ICM25-B		14	128	124	120	115	111	106	101	95.4
ICM32-A	32	10	91.4	88.5	85.6	82.5	79.1	75.7	72.0	68.1
ICM32-B		20	183	177	171	165	158	151	144	136
ICM40-A	40	17	155	150	145	140	135	129	122	116
ICM40-B		30	274	266	257	247	237	227	216	204
ICM50-A	50	27	247	239	231	223	214	204	194	184
ICM50-B		46	420	407	394	379	364	348	331	313
ICM65-A	65	41	375	363	351	338	324	310	295	279
ICM65-B		81	740	717	693	668	641	613	583	552
ICM100	100	165	1508	1461	1412	1361	1305	1249	1187	1125
ICM125	125	259	2367	2293	2217	2136	2049	1960	1863	1765
ICM150	150	430	3929	3806	3680	3546	3402	3254	3093	2931

Correction factor for ΔP ($f_{\Delta P}$)

ΔP (psi)	Correction factor
0.75	1.97
1.5	1.39
3	**1.00**
3.5	0.91
4	0.85
4.5	0.81

Correction factor for circulation rate (f_{rec})

Circulation rate	Correction factor
2	0.5
3	0.75
4	**1**
6	1.5
8	2
10	2.5

Nominal capacities

Liquid line without phase change

SI units

Capacity table at nominal conditions, Q_N [kW],
Circulation rate = 4,
Δp = 0.2 bar

R 744

Type	Valve body size	K_v [m³/h]	Evaporating temperature [°C]						
			-50	-40	-30	-20	-10	0	10
ICM20A-33	20	0.2	2.2	2.1	2.0	1.8	1.6	1.4	1.1
ICM20-A		0.6	6.7	6.3	5.9	5.4	4.8	4.2	3.4
ICM20-B		2.4	27.0	25.3	23.5	21.5	19.2	16.7	13.7
ICM20-C		4.6	51.7	48.5	45.0	41.1	36.8	32.0	26.4
ICM25-A	25	6	67.5	63.3	58.7	53.7	48.0	41.7	34.4
ICM25-B		12	134.9	126.5	117.4	107.3	96.0	83.5	68.7
ICM32-A	32	9	101.2	94.9	88.1	80.5	72.0	62.6	51.6
ICM32-B		17	191	179	166	152	136	118	97.4
ICM40-A	40	15	169	158	147	134	120	104	85.9
ICM40-B		26	292	274	254	233	208	181	149
ICM50-A	50	23	259	242	225	206	184	160	132
ICM50-B		40	450	422	391	358	320	278	229
ICM65-A	65	35	393	369	343	313	280	243	200
ICM65-B		70	787	738	685	626	560	487	401
ICM100	100	142	1596	1496	1390	1271	1136	988	813
ICM125	125	223	2506	2350	2182	1996	1784	1551	1276
ICM150	150	370	4159	3898	3621	3312	2960	2574	2118

Correction factor for ΔP ($f_{\Delta P}$)

ΔP (bar)	Correction factor
0.05	2.00
0.1	1.41
0.2	**1.00**
0.3	0.82
0.4	0.71
0.5	0.63

Correction factor for circulation rate (f_{rec})

Circulation rate	Correction factor
2	0.77
3	0.90
4	**1**
6	1.13
8	1.20
10	1.25

US units

Capacity table at nominal conditions, Q_N [Tons of Refrigeration],
Circulation rate = 4,
Δp = 3 psi

R 744

Type	Valve body size	C_v [USgal/min]	Evaporating temperature [°F]						
			-60	-40	-20	0	20	40	60
ICM20-A33	20	0.23	0.7	0.6	0.6	0.5	0.4	0.4	0.3
ICM20-A		0.7	2.0	1.8	1.7	1.5	1.3	1.1	0.9
ICM20-B		2.8	7.9	7.4	6.8	6.1	5.4	4.5	3.4
ICM20-C		5.3	15.0	13.9	12.8	11.6	10.1	8.5	6.5
ICM25-A	25	7	19.8	18.4	16.9	15.3	13.4	11.2	8.6
ICM25-B		14	39.5	36.8	33.9	30.5	26.8	22.5	17.2
ICM32-A	32	10	28.2	26.3	24.2	21.8	19.1	16.1	12.3
ICM32-B		20	56.4	52.6	48.4	43.6	38.3	32.1	24.6
ICM40-A	40	17	48.0	44.7	41.1	37.1	32.5	27.3	20.9
ICM40-B		30	84.7	78.9	72.6	65.4	57.4	48.2	37.0
ICM50-A	50	27	76.2	71.0	65.3	58.9	51.7	43.4	33.3
ICM50-B		46	130	121	111	100	88.0	73.9	56.7
ICM65-A	65	41	116	108	99	89	78	66	51
ICM65-B		81	229	213	196	177	155	130	100
ICM100	100	165	466	433	399	359	315	264	204
ICM125	125	259	732	680	627	564	495	415	320
ICM150	150	430	1216	1129	1040	937	821	689	531

Correction factor for ΔP ($f_{\Delta P}$)

ΔP (psi)	Correction factor
0.75	1.97
1.5	1.39
3	**1.00**
3.5	0.91
4	0.85
4.5	0.81

Correction factor for circulation rate (f_{rec})

Circulation rate	Correction factor
2	0.5
3	0.75
4	**1**
6	1.5
8	2
10	2.5

Nominal capacities

Liquid line without phase change

SI units

Capacity table at nominal conditions, Q_N [kW], Circulation rate = 4, Δp = 0.2 bar

R 134a

Type	Valve body size	K_v [m³/h]	Evaporating temperature [°C]						
			-40	-30	-20	-10	0	10	20
ICM20A-33	20	0.2	1.6	1.6	1.5	1.5	1.4	1.3	1.2
ICM20-A		0.6	4.9	4.8	4.6	4.4	4.2	4.0	3.7
ICM20-B		2.4	19.8	19.1	18.3	17.6	16.7	15.9	14.9
ICM20-C		4.6	37.9	36.6	35.2	33.6	32.1	30.4	28.7
ICM25-A	25	6	49.5	47.7	45.9	43.9	41.8	39.7	37.4
ICM25-B		12	98.9	95.5	91.7	87.8	83.7	79.4	74.7
ICM32-A	32	9	74.2	71.6	68.8	65.8	62.7	59.5	56.1
ICM32-B		17	140	135	130	124	119	112	106
ICM40-A	40	15	124	119	115	110	105	99.2	93.4
ICM40-B		26	214	207	199	190	181	172	162
ICM50-A	50	23	190	183	176	168	160	152	143
ICM50-B		40	330	318	306	293	279	265	249
ICM65-A	65	35	288	278	268	256	244	232	218
ICM65-B		70	577	557	535	512	488	463	436
ICM100	100	142	1170	1130	1086	1039	991	940	884
ICM125	125	223	1837	1774	1706	1632	1556	1476	1388
ICM150	150	370	3049	2944	2830	2707	2581	2448	2302

Correction factor for ΔP ($f_{\Delta P}$)

ΔP (bar)	Correction factor
0.2	**1.00**
0.25	0.89
0.3	0.82
0.4	0.71
0.5	0.63
0.6	0.58

Correction factor for circulation rate (f_{rec})

Circulation rate	Correction factor
2	0.5
3	0.75
4	**1**
6	1.5
8	2
10	2.5

US units

Capacity table at nominal conditions, Q_N [Tons of Refrigeration], Circulation rate = 4, Δp = 3 psi

R 134a

Type	Valve body size	C_v [USgal/min]	Evaporating temperature [°F]						
			-40	-20	-0	20	40	60	80
ICM20-A33	20	0.23	0.5	0.5	0.4	0.4	0.4	0.4	0.3
ICM20-A		0.7	1.4	1.4	1.3	1.3	1.2	1.1	1.0
ICM20-B		2.8	5.8	5.5	5.3	5.0	4.8	4.5	4.2
ICM20-C		5.3	10.9	10.5	10.0	9.5	9.0	8.5	7.9
ICM25-A	25	7	14.4	13.8	13.2	12.6	11.9	11.2	10.4
ICM25-B		14	28.8	27.7	26.4	25.1	23.8	22.4	20.8
ICM32-A	32	10	20.6	19.8	18.9	18.0	17.0	16.0	14.9
ICM32-B		20	41.1	39.5	37.8	35.9	34.0	32.0	29.8
ICM40-A	40	17	35.0	33.6	32.1	30.5	28.9	27.2	25.3
ICM40-B		30	61.7	59.3	56.7	53.9	51.0	48.0	44.6
ICM50-A	50	27	55.5	53.3	51.0	48.5	45.9	43.2	40.2
ICM50-B		46	94.6	90.9	86.9	82.6	78.2	73.5	68.4
ICM65-A	65	41	84	81	77	74	70	66	61
ICM65-B		81	167	160	153	146	138	130	121
ICM100	100	165	339	326	311	297	281	264	245
ICM125	125	259	532	512	489	466	441	414	385
ICM150	150	430	883	850	811	774	732	687	638

Correction factor for ΔP ($f_{\Delta P}$)

ΔP (psi)	Correction factor
3	**1.00**
4	0.87
5	0.79
6	0.72
7	0.66
8	0.62

Correction factor for circulation rate (f_{rec})

Circulation rate	Correction factor
2	0.5
3	0.75
4	**1**
6	1.5
8	2
10	2.5

Nominal capacities

Liquid line without phase change

SI units

Capacity table at nominal conditions, Q_N [kW],
Circulation rate = 4,
Δp = 0.2 bar

R 404A

Type	Valve body size	K_v [m³/h]	Evaporating temperature [°C]							
			-50	-40	-30	-20	-10	0	10	20
ICM20A-33	20	0.2	1.5	1.4	1.3	1.3	1.8	1.1	1.0	1.0
ICM20-A		0.6	4.4	4.2	4.0	3.8	5.3	3.4	3.1	2.9
ICM20-B		2.4	17.5	16.7	15.9	15.1	21.2	13.5	12.5	11.5
ICM20-C		4.6	33.4	32.1	30.4	29.0	40.6	25.8	24.0	21.9
ICM25-A	25	6	43.6	41.8	39.7	37.8	53.0	33.7	31.3	28.6
ICM25-B		12	87.3	83.7	79.4	75.6	105.9	67.4	62.6	57.3
ICM32-A	32	9	65.4	62.7	59.5	56.7	79.5	50.5	46.9	42.9
ICM32-B		17	124	119	112	107	150	95.4	88.6	81.1
ICM40-A	40	15	109	105	99.2	94.5	132.4	84.2	78.2	71.6
ICM40-B		26	189	181	172	164	230	146	136	124
ICM50-A	50	23	167	160	152	145	203	129	120	110
ICM50-B		40	291	279	265	252	353	225	209	191
ICM65-A	65	35	255	244	232	221	309	197	182	167
ICM65-B		70	509	488	463	441	618	393	365	334
ICM100	100	142	1033	991	940	895	1254	798	740	678
ICM125	125	223	1623	1556	1476	1406	1969	1253	1162	1066
ICM150	150	370	2693	2581	2448	2332	3267	2079	1929	1768

Correction factor for ΔP ($f_{\Delta P}$)

ΔP (bar)	Correction factor
0.05	2.00
0.1	1.41
0.2	**1.00**
0.3	0.82
0.4	0.71
0.5	0.63

Correction factor for circulation rate (f_{rec})

Circulation rate	Correction factor
2	0.5
3	0.75
4	**1**
6	1.5
8	1.2
10	2.5

US units

Capacity table at nominal conditions, Q_N [Tons of Refrigeration],
Circulation rate = 4,
Δp = 3 psi

R 404A

Type	Valve body size	C_v [USgal/min]	Evaporating temperature [°F]							
			-60	-40	-20	0	20	40	60	80
ICM20-A33	20	0.23	0.4	0.4	0.4	0.4	0.3	0.3	0.3	0.3
ICM20-A		0.7	1.3	1.2	1.1	1.1	1.0	1.0	0.9	0.8
ICM20-B		2.8	5.1	4.9	4.6	4.4	4.1	3.8	3.5	3.1
ICM20-C		5.3	9.7	9.2	8.7	8.2	7.7	7.2	6.6	5.9
ICM25-A	25	7	12.7	12.2	11.5	10.9	10.2	9.5	8.7	7.8
ICM25-B		14	25.5	24.4	23.0	21.8	20.4	19.0	17.4	15.5
ICM32-A	32	10	18.2	17.4	16.4	15.6	14.6	13.6	12.4	11.1
ICM32-B		20	36.4	34.8	32.8	31.1	29.2	27.2	24.8	22.2
ICM40-A	40	17	31.0	29.6	27.9	26.4	24.8	23.1	21.1	18.8
ICM40-B		30	54.6	52.2	49.3	46.7	43.8	40.7	37.2	33.3
ICM50-A	50	27	49.2	47.0	44.3	42.0	39.4	36.7	33.5	29.9
ICM50-B		46	83.8	80.1	75.5	71.6	67.2	62.5	57.1	51.0
ICM65-A	65	41	75	71	67	64	60	56	51	46
ICM65-B		81	148	141	133	126	118	110	101	89.8
ICM100	100	165	301	287	270	257	240	225	206	183
ICM125	125	259	473	450	424	404	377	353	323	288
ICM150	150	430	785	748	703	670	626	587	536	478

Correction factor for ΔP ($f_{\Delta P}$)

ΔP (psi)	Correction factor
0.75	1.97
1.5	1.39
3	**1.00**
3.5	0.91
4	0.85
4.5	0.81

Correction factor for circulation rate (f_{rec})

Circulation rate	Correction factor
2	0.5
3	0.75
4	**1**
6	1.5
8	2
10	2.5

Nominal capacities

Liquid line without phase change

SI units

Capacity table at nominal conditions, Q_N [kW], Circulation rate = 4, Δp = 0.2 bar

R 22

Type	Valve body size	K_v	Evaporating temperature [°C]							
		[m³/h]	-50	-40	-30	-20	-10	0	10	20
ICM20A-33	20	0.2	1.8	1.7	1.7	1.6	1.5	1.4	1.4	1.3
ICM20-A		0.6	5.3	5.2	5.0	4.8	4.6	4.3	4.1	3.9
ICM20-B		2.4	21.4	20.6	19.9	19.1	18.2	17.3	16.4	15.4
ICM20-C		4.6	40.9	39.6	38.1	36.5	35.0	33.3	31.5	29.6
ICM25-A	25	6	53.4	51.6	49.7	47.7	45.6	43.4	41.1	38.6
ICM25-B		12	107	103	99.4	95.3	91.2	86.7	82.1	77.1
ICM32-A	32	9	80.1	77.4	74.6	71.5	68.4	65.1	61.6	57.9
ICM32-B		17	151	146	141	135	129	123	116	109
ICM40-A	40	15	134	129	124	119	114	108	103	96
ICM40-B		26	231	224	215	207	198	188	178	167
ICM50-A	50	23	205	198	191	183	175	166	157	148
ICM50-B		40	356	344	331	318	304	289	274	257
ICM65-A	65	35	311	301	290	278	266	253	239	225
ICM65-B		70	623	602	580	556	532	506	479	450
ICM100	100	142	1263	1222	1177	1129	1080	1025	972	913
ICM125	125	223	1984	1919	1848	1773	1696	1610	1526	1434
ICM150	150	370	3292	3184	3067	2942	2814	2671	2532	2379

Correction factor for ΔP ($f_{\Delta P}$)

ΔP (bar)	Correction factor
0.2	**1.00**
0.25	0.89
0.3	0.82
0.4	0.71
0.5	0.63
0.6	0.58

Correction factor for circulation rate (f_{rec})

Circulation rate	Correction factor
2	0.5
3	0.75
4	**1**
6	1.5
8	2
10	2.5

US units

Capacity table at nominal conditions, Q_N [Tons of Refrigeration], Circulation rate = 4, Δp = 3 psi

R 22

Type	Valve body size	C_v	Evaporating temperature [°F]							
		[USgal/min]	-60	-40	-20	0	20	40	60	80
ICM20-A33	20	0.23	0.5	0.5	0.5	0.5	0.4	0.4	0.4	0.4
ICM20-A		0.7	1.6	1.5	1.4	1.4	1.3	1.2	1.2	1.1
ICM20-B		2.8	6.2	6.0	5.8	5.5	5.2	4.9	4.6	4.3
ICM20-C		5.3	11.8	11.4	10.9	10.4	9.9	9.3	8.7	8.1
ICM25-A	25	7	15.6	15.0	14.4	13.7	13.1	12.3	11.6	10.7
ICM25-B		14	31.2	30.1	28.8	27.5	26.1	24.7	23.1	21.4
ICM32-A	32	10	22.3	21.5	20.6	19.6	18.7	17.6	16.5	15.3
ICM32-B		20	44.6	43.0	41.2	39.3	37.3	35.2	33.0	30.6
ICM40-A	40	17	37.9	36.5	35.0	33.4	31.7	29.9	28.1	26.0
ICM40-B		30	66.9	64.4	61.7	58.9	56.0	52.9	49.5	45.9
ICM50-A	50	27	60.2	58.0	55.6	53.0	50.4	47.6	44.6	41.3
ICM50-B		46	103	98.8	94.7	90.4	85.8	81.0	75.9	70.4
ICM65-A	65	41	92	88	84	81	76	72	68	63
ICM65-B		81	181	174	167	159	151	143	134	124
ICM100	100	165	369	354	339	324	308	290	273	253
ICM125	125	259	579	556	532	509	483	455	429	397
ICM150	150	430	961	923	884	845	802	755	712	659

Correction factor for ΔP ($f_{\Delta P}$)

ΔP (psi)	Correction factor
3	**1.00**
4	0.87
5	0.79
6	0.72
7	0.66
8	0.62

Correction factor for circulation rate (f_{rec})

Circulation rate	Correction factor
2	0.5
3	0.75
4	**1**
6	1.5
8	2
10	2.5

Nominal capacities

Wet suction line

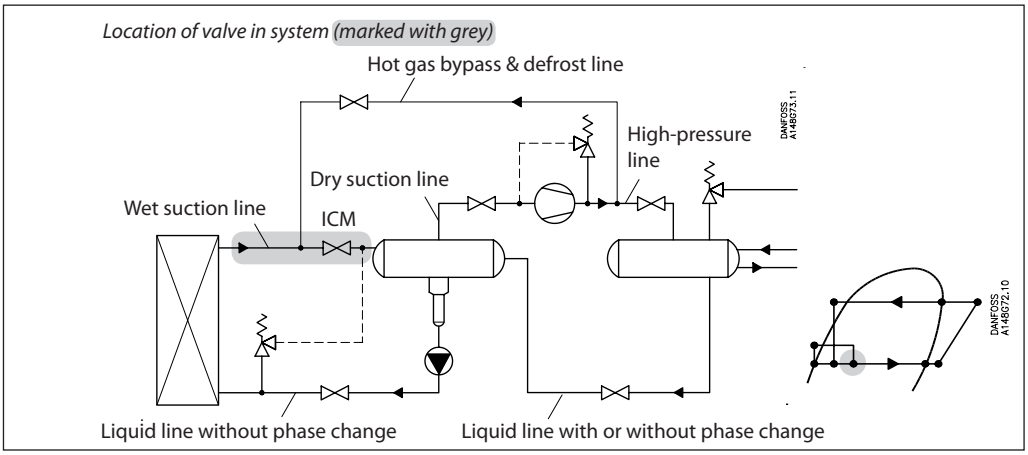

SI units

Calculation example (R717 capacities):

An application has following running conditions:

T_e = -20 °C
Q_o = 80 kW
Circulation rate = 3
Max. Δp = 0.3 bar
Connection: DN32

The capacity table is based on nominal condition (pressure drop Δp = 0.2 bar, recirculation rate = 4)

Therefore the actual capacity must be corrected to nominal condition by means of correction factors.
Correction factor for Δp 0.3 bar $f_{\Delta p}$ = 0.82
Correction factor for circulation rate f_{rec} = 0.9

$Q_n = Q_o \times f_{\Delta p} \times f_{rec} = 80 \times 0.82 \times 0.9 = 59$ kW

From the capacity table a ICM 32-B with Q_n capacity 60.1 kW is selected.

US units

Calculation example (R717 capacities):

An application has following running conditions:

T_e = -20 °F
Q_o = 8 TR
Circulation rate = 3
Max. Δp = 3.5 psi
Connection: 1″

The capacity table is based on nominal condition (pressure drop Δp = 3 psi, recirculation rate = 4)

Therefore the actual capacity must be corrected to nominal condition by means of correction factors.
Correction factor for Δp 3.5 psi $f_{\Delta p}$ = 0.91
Correction factor for circulation rate f_{rec} = 0.9

$Q_n = Q_o \times f_{\Delta p} \times f_{rec} = 8 \times 0.91 \times 0.9 = 6.6$ TR

From the capacity table a ICM 25-B with Q_n capacity 10.2 TR is selected.

Nominal capacities

SI units

Capacity table at nominal conditions, Q_N [kW], Circulation rate = 4, Δp = 0.2 bar

R 717 — Wet suction line

Type	Valve body size	K_v [m³/h]	Evaporating temperature [°C]							
			-50	-40	-30	-20	-10	0	10	20
ICM20A-33	20	0.2	0.3	0.4	0.6	0.7	0.8	1.0	1.1	1.3
ICM20-A		0.6	0.9	1.3	1.7	2.1	2.5	3.0	3.4	3.9
ICM20-B		2.4	3.4	5.2	6.8	8.5	10.2	11.9	13.7	15.6
ICM20-C		4.6	6.6	10.0	13.1	16.3	19.5	22.9	26.4	29.9
ICM25-A	25	6	8.6	13.0	17.1	21.2	25.5	29.8	34.4	39.0
ICM25-B		12	17.2	26.0	34.2	42.4	50.9	59.7	68.7	78.0
ICM32-A	32	9	12.9	19.5	25.7	31.8	38.2	44.7	51.6	58.5
ICM32-B		17	24.4	36.8	48.5	60.1	72.1	84.5	97.4	111
ICM40-A	40	15	21.5	32.5	42.8	53.0	63.6	74.6	85.9	97.5
ICM40-B		26	37.3	56.3	74.1	91.9	110	129	149	169
ICM50-A	50	23	33.0	49.8	65.6	81.3	97.6	114	132	150
ICM50-B		40	57.4	86.6	114	141	170	199	229	260
ICM65-A	65	35	50	76	100	124	148	174	200	228
ICM65-B		70	101	152	200	248	297	348	401	455
ICM100	100	142	204	308	405	502	602	706	813	924
ICM125	125	223	321	483	635	788	945	1109	1276	1450
ICM150	150	370	532	802	1054	1307	1568	1839	2118	2407

Correction factor for ΔP ($f_{\Delta P}$)

ΔP (bar)	Correction factor
0.05	2.00
0.1	1.41
0.2	**1.00**
0.3	0.82
0.4	0.71
0.5	0.63

Correction factor for circulation rate (f_{rec})

Circulation rate	Correction factor
2	0.77
3	0.90
4	**1**
6	1.13
8	1.20
10	1.25

US units

Capacity table at nominal conditions, Q_N [Tons of Refrigeration], Circulation rate = 4, Δp = 3 psi

R 717

Type	Valve body size	C_v [USgal/min]	Evaporating temperature [°F]							
			-60	-40	-20	0	20	40	60	80
ICM20-A33	20	0.23	0.08	0.12	0.17	0.21	0.26	0.30	0.35	0.40
ICM20-A		0.7	0.2	0.4	0.5	0.6	0.8	0.9	1.1	1.2
ICM20-B		2.8	0.9	1.5	2.0	2.6	3.1	3.7	4.3	4.9
ICM20-C		5.3	1.8	2.8	3.9	4.9	5.9	7.0	8.1	9.3
ICM25-A	25	7	2.3	3.8	5.1	6.4	7.8	9.3	10.8	12.3
ICM25-B		14	4.6	7.5	10.2	12.9	15.7	18.5	21.5	24.5
ICM32-A	32	10	3.3	5.4	7.3	9.2	11.2	13.2	15.4	17.5
ICM32-B		20	6.6	10.7	14.6	18.4	22.4	26.5	30.7	35.0
ICM40-A	40	17	5.6	9.1	12.4	15.6	19.0	22.5	26.1	29.8
ICM40-B		30	9.9	16.1	21.9	27.6	33.5	39.7	46.1	52.5
ICM50-A	50	27	8.9	14.5	19.7	24.8	30.2	35.8	41.5	47.3
ICM50-B		46	15.2	24.7	33.5	42.3	51.4	60.9	70.7	80.5
ICM65-A	65	41	13	22	30	38	46	54	63	72
ICM65-B		81	26.8	43.5	59.0	74.5	90.6	107	125	142
ICM100	100	165	54	89	120	151	185	218	254	289
ICM125	125	259	84	140	188	237	290	342	399	453
ICM150	150	430	140	232	313	394	481	568	662	752

Correction factor for ΔP ($f_{\Delta P}$)

ΔP (psi)	Correction factor
0.75	1.97
1.5	1.39
3	**1.00**
3.5	0.91
4	0.85
4.5	0.81

Correction factor for circulation rate (f_{rec})

Circulation rate	Correction factor
2	0.77
3	0.90
4	**1**
6	1.13
8	1.20
10	1.25

Nominal capacities

Wet suction line

R 744

SI units

Capacity table at nominal conditions, Q_N [kW],
Circulation rate = 4,
Δp = 0.2 bar

Type	Valve body size	K_v	Evaporating temperature [°C]						
		[m³/h]	-50	-40	-30	-20	-10	0	10
ICM20A-33	20	0.2	0.6	0.7	0.8	0.9	0.9	1.0	1.0
ICM20-A		0.6	1.8	2.1	2.4	2.6	2.8	2.9	2.9
ICM20-B		2.4	7.3	8.4	9.4	10.4	11.2	11.7	11.8
ICM20-C		4.6	14.0	16.1	18.1	19.9	21.5	22.5	22.6
ICM25-A	25	6	18.3	21.0	23.6	26.0	28.0	29.3	29.5
ICM25-B		12	36.5	41.9	47.1	51.9	56.0	58.6	59.0
ICM32-A	32	9	27.4	31.4	35.4	39.0	42.0	44.0	44.2
ICM32-B		17	51.7	59.4	66.8	73.6	79.3	83.1	83.5
ICM40-A	40	15	45.6	52.4	58.9	64.9	70.0	73.3	73.7
ICM40-B		26	79.1	90.8	102	113	121	127	128
ICM50-A	50	23	70.0	80.3	90.4	100	107	112	113
ICM50-B		40	122	140	157	173	187	195	197
ICM65-A	65	35	106	122	138	152	163	171	172
ICM65-B		70	213	245	275	303	327	342	344
ICM100	100	142	432	496	559	615	663	693	697
ICM125	125	223	678	780	877	966	1041	1088	1095
ICM150	150	370	1125	1294	1456	1603	1726	1805	1816

Correction factor for ΔP ($f_{\Delta P}$)

ΔP (bar)	Correction factor
0.05	2.00
0.1	1.41
0.2	**1.00**
0.3	0.82
0.4	0.71
0.5	0.63

Correction factor for circulation rate (f_{rec})

Circulation rate	Correction factor
2	0.77
3	0.90
4	**1**
6	1.13
8	1.20
10	1.25

R 744

US units

Capacity table at nominal conditions, Q_N [Tons of Refrigeration],
Circulation rate = 4,
Δp = 3 psi

Type	Valve body size	C_v	Evaporating temperature [°F]						
		[USgal/min]	-60	-40	-20	0	20	40	60
ICM20-A33	20	0.23	0.17	0.20	0.23	0.25	0.27	0.28	0.27
ICM20-A		0.7	0.5	0.6	0.7	0.8	0.8	0.9	0.8
ICM20-B		2.8	2.1	2.4	2.8	3.1	3.3	3.4	3.3
ICM20-C		5.3	4.0	4.6	5.3	5.8	6.3	6.5	6.3
ICM25-A	25	7	5.2	6.1	7.0	7.7	8.3	8.6	8.4
ICM25-B		14	10.5	12.2	13.9	15.4	16.6	17.2	16.7
ICM32-A	32	10	7.5	8.7	9.9	11.0	11.9	12.3	11.9
ICM32-B		20	14.9	17.4	19.9	22.0	23.7	24.6	23.9
ICM40-A	40	17	12.7	14.8	16.9	18.7	20.1	20.9	20.3
ICM40-B		30	22.4	26.1	29.8	33.0	35.6	36.9	35.8
ICM50-A	50	27	20.2	23.5	26.8	29.7	32.0	33.2	32.2
ICM50-B		46	34.4	40.1	45.7	50.7	54.5	56.6	54.9
ICM65-A	65	41	31	36	41	45	48	51	49
ICM65-B		81	60.5	70.6	80.5	89.2	96.0	100	97
ICM100	100	165	123	143	164	182	195	203	196
ICM125	125	259	193	225	258	286	306	319	308
ICM150	150	430	320	373	428	475	508	530	511

Correction factor for ΔP ($f_{\Delta P}$)

ΔP (psi)	Correction factor
0.75	1.97
1.5	1.39
3	**1.00**
3.5	0.91
4	0.85
4.5	0.81

Correction factor for circulation rate (f_{rec})

Circulation rate	Correction factor
2	0.77
3	0.90
4	**1**
6	1.13
8	1.20
10	1.25

Nominal capacities

Wet suction line

SI units

Capacity table at nominal conditions, Q_N [kW], Circulation rate = 4, Δp = 0.2 bar

R 134a

Type	Valve body size	K_v	Evaporating temperature [°C]						
		[m³/h]	-40	-30	-20	-10	0	10	20
ICM20A-33	20	0.2	0.1	0.2	0.2	0.3	0.3	0.4	0.4
ICM20-A		0.6	0.4	0.5	0.7	0.8	1.0	1.1	1.2
ICM20-B		2.4	1.6	2.2	2.7	3.3	3.8	4.3	4.9
ICM20-C		4.6	3.1	4.2	5.3	6.3	7.3	8.3	9.4
ICM25-A	25	6	4.0	5.5	6.8	8.2	9.5	10.9	12.2
ICM25-B		12	8.0	11.0	13.7	16.4	19.1	21.7	24.4
ICM32-A	32	9	6.0	8.2	10.3	12.3	14.3	16.3	18.3
ICM32-B		17	11.4	15.5	19.4	23.2	27.0	30.8	34.6
ICM40-A	40	15	10.1	13.7	17.1	20.5	23.9	27.2	30.5
ICM40-B		26	17.4	23.7	29.7	35.5	41.3	47.1	52.9
ICM50-A	50	23	15.4	21.0	26.3	31.4	36.6	41.6	46.8
ICM50-B		40	26.8	36.5	45.7	54.6	63.6	72.4	81.4
ICM65-A	65	35	23	32	40	48	56	63	71
ICM65-B		70	47.0	63.9	79.9	95.5	111	127	142
ICM100	100	142	95	129	162	194	226	257	289
ICM125	125	223	149	202	255	304	356	404	453
ICM150	150	370	248	336	423	505	590	670	752

Correction factor for ΔP ($f_{\Delta P}$)

ΔP (bar)	Correction factor
0.2	**1.00**
0.25	0.89
0.3	0.82
0.4	0.71
0.5	0.63
0.6	0.58

Correction factor for circulation rate (f_{rec})

Circulation rate	Correction factor
2	0.77
3	0.90
4	**1**
6	1.13
8	1.20
10	1.25

US units

Capacity table at nominal conditions, Q_N [Tons of Refrigeration], Circulation rate = 4, Δp = 3 psi

R 134a

Type	Valve body size	C_v		Evaporating temperature [°F]					
		[USgal/min]	-40	-20	0	20	40	60	80
ICM20-A33	20	0.23	0.04	0.05	0.07	0.08	0.10	0.11	0.13
ICM20-A		0.7	0.1	0.2	0.2	0.3	0.3	0.3	0.4
ICM20-B		2.8	0.5	0.7	0.8	1.0	1.2	1.4	1.5
ICM20-C		5.3	0.9	1.2	1.6	1.9	2.2	2.6	2.9
ICM25-A	25	7	1.2	1.6	2.1	2.5	2.9	3.4	3.8
ICM25-B		14	2.3	3.3	4.1	5.0	5.9	6.8	7.6
ICM32-A	32	10	1.7	2.3	3.0	3.6	4.2	4.8	5.4
ICM32-B		20	3.3	4.7	5.9	7.2	8.4	9.7	10.9
ICM40-A	40	17	2.8	4.0	5.0	6.1	7.2	8.2	9.2
ICM40-B		30	5.0	7.0	8.9	10.8	12.6	14.5	16.3
ICM50-A	50	27	4.5	6.3	8.0	9.7	11.4	13.0	14.7
ICM50-B		46	7.6	10.7	13.6	16.5	19.4	22.2	25.0
ICM65-A	65	41	7	10	12	15	17	20	22
ICM65-B		81	13.4	18.9	24.0	29.1	34.1	39.1	44.0
ICM100	100	165	27	39	49	60	70	79	90
ICM125	125	259	43	62	76	94	109	124	141
ICM150	150	430	71	102	127	157	181	207	234

Correction factor for ΔP ($f_{\Delta P}$)

ΔP (psi)	Correction factor
3	**1.00**
4	0.87
5	0.79
6	0.72
7	0.66
8	0.62

Correction factor for circulation rate (f_{rec})

Circulation rate	Correction factor
2	0.77
3	0.90
4	**1**
6	1.13
8	1.20
10	1.25

Nominal capacities

Wet suction line

SI units

Capacity table at nominal conditions, Q_N [kW],
Circulation rate = 4,
Δp = 0.2 bar

R 404A

Type	Valve body size	K_v	Evaporating temperature [°C]							
		[m³/h]	-50	-40	-30	-20	-10	0	10	20
ICM20A-33	20	0.2	0.2	0.2	0.3	0.3	0.3	0.4	0.4	0.5
ICM20-A		0.6	0.5	0.7	0.8	0.9	1.0	1.2	1.3	1.4
ICM20-B		2.4	2.1	2.6	3.1	3.7	4.2	4.7	5.2	5.6
ICM20-C		4.6	4.0	5.0	6.0	7.0	8.0	9.0	10.0	10.8
ICM25-A	25	6	5.2	6.5	7.8	9.1	10.5	11.7	13.0	14.1
ICM25-B		12	10.4	13.0	15.6	18.3	20.9	23.5	26.0	28.2
ICM32-A	32	9	7.8	9.8	11.7	13.7	15.7	17.6	19.5	21.1
ICM32-B		17	14.7	18.5	22.1	25.9	29.6	33.3	36.8	39.9
ICM40-A	40	15	12.9	16.3	19.5	22.8	26.1	29.4	32.5	35.2
ICM40-B		26	22.4	28.3	33.7	39.6	45.3	50.9	56.3	61.1
ICM50-A	50	23	19.8	25.0	29.8	35.0	40.1	45.0	49.8	54.0
ICM50-B		40	34.5	43.5	51.9	60.9	69.7	78.3	86.6	93.9
ICM65-A	65	35	30	38	46	53	61	69	76	82
ICM65-B		70	60.4	76.1	90.8	107	122	137	152	164
ICM100	100	142	122	155	185	216	247	278	308	333
ICM125	125	223	192	244	290	339	387	437	483	523
ICM150	150	370	319	404	481	563	643	725	802	868

Correction factor for ΔP ($f_{\Delta P}$)

ΔP (bar)	Correction factor
0.05	2.00
0.1	1.41
0.2	**1.00**
0.3	0.82
0.4	0.71
0.5	0.63

Correction factor for circulation rate (f_{rec})

Circulation rate	Correction factor
2	0.77
3	0.90
4	**1**
6	1.13
8	1.20
10	1.25

US units

Capacity table at nominal conditions, Q_N [Tons of Refrigeration],
Circulation rate = 4,
Δp = 3 psi

R 404A

Type	Valve body size	C_v	Evaporating temperature [°F]							
		[USgal/min]	-60	-40	-20	0	20	40	60	80
ICM20-A33	20	0.23	0.05	0.06	0.07	0.09	0.10	0.12	0.13	0.14
ICM20-A		0.7	0.1	0.2	0.2	0.3	0.3	0.4	0.4	0.4
ICM20-B		2.8	0.6	0.8	0.9	1.1	1.3	1.4	1.6	1.7
ICM20-C		5.3	1.1	1.4	1.7	2.1	2.4	2.7	3.0	3.2
ICM25-A	25	7	1.5	1.9	2.3	2.7	3.2	3.6	4.0	4.3
ICM25-B		14	2.9	3.8	4.6	5.5	6.3	7.2	7.9	8.6
ICM32-A	32	10	2.1	2.7	3.3	3.9	4.5	5.1	5.7	6.1
ICM32-B		20	4.2	5.4	6.6	7.8	9.1	10.2	11.3	12.2
ICM40-A	40	17	3.5	4.6	5.6	6.7	7.7	8.7	9.6	10.4
ICM40-B		30	6.2	8.1	9.9	11.7	13.6	15.4	17.0	18.3
ICM50-A	50	27	5.6	7.3	8.9	10.6	12.2	13.8	15.3	16.5
ICM50-B		46	9.6	12.4	15.2	18.0	20.8	23.6	26.1	28.1
ICM65-A	65	41	8	11	13	16	19	21	23	25
ICM65-B		81	16.9	21.9	26.7	31.7	36.7	41.5	45.9	49.5
ICM100	100	165	34	45	54	65	75	85	94	100
ICM125	125	259	53	71	84	102	117	134	147	157
ICM150	150	430	88	117	140	170	194	222	244	261

Correction factor for ΔP ($f_{\Delta P}$)

ΔP (psi)	Correction factor
0.75	1.97
1.5	1.39
3	**1.00**
3.5	0.91
4	0.85
4.5	0.81

Correction factor for circulation rate (f_{rec})

Circulation rate	Correction factor
2	0.77
3	0.90
4	**1**
6	1.13
8	1.20
10	1.25

Nominal capacities

Wet suction line

SI units

Capacity table at nominal conditions, Q_N [kW], Circulation rate = 4, Δp = 0.2 bar

R 22

Type	Valve body size	K_v [m³/h]	Evaporating temperature [°C]							
			-50	-40	-30	-20	-10	0	10	20
ICM20A-33	20	0.2	0.2	0.2	0.3	0.3	0.4	0.4	0.4	0.5
ICM20-A		0.6	0.5	0.6	0.8	0.9	1.1	1.2	1.3	1.5
ICM20-B		2.4	1.9	2.5	3.1	3.7	4.2	4.8	5.4	5.9
ICM20-C		4.6	3.7	4.8	5.9	7.0	8.1	9.2	10.3	11.4
ICM25-A	25	6	4.8	6.3	7.7	9.1	10.6	12.0	13.5	14.9
ICM25-B		12	9.6	12.6	15.4	18.3	21.2	24.1	26.9	29.7
ICM32-A	32	9	7.2	9.4	11.6	13.7	15.9	18.1	20.2	22.3
ICM32-B		17	13.6	17.8	21.9	25.9	30.0	34.1	38.1	42.1
ICM40-A	40	15	12.0	15.7	19.3	22.8	26.5	30.1	33.6	37.2
ICM40-B		26	20.7	27.2	33.4	39.6	45.9	52.2	58.3	64.4
ICM50-A	50	23	18.3	24.1	29.6	35.0	40.6	46.2	51.6	57.0
ICM50-B		40	31.9	41.9	51.4	60.9	70.6	80.3	89.7	99.1
ICM65-A	65	35	28	36	45	53	62	70	78	87
ICM65-B		70	55.8	73.3	90.0	107	124	141	157	173
ICM100	100	142	114	148	183	216	251	285	318	352
ICM125	125	223	179	233	288	339	395	447	499	553
ICM150	150	370	296	386	477	563	655	742	828	917

Correction factor for ΔP ($f_{\Delta P}$)

ΔP (bar)	Correction factor
0.2	**1.00**
0.25	0.89
0.3	0.82
0.4	0.71
0.5	0.63
0.6	0.58

Correction factor for circulation rate (f_{rec})

Circulation rate	Correction factor
2	0.77
3	0.90
4	**1**
6	1.13
8	1.20
10	1.25

US units

Capacity table at nominal conditions, Q_N [Tons of Refrigeration], Circulation rate = 4, Δp = 3 psi

R 22

Type	Valve body size	C_v [USgal/min]	Evaporating temperature [°F]							
			-60	-40	-20	0	20	40	60	80
ICM20-A33	20	0.23	0.04	0.06	0.07	0.09	0.11	0.12	0.14	0.15
ICM20-A		0.7	0.1	0.2	0.2	0.3	0.3	0.4	0.4	0.5
ICM20-B		2.8	0.5	0.7	0.9	1.1	1.3	1.5	1.7	1.8
ICM20-C		5.3	1.0	1.4	1.7	2.1	2.4	2.8	3.1	3.5
ICM25-A	25	7	1.3	1.8	2.3	2.8	3.2	3.7	4.1	4.6
ICM25-B		14	2.7	3.6	4.6	5.5	6.4	7.4	8.3	9.2
ICM32-A	32	10	1.9	2.6	3.3	3.9	4.6	5.3	5.9	6.5
ICM32-B		20	3.8	5.2	6.5	7.9	9.2	10.5	11.9	13.1
ICM40-A	40	17	3.2	4.4	5.6	6.7	7.8	9.0	10.1	11.1
ICM40-B		30	5.7	7.8	9.8	11.8	13.8	15.8	17.8	19.6
ICM50-A	50	27	5.1	7.0	8.8	10.6	12.4	14.2	16.0	17.7
ICM50-B		46	8.7	12.0	15.0	18.1	21.2	24.2	27.3	30.1
ICM65-A	65	41	8	11	13	16	19	22	24	27
ICM65-B		81	15.4	21.1	26.5	31.9	37.3	42.7	48.0	53.0
ICM100	100	165	30	43	53	65	75	88	98	109
ICM125	125	259	48	68	84	103	118	138	153	171
ICM150	150	430	79	112	139	171	196	229	254	283

Correction factor for ΔP ($f_{\Delta P}$)

ΔP (psi)	Correction factor
3	**1.00**
4	0.87
5	0.79
6	0.72
7	0.66
8	0.62

Correction factor for circulation rate (f_{rec})

Circulation rate	Correction factor
2	0.77
3	0.90
4	**1**
6	1.13
8	1.20
10	1.25

Nominal capacities

Dry suction line

Location of valve in system (marked with grey)

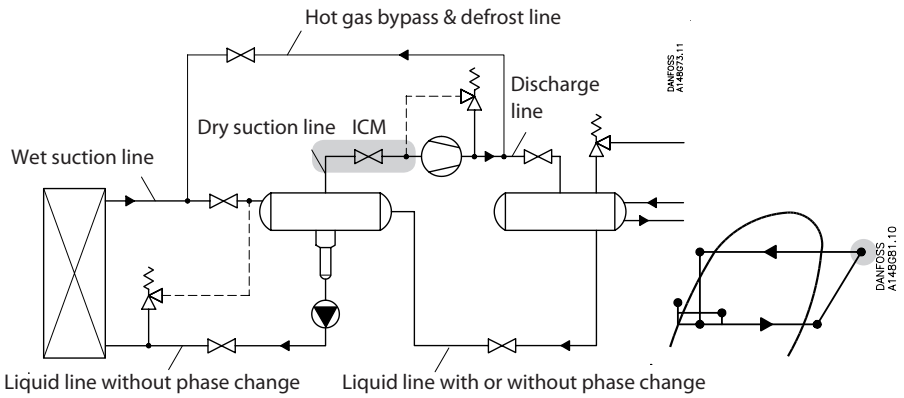

SI units

Calculation example (R717 capacities):

An application has following running conditions:

T_e = -20 °C
Q_o = 90 kW
T_{liq} = 10 °C
Max. Δp = 0.3 bar
Connection: DN32

The capacity table is based on nominal condition (pressure drop Δp = 0.2 bar, T_{liq} = 30 °C)

Therefore the actual capacity must be corrected to nominal condition by means of correction factors.
Correction factor for Δp 0.3 bar $f_{\Delta p}$ = 0.82
Correction factor for liquid temperature f_{Tliq} = 0.92

$Q_n = Q_o \times f_{\Delta p} \times f_{Tliq} = 90 \times 0.82 \times 0.92 = 68$ kW

From the capacity table a ICM 32-B with Q_n capacity 92.3 kW is selected.

US units

Calculation example (R717 capacities):

An application has following running conditions:

T_e = 0 °F
Q_o = 20 TR
T_{liq} = 50 °F
Max. Δp = 3.5 psi
Connection: 1 1/4"

The capacity table is based on nominal condition (Δp = 3 psi, T_{liq} = 90 °F)

Therefore the actual capacity must be corrected to nominal condition by means of correction factors.
Correction factor for Δp 3.5 psi $f_{\Delta p}$ = 0.91
Correction factor for liquid temperature f_{Tliq} = 0.92

$Q_n = Q_o \times f_{\Delta p} \times f_{Tliq} = 20 \times 0.91 \times 0.92 = 16.7$ TR

From the capacity table a ICM 32-B with Q_n capacity 28.2 TR is selected.

Nominal capacities

SI units

Capacity table at nominal conditions, Q_N [kW],
T_{liq} = 30 °C,
Δp = 0.2 bar
Superheating = 8 °C

R 717

Dry suction line

Type	Valve body size	K_v	Evaporating temperature [°C]							
		[m³/h]	-50	-40	-30	-20	-10	0	10	20
ICM20A-33	20	0.2	0.5	0.7	0.9	1.1	1.3	1.6	2.0	2.3
ICM20-A		0.6	1.6	2.0	2.6	3.3	4.0	4.9	5.9	6.9
ICM20-B		2.4	6.2	8.0	10.3	13.0	16.1	19.5	23.4	27.7
ICM20-C		4.6	11.9	15.3	19.8	25.0	30.9	37.5	44.9	53.0
ICM25-A	25	6	15.5	20.0	25.8	32.6	40.3	48.9	58.5	69.2
ICM25-B		12	31.0	40.0	51.6	65.1	80.6	97.7	117	138
ICM32-A	32	9	23.3	30.0	38.7	48.9	60.4	73.3	87.8	104
ICM32-B		17	44.0	56.7	73.1	92.3	114	138	166	196
ICM40-A	40	15	38.8	50.0	64.5	81.4	101	122	146	173
ICM40-B		26	67.2	86.7	112	141	175	212	254	300
ICM50-A	50	23	59.5	76.7	98.9	125	154	187	224	265
ICM50-B		40	103	133	172	217	269	326	390	461
ICM65-A	65	35	91	117	151	190	235	285	342	403
ICM65-B		70	181	234	301	380	470	570	683	807
ICM100	100	142	368	473	611	772	953	1156	1386	1637
ICM125	125	223	578	743	960	1212	1497	1816	2176	2571
ICM150	150	370	959	1233	1592	2011	2483	3013	3611	4265

Correction factor for ΔP ($f_{\Delta P}$)

ΔP (bar)	Correction factor
0.05	2.00
0.1	1.41
0.2	**1.00**
0.3	0.82
0.4	0.71
0.5	0.63

Correction factor for liquid temperature (T_{liq})

Liquid temperature [°C]	Correction factor
-20	0.82
-10	0.86
0	0.88
10	0.92
20	0.96
30	**1.00**
40	1.04
50	1.09

US units

Capacity table at nominal conditions, Q_N [Tons of Refrigeration],
T_{liq} = 90 °F,
Δp = 3 psi
Superheating = 12 °F

R 717

Type	Valve body size	C_v	Evaporating temperature [°F]							
		[USgal/min]	-60	-40	-20	0	20	40	60	80
ICM20-A33	20	0.23	0.15	0.19	0.25	0.32	0.41	0.50	0.61	0.73
ICM20-A		0.7	0.5	0.6	0.8	1.0	1.2	1.5	1.9	2.2
ICM20-B		2.8	1.9	2.3	3.1	3.9	5.0	6.1	7.4	8.8
ICM20-C		5.3	3.5	4.4	5.8	7.5	9.4	11.6	14.0	16.8
ICM25-A	25	7	4.7	5.8	7.6	9.9	12.4	15.3	18.5	22.1
ICM25-B		14	9.3	11.6	15.3	19.7	24.8	30.6	37.1	44.2
ICM32-A	32	10	6.7	8.3	10.9	14.1	17.7	21.9	26.5	31.6
ICM32-B		20	13.3	16.5	21.9	28.2	35.5	43.8	53.0	63.2
ICM40-A	40	17	11.3	14.0	18.6	23.9	30.1	37.2	45.0	53.7
ICM40-B		30	20.0	24.8	32.8	42.3	53.2	65.6	79.4	94.8
ICM50-A	50	27	18.0	22.3	29.5	38.0	47.9	59.1	71.5	85.3
ICM50-B		46	30.7	38.0	50.3	64.8	81.6	101	122	145
ICM65-A	65	41	28	34	45	58	73	90	109	129
ICM65-B		81	54.0	66.9	88.5	114	144	177	215	256
ICM100	100	165	111	137	181	233	292	360	438	521
ICM125	125	259	174	215	284	365	458	566	687	818
ICM150	150	430	289	357	472	606	761	939	1141	1357

Correction factor for ΔP ($f_{\Delta P}$)

ΔP (psi)	Correction factor
0.75	1.97
1.5	1.39
3	**1.00**
3.5	0.91
4	0.85
4.5	0.81

Correction factor for superheat (T^S)

T_s [°F]	Correction factor
10	1.00
14	1.00
18	1.00
20	1.00

Correction factor for liquid temperature (T_{liq})

Liquid temperature [°F]	Correction factor
-10	0.82
10	0.85
30	0.88
50	0.92
70	0.96
90	**1.00**
110	1.04
130	1.09

Nominal capacities

Dry suction line

R 744

SI units

Capacity table at nominal conditions, Q_N [kW],
T_{liq} = 10 °C,
Δp = 0.2 bar
Superheating = 8 °C

Type	Valve body size	K_v [m³/h]	Evaporating temperature [°C]						
			-50	-40	-30	-20	-10	0	10
ICM20A-33	20	0.2	0.7	0.9	1.0	1.2	1.4	1.6	1.9
ICM20-A		0.6	2.1	2.6	3.1	3.7	4.3	4.9	5.6
ICM20-B		2.4	8.4	10.3	12.4	14.6	17.1	19.6	22.3
ICM20-C		4.6	16.1	19.7	23.7	28.1	32.7	37.7	42.8
ICM25-A	25	6	21.0	25.8	30.9	36.6	42.7	49.1	55.8
ICM25-B		12	42.1	51.5	61.9	73.2	85.4	98.2	112
ICM32-A	32	9	31.6	38.6	46.4	54.9	64.0	73.7	83.7
ICM32-B		17	59.6	73.0	87.7	104	121	139	158
ICM40-A	40	15	52.6	64.4	77.4	91.5	107	123	140
ICM40-B		26	91.2	112	134	159	185	213	242
ICM50-A	50	23	80.7	98.7	119	140	164	188	214
ICM50-B		40	140	172	206	244	285	327	372
ICM65-A	65	35	123	150	181	214	249	286	326
ICM65-B		70	246	301	361	427	498	573	651
ICM100	100	142	498	610	733	867	1012	1162	1322
ICM125	125	223	782	958	1150	1362	1589	1825	2076
ICM150	150	370	1297	1590	1909	2259	2636	3027	3444

Correction factor for ΔP ($f_{\Delta P}$)

ΔP (bar)	Correction factor
0.05	2.00
0.1	1.41
0.2	**1.00**
0.3	0.82
0.4	0.71
0.5	0.63

Correction factor for liquid temperature (T_{liq})

Liquid temperature [°C]	Correction factor
-20	0.52
-10	0.67
0	0.91
10	**1.00**
15	1.09

R 744

US units

Capacity table at nominal conditions, Q_N [Tons of Refrigeration],
T_{liq} = 50 °F,
Δp = 3 psi
Superheating = 12 °F

Type	Valve body size	C_v [USgal/min]	Evaporating temperature [°F]						
			-60	-40	-20	0	20	40	60
ICM20-A33	20	0.23	0.20	0.24	0.30	0.36	0.43	0.50	0.57
ICM20-A		0.7	0.6	0.7	0.9	1.1	1.3	1.5	1.7
ICM20-B		2.8	2.4	3.0	3.7	4.4	5.2	6.0	6.9
ICM20-C		5.3	4.5	5.7	6.9	8.3	9.8	11.4	13.0
ICM25-A	25	7	6.0	7.5	9.1	11.0	13.0	15.1	17.2
ICM25-B		14	11.9	14.9	18.3	22.0	26.0	30.2	34.5
ICM32-A	32	10	8.5	10.7	13.1	15.7	18.5	21.5	24.6
ICM32-B		20	17.0	21.3	26.1	31.4	37.1	43.1	49.2
ICM40-A	40	17	14.5	18.1	22.2	26.7	31.5	36.6	41.8
ICM40-B		30	25.5	32.0	39.2	47.1	55.6	64.6	73.9
ICM50-A	50	27	23.0	28.8	35.3	42.4	50.1	58.2	66.5
ICM50-B		46	39.1	49.1	60.1	72.2	85.3	99.1	113
ICM65-A	65	41	35	44	54	64	76	88	101
ICM65-B		81	68.9	86.4	106	127	150	175	199
ICM100	100	165	141	175	215	259	306	355	405
ICM125	125	259	221	275	338	407	480	558	636
ICM150	150	430	366	457	561	675	797	926	1057

Correction factor for ΔP ($f_{\Delta P}$)

ΔP (psi)	Correction factor
0.75	1.97
1.5	1.39
3	**1.00**
3.5	0.91
4	0.85
4.5	0.81

Correction factor for superheat (T_S)

T_s [°F]	Correction factor
10	1.00
14	1.00
18	1.00
20	1.00

Correction factor for liquid temperature (T_{liq})

Liquid temperature [°F]	Correction factor
-10	0.48
10	0.64
30	0.88
50	**1.00**

Nominal capacities

Dry suction line

R 134a

SI units

Capacity table at nominal conditions, Q_N [kW],
T_{liq} = 30 °C,
Δp = 0.2 bar
Superheating = 8 °C

Type	Valve body size	K_v [m³/h]	Evaporating temperature [°C]						
			-40	-30	-20	-10	0	10	20
ICM20A-33	20	0.2	0.2	0.2	0.3	0.4	0.5	0.6	0.7
ICM20-A		0.6	0.5	0.7	0.9	1.2	1.4	1.8	2.1
ICM20-B		2.4	2.1	2.8	3.6	4.6	5.7	7.0	8.5
ICM20-C		4.6	4.1	5.4	7.0	8.8	11.0	13.5	16.3
ICM25-A	25	6	5.3	7.0	9.1	11.5	14.4	17.6	21.3
ICM25-B		12	10.6	14.1	18.2	23.1	28.7	35.2	42.6
ICM32-A	32	9	8.0	10.5	13.6	17.3	21.5	26.4	32.0
ICM32-B		17	15.1	19.9	25.7	32.7	40.7	49.9	60.4
ICM40-A	40	15	13.3	17.6	22.7	28.8	35.9	44.0	53.3
ICM40-B		26	23.1	30.5	39.4	50.0	62.2	76.3	92.3
ICM50-A	50	23	20.4	26.9	34.8	44.2	55.0	67.5	81.7
ICM50-B		40	35.5	46.9	60.6	76.9	95.7	117	142
ICM65-A	65	35	31	41	53	67	84	103	124
ICM65-B		70	62.1	82.0	106	135	168	206	249
ICM100	100	142	125	166	215	274	339	417	504
ICM125	125	223	197	261	337	430	532	655	791
ICM150	150	370	326	433	560	713	883	1087	1312

Correction factor for ΔP ($f_{\Delta P}$)

ΔP (bar)	Correction factor
0.05	2.00
0.1	1.41
0.2	**1.00**
0.3	0.82
0.4	0.71
0.5	0.63

Correction factor for liquid temperature (T_{liq})

Liquid temperature [°C]	Correction factor
-20	0.66
-10	0.70
0	0.76
10	0.82
20	0.90
30	**1.00**
40	1.13
50	1.29

R 134a

US units

Capacity table at nominal conditions, Q_N [Tons of Refrigeration],
T_{liq} = 90,
Δp = 3 psi
Superheating = 12

Type	Valve body size	C_v [USgal/min]	Evaporating temperature [°F]						
			-40	-20	0	20	40	60	80
ICM20-A33	20	0.23	0.05	0.07	0.09	0.12	0.15	0.18	0.23
ICM20-A		0.7	0.2	0.2	0.3	0.4	0.4	0.6	0.7
ICM20-B		2.8	0.6	0.8	1.1	1.4	1.8	2.2	2.7
ICM20-C		5.3	1.1	1.6	2.1	2.7	3.4	4.2	5.2
ICM25-A	25	7	1.5	2.1	2.7	3.5	4.5	5.6	6.9
ICM25-B		14	3.0	4.1	5.4	7.1	9.0	11.2	13.7
ICM32-A	32	10	2.2	2.9	3.9	5.0	6.4	8.0	9.8
ICM32-B		20	4.3	5.9	7.8	10.1	12.8	16.0	19.6
ICM40-A	40	17	3.7	5.0	6.6	8.6	10.9	13.6	16.6
ICM40-B		30	6.5	8.8	11.7	15.1	19.2	23.9	29.4
ICM50-A	50	27	5.8	7.9	10.5	13.6	17.3	21.5	26.4
ICM50-B		46	9.9	13.5	17.9	23.2	29.4	36.7	45.0
ICM65-A	65	41	9	12	16	21	26	33	40
ICM65-B		81	17.4	23.8	31.5	40.8	51.8	64.6	79.3
ICM100	100	165	36	48	65	84	105	132	162
ICM125	125	259	57	76	102	132	165	208	254
ICM150	150	430	95	126	169	219	273	345	421

Correction factor for ΔP ($f_{\Delta P}$)

ΔP (psi)	Correction factor
0.75	1.97
1.5	1.39
3	**1.00**
3.5	0.91
4	0.85
4.5	0.81

Correction factor for superheat (T^S)

T_s [°F]	Correction factor
10	1.00
14	1.00
18	1.00
20	1.00

Correction factor for liquid temperature (T_{liq})

Liquid temperature [°F]	Correction factor
-10	0.64
10	0.68
30	0.74
50	0.81
70	0.89
90	**1.00**
110	1.15
130	1.35

Nominal capacities

SI units

Capacity table at nominal conditions, Q_N [kW],
T_{liq} = 30 °C,
Δp = 0.2 bar
Superheating = 8 °C

R 404A

Dry suction line

Type	Valve body size	K_v	Evaporating temperature [°C]							
		[m³/h]	-50	-40	-30	-20	-10	0	10	20
ICM20A-33	20	0.2	0.2	0.2	0.3	0.4	0.4	0.5	0.7	0.8
ICM20-A		0.6	0.5	0.6	0.8	1.1	1.3	1.6	2.0	2.4
ICM20-B		2.4	1.9	2.5	3.3	4.2	5.3	6.5	8.0	9.6
ICM20-C		4.6	3.6	4.9	6.3	8.1	10.2	12.5	15.2	18.3
ICM25-A	25	6	4.8	6.4	8.3	10.6	13.2	16.3	19.9	23.9
ICM25-B		12	9.5	12.7	16.5	21.1	26.5	32.7	39.8	47.8
ICM32-A	32	9	7.1	9.5	12.4	15.9	19.9	24.5	29.8	35.9
ICM32-B		17	13.5	18.0	23.4	29.9	37.5	46.3	56.3	67.8
ICM40-A	40	15	11.9	15.9	20.7	26.4	33.1	40.8	49.7	59.8
ICM40-B		26	20.6	27.5	35.8	45.8	57.4	70.8	86.2	104
ICM50-A	50	23	18.2	24.3	31.7	40.5	50.8	62.6	76.2	91.7
ICM50-B		40	31.7	42.3	55.1	70.5	88.3	109	133	159
ICM65-A	65	35	28	37	48	62	77	95	116	140
ICM65-B		70	55.5	74.1	96.5	123	155	191	232	279
ICM100	100	142	113	150	195	251	313	386	471	566
ICM125	125	223	177	235	306	394	492	606	740	889
ICM150	150	370	294	390	508	654	816	1005	1227	1476

Correction factor for ΔP ($f_{\Delta P}$)

ΔP (bar)	Correction factor
0.05	2.00
0.1	1.41
0.2	**1.00**
0.3	0.82
0.4	0.71
0.5	0.63

Correction factor for liquid temperature (T_{liq})

Liquid temperature [°C]	Correction factor
-20	0.55
-10	0.60
0	0.66
10	0.74
20	0.85
30	**1.00**
40	1.23
50	1.68

US units

Capacity table at nominal conditions, Q_N [Tons of Refrigeration],
T_{liq} = 90 °F,
Δp = 3 psi
Superheating = 12 °F

R 404A

Type	Valve body size	C_v	Evaporating temperature [°F]							
		[USgal/min]	-60	-40	-20	0	20	40	60	80
ICM20-A33	20	0.23	0.04	0.06	0.08	0.10	0.13	0.16	0.20	0.25
ICM20-A		0.7	0.1	0.2	0.2	0.3	0.4	0.5	0.6	0.8
ICM20-B		2.8	0.5	0.7	1.0	1.2	1.6	2.0	2.5	3.0
ICM20-C		5.3	1.0	1.3	1.8	2.4	3.0	3.8	4.7	5.7
ICM25-A	25	7	1.3	1.8	2.4	3.1	4.0	5.0	6.2	7.6
ICM25-B		14	2.6	3.5	4.8	6.2	8.0	10.0	12.4	15.2
ICM32-A	32	10	1.8	2.5	3.4	4.5	5.7	7.2	8.9	10.8
ICM32-B		20	3.7	5.1	6.8	8.9	11.4	14.3	17.8	21.7
ICM40-A	40	17	3.1	4.3	5.8	7.6	9.7	12.2	15.1	18.4
ICM40-B		30	5.5	7.6	10.2	13.4	17.1	21.5	26.6	32.5
ICM50-A	50	27	4.9	6.8	9.2	12.0	15.4	19.4	24.0	29.3
ICM50-B		46	8.4	11.6	15.7	20.5	26.2	33.0	40.8	49.9
ICM65-A	65	41	7	10	14	18	23	29	36	45
ICM65-B		81	14.8	20.5	27.6	36.1	46.2	58.1	71.9	87.8
ICM100	100	165	30	42	56	73	94	118	146	179
ICM125	125	259	47	66	87	115	148	186	229	282
ICM150	150	430	77	110	145	191	245	308	381	467

Correction factor for ΔP ($f_{\Delta P}$)

ΔP (psi)	Correction factor
0.75	1.97
1.5	1.39
3	**1.00**
3.5	0.91
4	0.85
4.5	0.81

Correction factor for superheat (T_S)

T_s [°F]	Correction factor
10	1.00
14	1.00
18	1.00
20	1.00

Correction factor for liquid temperature (T_{liq})

Liquid temperature [°F]	Correction factor
-10	0.52
10	0.57
30	0.63
50	0.72
70	0.83
90	**1.00**
110	1.29
130	1.92

Nominal capacities

SI units

Capacity table at nominal conditions, Q_N [kW],
T_{liq} = 30 °C,
Δp = 0.2 bar
Superheating = 8 °C

R 22

Dry suction line

Type	Valve body size	K_v [m³/h]	Evaporating temperature [°C]							
			-50	-40	-30	-20	-10	0	10	20
ICM20A-33	20	0.2	0.2	0.3	0.3	0.4	0.5	0.6	0.7	0.9
ICM20-A		0.6	0.6	0.8	1.0	1.3	1.5	1.9	2.2	2.6
ICM20-B		2.4	2.5	3.2	4.1	5.0	6.2	7.4	8.8	10.4
ICM20-C		4.6	4.7	6.1	7.8	9.7	11.8	14.2	16.9	19.9
ICM25-A	25	6	6.2	8.0	10.1	12.6	15.4	18.6	22.1	26.0
ICM25-B		12	12.3	16.0	20.3	25.2	30.8	37.1	44.1	51.9
ICM32-A	32	9	9.3	12.0	15.2	18.9	23.1	27.8	33.1	39.0
ICM32-B		17	17.5	22.6	28.7	35.7	43.6	52.6	62.5	73.6
ICM40-A	40	15	15.4	20.0	25.4	31.5	38.5	46.4	55.2	64.9
ICM40-B		26	26.7	34.6	43.9	54.6	66.7	80.4	95.6	113
ICM50-A	50	23	23.7	30.6	38.9	48.3	59.0	71.1	84.6	100
ICM50-B		40	41.1	53.3	67.6	84.0	103	124	147	173
ICM65-A	65	35	36	47	59	74	90	108	129	152
ICM65-B		70	72.0	93.2	118	147	180	217	258	303
ICM100	100	142	146	189	240	299	364	440	522	615
ICM125	125	223	229	297	377	469	572	691	820	966
ICM150	150	370	380	493	625	779	948	1147	1360	1603

Correction factor for ΔP ($f_{\Delta P}$)

ΔP (bar)	Correction factor
0.2	**1.00**
0.25	0.89
0.3	0.82
0.4	0.71
0.5	0.63
0.6	0.58

Correction factor for liquid temperature (T_{liq})

Liquid temperature [°C]	Correction factor
-20	0.71
-10	0.75
0	0.80
10	0.86
20	0.92
30	**1.00**
40	1.09
50	1.22

US units

Capacity table at nominal conditions, Q_N [Tons of Refrigeration],
T_{liq} = 90 °F,
Δp = 3 psi
Superheating = 12 °F

R 22

Type	Valve body size	C_v [USgal/min]	Evaporating temperature [°F]							
			-60	-40	-20	0	20	40	60	80
ICM20-A33	20	0.23	0.06	0.07	0.10	0.12	0.16	0.19	0.23	0.27
ICM20-A		0.7	0.2	0.2	0.3	0.4	0.5	0.6	0.7	0.8
ICM20-B		2.8	0.7	0.9	1.2	1.5	1.9	2.3	2.8	3.3
ICM20-C		5.3	1.3	1.7	2.2	2.9	3.6	4.3	5.2	6.2
ICM25-A	25	7	1.7	2.3	3.0	3.8	4.7	5.7	6.9	8.2
ICM25-B		14	3.4	4.6	5.9	7.5	9.4	11.5	13.8	16.4
ICM32-A	32	10	2.4	3.3	4.2	5.4	6.7	8.2	9.9	11.7
ICM32-B		20	4.9	6.5	8.5	10.8	13.4	16.4	19.8	23.5
ICM40-A	40	17	4.1	5.5	7.2	9.2	11.4	13.9	16.8	20.0
ICM40-B		30	7.3	9.8	12.7	16.1	20.1	24.6	29.6	35.2
ICM50-A	50	27	6.6	8.8	11.4	14.5	18.1	22.1	26.7	31.7
ICM50-B		46	11.2	15.0	19.5	24.8	30.8	37.7	45.4	54.0
ICM65-A	65	41	10	13	17	22	28	34	41	48
ICM65-B		81	19.7	26.4	34.3	43.6	54.3	66.4	80.0	95.1
ICM100	100	165	41	53	70	89	111	136	163	193
ICM125	125	259	64	83	110	140	175	213	256	303
ICM150	150	430	106	139	182	233	290	353	425	503

Correction factor for ΔP ($f_{\Delta P}$)

ΔP (psi)	Correction factor
3	**1.00**
4	0.87
5	0.79
6	0.72
7	0.66
8	0.62

Correction factor for superheat (T_S)

T_s [°F]	Correction factor
10	1.00
14	1.00
18	1.00
20	1.00

Correction factor for liquid temperature (T_{liq})

Liquid temperature [°F]	Correction factor
-10	0.73
10	0.77
30	0.82
50	0.87
70	0.93
90	**1.00**
110	1.09
130	1.20

Nominal capacities

Discharge line

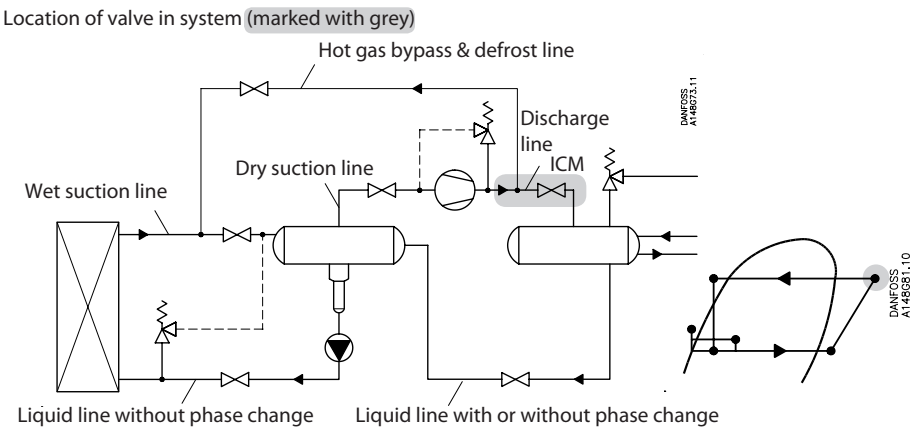

SI units

Calculation example (R717 capacities):

An application has following running conditions:

T_e = -20 °C
Q_o = 90 kW
T_{liq} = 10 °C
Max. Δp = 0.4 bar
$T_{disch.}$ = 60 °C
Connection: DN25

The capacity table is based on nominal condition (Δp = 0.2 bar, T_{liq} = 30 °C, $P_{disch.}$ = 12 bar, $T_{disch.}$ = 80 °C)

Therefore the actual capacity must be corrected to nominal condition by means of correction factors.
Correction factor for Δp 0.4 bar $f_{\Delta p}$ = 0.72
Correction factor for liquid temperature f_{Tliq} = 0.92
Correction factor for $T_{disch.}$ 60 °C, $f_{disch.}$ = 0.97

$Q_n = Q_o \times f_{\Delta p} \times f_{Tliq} \times f_{Tdisch.}$ =
90 × 0.72 × 0.92 × 0.97 = 58 kW

From the capacity table a ICM 25-A with Q_n capacity 73.2 kW is selected.

US units

Calculation example (R717 capacities):

An application has following running conditions:

T_e = 0 °F
Q_o = 8 TR
T_{liq} = 50 °F
Max. Δp = 4.5 psi
$T_{disch.}$ = 120 °F
Connection: 3/4"

The capacity table is based on nominal condition (Δp = 3 psi, T_{liq} = 90 °F, $P_{disch.}$ = 185 psi, $T_{disch.}$ = 180 °F)

Therefore the actual capacity must be corrected to nominal condition by means of correction factors.
Correction factor for Δp 4.5 psi $f_{\Delta p}$ = 0.81
Correction factor for liquid temperature f_{Tliq} = 0.92
Correction factor for $T_{disch.}$ 120 °F, $f_{disch.}$ = 0.95

$Q_n = Q_o \times f_{\Delta p} \times f_{Tliq} \times f_{Tdisch.}$ =
8 × 0.81 × 0.92 × 0.95 = 5.7 TR

From the capacity table a ICM 20-B with Q_n capacity 8.4 TR is selected.

Nominal capacities

SI units

Capacity table at nominal conditions, Q_N [kW],
T_{liq} = 30 °C,
Δp = 0.2 bar,
$P_{disch.}$ = 12 bar,
$T_{disch.}$ = 80 °C
Superheating = 8 °C

R 717 Discharge line

Type	Valve body size	K_v [m³/h]	Evaporating temperature [°C]							
			-50	-40	-30	-20	-10	0	10	20
ICM20A-33	20	0.2	2.3	2.4	2.4	2.4	2.5	2.5	2.5	2.5
ICM20-A		0.6	7.0	7.1	7.2	7.3	7.4	7.5	7.5	7.6
ICM20-B		2.4	28.0	28.5	28.9	29.3	29.6	29.9	30.1	30.3
ICM20-C		4.6	53.7	54.5	55.4	56.1	56.8	57.3	57.8	58.1
ICM25-A	25	6	70.0	71.1	72.3	73.2	74.1	74.7	75.3	75.8
ICM25-B		12	140	142	145	146	148	149	151	152
ICM32-A	32	9	105	107	108	110	111	112	113	114
ICM32-B		17	198	202	205	207	210	212	213	215
ICM40-A	40	15	175	178	181	183	185	187	188	189
ICM40-B		26	303	308	313	317	321	324	326	328
ICM50-A	50	23	268	273	277	281	284	287	289	290
ICM50-B		40	467	474	482	488	494	498	502	505
ICM65-A	65	35	408	415	422	427	432	436	439	442
ICM65-B		70	817	830	843	854	864	872	879	884
ICM100	100	142	1656	1684	1710	1732	1753	1769	1782	1794
ICM125	125	223	2601	2644	2686	2720	2752	2778	2798	2817
ICM150	150	370	4316	4388	4456	4512	4567	4610	4643	4675

Correction factor for ΔP ($f_{\Delta P}$)

ΔP (bar)	Correction factor
0.05	2.00
0.1	1.41
0.2	**1.00**
0.3	0.82
0.4	0.71
0.5	0.63

Correction factor for discharge temperature (T_{disch}).

Discharge temperature [°C]	Correction factor
50	0.96
60	0.97
80	**1.00**
90	1.01
100	1.03
110	1.04
120	1.06

Correction factor for liquid temperature (T_{liq})

Liquid temperature [°C]	Correction factor
-20	0.82
-10	0.86
0	0.88
10	0.92
20	0.96
30	**1.00**
40	1.04
50	1.09

US units

Capacity table at nominal conditions, Q_N [Tons of Refrigeration],
T_{liq} = 90 °F,
Δp = 2.9 psi,
$P_{disch.}$ = 185 psi,
$T_{disch.}$ = 180 °F
Superheating = 12 °F

R 717

Type	Valve body size	C_v [USgal/min]	Evaporating temperature [°F]							
			-60	-40	-20	0	20	40	60	80
ICM20-A33	20	0.23	0.66	0.67	0.68	0.69	0.70	0.71	0.71	0.72
ICM20-A		0.7	2.0	2.0	2.1	2.1	2.1	2.2	2.2	2.2
ICM20-B		2.8	8.0	8.2	8.3	8.4	8.5	8.6	8.7	8.7
ICM20-C		5.3	15.2	15.4	15.7	15.9	16.1	16.3	16.4	16.5
ICM25-A	25	7	20.0	20.4	20.7	21.0	21.3	21.5	21.7	21.8
ICM25-B		14	40.1	40.8	41.5	42.0	42.6	43.0	43.4	43.6
ICM32-A	32	10	28.6	29.1	29.6	30.0	30.4	30.7	31.0	31.2
ICM32-B		20	57.3	58.3	59.3	60.0	60.9	61.5	62.0	62.3
ICM40-A	40	17	48.7	49.5	50.4	51.0	51.7	52.3	52.7	53.0
ICM40-B		30	85.9	87.4	88.9	90.0	91.3	92.2	93.0	93.5
ICM50-A	50	27	77.3	78.7	80.0	81.0	82.2	83.0	83.7	84.2
ICM50-B		46	132	134	136	138	140	141	143	143
ICM65-A	65	41	117	119	122	123	125	126	127	128
ICM65-B		81	232	236	240	243	247	249	251	253
ICM100	100	165	472	480	489	495	501	508	512	514
ICM125	125	259	741	754	768	777	787	797	804	807
ICM150	150	430	1231	1251	1275	1290	1307	1324	1335	1341

Correction factor for ΔP ($f_{\Delta P}$)

ΔP (psi)	Correction factor
0.75	1.97
1.5	1.39
3	**1.00**
3.5	0.91
4	0.85
4.5	0.81

Correction factor for discharge temperature (T_{disch}).

Discharge temperature [°F]	Correction factor
120	0.95
140	0.97
180	**1.00**
200	1.02
210	1.02
230	1.04
250	1.05

Correction factor for liquid temperature (T_{liq})

Liquid temperature [°F]	Correction factor
-10	0.82
10	0.85
30	0.88
50	0.92
70	0.96
90	**1.00**
110	1.04
130	1.09

Nominal capacities

Discharge line

SI units

Capacity table at nominal conditions, Q_N [kW],
T_{liq} = 10 °C,
Δp = 0.2 bar,
$P_{disch.}$ = 10 bar,
$T_{disch.}$ = 80 °C
Superheating = 8 °C

R 744

Type	Valve body size	K_v [m³/h]	Evaporating temperature [°C]						
			-50	-40	-30	-20	-10	0	10
ICM20A-33	20	0.2	1.5	2.4	2.4	2.4	2.5	2.5	2.5
ICM20-A		0.6	4.4	4.5	4.5	4.6	4.6	4.5	4.4
ICM20-B		2.4	17.7	17.9	18.1	18.2	18.2	18.0	17.7
ICM20-C		4.6	33.8	34.4	34.8	34.9	34.9	34.6	33.9
ICM25-A	25	6	44.1	44.8	45.3	45.5	45.5	45.1	44.2
ICM25-B		12	88.3	89.7	90.7	91.0	91.0	90.2	88.5
ICM32-A	32	9	66.2	67.2	68.0	68.3	68.3	67.6	66.3
ICM32-B		17	125	127	128	129	129	128	125
ICM40-A	40	15	110	112	113	114	114	113	111
ICM40-B		26	191	194	196	197	197	195	192
ICM50-A	50	23	169	172	174	174	174	173	170
ICM50-B		40	294	299	302	303	303	301	295
ICM65-A	65	35	257	262	264	266	266	263	258
ICM65-B		70	515	523	529	531	531	526	516
ICM100	100	142	1044	1061	1071	1078	1078	1067	1047
ICM125	125	223	1639	1666	1683	1693	1693	1676	1644
ICM150	150	370	2720	2765	2792	2808	2808	2781	2728

Correction factor for ΔP ($f_{\Delta P}$)

ΔP (bar)	Correction factor
0.05	2.00
0.1	1.41
0.2	**1.00**
0.3	0.82
0.4	0.71
0.5	0.63

Correction factor for discharge temperature (T_{disch}).

Discharge temperature [°C]	Correction factor
50	0.96
60	0.97
80	**1.00**
90	1.01
100	1.03
110	1.04
120	1.06

Correction factor for liquid temperature (T_{liq})

Liquid temperature [°C]	Correction factor
-20	0.52
-10	0.67
0	0.91
10	**1.00**
15	1.09

US units

Capacity table at nominal conditions, Q_N [Tons of Refrigeration],
T_{liq} = 90 °F,
Δp = 3 psi,
$P_{disch.}$ = 120 psi,
$T_{disch.}$ = 180 °F
Superheating = 12 °F

R 744

Type	Valve body size	C_v [USgal/min]	Evaporating temperature [°F]						
			-60	-40	-20	0	20	40	60
ICM20-A33	20	0.23	0.40	0.41	0.42	0.42	0.42	0.41	0.41
ICM20-A		0.7	1.2	1.3	1.3	1.3	1.3	1.2	1.2
ICM20-B		2.8	4.9	5.0	5.1	5.1	5.1	5.0	5.0
ICM20-C		5.3	9.3	9.5	9.6	9.7	9.6	9.5	9.5
ICM25-A	25	7	12.3	12.6	12.7	12.8	12.7	12.5	12.5
ICM25-B		14	24.7	25.1	25.4	25.5	25.4	25.0	25.0
ICM32-A	32	10	17.6	18.0	18.1	18.2	18.1	17.8	17.8
ICM32-B		20	35.3	35.9	36.3	36.5	36.3	35.7	35.7
ICM40-A	40	17	30.0	30.5	30.9	31.0	30.9	30.3	30.3
ICM40-B		30	52.9	53.9	54.4	54.7	54.4	53.5	53.5
ICM50-A	50	27	47.6	48.5	49.0	49.2	49.0	48.2	48.2
ICM50-B		46	81.1	82.6	83.5	83.9	83.5	82.1	82.1
ICM65-A	65	41	72	74	75	75	75	73	73
ICM65-B		81	143	145	147	148	147	145	145
ICM100	100	165	290	297	300	301	300	294	294
ICM125	125	259	455	466	471	473	471	461	461
ICM150	150	430	756	774	782	786	782	765	765

Correction factor for ΔP ($f_{\Delta P}$)

ΔP (psi)	Correction factor
0.75	1.97
1.5	1.39
3	**1.00**
3.5	0.91
4	0.85
4.5	0.81

Correction factor for discharge temperature (T_{disch}).

Discharge temperature [°F]	Correction factor
120	0.95
140	0.97
180	**1.00**
200	1.02
210	1.02
230	1.04
250	1.05

Correction factor for liquid temperature (T_{liq})

Liquid temperature [°F]	Correction factor
-10	0.48
10	0.64
30	0.88
50	**1.00**

Nominal capacities

SI units

Capacity table at nominal conditions, Q_N [kW],
T_{liq} = 30 °C,
Δp = 0.2 bar,
$P_{disch.}$ = 8 bar,
$T_{disch.}$ = 80 °C
Superheating = 8 °C

R 134a

Discharge line

Type	Valve body size	K_v [m³/h]	Evaporating temperature [°C]						
			-40	-30	-20	-10	0	10	20
ICM20A-33	20	0.2	1.9	2.0	2.1	2.2	2.3	2.3	2.4
ICM20-A		0.6	5.7	6.0	6.3	6.5	6.8	7.0	7.3
ICM20-B		2.4	22.9	24.0	25.1	26.1	27.2	28.2	29.1
ICM20-C		4.6	43.8	45.9	48.0	50.1	52.0	54.0	55.9
ICM25-A	25	6	57.2	59.9	62.7	65.3	67.9	70.5	72.9
ICM25-B		12	114	120	125	131	136	141	146
ICM32-A	32	9	85.8	89.9	94.0	98.0	102	106	109
ICM32-B		17	162	170	178	185	192	200	206
ICM40-A	40	15	143	150	157	163	170	176	182
ICM40-B		26	248	260	272	283	294	305	316
ICM50-A	50	23	219	230	240	250	260	270	279
ICM50-B		40	381	399	418	435	453	470	486
ICM65-A	65	35	333	350	366	381	396	411	425
ICM65-B		70	667	699	731	762	792	822	850
ICM100	100	142	1353	1419	1484	1545	1607	1667	1724
ICM125	125	223	2124	2228	2331	2426	2524	2618	2708
ICM150	150	370	3524	3697	3867	4025	4188	4344	4492

Correction factor for ΔP ($f_{\Delta P}$)

ΔP (bar)	Correction factor
0.05	2.00
0.1	1.41
0.2	**1.00**
0.3	0.82
0.4	0.71
0.5	0.63

Correction factor for discharge temperature (T_{disch}).

Discharge temperature [°C]	Correction factor
50	0.96
60	0.97
80	**1.00**
90	1.01
100	1.03
110	1.04
120	1.06

Correction factor for liquid temperature (T_{liq})

Liquid temperature [°C]	Correction factor
-20	0.66
-10	0.70
0	0.76
10	0.82
20	0.90
30	**1.00**
40	1.13
50	1.29

US units

Capacity table at nominal conditions, Q_N [Tons of Refrigeration],
T_{liq} = 90 °F,
Δp = 3 psi,
$P_{disch.}$ = 120 psi,
$T_{disch.}$ = 180 °F
Superheating = 12 °F

R 134a

Type	Valve body size	C_v [USgal/min]	Evaporating temperature [°F]						
			-40	-20	0	20	40	60	80
ICM20-A33	20	0.23	0.17	0.18	0.19	0.19	0.20	0.21	0.22
ICM20-A		0.7	0.5	0.5	0.6	0.6	0.6	0.6	0.7
ICM20-B		2.8	2.0	2.1	2.3	2.4	2.5	2.6	2.7
ICM20-C		5.3	3.9	4.1	4.3	4.5	4.7	4.9	5.0
ICM25-A	25	7	5.1	5.4	5.6	5.9	6.2	6.4	6.7
ICM25-B		14	10.2	10.7	11.3	11.8	12.3	12.8	13.3
ICM32-A	32	10	7.3	7.7	8.0	8.4	8.8	9.2	9.5
ICM32-B		20	14.5	15.3	16.1	16.9	17.6	18.3	19.0
ICM40-A	40	17	12.4	13.0	13.7	14.3	15.0	15.6	16.2
ICM40-B		30	21.8	23.0	24.1	25.3	26.4	27.5	28.5
ICM50-A	50	27	19.6	20.7	21.7	22.8	23.8	24.7	25.7
ICM50-B		46	33.4	35.3	37.0	38.8	40.5	42.1	43.7
ICM65-A	65	41	30	31	33	35	36	37	39
ICM65-B		81	58.9	62.1	65.2	68.3	71.3	74.2	77.0
ICM100	100	165	120	126	134	140	145	151	158
ICM125	125	259	188	197	210	219	228	236	248
ICM150	150	430	312	328	348	364	379	393	411

Correction factor for ΔP ($f_{\Delta P}$)

ΔP (psi)	Correction factor
0.75	1.97
1.5	1.39
3	**1.00**
3.5	0.91
4	0.85
4.5	0.81

Correction factor for discharge temperature (T_{disch}).

Discharge temperature [°F]	Correction factor
120	0.95
140	0.97
180	**1.00**
200	1.02
210	1.02
230	1.04
250	1.05

Correction factor for liquid temperature (T_{liq})

Liquid temperature [°F]	Correction factor
-10	0.64
10	0.68
30	0.74
50	0.81
70	0.89
90	**1.00**
110	1.15
130	1.35

Nominal capacities

SI units

Capacity table at nominal conditions, Q_N [kW],
T_{liq} = 30 °C,
Δp = 0.2 bar,
$P_{disch.}$ = 12 bar,
$T_{disch.}$ = 80 °C
Superheating = 8 °C

R 404A

Discharge line

Type	Valve body size	K_v [m³/h]	Evaporating temperature [°C]							
			-50	-40	-30	-20	-10	0	10	20
ICM20A-33	20	0.2	1.8	1.9	2.0	2.1	2.2	2.4	2.5	2.5
ICM20-A		0.6	5.3	5.7	6.0	6.4	6.7	7.1	7.4	7.6
ICM20-B		2.4	21.2	22.6	24.1	25.5	26.9	28.2	29.5	30.5
ICM20-C		4.6	40.6	43.4	46.2	48.9	51.5	54.1	56.4	58.6
ICM25-A	25	6	53.0	56.6	60.3	63.8	67.2	70.5	73.6	76.4
ICM25-B		12	106	113	121	128	134	141	147	153
ICM32-A	32	9	79.5	84.9	90.4	95.7	101	106	110	115
ICM32-B		17	150	160	171	181	190	200	209	216
ICM40-A	40	15	132	141	151	159	168	176	184	191
ICM40-B		26	230	245	261	276	291	306	319	331
ICM50-A	50	23	203	217	231	244	258	270	282	293
ICM50-B		40	353	377	402	425	448	470	491	509
ICM65-A	65	35	309	330	352	372	392	412	430	445
ICM65-B		70	618	660	703	744	784	823	859	891
ICM100	100	142	1254	1339	1427	1510	1590	1670	1743	1807
ICM125	125	223	1969	2103	2240	2371	2497	2623	2737	2838
ICM150	150	370	3267	3489	3717	3934	4142	4352	4541	4709

Correction factor for ΔP ($f_{\Delta P}$)

ΔP (bar)	Correction factor
0.05	2.00
0.1	1.41
0.2	**1.00**
0.3	0.82
0.4	0.71
0.5	0.63

Correction factor for discharge temperature (T_{disch}).

Discharge temperature [°C]	Correction factor
50	0.96
60	0.97
80	**1.00**
90	1.01
100	1.03
110	1.04
120	1.06

Correction factor for liquid temperature (T_{liq})

Liquid temperature [°C]	Correction factor
-20	0.55
-10	0.60
0	0.66
10	0.74
20	0.85
30	**1.00**
40	1.23
50	1.68

US units

Capacity table at nominal conditions, Q_N [Tons of Refrigeration],
T_{liq} = 90 °F,
Δp = 3 psi,
$P_{disch.}$ = 120 psi,
$T_{disch.}$ = 180 °F
Superheating = 12 °F

R 404A

Typ	Valve body size	C_v [USgal/min]	Evaporating temperature [°F]							
			-60	-40	-20	0	20	40	60	80
ICM20-A33	20	0.23	0.15	0.16	0.17	0.19	0.20	0.21	0.22	0.23
ICM20-A		0.7	0.5	0.5	0.5	0.6	0.6	0.6	0.7	0.7
ICM20-B		2.8	1.8	2.0	2.1	2.3	2.4	2.5	2.7	2.8
ICM20-C		5.3	3.5	3.7	4.0	4.3	4.6	4.8	5.0	5.2
ICM25-A	25	7	4.6	5.0	5.3	5.7	6.0	6.4	6.6	6.9
ICM25-B		14	9.2	9.9	10.6	11.4	12.0	12.7	13.3	13.8
ICM32-A	32	10	6.5	7.1	7.6	8.1	8.6	9.1	9.5	9.9
ICM32-B		20	13.1	14.1	15.2	16.2	17.2	18.1	19.0	19.7
ICM40-A	40	17	11.1	12.0	12.9	13.8	14.6	15.4	16.1	16.8
ICM40-B		30	19.6	21.2	22.8	24.3	25.8	27.2	28.5	29.6
ICM50-A	50	27	17.7	19.1	20.5	21.9	23.2	24.5	25.6	26.6
ICM50-B		46	30.1	32.5	35.0	37.3	39.6	41.7	43.7	45.4
ICM65-A	65	41	27	29	31	33	35	37	39	41
ICM65-B		81	53.0	57.3	61.6	65.7	69.7	73.5	76.9	79.9
ICM100	100	165	109	117	124	135	142	149	157	163
ICM125	125	259	171	183	195	211	223	234	247	256
ICM150	150	430	283	304	324	351	370	388	410	425

Correction factor for ΔP ($f_{\Delta P}$)

ΔP (psi)	Correction factor
0.75	1.97
1.5	1.39
3	**1.00**
3.5	0.91
4	0.85
4.5	0.81

Correction factor for discharge temperature (T_{disch}).

Discharge temperature	Correction factor
120	0.95
140	0.97
180	**1.00**
200	1.02
210	1.02
230	1.04
250	1.05

Correction factor for liquid temperature (T_{liq})

Liquid temperature [°F]	Correction factor
-10	0.52
10	0.57
30	0.63
50	0.72
70	0.83
90	**1.00**
110	1.29
130	1.92

Nominal capacities

SI units

Capacity table at nominal conditions, Q_N [kW],
T_{liq} = 30 °C,
Δp = 0.2 bar,
$P_{disch.}$ = 12 bar,
$T_{disch.}$ = 80 °C
Superheating = 8 °C

R 22

Discharge line

Type	Valve body size	K_v	Evaporating temperature [°C]							
		[m³/h]	-50	-40	-30	-20	-10	0	10	20
ICM20A-33	20	0.2	0.76	0.78	0.80	0.83	0.84	0.87	0.89	0.90
ICM20-A		0.6	2.3	2.3	2.4	2.5	2.5	2.6	2.7	2.7
ICM20-B		2.4	9.1	9.3	9.6	9.9	10.1	10.4	10.6	10.8
ICM20-C		4.6	17.3	17.9	18.4	19.0	19.5	19.9	20.4	20.8
ICM25-A	25	6	22.6	23.4	24.0	24.7	25.4	26.0	26.6	27.1
ICM25-B		12	45.3	46.7	48.1	49.5	50.7	51.9	53.1	54.2
ICM32-A	32	9	33.9	35.0	36.1	37.1	38.1	39.0	39.9	40.6
ICM32-B		17	64.1	66.2	68.1	70.1	71.9	73.6	75.3	76.7
ICM40-A	40	15	56.6	58.4	60.1	61.8	63.4	64.9	66.4	67.7
ICM40-B		26	98.1	101	104	107	110	113	115	117
ICM50-A	50	23	86.7	89.5	92.2	94.8	97.3	100	102	104
ICM50-B		40	151	156	160	165	169	173	177	181
ICM65-A	65	35	132	136	140	144	148	152	155	158
ICM65-B		70	264	273	281	289	296	303	310	316
ICM100	100	142	536	552	569	586	600	615	630	641
ICM125	125	223	842	867	893	920	942	966	989	1006
ICM150	150	370	1398	1438	1482	1527	1563	1603	1641	1670

Correction factor for ΔP ($f_{\Delta P}$)

ΔP (bar)	Correction factor
0.2	**1.00**
0.25	0.89
0.3	0.82
0.4	0.71
0.5	0.63
0.6	0.58

Correction factor for discharge temperature (T_{disch}).

Discharge temperature [°C]	Correction factor
50	0.96
60	0.97
80	**1.00**
90	1.01
100	1.03
110	1.04
120	1.06

Correction factor for liquid temperature (T_{liq}).

Liquid temperature [°C]	Correction factor
-20	0.71
-10	0.75
0	0.80
10	0.86
20	0.92
30	**1.00**
40	1.09
50	1.22

US units

Capacity table at nominal conditions, Q_N [Tons of Refrigeration],
T_{liq} = 90 °F,
Δp = 3 psi,
$P_{disch.}$ = 120 psi,
$T_{disch.}$ = 180 °F
Superheating = 12 °F

R 22

Typ	Valve body size	C_v	Evaporating temperature [°F]							
		[USgal/min]	-60	-40	-20	0	20	40	60	80
ICM20-A33	20	0.23	0.21	0.22	0.23	0.23	0.24	0.24	0.25	0.26
ICM20-A		0.7	0.6	0.7	0.7	0.7	0.7	0.7	0.8	0.8
ICM20-B		2.8	2.6	2.6	2.7	2.8	2.9	3.0	3.0	3.1
ICM20-C		5.3	4.8	5.0	5.2	5.3	5.5	5.6	5.8	5.9
ICM25-A	25	7	6.4	6.6	6.8	7.1	7.3	7.4	7.6	7.8
ICM25-B		14	12.8	13.2	13.7	14.1	14.5	14.9	15.2	15.6
ICM32-A	32	10	9.1	9.5	9.8	10.1	10.4	10.6	10.9	11.1
ICM32-B		20	18.2	18.9	19.6	20.2	20.7	21.3	21.8	22.2
ICM40-A	40	17	15.5	16.1	16.6	17.1	17.6	18.1	18.5	18.9
ICM40-B		30	27.4	28.4	29.3	30.3	31.1	31.9	32.7	33.3
ICM50-A	50	27	24.6	25.5	26.4	27.2	28.0	28.7	29.4	30.0
ICM50-B		46	42.0	43.5	45.0	46.4	47.7	49.0	50.1	51.1
ICM65-A	65	41	37	39	40	41	42	43	45	46
ICM65-B		81	73.9	76.6	79.2	81.7	84.0	86.2	88.2	90.0
ICM100	100	165	150	157	161	166	171	175	180	184
ICM125	125	259	235	246	253	261	268	274	283	288
ICM150	150	430	391	408	421	433	445	455	470	479

Correction factor for ΔP ($f_{\Delta P}$)

ΔP (psi)	Correction factor
3	**1.00**
4	0.87
5	0.79
6	0.72
7	0.66
8	0.62

Correction factor for discharge temperature (T_{disch}).

Discharge temperature [°F]	Correction factor
120	0.95
140	0.97
180	**1.00**
200	1.02
210	1.02
230	1.04
250	1.05

Correction factor for liquid temperature (T_{liq}).

Liquid temperature [°F]	Correction factor
-10	0.73
10	0.77
30	0.82
50	0.87
70	0.93
90	**1.00**
110	1.09
130	1.20

Nominal capacities

Expansion - ICM

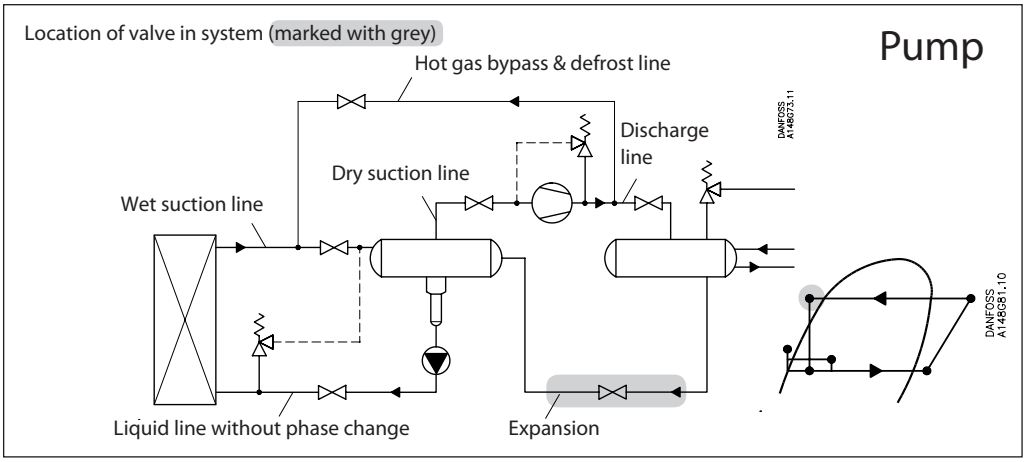

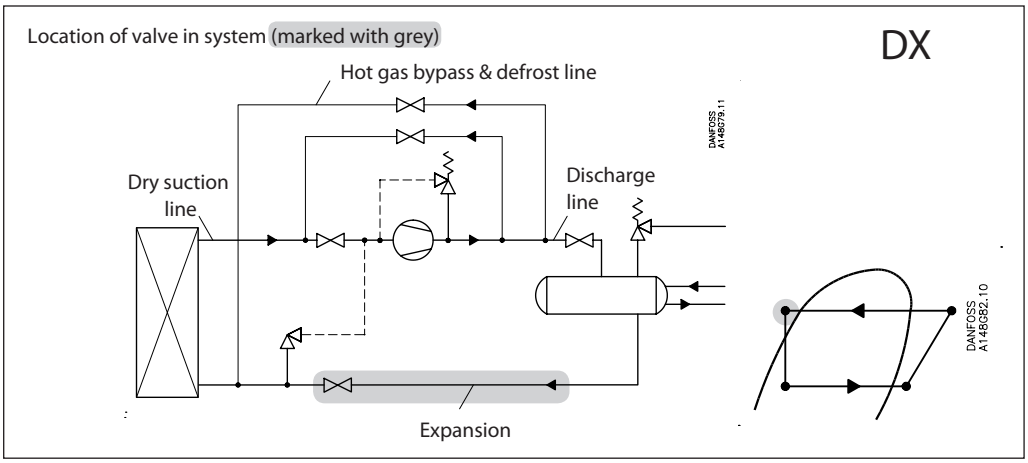

Correction factors
When dimensioning, multiply the evaporator capacity by a correction factor k dependent on the subcooling Δt_{sub} just ahead of the valve.
The corrected capacity* can then be found in the capacity table.

Correction factors for subcooling

Subcooling K	2	4	10	15	20	25	30	35	40
R717	1.01	1	0.98	0.96	0.94	0.92	0.91	0.89	0.87
R744	1.02	1	0.95	0.90	0.86	0.82	0.79	0.75	0.73
R134a	1.03	1	0.93	0.88	0.84	0.80	0.76	0.73	0.70
R404A	1.04	1	0.91	0.83	0.78	0.73	0.68	0.65	0.61
R22	1.03	1	0.94	0.90	0.87	0.83	0.80	0.77	0.74

* The capacity table is based on nominal conditions of subcooling just ahead of the valve of 4°K.

Calculation example:
An application has the following operating conditions:

Refrigerant R717
T_e = -10 °C
T_c = 30 °C
Q_0 = 1500 kW
Δt_{sub} = 20 °K

Correction factor for subcooling: 0.94

Pressure drop across the valve:
11.7 bar - 2.9 bar = 8.8 bar

Corrected capacity: 1500 x 0.94 = 1410 kW

From the R717 capacity table ICM 20-C is selected with Q_{nom} capacity 1990 kW at 8 bar.

Expansion

R 717

Capacities for nominal conditions, Q_n (kW)

Type			Pressure drop across valve Δp bar						Pressure drop across valve Δp bar					
			1	2	4	8	12	16	1	2	4	8	12	16
		K_v	Evaporating temperature 10 °C						Evaporating temperature 0 °C					
ICM20-A33	DN20	0.2	28.5	39.5	53.9	71.8	83.5	92.2	29.6	40.8	55.4	73.1	84.7	93.3
ICM20-A	DN20	0.6	85.9	119	163	217	253	279	89	123	167	221	256	282
ICM20-B	DN20	2.4	498	686	930	1230	1435	1587	515	705	950	1245	1450	1594
ICM20-C	DN20	4.6	824	1124	1507	1990	2310	2550	850	1145	1525	2000	2320	2560
ICM25-A	DN25	6	1274	1739	2337	3080	3575	3970	1310	1773	2370	3100	3600	3980
ICM32-A	DN32	9	1834	2515	3400	4490	5220	5775	1890	2580	3450	4530	5250	5790
ICM40-A	DN40	15	3410	4630	6200	8150	9450	10450	3500	4700	6250	8170	9480	10450
ICM50-A	DN50	23	5960	8050	10750	14100	16300	18100	6100	8150	10800	14100	16300	18100
ICM65-A	DN65	35	9793	13270	17686	23178	26940	29745	10034	13431	17749	23194	26914	29749
			Evaporating temperature -10 °C						Evaporating temperature -20 °C					
ICM20-A33	DN20	0.2	30.5	41.9	56.4	74	85.4	93.8	31.3	42.7	57.2	74.5	85.6	93.8
ICM20-A	DN20	0.6	92	127	170	224	258	284	94.5	129	172	224	258	284
ICM20-B	DN20	2.4	527	715	955	1253	1452	1594	535	718	957	1250	1450	1594
ICM20-C	DN20	4.6	859	1152	1520	1990	2310	2550	860	1140	1505	1975	2290	2525
ICM25-A	DN25	6	1332	1780	2360	3090	3590	3960	1332	1770	2345	3070	3570	3940
ICM32-A	DN32	9	1930	2600	3450	4520	5240	5780	1935	2590	3440	4510	5220	5750
ICM40-A	DN40	15	3550	4715	6220	8140	9450	10430	3520	4650	6140	8050	9350	10350
ICM50-A	DN50	23	6150	8150	10700	14000	16300	18000	6070	8000	10550	13850	16100	17800
ICM65-A	DN65	35	10118	13393	17640	23065	26784	29613	29353	13181	17379	22806	26524	29354
			Evaporating temperature -30 °C						Evaporating temperature -40 °C					
ICM20-A33	DN20	0.2	31.8	43.2	57.5	74.5	85.4	93.3	32.3	43.5	57.5	74.2	84.8	92.5
ICM20-A	DN20	0.6	96	130	173	225	258	282	97	131	173	224	256	280
ICM20-B	DN20	2.4	532	716	950	1240	1435	1580	527	705	940	1230	1420	1555
ICM20-C	DN20	4.6	840	1111	1480	1950	2270	2505	815	1085	1448	1920	2230	2470
ICM25-A	DN25	6	1310	1740	2310	3030	3530	3880	1270	1690	2270	2990	3480	3830
ICM32-A	DN32	9	1920	2560	3400	4460	5150	5700	1870	2500	3350	4400	5100	5630
ICM40-A	DN40	15	3430	4530	6030	7950	9250	10200	3300	4400	5900	7820	9120	10100
ICM50-A	DN50	23	5900	7800	10350	13650	15900	17600	5670	7550	10150	13400	15700	17400
ICM65-A	DN65	35	9732	12842	17045	22491	26193	28997	9364	12465	16707	22144	25832	28581
			Evaporating temperature -50 °C											
ICM20-A33	DN20	0.2	32.5	43.5	57.3	73.5	83.9	91.4						
ICM20-A	DN20	0.6	97.5	131	172	222	253	276						
ICM20-B	DN20	2.4	512	690	925	1210	1400	1535						
ICM20-C	DN20	4.6	780	1055	1425	1890	2200	2430						
ICM25-A	DN25	6	1220	1650	2220	2950	3420	3780						
ICM32-A	DN32	9	1810	2450	3280	4325	5030	5540						
ICM40-A	DN40	15	3170	4280	5800	7710	8950	9900						
ICM50-A	DN50	23	5430	7350	9900	13200	15400	17100						
ICM65-A	DN65	35	8659	12096	16354	21774	25423	28137						

Expansion

R 717

Capacities for nominal conditions, Q_n (TR)

Type			Pressure drop across valve Δp psi					
			15	30	60	120	180	240
		C_v	**Evaporating temperature 60 °F**					
ICM20-A33	DN20	0.2	8.1	11.2	15.3	20.4	23.8	26.3
ICM20-A	DN20	0.7	24.5	33.9	46.3	61.8	72	79.3
ICM20-B	DN20	2.8	142	196	265	352	410	451
ICM20-C	DN20	5.3	235	321	432	570	660	730
ICM25-A	DN25	7	363	497	670	880	1025	1130
ICM32-A	DN32	10	523	720	970	1280	1490	1645
ICM40-A	DN40	17	975	1325	1780	2330	2705	3000
ICM50-A	DN50	27	1695	2310	3070	4030	4690	5170
ICM65-A	DN65	41	2790	3789	5061	6643	7708	8517
			Evaporating temperature 20 °F					
ICM20-A33	DN20	0.2	8.7	12	16.2	21.2	24.5	26.9
ICM20-A	DN20	0.7	26.3	36.2	48.8	64	74	81.4
ICM20-B	DN20	2.8	151	206	275	360	416	459
ICM20-C	DN20	5.3	248	332	439	574	665	734
ICM25-A	DN25	7	383	515	681	888	1030	1135
ICM32-A	DN32	10	553	746	993	1299	1510	1657
ICM40-A	DN40	17	1020	1360	1795	2346	2715	3005
ICM50-A	DN50	27	1770	2350	3100	4040	4680	5170
ICM65-A	DN65	41	2907	3862	5089	6647	7711	8518
			Evaporating temperature -20 °F					
ICM20-A33	DN20	0.2	9.2	12.5	16.6	21.4	24.6	26.8
ICM20-A	DN20	0.7	27.7	37.5	50	64.5	74	81
ICM20-B	DN20	2.8	154	206	274	357	413	454
ICM20-C	DN20	5.3	244	323	428	560	653	720
ICM25-A	DN25	7	380	503	665	875	1015	1120
ICM32-A	DN32	10	555	740	978	1285	1485	1635
ICM40-A	DN40	17	995	1315	1740	2290	2660	2945
ICM50-A	DN50	27	1720	2255	2985	3930	4570	5050
ICM65-A	DN65	41	2817	3712	4921	6481	7539	8338
			Evaporating temperature -60 °F					
ICM20-A33	DN20	0.2	9.4	12.6	16.5	21.1	24.1	26.2
ICM20-A	DN20	0.7	28.1	37.6	49.5	63.7	72.5	79
ICM20-B	DN20	2.8	147	199	266	347	400	440
ICM20-C	DN20	5.3	225	304	410	544	630	695
ICM25-A	DN25	7	352	475	640	845	980	1080
ICM32-A	DN32	10	520	703	943	1246	1440	1585
ICM40-A	DN40	17	910	1230	1660	2210	2570	2850
ICM50-A	DN50	27	1560	2110	2850	3800	4430	4900
ICM65-A	DN65	41	2567	3474	4699	6251	7292	8063

Pressure drop across valve Δp psi					
15	30	60	120	180	240
Evaporating temperature 40 °F					
8.4	11.6	15.8	20.9	24.2	26.7
25.3	35	47.6	63	73	80.4
147	201	271	358	415	458
243	328	438	574	665	735
375	510	680	888	1030	1140
539	735	985	1294	1500	1655
1000	1350	1800	2344	2715	3010
1745	2350	3100	4050	4700	5200
2863	3852	5104	6671	7736	8545
Evaporating temperature 0 °F					
9	12.3	16.4	21.4	24.6	26.9
27.1	37	49.5	64.5	74.3	81.5
154	207	276	360	416	458
249	330	435	570	660	728
385	513	678	884	1025	1130
560	747	990	1293	1500	1650
1022	1345	1775	2325	2700	2970
1770	2320	3050	4000	4650	5130
2895	3812	5019	6576	7639	8446
Evaporating temperature -40 °F					
9.3	12.6	16.6	21.3	24.4	26.6
28	37.8	50	64.3	73.5	79.9
152	203	270	353	408	446
235	313	418	553	642	710
366	488	653	860	1000	1100
540	723	965	1265	1465	1610
955	1270	1700	2250	2615	2900
1640	2180	2920	3870	4500	4990
2696	3590	4809	6368	7422	8209

Expansion

R 744

Capacities for nominal conditions, Q_n (kW)

Type			Pressure drop across valve Δp bar					
			1	2	4	8	12	16
		K_v	**Evaporating temperature 10 °C**					
ICM20-A33	DN20	0.2	6.1	8.6	11.9	15.9	18.4	20
ICM20-A	DN20	0.6	18.7	26.2	36.1	48.3	56	61
ICM20-B	DN20	2.4	109	152	209	280	324	353
ICM20-C	DN20	4.6	180	251	347	465	535	583
ICM25-A	DN25	6	277	389	535	718	826	900
ICM32-A	DN32	9	400	560	770	1030	1190	1300
ICM40-A	DN40	15	743	1040	1435	1920	2215	2400
ICM50-A	DN50	23	1295	1810	2500	3340	3850	4180
ICM65-A	DN65	35	2116	2964	4086	5458	6297	6836
			Evaporating temperature -10 °C					
ICM20-A33	DN20	0.2	8.1	11.4	15.7	21	24.4	27
ICM20-A	DN20	0.6	24.7	34.5	47.5	63.6	74	81
ICM20-B	DN20	2.4	143	200	275	368	428	470
ICM20-C	DN20	4.6	238	331	455	608	705	770
ICM25-A	DN25	6	368	513	705	940	1090	1195
ICM32-A	DN32	9	528	735	1015	1355	1570	1720
ICM40-A	DN40	15	980	1370	1880	2510	2910	3180
ICM50-A	DN50	23	1710	2380	3280	4380	5050	5550
ICM65-A	DN65	35	2808	3916	5383	7173	8306	9083
			Evaporating temperature -30 °C					
ICM20-A33	DN20	0.2	9.8	13.6	18.6	24.8	28.7	31.3
ICM20-A	DN20	0.6	29.7	41	56.3	75	86.8	95
ICM20-B	DN20	2.4	172	238	325	432	500	545
ICM20-C	DN20	4.6	285	395	536	710	820	895
ICM25-A	DN25	6	440	610	828	1100	1270	1380
ICM32-A	DN32	9	632	880	1195	1585	1830	2000
ICM40-A	DN40	15	1175	1630	2220	2920	3370	3680
ICM50-A	DN50	23	2050	2850	3850	5080	5850	6400
ICM65-A	DN65	35	3369	4673	6337	8350	9616	10492
			Evaporating temperature -50 °C					
ICM20-A33	DN20	0.2	11	15.2	20.7	27.2	31.3	34
ICM20-A	DN20	0.6	33.3	46	62.5	82.5	94.8	103
ICM20-B	DN20	2.4	193	266	359	472	540	588
ICM20-C	DN20	4.6	319	438	587	765	880	955
ICM25-A	DN25	6	494	678	910	1190	1360	1480
ICM32-A	DN32	9	710	980	1320	1720	1980	2155
ICM40-A	DN40	15	1320	1810	2420	3150	3610	3940
ICM50-A	DN50	23	2300	3150	4210	5450	6250	6800
ICM65-A	DN65	35	3781	5179	6917	8989	10290	11193

Pressure drop across valve Δp bar					
1	2	4	8	12	16
Evaporating temperature 0 °C					
7.4	10.2	14	18.7	21.7	23.7
22.4	31	42.5	56.8	66	72
130	179	246	329	381	417
215	297	408	542	630	686
333	460	630	838	975	1065
478	660	905	1210	1400	1530
890	1230	1680	2250	2600	2830
1550	2140	2940	3900	4530	4750
2541	3509	4808	6407	7408	8084
Evaporating temperature -20 °C					
9	12.5	17.1	23	26.7	29.3
27.1	37.8	52	69.6	81	88.5
157	219	302	402	468	512
260	363	497	665	770	840
402	563	770	1025	1190	1300
580	810	1110	1480	1715	1880
1075	1500	2060	2740	3160	3470
1870	2620	3580	4750	5500	6030
3080	4300	5890	7821	9039	9880
Evaporating temperature -40 °C					
10.7	14.6	19.8	26.2	30.2	32.9
32.1	44	60	79	91.2	99.5
186	256	345	455	525	571
308	422	570	745	855	930
478	655	880	1155	1325	1444
685	940	1270	1670	1915	2090
1275	1750	2350	3060	3530	3830
2220	3050	4080	5330	6100	6650
3657	5003	6705	8751	10040	10934

Expansion

R 744

Capacities for nominal conditions, Q_n (TR)

Type			Pressure drop across valve Δp psi						Pressure drop across valve Δp psi					
			15	30	60	120	180	240	15	30	60	120	180	240
		C_v	**Evaporating temperature 60 °F**						**Evaporating temperature 40 °F**					
ICM20-A33	DN20	0.2	1.58	2.21	3.05	4.05	4.64	5	1.93	2.71	3.74	5.01	5.8	6.32
ICM20-A	DN20	0.7	4.8	6.7	9.2	12.3	14.2	15.3	5.8	8.2	11.3	15.2	17.6	19.2
ICM20-B	DN20	2.8	27.8	39	53.7	71.5	82	88.8	33.9	47.6	66	88.3	102	111
ICM20-C	DN20	5.3	46	64.5	89	118	136	146	56	79	109	146	169	184
ICM25-A	DN25	7	71.1	100	137	183	210	226	87	122	169	226	261	285
ICM32-A	DN32	10	102	144	198	264	303	327	125	176	242	325	376	410
ICM40-A	DN40	17	191	267	368	490	561	605	232	326	450	603	699	760
ICM50-A	DN50	27	332	465	640	855	976	1055	405	570	785	1050	1215	1320
ICM65-A	DN65	41	543	762	1048	1393	1594	1713	664	933	1288	1720	1986	2159
			Evaporating temperature 20 °F						**Evaporating temperature 0 °F**					
ICM20-A33	DN20	0.2	2.27	3.16	4.35	5.82	6.75	7.38	2.55	3.55	4.86	6.49	7.53	8.23
ICM20-A	DN20	0.7	6.8	9.6	13.2	17.7	20.5	22.4	7.7	10.7	14.7	19.7	22.8	25
ICM20-B	DN20	2.8	39.9	55.7	76.5	102	118	130	44.7	62.3	85.5	114	132	144
ICM20-C	DN20	5.3	66	92	126	169	195	214	74.3	103	141	188	217	237
ICM25-A	DN25	7	102	142	196	261	303	330	115	159	218	290	335	367
ICM32-A	DN32	10	147	205	281	376	437	476	165	230	315	418	485	528
ICM40-A	DN40	17	273	381	524	699	805	880	307	426	585	775	895	975
ICM50-A	DN50	27	475	663	910	1215	1400	1535	535	745	1015	1350	1555	1700
ICM65-A	DN65	41	781	1088	1495	1990	2300	2510	879	1221	1668	2210	2551	2783
			Evaporating temperature -20 °F						**Evaporating temperature -40 °F**					
ICM20-A33	DN20	0.2	2.78	3.87	5.3	7.05	8.15	8.9	3.02	4.17	5.68	7.52	8.64	9.41
ICM20-A	DN20	0.7	8.4	11.7	16	21.4	24.7	27	9.1	12.6	17.2	22.7	26.2	28.5
ICM20-B	DN20	2.8	48.9	68	93	123	142	155	53	73.3	99	131	150	164
ICM20-C	DN20	5.3	81	112	153	203	233	255	87.8	121	163	214	245	267
ICM25-A	DN25	7	125	174	237	313	362	395	135	187	253	331	380	414
ICM32-A	DN32	10	180	250	341	453	523	570	195	270	365	480	549	600
ICM40-A	DN40	17	335	464	633	835	960	1050	362	500	675	878	1010	1100
ICM50-A	DN50	27	584	810	1100	1450	1670	1820	633	870	1170	1530	1750	1900
ICM65-A	DN65	41	958	1332	1809	2383	2741	2987	1040	1431	1923	2510	2877	3129
			Evaporating temperature -60 °F											
ICM20-A33	DN20	0.2	3.19	4.41	5.97	7.84	8.99	9.76						
ICM20-A	DN20	0.7	9.6	13.3	18.1	23.7	27.3	29.5						
ICM20-B	DN20	2.8	56	77	104	136	156	169						
ICM20-C	DN20	5.3	92.8	127	170	221	253	275						
ICM25-A	DN25	7	143	197	263	342	391	425						
ICM32-A	DN32	10	206	284	380	496	568	618						
ICM40-A	DN40	17	383	524	700	907	1040	1130						
ICM50-A	DN50	27	667	915	1215	1570	1800	1950						
ICM65-A	DN65	41	1099	1499	1996	2587	2956	3211						

Expansion

Capacities for nominal conditions, Q_n (kW)

R 134a

Type			Pressure drop across valve Δp bar					
			1	2	4	8	12	16
		K_v	**Evaporating temperature 10 °C**					
ICM20-A33	DN20	0.2	6.4	8.6	11.1	13.4	14.1	14
ICM20-A	DN20	0.6	19.4	26	33.6	40.5	42.7	42.5
ICM20-B	DN20	2.4	112	149	192	230	243	242
ICM20-C	DN20	4.6	184	243	310	370	392	391
ICM25-A	DN25	6	285	377	480	575	607	606
ICM32-A	DN32	9	410	545	699	835	885	883
ICM40-A	DN40	15	760	1000	1270	1520	1610	1605
ICM50-A	DN50	23	1320	1730	2200	2620	2770	2785
ICM65-A	DN65	35	2169	2847	3606	4304	4550	4551
			Evaporating temperature -10 °C					
ICM20-A33	DN20	0.2	6.9	9.1	11.5	13.4	13.9	13.7
ICM20-A	DN20	0.6	20.7	27.4	34.5	40.5	42	41.5
ICM20-B	DN20	2.4	118	154	194	229	238	235
ICM20-C	DN20	4.6	191	247	310	365	381	379
ICM25-A	DN25	6	296	383	481	568	593	587
ICM32-A	DN32	9	430	559	702	826	865	855
ICM40-A	DN40	15	785	1013	1265	1490	1565	1550
ICM50-A	DN50	23	1360	1740	2180	2570	2700	2670
ICM65-A	DN65	35	2229	2866	3579	4222	4420	4384
			Evaporating temperature -30 °C					
ICM20-A33	DN20	0.2	7.1	9.2	11.3	13	13.2	12.8
ICM20-A	DN20	0.6	21.3	27.6	34.2	39.1	40	38.7
ICM20-B	DN20	2.4	118	152	189	219	225	218
ICM20-C	DN20	4.6	186	238	297	347	357	350
ICM25-A	DN25	6	290	372	463	540	555	545
ICM32-A	DN32	9	425	545	680	790	812	792
ICM40-A	DN40	15	760	970	1210	1415	1465	1430
ICM50-A	DN50	23	1305	1670	2080	2440	2530	2480
ICM65-A	DN65	35	2146	2744	3417	3998	4141	4054

Pressure drop across valve Δp bar					
1	2	4	8	12	16
Evaporating temperature 0 °C					
6.6	8.9	11.3	13.5	14.1	14
20.1	26.8	34.3	40.8	42.5	42.1
116	153	194	231	242	240
189	247	311	370	389	388
292	383	482	575	604	602
422	555	703	835	880	875
775	1015	1270	1515	1596	1590
1350	1750	2200	2610	2750	2740
2215	2877	3612	4285	4508	4492
Evaporating temperature -20 °C					
7	9.2	11.4	13.3	13.6	13.3
21.1	27.6	34.5	40	41.1	40.1
119	154	193	225	233	228
190	244	305	357	372	365
295	380	474	555	575	568
430	555	695	810	840	826
775	995	1240	1460	1520	1495
1340	1710	2130	2510	2620	2590
2203	2818	3509	4124	4296	4235
Evaporating temperature -40 °C					
7.1	9.1	11.1	12.6	12.7	12.1
21.4	27.5	33.6	38	38.3	36.8
116	149	184	211	216	208
180	231	288	335	342	333
280	361	448	520	532	516
415	532	660	760	780	755
730	940	1175	1360	1410	1358
1260	1610	2010	2350	2420	2350
2068	2654	3310	3853	3964	3849

Expansion

Capacities for nominal conditions, Q_n (TR)

R 134a

Type			Pressure drop across valve Δp psi					
			15	30	60	120	180	240
		C_v	**Evaporating temperature 60 °F**					
ICM20-A33	DN20	0.2	1.8	2.42	3.13	3.76	3.96	3.93
ICM20-A	DN20	0.7	5.5	7.3	9.5	11.4	12	11.9
ICM20-B	DN20	2.8	31.5	42	54.1	65	68.5	68.2
ICM20-C	DN20	5.3	52	69	88	105	111	111
ICM25-A	DN25	7	80.3	106	136	163	172	171
ICM32-A	DN32	10	116	154	198	237	250	249
ICM40-A	DN40	17	214	284	360	431	455	454
ICM50-A	DN50	27	373	493	625	745	787	787
ICM65-A	DN65	41	612	808	1026	1225	1292	1287
			Evaporating temperature 20 °F					
ICM20-A33	DN20	0.2	1.95	2.58	3.26	3.82	3.93	3.87
ICM20-A	DN20	0.7	5.9	7.8	9.9	11.6	12	11.8
ICM20-B	DN20	2.8	33.6	44.3	55.5	65.5	68	66.7
ICM20-C	DN20	5.3	54.8	71	88.5	105	109	108
ICM25-A	DN25	7	85	110	138	162	169	167
ICM32-A	DN32	10	123	160	201	237	247	243
ICM40-A	DN40	17	225	291	363	428	447	442
ICM50-A	DN50	27	390	503	625	737	770	760
ICM65-A	DN65	41	640	824	1029	1211	1264	1249
			Evaporating temperature -20 °F					
ICM20-A33	DN20	0.2	2.03	2.63	3.24	3.69	3.74	3.59
ICM20-A	DN20	0.7	6.1	7.9	9.8	11.2	11.3	10.9
ICM20-B	DN20	2.8	34	43.9	54.3	62.6	64	61.8
ICM20-C	DN20	5.3	53.5	68.5	85.3	99	102	99
ICM25-A	DN25	7	83.5	107	132	154	158	154
ICM32-A	DN32	10	122	157	195	225	231	224
ICM40-A	DN40	17	219	280	347	405	416	405
ICM50-A	DN50	27	377	480	597	695	720	710
ICM65-A	DN65	41	618	790	981	1144	1179	1148

Pressure drop across valve Δp psi					
15	30	60	120	180	240
Evaporating temperature 40 °F					
1.88	2.51	3.21	3.82	3.99	3.93
5.7	7.6	9.7	11.6	12.1	11.9
32.7	43.5	55.3	65.8	68.8	68
53.6	70.5	89	106	111	110
83	109	138	164	172	170
120	158	201	238	250	248
222	289	364	432	455	452
385	500	630	745	785	780
631	823	1035	1226	1287	1278
Evaporating temperature 0 °F					
2	2.62	3.27	3.78	3.87	3.75
6	7.9	9.9	11.4	11.7	11.4
34.1	44.4	55.4	64.2	66.2	64.5
54.8	70.2	87.5	102	106	104
85	109	136	159	164	161
124	160	199	232	240	235
224	287	357	418	433	425
387	495	615	720	747	735
634	813	1010	1183	1227	1204
Evaporating temperature -40 °F					
2.04	2.61	3.18	3.57	3.58	3.4
6.1	7.8	9.6	10.8	10.8	10.3
33.3	42.7	52.8	60.1	61	58.5
51.7	66.6	82.5	95	97	93.7
80.7	103.3	128	148	151	145
119	153	189	217	220	212
211	270	336	388	397	383
362	463	575	667	685	660
594	762	948	1098	1123	1082

Expansion

Capacities for nominal conditions, Q_n (kW)

R 404A

Type			Pressure drop across valve Δp bar					
			1	2	4	8	12	16
		K_v	**Evaporating temperature 10 °C**					
ICM20-A33	DN20	0.2	5.2	7.1	9.2	11.2	11.7	11.3
ICM20-A	DN20	0.6	15.7	21.3	27.8	33.8	35.3	34.5
ICM20-B	DN20	2.4	91	123	160	194	203	198
ICM20-C	DN20	4.6	150	203	263	315	330	322
ICM25-A	DN25	6	233	313	406	490	510	500
ICM32-A	DN32	9	335	452	589	710	740	723
ICM40-A	DN40	15	621	835	1080	1300	1360	1323
ICM50-A	DN50	23	1085	1455	1880	2250	2350	2300
ICM65-A	DN65	35	1779	2388	3075	3687	3848	3755
			Evaporating temperature -10 °C					
ICM20-A33	DN20	0.2	5.8	7.8	10	11.9	12.4	12
ICM20-A	DN20	0.6	17.4	23.5	30.3	36.1	37.5	36.5
ICM20-B	DN20	2.4	101	135	173	206	214	209
ICM20-C	DN20	4.6	166	220	280	333	345	338
ICM25-A	DN25	6	257	340	435	515	535	525
ICM32-A	DN32	9	370	493	629	748	778	760
ICM40-A	DN40	15	685	904	1150	1360	1420	1390
ICM50-A	DN50	23	1190	1570	1990	2350	2450	2400
ICM65-A	DN65	35	1958	2581	3266	3864	4019	3928
			Evaporating temperature -30 °C					
ICM20-A33	DN20	0.2	6.2	8.3	10.4	12	12.3	11.8
ICM20-A	DN20	0.6	18.7	24.7	31.3	36.5	37.3	35.8
ICM20-B	DN20	2.4	107	140	176	205	211	204
ICM20-C	DN20	4.6	173	225	281	329	338	328
ICM25-A	DN25	6	269	349	437	510	525	508
ICM32-A	DN32	9	389	508	637	745	765	742
ICM40-A	DN40	15	711	922	1150	1345	1385	1340
ICM50-A	DN50	23	1235	1590	1980	2320	2390	2320
ICM65-A	DN65	35	2029	2611	3253	3801	3920	3803
			Evaporating temperature -50 °C					
ICM20-A33	DN20	0.2	6.5	8.3	10.2	11.6	11.6	10.9
ICM20-A	DN20	0.6	19.5	25	30.9	35	35.1	33.2
ICM20-B	DN20	2.4	108	138	171	196	198	188
ICM20-C	DN20	4.6	170	215	268	310	315	301
ICM25-A	DN25	6	265	335	418	484	490	468
ICM32-A	DN32	9	388	493	613	705	715	680
ICM40-A	DN40	15	695	875	1090	1270	1290	1230
ICM50-A	DN50	23	1195	1505	1880	2180	2230	2130
ICM65-A	DN65	35	1968	2475	3088	3585	3650	3487

Pressure drop across valve Δp bar					
1	2	4	8	12	16
Evaporating temperature 0 °C					
5.5	7.5	9.7	11.6	12.1	11.8
16.6	22.5	29.3	35.2	36.8	35.9
96.5	130	168	201	210	205
159	213	273	327	341	333
246	329	423	508	528	518
354	475	612	733	766	750
659	876	1123	1340	1400	1370
1145	1525	1950	2330	2430	2380
1881	2503	3198	3810	3973	3886
Evaporating temperature -20 °C					
6.1	8.1	10.3	12.1	12.4	12
18.2	24.3	31	36.5	37.7	36.5
105	139	176	207	214	208
172	225	283	333	345	335
265	348	439	515	535	520
384	506	640	750	778	755
706	920	1160	1360	1410	1375
1230	1600	2000	2350	2435	2380
2017	2621	3284	3857	3997	3896
Evaporating temperature -40 °C					
6.4	8.3	10.4	11.9	12	11.4
19.2	25	31.3	35.8	36.3	34.7
109	140	174	202	205	197
173	221	276	320	328	316
269	345	428	499	510	490
393	503	628	730	745	715
711	902	1130	1310	1340	1295
1225	1555	1940	2255	2320	2240
2014	2557	3190	3808	3801	3662

Expansion

R 404A

Capacities for nominal conditions, Q_n (TR)

Type			Pressure drop across valve Δp psi					
			15	30	60	120	180	240
		C_v	**Evaporating temperature 60 °F**					
ICM20-A33	DN20	0.2	1.44	1.95	2.54	3.07	3.18	3.06
ICM20-A	DN20	0.7	4.4	5.9	7.7	9.3	9.7	9.3
ICM20-B	DN20	2.8	25.2	34.1	44.5	53.5	55.5	53.8
ICM20-C	DN20	5.3	41.8	56.3	73	87.5	91	87.5
ICM25-A	DN25	7	64.5	87	113	135	141	136
ICM32-A	DN32	10	93	125	163	196	204	197
ICM40-A	DN40	17	173	233	300	360	373	360
ICM50-A	DN50	27	300	405	522	625	647	625
ICM65-A	DN65	41	494	664	856	1022	1059	1021
			Evaporating temperature 20 °F					
ICM20-A33	DN20	0.2	1.64	2.2	2.84	3.37	3.48	3.36
ICM20-A	DN20	0.7	4.9	6.6	8.6	10.2	10.6	10.2
ICM20-B	DN20	2.8	28.7	38.4	49.1	58.2	60.5	58.5
ICM20-C	DN20	5.3	47.3	62.6	79.8	94.5	97.5	94.7
ICM25-A	DN25	7	73	97	123	146	151	147
ICM32-A	DN32	10	105	140	179	212	220	213
ICM40-A	DN40	17	195	259	327	387	402	389
ICM50-A	DN50	27	340	448	567	670	694	675
ICM65-A	DN65	41	558	736	931	1098	1137	1104
			Evaporating temperature -20 °F					
ICM20-A33	DN20	0.2	1.78	2.35	2.96	3.42	3.48	3.32
ICM20-A	DN20	0.7	5.4	7.1	8.9	10.4	10.5	10.1
ICM20-B	DN20	2.8	30.8	40.2	50.5	58.7	60	57.5
ICM20-C	DN20	5.3	50	64.5	80.5	93.5	96	92.5
ICM25-A	DN25	7	77.5	100	125	145	149	143
ICM32-A	DN32	10	112	146	183	212	217	209
ICM40-A	DN40	17	205	265	330	383	394	380
ICM50-A	DN50	27	355	457	567	660	678	655
ICM65-A	DN65	41	584	751	933	1085	1113	1072
			Evaporating temperature -60 °F					
ICM20-A33	DN20	0.2	1.86	2.38	2.91	3.27	3.25	3.04
ICM20-A	DN20	0.7	5.6	7.1	8.8	9.9	9.9	9.3
ICM20-B	DN20	2.8	31.1	39.5	48.8	55.6	55.6	52.2
ICM20-C	DN20	5.3	49	61.5	76.7	87.8	89	84
ICM25-A	DN25	7	76.3	96	119	137	138	130
ICM32-A	DN32	10	111	141	175	200	201	190
ICM40-A	DN40	17	200	250	312	360	363	343
ICM50-A	DN50	27	344	430	535	620	628	595
ICM65-A	DN65	41	564	708	881	1016	1027	972

Pressure drop across valve Δp psi					
15	30	60	120	180	240
Evaporating temperature 40 °F					
1.55	2.09	2.71	3.25	3.38	3.26
4.7	6.3	8.2	9.9	10.2	9.9
27.2	36.5	47.3	56.5	58.8	57
45	60	77	92	95.5	92.5
69.5	93	119	143	148	144
100	134	173	207	215	208
186	248	318	377	393	381
325	431	550	655	680	660
532	707	904	1073	1113	1080
Evaporating temperature 0 °F					
1.72	2.28	2.92	3.43	3.51	3.38
5.2	6.9	8.8	10.4	10.6	10.3
29.9	39.5	50.3	59	60.6	58.5
49	64.3	81	95	98	94.5
76	99.5	125	147	152	147
109	144	183	214	221	214
202	264	332	389	401	389
352	457	573	672	694	672
577	751	940	1101	1135	1099
Evaporating temperature -40 °F					
1.82	2.38	2.95	3.37	3.39	3.2
5.5	7.2	8.9	10.2	10.3	9.7
31.2	40.2	50	57.5	58	55.3
50	63.6	79	91.5	93	89
77.5	99	123	142	144	138
113	144	180	207	211	201
204	259	323	373	380	363
353	447	555	643	657	630
571	734	913	1056	1076	1028

Expansion

R 22

Capacities for nominal conditions, Q_n (kW)

Type		K_v	Pressure drop across valve Δp bar 1	2	4	8	12	16
			Evaporating temperature 10 °C					
ICM20-A33	DN20	0.2	6.7	9.2	12.2	15.5	17.1	18
ICM20-A	DN20	0.6	20.1	27.6	36.8	46.7	51.7	54.2
ICM20-B	DN20	2.4	117	160	212	268	297	312
ICM20-C	DN20	4.6	193	263	346	435	482	505
ICM25-A	DN25	6	299	406	535	675	746	785
ICM32-A	DN32	9	430	585	777	980	1085	1140
ICM40-A	DN40	15	798	1080	1420	1790	1980	2080
ICM50-A	DN50	23	1390	1880	2470	3100	3430	3600
ICM65-A	DN65	35	2286	3090	4057	5097	5638	5918
			Evaporating temperature -10 °C					
ICM20-A33	DN20	0.2	7.3	9.9	13	16.2	17.7	18.5
ICM20-A	DN20	0.6	21.9	29.8	39	48.8	53.7	55.8
ICM20-B	DN20	2.4	126	170	223	278	305	318
ICM20-C	DN20	4.6	208	277	360	448	493	514
ICM25-A	DN25	6	321	430	557	695	764	796
ICM32-A	DN32	9	463	621	809	1010	1110	1157
ICM40-A	DN40	15	855	1140	1472	1830	2012	2112
ICM50-A	DN50	23	1490	1970	2550	3170	3480	3650
ICM65-A	DN65	35	2449	3247	4192	5205	5730	5999
			Evaporating temperature -30 °C					
ICM20-A33	DN20	0.2	7.7	10.3	13.3	16.3	17.7	18.3
ICM20-A	DN20	0.6	23.2	31	40	49.3	53.5	55.3
ICM20-B	DN20	2.4	132	175	225	277	302	313
ICM20-C	DN20	4.6	212	279	357	443	485	505
ICM25-A	DN25	6	329	433	556	685	752	783
ICM32-A	DN32	9	478	631	812	1000	1095	1140
ICM40-A	DN40	15	873	1140	1465	1810	1980	2070
ICM50-A	DN50	23	1510	1970	2520	3110	3420	3560
ICM65-A	DN65	35	2479	3235	4147	5127	5623	5865
			Evaporating temperature -50 °C					
ICM20-A33	DN20	0.2	7.9	10.4	13.2	15.9	17.1	17.6
ICM20-A	DN20	0.6	23.8	31.3	39.8	48	51.8	53
ICM20-B	DN20	2.4	131	172	220	269	291	300
ICM20-C	DN20	4.6	205	269	346	427	465	480
ICM25-A	DN25	6	320	418	540	663	720	747
ICM32-A	DN32	9	470	615	789	970	1055	1090
ICM40-A	DN40	15	835	1095	1410	1740	1900	1970
ICM50-A	DN50	23	1435	1880	2430	3000	3270	3400
ICM65-A	DN65	35	2370	3097	3989	4931	5390	5593

Pressure drop across valve Δp bar 1	2	4	8	12	16
Evaporating temperature 0 °C					
7	9.5	12.6	15.9	17.5	18.3
21.1	28.8	38.1	48	53	55.4
122	166	218	274	303	316
201	271	355	443	490	513
312	420	550	687	760	795
448	606	798	998	1100	1155
830	1115	1460	1820	2005	2110
1450	1940	2530	3150	3480	3650
2378	3187	4149	5179	5714	5989
Evaporating temperature -20 °C					
7.5	10.1	13.2	16.3	17.8	18.4
22.7	30.5	39.8	49.3	53.7	55.7
130	174	225	279	305	317
212	280	361	447	490	510
328	435	559	693	760	792
475	630	815	1012	1105	1151
870	1150	1475	1830	2005	2100
1510	1980	2550	3150	3460	3630
2490	3264	4190	5185	5697	5952
Evaporating temperature -40 °C					
7.9	10.4	13.2	16.2	17.5	18
23.6	31.3	40.1	48.8	52.8	54.3
133	174	223	274	298	308
210	275	353	436	475	495
327	428	550	676	740	765
478	626	805	990	1075	1120
860	1120	1440	1780	1940	2020
1480	1930	2480	3070	3350	3500
2443	3178	4078	5041	5520	5743

Expansion

Capacities for nominal conditions, Q_n (TR)

R 22

Type			Pressure drop across valve Δp psi					
			15	30	60	120	180	240
		C_v	**Evaporating temperature 60 °F**					
ICM20-A33	DN20	0.2	1.86	2.55	3.41	4.33	4.8	5.02
ICM20-A	DN20	0.7	5.6	7.7	10.3	13.1	14.5	15.2
ICM20-B	DN20	2.8	32.5	44.6	59.5	75.5	83.6	87.5
ICM20-C	DN20	5.3	54	73.5	97.5	123	136	142
ICM25-A	DN25	7	83.2	114	151	190	210	220
ICM32-A	DN32	10	120	164	218	275	305	320
ICM40-A	DN40	17	223	303	400	505	560	585
ICM50-A	DN50	27	388	528	695	878	970	1015
ICM65-A	DN65	41	638	868	1144	1439	1590	1665
			Evaporating temperature 20 °F					
ICM20-A33	DN20	0.2	2.07	2.8	3.68	4.6	5.03	5.23
ICM20-A	DN20	0.7	6.3	8.5	11.2	13.9	15.2	15.9
ICM20-B	DN20	2.8	36	48.7	63.6	79	87	90.6
ICM20-C	DN20	5.3	59.5	79.5	103	128	140	146
ICM25-A	DN25	7	92	123	160	198	218	227
ICM32-A	DN32	10	133	178	232	289	317	329
ICM40-A	DN40	17	245	326	423	525	575	600
ICM50-A	DN50	27	427	565	730	905	995	1038
ICM65-A	DN65	41	700	930	1201	1489	1637	1709
			Evaporating temperature -20 °F					
ICM20-A33	DN20	0.2	2.21	2.95	3.8	4.65	5.05	5.19
ICM20-A	DN20	0.7	6.7	8.9	11.5	14.1	15.2	15.7
ICM20-B	DN20	2.8	37.9	50.3	64.5	79.2	86.2	89.1
ICM20-C	DN20	5.3	61.3	80.1	103	127	138	144
ICM25-A	DN25	7	95	125	160	197	215	223
ICM32-A	DN32	10	138	182	233	287	314	325
ICM40-A	DN40	17	251	329	421	518	567	590
ICM50-A	DN50	27	435	565	725	895	980	1020
ICM65-A	DN65	41	714	932	1192	1470	1608	1672
			Evaporating temperature -60 °F					
ICM20-A33	DN20	0.2	2.27	2.98	3.78	4.53	4.86	4.96
ICM20-A	DN20	0.7	6.9	9	11.4	13.7	14.7	15
ICM20-B	DN20	2.8	37.7	49.5	63	76.8	83	85
ICM20-C	DN20	5.3	59	77	99	122	132	136
ICM25-A	DN25	7	92	120	154	189	205	212
ICM32-A	DN32	10	135	177	227	276	300	309
ICM40-A	DN40	17	240	314	403	498	540	560
ICM50-A	DN50	27	412	540	695	855	935	965
ICM65-A	DN65	41	679	888	1143	1408	1534	1586

Pressure drop across valve Δp psi					
15	30	60	120	180	240
Evaporating temperature 40 °F					
1.97	2.96	3.57	4.49	4.95	5.16
6	8.2	10.8	13.6	15	15.6
34.5	47	62	77.8	85.5	89.5
57	77	101	126	139	145
88	119	156	196	216	226
127	172	226	283	313	327
236	317	415	517	570	596
410	550	720	895	990	1035
674	906	1182	1475	1624	1698
Evaporating temperature 0 °F					
2.14	2.89	3.76	4.65	5.06	5.24
6.5	8.7	11.4	14.1	15.3	15.9
37.3	49.8	64.5	80	87	90.2
60.7	80.5	104	128	140	146
94	125	161	199	217	226
136	181	234	289	316	329
250	330	424	524	575	599
435	570	730	905	993	1035
714	938	1203	1487	1630	1698
Evaporating temperature -40 °F					
2.25	2.98	3.81	4.61	4.97	5.1
6.8	9	11.5	13.9	15	15.4
38.1	50.2	64	78.5	85	87.6
60.5	79	101	125	136	140
94	123	157	193	211	218
138	180	231	283	307	318
248	323	413	510	555	575
428	555	710	875	960	995
702	913	1170	1443	1575	1634

ICM 20 / ICAD 600A

Ordering from the parts programme

Example (select from table I, II and III)

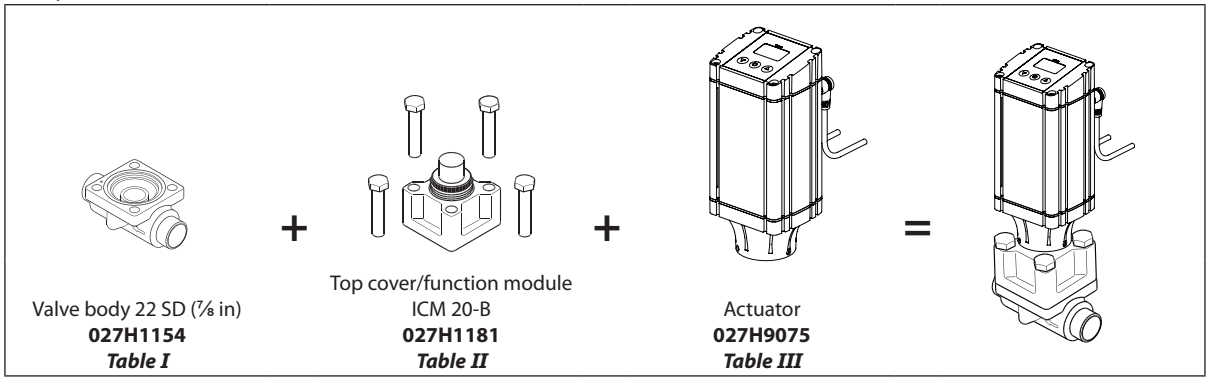

Valve body 22 SD (⅞ in)
027H1154
Table I

Top cover/function module
ICM 20-B
027H1181
Table II

Actuator
027H9075
Table III

ICV 20 valve body w/different connections *Table I*

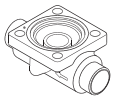

20 D (¾ in)	25 D (1 in)	20 A (¾ in)	20 SOC (¾ in)
027H1145	**027H1163**	**027H1148**	**027H1151**

16 SA (⅝ in)	22 SA (⅞ in)	16 SD (⅝ in)	22 SD (⅞ in)
027H1129	**027H1160**	**027H1132**	**027H1154**

20 FPT (¾ in)		25 A (1 in)	
027H1157		**027H1166**	

D = Butt-weld DIN ; A = Butt-weld ANSI ; J = Butt-weld JIS ;
SOC = Socket weld ANSI ; SD = Solder DIN ; SA = Solder ANSI ;
FPT = Female Pipe Thread

ICM 20 Function module / top cover *Table II*

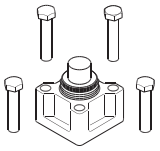

Description	Code Number
ICM 20-A33	**027H1186** *)
ICM 20-A	**027H1180** *)
ICM 20-B66	**027H1194** *)
ICM 20-B	**027H1181** *)
ICM 20-C	**027H1182** *)

*) Including:
Bolts and O-ring (for assembly with ICV valve body)
Seat and O-ring (for seat to be mounted in ICV valve body)

Actuator ICAD 600A *Table III*

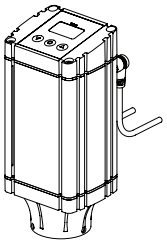

Description	Code Number
ICAD 600A with 1.5 m. (60 in) cables	**027H9075**
ICAD 600A without cables	**027H9120**

Ordering complete factory assembled valve without actuator

(body, function module/top cover) *Table A*

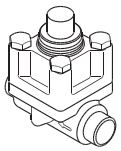

	Available connections								
	20 D (¾ in)	25 D (1 in)	20 A (¾ in)	20 SOC (¾ in)	16 SA (⅝ in)	22 SA (⅞ in)	16 SD (⅝ in)	22 SD (⅞ in)	20 FPT (¾ in)
ICM 20-A	**027H1030**	**027H1020**	**027H1035**	**027H1040**		**027H1050**		**027H1045**	
ICM 20-B	**027H1031**	**027H1021**	**027H1036**	**027H1041**		**027H1051**		**027H1046**	
ICM 20-C	**027H1032**	**027H1022**				**027H1052**		**027H1047**	

	25 A (1 in)
ICM 20-A	
ICM 20-B	
ICM 20-C	**027H1025**

Select from parts programme

ICM 25 / ICAD 600A

Ordering from the parts programme

Example (select from table I, II and III)

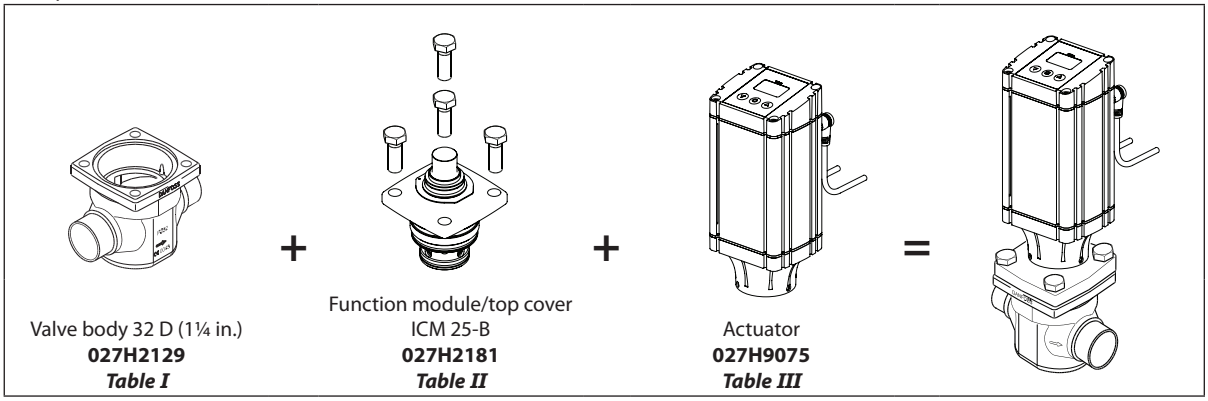

Valve body 32 D (1¼ in.)
027H2129
Table I

Function module/top cover
ICM 25-B
027H2181
Table II

Actuator
027H9075
Table III

ICV 25 valve body w/different connections *Table I*

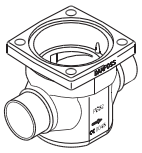

20 D (¾ in.)	25 D (1 in.)	32 D (1¼ in.)	40 D (1½ in.)
027H2128	**027H2120**	**027H2129**	**027H2135**

35 SD (1⅜ in. SA)	28 SA (1⅛ in.)	22 SA (⅞ in.)	28 SD (1⅛ in.)
027H2134	**027H2126**	**027H2125**	**027H2124**

22 SD (⅞ in.)	20 A (¾ in.)	25 A (1 in.)	32 A (1¼ in.)
027H2123	**027H2131**	**027H2121**	**027H2130**

20 SOC (¾ in.)	25 SOC (1 in.)	20 FPT (¾ in.)	25 FPT (1 in.)
027H2132	**027H2122**	**027H2133**	**027H2127**

D = Butt-weld DIN ; A = Butt-weld ANSI ; J = Butt-weld JIS ;
SOC = Socket weld ANSI ; SD = Solder DIN ; SA = Solder ANSI ;
FPT = Female Pipe Thread

ICM 25 Function module / top cover *Table II*

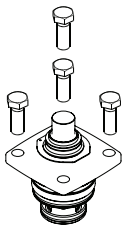

Description	Code Number
ICM 25-A	**027H2180** *)
ICM 25-A33	**027H2190** *)
ICM 25-B	**027H2181** *)

*) Including gasket and O-rings

Actuator ICAD 600A *Table III*

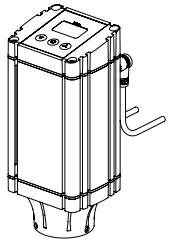

Description	Code Number
ICAD 600A with 1.5 m. (60 in.) cables	**027H9075**
ICAD 600A without cables	**027H9120**

Ordering complete factory assembled valve without actuator

(body, function module/top cover) *Table A*

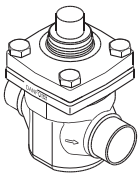

	Available connections							
	20 D (¾ in.)	25 D (1 in.)	32 D (1¼ in.)	40 D (1½ in.)	35 SD (1⅜ in. SA)	28 SA (1⅛ in.)	22 SA (⅞ in.)	28 SD (1⅛ in.)
ICM 25-A		**027H2000**		**027H2016**	**027H2014**	**027H2012**	**027H2010**	**027H2008**
ICM 25-B		**027H2001**			**027H2015**	**027H2013**	**027H2011**	**027H2009**

	22 SD (⅞ in.)	20 A (¾ in.)	25 A (1 in.)	32 A (1¼ in.)	20 SOC (¾ in.)	25 SOC (1 in.)	20 FPT (¾ in.)	25 FPT (1 in.)
ICM 25-A	**027H2006**		**027H2002**			**027H2004**		
ICM 25-B	**027H2007**		**027H2003**			**027H2005**		

Select from parts programme

ICM 32 / ICAD 600A

Ordering from the parts programme

Example (select from table I, II and III)

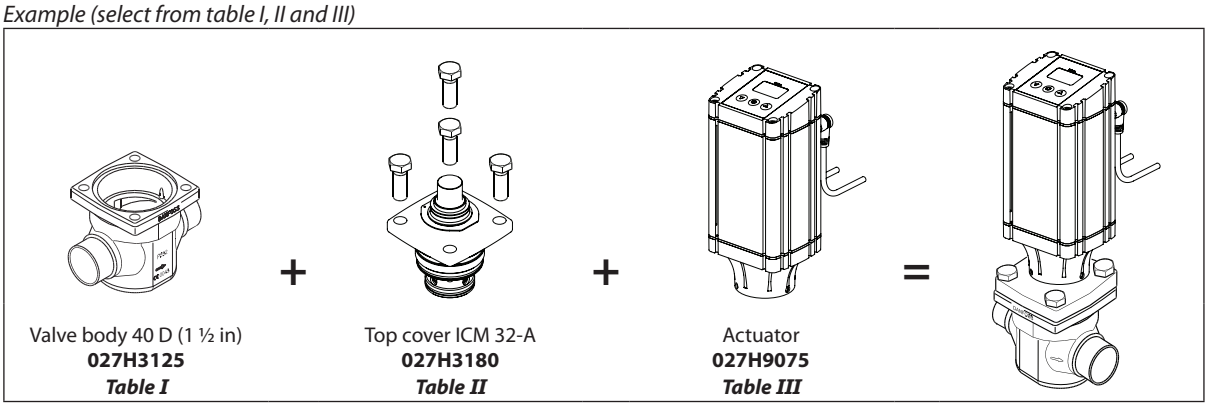

Valve body 40 D (1 ½ in)
027H3125
Table I

Top cover ICM 32-A
027H3180
Table II

Actuator
027H9075
Table III

ICV 32 valve body w/different connections *Table I*

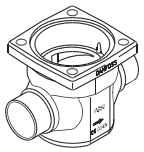

32 D (1 ¼ in)	40 D (1 ½ in)	42 SA (1 ⅝ in)	42 SD (1 ⅝ in)
027H3120	**027H3125**	**027H3127**	**027H3128**

35 SD (1 ⅜ in SA)	32 A (1 ¼ in)	32 SOC (1 ¼ in)	40 A (1 ½ in)
027H3123	**027H3121**	**027H3122**	**027H3126**

D = Butt-weld DIN ; A = Butt-weld ANSI ; J = Butt-weld JIS ;
SOC = Socket weld ANSI ; SD = Solder DIN ; SA = Solder ANSI ;
FPT = Female Pipe Thread

ICM 32 Function module / top cover *Table II*

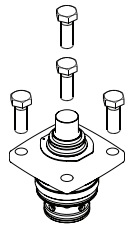

Description	Code Number
ICM 32-A	**027H3180** *)
ICM 32-B	**027H3181** *)

*) Including gasket and O-rings

Actuator ICAD 600A *Table III*

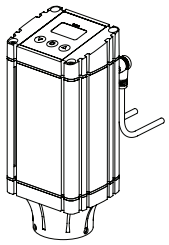

Description	Code Number
ICAD 600A with 1.5 m. (60 in) cables	**027H9075**
ICAD 600A without cables	**027H9120**

Ordering complete factory assembled valve without actuator

(body, function module / top cover) *Table A*

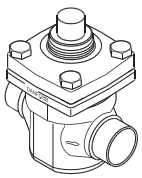

	Available connections							
	32 D (1 ¼ in)	40 D (1 ½ in)	42 SA (1 ⅝ in)	42 SD (1 ⅝ in)	35 SD (1 ⅜ in SA)	32 A (1 ¼ in)	32 SOC (1 ¼ in)	40 A (1 ½ in)
ICM 32-A	**027H3000**	**027H3012**	**027H3008**		**027H3006**	**027H3002**	**027H3004**	
ICM 32-B	**027H3001**				**027H3007**	**027H3003**	**027H3005**	

Select from parts programme

ICM 40 / ICAD 1200A

Ordering from the parts programme

Example (select from table I, II and III)

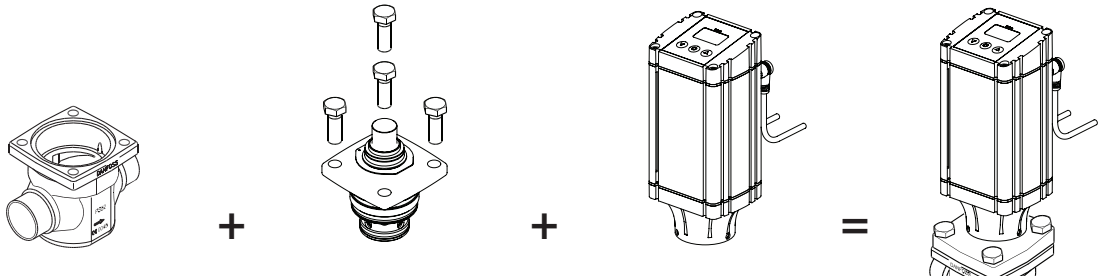

Valve body A 40 (1½ in)
027H4121
Table I

Top cover ICM 40-A
027H4180
Table II

Actuator
027H9077
Table III

ICV 40 valve body w/different connections *Table I*

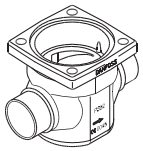

40 D (1 ½ in)	50 D (2 in)	42 SA (1 ⅝ in)	42 SD (1 ⅝ in)
027H4120	**027H4126**	**027H4124**	**027H4123**

40 A (1 ½ in)	40 SOC (1 ½ in)	50 A (2 in)	
027H4121	**027H4122**	**027H4127**	

D = Butt-weld DIN ; A = Butt-weld ANSI ; J = Butt-weld JIS ;
SOC = Socket weld ANSI ; SD = Solder DIN ; SA = Solder ANSI ;
FPT = Female Pipe Thread

ICM 40 Function module / top cover *Table II*

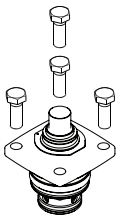

Description	Code Number
ICM 40-A	**027H4180** *)
ICM 40-B	**027H4181** *)

*) Including gasket and O-rings

Actuator ICAD 1200A *Table III*

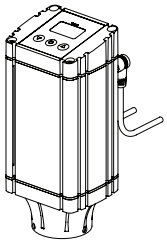

Description	Code Number
ICAD 1200A with 1.5 m. (60 in) cables	**027H9077**
ICAD 1200A without cables	**027H9122**

Ordering complete factory assembled valve without actuator

(body, function module/top cover) *Table A*

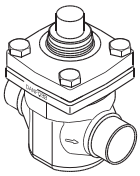

	Available connections						
	40 D (1 ½ in)	50 D (2 in)	42 SA (1 ⅝ in)	42 SD (1 ⅝ in)	40 A (1 ½ in)	40 SOC (1 ½ in)	50 A (2 in)
ICM 40-A	**027H4000**	**027H4010**	**027H4006**	**027H4008**	**027H4002**	**027H4004**	
ICM 40-B	**027H4001**		**027H4007**	**027H4009**	**027H4003**	**027H4005**	

Select from parts programme

ICM 50 / ICAD 1200A

Ordering from the parts programme

Example (select from table I, II and III)

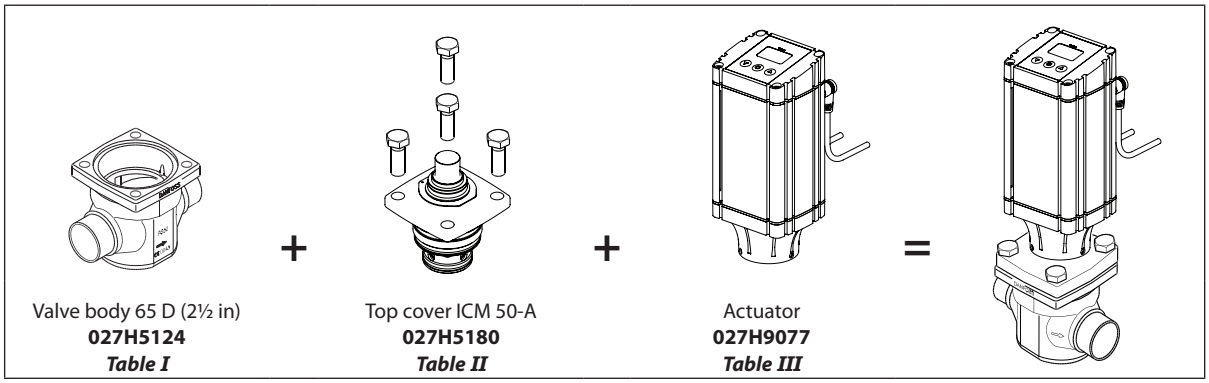

Valve body 65 D (2½ in)
027H5124
Table I

Top cover ICM 50-A
027H5180
Table II

Actuator
027H9077
Table III

ICV 50 valve body w/different connections *Table I*

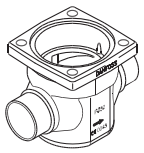

50 D (2 in)	65 D (2 ½ in)	54 SD (2 ⅛ in SA)	50 A (2 in)
027H5120	**027H5124**	**027H5123**	**027H5121**

50 SOC (2 in)	65 A (2 ½ in)		
027H5122	**027H5125**		

D = Butt-weld DIN ; A = Butt-weld ANSI ; J = Butt-weld JIS ;
SOC = Socket weld ANSI ; SD = Solder DIN ; SA = Solder ANSI ;
FPT = Female Pipe Thread

ICM 50 Function module / top cover *Table II*

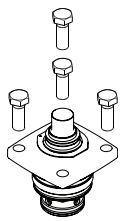

Description	Code Number
ICM 50-A	**027H5180** *)
ICM 50-B	**027H5181** *)

*) Including gasket and O-rings

Actuator ICAD 1200A *Table III*

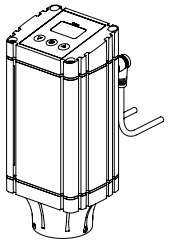

Description	Code Number
ICAD 1200A with 1.5 m. (60 in) cables	**027H9077**
ICAD 1200A without cables	**027H9122**

Ordering complete factory assembled valve without actuator

(body, function module/top cover) *Table A*

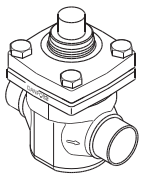

	Available connections					
	50 D (2 in)	65 D (2 ½ in)	54 SD (2 ⅛ in SA)	50 A (2 in)	50 SOC (2 in)	65 A (2 ½ in)
ICM 50-A	**027H5000**	**027H5008**	**027H5006**	**027H5002**	**027H5004**	
ICM 50-B	**027H5001**		**027H5007**	**027H5003**	**027H5005**	

Select from parts programme

ICM 65 / ICAD 1200A

Ordering from the parts programme

Example (select from table I, II and III)

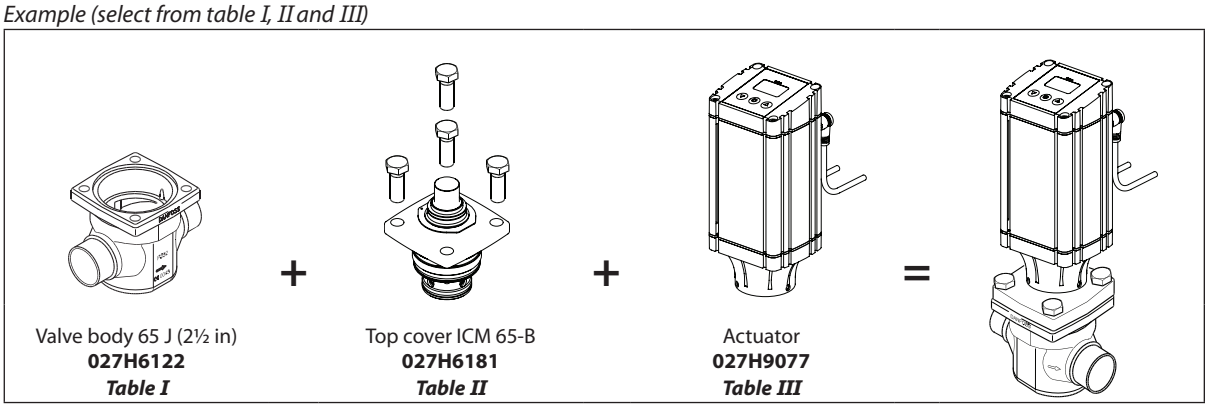

Valve body 65 J (2½ in)
027H6122
Table I

Top cover ICM 65-B
027H6181
Table II

Actuator
027H9077
Table III

ICV 65 valve body w/different connections *Table I*

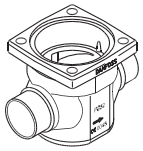

65 D (2 ½ in)	65 A (2 ½ in)	65 J (2 ½ in)	80 D (3 in)
027H6120	**027H6121**	**027H6122**	**027H6126**

80 A (3 in)	67 SA (2 ⅝ in)	76 SD (3 in)	65 SOC (2 ½ in)
027H6127	**027H6125**	**027H6124**	**027H6123**

D = Butt-weld DIN ; A = Butt-weld ANSI ; J = Butt-weld JIS ;
SOC = Socket weld ANSI ; SD = Solder DIN ; SA = Solder ANSI ;
FPT = Female Pipe Thread

ICM 65 Function module / top cover *Table II*

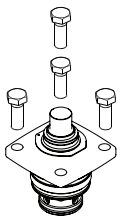

Description	Code Number
ICM 65-A	**027H6180 *)**
ICM 65-B	**027H6181** *)

*) Including gasket and O-rings

Actuator ICAD 1200A *Table III*

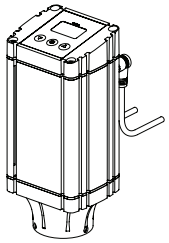

Description	Code Number
ICAD 1200A with 1.5 m. (60 in) cables	**027H9077**
ICAD 1200A without cables	**027H9122**

Ordering complete factory assembled valve without actuator

(body, function module/top cover)

Table A

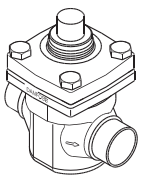

	Available connections							
	65 D (2 ½ in)	65 A (2 ½ in)	65 J (2 ½ in)	80 D (3 in)	80 A (3 in)	67 SA (2 ⅝ in)	76 SD (3 in)	65 SOC (2 ½ in)
ICM 65-A	**027H6010**	**027H6012**						
ICM 65-B	**027H6001**	**027H6003**				**027H6007**	**027H6009**	**027H6005**

Select from parts programme

ICM 100

Complete factory assembled valve without actuator
(body, function module / top cover)

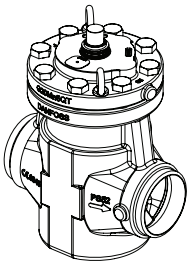

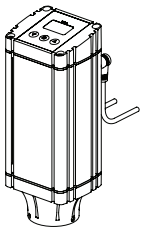

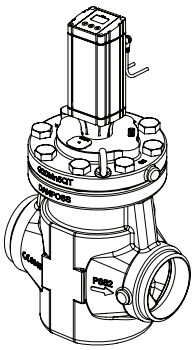

	Available connections		ICAD 1200A with 1.5 m. (60 in) cables	ICAD 1200A without cable
	100 D (4 in)	100 A (4 in)	**027H9077**	**027H9122**
ICM 100	**027H7130**	**027H7131**		

ICM 125

Complete factory assembled valve without actuator
(body, function module / top cover)

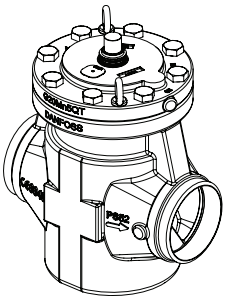

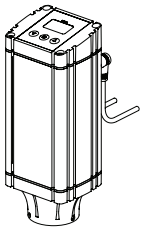

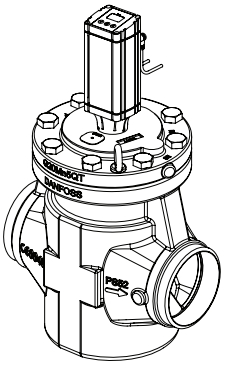

	Available connections		ICAD 1200A with 1.5 m. (60 in) cables	ICAD 1200A without cable
	125 D (5 in)	125 A (5 in)	**027H9077**	**027H9122**
ICM 125	**027H7150**	**027H7151**		

ICM 150

Complete factory assembled valve without actuator
(body, function module / top cover)

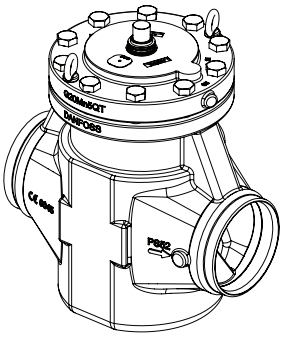

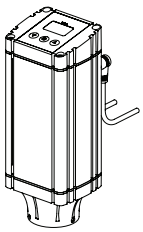

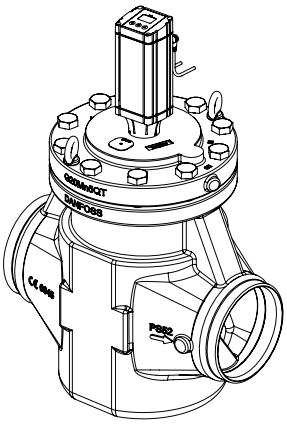

	Available connections		ICAD 1200A with 1.5 m. (60 in) cables	ICAD 1200A without cable
	150 D (6 in)	150 A (6 in)	**027H9077**	**027H9122**
ICM 150	**027H7170**	**027H7171**		

Spare parts and accessories

ICV PM flanged valve housings
ICV PM flanged valve housings can replace the PM valves on already installed refrigeration systems.

Pressure range
The ICV PM valve housing is designed for a max. working pressure of 28 bar g (406 psig) and therefore a suitable replacement for PM valves in the service market. They also offer the same drop-in dimensions as the PM valves.

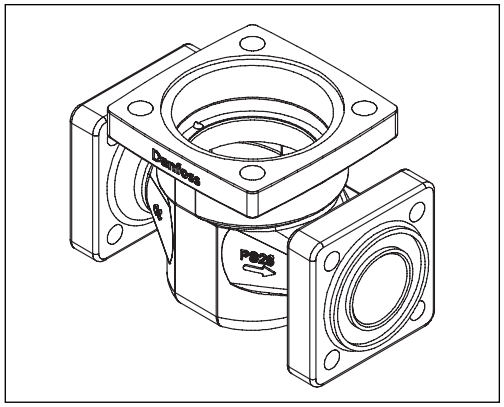

Description	Code no.
ICV 25 PM Valve housing	**027H2119** *)
ICV 32 PM Valve housing	**027H3129** *)
ICV 40 PM Valve housing	**027H4128** *)
ICV 50 PM Valve housing	**027H5127** **)
ICV 65 PM Valve housing	**027H6128** **)

Function modules and top covers must be ordered separately (see the section "Ordering").

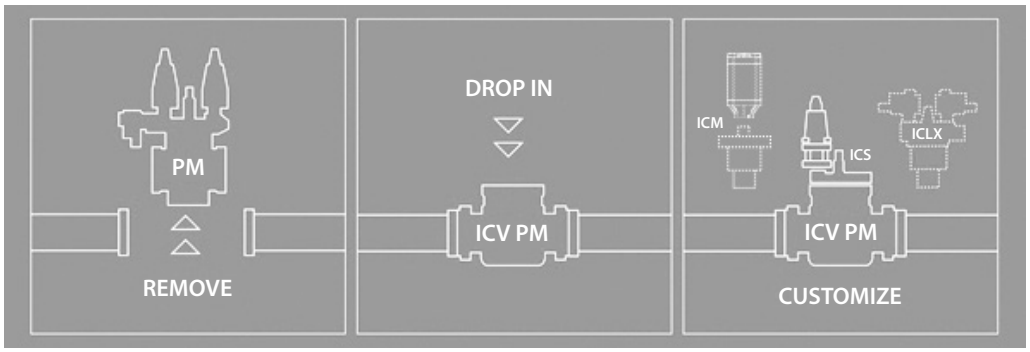

ICV (H)A4A flanged valve housings
ICV (H)A4A flanged valve housings can replace the (H)A4A valves on already installed refrigeration systems.

The ICV (H)A4A flanged valve housing provides an upgrade of the old motor valve types HMMR and HMMV to ICM motorized valve as a drop-in solution.

Pressure range
The ICV (H)A4A valve housing is designed for a max. working pressure of 28 bar g (406 psig) and therefore a suitable replacement for (H)A4A valves in the service market. They also offer the same drop-in dimensions as the (H)A4A valves.

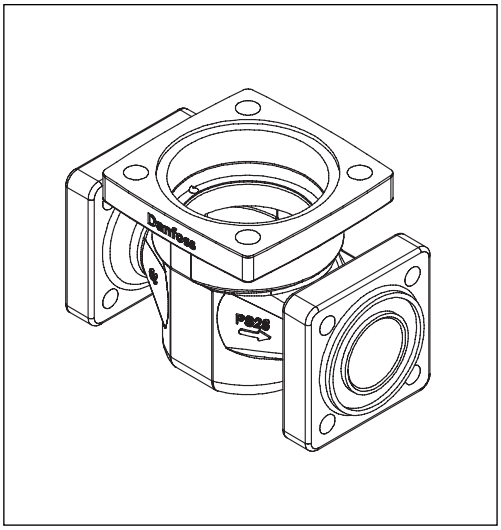

Description	Code no.
ICV 25 (H)A4A Valve housing	**027H2304** *)
ICV 32 A4A Valve housing	**027H3130** *)
ICV 32 HA4A Valve housing	**027H3131** *)
ICV 40 (H)A4A Valve housing	**027H4129** *)
ICV 50 (H)A4A Valve housing	**027H5128** **)
ICV 65 (H)A4A Valve housing	**027H6129** **)

Function modules and top covers must be ordered separately (see the section "Ordering").

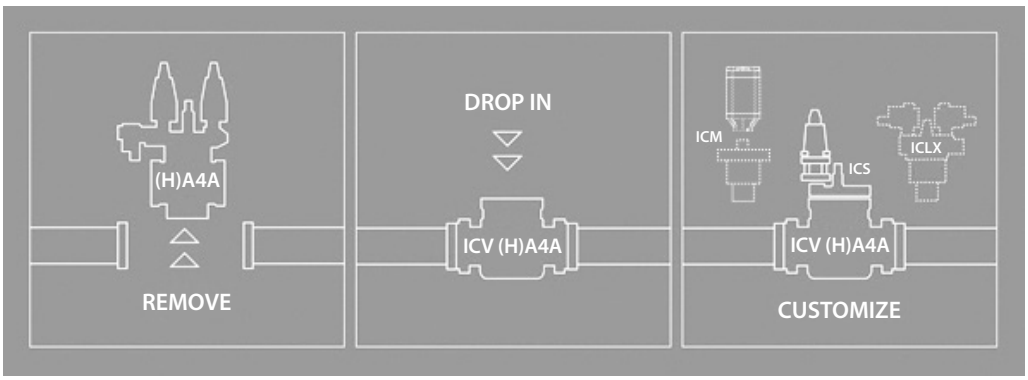

*) Includes ICV PM valve housing, flange gaskets and flange bolts.
**) Includes ICV PM valve housing, flange gaskets, flange bolts and flange nuts.

ICM 20 / ICAD 600A

Spare parts and accessories

Spare parts

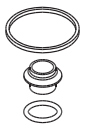

Description	Code Number
Repair kit ICM 20-A / ICM 20-A-33 (Metal with plastic seat) ICM 20-B / ICM 20-C (Plastic seat)	**027H1190**

Accessories

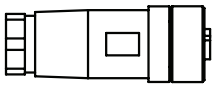

Connectors for ICAD 600A/1200A	
Connector type	**Code number**
Two Female Connectors with screw terminals: - connector for power - connector for control signals	**027H0430**

Accessories



Description	Code Number
ICAD-UPS	**027H0182**

Accessories



Description	Code Number
Multi-function tool	**027H0180**

Accessories

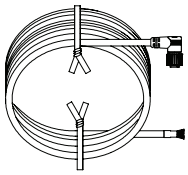

Cable for ICAD 600A/1200A	
Cable length	**Code number**
Cable set 1.5 m, female	**027H0426**
Cable set 3 m, female	**027H0438**
Cable set 10 m, female	**027H0427**
Cable set 15 m, female	**027H0435**

Accessories

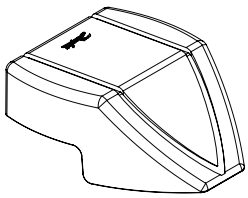

Protection cap ICAD 600A/1200A	
Description	**Code number**
Protection cap	**027H0431**

Please observe, when used in CO_2, that the o-rings on the ICM module can swell (grow). At service it is recommend that new o-rings are installed before the ICM functions module again is installed in the ICV valve body.

ICM 25-32 / ICAD 600A

Spare parts and accessories

Spare parts

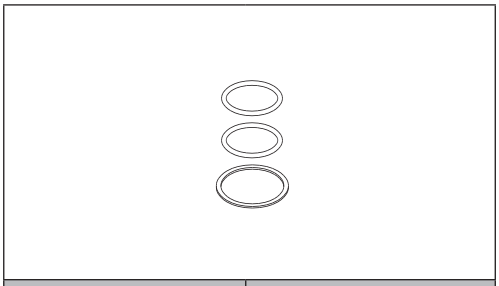

Description	Code Number
ICM 25 Inspection kit	**027H2218**
ICM 32 Inspection kit	**027H3016**

Accessories

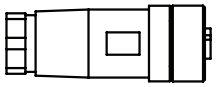

Connectors for ICAD 600A/1200A	
Connector type	**Code number**
Two Female Connectors with screw terminals: - connector for power - connector for control signals	**027H0430**

Accessories



Description	Code Number
ICAD-UPS	**027H0182**

Accessories



Description	Code Number
Multi-function tool	**027H0180**

Accessories

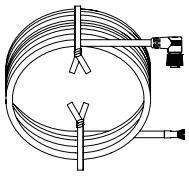

Cable for ICAD 600A/1200A	
Cable length	**Code number**
Cable set 1.5 m, female	**027H0426**
Cable set 3 m, female	**027H0438**
Cable set 10 m, female	**027H0427**
Cable set 15 m, female	**027H0435**

Accessories

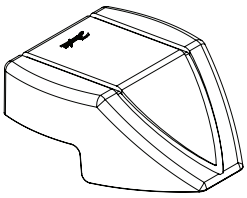

Protection cap ICAD 600A/1200A	
Description	**Code number**
Protection cap	**027H0431**

Please observe, when used in CO_2, that the o-rings on the ICM module can swell (grow). At service it is recommend that new o-rings are installed before the ICM functions module again is installed in the ICV valve body.

ICM 40-50-65 / ICAD 1200A

Spare parts and accessories

Spare parts

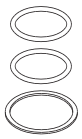

Description	Code Number
ICM 40 Inspection kit	**027H4014**
ICM 50 Inspection kit	**027H5014**
ICM 65 Inspection kit	**027H6016**

Accessories

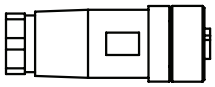

Connectors for ICAD 600A/1200A	
Connector type	**Code number**
Two Female Connectors with screw terminals: - connector for power - connector for control signals	**027H0430**

Accessories



Description	Code Number
ICAD-UPS	**027H0182**

Accessories



Description	Code Number
Multi-function tool	**027H0181**

Accessories

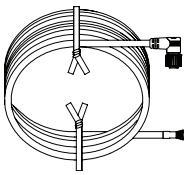

Cable for ICAD 600A/1200A	
Cable length	**Code number**
Cable set 1.5 m, female	**027H0426**
Cable set 3 m, female	**027H0438**
Cable set 10 m, female	**027H0427**
Cable set 15 m, female	**027H0435**

Accessories

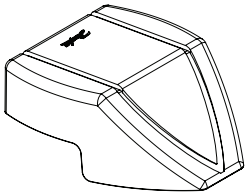

Protection cap ICAD 600A/1200A	
Description	**Code number**
Protection cap	**027H0431**

Please observe, when used in CO_2, that the o-rings on the ICM module can swell (grow). At service it is recommend that new o-rings are installed before the ICM functions module again is installed in the ICV valve body.

ICM 100-125-150 / ICAD 1200A

Spare parts and accessories

Accessories

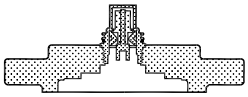

Top covers		
Consist of: Top cover complete with magnet coupling and gasket	Size	**Code number**
	ICM 100	**027H7133**
	ICM 125	**027H7153**
	ICM 150	**027H7173**



ICAD-UPS
Code Number
027H0182

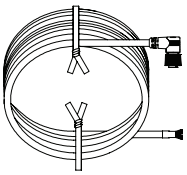

Cable for ICAD 600A/1200A	
Cable length	**Code number**
Cable set 1.5 m, female	**027H0426**
Cable set 3 m, female	**027H0438**
Cable set 10 m, female	**027H0427**
Cable set 15 m, female	**027H0435**

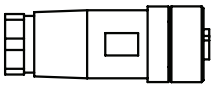

Connectors for ICAD 600A/1200A	
Connector type	**Code number**
Two Female Connectors with screw terminals: - connector for power - connector for control signals	**027H0430**

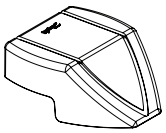

Description	Code number
Protection cap ICAD 600A/1200A	**027H0431**



Description	Code Number
Multi-function tool	**027H0181**

Spare parts

Please see AI245486497115

ICM 20 / ICAD 600A

Dimensions

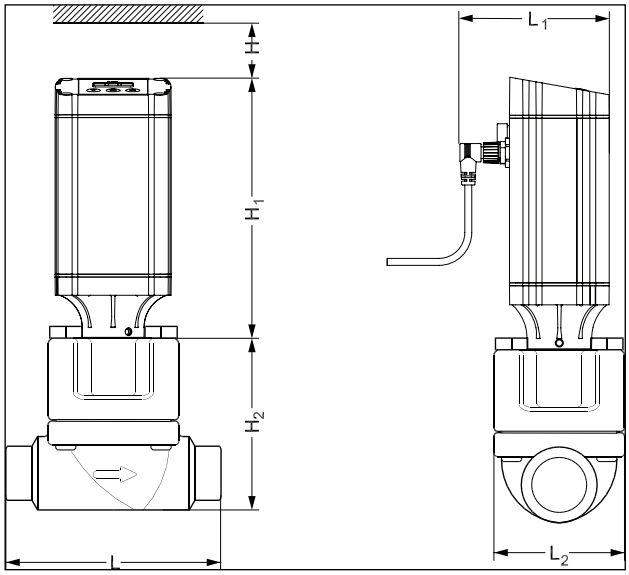

Connection		H	H_1	H_2	L	L_1	L_2	Weight ICM incl. ICAD
20 D (¾ in)	[mm]	40	195	85	107	102	65	3 kg
	[in]	1.58	7.68	3.35	4.21	4.02	2.56	6.6 lb.
25 D (1 in)	[mm]	40	195	85	107	102	65	3 kg
	[in]	1.58	7.68	3.35	4.21	4.02	2.56	6.6 lb.
25 A (1 in)	[mm]	40	195	85	107	102	65	3 kg
	[in]	1.58	7.68	3.35	4.21	4.02	2.56	6.6 lb.
20 A (¾ in)	[mm]	40	195	85	107	102	65	3 kg
	[in]	1.58	7.68	3.35	4.21	4.02	2.56	6.6 lb.
20 SOC (¾ in)	[mm]	40	195	85	107	102	65	3 kg
	[in]	1.58	7.68	3.35	4.21	4.02	2.56	6.6 lb.
16 SD (⅝ in)	[mm]	40	195	85	107	102	65	3 kg
	[in]	1.58	7.68	3.35	4.21	4.02	2.56	6.6 lb.
22 SD (⅞ in)	[mm]	40	195	85	107	102	65	3 kg
	[in]	1.58	7.68	3.35	4.21	4.02	2.56	6.6 lb.
16 SA (⅝ in)	[mm]	40	195	85	107	102	65	3 kg
	[in]	1.58	7.68	3.35	4.21	4.02	2.56	6.6 lb.
22 SA (⅞ in)	[mm]	40	195	85	107	102	65	3 kg
	[in]	1.58	7.68	3.35	4.21	4.02	2.56	6.6 lb.
20 FPT (¾ in)	[mm]	40	195	85	107	102	65	3 kg
	[in]	1.58	7.68	3.35	4.21	4.02	2.56	6.6 lb.

D = Butt-weld DIN ; A = Butt-weld ANSI ; SOC = Socket weld ANSI ; SD = Solder DIN ; SA = Solder ANSI ; FPT = Female Pipe Thread

ICM 25 / ICAD 600A

Dimensions *(continued)*

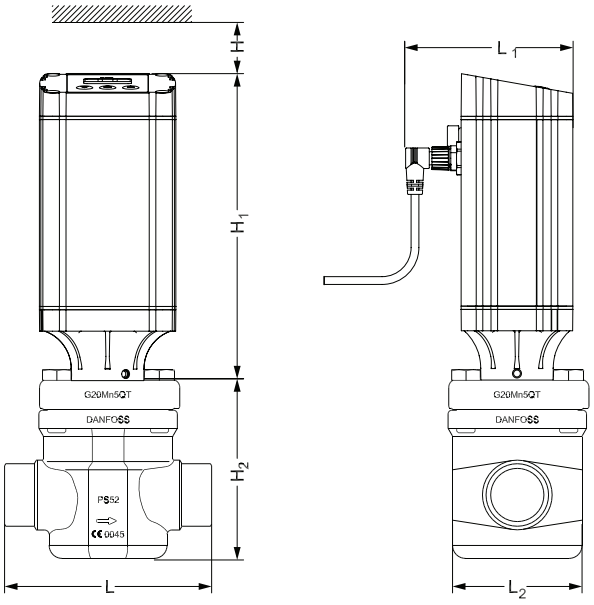

Connection		H	H_1	H_2	L	L_1	L_2	Weight ICM incl. ICAD
20 D (¾ in)	[mm]	40	195	99	135	102	84	4.1 kg
	[in]	1.58	7.68	3.90	5.31	4.02	3.31	8.8 lb.
25 D (1 in)	[mm]	40	195	99	135	102	84	4.1 kg
	[in]	1.58	7.68	3.90	5.31	4.02	3.31	8.8 lb.
32 D (1 ¼ in)	[mm]	40	195	99	135	102	84	4.1 kg
	[in]	1.58	7.68	3.90	5.31	4.02	3.31	8.8 lb.
40 D (1½ in)	[mm]	40	195	99	135	102	84	4.1 kg
	[in]	1.58	7.68	3.90	5.31	4.02	3.31	8.8 lb.
20 A (¾ in)	[mm]	40	195	99	135	102	84	4.1 kg
	[in]	1.58	7.68	3.90	5.31	4.02	3.31	8.8 lb.
25 A (1 in)	[mm]	40	195	99	135	102	84	4.1 kg
	[in]	1.58	7.68	3.90	5.31	4.02	3.31	8.8 lb.
32 A (1 ¼ in)	[mm]	40	195	99	135	102	84	4.1 kg
	[in]	1.58	7.68	3.90	5.31	4.02	3.31	8.8 lb.
20 SOC (¾ in)	[mm]	40	195	99	135	102	84	4.1 kg
	[in]	1.58	7.68	3.90	5.31	4.02	3.31	8.8 lb.
25 SOC (1 in)	[mm]	40	195	99	148	102	84	4.1 kg
	[in]	1.58	7.68	3.90	5.83	4.02	3.31	8.8 lb.
22 SD (⅞ in)	[mm]	40	195	99	135	102	84	4.1 kg
	[in]	1.58	7.68	3.90	5.31	4.02	3.31	8.8 lb.
28 SD (1 ⅛ in)	[mm]	40	195	99	147	102	84	4.1 kg
	[in]	1.58	7.68	3.90	5.79	4.02	3.31	8.8 lb.
22 SA (⅞ in)	[mm]	40	195	99	135	102	84	4.1 kg
	[in]	1.58	7.68	3.90	5.31	4.02	3.31	8.8 lb.
28 SA (1 ⅛ in)	[mm]	40	195	99	147	102	84	4.1 kg
	[in]	1.58	7.68	3.90	5.79	4.02	3.31	8.8 lb.
35 SD (1 ⅜ in SA)	[mm]	40	195	99	147	102	84	4.1 kg
	[in]	1.58	7.68	3.90	5.79	4.02	3.31	8.8 lb.
20 FPT (¾ in)	[mm]	40	195	99	135	102	84	4.1 kg
	[in]	1.58	7.68	3.90	5.31	4.02	3.31	8.8 lb.
25 FPT (1 in)	[mm]	40	195	99	135	102	84	4.1 kg
	[in]	1.58	7.68	3.90	5.31	4.02	3.31	8.8 lb.

D = Butt-weld DIN ; A = Butt-weld ANSI ; SOC = Socket weld ANSI ; SD = Solder DIN ; SA = Solder ANSI ; FPT = Female Pipe Thread

ICM 32 / ICAD 600A

Dimensions *(continued)*

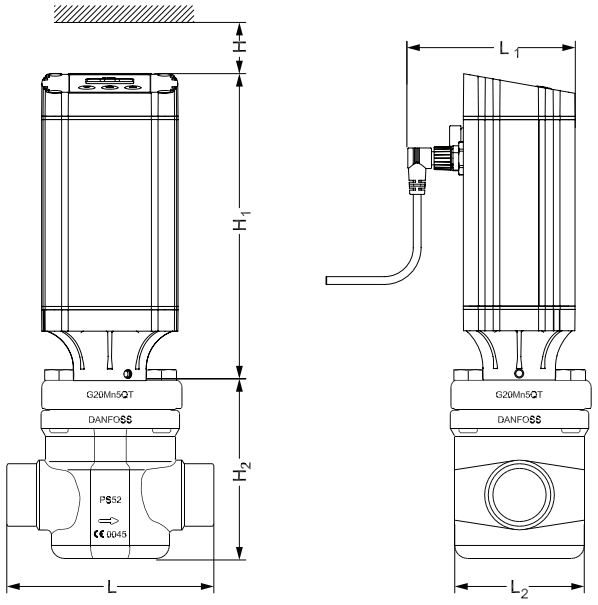

Connection		H	H_1	H_2	L	L_1	L_2	Weight ICM incl. ICAD
32 D (1 ¼ in)	[mm]	40	195	117	145	102	102	5.8 kg
	[in]	1.58	7.68	4.61	5.71	4.02	4.02	11.0 lb.
40 D (1 ½ in)	[mm]	40	195	117	145	102	102	5.8 kg
	[in]	1.58	7.68	4.61	5.71	4.02	4.02	11.0 lb.
32 A (1 ¼ in)	[mm]	40	195	117	145	102	102	5.8 kg
	[in]	1.58	7.68	4.61	5.71	4.02	4.02	11.0 lb.
40 A (1 ½ in)	[mm]	40	195	117	145	102	102	5.8 kg
	[in]	1.58	7.68	4.61	5.71	4.02	4.02	11.0 lb.
32 SOC (1 ¼ in)	[mm]	40	195	117	147	102	102	5.8 kg
	[in]	1.58	7.68	4.61	5.79	4.02	4.02	11.0 lb.
35 SD (1 ⅜ in SA)	[mm]	40	195	117	148	102	102	5.8 kg
	[in]	1.58	7.68	4.61	5.83	4.02	4.02	11.0 lb.
42 SD (1 ⅝ in)	[mm]	40	195	117	148	102	102	5.8 kg
	[in]	1.58	7.68	4.61	5.83	4.02	4.02	11.0 lb.
42 SA (1 ⅝ in)	[mm]	40	195	117	148	102	102	5.8 kg
	[in]	1.58	7.68	4.61	5.83	4.02	4.02	11.0 lb.

D = Butt-weld DIN ; A = Butt-weld ANSI ; SOC = Socket weld ANSI ; SD = Solder DIN ; SA = Solder ANSI

ICM 40 / ICAD 1200A

Dimensions *(continued)*

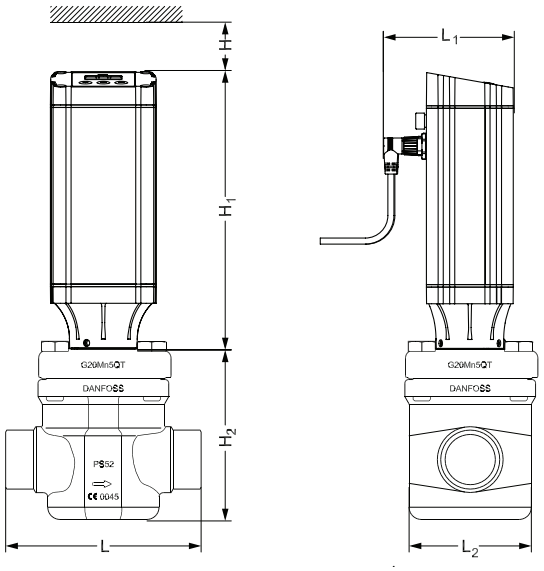

Connection		H	H_1	H_2	L	L_1	L_2	Weight ICM incl. ICAD
40 D (1 ½ in)	[mm]	45	219	131	160	102	107	7.8 kg
	[in]	1.77	8.62	5.16	6.30	4.02	4.21	17.2 lb.
50 D (2 in)	[mm]	45	219	131	180	102	107	7.8 kg
	[in]	1.77	8.62	5.16	7.09	4.02	4.21	17.2 lb.
40 A (1 ½ in)	[mm]	45	219	131	160	102	107	7.8 kg
	[in]	1.77	8.62	5.16	6.30	4.02	4.21	17.2 lb.
50 A (2 in)	[mm]	45	219	131	180	102	107	7.8 kg
	[in]	1.77	8.62	5.16	7.09	4.02	4.21	17.2 lb.
40 SOC (1 ½ in)	[mm]	45	219	131	180	102	107	7.8 kg
	[in]	1.77	8.62	5.16	7.09	4.02	4.21	17.2 lb.
42 SD (1 ⅝ in)	[mm]	45	219	131	180	102	107	7.8 kg
	[in]	1.77	8.62	5.16	7.09	4.02	4.21	17.2 lb.
42 SA (1 ⅝ in)	[mm]	45	219	131	180	102	107	7.8 kg
	[in]	1.77	8.62	5.16	7.09	4.02	4.21	17.2 lb.

D = Butt-weld DIN ; A = Butt-weld ANSI ; SOC = Socket weld ANSI ; SD = Solder DIN ; SA = Solder ANSI

ICM 50 / ICAD 1200A

Dimensions *(continued)*

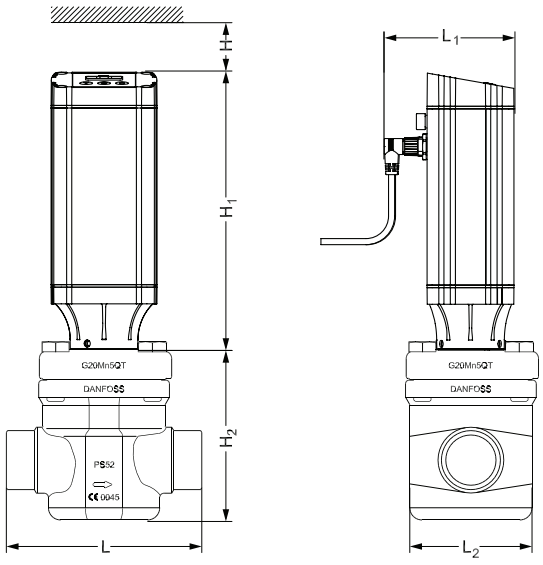

Connection		H	H_1	H_2	L	L_1	L_2	Weight ICM incl. ICAD
50 D (2 in)	[mm]	45	219	159	200	102	125	11.1 kg
	[in]	1.77	8.62	6.26	7.87	4.02	4.92	24.4 lb.
65 D (2 ½ in)	[mm]	45	219	159	210	102	125	11.1 kg
	[in]	1.77	8.62	6.26	8.27	4.02	4.92	24.4 lb.
50 A (2 in)	[mm]	45	219	159	200	102	125	11.1 kg
	[in]	1.77	8.62	6.26	7.87	4.02	4.92	24.4 lb.
65 A (2 ½ in)	[mm]	45	219	159	210	102	125	11.1 kg
	[in]	1.77	8.62	6.26	8.27	4.02	4.92	24.4 lb.
50 SOC (2 in)	[mm]	45	219	159	216	102	125	11.1 kg
	[in]	1.77	8.62	6.26	8.50	4.02	4.92	24.4 lb.
54 SD (2 ⅛ in SA)	[mm]	45	219	159	216	102	125	11.1kg
	[in]	1.77	8.62	6.26	8.50	4.02	4.92	24.4 lb.

D = Butt-weld DIN ; A = Butt-weld ANSI ; SOC = Socket weld ANSI ; SD = Solder DIN

ICM 65 / ICAD 1200A

Dimensions *(continued)*

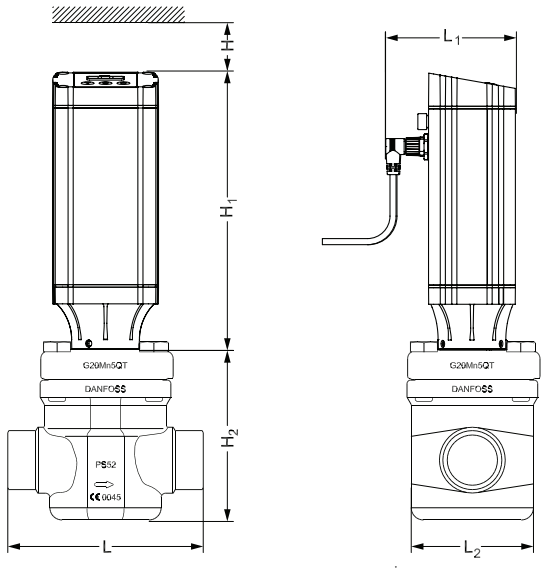

Connection		H	H_1	H_2	L	L_1	L_2	Weight ICM incl. ICAD
65 D (2 ½ in)	[mm]	45	219	188	230	102	139	16.6 kg
	[in]	1.77	8.62	7.40	9.06	4.02	5.47	36.5 lb
80 D (3 in)	[mm]	45	219	188	245	102	139	16.6 kg
	[in]	1.77	8.62	7.40	9.65	4.02	5.47	36.5 lb
65 A (2½ in)	[mm]	45	219	188	230	102	139	16.6 kg
	[in]	1.77	8.62	7.40	9.06	4.02	5.47	36.5 lb
80 A (3 in)	[mm]	45	219	188	245	102	139	16.6 kg
	[in]	1.77	8.62	7.40	9.65	4.02	5.47	36.5 lb
65 J (2 ½ in)	[mm]	45	219	188	230	102	139	16.6 kg
	[in]	1.77	8.62	7.40	9.06	4.02	5.47	36.5 lb
65 SOC (2 ½ in)	[mm]	45	219	188	230	102	139	16.6 kg
	[in]	1.77	8.62	7.40	9.06	4.02	5.47	36.5 lb
76 SD (3 in)	[mm]	45	219	188	245	102	139	16.6 kg
	[in]	1.77	8.62	7.40	9.65	4.02	5.47	36.5 lb
67 SA (2 ⅝ in)	[mm]	45	219	188	245	102	139	16.6 kg
	[in]	1.77	8.62	7.40	9.65	4.02	5.47	36.5 lb

D = Butt-weld DIN ; A = Butt-weld ANSI ; J = Butt-weld JIS ; SOC = Socket weld ANSI ; SD = Solder DIN ; SA = Solder ANSI

ICM 100 / ICAD 1200A

Dimensions *(continued)*

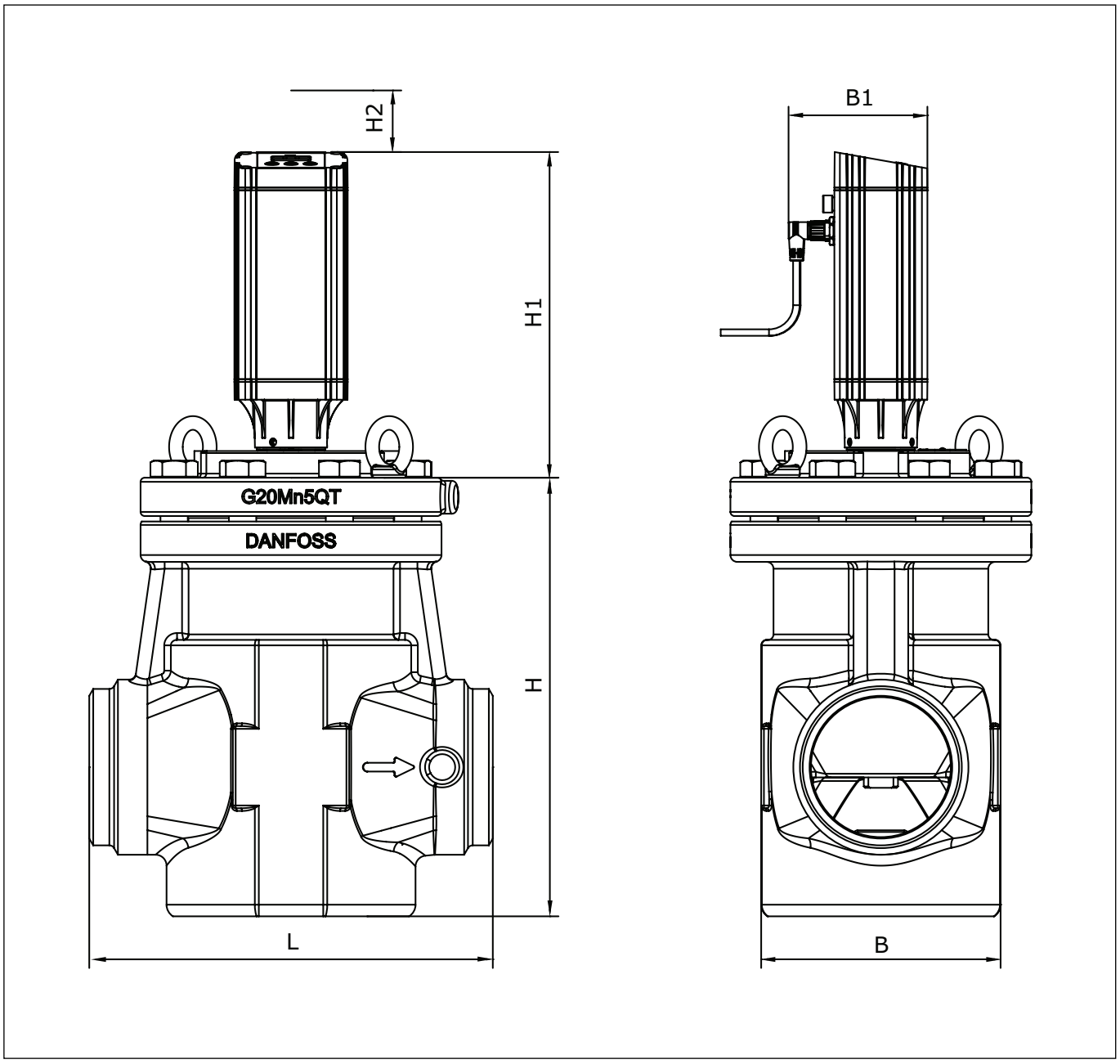

Connection		H	H_1	H_2	L	B	B_1	Weight ICM incl. ICAD
100 D/A (4 in)	[mm]	321	238	45	295	175	102	44 kg.
	[in]	12.64	9.37	1.77	11.61	6.89	4.02	97 lb.

D = Butt-weld DIN ; A = Butt-weld ANSI

ICM 125 / ICAD 1200A

Dimensions *(continued)*

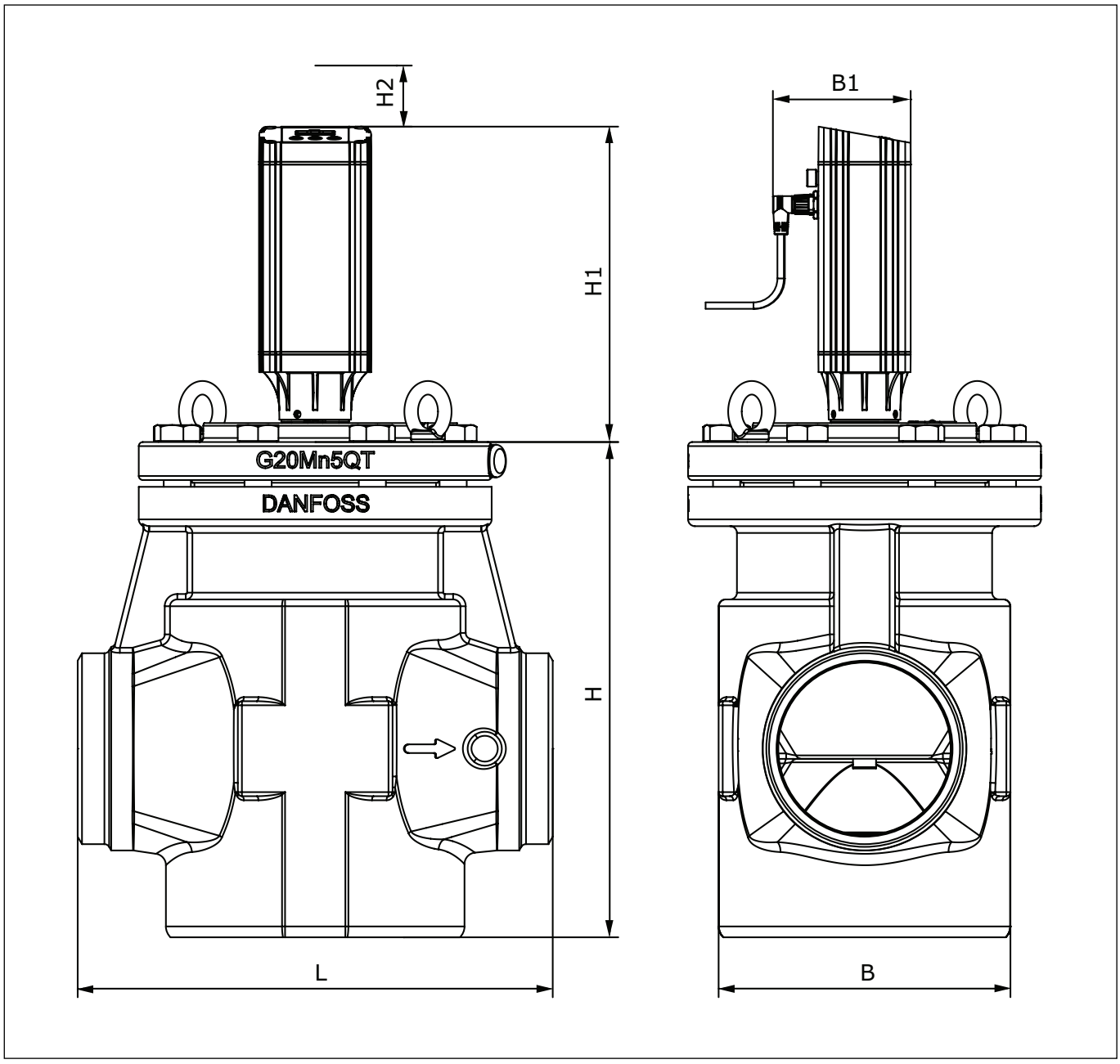

Connection		H	H_1	H_2	L	B	B_1	Weight ICM incl. ICAD
125 D/A (5 in)	[mm]	365	238	45	350	215	102	55 kg
	[in]	14.37	9.37	1.77	13.78	8.47	4.02	121 lb.

D = Butt-weld DIN ; A = Butt-weld ANSI

ICM 150 / ICAD 1200A

Dimensions *(continued)*

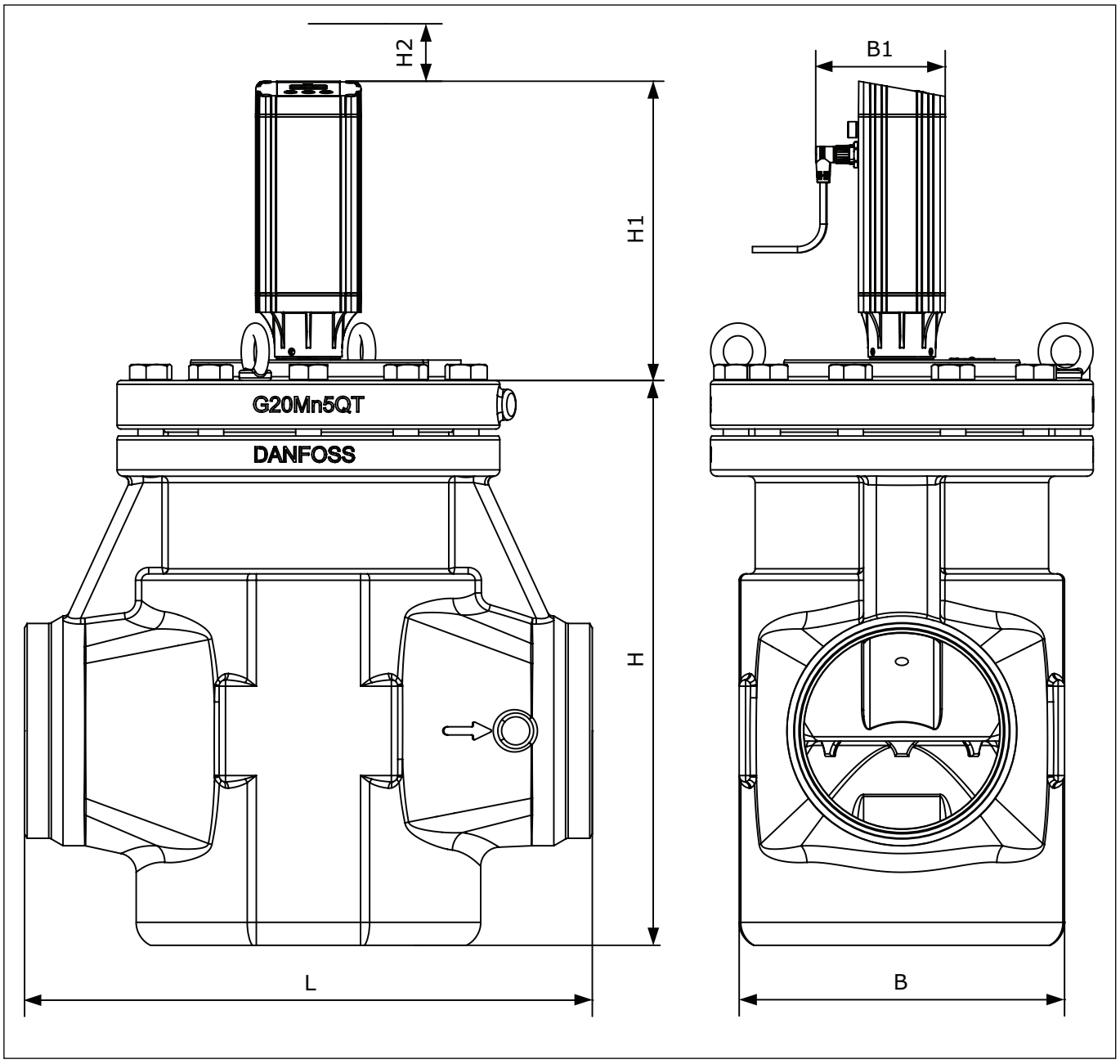

Connection		H	H_1	H_2	L	B	B_1	Weight ICM incl. ICAD
150 D/A (6 in)	[mm]	443	238	45	445	255	102	95 kg
	[in]	17.77	9.37	1.77	17.52	10.04	4.02	209 lb.

D = Butt-weld DIN ; A = Butt-weld ANSI

Connections

D: *Butt-weld DIN (2448)*

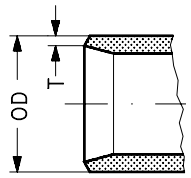

Size [mm]	Size [in]	OD [mm]	T [mm]	OD [in]	T [in]		
20	¾	26.9	2.3	1.059	0.091		
25	1	33.7	2.6	1.327	0.103		
32	1¼	42.4	2.6	1.669	0.102		
40	1½	48.3	2.6	1.902	0.103		
50	2	60.3	2.9	2.37	0.11		
65	2½	76.1	2.9	3	0.11		
80	3	88.9	3.2	3.50	0.13		
100	4	114.3	3.6	4.5	0.14		
125	5	140.7	4	5.5	0.16		
150	6	168.3	6.3	6.6	0.25		

A: *Butt-weld ANSI (B 36.10)*

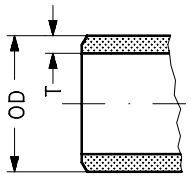

Size [mm]	Size [in]	OD [mm]	T [mm]	OD [in]	T [in]	Schedule	
20	¾	26.9	4.0	1.059	0.158	80	
25	1	33.7	4.6	1.327	0.181	80	
32	1¼	42.4	4.9	1.669	0.193	80	
40	1½	48.3	5.1	1.902	0.201	80	
50	2	60.3	3.9	2.37	0.15	40	
65	2½	73.0	5.2	2.87	0.20	40	
80	3	88.9	5.5	3.50	0.22	40	
100	4	114.3	6	4.5	0.24		
125	5	140.7	6.5	5.5	0.26		
150	6	168.3	7.1	6.6	0.28		

J: *Butt-weld JIS*

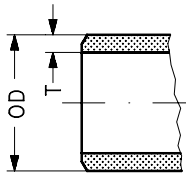

Size [mm]	Size [in]	OD [mm]	T [mm]	OD [in]	T [in]		
20	¾	26.9	4.0	1.059	0.158		
25	1	33.7	4.6	1.327	0.181		
32	1¼	42.4	4.9	1.669	0.193		
40	1½	48.3	5.1	1.902	0.201		
50	2	60.3	3.9	2.37	0.15		
65	2½	76.3	5.2	3.0	0.20		
80	3	88.9	5.5	3.50	0.22		

Connections

SOC:
Socket welding ANSI (B 16.11)

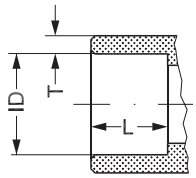

Size mm	Size [in]	ID mm	T mm	ID [in]	T [in]	L mm	L [in]
20	¾	27.2	4.6	1.071	0.181	13	0.51
25	1	33.9	7.2	1.335	0.284	13	0.51
32	1¼	42.7	6.1	1.743	0.240	13	0.51
40	1½	48.8	6.6	1.921	0.260	13	0.51
50	2	61.2	6.2	2.41	0.24	16	0.63
65	2½	74	8.8	2.91	0.344	16	0.63

SD: *Soldering (DIN 2856)*

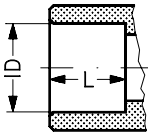

Size mm	Size [in]	ID mm		ID [in]		L mm	L [in]
16		16.07				15	
22		22.08				16.5	
28		28.08				26	
35		35.07				25	
42		42.07				28	
54		54.09				33	
76		76.1				33	

SA: Soldering (ANSI B 16.22)

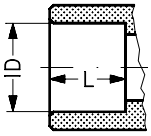

	⅝			0.625			0.591
	⅞			0.875			0.650
	1⅛			1.125			1.024
	1⅜			1.375			0.984
	1⅝			1.625			1.102
	2⅛			2.125			1.300
	2⅝			2.625			1.300

FPT:
Female pipe thread,
(ANSI/ASME B 1.20.1)

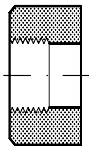

Size mm	Size [in]	Inside pipe thread		
20	¾	(¾ x 14 NPT)		
25	1	(1 x 11.5 NPT)		
32	1¼	(1 ¼ x 11.5 NPT)		

General operation

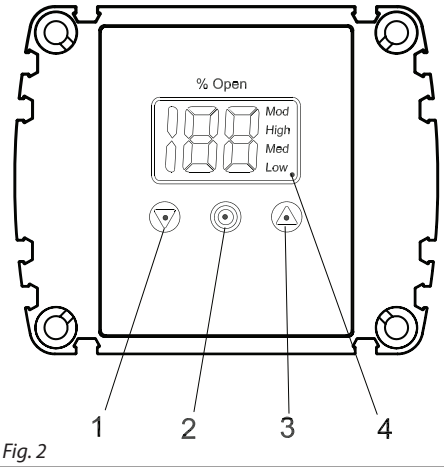

1. "Down" arrow push button
2. Enter
3. "Up" arrow push button
4. Display

Fig. 2

ICAD is equipped with an MMI (Man Machine Interface) from which it is possible to monitor and change the setting of parameters to adapt the ICAD and the corresponding ICM to the actual refrigeration application.

The setting of parameters is managed by means of the integrated ICAD MMI (see fig. 2 and fig. 3) and consists of:

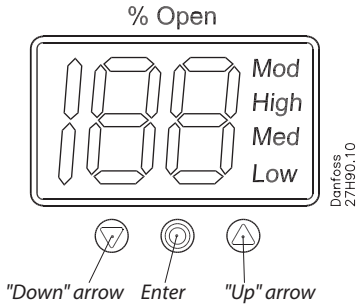

Fig. 3

- "Down" arrow push button (fig. 2, pos. 1)
  - Decreases parameter number by 1 at each activation
- "Up" arrow pushbutton (fig. 2, pos. 3)
  - Increases parameter number by 1 at each activation
- Enter push button (fig. 2, pos. 2)
  - Gives access to the **Parameter list** by keeping the push button activated for 2 seconds. A **Parameter list** example is shown below (parameter **¡08**, fig. 4).

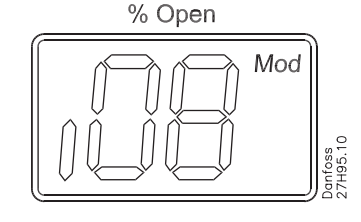

Fig. 4

  - Gives access to change a value once the **Parameter list** has been accessed
  - Acknowledge and save change of value of a parameter.
  - To exit from the **Parameter list** and return to the display of Opening Degree (OD) keep the push button activated for 2 seconds.
- Display (fig. 2, pos. 4)
  - Normally the Opening Degree (OD) 0 – 100% of the ICM valve is displayed. No activation of push buttons for 20 seconds means that the display will always show OD (see fig. 5).

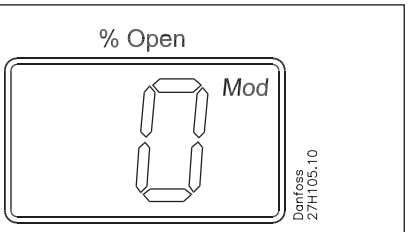

Fig. 5

- Displays the parameter.
- Displays the actual value of a parameter.
- Displays the function status by means of text (fig. 2, pos. 4)
  - ***Mod*** represents that ICAD is positioning the ICM valve according to an analog input signal (Current or Voltage)
  - ***Low*** represents that ICAD is operating the ICM valve like an ON / OFF solenoid valve with low speed according to a digital input signal.
  - ***Med*** represents that ICAD is operating the ICM valve like an ON / OFF solenoid valve with medium speed according to a digital input signal.
  - ***High*** represents that ICAD is operating the ICM valve like an ON / OFF solenoid valve with high speed according to a digital input signal (see fig. 6).

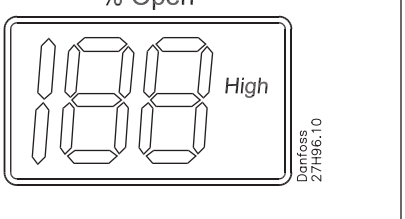

Fig. 6

Alarms

ICAD can handle and display different alarms.

Description	ICAD alarm text	Definition of event	Comments
No Valve type selected	**A1**	Alarm ON	At start-up **A1** will be displayed
Controller fault	**A2**	Alarm ON	Internal fault inside electronics. Carry out: 1) Power OFF and Power ON If A2 still active. 2) Make a Reset to factory setting If A2 still active. Return ICAD to Danfoss
AI input error	**A3**	Alarm ON	Not active if **¡01** = 2, or **¡02** = 2 When **¡03** = 1 and AI A > 22 mA When **¡03** = 2 and AI A > 22 mA or AI A < 2 mA When **¡03** = 3 and AI A > 12 V When **¡03** = 4 and AI A > 12 V or AI A < 1 V
Low voltage of fail safe Supply	**A4**	Alarm ON	If 5 V < fail safe supply <18 V. Enabled by **¡08**
Check supply to ICAD	**A5**	Alarm ON	If supply voltage < 18 V
Calibration extended failed	**A6**	Alarm ON	Check valve type selected. Check presence of foreign body internally in ICM valve
Internal temperature alarm	**A7**	Alarm ON	Temperature for stepper motor component too high.Ventilate / lower ambient ICAD temperature
	A8	Alarm ON	Temperature for stepper motor component too high. Ventilate/lower ambient ICAD temperature.
Valve locked	**A9**	Alarm ON	Only active if i16 = 1 If the valve is locked in more than 15 seconds. ICM stopped and hold position A9 flashing in display A9 alarm can only be reset by Power OFF / ON of ICAD

If an alarm has been detected the ICAD display (fig. 2) will alternate between showing Actual alarm and present Opening Degree.
If more than one alarm is active at the same time the alarm with the highest priority will take preference. **A1** has the highest priority, **A9** the lowest.

Any active alarm will activate the Common Digital Alarm output (Normally Open).
All alarms will automatically reset them-selves when they physically disappear.Old alarms (alarms that have been active, but have physically disappeared again) can be found in parameter **¡11**.

Parameter list - Valid from: (i58:11, i59:36) and onwards



The first parameter to be entered shall be: **¡26**

Description	ICAD parameter	Min	Max	Factory Setting	Stored	Unit	Pass word	Comments
OD (Opening degree)	-	0	100			%	-	ICM / ICMTS valve Opening Degree is displayed during normal operation. Running display value (see **¡01**, **¡05**).
Main Switch	**¡01**	1	2	1	✔	-	No	Internal main switch 1: Normal operation 2: Manual operation. Valve Opening Degree will be flashing. With the down arrow and the up arrow push buttons the OD can be entered manually.
Mode	**¡02**	1	2	1	✔	-	No	Operation mode 1: Modulating – ICM positioning according to Analog Input (see **¡03**) 2: ON / OFF - operating the ICM valve like an ON/OFF solenoid valve controlled via Digital Input. See also **¡09**. 3: Neutralzone / 3 point control. Increase/Decrease Opening Degree by Digital Input. See fig. 9
AI signal	**¡03**	1	4	2	✔	-	No	Type of AI signal from external controller 1: 0 – 20 mA 2: 4 – 20 mA 3: 0 – 10 V 4: 2 – 10 V
Speed In **Modulating Mode** Opening / closing speed In **ON / OFF Mode** Opening speed	**¡04**	1	100	50/ 100	✔	-	No	Speed can be decreased. Max. speed is 100% - Not active in manual operation (**¡01** = 2) If **¡26**= 1 - 3 then factory setting =100 If **¡26**= 4 - 9 then factory setting =50 If ICM is opening and (**¡04** < = 33) or ICM is closing and (**¡14** < = 33) => Low is displayed. If ICM is opening and (33 < If **¡04** < = 66) or ICM is closing and (33 < If **¡14** < = 66) => Med is displayed. If ICM is opening and (**¡04** > = 67) or ICM is closing and (**¡14** > = 67) => High is displayed"
Automatic calibration	**¡05**	0	2	0		-	No	Not active before **¡26** has been operated. Always auto reset to 0. CA will flash in the display during calibration, if Enter push button has been activated for two seconds 0: No Calibration 1: Normal forced calibration - CA flashing slowly 2: Extended calibration – CA flashing rapidly"
AO signal	**¡06**	0	2	2	✔	-	No	Type of A0 signal for ICV valve position 0: No signal 1: 0 – 20 mA 2: 4 – 20 mA
Failsafe	**¡07**	1	4	1	✔	-	No	Define condition at power cut and fail safe supply is installed. 1: Close valve 2: Open Valve 3: Maintain valve position 4: Go to OD given by **¡12**"
Fail safe supply	**¡08**	0	1	0	✔		Yes	Fail safe supply connected and enable of A4 alarm: 0: No 1: Yes
DI function	**¡09**	1	2	1	✔		No	Define function when DI is ON (short circuited DI terminals) when **¡02** = 2 1: Open ICM valve (DI = OFF = > Close ICM valve) 2: Close ICM valve (DI = OFF = > Open ICM valve)
Password	**¡10**	0	199	0		-	-	Enter number to access password protected parameters: **¡26** Password = 11
Old Alarms	**¡11**	A1	A99	-		-	No	Old alarms will be listed with the latest shown first. Alarm list can be reset by means of activating down arrow and up arrow at the same time for 2 seconds.
OD at power cut.	**¡12**	0	100	50	✔		No	Only active if **¡07** = 4 If fail safe supply is connected and power cut occurs, the ICM will go to the specified OD.
Inverse operation	**¡13**	0	1	0	✔		No	When **¡02** = 1 0: Increasing Analog Input signal => Increasing ICM Opening Degree 1: Increasing Analog Input signal => Decreasing ICM Opening Degree When **¡02** = 3 0: DI1 = ON, DI2 = OFF => Increasing ICM Opening Degree. DI1 = OFF, DI2 = ON => Decreasing ICM Opening Degree DI1 = DI2 = OFF => ICAD/ICM maintain current position DI1 = DI2 = ON => ICAD/ICM maintain current position 1: DI1 = ON, DI2 = OFF => Decreasing ICM Opening Degree DI1 = OFF, DI2 = ON => Increasing ICM Opening Degree DI1 = DI2 = OFF => ICAD/ICM maintain current position DI1 = DI2 = ON => ICAD/ICM maintain current position
In **ON / OFF Mode** Closing speed	**¡14**	0	100	50/ 100	✔	-	No	See **¡04**. If **¡26**= 1 - 3 then factory settin qg = 100 If **¡26**= 4 - 9 then factory setting = 50
Manual set point	**¡15**	0	100	0			No	When **¡01**= 2, **¡15** determine the start up value.

to be continued....

Parameter list
(continued)

Description	ICAD parameter	Min	Max	Factory Setting	Stored	Unit	Pass word	Comments
Encoder operation	**¡16**	0	1	1	✔		Yes	**NB:** Password protected. Password = 7 0: Encoder disabled. Means ICAD operation as ICAD 600A/ICAD 600A-TS/1200A without encoder 1: Encoder enabled
Forced closing when ICM valve Opening Degree < 3%	**i17**	0	1	0	✔	-	No	Enable/Disable forced closing 0: When ICM valve Opening Degree < 3% it will be forced to close regardless of requested ICM valve Opening Degree 1: When ICM valve Opening Degree < 3% no forced to closing will take place
ICM configuration	**¡26**	0	9	0	✔		Yes	**NB:** Password protected. Password = 11 0: No valve selected. Alarm A1 will become active. 1: ICM 20 with ICAD 600A / ICMTS 20 with ICAD 600A-TS 2: ICM 25 with ICAD 600A 3: ICM 32 with ICAD 600A 4: ICM 40 with ICAD 1200A 5: ICM 50 with ICAD 1200A 6: ICM 65 with ICAD 1200A 7: ICM 100 with ICAD 1200A 8: ICM 125 with ICAD 1200A 9: ICM 150 with ICAD 1200A

Service

Description	ICV Name	Min	Max	Factory Setting	Stored	Unit	Pass word	Comments
OD%	**¡50**	0	100	-		%	-	ICM valve Opening Degree
AI [mA]	**¡51**	0	100	-		mA	-	AI signal
AI [V]	**¡52**	0	100	-		V	-	AI signal
AO [mA]	**¡53**	0	100	-		mA	-	A0 signal
DI	**¡54**	0	1	-		-	-	DI signals. Depending of **¡02** If **¡02** = 2, one digits are shown. See fig. 8 0 : DI1 = OFF 1 : DI1 = ON If **¡02** = 3, two digits are shown. See fig. 9 00 : DI1 = OFF, DI2 = OFF 10 : DI1 = ON, DI2 = OFF 01 : DI1 = OFF, DI2 = ON 11 : DI1 = ON, DI2 = ON
DO Close	**¡55**	0	1	-		-	-	DO Closed status. ON when OD < 3%
DO Open	**¡56**	0	1	-		-	-	DO Open status. ON when OD > 97%
DO Alarm	**¡57**	0	1	-		-	-	DO alarm status. ON when a Alarm is detected
Display mP SW ver.	**¡58**	0	100	-		-	-	Software version for display microprocessor
Motor mP SW ver.	**¡59**	0	100	-		-	-	Software version for motor microprocessor

Reset to factory setting

1. Remove the power supply.
2. Activate down arrow and up arrow push buttons at the same time.
3. Connect the power supply.
4. Release down arrow and up arrow push buttons.
5. When the display on ICAD (fig. 2) is alternating between showing: **CA** and **A1** the factory resetting is complete.

ENGINEERING
TOMORROW

Motor operated valve, type ICMTS **with actuator,** type ICAD 600A-TS

Contents **Page**

Features (valve) 307
Design (valve) 307
Technical data (valve) 308
Function (valve) 308
Features (actuator) 309
Technical data (actuator) 309
Approvals 310
Function (actuator) 310
ICAD-UPS for ICMTS 311
Material specification 313
ICMTS Application 314
ICMTS capacities 315
Ordering 315
Dimensions 318
Connections 318
General operation 319
Alarms 320
Reset to factory setting 322

AI217586428573en-000503 | 2018.10

ENGINEERING TOMORROW

Motor operated valve, type ICMTS **with actuator,** type ICAD 600A-TS



The ICMTS is a direct operated motorised valve driven by actuator type ICAD 600A-TS.

The ICMTS is designed to regulate the flow of transcritical gas or subcritical liquid from the gascooler in transcritical CO_2 systems. The ICMTS can also be used for other control functions in CO_2 systems.

The ICMTS valve is designed so that the opening and closing forces are balanced.

ICAD 600A-TS
ICAD 600A-TS actuators can be controlled using the following signals:
0-20 mA
4-20 mA (default)
0-10 V
2-10 V

ICAD 600A-TS actuators can also operate an ICMTS valve as an On/Off function supported by a digital input.

The ICMTS valve can be operated manually via the ICAD 600A-TS actuator or via the Multi-function tool for ICMTS (see the ordering section).

Features (valve)

- Designed for high pressure CO_2 systems with applications for a maximum working pressure of 140 bar / 2030 psig.
- Applicable to R744 (CO_2).
- Direct coupled connections.
- Connection types are DIN butt weld.
- Non-alloyed quality steel.
- Low weight and compact design.
- Regulating cone ensures optimum regulating accuracy, particularly at part load.
- Manual opening possible via ICAD 600A-TS or Multi-function tool.
- The PTFE seat provides excellent valve tightness.
- Magnet coupling - real hermetic sealing.
- ICAD 600A-TS include encoder function that will provide a true valve position feedback to Danfoss controller or non-Danfoss control systems.

Design (valve)

Connections
ICMTS valves are available with DIN butt weld connections.

Approvals
The ICMTS valve concept is designed to fulfil global refrigeration requirements.

The ICMTS valves are approved in accordance with the European standard specified in the Pressure Equipment Directive and are CE marked. For further details / restrictions - see Installation Instruction. The ICAD 600A-TS actuator is UL listed.

Valve body and top cover material
Low temperature steel

CE

ICMTS valves	
Nominal bore	DN≤ 25 (1 in)
Classified for	Fluid group I
Category	Article 3, paragraph 3

Fail Safe supply options

In the event of a power failure, multiple fail safe options are possible, provided that a ICAD-UPS or similar is used.
During power failure, ICAD 600A-TS can be selected to:
- Close ICMTS
- Open ICMTS
- Stay in the position it was in, prior to power failure.
- Go to a specific ICMTS valve opening degree.

See the section ICAD UPS for further information.

Please note:
a fail safe supply (battery or UPS) is required.



Technical data (valve)

Refrigerants
Applicable to R744 (CO_2).
ICMTS valves must not be used with flammable refrigerants. For further information, please contact your local Danfoss sales company.

- *Temperature range:*
  Media: -60 – 120 °C / -76 – 248 °F.
- *Pressure*
  The valve is designed for:
  Max. working pressure: 140 bar g / 2030 psig
- *Surface protection*
  ICMTS:
  The external surface is treated in order to provide good corrosion protection.
- Max. opening pressure differential (MOPD)
  ICMTS:
  90 bar / 1305 psi
- The time it takes to move from Closed to Open position or in reverse order with maximum selected speed at ICAD 600A-TS is 3 seconds.

Function (valve)

The ICMTS motor valve is designed for use with ICAD 600A-TS.

The driving force from the actuator is transferred via a magnetic coupling (a) through the stainless steel top housing (b), thus eliminating the need for a packing gland. The rotational movement of the magnetic coupling (a) is transferred to a spindle (c) which in turn provides the vertical movement of the cone (d) and PTFE valve plate (e), to open and close the valve. The closing force of the actuator combined with the PTFE valve plate (e) and valve seat (f) provides an effective seal to prevent leakage across the valve port, when the valve is in the closed position. To prevent damage to the PTFE valve plate (e) and seat (f) from system debris, it is recommended to install a filter in the system.

Valve inlet pressure (P_1) acting on the underside of the PTFE valve plate (e) also passes through the hollow cone assembly (d) on to the top of the piston (g) and balances the pressure acting on the piston (g). Any trapped liquid across the throttle cone (d) is equalised down to the valve outlet without affecting the valve performance.

The actuators have a fully weather protected enclosure with none of the moving parts exposed to the environment.

The fast acting actuators and balanced valve design results in the valve being able to move from the fully closed to the fully open position in about 3 seconds.

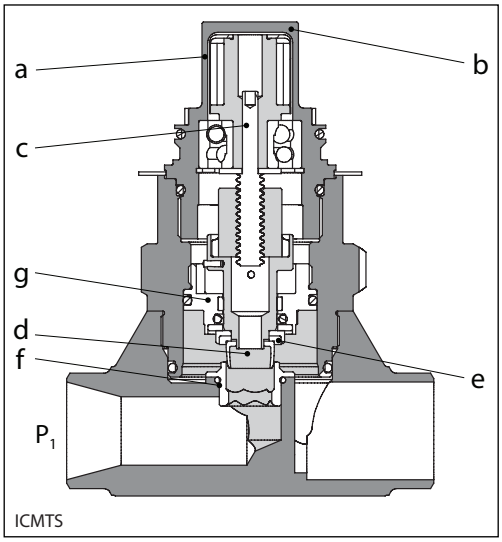

ICMTS

The smallest cones (A33 and A) are log-shaped in order to provide optimum regulation at small capacities and high pressure differentials.

The first version of the ICMTS valve features V-shaped A cones. Please contact your local Danfoss sales company for further info.

Bigger cones (B and C) are V-shaped in order to provide an optimum regulating curve for higher capacities.

ICAD 600A-TS

The actuator type 600A-TS is designed specifically for ICMTS valves. The actuator type 900 can be used for ICMTS as well, however it consumes more energy than ICAD 600A-TS for similar applications.

The ICAD 600A-TS is controlled via a modulating analogue signal (e.g. 4 – 20 mA/2 – 10 V) or a digital ON / OFF signal. ICAD 600A-TS incorporates an advanced MMI (Man Machine Interface), including continuous display of Opening Degree, which gives the user a very advanced and flexible setup procedure that can meet many different applications. The ICMTS valve is typically controlled by the Danfoss EKC 326A controller.

Features (actuator)

- Specifically designed for ICMTS valve
- Advanced and high speed Digital Stepper Motor Technology
- Seven segment LCD display including three programming keys
- Valve opening degree can be observed continuously.
- Can easily be configured to different applications on-site. (change speed, ON/OFF, modulating valve)
- Open – Close time: 3 seconds
- Modulating or ON / OFF operation
- Multiple speed selection during operation
- Logging of old alarms
- Password protection
- Control input signal:
  4 – 20 mA, 0 – 20 mA, 0 – 10 V, 2 – 10 V
- Position feed back : 0 – 20 mA, 4 – 20 mA (ICMTS)
- 3 Digital ON / OFF feedback
- Resolution: 20 micron / step (0.02 mm stroke pr. step)
- Total steps: 250
- Auto Calibration, Neutral zone
- In the event of a power failure, multiple fail safe options are possible. During power failure, ICAD 600A-TS can be selected to:
  Close ICMTS
  Open ICMTS
  Stay in the position it was in, prior to power failure.
  Go to a specific ICMTS valve opening degree.
- Hermetic magnetic motor
- Enclosure: IP 67 (~NEMA 6)
- Approvals: CE, UL, CRN
- Connectors for easy installation and servicing
- Can be controlled by Danfoss EKC 326A controller and integrated into Danfoss ADAP-KOOL® system.

Technical data (actuator)

- *Materials*
  Housing
  Aluminium
  Top part of ICAD 600A-TS:
  PBT thermo plastic
- *Weight*
  ICAD 600A-TS: 1.2 kg (2.64 lb)
- *Temperature range (ambient)*
  -30 – 50 °C / -22 – 122 °F
- *Enclosure*
  IP 67 (~NEMA 6)
- *Cable connection*
  Can be ordered with or without cables included.

  If ordered with cables:
  2 cables in length of 1.5 m length (60 in) with M12 connectors included

  Supply cable
  3 × 0.34 mm² (3 × ~22 AWG)
  Ø4.8 mm (diameter 0.19")

  Control cable
  7 × 0.25 mm² (7 × ~24 AWG)
  Ø6 mm (diameter 0.24")

Electrical data
Supply voltage is galvanic isolated from Input/ Output.

Supply voltage: 24 V DC, 10% / -15%
Load: ICAD 600A-TS: 1.2 A

Fail safe supply: Min. 19 V DC, max. 26.4 V DC
Load: ICAD 600A-TS: 1.2 A

Battery capacity:
For each open/closed cycle
ICAD 600A-TS:
Speed Parameter i04=100 (Max. Speed) : 2 mAh
Speed Parameter i04=1 (Min. Speed) : 200 mAh

Analogue Input - Current or Voltage
Current: 0/4-20 mA
Load: 200 Ω
Voltage: 0/2-10 V DC
Load: 10 kΩ

Analogue Output: 0/4-20 mA
Load: ≤ 250 Ω

Digital input - Digital ON / OFF input by means of volt-free contact (Signal / Telecom relays with gold-plated contacts recommended) – Voltage input used
ON: contact impedance < 50 Ω)
OFF: contact impedance > 100 kΩ

Digital Output - 3 pcs. NPN transistor output
External supply: 5-24 V DC
(Same supply as for ICAD 600A-TS can be used, but please note that the galvanically isolated system will then be spoiled).
Output load: 50 Ω
Load: Max. 50 mA

Technical data *(cont.)*

Cable connection - Two 1.5 m (60 in) cables premounted

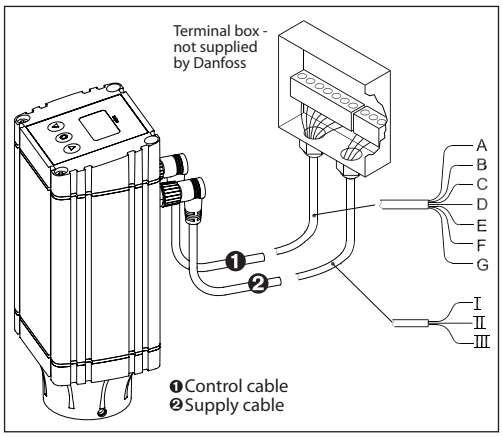

Ref.	Colour		Description	
A	Black	–	Common Alarm	Digital Ouput
B	Brown	–	ICMTS fully open	
C	Red	–	ICMTS fully closed	
D	Orange	–	GND ground	
E	Yellow	+	0/4 - 20 mA Input	Analogue In/Output
F	Green	+	0/2 - 10 V Input	
G	Blue	+	0/4 - 20 mA Output	

I	Black	+	Fail safe supply Battery / UPS* 19 V DC
II	White	+	Supply voltage 24 V DC
III	Brown	–	

* Uninterruptable Power Supply

Note: Colour code changed when compared to older colour wiring diagram.

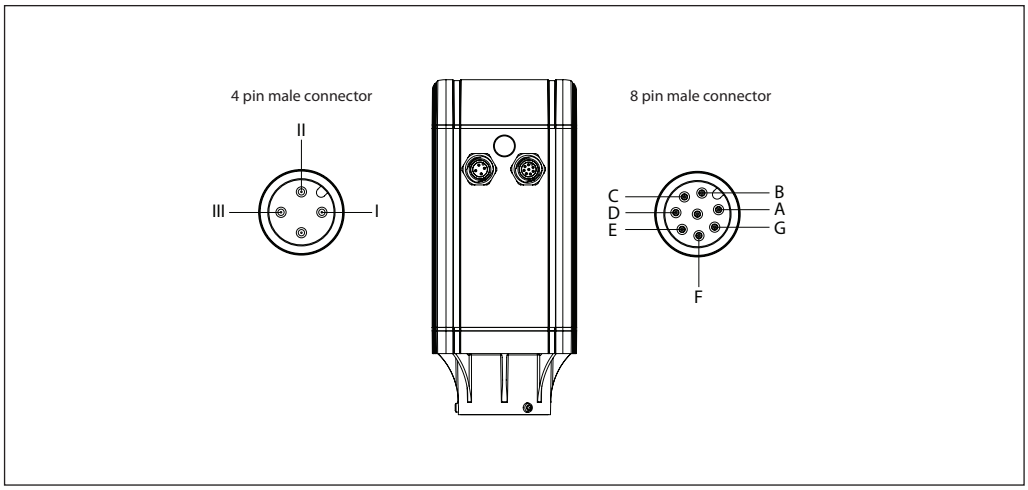

Approvals

CE according to 89/336 EEC (EMC)
Emission: EN61000-6-3
Immunity:EN61000-6-2
UL
CRN

Function (actuator)

The design of ICAD 600A-TS is based on a digital stepper motor technology combined with an advanced MMI (Man Machine Interface), that gives excellent possibilities for having a high degree of flexibility with the same type of ICAD 600A-TS actuator.

The Opening Degree (0-100 %) of the actual ICMTS valve installed can be continuously observed on the ICAD 600A-TS display.

The advanced menu system will allow several parameters to be adjusted to obtain the required function. Many different parameters can be configurated, among these:

- Modulating and ON/OFF control
- Analogue input
  0 – 20 mA or 4 – 20 mA
  0 – 10 V or 2 – 10 V
- Analogue output
  0 – 20 mA or 4 – 20 mA
- Automatic or manual control
- Change of ICMTS valve speed
- Automatic calibration
- Multiple Fail Safe set-up options during power cut

For service all Input and Output signals can be recalled and observed from the ICAD 600A-TS display.

A password protection has been linked to the parameter of entering the correct ICMTS valve to avoid unintentional and non-authorised operation.

Function (actuator)
(continued)

The design of ICAD 600A-TS is based on a digital stepper motor technology combined with an advanced MMI (Man Machine Interface), that gives excellent possibilities for having a high degree of flexibility with the same type of ICAD 600A-TS actuator.

The Opening Degree (0-100 %) of the actual ICMTS valve installed can be continuously observed on the ICAD 600A-TS display.

The advanced menu system will allow several parameters to be adjusted to obtain the required function. Many different parameters can be configurated, among these:

- Modulating and ON/OFF control
- Analogue input
  0 – 20 mA or 4 – 20 mA
  0 – 10 V or 2 – 10 V
- Analogue output
  0 – 20 mA or 4 – 20 mA
- Automatic or manual control
- Change of ICMTS valve speed
- Automatic calibration
- Multiple Fail Safe set-up options during power cut

ICAD-UPS for ICMTS



ICAD-UPS is designed for using with ICMTS valve.

In the event of power failure, there is a need to make sure that the ICMTS goes to a safe position. ICAD-UPS can be connected to the ICAD 600A-TS.

The solution of connecting ICMTS with ICAD 600A-TS to ICAD-UPS will give one of the following possibilities in the event of power failure:
– close ICMTS
– open ICMTS
– stay
– go to a specific ICMTS Opening Degree.

When power supply has been re-established the system will automatically return to normal operation.

Facts and features

- Industrial product.
- *Can support up to*
  –
  8 pcs. of ICAD 600A-TS
- Integrated solution - battery and UPS.
- *Industrial approvals:*
  CE, UL, GL (Germanisher Lloyd).
- DIN rail mounting.
  – *LED indication*
  – Green (Power ON)
  – Yellow (Flashing: charging, Constant: Buffer mode (Failsafe supply to ICAD 600A-TS))
  – Red (Battery fully discharged/Battery faulty)
- 24 V DC supply → Same transformer as for ICAD 600A-TS can be used. Only +0.5 A extra load on the transformer.
- Check of battery every 60 sec.
- Adjustable buffer time*. (1, 2, 3, 5, 10, 15, 20, 30 or infinity) = Ensures longer battery life time.
- Forced remote shutdown in buffer mode via digital input.
- 3 digital volt free relay change over contacts for signals to PLC systems. (Power OK, Buffer mode (failsafe supply to ICAD 600A-TS), Alarm).

* Buffer time is defined as the period whereICAD 600A-TS is only powered from the ICAD-UPS (i.e. not from main supply). On ICAD-UPS there is an adjustable buffer time setting (1, 2, 3, 5, 10, 15, 20, 30 min. or infinity). If set to 3, ICAD-UPS will switch off power to connected ICAD 600A-TS, 3 minutes after the power failure occurs. This ensures that the internal battery inside ICAD-UPS does not fully discharge.

Code number: **027H0182**

For further information, please see the instruction AN000086416706

ICAD-UPS applications

Seperate 24 V DC tranformer for both ICAD-UPS and ICAD 600A-TS

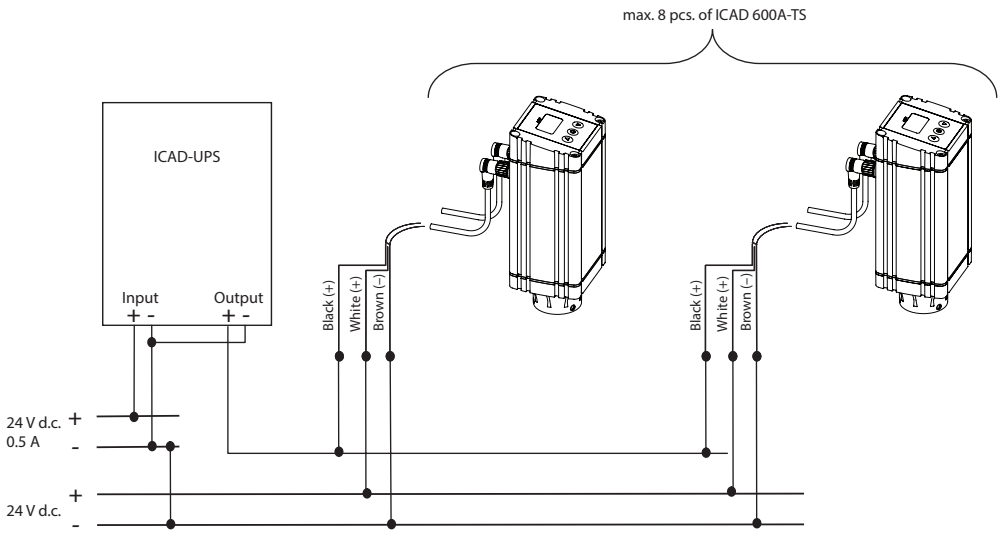

One 24 V DC tranformer for ICAD-UPS and ICAD 600A-TS

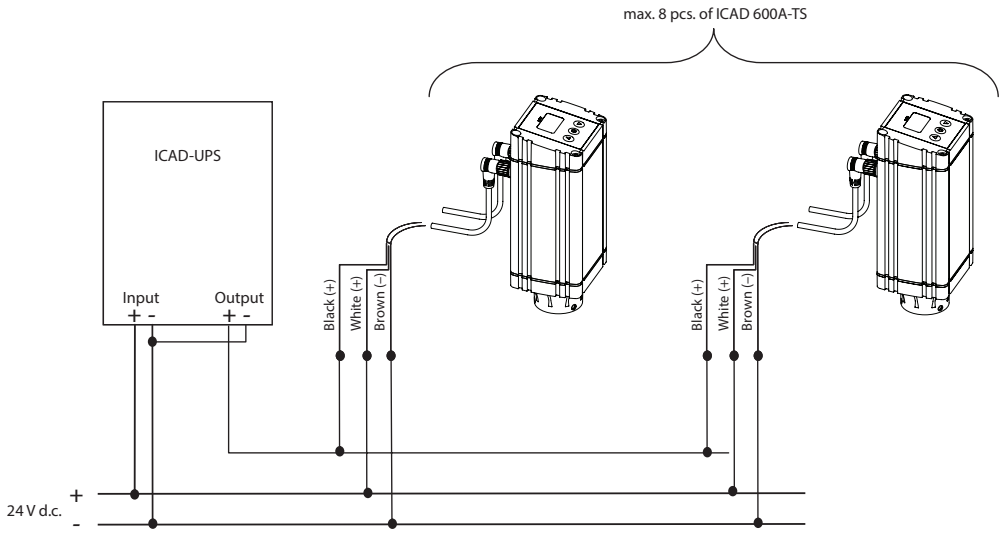

Material specification

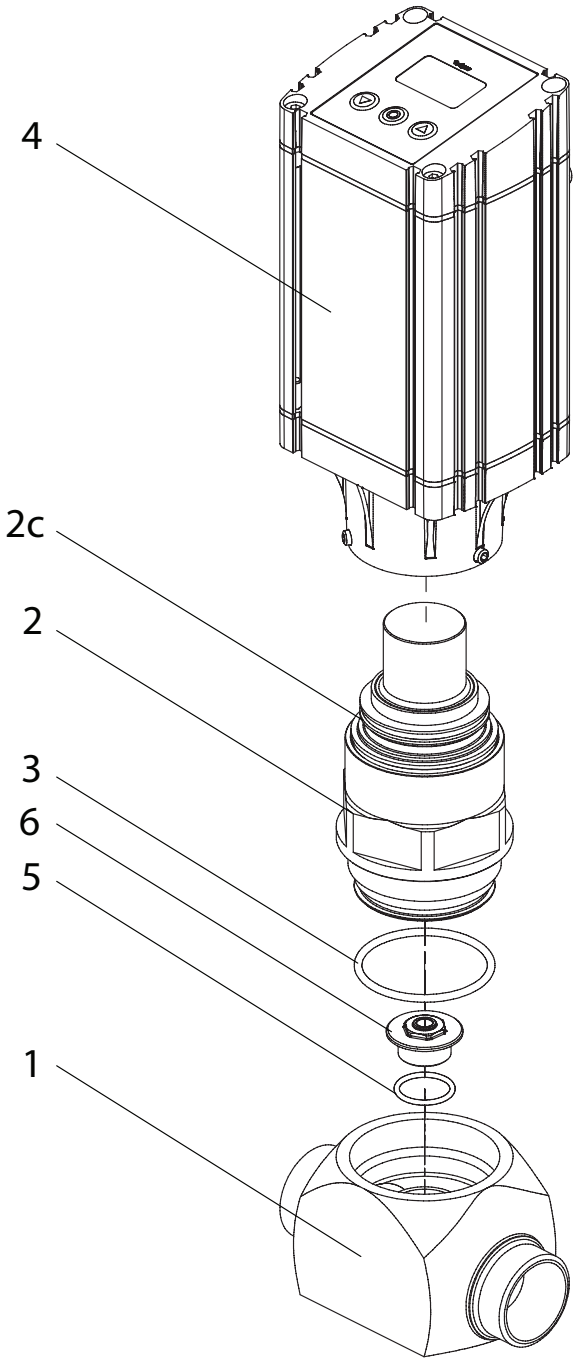

No.	Part	Material	EN	ASTM
1	Housing	Low temperature steel	S235J2, EN10025	A515
2	Top cover / function module	Low temperature steel	S355J2, EN10025	LCC, A352
2c	O-ring	Cloroprene (Neoprene)		
3	O-ring	Cloroprene (Neoprene)		
4	Actuator			
5	O-ring	Cloroprene (Neoprene)		
6	Seat	stainless steel		

ICMTS Application

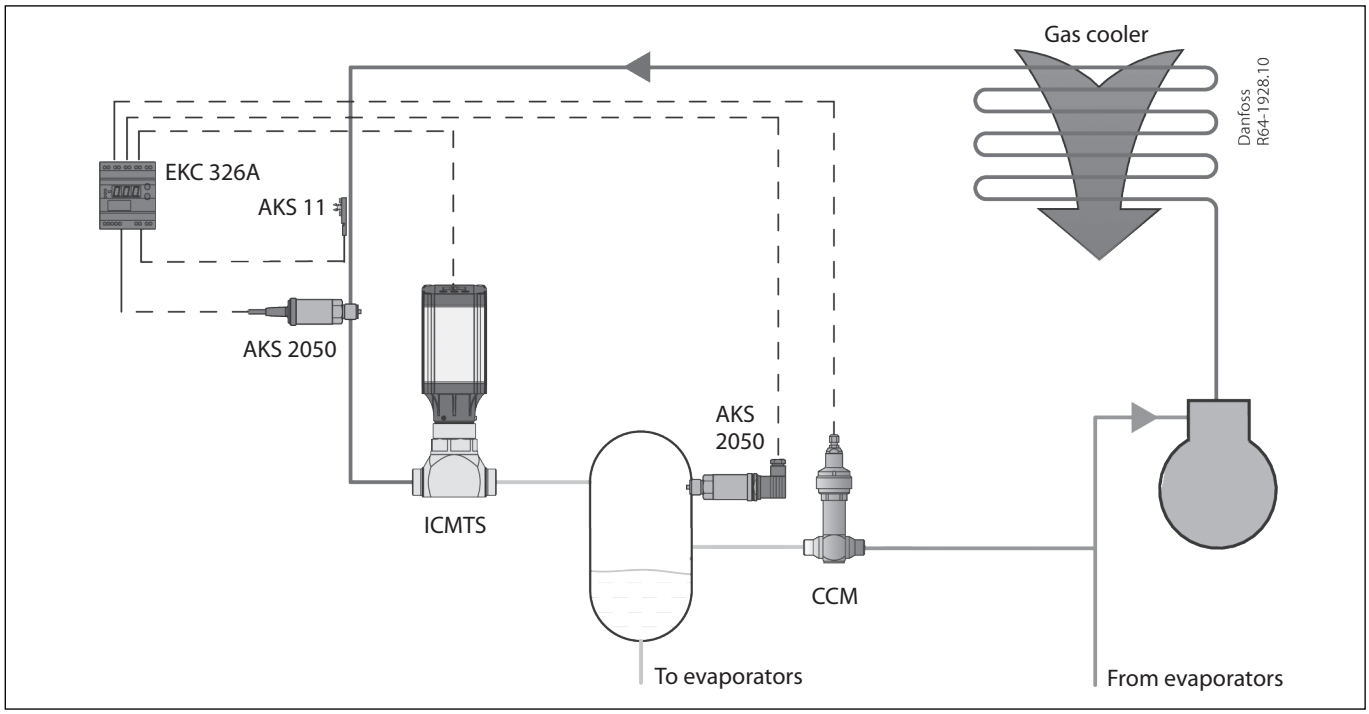

The ICMTS valve is developed for transcritical CO_2 applications. The ICMTS valve can be used in systems with flash gas bypass, parallel compression as well as in stand-alone application. The ICMTS valve can be used in transcritical and subcritical conditions.

The most typical application is with flash gas bypass.

Pressure optimisation is performed by the Danfoss EKC 326A controller and the ICMTS valve which is installed at the outlet of the gas cooler (see the figure above). This design provides the possibility to optimise gas cooler pressure and intermediate receiver pressure independently.

The pressure in the receiver is one important parameter, but the design of the receiver is also important. It typically acts as a liquid separator as well.

In order to keep the intermediate pressure low, flash gas is expelled through a gas bypass valve to the suction side of the compressor. The two phase mixture from the ICMTS valve has to be separated before gas enters the gas bypass.

Please refer to the Danfoss Application guide, DKRCE.PA.R1.A for more information on CO_2 systems.

ICMTS capacities

It is relatively complex to correctly size a valve for transcritical applications, especially as the mass flow of the refrigerant changes, drastically moving from transcritical to subcritical conditions. At the same time, temperature variations in the intermediate vessel downstream of the valve, will not significantly affect the sizing the valve.
It is recommended to calculate the ICMTS valve using Danfoss DIRcalc™ software following these steps:

- Calculate the ICMTS valve as an expansion valve in the liquid line with the following conditions: T_{cond} = 30 °C, T_{evap} = temperature in the intermediate vessel, 0 K subcooling.
- Check the selected valve for the winter conditions: e.g. T_{cond} = 15 °C with 5 K subcooling
- Possible part load of the system at T_{cond} = 30 °C, T_{evap} = temperature in the intermediate vessel, 10 K subcooling. (night operation or the smallest capacity step of the power pack).
  The part load of the valve should be above 10%.

Quick capacity selection could be done using the following table:

Table 1

	0 K subcooling in the subcritical mode		
	+15/+5 °C [kW]	+30/+5 °C [kW]	**+38 (100 bar)/ +5 °C** [kW]
ICMTS 20-A33	16.7	16.1	25
ICMTS 20-A	50	48	75
ICMTS 20-B	291	278	423
ICMTS 20-C	479	454	675

Table 2

	5 K subcooling in the subcritical mode		
	+15/+5 °C [kW]	+30/+5 °C [kW]	**+38 (100 bar)/ +5 °C** [kW]
ICMTS 20-A33	18.5	23	25
ICMTS 20-A	56	69	75
ICMTS 20-B	325	400	423
ICMTS 20-C	540	655	675

Table 3

	10 K subcooling in the subcritical mode		
	+15/+5 °C [kW]	+30/+5 °C [kW]	**+38 (100 bar)/ +5 °C** [kW]
ICMTS 20-A33	20.4	26.5	25
ICMTS 20-A	61	80	75
ICMTS 20-B	355	470	423
ICMTS 20-C	585	760	675

Please contact your local Danfoss sales office if you need assistance in your selection of ICMTS valves.

Ordering

Type	**Code number**
ICMTS 20-A33	**027H1084**
ICMTS 20-A	**027H1085**
ICMTS 20-B66	**027H1093**
ICMTS 20-B	**027H1086**
ICMTS 20-C	**027H1087**

ICAD 600A-TS with cables	**027H9078**
ICAD 600A-TS without cables	**027H9123**

Accessories



Service kit 1 - valve orifice

Code number	**027H1192 - Gasket kit with orifice for B and C cones**
Code number	**027H1193 - Gasket kit with orifice for A33 and A (new design) cones**



Service kit 2 – Top part with cone complete

Type	Code number
ICMTS 20-A33 top part with cone and orifice kit	**027H1088**
ICMTS 20-A top part with cone and orifice kit	**027H1080**
ICMTS 20-B66 top part with cone and orifice kit	**027H1094**
ICMTS 20-B top part with cone and orifice kit	**027H1081**
ICMTS 20-C top part with cone and orifice kit	**027H1082**

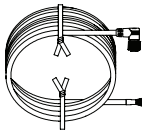

Cable for ICAD 600A-TS

Cable length	Code number
Cable set 1.5 m, female	**027H0426**
Cable set 10 m, female	**027H0427**

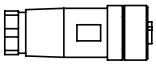

Connectors for ICAD 600A-TS

Connector type	Code number
Two Female Connectors with screw terminals: - connector for power - connector for control signals	**027H0430**



ICAD-UPS

Code number	**027H0182**



Multi-function tool

Code number	**027H0181**

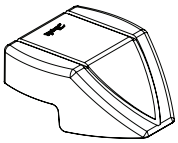

ICAD 600A-TS Protection Cap

Code number	**027H0431**

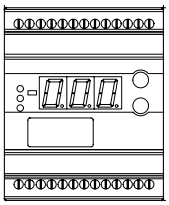

EKC 326A

Code number	**084B7252**

Technical data

Supply voltage	24 V AC ±15% 50/60 Hz (the supply voltage is galvanically separated from the input and output signals)	
Power consumption	Controller	8 VA
Input signal	Pressure transmitter	Ratiometric, AKS 2050
	Pressure transmitter	Ratiometric, AKS 2050
	Digital input from external contact function	
	Voltage signal	0 – 10 V Signal range = 2 – 10 V
Sensor input	1 pcs. Pt 1000 ohm	
Alarm relay	1 pcs. SPST	250 V AC AC-1: 4 A (ohmic) AC-15: 3 A (inductive)
Actuator	ICAD 600A-TS mounted on ICMTS	Voltage signal 0 – 10 mA
	CCM	Step motor
Data communication	Possible to connect a data communication module type AKA 174	
Environments	-10 – 55 °C, during operations -40 – 70 °C, during transport	
	20 - 80% Rh, not condensed	
	No shock influence / vibrations	
Enclosure	IP 20	
Weight	300 g	
Mounting	DIN rail	
Display	LED, 3 digits	
Terminals	max. 2.5 mm^2 multicore	
Approvals	EMC acc. EN 61000-6-3 and EN 61000-6-2 LVD acc. EN 60730-1 and EN 60730-2-9	

Accessories (continued)

AKS 2050

Code number	**060G5750 (-1 to 59 bar)**
Code number	**060G5751 (-1 to 99 bar)**
Code number	**060G5752 (-1 to 159 bar)**



Technical data

Operating range	as mentioned above
Permissible working pressure (PB)	250 bar
Compensated temperature range	0 – 80 °C
Connection	G 3/8 A 2) - Thread ISO 228/1 - G 3/8 A (BSP).

Connecting plug with 5 m cable
(a pressure transducer with the cap gets a IP67 rating)



Code number	**060G1034**

Plug Pg 9



Code number	**060G0008**

AKS 11

Code number	**084N0003 – cable length: 3.50 m**
Code number	**084N0005 – cable length: 5.50 m**
Code number	**084N0008 - cable length: 8.50 m**



Technical data

Max. ambient temperature	100 °C
Cable type	PVC
Electrical connection	Cable
Measuring range	-50 – 100 °C
Resistance value	1 x Pt 1000
Tolerance	EN 60751 Class B
Wires	2 pcs.

For selection of CCM motorised valves for CO_2 gas bypass application please see AI213386426013

Dimensions

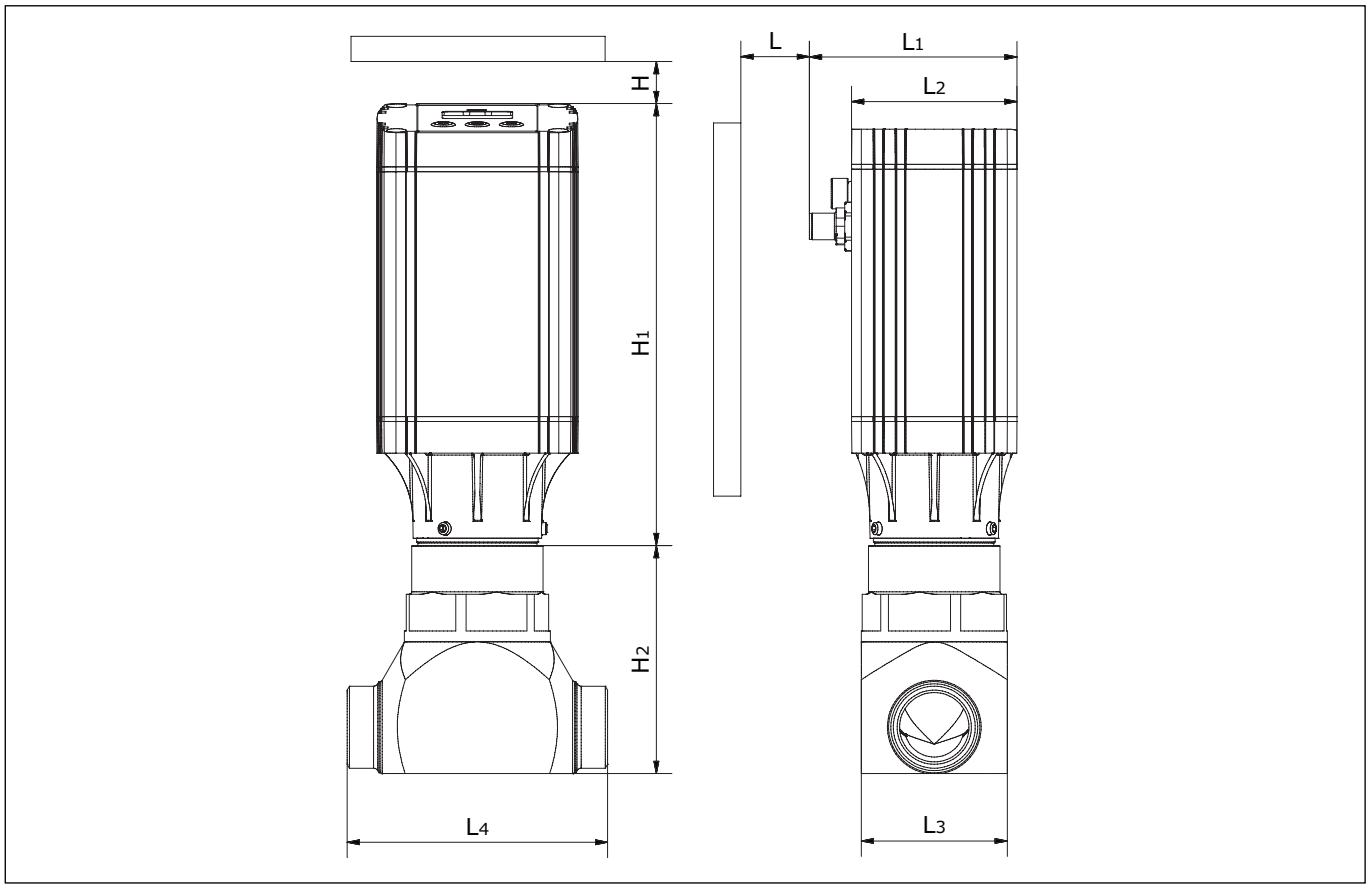

Connection		H	H_1	H_2	L*	L_1	L_2	L_3	L_4	Weight ICMTS incl. ICAD 600A-TS
25 D (1 in)	[mm]	40	195	94	65	86	68	60	107	3.3 kg
	[in]	1.58	7.68	3.7	2.56	3.39	2.68	2.36	4.21	6 lb.

* include space for ICAD Protection cap

Connections

D: *Butt weld DIN (EN 10220)*

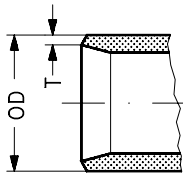

Size [mm]	Size [in]	OD [mm]	T [mm]	OD [in]	T [in]		
25	(1)	33.7	2.6	1.327	0.103		

General operation

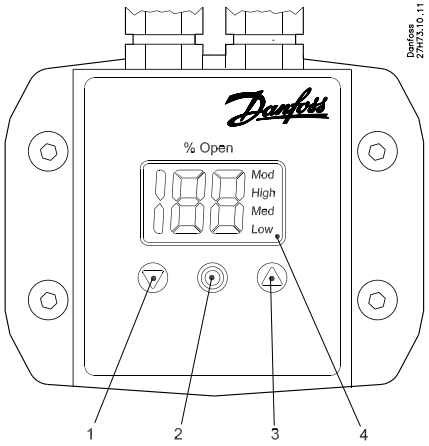

Fig. 2

1. "Down" arrow push button
2. Enter
3. "Up" arrow push button
4. Display

ICAD 600A-TS is equipped with an MMI (Man Machine Interface) from which it is possible to monitor and change the setting of parameters to adapt the ICAD 600A-TS and the corresponding ICMTS to the actual refrigeration application.

The setting of parameters is managed by means of the integrated ICAD 600A-TS MMI (see fig. 2 and fig. 3) and consists of:

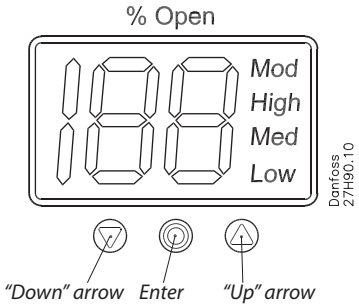

Fig. 3

- "Down" arrow push button (fig. 2, pos. 1)
  - Decreases parameter number by 1 at each activation.
- "Up" arrow pushbutton (fig. 2, pos. 3)
  - Increases parameter number by 1 at each activation.
- Enter push button (fig. 2, pos. 2)
  - Gives access to the **Parameter list** by keeping the push button activated for 2 seconds. A **Parameter list** example is shown below (parameter **¡08**, fig. 4).

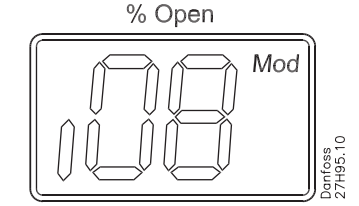

Fig. 4

  - Gives access to change a value once the Parameter list has been accessed
  - Acknowledge and save change of value of a parameter.
  - To exit from the **Parameter list** and return to the display of Opening Degree (OD), keep the Enter button activated for 2 seconds.
- Display (fig. 2, pos. 4)
  - The Opening Degree (OD) 0 – 100 % of the ICMTS valve is normally displayed. When the push buttons are not activated for 20 seconds, the display will return to OD (see fig. 5).

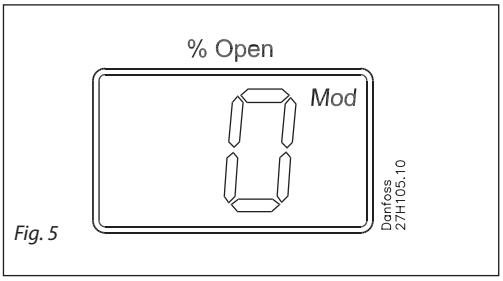

Fig. 5

- Displays the parameter.
- Displays the actual value of a parameter.
- Displays the function status by means of text (fig. 2, pos. 4).
  - Mod represents that ICAD 600A-TS is positioning the ICMTS valve according to an analogue input signal (Current or Voltage).
  - ***Low*** represents that ICAD 600A-TSS is operating the ICMTS valve like an ON/OFF solenoid valve with low speed according to a digital input signal.
  - ***Med*** represents that ICAD 600A-TS is operating the ICMTS valve like an ON/OFF solenoid valve with medium speed according to a digital input signal.
  - ***High*** represents that ICAD 600A-TS is operating the ICMTS valve like an ON/OFF solenoid valve with high speed according to a digital input signal (see fig. 6).

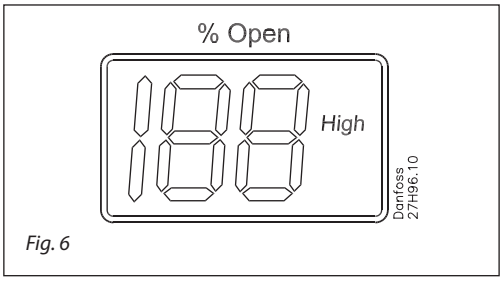

Fig. 6

Alarms

Description	ICAD alarm text	Definition of event	Comments
No Valve type selected	**A1**	Alarm ON	At start-up **A1** will be displayed
Controller fault	**A2**	Alarm ON	Internal fault inside electronics. Carry out: 1) Power OFF and Power ON If A2 still active. 2) Make a Reset to factory setting If A2 still active. Return ICAD to Danfoss
AI input error	**A3**	Alarm ON	Not active if **¡01** = 2, or **¡02** = 2 When **¡03** = 1 and AI A > 22 mA When **¡03** = 2 and AI A > 22 mA or AI A < 2 mA When **¡03** = 3 and AI A > 12 V When **¡03** = 4 and AI A > 12 V or AI A < 1 V
Low voltage of fail safe Supply	**A4**	Alarm ON	If 5 V < fail safe supply <18 V. Enabled by **¡08**
Check supply to ICAD	**A5**	Alarm ON	If supply voltage < 18 V
Calibration extended failed	**A6**	Alarm ON	Check valve type selected. Check presence of foreign body internally in ICMTS valve
Internal temperature alarm	**A7**	Alarm ON	Temperature for stepper motor component too high.Ventilate/lower ambient ICAD temperature
	A8	Alarm ON	Temperature for stepper motor component too high. Ventilate/lower ambient ICAD temperature.
Valve locked	**A9**	Alarm ON	Only active if i16 = 1 If the valve is locked in more than 15 seconds. ICMTS stopped and hold position A9 flashing in display A9 alarm can only be reset by Power OFF/ON of ICAD

If an alarm has been detected, the ICAD 600A-TS display (fig. 2) will alternate between showing Actual alarm and Present Opening Degree.

If more than one alarm is active at the same time, the alarm with the highest priority will take preference. **A1** has the highest priority, **A5** the lowest.

Any active alarm will activate the Common Digital Alarm Output (Normally Open).

All alarms will automatically reset themselves when they physically disappear.

Old alarms (alarms that have been active, but have physically disappeared again) can be found in parameter **¡11**.

Parameter list - Valid from: (i58:11, i59:36) and onwards

The first parameter to be entered shall be: **¡26**

Description	ICAD parameter	Min	Max	Factory Setting	Stored	Unit	Pass word	Comments
OD (Opening degree)	-	0	100			%	-	ICMTS valve Opening Degree is displayed during normal operation. Running display value (see **¡01**, **¡05**).
Main Switch	**¡01**	1	2	1	✓	-	No	Internal main switch 1: Normal operation 2: Manual operation. Valve Opening Degree will be flashing. With the down arrow and the up arrow push buttons the OD can be entered manually.
Mode	**¡02**	1	2	1	✓	-	No	Operation mode 1: Modulating – ICMTS positioning according to Analog Input (see **¡03**) 2: ON/OFF - operating the ICMTS valve like an ON/OFF solenoid valve controlled via Digital Input. See also **¡09**. 3: Neutralzone / 3 point control. Increase/Decrease Opening Degree by Digital Input. See fig. 9
AI signal	**¡03**	1	4	2	✓	-	No	Type of AI signal from external controller 1: 0-20 mA 2: 4-20 mA 3: 0-10 V 4: 2-10 V
Speed In **Modulating Mode** Opening/closing speed In **ON/OFF Mode** Opening speed	**¡04**	1	100	50/ 100	✓	-	No	Speed can be decreased. Max. speed is 100 % - Not active in manual operation (**¡01** = 2) If **¡26**= 1 - 3 then factory setting =100 If **¡26**= 4 - 9 then factory setting =50 If ICMTS is opening and (**¡04** < = 33) or ICMTS is closing and (**¡14** < = 33) => Low is displayed. If ICMTS is opening and (33 < If **¡04** < = 66) or ICMTS is closing and (33 < If **¡14** < = 66) => Med is displayed. If ICMTS is opening and (**¡04** > = 67) or ICMTS is closing and (**¡14** > = 67) => High is displayed"
Automatic calibration	**¡05**	0	2	0		-	No	Not active before **¡26** has been operated. Always auto reset to 0. CA will flash in the display during calibration, if Enter push button has been activated for two seconds 0: No Calibration 1: Normal forced calibration - CA flashing slowly 2: Extended calibration – CA flashing rapidly"
AO signal	**¡06**	0	2	2	✓	-	No	Type of A0 signal for ICV valve position 0: No signal 1: 0-20 mA 2: 4-20 mA
Failsafe	**¡07**	1	4	1	✓	-	No	Define condition at power cut and fail safe supply is installed. 1: Close valve 2: Open Valve 3: Maintain valve position 4: Go to OD given by **¡12**"
Fail safe supply	**¡08**	0	1	0	✓		Yes	Fail safe supply connected and enable of A4 alarm: 0: No 1: Yes
DI function	**¡09**	1	2	1	✓		No	Define function when DI is ON (short circuited DI terminals) when **¡02** = 2 1: Open ICMTS valve (DI = OFF = > Close ICMTS valve) 2: Close ICMTS valve (DI = OFF = > Open ICMTS valve)
Password	**¡10**	0	199	0		-	-	Enter number to access password protected parameters: **¡26** Password = 11
Old Alarms	**¡11**	A1	A99	-		-	No	Old alarms will be listed with the latest shown first. Alarm list can be reset by means of activating down arrow and up arrow at the same time for 2 seconds.
OD at power cut.	**¡12**	0	100	50	✓		No	Only active if **¡07** = 4 If fail safe supply is connected and power cut occurs, the ICMTS will go to the specified OD.
Inverse operation	**¡13**	0	1	0	✓		No	When **¡02** = 1 0: Increasing Analog Input signal => Increasing ICMTS Opening Degree 1: Increasing Analog Input signal => Decreasing ICMTS Opening Degree When **¡02** = 3 0: DI1 = ON, DI2 = OFF => Increasing ICMTS Opening Degree. DI1 = OFF, DI2 = ON => Decreasing ICMTS Opening Degree DI1 = DI2 = OFF => ICAD/ICMTS maintain current position DI1 = DI2 = ON => ICAD/ICMTS maintain current position 1: DI1 = ON, DI2 = OFF => Decreasing ICMTS Opening Degree DI1 = OFF, DI2 = ON => Increasing ICMTS Opening Degree DI1 = DI2 = OFF => ICAD/ICMTS maintain current position DI1 = DI2 = ON => ICAD/ICMTS maintain current position
In **ON/OFF Mode** Closing speed	**¡14**	0	100	50/ 100	✓	-	No	See **¡04**. If **¡26**= 1 - 3 then factory settin qg = 100 If **¡26**= 4 - 9 then factory setting = 50
Manual set point	**¡15**	0	100	0			No	When **¡01**= 2, **¡15** determine the start up value.

to be continued....

Parameter list
(continued)

Description	ICAD parameter	Min	Max	Factory Setting	Stored	Unit	Pass word	Comments
Encoder operation	**¡16**	0	1	0/1	✓		Yes	**NB:** Password protected. Password = 7 If **¡26** = 1 - 3 then factory setting = 0 If **¡26** = 4 - 6 then factory setting = 0 If **¡26** = 7 - 9 then factory setting = 1 0: Encoder disabled. Means ICAD operation as ICAD 600A-TS 1: Encoder enabled
Forced closing when ICMTS valve Opening Degree < 3%	**i17**	0	1	0	✓	-	No	Enable/Disable forced closing 0: When ICMTS valve Opening Degree < 3% it will be forced to close regardless of requested ICMTS valve Opening Degree 1: When ICMTS valve Opening Degree < 3% no forced to closing will take place
ICMTS configuration	**¡26**	0	9	0	✓		Yes	**NB:** Password protected. Password = 11 0: No valve selected. Alarm A1 will become active. 1: ICMTS 20 with ICAD 600A-TS

Service

Description	ICAD Parameter	Min	Max	Factory Setting	Stored	Unit	Pass word	Comments
OD %	**¡50**	0	100	-		%	-	ICMTS valve Opening Degree
AI [mA]	**¡51**	0	100	-		mA	-	AI signal
AI [V]	**¡52**	0	100	-		V	-	AI signal
AO [mA]	**¡53**	0	100	-		mA	-	A0 signal
DI	**¡54**	0	1	-		-	-	DI signals. Depending of **¡02** If **¡02** = 2, one digits are shown. 0 : DI1 = OFF 1 : DI1 = ON If **¡02** = 3, two digits are shown. 00 : DI1 = OFF, DI2 = OFF 10 : DI1 = ON, DI2 = OFF 01 : DI1 = OFF, DI2 = ON 11 : DI1 = ON, DI2 = ON
DO Close	**¡55**	0	1	-		-	-	DO Closed status. ON when OD < 3 %
DO Open	**¡56**	0	1	-		-	-	DO Open status. ON when OD > 97 %
DO Alarm	**¡57**	0	1	-		-	-	DO alarm status. ON when a Alarm is detected
Display mP SW ver.	**¡58**	0	100	-		-	-	Software version for display microprocessor
Motor mP SW ver.	**¡59**	0	100	-		-	-	Software version for motor microprocessor

Reset to factory setting

1. Remove the power supply.
2. Activate down arrow and up arrow push buttons at the same time.
3. Connect the power supply.
4. Release down arrow and up arrow push buttons.
5. When the display on ICAD (fig. 2) is alternating between showing: **CA** and **A1** the factory resetting is complete.

ENGINEERING
TOMORROW

Pressure control valve
Type KDC 65-200

Contents **Page**

Features 325
Technical data 325
Design 326
Function 327
Application example 328
Nominal capacities 328
Connections 329
Material specification 330
Dimensions and weights 331

AI225686433549en-000401 | 2017.03

ENGINEERING TOMORROW

Pressure control valve
Type KDC 65-200



The KDC valve is a pressure control valve . The valve controls the discharge pressure of the compressor to ensure fast build-up of pressure and lubrication pressure. The valve also acts as a check valve in the discharge line of the compressor.

The KDC valve is force-controlled so that when pressure in the oil separator becomes 2 bar (29 psi) higher than the suction pressure, the spring is compressed and the valve opens. In low-pressure units (boosters), the spring requires a differential pressure of 0.5 bar (7 psi) for the valve to open.

Features

- Applicable to HCFC, HFC, R717(Ammonia) and R744 (CO_2).
- Each valve type is clearly marked with type, size and performance range
- Angle valves with weld connections
- Fast build-up of oil pressure in oil separator during start-up.
- High closing force on the cone during standstill, even without differential pressure across the valve
- Very low pressure drop because of spring force
- Low part-load without risk of valve chattering
- Stainless steel bolts
- Housing and bonnet material is in low temperature steel according to requirements of the Pressure Equipment Directive and other international classification authorities
- *Pressure range:*
  40 bar g (580 psig)
- *Temperature range:*
  –50/+150°C (–58/+302°F)
- Classification: DNV, CRN, BV, EAC etc.
  To get an updated list of certification on the products please contact your local Danfoss Sales Company.

Technical data

- *Refrigerants*
  Applicable to HCFC, HFC, R717(Ammonia) and R744 (CO_2).
  For further information please see installation instruction for KDC.
- *Temperature range*
  –50/+150°C (–58/+302°F).
- *Pressure range*
  The valves are designed for max. working pressure 40 bar g (580 psig).

Design

Connections
Available with the following connections:
- Butt-weld DIN (2448)
- Butt-weld ANSI (B 36.10 Schedule 40),
  – DN 65 - 200 (2½ - 8 in.)

Housing
Made of special, cold resistant steel approved for low temperature operations.

Valve cone
The valve cone has two teflon tightening rings with built-in metallic stops to prevent damage to the teflon rings in case of an extreme pressure difference.

Spindle
The spindle is made of gas-tempered steel. Consequently the valve spindle has an extremely hard and smooth surface. The valve rod has an internal weak spring (fig. 1, pos. 13), which is active when the servo piston is in upright position.

Actuator
The KDC actuator has one chamber. It is separated from the main flow by a piston (fig. 1, pos. 6). The chamber has a spring (fig. 1, pos. 14) which provides differential opening of the valve. The chamber of the actuator is connected to the suction line of the compressor.

Installation
The valve must be mounted vertically with the cone in downward position.
On top of the bonnet the actuator has one threaded (NPT 1/4 in.) connection (fig. 1, pos. A) for the pilot line. Fittings for connection of steel pipe DN 10 (d_o/d_i = 10/6 mm) by means of cutting rings. The valve is designed to resist very high internal pressure, but as to the pipe system in general, hydraulic pressure caused by thermal expansions in entrapped refrigerants should be avoided.

For further information please refer to KDC installation instruction.

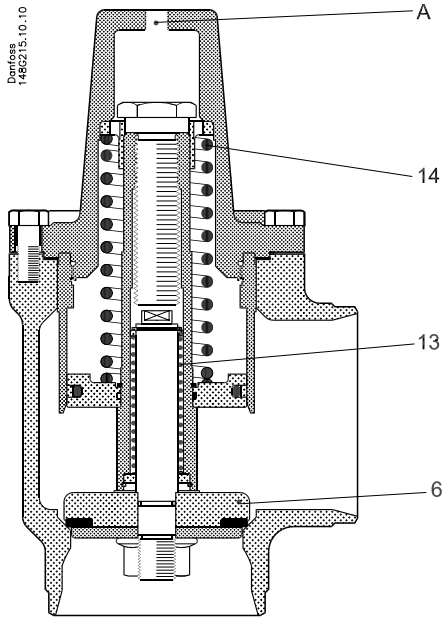

Fig. 1

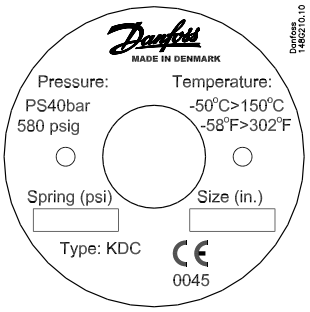

Example of ID-plate for KDC

Pressure Equipment Directive (PED)
KDC valves are approved according to the European standard specified in the Pressure Equipment Directive and are CE marked.

For further details / restrictions - see Installation Instruction.

KDC valves			
Nominal bore		DN65-80 mm (1¼ - 3 in.)	DN100 - 200 mm (4-8 in.)
Classified for	Fluid group I		
Category		II	III

Function

The KDC valve opens in a 3 step sequence. The sequence of steps depends on the start-up situation (see fig. 2).

Step 1
The valve is always closed by a minimum differential pressure of 1.5 to 2.0 bar (0.3 to 0.5 bar in a booster system). Step 1 will occur when the compressor is stopped and the discharge pressure has equalized to the top of the valve through the suction side of the compressor.

$p_c - p_1 < 2$ bar (0.5 bar for booster) and $p_c > p_2$

Step 2
Step 2 will occur as soon as the condensing pressure becomes higher than the pressure in the oil separator, and when the differential pressure between suction side and condensing pressure is bigger than the spring force.

$p_c - p_1 > 2$ bar (0.5 bar for booster) and $p_c > p_2$

When the compressor starts the valve will either be in step 1 or step 2 position, depending on the pressure difference between the oil separator and the condensing pressure.

Start up situation 1
Condensing pressure is lower than oil separator pressure.

Start up will occur from step 1 position and go to step 3 as soon as a differential pressure between suction side and oil separator that can overcome the spring force is present.

Start up situation 2
Condensing pressure is higher than oil separator pressure but the differential pressure is lower than the spring force.

Start up will occur from step 1 and go to step 2 when differential pressure between suction side and condensing pressure is bigger than the spring force. When oil separator pressure comes close to the condensing pressure the valve will start opening and the small spring will open the valve completely. The valve will then be in step 3 position.

Start up situation 3
Condensing pressure is higher than oil separator pressure + spring force pressure.
Start up will occur from step 2 position.

When oil separator pressure comes close to the condensing pressure the valve will start opening and the small spring will open the valve completely. The valve will then be in step 3 position.

When the compressor stops, the valve will be in step 3 position and as soon as the condensing pressure has equalized to the suction side the spring force will close the valve. The valve will be in step 1 position until enough differential pressure between condensing pressure and oil separator/suction side pressure occurs for the valve to enter into step 2 position.

NOTE:
The KDC valve cannot be used on compressor units where the non-return valve is placed between compressor and oil separator instead of on the suction side of the compressor. The reason for this is that the KDC valve needs to have the pilot pipe connected to a point on the compressor unit, where the pressure is low during running and high during standstill.

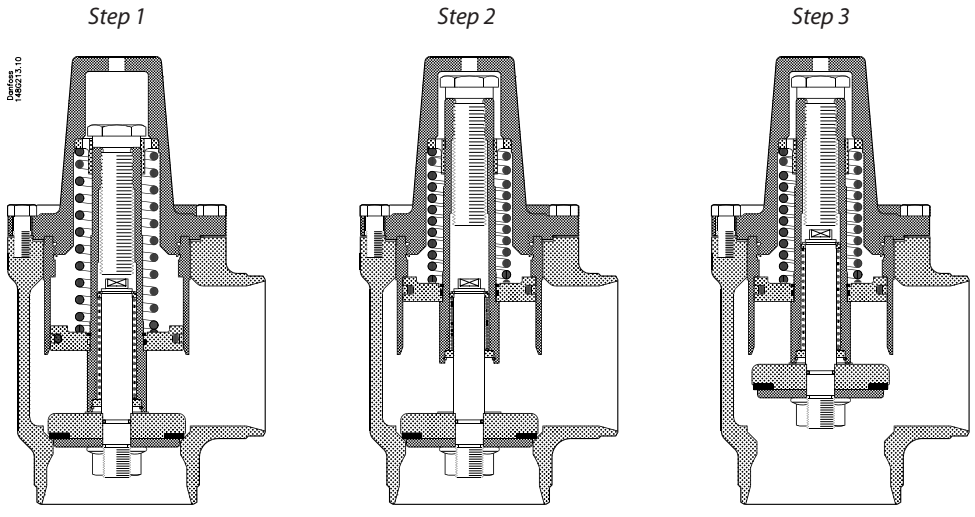

Fig. 2

To be continued.....

Function
(Cont.)

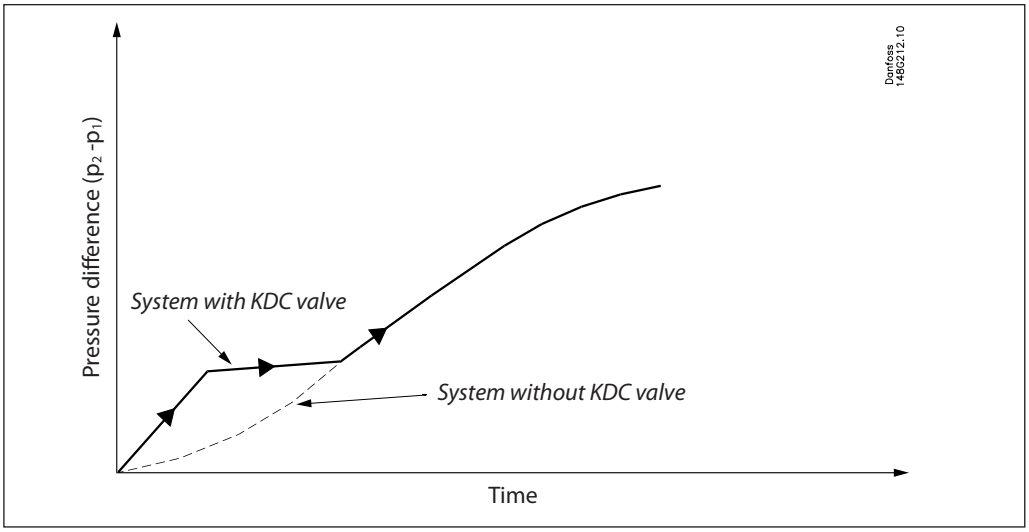

Application example

Compressor discharge line after oil separator:

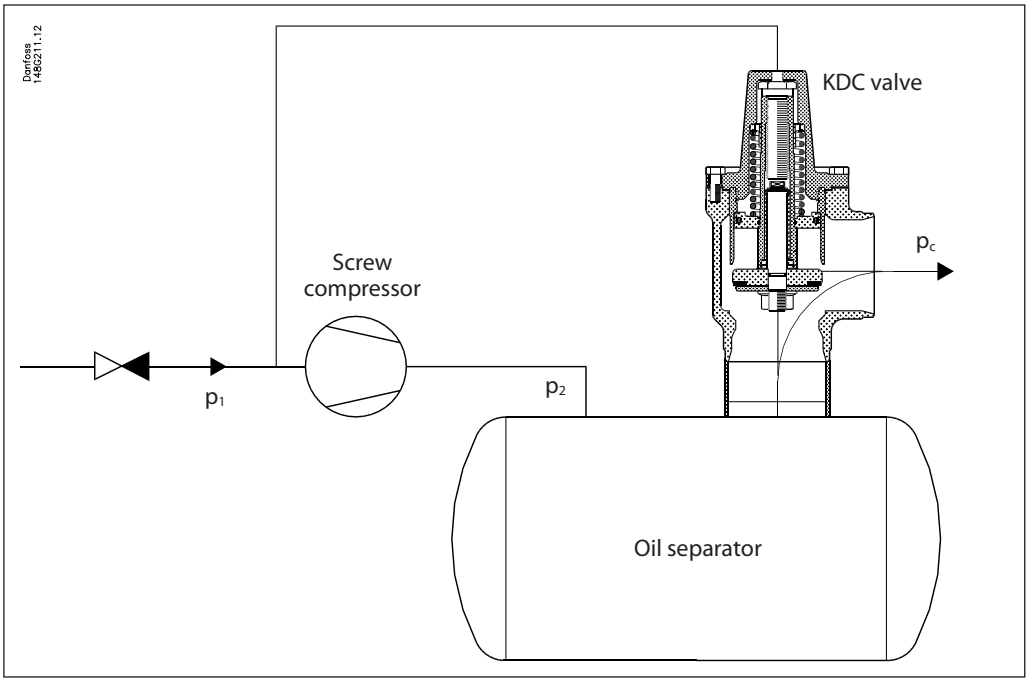

Nominal capacities

High pressure compressor

Capacity table at t_c / t_o = +35/–15°C,
Q_N [kW],
Δp = 0.05 bar

	KDC 65	KDC 80	KDC 100	KDC 125	KDC 150	KDC 200
R717	434	656	1128	1851	2829	4207
R404A	132	200	344	564	863	1283
R22	157	238	410	672	1028	1528

Booster compressor

Capacity table at t_c / t_o = –18 / –40°C,
Q_N [kW],
Δp = 0.05 bar

	KDC 65	KDC 80	KDC 100	KDC 125	KDC 150	KDC 200
R717	229	347	597	978	1496	2225
R404A	101	153	263	432	661	983
R22	102	154	265	435	665	990

Connections

DIN

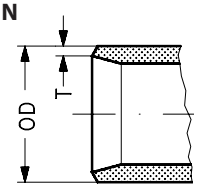

Butt-weld DIN (2448)

Size mm	Size in.	OD mm	T mm	OD in.	T in.			k_v-angle m^3/h	C_v-angle USgal/min
65	2½	76.1	2.9	3	0.11			78	90
80	3	88.9	3.2	3.50	0.13			118	137
100	4	114.3	3.6	4.50	0.14			203	235
125	5	139.7	4.0	5.50	0.16			333	386
150	6	168.3	4.5	6.63	0.18			509	590
200	8	219.1	6.3	8.63	0.25			757	878

ANSI

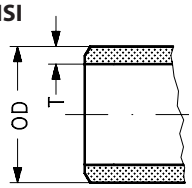

Butt-weld ANSI (B 36.10 Schedule 40)

Size mm	Size in.	OD mm	T mm	OD in.	T in.			k_v-angle m^3/h	C_v-angle USgal/min
65	2½	73.0	5.2	2.87	0.20			78	90
80	3	88.9	5.5	3.50	0.22			118	137
100	4	114.3	6.0	4.50	0.24			203	235
125	5	141.3	6.6	5.56	0.26			333	386
150	6	168.3	7.1	6.63	0.28			509	590
200	8	219.1	8.2	8.63	0.32			757	878

Material specification

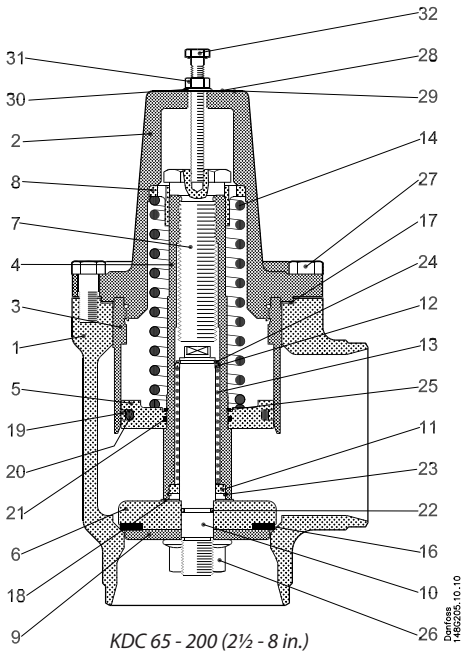

KDC 65 - 200 (2½ - 8 in.)

No.	Part	Material	EN	ISO	ASTM
1	Valve House	Steel	G20Mn5QT EN10213-3		LCC A352
2	Bonnet	Steel	P285QH EN10222-4		LF2 A350
3	Piston	Steel	S235JRG2 EN10025	Fe260B 630	Grade C A283
4	Piston rod	Steel	S235JRG2 EN10025	Fe260B 630	Grade C A283
5	Piston	Steel	11SMn30 EN10087	Type 2 R683/9	Grade 1213 A29
6	Cone	Steel	11SMn30 EN10087	Type 2 R683/9	Grade 1213 A29
7	Screw for spring	Steel	11SMn30 EN10087	Type 2 R683/9	Grade 1213 A29
8	Bushing for spring	Cast iron			
9	Cone plate	Steel	11SMn30 EN10087	Type 2 R683/9	Grade 1213 A29
10	Cone rod	Steel	11SMn30 EN10087	Type 2 R683/9	Grade 1213 A29
11	Rear bushing	Cast iron			
12	Front bushing	Cast iron			
13	Spring for cone	Steel			
14	Spring	Steel			
16	Teflon ring	PTFE			
17	Gasket	Fiber gasket non-asbestos			
18	Washer	Nylon			
19	Glide ring	PTFE			
20	O-ring	Cloroprene (Neoprene) (Standard KDC)			
		FKM (Hydrocarbon KDC)			
21	O-ring	Cloroprene (Neoprene) (Standard KDC)			
		FKM (Hydrocarbon KDC)			
22	O-ring	Cloroprene (Neoprene) (Standard KDC)			
		FKM (Hydrocarbon KDC)			
23	Retaining ring bore	Steel			
24	Spring ring	Steel			
25	Spring ring	Steel			
26	Nut	Steel			
27	Bolts	Steel	A2-70 EN1515-1	A2-70 3506	Grade B8 A320
28	ID plate	Aluminium			
29	Driv screw	Steel			
30	Washer	Steel			
31	Nut	Steel			
32	Screw	Steel			

Dimensions and weights

KDC 65 - 200 (2½ - 8 in.)

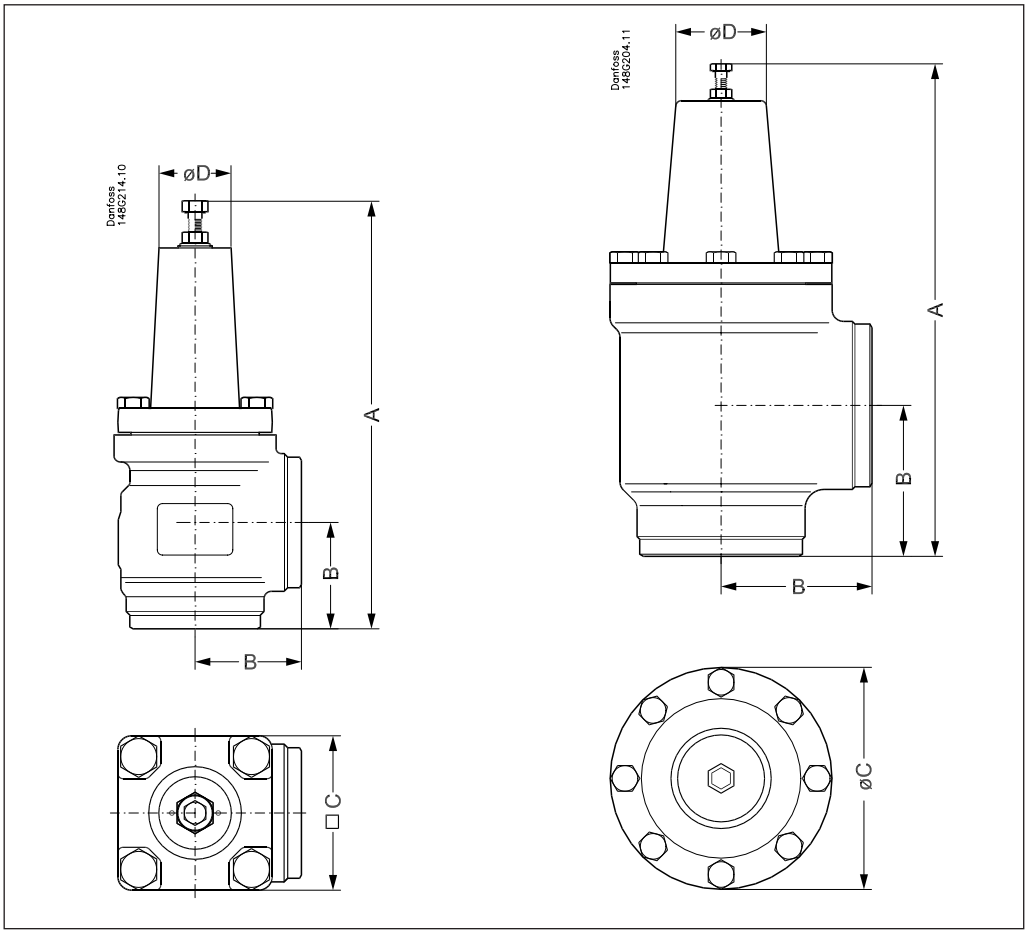

Valve size		A	B	C	ØD	Weight
KDC						
KDC 65	mm	250	62	90	42	7.3 kg
KDC 2½	in.	9.84	2.44	3.54	1.65	16.1 lb
KDC 80	mm	298	90	129	51	11.1 kg
KDC 3	in.	11.73	3.54	5.08	2.01	24.5 lb
KDC 100	mm	346	106	156	64	17.3 kg
KDC 4	in.	13.62	4.17	6.14	2.52	38.1 lb
KDC 125	mm	407	128	192	64	36.9 kg
KDC 5	in.	16.02	5.04	7.56	2.52	81.3 lb
KDC 150	mm	471	145	219	75	49.9 kg
KDC 6	in.	18.54	5.71	8.62	2.95	110.0 lb
KDC 200	mm	539	180	276	75	99.6 kg
KDC 8	in.	21.22	7.09	10.87	2.95	219.6 lb

Specified weights are approximate values only.

Bolt in top of the valve is for transportation purposes only.
For further information please see installation instruction.

Ordering

Important!
Where products need to be certified according to specific certification societies or where higher pressures are required, the relevant information should be included at the time of ordering.

Standard KDC with welding branches - *DIN*

Size		Type	bar	Code no.
mm	in.			
65	2½	KDC 65	0.5 2 3	**148G3585** **148G3586** **148G3713**
80	3	KDC 80	0.5 2 3	**148G3589** **148G3590** **148G3714**
100	4	KDC 100	0.5 2 3	**148G3593** **148G3594** **148G3715**
125	5	KDC 125	0.5 2 3	**148G3597** **148G3598** **148G3716**
150	6	KDC 150	0.5 2	**148G3601** **148G3602**
200	8	KDC 200	0.5 2	**148G3605** **148G3606**

Standard KDC with welding branches - *ANSI*

Size		Type	bar	Code no.
mm	in.			
65	2½	KDC 65	0.5 2 3	**148G3587** **148G3588** **148G3811**
80	3	KDC 80	0.5 2 3	**148G3591** **148G3592** **148G3812**
100	4	KDC 100	0.5 2 3	**148G3595** **148G3596** **148G3813**
125	5	KDC 125	0.5 2	**148G3599** **148G3600**
150	6	KDC 150	0.5 2	**148G3603** **148G3604**
200	8	KDC 200	0.5 2	**148G3607** **148G3608**

Note!
The HYDROCARBON versions of the KDC valves are not compatiable with Ammonia as refrigerant.
They can only be used in systems with HYDROCARBON as refrigerant.

HYDROCARBON *KDC with welding branches - **ANSI***

Size		Type	bar	Code no.
mm	in.			
65	2½	KDC 65	0.5 2	**148G3825** **148G3831**
80	3	KDC 80	0.5 2	**148G3826** **148G3832**
100	4	KDC 100	0.5 2	**148G3827** **148G3833**
125	5	KDC 125	0.5 2	**148G3828** **148G3834**
150	6	KDC 150	0.5 2	**148G3829** **148G3835**
200	8	KDC 200	0.5 2	**148G3830** **148G3836**

Spare parts and accessories

Type	Code no.
GASKET BONNET/HOUSING KDC/GVD 65	**148G3048**
GASKET BONNET/HOUSING KDC/GVD 80	**148G3049**
GASKET BONNET/HOUSING KDC/GVD 100	**148G3050**
GASKET BONNET/HOUSING KDC/GVD 125	**148G3051**
GASKET BONNET/HOUSING KDC/GVD 150	**148G3052**
GASKET BONNET/HOUSING KDC/GVD 200	**148G3053**

Type	Code no.
SEAL KIT SET KDC/GVD 65	**148G3054**
SEAL KIT SET KDC/GVD 80	**148G3055**
SEAL KIT SET KDC/GVD 100	**148G3056**
SEAL KIT SET KDC/GVD 125	**148G3057**
SEAL KIT SET KDC/GVD 150	**148G3058**
SEAL KIT SET KDC/GVD 200	**148G3059**

Type	Code no.
SEAL KIT SET KDC/GVD 65 Hydrocarbon	**148G3837**
SEAL KIT SET KDC/GVD 80 Hydrocarbon	**148G3838**
SEAL KIT SET KDC/GVD 100 Hydrocarbon	**148G3839**
SEAL KIT SET KDC/GVD 125 Hydrocarbon	**148G3840**
SEAL KIT SET KDC/GVD 150 Hydrocarbon	**148G3841**
SEAL KIT SET KDC/GVD 200 Hydrocarbon	**148G3842**

Note!
The HYDROCARBON versions of the seal kits are not compatible with Ammonia as refrigerant.
They can only be used in systems with HYDROCARBON as refrigerant.

The seal kit

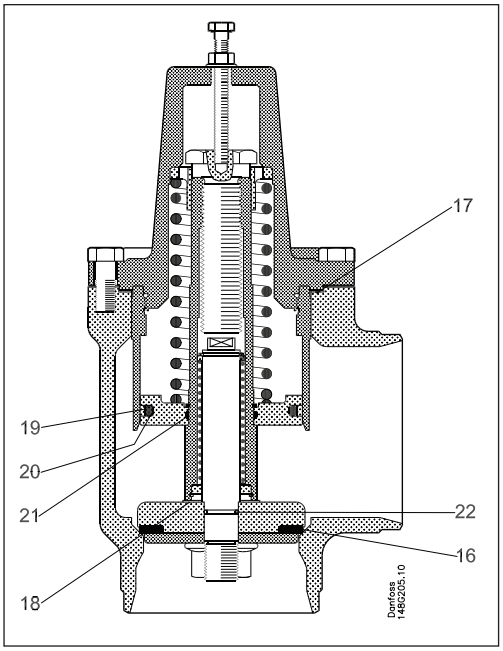

No.	Part	Material
16	Teflon ring	PTFE
17	Gasket	Fiber gasket non-asbestos
18	Washer	Nylon
19	Glide ring	PTFE
20-22	O-ring - Standard valve - Hydrocarbon valve	 Cloroprene (Neoprene) Viton

ENGINEERING
TOMORROW

Temperature regulating valve
Type ORV

Contents **Page**

Features ... 337
Technical data ... 338
Design ... 338
Function ... 339
Application examples ... 340
Capacities ... 341
Material specification ... 343
Connections ... 344
Dimensions and weights ... 345
Ordering ORV valves from the parts programme ... 346

AI176286419819en-000101 | 2015.10

ENGINEERING
TOMORROW

Temperature regulating valve
Type ORV



ORV are 3-way industrial valves for maintaining a constant oil temperature in gas compressor systems, by mixing hot and cold oil in the lubricating system of e.g. screw or turbo type compressors.

The ORV valves are with few components and with extended cylindrical connections, to ensure ease of installation and service.

Features

- Stainless steel nickel plated thermostatic element
- Butt-weld (DIN, ANSI) or socket weld (SOC) connection
- No manual adjustment
- Plug and Play design
- Optimised flow characteristics
- Sturdy construction
- High resistance against vibrations or shock
- Can be mounted in any direction
- Service friendly. Easy to dismantle and service when required
- Classification: DNV, CRN, BV, EAC etc.
  To get an updated list of certification on the products please contact your local Danfoss Sales Company

Technical data

Oils:
Applicable to all common refrigeration oils.

Refrigerants:
Applicable to HC, HCFC, HFC, R717 (Ammonia) and R744 (CO_2).
For further information please refer to installation instruction for ORV.

Temperature range:
Minimum operating temperature:
≥ -10 °C / 14 °F

Max. temperature limit based on the element temperature settings:

Types	Max limit
43 °C / 110 °F	77 °C / 170 °F
49 °C / 120 °F	82 °C / 180 °F
60 °C / 140 °F	93 °C / 200 °F
77 °C / 170 °F	110 °C / 230 °F

Pressure range:
The valves are designed for a max. working pressure of 40 bar g (580 psig)

Design

Connections
Available with the following connections:

- Butt weld DIN (EN 10220), DN 25-80 (1–3 in)
- Butt weld ANSI (B 36.10 Schedule 80), DN 25 - 40 (1 – 1 ½ in)
- Butt weld ANSI (B 36.10 Schedule 40), DN 50 - 80 (2 – 3 in)
- Socket Weld (ANSI B 16.11), DN 25 - 50 (1 – 2 in)

Housing
Made of special, cold resistant steel approved for low temperature operations.

Installation
Installation of the valve depends on the way it should operate.

Pressure Equipment Directive (PED)
ORV valves are approved according to the European standard specified in the Pressure Equipment Directive and are CE marked.
For further details / restrictions - see Installation Instruction.

Identification

Example:

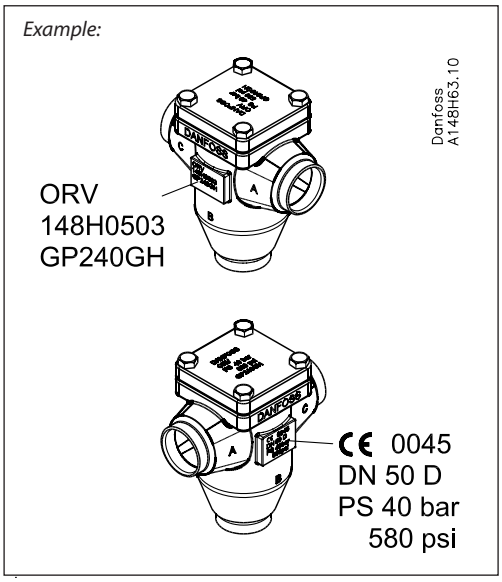

Function

Mixing operation

ORV valve can work as a mixing or diverting valve. The ORV temperature regulating valve utilises the high coefficient of thermal expansion of wax to create the internal movement necessary to have a cold and a hot inlet mixing to a common outlet. The outlet temperature will correspond to the nominal temperature of the thermostatic element.

The valve house has three ports:

- Port A is used for the common outlet
- Port B is for the hot inlet
- Port C is for the cold inlet

When the compressor unit is cold at start up, the thermostatic element will be contracted to let the full flow from port B pass until the nominal temperature (minus 5 K / 10 °F) is reached (fig. 1.1). The thermostatic element will then begin to extract to let the outlet become a mixture of hot and cold oil.

When the nominal temperature is reached, the element is positioned in approximately half open position (fig. 1.2). If the temperature is reaching approximately the nominal temperature plus 5 K, the thermostatic element has been extracted to its fully open position (fig. 1.3). In this position the oil temperature will only come from the cold inlet port (C) from oil cooler.

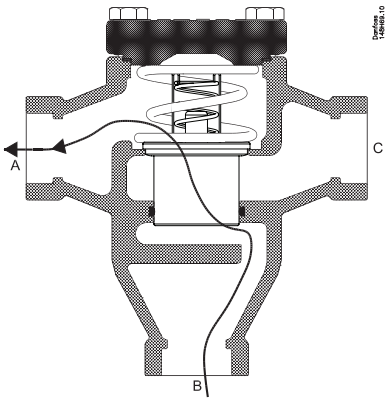

Fig 1.1

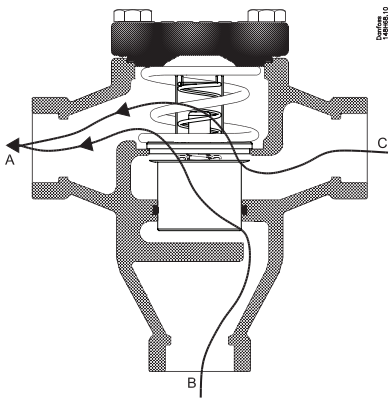

Fig. 1.2

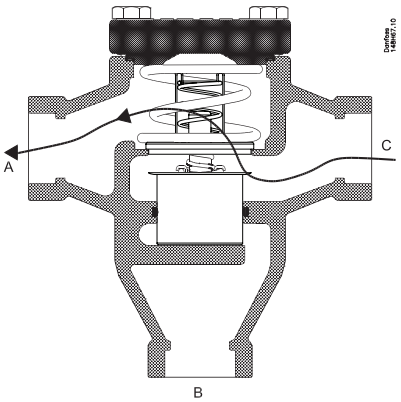

Fig. 1.3

From figure 1, it can be seen how the sleeve on the element is sliding in a vertical movement. The thermostatic element is kept in position by a spring.

Diverting operation

Diverting operation is similar to the mixing operation. It is carried out with separation in to two of the fluid with single temperature. Due to that the temperature on the inlet is very stable fact the regulation is very smooth. The inlet temperature would correspond to the nominal temperature of the thermostatic element.

The valve house has three ports:

- Port A is used for the common inlet
- Port B is for the cold outlet
- Port C is for the warm outlet

The diverting operation otherwise is similar to the mixing operation.

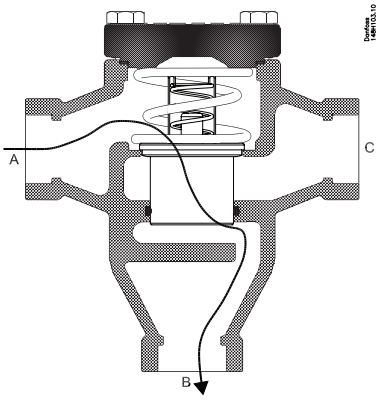

Fig. 1.1

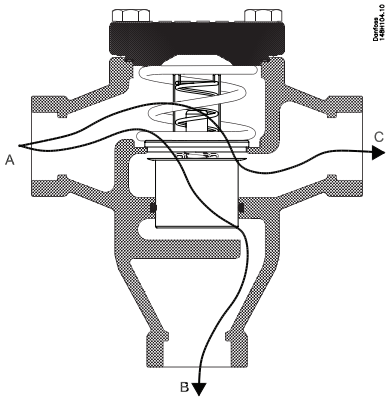

Fig. 1.2

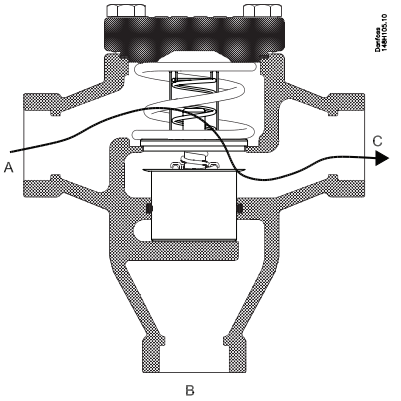

Fig. 1.3

Application examples

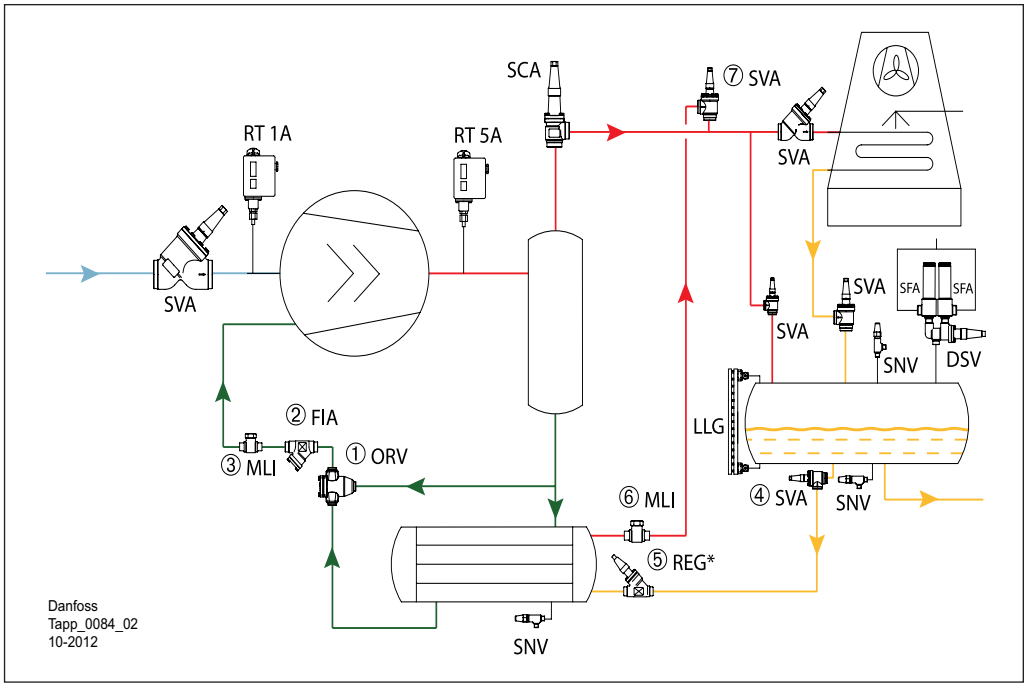

Example of the system with ORV for mixing operation.

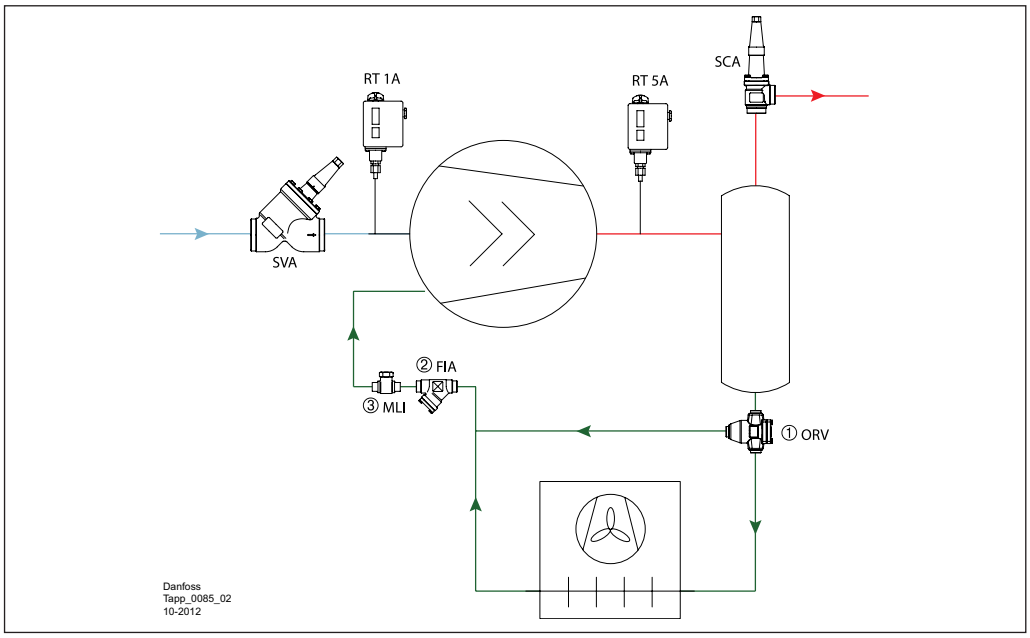

Example of the system with ORV for diverting operation

Capacities

SI units

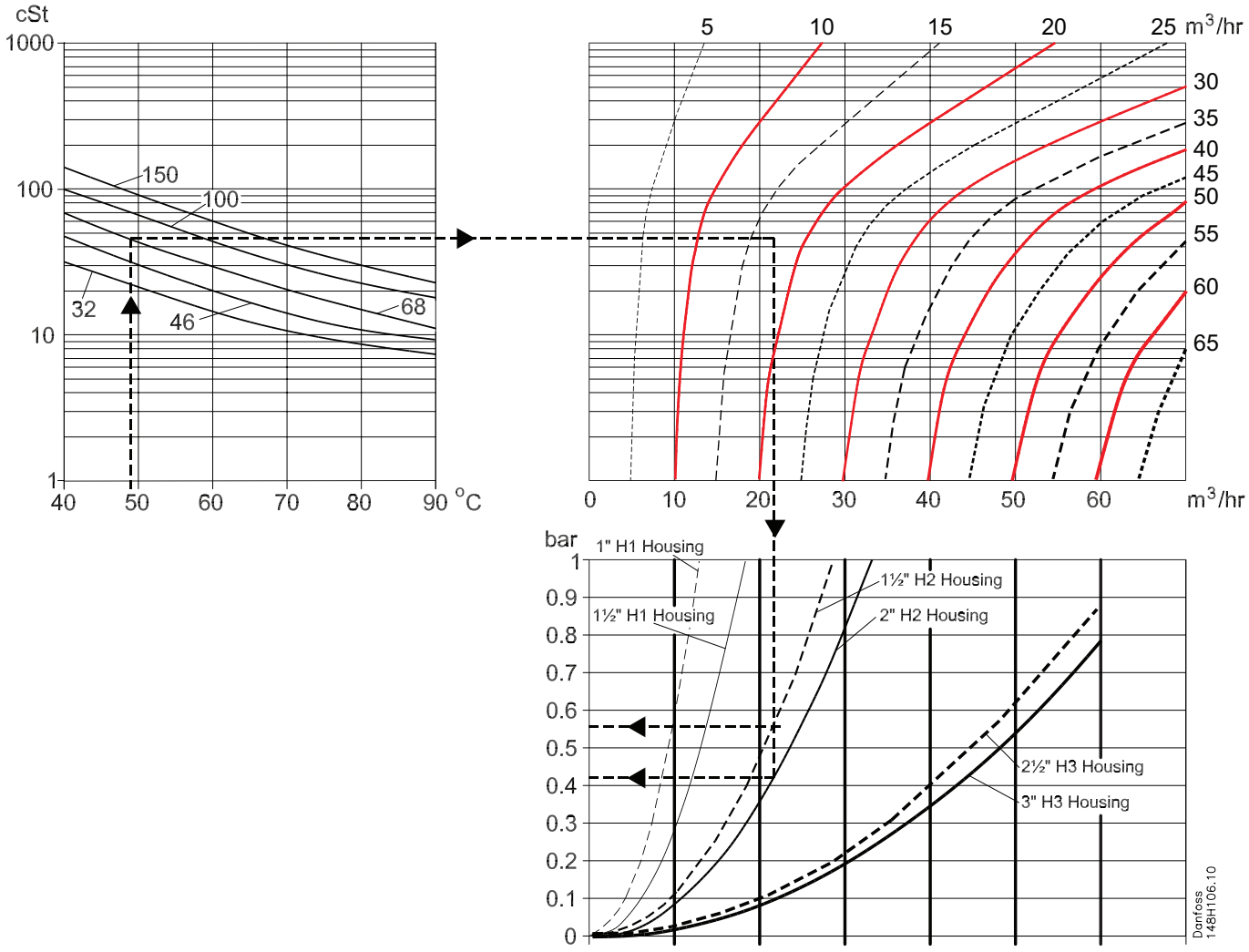

Selection example

Oil type:	Grade 68
Required flow:	17 m³/h
Nominal oil temperature:	49 °C
Pipe dimension:	40 mm

The upper left curve shows the viscosity of different grades of oil as a function of the temperature. The viscosity is continued into the upper right curve where the 17 m³/h must be found. The line is drawn vertically downwards into the capacity table for the ORV valve models.

As shown two selections can be made:
Either ORV 40 H2 with pressure drop at approx. 0.56 bar or ORV 50 H2 with pressure drop at 0.42 bar.

The final selection will depend on the available pressures in the system. If the pressures are low (or can be low at certain loads) the ORV 50 H2 might be preferred. If the pressures are constantly available the pipe dimension may be taken into account and the ORV 40 H2 might be preferred.

Capacities

US units

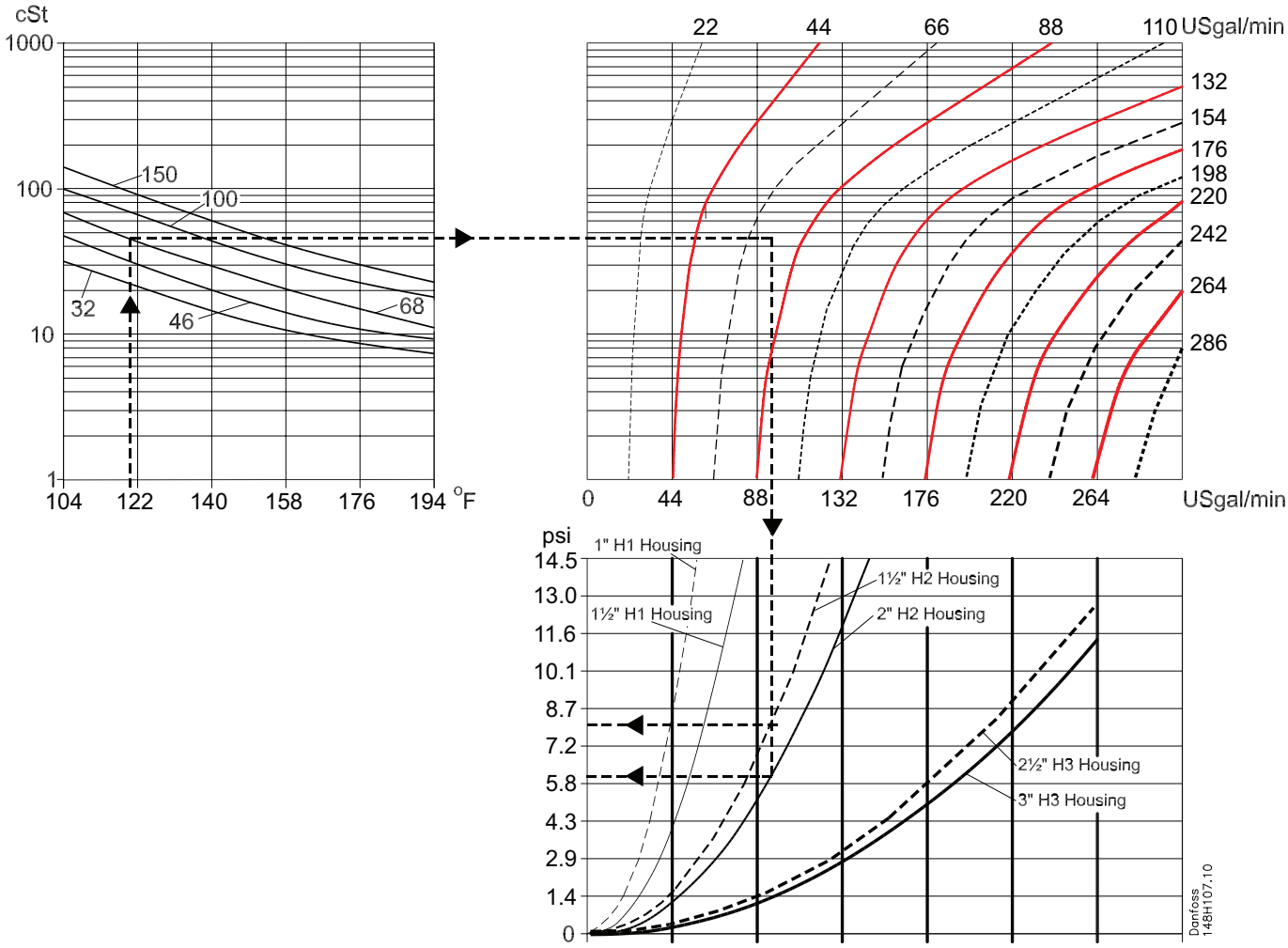

Selection example

Oil type:	Grade 68
Required flow:	75 USgal/min.
Nominal oil temperature:	120 °F
Pipe dimension:	1 ½ in

The upper left curve shows the viscosity of different grades of oil as a function of the temperature. The viscosity is continued into the upper right curve where the 75 USgal/min. must be found. The line is drawn vertically downwards into the capacity table for the ORV valve models.

As shown two selections can be made:
Either
- ORV 1½H2 with pressure drop 8.2 psi or
- ORV 2"H2 with pressure drop 6.2 psi

The final selection will depend on the available pressures in the system. If the pressures are low (or can be low at certain loads) the ORV 2" H2 might be preferred. If the pressures are constantly available the pipe dimension may be taken into account and the ORV 1½" H2 might be preferred.

Material specification

ORV 25-80

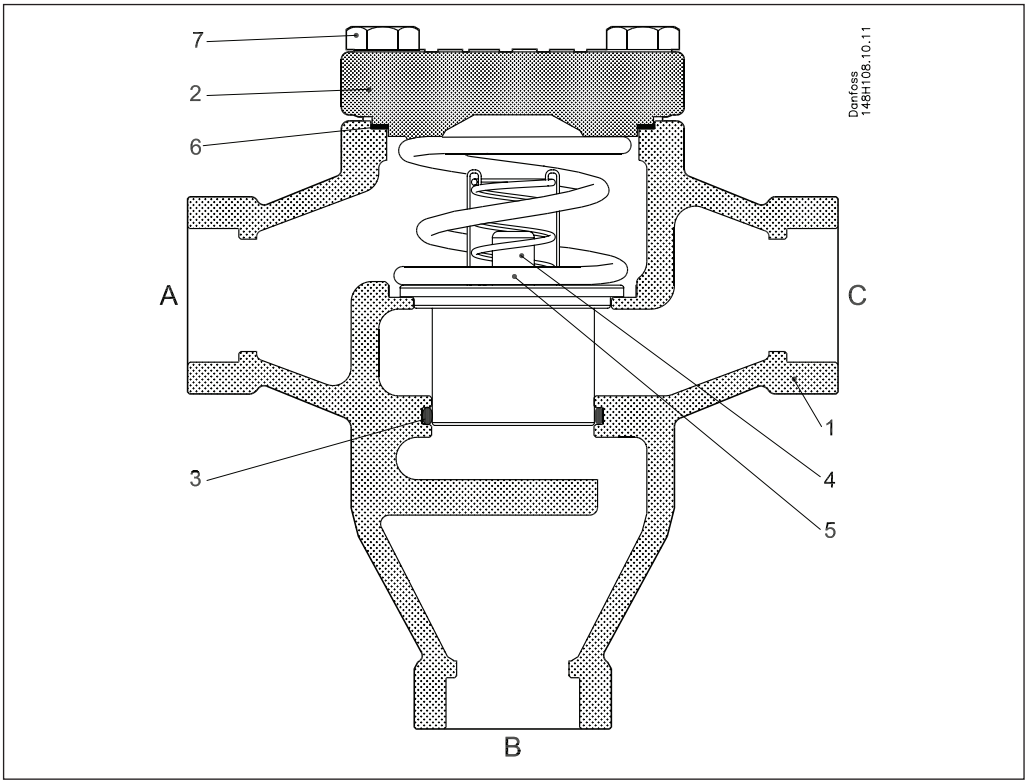

No.	Part	Material	EN		ASTM standard	
1	Housing	Steel	GP240GH	10213-2	WCB	A 216
2	Cover	Steel	GP240GH --- P285QH	10213-2 --- 10222-4	WCB	A 216 --- A 350
3	Glide ring	PTFE				
4	Element*)	Stainless steel and NI plated parts				
5	Spring	Steel	DIN17223	10270-1		
6	Gasket	Non asbestos				
7	Bolts	Steel	Quality 8.8	ISO4017	Grade 5	

*) The thermostatic element may look differently from one shown on the picture. All types of thermostats used by Danfoss have the same function, temperature setting and P-band.

Connections

DIN

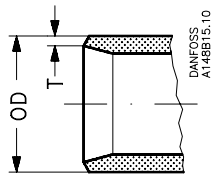

Size [mm]	Size [in]	OD [mm]	T [mm]	OD [in]	T [in]			K_v / C_v H1 housing		K_v / C_v H2 housing		K_v / C_v H3 housing	
Butt-weld DIN (EN10220)								K_v [m³/h]	C_v [Usgal/min]	K_v [m³/h]	C_v [USgal/min]	K_v [m³/h]	C_v [USgal/min]
25	1	33.7	2.6	1.327	0.103			15	17	-	-	-	-
40	1½	48.3	2.6	1.902	0.103			22	26	30	35	-	-
50	2	60.3	2.9	2.37	0.11			-	-	36	42	-	-
65	2½	76.1	2.9	3	0.11			-	-	-	-	65	75
80	3	88.9	3.2	3.5	0.13			-	-	-	-	75	87

ANSI

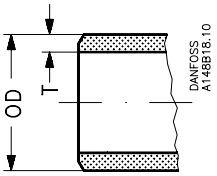

Size [mm]	Size [in]	OD [mm]	T [mm]	OD [in]	T [in]			K_v / C_v H1 housing		K_v / C_v H2 housing		K_v / C_v H3 housing	
Butt-weld ANSI (B 36.10 Schedule 80)								K_v [m³/h]	C_v [USgal/min]	K_v [m³/h]	C_v [USgal/min]	K_v [m³/h]	C_v [USgal/min]
25	1	33.7	4.6	1.327	0.181			15	17	-	-	-	-
40	1½	48.3	5.1	1.902	0.201			22	26	30	35	-	-
Butt-weld ANSI (B 36.10 Schedule 40)								K_v [m³/h]	C_v [USgal/min]	K_v [m³/h]	C_v [USgal/min]	K_v [m³/h]	C_v [USgal/min]
50	2	60.3	3.9	2.37	0.15			-	-	36	42	-	-
65	2½	73	5.2	2.87	0.2			-	-	-	-	65	75
80	3	88.9	5.5	3.5	0.22			-	-	-	-	75	87

SOC

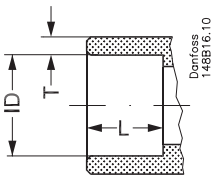

Size [mm]	Size [in]	ID [mm]	T [mm]	ID [in]	T [in]	L [mm]	L [in]	K_v / C_v H1 housing		K_v / C_v H2 housing		K_v / C_v H3 housing	
Socket welding ANSI (B 16.11)								K_v [m³/h]	C_v [USgal/min]	K_v [m³/h]	C_v [USgal/min]	K_v [m³/h]	C_v [USgal/min]
25	1	33.9	7.2	1.335	0.284	13	0.51	15	17	-	-	-	-
40	1½	48.8	6.6	1.921	0.26	13	0.51	-	-	30	35	-	-
50	2	61.2	6.2	2.41	0.24	16	0.63	-	-	36	42	-	-

Dimensions and weights

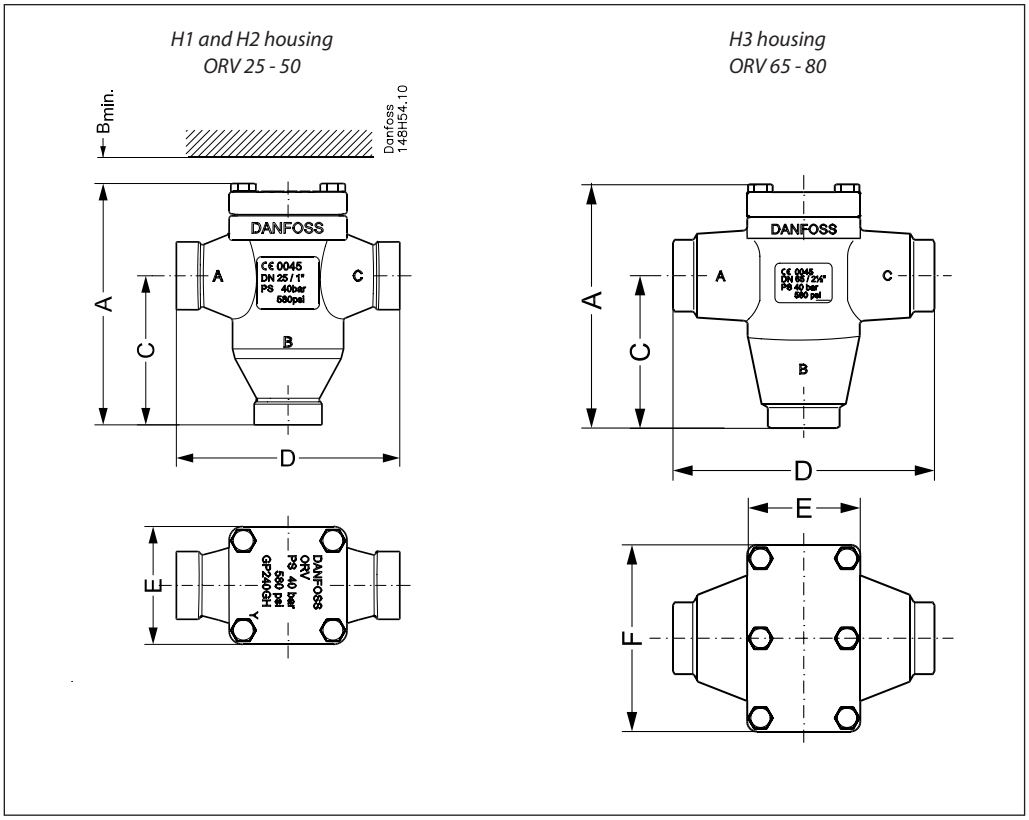

Valve size	Valve size		A	$B_{MIN.}$	C	D	E	F	Weight
H1 housing	ORV 25-40	[mm]	178	75	110	165	87	-	4.5 kg
	(1-1½)	[in]	7.00	3.00	4.33	6.50	3.43	-	10 lb
H2 housing	ORV 40-50	[mm]	215	80	138	196	110	-	9.0 kg
	(1½-2)	[in]	8.46	3.15	5.43	7.72	4.33	-	20 lb
H3 housing	ORV 65-80	[mm]	252	80	155	266	115	190	18 kg
	(2½-3)	[in]	9.92	3.15	6.10	10.47	4.53	7.48	40 lb

Temperature regulating valve, type ORV

Type codes

Valve type	ORV	Oil regulating valve, high specification				
			Available connections			
			DIN	ANSI	SOC	
Nominal size in mm (valve size measured on the connection diameter)	**25**		X	X	X	
	40		X	X	X	
	50		X	X	X	
	65		X	X		
	80		X	X		
Connection	**A** **D** **SOC**	Butt weld connection: ANSI Butt weld connection: DIN Socket welding				
Valve housing	**3-WAY**	3-WAY				

Important!
Where products need to be certified according to specific certification societies or where higher pressures are required, the relevant information should be included at the time of ordering.

Ordering ORV valves from the parts programme

Example:
ORV 40 DIN H2 49 °C/120 °F:
Thermostat element and cover gasket code number 148H3464
and
Complete valve housing code number 148H3402

Please note:
The thermostat code numbers do not include guide ring.

Gasket and guide ring are included when ordering the complete valve housing but can also be ordered separately as spare parts.

ORV parts programme

Thermostat		Code no.
Thermostat 43°C / 110°F	ORV 25 and ORV 40 H1	**148H3466**
	ORV 40 and ORV 50 H2	**148H3467**
	ORV 65 and ORV 80 H3	**148H3468**[1)]
Thermostat 49°C / 120°F	ORV 25 and ORV 40 H1	**148H3463**
	ORV 40 and ORV 50 H2	**148H3464**
	ORV 65 and ORV 80 H3	**148H3465**[1)]
Thermostat 60°C / 140°F	ORV 25 and ORV 40 H1	**148H3469**
	ORV 40 and ORV 50 H2	**148H3470**
	ORV 65 and ORV 80 H3	**148H3471**[1)]
Thermostat 77°C / 170°F	ORV 25 and ORV 40 H1	**148H3472**
	ORV 40 and ORV 50 H2	**148H3473**
	ORV 65 and ORV 80 H3	**148H3474**[1)]

Complete valve housing including gasket and guide ring but without thermostat	Code no.
ORV 25 DIN H1	**148H3399**
ORV 25 SOC H1	**148H3400**
ORV 25 ANSI H1	**148H3401**
ORV 40 DIN H1	**148H3361**
ORV 40 DIN H2	**148H3402**
ORV 40 SOC H2	**148H3403**
OVR 40 ANSI H1	**148H3404**
ORV 40 ANSI H2	**148H3405**
ORV 50 DIN H2	**148H3406**
ORV 50 SOC H2	**148H3407**
ORV 50 ANSI H2	**148H3408**
ORV 65 DIN H3	**148H3409**
ORV 65 ANSI H3	**148H3410**
ORV 80 DIN H3	**148H3362**
ORV 80 ANSI H3	**148H3411**

[1)] For valve housing size H3 the code number includes two H2 thermostats.

ORV spare parts

Part	Spare parts for	Code no.
Gasket and guide ring	ORV 25 and ORV 40 H1	**148H3246**
	ORV 40 and ORV 50 H2	**148H3247**
	ORV 65 and ORV 80 H3	**148H3248**[2)]

[2)] Including two guide rings and one gasket.

ENGINEERING
TOMORROW

Pressure regulating valves
Types OFV, OFV-SS

Contents **Page**

Features . . . 349
Design . . . 350
Technical data . . . 350
Understanding the OFV in practice . . . 351
Adjusting set pressure . . . 351
Computation and selection . . . 352
Capacity calculation for defrost pressure regulating . . . 352
Plant applications . . . 353
Material specification . . . 354
Connections . . . 356
Dimensions and weights . . . 356
Ordering . . . 357

AI234986440301en-000501 | 2017.06

ENGINEERING TOMORROW

Pressure regulating valves
Types OFV, OFV-SS



OFV are angle-way pressure regulating valves, which have ajustable opening pressure and cover the differential pressure range (ΔP): 2 – 8 bar / 29 – 116 psi. The valve can be closed manually, e.g. during plant service and have backseating, enabling the spindle seal to be replaced with the valve still under pressure.

The valves are especially designed to prevent fluttering due to low velocity and / or low density. In consequence it is possible to apply the valves with wide fluctuations in capacity demands, i.e. from maximum performance to part load. A flexible O-ring provides perfect sealing over the seat.

Features

- Applicable to HCFC, HFC, R717(Ammonia) and R744 (CO_2)
- Full temperature range packing gland
- -50 – 150 °C / -58 – 302 °F
- Maximum operating pressure: 40 bar g / 580 psig
- Three functions in one valve. The OFV valve combines the functions of a pressure reegulating valve, a check valve and a shut-off valve
- Classification: DNV, CRN, BV, EAC etc. To get an updated list of certification on the products please contact your local Danfoss Sales Company
- Special features for OFV-SS
  - Low temperature stainless steel housing and bonnet
  - Low temperature packing gland -60 – 150 °C / -76 – 302 °F
  - Maximum operating pressure 52 bar / 754 psi g

Design

Connections
Available with the following connections:
- Welding DIN (EN 10220)
- Welding ANSI (B 36.19M)

Packing gland OFV
The "full temperature range" packing gland consists of a double O-ring sealing arrangement combined with permanent lubrication from a grease reservoir. This ensures perfect tightness throughout the whole range: -50 – 150 °C / -58 – 302 °F.
Flexible O-ring provides perfect sealing over the seat.

Packing gland OFV-SS
The stainless steel packing gland comprises a spring loaded seal packing gland which ensures a perfect tightness in the range:
-60 – 150 °C / -76 – 302 °F.
The packing glands are equipped with a scraper ring to prevent penetration of dirt and ice into the packing gland.

Pressure Equipment Directive (PED)
OFV valves are approved and CE-marked in accordance with the Pressure Equipment Directive - 97/23/EC.

For further details / restrictions - see Installation Instruction
Installation

	OFV
Nominal bore	DN≤ 25 mm (1 in)
Classified for	Fluid group I
Category	Article 3, paragraph 3

The valve is designed to resist very high internal pressure, but as to the pipe system in general, hydraulic pressure caused by thermal expansions in entrapped refrigerants should be avoided. For further information please see OFV installation instruction.



Example of Marking Ring, Valve type OFV.

Technical data

- *Refrigerants*
  Applicable to HCFC, HFC, R717(Ammonia) and R744 (CO_2).
- Flammable hydrocarbons are not recommended. For further information please contact your local Danfoss Sales Company.
- *Temperature range*
  OFV: -50 – 150 °C / -58 – 302 °F
  OFV-SS: -60 – 150 °C / -76 – 302 °F
- *Pressure range*
  Maximum operating pressure:
  OFV: 40 bar g / 580 psig
  OFV-SS: 52 bar / 754 psi g
  Set pressure (Δp):
  2 - 8 bar / 29 – 116 psi.

Understanding the OFV in practice
(when working in a defrosting application)

How the OFV works
The opening pressure of the OFV can be adjusted to a specific differential pressure ΔP_{set} by turning the spindle. ΔP_{set} indirectly determines the defrosting pressure. As illustrated in fig. 1 the OFV will work at a pressure somewhat higher than ΔP_{set}, namely the ΔP_{total} which will be situated somewhere in the area marked with grey in fig. 1.

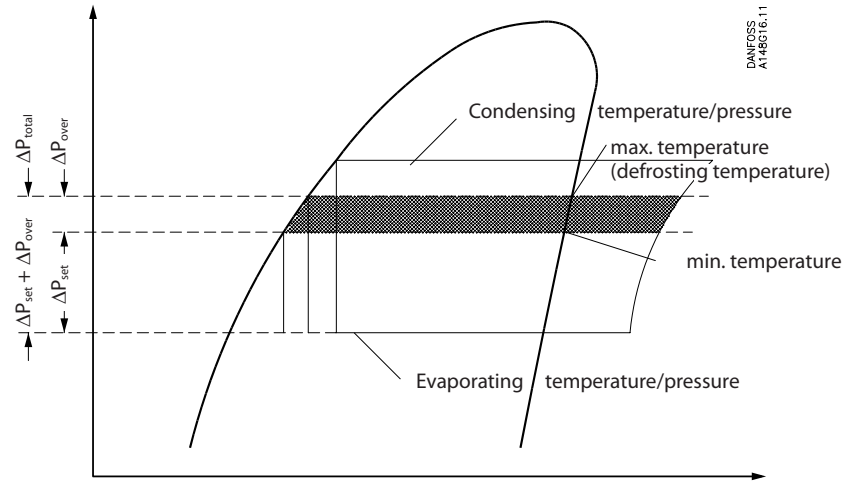

Fig. 1

As ΔP_{over} is plant specific, it follows that the total working pressure ($\Delta P_{total} = \Delta P_{set} + \Delta P_{over}$) is plant specific too. By adjusting the opening differential pressure ΔP_{set} it is possible to adjust the working pressure $\Delta P_{set} + \Delta P_{over}$ until you get the required defrosting pressure.

Defrosting pressure ≈ Evaporating pressure + $\Delta P_{set} + \Delta P_{over}$.

Important!
The OFV valve is **back pressure** dependent.

Adjusting set pressure

The set pressure is the pressure at which the valve starts to open.

The set pressure is adjustable in the range 2 - 8 bar differential pressure. When the valve is delivered, a distance piece is supplied seperately with the valve. The distance piece can be mounted under the spring, thus increasing the initial tension of the spring. Therefore the valve covers the complete range 2 - 8 bar differential pressure, as follows:

2 - 6.5 bar differential pressure without distance piece.
3.5 - 8 bar differential pressure with distance piece.

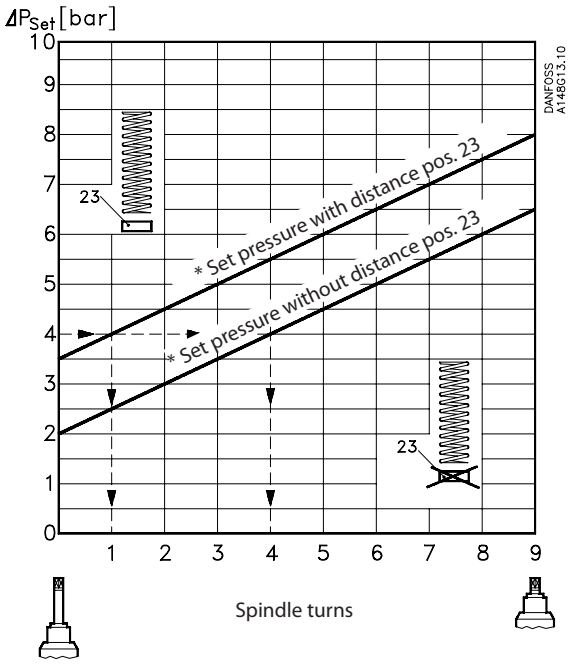

Fig. 2
Set pressure as a function of the spindle turns

* see material specification and installation an maintenance instruction for OFV.

Computation and selection

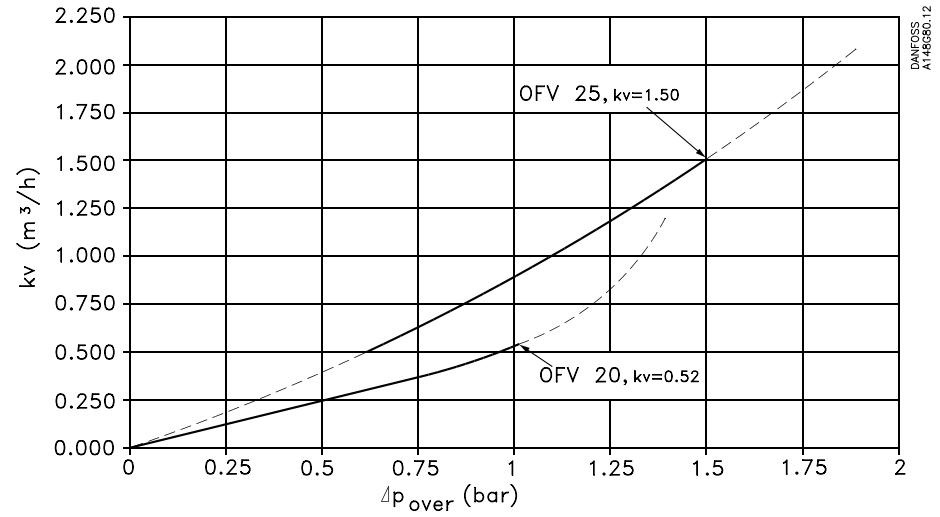

Fig. 3.
k_v values for OFV 20 - 25

The capacity of the OFV valves can be calculated by the following formulas:

Liquids without phase change

$$G = k_v \sqrt{r \times \Delta P_{total} \times 1000}$$

Liquids with phase change (e.g. pressure control during defrost)

$$G = k_v \times 0.78 \sqrt{r \times \Delta P_{total} \times 1000}$$

G: mass flow (kg/h)

k_v: flow rate (m^3/h) (the k_v value is dependent on ΔP_{over}, see fig. 3).

ρ: density, liquid (kg/m^3)

ΔP_{bar} = differential pressure (bar)
$\Delta P_{bar} = \Delta P_{set} + \Delta P_{over}$

Defrosting pressure ≈ Evaporating pressure + $\Delta P_{set} + \Delta P_{over}$

Capacity calculation for defrost pressure regulating

Table 1: Max. mass flow (G_{OFV}) for OFV 20 and OFV 25 with R717

Evaporating temperature	-10 °C	-20 °C	-30 °C	-40 °C	-50 °C
Defrosting temperature	10 °C				
OFV 20					
Mass flow $G_{OFV\ 20}$ (kg/h) (ΔP_{over} = 1 bar □ k_v = 0.52 m^3/h)	577	661	714	747	768
OFV 25					
Mass flow $G_{OFV\ 25}$ (kg/h) (ΔP_{over} = 1.5 bar □ k_v = 1.5 m^3/h)	1666	1906	2059	2156	2216

Note: the calculation is based on formula for "liquids with phase change" in the paragraph "Computation and selection".

Table 2: Calculating of refrigerant mass flow G_0

Evaporating temperature	-10 °C	-20 °C	-30 °C	-40 °C	-50 °C
Mass flow G_0 (kg/h)	2.780 × Q_0	2.712 × Q_0	2.651 × Q_0	2.595 × Q_0	2.544 × Q_0

Q_0: Capacity of the evaporator (kW)
Note: the calculation is based on pump circulating system (Liquid temperature = Evaporating temperature)

Guide line: Defrost capacity $G_{OFV} \sim (2 - 3) \times G_0$

Example:
An evaporator in a refrigerant plant has a capacity of Q_o = 150 kW and a evaporating temperature of -40 °C.
The defrosting temperature has to be controlled with an OFV valve.

Table 2: G_0= 2.595 × Q_0 = 389 kg/h
The defrosting capacity in this example is 2.5 × G_0.
$G_{OFV} \geq 2.5 \times 389 = 972$ kg/h.
OFV 25 is selected ($G_{OFV\ 25\ max.}$ = 2156 kg/h (table 1)).

Plant applications

Pressure/temperature control during hot gas defrosting

In order to obtain efficient hot gas defrosting the temperature (pressure) must be increased to approx. 10°C (50°F). The OFV is the optimal solution for controlling the defrosting pressure and thus the corresponding temperature. It is recommended to start the defrosting cycle by closing the ICLX valve in the liquid supply line and allowing some of the cold liquid contained in the evaporator to return to the liquid separator.

Close the ICLX valve in the suction line and after a delay open the solenoid valve in the hot gas supply in order to build up the defrosting pressure in the evaporator. When the defrosting pressure reaches the set OFV-pressure, the OFV will open and the defrosting pressure will increase to the working pressure $\Delta P_{set} + \Delta P_{over}$.

After defrosting, it is normal practice to open the ICLX in the return line to equalize the pressure to the suction side before opening to the pump side.

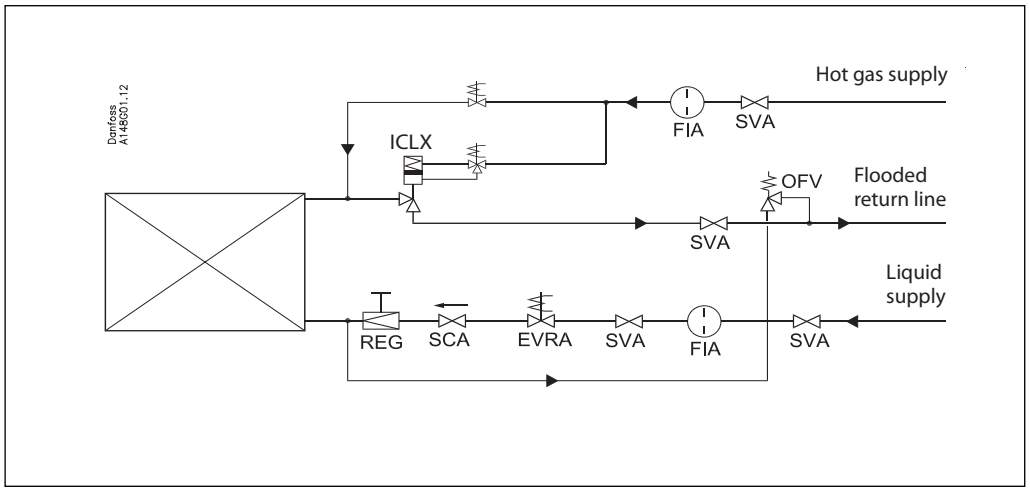

Material specification

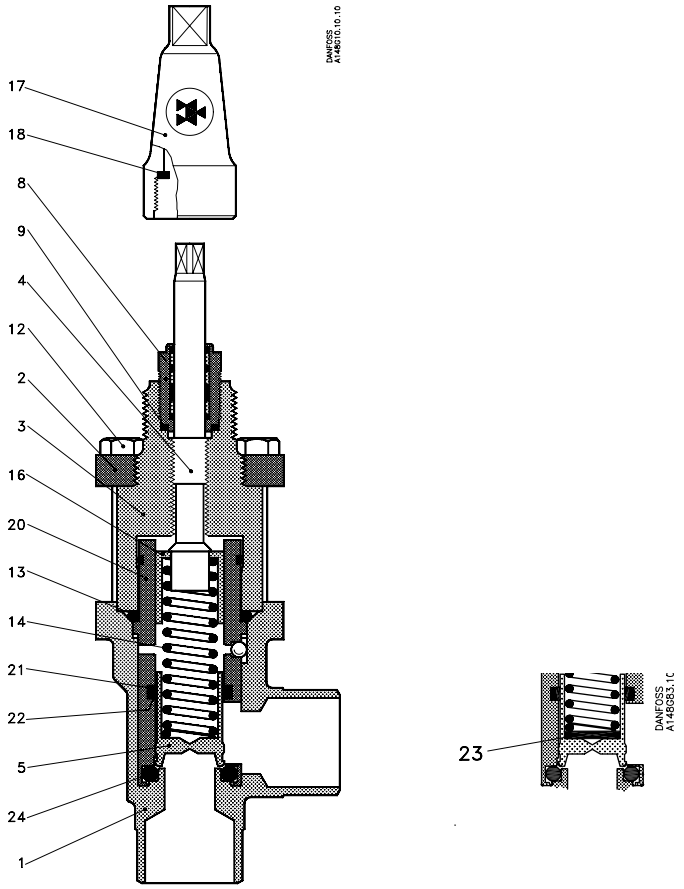

No.	Part	Material	EN	ISO	ASTM
1	Housing	Steel	P285 QH EN10222-4		LFA350
2	Bonnet, Flange	Steel	P275 NL1 EN10028-3		
3	Bonnet, Insert	Steel			
4	Spindle	Stainless steel	X10 CrNi S18-9 17440	Type 17 683/13	AISI 303
5	Cone	Steel			
8	Packing gland	Steel			
9	Packing washer	Aluminium			
12	Bolts	Stainless steel	A2-70	A2-70	Type 308
13	O-ring	Cloroprene (Neoprene)			
14	Spring	Steel			
16	Spring washer	Steel			
17	Cap	Aluminium			
18	Gasket for cap	Nylon			
20	Guide piece	Steel			
21	O-ring	Cloroprene (Neoprene)			
22	Sealing ring	PTFE (Teflon)			
23	Distance piece	Steel			
24	O-ring	Cloroprene (Neoprene)			

Material specification

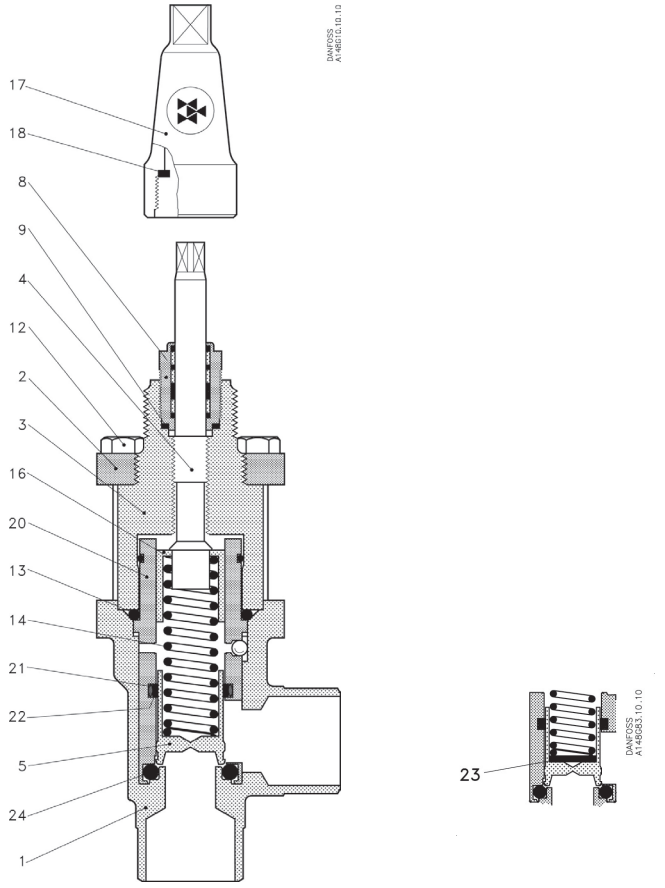

OFV-SS 20 - 25 (¾ - 1")

No.	Part	Material	DIN/EN	ISO	ASTM
1	Housing	Stainless steel	X5CrNi18-10 EN10088		AISI 304
2	Bonnet, Flange	Stainless steel	X5CrNi18-10 EN10088		AISI 304
3	Bonnet, Insert	Stainless steel			
4	Spindle	Stainless steel	X8CrNiS18-9 DIN 17440	Type 17, 683/13	AISI 303
5	Cone	Steel	9SMn28	Type 2	1213
8	Packing gland	Stainless steel			
9	Packing washer	Non asbestos			
12	Bolts	Stainless steel	A2-70	A2-70	Type 308
13	O-ring	Cloroprene (Neoprene)			
14	Spring	Steel			
16	Spring washer	Steel	Steel		
17	Spindle seal cap	Aluminium			
18	Seal cap gasket	Nylon			
20	Guide piece	Steel			
21	O-ring	Cloroprene (Neoprene)			
22	Sealing ring	PTFE (Teflon)			
23	Distance piece	Steel			
24	O-ring	Cloroprene (Neoprene)			

Connections

DIN

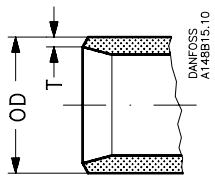

ANSI

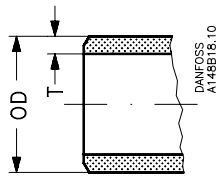

Size mm	Size in.	OD mm	T mm	OD in.	T in.			k_v-angle m^3/h		C_v-angle USgal/min	
Butt-weld DIN (EN 10220)											
20 25	¾ 1	26.9 33.7	2.3 2.6	1.06 1.33	0.09 0.10			0 - 0.52 0 - 1.50		0 - 0.60 0 - 1.74	
Butt-weld ANSI (B 36.10M)											
20 25	3/4 1	26.9 33.7	4.0 4.6	1.06 1.33	0.16 0.18			0 - 0.52 0 - 1.50		0 - 0.60 0 - 1.74	
Butt-weld ANSI (B 36.19M, SCHEDULE 40)											
20 25	¾ 1	26.9 33.7	2.9 3.5	1.06 1.33	0.11 0.14			0 - 0.52 0 - 1.50		0 - 0.60 0 - 1.74	

Dimensions and weights

OFV 20 - 25

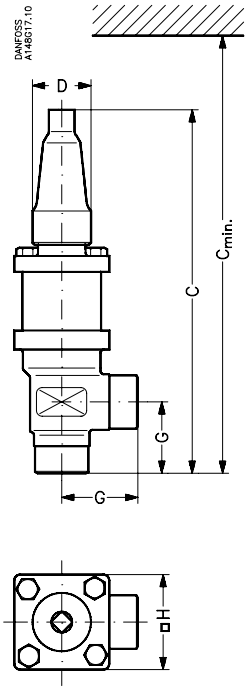

Valve size			G	C	C_{min}		∅D		□H		Weight
OFV 20 - 25											
OFV 20 (¾ in)	[mm] [in]		45 1.77	230 9.1	290 11.4		38 1.5		60 2.4		2.0 kg
OFV 25 (1 in)	[mm] [in]		45 1.77	230 9.1	290 11.4		38 1.5		60 2.4		2.0 kg

Specified weights are approximate values only.

Ordering

How to order
The table below is used to identify the valve required.

Please note that the type codes only serve to identify the valves, some of which may not form part of the standard product range.

For further information please contact your local Danfoss Sales Company.

Example for type codes

OFV	25	D	1	3	3

Type codes

Valve type	**OFV** **OFV-SS**	Over Flow Valve in carbon steel Over Flow Valve in stainless steel
Nominal size in mm	**20** **25**	DN 20 DN 25
Connections	**D** **A**	Butt-weld connection: DIN EN 10220 Butt-weld connection: ANSI B 36.19M
Valve housing	**1**	Angle flow
Materials	**3**	Housing: P285 QH, Bonnet: P275 NL1
Other equipment	**3**	Cap, short spindle with Cloroprene (Neoprene) O-ring

Important!
Where products need to be certified according to specific certification societies or where higher pressures are required, the relevant information should be included at the time of order.

Opening differential pressure
2-8 bar (29-116 psi):

Size		Type	**Code No.**
mm	in		
20	¾	OFV 20 A 133	**2412+185**
20	¾	OFV 20 D 133	**2412+183**
20	¾	OFV-SS 20 D ANG OVER FLOW VALVE 52BAR	**148G3194**
25	1	OFV 25 A 133	**2412+186**
25	1	OFV 25 D 133	**2412+184**
25	1	OFV-SS 25 A ANG OVER FLOW VALVE 52BAR	**148G3843**
25	1	OFV-SS 25 D ANG OVER FLOW VALVE 52BAR	**148G3195**

ENGINEERING
TOMORROW

Constant pressure valve
Type CVMD

Contents **Page**

Technical data 361
Ordering 361
Materials 361
Construction 361
Dimensions and weight 362
Application 362

AI184486420268en-000201 | 2016.01

ENGINEERING TOMORROW

Constant pressure valve
Type CVMD



CVMD is a constant pressure regulator for refrigeration and freezing plant in applications such as;

- Hot gas defrosting (drain lines)
- Refrigerant pump bypass (to ensure min. flow in refrigerant pumps).

Technical data

- *Refrigerants*
  HCFC, HFC, R717 (Ammonia)
- *Range*
  0-7 Bar (0-102 psi)
- *Max. working pressure*
  PB = 28 bar (406 psi)
- *Temperature range*
  -50 °C – 120 °C / -58 – 248 °F
- *k_v value*
  1.5
- *C_v value*
  1.7
- Classification: DNV, CRN, BV, EAC etc.
  To get an updated list of certification on the products please contact your local Danfoss Sales Company.

Ordering

CVMD incl. $^1/_2$ in weld flange, code no. **027B1038**.

Materials

- Gaskets are non asbestos
- Valve housing made of EN-GJS-400-18

Construction

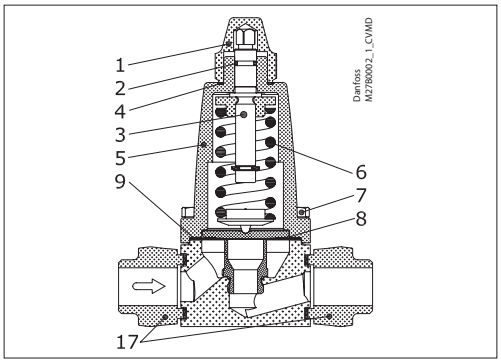

1. Protection cap
2. O-ring
3. Spindle
4. Gasket
5. Cover
6. Spring
7. Screw
8. Diaphragm
9. Gasket
17. Flanges

Dimensions and weight

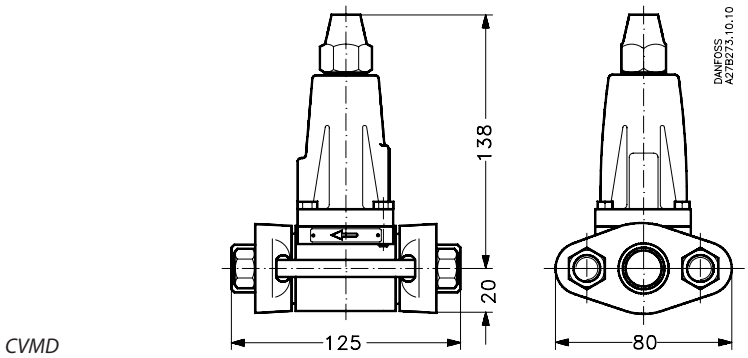

CVMD

Weight:
2.7 kg

Application

Example

Hot gas defrosting of evaporator with pump circulation

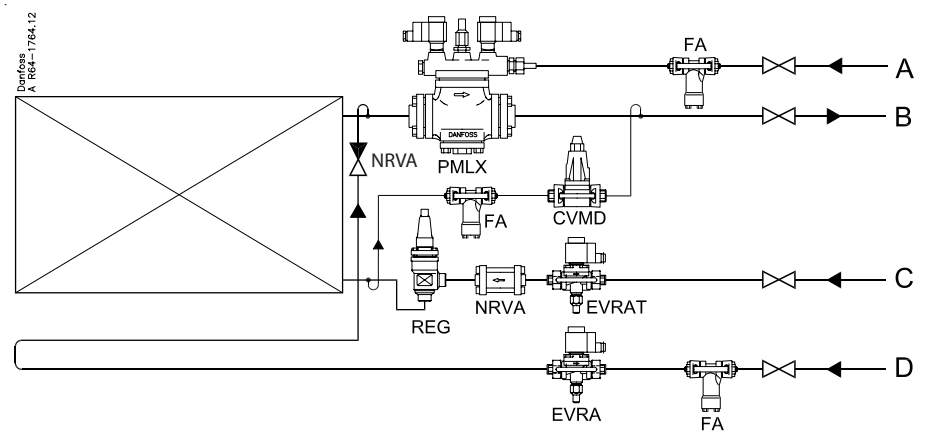

The figure shows the low pressure side of an R 717 refrigeration plant with flooded evaporator with pump circulation.

In this application, the constant pressure valve, type CVMD, is mounted as a pressure regulator in the bypass line between evaporator and downstream wet suction line after the solenoid valve, type PMLX.

Pos. A on the drawing is the pilot line from the high pressure side to PMLX.
Pos. B is the liquid/gas return line.
Pos. C is the liquid line to the evaporator.
Pos. D is the hot gas line for hot gas defrosting of the evaporator.

The CVMD can be used in this application for evaporators with capacities up to:

R 717

Defrost temperature	10 °C				
Evaporating temperature	-10 °C	-20 °C	-30 °C	-40 °C	-50 °C
(Drainline capacity kg/h)	(1666)	(1906)	(2059)	(2156)	(2216)
Max. $Q_{Evaporator}$ (kW)	240	281	311	333	349

Based on:
$\Delta P_{over} = 1$, $k_v = 1.5$ m³/h
Defrost capacity (kW) = 2.5 × $Q_{Evaporator}$

Use PM + CVP (HP) valves for higher capacities.

ENGINEERING
TOMORROW

Thermostat
KP

Contents **Page**

Features 365
Approvals 365
Ship approvals 365
Technical data 366
Contact systems 366
Regulating range 367
Ordering 368
Design / function 370
Terminology 371
Setting 372
Charges 372
Dimensions an weights 373

AI203586420959en-000701 | 2016.07

ENGINEERING TOMORROW

Thermostat
KP



The KP Thermostats are single-pole, double-throw (SPDT) temperature-operated electric switches.

They can be connected directly to a single-phase AC motor of up to approx.
2 kW or installed in the control circuit of DC motors and large AC motors.

The KP Thermostats are used for regulation, but can also be seen in safety monitoring systems.

They are available with vapour charge or with adsorption charge.
With vapour charge the differential is very small.
The KP Thermostats with adsorption charge are widely used to give frost protection.

Features

- Wide regulating range
- Can be used for deep freeze, refrigeration and air conditioning plant
- Welded bellows elements mean increased reliability
- Small dimensions.
  Easy to install in refrigerated counters or cold rooms
- Ultra-short bounce times.
  This gives long operating life, reduces wear to a minimum and increases reliability
- Standard versions with changeover switch.
  Possible to obtain opposite contact function or to connect a signal
- Electrical connection at the front of the unit.
  Facilitates rack mounting
  Saves space
- Suitable for alternating and direct current
- Cable entry of soft thermoplastic for cables from 6 to 14 mm diameter
- Extensive and wide range

Approvals

CE-marked in accordance with EN 60947-4/-5 for sale in Europe

China Compulsory Certificate, CCC
Underwriters Laboratories Inc., US – UL
GOST

Ship approvals

Germanischer Lloyd, GL (excluding KP 98)
Registro Italiano Navale, RINA
Bureau Veritas, France, BV (excluding KP 98)
Lloyd's Register, LR (excluding KP 79, KP 81, KP 98)

Russian Maritime Register of Shipping, RMRS

Note: Marine Approvals do not cover KP 98 dual thermostat.

Technical data

Ambient temperature		-40 – 65 °C (80 °C for max. 2 hours).
Switch		Single-pole, double-throw (SPDT) changeover switch.
Contact load	Alternating current	AC1 =16 A, 400 V
		AC3 = 16 A, 400 V
	Direct current	DC13: 12 W, 220 V control current
Wire dimensions	solid / stranded	0.75 – 2.5 mm^2
	flexible, without ferrules	0.7 – 2.5 mm^2
	flexible, with ferrules	0.5 – 1.5 mm^2
Tightening torque		max. 2 Nm
Rated impulse voltage		4 kV
Pollution degree		3
Short circuit protection, fuse		16 A
Insulation		400 V
Enclosure		30/44

Cable connection
Cable entry for cables 6 – 14 mm dia.
A Pg 13.5 screwed cable entry can be used for 6 – 14 mm dia. cables.
With 8 – 16 mm cables a standard Pg 16 screwed cable entry can be used.

Enclosure
IP30 to EN 60529 / IEC 529
This grade of enclosure is obtained when the unit is mounted on a flat surface or bracket. The bracket must be fixed so that all unused holes are covered.

Contact systems

KP temperature control	KP 98
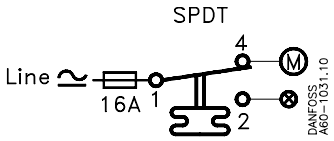	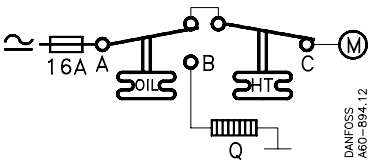

Regulating range

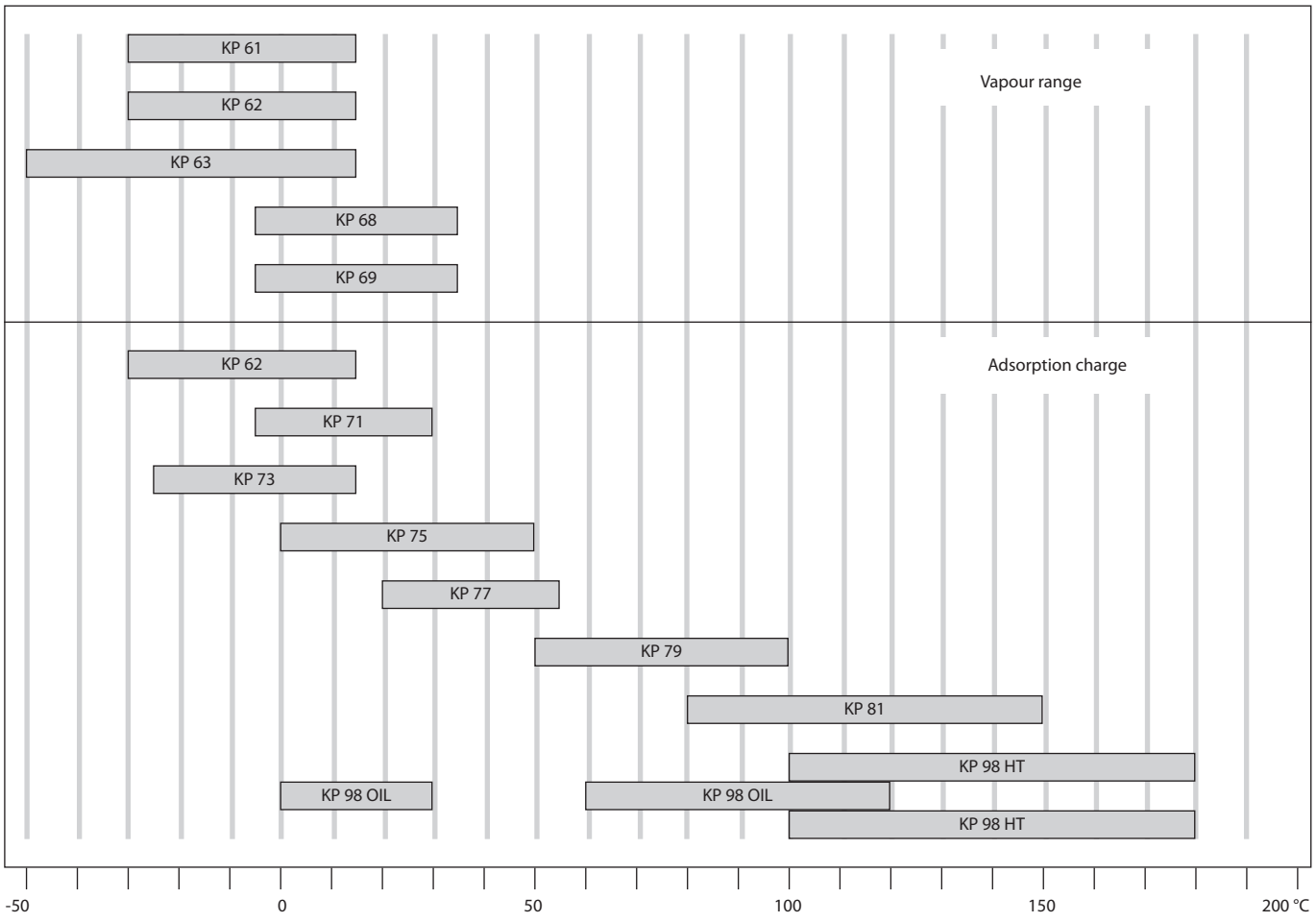

Ordering





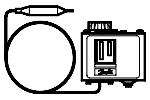

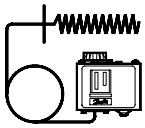

Charge	Type	Bulb type	Setting - range	Differential Δt		Reset	Max. bulb temp.	Capillary-tube length	Code no.
				Lowest temperature	Highest temperature				
			[°C]	[°C]	[°C]		[°C]	[m]	
Vapour [1]	KP 61	A	-30 – 15	5.5 – 23	1.5 – 7	aut.	120	2	**060L110066**
	KP 61	A	-30 – 15	5.5 – 23	1.5 – 7	aut.	120	5	**060L110166**
	KP 61	B	-30 – 13	4.5 – 23	1.2 – 7	aut.	120	2	**060L110266**
	KP 61	B	-30 – 15	5.5 – 23	1.5 – 7	aut.	120	2	**060L110366** [3]
	KP 61	B	-30 – 15	5.5 – 23	1.5 – 7	aut.	120	2	**060L112866** [3] [4]
	KP 61	A	-30 – 15	Fixed 6	Fixed 2	min.	120	5	**060L110466**
	KP 61	B	-30 – 15	Fixed 6	Fixed 2	min.	120	2	**060L110566**
	KP 62	C 1	-30 – 15	6.0 – 23	1.5 – 7	aut.	120	–	**060L110666**
	KP 63	A	-50 – 10	10.0 – 70	2.7 – 8	aut.	120	2	**060L110766**
	KP 63	B	-50 – 10	10.0 – 70	2.7 – 8	aut.	120	2	**060L110866**
	KP 68	C 1	-5 – 35	4.5 – 25	1.8 – 7	aut.	120	–	**060L111166**
	KP 69	B	-5 – 35	4.5 – 25	1.8 – 7	aut.	120	2	**060L111266**
Adsorbtion [2]	KP 62	C 2	-30 – 15	5.0 – 20	2.0 – 8	aut.	80	–	**060L111066** [3] [4]
	KP 71	E 2	-5 – 20	3.0 – 10	2.2 –9	aut.	80	2	**060L111366**
	KP 71	E 2	-5 – 20	Fixed 3	Fixed 3	min.	80	2	**060L111566**
	KP 73	E 1	-25 – 15	12.0 – 70	8.0 – 25	aut.	80	2	**060L111766**
	KP 73	D 1	-25 – 15	4.0 – 10	3.5 – 9	aut.	80	2	**060L111866** [3]
	KP 73	D 1	-25 – 15	Fixed 3.5	Fixed 3.5	min.	80	2	**060L113866**
	KP 73	D 2	-20 – 15	4.0 – 15	2.0 – 13	aut.	55	3	**060L114066**
	KP 73	D 1	-25 – 15	3.5 – 20	3.25 – 18	aut.	80	2	**060L114366**
	KP 75	F	0 – 35	3.5 – 16	2.5 – 12	aut.	110	2	**060L112066**
	KP 75	E 2	0 – 35	3.5 – 16	2.5 – 12	aut.	110	2	**060L113766**
	KP 77	E 3	20 – 60	3.5 – 10	3.5 – 10	aut.	130	2	**060L112166**
	KP 77	E 3	20 – 60	3.5 – 10	3.5 – 10	aut.	130	3	**060L112266**
	KP 77	E 2	20 – 60	3.5 – 10	3.5 – 10	aut.	130	5	**060L116866**
	KP 79	E 3	50 – 100	5.0 – 15	5.0 – 15	aut.	150	2	**060L112666**
	KP 81	E 3	80 – 150	7.0 – 20	7.0 – 20	aut.	200	2	**060L112566**
	KP 81	E 3	80 – 150	Fixed 8	Fixed 8	max.	200	2	**060L115566**
	KP 98	E 2	OIL: 60 – 120	OIL: Fixed 14	OIL: Fixed 14	max.	150	1	**060L113166**
		E 2	HT: 100 – 180	HT: Fixed 25	HT: Fixed 25	max.	250	2	

[1]) Bulb must always be placed colder than the thermostat housing and capillary tube. The thermostat will then regulate independent of ambient temperature.

[2]) Bulb can be placed warmer or colder than thermostat housing and capillary tube, but variations from 20 °C ambient temperature will influence the scale accuracy.

[3]) With manual switch, not isolating switch.

[4]) Panel mounting model with top plate.

Ordering
(continued)

Thermostat bulb types

A	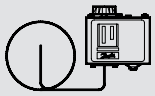	Straight capillary tube
B	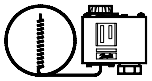	ø9.5 × 70 mm remote air coil
C		C1: ø40 × 30 mm air coil C2: ø25 × 67 mm air coil (integral with thermostat)
D	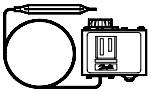	D1: ø10 × 85 mm double contact remote bulb D2: ø16 × 170 mm double contact remote bulb Note! Cannot be used in sensor (bulb) pocket
E	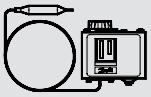	E1: ø6.4 × 95 mm remote bulb E2: ø9.5 × 115 mm remote bulb E3: ø9.5 × 85 mm remote bulb
F	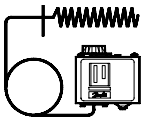	ø25 × 125 mm remote duct coil

Design / function

1. Temperature setting spindle
2. Differential setting spindle
3. Main arm
7. Main spring
8. Differential spring
9. Bellows
12. Switch
13. Terminals
14. Earth terminal
15. Cable entry
16. Tumbler
17. Sensor

Key sketch of KP thermostat

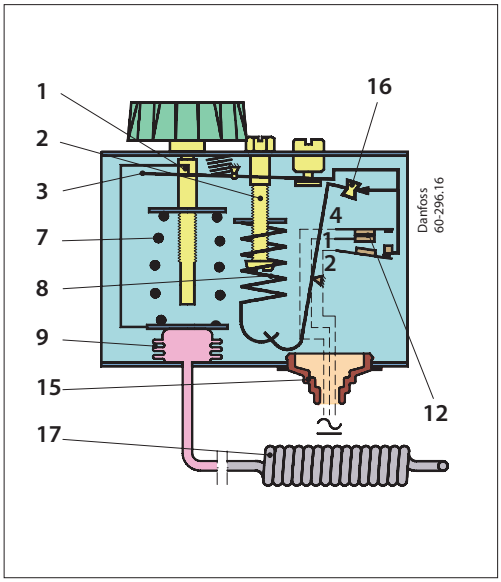

KP thermostat

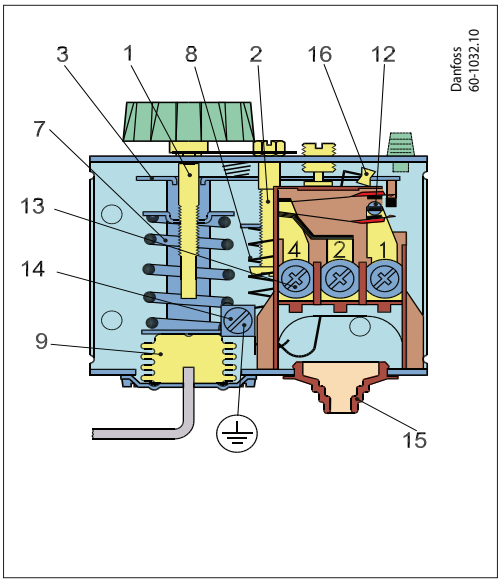

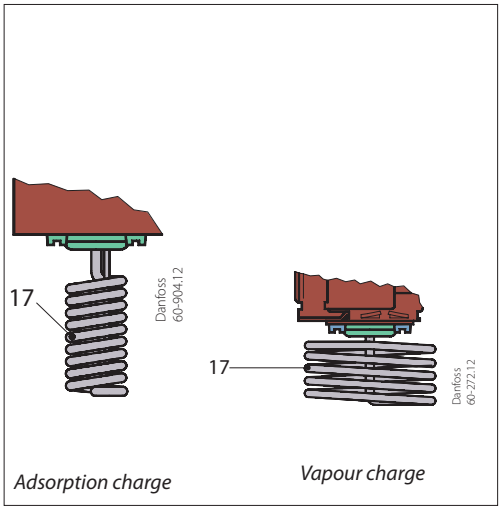

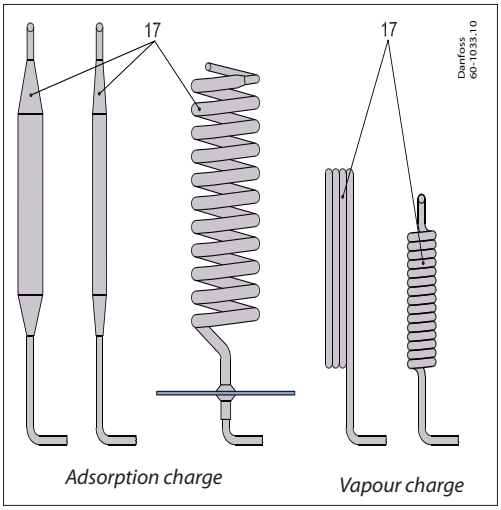

The switch in the KP has a snap-action function and the bellows move only when the cut-in or cut-out value is reached.

The design of the KP thermostats affords the following advantages:

- high contact load,
- ultra-short bounce time,
- vibration resistance up to 4 g, in the range 0 – 1000 Hz,
- long mechanical and electrical life.

Design / function
(continued)

KP thermostat, dual type

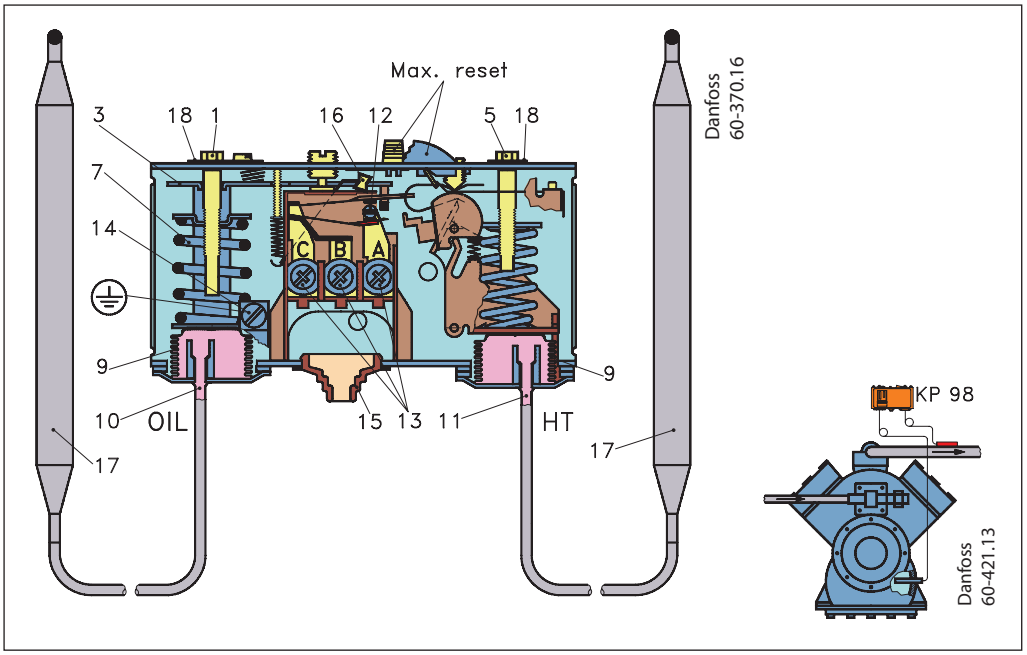

1. Temperature setting spindle, OIL
3. Main arm
5. Temperature setting spindle, HT
7. Main spring
9. Bellows
10. Capillary tube, OIL
11. Capillary tube, HT
12. Switch
13. Terminals
14. Earth terminal
15. Cable entry
16. Tumbler
17. Sensor (bulb)
18. Locking plate

Dual thermostat KP 98 is used to provide protection against excessively high discharge gas temperature and to ensure a suitable oil temperature in the compressor.
To avoid the temperature of the hot gas exceeding the maximum permissible value during extreme operating conditions (low evaporating pressure, high condensing pressure, high suction vapour superheat) a KP 98 thermostat can be used on the high temperature side (HT). If the temperature of the hot gas becomes too high the refrigerant will break down and the compressor discharge valve will become damaged.

The risk is greatest in refrigeration systems that operate on a high compression ratio (e.g. in systems with NH_3 or R22) and in applications with hot gas bypass.
This unit has two separate thermostat functions.
The HT sensor that controls the discharge gas temperature is fitted on the discharge tube immediately after the compressor.
For larger compressors, the sensor can be built into the discharge line.
The OIL sensor that controls the oil temperature is located in the compressor oil sump.

Terminology

Differential
The differential is the difference between the make and break temperatures.
A differential is necessary for satisfactory automatic operation of the plant.

Mechanical differential (intrinsic differential)
The mechanical differential is the differential set by the differential spindle.

Operating differential (thermal differential)
The operating differential is the differential the plant operates on. Operating differential is the sum of the mechanical differential and the differential produced by the time constant.

Reset
1. Manual reset:
   Units with manual reset can only be restarted after the reset button has been activated.
   On min. reset units the set value is equal to the cut-out value for falling temperature.
   On max. reset units the set value is equal to the cut-out value for rising temperature.

2. Automatic reset:
   These units are automatically reset after operational stop.

Setting

Thermostats with automatic reset

Set the upper activating temperature on the range scale.
Set the differential on the "DIFF" scale.
The temperature setting on the range scale will then correspond to the temperature at which the refrigeration compressor will be started on rising temperature. The compressor will be stopped when the temperature has fallen in relation to the differential setting.
Note that the differential depends on the range setting. Therefore, the differential scale must only be used as guideline.
If with low stop temperature settings the compressor will not stop, check whether the differential is set at too high a value!

Thermostats with minimum reset

Set the stop temperature on the range scale.
The differential is a fixed setting.
The compressor can be restarted by pressing the "Reset button" after the temperature on the thermostat sensor has risen by a value equal to the fixed differential setting.

Thermostats with maximum reset

Set the stop temperature on the range scale.
The differential is a fixed setting.
The compressor can be restarted by pressing the "Reset button" after the temperature on the thermostat sensor has fallen to a value equal to the fixed differential setting.

Charges

1. Vapour charge

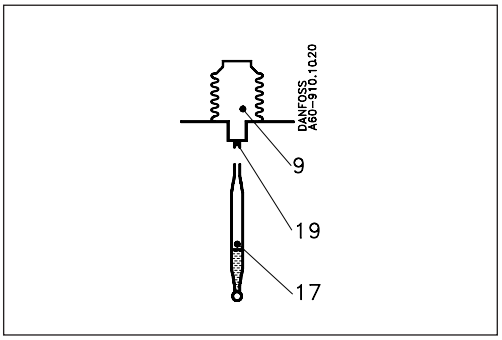

9. Bellows element
17. Sensor (bulb)
19. Capillary tube

Here the interdependence between the pressure and temperature of saturated vapour is utilized, i.e. the element is charged with saturated vapour plus a small amount of liquid.
The charge is pressure-limited; a further increase in pressure after evaporation of all the liquid in the sensor (17) will only result in a small pressure increase in the element.

This principle can be utilized in thermostats for low temperature, etc. where evaporation must be able to take place from the free liquid surface in the sensor (within the operating range of the thermostat), and where at the same time, the bellows must be protected against deformation when kept at normal ambient temperatures.
Since the pressure in the element depends on the temperature at the free liquid surface, the thermostat must always be placed so that the sensor is colder than the rest of the thermostatic element.
The evaporated liquid will recondense at the coldest point, i.e. the sensor. Thus, as intended, the sensor becomes the temperature-controlling part of the system.

Note: When the sensor is coldest, the ambient temperature has no effect on regulating accuracy.

2. Adsorption charge

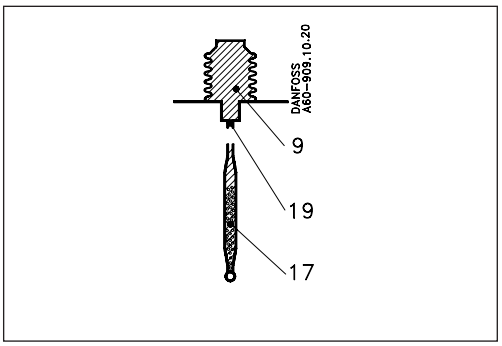

9. Bellows element
17. Sensor (bulb)
19. Capillary tube

In this case the charge consists partly of a superheated gas and partly of a solid having a large adsorption surface.
The solid is concentrated in the sensor (17) and it is therefore always the sensor that is the temperature-controlling part of the thermostatic element.
The sensor can be placed warmer or colder than thermostat housing and capillary tube, but variations from 20 °C ambient temperature will influence the scale accuracy.

Dimensions an weights

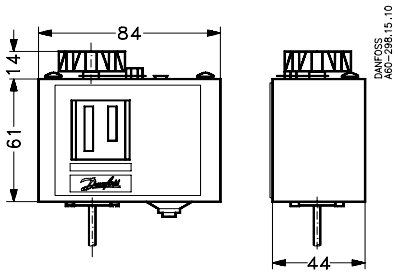

KP 61 – 81

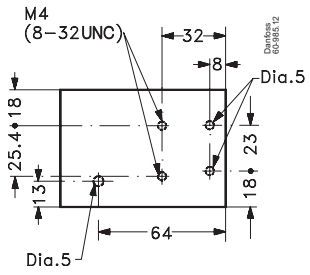

Mounting holes (back of KP)

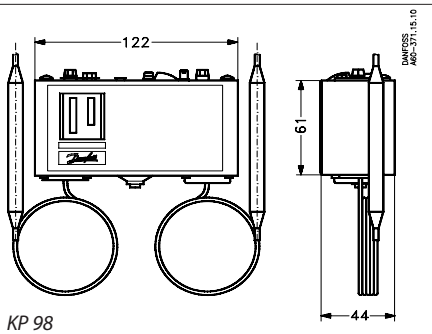

KP 98

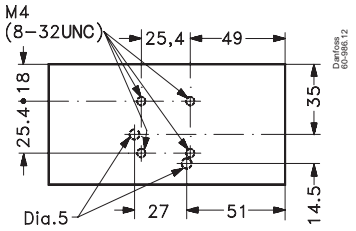

Mounting holes (back of KP)

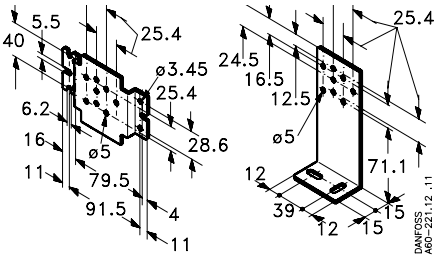

Wall bracket Angle bracket

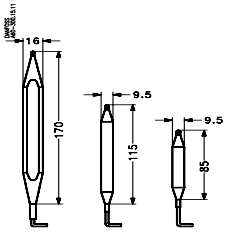

D2: KP 73

E2: KP 71

E3: KP 77, KP 73 KP 75, KP 77, KP 98

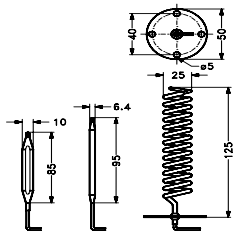

D1: KP 73 KP 79 KP 81

E1: KP 73

F: KP 75

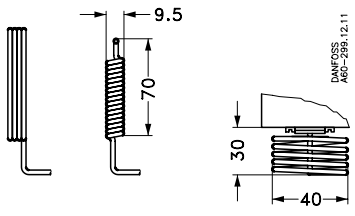

A: KP 61, KP 63 KP 69

B: KP 61, KP 63,

C1: KP 62, KP 68

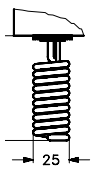

C2: KP 62

Net weight:
KP 61 – 81: approx. 0.4 kg
KP 98: approx. 0.6 kg

ENGINEERING
TOMORROW

Pressure switch
KP

Contents **Page**

Features 377
Approvals 377
Ship approvals 377
Technical data 378
Materials in contact with the medium 379
Ordering 380
Design / Function 382
Terminology 384
Setting 384
Dimensions and weights 385

AI213186439478en-000101 | 2016.09

ENGINEERING TOMORROW

Pressure switch
KP



KP pressure switchs are for use in refrigeration and air conditioning systems to give protection against excessively low suction pressure or excessively high discharge pressure.

KP pressure switches are also used for starting and stopping refrigeration compressors and fans on air-cooled condensers.

A KP pressure switch can be connected directly to a single-phase AC motor of up to approx. 2 kW or installed in the control circuit of DC motors and large AC motors.

KP pressure switches are fitted with a single-pole double-throw (SPDT) switch. The position of the switch is determined by the pressure switch setting and the pressure at the connector.
KP pressure switches are available in IP30, IP44 and IP55 enclosures.

Features

- Ultra-short bounce time thanks to snap-action function (reduces wear to a minimum and increases reliability)
- Manual trip function (electrical contact function can be tested without the use of tools)
- Types KP 6, KP 7 and KP 17 with fail-safe double bellows element
- Vibration and shock resistant
- Compact design
- Fully welded bellows element
- High reliability both electrically and mechanically

Approvals

CE-marked in accordance with:
– LVD 2014/35/EU
(EN 60947-1, EN 60947-4-1, EN 60947-5-1)
– PED 2014/68/EU, category IV (EN 12263):
KP 1, KP 2, KP 6, KP 7 and KP 17

Underwriters Laboratories Inc., UL listed
China Compulsory Certificate, CCC

Ship approvals

Germanischer Lloyd, GL
Det Norske Veritas, Norway, DNV
Registro Italiano Navale, RINA

Bureau Veritas, BV
Lloyd's Register, LR
Russian Maritime Register of Shipping, RMRS

Technical data

Ambient temperature		-40 – 65 °C (80 °C for max. 2 hours).
Ambient temperature (PED approved units)		-25 – 65 °C (80 °C for max. 2 hours).
Media temperature *)		-50 – 100 °C
Max. working pressure		LP: PS / MWP = 17 bar
		HP: PS / MWP = 35 bar
		KP 6: PS / MWP = 46.5 bar
Max. test pressure		LP: P_e = 20 bar
		HP: P_e = 35 bar
		KP 6: P_e = 46.5 bar
Contact load	Alternating current	AC1 =16 A, 400 V
		AC3 = 16 A, 400 V
		AC15 = 10 A, 400 V
	Direct current	DC13 = 12 W, 220 V control current
Wire dimensions	solid / stranded	0.75 – 2.5 mm^2
	flexible, without ferrules	0.7 – 2.5 mm^2
	flexible, with ferrules	0.5 – 1.5 mm^2
Tightening torque		max. 2 Nm
Rated impulse voltage		4 kV
Pollution degree		3
Short circuit protection, fuse		16 A
Insulation		400 V
Enclosure		IP30 / IP44 / IP55

*) The media temperature can be out of ambient temperature range under necessary condition that temperature inside KP must be kept in ambient temperature range.

Contact systems

Low pressure (LP)	High pressure (HP)
SPDT	SPDT
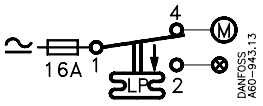	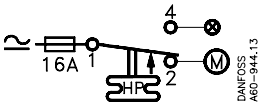

Dual pressure (LP/HP)	Dual pressure (LP/HP)	Dual pressure (HP/HP)
SPDT+LP signal	SPDT+LP+HP signal	SPST
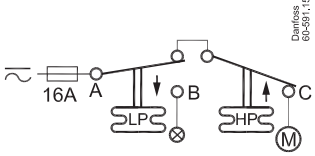	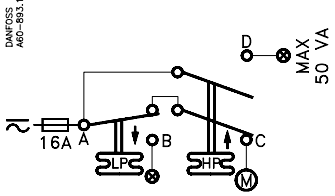	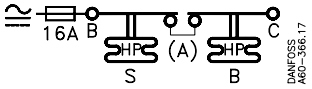

Technical data
(continued)

Cable connection
The cable entry can be used for 6 – 14 mm dia. cables. A Pg 13.5 screwed cable entry can also be used for 6 – 14 mm cable. With 8 – 16 mm cable a standard Pg 16 screwed cable entry can be used.

Enclosure
IP30 to EN 60529 / IEC 60529
Enclosure IP30 is obtained when the units without top cover are mounted on a flat surface or bracket. The bracket must be fixed to the unit so that all unused holes are covered.

IP44 to EN 60529 / IEC 60529
Enclosure IP44 is obtained when the units with top cover are mounted on a flat surface or bracket. The bracket must be fixed to the unit so that all unused holes are covered.

KP pressure switches with auto reset are supplied with top cover. For KP pressure switches with manual reset, the top cover must be separately ordered (**code no. 060-109766** for single pressure switches and **code no. 060-109866** for dual pressure switches).

IP55 to EN 60529 / IEC 60529
IP55 is obtained when the KP pressure switches are mounted in an IP55 enclosure, **(code no. 060-033066** for single pressure switches and **code no. 060-035066** for dual pressure switches).
IP55 enclosure has to be ordered separately.

Materials in contact with the medium

Type	Material
KP 1, KP 2, KP 5, KP 6, KP 7, KP 15 and KP 17	Tinbronze, no. CW452K, EN 1652
	Nickel plated free cutting steel, no. 1.0737 / 1.0718, EN 10277
KP 1A, KP 5A, KP 6A, KP 7A and KP 15A only	Stainless steel 18/8, no. 1.4306, EN 10088-2
	Free cutting steel, no. 1.0737, EN 10277
	Cold forming steel, no. 1.0338, EN 10139
	Steel, no 1.0308, EN 10305
	Free cutting steel, no. 1.0715, EN10277
	Free cutting steel, no. 1.0718, EN 10277
	Aluminium, no. AW-3005, EN 573

Ordering

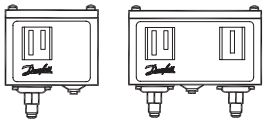

For R22, R134a, R404A, R407A, R407C, R407F, R422B, R422D, R438A, R448A, R449A, R450A, R452A, R507A, R513A

For complete list of approved refrigerants, visit www.products.danfoss.com and search for individual code numbers, where refrigerants are listed as part of technical data.

Pressure	Type	Low pressure (LP)		High pressure (HP)		Reset		Contact system	Code no.		
									Connection		
		Regulating range [bar]	Differential Δp [bar]	Regulating range [bar]	Differential Δp [bar]	Low pressure LP	High pressure HP		1/4 in. 6 mm flare	1/4 in. ODF solder	6 mm ODF solder
Low	**KP 1**	-0.2 – 7.5	0.7 – 4.0	–	–	Auto	–	SPDT	**060-110166** [1)4)]	**060-111266** [4)]	**060-111066** [4)]
Low	**KP 1**	-0.2 – 7.5	0.7 – 4.0	–	–	Auto	–	SPDT	**060-114166** [2)4)]	–	–
Low	**KP 1**	-0.9 – 7.0	0.7	–	–	Man. (Min.)	–	SPDT	**060-110366** [1)]	**060-111166**	**060-110966**
Low	**KP 2**	-0.2 – 5.0	0.4 – 1.5	–	–	Auto	–	SPDT	**060-112066** [1)4)]	–	**060-112366** [4)]
High	**KP 5**	–	–	8 – 32	1.8 – 6.0	–	Auto	SPDT	**060-117166** [1)4)]	**060-117966** [4)]	**060-117766** [4)]
High	**KP 5**	–	–	8 – 32	3	–	Man. (Max.)	SPDT	**060-117366** [1)]	**060-118066**	–
Dual	**KP 15**	-0.2 – 7.5	0.7 – 4.0	8 – 32	4	Auto	Auto	SPDT + LP signal	**060-124166** [4)]	**060-125466** [4)]	–
Dual	**KP 15**	-0.2 – 7.5	0.7 – 4.0	8 – 32	4	Auto	Man. (Max.)	SPDT + LP signal	**060-124366** [1)]	–	–
Dual	**KP 15**	-0.2 – 7.5	0.7 – 4.0	8 – 32	4	Auto	Man. (Max.)	SPDT + LP signal	**060-114866** [2)]	–	–
Dual	**KP 15**	-0.9 – 7.0	0.7	8 – 32	4	Man. (Min.)	Man. (Max.)	SPDT + LP signal	**060-124566** [1)]	–	–
Dual	**KP 15**	-0.9 – 7.0	0.7	8 – 32	4	Conv.[3)]	Conv.[3)]	SPDT + LP signal	**060-126166**	–	–
Dual	**KP 15**	-0.2 – 7.5	0.7 – 4.0	8 – 32	4	Auto	Auto	SPDT + LP and HP signal	**060-126566** [1)4)]	**060-129966** [4)]	–
Dual	**KP 15**	-0.2 – 7.5	0.7 – 4.0	8 – 32	4	Auto	Man. (Max.)	SPDT + LP and HP signal	**060-126466** [1)]	**060-128466** [1)]	–
Dual	**KP 15**	-0.2 – 7.5	0.7 – 4.0	8 – 32	4	Conv.[3)]	Conv.[3)]	SPDT + LP and HP signal	**060-115466** [4)]	**060-001066** [4)]	–
Dual	**KP 15**	-0.9 – 7.0	0.7	8 – 32	4	Conv.[3)]	Conv.[3)]	SPDT + LP and HP signal	**060-122066**	–	–

For R717, R22, R134a, R404A, R407A, R407C, R407F, R422B, R422D, R438A, R448A, R449A, R450A, R452A, R507A, R513A

For complete list of approved refrigerants, visit www.products.danfoss.com and search for individual code numbers, where refrigerants are listed as part of technical data.

Pressure	Type	Low pressure (LP)		High pressure (HP)		Reset		Contact system	Code no.	
									Connection	
		Regulating range [bar]	Differential Δp [bar]	Regulating range [bar]	Differential Δp [bar]	Low pressure LP	High pressure HP		M10 × 0.75	1 m cap. tube with M10 × 0.75
Low	**KP 1A**	-0.2 – 7.5	0.7 – 4.0	–	–	Auto	–	SPDT	**060-116266** [1)]	**060-116066** [4)]
Low	**KP 1A**	-0.9 – 7.0	0.7	–	–	Man. (Min.)	–	SPDT	–	**060-116166**
High	**KP 5A**	–	–	8 – 32	1.8 – 6.0	–	Auto	SPDT	–	**060-123066** [4)]
High	**KP 5A**	–	–	8 – 32	3	–	Man. (Max.)	SPDT	**060-115366** [1)]	**060-123166**
Dual	**KP 15A**	-0.2 – 7.5	0.7 – 4.0	8 – 32	4	Auto	Auto	SPDT + LP and HP signal	**060-129566**	**060-129366** [4)]
Dual	**KP 15A**	-0.2 – 7.5	0.7 – 4.0	8 – 32	4	Auto	Man. (Max.)	SPDT + LP and HP signal	**060-129666**	**060-129466**
Dual	**KP 15A**	-0.9 – 7.0	0.7	8 – 32	4	Conv. [3)]	Conv. [3)]	SPDT + LP signal	–	**060-128366**

[1)] Available in Asia market with code 060-xxxx91
[2)] Pressure switches with gold-plated contacts
[3)] Conv.: optional automatic or manual reset
[4)] Enclosure IP44

Pressure switches PED 2014/68/EU approved; EN 12263

For R22, R134a, R404A, R407A, R407C, R407F, R410A*), R422B, R422D, R438A, R448A, R449A, R450A, R452A, R507A, R513A

**) for KP6W, KP6B*

For complete list of approved refrigerants, visit www.products.danfoss.com and search for individual code numbers, where refrigerants are listed as part of technical data.

Pressure	Type [1]	Low pressure (LP)		High pressure (HP)		Reset		Contact system	Code no.	
									Connection	
		Regulating range [bar]	Differential Δp [bar]	Regulating range [bar]	Differential Δp [bar]	Low pressure LP	High pressure HP		1/4 in. 6 mm flare	6 mm ODF solder
Low	**KP 1**	-0.2 – 7.5	0.7 – 4.0	–	–	Auto	–	SPDT	**060-110166 [2][3]**	**060-111066 [3]**
Low	**KP 1**	-0.9 – 7	0.7	–	–	Man. (Min.)	–	SPDT	**060-110366 [2]**	**060-110966**
Low	**KP 2**	-0.2 – 5	0.4 – 1.5	–	–	Auto	–	SPDT	**060-112066 [2] [3]**	**060-112366 [3]**
High	**KP 6W**	–	–	8 – 42	4 – 10	–	Auto	SPDT	**060-519066 [3]**	–
High	**KP 6B**	–	–	8 – 42	4	–	Man. (Max.)	SPDT	**060-519166**	–
High	**KP 7W**	–	–	8 – 32	4 – 10	–	Auto	SPDT	**060-119066 [3]**	**060-120366 [3]**
High	**KP 7B**	–	–	8 – 32	4	–	Man. (Max.)	SPDT	**060-119166**	–
High	**KP 7S**	–	–	8 – 32	4	–	Man. (Max.)	SPDT	**060-119266 [3]**	–
Dual	**KP 7BS**	–	–	8 – 32	4	–	Man. (Max.) Man. (Max.)	SPST	**060-120066**	–
Dual	**KP 17W**	-0.2 – 7.5	0.7 – 4	8 – 32	4	Auto	Auto	SPDT + LP and HP signal	**060-127566 [3]**	**060-127666 [3]**
Dual	**KP 17W**	-0.2 – 7.5	0.7 – 4	8 – 32	4	Auto	Auto	SPDT+ LP signal	**060-126766 [3]**	–
Dual	**KP 17B**	-0.2 – 7.5	0.7 – 4	8 – 32	4	Auto	Man. (Max.)	SPDT	**060-126866**	**060-127466**
Dual	**KP 17WB**	-0.2 – 7.5	0.7 – 4	8 – 32	4	Auto	Conv.[5]	SPDT + LP and HP signal	**060-539766 [3][4]**	–

For R717, R22, R134a, R404A, R407A, R407C, R407F, R422B, R422D, R438A, R448A, R449A, R450A, R452A, R507A, R513A

For complete list of approved refrigerants, visit www.products.danfoss.com and search for individual code numbers, where refrigerants are listed as part of technical data.

Pressure	Type	Low pressure (LP)		High pressure (HP)		Reset		Contact system	Code no.	
									Connection	
		Regulating range [bar]	Differential Δp [bar]	Regulating range [bar]	Differential Δp [bar]	Low pressure LP	High pressure HP		M10 × 0.75	1 m cap. tube with M10 × 0.75
Low	**KP 1A**	-0.2 – 7.5	0.7 – 4.0	–	–	Auto	–	SPDT	**060-116266 [2]**	**060-116066 [3]**
Low	**KP 1A**	0.9 – 7	Fixed 0.7	–	–	Man. (Min.)	–	SPDT	–	**060-116166**
Dual	**KP 7ABS**	–	–	8 – 32	Fixed 4	–	Man. (Max.) Man. (Max.)	SPST	–	**060-120566**

[1]) W = PSH (pressure switch), B = PZH (pressure switch with ext. reset), S = PZHH (pressure switch with int. reset)
[2]) Available in Asia market with code 060-xxxx91
[3]) Enclosure IP44
[4]) Factory setting: LP side: Range 1 bar Pe, Diff. 1 bar; HP side: Range 18 bar Pe, Diff. 4 bar fixed
[5]) Conv.: optional automatic or manual reset

Pressure switch setting with convertible reset

	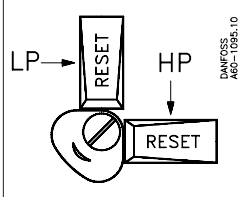	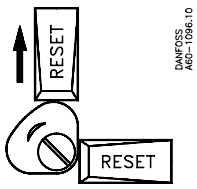	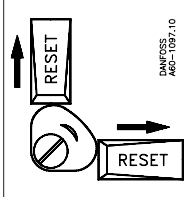	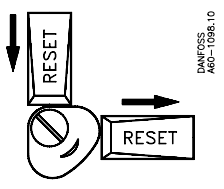
Low pressure	Manual reset [1])	Automatic reset	Automatic reset	Manual reset
High pressure	Manual reset [1])	Manual reset	Automatic reset	Automatic reset

[1]) Factory setting

Design / Function

Pressure switch , type KP

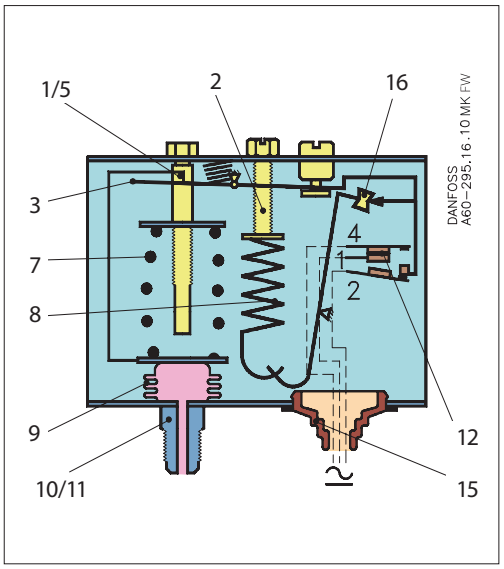

KP 1, KP 2, KP 5

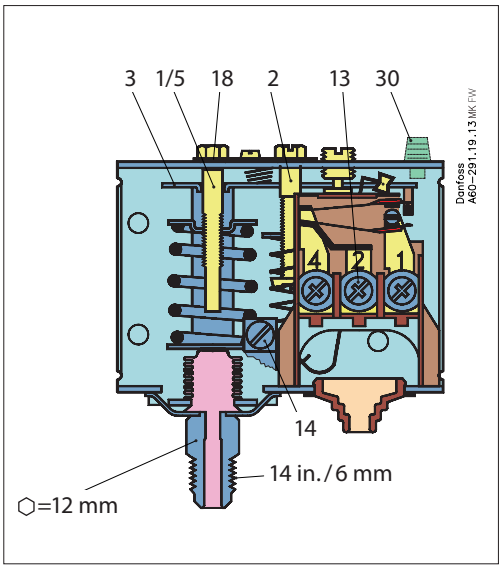

KP 15

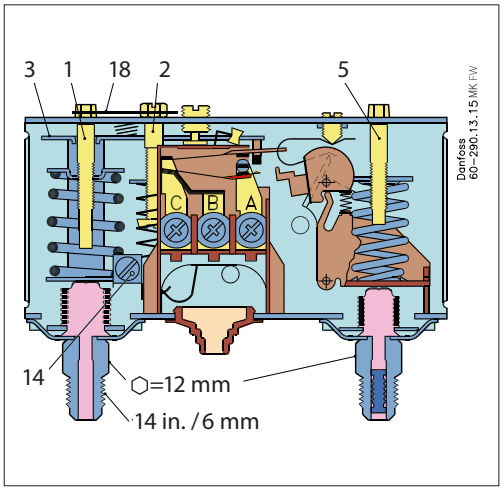

Capillary tube for KP 1A, KP 5A and KP 15A

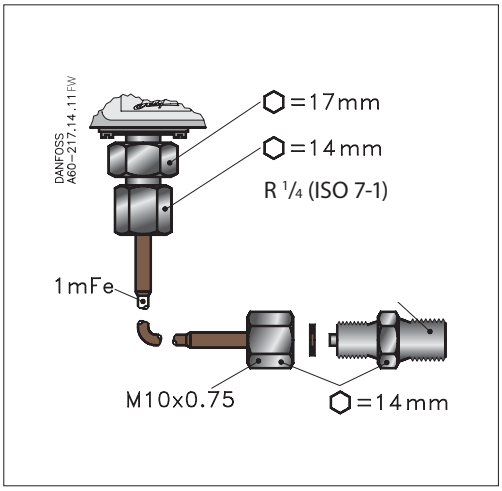

1. Low pressure (LP) setting spindle
2. Differential setting spindle, (LP)
3. Main arm
5. High pressure (HP) setting spindle
7. Main spring
8. Differential spring
9. Bellows
10. LP connection
11. HP connection
12. Switch
13. Terminals
14. Earth terminal
15. Cable entry
16. Tumbler
18. Locking plate
30. Reset button

The switch in the KP has a snap-action function and the bellows moves only when the cut-in or cut-out value is reached.

The bellows becomes connected to the low or high pressure side of the plant through connection (10) or (11).

The design of the KP pressure switch gives the following advantages:

- high contact load
- ultra-short bounce time
- high resistance to pulsation
- vibration resistance up to 4 g in the range 0 – 1000 Hz
- long mechanical and electrical life

Design
(continued)

KP 7W, flare

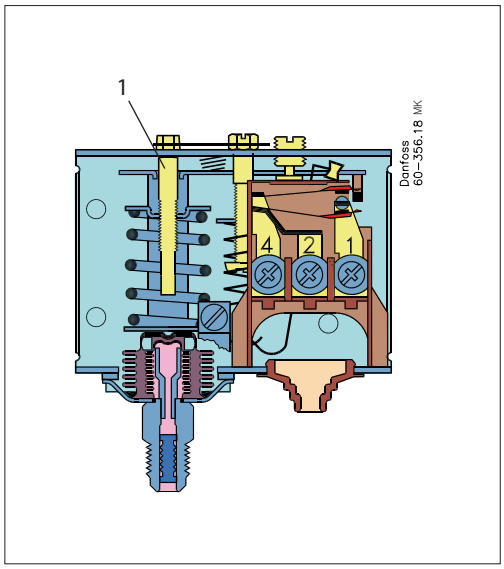

KP 7W, solder

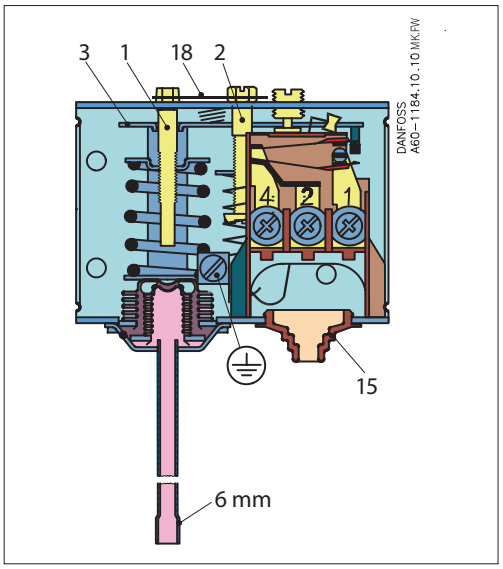

KP 7BS

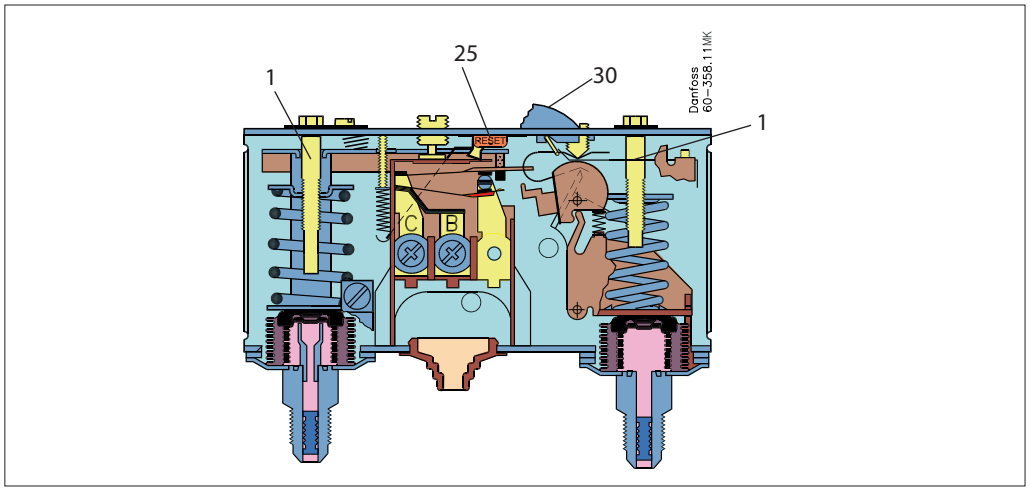

1. Pressure setting spindle
2. Differential setting spindle
3. Main arm
15. Cable entry
18. Locking plate
25. Int. reset arm
30. Ext. reset button

Types KP1, KP1A, KP2, KP6, KP6A, KP7 and KP17 units with designation W, B or S have been tested and approved by TÜV, Rheinland in accordance with EN 12263.

Types KP6, KP6A, KP7 and KP17 have a double bellows: an outer bellows and a regulating bellows. When system pressure exceeds the set value, the KP will automatically stop the plant. The double bellows system prevents loss of charge in the event of bellows rupture.

A rupture in the inner bellows will cause the control cut-out pressure to fall about 3 times less the set value, thus the refrigeration plant compressor will stop.

A rupture in the outer bellows will cause the control cut-out pressure to fall to about 3 bar under the set value, thus providing a fail-safe function.

Versions with designation W or AW cut in again automatically when the pressure has fallen to the set value minus the differential.

Versions with designation B or AB can be cut in manually with the external reset button when the pressure in KP1 has increased 0.7 bar above set value and in KP6 and KP7 has fallen 4 bar under the set value.

Versions with designation S or AS can be cut in manually with the internal reset arm when the pressure has fallen 4 bar under the set value.

All KP pressure switches, including those which are PED-approved, operate independently of changes in the ambient temperature around the control housing. Therefore the set cut-out pressure and differential are held constant provided the permissible ambient temperatures are not exceeded.

Terminology

Reset

1. ***Manual (Min. / Max.) reset:***
   Units with manual reset can only be reset during operation by activation of the reset button
2. ***Automatic reset:***
   After operational stop, these units reset automatically
3. ***Convertible reset:***
   Units with optional reset can be activated by automatic and/or manual reset

Permissible working pressure
The permissible working pressure is determined by the pressure that can be safely allowed in the refrigerating system or any of the units within it.

Test pressure
The test pressure is the pressure used in strength tests and/or leakage tests on refrigerating systems or individual parts in systems. The test pressure is designated P_e.

"Snap function"
A certain contact force is maintained until irrevocable "snap" is initiated. The time during which the contact force approaches zero is thus limited to a very few milliseconds. Therefore contact bounce cannot occur as a result of, for example, slight vibrations, before the cut-out point. Contact systems with "Snap function" will change over even when micro-welds are created between the contacts during cut-in. A very high force is created during cut-out to separate the contacts. This force immediately shears off all the welds. Thus the cut-out point of the unit remains very accurate and completely independent of the magnitude of the current load.

Setting

Pressure switches with automatic reset – LP:
Set the LP start pressure on the "CUT-IN" scale (range scale). One rotation of the low pressure spindle ~ 0.7 bar.Set the LP differential on the "DIFF" scale. One rotation of the differential spindle ~ 0.15 bar.The LP stop pressure is the LP start pressure minus the differential.

Note:
The LP stop pressure must be above absolute vacuum (P_e = -1 bar)!

If with low stop pressure the refrigeration compressor will not stop, check to ensure that the differential value has not been set too high!

Pressure switches with automatic reset – HP:
Set the HP pressure on the "CUT-OUT" scale.
One rotation of the HP spindle ~ 2.3 bar.
Set the HP differential on the "DIFF" scale.
One rotation of the differential spindle ~ 0.3 bar.
The HP start pressure is the HP stop pressure minus the differential.

Start and stop pressures for both the LP and HP sides of the system should always be checked with an accurate pressure gauge.

Pressure switches with manual reset
Set the stop pressure on "CUT-OUT" scale (range scale).
Low pressure switches can be manually reset when the pressure is equal to the stop pressure plus the differential.
High pressure switches can be manually reset when the pressure is equal to the stop pressure minus the differential.

Dimensions and weights

Pressure switchess with flare connection

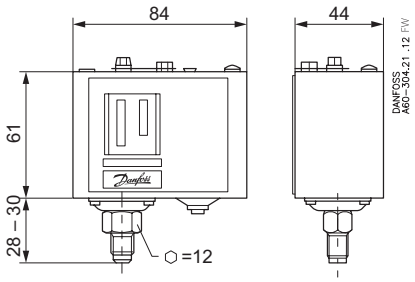

KP 1, KP 2, KP 5, KP 6, KP 7B, KP 7S and KP 7W

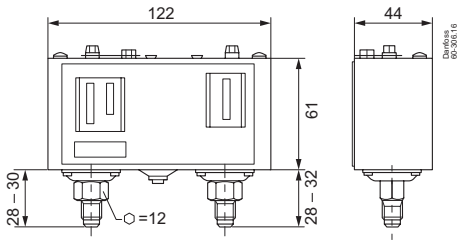

KP 15 and KP 17W

M10 × 0.75 connection

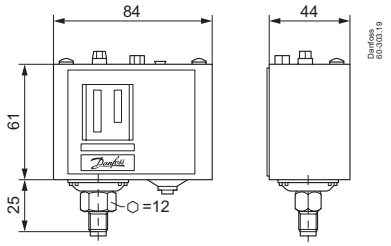

KP 1A, KP 2A and KP 5A

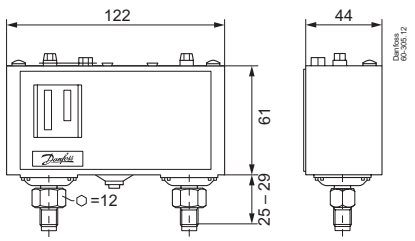

KP 15A, KP 7AS and KP 7ABS

Solder connection

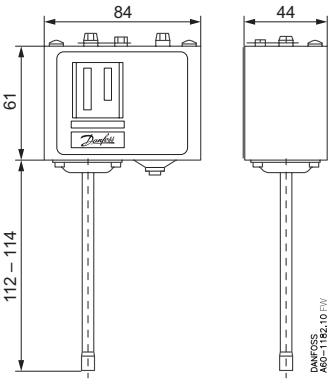

KP 1, KP 2, KP 5, KP 7B, KP 7S and KP 7W

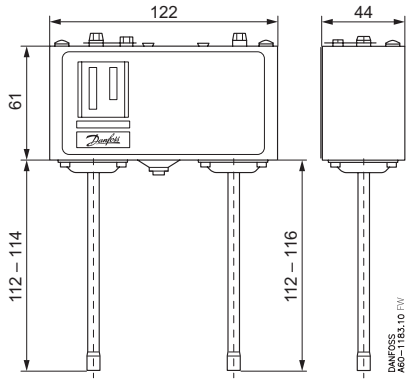

KP 15, 1 KP 7W

KP with top cover

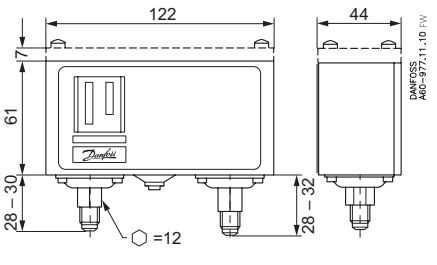

Net weight:
KP 1, KP 2, KP 5 and KP 7: approx. 0.3 kg
KP 15, KP 17 and KP 7BS: approx. 0.5 kg
KP 1A and KP 5A: approx. 0.3 kg
KP 15A and KP 7ABS: approx. 0.5 kg

Dimensions [mm] and weights [kg]
(continued)

IP55 enclosure

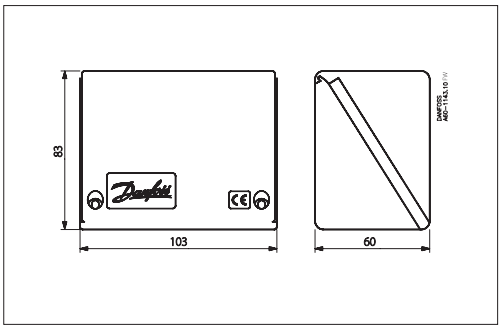

IP55 enclosure for dual types

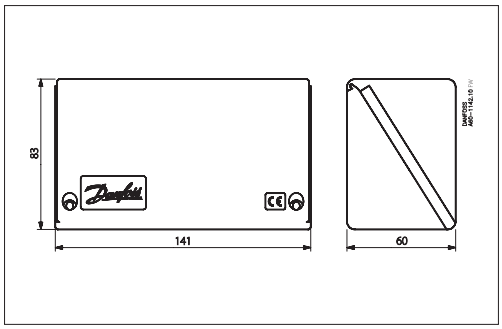

Weld nipple for KP-A

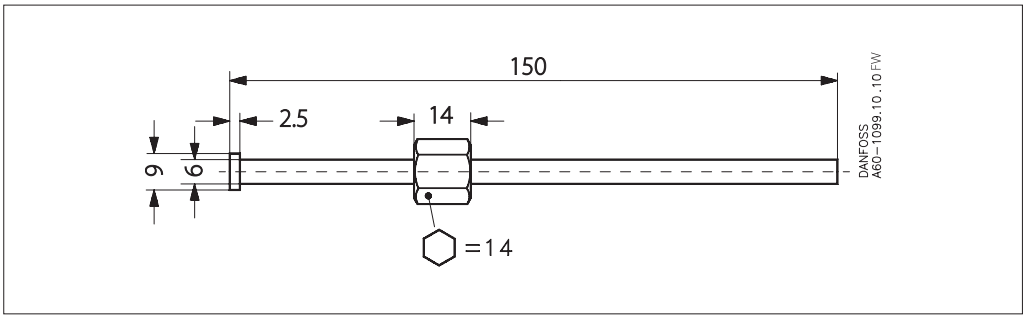

ENGINEERING
TOMORROW

Thermostat, Differential thermostat
RT

Contents **Page**

Features ... 389
Approvals ... 390
Technical data ... 390
Overview ... 391
Ordering ... 392
Design / Function ... 395
Terminology ... 396
Charges ... 397
Terminology ... 398
Setting of differential ... 398
Design / Function ... 399
Nomograms for obtained differentials ... 400
Dimensions and weights ... 402

AI240786443892en-000901 | 2017.09

ENGINEERING
TOMORROW

Thermostat, Differential thermostat
RT



An RT thermostat is fitted with a single-pole changeover switch.

The position of the contacts depends on the bulb temperature and the set scale value.

The RT series includes thermostats for general applications within industrial and marine refrigeration.

The RT series also includes differential thermostats, thermostats for neutral zone regulation and special thermostats with gold-plated contact surface for PLC applications.

Features

- Waterproof versions, enclosure IP66
- Wide regulating range
- Wide range of units for industrial and marine applications
- Suitable for alternating and direct current
- Interchangeable contact system
- Special versions for PLC applications
- Safety Integrity Level: SIL 2 according to IEC 61508

Approvals

RT 2	RT 3	RT 4	RT 7	RT 8	RT 8L	RT 9	RT 11	RT 12	RT 13	RT 14	RT 14L	RT 15	RT 16L	RT 17	RT 23	RT 24	RT 34	RT 101	RT 102	RT 107	RT 140	RT 140L	RT 270	
																				•				Lloyd's Reg. of Shipping, LR
	•		•	•	•	•		•	•	•	•	•						•		•				Germanischer Lloyd, GL
																		•		•				Det Norske Veritas, DNV
																		•						Bureau Veritas, BV
•	•	•	•	•	•	•	•	•	•	•	•	•	•	•	•	•	•	•	•	•	•	•	•	Russian Maritime Register of Shipping, RMRS
•	•		•					•	•	•		•			•			•		•				Nippon Kaiji Kyokai, NKK
																				•				Korean Register of Shipping, KRS
•	•	•	•	•	•	•	•	•	•	•	•	•	•	•	•	•	•	•	•	•	•	•	•	Conformity with EN 60730-2-1 to 9
•	•	•	•	•	•	•	•	•	•	•	•	•	•	•	•	•	•	•	•	•	•	•	•	CE mark according to EN 60947-4, -5
•	•	•	•	•	•	•	•	•	•	•	•	•	•	•	•	•	•	•	•	•	•	•	•	China Compulsory Certificate, CCC

Technical data

Cable connection	Pg 13.5. Cable diameter 6 – 14 mm.
Enclosure	IP66 acc. to EN 60529 / IEC 60529, except for versions with ext. reset which are IP54.
Permissible ambient temperature	-50 – 70 °C for thermostat housing.
Switches	See "Ordering switches"

Properties according to EN 60947

Wire dimensions	
solid / stranded	0.2 – 2.5 mm^2
flexible, w / out ferrules	0.2 – 2.5 mm^2
flexible, with ferrules	0.2 – 1.5 mm^2
Tightening torque	max. 1.5 Nm
Rated impulse voltage	4 kV
Pollution degree	3
Short circuit protection, fuse	10 A
Insulation	400 V
Ingress Protection	IP54, IP66

Overview

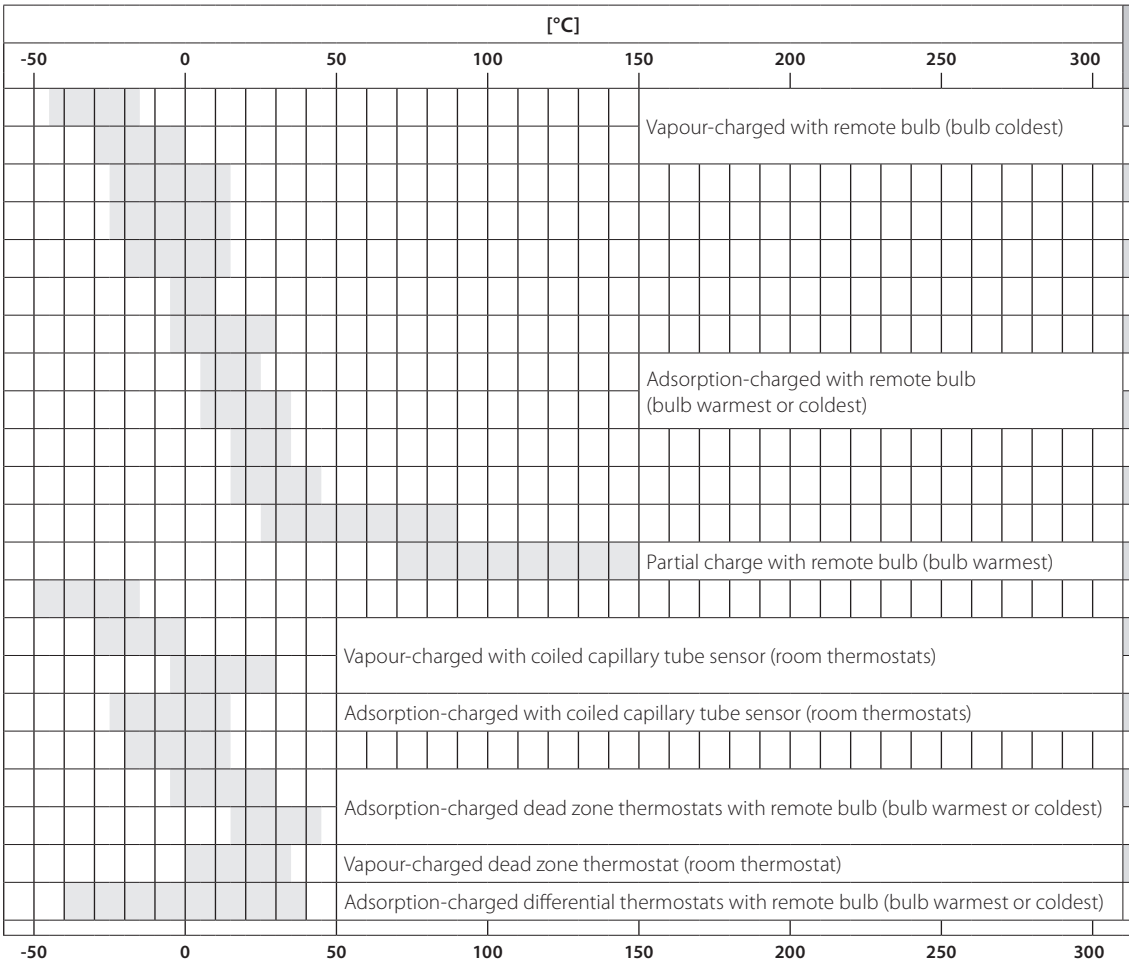

Range [°C]	Type
-45 – -15	**RT 9**
-30 – 0	**RT 13**
-25 – 15	**RT 3**
-25 – 15	**RT 2, RT 7**
-20 – 12	**RT 8**
-5 – 10	**RT 12**
-5 – 30	**RT 14**
5 – 22	**RT 23**
8 – 32	**RT 15**
15 – 34	**RT 24**
15 – 45	**RT 140**
25 – 90	**RT 101, RT 102**
70 – 150	**RT 107**
-50 – -15	**RT 17**
-30 – 0	**RT 11**
-5 – 30	**RT 4**
-25 – 15	**RT 34**
-20 – 12	**RT 8L**
-5 – 30	**RT 14L**
15 – 45	**RT 140L**
0 – 38	**RT 16L**
-30 – 40	**RT 270**

Ordering

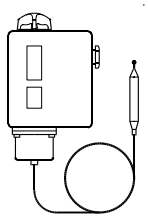

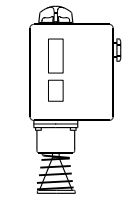

Thermostats

Charge	Type	Bulb type	Regulation range [°C]	Differential Δt At min. range setting [K]	Differential Δt At max. range setting [K]	Reset	Max. bulb temp. [°C]	Capillary tube length [m]	Code no.
Vapour [1]	RT 9	A	-45 – 15	2.2 – 10.0	1.0 – 4.5	auto	150	2	**017-506666**
	RT 3	A	-25 – 15	2.8 – 10.0	1.0 – 4.0	auto	150	2	**017-501466**
	RT 17	B	-50 – -15	2.2 – 7.0	1.5 – 5.0	auto	100	–	**017-511766**
	RT 11	B	-30 – 0	1.5 – 6.0	1.0 – 3.0	auto	66	–	**017-508366**
	RT 4	B	-5 – 30	1.5 – 7.0	1.2 – 4.0	auto	75	–	**017-503666** **017-503766** [4]
Adsorption [2]	RT 13	A	-30 – 0	1.5 – 6.0	1.0 – 3.0	auto	150	2	**017-509766**
	RT 2	A	-25 – 15	5.0 – 18.0	6.0 – 20.0	auto	150	2	**017-500866**
	RT 8	A	-20 – 12	1.5 – 7.0	1.5 – 7.0	auto	145	2	**017-506366**
	RT 12	A	-5 – 10	1.0 – 3.5	1.0 – 3.0	auto	65	2	**017-508966**
	RT 23	A	5 – 22	1.1 – 3.5	1.0 – 3.0	auto	85	2	**017-527866**
	RT 15	A	8 – 32	1.6 – 8.0	1.6 – 8.0	auto	150	2	**017-511566**
	RT 24	A	15 – 34	1.4 – 4.0	1.4 – 3.5	auto	105	2	**017-528566**
	RT 140	C	15 – 45	1.8 – 8.0	2.5 – 11.0	auto	240	2	**017-523666**
	RT 102	D	25 – 90	2.4 – 10.0	3.5 – 20.0	auto	300	2	**017-514766**
	RT 34	B	-25 – 15	2.0 – 10.0	2.0 – 12.0	auto	100	–	**017-511866**
	RT 7	A	-25 – 15	2.0 – 10.0	2.5 – 14.0	auto	150	2	**017-505366**
	RT 14	A	-5 – 30	2.0 – 8.0	2.0 – 10.0	auto	150	2	**017-509966**
	RT 101	A	25 – 90	2.4 – 10.0	3.5 – 20.0	auto	300	2	**017-500366**
Partial [3]	RT 107	A	70 – 150	6.0 – 25.0	1.8 – 8.0	auto	215	2	**017-513566**

[1] The sensor must be located colder than thermostat housing and capillary tube.
[2] The sensor can be located warmer or colder than thermostat housing.
[3] The sensor must be located warmer than thermostat housing and capillary tube.
[4] With built-in heating coil – reduces the thermal differential.

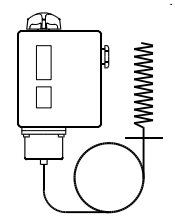

Thermostats with adjustable dead zone

Charge	Type	Bulb type	Regulation range [°C]	Mechanical differential [K]	Neutral zone NZ At min. range setting [K]	Neutral zone NZ At max. range setting [K]	Max. bulb temp. [°C]	Capillary tube length [m]	Code no.
Vapour	RT 16L	B	0 – 38	1.5 – 0.7	1.5 – 5.0	0.7 – 1.9	100	–	**017L002466**
Adsorption	RT 8L	A	-20 – 12	1.5	1.5 – 4.4	1.5 – 4.9	145	2	**017L003066**
	RT 14L	A	-5 – 30	1.5	1.5 – 5.0	1.5 – 5.0	150	2	**017L003466**
	RT 140L	C	15 – 45	1.8 – 2.0	1.8 – 4.5	2.0 – 5.0	240	2	**017L003166**
	RT 101L	A	25 – 90	2.5 – 3.5	2.5 – 7.0	3.5 – 12.5	300	2	**017L006266**

Ordering
Continued

Type of bulb / sensor

A	B	C	D
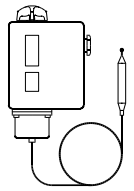	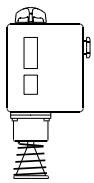	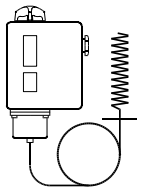	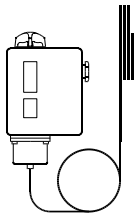
Cylindrical remote sensor	Room sensor	Duct sensor	Capillary tube sensor

Special versions
RT can be supplied with special switches.
See next page.

When ordering, please state:
1. Type
2. Code no. of standard unit
3. Code no. of special switch

Switches

Version	Symbol	Description	Contact rating	Reset	Code no.
Standard	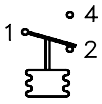 SPDT	Single-pole changeover switch with terminal board proof against leakage current. **Fitted in all standard versions of type RT.** Snap action changeover contacts.	**Alternating current** *Ohmic:* AC 1 = 10 A, 400 V *Inductive:* AC 3 = 4 A, 400 V AC 15 = 3 A, 400 V *Dir. current:* DC 13 = 12 W, 220 V	Auto	**017-403066**
Man. reset	 SPDT	For manual reset of unit after contact changeover on rising temperature. **For units with reset facility.**		Max.	**017-404266**
Man. reset	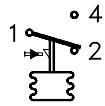 SPDT	For manual reset of unit after contact changeover on falling temperature. **For units with reset facility.**		Min.	**017-404166**
Neutral zone	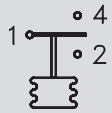 SPDT	Single-pole changeover switch with dead zone and terminal board proof against leakage current.		–	Available only as a component part of RT controls with adjustable neutral zone

Ordering
(continued)

Switches

Version	Symbol	Description	Contact rating	Reset	Code no.
Standard	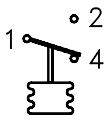 SPDT	Single-pole changeover switch with gold plated (oxide-free) contact surfaces. Increases cut-in reliability on alarm and monitoring systems, etc. Snap action changeover contacts. Terminal board proof against leakage current.	**Alternating current** *Ohmic:* AC 1 = 10 A, 400 V *Inductive:* AC 3 = 2 A, 400 V AC 15 = 1 A, 400 V *Dir. current:* DC 13 = 12 W, 220 V	Auto	**017-424066**
Man. reset	 SPDT	Single-pole changeover switch with gold plated (oxide-free) contact surfaces. Increases cut-in reliability on alarm and monitoring systems, etc. Snap action changeover contacts. Terminal board proof against leakage current.		Max.	**017-404866**
Neutral zone	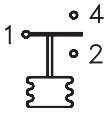 SPDT	Single-pole changeover switch with dead zone and gold plated (oxide-free) contact surfaces. Increase cut-in reliability on alarm and monitoring systems, etc. Snap action changeover contacts. Terminal board proof against leakage current.		–	Available only as a component part of RT controls with adjustable neutral zone
Man. reset	 SPDT	Single-pole changeover switch with gold plated (oxide-free) contact surfaces. Increases cut-in reliability on alarm and monitoring systems, etc. Snap action changeover contacts. Terminal board proof against leakage current.		Min.	**017-404766**
Cuts in two circuits simultane-ously	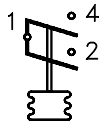 SPST	Single-pole changeover switch that cuts in two circuits simultaneously on rising temperature. Snap action changeover contacts. Terminal board proof against leakage current.	**Alternating current** *Ohmic:* AC 1 = 10 A, 400 V *Inductive:* AC 3 = 3 A, 400 V AC 15 = 2 A, 400 V *Dir. current:* DC 13 = 12 W, 220 V [1]	Max.	**017-403466**
With non-snap action change- over contacts	 SPDT	Single-pole changeover switch with non-snap action changeover contacts.	*Alternating or direct current* 25 VA, 24 V	–	**017-018166**

[1]) If current is led through contacts 2 – 4, i.e. terminals 2 – 4 connected but not 1, max. permissible load is increased to 90 W, 220 V.

The switches are shown in the position they assume on falling temperature, i.e. after downward movement of the RT main spindle. The setting pointer of the control shows the scale value at which contact changeover occurs on falling temperature.

An exception is RT with switch, code no. **017-404266**, with max. reset where the setting pointer shows the scale value at which contact changeover occurs on rising temperature.

Spare parts and accessories,
see separate spare parts catalogue.

Design / Function

5. Setting knob
9. Regulation range scale
10. Loop terminal
11. Pg 13.5 screwed cable entry
12. Main spring
14. Terminals
15. Main spindle
16. Switch
17. Upper guide bush
18. Contact arm
19. Differential temperature setting nut
23. Bellows element
25. Fixing hole
26. Sensor (bulb) clip
28. Capillary tube
29. Sensor (bulb)
30. Sensor (bulb) pocket
31. Capillary tube gland
38. Earth terminal
44. Temperature setting spindle

Key sketch of RT thermostat

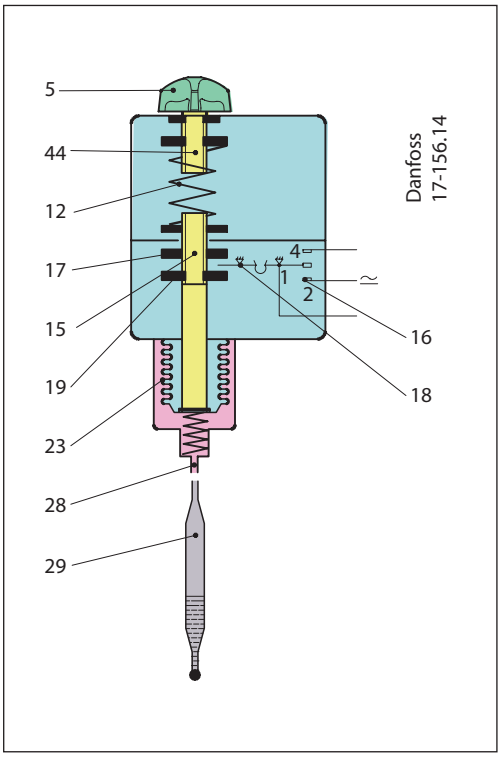

The thermostatic element consists of a sensor (29) capillary tube (28) and bellows element (23). The element contains a charge that reacts to temperature variations at the sensor so that the pressure on the moving bellows rises when temperature rises.
By turning the setting knob (5) the main spring (12) can be set to balance the pressure in the element.

RT thermostat

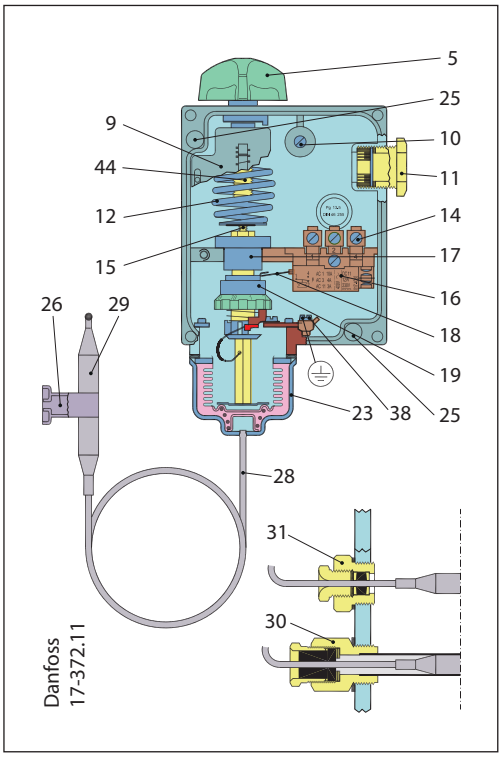

A rise in temperature at the sensor compresses the bellows and moves the main spindle (15) upwards until spring force and element pressure are in equilibrium.
The main spindle (15) is fitted with a guide bush (17) and a differential setting nut (19) that together transfer the main spindle movement to the switch (16).

Design / Function
(continued)

5. Setting knob
9. Regulation range scale
12. Main spring
15. Main spindle
16. Switch
17. Upper guide bush
18a and 18b. Contact arm
20. Lower guide bush
23. Bellows element
25. Fixing hole
28. Capillary tube
29. Sensor (bulb)
40. Neutral zone setting nut
44. Temperature setting spindle

Key sketch RT L thermostat with neutral zone

Key sketch RT L temperature control

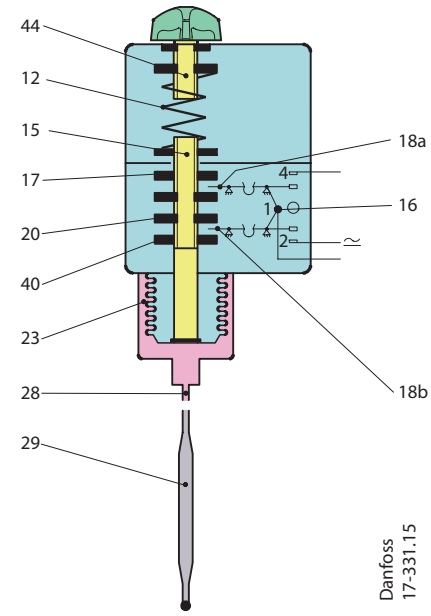

RT L temperature controL

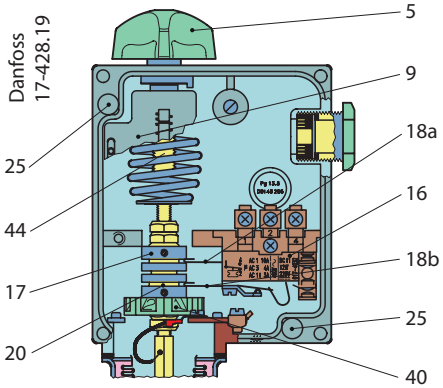

RT L thermostats are fitted with a switch with an adjustable neutral zone. This enables the units to be used for floating control.
The neutral zone switch contact arms (18a) and (18b) are operated by the spindle guide bushes (17) and (20).

The upper guide bush (17) is fixed while the lower guide bush (20) can be moved up or down by the setting nut (40). In this way the neutral zone can be varied between a minimum value (equal to the mechanical differential of the unit) and a maximum value (depending on the type of RT unit).

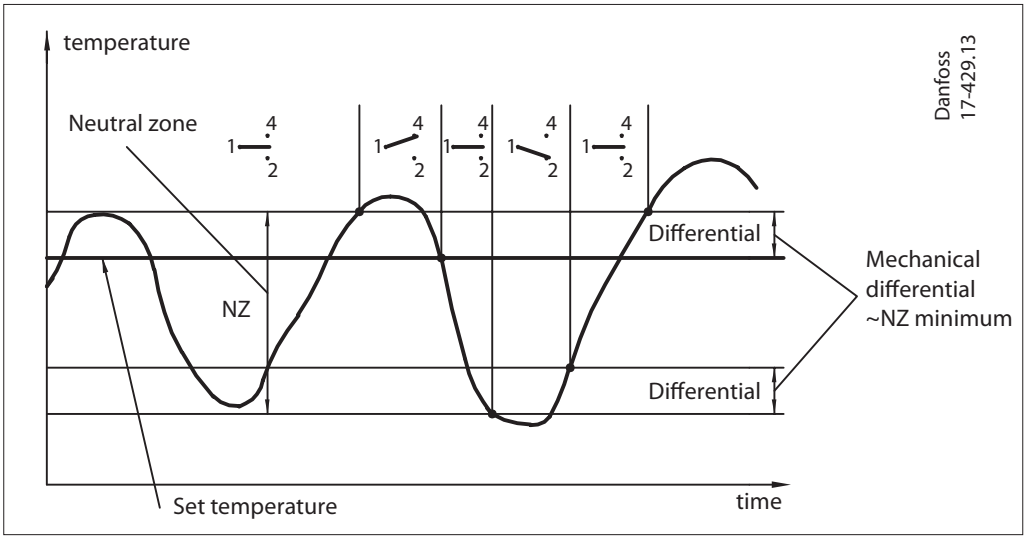

Terminology

Floating control
A form of delayed control where the correcting element (e.g. valve, damper, or similar) moves towards one extreme position at a rate independent of the magnitude of the error when the error exceeds a definite positive value, and towards the opposite extreme position when the error exceeds a definite negative value.

Hunting
Periodic variations of the controlled variable from the fixed reference.

Neutral zone
The interval between the make points of the two contacts.

Charges

1. Vapour charge

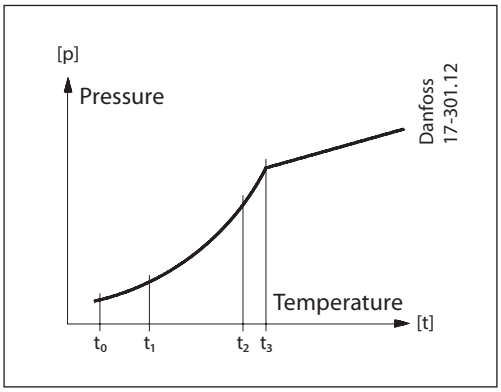

Here the interdependence between the pressure and temperature of saturated vapour is utilized, i.e. the element is charged with saturated vapour plus a small amount of liquid.
The charge is pressure-limited; a further increase in pressure after evaporation of all the liquid in the bulb, will only result in a small pressure increase in the element.

This principle can be utilized in thermostats for low temperature, etc., where evaporation must be able to take place from the free liquid surface in the bulb (within the operation range of the thermostat), and where at the same time, the bellows must be protected against deformation when kept at normal ambient temperatures.
Since the pressure in the element depends on the temperature at the free liquid surface, the thermostat must always be placed so that the bulb is colder than the rest of the thermostatic element.
The evaporated liquid will recondense at the coldest point, i.e. the bulb. Thus, as intended, the bulb becomes the temperature-controlling element in the system.

Note:
When the bulb is coldest, the ambient temperature has no effect on regulating accuracy.

2. Adsorption charge

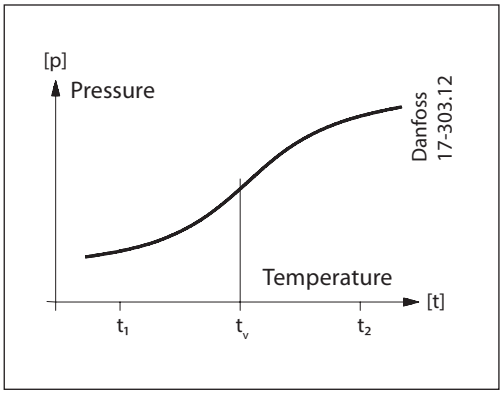

In this case the charge consists partly of a superheated gas and partly of a solid having a large adsorption surface.
The solid is concentrated in the bulb and it is therefore always the bulb that is the temperature-controlling part of the thermostatic element.

The bulb can thus be placed warmer or colder than the rest of the thermostatic element.
Such a charge is however to some extent sensitive to changes in the temperature of the bellows element and capillary tube.
Under normal conditions this is not important, but if the thermostat is used in extreme conditions, scale deviation will occur.
The scale can be corrected by using the graph and the table.
Scale correction = Z × a.
Z can be found in the graph and "a" in the table.

Scale deviation factor

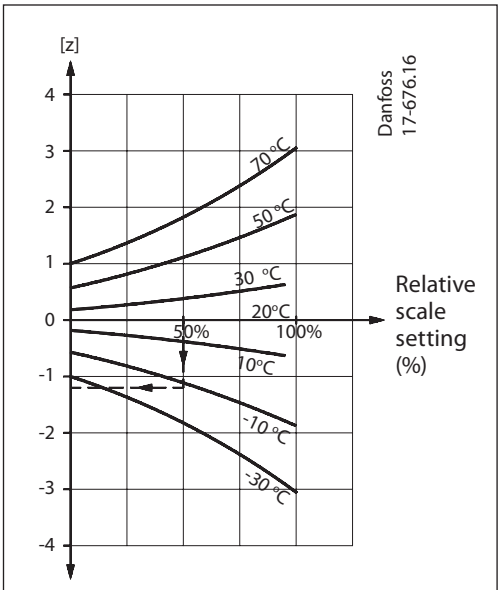

Curves for different ambient temperatures.
0% ~ lowest scale setting temperature,
100% ~ highest scale setting temperature.

Type	Range [°C]	Correction factor "a"
RT 2	-25 – 15	2.3
RT 7	-25 – 15	2.9
RT 8, RT 8L	-20 – 12	1.7
RT 12	-5 – 10	1.2
RT 14, RT 14L	-5 – 30	2.4
RT 15	8 – 32	1.2
RT 23	5 – 22	0.6
RT 24	15 – 34	0.8
RT 101, RT 102	25 – 90	5.0
RT 140, RT 140L	15 – 45	3.1

Charges
(continued)

Example
Scale correction on an RT 14 (range -5 – 30 °C) at activating temperature 12 °C and ambient temperature -10 °C.
The scale temperature, 12 °C, lies approximately in the middle of the scale range, i.e. relative scale setting of 50%.
The factor Z can be found in the graph from 50% and the curve for -10 °C, i.e. approx. -1.2.

The correction factor "a" can be found in the table for an RT 14, i.e. 2.4.
The scale correction = Z×a=-1.2×2.4=-2.88.
If activation at 12 °C for the same conditions is required, the thermostat must be set at 12×2.88=9.12≈9.1.

3. Partial charge

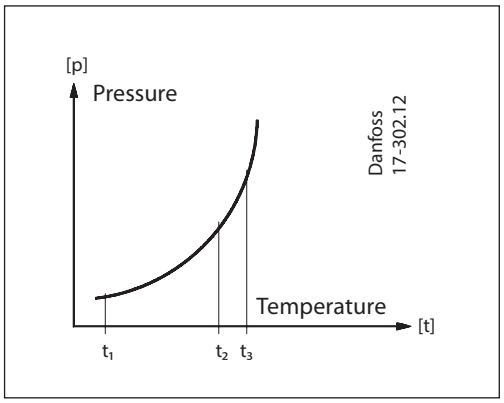

Partial charge is used in RT units having a range lying higher than ambient temperature.
As with the vapour charge, the partial charge utilizes the interdependence between the pressure and temperature of saturated vapour.

The partial charge is of such a volume that the bellows housing, capillary tube and a small part of the bulb are filled when the thermostat is in operation. The bulb is thus the warmest part of the system.
The liquid will condense in the remaining, coldest, part of the system but because of the volume of the charge the free liquid surface will always be in the bulb. In this way, the bulb becomes the temperature-controlling part of the system.

Note:
When the bulb is placed warmest, the ambient temperature has no effect on regulating accuracy.

Terminology

Regulation range
The temperature differential between LT and HT sensors within which the unit can be set to operate. Indicated on the thermostat scale.

Scale indication
The difference between the temperature on LT and HT sensors at the moment when the switch contacts change over as a result of the downward movement of the spindle.

Operating range
The temperature range of the LT sensor, within which the differential thermostat can operate.

Contact differential
The temperature rise on the HT sensor over the set temperature differential which causes the switch contacts to make or break.

Reference sensor
The sensor that is placed in the medium whose temperature is not affected by the function of the thermostat (HT or LT sensor).

Control sensor
The sensor that is placed in the medium whose temperature must be controlled (LT or HT sensor).

Setting of differential

The knob can be used to make a setting on the range scale for the lowest temperature at which the contact system must be activated (cut-out or cut-in).

The differential roller 19 must then be used to set the differential. The highest activating temperature at the sensor is equal to the activating temperature + the set differential.

Design / Function

RT differential thermostat

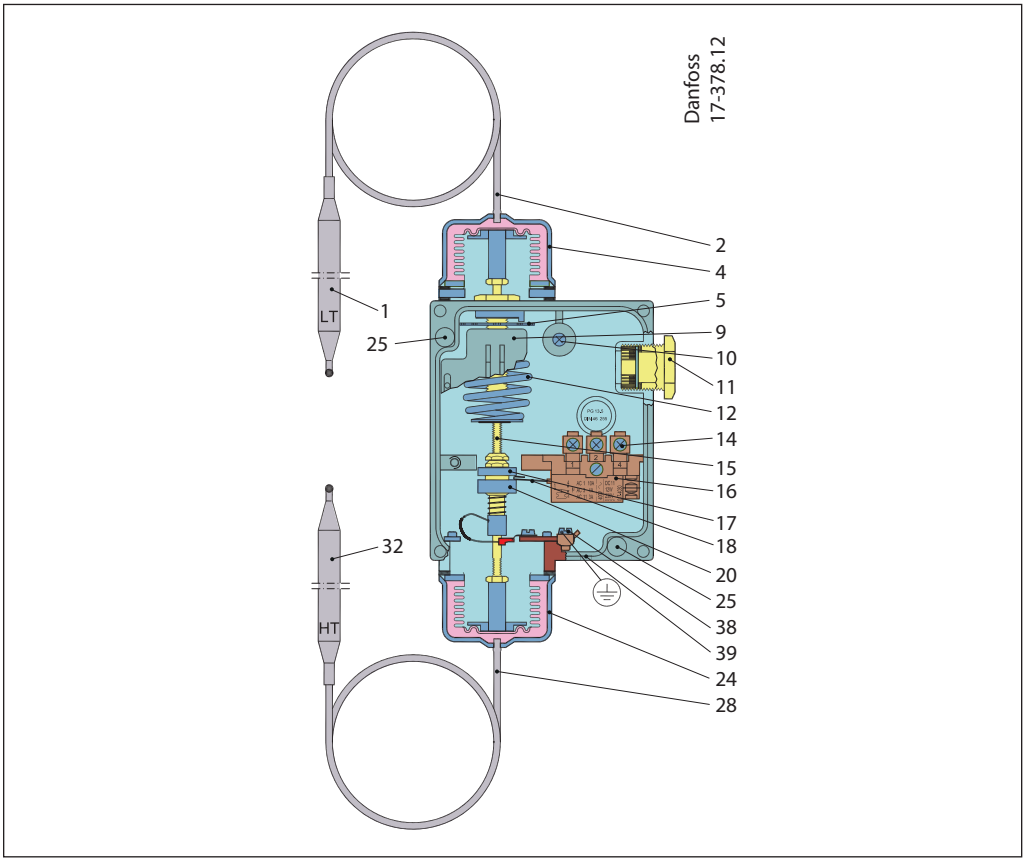

1. LT sensor (bulb)
2. Capillary tube
4. LT bellows element
5. Setting disc
9. Regulation range scale
10. Loop terminal
11. Pg 13.5 screwed cable entry
12. Main spring
14. Terminals
15. Main spindle
16. Switch
17. Upper guide bush
18. Contact arm
20. Lower guide bush
24. HT bellows element
25. Fixing hole
28. Capillary tube
32. HT sensor (bulb)
38. Earth terminal
39. Blow-out disc

An RT differential thermostat contains a single-pole changeover switch that makes or breaks depending on the temperature difference between the two sensors of the unit.
The RT 270 017D003166 is for use in process plant, ventilation plant, and refrigeration and heating plant where there is need to maintain a certain temperature differential, 0 – 15 °C, between two media. One sensor is used as a reference and the other as a control sensor. The temperature differential is the direct controlled variable.

The figure shows a cross-section of the RT 270.

The differential thermostat contains two bellows elements: the LT element whose sensor must be placed in the medium having the lowest temperature, and the HT element whose sensor must be placed in the medium having the highest temperature.
The main spring has a rectilinear characteristic.

Within the operating range the RT 270 can be set for different temperature differentials by the setting disc (5).
When the differential between LT and HT sensor temperature falls, the main spindle (15) moves downwards.
The contact arm (18) is moved downwards by the guide (17) so that contacts (1-4) break and contacts (1-2) make when the set temperature differential is reached.
The contacts changeover again when the temperature differential rises to the set value plus the fixed contact differential of approx. 2 °C.

Example
Set differential =4 °C.
Switch breaks at 4 °C differential and remakes at 4+2=6 °C.

Nomograms for obtained differentials

RT 2

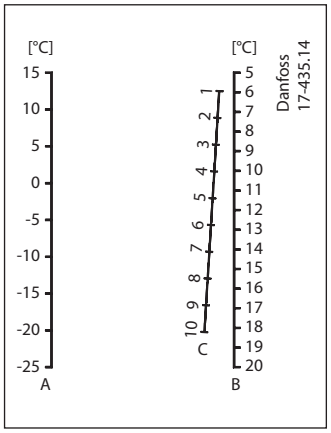

RT 3

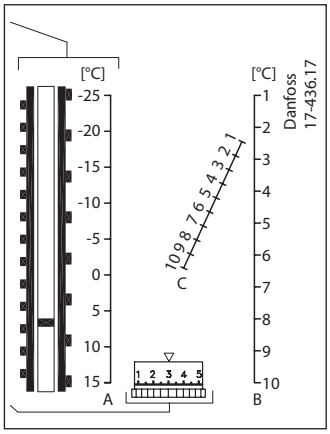

RT 4

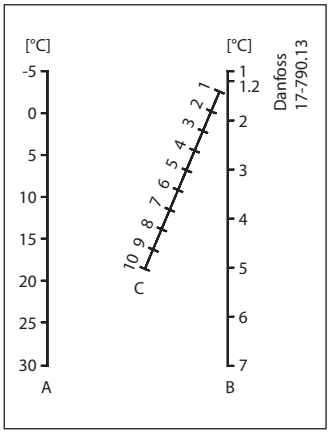

RT 7

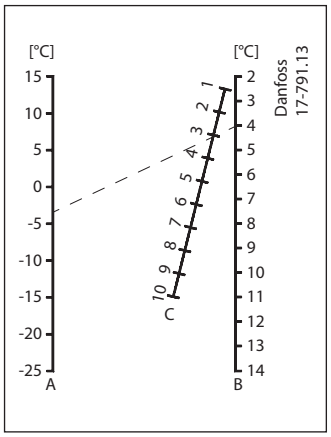

RT 9

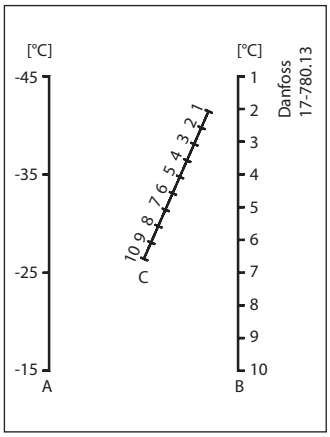

RT 10

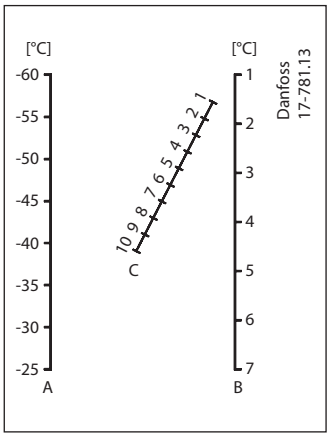

RT 11, RT 13

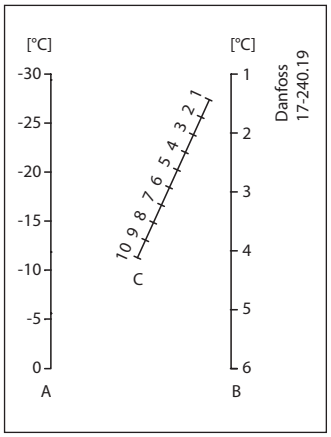

RT 12

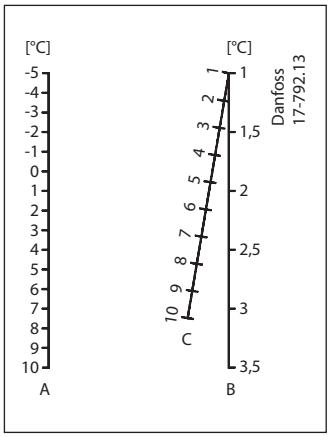

RT 24

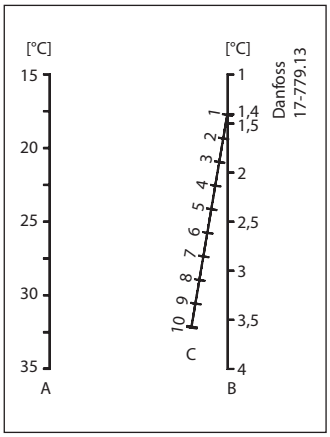

A = Range setting
B = Obtained differential
C = Differential setting

Nomograms for obtained differentials
(continued)

RT 14

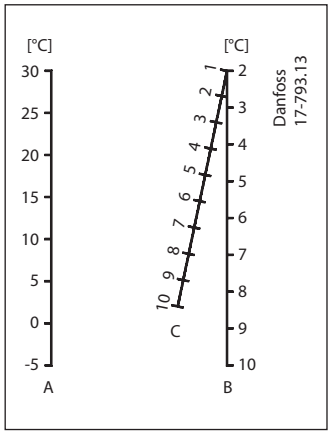

RT 17

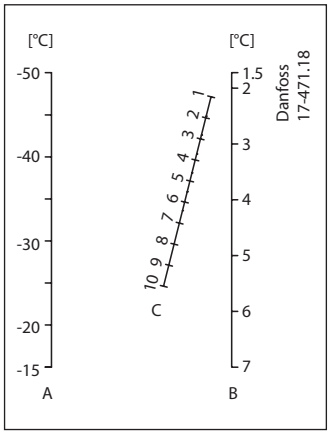

RT 23

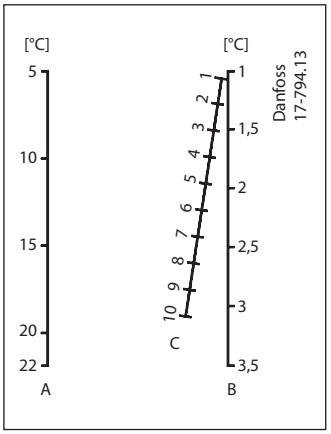

RT 34

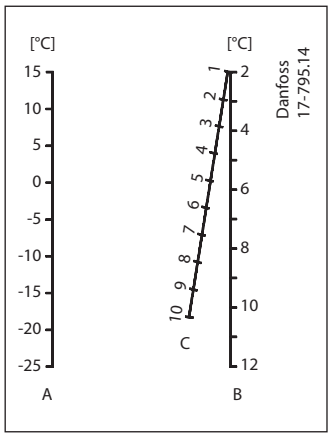

RT 101

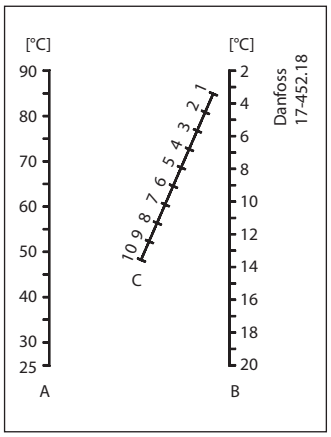

RT 107

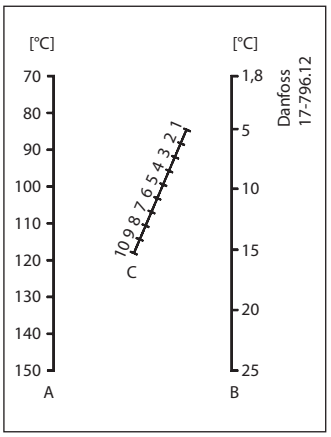

RT 140

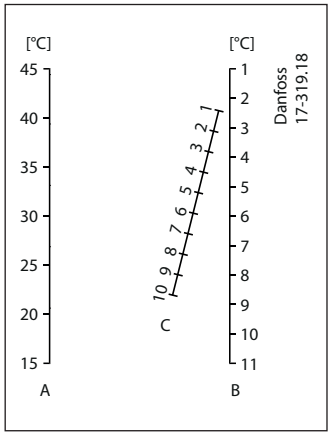

A = Range setting
B = Obtained differential
C = Differential setting

Dimensions and weights

RT thermostat housing

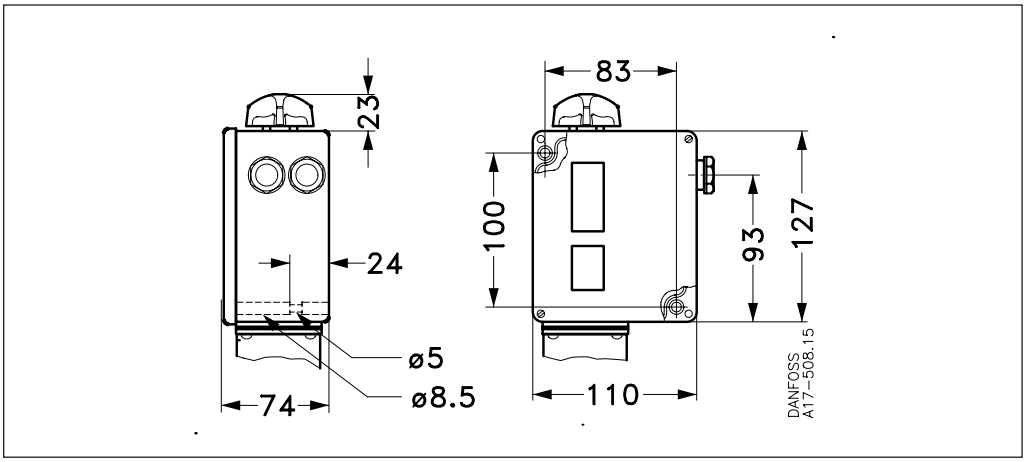

RT 4, RT 11, RT 16L, RT 17, RT 34

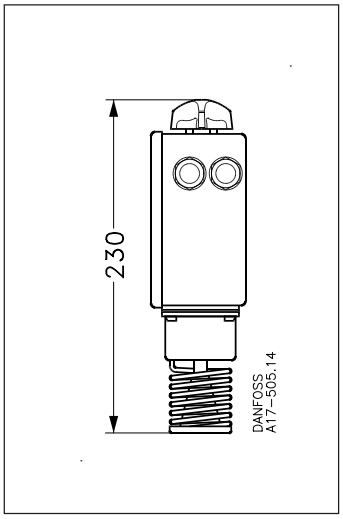

RT thermostat housing

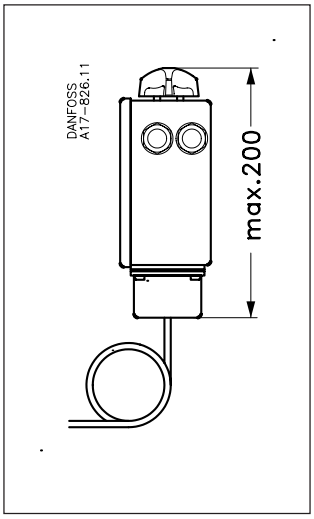

RT 140, RT 140L

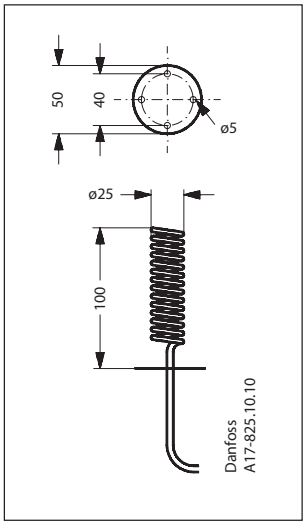

RT 2, RT 3, RT 7, RT 9, RT 13, RT 101

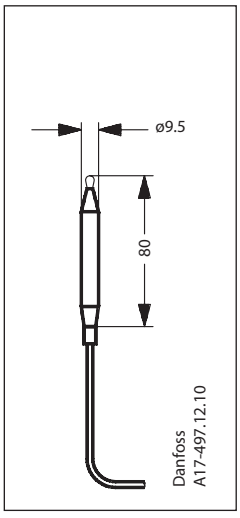

RT 8, RT 8L, RT 14, RT 14L, RT 15, RT 107, RT 270

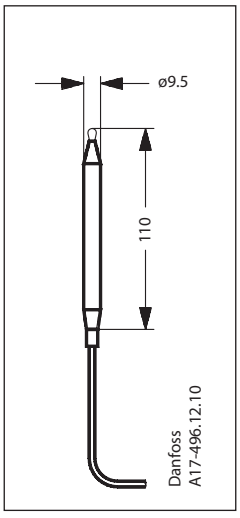

RT 12, RT 23, RT 24

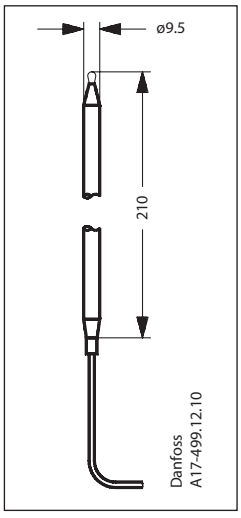

RT 102

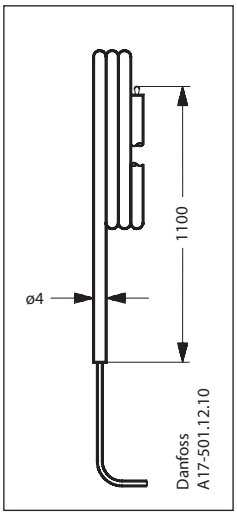

Net weight approx. 1 kg

ENGINEERING
TOMORROW

Pressure switch, Differential pressure switch
RT

Contents **Page**

Features 405
Approvals 406
Technical data 406
Materials in contact with the medium 407
Ordering 408
Design / Function 411
Terminology 414
Setting 414
Dimensions and weight 415

AI240686443327en-000501 | 2017.09

ENGINEERING
TOMORROW

Pressure switch, Differential pressure switch
RT



An RT pressure switch contains a pressure operated single-pole changeover contact, the position of which depends on the pressure in the inlet connection and the set scale value.
The RT series includes pressure switches for general applications within industrial and marine refrigeration.
The RT series also includes differential pressure switches, pressure switches for neutral zone regulation, and special pressure switches with gold-plated contact surfaces for PLC applications.

Features

- Versions with enclosure IP66
- Wide regulating range
- Wide range of units for industrial and marine applications
- Suitable for alternating and direct current (AC and DC)
- Interchangeable contact system
- Special versions for PLC applications
- Safety Integrity Level:
  SIL 2 according to IEC 61508

Approvals

RT 1	RT 1A	RT 1AL	RT 5A	RT 6W, RT 6B, RT 6S	RT 6AW, RT 6AB, RT 6AS	RT 30AW, RT 30AB, RT 30AS	RT 36B, RT 36S	RT 117	RT 117L	RT 200	RT 200L	RT 260A	RT 262A	
•				•		•		•		•				Germanischer Lloyd, GL
								•		•				Det Norske Veritas, DNV
								•		•				Bureau Veritas, BV
•	•							•		•		•	•	Registro Italiano Navale, RINA
•	•	•	•	•	•	•	•	•	•	•	•	•	•	Russian Maritime Register of Shipping, RMRS
•	•		•					•		•				Nippon Kaiji Kyokai, NKK
								•		•		•	•	Korean Register of Shipping, KRS
•	•	•	•	•	•	•	•	•	•	•	•	•	•	CE marked according to 60947-4, -5
				•	•	•	•							CE marked acc. to PED 97/23/EC category IV, safety equipment and EN 12263
•	•	•	•	•	•	•	•	•	•	•	•	•	•	China Compulsory Certificate, CCC

Technical data

Cable connection	2 × Pg 13.5 Cable diameter 6 – 14 mm
Enclosure	IP66 to EN 60529 / IEC 529, except for versions with ext. reset which are IP54
Ambient temperature	-50 – 70 °C for pressure control housing
Switches	See “Ordering, switches” (below)
Solid / stranded	0.2 – 2.5 mm^2
Flexible, without ferrules	0.2 – 2.5 mm^2
Flexible, with ferrules	0.2 – 1.5 mm^2
Tightening torque	max. 1.5 Nm
Rated impulse voltage	4 kV
Pollution degree	3
Short circuit protection, fuse	10 Amp
Insulation	400 V

Materials in contact with the medium

Type	Bellows	Material	W. no.	To EN	Comments
RT 260AL, RT 262AL, RT 263AL, RT 265A, RT 5A, RT 5AL, RT 260A	017-7253	Steel	1.0338	10139	Nickel-plated
	017-7254	Steel	1.0401	10277-2	Nickel-plated
	017-7258	Stainless Steel	1.4306	10088-2	—
	017-7260	—	—	—	—
	017-7252	—	—	—	—
	017-7274	—	—	—	—
	017-7253	—	—	—	—
	017-7258	—	—	—	—
	017-7269	—	—	—	—
	017-7270	—	—	—	—
	—	Aluminium [1]	3.0255	573-3	—
	—	Steel [1]	1.0402	10250-2	Zn-plated
RT 1	017-7256	Steel	1.0338	10139	Nickel-plated, Tin-plated
	—	Steel	1.0718	10227-3	Nickel-plated
	—	Stainless Steel	1.4306	10088-2	—
	—	Steel	Spring wire type DH	10270-1	Zn-plated
RT 200, RT 200L	017-7275	Stainless Steel	1.4306	10088-2	—
	—	Stainless Steel	1.4568	10270-3	—
	—	Brass	2.0321	1652	—
	—	Brass	2.0402	12165	—
RT 6B, RT 6S, RT 6W, RT 6AB, RT 6AS, RT 6AW	017-7281	Steel	1.0332	10111	Nickel-plated
	017-7282	Steel	1.0338	10139	Nickel-plated
	017-7283	Steel	1.0718	10227-3	Nickel-plated
	—	Stainless Steel	1.4306	10088-2	—
	—	Aluminium [1]	3.0255	573-3	—
	—	Steel [1]	1.0402	10250-2	Zn-plated
RT 1A, RT 1AL	017-7255	Steel	1.0338	10139	Nickel-plated, Tin-plated
	017-7259	Steel	1.0401	10277-2	Nickel-plated
	—	Stainless Steel	1.4306	10088-2	—
	—	Steel	Spring wire type DH	10270-1	Zn-plated
	—	Aluminium [1]	3.0255	573-3	—
	—	Steel [1]	1.0402	10250-2	Zn-plated
RT 262A	017-7254	Steel	1.0338	10139	Nickel-plated
	017-7268	Steel	1.0401	10277-2	Nickel-plated
	017-7288	Stainless Steel	1.4305	10088-3	—
	—	Stainless Steel	1.4306	10088-2	—
	—	Aluminium [1]	3.0255	573-3	—
	—	Steel [1]	1.0402	10250-2	Zn-plated
RT 117, RT 117L	017-7279	Stainless Steel	1.4306	10088-2	—
	—	Stainless Steel	1.4568	10270-3	—
	—	Brass	2.0321	1652	—
	—	Brass	2.0401	12164	—
	—	Brass	2.0402	12165	—
RT 36B, RT 36S, RT 30AW, RT 30AB, RT 30AS	017-7284	Steel	1.0332	10111	Nickel-plated
	017-7286	Steel	1.0338	10139	Nickel-plated
	017-7283	Steel	1.0718	10227-3	Nickel-plated
	017-7286	Stainless Steel	1.4305	10088-3	—
	—	Stainless Steel	1.4306	10088-2	—
	—	Stainless Steel	1.4568	10270-3	—

[1] Only in types with connection G 3/8 A + weld nipple ø 6.5/10 mm

Ordering

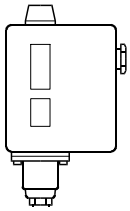

For R22, R134a, R404A, R407A, R407C, R407F, R422B, R422D
For complete list of approved refrigerants, visit www.products.danfoss.com and search for individual code numbers, where refrigerants are listed as part of technical data.

Pressure	Type	Regulation range [bar]	Differential Δp [bar]	Reset	Max. working pressure PS [bar]	Max. test pressure P_e [bar]	Code no.	
							Connection	
							¼ in flare	G 3/8 A [1]
Low	RT 1	-0.8 – 5	0.5 – 1.6	Auto.	22	25	**017-524566**	–
		-0.8 – 5	0.5	Man. (Min.)	22	25	**017-524666**	–
	RT 200	0.2 – 6	0.25 – 1.2	Auto	22	25	–	**017-523766**
High	RT 117	10 – 30	1 – 4	Auto	42	47	–	**017-529566**

[1]) BSP ext. thread, ISO 228-1.

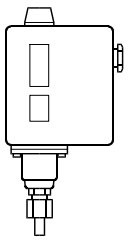

Safety – Pressure switches for
R22, R134a, R404A, R407A, R407C, R407F, R422B, R422D, R507A, R717 *)
For complete list of approved refrigerants, visit www.products.danfoss.com and search for individual code numbers, where refrigerants are listed as part of technical data.

Pressure	Type	Regulation range [bar]	Differential Δp [bar]	Reset	Max. working Pressure PS [bar]	Max. test pressure P_e [bar]	Code no.	
							Connection	
							Cutting ring ø6 mm	G 3/8 A [1] + weld nipple ø6.5/10 mm
Low	RT 1A	-0.8 – 5	0.5 – 1.6	Auto	22	25	**017-501966**	**017-500166**
		-0.8 – 5	0.5	Man. (Min.)	22	25	**017-502766**	**017-500266**
		-0.8 – 5	1.3 – 2.4	Auto	22	25	–	**017-500766**
High	RT 5A	4 – 17	1.2 – 4	Auto	22	25	**017-505266**	**017-504666**
		4 – 17	1.3	Man. (Max.)	22	25	**017-506166**	**017-504766**

[1]) BSP ext. thread, ISO 228-1.
*) *Only for RT 1A, RT 5A.*

Safety pressure switches with EN 12263 approval and CE marked acc. PED (Pressure Equipment Directive) *)
R22, R134a, R404A, R407A, R407C, R407F, R422B, R422D, R507A, R717 **)
For complete list of approved refrigerants, visit www.products.danfoss.com and search for individual code numbers, where refrigerants are listed as part of technical data.

Pressure	Type	Regulation range [bar]	Differential (fixed) Δp [bar]	Reset [bar]	Max. working pressure PS [bar]	Max. test pressure P_e [bar]	Code no.			
							Connection			
							¼ in flare	Cutting ring ø6 mm	G 3/8 A [1] + weld nipple ø6.5/10 mm	G ½ A [1]
High	RT 6W	5 – 25	3.0	Auto	34 [3]	38	017-503166	–	–	–
	RT 6B	10 – 28	1.0 [4]	Man. (Max.)	34 [3]	38	017-503466	–	–	–
	RT 6S	10 – 28	1.0 [4]	Man. (Max.)	34 [3]	38	017-507566	–	–	–
High	RT 30AW [2]	1 – 10	0.8	Auto	22	25	–	–	–	**017-518766**
	RT 30AB [2]	1 – 10	0.6 [4]	Man. (Max.)	22	25	–	–	–	**017-518866**
	RT 30AS [2]	1 – 10	0.4 [4]	Man. (Max.)	22	25	–	–	–	**017-518966**
High	RT 6AW	5 – 25	3.0	Auto	34 [3]	38	–	**017-513166**	**017-503266**	–
	RT 6AB	10 – 28	1.5 [4]	Man. (Max.)	34 [3]	38	–	**017-513366**	**017-503566**	–
	RT 6AS	10 – 28	1. 5 [4]	Man. (Max.)	34 [3]	38	–	**017-514666**	**017-507666**	–

*) Meets the requirements in VBG 20 on safety equipment and excess pressures.
W=Wächter (pressure control).
B= Begrenzer (pressure control with external reset).
S= Sicherheitsdruckbegrenzer (pressure control with internal reset).
A rupture in the bellows system of the unit will cause the compressor to stop.

**) Only for RT 6AW, RT 6AB, RT 6AS, RT 30AW, RT 30AB, RT 30AS.

[1]) BSP ext. thread, ISO 228-1.
[2]) Approved for PED also acc. to EN12953-9 and EN12922-11.
[3]) Max. working pressure acc. to PED is limited to 28 bar.
[4]) Max.

Ordering
(continued)

Pressure switches with adjustable neutral zone for
R22, R134a, R404A, R407A, R407C, R407F, R507A, R717 *)
For complete list of approved refrigerants, visit www.products.danfoss.com and search for individual code numbers, where refrigerants are listed as part of technical data.

Pressure	Type	Regulation range [bar]	Differential Δp [bar]	Adjustable neutral zone NZ Δp [bar]	Max. working Pressure PS [bar]	Max. test pressure P_e [bar]	Code no.	
							Connection	
							Cutting ring ø6 mm	G 3/8 A [1] + weld nipple ø6.5/10 mm
Low	RT 1AL	-0.8 – 5	0.2	0.2 – 0.9	22	25	**017L001666**	**017L003366**
	RT 200L	0.2 – 6	0.25	0.25 – 0.7	22	25	–	**017L003266** [2]
High	RT 5AL	4 – 17	0.35	0.35 – 1.4	22	25	**017L001766** [2]	**017L004066**
	RT 117L	10 – 30	1.0	1 – 3.0	42	47	–	**017L004266** [2]

[1]) BSP ext. thread, ISO 228-1.
[2]) Without nipple.
*) Only for RT 1AL, RT 5AL.

Differential pressure switches for
R22, R134a, R404A, R407A, R407C, R407F, R422B, R422D, R507A, R717
For complete list of approved refrigerants, visit www.products.danfoss.com and search for individual code numbers, where refrigerants are listed as part of technical data.

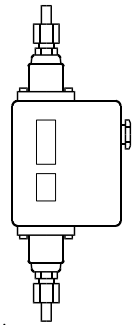

Type	Regulation range [bar]	Differential Δp [bar]	Operating range for LP bellows [bar]	Max. working Pressure PS [bar]	Max. test pressure P_e [bar]	Code no.	
						Connection	
						Cutting ring ø6 mm	G 3/8 A [1] + weld nipple ø6.5/10 mm
RT 260A	0.5 – 4	0.3	-1 – 18	22	25	**017D001466**	**017D002166**
	0.5 – 4	0.3	-1 – 18	22	25	–	**017D002266**[2])
	0.5 – 6	0.5	-1 – 36	42	47	**017D001566** [4])	**017D002366**
	1.5 – 11	0.5	-1 – 31	42	47	**017D001666**	**017D002466**
RT 262A	0.1 – 1.5	0.1	-1 – 9	11	13	**017D001366**	**017D002566**
RT 265A [3])	1 – 6	0.5	-1 – 36	42	47	–	**017D007266**

[1]) BSP ext thread, ISO 228-1.
[2]) Man. (Max.) reset.
[3]) Filter monitor: Alarm Δp = 0.8 bar, cut-out Δp = 1 bar (factory setting).
[4]) With 3 m capillary tube.

Differential pressure switches with adjustable neutral zone for
R22, R134a, R404A, R407A, R407C, R407F, R422B, R422D, R507A, R717
For complete list of approved refrigerants, visit www.products.danfoss.com and search for individual code numbers, where refrigerants are listed as part of technical data.

Type	Regulation range [bar]	Differential Δp [bar]	Adjustable neutral zone NZ [bar]	Operating range for LP bellows [bar]	Max. working pressure PS [bar]	Max. test pressure P_e [bar]	Code no.	
							Connection	
							G 3/8 A [1] + weld nipple ø6.5/10 mm	
RT 262 AL	0.1 – 1.5	0.1	0.1 – 0.33	-1 – 9	11	13	**017D004366**	

[1]) BSP ext thread, ISO 228-1.

Ordering
(continued)

Switches [1])

Contact system versions	Contact system	Description	Contact load	Code no.
With automatic reset	 SPDT	Single-pole changeover switch with terminal board proof against leakage current. Fitted in all standard versions of type RT. Snap action changeover contacts.	Alternating current [2]) Ohmic: AC 1 = 10 A, 400 V Inductive: AC 3 = 4 A, 400 V AC 15 = 3 A, 400 V Direct current DC 13 = 12 W, 220 V	**017-403066**
With manual (max.) reset	 SPDT	For manual reset of unit after contact changeover on rising pressure. For HP units prepared for reset facility.		**017-404266**
With manual (min.) reset	 SPDT	For manual reset of unit after contact changeover on falling pressure. For LP-units prepared for reset facility.		**017-404166**
With automatic reset, gold-plated	 SPDT	Single-pole changeover switch with gold plated (oxide-free) contact surfaces. Increases cut-in reliability on alarm and monitoring systems, etc. Snap action changeover contacts. Terminal board proof against leakage current.	Alternating current [2]) Ohmic: AC 1 = 10 A, 400 V Inductive: AC 3 = 2 A, 400 V AC 15 = 1 A, 400 V Direct current DC 13 = 12 W, 220 V	**017-424066**
Cuts in two circuits simultan-eously	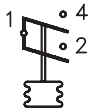 SPST	Single-pole changeover switch that cuts in two circuits simultaneously on rising pressure. Snap action changeover contacts. Terminal board proof against leakage current.	Alternating current [2]) Ohmic: AC 1 = 10 A, 400 V Inductive: AC 3 = 3 A, 400 V AC 15 = 2 A, 400 V Direct current DC 13 = 12 W, 220 V [3])	**017-403466**
With non-snap action changeover contacts	 SPDT	Single-pole changeover switch with non-snap action changeover contacts.	Alternating or direct current 25 VA, 24 V	**017-018166**

[1]) RT pressure switches meet the conditions of EN 60947-2-9.
[2]) Max. starting current (L.R.) = 7 × AC 3.
[3]) If current is led through the contacts 2 and 4, i.e. terminals 2 and 4 connected but not terminal 1, the max. permissible load is increased by 90 W, 220V.

The switches are shown in the position they assume on falling pressure, i.e. after downward movement of the RT main spindle.

The setting pointer of the switch shows the scale value at which contact changeover occurs on falling pressure.

An exception is RT with switch code no. 017-404266 with Man. reset, where the setting pointer shows the scale value at which contact changeover occurs on rising pressure.

Special versions

RT can be supplied with special switches as follows.

When ordering, please state:
1. Type
2. Code no. of standard unit
3. Code no. of special switch

Design / Function

5. Setting knob
9. Regulation range scale
10. Loop terminal
11. Pg 13.5 screwed cable entry
12. Main spring
14. Terminals
15. Main spindle
16. Switch
17. Guide bush
18. Contact arm
19. Differential setting nut
23. Bellows element
25. Fixing hole
27. Connection
38. Earth terminal
39. Blow-out disc
44. Pressure setting spindle

Pressure switch, type RT

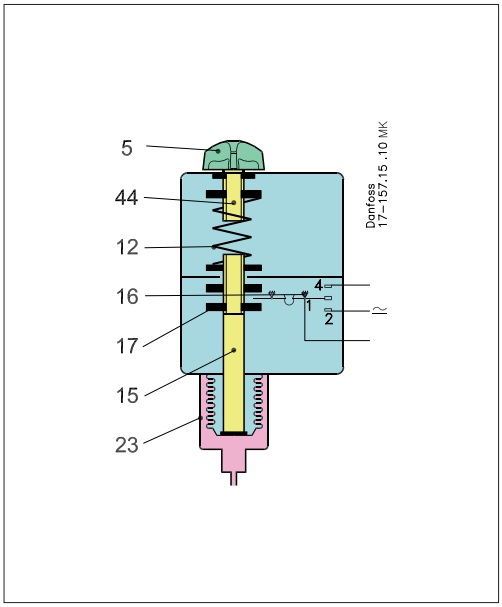

Pressure switch, type RT

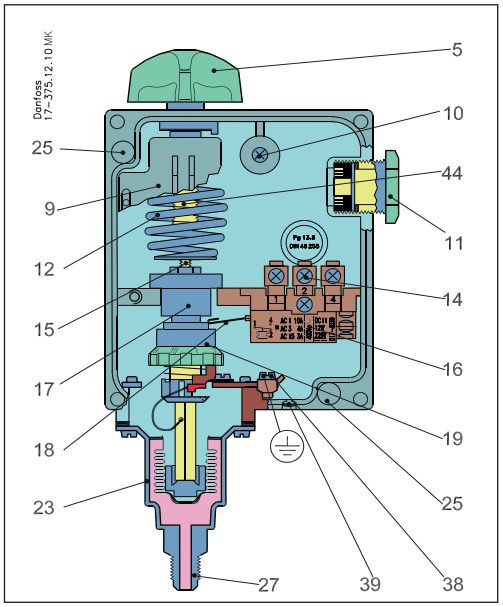

The bellows in the RT pressure switch is connected to the low or high pressure side of the controlled system via the connection.

By turning the setting knob (5) the main spring (12) can be set to balance the pressure in the bellows.

A rise in pressure compresses the bellows and moves the main spindle (15) upwards until spring and bellows pressure are in equilibrium.
The main spindle (15) is fitted with a guide bush (17) and a differential pressure setting nut (19) that together transfer the main spindle movement to the switch (16).

The RT 6W, RT 6B, RT 6S, RT 6AW, RT 6AB, RT 6AS, RT 30AW, RT 30AB, RT 30AS, RT 36B, RT 36S are equipped with a double bellows (an outer bellows and a regulating bellows).

These units have been tested and approved by TÜV (Technischer Überwachungs Verein, Germany) according to EN 12263.

General for EN 12263 approved units.

1. The units are equipped with a double bellows system. When pressure in the plant exceeds the set value, the unit will automatically stop the plant.
   The double bellows system prevents loss of system charge in the event of bellows rupture.
2. Versions with designation W or AW cut again automatically when the pressure has fallen to the set value minus the differential.
3. Versions with designation B or AB are cut manually with the external reset button. This is possible when the pressure has fallen to the set value minus differential.
4. Versions with designation S or AS can be cut in manually with the internal reset arm when the pressure has fallen to the set value minus differential.

As laid down by EN 12263 requirements, if a rupture occurs in the regulating bellows of the unit, the refrigerating system compressor will be stopped and can only be restarted when the pressure control has been replaced.

A rupture in the outer bellows will cause the cut-out pressure of RT 36 to fall 2.5 bar, and the cut-out pressure of RT 6 and RT 30 to fall 4.5 bar under the set value. This means that the unit cuts out at normal condensing pressure and thus provides a fail-safe function.

All RT pressure switches, including those which are EN 12263 approved, operate independently of changes in the ambient temperature around the control housing. Therefore the set cut-out pressure and differential are held constant provided the permissible ambient temperatures are not exceeded.

Design / Function
(continued)

5. Setting knob
9. Regulation range scale
11. Pg 13.5 screwed cable entry
12. Main spring
15. Main spindle
16. Switch
17. Upper guide bush
18. 18a, 18b. Contact arm
20. Lower guide bush
23. Bellows element
25. Fixing hole
27. Connection
38. Earth terminal
39. Blow-out disc
40. Neutral zone setting nut
44. Pressure setting spindle

Pressure switch with adjustable neutral zone, type RT L

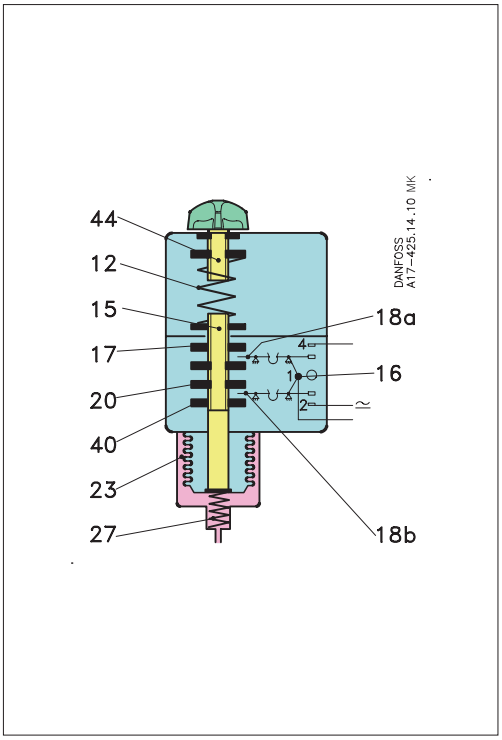

Pressure switch, type RT L

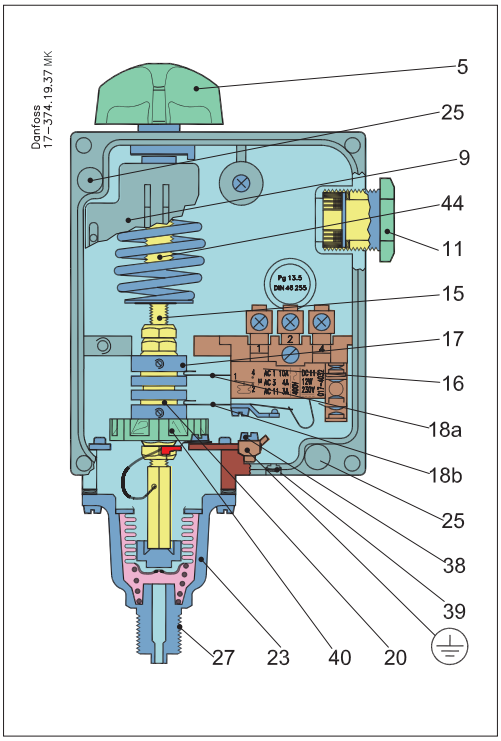

RT L pressure switches are fitted with a switch with an adjustable neutral zone. This enables the units to be used for floating control. The neutral zone switch contact arms (18a) and (18b) are operated by the spindle guide bushes (17) and (20).

The upper guide bush (17) is fixed while the lower guide bush (20) can be moved up or down by the setting nut (40). In this way the neutral zone can be varied between a minimum value (equal to the mechanical differential of the unit) and a maximum value (depending on the type of RT unit).

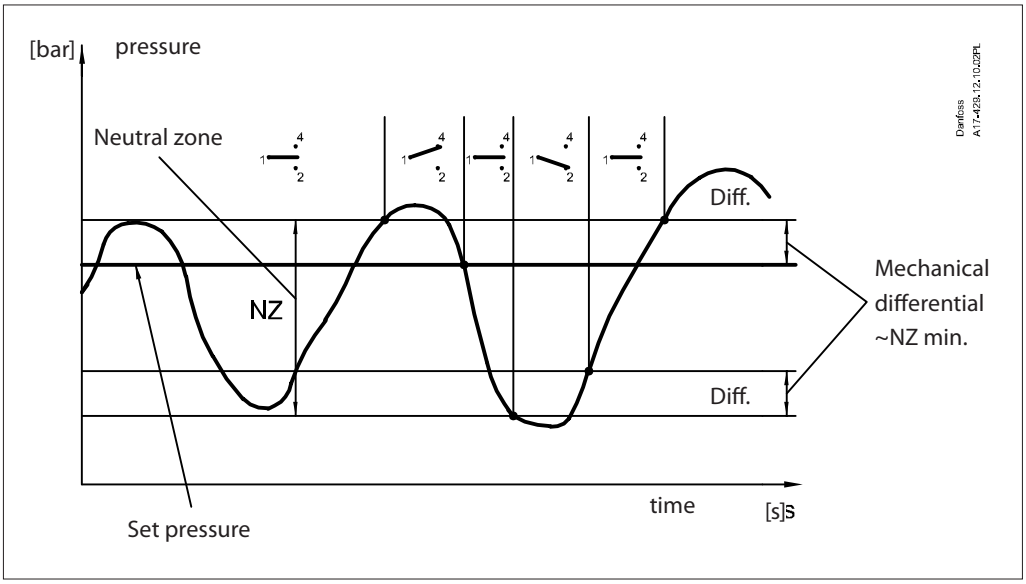

Design / Function
(continued)

3. LP connection
4. LP bellows element
5. Setting disc
9. Regulation range scale
10. Coil clamp
11. Pg 13.5 screwed cable entry
12. Main spring
14. Terminals
15. Main spindle
16. Switch
17. Upper guide bush
18. Contact arm
20. Lower guide bush
24. HP bellows element
25. Fixing hole
34. HP connection
38. Earth terminal
39. Blow-out disc

Differential pressure switch, type RT

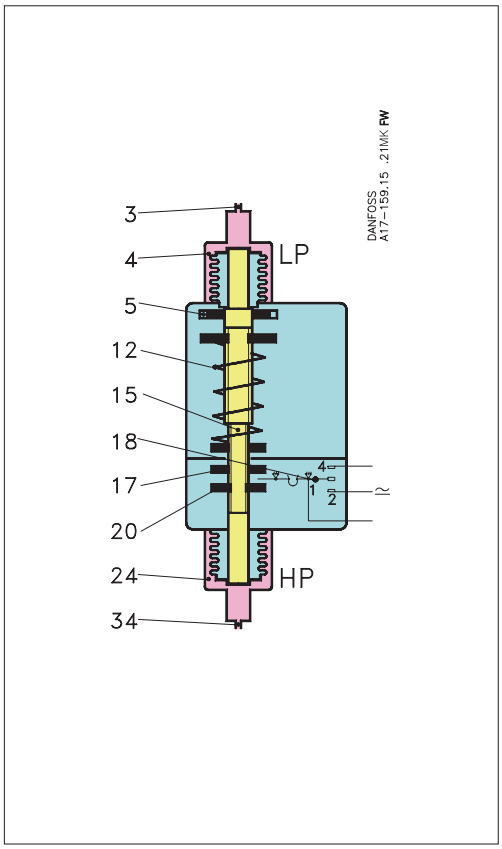

Differential pressure switch, type RT

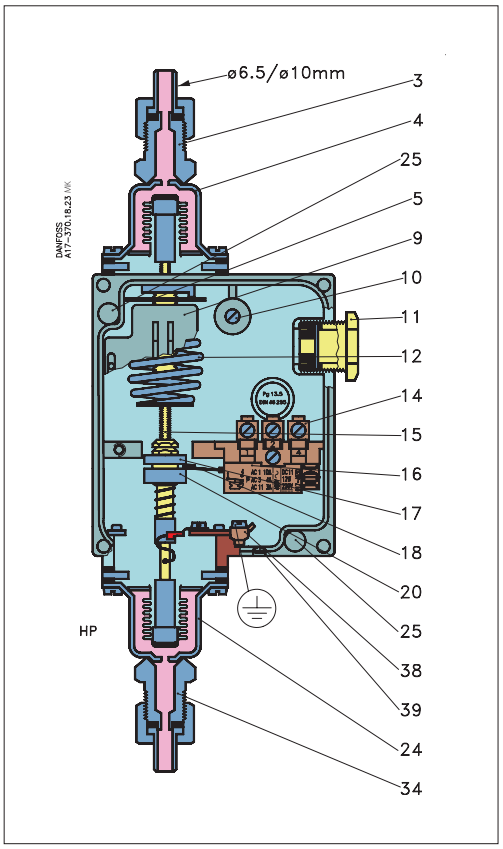

An RT differential pressure switch contains a single-pole changeover switch that makes or breaks depending on the pressure differential between two counteracting bellows elements (LP and HP).

Differential pressure switches are used primarily as protection against too low a differential pressure across liquid circulation pumps.
A secondary application is the safeguarding of lubricating oil pressure in refrigeration compressors.

The function of the pressure switch is conditional only on the differential pressure, i.e. the difference in pressure between the two counteracting bellows, whereas it is independent of the absolute pressure on both bellows.
The bellows (4) and (24) are respectively connected to the LP port (lowest pressure) and the HP port (highest pressure).

The main spring (12) can be set for different differential pressures by the setting disc (5).
If the differential pressure between highest and lowest pressures falls, the spindle (15) moves downwards and via the upper guide bush (17), actuates the switch contact arm (18). The reverse function occurs if the differential pressure rises.

Terminology

Floating control
A form of delayed control where the correcting element (e.g. valve, damper, or similar) moves towards one extreme position at a rate independent of the magnitude of the error when the error exceeds a definite positive value, and towards the opposite extreme position when the error exceeds a definite negative value.

Hunting
Periodic variations of the controlled variable from the fixed reference.

Neutral zone
The interval between the make points of the two contacts.

"Snap function"
A certain contact force is maintained until the irrevocable "snap" is initiated. The time during which the contact force approaches zero is thus limited to a very few milliseconds. Therefore contact bounce cannot occur as a result of, for example, slight vibrations, before the cut-out point.

Contact systems with "Snap function" will change over even when micro-welds are created between the contacts during cut-in. A very high force is created during cut-out to separate the contacts. This force immediately shears off all the welds. Thus the cut-out point of the unit remains very accurate and completely independent of the magnitude of the current load.

Setting

RT with automatic reset – LP
The knob is used to set the lowest pressure at which the contact system must be activated (cut-out or cut-in).
This value can be read on the main scale of the unit.
The differential roller must be used to set the differential.
Highest activating pressure = lowest activating pressure + set differential.

RT with manual reset – LP
RT pressure switches RT 1 and RT 1A are obtainable in versions with min. reset. When the pressure falls to the setting value the pressure control cuts out.

Manual reset becomes possible when the pressure in the bellows system has risen to a value corresponding to the set value + the differential.

On falling pressure the follower activates the contact system arm and the contact changes over.

The scale is calibrated so that the scale value corresponds to contact changeover on falling pressure.

RT with automatic reset – HP
The knob can be used to set the lowest pressure at which the contact system must be activated (cut-out or cut-in).
This value can be read on the main scale of the unit.
The differential must be set with the differential roller. Highest activating pressure = lowest activating pressure + set differential.

RT with manual reset – HP
Pressure switch RT 5A is obtainable with max. reset. When the pressure has risen to the set value the pressure control cuts out.

Manual reset only becomes possible when the pressure has fallen to a value corresponding to the set pressure minus the differential.

The differential roller is then used as a follower. On rising pressure the differential roller activates the contact system arm and the contact changes over.

The scale is calibrated so that the scale values correspond to contact changeover on rising pressure, which is opposite to RT units with automatic reset.

Dimensions and weight

RT pressure switch housing

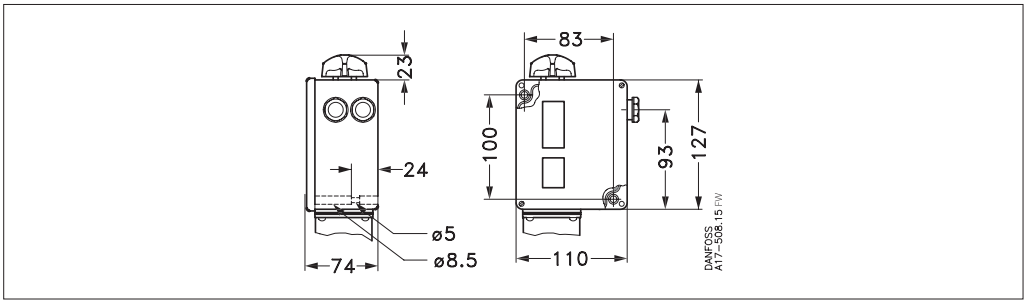

RT 1

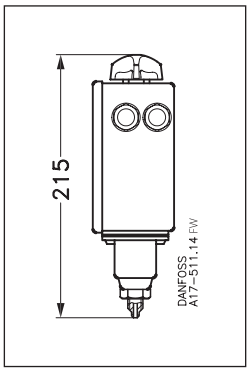

RT 1A, RT 1AL

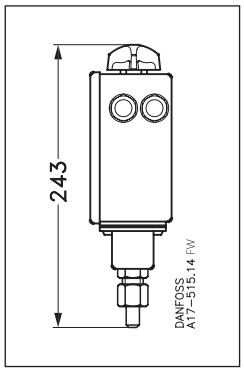

RT 1A, RT 1AL

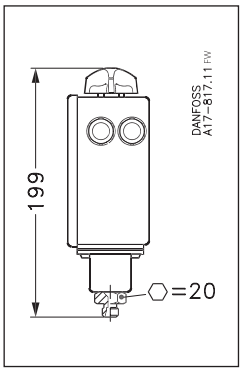

RT 6A

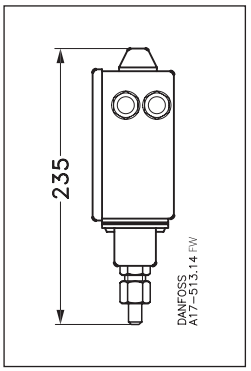

RT 6, RT 36

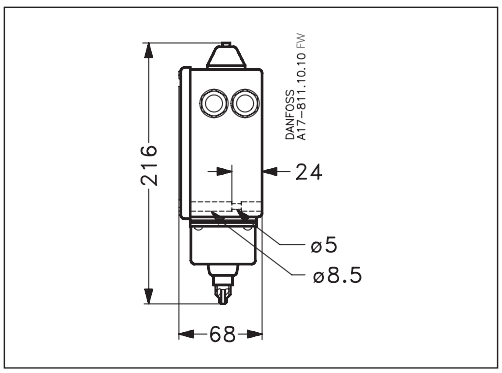

RT 30A

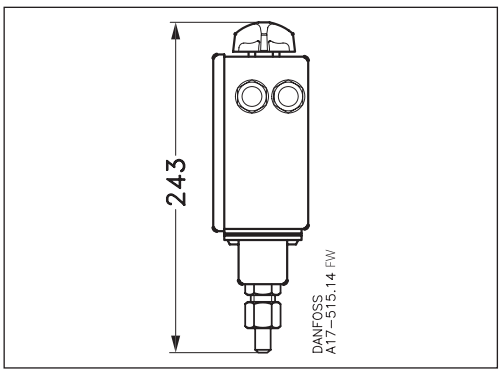

RT 117, RT 117L, RT 200, RT 200L

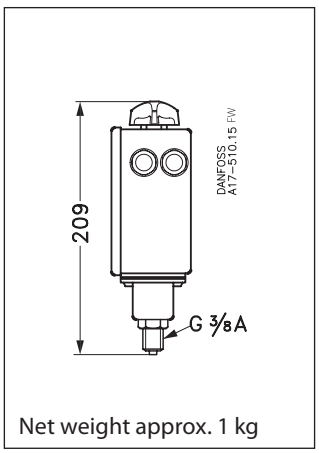

Net weight approx. 1 kg

RT 260A

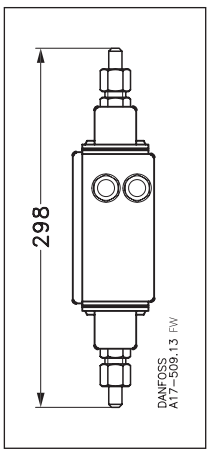

RT 262A

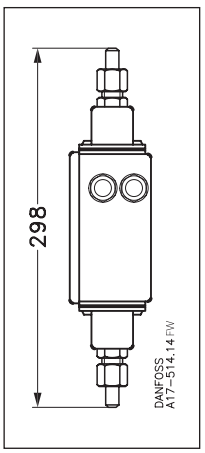

RT 260A, RT 262A

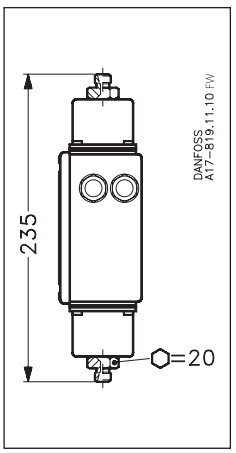

ENGINEERING
TOMORROW

Differential pressure switch
MP 54, MP 55 and MP 55A

Contents **Page**

Features 419
Approvals 419
Ship approvals 419
Materials in contact with the medium 420
Technical data 420
Terminology 420
Ordering 421
Design 421
Function 422
Dimensions and weight 424

AI211986438834en-000901 | 2016.10

ENGINEERING TOMORROW

Differential pressure switch
MP 54, MP 55 and MP 55A



MP 54 and MP 55 oil differential pressure switches are used as safety switches to protect refrigeration compressors against low lubricating oil pressure.

If the oil pressure fails, the oil differential pressure switch stops the compressor after a certain time period.

MP 54 and MP 55 are used in refrigerating systems using HCFC and non-flammable HFC refrigerants.

MP 55A is used in refrigerating systems with R717. MP 55A can also be used in systems with HCFC and non-flammable HFC refrigerants.

MP 54 has a fixed differential pressure setting. It also incorporates a thermal time relay with a fixed release time setting.

MP 55 and MP 55A have adjustable differential pressure and are available both with and without thermal time relay.

Features

- Wide regulating range
- Can be used for deep freeze, refrigeration and air conditioning plant
- Can be used for HCFC and non-flammable HFC refrigerants
- Electrical connection at the front of the unit
- Suitable for both alternating and direct current (AC and DC)
- Screwed cable entry for cables from 6 – 14 mm diameter
- Small contact differential

Approvals

CE mark according to LVD 2006/95/EC
EN 60947-1, EN 60947-4-1, EN 60947-5-1

China Compulsory Certificate, CCC
Versions having UL and CSA approvals can be supplied to special order

Ship approvals

Germanischer Lloyd, GL
Registro Italiano Navale, RINA (MP55)

Materials in contact with the medium

Unit type	Material
MP 54 MP 55	Stainless steel 19/11, no. 1.4306 to EN 10088 Cold forming steel, no. 1.0338, EN 10139 Free cutting steel, no. 1.0718, EN 10277
MP 55A	Stainless steel 19/11, no. 1.4306 to EN 10088 Cold forming steel, no. 1.0338, EN 10139 Free cutting steel, no. 1.0401, EN 10277-2

Technical data

Control voltage		230 V or 115 V AC or DC
Permissible voltage variation		-15 – 10%
Max. working pressure		PS/MWP = 17 bar
Max. test pressure		P_e = 22 bar
Ambient temperature The time relay is temperature-compensated in the range		-40 – 60 °C
Screwed cable entry		P_g 13.5
Cable diameter		6 – 14 mm
Max. bellows temperature		100 °C
Switch differential max. Δp [bar]		0.2
Enclosure		IP20 to EN 60529 / IEC 60529
Contact loads	MP with time relay (contacts M-S)	AC15 = 2 A, 250 V
		DC13 = 0.2 A, 250 V
	MP without time relay	AC15 = 0.1 A, 250 V
		DC13 = 12 W, 125 V
Wire dimensions	solid / stranded	0.2 – 1.5 mm²
	flexible, without ferrules	0.2 – 1.5 mm²
	flexible, with ferrules	0.2 – 1 mm²
Tightening torque		max. 1.2 Nm
Rated impulse voltage		4 kV
Pollution degree		3
Short circuit protection, fuse		2 A
Insulation		250 V

Terminology

Differential range
The pressure difference between LP and OIL connections within which the switch can be set to operate.

Scale reading
The differential between the oil pump pressure and the pressure in the crankcase that exists at the moment the contact system cuts in current to the time relay on falling oil pressure.

Operating range
The pressure range on the LP connection within which the switch can operate.

Contact differential
The pressure rise above the set differential pressure (scale reading) necessary to cut off current to the time relay.

Release time
The period for which the differential pressure switch allows the compressor to run with too low an oil pressure during start-up and operation.

Ordering

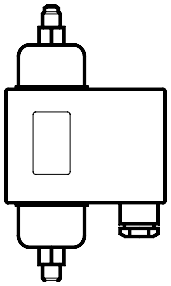

For R22, R134a, R404A, R407A, R407C, R407F, R422B, R422D, R448A, R449A, R450A, R452A, R507A, R513A
For complete list of approved refrigerants, go to http://products.danfoss.com/all-products/

Type	Differential Δp [bar]	Operation range, LP side [bar]	Relay release time [s]	Code no.		
				Connection		
				¼ in Flare	1 m cap.tube ¼ in ODF solder	M12 x 1.5 with 6 mm cutting ring
MP 54	0.65	-1 – 12	0 [2]	060B029766	–	–
	0.65	-1 – 12	45	060B016666	–	–
	0.9	-1 – 12	60	060B016766	–	–
	0.65	-1 – 12	90	060B016866	–	–
	0.65	-1 – 12	120	060B016966	–	–
MP 55	0.3 – 4.5	-1 – 12	45	060B017066	060B013366	–
	0.3 – 4.5	-1 – 12	60	060B017166	–	–
	0.3 – 4.5	-1 – 12	60	060B017866 [1]	–	–
	0.3 – 4.5	-1 – 12	90	060B017266	–	–
	0.3 – 4.5	-1 – 12	120	060B017366	–	–
	0.3 – 4.5	-1 – 12	0 [2]	060B029966	–	–

For R22, R134a, R404A, R407A, R407C, R407F, R422B, R422D, R448A, R449A, R450A, R452A, R507A, R513A, R717*)
For complete list of approved refrigerants, go to http://products.danfoss.com/all-products/

Type	Differential Δp [bar]	Operation range, LP side [bar]	Relay release time [s]	Code no.	
				Connection	
				G 3/8 A supplied with ø6.5 / ø10 mm weld nipple	M12 ×1.5 with 6 mm cutting ring
MP 55A	0.3 – 4.5	-1 – 12	45	060B017466	060B018266
	0.3 – 4.5	-1 – 12	60	060B017566	060B018366
	0.3 – 4.5	-1 – 12	60	060B017966 [1]	–
	0.3 – 4.5	-1 – 12	90	060B017666	060B018466
	0.3 – 4.5	-1 – 12	120	060B017766	060B018566
	0.3 – 4.5	-1 – 12	0 [2]	060B029866 [2]	060B029666

[1]) With glow lamp that remains on during normal operation.
Note: If the operational light goes out, the compressor should not run longer than the release time.

*) only for **MP 55A**

[2]) MP without time relay. Versions without time relay are for applications where an external time relay is required – perhaps with a different release time than the one specified.

Design

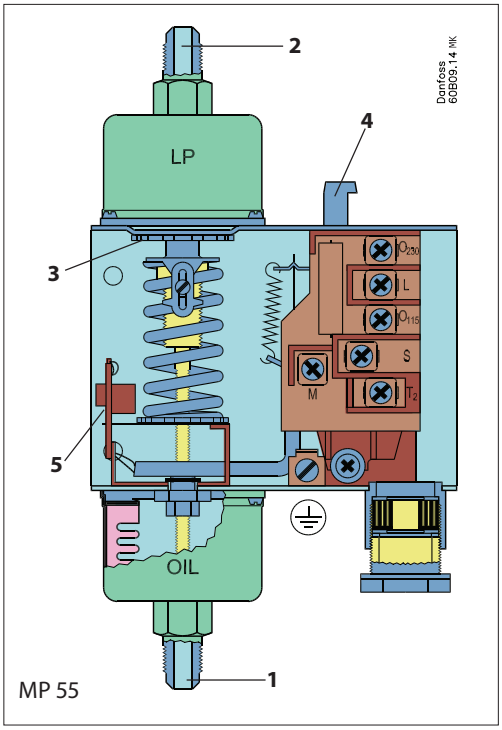

MP 55

1. Connection to pressure side of lubrication system, OIL
2. Connection to suction s ide of refrigeration plant, LP
3. Setting disk (MP 55 and MP 55A)
4. Reset button
5. Test device

The operation of the pressure switch relies only on the differential pressure, i.e. the difference in pressure between the two counteracting bellows, whereas it is independent of the absolute pressure acting on both bellows.

The MP 55 and 55A can be set for different differential pressures by the setting disc (3).

The set differential pressure can be read from the internal scale.

The MP 54 has a fixed differential and has no pressure setting disc.

The factory-set differential pressure is stamped on the front plate of the switch.

Function

If there is no oil pressure on starting, or if the oil pressure falls below the set pressure during operation, the compressor will stop after the release time has elapsed.

The electrical circuit is divided into two completely separate circuits: a safety circuit and an operational circuit.

The timer (e) in the safety circuit is activated when the effective lubricating oil pressure, *the oil differential pressure* (the difference between the oil pump pressure and suction pressure), is lower than the set value.

The timer is deactivated when the oil differential pressure is more than the set value plus the contact differential.

Electrical diagram

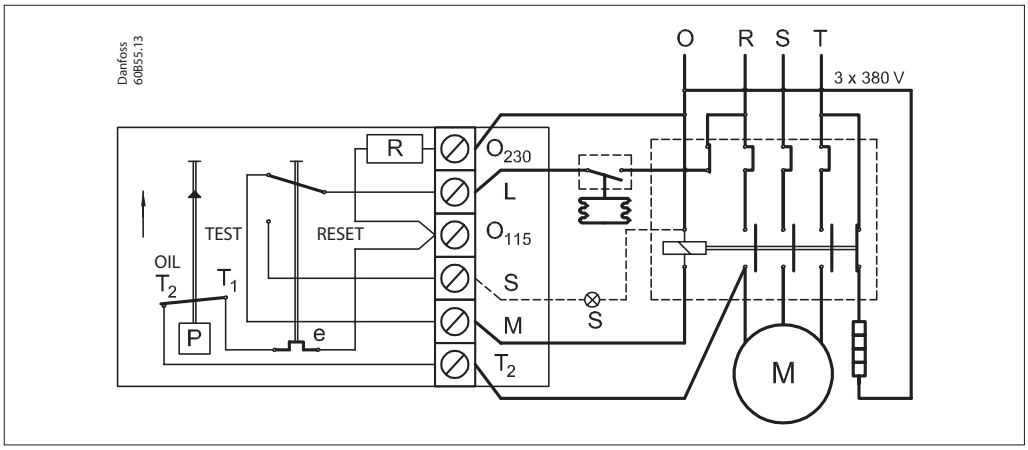

The two diagrams below explain the terms "oil differential pressure" and "contact differential". Both have to be considered when using oil differential pressure switches.

The first diagram shows the function of the differential switch during start; the second shows the function of the switch during operation.

During start

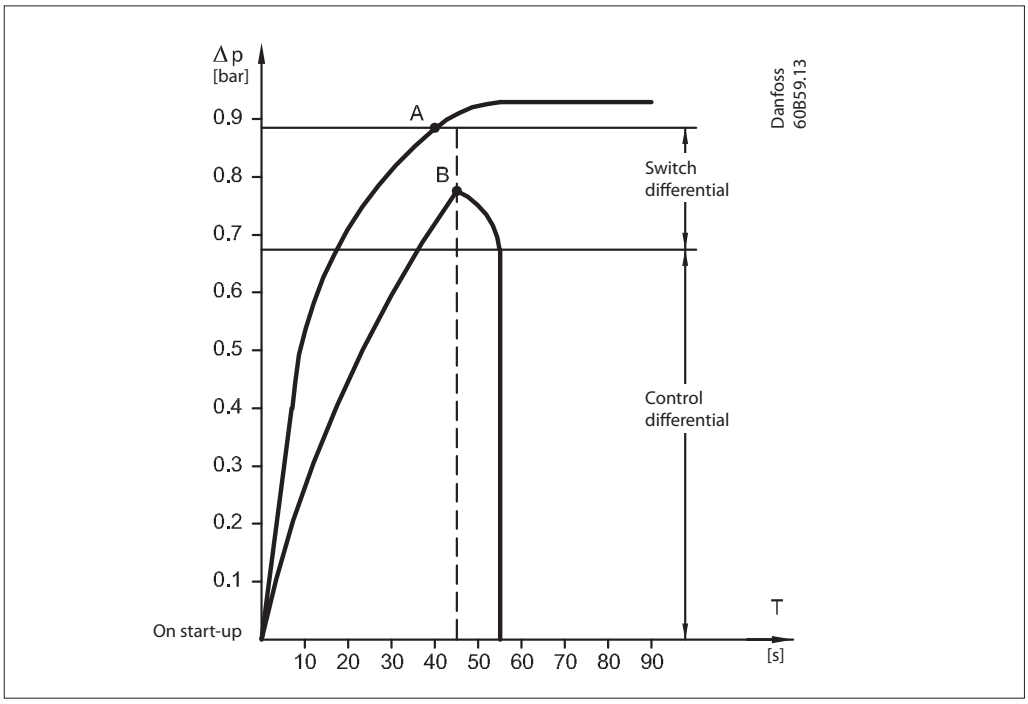

Pos. A: Normal start-up.
The lubricating oil pressure is built up during start to the set/fixed differential plus the contact differential, before the timer cuts out (in this example, after 45 seconds).
At point A contacts T1-T2 open and timer (e) is stopped, i.e. normal lubricating oil conditions for the compressor have been established.

Pos. B: The lubricating oil pressure does not reach the set/fixed differential plus the contact differential before the timer period elapses.
At point B the timer cuts out operational circuit L-M and the compressor stops. If a signal source is connected to terminal S, it will be activated.
Restart can only be performed after about 2 minutes by activation of the reset button, provided the cause of the fault has been determined.

Function
(continued)

During operation

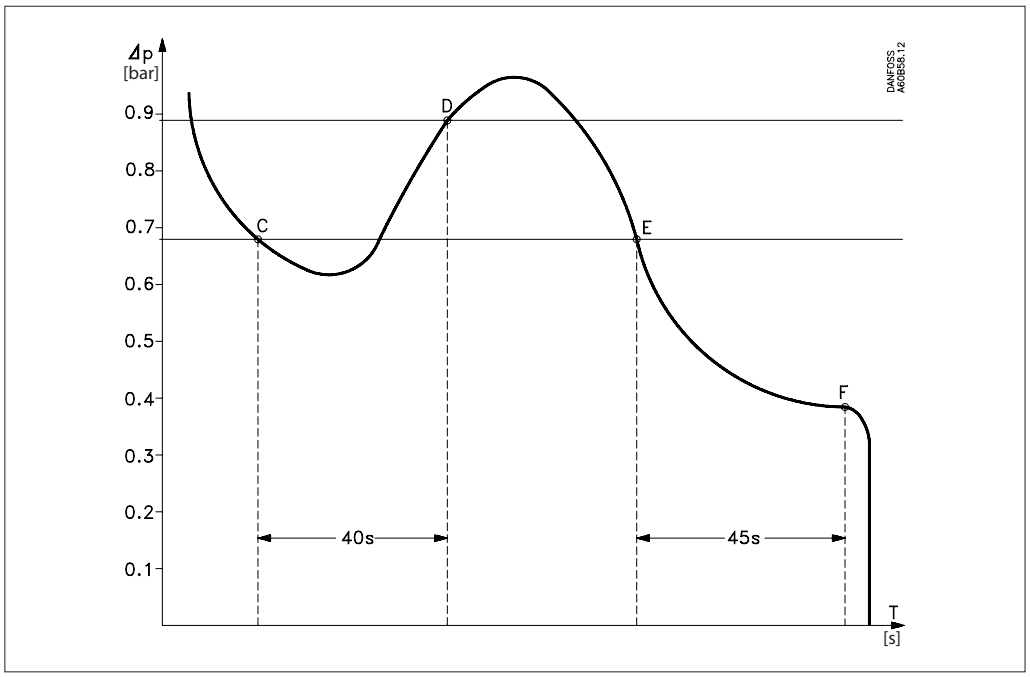

Pos. C: The lubricating oil pressure falls during operation to a value lower than the set/fixed differential. At point C, safety circuit T1-T2 cuts in and the timer is activated.

Pos. D: The lubricating oil pressure reaches the set/fixed differential plus the contact differential before the timer period elapses. At point D, safety circuit T1-T2 cuts out and the timer is stopped, i.e. normal lubricating oil conditions for the compressor have been established.

Pos. E: The lubricating oil pressure falls to a value lower than the set/fixed differential during operation. At point E, safety circuit T1-T2 cuts in and the timer is activated.

Pos. F: The lubricating oil pressure remains lower than the set/fixed differential. At point F the timer cuts out operational circuit L-M and the compressor stops. If a signal source is connected to terminal S, it will be activated. Restart can only be performed after about 2 minutes by activation of the reset button, provided the cause of the fault has been determined.

After start-up

It is important that a function check should be made to ensure that the differential pressure control is operating as it should.

This check can be made by pressing the test device (inside the unit on the left hand side).

When the test device is pressed down and held in this position, the compressor motor should stop after the release time determined by the time relay has elapsed.

Dimensions and weight

MP 54, MP 55, MP 55A

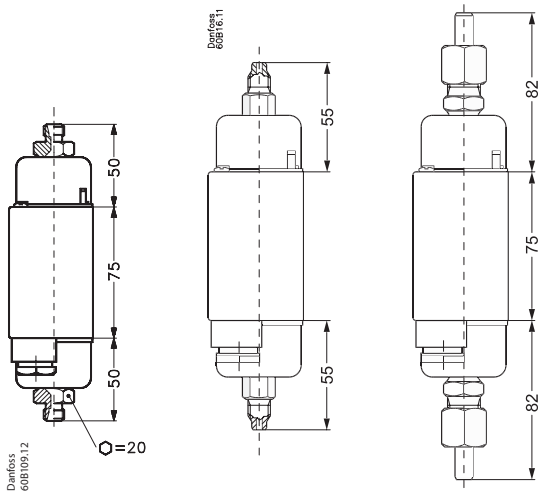

Net weight:
approx. 0.8 kg

ENGINEERING
TOMORROW

Liquid level switch
Type AKS 38

Contents **Page**

Features 427
Technical data 428
Design 428
Function 429
Application 430
Ordering 430
Dimensions 431
Spare parts 431

AI238386442275en-000501 | 2017.07

ENGINEERING TOMORROW

Liquid level switch
Type AKS 38



AKS 38 is an electro-mechanical liquid level switch designed to provide a reliable, electro- mechanical response to liquid level changes.

The simple and basic design ensures long lifetime performance and reliable operation for many applications.

AKS 38 can control liquid level in vessels and accumulators or can be used as a low / high level alarm.

Features

- Based on Danfoss liquid level switch type 38E
- DIN, ANSI and FPT/NPT flanges
- The switch box can be placed in any position on top of float housing for ease of installation.
- Adjustable liquid level differential switch point
- Electric magnetic microswitch, mechanically activated
- The complete switch box can easily be replaced without any interference with the refrigeration system
- Switch box supplied with a DIN plug for easy installation and service
- Flanges included
- Classification: DNV, CRN, BV, EAC etc. To get an updated list of certification on the products please contact your local Danfoss Sales Company

Technical data

- *Refrigerants*
  Applicable to HCFC, non flammable HFC and R717 (Ammonia).
  Flammable hydrocarbons are not recommended
- *Temperature range*
  -50 – 65°C / –58 – 149 °F
- *Pressure range*
  AKS 38 is designed for a max. working pressure of 28 bar g / 406 psi g

IMPORTANT
Should pressure testing in excess of 28 bar g / 406 psig be necessary then the internal float assembly must be removed, thus allowing a maximum test pressure of 42 bar g / 609 psig.

Technical data

- *Material*
  Float housing:
  Cast Iron, zinc chromated,
  EN-GJS-400-18-LT

  Floats housing bolts:
  Stainless steel
  A2-70 (DIN 267-11) / ASTM A-276

  Flanges:
  P285QH
  EN 10222-4 / ASTM A350

  Flange gasket:
  Fiber, non asbestos

  Pressure tube:
  Stainless steel
  X5CrNi18-10, EN 10088 / AISI 304, A276

  O-ring:
  Neoprene (Cloroprene)

  Gasket between pressure tube and housing
  Aluminium

  Electrical switch box:
  Shock resistant polycarbonate
  CT-661-T

- *Electrical data*
  - **Change over Micro (SPDT) switch**
    250 V a.c / 10 A
    30 V d.c / 5 A
    Normally Open (NO) and Normally Closed (NC) function
  - **DIN Plug**
    DIN 43650 connection
    PG 11, 8-10 mm (0.31"– 0.39")
    Screw terminal 1.5 mm2 (16 AWG)
    3+PE
- *Liquid level differential*
  Variable between 12.5 mm to 50 mm (½" to 2") in 12.5 mm (½") increments. Required diffferential setting should be made prior to installation.
  Factory set at 50 mm (2").
- *Enclosure*
  IP 65
- *Weight (including flanges)*
  9.75 kg (21.5 lb)
- *Approvals*
  CE – for further details please see instruction.

Design

AKS 38 is an electro-mechanical liquid level switch.

The design is based on a mechanical float, which will operate in the refrigerant. When the set level is reached an electrical volt free micro (SPDT) switch will be activated.

The microswitch is located in the switch box which has a clear front cover and allows viewing of the switch position. The micro- switch is fully isolated from the refrigeration system and operates by means of a magnet.

AKS 38 is supplied with a DIN plug for the electrical connections. The microswitch provides volt free contacts to open / close solenoid valves or energise / de-energise contactors for the starting / stopping refrigerant pumps / compressors.

Can be used as a device for acoustic alarms / switches for visual indication when there is a danger of high or low liquid level.

The switch box can be placed in any position on top of the float housing for easy installation and can be replaced without any interference with the refrigeration system.
Flanges are included.

Function

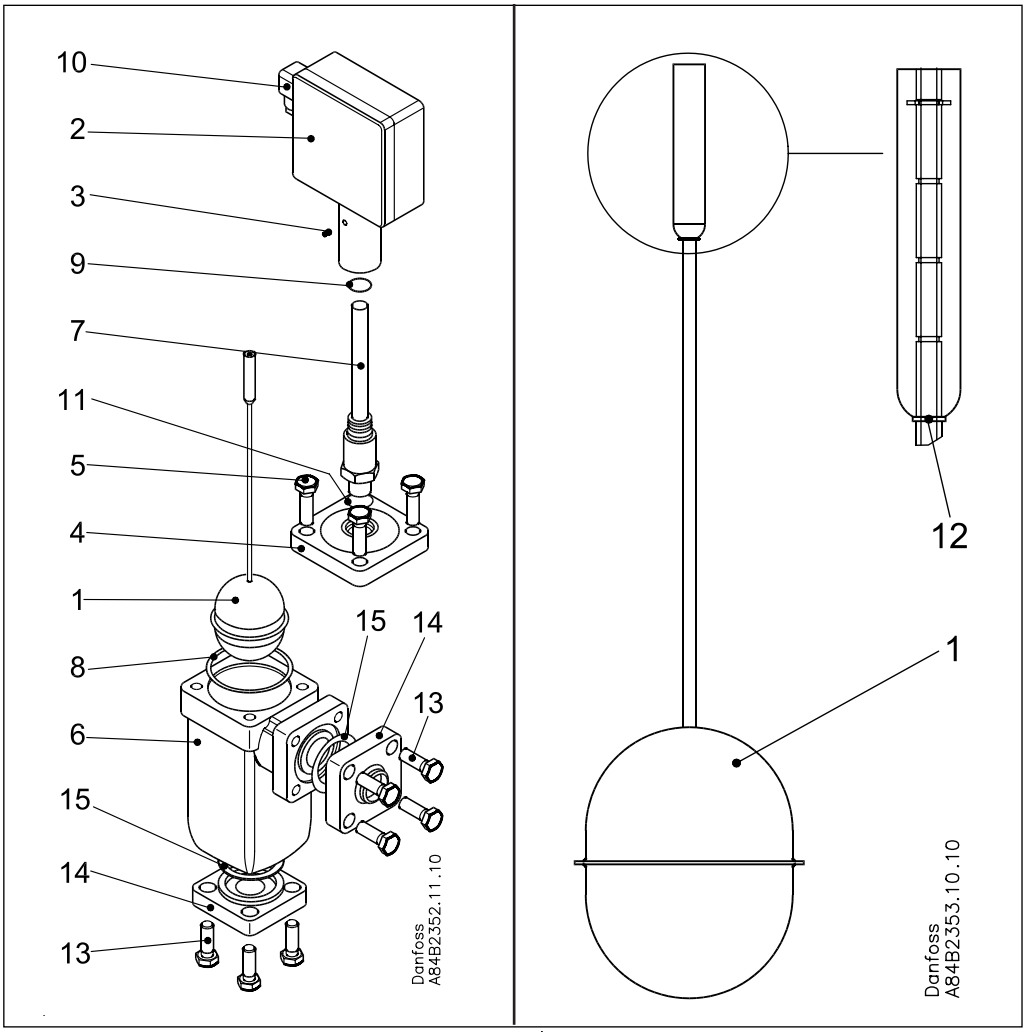

1 Internal float assembly
2 Switch box
3 M4x8 pinol tailstock screw
4 Top cover
5 4 pcs M12x35 stainless steel bolts
6 AKS 38 housing
7 Pressure tube
8 Top cover gasket
9 O-ring for pressure tube
10 DIN-plug for electrical connection
11 Aluminium gasket
12 Locking ring for internal float
13 Stainless steel bolts
14 Flanges
15 Flange gaskets

AKS 38 incorporates an internal float assembly (1), which will operate directly in accordance with the refrigerant level.

The internal float will follow the liquid level vertically up and down.

The upper part of the internal float assembly moves within the pressure tube (7).

At a specific switch point the upper part of the internal float assembly will via a magnet activate the electrical microswitch in the switch box (2).

A volt free signal can be detected by wiring to terminals at the DIN-plug (10). The actual switch point can be adjusted by means of a locking ring (12) before installation.

Function

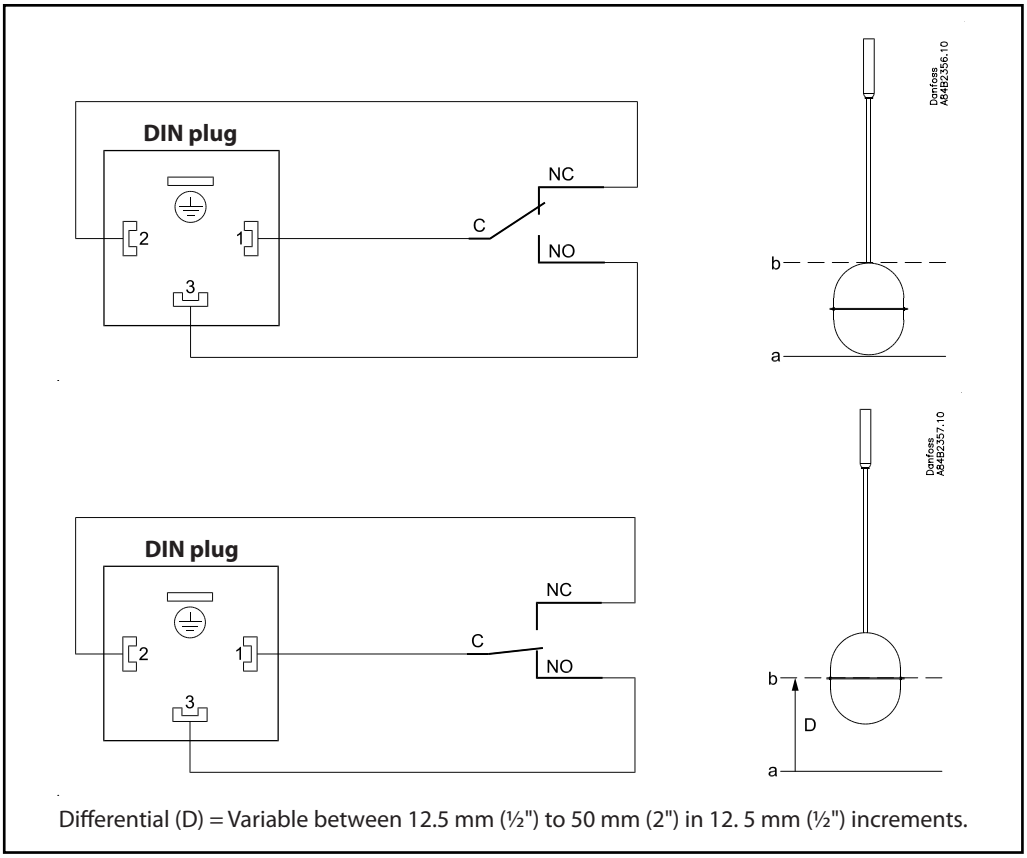

Differential (D) = Variable between 12.5 mm (½") to 50 mm (2") in 12. 5 mm (½") increments.

Application

For the control and detection of liquid levels in: -

- Liquid over-feed accumulators.
- Flooded surge drums.
- Flooded shell & tube chillers.
- High and low pressure receivers.
- Inter coolers.
- Use as low / high level switch to protect circulating pumps / compressors.

Ordering

Type	Code No.
AKS 38 Butt Weld, DIN DN 25 (1 in)	**148H3194**
AKS 38 Butt Weld, ANSI DN 25 (1 in)	**148H3204**
AKS 38 Socket Weld, ANSI DN 20 (3/4 in)	**148H3205**
AKS 38 Socket Weld, ANSI DN 25 (1 in)	**148H3206**
AKS 38 FPT, NPT DN 20 (3/4 in)	**148H3207**

Dimensions

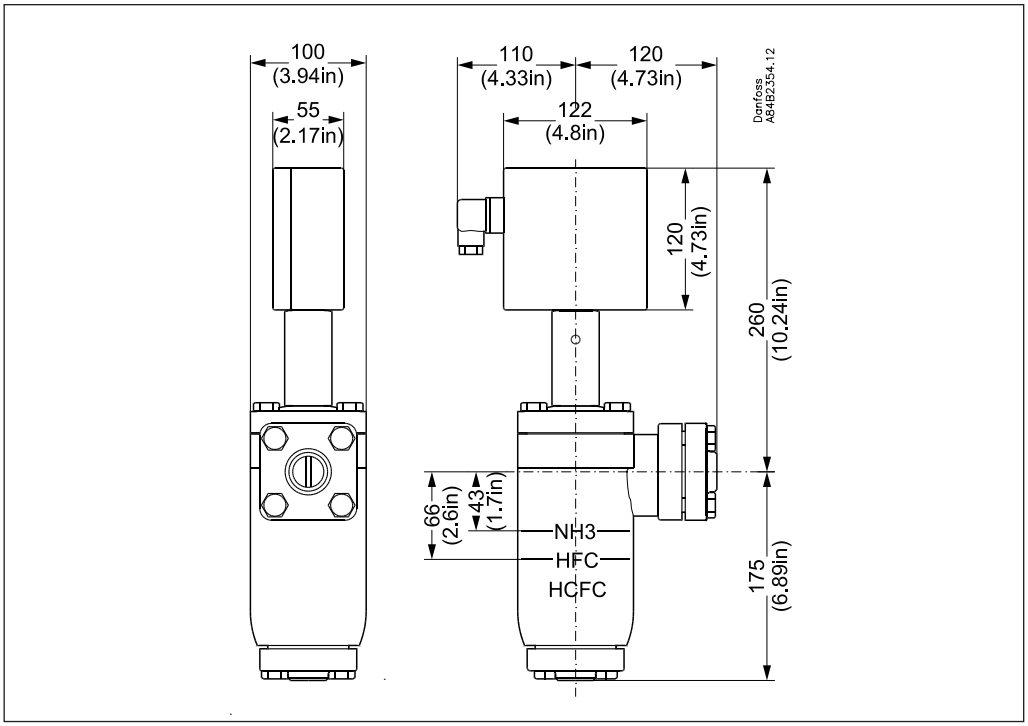

Spare parts

Type	Code no.
Repair kit: Top cover gasket O-ring for pressure tube Alu. gasket Flange gasket Locking ring for internal float	**148H3200**
Internal float assembly	**148H3203**
Electrical switch box	**148H3202**
Flanges:	
AKS 38 Butt Weld, DIN DN 25 (1 in)	**027N1026**
AKS 38 Butt Weld, ANSI DN 25 (1 in)	**027N2023**
AKS 38 Socket Weld, ANSI DN 20 (3/4 in)	**027N2012**
AKS 38 Socket Weld, ANSI DN 25 (1 in)	**027N2013**
AKS 38 FPT, NPT DN 20 (3/4 in)	**027G1007**
Please observe: Same flanges as for NRVA 25 and NRVA 32	

ENGINEERING
TOMORROW

Float valve
Type HFI

Contents **Page**

Features 435
Design 436
Technical data 436
The principle of high pressure control 436
Insert for the high pressure float valve 437
Computation and selection 437
High pressure control in refrigeration system with condenser / evaporator 440
Material specification 441
Connections 442
Dimensions and weights 443
Volumes 445
Ordering 445
Accessories 446

AI220786430153en-000403 | 2018.11

ENGINEERING TOMORROW

Float valve
Type HFI

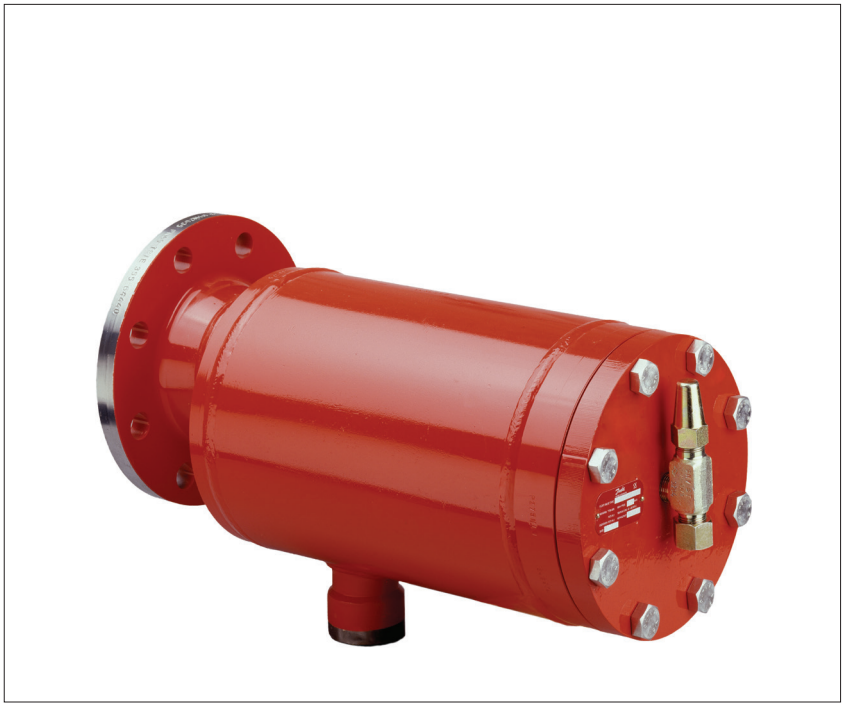

HFI is a high pressure float valve with internal liquid measuring device. The float valve is designed for direct flange mounting or welding on to plate heat exchanger type condensers, as illustrated in fig 1.

HFI is direct acting, therefore no differential pressure is required to activate the valve.

HFI is sturdy and reliable owing to its simple design. The float valve is equipped with a purge valve for purging non condensable gases e.g. air from the top of the valve housing. This facility is also useful if the valve has to be serviced.

The HFI is available with two external connections on the housing for drainage and pressure equalizations.

Features

- Designed for direct flange mounting on to plate heat exchanger type condensers
- Can be mounted directly on vessels
- Temperature range: –50/+80°C (–58/+176°F)
- Equipped with purge valve for purging non condensable gasses
- Available with external connections for drainage and pressure equalizations
- Maximum operating pressure is 25 bar g (363 psi g)
- Suitable for R717 (ammonia), HCFC and HFC with a density of 500 through 700 kg/m^3 (31.21 - 43.70 lb/ft^3). For densities outside this range please contact your local Danfoss sales company.
- Housing i.e. shell and flange are made of special steel approved for low temperature application
- Classification: DNV, CRN, BV, EAC etc. To get an updated list of certification on the products please contact your local Danfoss Sales Company.

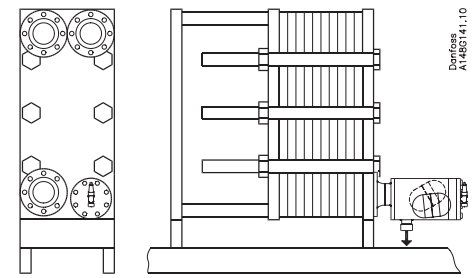

Fig. 1

Design

Available connections
Flange:
Inlet: Flange DN 100 or DN 150 (DIN-2635/DIN 2512-F)
Outlet: Welding connection DN 50 (EN 10220)

Butt-weld, DIN:
Inlet: DN 100 or DN 150 (EN 10220)
Outlet: Welding connection DN 50 (EN 10220)

Butt-weld, ANSI:
Inlet: DN 100 (4 in) or DN 150 (6 in) (ANSI B 36.10)
Outlet: Welding connection DN 50 (2 in) (ANSI 36.10)

Housing
Housing i.e. shell and flange is made of special steel approved for low temperature operation.

Installation
Refer to installation instruction for HFI.

Identification:

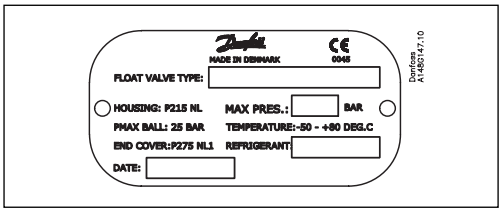

Pressure Equipment Directive (PED)
The HFI-valves are approved in accordance with the European standard specified in the Pressure Equipment Directive and are CE marked.
For further details / restrictions - see Installation Instruction

HFI valves	
Nominal bore	DN 100 and 150 mm (4 in and 6 in)
Classified for	Fluid group I
Catagory	III

Technical data

- Refrigerants
  Suitable for R717 (ammonia), HCFC and HFC with a density of 500 through 700 kg/m^3 (31.21 - 43.70 lb/ft^3). For densities outside this range please contact your local Danfoss sales company.
  Flammable hydrocarbons are not recommended. For further information please contact your local Danfoss Sales Company.
- Temperature range
  –50/+80°C (–58/+176 °F)
- Pressure
  The float valve is designed for:
  Maximum operating pressure:

  Housing PED 28 bar g (407 psi g)
  Ball (float) 25 bar g (363 psi g)

  If test pressure exceeds 25 bar g (363 psi g) the ball should be removed during test.

  Valves for higher pressure are available on request.

The principle of high pressure control

Introduction
In installations with one application high pressure control is an effective and cost saving way of expanding liquid from the condenser to the low pressure side.

High pressure refrigerant entering the condenser will start to condense, consequently condensate will accumulate at the bottom of the condenser and in the float valve.

When capacity demands increase, the liquid level in the float valve will rise, which will cause the valve to open and the refrigerant to expand into the separator at the low pressure side.

When the valve is closed, there will still be a small by-pass over the seat, so any remaining liquid will equalize slowly to the low pressure side, for instance during an off cycle. Therefore the system will equalize automatically and the compressor can start up without excessive back pressure. The size of the bypass is predetermined and defined by geometry of the elements.

It follows from the above, that almost all the refrigerant will be accumulated on the low pressure side under normal conditions. Therefore under normal conditions no high pressure receiver is necessary when using the HFI for high pressure control.

Insert for the high pressure float valve

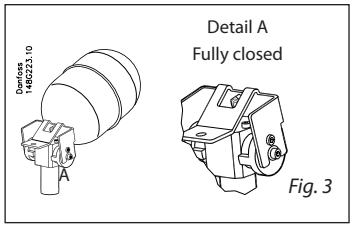

Fig. 3

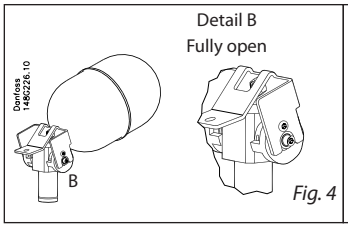

Fig. 4

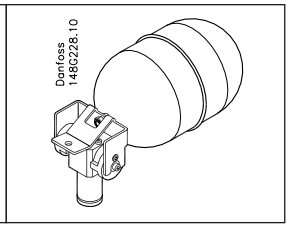

Computation and selection

In R 717 plants (ammonia)

On the following pages you will find tables with capacities of the float valve at various operating conditions.

Select a valve using the specific operating conditions. The chosen valve must have a capacity higher than the required capacity during nominal operation, as well as during plant start up.

In plants using other refrigerants than ammonia

The capacity of the float valve can be calculated by using the values and the equation to the right. However, the density of the refrigerant must be in the range: 500 to 700 kg/m^3.

For densities outside this range please contact your local Danfoss Sales Company.

Valve type	Nominal capacity [kW] (R 717, -10 – 35 °C)	Valve constant [K]
HFI 040 FD	400	16.79
HFI 050 FD	800	33.58
HFI 060 FD	1200	50.36
HFI 070 FD	2400	100

Mass flow $G = K\sqrt{\Delta p \times \rho}\ [kg/h]$

Δp = differential pressure [bar]
ρ = density of liquid [kg/m^3]
K = valve constant (from the above table)

Computation and selection capacity tables - SI units

HFI 040 - R 717, evaporating capacity [kW]

Condensing temp. (°C)	Evaporating temperature (°C)												
	-40	-35	-30	-25	-20	-15	-10	-5	0	5	10	15	20
50	475	480	480	475	475	475	470	460	455	445	430	415	395
45	460	460	460	460	455	455	445	440	430	420	405	385	360
40	440	440	440	440	435	430	425	415	405	390	375	350	325
35	420	420	420	415	415	405	**400**	390	375	360	340	315	280
30	400	400	400	395	390	385	375	360	345	325	300	270	230
25	380	380	375	370	365	360	345	330	315	290	260	220	160
20	360	355	355	350	340	330	315	300	280	250	210	155	
15	340	335	330	325	315	300	285	265	240	200	150		
10	315	310	305	295	285	270	250	225	195	140			
5	290	285	280	270	255	240	215	185	135				
0	270	260	255	240	225	205	175	125					
-5	245	235	225	210	190	165	120						
-10	220	210	200	180	155	115							

HFI 050 - R 717, evaporating capacity [kW]

Condensing temp. (°C)	Evaporating temperature (°C)												
	-40	-35	-30	-25	-20	-15	-10	-5	0	5	10	15	20
50	955	955	955	955	950	945	935	925	910	890	865	830	790
45	920	920	920	915	910	905	895	880	860	835	805	770	725
40	880	880	880	875	870	860	850	830	810	780	745	700	645
35	845	845	840	835	825	815	**800**	780	755	720	680	625	560
30	805	800	800	790	780	765	750	725	695	655	605	540	455
25	765	760	755	745	730	715	695	665	630	580	520	440	320
20	720	715	705	695	680	660	635	600	555	500	420	310	
15	675	670	660	645	630	605	570	530	480	405	295		
10	630	625	610	595	570	545	505	455	385	285			
5	585	575	560	540	515	480	430	365	270				
0	540	525	505	485	450	405	345	255					
–5	490	475	455	425	385	325	240						
–10	440	420	395	360	305	230							

HFI 060 - R 717, evaporating capacity [kW]

Condensing temp. (°C)	Evaporating temperature (°C)												
	-40	-35	-30	-25	-20	-15	-10	-5	0	5	10	15	20
50	1430	1435	1435	1430	1425	1420	1405	1385	1365	1335	1295	1245	1190
45	1380	1380	1380	1375	1370	1360	1340	1320	1290	1255	1210	1155	1085
40	1325	1325	1320	1315	1305	1290	1270	1245	1215	1170	1120	1055	970
35	1265	1265	1260	1250	1240	1220	**1200**	1170	1130	1080	1020	940	840
30	1205	1205	1195	1185	1170	1150	1120	1085	1040	980	905	810	685
25	1145	1140	1130	1115	1100	1075	1040	995	940	870	780	660	485
20	1080	1070	1060	1045	1020	990	950	900	835	750	635	465	
15	1015	1005	990	970	940	905	860	795	715	605	445		
10	945	935	915	890	860	815	755	680	580	425			
5	875	860	840	810	770	720	645	550	405				
0	805	785	760	725	675	610	520	380					
–5	735	710	680	635	575	490	360						
–10	660	635	595	540	460	340							

HFI 070 - R717, evaporating capacity [kW]

Condensing temp. (°C)	Evaporating temperature (°C)												
	-40	-35	-30	-25	-20	-15	-10	-5	0	5	10	15	20
50								2775	2725	2665	2590	2495	2375
45							2680	2640	2580	2510	2420	2310	2170
40							2545	2490	2425	2340	2235	2105	1940
35						2445	**2400**	2335	2260	2160	2035	1880	1680
30					2340	2300	2245	2170	2080	1960	1815	1625	1370
25					2195	2145	2080	1995	1885	1745	1565	1320	965
20				2090	2040	1980	1900	1800	1670	1500	1265	930	
15				1940	1885	1810	1715	1595	1435	1210	890		
10			1835	1785	1715	1630	1515	1365	1160	850			
5		1725	1680	1620	1540	1435	1295	1100	810				
0		1575	1520	1450	1350	1220	1040	765					
-5	1470	1425	1360	1270	1150	980	725						
-10	1325	1265	1190	1080	920	685							

Computation and selection capacity tables - US units

HFI 040 - R 717, evaporating capacity [TR]

Condensing temp. (°F)	Evaporating temperature (°F)												
	-40	-30	-20	-10	0	10	20	30	40	50	60	70	80
120	134	135	135	134	134	132	131	128	125	121	116	109	101
110	129	129	129	128	127	126	123	121	117	112	106	98	87
100	123	123	122	122	120	118	116	112	108	102	94	84	71
90	117	117	116	115	113	111	107	103	98	91	81	69	50
80	110	110	109	107	105	102	99	94	87	78	66	49	
70	103	103	102	100	97	94	89	83	75	63	47		
60	97	96	94	92	89	84	79	71	60	44			
50	90	88	86	83	80	74	67	57	42				
40	82	81	78	75	70	63	54	40					
30	75	73	70	65	59	51	38						
20	67	65	61	55	47	35							
10	59	56	51	44	33								

HFI 050 - R 717, evaporating capacity [TR]

Condensing temp. (°F)	Evaporating temperature (°F)												
	-40	-30	-20	-10	0	10	20	30	40	50	60	70	80
120	268	269	269	269	267	265	261	256	250	242	231	218	201
110	258	258	257	256	254	251	247	241	233	224	211	195	175
100	246	246	245	243	241	237	232	224	215	204	189	169	143
90	234	233	232	229	226	221	215	207	196	181	163	138	101
80	221	220	218	215	211	205	197	187	174	156	132	97	
70	207	206	203	200	194	187	178	166	149	127	93		
60	193	191	188	184	177	169	157	142	121	89			
50	179	176	172	167	159	149	134	114	84				
40	165	161	156	149	140	127	108	80					
30	150	145	139	130	118	102	75						
20	135	129	121	110	95	70							
10	119	112	102	88	65								

HFI 060 - R 717, evaporating capacity [TR]

Condensing temp. (°F)	Evaporating temperature (°F)												
	-40	-30	-20	-10	0	10	20	30	40	50	60	70	80
120	403	404	404	403	401	397	392	385	375	363	347	327	302
110	386	387	386	384	381	377	370	362	350	335	317	293	262
100	369	368	367	365	361	355	347	337	323	305	283	253	214
90	350	350	348	344	339	332	322	310	293	272	244	207	151
80	331	329	327	322	316	307	296	281	261	234	199	146	
70	310	309	305	299	292	281	267	249	224	190	140		
60	290	287	282	275	266	253	236	213	181	133			
50	269	265	259	250	239	223	202	172	126				
40	247	242	234	224	209	190	162	120					
30	225	218	209	196	178	152	113						
20	202	194	182	165	142	106							
10	178	168	153	132	98								

HFI 070 - R717, evaporating capacity [TR]

Condensing temp. (°F)	Evaporating temperature (°F)												
	-40	-30	-20	-10	0	10	20	30	40	50	60	70	80
120							784	769	750	725	694	654	603
110							741	723	700	671	633	586	524
100						710	695	673	646	611	566	507	428
90					678	664	645	620	587	544	489	413	302
80					632	615	592	561	521	469	397	292	
70				599	583	562	534	497	447	380	279		
60				551	532	506	472	426	362	267			
50			517	500	477	446	403	343	253				
40		483	469	448	419	380	325	240					
30		436	418	391	355	305	226						
20	404	387	364	331	284	211							
10	357	336	307	263	195								

High pressure control in refrigeration system with condenser / evaporator

Fig. 5 shows a water chiller with plate heat exchanger as both condenser and evaporator. HFI is flanged directly on to the condenser.

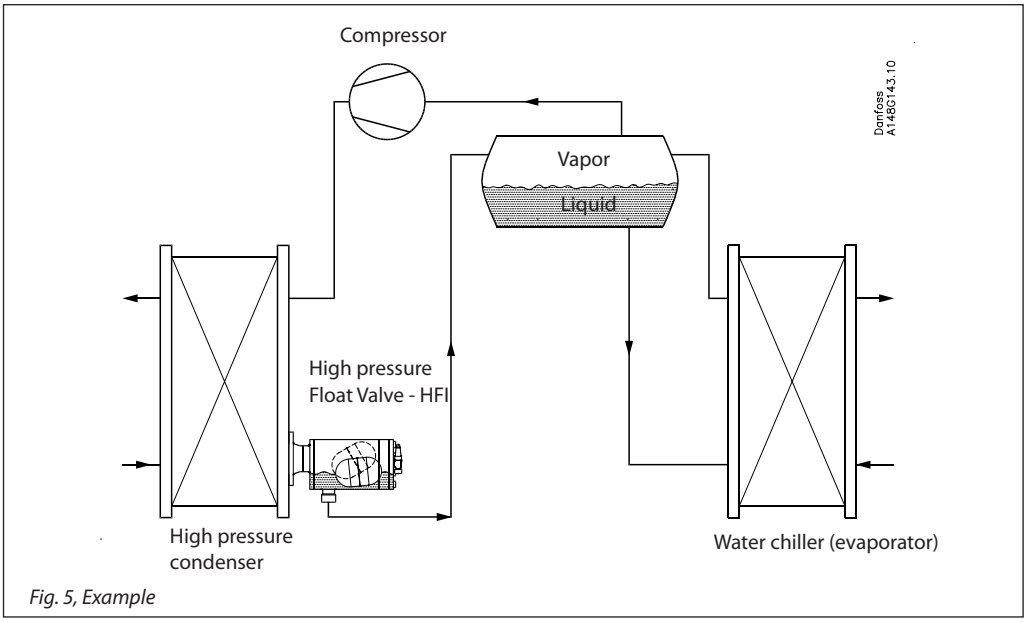

Fig. 5, Example

Material specification

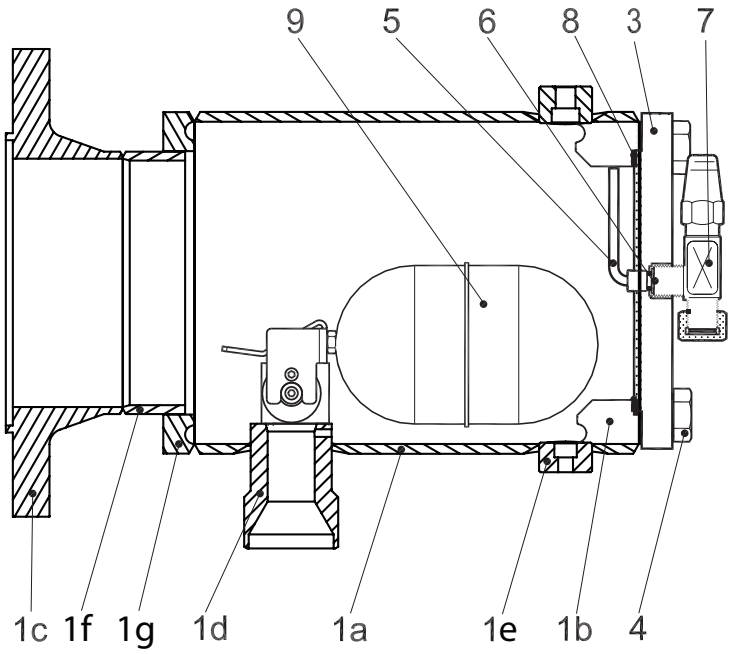

Fig. 6

No	Part	Material	DIN/EN	ASTM
1	Housing: a. Shell b. Flange (shell) c. Flange (inlet) d. Branch (discharge) e. External connection f. Flange (shell) g. Connecting tube	 Steel Steel Steel Steel Steel Steel Steel	 P215NL, EN 10216-4 P275 NL1, EN10028-3 P285QH EN 10222-4 P275 NL1, EN10028-3 P285QH EN 10222-4 P215NL, EN 10216-4 P275 NL1, EN10028-3	 Grade 1, A333, A334 Grade A , A662 LF2A350 Grade A , A662 LF2A350 Grade 1, A333, A334 Grade A , A662
3	End cover with cylinder	Steel	P275 NL1, EN 10 028-3	
4	Set screw	Stainless steel	A2-70	
5	Tube	Steel		
6	Gasket	Aluminium		
7	Purge valve, SNV-ST [1])			
8	Gasket	Non asbestos		
9	Float Ball	Steel		

[1]) SNV-ST G½-G½ (148B3745).

Connections

DIN - Outlet

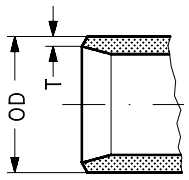

Butt-weld DIN (EN 10220)

HFI size mm	HFI size in.	Outlet OD mm	Outlet T mm	Outlet OD in.	Outlet T in.	For use with valve type
100	4	60.3	2.9	2.37	0.11	HFI 040 HFI 050 HFI 060 HFI 070
150	6	60.3	2.9	2.37	0.11	HFI 050 HFI 060 HFI 070

ANSI - Outlet

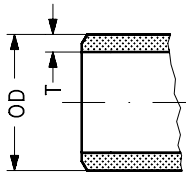

Butt-weld ANSI (B 36.10 Schedule 40)

HFI size mm	HFI size in.	Outlet OD mm	Outlet T mm	Outlet OD in.	Outlet T in.	For use with valve type
100	4	60.3	3.9	2.37	0.15	HFI 040 HFI 050 HFI 060 HFI 070
150	6	60.3	3.9	2.37	0.15	HFI 050 HFI 060 HFI 070

DIN - Inlet

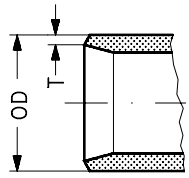

Butt-weld DIN (EN 10220)

HFI size mm	HFI size in.	Inlet OD mm	Inlet T mm	Inlet OD in.	Inlet T in.	For use with valve type
100	4	114.3	3.6	4.50	0.14	HFI 040 HFI 050 HFI 060 HFI 070
150	6	168.3	4.5	6.63	0.18	HFI 050 HFI 060 HFI 070

ANSI - Inlet

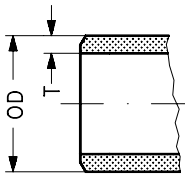

Butt-weld ANSI (B 36.10 Schedule 40)

HFI size mm	HFI size in.	Inlet OD mm	Inlet T mm	Inlet OD in.	Inlet T in.	For use with valve type
100	4	114.3	6.3	4.50	0.25	HFI 040 HFI 050 HFI 060 HFI 070
150	6	168.3	7.1	6.63	0.28	HFI 050 HFI 060 HFI 070

Inlet flange

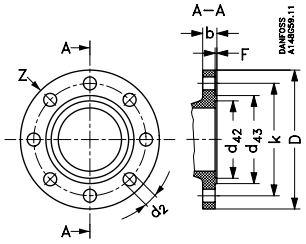

*40 bar / DIN 2635 / DIN 2512-F**

		D	b	k	d_{42}	d_{43}	F	d_2	Z
Size 100 (4 in.)	mm	235	24	190	129	149	4.5	22	8 pcs.
	in.	9.3	0.94	7.48	5.08	5.87	0.18	0.97	
Size 150 (6 in.)	mm	300	28	250	183	203	4.5	26	8 pcs.
	in.	11.8	1.10	9.84	7.20	7.99	0.18	1.02	

*Inlet flange and DIN outlet

Dimensions and weights

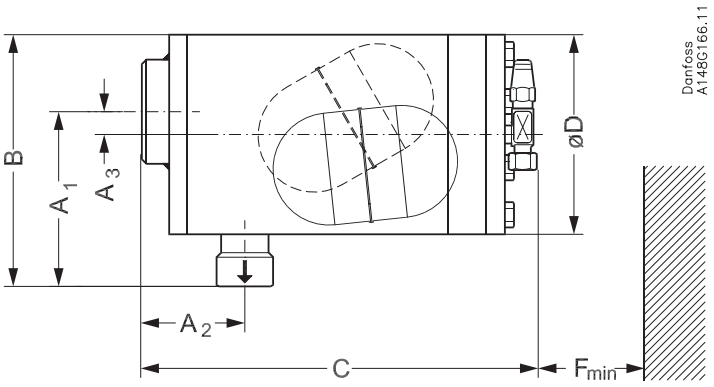

Fig. 7

High pressure float valve without flange (Fig. 7)

Valve size		A1	A2	A3	B	C	ØD	Fmin.	Weight
HFI 100	[mm]	192	113	25	276	435	219	200	37 kg
	[in]	7.56	4.45	0.98	10.87	17.13	8.62	7.87	81.5 lb
HFI 150	[mm]	167	113		276	435	219	200	37 kg
	[in]	6.57	4.45		10.87	17.13	8.62	7.87	81.5 lb

Specified weights are approximate values only.

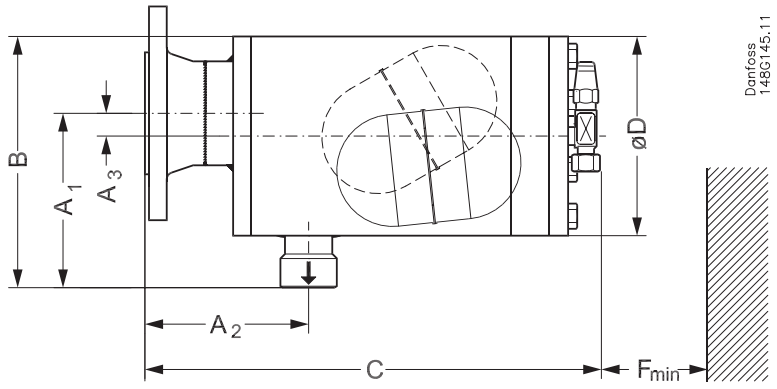

Fig. 8

High pressure float valve with flange (Fig. 8)

Valve size		A1	A2	A3	B	C	ØD	Fmin.	Weight
HFI 100	[mm]	192	180	25	309	502	219	200	41 kg
	[in]	7.56	7.09	0.98	12.17	19.76	8.62	7.87	90.4 lb
HFI 150	[mm]	167	189		317	511	219	200	41 kg
	[in]	6.57	7.44		12.48	20.12	8.62	7.87	90.4 lb

Specified weights are approximate values only.

Dimensions and weights (HFI with external connections)

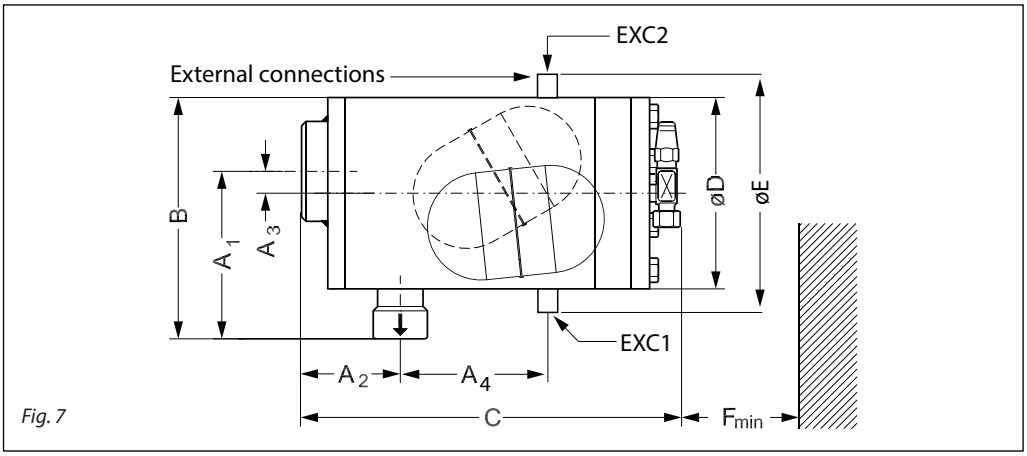

Fig. 7

High pressure float valve without flange (Fig. 7)

Valve size		A_1	A_2	A_3	A_4	B	C	ØD	ØE	$F_{min.}$	Weight
HFI 100	[mm]	192	113	25	176	276	435	219	247	200	37 kg
	[in]	7.56	4.45	0.98	6.93	10.87	17.13	8.62	9.72	7.87	81.5 lb
HFI 150	[mm]	167	113		176	276	435	219	247	200	37 kg
	[in]	6.57	4.45		6.93	10.87	17.13	8.62	9.72	7.87	81.5 lb

Specified weights are approximate values only.

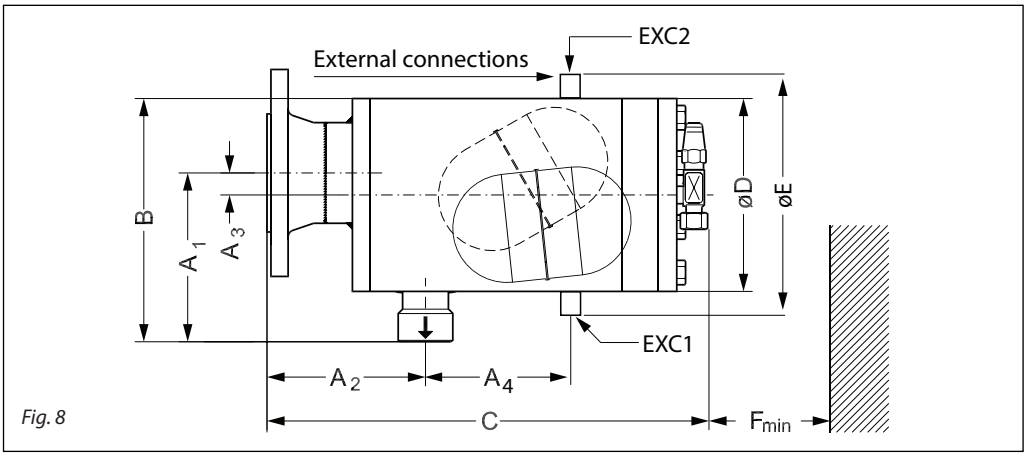

Fig. 8

High pressure float valve with flange (Fig. 8)

Valve size		A_1	A_2	A_3	A_4	B	C	ØD	ØE	$F_{min.}$	Weight
HFI 100	[mm]	192	180	25	176	309	502	219	247	200	41 kg
	[in]	7.56	7.09	0.98	6.93	12.17	19.76	8.62	9.72	7.87	90.4 lb
HFI 150	[mm]	167	189		176	317	511	219	247	200	41 kg
	[in]	6.57	7.44		6.93	12.48	20.12	8.62	9.72	7.87	90.4 lb

Specified weights are approximate values only.

EXC1	3/8 - 18 NPT
EXC2	1/2 - 14 NPT

Volumes

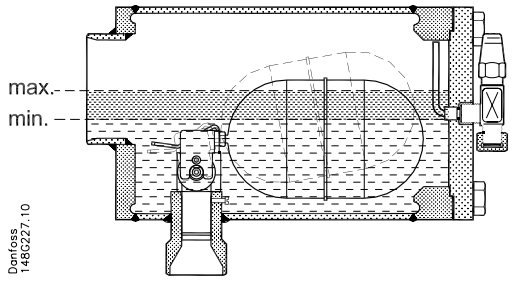

Fig. 9

Internal volume (gross): 8.2×10^{-3} m³ (2.17 USgal)
Internal volume with float ball: 6.4×10^{-3} m³ (1.69 USgal)
Liquid volume at max. level: 4.6×10^{-3} m³ (1.22 USgal)
Liquid volume at min. level: 1.6×10^{-3} m³ (0.42 USgal)

Ordering

The table below is used to identify the valve required.
Example: HFI 040 D 100 = 148G3092

Type	Inlet connection size	Nozzle size	Code numbers
HFI 040 FD 100	100 (4 in) DIN Flange	40	**148G3102**
HFI 050 FD 100		50	**148G3103**
HFI 060 FD 100		60	**148G3104**
HFI 070 FD 100		70	**148G3422**
HFI 050 FD 150	150 (6 in) DIN Flange	50	**148G3105**
HFI 060 FD 150		60	**148G3106**
HFI 070 FD 150		70	**148G3423**
HFI 040 D 100	100 (4 in) DIN BW	40	**148G3092**
HFI 050 D 100		50	**148G3093**
HFI 060 D 100		60	**148G3094**
HFI 070 D 100		70	**148G3418**
HFI 050 D 150	150 (6 in) DIN BW	50	**148G3095**
HFI 060 D 150		60	**148G3096**
HFI 070 D 150		70	**148G3419**
HFI 040 A 100	100 (4 in) ANSI BW	40	**148G3097**
HFI 050 A 100		50	**148G3098**
HFI 060 A 100		60	**148G3099**
HFI 070 A 100		70	**148G3420**
HFI 050 A 150	150 (6 in) ANSI BW	50	**148G3100**
HFI 060 A 150		60	**148G3101**
HFI 070 A 150		70	**148G3421**

HFI with 2 external connections

Type	Inlet connection size	Nozzle size	Code numbers
HFI 040 FD 100 w. 2 ext. con	100 (4 in) DIN Flange	40	**148G3196**
HFI 050 FD 100 w. 2 ext. con		50	**148G3727**
HFI 060 FD 100 w. 2 ext. con		60	**148G3670**
HFI 070 FD 100 w. 2 ext. con		70	**148G3671**
HFI 050 FD 150 w. 2 ext. con	150 (6 in) DIN Flange	50	**148G3762**
HFI 060 FD 150 w. 2 ext. con		60	**148G3763**
HFI 070 FD 150 w. 2 ext. con		70	**148G3764**
HFI 040 D 100 w. 2 ext. con	100 (4 in) DIN BW	40	**148G3765**
HFI 050 D 100 w. 2 ext. con		50	**148G3704**
HFI 060 D 100 w. 2 ext. con		60	**148G3766**
HFI 070 D 100 w. 2 ext. con		70	**148G3720**
HFI 050 D 150 w. 2 ext. con	150 (6 in) DIN BW	50	**148G3767**
HFI 060 D 150 w. 2 ext. con		60	**148G3768**
HFI 070 D 150 w. 2 ext. con		70	**148G3769**

FD = inlet flange DIN
D = Butt welding DIN
A = Butt welding ANSI

Insert for HFI 070 (complete insert with float ball - without float housing)	**148G3584**
Insert for HFI 060 (complete insert with float ball - without float housing)	**148G3663**
Insert for HFI 050 (complete insert with float ball - without float housing)	**148G3662**
Insert for HFI 040 (complete insert with float ball - without float housing)	**148G3661**

Accessories

Type		Connection type	Quantity	Code no.
	Welding nipple incl. aluminium gasket	G½-ND6	2 pcs.	**148B4184**
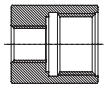	Al gaskets included	1/4" FPT – ½" G	1 pc.	**148B3860**
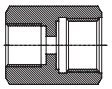	Al gaskets included	3/8" G - ½" G	1 pc.	**148B3861**

ENGINEERING
TOMORROW

Float valves
Types SV 1 and SV 3

Contents **Page**

Approvals 449
Identification 450
Dimensioning example for SV (L) 450
Ordering 450
Pipe dimensions 450
Capacity 451
Design / function 452
SV 1 - 3 used as a high pressure defrost drain float valve 455
Dimensions and weight 456

AI221686430747en-000801 | 2017.01

ENGINEERING TOMORROW

Float valves
Types SV 1 and SV 3



The SV 1 and 3 can be used separately as a modulating liquid level regulator in refrigerating, freezing and air conditioning systems for ammonia or fluorinated refrigerants.

However, in most cases, the SV is used as a float pilot valve for the main expansion valve type PMFH.

Technical data

- *Refrigerant*
  Applicable to HCFC, HFC and R717 (Ammonia).
- *P band*
  35 mm
- *Temperature of medium*
  -50 – 65°C
- *Max. working pressure*
  PS = 28 bar
- *Max. test pressure*
  p' = 36 bar
- *k_v value for float orifice*
  SV 1 = 0.06 m^3/h
  SV 3 = 0.14 m^3/h
- The highest k_v value for the built-in throttle valve is 0.18 m^3/h. The throttle valve can be used both in parallel and in series with the float orifice.
- Classification: DNV, CRN, BV, EAC etc.
  To get an updated list of certification on the products please contact your local Danfoss Sales Company.

Approvals

CE

Pressure Equipment Directive (PED)
SV1 and 3 are approved in accordance with the European standard specified in the Pressure Equipment Directive and are CE marked.

For further details / restrictions - see Installation Instruction

	SV1 and 3
Classified for	Fluid group I
Category	I

Identification



Dimensioning example for SV (L)

Refrigerant
R717 (NH_3)

Evaporating capacity
Q_e = 27 kW

Evaporating temperature
t_e = -10 °C (~ p_e = 2.9 bar abs.)

Condensing temperature
t_c = 30 °C (~ p_c = 11.7 bar abs.)

Liquid temperature for SV
t_l = 20 °C

Subcooling
$\Delta t_{sub} = t_c - t_l$ = 30°C - 20°C = 10 K

Pressure drop in SV
$\Delta p = p_c - p_e$ = 11.7 - 2.9 = 8.8 bar

Correction factor k for 10 K subcooling
0.98

Corrected capacity
27 × 0.98 = 26.4 kW

At t_e = -10 °C and Δp = 8 bar SV 1 yields 27 kW and can therefore be used.

If SV 3 is used for this capacity, it will mean a small offset.

Ordering

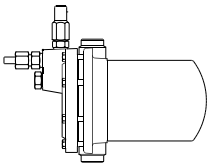

Regulator

The code nos. stated apply to float valves, types SV 1 and SV 3 incl. ∅ 6.5 / ∅ 10 mm weld connection [1]) for the pilot line. Balance tube connection (liquid / vapour): 1 in weld / 1 1/8 in solder.

The rated capacity refers to the valve capacity at evaporating temperature t_e = 5 °C, condensing temp. t_c = 32 °C and liquid temperature t_l = 28 °C.

Valve type	Code no.	Rated capacity in kW					
		R717	R22	R134a	R404A	R12	R502
SV 1	**027B2021**	25	4.7	3.9	3.7	3.1	3.4
SV 3	**027B2023**	64	13	10.0	9.7	7.9	8.8

[1]) 3/8 in flare connection can be supplied under code no. **027B2033.**

Spare parts and accessories
See spare parts catalogue.

Pipe dimensions

Liquid line
The following suggested dimensions for the liquid line, which is connected to the nipple pos. C, see "Design / Function", are based on a maximum velocity in a line with subcooled ammonia of *approx. 1 m/s* and a *maximum* velocity in a line with subcooled fluorinated refrigerant of *approx. 0.5 m/s.*

1. R717 (ammonia)

Type	Dimensions	
	0.8 bar < Δp_{sv} < 4 bar	4 bar < Δp_{sv} < 16 bar
	Steel tube	Steel tube
SV 1	3/8 in	3/8 in
SV 3	3/8 in	1/2 in

2. R22, R134a, R404A

Type	Dimensions			
	0.8 bar < Δp_{sv} < 4 bar		4 bar < Δp_{sv} < 16 bar	
	Steel tube	Copper tube	Steel tube	Copper tube
SV 1	3/8 in	3/8 in	3/8 in	1/2 in
SV 3	3/8 in	5/8 in	1/2 in	3/4 in

Upper balance pipe (connect to pos. D on SV (L)

Type	Dimensions
SV (L) 1	1 in
SV (L) 3	1 1/2 in

Capacity

The values in the capacity tables are based on a subcooling of 4 K just ahead of the SV valve.

If the subcooling is more or less than 4 K, refer to the following correction factors.

R717 (NH_3)

Type	Evaporating temperature t_e [°C]	Capacity in kW at pressure drop across valve Δp bar							
		0.8	1.2	1.6	2	4	8	12	16
SV 1	10	9.5	11	13	15	20	27	30	
	0	9.9	12	14	15	20	27	31	33
	-10	10	12	14	15	21	27	31	33
	-20	11	12	14	15	21	27	30	33
	-30	11	12	14	15	20	26	30	33
	-40	11	13	14	15	20	26	29	32
	-50	11	12	13	15	20	26	29	32
SV 3	10	25	31	35	39	52	71	77	
	0	26	32	36	40	52	69	78	83
	-10	26	32	36	40	52	68	77	83
	-20	26	31	35	39	52	67	76	82
	-30	25	30	34	38	50	66	75	82
	-40	24	29	33	36	49	65	73	80
	-50	23	27	31	35	47	64	71	79

R22

Type	Evaporating temperature t_e [°C]	Capacity in kW at pressure drop across valve Δp bar							
		0.8	1.2	1.6	2	4	8	12	16
SV 1	10	2.2	2.6	3.0	3.2	4.2	4.8	5.7	5.7
	0	2.3	2.7	3.1	3.4	4.4	4.9	5.8	5.8
	-10	2.4	2.8	3.2	3.5	4.5	5.0	5.8	5.9
	-20	2.4	2.9	3.3	3.6	4.6	5.0	5.8	5.8
	-30	2.5	2.9	3.3	3.6	4.5	5.0	5.7	5.7
	-40	2.5	2.9	3.3	3.6	4.4	4.9	5.6	5.6
	-50	2.6	2.9	3.3	3.5	4.3	4.8	5.4	5.4
SV 3	10	5.6	6.8	7.7	8.5	11	13	15	15
	0	5.8	7.0	8.0	8.8	11	13	15	15
	-10	6.0	7.3	8.2	9.0	12	13	15	15
	-20	6.1	7.3	8.3	8.9	11	13	14	15
	-30	6.2	7.3	8.1	8.8	11	12	14	14
	-40	6.1	7.1	7.9	8.5	11	12	14	14
	-50	5.9	6.9	7.6	8.2	11	12	13	14

Correction factors

When dimensioning, multiply the evaporator capacity by a correction factor k dependent on the subcooling Δt_{sub} just ahead of the valve. The corrected capacity can then be found in the capacity table.

R717 (NH3)

Δt K	2	4	10	15	20	25	30	35	40	45	50
k	1.01	1.00	0.98	0.96	0.94	0.92	0.91	0.89	0.87	0.86	0.85

R22

Δt K	2	4	10	15	20	25	30	35	40	45	50
k	1.01	1.00	0.96	0.93	0.90	0.87	0.85	0.83	0.80	0.78	0.77

Design / function

SV with low-pressure function

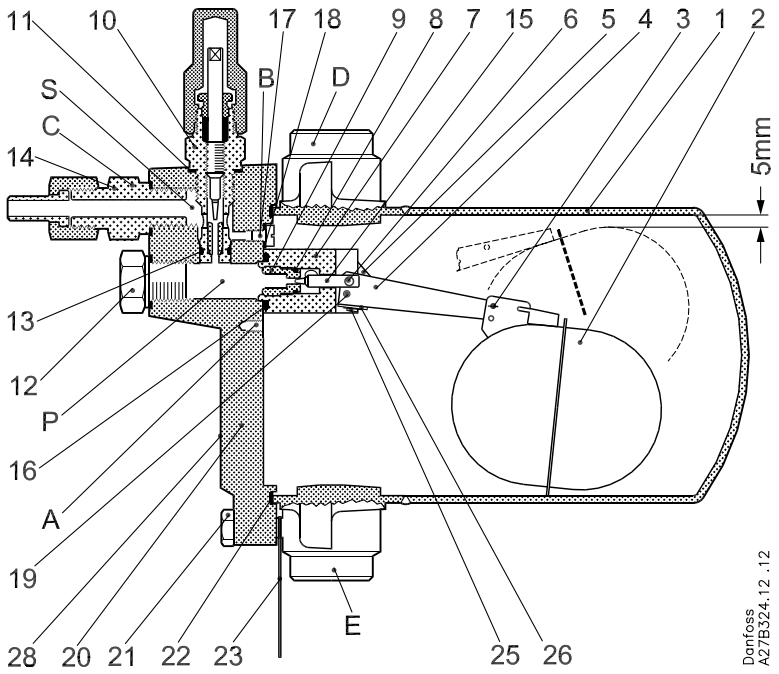

C. Nipple
D. Connection for balance pipe
P. Parallel connection of pos. C (screw 17 in pos. A)
S. Series connection of pos. C (screw 17 in pos. B)

No.	Part	Material	DIN / EN
1	Float housing	Stainless steel Low temperature, steel	X5CrNi18-10, DIN 17440 P285QH, EN 10222-4
2	Float	Stainless steel	
3	Split pin	Steel	
4	Float arm	Stainless steel	
5	Link	Steel	
6	Pin	Stainless steel	
7	Valve housing	Steel	
8	O-ring	Cloroprene (Neoprene)	
9	Float orifice	Plastic	
10	Manual regulation unit. Throttle valve	Steel	
11	Gasket	Non asbestos	
12	Plug	Steel	
13	O-ring	Cloroprene (Neoprene)	
14	Pilot connection (spare part)	Steel	
15	Orifice needle	Plastic	
16	O-ring	Cloroprene (Neoprene)	
17	Screw	Steel	
18	Gasket	Non asbestos	
19	Pin	Steel	
20	Cover	Low temperature, cast iron (spherical)	EN-GJS-400-18-LT EN 1563
21	Screw	Stainless steel	A2-70
22	Gasket	Non asbestos	
23	Label	Cardboard	
25	Screw	Steel	
26	Spring washer	Steel	
28	Sign	Aluminium	

Design / function
(continued)

SV (L), low-pressure function
SV (L) is used for small, flooded evaporators, where only slight variations in the liquid level can be accepted.
When the liquid level falls, the float pos. (2) moves downwards. This draws the needle pos. (15) away from the orifice and the amount of liquid injected is increased.

The liquid inlet line, which is mounted on the nipple pos. (C), should be dimensioned in such a way *that acceptable liquid velocities* and *pressure drops are obtained*.
This is particularly important when the liquid is only slightly subcooled, since valve capacity is reduced considerably if flashgas occurs in the liquid ahead of the orifice and wear is strongly increased.
See the suggested dimensions for the liquid line in "Pipe dimensions".

The flashgas quantity which occurs on expansion is removed through the balance pipe from pos. (D). On refrigeration plant using fluorinated refrigerants, slight subcooling and a large pressure drop can give a flashgas quantity of approx. 50% of the injected liquid quantity. *Therefore the pressure drop in this balance pipe must be kept at a minimum*, since there will otherwise be a risk that
the liquid level in the evaporator will vary to an unacceptable degree as a function of evaporator load
the absolute difference between the liquid level of the evaporator and the SV valve will be too large.

See the suggested dimensions for the balance pipe in "Pipe dimensions".

Design / function
(continued)

SV with high-pressure function

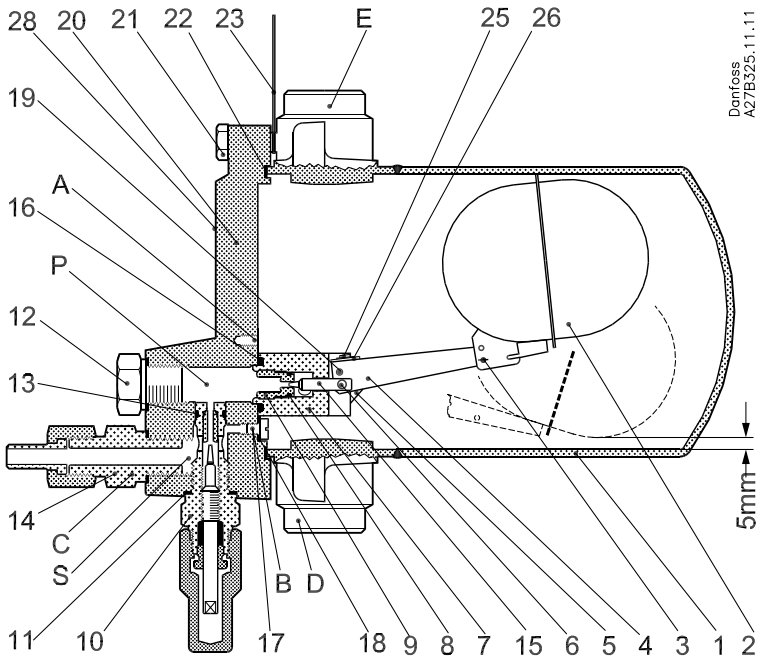

C. Nipple
D. Connection for balance pipe
P. Parallel connection of pos. C (screw 17 in pos. A)
S. Series connection of pos. C (screw 17 in pos. B)

No.	Part	Material	DIN / EN
1	Float housing	Stainless steel Low temperature, steel	X5CrNi18-10, DIN 17440 P285QH, EN 10222-4
2	Float	Stainless steel	
3	Split pin	Steel	
4	Float arm	Stainless steel	
5	Link	Steel	
6	Pin	Stainless steel	
7	Valve housing	Steel	
8	O-ring	Cloroprene (Neoprene)	
9	Float orifice	Plastic	
10	Manual regulation unit. Throttle valve	Steel	
11	Gasket	Non asbestos	
12	Plug	Steel	
13	O-ring	Cloroprene (Neoprene)	
14	Pilot connection (spare part)	Steel	
15	Orifice needle	Plastic	
16	O-ring	Cloroprene (Neoprene)	
17	Screw	Steel	
18	Gasket	Non asbestos	
19	Pin	Steel	
20	Cover	Low temperature, cast iron (spherical)	EN-GJS-400-18-LT EN 1563
21	Screw	Stainless steel	A2-70
22	Gasket	Non asbestos	
23	Label	cardboard	
25	Screw	Steel	
26	Spring washer	Steel	
28	Sign	Aluminium	

Design / function
(continued)

SV (H), high-pressure function
SV (H) is used as a liquid level regulator for small condensers or receivers.
When the liquid level rises, the float pos. (2) moves upwards. This draws the needle pos. (15) away from the orifice and the excess liquid is drawn away.
On refrigeration plant using fluorinated refrigerants slight subcooling and a large pressure drop can, as already mentioned, cause the formation of a large amount of flashgas.

This mixture of liquid and vapour has to pass through the nipple pos. (C) and out into the liquidline.
If the dimensions of the line are too small, a pressure drop will occur which can reduce the capacity of the SV (H) valve considerably. This will mean a risk of inadvertent liquid accumulation in the condenser or receiver.

See the suggested dimensions for the liquid line in "Pipe dimensions".

The connection nipple (C) can be mounted either in P or in S.

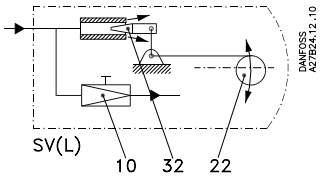

P-connection

P-connection (= parallel)
With P-connection an SV with closed float orifice will have a capacity which corresponds to the degree of opening of the adjustable throttle valve 10.

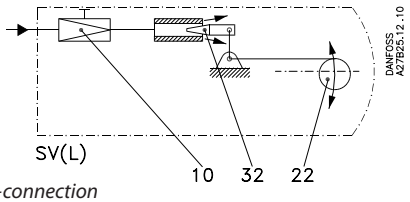

S-connection

S-connection (= series)
With S-connection the throttle valve 10 will function as a pre-orifice on SV (L) and as a post orifice on SV (H).

SV 1 - 3 used as a high pressure defrost drain float valve

SV 1 - 3 can be used as a defrost drain float valve, when one balance pipe is sealed off and the liquid level regulator is mounted with a special kit (code no. 027B2054) consisting of:

- Special orifice and orifice needle with a larger k_v-value of 0.28 m³/h.
- Gas drain pipe

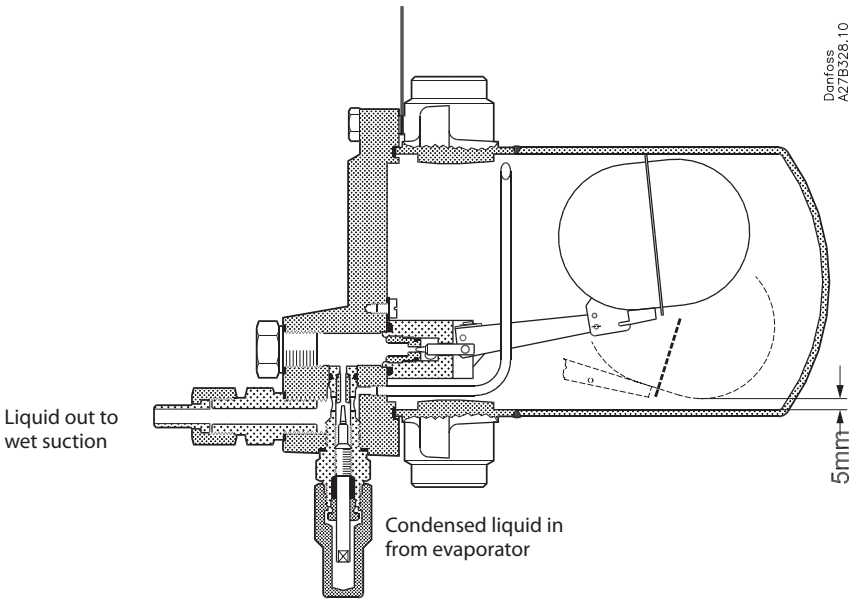

SV 1 - 3 fitted with the special kit

SV 1 - 3 used as a high pressure defrost drain float valve *(continued)*

Application example

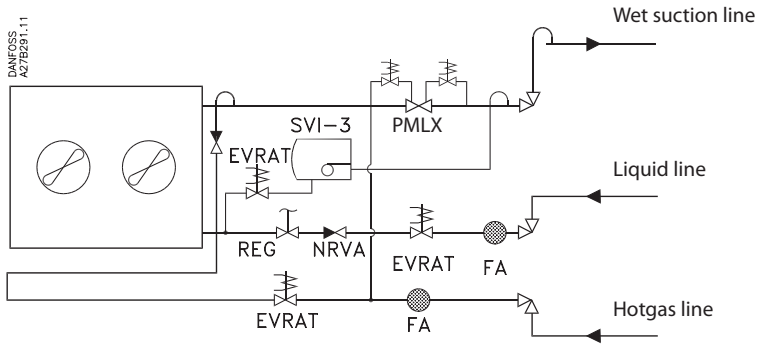

SV 1 - 3 with special kit mounted as defrost drain float valve on a flooded evaporator with hotgas defrost.

Dimensions and weight

SV 1 and SV 3

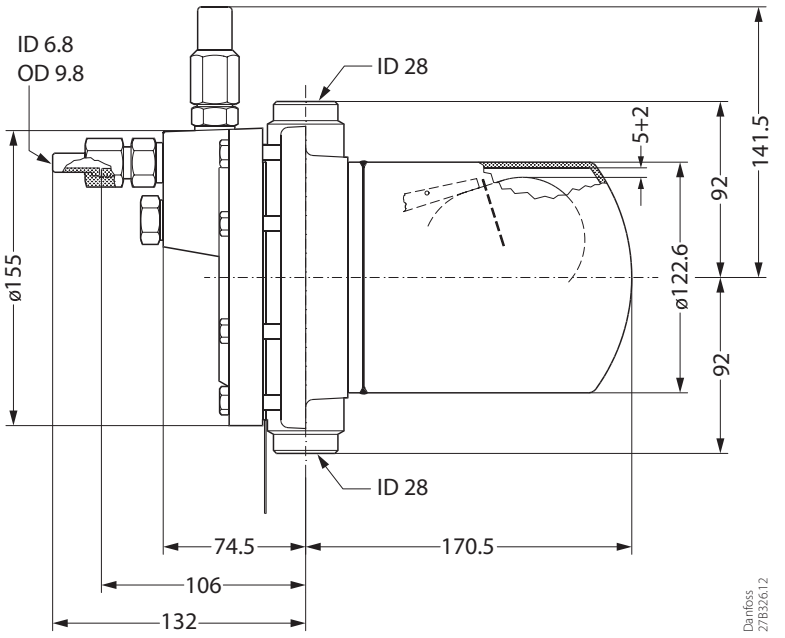

Weight
5.7 kg

Pilot connection (weld / solder)

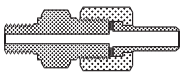

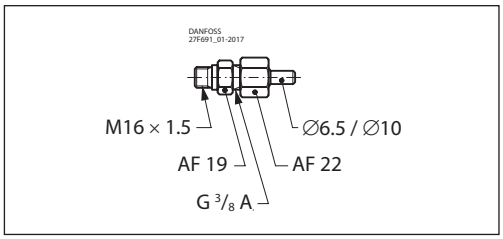

ENGINEERING TOMORROW

Float valves
Types SV 4, SV 5 and SV 6

Contents **Page**

Features . . . 459
Technical data . . . 459
Approvals . . . 460
Identification . . . 460
Materials . . . 460
Dimensioning example for SV . . . 460
Capacity . . . 461
Construction / function . . . 462
Application . . . 465
Dimensions and weight . . . 466
Ordering . . . 467

AI175286419654en-000506 | 2018.10

ENGINEERING
TOMORROW

Float valves
Types SV 4, SV 5 and SV 6



SV 4-6 are for use on the low pressure side as modulating liquid level regulators in refrigeration, freezing and air conditioning systems with ammonia and other common types of refrigerants.

Features

- Reliable function
- Stable regulation, even during momentary load change
- Liquid injection into the float housing or directly into the evaporator through external pipe connection
- Orifice assembly and filter can be replaced without evacuating the float housing
- Can be supplied without float housing for direct installation in the system (special order only)
- Can be used as pilot float for PMLF if mounted with special orifice (diameter Ø2.5 mm)
- Classification: DNV, CRN, BV, EAC etc.
  To get an updated list of certification on the products please contact your local Danfoss Sales Company

Technical data

Refrigerants
Applicable to HCFC, HFC and R717 (Ammonia). Use with flammable hydrocarbons cannot be recommended; please contact Danfoss.

P band
Approx. 35 mm

Max. working pressure
MWP = 28 bar
Max. Δp
SV 4 = 23 bar
SV 5 = 21 bar
SV 6 = 19 bar

Media temperature
-50 – 120 °C

Max. test pressure
MTP = 32 bar

k_v value and diameter for orifice
SV 4: k_v = 0.23 m^3/hD = 3.0 mm
SV 5: k_v = 0.31 m^3/hD = 3.5 mm
SV 6: k_v = 0.43 m^3/hD = 4.0 mm

Approvals

Pressure Equipment Directive (PED)
SV 4, 5 and 6 are approved in accordance with the European standard specified in the Pressure Equipment Directive and are CE marked.
For further details / restrictions - see Installation Instruction

	SV 4, 5 and 6
Classified for	Fluid group I
Category	II

Identification

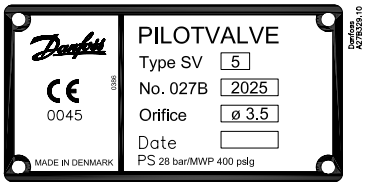

Materials

- Gaskets are non asbestos
- Valve housing made of lowtemperature cast iron, spherical (EN-GJS-400-18-LT)
- Float housing: ST 35.8 DIN 17175 W. no. 1.0305

Dimensioning example for SV

Refrigerant
R717 (NH_3)

Evaporating capacity
Q_e = 145 kW

Evaporating temperature
t_e = -10 °C (~ p_e = 2.9 bar abs.)

Condensing temperature
t_c = 30 °C (~ p_c = 11.7 bar abs.)

Liquid temperature ahead of SV
t_l = 20 °C

Subcooling
$\Delta t_{sub} = t_c - t_l = 30\ °C - 20\ °C = 10\ K$

Pressure drop in SV
$\Delta p = p_c - p_e = 11.7 - 2.9 = 8.8$ bar

Correction factor k for 10 K subcooling
= 0.98

Corrected capacity
145 × 0.98 = 142 kW

At t_e = -10 °C and Δp = 8 bar SV 5 yields 147 kW and can therefore be used.

Capacity

The values in the capacity tables are based on a subcooling of 4 K just ahead of the SV valve.
If the subcooling is more or less than 4 K, refer to the following correction factors.

R717 (NH_3)

Type	Evaporating temperature t_e [°C]	Capacity in kW at pressure drop across valve Δp bar							
		0.8	1.2	1.6	2	4	8	12	16
SV 4	10	37	45	52	58	79	105	122	134
	0	39	47	54	59	81	107	124	136
	-10	40	48	55	61	82	108	125	137
	-20	41	49	56	62	83	109	125	137
	-30	42	50	57	63	84	109	125	136
	-40	42	51	58	63	84	108	124	135
	-50	43	51	58	63	83	107	122	133
SV 5	10	51	62	71	78	107	143	166	183
	0	53	64	73	81	110	145	168	185
	-10	54	66	75	83	112	147	170	186
	-20	56	67	76	84	113	148	170	186
	-30	57	68	78	85	114	148	170	185
	-40	58	69	78	86	114	147	168	184
	-50	58	69	78	86	113	146	167	182
SV 6	10	68	83	95	105	144	191	222	245
	0	71	86	98	108	147	195	226	248
	-10	73	88	101	111	150	197	227	250
	-20	75	90	103	113	152	198	228	250
	-30	76	92	104	115	153	198	227	248
	-40	77	93	105	115	153	197	226	246
	-50	78	93	105	115	152	196	223	243

R22

Type	Evaporating temperature t_e [°C]	Capacity in kW at pressure drop across valve Δp bar							
		0.8	1.2	1.6	2	4	8	12	16
SV 4	10	8.5	10.3	11.7	12.9	17.2	21.8	24.1	25.1
	0	8.9	10.7	12.2	13.5	17.8	22.4	24.6	25.7
	-10	9.3	11.2	12.7	14.0	18.3	22.8	25.0	25.9
	-20	9.7	11.6	13.1	14.4	18.7	23.1	25.1	25.9
	-30	9.9	11.8	13.4	14.6	18.9	23.1	25.0	25.7
	-40	10.1	12.1	13.6	14.8	18.9	22.9	24.7	25.3
	-50	10.3	12.1	13.6	14.8	18.8	22.6	24.2	24.8
SV 5	10	11.6	14.0	15.9	17.6	23.4	29.6	32.7	34.2
	0	12.1	14.6	16.7	18.4	24.3	30.5	33.5	34.9
	-10	12.7	15.2	17.3	19.0	24.9	31.1	34.0	35.3
	-20	13.1	15.7	17.8	19.6	25.4	31.4	34.1	35.3
	-30	13.5	16.1	18.2	19.9	25.7	31.4	34.0	35.0
	-40	13.8	16.4	18.4	20.1	25.7	31.2	33.6	34.5
	-50	14.0	16.5	18.5	20.2	25.6	30.7	33.0	33.7
SV 6	10	15.5	18.7	21.3	23.6	31.4	39.7	43.9	45.8
	0	16.3	19.6	22.3	24.6	32.6	40.9	45.0	46.8
	-10	17.0	20.4	23.2	25.5	33.5	41.7	45.6	47.3
	-20	17.6	21.1	23.9	26.2	34.1	42.1	45.8	47.3
	-30	18.1	21.6	24.4	26.7	34.5	42.1	45.6	47.0
	-40	18.5	22.0	24.7	27.0	34.5	41.8	45.0	46.2
	-50	18.7	22.2	24.8	27.0	34.3	41.2	44.2	45.2

Correction factors
When dimensioning, multiply the evaporating capacity by the correction factor k, dependent on the subcooling Δt_{sub} just ahead of the valve. The corrected capacity can then be found in the capacity table.

R717 (NH_3)

Δt K	2	4	10	15	20	25	30	35	40	45	50
k	1.01	1.00	0.98	0.96	0.94	0.92	0.91	0.89	0.87	0.86	0.85

R22

Δt K	2	4	10	15	20	25	30	35	40	45	50
k	1.01	1.00	0.96	0.93	0.90	0.87	0.85	0.83	0.80	0.78	0.77

Construction / function

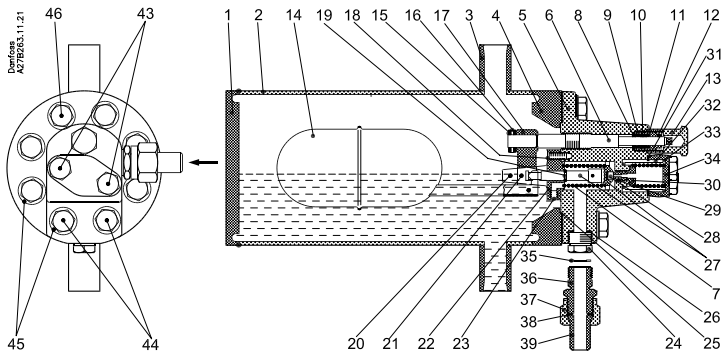

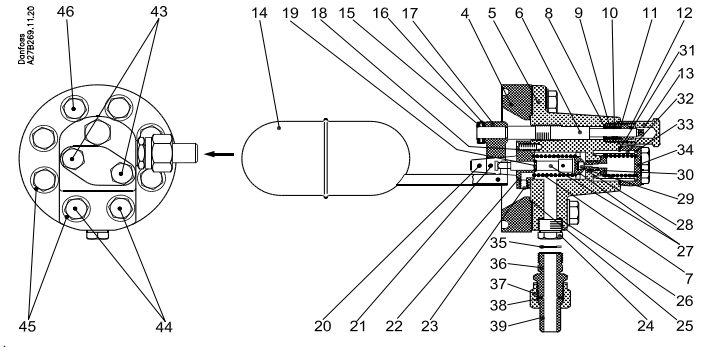

No.	Part	Material	DIN / EN
1	Bottom flange for float valve	Steel	P275NL1 EN10028-3
2	Tube for valve body	Steel	TTST35N DIN17173
3	Connection for float house	Steel	TTST35N DIN17173
4	Top cover for float valve	Steel	P275NL1 EN10028-3
5	Valve housing	Low temperature, cast iron (spherical)	EN-GJS-400-18-LT EN1563
6	Spindle	Stainless steel	
7	Spring	Steel	
8	Sealing ring	Nylon (PA 6)	
9	O-ring	Cloroprene (Neoprene)	
10	Distance ring	Nylon (PA 6)	
11	Packing ring	Nylon (PA 6)	
12	Packing box	Steel	
13	Cap	Steel	
14	Float	Stainless steel	
15	Adjusting ring	Steel	
16	Pin	Steel	
17	Fork for spindle	Steel	
18	Screw	Steel	
19	Locking ring	Steel	
20	Pin	Steel	

Construction / function
(cont.)

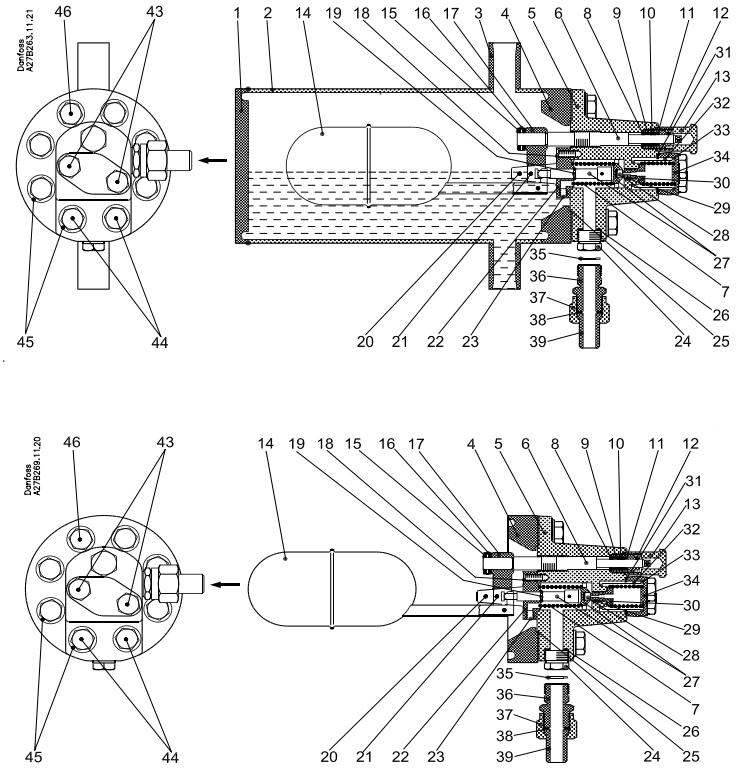

No.	Part	Material	DIN / EN
21	Pin	Steel	
22	Cover with guide	Steel	
23	Screw	Steel	
24	Plug	Steel	
25	Gasket	Non asbestos	
26	Gasket	Aluminium	
27	Valve cone (guide) with pin	Steel / Nylon (PA6)	
28	Valve cone	Teflon (PTFE)	
29	O-ring	Cloroprene (Neoprene)	
30	Nozzle	Teflon (PTFE)	
31	Gasket	Non asbestos	
32	Filter	Steel / Stainless steel	
33	Spring	Steel	
34	Cover for filter	Steel	
35	Gasket	Aluminium	
36	Nipple	Steel	
37	Union nut	Steel	
38	Gasket	Aluminium	
39	Welding nipple	Steel	
40	Locking ring	Steel	
41	Ring	Nylon (PA6)	
42	Pin	Steel	
43	Screw	Stainless steel	A2-70
44	Screw	Stainless steel	A2-70
45	Washer	Steel	
46	Screw	Stainless steel	A2-70

Construction / function
(cont.)

SV 4-6 float valves are for low pressure operation only. They are used for flooded evaporators, where only slight variations in the liquid level can be accepted.
When the liquid level decreases, the float moves downwards. This opens the orifice (pos. 7) and the amount of liquid injected is increased.

The liquid inlet line should be dimensioned in *such a way that acceptable liquid velocities and pressure drops are obtained.*
This is particularly important when the liquid is only slightly subcooled, since valve capacity is reduced considerably if flashgas occurs in the liquid ahead of the orifice.

The flashgas quantity which occurs on expansion is removed through the balance pipe. On refrigeration plant using fluorinated refrigerants, slight subcooling and a large pressure drop can result in a flashgas quantity of approx. 50% of the injected liquid quantity.

Therefore the pressure drop in this balance pipe must be kept at a minimum, otherwise there is a risk that:
- the liquid level in the evaporator will vary to an unacceptable degree as a function of evaporator load
- the absolute difference between the liquid level of the evaporator and the SV valve

If too large amounts of flash gas are created it is recommended to use the external injection connection or let the liquid expand directly into the surge drum. See application drawings 3 and 4.

See instruction for SV 4 - 6 for:
- Cleaning of strainer
- Change of orifice
- Change of valve plate

Application

The liquid expands into the float housing

1)

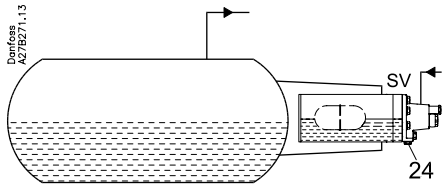

Direct liquid injection into the float housing 4 pcs. M6 screws (pos. 23) are removed, and pos. 24 remains blanked off. This leaves four holes through which liquid expands directly.
Note: *If the capacity is too high, only remove two or three screws.*
Pos. 23 and 24, see Construction & Function.

The liquid expands into the float housing

2)

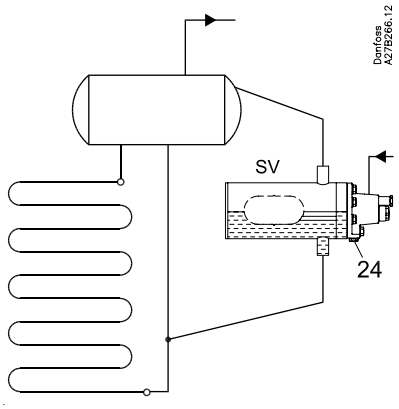

4 pcs. M6 screws (pos. 23) are removed, and pos. 24 remains blanked off. This leaves four holes through which liquid expands directly.
Note: *If the capacity is too high, only remove two or three screws.*
Pos. 23 and 24, see Construction & Function.

The liquid expands into the evaporator

3)

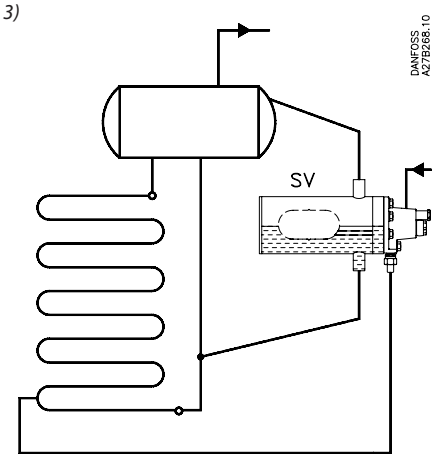

Used in large evaporators with long pipe lines.
- *pos. 24 is removed and weld connection is mounted*
- *pos. 23 remains screwed*

Pos. 23 and 24, see Construction & Function.

The liquid expands directly into the surge drum

4)

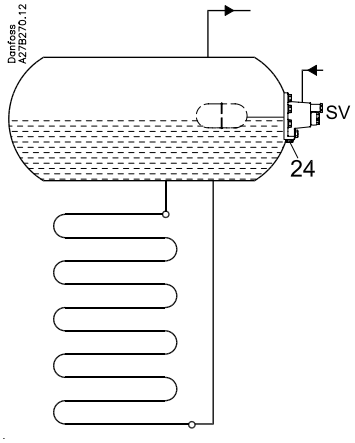

4 pcs. M6 screws (pos. 23) are removed, and pos. 24 remains blanked off. This leaves four holes through which liquid expands directly.
Note: *If the capacity is too high, only remove two or three screws.*
Pos. 23 and 24, see Construction & Function.

Dimensions and weight

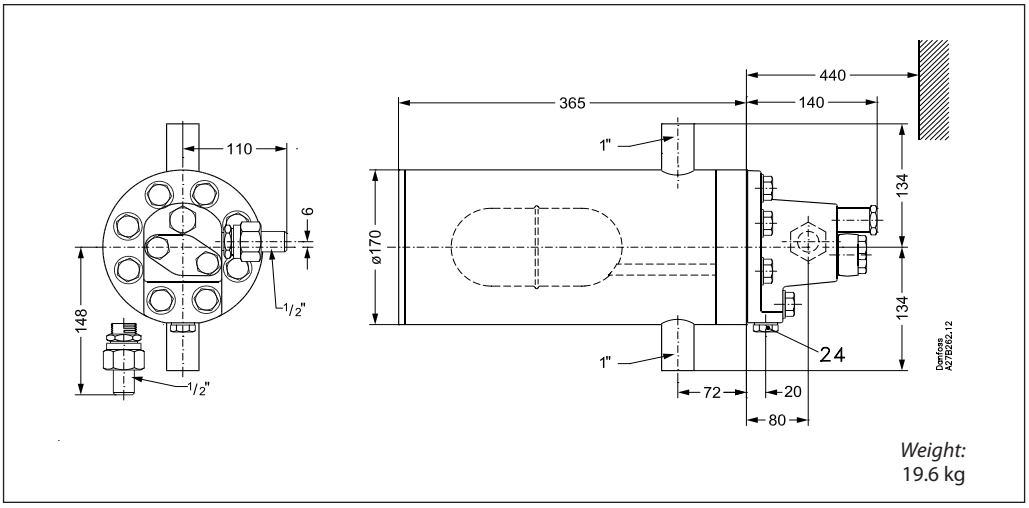

Weight:
19.6 kg

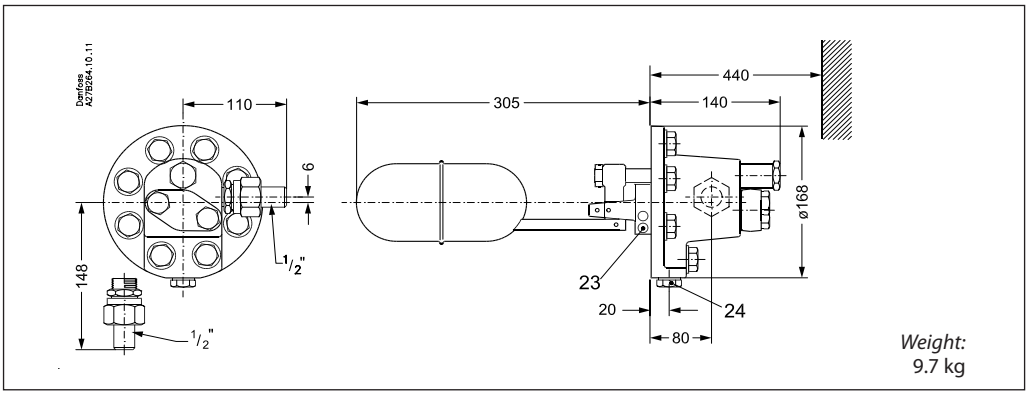

Weight:
9.7 kg

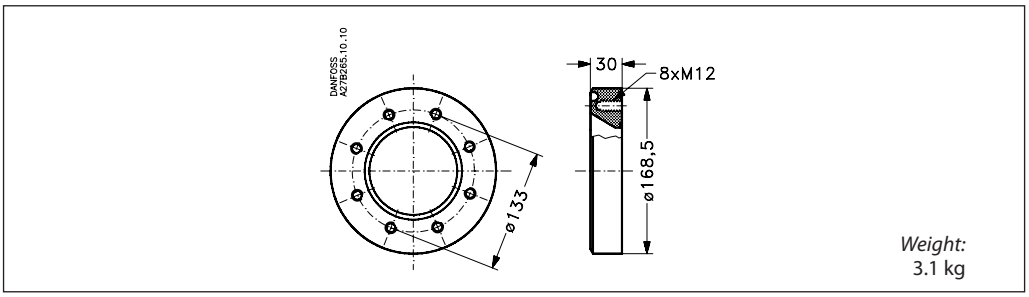

Weight:
3.1 kg

Ordering

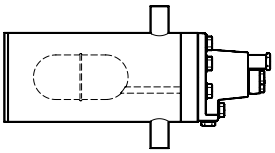

Regulator

The code nos. stated apply to float valves types SV 4, 5 and 6 with two 1" weld connections for balance tubes and two ½" weld joints for liquid and evaporator connections respectively.

Valve type	Orifice diameter	**Code no.**	**Code no.** without housing [2]	Rated capacity in kW[1]			
				R717	R22	R134a	R404A
SV 4	∅ 3.0 mm	**027B2024**	**027B2014**	102	21.0	16.4	15.4
SV 5	∅ 3.5 mm	**027B2025**	**027B2015**	138	28.6	22.3	21.0
SV 6	∅ 4.0 mm	**027B2026**	**027B2016**	186	38.3	29.9	28.1

[1] The rated capacity refers to the valve capacity at evaporating temperature t_e = 5 °C, condensing temp. t_c = 32 °C and liquid temperature t_l = 28 °C.
[2] Flange for mounting without housing Code no. **027B2027**.

Spare parts and accessories

Smaller orifices for the SV 4 - 6 are available as spare parts and can be mounted in the SV 4 - 6 if smaller capacities are required.

- Seal kit: **027B2070**
- Other spare parts: See spare parts catalogue

Special orifice code no. and rated capacities for SV 4 - 6

Orifice diameter	k_v	Capacities at -10 °C evaporating temperature at pressure drop across valve ΔP bar						**Code no.** [1]
		R717			R22			
		4	7	10	4	7	10	
∅ 1.0 mm	0.026	9	12	13.5	1.6	2.2	2.4	**027B2080**
∅ 1.5 mm	0.06	21	27	29	3.8	4.9	5.2	**027B2081**
∅ 2.0 mm	0.10	35	46	50	6.3	8.3	9	**027B2082**
∅ 2.5 mm	0.16	56	70	81	10	13	15	**027B2083**
∅ 2.8 mm	0.20	70	87.5	101	12	16	18	**027B2084**

[1] The code no. includes orifice and all necessary gaskets

Note: The SV 4 - 6 mounted with special orifice diameter ∅2.5 mm is recommended as pilot float valve for the servo-operated level regulators type PMFL for higher capacities.

ENGINEERING
TOMORROW

Liquid level regulating valves
Types PMFL / PMFH and SV

Contents **Page**

Features 471
Approvals 471
Technical data 472
Design/Function PMFL 473
SV floats for PMFL 474
Design/Function PMFH 475
Design / Function SV 1-3 476
Sizing 476
Capacity in kW 477
Material specification 479
Ordering 480
Dimensions and weights 482

AI242086443737en-000201 | 2017.05

ENGINEERING TOMORROW

Liquid level regulating valves
Types PMFL / PMFH and SV

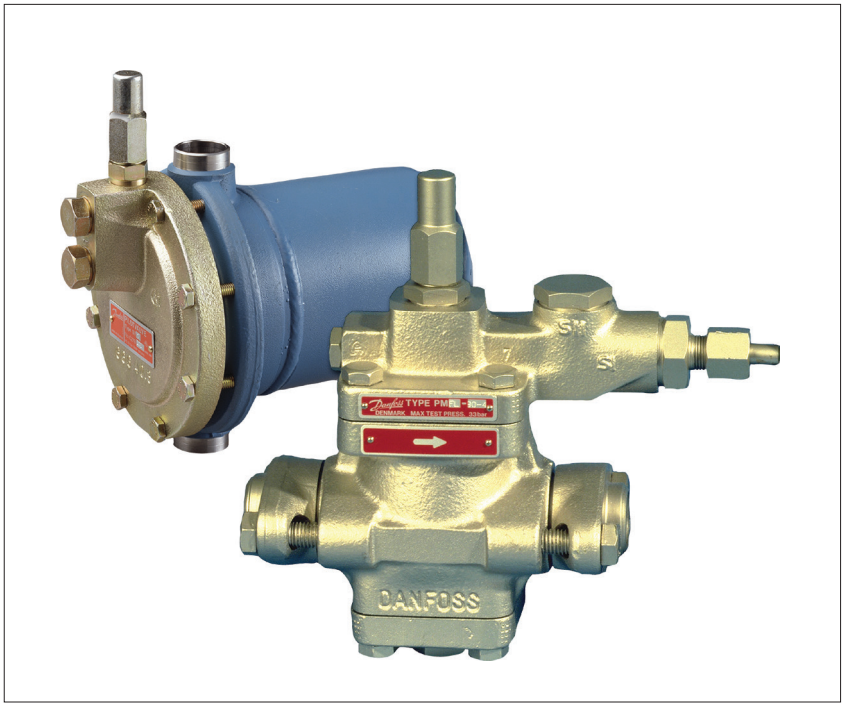

For modulating liquid level control in refrigeration, freezing and air conditioning plant, a system comprising a liquid level regulating valve type PMFL or PMFH, controlled by a pilot float valve type SV, is used.

PMFL and SV systems are used on the evaporator side. PMFH and SV systems are used on the condenser side.
The system is suitable for use with ammonia or fluorinated refrigerants. The PMFL and PMFH can be used in liquid lines to or from

- evaporators
- separators
- intermediate coolers
- condensers
- receivers

Modulating liquid level regulation provides liquid injection that is proportional to the actual capacity. This gives a constant amount of flashgas, thus ensuring stable regulation and economic operation because variations in pressure and temperature are held to a minimum.

Features

- Applicable to HCFC, HFC and R717 (Ammonia)
- PMFL / PMFH are based on PM valve family housings
- Same flange programme as for PM valve series
- Valve housing in low temperature cast iron (spherical) - EN GJS 400-18-LT
- Manual operation possible
- Position indicator available
- Pressure gauge connection to monitor inlet pressure
- Simple installation
- Main valve top cover can be located in any position without affecting the function
- Classification: DNV, CRN, BV, EAC etc.
  To get an updated list of certification on the products please contact your local Danfoss Sales Company

Approvals

Pressure Equipment Directive (PED)
The PMFL / PMFH valves are approved and CE marked in accordance with Pressure Equipment Directive - 97/23/EC.
For further details / restrictions - see Installation Instruction.

PMFL/PMFH-valves*			
Nominal bore	DN≤ 25 (1 in)	DN 32-125 mm (1 ¼ – 5 in)	DN 150 mm (6 in)
Classified for	Fluid group I		
Catagory	Article 3, paragraph 3	II	III

* CE is only applicable to the EN GJS 400-18-LT

Technical data

Refrigerants
Applicable to HCFC, HFC and R717 (Ammonia).

Max. working pressure
PMFL / H: MWP = 28 bar
SV: MWP = 28 bar

Max. test pressure
PMFL / H: Max. test pressure = 42 bar
SV: Max. test pressure = 42 bar

Temperature of media:
-60 – 120 °C.

Note:
Max. working pressure is limited to
MWP = 21 bar when media temperatures are:
below -20 °C for valves made of GGG-40.3 and
below -10 °C for valves made of GG-25.

Design/Function PMFL

6. Seal plug
10. Valve spindle
12. Valve seat
19. Valve body
19a. Channel in valve body
20. Bottom cover
23. Main spring
24. Servo piston
24a. Channel in servo piston
30. Top cover
30a.b.c. Channels in top cover
31. Valve cone
43. Supplementary spring
44. Manometer connection
53. Spindle cap
60. Setting spindle
73. Pilot connection

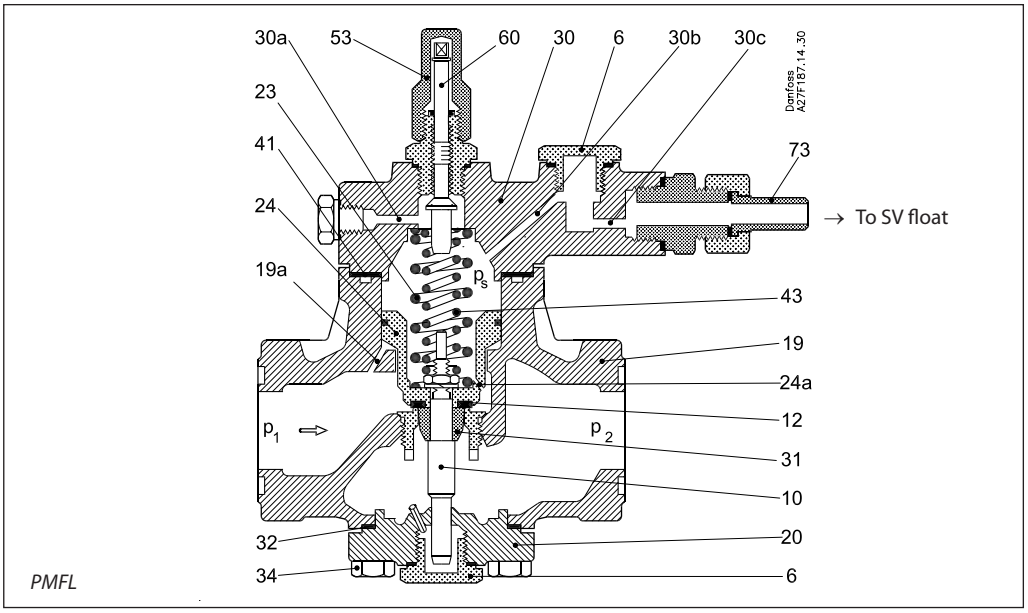

PMFL

When the liquid level inside the float drops, the float orifice opens. This relieves the higher pressure, ps, acting on the servo piston to the low pressure side causing the PMFL to open. Variations in liquid level will result in variations in pressure over the piston and variation in the amount of liquid injected. It is important to choose the correct spring set when designing the plant. The spring set should be selected from the table below:

Subcooling		Pressure difference over main valve			
		bar	psi	bar	psi
K	F	4 – 15	58 – 218	1.2 – 4.0	17 – 58
0 – 8	0 – 14	Normal spring set		Weak spring set	
8 – 40	14 – 72	Strong spring set			

The setting spindle, pos. 60, has not been set from factory. It is imperative that the setting spindle is adjusted before the valve is put into operation. The outer spring, pos. 23, is preset and the inner spring, pos. 43, is adjusted when turning the spindle. The following tables shows the adjustment of the inner spring in number of turns of the spindle as a function of valve size, spring type and pressure difference:

PMFL	C/w normal (factory mounted) spring set, subcooling 0-8 K ~ 0-14 F				
	Pressure difference (Δp) over PMFL in bar or psi				
	< 5 bar	5 – 8 bar	8 – 10 bar	10 – 12 bar	> 12 bar
	< 72 psi	72 – 116 psi	116 – 145 psi	145 – 174 psi	> 174 psi
80	No tension	2 – 3	3 – 4.5	4.5 – 6	ca. 7
125	No tension	3 – 5	5 – 7	7 – 9	ca. 10
200	No tension	3 – 5	5 – 7	7 – 9	ca. 10
300	No tension	4 – 6	6 – 9	9 – 12	ca. 14

PMFL	C/w strong spring set, subcooling 8-40 K ~ 14-72 F	
	Pressure difference (Δp) over PMFL in bar or psi	
	6 – 9 bar	> 9 bar
	87 – 131 psi	> 131 psi
80	4	Max. tension
125	6	Max. tension

PMFL	C/w stong spring set, subcooling 8-40 K ~ 14-72 F
	Pressure difference (Δp) over PMFL in bar or psi
	6 – 16 bar
	87 – 232 psi
300	Spring must always be set to max. tension

PMFL	C/w weak spring set, low pressure plants			
	Pressure difference (Δp) over PMFL in bar or psi			
	1.2 – 1.8 bar	1.8 – 2.5 bar	2.5 – 3 bar	3 – 4 bar
	17 – 26 psi	26 – 36 psi	36 – 43 psi	43 – 58 psi
80	No tension	3 – 4	4 – 6	Max. tension
125	No tension	4 – 6	6 – 8	Max. tension
200	No tension	4 – 6	6 – 8	Max. tension
300	No tension	5 – 7	5 – 7	Max. tension

Design/Function
(*continued*)

The values for spindle turns are an indication for an initial setting only. If a position indicator is used, a more precise modulation can be achieved when fine tuning the valve setting. If the PMFL is not opening fully, the spring tension must be reduced. If the PMFL is operating in a ON/OFF function, the spring tension should be increased. The condenser pressure will have an effect on the fine tuning and large variations in condensing pressure might call for readjustment.
The subcooling is measured just before the PMFL and the pressure difference is for the valve only excluding piping and armatures.

The PMFL can be used together with SV 4 as a pilot valve.

The orifices determines the k_v (C_v) value of the pilot and the following table can be used as an initial selection guide:

PMFL	SV 4-6	
	Ø 2.5	Ø 3 (SV 4)
80	X	
125	X	
200	X	
300		X

The final choice of orifice may vary depending on refrigerant and pressure levels. Smaller pressure levels needs a bigger orifice. Pressure difference levels below 3 bar (43 psi) need SV 4-6 with Ø3 mm orifice.

PMFL function example

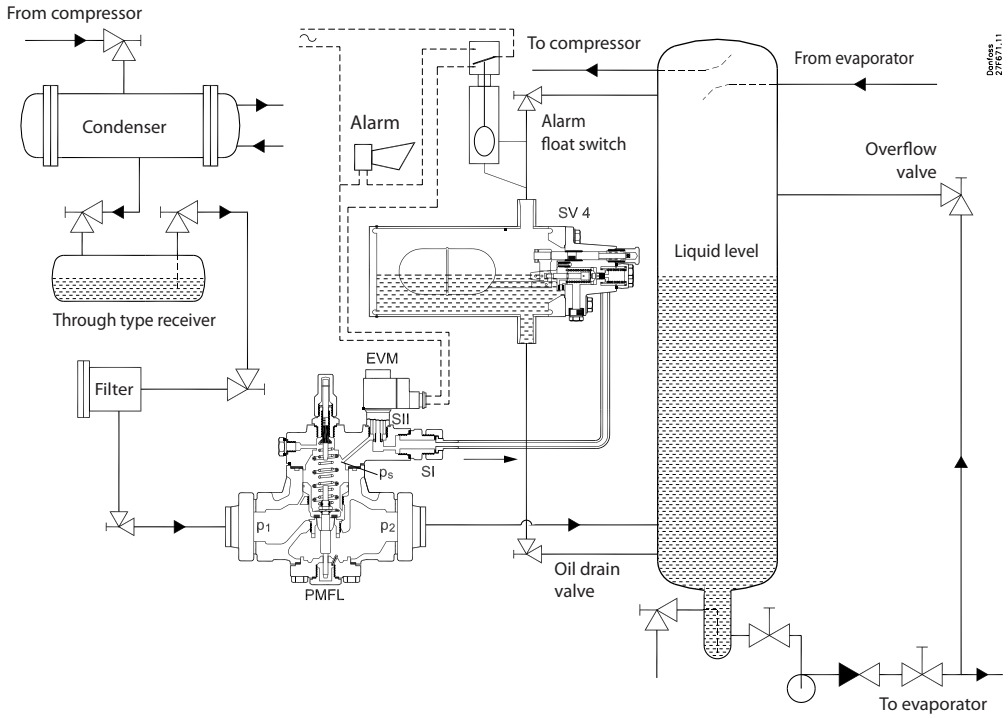

SV floats for PMFL

SV 4 can be used for PMFL low pressure control system. The float must be connected as shown.
Note: Only one inlet connection possible for SV 4.

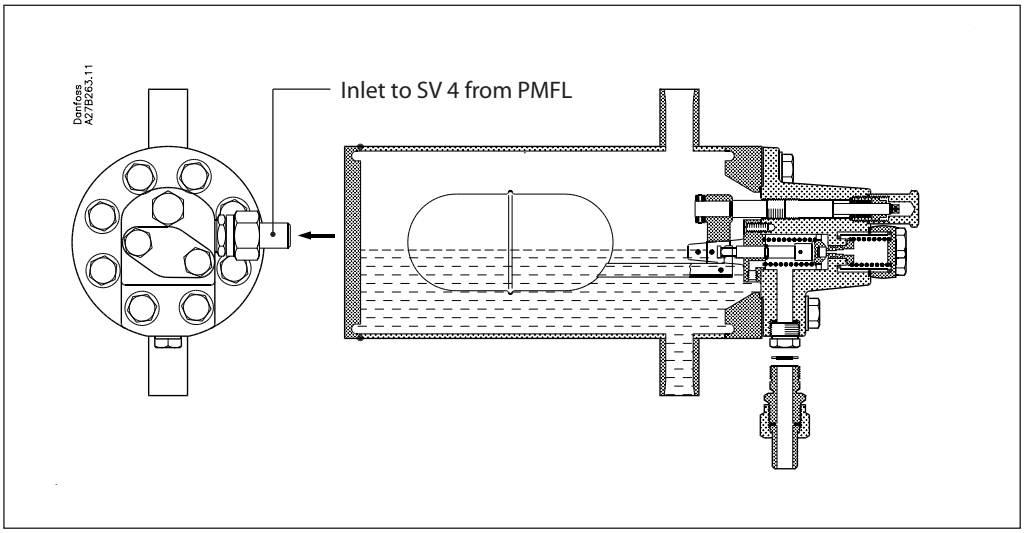

Design/Function PMFH

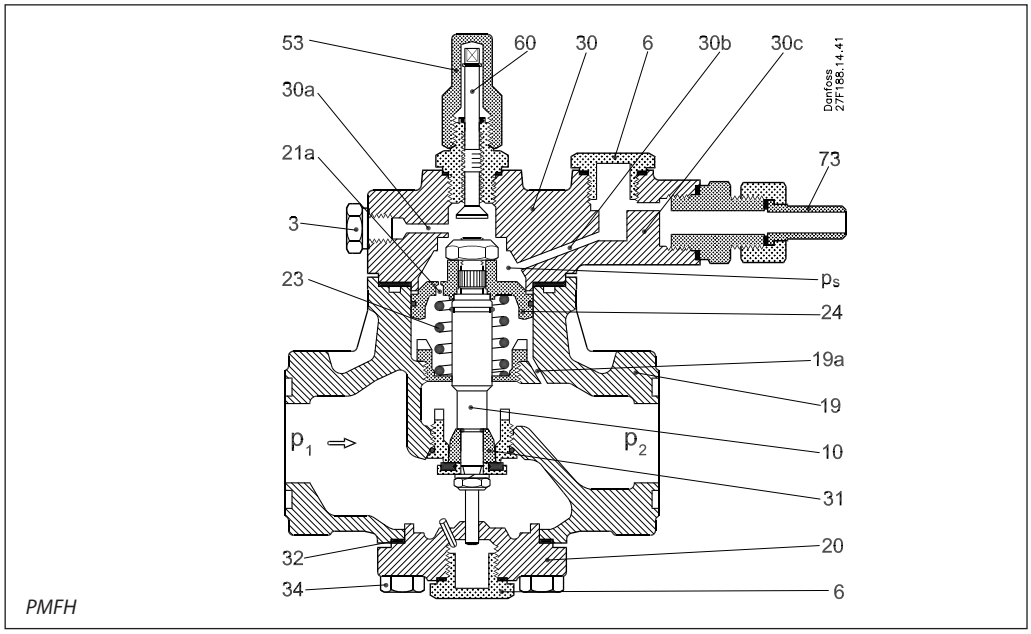

PMFH

3.	Manometer connection
6.	Seal plug
10.	Valve spindle
19.	Valve body
19a.	Channel in valve body
20.	Bottom cover
21a.	Channel in servo piston
23.	Main spring
24.	Servo piston
30.	Top cover
30a.b.c.	Channels in top cover
31.	Valve cone
53.	Spindle cap
60.	Manual opening
73.	Pilot connection

If the liquid level inside the SV float rises, the float orifice opens and relieves pressure through the pilot line to the top of the PMFH, increasing the pressure, ps, moving the pushrod downwards and opening the PMFH. The pilot line is connected in the topcover at SI. Override of the pilot signal can be made by using an EVM valve at SII. It is important to choose the correct spring set when designing the plant. The spring set should be selected from the table below:

The PMFH can be used together with either SV 1 or 3 with the SV mounted with the bleed valve downwards, refer to the drawing below. This reverses the opening so that rising float opens the orifice.

Pressure difference over main valve			
bar	psi	bar	psi
0 – 4.5	0 – 65	> 4.5	> 65
Weak spring set		Normal spring set	

PMFH function example

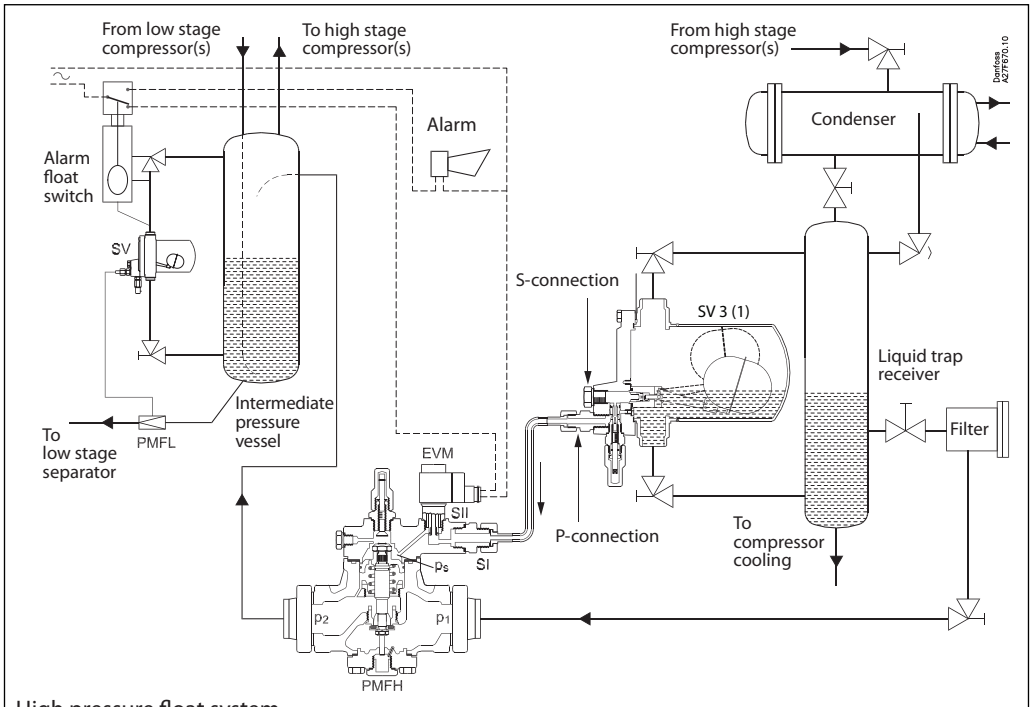

High pressure float system
(for explanatory purposes only)

Design / Function SV 1-3

SV 1-3 float has 2 different pilot connections: S-port (series connection with PMFH) or P-port (parallel connection with the PMFH).

P-port:
When using the P-port, it is possible to force open the PMFH valve to a fully open position. This is practical for service purposes or to confirm if the float has sufficient capacity for the PMFH and the operating conditions. However, when P-port connection is used it is possible to overfill a system due to constant bleeding or unautorised tampering. In this case, it is advisable to introduce a shut off when the liquid level reaches a preset point. Shut off can be done via an electrical switch if an EVM valve is mounted in the SII port in the top of the PMFH. It is only advisable to use the P-port at low pressure difference.

S-port:
The S-port offers the advantage of a preorifice which divides the pressure drop and any wear possibility due to cavitation. S-port connection must be used at high pressure differences, dp > 10 bar (145 psi). The k_v (C_v) value of the SV is higher using P-port than using S-port. A higher P-band can thus be obtained.

Sizing

Sizing example for PMFL

Refrigerant
R 717 (NH_3)

Evaporator capacity
Q_e = 600 kW

Evaporating temperature
t_e = -10°C (~ p_e = 2.9 bar abs.)

Condensing temperature
t_c = 30 °C (~ p_c = 11.9 bar abs.)

Liquid temperature ahead of valve
t_l = 20 °C at max. capacity

Subcooling
$\Delta t_{sub} = t_c - t_l$ = 30°C - 20°C = 10 K
Calculations do not take into account pressure loss in pipelines.

Pressure drop across valve
$\Delta p = p_c - p_e$ = 11.9 bar - 2.9 bar = 9 bar

Correction factor for 10 K subcooling
0.98

Corrected capacity
600 kW × 0.98 = 588 kW

The corrected capacity can be found in the capacity table. It will be seen from the table that valve type PMFL 80-4 should be chosen.
Refering to "ordering table", code number **027F0053** can be found.
For details of flanges, accessories and pilot valve, see the ordering table.

Since Δp = 9 bar and Δt_{sub} = 10 K, it will be seen from the "C/w strong spring set" for PMFL that a "STRONG" spring set must be used. The pilot line is connected to SV at connection S.
In the ordering table the code number for the spring set can be found: **027F0118**.

Sizing example for PMFH

Refrigerant
R 717 (NH_3)

Evaporator capacity
Q_e = 2200 kW

Evaporating temperature
t_e = -10 °C (~ p_e = 2.9 bar abs.)

Condensing temperature
t_c = 30 °C (~ 11.9 bar abs.)

Liquid temperature ahead of valve
t_l = 20 °C

Subcooling
$\Delta t_{sub} = t_c - t_l$ = 30 °C - 20 °C = 10 K
Calculations do not take into account pressure loss in pipelines.

Pressure drop across valve
$\Delta p = p_c - p_e$ = 11.9 bar - 2.9 bar = 9 bar

Correction factor for 10 K subcooling
0.98

Corrected capacity
2200 kW × 0.98 = 2156 kW

The corrected capacity can be found in the capacity table. It will be seen from the table that valve type PMFH 80-7 should be chosen.
In the ordering table the code number for the valve can be found: **027F3060** for CE-approved valve.

For details of flanges, accessories and pilot valve, see the ordering table.

Correction factors
When dimensioning, multiply the evaporator capacity by a correction factor k dependent on the subcooling Δt_{sub} just ahead of the valve.
The corrected capacity can then be found in the capacity table.

R 717 (NH_3)

Δt K	2	4	10	15	20	25	30	35	40	45	50
k	1.01	1.00	0.98	0.96	0.94	0.92	0.91	0.89	0.87	0.86	0.85

R 22

Δt K	2	4	10	15	20	25	30	35	40	45	50
k	1.01	1.00	0.96	0.93	0.90	0.87	0.85	0.83	0.80	0.78	0.77

Capacity in kW

Type	Evaporating temperature t_e	Rated capacity in kW at pressure drop across valve Δp bar			
	[°C]	0.8	1.2	1.6	2.0
		R 717 (NH_3)			
PMFL 80-1	10	50	60	69	76
	0	51	62	71	79
	-10	53	64	73	81
	-20	54	65	74	82
	-30	55	66	75	83
	-40	56	67	79	86
	-50	56	67	75	82
PMFL 80-2	10	80	97	111	123
	0	83	101	115	127
	-10	85	103	118	130
	-20	86	105	119	132
	-30	88	106	120	133
	-40	89	107	120	132
	-50	90	106	119	131
PMFL 80-3	10	127	154	176	194
	0	131	159	182	201
	-10	134	163	186	205
	-20	137	164	188	207
	-30	139	167	188	207
	-40	140	166	187	205
	-50	139	164	184	201
PMFL 80-4	10	206	250	286	316
	0	214	259	295	327
	-10	219	264	301	333
	-20	222	267	303	334
	-30	224	267	301	330
	-40	223	263	295	323
	-50	219	257	288	315
PMFL 80-5	10	325	394	449	496
	0	336	406	463	511
	-10	344	413	470	518
	-20	347	414	468	514
	-30	345	407	458	502
	-40	338	396	444	486
	-50	327	383	429	470
PMFL 80-6	10	565	682	773	851
	0	584	700	792	869
	-10	591	705	795	871
	-20	587	692	777	850
	-30	571	666	746	816
	-40	546	636	712	781
	-50	520	608	684	751
PMFL 80-7	10	881	1060	1190	1300
	0	909	1080	1210	1310
	-10	910	1070	1190	1300
	-20	887	1030	1150	1250
	-30	844	975	1090	1190
	-40	794	921	1030	1130
	-50	750	875	984	1080
PMFL 125	10	1400	1690	1910	2100
	0	1450	1730	1950	2140
	-10	1460	1740	1950	2140
	-20	1450	1700	1930	2080
	-30	1400	1630	1820	1990
	-40	1330	1550	1730	1900
	-50	1260	1480	1660	1830
PMFL 200	10	2250	2710	3060	3360
	0	2320	2770	3120	3420
	-10	2340	2780	3120	3410
	-20	2310	2710	3030	3310
	-30	2220	2590	2890	3160
	-40	2110	2480	2750	3020
	-50	2000	2340	2630	2900
PMFL 300	10	3420	4110	4650	4990
	0	3530	4210	4740	5180
	-10	3560	4210	4730	5170
	-20	3500	4100	4590	5010
	-30	3370	3910	4370	4780
	-40	3190	3710	4160	4560
	-50	3030	3540	3980	4380

Type	Evaporating temperature t_e	Rated capacity in kW at pressure drop across valve Δp bar			
	[°C]	4.0	8.0	12.0	16.0
		R 717 (NH_3)			
PMFL 80-1	10	104	140	161	
	0	107	142	165	176
	-10	110	143	166	178
	-20	111	143	166	179
	-30	111	143	165	179
	-40	111	142	162	177
	-50	109	140	160	175
PMFL 80-2 PMFH 80-2	10	167	224	257	
	0	172	227	264	281
	-10	176	228	265	284
	-20	177	238	264	285
	-30	177	227	262	284
	-40	175	225	258	281
	-50	173	222	253	277
PMFL 80-3 PMFH 80-3	10	264	353	404	
	0	271	356	414	440
	-10	276	357	416	444
	-20	278	356	413	445
	-30	276	353	407	443
	-40	272	349	400	438
	-50	267	343	393	431
PMFL 80-4 PMFH 80-4	10	427	571	651	
	0	438	573	664	704
	-10	444	572	665	709
	-20	445	568	657	709
	-30	439	561	647	704
	-40	429	552	635	696
	-50	420	543	624	685
PMFL 80-5 PMFH 80-5	10	667	887	1010	
	0	679	883	1020	1080
	-10	685	874	1020	1080
	-20	680	864	1000	1080
	-30	666	852	984	1070
	-40	649	837	966	1060
	-50	632	823	948	1040
P MFL 80-6 PMFH 80-6	10	1130	1490	1670	
	0	1130	1460	1690	1780
	-10	1130	1430	1670	1780
	-20	1110	1410	1640	1770
	-30	1080	1380	1610	1760
	-40	1050	1360	1570	1730
	-50	1020	1340	1540	1710
PMFL 80-7 PMFH 80-7	10	1690	2220	2480	
	0	1670	2150	2500	2610
	-10	1660	2090	2470	2610
	-20	1630	2050	2410	2610
	-30	1580	2010	2350	2590
	-40	1530	1970	2300	2550
	-50	1490	1940	2250	2510
PMFL 125 PMFH 125	10	2770	3650	4100	
	0	2770	3570	4140	4350
	-10	2770	3500	4090	4350
	-20	2720	3430	4010	4340
	-30	2650	3370	3920	4300
	-40	2570	3320	3840	4240
	-50	2490	3260	3770	4180
PMFL 200 PMFH 200	10	4410	5810	6530	
	0	4420	5680	6590	6920
	-10	4400	5550	6510	6920
	-20	4330	5450	6370	6900
	-30	4210	5360	6240	6830
	-40	4080	5260	6110	6740
	-50	3960	5170	5990	6640
PMFL 300 PMFH 300	10	6690	8810	9880	
	0	6690	8600	9980	10500
	-10	6660	8400	9850	10500
	-20	6550	8240	9650	10400
	-30	6360	8100	9430	10300
	-40	6170	7960	9240	10200
	-50	5990	7820	9050	10000
PMFH 500	10	10700	14100	15800	
	0	10700	13700	15900	16700
	-10	10600	13400	15700	16700
	-20	10400	13100	15400	16700
	-30	10100	12900	15000	16500
	-40	9830	12700	14700	16300
	-50	9540	12400	14400	16000

Capacity in kW *(continued)*

Type	Evaporating temperature t_e	Rated capacity in kW at pressure drop across valve Δp bar			
	[°C]	0.8	1.2	1.6	2.0
					R 22
PMFL 80-1	10	11	13	15	17
	0	12	14	16	18
	-10	12	15	17	18
	-20	12	15	17	19
	-30	13	15	17	19
	-40	13	16	18	19
	-50	13	16	18	19
PMFL 80-2	10	18	22	25	27
	0	19	23	26	29
	-10	20	24	27	30
	-20	20	24	28	30
	-30	21	25	28	31
	-40	21	25	28	31
	-50	21	25	28	31
PMFL 80-3	10	29	35	39	43
	0	30	36	41	46
	-10	31	37	43	47
	-20	32	39	44	48
	-30	33	39	44	48
	-40	34	40	45	49
	-50	34	40	44	48
PMFL 80-4	10	47	57	64	71
	0	49	59	67	74
	-10	51	61	70	77
	-20	52	63	71	78
	-30	54	64	72	78
	-40	54	64	72	78
	-50	55	64	71	77
PMFL 80-5	10	74	89	102	112
	0	78	94	107	117
	-10	80	96	110	121
	-20	83	99	112	122
	-30	84	99	112	122
	-40	84	99	110	120
	-50	84	97	108	117
PMFL 80-6	10	129	156	177	194
	0	135	162	184	202
	-10	140	167	188	206
	-20	142	168	189	205
	-30	143	167	186	202
	-40	141	163	181	196
	-50	137	158	175	189
PMFL 80-7	10	202	242	273	299
	0	211	251	283	308
	-10	216	256	286	311
	-20	218	255	283	307
	-30	215	249	275	298
	-40	209	240	265	286
	-50	200	230	254	275
PMFL 125	10	321	386	437	479
	0	336	402	455	498
	-10	346	412	464	507
	-20	352	415	464	505
	-30	352	410	455	494
	-40	346	399	442	478
	-50	335	386	426	461
PMFL 200	10	515	618	700	767
	0	538	645	728	796
	-10	555	660	742	810
	-20	563	663	740	805
	-30	561	653	725	786
	-40	550	635	702	760
	-50	532	612	677	732
PMFL 300	10	782	940	1060	1170
	0	819	980	1110	1210
	-10	843	1000	1130	1230
	-20	855	1010	1120	1220
	-30	851	990	1100	1190
	-40	833	961	1060	1150
	-50	804	925	1020	1110

Type	Evaporating temperature t_e	Rated capacity in kW at pressure drop across valve Δp bar			
	[°C]	4.0	8.0	12.0	16.0
					R 22
PMFL 80-1	10	22	28	31	32
	0	23	29	32	33
	-10	24	30	32	34
	-20	25	30	32	34
	-30	25	30	32	33
	-40	25	30	32	32
	-50	24	29	31	32
PMFL 80-2 PMFH 80-2	10	36	46	51	52
	0	38	47	52	53
	-10	39	48	52	54
	-20	40	48	52	54
	-30	40	48	52	53
	-40	40	48	51	52
	-50	39	47	49	51
PMFL 80-3 PMFH 80-3	10	57	72	80	82
	0	60	74	82	84
	-10	62	76	82	85
	-20	63	76	82	85
	-30	63	76	81	83
	-40	62	75	79	81
	-50	61	73	77	79
PMFL 80-4 PMFH 80-4	10	94	118	130	133
	0	98	121	133	136
	-10	101	123	133	138
	-20	102	123	132	137
	-30	101	122	130	134
	-40	99	120	127	131
	-50	97	117	124	127
PMFL 80-5 PMFH 80-5	10	147	184	202	206
	0	153	188	205	211
	-10	157	190	205	212
	-20	157	189	203	210
	-30	156	187	199	206
	-40	152	184	195	200
	-50	148	179	189	194
PMFL 80-6 PMFH 80-6	10	251	310	341	345
	0	260	314	343	352
	-10	263	315	341	353
	-20	262	313	335	348
	-30	257	308	328	340
	-40	249	302	320	331
	-50	241	294	312	321
PMFL 80-7 PMFH 80-7	10	381	466	510	515
	0	390	467	510	524
	-10	393	465	504	523
	-20	389	461	495	516
	-30	378	454	483	503
	-40	366	444	471	489
	-50	353	433	458	473
PMFL 125 PMFH 125	10	620	763	837	847
	0	639	770	842	864
	-10	647	771	835	865
	-20	643	767	821	853
	-30	628	755	804	834
	-40	609	739	784	810
	-50	589	720	762	785
PMFL 200 PMFH 200	10	990	1220	1330	1350
	0	1020	1230	1340	1380
	-10	1030	1230	1330	1380
	-20	1020	1220	1310	1360
	-30	1000	1200	1280	1330
	-40	969	1170	1250	1290
	-50	937	1150	1210	1250
PMFL 300 PMFH 300	10	1500	1850	2020	2050
	0	1550	1860	2030	2080
	-10	1560	1860	2010	2090
	-20	1550	1850	1980	2060
	-30	1510	1820	1930	2010
	-40	1470	1780	1890	1950
	-50	1420	1730	1830	1890
PMFH 500	10	2410	2950	3240	3270
	0	2480	2970	3250	3330
	-10	2500	2970	3210	3330
	-20	2480	2950	3160	3290
	-30	2420	2900	3090	3210
	-40	2340	2840	3010	3120
	-50	2260	2770	2930	3020

Material specification

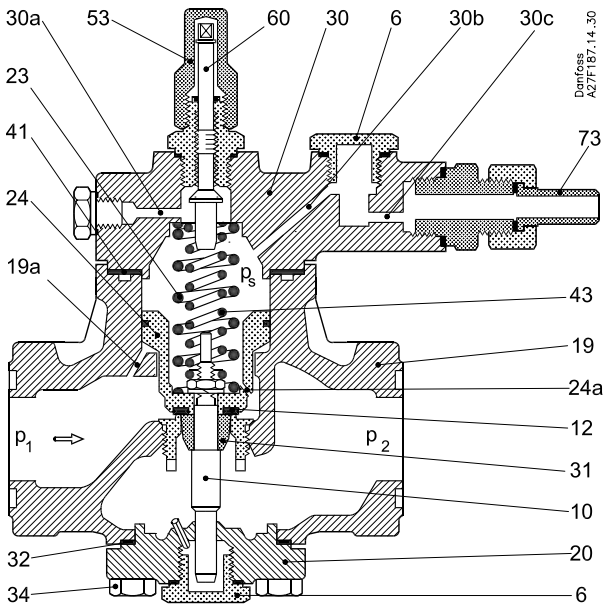

PMFL

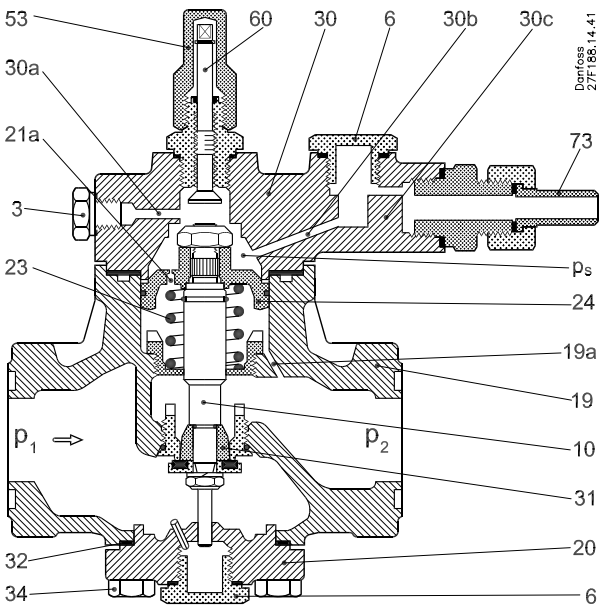

PMFH

Material specification for PMFL / PMFH valves

No.	Part	Material	DIN/EN	ISO	ASTM
2	Gasket between body and flange	Non-metal Non-asbestos			
3	Bolts for flange	Stainless steel	A2-70	A2-70	Type 308
4	Flange PM 5 - 65	Steel	RSt. 37-2, 10025	Fe360 B, 630	Grade C, A 283
6	Plug	Steel	9SMn28 1651	Type 2 R683/9	1213 SAE J 403
10	Valve spindle	Steel	9SMn28 1651	Type 2 R683/9	1213 SAE J 403
12	Valve seat	Teflon [PTFE]			
19	Valve body	Low temperature cast iron (spherical)	EN-GJS-400-18-LT EN-1693		
20	Bottom cover	Low temperature cast iron (spherical)	EN-GJS-400-18-LT EN-1693		
23	Spring	Steel			
24	Servo piston	Cast iron	GG-25	Grade 250	Class 40B
30	Cover	Low temperature cast iron (spherical)	EN-GJS-400-18-LT EN-1693		
31	Trottle cone	Steel	9SMn28 1651	Type 2 R683/9	1213 SAE J 403
32	Gasket between body and bottom cover	Non-metal Non-asbestos			
34	Bolts for top and bottom cover	Stainless steel	A2-70	A2-70	Type 308
41	Gasket	Non-metal Non-asbestos			
43	Spring	Steel			
53	Spindle cap	Steel	9SMn28 1651	Type 2 R683/9	1213 SAE J 403
60	Setting / manual operating spindle	Steel	9SMn28 1651	Type 2 R683/9	1213 SAE J 403
73	Pilot connection	Steel	9SMn28 1651	Type 2 R683/9	1213 SAE J 403

Ordering

Rated capacity in kW (1 kW = 0.284 TR)

Valve type	R 717	R 22	R 134a	R 404A	R 12	R 502
PMFL/H 80-1	139	27.8	22.1	33	17.4	30
PMFL/H 80-2	209	41.8	35.3	49.7	27.8	45.2
PMFL/H 80-3	348	70	53.1	82.7	41.8	75.2
PMFL/H 80-4	558	105	88.9	124	70	113
PMFL/H 80-5	835	174	133	207	105	188
PMFL/H 80-6	1395	278	221	330	174	300
PMFL/H 80-7	2080	435	353	569	278	470
PMFL/H 125	3480	700	552	831	435	755
PMFL/H 200	5580	1050	889	1243	700	1130
PMFL/H 300	8350	1740	1333	2068	1050	1880
PMFL/H 500	13900	2780	2210	3300	1740	3000

The rated capacity is given at evaporating temperature t_e = 5 °C, condensing temperature t_c = 32 °C and liquid temperature t_l = 28 °C.

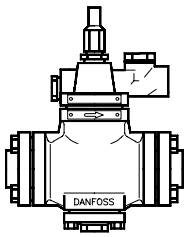

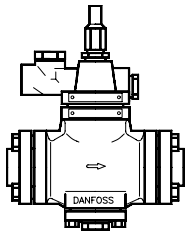

Main valve

Valve type	Code no. EN GJS 400-18-LT
PMFL 80-1	**027F3054**
PMFL 80-2	**027F3055**
PMFL 80-3	**027F3056**
PMFL 80-4	**027F3057**
PMFL 80-5	**027F3058**
PMFL 80-6	**027F3059**
PMFL 80-7	**027F3060**
PMFL 125	**027F3061**
PMFL 200	**027F3062**
PMFL 300	**027F3063**

Valve type	Code no. EN GJS 400-18-LT
PMFH 80-2	**027F3065**
PMFH 80-3	**027F3066**
PMFH 80-4	**027F3067**
PMFH 80-5	**027F3068**
PMFH 80-6	**027F3069**
PMFH 80-7	**027F3070**
PMFH 125	**027F3071**
PMFH 200	**027F3072**
PMFH 300	**027F3073**
PMFH 500	**027F3074**

The code nos. stated apply to main valves type PMFL or PMFH incl. flange gaskets, flange bolts, blanking plug and pilot connection with Ø6.5 / Ø10 mm weld nipple.

Spring set

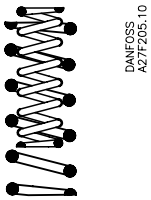

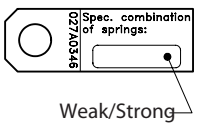

Special spring set for PMFL

Subcooling Δt_u K	Pressure drop Δp in PMFL: 4 – 15 bar (Spring set)	Pressure drop Δp in PMFL: 1.2 – 4 bar (Spring set)	Pilot connection on SV 1-3 only	Pos.	Type PMFL	"WEAK" Code no.	"STRONG" Code no.
0-8	"STANDARD"	"WEAK"	P	23 + 43	80-1 → 80-7	**027F0123**	**027F0118**
8-40	"STRONG"		S		125	**027F0124**	**027F0119**
					200	**027F0125**	
					300	**027F0126**	**027F0121**

Special spring set for PMFH

Pressure drop in PMFH Δp bar	Type	"WEAK" Code no.
1 → 4	PMFH 80.1 → 7	**027F2190**
	PMFH 125	**027F2191**
	PMFH 200	**027F2192**
	PMFH 300	**027F2193**

Ordering
(continued)

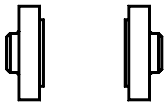

Flanges [2]

Valve type	Flange type	Weld flanges		Solder flanges			
		[in]	**Code no.** [1]	[in]	**Code no.** [1]	[mm]	**Code no.** [1]
PMFL 80 / PMFH 80	12	3/4 1 1 1/4	**027N1220** **027N1225** **027N1230**	7/8 1 1/8	**027L1223** **027L1229**	22 28	**027L1222** **027L1228**
PMFL 125 / PMFH 125	23	1 1/4 1 1/2	**027N2332** **027N2340**	1 3/8	**027L2335**	35	**027L2335**
PMFL 200 / PMFH 200	24	1 1/2 2	**027N2440** **027N2450**	1 5/8	**027L2441**	42	**027L2442**
PMFL 300 / PMFH 300	25	2 2 1/2	**027N2550** **027N2565**	2 1/8	**027L2554**	54	**027L2554**
PMFH 500	26	2 1/2 3	**027N2665** **027N2680**	2 5/8	**027L2666**	76	**027L2676**

[1] Code no. applies to one flange set consisting of one inlet and one outlet flange.
[2] Dimension sketch see spare part catalogue.

Stainless steel: flanges, bolts for flanges and top and bottom covers, see spare parts catalogue.

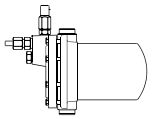

Pilot valves SV 1-3

Type	Connection		**Code no.**	
Float pilot valve type SV	Balance tube liquid / vapour	Pilot line	SV 1: **027B2021** **027B2021CE** [2]	SV 3: **027B2023** **027B2023CE** [2]
	1 in weld	Ø 6.5 / Ø 10 mm weld [1]		

[1] 3/8 in flare connection can be supplied under code no. **027B2033**.
[2] Approved and CE-marked in accordance with Pressure Equipment Directive - 97/23/EC.

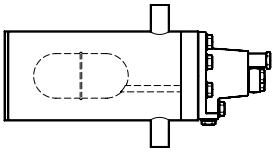

Pilot valves SV 4

Valve type	Orifice diameter	**Code no.**	**Code no.** without housing[1]
SV 4	Ø 3.0 mm	**027B2024** [2]	**027B2014** [2]

[1] Flange for mounting without housing Code no. 027B2027.
[2] Approved and CE-marked in accordance with Pressure Equipment Directive - 97/23/EC.

The code nos. stated apply to liquid level regulators type SV 4, 5 and 6 with two 1" weld connections for balance tubes and two ½" weld joints for liquid and evaporator connections respectively.

Spare parts and accessories
Smaller orifices for the SV 4 are available as spare parts.
– *Seal kit:* ***027B2070***

Special orifice code no. for SV 4

Orifice diameter	k_v	Code no.[1]
Ø 1.0 mm	0,026	**027B2080**
Ø 1.5 mm	0,06	**027B2081**
Ø 2.0 mm	0.10	**027B2082**
Ø 2.5 mm	0,16	**027B2083**
Ø 2.8 mm	0.20	**027B2084**

[1] The code no. includes orifice and all necessary gaskets

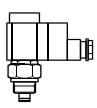

Pilot valve kits (EVM and coil)
Can be screwed on to the PMFL or PMFH instead of the blanking plug.

Coils, 10 W AC	AC: 027B1122xx where xx can be
110 V, 60 Hz	21
220 V, 50 Hz	31
220 V, 50/60 Hz	32
240 V, 50 Hz	33

Ordering
(continued)

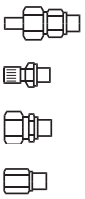

Optional accessories

Description		Code no.
Pressure gauge connection Ø 6.5 / Ø 10 mm weld / solder		**027B2035**
Pressure gauge connection 1/4 in flare (self-closing) (Must not be used in ammonia plant)		**027B2041**
Pressure gauge connection Cutting ring connection	6 mm 10 mm	**027B2063** **027B2064**
Pressure gauge connection	1/4 NPT	**027B2062**
Manual operating unit for PMFL. Can be fitted in place of the regulator bottom plug		**027F0128**
3/8 in flare pilot connection for SV		**027B2033**

Dimensions and weights

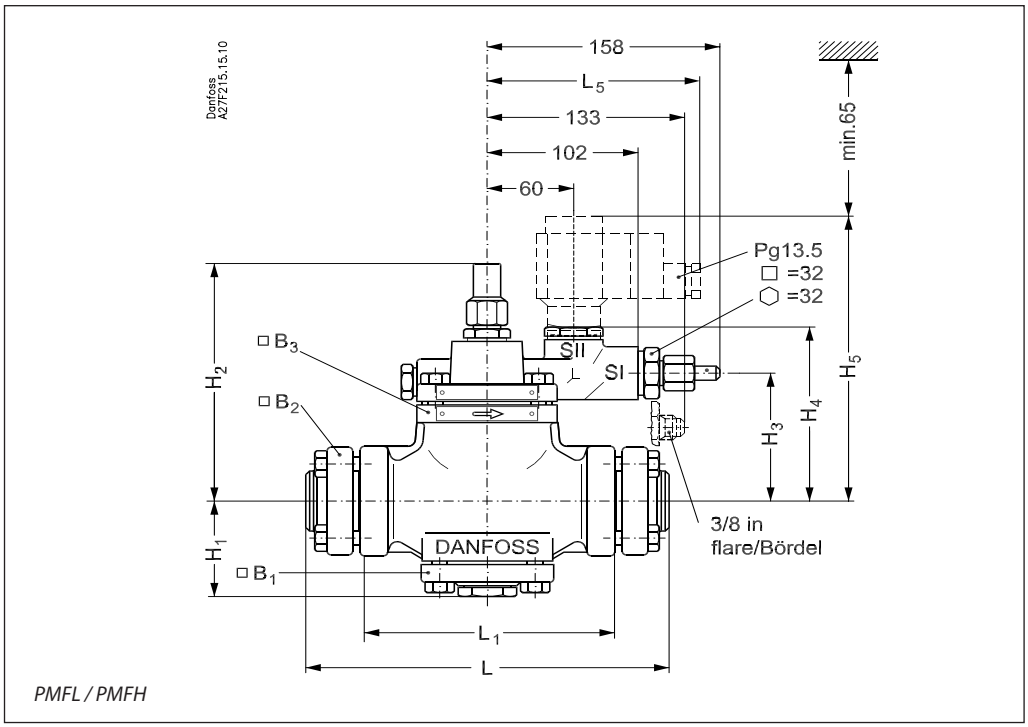

PMFL / PMFH

Type		H_1 [mm]	H_2 [mm]	H_3 [mm]	H_4 [mm]	H_5 [mm]	L [mm]	L_1 [mm]	L_5 max. 10 W [mm]	L_5 max. 20 W [mm]	B_1 [mm]	B_2 [mm]	B_3 [mm]	Weight excl. solenoid valve [kg]
PMFL PMFH	80	66	162	79	113	176	177	106	130	140	75		87	7.0
	125	72	178	96	128	193	240	170	130	140	84	82	94	11.3
	200	79	187	105	138	202	254	170	130	140	94	89	102	14.2
	300	95	205	123	155	220	288	200	130	140	104	106	113	19.8
PMFH	500	109	227	146	176	242	342	250	130	140	127	113	135	28.3

Pilot connection (weld / solder)

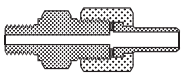

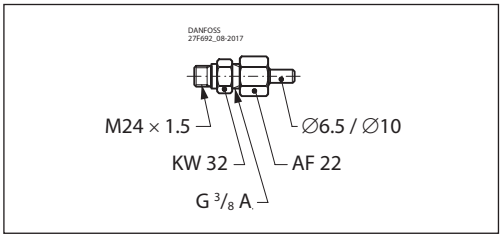

ENGINEERING
TOMORROW

Liquid Level Alarms

Types RT 280A, RT 281A

Contents **Page**

Features 485
Approvals 485
Technical data 486
Design / Function 487
Dimensions [mm] and weights [kg] 488

AI203586432637en-000401 | 2016.07

ENGINEERING TOMORROW

Liquid Level Alarms

Types RT 280A, RT 281A

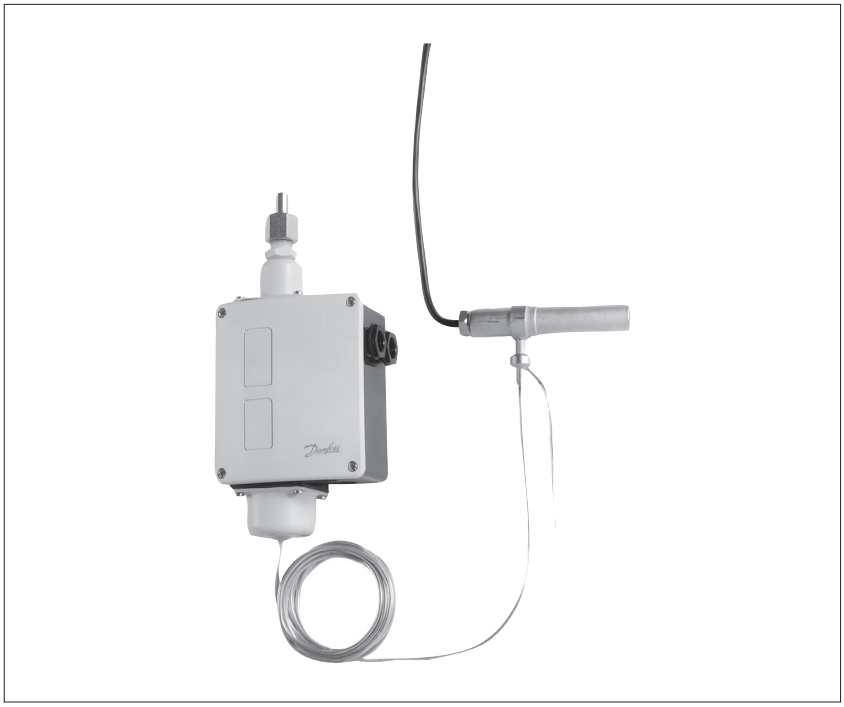

RT 280A and RT 281A are primarily used as liquid level alarms and safety switches to prevent too high a liquid level in liquid separators.

Secondarily, RT 280A and RT 281A can be used as liquid level regulators where a liquid level differential of up to ±40 mm can be permitted.

When used as safety switches, RT 280A and RT 281A ensure that the max. permissible refrigerant level in flooded evaporators, pump tanks or liquid separators is not exceeded.

As liquid level regulators, RT 280A and RT 281A maintain a constant average refrigerant level in flooded evaporators, pump tanks or liquid separators.

Features

- Waterproof versions, enclosure IP66
- Single pole changeover switch (SPDT) suitable for AC / DC loads
- Interchangeable contact system

Approvals

CE-approved according to
EN 60947-4, -1 EN 60947-5, -1

Meets the requirements of VDE 0660 (VDE: Verband Deutscher Elektrotechniker)

Technical data

Refrigerants	R717 (NH_3), R22 and R502 "For other refrigerants, please contact Danfoss."	
Operating ranges for RT 280A	R12	-50 – 10 °C
	R22 and R717 (NH_3)	-50 – 0 °C
	R502	-65 – -5 °C
Operating ranges for RT 281A	R22 and R717 (NH_3)	-30 – 20 °C
Ambient temperature	-50 – 70 °C	
Switch	Single pole changeover switch (SPDT), code no. **017-403066**	
Contact load	Alternating current	AC1: 10 A, 400 V
		AC3: 4 A, 400 V [1]
		AC15: 3 A, 400 V
	Direct current	DC13: 12 W, 220 V
Weight	2.0 kg	
Enclosure	IP66 to IEC 529.	
Pressure connection	G 3/8 A with ø 6.5 / ø 10 mm weld nipple	
Max. working pressure	PB = 22 bar	
Max. test pressure	Pe = 25 bar	
Thermostatic element	Adsorption charge	
	3 m capillary tube	
	Max. permissible bulb temperature: 80 °C	
Bulb with electric heater	10 W heater for 24 V DC or AC The heater must be constantly energised whilst the system is in operation. 1.5 m connection cable.	

[1]) *Max. short-time AC3 current: 28 A*

Liquid level differential
With a steady liquid level and a liquid level variation rate of max. 15 mm/min, the differential will be approx. 10 mm on a rise in level and approx. 20 mm on a fall in level. In unfavourable operating conditions, differentials of approx. 20 mm on a rise in level and approx. 60 mm on a fall in level must be expected.

Materials

Gaskets are non-asbestos.

Ordering

RT 280A code no. **017D004066**
RT 281A code no. **017D004666**

Design / Function

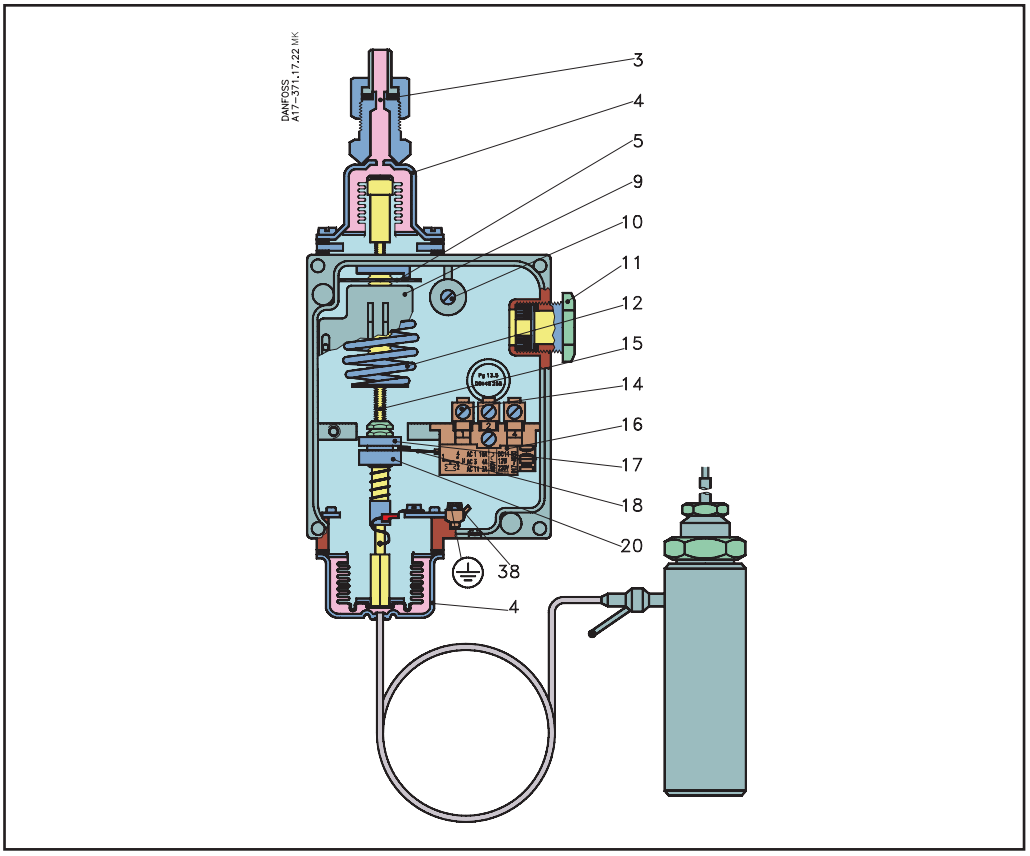

3. Pressure connection
4. Bellows element
5. Setting disc
9. Scale
10. Loop terminal
11. Pg 13.5 screwed cable entry
12. Spring
14. Terminals
15. Spindle
16. Switch (17-4030)
17. Upper guide bush
18. Contact arm
20. Lower guide bush
38. Earth terminal

RT 280A and RT 281A units are based on RT 260A. The lower element is thermal and has an electrically heated bulb.
As stated, the units are primarily for use as liquid level alarms and safety switches. In designing the units, emphasis was placed on the failsafe function. In the event of a defect in the thermal element, the compressor is stopped and liquid injection cut off. Restart is only possible after the defect has been rectified.

This also applies in the case of loss of charge, for example if the capillary tube or heating element in the bulb is damaged, or if current to the heating element falls.
The element heating or cooling signal is compared to the reference pressure and then converted to an electric on / off impulse.
The regulating principle is based on the heat conduction difference between the liquid and vapour phases of the refrigerant.

Note:
If the evaporating temperature, and with it the reference pressure, is higher than the max. regulation range temperature, the unit will react as though the liquid level in the liquid container was too high.

Dimensions [mm] and weights [kg]

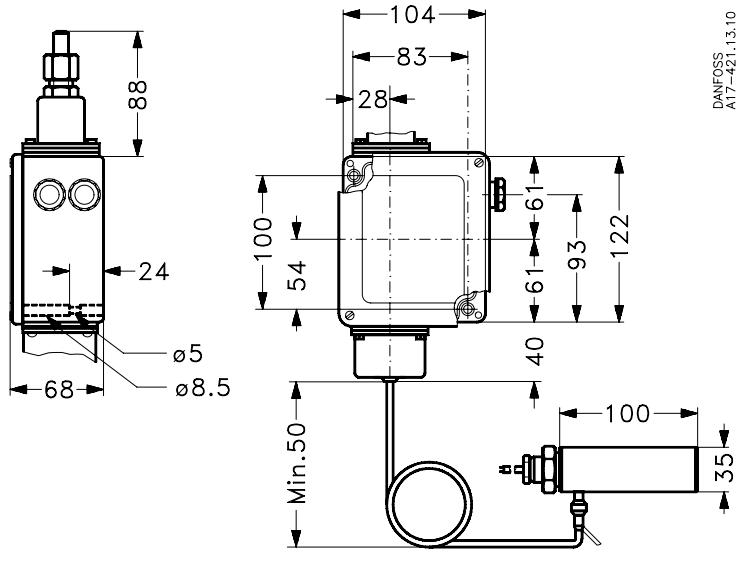

Net weight 2.0 kg

ENGINEERING
TOMORROW

Sight glass
Type LLG 185 - 1550

Contents **Page**

Features 491
Technical data 491
Design 492
Frostproof sight glasses 493
Material specification 495
Dimensions and weights 496
Ordering 497

AI176286432251en-000602 | 2018.08

ENGINEERING TOMORROW

Sight glass
Type LLG 185 - 1550



LLG are sight glasses in ductile steel which meets the strictest requirements on industrial and marine refrigeration installations. The sight glasses are offered in 3 different versions:
- with welding nipples (LLG)
- with stop valves equipped with caps (LLG S)
- with stop valves and sight adapter in acrylic glass ready for insulation on site (LLG SF).

The range of sight glasses is based on 3 basic sight glasses: LLG 185, LLG 335 and LLG 740. The other standard lengths are combined by using variations of basic glass lengths.

LLG produce sufficient flow areas to secure the highest possible degree of synchronous operation, and have a specially hardened reflection glass for quick reading. The front and the base frame are mounted together from the front with countersunk allen screws. This ensures easy insulation on site as well as easy inspection and service, if any.

All sight glasses are equipped as standard with a built-in safety system (non return device). If a glass is damaged, the pressure of the refrigerant will activate the safety system and refrigerant loss will be limited to an absolute minimum.

Features

- Refrigerants
  Applicable to HCFC, HFC and R717 (Ammonia).
- Temperature range
  -10 – 100 °C / -14 – 212 °F or
  -50 – 30 °C / -58 – 86 °F
- Maximum operating pressure:
  25 bar g / 363 psi g
- Equipped with boron silicate glass, hardened by an accurately controlled heat treatment process
- Classification: CRN, EAC etc.
  To get an updated list of certification on the products please contact your local Danfoss Sales Company.

Technical data

- *Refrigerants*
  Applicable to HCFC, HFC and R717 (Ammonia).
  For further information please see installation instruction for LLG.
  Flammable hydrocarbons are not recommended. For further information please contact your local Danfoss Sales Company.
- *Temperature range*
  The sight glasses are applicable to the above mentioned refrigerants within the temperature range of:
  -10 – 100 °C / 14 – 212 °F for the LLG types with safety system with welding nipples and the LLG S types with safety system with stop valves.
  -50 – 30 °C / -58 – 86 °F for the LLG SF types with safety system with stop valves and sight adapter (acrylic glass) and the LLG F types with safety system and sight adapter (acrylic glass).
- *Pressure range*
  All LLG types are designed for:
  Max. operating pressure 25 bar g / 363 psi g
  Strength test: 50 bar g / 725 psi g
  Leakage test: at 25 bar g / 363 psi g.

Design

Glass
LLG's are equipped with a boronsilicate glass, hardened by an accurately controlled heat treatment process. All glasses are according to DIN 7081.

Gaskets
The glasses are equipped with a special non-asbestos carbon compound gasket which provides superior mechanical characteristics and a long time guarantee against service leakage.

Connectors
LLG 590, LLG 995, LLG 1145 and LLG 1550 are joined together by 2 basic LLG's by means of a connector. The connector holds the two basic glasses together by means of screws and guiding pins, which ensures a rigid construction.

Stop Valves / Nipples
The glasses are connected to the refrigeration system by means of welding nipples or stop valves. Which ever system is used, the nipples or stop valves are screwed into a flange, which is located in the correct position and subsequently tightened with a seal gasket and 4 screws.

Installation
Install the glasses on a bracket using the 4 screws supplied with the glass.

Use the threaded holes on the back of the frame to mount the glass on a bracket (not of Danfoss supply). Always connect the piping after mounting on the bracket. Please note the importance of a minimum of stress in the sight glasses from the connected pipes.
Please also make sure that there is sufficient space behind the the sight glasses to ensure proper insulation, service and inspection, etc.

For installations below -10 °C / 14 °F it is recommended to add the sight adapter to enable reading after insulation has been applied.
For installations below -10 °C / 14 °F in R717 plants it is recommended to use an oil column as described in the following pages. There will be no formation of bubbles or ice build-up in oilfilled sight glasses, which may be the case in the refrigerant-filled glasses.

The sight glasses are designed to withstand high internal pressures. However, the piping system in general should be designed to avoid liquid traps and reduce the risk of hydraulic pressure caused by thermal expansion.

Note:
The LLG sight glass can only be placed in CE approved applications with the stop valves in front.

Frostproof sight glasses

Example 1
Refrigerant: R717 (ammonia).
Temperature: Recommended for temperatures below -10 °C / 14 °F.

The principle shown in fig. 1 can be used in connection with low temperature liquid separators or intermediate coolers when the refrigerant is R717 (ammonia).

As the liquid level in the R717 separator varies the oil level will change simultaneously.

Oil Charging
The system is charged with synthetic oil type SHC 226 with a specific weight, differing from that of R717, and (h) must be multiplied by approximately 1.35 (the ratio of density oil to density R717) to calculate H.

Charge the oil vessel (volume approximate 10 litres) to a level just below the lower balancing pipe (A) through the oil charging valve. Close the oil charging valve.

The oil will show in the sight glass at a level equal to the level in the oil vessel. When R717 is filled into the separator or intermediate cooler it will enter the oil vessel and press down the oil surface.

The R717 will also rise into the upper balance pipe (B) to a level equal to the level in the separator or intermediate cooler. As the oil surface in the oil vessel is pressed down, the oil will rise into the sight glass.

Note:
It is important to use an oil which is not likely to mix with R717. The oil must have a high viscosity index to ensure easy flowing at low temperatures. Mobil SHC 226 of the synthetic polyalphaolefin type has proven suitable for this purpose.

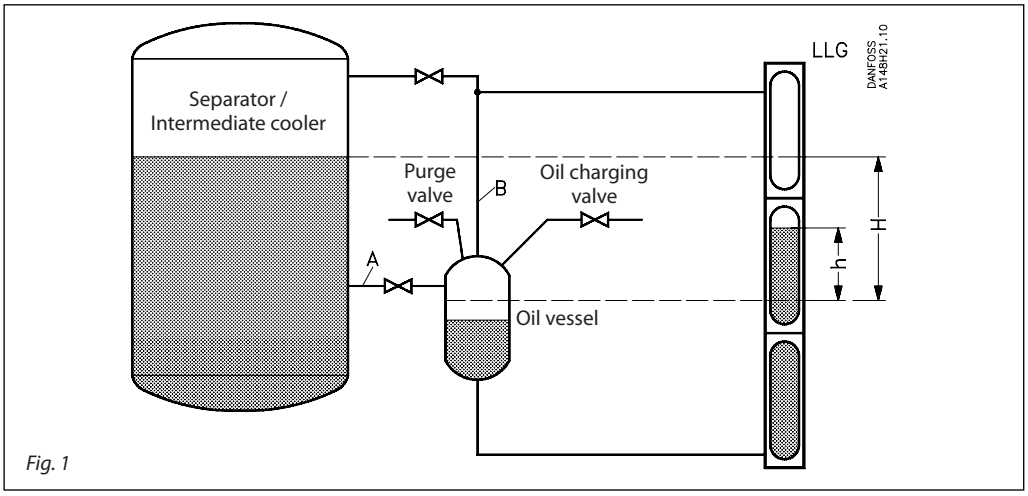

Fig. 1

Frostproof sight glasses

Example 2
Refrigerant: R717 (ammonia).
Temperature: Recommended for temperatures below -10°C / 14 °F

Fig. 2 shows a frostproof sight glass for an R717 liquid separator which is placed above ground level. The arrangement is called a Hampsonmeter.

Due to the evaporation taking place in the uninsulated balance pipe (ND 80/3 in) the pressure in this pipe will be equal to
$P_1 = P_0 + H \times \rho \times g$.

P_0	Separator pressure	N/m^2
H	R717 liquid level (see fig. 2)	m
ρ	R717 density	kg/m^3
g	Acceleration due to gravity 9.81	m/s^2

Oil Charging
The pressure will act on the oil surface in the oil vessel and cause the oil to rise in the sight glasses which are installed in a length of e.g. 2 in pipe, the top of which is connected to the top of the separator which is at pressure P_0.

The oil will rise to a level h and H can then be calculated by multiplying h by 1.35 (the ratio of density oil to density R717).

Charge the oil vessel through the oil charging valve to a level of approximately ¾ of full level. The level will show in the lower sight glass.

Take care that the volume of the oil vessel is sufficient to allow the oil to rise into the sight glasses. When the system is operating keep the bypass valve closed.

Note:
It is important to use an oil not likely to mix with R717, and having a high viscosity index to ensure easy oil movements at low temperatures. Mobil SHC 226 of the synthetic polyalphaolefin type has proven suitable for this purpose.

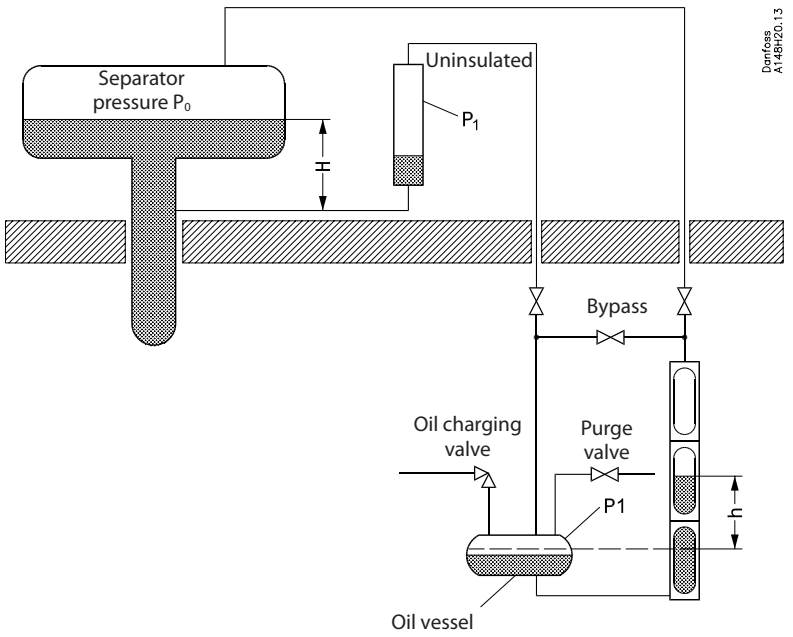

Fig. 2

Material specification

LLG

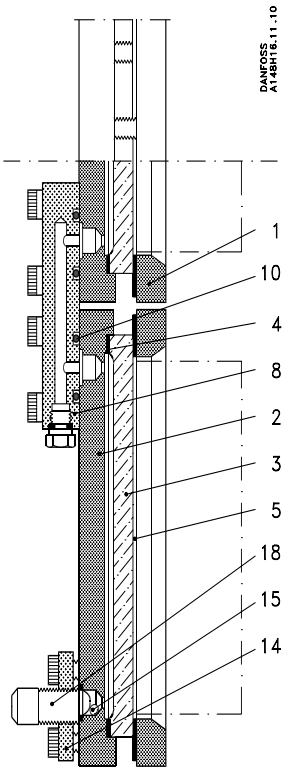

LLG S and LLG SF

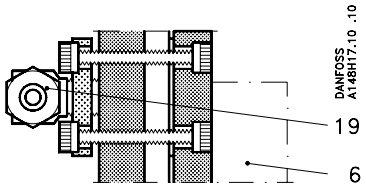

No.	Part	Material	DIN	ISO	ASTM
1	Front frame	Steel	RSt. 37.2, 17 100	Fe 360 B, 630	Grade C, A 283
2	Back frame	Steel	RSt. 37.2, 17 100	Fe 360 B, 630	Grade C, A 283
3	Sight glass	Glass			
4	Gasket	Non-asbestos			
5	Protective coating for sight glass	Non-asbestos			
6	Sight adapter	PMMA-acrylic			
8	Connecting piece	Steel	RSt. 37.2, 17 100	Fe 360 B, 630	Grade C, A 283
10	O-ring	Cloroprene (Neoprene)			
14	Flange	Steel	RSt. 37.2, 17 100	Fe 360 B, 630	Grade C, A 283
15	Balls	Stainless steel			
18	Welding nipple	Steel	RSt. 37.2, 17 100	Fe 360 B, 630	Grade C, A 283
19	Stop valve (SNV-ST*)	Steel			

* See technical data for SNV-ST valves.

Dimensions and weights

LLG

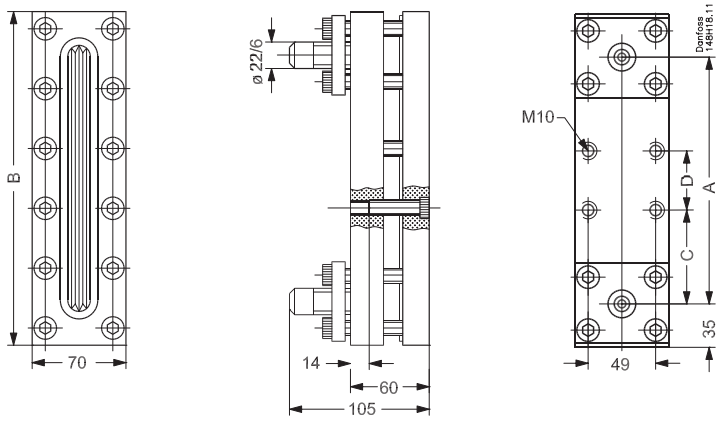

LLG S and LLG SF

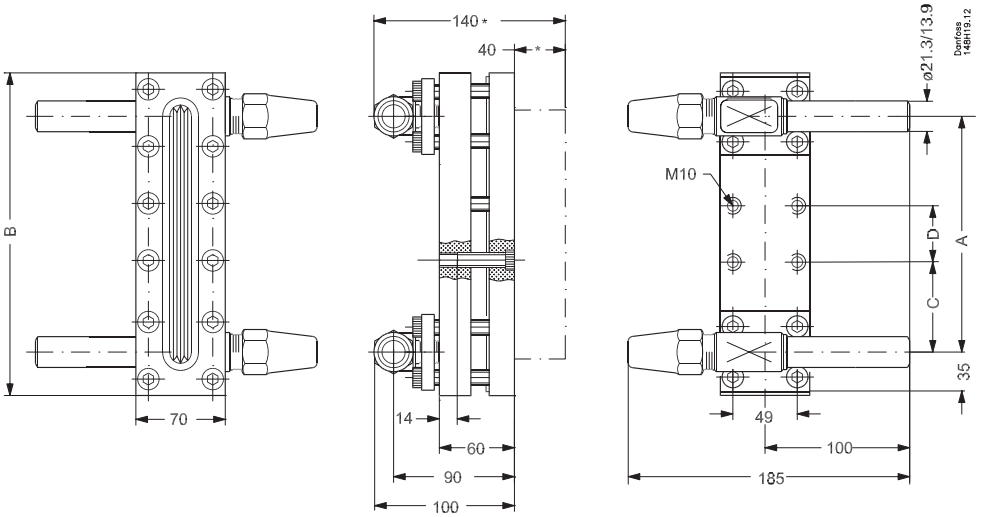

* Only for LLG SF with sight adapter.

Type		A		B		C	D	Weight
LLG 185 - 1550								
LLG 185	[mm] [in]	185 7¼		255 10		69 2 ¾	48 2	4.2 kg [1] 5.8 kg [2]
LLG 335	[mm] [in]	335 13¼		405 16		63 2 ½	42 1 ¾	7.5 kg [1] 9.2 kg [2]
LLG 590	[mm] [in]	590 23¼		660 26		69 + 63 2 ¾ + 2 ½	48 + 42 2 + 1 ¾	13.2 kg [1] 15.1 kg [2]
LLG 740	[mm] [in]	740 29¼		810 32		63 2½	42 1 ¾	16.5 kg [1] 18.5 kg [2]
LLG 995	[mm] [in]	995 39¼		1065 42		69 + 63 2 ¾ + 2 ½	48 + 42 2 + 1 ¾	22.5 kg [1] 24.7 kg [2]
LLG 1145	[mm] [in]	1145 45		1215 47¾		63 2 ½	42 + 42 1 ¾ + 1 ¾	25.7 kg [1] 28.0 kg [2]
LLG 1550	[mm] [in]	1550 61		1620 63¾		63 2 ½	42 1 ¾	33.5 kg [1] 36.1 kg [2]

[1] Type LLG
[2] Type LLG S and LLG SF

Specified weights are approximate values only.

* please note that LLG 740 consist of one back piece and 2 front sight glasses.

Ordering

How to order
The table below is used to identify sight glasses required.

Please note that the type codes only serve to identify the sight glasses, some of which may not form part of the standard product range.

For further information please contact your local Danfoss Sales Company.

Example for type codes

LLG 740 SF

Type codes

Valve type	LLG	Sight glass	
Nominal size in mm			Combined by:
	185	DN 185	
	335	DN 335	
	590	DN 590	LLG 185 + LLG 335
	740	DN 740	LLG 740 consist of one back piece and 2 front sight glasses
	995	DN 995	LLG 185 + LLG 740
	1145	DN 1145	LLG 335 + LLG 740
	1550	DN 1550	LLG 740 + LLG 740
Equipment	**-**	Safety system and welding nipples	
	F	Safety system and sight adapter	
	S	Safety system and stop valves (SNV-ST)	
	SF	Safety system, stop valves (SNV-ST) and sight adapter	

Sight glasses - LLG

With safety system and welding nipples

Length [mm]	Length [in]	Type	Code no.
185	7 ¼	LLG 185	**2512+049**
335	13 ¼	LLG 335	**2512+050**
590	23 ¼	LLG 590	**2512+051**
740	29 ¼	LLG 740	**2512+052**
995	39 ¼	LLG 995	**2512+053**
1145	45	LLG 1145	**2512+054**
1550	61	LLG 1550	**2512+055**

Sight glasses - LLG S

With safety system and stop valves (SNV-ST)

Length [mm]	Length [in]	Type	Code no.
185	7 ¼	LLG 185 S	**2512+056**
335	13 ¼	LLG 335 S	**2512+057**
590	23 ¼	LLG 590 S	**2512+058**
740	29 ¼	LLG 740 S	**2512+059**
995	39 ¼	LLG 995 S	**2512+060**
1145	45	LLG 1145 S	**2512+061**
1550	61	LLG 1550 S	**2512+062**

Sight glasses for insulating - LLG F

With safety system and sight adapter

Length [mm]	Length [in]	Type	Code no.
185	7 ¼	LLG 185 F	**2512+078**
335	13 ¼	LLG 335 F	**2512+079**
590	23 ¼	LLG 590 F	**2512+080**
740	29 ¼	LLG 740 F	**2512+081**
995	39 ¼	LLG 995 F	**2512+082**
1145	45	LLG 1145 F	**2512+083**
1550	61	LLG 1550 F	**2512+084**

Sight glasses for insulating - LLG SF

With safety system, stop valves (SNV-ST) and sight adapter

Length [mm]	Length [in]	Type	Code no.
185	7 ¼	LLG 185 SF	**2512+066**
335	13 ¼	LLG 335 SF	**2512+067**
590	23 ¼	LLG 590 SF	**2512+068**
740	29 ¼	LLG 740 SF	**2512+069**
995	39 ¼	LLG 995 SF	**2512+070**
1145	45	LLG 1145 SF	**2512+071**
1550	61	LLG 1550 SF	**2512+072**

Important!
Where products need to be certified according to specific certification societies or where higher pressures are required, the relevant information should be included at the time of order.

ENGINEERING
TOMORROW

Valve station
ICF 15, ICF 20, ICF 25, ICF 50 and ICF 65

Contents **Page**

Features ... 501
Technical data ... 502
Design ... 502
Description of the function modules for ICF 15 and 20 ... 506
Description of the function modules for ICF 25 ... 507
Description of the function modules for ICF 50 and ICF 65 ... 508
Material specification ... 509
Code number selection ... 518
Connections ... 522
Ordering ICF valve station ... 523
Label example: ... 523
Dimensions ... 539

AI251686497769en-001003 | 2018.11

ENGINEERING TOMORROW

Valve station
ICF 15, ICF 20, ICF 25, ICF 50 and ICF 65

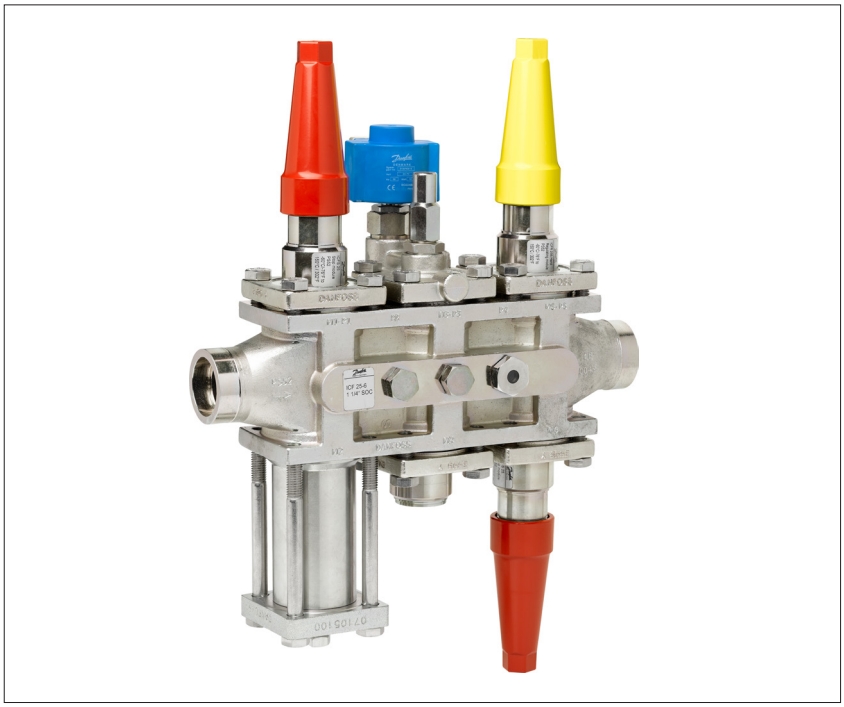

Based on advanced technology the ICF valve station incorporates several functions in one housing, which can replace a series of conventional mechanical, electro-mechanical and electronically operated valves.

This valve station not only provides a number of advantages in the design phase of a refrigeration plant but also in the installation, service and maintenance.

The ICF valve stations are designed for low and high pressure refrigerants and can be used in pumped liquid lines, liquid injection lines, liquid drain lines and hot gas lines.

Supplied as a complete assembly, it is fully tested at high pressure and its functions are tested under factory controlled conditions.

One code number equals one application solution.

Features

- Designed for industrial refrigeration applications for a maximum working pressure of 52 bar/754 psig.
  (For ICF with ICFD defrost module; see Technical Data, *Pressure*)
- Applicable to HCFC, non flammable HFC, R717 (Ammonia) and R744 (CO_2).
  The use of ICF valve stations with flammable hydrocarbons is not recommended.
- Direct weld connections
  (No leaks through flanges)
- Connection types include butt weld and socket weld.
- Low temperature steel housing.
- Low weight and compact design.
- V-port regulating cones on the control modules ensure optimum regulating accuracy particularly at part load.
- Modular Concept
  Each housing is available with several different connection types and sizes.
  Valve service is performed by replacing the function module.
- Side ports for the connection of pressure gauges, transmitters, sight glasses, service valve etc.
- UL approved

CE

ICF valve station		
Nominal bore	DN≤ 25 (1 in.)	DN 32-65 (1¼ - 2½")
Classified for	Fluid group I	
Category	Article 4, paragraph 3	II

Technical data

- *Refrigerants*
  Applicable to HFC, R717 (Ammonia) and R744 (CO_2).
  The use of ICF valve stations with flammable hydrocarbons is not recommended.

  Exception:
  ICFD is released for ammonia and land-based applications only. For CO_2, please contact the local Danfoss Sales company.

  For further information please contact the local Danfoss sales company.
- *Temperature range*
  ICF complete platform
  –60/+120°C (–76/+248°F)

  Exceptions:
  ICM: If the ICM module is going to be used in liquid refrigerant with a temperature above 75°C (+167°F), please contact Danfoss.

  ICFD: –50/+50°C (–58/+122°F) at 28 Bar (406 psig) in ammonia
- Ambient temperature for ICF with ICAD:
  –30°C/+50°C (–22°F/122°F)
- *Surface protection*
  The external surface is zinc-TLP treated to provide corrosion protection according to EN ISO 2081:2009
  Additional on-site corrosion protection is recommended.
- *Pressure*
  The ICF is designed for:
  Max. working pressure: 52 bar g (754 psig).
  For ICF with ICFD module the max. working pressure is 28 bar g (406 psi g).
  If the refrigeration system include ICFD module, a test pressure of the system must not exceed 28 bar (406 psi g), unless the ICFD float is temporarily taken out before test.

  ICFD is released for ammonia and land-based applications only. For CO_2, please contact the local Danfoss Sales company.

  Max. working pressure for ICFD without float: 52 Bar/754 psig.

  Opening differential pressure:
  Please refer to the individual function module data.

Design

The main components of the ICF valve station are:

- A housing
- A maximum of four or six function modules (ICF 65 - max. 3)
  - In all ICF 15 the modules M1 and M2 are predefined as shut-off valve and strainer module.
  - In all ICF 50 the modules M1 and M2 are predefined as shut-off valve and blind cover (prepared for strainer).
  - In all ICF 65 the module M1 is predefined as shut-off valve

Housing

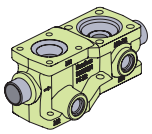

ICF 15-4

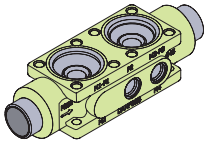

ICF 20-4

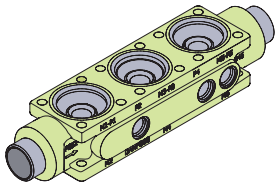

ICF 20-6

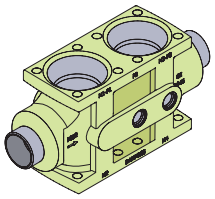

ICF 25-4

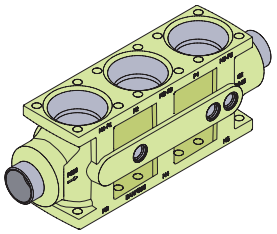

ICF 25-6

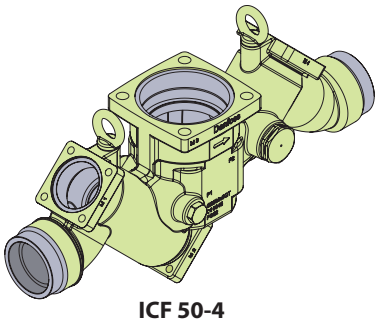

ICF 50-4

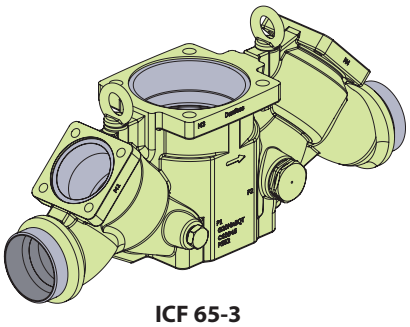

ICF 65-3

Function modules

Each housing accommodates a maximum of four or six function modules (ICF 65 max. 3), of the following types:

- Shut-off valve module
- Manual regulating valve module
- Strainer module
- Solenoid valve module
- Electronic expansion valve module
- Manual opening module
- Check valve module
- Stop & check valve module
- Pilot operated servo valve module
- Defrost drain module
- Motor operated valve module
- External welding connection module
- Blind top cover

Optional:
The housings are supplied with a predefined number of side ports for the following options:

- Sight glass
- Temperature or pressure sensor
- Pressure gauge
- Side exit for drain or bypass.

The design allows maximum capacity and minimum pressure drop, using advanced technology and double seats – offering higher capacity than conventional systems using individual valves and components.

The ICF valve station is multifunctional.

ICF valve station offers compact dimensions and shortened installation time due to the reduced number of direct welded connections.

Supplied as a complete assembly, it is leak tested at high pressure and its functions are tested under factory controlled conditions.

Connections
There is a wide range of connection types and sizes available with ICF valve stations:

- D: Butt weld, DIN (EN 10220)
- A: Butt weld, ANSI (ASME B 36.10M SCHEDULE 80)
  A: Butt weld, ANSI (ASME B 36.19 SCHEDULE 40)
- SOC: Socket weld, ANSI (B 16.11)

Approvals
The ICF concept is designed to fulfil global refrigeration requirements.
For specific approval information, please contact Danfoss.

Housing and function module material
Low temperature steel

When using TIG/MIG/SMAW welding technology, it is possible to install the ICF valve station without prior removal of the function modules from the housing. If using other welding methods the modules must be removed during welding.

Please consult the product instruction for more details.

Module and side port arrangement

ICF 15-4

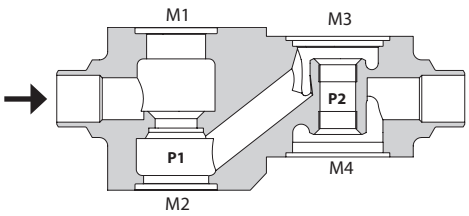

Flow in an ICF 15-4

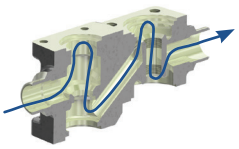

ICF 20-4, 25-4

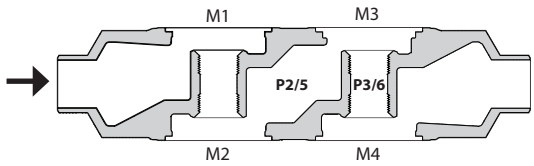

Flow in an ICF 20-4, 25-4

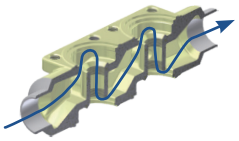

ICF 20-6, 25-6

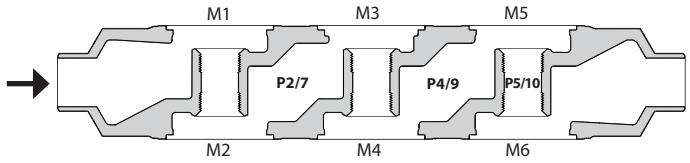

Flow in an ICF 20-6, 25-6

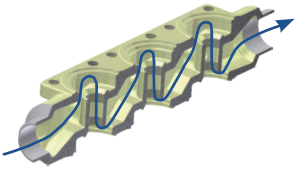

ICF 50-4

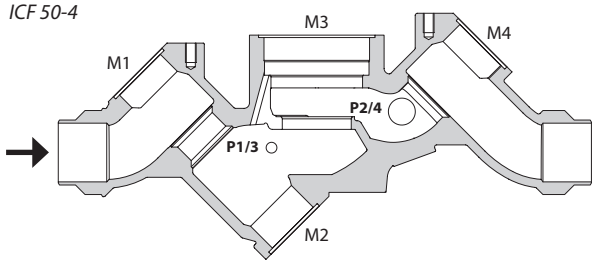

Flow in an ICF 50-4

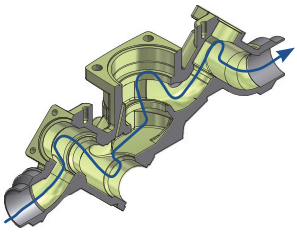

ICF 65-3

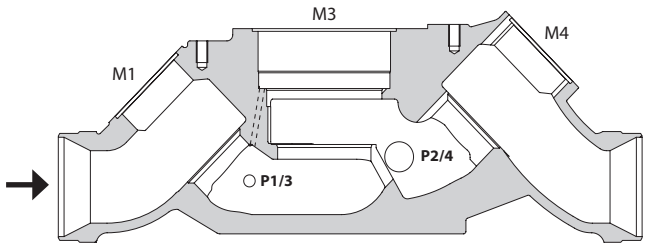

Flow in an ICF 65-3

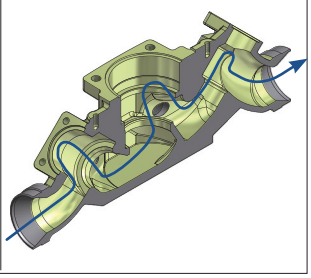

Module and side port arrangement (continued)

All ICF 15-4 DIN, ANSI and Socket connections. 2 side ports - right hand side in flow direction.

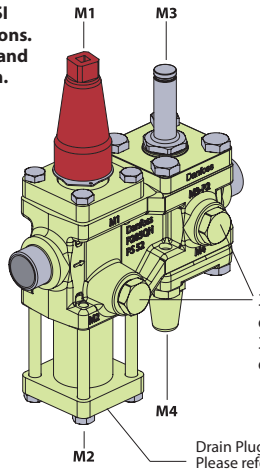

Example: ICF 15-4-8 DIN

All ICF 20/25-4 DIN, ANSI and Socket connections. 4 side ports - 2 opposite on each side.

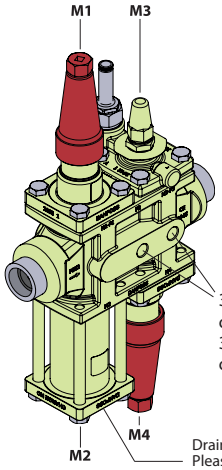

Example: ICF 25-4-9 SOC

All ICF 20/25-6 DIN, ANSI and Socket connections. 6 side ports - 3 opposite on each side

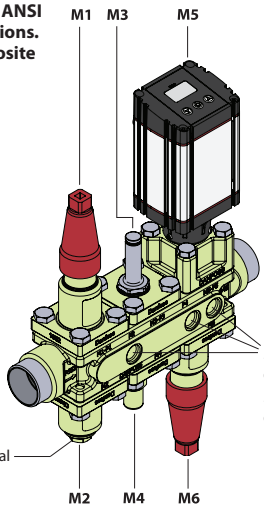

Example: ICF 20-6-5MB DIN

All ICF 20/25-6 DIN, ANSI and Socket connections. 6 side ports - 3 opposite on each side.

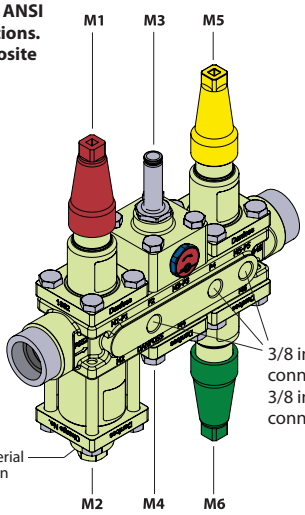

Example: ICF 20-6-2HRB SOC

All ICF 50-4 DIN, ANSI and Socket connections. 4 side ports - 2 opposite on each side

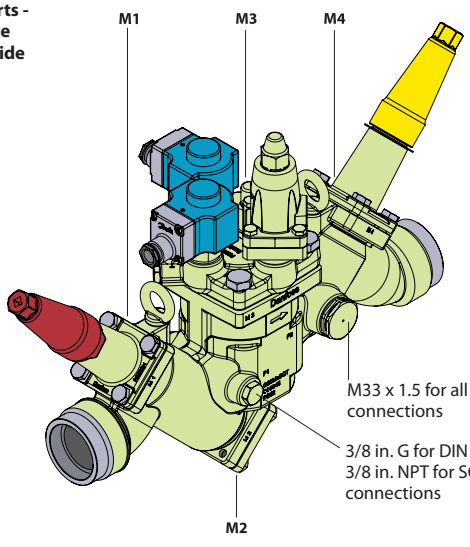

Example: ICF 50-4-42S50 SOC

All ICF 65-3 DIN and ANSI connections. 4 side ports - 2 opposite on each side

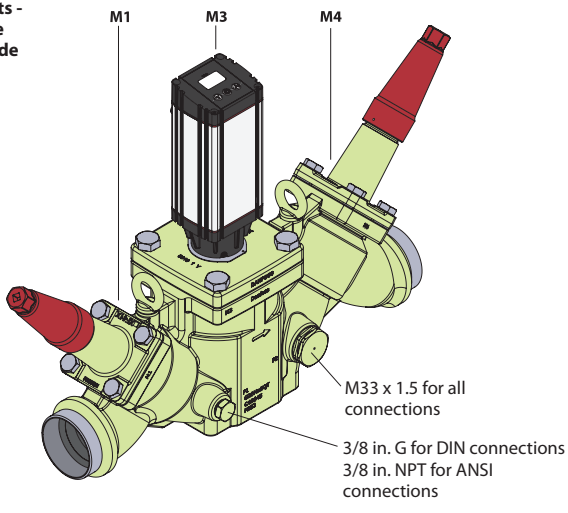

Example: ICF 65-3-43MA DIN

ICF 15 and ICF 20

Description of the function modules for ICF 15 and 20
ICF 15 and ICF 20 have the same function modules except for the two fixed modules M1 (stop valve ICFS 15) and M2 (filter ICFF 15) in ICF 15.

ICFS 15 / ICFS 20
Shut-off valve module
This module has the function of a stop valve, and has a red cap.

ICFR 20A
Manual regulating valve module
This module has the function of a hand regulating valve, and has a yellow cap.

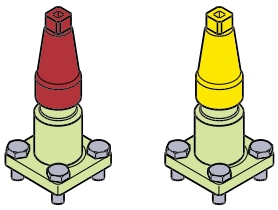
ICFS 15/ICFS 20 ICFR 20A

ICFC 20
Check valve module
This module has the function of a check valve.

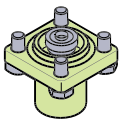
ICFC 20

ICFF 15/20 / ICFF 20E
Strainer module
This module functions as a strainer.
ICF 15, all connections:
Strainer element 150µ (100 mesh) 60 cm² (9.3 in²)
ICF 20, with DIN/ANSI connections:
Pleated 150µ (100 mesh) 45 cm² (7.0 in²)
ICF 20 with SOC connections (ICFF 20E):
Pleated 150µ (100 mesh) / 160 cm² (24.8 in²)

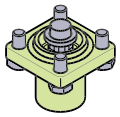
ICFF 15/20 / ICFF 20E

ICFN 20
Stop & check valve module
This module has the function of a combined stop and check valve, and has a green cap.

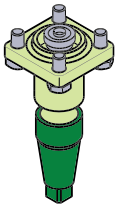
ICFN 20

ICFE 20
Solenoid valve module
This module has the function of a normally closed solenoid valve for controlling the refrigerant flow.

ICFA 20
Electronic expansion valve module
This module has the function of an electronic pulse width modulating (PWM) expansion valve.

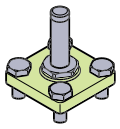
ICFE 20 / ICFA 20

ICM 20-A, B or C
Motor operated valve module
This module is a stepper motor actuator valve for on/off and modulating control of the refrigerant flow.

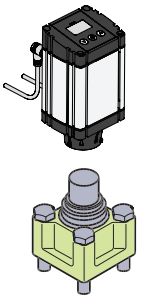
ICM 20-A, B or C

ICFO 20
Manual opening module
This module facilitates the manual opening of the solenoid valve (type ICFE).

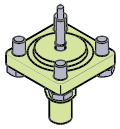
ICFO 20

ICFB 20
Blind top cover
This provides a blanking cover for unused module ports.

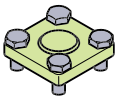
ICFB 20

ICFE 20H
Solenoid valve module with integrated manual opener
This module has the function of a normally closed solenoid valve for controlling the refrigerant flow.

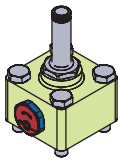
ICFE 20H

ICFW 20
Welding module 20 DIN or ¾" SOC
This module is used for drain connection during hot-gas defrosting - in case of high capacity.

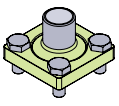
ICFW 20

ICFD 20
Float operated valve module. This module opens for liquid flow when the float is lifted by the internal liquid level.

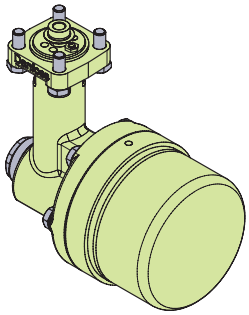

Please note:
At about 10% of maximum mass flow of ICFE 20H, the pressure differential correspond to about 0.07 Bar (1 psi). ICFE 20H will start to open at these conditions.
At a pressure differential of minimum 0.2 Bar (2.9 psi) ICFE 20H will be 100 % open.

Description of the function modules for ICF 25

ICF 25

ICFS 25
Shut-off valve module
This module has the function of a stop valve, and has a red cap.

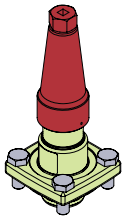
ICFS 25

ICFR 25, A or B
Manual regulating valve module
This module has the function of a hand regulating valve, and has a yellow cap.


ICFR 25

ICFC 25
Check valve module
This module has the function of a check valve.

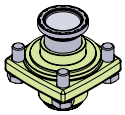
ICFC 25

ICFF 25 / ICFF 25E
Strainer module
This module functions as a strainer.

Strainer size:
ICF with DIN and ANSI (ICFF 25) connections: Pleated 150µ (100 mesh) / 160 cm² (24.8 in²)

ICF with SOC connections (ICF 25E):
Pleated 150µ (100 mesh) / 330 cm² (51.2 in²)

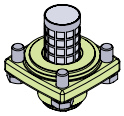
ICFF 25 / ICFF 25E

ICFN 25
Stop & check valve module
This module has the function of a combined stop and check valve, and has a green cap.

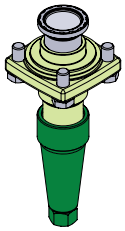
ICFN 25

ICFE 25
Solenoid valve module
This module has the function of a normally closed solenoid valve for controlling the refrigerant flow.

It has a built-in manual opening function.

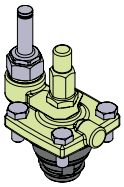
ICFE 25

ICM 25-A or B
Motor operated valve module
This module is a stepper motor actuator valve for on/off and modulating control of the refrigerant flow.

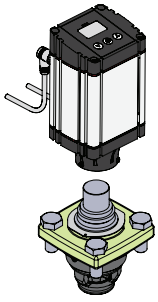
ICM 25-A or B

Please note:
At about 10% of maximum mass flow of ICFE 25, the pressure differential correspond to about 0.07 Bar (1 psi). ICFE 25 will start to open at these conditions.

At a pressure differential of minimum 0.2 Bar (2.9 psi) ICFE 25 will be 100 % open.

ICFW 25
Welding module, 25 DIN or 25 (1") SOC
This module is used for drain connection during hot-gas defrosting - in case of high capacity.

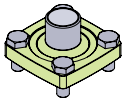
ICFW 25

ICFB 25
Blind top cover
This provides a blanking cover for unused module ports.

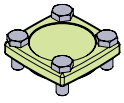
ICFB 25

Description of the function modules for ICF 50 and ICF 65

ICF 50 and ICF 65

SVA-S 50 / SVA 65
Shut-off valve module
This module has the function of a stop valve, and has a red cap.

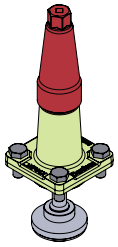

SVA-S 50 / SVA-S 65

REG-SB 50 / REG-SB 65
Manual regulating valve module
This module has the function of a hand regulating valve, and has a yellow cap.

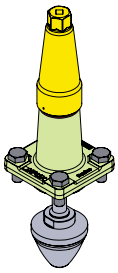

REG-SB 50 / REG-SB 65

ICFB 50
Blind cover
Prepared for insert of strainer (see below)

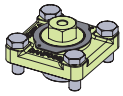

ICFB 50

FIA 50 (option)
Strainer insert

Please order FIA 50 strainer insert and element from the FIA part programme. For further information please consult the data sheet for FIA strainers.

Available elements:
See below.

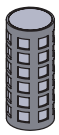

FIA 50

Strainer insert 100µ 150 mesh	Strainer insert 150µ 100 mesh	Strainer insert 250µ 72 mesh	Strainer insert 500µ 38 mesh	Pleated Strainer insert 150µ 100 mesh	Pleated Strainer insert 250µ 72 mesh	Pleated Strainer insert 500µ 38 mesh
148H3157	**148H3130**	**148H3138**	**148H3144**	**148H3179**	**148H3184**	**148H3189**

ICS 50 / ICS 65
Pilot-operated valve module
This module has the function of a pilot-operated valve for on/off and modulating control of the refrigerant flow.

All ICS modules are 3-pilot versions. They are supplied with two blanking plugs (A) and one sealing plug (B).

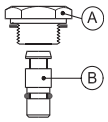

ICS 50 and 65 inserts are available in different capacities:

ICS 50:	**ICS 65:**
ICS 50	ICS 65
ICS 50-32	ICS 65-40
ICS 50-40	ICS 80

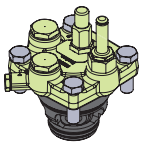

ICS 50 / ICS 65

ICM 50 / ICM 65 - A or B
Motor operated valve module
This module is a stepper motor actuator valve for on/off and modulating control of the refrigerant flow.

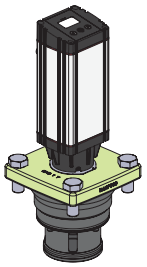

ICM 50 / ICM 65 - A or B

ICLX 50 / ICLX 65
2-step solenoid valve module
This module has the function of a normally closed gas powered solenoid valve for controlling the refrigerant flow.
It has a built-in manual opening function.
ICLX is used in suction lines for opening in 2 steps after hot gas defrost.

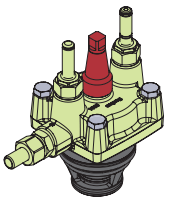

ICLX 50 / ICLX 65

ICSH 50/ICSH 65
2-step solenoid valve module
This module has the function of a normally closed solenoid valve for controlling the refrigerant flow.
It has a built-in manual opening function.
ICSH is used in hot gas lines for the opening of hot gas defrost flow to the evaporator in 2 steps.

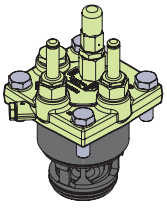

ICSH 50 / ICSH 65

Material specification

ICF housing

ICF 15-4

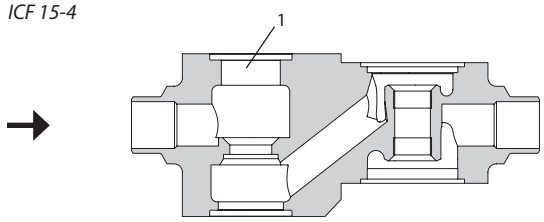

Pos.	Part	Material	EN*	ASTM**	JIS**
1	Housing	Steel	P285QH, 10222-4	LF2, A350	

ICF 20-4, 25-4

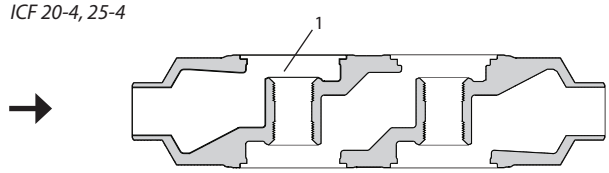

ICF 20-6, 25-6

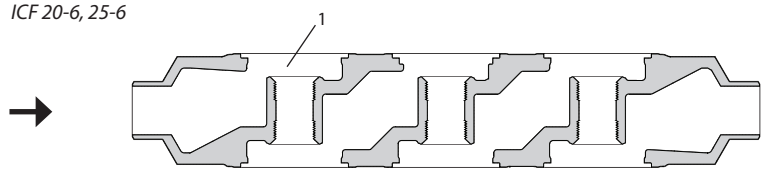

Pos.	Part	Material	EN*	ASTM**	JIS**
1	Housing	Cast steel low temperature	G20MN5QT EN 10213-3	LCC, A352	SCPL1, G5151

ICF 50-4

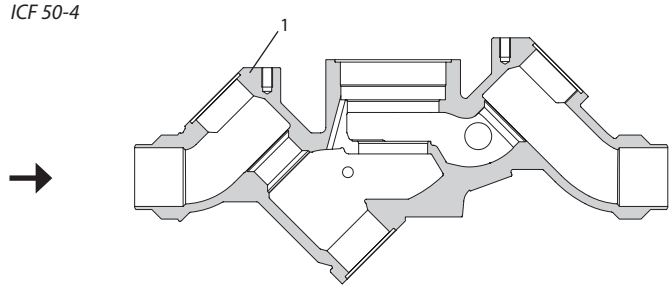

ICF 65-3

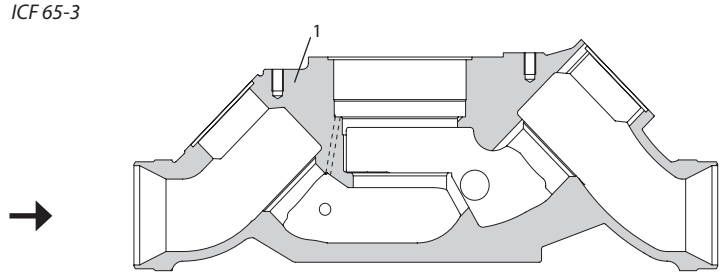

Pos.	Part	Material	EN*	ASTM**	JIS**
1	Housing	Cast steel low temperature	G20MN5QT EN 10213-3	LCC, A352	SCPL1, G5151

* EN: Primary Design Standard
** ASTM, JIS: Equivalent Material Standard

Material specification
(continued)

ICFS 15 shut-off valve module

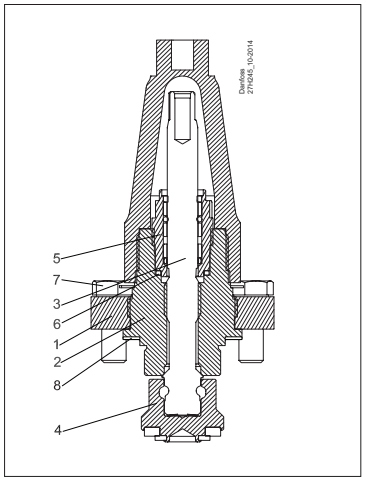

Pos.	Part	Material	EN*	ASTM**	JIS**
1	Bonnet, Flange Steel	Steel	G20Mn5QT, 10213-3 P285QH+QT, 10222-4 P275NL, 10028-3	LCC, A352 LF2, A350	
2	Bonnet, Insert	Steel	11SMn30 10087	AISI 1213	Type 2 R 683/9
3	Spindle	Stainless steel	X8CrNiS18-9 10088	AISI 303	Type 17 683/13
4	Cone	Steel	11SMn30 10087	AISI 1213	Type 2 R 683/9
5	Packing gland	Stainless steel	X8CrNiS18-9 10088	AISI 303	Type 17 683/13
6	Packing washer	Aluminium			
7	Bolts	Stainless steel	A2-70	Type 308	A2-70
8	Gasket	Fiber, Non-asbestos			

ICFS 20 shut-off valve module

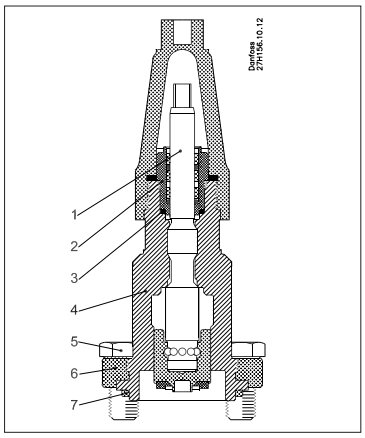

Pos.	Part	Material	EN*	ASTM**	JIS**
1	Spindle	Stainless steel	X8CrNiS 18-9 EN 10088		G4303 G4304
2	Thread part	Stainless steel	X8CrNiS 18-9 EN 10088		G4303 G4304
3	AL-gasket/ Refrig. gasket		AL99 alloy no. 1200 DIN 1712 BL.3	AL1200	
4	Bonnet	Steel	S235JRG2 EN 10025	A283	G3101
5	Hex-head bolt M10 × 25	Stainless steel	A2-70 EN 24017	A320	A2-70
6	Flange	Cast steel low temperature	G20Mn5QT EN 10213-3	A352	G5152
7	Gasket	Chloroprene (Neoprene)			

ICFF 15 strainer module (strainer element 150µ (100 mesh) 60 cm² (9.3 in²)

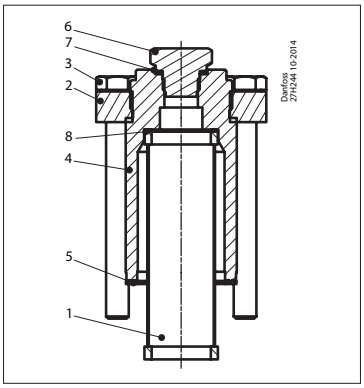

Pos.	Part	Material	EN*	ASTM**	JIS**
1	Strainer	Stainless steel			
2	Flange bonnet	Steel	G20Mn5QT, 10213-3 P285QH+QT, 10222-4 P275NL, 10028-3	LCC, A352 LF2, A350	
3	Bolt	Stainless steel	A2-70	Type 308	A2-70
4	ICFF 15 bonnet	Steel	S355J2+N 1.0570 / 1.0577 EN 10025-2	ASTM A572-50	
5	Flat gasket	Fiber, Non-asbestos			
6	Plug ¼" RG for butt-weld 3/8" NPT for socket weld	Steel	11SMnPb30		
7	Gasket - metal joint	Aluminium			
8	Wave spring	Steel			

ICFF 20 strainer module

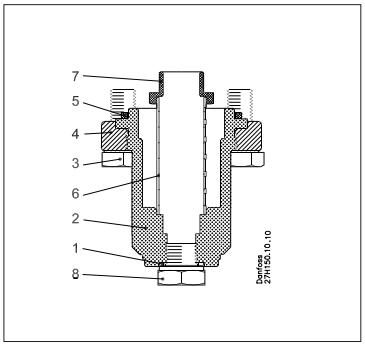

Pos.	Part	Material	EN*	ASTM**	JIS**
1	Gasket	AL 99 F11			
2	Bonnet	Steel	S235JRG2 EN 10025	A283	G3101
3	Hex-head bolt M10 × 25	Stainless steel	A2-70 EN 24017	A320	A2-70
4	Flange	Cast steel low temperature	G20Mn5QT EN 10213-3	A352	G5152
5	Gasket	Chloroprene (Neoprene)			
6	Strainer element	Stainless steel 150µ	1.4301	A304	SUS304
7	Plug	Steel			
8	Plug ¼" RG for butt-weld 3/8" NPT for socket weld	Stainless steel	A2-70 EN 24017	A320	A2-70

* EN: Primary Design Standard
** ASTM, JIS: Equivalent Material Standard

Material specification
(continued)

ICFF 20E extended strainer module

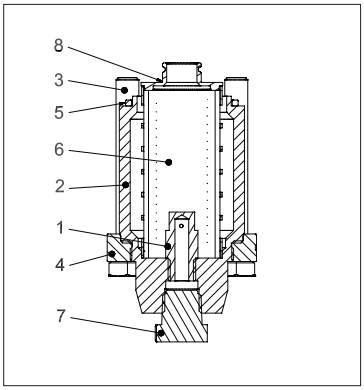

Pos.	Part	Material	EN*	ASTM**	JIS**
1	Dirt protection plug	Steel	11SMn30 EN 10087	Grade 1213 A29	G4804
2	Bonnet	Steel	11SMn30 EN 10087	Grade 1213 A29	G4804
3	Hex-head bolt M12x80	Stainless steel	A2-70 EN 1515-1	Grade B8 A320	A2-70 B1054
4	Flange	Steel	P285QH: EN 10222-4 G20Mn5QT; EN 10213-3	LF2 - A350 LCC - A352	SFL2 - G3205 SCPL1 - G5152
5	Gasket	Chloroprene (Neoprene)			
6	Strainer element	Stainless steel 250µ	1.4301	A304	SUS304
7	Plug 3/8" NPT	Steel	11SMn30 EN 10087	Grade 1213 A29	G4804
8	Strainer adaptor	Steel	11SMn30 EN 10087	Grade 1213 A29	G4804

ICFE 20 solenoid valve module

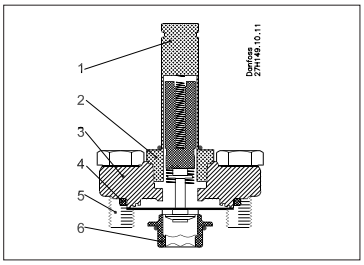

Pos.	Part	Material	EN*	ASTM**	JIS**
1	Armature tube	Stainless steel	X2CrNi19-11 EN 10088		
2	Armature tube nut	Stainless steel	X8CrNiS18-9 EN 10088		
3	Flange	Cast Steel low temperature	G20Mn5QT EN 10213-3	A352	G5152
4	Gasket	Chloroprene (Neoprene)			
5	Hex-Head bolt M10 × 25	Stainless steel	A2-70 EN 24017	A320	A2-70
6	Seat	High density polymer			

ICFE 20H solenoid valve module

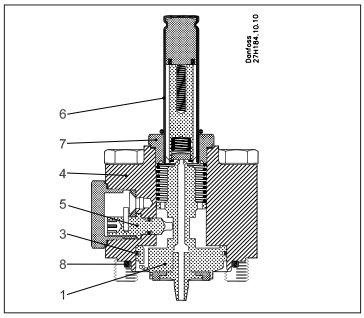

Pos.	Part	Material	EN*	ASTM**	JIS**
1	Piston	Steel	11SMn30 EN EN 10025		
2	Seat	Teflon			
3	Piston ring				
4	Bonnet cylinder	Steel	P285QH EN 10222	A350	G3205
5	Manual opener	Steel			
6	Armature tube	Stainless steel	X2CrNi19-11 EN10028		
7	Armature tube nut	Stainless steel	X2CrNi19-11 EN10216	A320	A2-70
8	Gasket	Chloroprene (Neoprene)			

ICFO 20 manual opening module

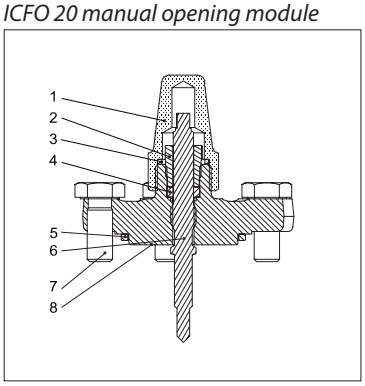

Pos.	Part	Material	EN*	ASTM**	JIS**
1	Seal cap	Steel	DIN 1651- 9SMn28 TLP surface treatment	1213 (SAE)	SUM 22
2	Gland nut	Steel	DIN 1651 9SMn28 Zinc Chromate Surface treatment	1213 (SAE)	SUM 22
3	Seal cap gasket	Nylon	Polyamid A6	Polyamid PA6	Polyamid PA6
4	Sealing ring	Teflon	PTFE	PTFE	PTFE
5	Rubber gasket	Chloroprene rubber	CR	CR	CR
6	Spindle	Stainless steel	X8CrNiS 18-9 EN 10088	G4303 G4304	SUS 303
7	Hex-head bolt M10 × 25	Stainless steel	A2-70 EN 24017	A320	A2-70
8	Flange	Cast steel low temperature	EN10222-4 P285QH		

* EN: Primary Design Standard
** ASTM, JIS: Equivalent Material Standard

Material specification
(continued)

ICFR 20 manual regulating valve module

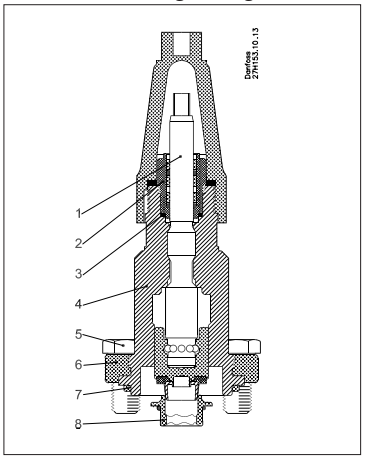

Pos.	Part	Material	EN*	ASTM**	JIS**
1	Spindle	Stainless steel	X8CrNiS 18-9 EN 10088		G4303 G4304
2	Thread part	Stainless steel	X8CrNiS 18-9 EN 10088		G4303 G4304
3	AL-gasket		AL99 alloy no. 1200 DIN 1712 BL.3		
4	Bonnet	Steel	S235JRG2 EN 10025	A283	G3101
5	Hex-head bolt M10 × 25	Stainless steel	A2-70 EN 24017	A320	A2-70
6	Flange	Cast steel low temperature	G20Mn5QT EN 10213-3	A352	G5152
7	Gasket	Chloroprene (Neoprene)			
8	Seat	High density polymer			

ICFA 20 electronic expansion valve module

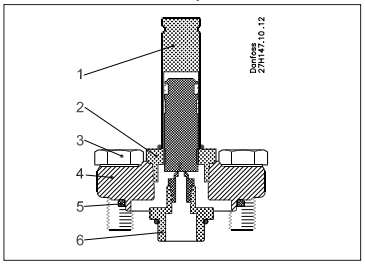

Pos.	Part	Material	EN*	ASTM**	JIS**
1	Armature tube	Stainless steel	X2CrNi19-11 EN 10088		
2	Armature tube nut	Stainless steel	X8CrNiS18-9 EN 10088		
3	Hex-head bolt M10 × 25	Stainless steel	A2-70 EN 24017	A320	A2-70
4	Flange	Cast steel low temperature	G20Mn5QT EN 10213-3	A352	G5152
5	Gasket	Chloroprene (Neoprene)			
6	Adaptor	Steel			

ICFC 20 check valve module

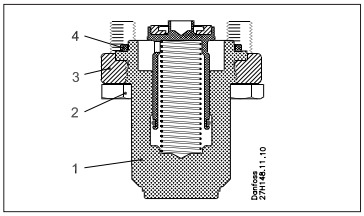

Pos.	Part	Material	EN*	ASTM**	JIS**
1	Bonnet	Steel	S235JRG2	A283	G3101
2	Hex-head bolt M10 × 25	Stainless steel	A2-70 EN 24017	A320	A2-70
3	Flange	Cast steel low temperature	G20Mn5QT EN 10213-3	A352	AG5152
4	Gasket	Chloroprene (Neoprene)			

ICFN 20 stop & check valve module

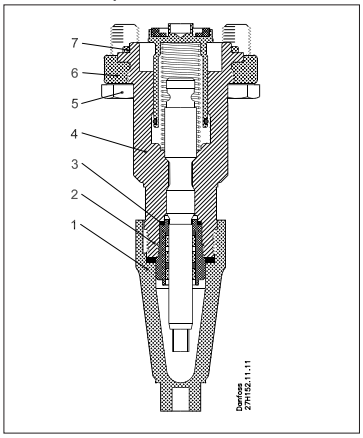

Pos.	Part	Material	EN*	ASTM**	JIS**
1	Spindle	Stainless steel	X8CrNiS 18-9 EN 10088		G4303 G4304
2	Thread part	Stainless steel	X8CrNiS 18-9 EN 10088		G4303 G4304
3	AL-gasket		AL99 alloy no. 1200 DIN 1712 BL.3		
4	Bonnet	Steel	S235JRG2 EN 10025	A283	G3101
5	Hex-head bolt M10 × 25	Stainless steel	A2-70 EN 24017	A320	A2-70
6	Flange	Cast steel low temperature	G20Mn5QT EN 10213-3	A352	G5152
7	Gasket	Chloroprene (Neoprene)			

ICM 20-A, 20-B or 20-C motor operated valve module

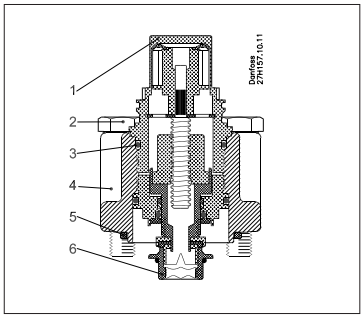

Pos.	Part	Material	EN*	ASTM**	JIS**
1	Adapter	Stainless steel	X5CrNi18-10 EN 10088	A240	G4303 G4304
2	Hex-head bolt M10 × 50	Stainless steel	A2-70 EN 24014	A320	A2-70
3	O-ring	Chloroprene			
4	Bonnet	Cast steel low temperature	G20Mn5QT EN 10213-3	A352	G5152
5	Gasket	Chloroprene (Neoprene)			
6	Seat	High density polymer			

* EN: Primary Design Standard
** ASTM, JIS: Equivalent Material Standard

Material specification
(continued)

ICFD 20 defrost module

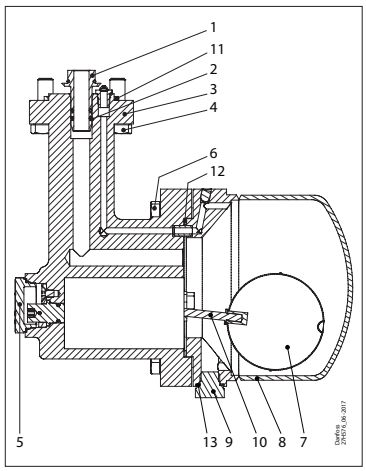

Pos.	Part	Material	EN*	ASTM**	JIS**
1	Inlet connector	steel	S235JR EN 10025 - 2	A283	G3101
2	O-ring Inlet connector	Chloroprene			
3	Valve Body	Cast Iron	EN -GJS- 400- 18-LT EN 1563		
4	Hex-head bolt M10x30	Stainless Steel	A2-70 EN 24017	A320	A2-70
5	Union nut	Stainless Steel	X8CrNiS18-9 EN 10088-3	AISI303	SUS303
6	Hex-head bolt M10x35	Stainless Steel	A2-70 EN 24017	A320	A2-70
7	Float	Stainless Steel	S.S 316		
8	Float housing	Stainless Steel	S355J2+N EN 10025-2	A572-50	SM490YB
9	Drain plug ¼" G	Steel	11SMnPb30 EN 10087		
10	Float lever	Steel	S235JR EN 10025 - 2	A283	G3101
11	Rubber Gasket	Chloroprene (Neoprene)			
12	Gasket	Fibre, Non Asbestos			
13	Gasket - Drain Plug	AL 99F11			

ICFB 20 blind top cover

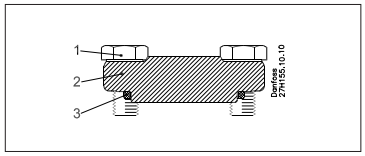

Pos.	Part	Material	EN*	ASTM**	JIS**
1	Hex-head bolt M10 × 25	Stainless Steel	A2-70 EN 24017	A320	A2-70
2	Flange	Cast steel low tem- perature	G20Mn5QT EN 10213-3	A352	G5152
3	Gasket	Chloroprene (Neoprene)			

ICFW 20 welding module, 20 DIN or ¾" SOC

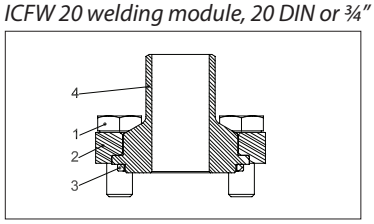

Pos.	Part	Material	EN*	ASTM**	JIS**
1	Hex-head bolt M10 × 25	Stainless Steel	A2-70 EN 24017	A320	A2-70
2	Flange	Cast steel low tem- perature	G20Mn5QT EN 10213-3	A352	G5152
3	Gasket	Chloroprene (Neoprene)			
4	Weld connection	Steel	S355J2+N EN 10025-2	A572-50	G3106 SM49

* EN: Primary Design Standard
** ASTM, JIS: Equivalent Material Standard

Material specification
(continued)

ICFS 25 shut-off valve module

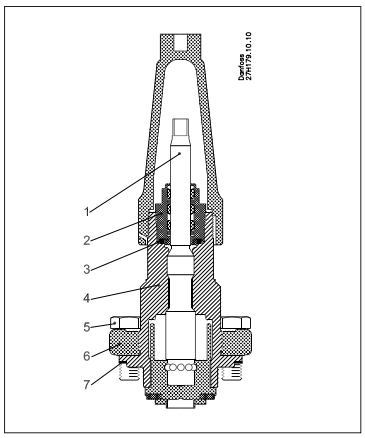

Pos.	Part	Material	EN*	ASTM**	JIS**
1	Spindle	Stainless steel	X8CrNiS 18-9 EN 10088		G4303 G4304
2	Thread part	Stainless steel	X8CrNiS 18-9 EN 10088		G4303 G4304
3	O-ring	Chloroprene			
4	Bonnet	Steel	S355J2+N 1.0570 / 1.0577 EN 10025-2	ASTM A572-50	
5	Hex-head bolt M12 × 30	Stainless steel	A2-70 EN 24017	A320	A2-70
6	Flange	Cast steel low temperature	G20Mn5QT EN 10213-3	A352	G5152
7	Gasket	Fiber non asbestos			

ICFF 25 strainer module

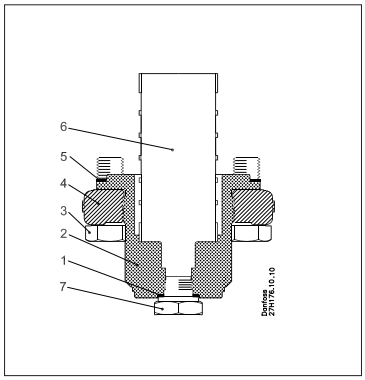

Pos.	Part	Material	EN*	ASTM**	JIS**
1	Al. Gasket	AL 99 F11			
2	Bonnet	Steel	S355J2+N 1.0570 / 1.0577 EN 10025-2	ASTM A572-50	
3	Hex-head bolt M12 × 30	Stainless steel	A2-70 EN 24017	A320	A2-70
4	Flange	Cast steel low temperature	G20Mn5QT EN 10213-3	A352	G5152
5	Gasket	Fiber non asbestos			
6	Strainer element	Stainless steel 150µ	1.4301	A304	SUS304
7	Plug ¼" RG for butt-weld 3/8" NPT for socket weld	Stainless steel	A2-70 EN 24017	A320	A2-70

ICFF 25E extended strainer module

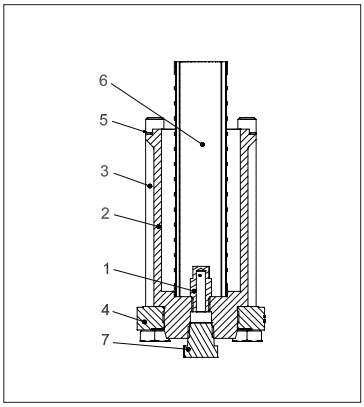

Pos.	Part	Material	EN*	ASTM**	JIS**
1	Dirt protection plug	Steel	11SMn30 EN 10087	Grade 1213 A29	G4804
2	Bonnet	Steel	S355J2+N 1.0570 / 1.0577 EN 10025-2	ASTM A572-50	
3	Hex-head bolt M12x140	Stainless steel	A2-70 EN 1515-1	Grade B8 A320	A2-70 B1054
4	Flange	Steel	P285QH: EN 10222-4 G20Mn5QT; EN 10213-3	LF2 - A350 LCC - A352	SFL2 - G3205 SCPL1 - G5152
5	Gasket	Fiber non asbestos			
6	Strainer element	Stainless steel 250µ	1.4301	A304	SUS304
7	Plug 3/8" NPT	Steel	11SMn30 EN 10087	Grade 1213 A29	A29

ICFE 25 solenoid valve module

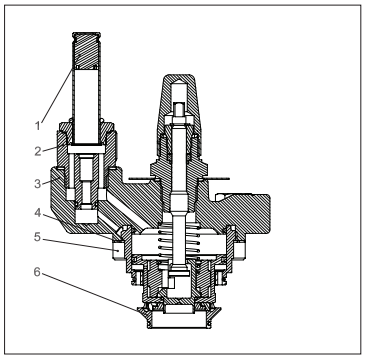

Pos.	Part	Material	EN*	ASTM**	JIS**
1	Armature tube	Stainless steel	X2CrNi19-11 EN 10088		
2	Armature tube nut	Stainless steel	X8CrNiS18-9 EN 10088		
3	Bonnet	Cast steel low temperature	G20Mn5QT EN10213-3	A352	G5152
4	Gasket	Fiber non asbestos			
5	Hex-Head bolt M10 × 25	Stainless steel	A2-70 EN 24017	A320	A2-70
6	Seat	High density polymer			

* EN: Primary Design Standard
** ASTM, JIS: Equivalent Material Standard

Material specification
(continued)

ICFR 25 manual regulating valve module, A or B

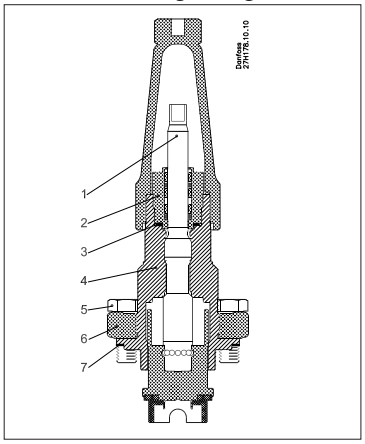

Pos.	Part	Material	EN*	ASTM**	JIS**
1	Spindle	Stainless steel	X8CrNiS 18-9 EN 10088		G4303 G4304
2	Thread part	Stainless steel	X8CrNiS 18-9 EN 10088		G4303 G4304
3	O-ring	Chloroprene			
4	Bonnet	Steel	S355J2+N 1.0570 / 1.0577 EN 10025-2	ASTM A572-50	
5	Hex-head bolt M12 × 30	Stainless steel	A2-70 EN 24017	A320	A2-70
6	Flange	Cast steel low temperature	G20Mn5QT EN 10213-3	A352	G5152
7	Gasket	Fiber non asbestos			
8	Seat	High density polymer			

ICFC 25 check valve module

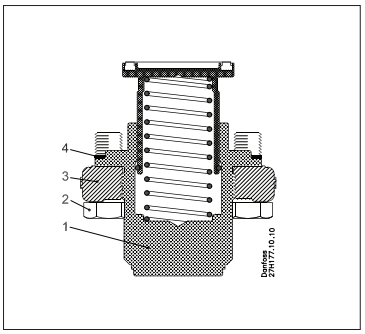

Pos.	Part	Material	EN*	ASTM**	JIS**
1	Bonnet	Steel	S355J2+N 1.0570 / 1.0577 EN 10025-2	ASTM A572-50	
2	Hex-head bolt M12 × 30	Stainless steel	A2-70 EN 24017	A320	A2-70
3	Flange	Cast steel low temperature	G20Mn5QT EN 10213-3	A352	AG5152
4	Gasket	Fiber non asbestos			

ICFN 25 stop & check valve module

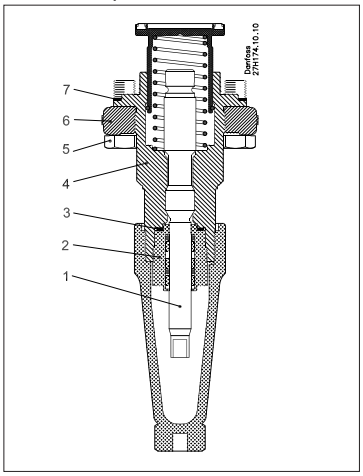

Pos.	Part	Material	EN*	ASTM**	JIS**
1	Spindle	Stainless steel	X8CrNiS 18-9 EN 10088		G4303 G4304
2	Thread part	Stainless steel	X8CrNiS 18-9 EN 10088		G4303 G4304
3	O-ring	Chloroprene			
4	Bonnet	Steel	S355J2+N 1.0570 / 1.0577 EN 10025-2	ASTM A572-50	
5	Hex-head bolt M12 × 30	Stainless steel	A2-70 EN 24017	A320	A2-70
6	Flange	Cast steel low temperature	G20Mn5QT EN 10213-3	A352	G5152
7	Gasket	Fiber non asbestos			

ICM 25-A or B motor operated valve module

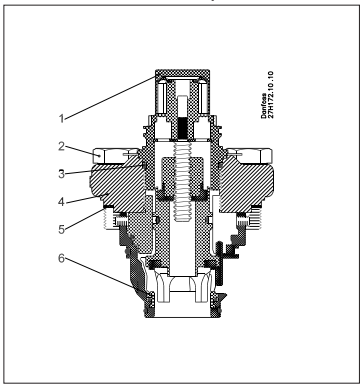

Pos.	Part	Material	EN*	ASTM**	JIS**
1	Adapter	Stainless steel	X5CrNi18-10 EN 10088	A240	G4303 G4304
2	Hex-head bolt M12 × 30	Stainless steel	A2-70 EN 24014	A320	A2-70
3	O-ring	Chloroprene			
4	Bonnet	Cast steel low temperature	G20Mn5QT EN 10213-3	A352	G5152
5	Gasket	Fiber non asbestos			
6	Seat	High density polymer			

* EN: Primary Design Standard
** ASTM, JIS: Equivalent Material Standard

Material specification
(continued)

ICFB 25 blind top cover

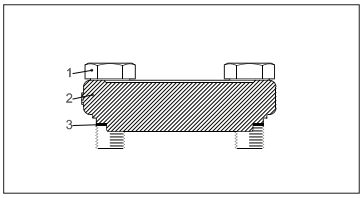

Pos.	Part	Material	EN*	ASTM**	JIS**
1	Hex-head bolt M10 × 25	Stainless Steel	A2-70 EN 24017	A320	A2-70
2	Flange	Cast steel low temperature	G20Mn5QT EN 10213-3	A352	G5152
3	Gasket	Fiber non asbestos			

ICFW 25 welding module, 25 DIN or 25 (1") SOC

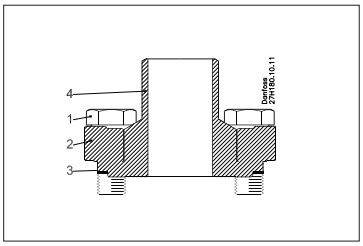

Pos.	Part	Material	EN*	ASTM**	JIS**
1	Hex-head bolt M10 × 25	Stainless Steel	A2-70 EN 24017	A320	A2-70
2	Flange	Cast steel low temperature	G20Mn5QT EN 10213-3	A352	G5152
3	Gasket	Fiber non asbestos			
4	Weld connection	Steel	S355J2+N EN 10025-2	A572-50	G3106 SM49

SVA-S 50 / SVA-S 65 shut-off valve module

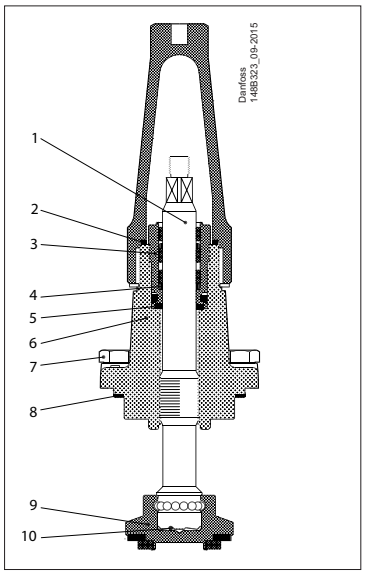

Pos.	Part	Material	EN*	ASTM**
1	Spindle	Stainless steel	X8CrNiS18-9 10088	AISI 303
2	Gasket for cap	Nylon		
3	Packing gland	Stainless steel	X8CrNiS18-9 10088	AISI 303
4	Spring loaded Teflon ring	PTFE		
5	Packing washer	Aluminium		
6	Bonnet	Steel	P285QH+QT, EN 10222-4	LF2, A350
7	Bolts	Stainless steel	A2-70	Type 308
8	Gasket	Fiber, non asbestos		
9	Cone	Steel	11SMn30 10087	AISI 1213
10	Disk spring	Steel		

REG-SB 50 / REG-SB 65 manual regulating valve module

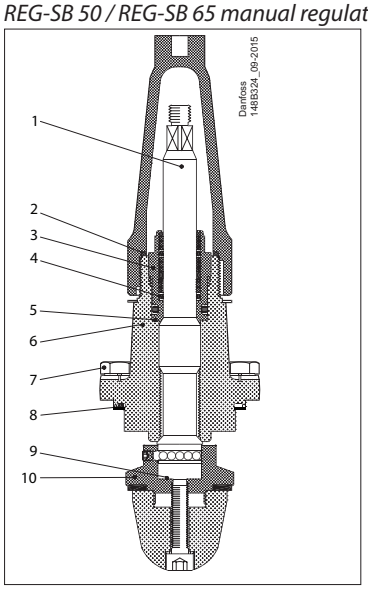

Pos.	Part	Material	EN*	ASTM**
1	Spindle	Stainless steel	X8CrNiS 18-9, 17440	AISI 303
2	Gasket for cap	Nylon		
3	Packing gland	Stainless Steel	X8CrNiS 18-9, 10088	AISI 303
4	Spring loaded Teflon ring	PTFE		
5	Packing washer	Aluminium		
6	Bonnet	Steel	P285QH+QT 10222-4	LF2 A350
7	Bolts	Stainless steel	A2-70	Type 308
8	Gasket	Fiber, non asbestos		
9	Disk spring	Steel		
10	Cone	Steel		

* EN: Primary Design Standard
** ASTM, JIS: Equivalent Material Standard

Material specification
(continued)

ICFB 50 blind top cover

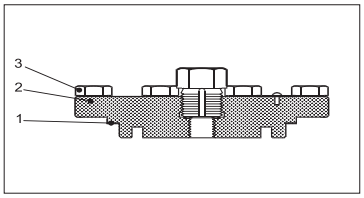

Pos.	Part	Material	EN*	ASTM**	JIS**
1	Gasket	Fiber non asbestos			
2	Flange	Cast steel low temperature	G20Mn5QT EN 10213-3	A352	G5152
3	Hex-head bolt M10 × 25	Stainless Steel	A2-70 EN 24017	A320	A2-70

ICS 50 / ICS 65 pilot-operated valve module

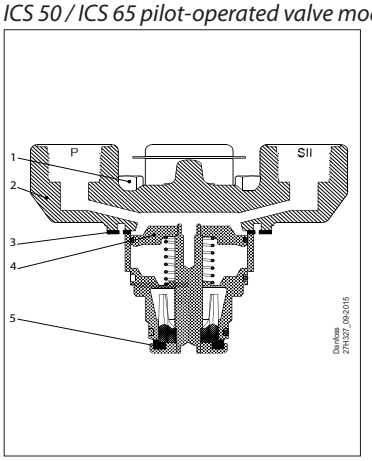

Pos.	Part	Material	EN*	ASTM**
1	Bolts	Stainless steel	A2-70, EN 1515-1	Grade B8 A320
2	Bonnet	Low temperature steel	G20Mn5QT, EN 10213-3 P285QH+QT EN 10222-4	LCC A352 LF2, A350
3	Gasket	Fiber, non-asbestos		
4	Piston	Steel		
5	Valve plate	PTFE		

ICM 50 / ICM 65 motor operated valve module

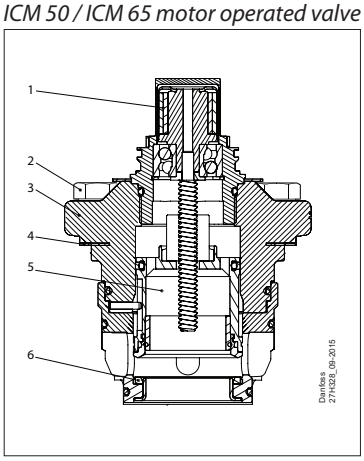

Pos.	Part	Material	EN*	ASTM**
1	Adaptor	Stainless steel	X5CrNi18-10 EN 10088	A240
2	Bolts	Stainless steel	A2-70, EN 1515-1	Grade B8 A320
3	Bonnet	Low temperature steel	G20Mn5QT, EN 10213-3	LCC A352
4	Gasket	Fiber, non-asbestos		
5	Piston	Steel		
6	Valve plate	PTFE		

ICLX 50 / ICLX 65 2-step solenoid valve module

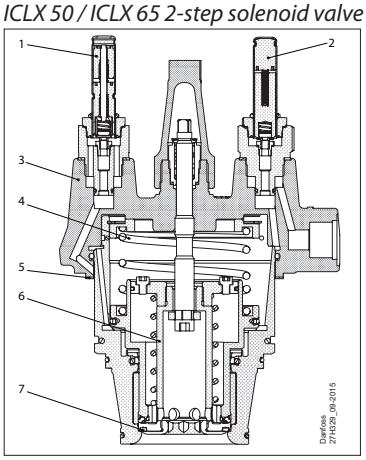

Pos.	Part	Material	EN*	ASTM**
1	EVM pilot NO			
2	EVM pilot NC			
3	Bonnet	Low temperature steel	P285QH, EN 10222-4	LF2, A350
4	Spring	Stainless steel		
5	Gasket	Fiber, non-asbestos		
6	Main piston	Steel		
7	Seat plate main	PTFE		

* EN: Primary Design Standard
** ASTM, JIS: Equivalent Material Standard

Material specification
(continued)

ICSH 50 / ICSH 65 2-step solenoid valve module

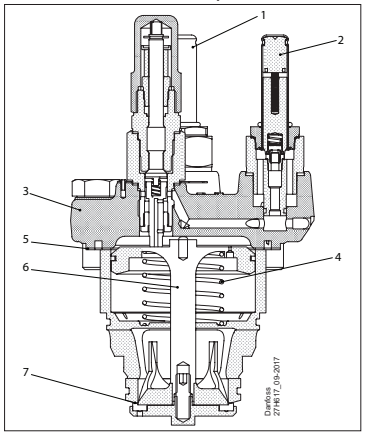

Pos.	Part	Material	EN*	ASTM**
1	EVM pilot NC			
2	EVM pilot NC			
3	Bonnet	Low temperature steel	P285QH, EN 10222-4	LF2, A350
4	Spring	Stainless steel		
5	Gasket	Fiber, non-asbestos		
6	Main piston	Steel		
7	Seat plate main	PTFE		

* EN: Primary Design Standard
** ASTM, JIS: Equivalent Material Standard

Code number selection

To determine the correct ICF valve station follow steps 1 through 5.

Step 1 **Determine application and function requirements:**
- Line: Pumped liquid, Liquid Injection, Hot gas defrost, Liquid DX, Return line etc.
- Control: On/off solenoid valve, motorised valve
- Defrost: Electric or hot gas

From the above determine the application reference number (see page 523):

Step 2 **Selection criteria - (Please use Danfoss calculation software)**
Download the software from:
http://refrigerationandairconditioning.danfoss.com/support-center/apps-and-software/coolselector/
- Refrigerant
- Capacity
- Temperature
- Circulation rate

From the above determine the valve station required, e.g.: ICF 20 complete with ICM 20-C

Step 3 **Establish connection sizes and type**
- DIN butt-weld, ANSI butt-weld or SOC weld
- 15 (½"), 20 (¾ in.), 25 (1 in.), 32 (1 ¼ in.) or , 40 (1½in.), 50 (2 in.), 65 (2½ in.) or 80 (3 in.)

Step 4 **Establish code number**
(see pages 524-536)

Example of application:
Liquid feed line

A valve combination for a flooded evaporator operating on/off from a thermostat and with electric defrost is required. Manual override of the solenoid valve is requested. Common ICF configurations for this kind of application is shown here:

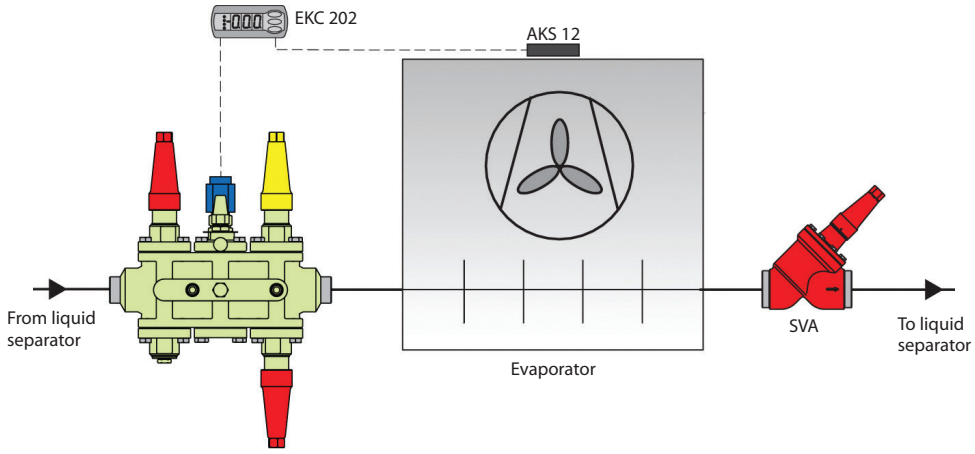

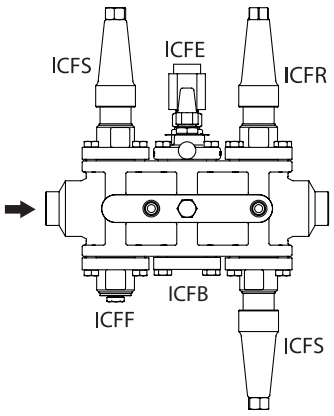

Not all valves are shown. Not to be used for construction purposes.

Example of application:
Liquid feed line/
Hot gas defrost line

Evaporator with 2 stage gas powered valve ICLX in the suction line and hot gas defrost featuring: ICF liquid feed station and ICF Hot gas station with side port to power ICLX. ICS+CVP as a defrost regulator (OFV optional depending on capacity).

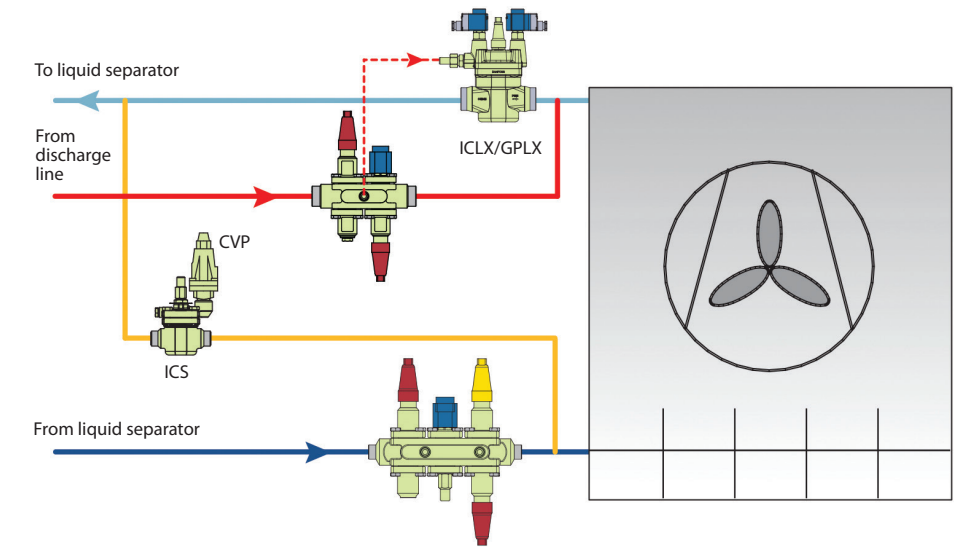

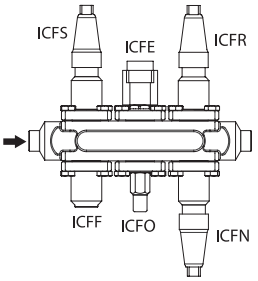

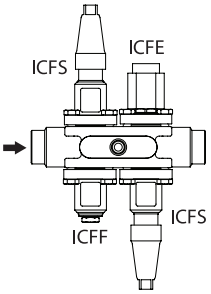

Not all valves are shown. Not to be used for construction purposes.

Example of application:
Liquid injection line

A valve combination for liquid injection to separator with electronic injection valve is required. It is requested to have a solenoid valve in front of the control valve.

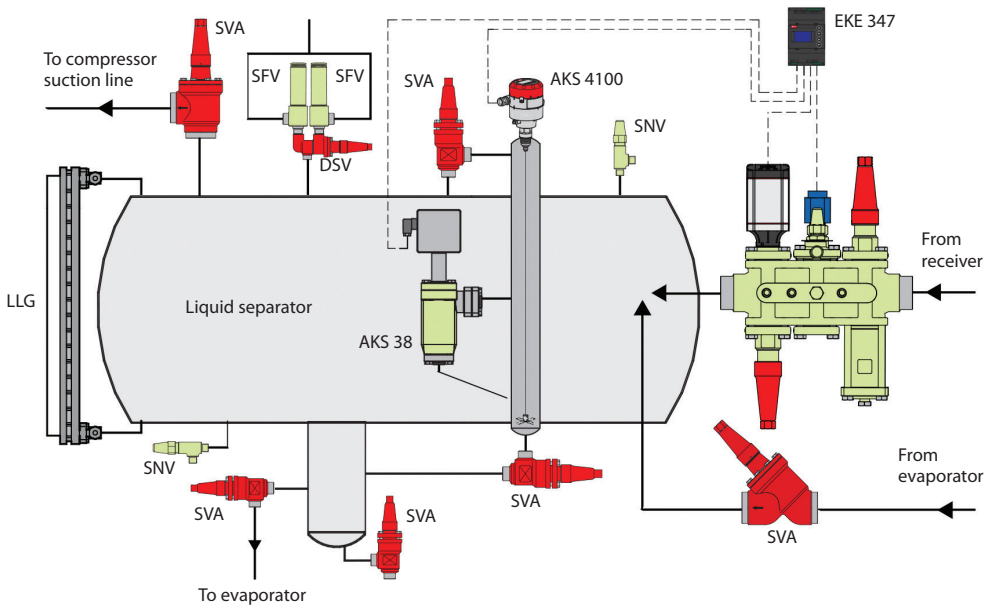

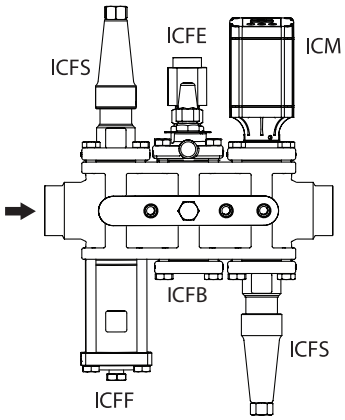

Not all valves are shown. Not to be used for construction purposes.

Example of application:
Liquid injection line

A valve combination for compressor liquid injection with electronic injection valve is required. It is a required to have a solenoid valve in front of the control valve.

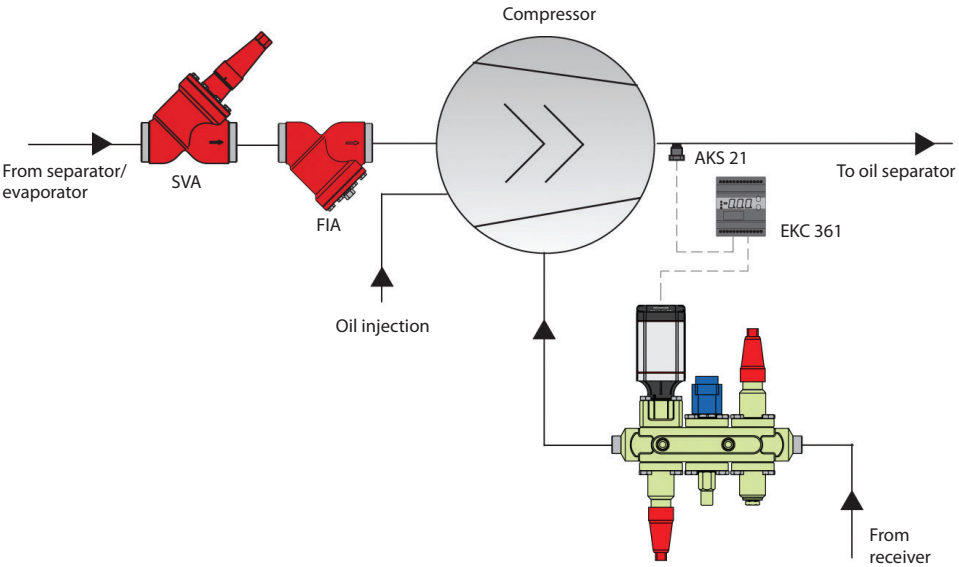

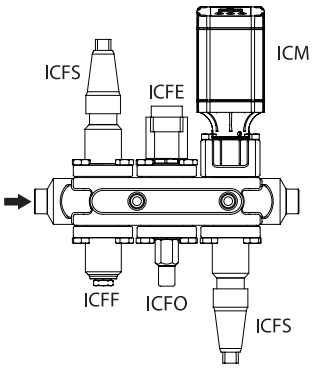

Not all valves are shown. Not to be used for construction purposes.

Example of application: Liquid feed line/Hot gas defrost line Return line/Defrost drain line

Evaporator with 2 stage gas powered ICLX module in suction line ICF and ICF liquid feed valve station. Hot gas defrost featuring: ICF hot gas valve station with side port to power ICLX module and ICF drain station with float activated liquid drainage to suction line ICF side port.

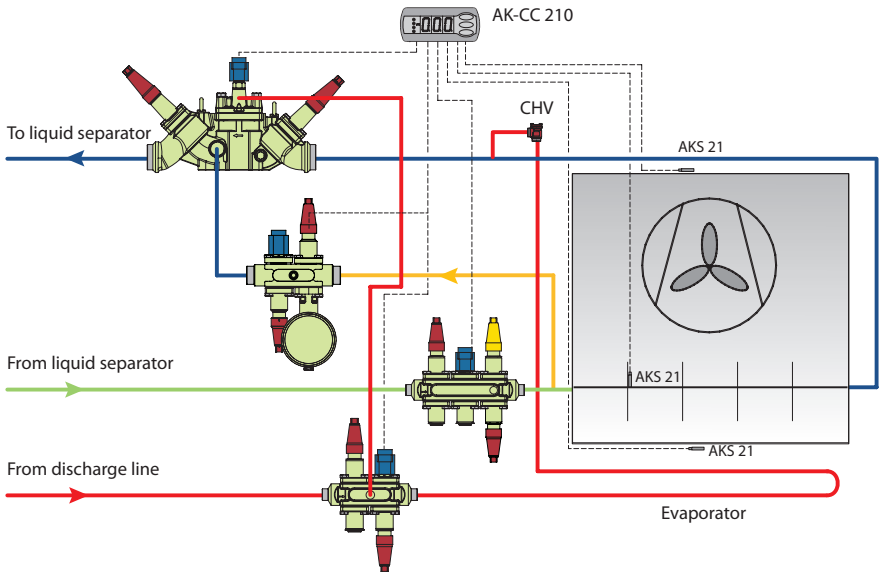

Not all valves are shown. Not to be used for construction purposes.

Note:
Restrictions to ICF drain station piping - please see AB236886443340

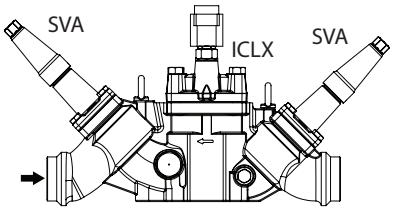

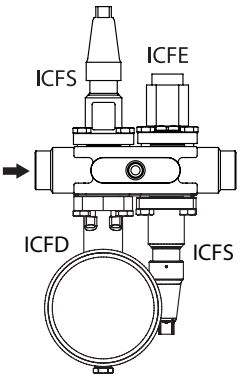

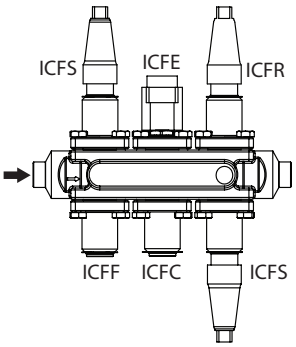

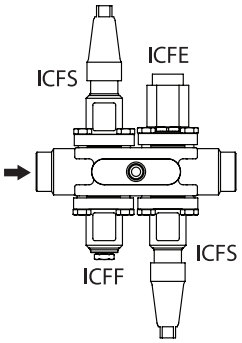

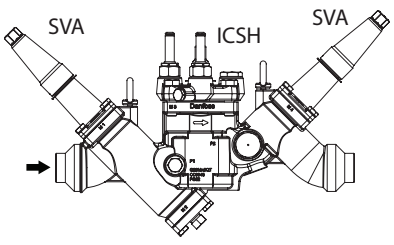

Connections

D: *Butt-weld DIN (EN 10220)*

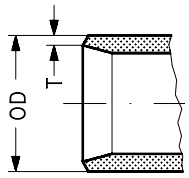

Size mm	Size in.	OD mm	T mm	OD in.	T in.		
15	½	21.3	1.3	0.839	0.052		
20	¾	26.9	2.3	1.059	0.091		
25	1	33.7	2.6	1.327	0.103		
32	1¼	42.4	2.6	1.669	0.102		
40	1½	48.3	2.6	1.902	0.103		
50	2	60.3	2.9	2.37	0.11		
65	2½	76.1	2.9	3.00	0.11		
80	3	88.9	3.2	3.50	0.13		

A: *Butt-weld ANSI (B 36.10)*
Butt weld ANSI (B 36.19)

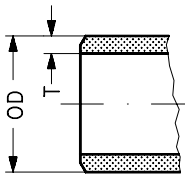

Size mm	Size in.	OD mm	T mm	OD in.	T in.	Schedule	
15	½	21.3	2.7	0.839	0.105	80	
20	¾	26.9	4.0	1.059	0.158	80	
25	1	33.7	4.6	1.327	0.181	80	
32	1¼	42.4	4.9	1.669	0.193	80	
40	1½	48.3	5.1	1.902	0.201	80	
65	2½	73.0	5.2	2.87	0.20	40	
80	3	88.9	5.5	3.50	0.22	40	

SOC: *Socket welding ANSI (B 16.11)*

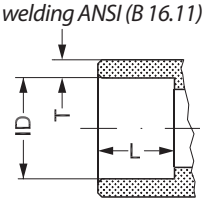

Size mm	Size in.	ID mm	T mm	ID in.	T in.	L mm	L in.
15	½	21.9	5.9	0.862	0.232	10.25	0.40
20	¾	27.2	4.6	1.071	0.181	13	0.51
25	1	33.9	7.2	1.335	0.284	13	0.51
32	1¼	42.7	6.1	1.743	0.240	13	0.51
40	1½	48.8	6.6	1.921	0.260	13	0.51
50	2	61.2	6.2	2.41	0.24	16	0.63

SD: *Soldering (DIN 2856)*

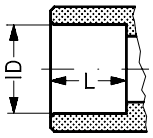

Size mm	Size in.	ID mm		ID in.		L mm	L in.
22		22.08				16.5	

SA: Soldering (ANSI B 16.22)

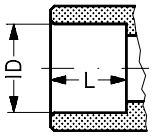

Size mm	Size in.	ID mm		ID in.		L mm	L in.
	7/8			0.875			0.650

FPT:
Female pipe thread,
(ANSI/ASME B 1.20.1)

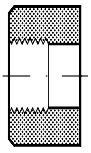

Size mm	Size in.	Inside pipe thread	
(15)	½	(½ × 14 NPT)	

Ordering ICF valve station

Below Nomenclature show the generic configuration and application by identification of housing size, type and application group.

This designation is often used for discussion on possible solutions and will be the final identification on the valve label (see label example)

ICF 20 - 6 - 3

- 3: Application reference number (see the below overview)
- 6: Number of module ports
- 20: Housing size
- ICF: Type

For ordering, connection size and type must be chosen to get the final identification. **The final identification is done by code number only** (see next pages)

Label example:



Application overview (generic configuration - connection type and size excluded)

Application #		Sequence of functions					
Liquid feed							
1	Liquid feed (No hotgas defrost)	Shut-off	Strainer	Solenoid	Man Open	Regul.	Shut-off
2	Liquid feed	Shut-off	Strainer	Solenoid	Man Open	Regul.	Stop & check
3	Liquid feed	Shut-off	Strainer	Solenoid	Check	Regul.	Shut-off
10	Liquid feed (No hotgas defrost)	Shut-off	Strainer	Solenoid	Regul.		
15	Liquid feed w. external Conn.	Shut-off	Strainer	Solenoid	Check	Welding	Regul.
Solenoid common							
4	Solenoid - Liquid & Hot gas lines	Shut-off	Strainer	Solenoid	Man Open	Shut-off	
8	Solenoid - Liquid & Hot gas lines	Shut-off	Strainer	Solenoid	Man Open		
Liquid injection							
5	Liquid injection (expansion)	Shut-off	Strainer	Solenoid	Man Open	Motor	Shut-off
12	Liquid injection (expansion) PWM	Shut-off	Strainer	El. Exp.	Shut-off		
14	Liquid injection (expansion)	Shut-off	Strainer	Motor	Shut-off		
Hot gas defrost							
9	Hot gas defrost	Shut-off	Strainer	Solenoid	Shut-off		
Hot gas defrost (ICF 50 only)							
47	Hot gas defrost - On/Off 2-step solenoid	Shut-off	Strainer option*	Solenoid	Shut-off		
48	Hot gas defrost - On/Off 2-step solenoid + manual Regulating	Shut-off	Strainer option*	Solenoid	Regul.		
Solenoid multiple evaporators							
11	Solenoid - Multiple evaporators	Shut-off	Strainer	Solenoid	Check		
18	Solenoid - Multiple evaporators	Shut-off	Strainer	Solenoid	Stop & check		
Liquid PWM							
13	Liquid injection & liquid feed PWM	Shut-off	Strainer	El. Exp.	Stop & check		
Return line (ICF 50 and ICF 65 only)							
41	ON/OFF 2-step solenoid	Shut-off	Strainer option*	Solenoid	Shut-off		
42	Pressure (temperature) Mechanical control	Shut-off	Strainer option*	ICS options**	Shut-off		
43	Pressure (temperature) Electronic control	Shut-off	Strainer option*	Motor	Shut-off		
44	ON/OFF 2-step solenoid + Manuel Regulating	Shut-off	Strainer option*	Solenoid	Regul.		
45	Pressure (temperature) Mechanical control + Manuel Regulating	Shut-off	Strainer option*	ICS options**	Regul.		
46	Pressure (temperature) Electronic control + Manuel Regulating	Shut-off	Strainer option*	Motor	Regul.		
Miscellaneous							
90	Multipurpose configurations						
Defrost drain line							
102	Liquid drain M2 with solenoid - 2 shut-off	Shut-off	Liquid drain	Solenoid	Shut-off		
103	Liquid drain M4 with solenoid - 1 shut-off	Shut-off	Solenoid	Liquid drain			
104	Liquid drain M4 with strainer and solenoid - 1 shut-off	Shut-off	Strainer	Solenoid	Liquid drain		
105	Liquid drain M2 with solenoid - 1 shut-off	Shut-off	Liquid drain	Solenoid			
106	Liquid drain M2 with solenoid and manual opener - 1 shut off	Shut-off	Liquid drain	Solenoid	Man Open		
107	Liquid drain M2 with solenoid and manual opener - 2 shut off	Shut-off	Liquid drain	Solenoid	Man Open	Shut-off	
108	Liquid drain M2 without solenoid - 2 shut off	Shut-off	Liquid drain	Shut-off			

* ICF 50 only

* ICF 50 only
** ICS typical options: On/Off solenoid, Pressure or Temperature control (see ICS data sheet)

Liquid feed

Application 1: Liquid feed (no hot gas defrost)

Type	# of modules	Appl. #	Connection size		Connection type	Module location						Weight		Code number
			[in.]	[mm]		M1	M2	M3	M4	M5	M6	kg	lbs	
ICF 20	6	1RA	¾	20	Butt-weld ANSI (B 36.10)	ICFS 20	ICFF 20	ICFE 20	ICFO 20	ICFR 20A	ICFS 20	9.5	20.9	027L3004
ICF 20	6	1RA	1	25	Butt-weld ANSI (B 36.10)	ICFS 20	ICFF 20	ICFE 20	ICFO 20	ICFR 20A	ICFS 20	10.1	22.2	027L3373
ICF 25	6	1RB	1¼	32	Butt-weld ANSI (B 36.10)	ICFS 25	ICFF 25	ICFE 25	ICFB 25	ICFR 25B	ICFS 25	23.8	52.4	027L4012
ICF 20	6	1RA	¾	20	Butt-weld DIN-EN 10220	ICFS 20	ICFF 20	ICFE 20	ICFO 20	ICFR 20A	ICFS 20	9.5	20.9	027L3000
ICF 20	6	1RA	1	25	Butt-weld DIN-EN 10220	ICFS 20	ICFF 20	ICFE 20	ICFO 20	ICFR 20A	ICFS 20	9.7	21.3	027L3002
ICF 20	6	1HRB	1	25	Butt-weld DIN-EN 10220	ICFS 20	ICFF 20	ICFE 20H	ICFB 20	ICFR 20B	ICFS 20	10.3	22.7	027L3406
ICF 25	6	1RA	1	25	Butt-weld DIN-EN 10220	ICFS 25	ICFF 25	ICFE 25	ICFB 25	ICFR 25A	ICFS 25	23.6	51.9	027L4002
ICF 20	6	1RA	1¼	32	Butt-weld DIN-EN 10220	ICFS 20	ICFF 20	ICFE 20	ICFO 20	ICFR 20A	ICFS 20	9.7	21.3	027L3003
ICF 20	6	1HRB	1¼	32	Butt-weld DIN-EN 10220	ICFS 20	ICFF 20	ICFE 20H	ICFB 20	ICFR 20B	ICFS 20	10.3	22.7	027L3407
ICF 25	6	1RA	1¼	32	Butt-weld DIN-EN 10220	ICFS 25	ICFF 25	ICFE 25	ICFB 25	ICFR 25A	ICFS 25	23.6	51.9	027L4006
ICF 25	6	1RB	1¼	32	Butt-weld DIN-EN 10220	ICFS 25	ICFF 25	ICFE 25	ICFB 25	ICFR 25B	ICFS 25	23.6	51.9	027L4011
ICF 25	6	1RB	1½	40	Butt-weld DIN-EN 10220	ICFS 25	ICFF 25	ICFE 25	ICFB 25	ICFR 25B	ICFS 25	22.7	49.9	027L4016
ICF 20	6	1RA	¾	20	Socket weld, ANSI (B 16.11)	ICFS 20	ICFF 20	ICFE 20	ICFO 20	ICFR 20A	ICFS 20	10.4	22.9	027L3005
ICF 20	6	1RA	1	25	Socket weld, ANSI (B 16.11)	ICFS 20	ICFF 20E	ICFE 20	ICFO 20	ICFR 20A	ICFS 20	9.9	21.8	027L3007
ICF 20	6	1HRB	1	25	Socket weld, ANSI (B 16.11)	ICFS 20	ICFF 20E	ICFE 20H	ICFB 20	ICFR 20B	ICFS 20	10.9	24.0	027L3408
ICF 25	6	1RA	1	25	Socket weld, ANSI (B 16.11)	ICFS 25	ICFF 25E	ICFE 25	ICFB 25	ICFR 25A	ICFS 25	24.1	53.0	027L4003
ICF 20	6	1RA	1¼	32	Socket weld, ANSI (B 16.11)	ICFS 20	ICFF 20E	ICFE 20	ICFO 20	ICFR 20A	ICFS 20	10.1	22.2	027L3008
ICF 20	6	1HRB	1¼	32	Socket weld, ANSI (B 16.11)	ICFS 20	ICFF 20E	ICFE 20H	ICFB 20	ICFR 20B	ICFS 20	10.9	24.0	027L3409
ICF 25	6	1RA	1¼	32	Socket weld, ANSI (B 16.11)	ICFS 25	ICFF 25E	ICFE 25	ICFB 25	ICFR 25A	ICFS 25	23.8	52.4	027L4008
ICF 25	6	1RB	1¼	32	Socket weld, ANSI (B 16.11)	ICFS 25	ICFF 25E	ICFE 25	ICFB 25	ICFR 25B	ICFS 25	24.2	53.2	027L4013
ICF 25	6	1RB	1½	40	Socket weld, ANSI (B 16.11)	ICFS 25	ICFF 25E	ICFE 25	ICFB 25	ICFR 25B	ICFS 25	23.8	52.4	027L4017

Application 2: Liquid feed

Type	# of Modules	Appl. #	Connection size		Connection type	Module location						Weight		Code number
			[in.]	[mm]		M1	M2	M3	M4	M5	M6	kg	lbs	
ICF 20	6	2RA	¾	20	Butt-weld ANSI (B 36.10)	ICFS 20	ICFF 20	ICFE 20	ICFO 20	ICFR 20A	ICFN 20	9.8	21.6	027L3013
ICF 20	6	2RA	¾	20	Butt-weld DIN-EN 10220	ICFS 20	ICFF 20	ICFE 20	ICFO 20	ICFR 20A	ICFN 20	9.7	21.3	027L3009
ICF 20	6	2RB	¾	20	Butt-weld DIN-EN 10220	ICFS 20	ICFF 20	ICFE 20	ICFO 20	ICFR 20B	ICFN 20	10.2	22.9	027L3398
ICF 20	6	2RB	1	25	Butt-weld DIN-EN 10220	ICFS 20	ICFF 20	ICFE 20	ICFO 20	ICFR 20B	ICFN 20	10.2	22.9	027L3422
ICF 20	6	2RA	1	25	Butt-weld DIN-EN 10220	ICFS 20	ICFF 20	ICFE 20	ICFO 20	ICFR 20A	ICFN 20	9.7	21.3	027L3011
ICF 20	6	2HRB	1	25	Butt-weld DIN-EN 10220	ICFS 20	ICFF 20	ICFE 20H	ICFB 20	ICFR 20B	ICFN 20	9.2	20.2	027L3410
ICF 20	6	2RA	1¼	32	Butt-weld DIN-EN 10220	ICFS 20	ICFF 20	ICFE 20	ICFO 20	ICFR 20A	ICFN 20	9.7	21.3	027L3012
ICF 20	6	2HRB	1¼	32	Butt-weld DIN-EN 10220	ICFS 20	ICFF 20	ICFE 20H	ICFB 20	ICFR 20B	ICFN 20	9.2	20.2	027L3411
ICF 25	6	2RA	1¼	32	Butt-weld DIN-EN 10220	ICFS 25	ICFF 25	ICFE 25	ICFB 25	ICFR 25A	ICFN 25	23.3	51.3	027L4135
ICF 20	6	2RA	¾	20	Socket weld, ANSI (B 16.11)	ICFS 20	ICFF 20E	ICFE 20	ICFO 20	ICFR 20A	ICFN 20	10.1	22.2	027L3014
ICF 20	6	2RA	1	25	Socket weld, ANSI (B 16.11)	ICFS 20	ICFF 20E	ICFE 20	ICFO 20	ICFR 20A	ICFN 20	9.9	21.8	027L3016
ICF 20	6	2HRB	1	25	Socket weld, ANSI (B 16.11)	ICFS 20	ICFF 20E	ICFE 20H	ICFB 20	ICFR 20B	ICFN 20	8.8	19.4	027L3412
ICF 20	6	2RA	1¼	32	Socket weld, ANSI (B 16.11)	ICFS 20	ICFF 20E	ICFE 20	ICFO 20	ICFR 20A	ICFN 20	9.9	21.8	027L3017
ICF 20	6	2HRB	1¼	32	Socket weld, ANSI (B 16.11)	ICFS 20	ICFF 20E	ICFE 20H	ICFB 20	ICFR 20B	ICFN 20	10.9	24.0	027L3413

ICAD and coils are not included and must be ordered separately.
***Please Note**: When used in systems with CO_2, the o-rings on the ICM module can swell (grow). At service, it is therefore recommended to install new o-rings, before the ICM function module is re-installed in the ICF valve body.*

Liquid feed

Application 3: Liquid feed

Type	# of Modules	Appl. #	Connection size		Connection type	Module location						Weight		Code number
			[in.]	[mm]		M1	M2	M3	M4	M5	M6	kg	lbs	
ICF 20	6	3RA	¾	20	Butt-weld ANSI (B 36.10)	ICFS 20	ICFF 20	ICFE 20	ICFC 20	ICFR 20A	ICFS 20	9.9	21.8	027L3022
ICF 20	6	3RA	1	25	Butt-weld ANSI (B 36.10)	ICFS 20	ICFF 20	ICFE 20	ICFC 20	ICFR 20A	ICFS 20	9.9	21.8	027L3419
ICF 20	6	3RA	¾	20	Butt-weld DIN-EN 10220	ICFS 20	ICFF 20	ICFE 20	ICFC 20	ICFR 20A	ICFS 20	9.6	21.1	027L3018
ICF 20	6	3RB	¾	20	Butt-weld DIN-EN 10220	ICFS 20	ICFF 20	ICFE 20	ICFC 20	ICFR 20B	ICFS 20	10.4	22.9	027L3433
ICF 20	6	3RA	1	25	Butt-weld DIN-EN 10220	ICFS 20	ICFF 20E	ICFE 20	ICFC 20	ICFR 20A	ICFS 20	10.0	22.0	027L3437
ICF 20	6	3HRB	1	25	Butt-weld DIN-EN 10220	ICFS 20	ICFF 20	ICFE 20H	ICFC 20	ICFR 20B	ICFS 20	10.6	23.3	027L3414
ICF 25	6	3RA	1	25	Butt-weld DIN-EN 10220	ICFS 25	ICFF 25	ICFE 25	ICFC 25	ICFR 25A	ICFS 25	23.4	51.5	027L4020
ICF 20	6	3RA	1¼	32	Butt-weld DIN-EN 10220	ICFS 20	ICFF 20	ICFE 20	ICFC 20	ICFR 20A	ICFS 20	10.4	22.9	027L3021
ICF 20	6	3HRB	1¼	32	Butt-weld DIN-EN 10220	ICFS 20	ICFF 20	ICFE 20H	ICFC 20	ICFR 20B	ICFS 20	10.6	23.3	027L3415
ICF 25	6	3RA	1¼	32	Butt-weld DIN-EN 10220	ICFS 25	ICFF 25	ICFE 25	ICFC 25	ICFR 25A	ICFS 25	23.2	51.0	027L4024
ICF 20	6	3RB	1¼	32	Butt-weld DIN-EN 10220	ICFS 20	ICFF 20	ICFE 20	ICFC 20	ICFR 20B	ICFS 20	10.4	22.9	027L3430
ICF 25	6	3RB	1¼	32	Butt-weld DIN-EN 10220	ICFS 25	ICFF 25	ICFE 25	ICFC 25	ICFR 25B	ICFS 25	23.8	52.4	027L4029
ICF 25	6	3RB	1½	40	Butt-weld DIN-EN 10220	ICFS 25	ICFF 25	ICFE 25	ICFC 25	ICFR 25B	ICFS 25	24.0	52.8	027L4034
ICF 20	6	3RA	¾	20	Socket weld, ANSI (B 16.11)	ICFS 20	ICFF 20E	ICFE 20	ICFC 20	ICFR 20A	ICFS 20	10.0	22.0	027L3023
ICF 20	6	3HRB	¾	20	Socket weld, ANSI (B 16.11)	ICFS 20	ICFF 20E	ICFE 20H	ICFC 20	ICFR 20B	ICFS 20	10.7	23.5	027L3418
ICF 20	6	3RA	1	25	Socket weld, ANSI (B 16.11)	ICFS 20	ICFF 20E	ICFE 20	ICFC 20	ICFR 20A	ICFS 20	10.0	22.0	027L3025
ICF 20	6	3HRB	1	25	Socket weld, ANSI (B 16.11)	ICFS 20	ICFF 20E	ICFE 20H	ICFC 20	ICFR 20B	ICFS 20	11.2	24.6	027L3416
ICF 25	6	3RA	1	25	Socket weld, ANSI (B 16.11)	ICFS 25	ICFF 25E	ICFE 25	ICFC 25	ICFR 25A	ICFS 25	24.2	53.2	027L4021
ICF 20	6	3RA	1¼	32	Socket weld, ANSI (B 16.11)	ICFS 20	ICFF 20E	ICFE 20	ICFC 20	ICFR 20A	ICFS 20	10.1	22.2	027L3026
ICF 20	6	3HRB	1¼	32	Socket weld, ANSI (B 16.11)	ICFS 20	ICFF 20E	ICFE 20H	ICFC 20	ICFR 20B	ICFS 20	11.3	24.9	027L3417
ICF 25	6	3RA	1¼	32	Socket weld, ANSI (B 16.11)	ICFS 25	ICFF 25E	ICFE 25	ICFC 25	ICFR 25A	ICFS 25	24.1	53.0	027L4026
ICF 25	6	3RB	1¼	32	Socket weld, ANSI (B 16.11)	ICFS 25	ICFF 25E	ICFE 25	ICFC 25	ICFR 25B	ICFS 25	24.1	53.0	027L4031
ICF 25	6	3RB	1½	40	Socket weld, ANSI (B 16.11)	ICFS 25	ICFF 25E	ICFE 25	ICFC 25	ICFR 25B	ICFS 25	24.2	53.2	027L4035

** Fixed module*
ICAD and coils are not included and must be ordered separately.
***Please Note**: When used in systems with CO_2, the o-rings on the ICM module can swell (grow). At service, it is therefore recommended to install new o-rings, before the ICM function module is re-installed in the ICF valve body.*

Liquid feed

Application 10: Liquid feed (no hot gas defrost)

Type	# of Modules	Appl. #	Connection size		Connection type	Module location					Weight		Code number
			[in.]	[mm]		M1	M2	M3	M4		kg	lbs	
ICF 15	4	10HRB	¾	20	Butt-weld ANSI (B 36.10)	ICFS 15*	ICFF 15*	ICFE 20H	ICFR 20B		7.0	15.4	027L4585
ICF 20	4	10RA	¾	20	Butt-weld ANSI (B 36.10)	ICFS 20	ICFF 20	ICFE 20	ICFR 20A		6.6	14.5	027L3077
ICF 25	4	10RA	1¼	32	Butt-weld ANSI (B 36.10)	ICFS 25	ICFF 25	ICFE 25	ICFR 25A		16.1	35.4	027L4081
ICF 15	4	10RA	½	15	Butt-weld DIN-EN 10220	ICFS 15*	ICFF 15*	ICFE 20	ICFR 20A		6.3	13.8	027L4548
ICF 15	4	10RB	½	15	Butt-weld DIN-EN 10220	ICFS 15*	ICFF 15*	ICFE 20	ICFR 20B		6.3	13.8	027L4544
ICF 15	4	10HRA	½	15	Butt-weld DIN-EN 10220	ICFS 15*	ICFF 15*	ICFE 20H	ICFR 20A		7.0	15.4	027L4552
ICF 15	4	10HRB	½	15	Butt-weld DIN-EN 10220	ICFS 15*	ICFF 15*	ICFE 20H	ICFR 20B		7.0	15.4	027L4549
ICF 15	4	10RA	¾	20	Butt-weld DIN-EN 10220	ICFS 15*	ICFF 15*	ICFE 20	ICFR 20A		6.3	13.8	027L4545
ICF 15	4	10RB	¾	20	Butt-weld DIN-EN 10220	ICFS 15*	ICFF 15*	ICFE 20	ICFR 20B		6.3	13.8	027L4540
ICF 15	4	10HRB	¾	20	Butt-weld DIN-EN 10220	ICFS 15*	ICFF 15*	ICFE 20H	ICFR 20B		7.0	15.4	027L4524
ICF 20	4	10RA	¾	20	Butt-weld DIN-EN 10220	ICFS 20	ICFF 20	ICFE 20	ICFR 20A		6.7	14.7	027L3073
ICF 20	4	10HRB	¾	20	Butt-weld DIN-EN 10220	ICFS 20	ICFF 20	ICFE 20H	ICFR 20B		7.9	17.4	027L3383
ICF 20	4	10RA	1	25	Butt-weld DIN-EN 10220	ICFS 20	ICFF 20	ICFE 20	ICFR 20A		7.2	15.8	027L3075
ICF 20	4	10RB	1	25	Butt-weld DIN-EN 10220	ICFS 20	ICFF 20	ICFE 20	ICFR 20B		7.2	15.8	027L3431
ICF 20	4	10HRB	1	25	Butt-weld DIN-EN 10220	ICFS 20	ICFF 20	ICFE 20H	ICFR 20B		7.9	17.4	027L3400
ICF 25	4	10RA	1	25	Butt-weld DIN-EN 10220	ICFS 25	ICFF 25	ICFE 25	ICFR 25A		15.9	35.0	027L4076
ICF 25	4	10RB	1	25	Butt-weld DIN-EN 10220	ICFS 25	ICFF 25	ICFE 25	ICFR 25B		15.9	35.0	027L4169
ICF 25	4	10RB	1	25	Butt-weld DIN-EN 10220	ICFS 25	ICFF 25E	ICFE 25	ICFR 25B		16.2	35.6	027L4187
ICF 20	4	10RA	1¼	32	Butt-weld DIN-EN 10220	ICFS 20	ICFF 20	ICFE 20	ICFR 20A		6.7	14.7	027L3076
ICF 20	4	10HRB	1¼	32	Butt-weld DIN-EN 10220	ICFS 20	ICFF 20	ICFE 20H	ICFR 20B		7.9	17.4	027L3401
ICF 25	4	10RA	1¼	32	Butt-weld DIN-EN 10220	ICFS 25	ICFF 25	ICFE 25	ICFR 25A		15.8	34.8	027L4080
ICF 25	4	10RB	1¼	32	Butt-weld DIN-EN 10220	ICFS 25	ICFF 25	ICFE 25	ICFR 25B		15.4	33.9	027L4085
ICF 25	4	10RB	1½	40	Butt-weld DIN-EN 10220	ICFS 25	ICFF 25	ICFE 25	ICFR 25B		15.8	34.8	027L4090
ICF 15	4	10RA	½	15	Socket weld, ANSI (B 16.11)	ICFS 15*	ICFF 15*	ICFE 20	ICFR 20A		6.3	13.8	027L4586
ICF 15	4	10HRB	½	15	Socket weld, ANSI (B 16.11)	ICFS 15*	ICFF 15*	ICFE 20H	ICFR 20B		7.0	15.4	027L4530
ICF 15	4	10RA	¾	20	Socket weld, ANSI (B 16.11)	ICFS 15*	ICFF 15*	ICFE 20	ICFR 20A		6.3	13.8	027L4625
ICF 15	4	10HRB	¾	20	Socket weld, ANSI (B 16.11)	ICFS 15*	ICFF 15*	ICFE 20H	ICFR 20B		7.0	15.4	027L4615
ICF 20	4	10RA	¾	20	Socket weld, ANSI (B 16.11)	ICFS 20	ICFF 20E	ICFE 20	ICFR 20A		7.0	15.4	027L3078
ICF 20	4	10HRB	¾	20	Socket weld, ANSI (B 16.11)	ICFS 20	ICFF 20E	ICFE 20H	ICFR 20B		8.4	18.5	027L3404
ICF 20	4	10RA	1	25	Socket weld, ANSI (B 16.11)	ICFS 20	ICFF 20E	ICFE 20	ICFR 20A		6.9	15.2	027L3080
ICF 20	4	10HRB	1	25	Socket weld, ANSI (B 16.11)	ICFS 20	ICFF 20E	ICFE 20H	ICFR 20B		7.8	17.2	027L3402
ICF 25	4	10RA	1	25	Socket weld, ANSI (B 16.11)	ICFS 25	ICFF 25E	ICFE 25	ICFR 25A		15.8	34.8	027L4077
ICF 20	4	10RA	1¼	32	Socket weld, ANSI (B 16.11)	ICFS 20	ICFF 20E	ICFE 20	ICFR 20A		7.0	15.4	027L3081
ICF 20	4	10HRB	1¼	32	Socket weld, ANSI (B 16.11)	ICFS 20	ICFF 20E	ICFE 20H	ICFR 20B		8.1	17.8	027L3403
ICF 25	4	10RA	1¼	32	Socket weld, ANSI (B 16.11)	ICFS 25	ICFF 25E	ICFE 25	ICFR 25A		12.7	27.9	027L4082
ICF 25	4	10RB	1¼	32	Socket weld, ANSI (B 16.11)	ICFS 25	ICFF 25E	ICFE 25	ICFR 25B		16.2	35.6	027L4087
ICF 25	4	10RB	1½	40	Socket weld, ANSI (B 16.11)	ICFS 25	ICFF 25E	ICFE 25	ICFR 25B		16.2	35.6	027L4091

** Fixed module*
ICAD and coils are not included and must be ordered separately.
***Please Note**: When used in systems with CO_2, the o-rings on the ICM module can swell (grow). At service, it is therefore recommended to install new o-rings, before the ICM function module is re-installed in the ICF valve body.*

Liquid feed

Application 15: Liquid feed with external connection

Type	# of Modules	Appl. #	Connection size		Connection type	Module location						Weight		Code number
			[in.]	[mm]		M1	M2	M3	M4	M5	M6	kg	lbs	
ICF 20	6	15RA	1	25	Butt-weld DIN-EN 10220	ICFS 20	ICFF 20	ICFE 20	ICFC 20	ICFW 20D	ICFR 20A	9.1	20.0	027L3157
ICF 20	6	15RB	1	25	Butt-weld DIN-EN 10220	ICFS 20	ICFF 20	ICFE 20	ICFC 20	ICFW 20D	ICFR 20B	9.1	20.0	027L3434
ICF 25	6	15RA	1	25	Butt-weld DIN-EN 10220	ICFS 25	ICFF 25	ICFE 25	ICFC 25	ICFW 25D	ICFR 25A	21.8	48.0	027L4121
ICF 25	6	15RB	1¼	32	Butt-weld DIN-EN 10220	ICFS 25	ICFF 25	ICFE 25	ICFC 25	ICFW 25D	ICFR 25B	22.7	49.9	027L4126
ICF 25	6	15RB	1½	40	Butt-weld DIN-EN 10220	ICFS 25	ICFF 25	ICFE 25	ICFC 25	ICFW 25D	ICFR 25B	21.9	48.2	027L4130
ICF 25	6	15RA	1	25	Socket weld, ANSI (B 16.11)	ICFS 25	ICFF 25E	ICFE 25	ICFC 25	ICFW 25S	ICFR 25A	23.5	51.7	027L4122
ICF 25	6	15RB	1¼	32	Socket weld, ANSI (B 16.11)	ICFS 25	ICFF 25E	ICFE 25	ICFC 25	ICFW 25S	ICFR 25B	23.6	51.9	027L4127
ICF 25	6	15RB	1½	40	Socket weld, ANSI (B 16.11)	ICFS 25	ICFF 25E	ICFE 25	ICFC 25	ICFW 25S	ICFR 25B	23.7	52.1	027L4131

Solenoid common

Application 4: Solenoid - Liquid & hot gas lines

Type	# of Modules	Appl. #	Connection size		Connection type	Module location						Weight		Code number
			[in.]	[mm]		M1	M2	M3	M4	M5	M6	kg	lbs	
ICF 20	6	4	1	25	Butt-weld DIN-EN 10220	ICFS 20	ICFF 20	ICFE 20	ICFO 20	ICFB 20	ICFS 20	9.2	20.2	027L3028
ICF 20	6	4	1¼	32	Butt-weld DIN-EN 10220	ICFS 20	ICFF 20	ICFE 20	ICFO 20	ICFB 20	ICFS 20	9.2	20.2	027L3029
ICF 20	6	4	¾	20	Socket weld, ANSI (B 16.11)	ICFS 20	ICFF 20E	ICFE 20	ICFO 20	ICFB 20	ICFS 20	9.4	20.7	027L3124
ICF 20	6	4	1	25	Socket weld, ANSI (B 16.11)	ICFS 20	ICFF 20E	ICFE 20	ICFO 20	ICFB 20	ICFS 20	9.3	20.5	027L3032
ICF 20	6	4	1¼	32	Socket weld, ANSI (B 16.11)	ICFS 20	ICFF 20E	ICFE 20	ICFO 20	ICFB 20	ICFS 20	9.5	20.9	027L3033

Application 8: Solenoid - Liquid & hot gas lines

Type	# of Modules	Appl. #	Connection size		Connection type	Module location						Weight		Code number
			[in.]	[mm]		M1	M2	M3	M4	M5	M6	kg	lbs	
ICF 15	4	8	½	15	Butt-weld ANSI (B 36.10)	ICFS 15*	ICFF 15*	ICFE 20	ICFO 20			5.7	12.6	027L4533
ICF 15	4	8	¾	20	Butt-weld ANSI (B 36.10)	ICFS 15*	ICFF 15*	ICFE 20	ICFO 20			5.7	12.6	027L4535
ICF 20	4	8	¾	20	Butt-weld ANSI (B 36.10)	ICFS 20	ICFF 20	ICFE 20	ICFO 20			6.3	13.9	027L3062
ICF 15	4	8	½	15	Butt-weld DIN-EN 10220	ICFS 15*	ICFF 15*	ICFE 20	ICFO 20			5.7	12.6	027L4532
ICF 15	4	8	½	15	Butt-weld DIN-EN 10220	ICFS 15*	ICFF 15*	ICFE 20	ICFN 20			6.8	15.0	027L4579
ICF 15	4	8	¾	20	Butt-weld DIN-EN 10220	ICFS 15*	ICFF 15*	ICFE 20	ICFO 20			5.7	12.6	027L4520
ICF 15	4	8	¾	20	Butt-weld DIN-EN 10220	ICFS 15*	ICFF 15*	ICFE 20	ICFN 20			6.8	15.0	027L4574
ICF 20	4	8	1	25	Butt-weld DIN-EN 10220	ICFS 20	ICFF 20	ICFE 20	ICFO 20			7.2	15.8	027L3060
ICF 25	4	8	1	25	Butt-weld DIN-EN 10220	ICFS 25	ICFF 25	ICFE 25	ICFB 25			12.4	27.3	027L4054
ICF 20	4	8	1¼	32	Butt-weld DIN-EN 10220	ICFS 20	ICFF 20	ICFE 20	ICFO 20			6.3	13.9	027L3061
ICF 25	4	8	1¼	32	Butt-weld DIN-EN 10220	ICFS 25	ICFF 25	ICFE 25	ICFB 25			14.5	31.9	027L4133
ICF 25	4	8	1½	40	Butt-weld DIN-EN 10220	ICFS 25	ICFF 25	ICFE 25	ICFB 25			14.5	31.9	027L4059
ICF 15	4	8	½	15	Pipe thread (ANSI B 1.20.1)	ICFS 15*	ICFF 15*	ICFE 20	ICFO 20			5.7	12.6	027L4534
ICF 15	4	8	½	15	Socket weld, ANSI (B 16.11)	ICFS 15*	ICFF 15*	ICFE 20	ICFO 20			5.7	12.6	027L4526
ICF 15	4	8	¾	20	Socket weld, ANSI (B 16.11)	ICFS 15*	ICFF 15*	ICFE 20	ICFO 20			5.7	12.6	027L4611
ICF 20	4	8	¾	20	Socket weld, ANSI (B 16.11)	ICFS 20	ICFF 20E	ICFE 20	ICFO 20			6.6	14.5	027L3366
ICF 20	4	8	1	25	Socket weld, ANSI (B 16.11)	ICFS 20	ICFF 20E	ICFE 20	ICFO 20			6.7	14.7	027L3064
ICF 20	4	8	1¼	32	Socket weld, ANSI (B 16.11)	ICFS 20	ICFF 20E	ICFE 20	ICFO 20			6.7	14.7	027L3065
ICF 15	4	8	7/8	22	Solder ANSI B 16.22	ICFS 15*	ICFF 15*	ICFE 20	ICFO 20			5.7	12.6	027L4536
ICF 15	4	8	7/8	22	Solder DIN-EN1254-1	ICFS 15*	ICFF 15*	ICFE 20	ICFO 20			5.7	12.6	027L4537

** Fixed module*
ICAD and coils are not included and must be ordered separately.
***Please Note**: When used in systems with CO_2, the o-rings on the ICM module can swell (grow). At service, it is therefore recommended to install new o-rings, before the ICM function module is re-installed in the ICF valve body.*

Liquid injection

Application 5: Liquid injection (expansion)

Type	# of modules	Appl. #	Connection size		Connection type	Module location						Weight		Code number
			[in.]	[mm]		M1	M2	M3	M4	M5	M6	kg	lbs	
ICF 20	6	5MA	¾	20	Butt-weld ANSI (B 36.10)	ICFS 20	ICFF 20	ICFE 20	ICFO 20	ICM 20-A	ICFS 20	9.6	21.1	027L3037
ICF 20	6	5MB	¾	20	Butt-weld ANSI (B 36.10)	ICFS 20	ICFF 20	ICFE 20	ICFO 20	ICM 20-B	ICFS 20	9.9	21.8	027L3043
ICF 25	6	5MA	1¼	32	Butt-weld ANSI (B 36.10)	ICFS 25	ICFF 25	ICFE 25	ICFB 25	ICM 25-A	ICFS 25	23.0	50.6	027L4043
ICF 20	6	5MA33	¾	20	Butt-weld DIN-EN 10220	ICFS 20	ICFF 20	ICFE 20	ICFO 20	ICM 20-A33	ICFS 20	10.1	22.2	027L3367
ICF 20	6	5MA33	¾	20	Butt-weld DIN-EN 10220	ICFS 20	ICFF 20-74	ICFE 20	ICFO 20	ICM 20-A33	ICFS 20	9.8	21.6	027L3151
ICF 20	6	5MA	¾	20	Butt-weld DIN-EN 10220	ICFS 20	ICFF 20	ICFE 20	ICFO 20	ICM 20-A	ICFS 20	9.8	21.6	027L3034
ICF 20	6	5MA	¾	20	Butt-weld DIN-EN 10220	ICFS 20	ICFF 20-74	ICFE 20	ICFO 20	ICM 20-A	ICFS 20	9.8	21.6	027L3147
ICF 20	6	5MB	¾	20	Butt-weld DIN-EN 10220	ICFS 20	ICFF 20	ICFE 20	ICFO 20	ICM 20-B	ICFS 20	9.8	21.6	027L3145
ICF 20	6	5MB66	¾	20	Butt-weld DIN-EN 10220	ICFS 20	ICFF 20	ICFE 20	ICFO 20	ICM 20-B66	ICFS 20	9.6	21.1	027L3161
ICF 20	6	5MC	¾	20	Butt-weld DIN-EN 10220	ICFS 20	ICFF 20	ICFE 20	ICFO 20	ICM 20-C	ICFS 20	9.9	21.8	027L3432
ICF 20	6	5MA33	1	25	Butt-weld DIN-EN 10220	ICFS 20	ICFF 20	ICFE 20	ICFO 20	ICM 20-A33	ICFS 20	10.1	22.2	027L3388
ICF 20	6	5MA33	1	25	Butt-weld DIN-EN 10220	ICFS 20	ICFF 20-74	ICFE 20	ICFO 20	ICM 20-A33	ICFS 20	9.6	21.1	027L3153
ICF 20	6	5MA	1	25	Butt-weld DIN-EN 10220	ICFS 20	ICFF 20	ICFE 20	ICFO 20	ICM 20-A	ICFS 20	9.8	21.6	027L3036
ICF 20	6	5HMA	1	25	Butt-weld DIN-EN 10220	ICFS 20	ICFF 20	ICFE 20H	ICFB 20	ICM 20-A	ICFS 20	10.4	22.9	027L3322
ICF 20	6	5MA	1	25	Butt-weld DIN-EN 10220	ICFS 20	ICFF 20-74	ICFE 20	ICFO 20	ICM 20-A	ICFS 20	9.8	21.6	027L3148
ICF 20	6	5MB	1	25	Butt-weld DIN-EN 10220	ICFS 20	ICFF 20	ICFE 20	ICFO 20	ICM 20-B	ICFS 20	9.6	21.1	027L3042
ICF 20	6	5MB	1	25	Butt-weld DIN-EN 10220	ICFS 20	ICFF 20-74	ICFE 20	ICFO 20	ICM 20-B	ICFS 20	9.8	21.6	027L3149
ICF 20	6	5HMB	1	25	Butt-weld DIN-EN 10220	ICFS 20	ICFF 20	ICFE 20H	ICFB 20	ICM 20-B	ICFS 20	11.4	25.1	027L3325
ICF 20	6	5MB66	1	25	Butt-weld DIN-EN 10220	ICFS 20	ICFF 20	ICFE 20	ICFO 20	ICM 20-B66	ICFS 20	10.5	23.1	027L3389
ICF 20	6	5MC	1	25	Butt-weld DIN-EN 10220	ICFS 20	ICFF 20	ICFE 20	ICFO 20	ICM 20-C	ICFS 20	9.9	21.8	027L3047
ICF 20	6	5HMC	1	25	Butt-weld DIN-EN 10220	ICFS 20	ICFF 20	ICFE 20H	ICFB 20	ICM 20-C	ICFS 20	11.4	25.1	027L3328
ICF 25	6	5MA	1	25	Butt-weld DIN-EN 10220	ICFS 25	ICFF 25	ICFE 25	ICFB 25	ICM 25-A	ICFS 25	22.8	50.2	027L4038
ICF 25	6	5MA33	1¼	32	Butt-weld DIN-EN 10220	ICFS 25	ICFF 25	ICFE 25	ICFB 25	ICM 25-A33	ICFS 25	23.0	50.6	027L4171
ICF 20	6	5MB66	1¼	32	Butt-weld DIN-EN 10220	ICFS 20	ICFF 20	ICFE 20	ICFO 20	ICM 20-B66	ICFS 20	9.6	21.1	027L3374
ICF 20	6	5MC	1¼	32	Butt-weld DIN-EN 10220	ICFS 20	ICFF 20	ICFE 20	ICFO 20	ICM 20-C	ICFS 20	9.8	21.6	027L3048
ICF 20	6	5HMB	1¼	32	Butt-weld DIN-EN 10220	ICFS 20	ICFF 20	ICFE 20-H	ICFB 20	ICM 20-B	ICFS 20	10.3	22.7	027L3390
ICF 20	6	5HMC	1¼	32	Butt-weld DIN-EN 10220	ICFS 20	ICFF 20	ICFE 20H	ICFB 20	ICM 20-C	ICFS 20	10.3	22.7	027L3329
ICF 25	6	5MA	1¼	32	Butt-weld DIN-EN 10220	ICFS 25	ICFF 25	ICFE 25	ICFB 25	ICM 25-A	ICFS 25	23.0	50.6	027L4042
ICF 25	6	5MB	1¼	32	Butt-weld DIN-EN 10220	ICFS 25	ICFF 25	ICFE 25	ICFB 25	ICM 25-B	ICFS 25	22.0	48.5	027L4047
ICF 25	6	5MA	1½	40	Butt-weld DIN-EN 10220	ICFS 25	ICFF 25E	ICFE 25	ICFB 25	ICM 25-A	ICFS 25	21.9	48.2	027L4148
ICF 25	6	5MA	1½	40	Butt-weld DIN-EN 10220	ICFS 25	ICFF 25	ICFE 25	ICFB 25	ICM 25-A	ICFS 25	22.2	48.9	027L4174
ICF 25	6	5MA33	1½	40	Butt-weld DIN-EN 10220	ICFS 25	ICFF 25	ICFE 25	ICFB 25	ICM 25-A33	ICFS 25	22.2	48.9	027L4170
ICF 25	6	5MB	1½	40	Butt-weld DIN-EN 10220	ICFS 25	ICFF 25	ICFE 25	ICFB 25	ICM 25-B	ICFS 25	22.2	48.9	027L4052
ICF 20	6	5MA33	¾	20	Socket weld, ANSI (B 16.11)	ICFS 20	ICFF 20E	ICFE 20	ICFO 20	ICM 20-A33	ICFS 20	10.1	22.2	027L3154
ICF 20	6	5MA	¾	20	Socket weld, ANSI (B 16.11)	ICFS 20	ICFF 20E	ICFE 20	ICFO 20	ICM 20-A	ICFS 20	10.0	22.0	027L3038
ICF 20	6	5MB66	¾	20	Socket weld, ANSI (B 16.11)	ICFS 20	ICFF 20E	ICFE 20	ICFO 20	ICM 20-B66	ICFS 20	10.5	23.1	027L3159
ICF 20	6	5MB	¾	20	Socket weld, ANSI (B 16.11)	ICFS 20	ICFF 20E	ICFE 20	ICFO 20	ICM 20-B	ICFS 20	9.8	21.6	027L3127
ICF 20	6	5MA33	1	25	Socket weld, ANSI (B 16.11)	ICFS 20	ICFF 20-E	ICFE 20	ICFO 20	ICM 20-A33	ICFS 20	10.1	22.2	027L3391
ICF 20	6	5MA	1	25	Socket weld, ANSI (B 16.11)	ICFS 20	ICFF 20E	ICFE 20	ICFO 20	ICM 20-A	ICFS 20	10.1	22.2	027L3040
ICF 20	6	5HMA	1	25	Socket weld, ANSI (B 16.11)	ICFS 20	ICFF 20E	ICFE 20H	ICFB 20	ICM 20-A	ICFS 20	11.4	25.1	027L3323
ICF 20	6	5MB66	1	25	Socket weld, ANSI (B 16.11)	ICFS 20	ICFF 20E	ICFE 20	ICFO 20	ICM 20-B66	ICFS 20	10.5	23.1	027L3160
ICF 20	6	5MB	1	25	Socket weld, ANSI (B 16.11)	ICFS 20	ICFF 20E	ICFE 20	ICFO 20	ICM 20-B	ICFS 20	10.0	22.0	027L3045
ICF 20	6	5HMB	1	25	Socket weld, ANSI (B 16.11)	ICFS 20	ICFF 20E	ICFE 20H	ICFB 20	ICM 20-B	ICFS 20	11.0	24.2	027L3326
ICF 20	6	5MC	1	25	Socket weld, ANSI (B 16.11)	ICFS 20	ICFF 20E	ICFE 20	ICFO 20	ICM 20-C	ICFS 20	10.0	22.0	027L3051
ICF 20	6	5HMC	1	25	Socket weld, ANSI (B 16.11)	ICFS 20	ICFF 20E	ICFE 20H	ICFB 20	ICM 20-C	ICFS 20	10.0	22.0	027L3330
ICF 25	6	5MA	1	25	Socket weld, ANSI (B 16.11)	ICFS 25	ICFF 25E	ICFE 25	ICFB 25	ICM 25-A	ICFS 25	23.1	50.8	027L4039
ICF 25	6	5MA33	1¼	32	Socket weld, ANSI (B 16.11)	ICFS 25	ICFF 25-E	ICFE 25	ICFB 25	ICM 25-A33	ICFS 25	22.0	48.5	027L4173
ICF 25	6	5MA	1¼	32	Socket weld, ANSI (B 16.11)	ICFS 25	ICFF 25E	ICFE 25	ICFB 25	ICM 25-A	ICFS 25	23.2	51.0	027L4044
ICF 20	6	5MB66	1¼	32	Socket weld, ANSI (B 16.11)	ICFS 20	ICFF 20-E	ICFE 20	ICFO 20	ICM 20-B66	ICFS 20	10.5	23.1	027L3392
ICF 25	6	5MB	1¼	32	Socket weld, ANSI (B 16.11)	ICFS 25	ICFF 25-E	ICFE 25	ICFB 25	ICM 25-B	ICFS 25	23.2	51.1	027L4049
ICF 20	6	5MC	1¼	32	Socket weld, ANSI (B 16.11)	ICFS 20	ICFF 20E	ICFE 20	ICFO 20	ICM 20-C	ICFS 20	10.1	22.2	027L3052
ICF 20	6	5HMB	1¼	32	Socket weld, ANSI (B 16.11)	ICFS 20	ICFF 20-E	ICFE 20-H	ICFB 20	ICM 20-B	ICFS 20	11.0	24.2	027L3393
ICF 25	6	5MA	1½	40	Socket weld, ANSI (B 16.11)	ICFS 20	ICFF 20E	ICFE 20H	ICFB 20	ICM 20-C	ICFS 20	11.0	24.2	027L3331
ICF 25	6	5MA33	1½	40	Socket weld, ANSI (B 16.11)	ICFS 25	ICFF 25-E	ICFE 25	ICFB 25	ICM 25-A33	ICFS 25	22.0	48.5	027L4172
ICF 25	6	5MA	1½	40	Socket weld, ANSI (B 16.11)	ICFS 25	ICFF 25-E	ICFE 25	ICFB 25	ICM 25-A33	ICFS 25	23.1	50.8	027L4132
ICF 25	6	5MB	1½	40	Socket weld, ANSI (B 16.11)	ICFS 25	ICFF 25-E	ICFE 25	ICFB 25	ICM 25-B	ICFS 25	23.2	51.1	027L4053

ICAD and coils are not included and must be ordered separately.
***Please Note**: When used in systems with CO_2, the o-rings on the ICM module can swell (grow). At service, it is therefore recommended to install new o-rings, before the ICM function module is re-installed in the ICF valve body.*

Liquid injection

Application 12: Liquid injection (expansion) PWM

Type	# of modules	Appl. #	Connection size		Connection type	Module location						Weight		Code number
			[in.]	[mm]		M1	M2	M3	M4	M5	M6	kg	lbs	
ICF 15	4	12	¾	20	Butt-weld ANSI (B 36.10)	ICFS 15*	ICFF 15*	ICFA 20	ICFS 20			6.2	13.7	027L4556
ICF 15	4	12	½	15	Butt-weld DIN-EN 10220	ICFS 15*	ICFF 15*	ICFA 20	ICFS 20			6.2	13.7	027L4573
ICF 15	4	12	¾	20	Butt-weld DIN-EN 10220	ICFS 15*	ICFF 15*	ICFA 20	ICFS 20			6.2	13.7	027L4522
ICF 20	4	12	¾	20	Butt-weld DIN-EN 10220	ICFS 20	ICFF 20	ICFA 20	ICFS 20			6.8	15.0	027L3089
ICF 15	4	12	½	15	Socket weld, ANSI (B 16.11)	ICFS 15*	ICFF 15*	ICFA 20	ICFS 20			6.2	13.7	027L4528
ICF 15	4	12	¾	20	Socket weld, ANSI (B 16.11)	ICFS 15*	ICFF 15*	ICFA 20	ICFS 20			6.2	13.7	027L4613
ICF 20	4	12	¾	20	Socket weld, ANSI (B 16.11)	ICFS 20	ICFF 20E	ICFA 20	ICFS 20			6.8	15.0	027L3091

Application 14: Liquid injection (expansion)

Type	# of modules	Appl. #	Connection size		Connection type	Module location						Weight		Code number
			[in.]	[mm]		M1	M2	M3	M4	M5	M6	kg	lbs	
ICF 15	4	14MA	½	15	Butt-weld DIN-EN 10220	ICFS 15*	ICFF 15*	ICM 20-A	ICFS 20			6.8	15.0	027L4551
ICF 15	4	14MB	½	15	Butt-weld DIN-EN 10220	ICFS 15*	ICFF 15*	ICM 20-B	ICFS 20			6.8	15.0	027L4559
ICF 20	4	14MA33	¾	20	Butt-weld DIN-EN 10220	ICFS 20	ICFF 20	ICM 20-A33	ICFS 20			7.3	16.1	027L3394
ICF 15	4	14MA	¾	20	Butt-weld DIN-EN 10220	ICFS 15*	ICFF 15*	ICM 20-A	ICFS 20			6.8	15.0	027L4525
ICF 20	4	14MA	¾	20	Butt-weld DIN-EN 10220	ICFS 20	ICFF 20	ICM 20-A	ICFS 20			7.3	16.1	027L3095
ICF 15	4	14MB66	¾	20	Butt-weld DIN-EN 10220	ICFS 15*	ICFF 15*	ICM 20-B66	ICFS 20			6.8	15.0	027L4553
ICF 20	4	14MB66	¾	20	Butt-weld DIN-EN 10220	ICFS 20	ICFF 20	ICM 20-B66	ICFS 20			7.2	15.8	027L4155
ICF 15	4	14MB	¾	20	Butt-weld DIN-EN 10220	ICFS 15*	ICFF 15*	ICM 20-B	ICFS 20			6.8	15.0	027L4560
ICF 20	4	14 MA33	1	25	Butt-weld DIN-EN 10220	ICFS 20	ICFF 20	ICM 20-A33	ICFS 20			6.6	14.5	027L3365
ICF 20	4	14MA	1	25	Butt-weld DIN-EN 10220	ICFS 20	ICFF 20	ICM 20-A	ICFS 20			7.3	16.1	027L3097
ICF 20	4	14MB66	1	25	Butt-weld DIN-EN 10220	ICFS 20	ICFF 20	ICM 20-B66	ICFS 20			7.2	15.8	027L3356
ICF 20	4	14MB	1	25	Butt-weld DIN-EN 10220	ICFS 20	ICFF 20	ICM 20-B	ICFS 20			7.2	15.8	027L3103
ICF 20	4	14MC	1	25	Butt-weld DIN-EN 10220	ICFS 20	ICFF 20	ICM 20-C	ICFS 20			7.2	15.8	027L3108
ICF 25	4	14MA	1	25	Butt-weld DIN-EN 10220	ICFS 25	ICFF 25	ICM 25-A	ICFS 25			15.5	34.1	027L4103
ICF 20	4	14MC	1¼	32	Butt-weld DIN-EN 10220	ICFS 20	ICFF 20	ICM 20-C	ICFS 20			7.3	16.1	027L3109
ICF 25	4	14MB	1¼	32	Butt-weld DIN-EN 10220	ICFS 25	ICFF 25	ICM 25-B	ICFS 25			14.4	31.7	027L4112
ICF 25	4	14MA	1¼	32	Butt-weld DIN-EN 10220	ICFS 25	ICFF 25	ICM 25-A	ICFS 25			15.4	33.9	027L4107
ICF 25	4	14MA	1½	40	Butt-weld DIN-EN 10220	ICFS 25	ICFF 25	ICM 25-A	ICFS 25			15.3	33.7	027L4182
ICF 25	4	14MB	1½	40	Butt-weld DIN-EN 10220	ICFS 25	ICFF 25	ICM 25-B	ICFS 25			15.3	33.7	027L4117
ICF 15	4	14MA	½	15	Socket weld, ANSI (B 16.11)	ICFS 15*	ICFF 15*	ICM 20-A	ICFS 20			6.8	15.0	027L4531
ICF 15	4	14MB	½	15	Socket weld, ANSI (B 16.11)	ICFS 15*	ICFF 15*	ICM 20-B	ICFS 20			6.8	15.0	027L4583
ICF 15	4	14MB	¾	20	Socket weld, ANSI (B 16.11)	ICFS 15*	ICFF 15*	ICM 20-B	ICFS 20			6.8	15.0	027L4623
ICF 15	4	14MA	¾	20	Socket weld, ANSI (B 16.11)	ICFS 15*	ICFF 15*	ICM 20-A	ICFS 20			6.8	15.0	027L4616
ICF 20	4	14MA	¾	20	Socket weld, ANSI (B 16.11)	ICFS 20	ICFF 20E	ICM 20-A	ICFS 20			7.5	16.5	027L3099
ICF 20	4	14MA	1	25	Socket weld, ANSI (B 16.11)	ICFS 20	ICFF 20E	ICM 20-A	ICFS 20			6.7	14.7	027L3101
ICF 20	4	14MB	1	25	Socket weld, ANSI (B 16.11)	ICFS 20	ICFF 20E	ICM 20-B	ICFS 20			6.7	14.7	027L3106
ICF 25	4	14MB	1	25	Socket weld, ANSI (B 16.11)	ICFS 25	ICFF 25	ICM 25-B	ICFS 25			14.4	31.7	027L4188
ICF 25	4	14MB	1¼	32	Socket weld, ANSI (B 16.11)	ICFS 25	ICFF 25E	ICM 25-B	ICFS 25			17.3	38.1	027L4114
ICF 25	4	14MB	1½	40	Socket weld, ANSI (B 16.11)	ICFS 25	ICFF 25E	ICM 25-B	ICFS 25			16.6	36.6	027L4118
ICF 20	4	14MC	1	25	Socket weld, ANSI (B 16.11)	ICFS 20	ICFF 20E	ICM 20-C	ICFS 20			6.7	14.7	027L3112
ICF 25	4	14MA	1	25	Socket weld, ANSI (B 16.11)	ICFS 25	ICFF 25E	ICM 25-A	ICFS 25			15.8	34.8	027L4104
ICF 20	4	14MC	1¼	32	Socket weld, ANSI (B 16.11)	ICFS 20	ICFF 20E	ICM 20-C	ICFS 20			7.4	16.3	027L3113
ICF 25	4	14MA	1¼	32	Socket weld, ANSI (B 16.11)	ICFS 25	ICFF 25E	ICM 25-A	ICFS 25			15.6	34.3	027L4109
ICF 25	4	14MA	1½	40	Socket weld, ANSI (B 16.11)	ICFS 25	ICFF 25E	ICM 25-A	ICFS 25			15.8	34.8	027L4140

** Fixed module*
ICAD and coils are not included and must be ordered separately.
***Please Note**: When used in systems with CO_2, the o-rings on the ICM module can swell (grow). At service, it is therefore recommended to install new o-rings, before the ICM function module is re-installed in the ICF valve body.*

Hot gas defrost

Application 9: Hot gas defrost

Type	# of Modules	Appl. #	Connection size		Connection type	Module location					Weight		Code number
			[in.]	[mm]		M1	M2	M3	M4		kg	lbs	
ICF 20	4	9	¾	20	Butt-weld ANSI (B 36.10)	ICFS 20	ICFF 20	ICFE 20	ICFS 20		7.2	15.8	027L3069
ICF 15	4	9H	¾	20	Butt-weld ANSI (B 36.10)	ICFS 15*	ICFF 15*	ICFE 20H	ICFS 20		7.2	15.4	027L4554
ICF 15	4	9	½	15	Butt-weld DIN-EN 10220	ICFS 15*	ICFF 15*	ICFE 20	ICFS 20		6.3	13.9	027L4543
ICF 15	4	9H	½	15	Butt-weld DIN-EN 10220	ICFS 15*	ICFF 15*	ICFE 20H	ICFS 20		7.2	15.4	027L4541
ICF 15	4	9	¾	20	Butt-weld DIN-EN 10220	ICFS 15*	ICFF 15*	ICFE 20	ICFS 20		6.3	13.9	027L4571
ICF 20	4	9	¾	20	Butt-weld DIN-EN 10220	ICFS 20	ICFF 20	ICFE 20	ICFS 20		6.7	14.7	027L3120
ICF 15	4	9H	¾	20	Butt-weld DIN-EN 10220	ICFS 15*	ICFF 15*	ICFE 20H	ICFS 20		7.2	15.4	027L4521
ICF 20	4	9	1	25	Butt-weld DIN-EN 10220	ICFS 20	ICFF 20	ICFE 20	ICFS 20		7.2	15.8	027L3067
ICF 20	4	9H	1	25	Butt-weld DIN-EN 10220	ICFS 20	ICFF 20	ICFE 20H	ICFS 20		8.2	18.0	027L3333
ICF 25	4	9	1	25	Butt-weld DIN-EN 10220	ICFS 25	ICFF 25	ICFE 25	ICFS 25		15.8	34.8	027L4063
ICF 20	4	9	1¼	32	Butt-weld DIN-EN 10220	ICFS 20	ICFF 20	ICFE 20	ICFS 20		6.8	15.0	027L3068
ICF 20	4	9H	1¼	32	Butt-weld DIN-EN 10220	ICFS 20	ICFF 20	ICFE 20H	ICFS 20		7.6	16.7	027L3334
ICF 25	4	9	1¼	32	Butt-weld DIN-EN 10220	ICFS 25	ICFF 25	ICFE 25	ICFS 25		15.7	34.5	027L4067
ICF 25	4	9	1½	40	Butt-weld DIN-EN 10220	ICFS 25	ICFF 25	ICFE 25	ICFS 25		15.7	34.5	027L4072
ICF 15	4	9	½	15	Socket weld, ANSI (B 16.11)	ICFS 15*	ICFF 15*	ICFE 20	ICFS 20		6.3	13.9	027L4538
ICF 15	4	9H	½	15	Socket weld, ANSI (B 16.11)	ICFS 15*	ICFF 15*	ICFE 20H	ICFS 20		7.2	15.4	027L4527
ICF 15	4	9	¾	20	Socket weld, ANSI (B 16.11)	ICFS 15*	ICFF 15*	ICFE 20	ICFS 20		6.3	13.9	027L4618
ICF 15	4	9H	¾	20	Socket weld, ANSI (B 16.11)	ICFS 15*	ICFF 15*	ICFE 20H	ICFS 20		7.2	15.4	027L4612
ICF 20	4	9H	¾	20	Socket weld, ANSI (B 16.11)	ICFS 20	ICFF 20E	ICFE 20H	ICFS 20		8.0	17.6	027L3351
ICF 20	4	9	1	25	Socket weld, ANSI (B 16.11)	ICFS 20	ICFF 20E	ICFE 20	ICFS 20		7.0	15.4	027L3071
ICF 20	4	9H	1	25	Socket weld, ANSI (B 16.11)	ICFS 20	ICFF 20E	ICFE 20H	ICFS 20		8.1	17.8	027L3336
ICF 25	4	9	1	25	Socket weld, ANSI (B 16.11)	ICFS 25	ICFF 25E	ICFE 25	ICFS 25		16.0	35.2	027L4064
ICF 20	4	9	1¼	32	Socket weld, ANSI (B 16.11)	ICFS 20	ICFF 20E	ICFE 20	ICFS 20		7.4	16.3	027L3072
ICF 20	4	9H	1¼	32	Socket weld, ANSI (B 16.11)	ICFS 20	ICFF 20E	ICFE 20H	ICFS 20		7.9	17.4	027L3337
ICF 25	4	9	1¼	32	Socket weld, ANSI (B 16.11)	ICFS 25	ICFF 25E	ICFE 25	ICFS 25		16.0	35.2	027L4069
ICF 25	4	9	1½	40	Socket weld, ANSI (B 16.11)	ICFS 25	ICFF 25E	ICFE 25	ICFS 25		16.1	35.4	027L4073

Hot gas defrost (ICF 50 only)

Application 47: Hot gas defrost - On/Off 2-step solenoid (ICF 50 only)

Type	# of Modules	Appl. #	Connection size		Connection type		Module location					Weight		Code number
			[in.]	[mm]			M1	M2	M3	M4		kg	lbs	
ICF 50	4	47	1½	40	Socket weld, ANSI (B 16.11)	S	SVA-S 50*	FIA 50	ICSH 50-32	SVA-S 50		25.8	56.8	027L5070
ICF 50	4	47	1½	40	Socket weld, ANSI (B 16.11)	S	SVA-S 50*	FIA 50	ICSH 50-40	SVA-S 50		25.8	56.8	027L5071
ICF 50	4	47	2	50	Socket weld, ANSI (B 16.11)	S	SVA-S 50*	FIA 50	ICSH 50-40	SVA-S 50		25.8	56.8	027L5072
ICF 50	4	47	2	50	Socket weld, ANSI (B 16.11)	S	SVA-S 50*	FIA 50	ICSH 50	SVA-S 50		25.8	56.8	027L5073

Application 48: Hot gas defrost - On/Off 2-step solenoid + manual Regulating (ICF 50 only)

Type	# of Modules	Appl. #	Connection size		Connection type		Module location					Weight		Code number
			[in.]	[mm]			M1	M2	M3	M4		kg	lbs	
ICF 50	4	48	1½	40	Socket weld, ANSI (B 16.11)	S	SVA-S 50*	FIA 50	ICSH 50-32	REG-SB 50		25.8	56.8	027L5074

** Fixed module*
ICAD and coils are not included and must be ordered separately.
***Please Note**: When used in systems with CO_2, the o-rings on the ICM module can swell (grow). At service, it is therefore recommended to install new o-rings, before the ICM function module is re-installed in the ICF valve body.*

Solenoid multiple evaporators

Application 11: Solenoid - Multiple evaporators

Type	# of Modules	Appl. #	Connection size		Connection type	Module location					Weight		Code number
			[in.]	[mm]		M1	M2	M3	M4		kg	lbs	
ICF 20	4	11	¾	20	Butt-weld ANSI (B 36.10)	ICFS 20	ICFF 20	ICFE 20	ICFC 20		6.5	14.3	027L3085
ICF 15	4	11	½	15	Butt-weld DIN-EN 10220	ICFS 15*	ICFF 15*	ICFE 20	ICFC 20		6.5	14.3	027L4539
ICF 15	4	11	¾	20	Butt-weld DIN-EN 10220	ICFS 15*	ICFF 15*	ICFE 20	ICFC 20		6.5	14.3	027L4547
ICF 15	4	11H	¾	20	Butt-weld DIN-EN 10220	ICFS 15*	ICFF 15*	ICFE 20-H	ICFC 20		7.2	15.8	027L4546
ICF 20	4	11	¾	20	Butt-weld DIN-EN 10220	ICFS 20	ICFF 20	ICFE 20	ICFC 20		6.4	14.1	027L4580
ICF 20	4	11	1	25	Butt-weld DIN-EN 10220	ICFS 20	ICFF 20	ICFE 20	ICFC 20		6.4	14.1	027L3083
ICF 20	4	11H	1	25	Butt-weld DIN-EN 10220	ICFS 20	ICFF 20	ICFE 20H	ICFC 20		8.0	17.6	027L3345
ICF 20	4	11	1¼	32	Butt-weld DIN-EN 10220	ICFS 20	ICFF 20	ICFE 20	ICFC 20		6.5	14.3	027L3084
ICF 20	4	11H	1¼	32	Butt-weld DIN-EN 10220	ICFS 20	ICFF 20	ICFE 20H	ICFC 20		7.4	16.3	027L3346
ICF 25	4	11	1¼	32	Butt-weld DIN-EN 10220	ICFS 25	ICFF 25	ICFE 25	ICFC 25		14.9	32.8	027L4094
ICF 25	4	11	1½	40	Butt-weld DIN-EN 10220	ICFS 25	ICFF 25	ICFE 25	ICFC 25		13.7	30.1	027L4099
ICF 20	4	11	1	25	Socket weld, ANSI (B 16.11)	ICFS 20	ICFF 20E	ICFE 20	ICFC 20		6.9	15.2	027L3087
ICF 20	4	11H	1	25	Socket weld, ANSI (B 16.11)	ICFS 20	ICFF 20E	ICFE 20H	ICFC 20		8.0	17.6	027L3348
ICF 20	4	11	1¼	32	Socket weld, ANSI (B 16.11)	ICFS 20	ICFF 20E	ICFE 20	ICFC 20		6.7	14.7	027L3088
ICF 20	4	11H	1¼	32	Socket weld, ANSI (B 16.11)	ICFS 20	ICFF 20E	ICFE 20H	ICFC 20		7.4	16.3	027L3349
ICF 25	4	11	1¼	32	Socket weld, ANSI (B 16.11)	ICFS 25	ICFF 25E	ICFE 25	ICFC 25		13.0	28.6	027L4096
ICF 25	4	11	1½	40	Socket weld, ANSI (B 16.11)	ICFS 25	ICFF 25E	ICFE 25	ICFC 25		14.3	31.5	027L4100

Application 18: Solenoid - Multiple evaporators

Type	# of Modules	Appl. #	Connection size		Connection type	Module location					Weight		Code number
			[in.]	[mm]		M1	M2	M3	M4		kg	lbs	
ICF 15	4	18H	¾	20	Butt-weld ANSI (B 36.10)	ICFS 15*	ICFF 15*	ICFE 20-H	ICFN 20		7.2	15.8	027L4572
ICF 15	4	18H	½	15	Butt-weld DIN-EN 10220	ICFS 15*	ICFF 15*	ICFE 20-H	ICFN 20		7.2	15.8	027L4542
ICF 15	4	18H	¾	20	Butt-weld DIN-EN 10220	ICFS 15*	ICFF 15*	ICFE 20-H	ICFN 20		7.2	15.8	027L4550
ICF 20	4	18	1	25	Butt-weld DIN-EN 10220	ICFS 20	ICFF 20E	ICFE 20	ICFN 20		7.3	16.0	027L3438
ICF 25	4	18	1	25	Butt-weld DIN-EN 10220	ICFS 25	ICFF 25	ICFE 25	ICFN 25		15.8	34.8	027L4175
ICF 25	4	18	1¼	32	Butt-weld DIN-EN 10220	ICFS 25	ICFF 25	ICFE 25	ICFN 25		16.6	36.5	027L4164
ICF 25	4	18	1¼	32	Butt-weld DIN-EN 10220	ICFS 25	ICFF 25E	ICFE 25	ICFN 25		16.6	36.5	027L4575
ICF 25	4	18	1½	40	Butt-weld DIN-EN 10220	ICFS 25	ICFF 25	ICFE 25	ICFN 25		16.6	36.5	027L4165
ICF 25	4	18	1½	40	Butt-weld DIN-EN 10220	ICFS 25	ICFF 25E	ICFE 25	ICFN 25		16.6	36.6	027L4177
ICF 15	4	18	½	15	Socket weld, ANSI (B 16.11)	ICFS 15*	ICFF 15*	ICFE 20	ICFN 20		6.5	14.3	027L4558
ICF 15	4	18H	½	15	Socket weld, ANSI (B 16.11)	ICFS 15*	ICFF 15*	ICFE 20-H	ICFN 20		7.2	15.8	027L4557
ICF 15	4	18	¾	20	Socket weld, ANSI (B 16.11)	ICFS 15*	ICFF 15*	ICFE 20	ICFN 20		6.5	14.3	027L4621
ICF 15	4	18H	¾	20	Socket weld, ANSI (B 16.11)	ICFS 15*	ICFF 15*	ICFE 20-H	ICFN 20		7.2	15.8	027L4620
ICF 15	4	18	¾	20	Socket weld, ANSI (B 16.11)	ICFS 20	ICFF 20E	ICFE 20H	ICFN 20		8.0	17.6	027L3353
ICF 25	4	18	1	25	Socket weld, ANSI (B 16.11)	ICFS 25	ICFF 25E	ICFE 25	ICFN 25		16.9	37.2	027L4136
ICF 20	4	18H	1	25	Socket weld, ANSI (B 16.11)	ICFS 20	ICFF 20E	ICFE 20H	ICFN 20		8.0	17.6	027L3354
ICF 20	4	18H	1¼	32	Socket weld, ANSI (B 16.11)	ICFS 20	ICFF 20E	ICFE 20H	ICFN 20		8.0	17.6	027L3355
ICF 25	4	18	1¼	32	Socket weld, ANSI (B 16.11)	ICFS 25	ICFF 25E	ICFE 25	ICFN 25		16.0	35.2	027L4137
ICF 25	4	18	1½	40	Socket weld, ANSI (B 16.11)	ICFS 25	ICFF 25E	ICFE 25	ICFN 25		16.2	35.6	027L4138

Liquid PWM

Application 13: Liquid injection & liquid feed PWM

Type	# of Modules	Appl. #	Connection size		Connection type	Module location					Weight		Code number
			[in.]	[mm]		M1	M2	M3	M4		kg	lbs	
ICF 15	4	13	¾	20	Butt-weld ANSI (B 36.10)	ICFS 15*	ICFF 15*	ICFA 20	ICFN 20		6.2	13.7	027L4555
ICF 15	4	13	¾	20	Butt-weld DIN-EN 10220	ICFS 15*	ICFF 15*	ICFA 20	ICFN 20		6.2	13.7	027L4523
ICF 20	4	13	¾	20	Butt-weld DIN-EN 10220	ICFS 20	ICFF 20	ICFA 20	ICFN 20		6.8	15.0	027L3092
ICF 15	4	13	½	15	Socket weld, ANSI (B 16.11)	ICFS 15*	ICFF 15*	ICFA 20	ICFN 20		6.2	13.7	027L4529
ICF 15	4	13	¾	20	Socket weld, ANSI (B 16.11)	ICFS 15*	ICFF 15*	ICFA 20	ICFN 20		6.2	13.7	027L4614
ICF 20	4	13	¾	20	Socket weld, ANSI (B 16.11)	ICFS 20	ICFF 20E	ICFA 20	ICFN 20		6.8	15.0	027L3094
ICF 15	4	13	7/8	22	Solder DIN-EN1254-1	ICFS 15*	ICFF 15*	ICFA20	ICFN20		6.2	13.7	027L4582

** Fixed module*
ICAD and coils are not included and must be ordered separately.
***Please Note**: When used in systems with CO_2, the o-rings on the ICM module can swell (grow). At service, it is therefore recommended to install new o-rings, before the ICM function module is re-installed in the ICF valve body.*

Return lines

Application 41: Return lines - ON/OFF

Type	# of Modules	Appl. #	Connection size		Connection type	Module location					Weight		Code number
			[in.]	[mm]		M1	M2	M3	M4		kg	lbs	
ICF 50	4	41	1½	40	Butt-weld DIN-EN 10220	SVA-S 50*	ICFB 50	ICLX 50	SVA-S 50		25.5	56.1	027L5021
ICF 50	4	41	2	50	Butt-weld DIN-EN 10220	SVA-S 50*	ICFB 50	ICLX 50	SVA-S 50		25.5	56.1	027L5023
ICF 50	4	41	1½	40	Socket weld, ANSI (B 16.11)	SVA-S 50*	ICFB 50	ICLX 50	SVA-S 50		25.5	56.1	027L5022
ICF 50	4	41	2	50	Socket weld, ANSI (B 16.11)	SVA-S 50*	ICFB 50	ICLX 50	SVA-S 50		25.5	56.1	027L5024
ICF 65	3	41	2½	65	Butt-weld ANSI (B 36.19)	SVA-S 65*		ICLX 65	SVA-S 65		32.7	71.9	027L6522
ICF 65	3	41	3	80	Butt-weld ANSI (B 36.19)	SVA-S 65*		ICLX 65	SVA-S 65		32.7	71.9	027L6524
ICF 65	3	41	2½	65	Butt-weld DIN-EN 10220	SVA-S 65*		ICLX 65	SVA-S 65		32.7	71.9	027L6521
ICF 65	3	41	3	80	Butt-weld DIN-EN 10220	SVA-S 65*		ICLX 65	SVA-S 65		32.7	71.9	027L6523

Application 42: Return lines - Pressure (temperature) - Mechanical control

Type	# of Modules	Appl. #	Connection size		Connection type	Module location					Weight		Code number
			[in.]	[mm]		M1	M2	M3	M4		kg	lbs	
ICF 50	4	42S50	1½	40	Butt-weld DIN-EN 10220	SVA-S 50*	ICFB 50	ICS 50	SVA-S 50		25.8	56.8	027L5001
ICF 50	4	42S32	1½	40	Butt-weld DIN-EN 10220	SVA-S 50*	ICFB 50	ICS 50-32	SVA-S 50		25.8	56.8	027L5005
ICF 50	4	42S40	1½	40	Butt-weld DIN-EN 10220	SVA-S 50*	ICFB 50	ICS 50-40	SVA-S 50		25.8	56.8	027L5009
ICF 50	4	42S50	2	50	Butt-weld DIN-EN 10220	SVA-S 50*	ICFB 50	ICS 50	SVA-S 50		25.8	56.8	027L5003
ICF 50	4	42S32	2	50	Butt-weld DIN-EN 10220	SVA-S 50*	ICFB 50	ICS 50-32	SVA-S 50		25.8	56.8	027L5007
ICF 50	4	42S40	2	50	Butt-weld DIN-EN 10220	SVA-S 50*	ICFB 50	ICS 50-40	SVA-S 50		25.8	56.8	027L5011
ICF 50	4	42S50	1½	40	Socket weld. ANSI (B 16.11)	SVA-S 50*	ICFB 50	ICS 50	SVA-S 50		25.8	56.8	027L5002
ICF 50	4	42S32	1½	40	Socket weld. ANSI (B 16.11)	SVA-S 50*	ICFB 50	ICS 50-32	SVA-S 50		25.8	56.8	027L5006
ICF 50	4	42S50	2	50	Socket weld. ANSI (B 16.11)	SVA-S 50*	ICFB 50	ICS 50	SVA-S 50		25.8	56.8	027L5004
ICF 50	4	42S32	2	50	Socket weld. ANSI (B 16.11)	SVA-S 50*	ICFB 50	ICS 50-32	SVA-S 50		25.8	56.8	027L5008
ICF 50	4	42S40	2	50	Socket weld. ANSI (B 16.11)	SVA-S 50*	ICFB 50	ICS 50-40	SVA-S 50		25.8	56.8	027L5012
ICF 65	3	42S65	2½	65	Butt-weld ANSI (B 36.19)	SVA-S 65*		ICS 65	SVA-S 65		33.3	73.3	027L6502
ICF 65	3	42S40	2½	65	Butt-weld ANSI (B 36.19)	SVA-S 65*		ICS 65-40	SVA-S 65		33.3	73.3	027L6506
ICF 65	3	42S80	2½	65	Butt-weld ANSI (B 36.19)	SVA-S 65*		ICS 80	SVA-S 65		33.3	73.3	027L6510
ICF 65	3	42S65	3	80	Butt-weld ANSI (B 36.19)	SVA-S 65*		ICS 65	SVA-S 65		33.3	73.3	027L6504
ICF 65	3	42S40	3	80	Butt-weld ANSI (B 36.19)	SVA-S 65*		ICS 65-40	SVA-S 65		33.3	73.3	027L6508
ICF 65	3	42S80	3	80	Butt-weld ANSI (B 36.19)	SVA-S 65*		ICS 80	SVA-S 65		33.3	73.3	027L6512
ICF 65	3	42S65	2½	65	Butt-weld DIN-EN 10220	SVA-S 65*		ICS 65	SVA-S 65		33.3	73.3	027L6501
ICF 65	3	42S40	2½	65	Butt-weld DIN-EN 10220	SVA-S 65*		ICS 65-40	SVA-S 65		33.3	73.3	027L6505
ICF 65	3	42S80	2½	65	Butt-weld DIN-EN 10220	SVA-S 65*		ICS 80	SVA-S 65		33.3	73.3	027L6509
ICF 65	3	42S65	3	80	Butt-weld DIN-EN 10220	SVA-S 65*		ICS 65	SVA-S 65		33.3	73.3	027L6503
ICF 65	3	42S40	3	80	Butt-weld DIN-EN 10220	SVA-S 65*		ICS 65-40	SVA-S 65		33.3	73.3	027L6507
ICF 65	3	42S80	3	80	Butt-weld DIN-EN 10220	SVA-S 65*		ICS 80	SVA-S 65		33.3	73.3	027L6511

All ICS modules are 3-pilot versions. They are supplied with two blanking plugs (A) and one sealing plug (B) (see page 508).

** Fixed module*
ICAD and coils are not included and must be ordered separately.
***Please Note**: When used in systems with CO_2, the o-rings on the ICM module can swell (grow). At service, it is therefore recommended to install new o-rings, before the ICM function module is re-installed in the ICF valve body.*

Return lines

Application 43: Return lines - Pressure (temperature) - Electronic control

Type	# of Modules	Appl. #	Connection size		Connection type	Module location					Weight		Code number
			[in.]	[mm]		M1	M2	M3	M4		kg	lbs	
ICF 50	4	43MA	1½	40	Butt-weld DIN-EN 10220	SVA-S 50*	ICFB 50	ICM 50 - A	SVA-S 50		24.8	54.6	027L5013
ICF 50	4	43MB	1½	40	Butt-weld DIN-EN 10220	SVA-S 50*	ICFB 50	ICM 50 - B	SVA-S 50		24.8	54.6	027L5017
ICF 50	4	43MA	2	50	Butt-weld DIN-EN 10220	SVA-S 50*	ICFB 50	ICM 50 - A	SVA-S 50		24.8	54.6	027L5015
ICF 50	4	43MB	2	50	Butt-weld DIN-EN 10220	SVA-S 50*	ICFB 50	ICM 50 - B	SVA-S 50		24.8	54.6	027L5019
ICF 50	4	43MA	1½	40	Socket weld, ANSI (B 16.11)	SVA-S 50*	ICFB 50	ICM 50 - A	SVA-S 50		24.8	54.6	027L5014
ICF 50	4	43MB	1½	40	Socket weld, ANSI (B 16.11)	SVA-S 50*	ICFB 50	ICM 50 - B	SVA-S 50		24.8	54.6	027L5018
ICF 50	4	43MA	2	50	Socket weld, ANSI (B 16.11)	SVA-S 50*	ICFB 50	ICM 50 - A	SVA-S 50		24.8	54.6	027L5016
ICF 50	4	43MB	2	50	Socket weld, ANSI (B 16.11)	SVA-S 50*	ICFB 50	ICM 50 - B	SVA-S 50		24.8	54.6	027L5020
ICF 65	3	43MA	2½	65	Butt-weld ANSI (B 36.19)	SVA-S 65*		ICM 65 - A	SVA-S 65		32.9	72.4	027L6514
ICF 65	3	43MB	2½	65	Butt-weld ANSI (B 36.19)	SVA-S 65*		ICM 65 - B	SVA-S 65		32.9	72.4	027L6518
ICF 65	3	43MA	3	80	Butt-weld ANSI (B 36.19)	SVA-S 65*		ICM 65 - A	SVA-S 65		32.9	72.4	027L6516
ICF 65	3	43MB	3	80	Butt-weld ANSI (B 36.19)	SVA-S 65*		ICM 65 - B	SVA-S 65		32.9	72.4	027L6520
ICF 65	3	43MA	2½	65	Butt-weld DIN-EN 10220	SVA-S 65*		ICM 65 - A	SVA-S 65		32.9	72.4	027L6513
ICF 65	3	43MB	2½	65	Butt-weld DIN-EN 10220	SVA-S 65*		ICM 65 - B	SVA-S 65		32.9	72.4	027L6517
ICF 65	3	43MA	3	80	Butt-weld DIN-EN 10220	SVA-S 65*		ICM 65 - A	SVA-S 65		32.9	72.4	027L6515
ICF 65	3	43MB	3	80	Butt-weld DIN-EN 10220	SVA-S 65*		ICM 65 - B	SVA-S 65		32.9	72.4	027L6519

Application 44: ON/OFF 2-step solenoid + Manuel Regulating

Type	# of Modules	Appl. #	Connection size		Connection type	Module location					Weight		Code number
			[in.]	[mm]		M1	M2	M3	M4		kg	lbs	
ICF 50	4	44	1½	40	Butt-weld DIN-EN 10220	SVA-S 50*	ICFB 50	ICLX 50	REG 50-B		25.5	56.1	027L5045
ICF 50	4	44	2	50	Butt-weld DIN-EN 10220	SVA-S 50*	ICFB 50	ICLX 50	REG 50-B		25.5	56.1	027L5046
ICF 50	4	44	1½	40	Socket weld, ANSI (B 16.11)	SVA-S 50*	ICFB 50	ICLX 50	REG 50-B		25.5	56.1	027L5047
ICF 50	4	44	2	50	Socket weld, ANSI (B 16.11)	SVA-S 50*	ICFB 50	ICLX 50	REG 50-B		25.5	56.1	027L5048

Application 45: Pressure (temperature) Mechanical control + Manuel Regulating

Type	# of Modules	Appl. #	Connection size		Connection type	Module location					Weight		Code number
			[in.]	[mm]		M1	M2	M3	M4		kg	lbs	
ICF 50	4	45S50	1½	40	Butt-weld DIN-EN 10220	SVA-S 50*	ICFB 50	ICS 50	REG 50-B		25.8	56.8	027L5025
ICF 50	4	45S32	1½	40	Butt-weld DIN-EN 10220	SVA-S 50*	ICFB 50	ICS 50-32	REG 50-B		25.8	56.8	027L5029
ICF 50	4	45S40	1½	40	Butt-weld DIN-EN 10220	SVA-S 50*	ICFB 50	ICS 50-40	REG 50-B		25.8	56.8	027L5033
ICF 50	4	45S50	2	50	Butt-weld DIN-EN 10220	SVA-S 50*	ICFB 50	ICS 50	REG 50-B		25.8	56.8	027L5027
ICF 50	4	45S32	2	50	Butt-weld DIN-EN 10220	SVA-S 50*	ICFB 50	ICS 50-32	REG 50-B		25.8	56.8	027L5031
ICF 50	4	45S40	2	50	Butt-weld DIN-EN 10220	SVA-S 50*	ICFB 50	ICS 50-40	REG 50-B		25.8	56.8	027L5035
ICF 50	4	45S50	1½	40	Socket weld, ANSI (B 16.11)	SVA-S 50*	ICFB 50	ICS 50	REG 50-B		25.8	56.8	027L5026
ICF 50	4	45S32	1½	40	Socket weld, ANSI (B 16.11)	SVA-S 50*	ICFB 50	ICS 50-32	REG 50-B		25.8	56.8	027L5030
ICF 50	4	45S40	1½	40	Socket weld, ANSI (B 16.11)	SVA-S 50*	ICFB 50	ICS 50-40	REG 50-B		25.8	56.8	027L5034
ICF 50	4	45S50	2	50	Socket weld, ANSI (B 16.11)	SVA-S 50*	ICFB 50	ICS 50	REG 50-B		25.8	56.8	027L5028
ICF 50	4	45S32	2	50	Socket weld, ANSI (B 16.11)	SVA-S 50*	ICFB 50	ICS 50-32	REG 50-B		25.8	56.8	027L5032
ICF 50	4	45S40	2	50	Socket weld, ANSI (B 16.11)	SVA-S 50*	ICFB 50	ICS 50-40	REG 50-B		25.8	56.8	027L5036
ICF 65	3	45S65	3	65	Butt-weld DIN-EN 10220	SVA-S 65*		ICS 65	REG 65-B		33.3	73.3	027L6525
ICF 65	3	45S65	3	65	Butt-weld DIN-EN 10220	SVA-S 65*		ICS 80	REG 65-B		33.3	73.3	027L6526

Application 46: Pressure (temperature) Electronic control + Manual Regulating

Type	# of Modules	Appl. #	Connection size		Connection type	Module location					Weight		Code number
			[in.]	[mm]		M1	M2	M3	M4		kg	lbs	
ICF 50	4	46MA	1½	40	Butt-weld DIN-EN 10220	SVA-S 50*	ICFB 50	ICM 50-A	REG 50-B		24.8	54.6	027L5037
ICF 50	4	46MB	1½	40	Butt-weld DIN-EN 10220	SVA-S 50*	ICFB 50	ICM 50-B	REG 50-B		24.8	54.6	027L5041
ICF 50	4	46MA	2	50	Butt-weld DIN-EN 10220	SVA-S 50*	ICFB 50	ICM 50-A	REG 50-B		24.8	54.6	027L5039
ICF 50	4	46MB	2	50	Butt-weld DIN-EN 10220	SVA-S 50*	ICFB 50	ICM 50-B	REG 50-B		24.8	54.6	027L5043
ICF 50	4	46MA	1½	40	Socket weld, ANSI (B 16.11)	SVA-S 50*	ICFB 50	ICM 50-A	REG 50-B		24.8	54.6	027L5038
ICF 50	4	46MB	1½	40	Socket weld, ANSI (B 16.11)	SVA-S 50*	ICFB 50	ICM 50-B	REG 50-B		24.8	54.6	027L5042
ICF 50	4	46MA	2	50	Socket weld, ANSI (B 16.11)	SVA-S 50*	ICFB 50	ICM 50-A	REG 50-B		24.8	54.6	027L5040
ICF 50	4	46MB	2	50	Socket weld, ANSI (B 16.11)	SVA-S 50*	ICFB 50	ICM 50-B	REG 50-B		24.8	54.6	027L5044

All ICS modules are 3-pilot versions. They are supplied with two blanking plugs (A) and one sealing plug (B) (see page 508).

** Fixed module*
ICAD and coils are not included and must be ordered separately.
***Please Note**: When used in systems with CO_2, the o-rings on the ICM module can swell (grow). At service, it is therefore recommended to install new o-rings, before the ICM function module is re-installed in the ICF valve body.*

Miscellaneous

Application 90: Miscellaneous

Type	# of modules	Appl. #	Connection size		Connection type	Module location						Weight		Code number
			[in.]	[mm]		M1	M2	M3	M4	M5	M6	kg	lbs	
ICF 20	4	90	¾	20	Butt-weld ANSI (B 36.10)	ICFS 20	ICFF 20E	ICFE 20	ICFN 20			7.2	15.8	027L3371
ICF 20	6	90	1	25	Butt-weld ANSI (B 36.10)	ICFS 20	ICFF 20	ICFE 20	ICFC 20	ICFB 20	ICFB 20	10.2	22.5	027L3420
ICF 20	6	90	1	25	Butt-weld ANSI (B 36.10)	ICFS 20	ICFF 20	ICFE 20	ICFS 20	ICFB 20	ICFB 20	9.7	21.4	027L3421
ICF 20	4	90	¾	20	Butt-weld DIN-EN 10220	ICFR 20A	ICFF 20	ICFA 20	ICFN 20			6.4	14.1	027L3156
ICF 20	4	90	¾	20	Butt-weld DIN-EN 10220	ICFR 20A	ICFF 20	ICFE 20	ICFN 20			6.4	14.1	027L3155
ICF 20	4	90	¾	20	Butt-weld DIN-EN 10220	ICFS 20	ICFF 20	ICFE 20	ICFN 20			7.2	15.8	027L3379
ICF 20	4	90	¾	20	Butt-weld DIN-EN 10220	ICFS 20	ICFW 20-D	ICFE 20	ICFS 20			5.9	13.0	027L3385
ICF 20	4	90	¾	20	Butt-weld DIN-EN 10220	ICFS 20	ICFF 20	ICFB 20	ICFC 20			5.9	13.0	027L3141
ICF 20	4	99	¾	20	Butt-weld DIN-EN 10220	ICFS 20	ICFF 20	ICFE 20	ICFB 20			6.2	13.7	027L3122
ICF 20	4	99	¾	20	Butt-weld DIN-EN 10220	ICFS 20	ICFF 20	ICFE 20	ICFO 20			6.1	13.4	027L3359
ICF 20	4	99	¾	20	Butt-weld DIN-EN 10220	ICFS 20	ICFF 20	ICFE 20	ICFR 20A			6.7	14.8	027L3700
ICF 20	4	90	¾	20	Butt-weld DIN-EN 10220	ICFS 20	ICFF 20	ICFB 20	ICFN 20			6.7	14.8	027L3405
ICF 15	4	90	½	15	Butt-weld DIN-EN 10220	ICFS 15*	ICFF 15*	ICFB 20	ICFN 20			6.7	14.8	027L4581
ICF 15	4	90	¾	20	Butt-weld DIN-EN 10220	ICFS 15*	ICFF 15*	ICFR 20A	ICFN 20			7.2	15.8	027L4576
ICF 20	6	90	¾	20	Butt-weld DIN-EN 10220	ICFS 20	ICFF 20	ICFE 20	ICFO 20	ICFA 20	ICFS 20	9.4	20.7	027L3053
ICF 20	6	90	¾	20	Butt-weld DIN-EN 10220	ICFS 20	ICFF 20	ICFA 20	ICFC 20	ICFB 20	ICFS 20	9.9	21.8	027L3056
ICF 20	6	90	¾	20	Butt-weld DIN-EN 10220	ICFS 20	ICFF 20	ICFE 20	ICFO 20	ICM 20-A	ICFN 20	9.7	21.3	027L3372
ICF 20	6	90	¾	20	Butt-weld DIN-EN 10220	ICFS 20	ICFF 20	ICFE 20	ICFB 20	ICFR 20-A	ICFN 20	9.7	21.3	027L3133
ICF 20	6	90	¾	20	Butt-weld DIN-EN 10220	ICFS 20	ICFF 20	ICFE 20	ICFC 20	ICFB 20	ICFR 20A	9.4	20.7	027L3144
ICF 20	6	90	¾	20	Butt-weld DIN-EN 10220	ICFS 20	ICFF 20	ICFE 20	ICFC 20	ICM 20-C	ICFS 20	9.7	21.3	027L3152
ICF 20	6	90	¾	20	Butt-weld DIN-EN 10220	ICFS 20	ICFF 20	ICFE 20	ICFO 20	ICFS 20	ICFC 20	9.8	21.6	027L3360
ICF 20	6	90	¾	20	Butt-weld DIN-EN 10220	ICFB 20	ICFC 20	ICFE 20	ICFO 20	ICFS 20	ICFB 20	6.2	13.6	027L3121
ICF 20	6	90	¾	20	Butt-weld DIN-EN 10220	ICFS 20	ICFF 20	ICFE 20H	ICFC 20	ICFB 20	ICFS 20	9.6	21.1	027L3387
ICF 20	6	90	¾	20	Butt-weld DIN-EN 10220	ICFS 20	ICFF 20	ICFE 20	ICFC 20	ICFR 20A	ICFW 20D	9.1	20.1	027L3368
ICF 20	6	90	¾	20	Butt-weld DIN-EN 10220	ICFS 20	ICFF 20	ICFE 20H	ICFC 20	ICFR 20A	ICFS 20	10.2	22.5	027L3386
ICF 20	6	90	¾	20	Butt-weld DIN-EN 10220	ICFS 20	ICFF 20	ICFE 20	ICFC 20	ICM 20B	ICFS 20	9.7	21.4	027L3397
ICF 20	6	90	¾	20	Butt-weld DIN-EN 10220	ICFS 20	ICFF 20	ICFE 20	ICFC 20	ICFB 20	ICFS 20	9.4	20.7	027L3424
ICF 20	6	90	¾	20	Butt-weld DIN-EN 10220	ICFS 20	ICFF 20	ICFE 20	ICFO 20	ICM 20B	ICFN 20	9.6	21.1	027L3425
ICF 20	6	99	¾	20	Butt-weld DIN-EN 10220	ICFS 20	ICFF 20	ICFE 20	ICFC 20	ICFB 20	ICFR 20A	9.4	20.7	027L3701
ICF 20	6	90	¾	20	Butt-weld DIN-EN 10220	ICFS 20	ICFF 20E	ICFE 20	ICFN 20	ICFR 20B	ICFW 20D	9.1	20.1	027L3439
ICF 20	6	90	¾	20	Butt-weld DIN-EN 10220	ICFS 20	ICFF 20	ICFE 20	ICFC 20	ICFW 20D	ICFS 20	9.1	20.1	027L3441
ICF 20	6	90	¾	20	Butt-weld DIN-EN 10220	ICFS 20	ICFF 20	ICFE 20	ICFO 20	ICFB 20	ICFN 20	9.4	20.7	027L3446
ICF 20	6	90	¾	20	Butt-weld DIN-EN 10220	ICFS 20	ICFF 20	ICFE 20	ICFC 20	ICFR 20B	ICFW 20D	9.1	20.1	027L3447
ICF 20	4	90	1	25	Butt-weld DIN-EN 10220	ICFS 20	ICFF 20	ICFE 20	ICFN 20			6.7	14.7	027L3134
ICF 20	4	90	1	25	Butt-weld DIN-EN 10220	ICFS 20	ICFF 20	ICFE 20	ICFB 20			5.9	13.0	027L3364
ICF 20	4	90	1	25	Butt-weld DIN-EN 10220	ICFS 20	ICFF 20	ICFE 20H	ICFN 20			7.2	15.8	027L3380
ICF 20	6	90	1	25	Butt-weld DIN-EN 10220	ICFS 20	ICFF 20	ICFE 20	ICFO 20	ICFA 20	ICFS 20	9.8	21.6	027L3361
ICF 20	6	90	1	25	Butt-weld DIN-EN 10220	ICFS 20	ICFF 20	ICFE 20	ICFC 20	ICFR 20A	ICFB 20	9.1	20.0	027L3363
ICF 20	6	90	1	25	Butt-weld DIN-EN 10220	ICFS 20	ICFF 20	ICFE 20H	ICFC 20	ICFR 20B	ICFW 20D	12.0	26.4	027L3376
ICF 20	6	90	1	25	Butt-weld DIN-EN 10220	ICFS 20	ICFF 20E	ICFE 20H	ICFC 20	ICFR 20B	ICFW 20D	11.5	25.3	027L3375

** Fixed module*
ICAD and coils are not included and must be ordered separately.
***Please Note**: When used in systems with CO_2, the o-rings on the ICM module can swell (grow). At service, it is therefore recommended to install new o-rings, before the ICM function module is re-installed in the ICF valve body.*

Miscellaneous

Application 90: Miscellaneous

Type	# of modules	Appl. #	Connection size		Connection type	Module location						Weight		Code number
			[in.]	[mm]		M1	M2	M3	M4	M5	M6	kg	lbs	
ICF 20	6	90	1	25	Butt-weld DIN-EN 10220	ICFS 20	ICFF 20	ICFE 20	ICFC 20	ICFB 20	ICFS 20	9.4	20.7	027L3123
ICF 25	6	90	1	25	Butt-weld DIN-EN 10220	ICFS 25	ICFF 25	ICFE 25	ICFC 25	ICFR 25B	ICFW 25D	23.6	51.9	027L4168
ICF 25	6	90	1	25	Butt-weld DIN-EN 10220	ICFS 25	ICFF 25	ICFE 25	ICFC 25	ICFS 25	ICFB 25	22.0	48.4	027L4151
ICF 20	6	90	1	25	Butt-weld DIN-EN 10220	ICFS 20	ICFF 20	ICFE 20	ICFC 20	ICFR 20A	ICFW 20D	9.0	19.8	027L3369
ICF 20	6	90	1	25	Butt-weld DIN-EN 10220	ICFS 20	ICFF 20	ICFE 20	ICFO 20	ICFA 20	ICFC 20	9.6	21.1	027L3396
ICF 20	6	90	1	25	Butt-weld DIN-EN 10220	ICFS 20	ICFF 20E	ICFE 20H	ICFC 20	ICFR 20A	ICFB 20	9.7	21.4	027L3423
ICF 20	6	90	1	25	Butt-weld DIN-EN 10220	ICFS 20	ICFF 20	ICFE 20	ICFO 20	ICM 20B	ICFN 20	9.6	21.1	027L3426
ICF 25	6	90	1	25	Butt-weld DIN-EN 10220	ICFS 25	ICFF 25E	ICFE 25	ICFC 25	ICFR 25B	ICFB 25	23.6	52.0	027L4176
ICF 25	6	90	1	25	Butt-weld DIN-EN 10220	ICFS 25	ICFF 25E	ICFE 25	ICFC 25	ICFR 25B	ICFF 25	23.8	52.4	027L4577
ICF 25	6	90	1	25	Butt-weld DIN-EN 10220	ICFS 25	ICFF 25E	ICFE 25	ICFN 25	ICFR 25B	ICFW 25D	22.7	49.9	027L4186
ICF 25	6	90	1¼	32	Butt-weld DIN-EN 10220	ICFS 25	ICFF 25	ICFE 25	ICFC 25	ICFR 25B	ICFB 25	21.7	47.7	027L4143
ICF 25	6	90	1¼	32	Butt-weld DIN-EN 10220	ICFS 25	ICFF 25E	ICFE 25	ICFC 25	ICFR 25B	ICFW 25D	22.7	49.9	027L4160
ICF 25	6	90	1¼	32	Butt-weld DIN-EN 10220	ICFS 25	ICFF 25	ICFE 25	ICFC 25	ICFR 25B	ICFW 25D	21.9	48.2	027L4161
ICF 25	6	90	1¼	32	Butt-weld DIN-EN 10220	ICFS 25	ICFF 25E	ICFE 25	ICFC 25	ICFB 25	ICFS 25	21.9	48.2	027L4162
ICF 25	6	90	1¼	32	Butt-weld DIN-EN 10220	ICFS 25	ICFF 25-E	ICFE 25	ICFC 25	ICFR 25B	ICFB 25	22.7	49.9	027L4178
ICF 25	6	90	1½	40	Butt-weld DIN-EN 10220	ICFS 25	ICFF 25	ICFE 25	ICFC 25	ICFR 25A	ICFW 25D	23.6	51.9	027L4157
ICF 25	6	90	1½	40	Butt-weld DIN-EN 10220	ICFS 25	ICFF 25E	ICFE 25	ICFC 25	ICFR 25B	ICFW 25D	23.6	51.9	027L4166
ICF 25	6	90	1½	40	Butt-weld DIN-EN 10220	ICFS 25	ICFF 25	ICFE 25	ICFC 25	ICFR 25B	ICFW 25D	21.7	47.7	027L4167
ICF 25	4	90	1½	40	Butt-weld DIN-EN 10220	ICFS 25	ICFF 25	ICM 25A	ICFB 25			14.9	32.8	027L4185
ICF 25	4	90	1½	40	Butt-weld DIN-EN 10220	ICFS 25	ICFF 25	ICFE 25	ICFR 25A			16.1	35.4	027L4192
ICF 20	4	90	¾	20	Socket weld, ANSI (B 16.11)	ICFS 20	ICFF 20E	ICM 20-A33	ICFB 20			7.2	15.8	027L3362
ICF 20	4	90	1	25	Socket weld, ANSI (B 16.11)	ICFR 20A	ICFF 20E	ICFE 20	ICFN 20			7.2	15.8	027L4179
ICF 20	4	90	1	25	Socket weld, ANSI (B 16.11)	ICFR 20B	ICFF 20E	ICFE 20H	ICFN 20			7.9	17.4	027L4578
ICF 20	4	90	1	25	Socket weld, ANSI (B 16.11)	ICFB 20	ICFF 20	ICFE 20	ICFN 20			7.0	15.4	027L3357
ICF 25	4	90	1	25	Socket weld, ANSI (B 16.11)	ICFB 25	ICFF 25E	ICFE 25	ICFN 25			14.1	31.0	027L4149
ICF 25	4	90	1	25	Socket weld, ANSI (B 16.11)	ICFS 25	ICFF 25E	ICFB 25	ICFR 25A			16.1	35.5	027L4180
ICF 25	4	90	1½	40	Socket weld, ANSI (B 16.11)	ICFS 25	ICFF 25E	ICFB 25	ICFR 25A			16.1	35.5	027L4181
ICF 20	6	90	¾	20	Socket weld, ANSI (B 16.11)	ICFS 20	ICFF 20E	ICFE 20	ICFO 20	ICFA 20	ICFS 20	9.3	20.5	027L3055
ICF 20	6	90	¾	20	Socket weld, ANSI (B 16.11)	ICFS 20	ICFF 20E	ICFA 20	ICFC 20	ICFB 20	ICFS 20	9.9	21.8	027L3058
ICF 20	6	90	¾	20	Socket weld, ANSI (B 16.11)	ICFS 20	ICFF 20E	ICFE 20	ICFO 20	ICFB 20	ICFN 20	9.4	20.7	027L3150
ICF 20	6	90	¾	20	Socket weld, ANSI (B 16.11)	ICFS 20	ICFF 20E	ICFE 20H	ICFC 20	ICFW 20S	ICFS 20	10.4	22.9	027L4153
ICF 20	6	90	1	25	Socket weld, ANSI (B 16.11)	ICFS 20	ICFF 20E	ICFE 20H	ICFC 20	ICFW 20S	ICFS 20	11.5	25.3	027L3377
ICF 25	6	90	1	25	Socket weld, ANSI (B 16.11)	ICFS 25	ICFF 25E	ICFE 25	ICFC 25	ICFB 25	ICFS 25	23.1	50.8	027L4156
ICF 25	6	90	1	25	Socket weld, ANSI (B 16.11)	ICFS 25	ICFF 25E	ICFE 25	ICFC 25	ICFW 25S	ICFS 25	25.1	55.2	027L4158
ICF 20	6	90	1¼	32	Socket weld, ANSI (B 16.11)	ICFS 20	ICFF 20E	ICFE 20H	ICFC 20	ICFB 20	ICFS 20	10.5	23.1	027L3378
ICF 20	6	90	1¼	32	Socket weld, ANSI (B 16.11)	ICFS 20	ICFF 20E	ICFE 20H	ICFC 20	ICFW 20S	ICFS 20	10.5	23.1	027L4152
ICF 25	6	90	1¼	32	Socket weld, ANSI (B 16.11)	ICFS 25	ICFF 25E	ICFE 25	ICFC 25	ICFW 25S	ICFS 25	25.1	55.2	027L4154
ICF 25	6	90	1½	40	Socket weld, ANSI (B 16.11)	ICFS 25	ICFF 25E	ICFE 25	ICFC 25	ICFW 25S	ICFS 25	25.1	55.2	027L4159
ICF 20	4	90	¾	20	Butt-weld DIN-EN 10220	ICFB 20	ICFD 20	ICFE 20	ICFB 20			12.4	27.3	027L3483
ICF 20	4	90	1	25	Butt-weld DIN-EN 10220	ICFB 20	ICFD 20	ICFE 20	ICFB 20			12.4	27.3	027L3484
ICF 20	4	90	1¼	32	Butt-weld DIN-EN 10220	ICFB 20	ICFD 20	ICFE 20	ICFB 20			12.4	27.3	027L3485
ICF 20	4	90	¾	20	Butt-weld DIN-EN 10220	ICFS 20	ICFD 20	ICFE 20	ICFN 20			12.1	26.7	027L3711
ICF 20	6	90	¾	20	Socket weld, ANSI (B 16.11)	ICFS 20	ICFB 20	ICFE 20	ICFD 20	ICFB 20	ICFS 20	15.0	33.1	027L3463
ICF 20	6	90	1	25	Socket weld, ANSI (B 16.11)	ICFS 20	ICFB 20	ICFE 20	ICFD 20	ICFB 20	ICFS 20	15.0	33.1	027L3464
ICF 20	6	90	1¼	32	Socket weld, ANSI (B 16.11)	ICFS 20	ICFB 20	ICFE 20	ICFD 20	ICFB 20	ICFS 20	15.0	33.1	027L3465

Note!
For special applications that cannot be covered by our predefined ICF code numbers please consult Coolselector®2 or your local Danfoss Sales company.
http://refrigerationandairconditioning.danfoss.com/support-center/apps-and-software/coolselector/

Prior to designing „non standard“ configurations there are some basic restrictions to the location of the function modules that must be followed (see page 537)

ICAD and coils are not included and must be ordered separately.
***Please Note**: When used in systems with CO_2, the o-rings on the ICM module can swell (grow). At service, it is therefore recommended to install new o-rings, before the ICM function module is re-installed in the ICF valve body.*

Defrost drain line

Application 102: Liquid drain M2 with solenoid - 2 shut-off

Type	# of modules	Appl. #	Connection size		Connection type	Module location						Weight		Code number
			[in.]	[mm]		M1	M2	M3	M4	M5	M6	kg	lbs	
ICF 20	4	102	¾	20	Butt-weld DIN-EN 10220	ICFS 20	ICFD 20	ICFE 20	ICFS 20			12.7	28	027L3489
ICF 20	4	102	1	25	Butt-weld DIN-EN 10220	ICFS 20	ICFD 20	ICFE 20	ICFS 20			12.7	28	027L3490
ICF 20	4	102	1¼	32	Butt-weld DIN-EN 10220	ICFS 20	ICFD 20	ICFE 20	ICFS 20			12.7	28	027L3491
ICF 20	4	102	¾	20	Socket weld, ANSI (B 16.11)	ICFS 20	ICFD 20	ICFE 20	ICFS 20			13.2	29.1	027L3480
ICF 20	4	102	1	25	Socket weld, ANSI (B 16.11)	ICFS 20	ICFD 20	ICFE 20	ICFS 20			13.1	29.1	027L3481
ICF 20	4	102	1¼	32	Socket weld, ANSI (B 16.11)	ICFS 20	ICFD 20	ICFE 20	ICFS 20			12.5	27.6	027L3482

Application 103: Liquid drain M4 with solenoid - 1 shut-off

Type	# of modules	Appl. #	Connection size		Connection type	Module location						Weight		Code number
			[in.]	[mm]		M1	M2	M3	M4	M5	M6	kg	lbs	
ICF 20	4	103	¾	20	Socket weld, ANSI (B 16.11)	ICFS 20	ICFB 20	ICFE 20	ICFD 20			12.6	27.8	027L3460
ICF 20	4	103	1	25	Socket weld, ANSI (B 16.11)	ICFS 20	ICFB 20	ICFE 20	ICFD 20			12.5	27.8	027L3461
ICF 20	4	103	1¼	32	Socket weld, ANSI (B 16.11)	ICFS 20	ICFB 20	ICFE 20	ICFD 20			11.9	26.2	027L3462

Application 104: Liquid drain M4 with strainer and solenoid - 1 shut-off

Type	# of modules	Appl. #	Connection size		Connection type	Module location						Weight		Code number
			[in.]	[mm]		M1	M2	M3	M4	M5	M6	kg	lbs	
ICF 15	4	104	¾	20	Butt-weld DIN-EN 10220	ICFS 15	ICFF 15	ICFE 20	ICFD 20			13.6	30	027L4589
ICF 20	4	104	1	25	Butt-weld DIN-EN 10220	ICFS 20	ICFF 20	ICFE 20	ICFD 20			12.1	26.7	027L3597

Application 105: Liquid drain M2 with solenoid - 1 shut-off

Type	# of modules	Appl. #	Connection size		Connection type	Module location						Weight		Code number
			[in.]	[mm]		M1	M2	M3	M4	M5	M6	kg	lbs	
ICF 20	4	105	¾	20	Butt-weld DIN-EN 10220	ICFS 20	ICFD 20	ICFE 20	ICFB 20			12.1	26.7	027L3486
ICF 20	4	105	1	25	Butt-weld DIN-EN 10220	ICFS 20	ICFD 20	ICFE 20	ICFB 20			12.1	26.7	027L3487
ICF 20	4	105	1¼	32	Butt-weld DIN-EN 10220	ICFS 20	ICFD 20	ICFE 20	ICFB 20			12.1	26.7	027L3488

Application 106: Liquid drain M2 with solenoid and manual opener - 1 shut off

Type	# of modules	Appl. #	Connection size		Connection type	Module location						Weight		Code number
			[in.]	[mm]		M1	M2	M3	M4	M5	M6	kg	lbs	
ICF 20	4	106	¾	20	Socket weld, ANSI (B 16.11)	ICFS 20	ICFD 20	ICFE 20	ICFO 20			12.9	28.4	027L3551
ICF 20	4	106	1	25	Socket weld, ANSI (B 16.11)	ICFS 20	ICFD 20	ICFE 20	ICFO 20			12.9	28.4	027L3496
ICF 20	4	106	1¼	32	Socket weld, ANSI (B 16.11)	ICFS 20	ICFD 20	ICFE 20	ICFO 20			12.9	28.4	027L3497

Application 107: Liquid drain M2 with solenoid and manual opener - 2 shut off

Type	# of modules	Appl. #	Connection size		Connection type	Module location						Weight		Code number
			[in.]	[mm]		M1	M2	M3	M4	M5	M6	kg	lbs	
ICF 20	6	107	¾	20	Socket weld, ANSI (B 16.11)	ICFS 20	ICFD 20	ICFE 20	ICFO 20	ICFB 20	ICFS 20	15.7	34.5	027L3498
ICF 20	6	107	1	25	Socket weld, ANSI (B 16.11)	ICFS 20	ICFD 20	ICFE 20	ICFO 20	ICFB 20	ICFS 20	15.7	34.5	027L3499
ICF 20	6	107	1¼	32	Socket weld, ANSI (B 16.11)	ICFS 20	ICFD 20	ICFE 20	ICFO 20	ICFB 20	ICFS 20	15.7	34.5	027L3550

Application 108: Liquid drain M2 without solenoid - 2 shut off

Type	# of modules	Appl. #	Connection size		Connection type	Module location						Weight		Code number
			[in.]	[mm]		M1	M2	M3	M4	M5	M6	kg	lbs	
ICF 20	4	108	¾	20	Socket weld, ANSI (B 16.11)	ICFS 20	ICFD 20	ICFB 20	ICFS 20			11.9	26.2	027L3558
ICF 20	4	108	1	25	Socket weld, ANSI (B 16.11)	ICFS 20	ICFD 20	ICFB 20	ICFS 20			11.9	26.2	027L3559
ICF 20	4	108	1¼	32	Socket weld, ANSI (B 16.11)	ICFS 20	ICFD 20	ICFB 20	ICFS 20			11.9	26.2	027L3560

ICAD and coils are not included and must be ordered separately.

Possible module locations

Module locations are indicated by M1, M2, M3, M4, M5 and M6.
With respect to refrigerant flow, M1 is closest to inlet.

ICF 15 with four modules

Function Module Type		Can be installed in these locations			
ICFS	Shut-off valve module	*(ICFS 15)	*(ICFF 15)		M4
ICFR	Manual regulating valve module	*(ICFS 15)	*(ICFF 15)		M4
ICFF	Strainer module	*(ICFS 15)	*(ICFF 15)		
ICFE	Solenoid valve module	*(ICFS 15)	*(ICFF 15)	M3	
ICFC	Check valve module	*(ICFS 15)	*(ICFF 15)		M4
ICFN	Stop & check valve module	*(ICFS 15)	*(ICFF 15)		M4
ICM	Motor operated valve module	*(ICFS 15)	*(ICFF 15)	M3	
ICFB	Blind top cover	*(ICFS 15)	*(ICFF 15)	M3	M4
ICFA	Electronic expansion valve module (for ICF 20 only)	*(ICFS 15)	*(ICFF 15)	M3	
ICFO	Manual opening module	*(ICFS 15)	*(ICFF 15)		M4
ICFW	Welding module	*(ICFS 15)	*(ICFF 15)	M3	M4
ICFD	Drain module (for ICF 15 and 20 only)	*(ICFS 15)	*(ICFF 15)		M4

ICF 20 and ICF 25 with four modules

Function Module Type		Can be installed in these locations			
ICFS	Shut-off valve module	M1	M2	M3	M4
ICFR	Manual regulating valve module	M1	M2	M3	M4
ICFF	Strainer module		M2		M4
ICFE	Solenoid valve module			M3	
ICFC	Check valve module				M4
ICFN	Stop & check valve module				M4
ICM	Motor operated valve module	M1		M3	
ICFB	Blind top cover	M1	M2	M3	M4
ICFA	Electronic expansion valve module (for ICF 20 only)	M1		M3	
ICFE20H	Solenoid valve module (for ICF 20 only)	M1		M3	
ICFO	Manual opening module				M4
ICFW	Welding module	M1	M2	M3	M4
ICFD	Drain module (for ICF 15 and 20 only)		M2		M4

ICF 20 and ICF 25 with six modules

Function Module Type		Can be installed in these locations					
ICFS	Shut-off valve module	M1	M2	M3	M4	M5	M6
ICFR	Manual regulating valve module	M1	M2	M3	M4	M5	M6
ICFF	Strainer module		M2		M4		M6
ICFE	Solenoid valve module			M3			
ICFC	Check valve module				M4		M6
ICFN	Stop & check valve module				M4		M6
ICM	Motor operated valve module	M1		M3		M5	
ICFB	Blind top cover	M1	M2	M3	M4	M5	M6
ICFA	Electronic expansion valve module (for ICF 20 only)	M1		M3		M5	
ICFE20H	Solenoid valve module (for ICF 20 only)	M1		M3		M5	
ICFO	Manual opening module				M4		
ICFW	Welding module	M1	M2	M3	M4	M5	M6
ICFD	Drain module (for ICF 15 and 20 only)		M2		M4		M6

ICF 50 with four modules

Function Module Type		Can be installed in these locations			
SVA-S	Shut-off valve module	*(SVA-S 50)			M4
ICFB	Blind top cover	*(SVA-S 50)	M2		
FIA	Strainer module	*(SVA-S 50)	M2		
ICS	Pilot-operated valve module	*(SVA-S 50)		M3	
ICM	Motor operated valve module	*(SVA-S 50)		M3	
ICLX	2-step solenoid valve module	*(SVA-S 50)		M3	
REG-SB	Manual regulating valve module	*(SVA-S 50)			M4

ICF 65 with three modules

Function Module Type		Can be installed in these locations			
SVA-S	Shut-off valve module	*(SVA-S 65)			M4
ICFB	Blind top cover	*(SVA-S 65)			
FIA	Strainer module	*(SVA-S 65)			
ICS	Pilot-operated valve module	*(SVA-S 65)		M3	
ICM	Motor operated valve module	*(SVA-S 65)		M3	
ICLX	2-step solenoid valve module	*(SVA-S 65)		M3	
REG-SB	Manual regulating valve module	*(SVA-S 65)			M4

location not possible

**) Module is fixed*

Ordering accessories

Stop valve type SNV-ST

	Description	Code no.
	G½ in. (Qty. 1)	**148B3778**
	NPT-FPT 3/8 in. (Qty. 1)	**148B3747**

Other SNV types see literature: AI244986497087

For complete list of Spare parts and accessories for ICF 15 to 65 (including SS versions) please refer to AI242886444256

ICAD 600A/ICAD 1200A

Description		Code no.
ICAD 600A for ICF 15 to 25	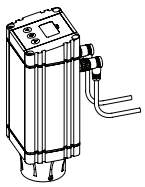	With 1.5 m. cables **027H9075**
		Without cables **027H9120**
ICAD 1200A for ICF 50 and 65	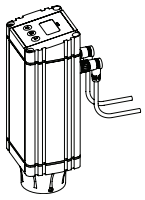	With 1.5 m. cables **027H9077**
		Without cables **027H9122**
Cable		Cable set 10 m. **027H0427**
Cable		Cable set 15 m. **027H0435**
Connector		Connector set female **027H0430**
Protection cap	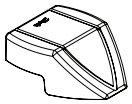	Protection cap for ICAD **027H0431**

ICAD details see literature: AI236186442940

Coils

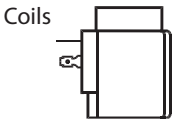

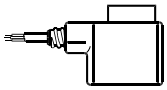

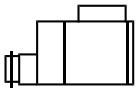

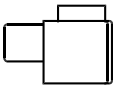

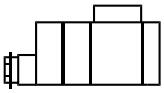

Valve type	Voltage V	Frequency Hz	Code no. With 1 m 3-core cable IP 67	Code no. With terminal box IP 67	Code no. With DIN plugs**)	Appen-dix no.*)	Power con-sumption
Alternating current a.c.							
ICFE ICS/ICLX (MOPD < 21 Bar)	12	50		**018F6706**		15	Holding: 10 W 21 VA Inrush: 44 VA
	24	50	**018F6257**	**018F6707**	**018F7358**	16	
	220-230	50	**018F6251**	**018F6701**	**018F7351**	31	
	115	60	**018F6260**	**018F6710**		20	
Direct current d.c.							
ICFE/ICFA ICS/ICLX (MOPD < 21 Bar)	12			**018F6856**		01	20 W
	24			**018F6857**		02	

Special coils for ICFE

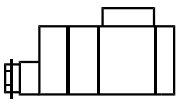

Valve type	Voltage V	Frequency Hz	Code no. With terminal box IP 67	Appendix no. Indicates voltage and frequency	Power consumption
Alternating current a.c.					
ICFE ICS/ICLX (MOPD < 21 Bar)	24	50	**018F6807**	16	Holding: 12 W 26 VA Inrush: 55 VA
	110	50	**018F6811**	22	
	220-230	50	**018F6801**	31	

For other coil types please refer to the technical leaflets for EVRA, AKVA, ICS or ICLX valves.

Dimensions

ICF 15-4

This example indicates the maximum dimensions for the ICF valve stations.

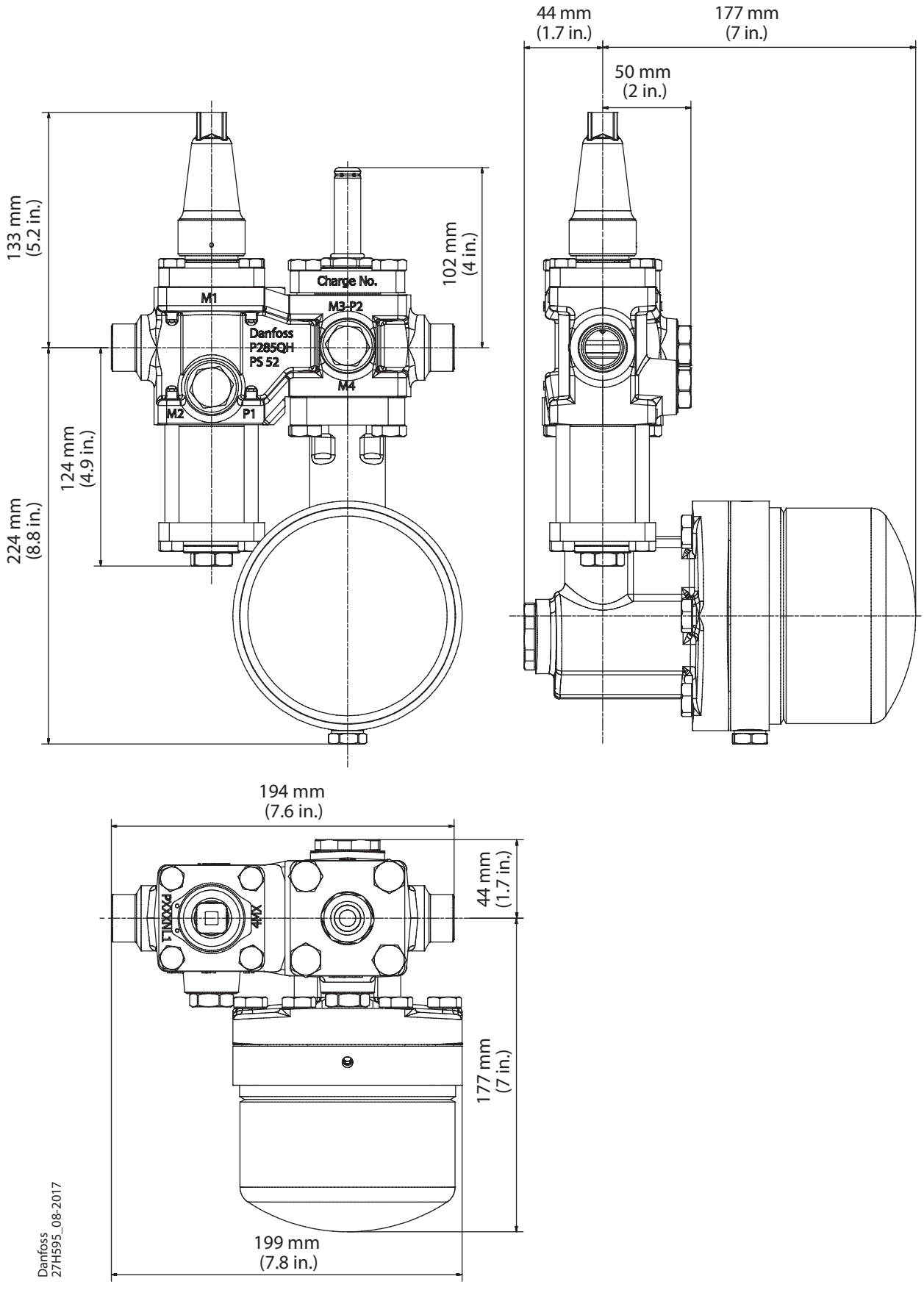

Dimensions *(continued)*

ICF 15-4

This example indicates the maximum dimensions for the ICF valve stations.

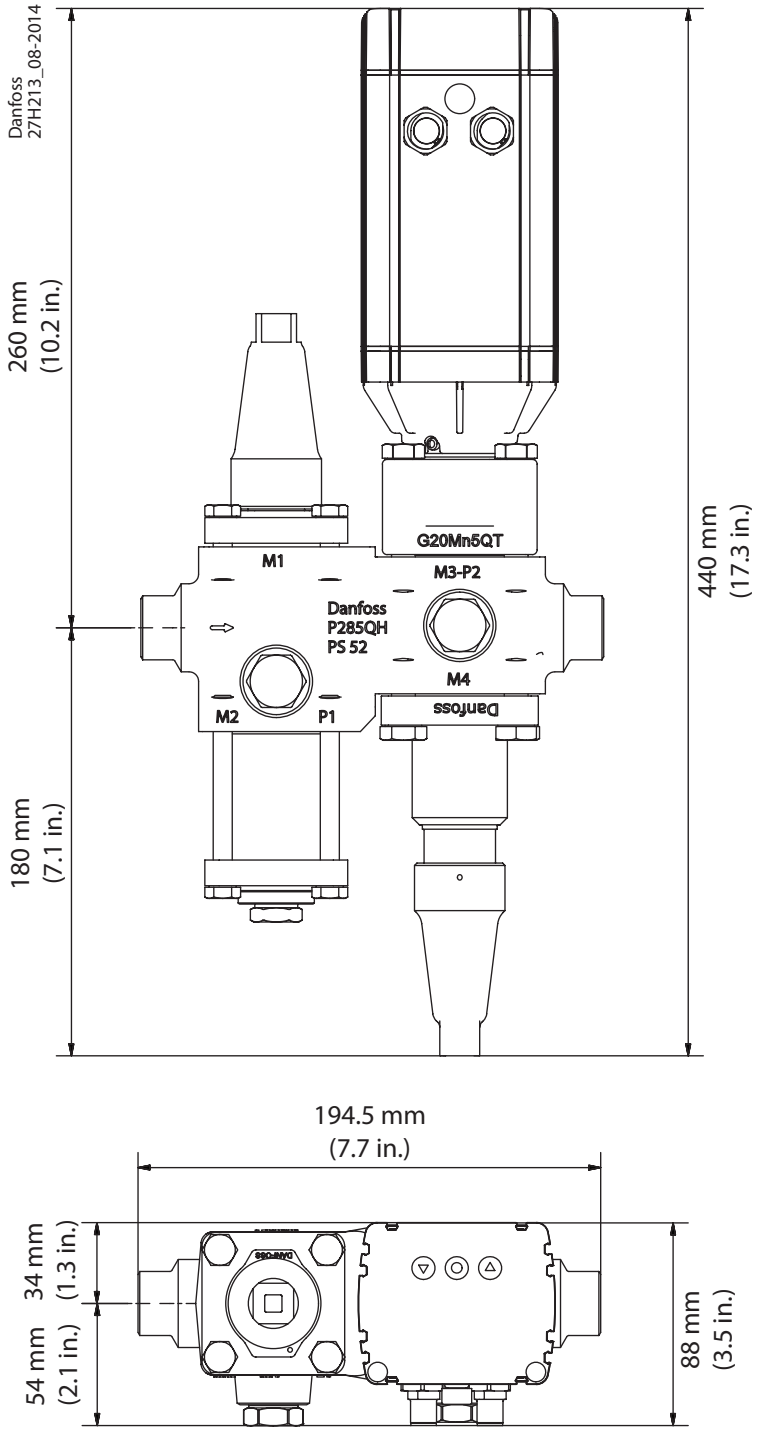

Dimensions *(continued)*

ICF 20-4

This example indicates the maximum dimensions for the ICF valve stations.

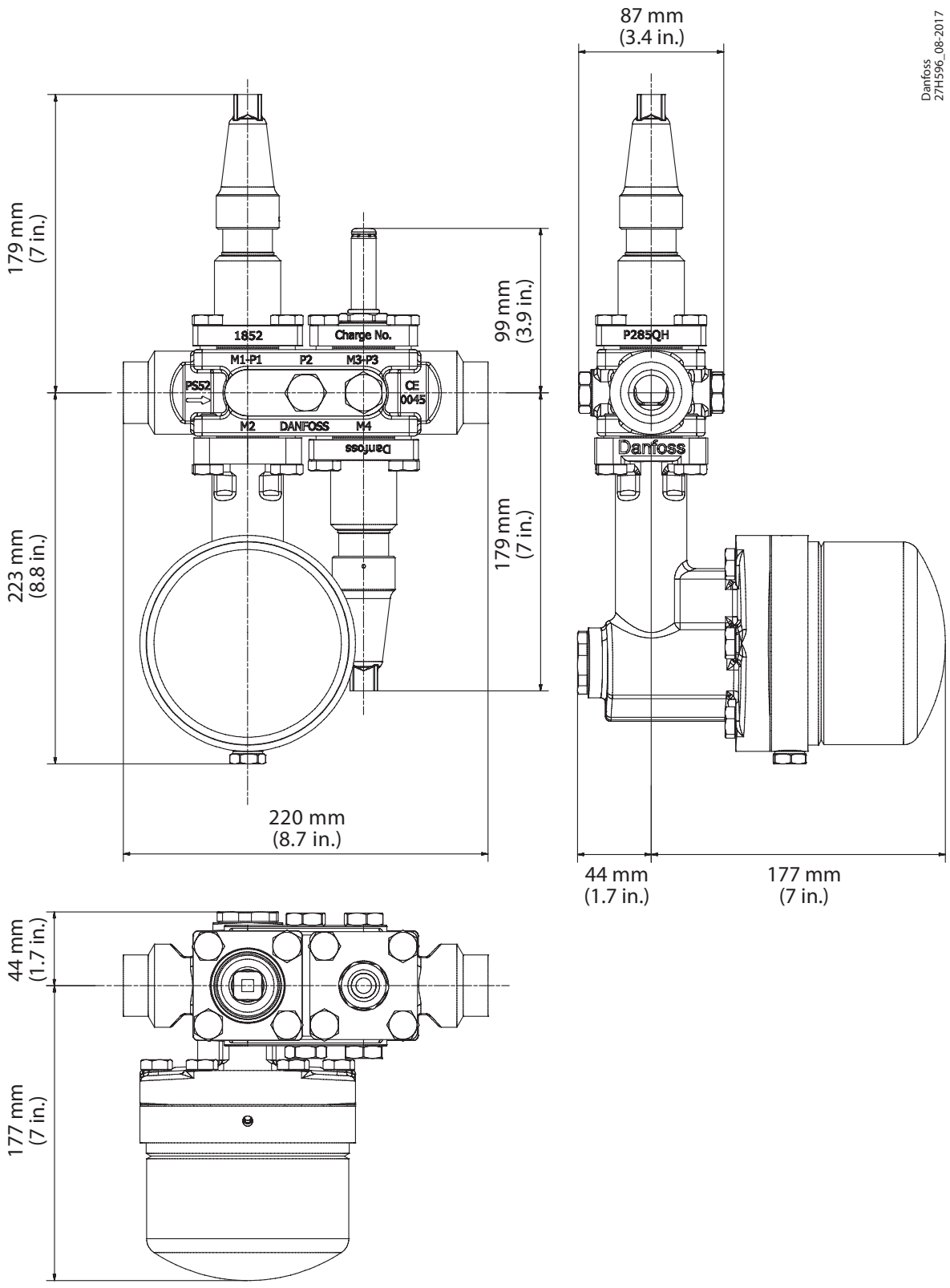

Dimensions *(continued)*

ICF 20-4

This example indicates the maximum dimensions for the ICF valve stations.

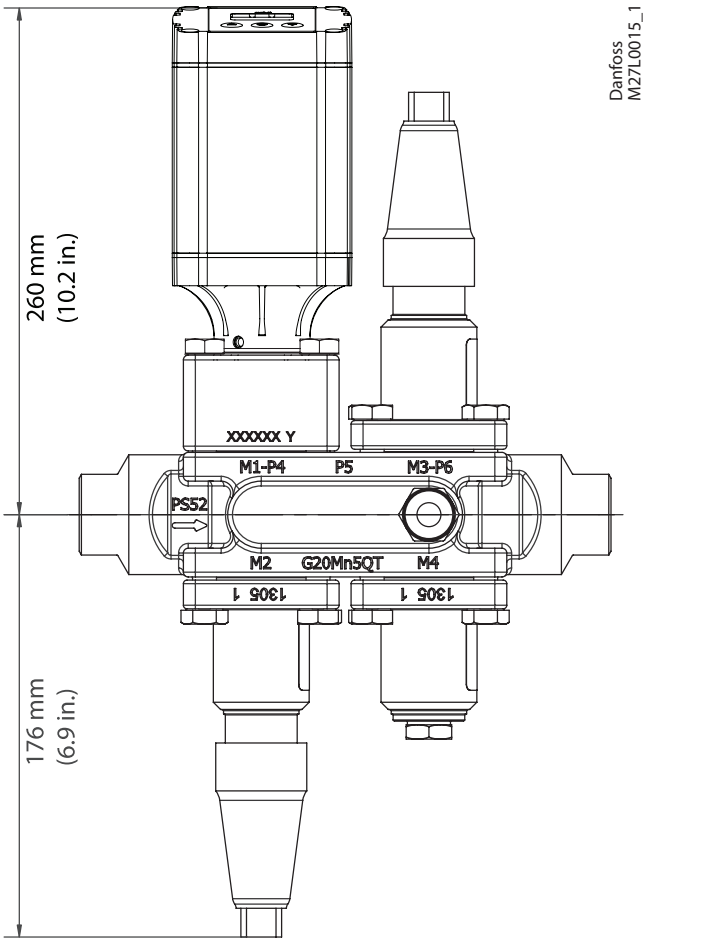

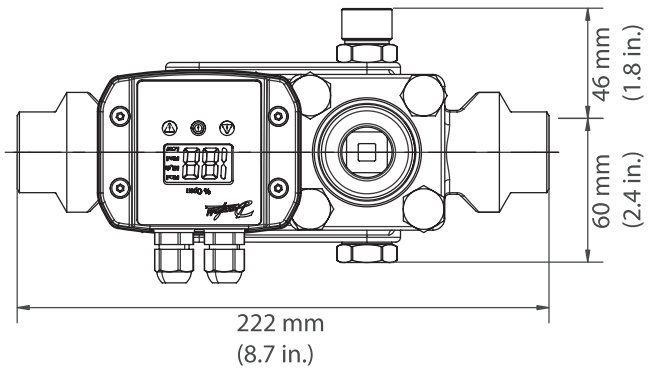

Dimensions *(continued)*

ICF 20-6

This example indicates the maximum dimensions for the ICF valve stations.

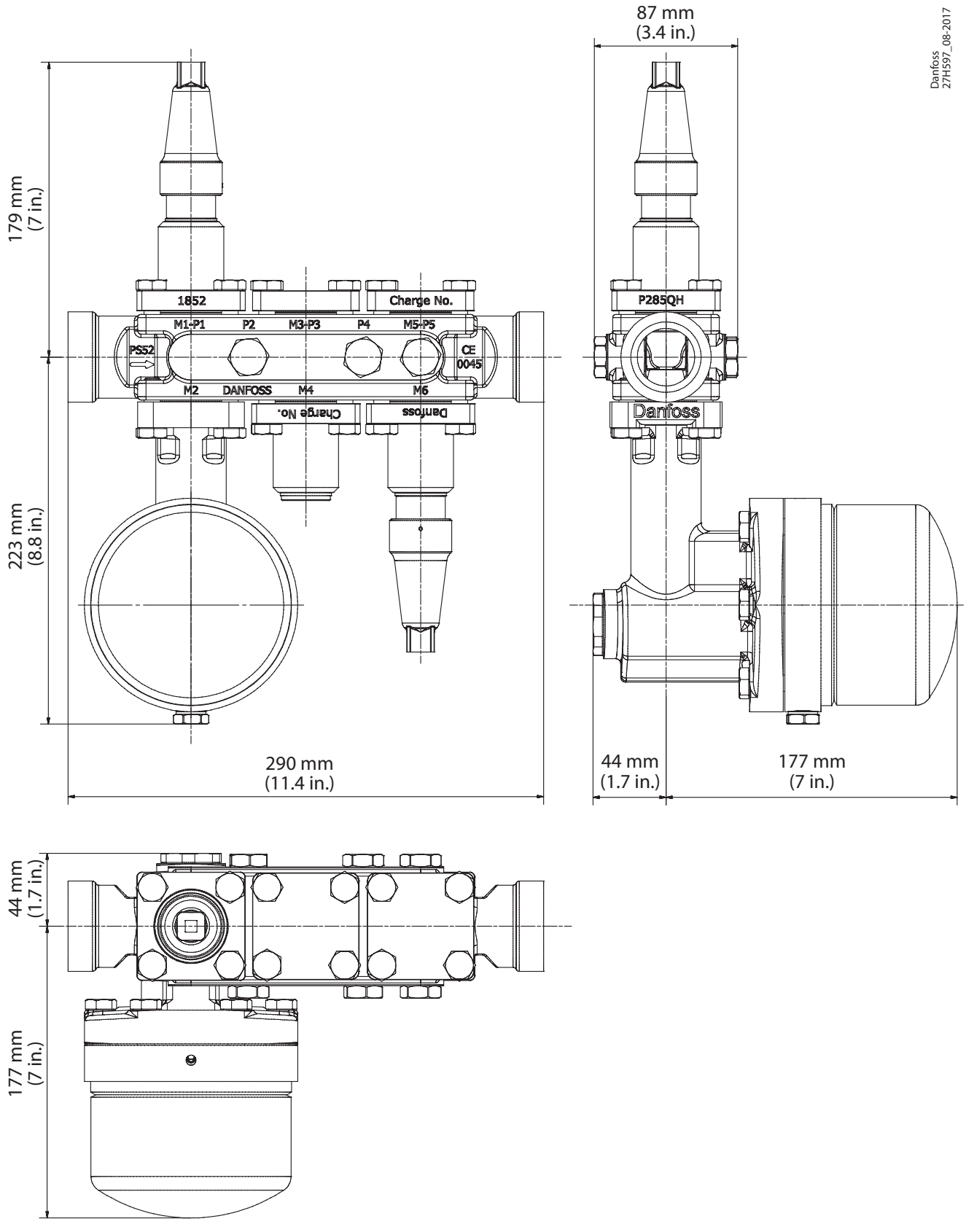

Dimensions *(continued)*

ICF 20-6

This example indicates the maximum dimensions for the ICF valve stations.

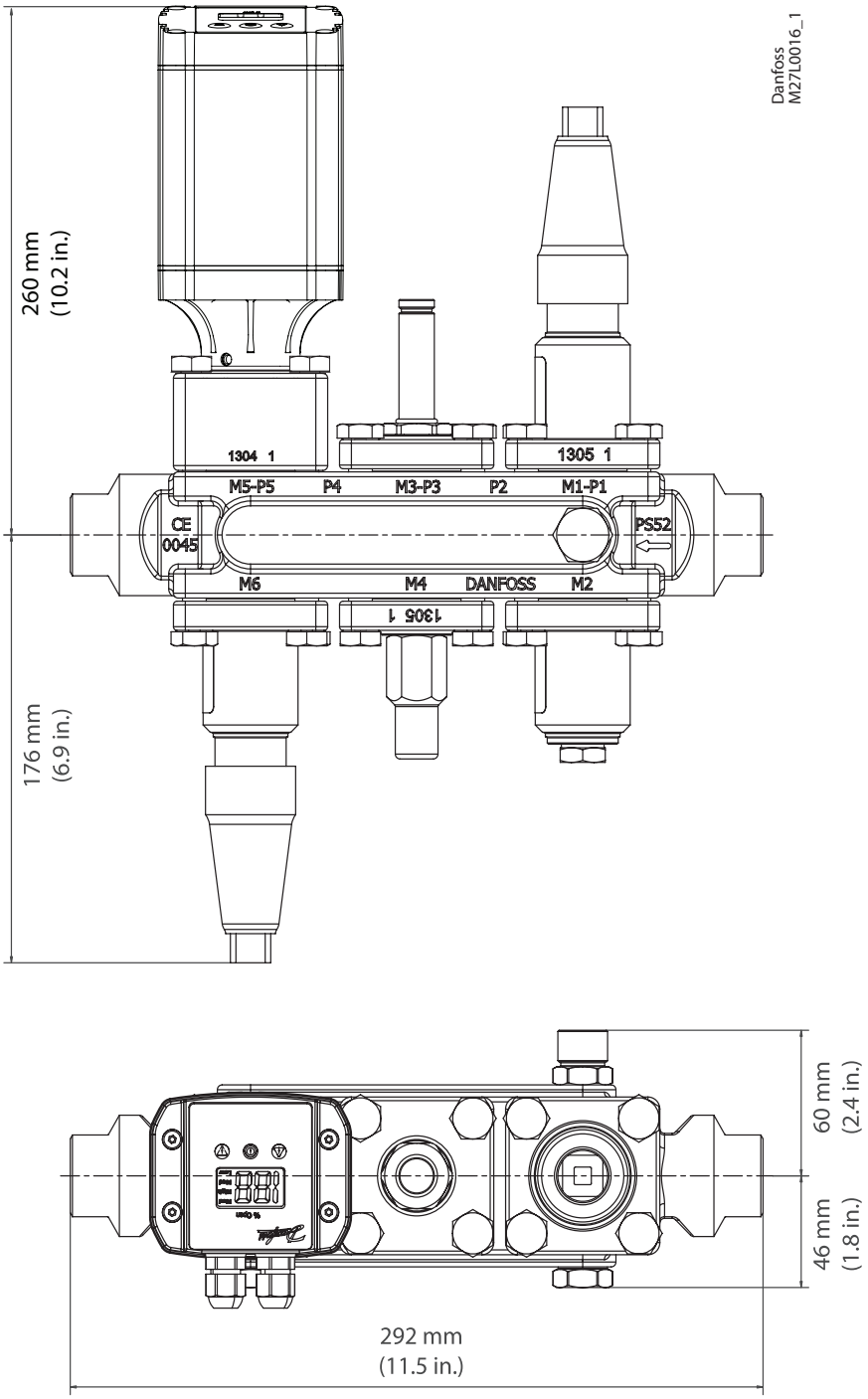

Dimensions *(continued)*

ICF 25-4

This example indicates the maximum dimensions for the ICF valve stations.

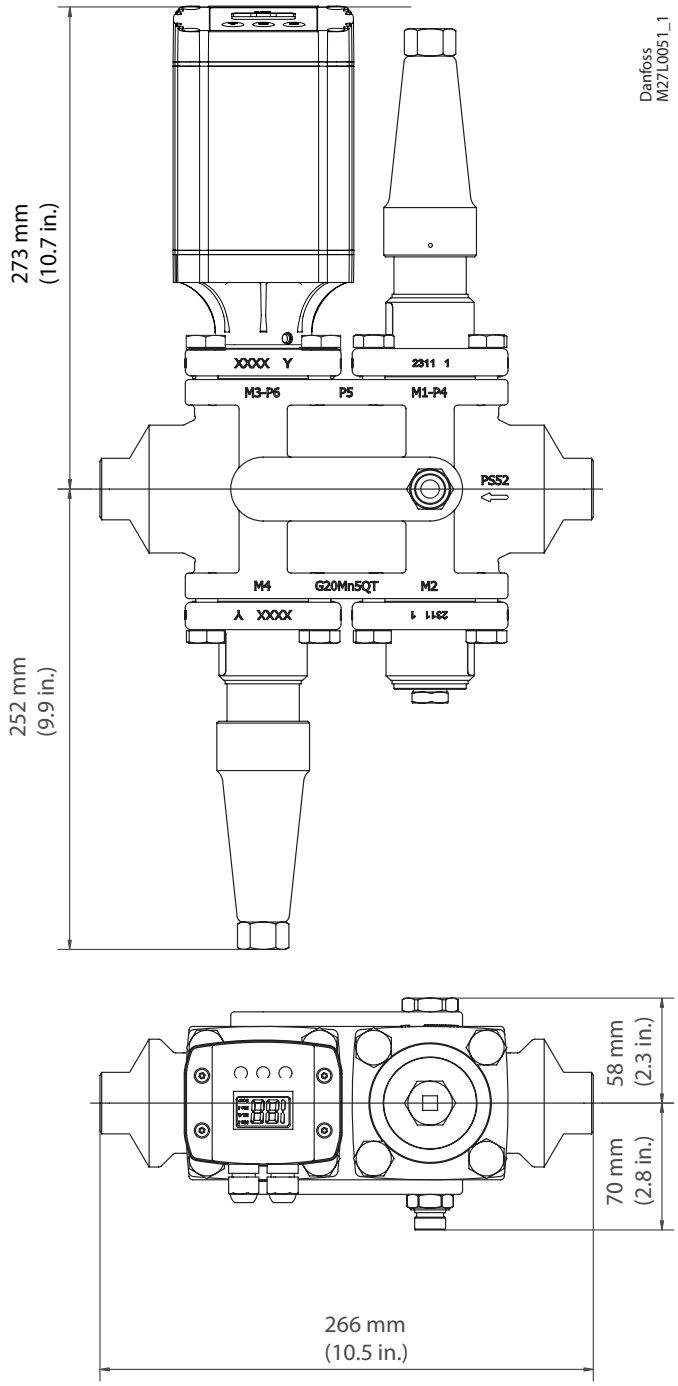

Dimensions *(continued)*

ICF 25-6

This example indicates the maximum dimensions for the ICF valve stations.

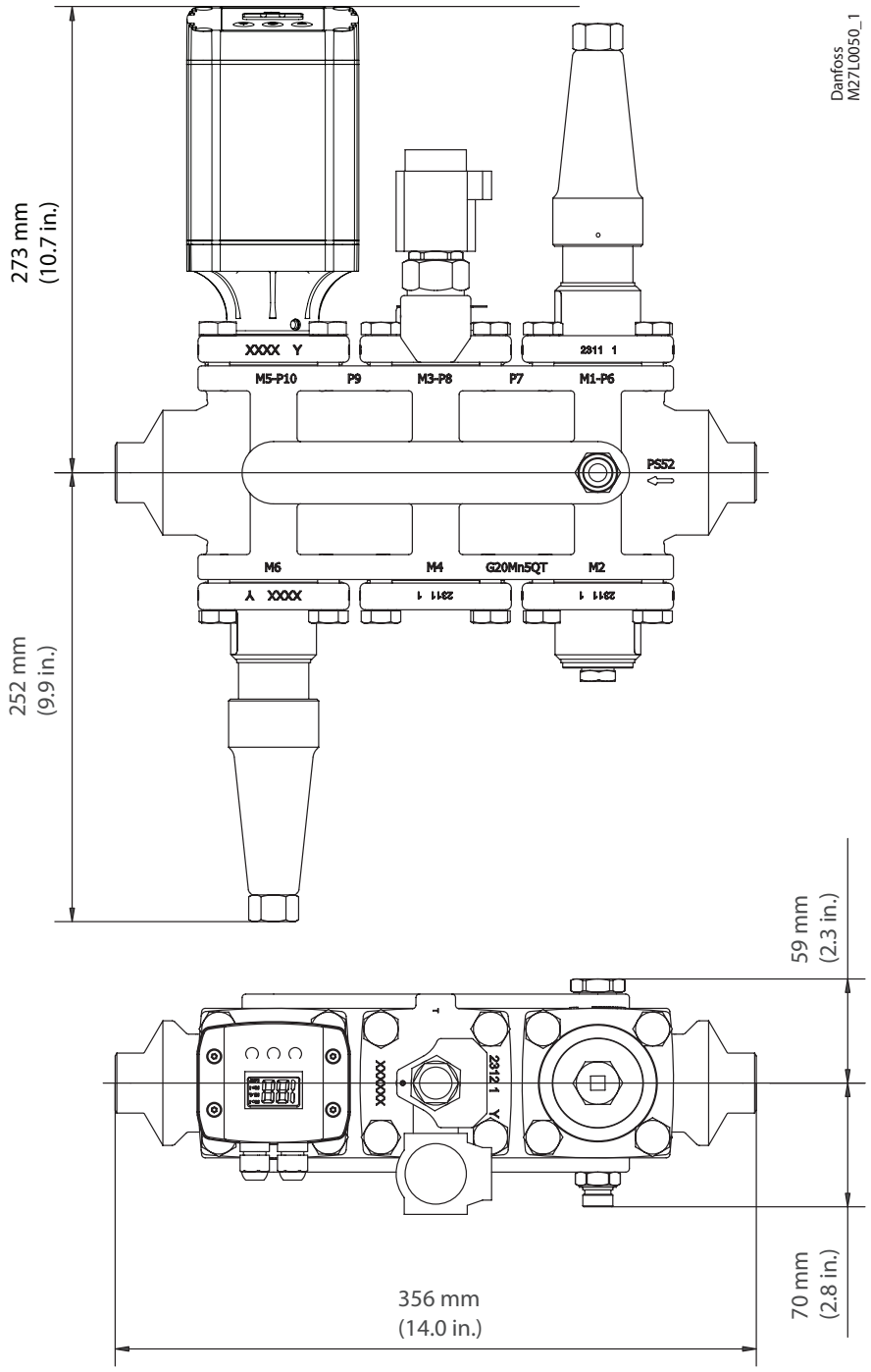

Dimensions *(continued)*

ICF 50-4

This example indicates the maximum dimensions for the ICF valve stations.

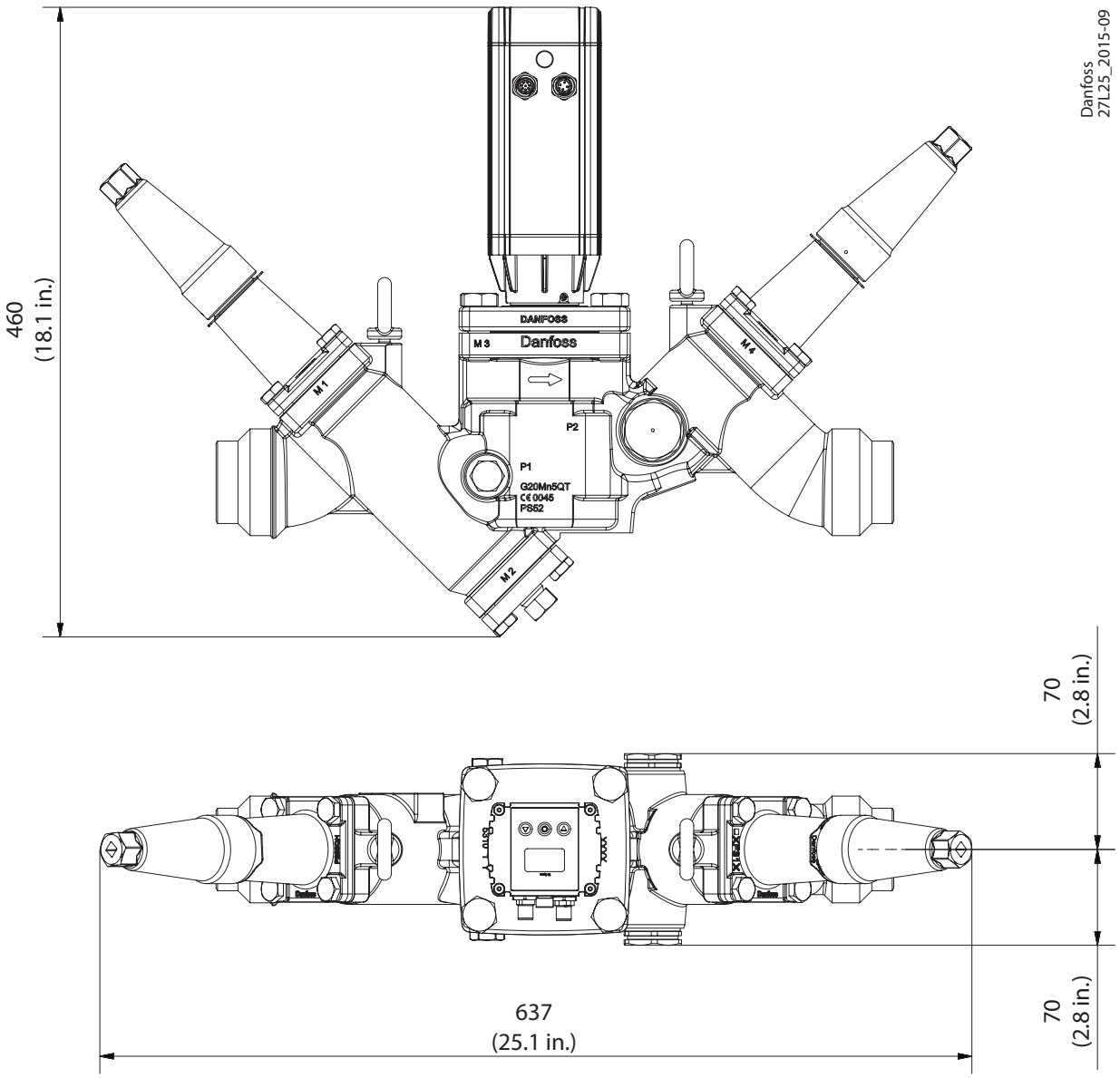

Dimensions *(continued)*

ICF 65-3

This example indicates the maximum dimensions for the ICF valve stations.

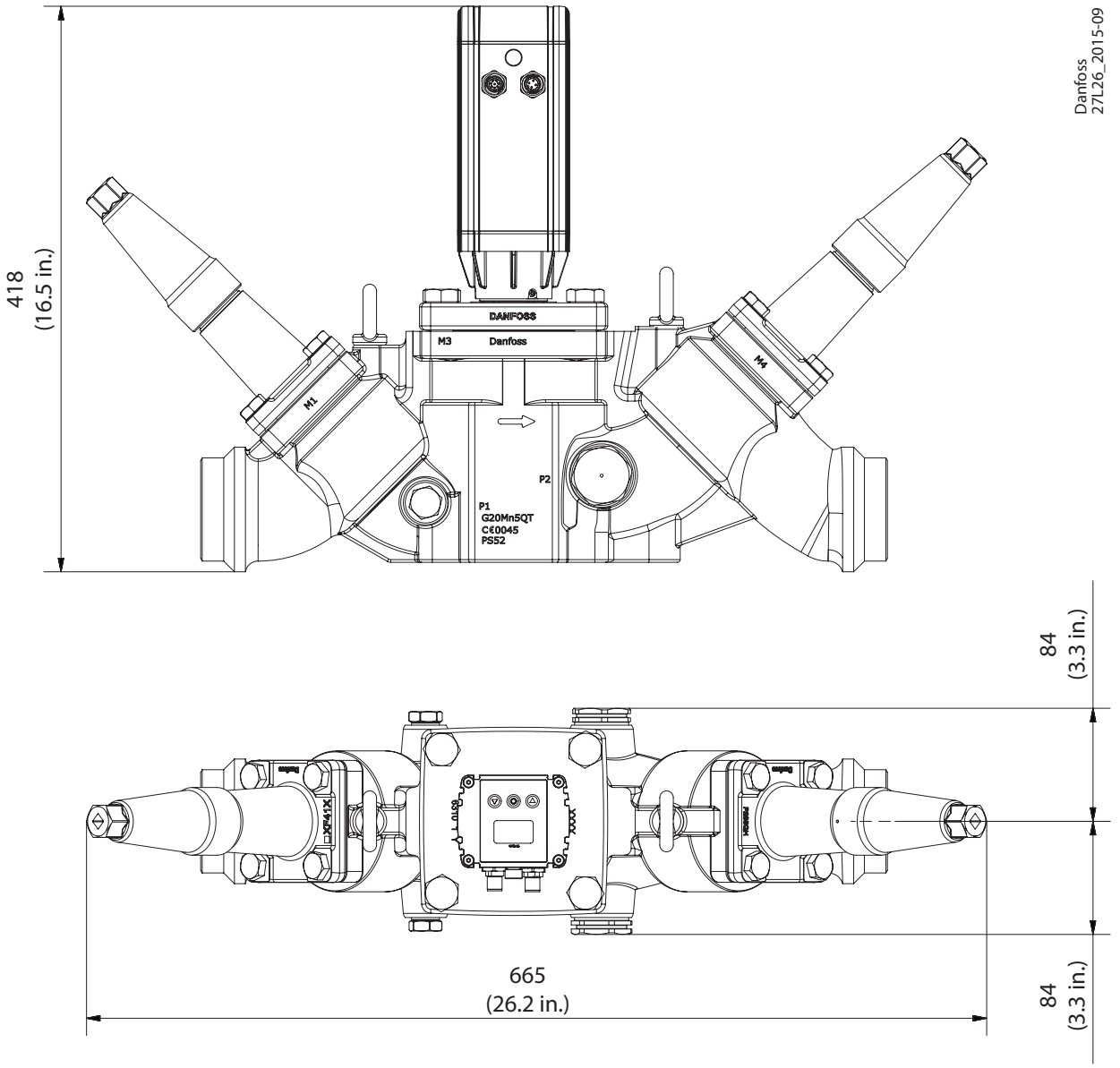

ENGINEERING
TOMORROW

Valve Station in stainless steel
ICF SS 20 and ICF SS 25

Contents **Page**

Features ... 551
Technical data ... 552
Design ... 552
Description of the function modules for ICF SS 20. ... 554
Description of the function modules for ICF SS 25. ... 555
Material specification ... 556
Code number selection ... 562
Applications ... 563
Connections. ... 566
Ordering ICF SS valve station ... 566
Dimensions ... 572

AI243586442520en-000702 | 2018.10

ENGINEERING
TOMORROW

Valve Station in stainless steel
ICF SS 20 and ICF SS 25

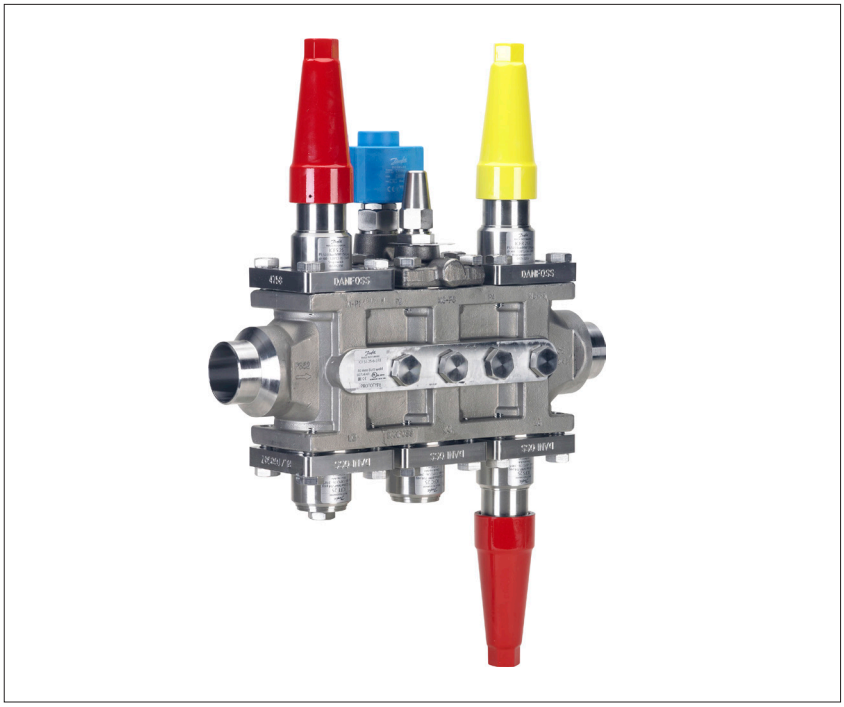

Based on advanced technology the ICF SS valve station incorporates several functions in one housing, which can replace a series of conventional mechanical, electro-mechanical and electronically operated valves.

This valve station not only provides a number of advantages in the design phase of a refrigeration plant but also in the installation, service and maintenance.

The ICF SS valve stations are designed for low and high pressure refrigerants and can be used in pumped liquid lines, liquid injection lines and hot gas lines.

Supplied as a complete assembly, it is fully tested at high pressure and its functions are tested under factory controlled conditions.

One code number equals one application solution.

Features

- Designed for industrial refrigeration applications for a maximum working pressure of 52 bar / 754 psig
- Applicable to HCFC, non flammable HFC, R717 (Ammonia) and R744 (CO_2).
  The use of ICF SS valve stations with flammable hydrocarbons is not recommended
- Direct weld connections
  (No leaks through flanges)
- Stainless steel valve housing and function modules
- Low weight and compact design
- V-port regulating cones on the control modules ensure optimum regulating accuracy particularly at part load
- Modular Concept
  Each housing is available with butt-weld DIN connections in several sizes.
  Valve service is performed by replacing the function module
- Side ports for the connection of pressure gauges, transmitters, sight glasses, service valve etc
- UL approved

CE

ICF SS valve station		
Nominal bore	DN≤ 25 (1in)	DN 32-40 (1 ¼ - 1 ½ in)
Classified for	Fluid group I	
Category	Article 3, paragraph 3	II

Technical data

- *Refrigerants*
  Applicable to HCFC, non flammable HFC, R717 (Ammonia) and R744 (CO_2).
  The use of ICF SS valve stations with flammable hydrocarbons is not recommended.

  For further information please contact the local Danfoss sales company.
- *Temperature range*
  -60 – 120 °C / -76 – 248 °F.

  If the ICM module is going to be used in liquid refrigerant with a temperature above 75 °C / 167 °F, please contact Danfoss.
- Ambient temperature for ICF SS with ICAD:
  -30 – 50 °C / -22 – 122 °F
- *Pressure*
  The ICF SS is designed for:
  Max. working pressure: 52 bar g / 754 psig

  Opening differential pressure:
  Please refer to the individual function module data.

Design

The main components of the ICF SS valve station are:
- A housing
- A maximum of four or six function modules

Housing

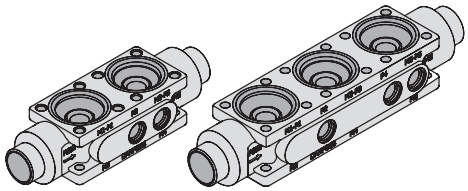

ICF SS 20-4 **ICF SS 20-6**

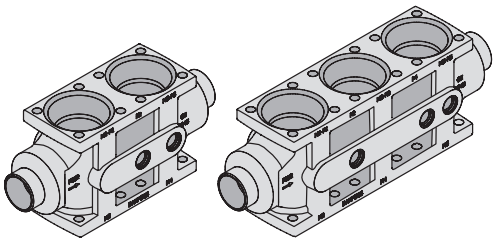

ICF SS 25-4 **ICF SS 25-6**

Function modules

Each housing accommodates a maximum of four or six function modules, of the following types:
- Stop valve module
- Manual regulating valve module
- Filter module
- Solenoid valve module
- Electronic expansion valve module
- Manual opening module
- Check valve module
- Stop/check valve module
- Motor valve module
- External welding connection module
- Blank top cover

Optional:
The housings are supplied with a predefined number of side ports for the following options:
- Sight glass
- Temperature or pressure sensor
- Pressure gauge
- Side exit for drain or bypass.

The design allows maximum capacity and minimum pressure drop, using advanced technology and double seats – offering higher capacity than conventional systems using individual valves and components.

The ICF SS valve station is multifunctional.

ICF SS valve station offers compact dimensions and shortened installation time due to the reduced number of direct welded connections.

Supplied as a complete assembly, it is leak tested at high pressure and its functions are tested under factory controlled conditions.

Connections
- D: Butt weld, DIN (EN 10220)
- A: Butt weld, ANSI (ASME B 36.19 SCHEDULE 40)

Approvals
The ICF SS concept is designed to fulfil global refrigeration requirements.
For specific approval information, please contact Danfoss.

Housing and function module material
Stainless steel

When using TIG/MIG/SMAW welding technology, it is possible to install the ICF SS valve station without prior removal of the function modules from the housing. If using other welding methods the modules must be removed during welding.

Please consult the product instruction for more details.

Module and Sideport arrangement

ICF SS 20-4, 25-4

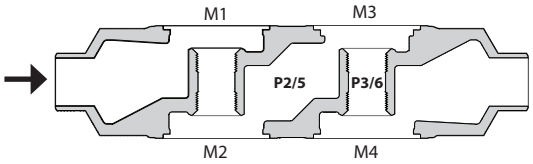

Flow in an ICF SS 20-4, 25-4

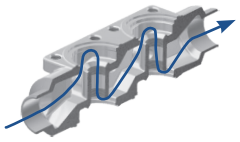

ICF SS 20-6, 25-6

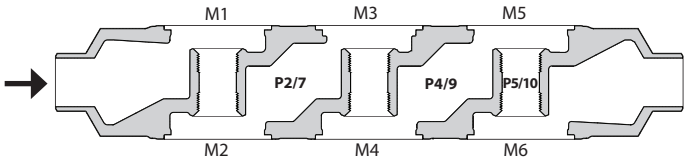

Flow in an ICF SS 20-6, 25-6

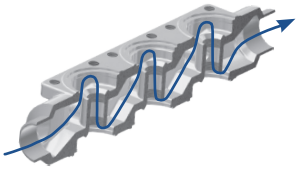

ICF SS 20-4
DIN + ANSI connections.

4 side ports
DIN = G ³/₈ in.
ANSI = NPT ³/₈ in.
(2 opposite on each side)

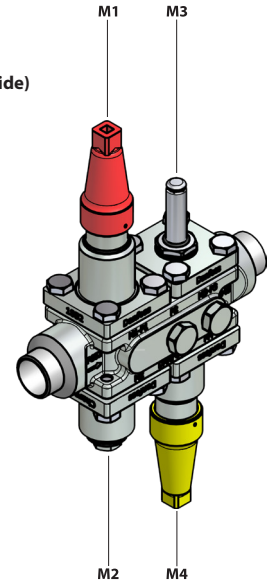

Example: ICF SS 20-4-10RA

All ICF SS 25-4
DIN + ANSI connections.

4 side ports
DIN = G ³/₈ in.
ANSI = NPT ³/₈ in.
(2 opposite on each side)

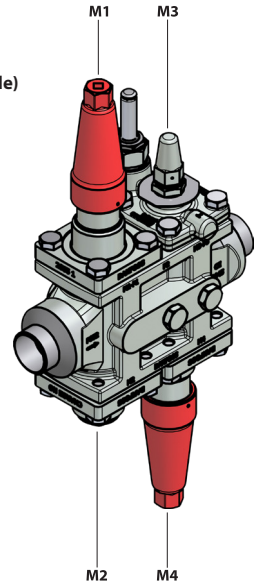

Example: ICF SS 25-4-9

All ICF SS 20-6
DIN + ANSI connections.

6 side ports
DIN = G ³/₈ in.
ANSI = NPT ³/₈ in.
(3 opposite on each side)

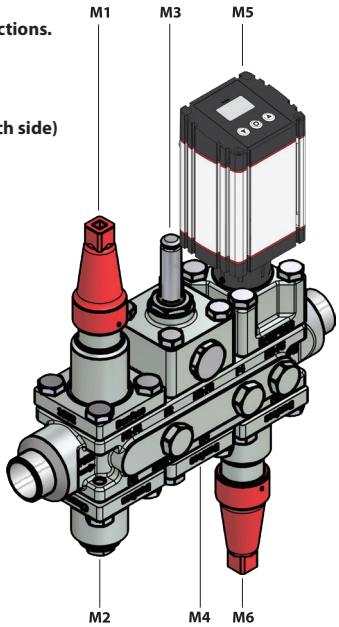

Example: ICF SS 20-6-5HMB

All ICF SS 25-6
DIN + ANSI connections.

6 side ports
DIN = G ³/₈ in.
ANSI = NPT ³/₈ in.
(3 opposite on each side)

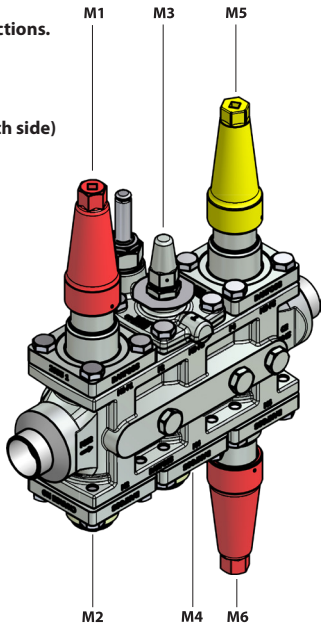

Example: ICF SS 25-6-3RA

ICF SS 20

Description of the function modules for ICF SS 20

ICFS SS 20
Shut-off valve module
This module has the function of a stop valve, and has a red cap.

ICFR SS 20, A or B
Manual regulating valve module
This module has the function of a hand regulating valve, and has a yellow cap.

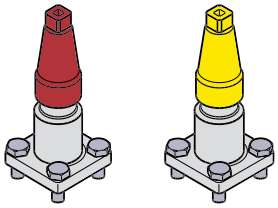

ICFS SS 20 *ICFR SS 20*

ICFC SS 20
Check valve module
This module has the function of a check valve.

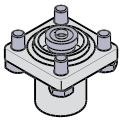

ICFC SS 20

ICFF SS 20 / ICFF SS 20E
Strainer module
This module functions as a strainer.

ICFF SS 20:
Pleated 150µ (100 mesh) / 45 cm^2 (7.0 in^2)

ICFF SS 20E:
Pleated 150µ (100 mesh) / 160 cm^2 (24.8 in^2)

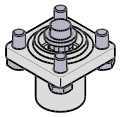

ICFF SS 20 / ICFF SS 20E

ICFN SS 20
Stop & check valve module
This module has the function of a combined stop and check valve, and has a green cap.

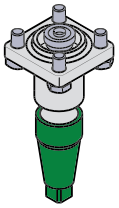

ICFN SS 20

ICFE SS 20
Solenoid valve module
This module has the function of a normally closed solenoid valve for controlling the refrigerant flow.

ICFA SS 20
Electronic expansion valve module
This module has the function of an electronic pulse width modulating (PWM) expansion valve.

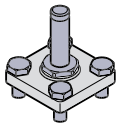

ICFE SS 20 / ICFA SS 20

ICM SS 20-A, 20-B, 20-C, 20-A33 or 20-B66
Motor operated valve module
This module is a stepper motor actuator valve for on/off and modulating control of the refrigerant flow.

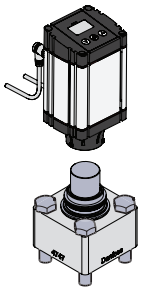

ICM SS 20-A, 20-B, 20-C, 20-A33 or 20-B66

ICFO SS 20
Manual opening module
This module facilitates the manual opening of the solenoid valve (type ICFE SS).

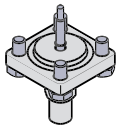

ICFO SS 20

ICFB SS 20
Blind top cover
This provides a blanking cover for unused module ports.

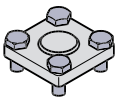

ICFB SS 20

ICFE SS 20H
Solenoid valve module with integrated manual opener
This module has the function of a normally closed solenoid valve for controlling the refrigerant flow.

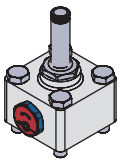

ICFE SS 20H

ICFW SS 20
Welding module 20 DIN
This module is used for drain connection during hot-gas defrosting - in case of high capacity.

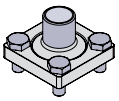

ICFW SS 20

Please note:
At about 10% of maximum mass flow of
ICFE SS 20H, the pressure differential correspond to about 0.07 Bar (1 psi). ICFE SS 20H will start to open at these conditions.
At a pressure differential of minimum 0.2 bar /2.9 psi ICFE SS 20H will be 100% open.

ICF SS 25

Description of the function modules for ICF SS 25

ICFS SS 25
Shut-off valve module
This module has the function of a stop valve, and has a red cap.

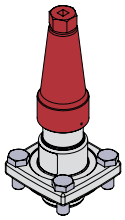
ICFS SS 25

ICFN SS 25
Stop & check valve module
This module has the function of a combined stop and check valve, and has a green cap.

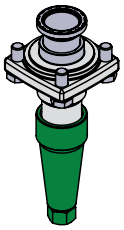
ICFN SS 25

ICFR SS 25, A or B
Manual regulating valve module
This module has the function of a hand regulating valve, and has a yellow cap.

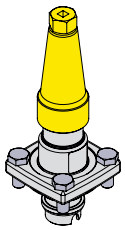
ICFR SS 25

ICM SS 25-A or B
Motor operated valve module
This module is a stepper motor actuator valve for on / off and modulating control of the refrigerant flow.

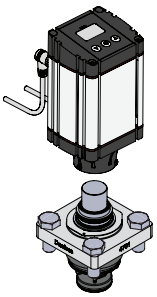
ICM SS 25-A or B

ICFF SS 25
Strainer module
This module functions as a strainer.

ICFF SS 25:
Pleated 150µ (100 mesh) / 160 cm² (24.8 in²)

ICFF SS 25E:
Pleated 150µ (100 mesh) / 330 cm² (51.2 in²)

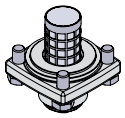
ICFF SS 25 / ICFF SS 25E

ICFB SS 25
Blind top cover
This provides a blanking cover for unused module ports.

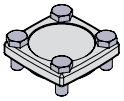
ICFB SS 25

ICFE SS 25
Solenoid valve module
This module has the function of a normally closed solenoid valve for controlling the refrigerant flow.

It has a built-in manual opening function.

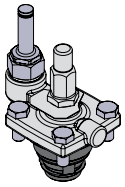
ICFE SS 25

Please note:
At about 10% of maximum mass flow of ICFE SS 25, the pressure differential correspond to about 0.07 bar / 1 psi. ICFE SS 25 will start to open at these conditions.

At a pressure differential of minimum 0.2 bar / 2.9 psi ICFE SS 25 will be 100% open.

ICFC SS 25
Check valve module
This module has the function of a check valve.

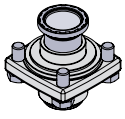
ICFC SS 25

ICFW SS 25
Welding module, 25 DIN
This module is used for drain connection during hot-gas defrosting - in case of high capacity.

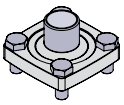
ICFW SS 25

Material specification

ICF SS housing

ICF SS 20-4, 25-4

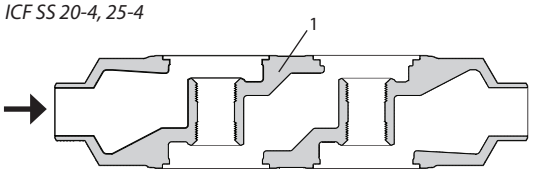

ICF SS 20-6, 25-6

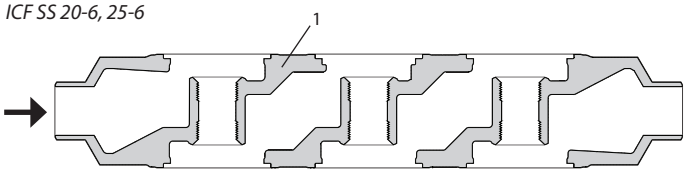

Pos.	Part	Material	EN	ASTM
1	Housing	Stainless steel	GX5CrNi19-10 EN10213-4	A304

ICFS SS 20 shut-off valve module

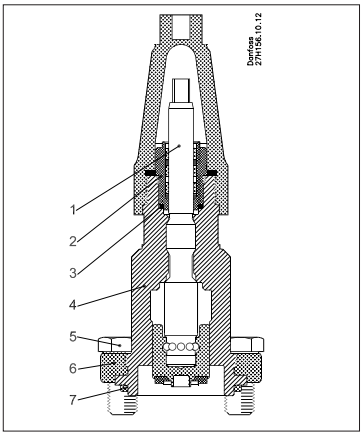

Pos.	Part	Material	EN	ASTM
1	Spindle	Stainless steel	X8CrNiS 18-9 EN 10088	A303
2	Thread part	Stainless steel		
3	AL-gasket / Refrig. gasket			
4	Bonnet	Stainless steel	X5CrNi 18-10 EN 10272	A304
5	Hex-head bolt M10 × 25	Stainless steel	A2-70	Type 308
6	Flange	Stainless steel	X5CrNi18-10 EN10088	A304
7	Gasket	Chloroprene (Neoprene)		

ICFF SS 20 strainer module

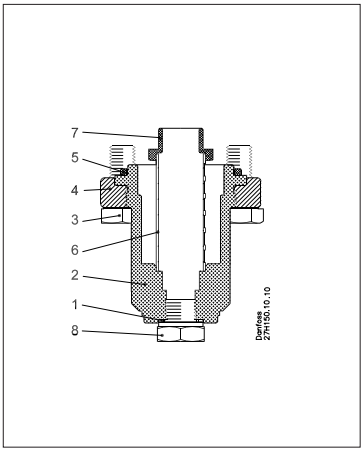

Pos.	Part	Material	EN	ASTM
1	Gasket	AL 99 F11		
2	Bonnet	Stainless steel	X5CrNi 18-10 EN 10272	A304
3	Hex-head bolt M10 × 25	Stainless steel	A2-70	Type 308
4	Flange	Stainless steel	X5CrNi18-10 EN10088	A304
5	Gasket	Chloroprene (Neoprene)		
6	Filter element	Stainless steel 74µ and 150µ		
7	Plug	Steel		
8	Plug ¼ in RG for butt-weld	Stainless steel		

Material specification
(continued)

ICFF SS 20E extended strainer module

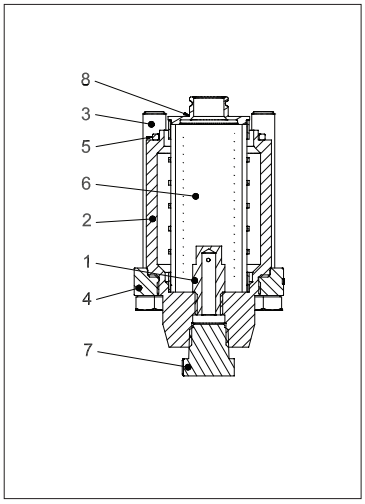

Pos.	Part	Material	EN	ASTM
1	Dirt protection plug	Steel	11SMn30 EN 10087	Grade 1213 A29
2	Bonnet	Stainless steel	X5CrNi 18-10 EN 10272	A304
3	Hex-head bolt M12x80	Stainless steel	A2-70	Type 308
4	Flange	Stainless steel	X5CrNi18-10 EN10088	A304
5	Gasket	Chloroprene (Neoprene)		
6	Filter element	Stainless steel 250µ		
7	Plug 3/8 in NPT	Stainless steel		
8	Filter adaptor	Steel		

ICFE SS 20 solenoid valve module

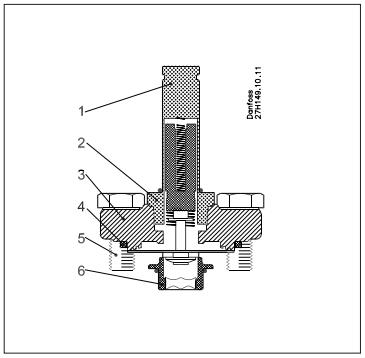

Pos.	Part	Material	EN	ASTM
1	Armature tube	Stainless steel		
2	Armature tube nut	Stainless steel	X8CrNiS18-9 EN 10088	
3	Flange	Stainless steel	X5CrNi18-10 EN10088	A304
4	Gasket	Chloroprene (Neoprene)		
5	Hex-Head bolt M10 × 25	Stainless steel	A2-70	Type 308
6	Seat	High density polymer		

ICFE SS 20H solenoid valve module

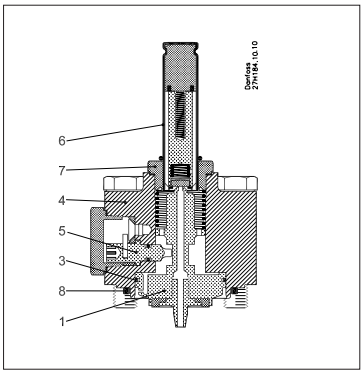

Pos.	Part	Material	EN	ASTM
1	Piston	Steel	11SMn30 EN EN 10025	
2	Seat	Teflon		
3	Piston ring			
4	Bonnet cylinder	Stainless steel	X5CrNi18-10 EN10088	A304
5	Manual opener	Steel		
6	Armature tube	Stainless steel		
7	Armature tube nut	Stainless steel	X2CrNi19-11 EN10216	A320
8	Gasket	Chloroprene (Neoprene)		

ICFO SS 20 manual opening module

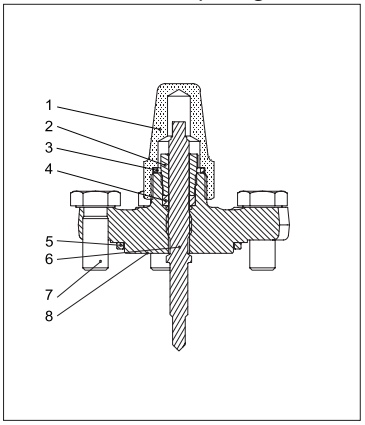

Pos.	Part	Material	EN	ASTM
1	Seal cap	Stainless steel		
2	Gland nut	Steel		
3	Seal cap gasket	Nylon	Polyamid A6	Polyamid PA6
4	Sealing ring	Teflon	PTFE	PTFE
5	Rubber gasket	Chloroprene rubber	CR	CR
6	Spindle	Stainless steel	X8CrNiS 18-9 EN 10088	A303
7	Hex-head bolt M10 × 25	Stainless steel	A2-70	Type 308
8	Flange	Stainless steel	X5CrNi18-10 EN10088	A304

Material specification
(continued)

ICFR SS 20 manual regulating valve module, A or B

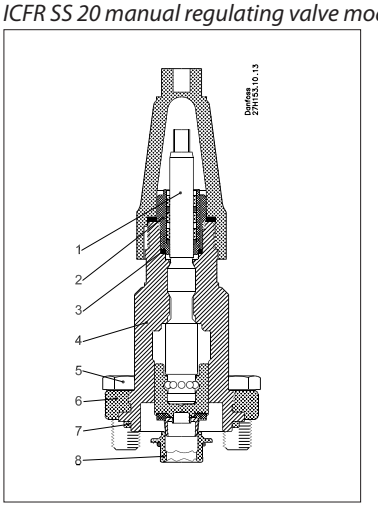

Pos.	Part	Material	EN	ASTM
1	Spindle	Stainless steel	X8CrNiS 18-9 EN 10088	A303
2	Thread part	Stainless steel		
3	AL-gasket			
4	Bonnet	Stainless steel	X5CrNi 18-10 EN 10272	A304
5	Hex-head bolt M10 × 25	Stainless steel	A2-70	Type 308
6	Flange	Stainless steel	X5CrNi18-10 EN10088	A304
7	Gasket	Chloroprene (Neoprene)		
8	Seat	High density polymer		

ICFA SS 20 electronic expansion valve module

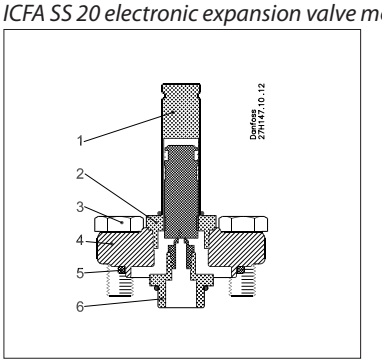

Pos.	Part	Material	EN	ASTM
1	Armature tube	Stainless steel		
2	Armature tube nut	Stainless steel	X8CrNiS18-9 EN 10088	
3	Hex-head bolt M10 × 25	Stainless steel	A2-70	Type 308
4	Flange	Stainless steel	X5CrNi18-10 EN10088	A304
5	Gasket	Chloroprene (Neoprene)		
6	Adaptor	Stainless steel		

ICFC SS 20 check valve module

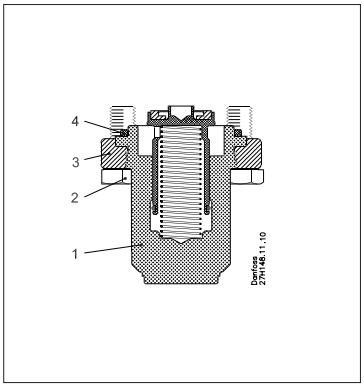

Pos.	Part	Material	EN	ASTM
1	Bonnet	Stainless steel	X5CrNi 18-10 EN 10272	A304
2	Hex-head bolt M10 × 25	Stainless steel	A2-70	Type 308
3	Flange	Stainless steel	X5CrNi18-10 EN10088	A304
4	Gasket	Chloroprene (Neoprene)		

ICFN SS 20 stop & check valve module

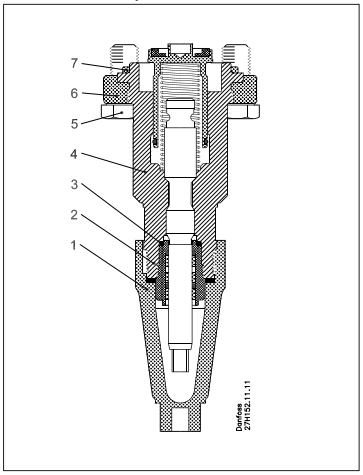

Pos.	Part	Material	EN	ASTM
1	Spindle	Stainless steel	X8CrNiS 18-9 EN 10088	A303
2	Thread part	Stainless steel		
3	AL-gasket			
4	Bonnet	Stainless steel	X5CrNi 18-10 EN 10272	A304
5	Hex-head bolt M10 × 25	Stainless steel	A2-70	Type 308
6	Flange	Stainless steel	X5CrNi18-10 EN10088	A304
7	Gasket	Chloroprene (Neoprene)		

Material specification
(continued)

ICM SS 20-A, 20-B, 20-C, 20-A33 or 20-B66 motor valve module

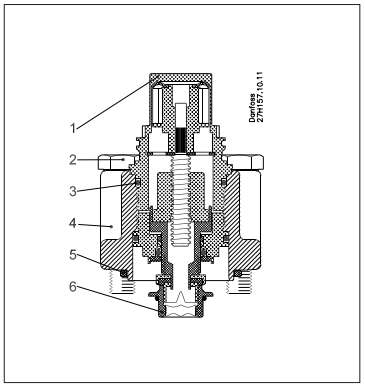

Pos.	Part	Material	EN	ASTM
1	Adapter	Stainless steel	X5CrNi18-10 EN 10088	A240
2	Hex-head bolt M10 × 55	Stainless steel	A2-70	Type 308
3	O-ring	Chloroprene		
4	Bonnet	Stainless steel	X5CrNi 18-10 EN 10088	A304
5	Gasket	Chloroprene (Neoprene)		
6	Seat	High density polymer		

ICFB SS 20 blank top cover

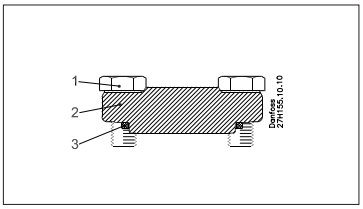

Pos.	Part	Material	EN	ASTM
1	Hex-head bolt M10 × 25	Stainless Steel	A2-70	Type 308
2	Flange	Stainless steel	X5CrNi18-10 EN10088	A304
3	Gasket	Chloroprene (Neoprene)		

ICFW SS 20D welding module, 20 DIN

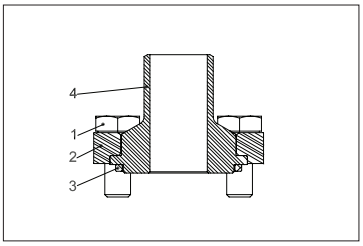

Pos.	Part	Material	EN	ASTM
1	Hex-head bolt M10 × 25	Stainless Steel	A2-70	Type 308
2	Flange	Stainless steel	X5CrNi18-10 EN10088	A304
3	Gasket	Chloroprene (Neoprene)		
4	Weld connection	Stainless Steel		

ICFS SS 25 shut-off valve module

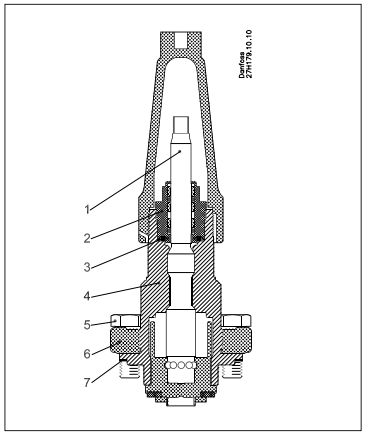

Pos.	Part	Material	EN	ASTM
1	Spindle	Stainless steel	X8CrNiS 18-9 EN 10088	A303
2	Thread part	Stainless steel		
3	O-ring	Chloroprene		
4	Bonnet	Stainless steel	X5CrNi 18-10 EN 10272	A304
5	Hex-head bolt M12 × 30	Stainless steel	A2-70	Type 308
6	Flange	Stainless steel	X5CrNi18-10 EN10088	A304
7	Gasket	Fiber non asbestos		

ICFF SS 25 strainer module

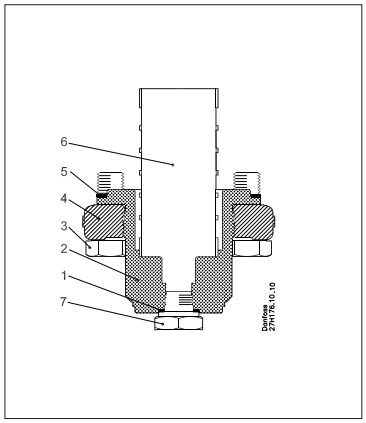

Pos.	Part	Material	EN	ASTM
1	Al. Gasket	AL 99 F11		
2	Bonnet	Stainless steel	X5CrNi 18-10 EN 10272	A304
3	Hex-head bolt M12 × 30	Stainless steel	A2-70	Type 308
4	Flange	Stainless steel	X5CrNi18-10 EN10088	A304
5	Gasket	Fiber non asbestos		
6	Filter element	Stainless steel 150µ		
7	Plug 1/4 in RG for butt-weld	Stainless steel		

Material specification
(continued)

ICFF SS 25E extended strainer module

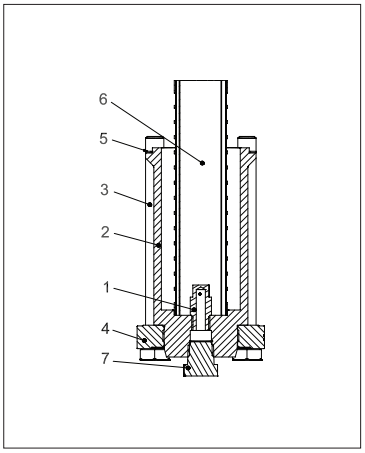

Pos.	Part	Material	EN	ASTM
1	Dirt protection plug	Steel	11SMn30 EN 10087	Grade 1213 A29
2	Bonnet	Stainless steel	X5CrNi 18-10 EN 10222	A304
3	Hex-head bolt M12x140	Stainless steel	A2-70	Type 308
4	Flange	Stainless steel	X5CrNi18-10 EN10088	A304
5	Gasket	Fiber non asbestos		
6	Filter element	Stainless steel 250µ		
7	Plug ³/₈ in NPT	Stainless steel		

ICFE SS 25 solenoid valve module

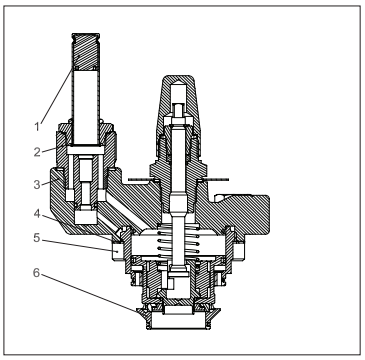

Pos.	Part	Material	EN	ASTM
1	Armature tube	Stainless steel		
2	Armature tube nut	Stainless steel	X8CrNiS18-9 EN 10088	
3	Bonnet	Stainless steel	X5CrNi 18-10 EN 10222	A304
4	Gasket	Fiber non asbestos		
5	Hex-Head bolt M10 × 30	Stainless steel	A2-70	Type 308
6	Seat	High density polymer		

ICFR SS 25 manual regulating valve module, A or B

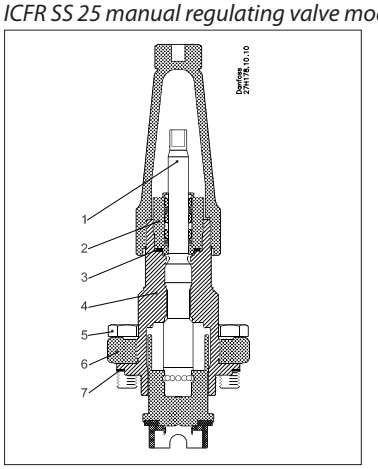

Pos.	Part	Material	EN	ASTM
1	Spindle	Stainless steel	X8CrNiS 18-9 EN 10088	A303
2	Thread part	Stainless steel		
3	O-ring	Chloroprene		
4	Bonnet	Stainless steel	X5CrNi 18-10 EN 10272	A304
5	Hex-head bolt M12 × 30	Stainless steel	A2-70	Type 308
6	Flange	Stainless steel	X5CrNi18-10 EN10088	A304
7	Gasket	Fiber non asbestos		
8	Seat	High density polymer		

ICFC SS 25 check valve module

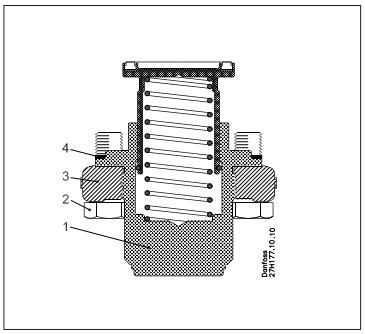

Pos.	Part	Material	EN	ASTM
1	Bonnet	Stainless steel	X5CrNi 18-10 EN 10272	A304
2	Hex-head bolt M12 × 30	Stainless steel	A2-70	Type 308
3	Flange	Stainless steel	X5CrNi18-10 EN10088	A304
4	Gasket	Fiber non asbestos		

Material specification
(continued)

ICFN SS 25 stop & check valve module

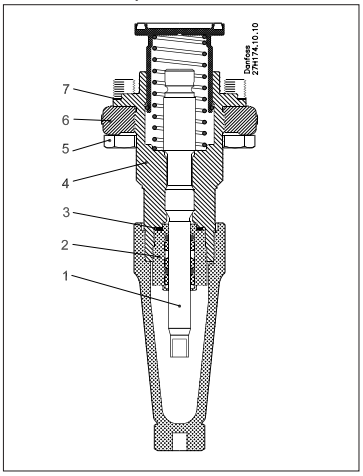

Pos.	Part	Material	EN	ASTM
1	Spindle	Stainless steel	X8CrNiS 18-9 EN 10088	A303
2	Thread part	Stainless steel		
3	O-ring	Chloroprene		
4	Bonnet	Stainless steel	X5CrNi 18-10 EN 10272	A304
5	Hex-head bolt M12 × 30	Stainless steel	A2-70	Type 308
6	Flange	Stainless steel	X5CrNi18-10 EN10088	A304
7	Gasket	Fiber non asbestos		

ICM SS 25-A or B motor valve module

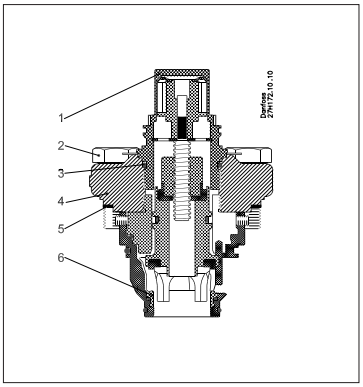

Pos.	Part	Material	EN	ASTM
1	Adapter	Stainless steel	X5CrNi18-10 EN 10088	A240
2	Hex-head bolt M12 × 30	Stainless steel	A2-70	Type 308
3	O-ring	Chloroprene		
4	Bonnet	Stainless steel	X5CrNi18-10 EN10088	A304
5	Gasket	Fiber non asbestos		
6	Seat	High density polymer		

ICFB SS 25 blank top cover

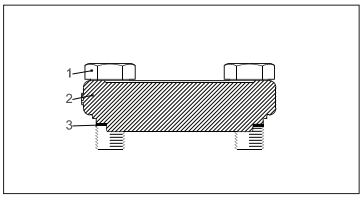

Pos.	Part	Material	EN	ASTM
1	Hex-head bolt M10 × 30	Stainless Steel	A2-70	Type 308
2	Flange	Stainless steel	X5CrNi18-10 EN10088	A304
3	Gasket	Fiber non asbestos		

ICFW SS 25 welding module, 25 DIN

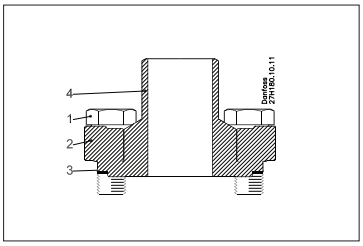

Pos.	Part	Material	EN	ASTM
1	Hex-head bolt M10 × 30	Stainless Steel	A2-70	Type 308
2	Flange	Stainless steel	X5CrNi18-10 EN10088	A304
3	Gasket	Fiber non asbestos		
4	Weld connection	Stainless steel		

Code number selection

To determine the correct ICF SS valve station follow steps 1 through 5.

Step 1 **Determine application and function requirements:**
- Line: Pumped liquid, Liquid Injection, Hot gas defrost, Liquid DX etc.
- Control: On/off solenoid valve, motorised valve
- Defrost: Electric or hot gas

From the above determine the application reference number (see page 566):

Step 2 **Selection criteria - Please use Coolselector®2**
Download the software from:
http://refrigerationandairconditioning.danfoss.com/support-center/apps-and-software/coolselector/
- Refrigerant
- Capacity
- Temperature
- Circulation rate

From the above determine the valve station required, e.g.: ICF SS 20 complete with ICM SS 20-C

Step 3 **Establish connection sizes and type**
- DIN butt-weld / ANSI butt-weld
- 20 (3/4 in), 25 (1 in), 32 (1 1/4 in) or 40 (1 1/2 in)

Step 4 **Establish code number**
(see pages 567 to 569)

Applications

To facilitate selection of the right ICF SS valve station Danfoss has predefined and grouped a large number of code numbers matching common applications:

Application #		Sequence of functions					
Liquid feed							
1	Liquid feed (No hotgas defrost)	Stop	Filter	Solenoid	Man Open	Regul.	Stop
2	Liquid feed	Stop	Filter	Solenoid	Man Open	Regul.	Stop/Check
3	Liquid feed	Stop	Filter	Solenoid	Check	Regul.	Stop
10	Liquid feed (No hotgas defrost)	Stop	Filter	Solenoid	Regul.		
15	Liquid feed with external connection	Stop	Filter	Solenoid	Check	Welding	Regul.
Liquid injection							
5	Liquid injection (expansion)	Stop	Filter	Solenoid	Man Open	Motor	Stop
14	Liquid injection (expansion)	Stop	Filter	Motor	Stop		
Hot gas defrost							
9	Hot gas defrost	Stop	Filter	Solenoid	Stop		
Miscellaneous							
90	Multipurpose configurations						

For specific identification of the different codes and flow capacity (K_v) please refer to ordering section.

Example of application: Liquid feed line

A valve combination for a flooded evaporator operating on / off from a thermostat and with electric defrost is required. Manual override of the solenoid valve is requested.
Common ICF SS configurations for this kind of application is shown here:

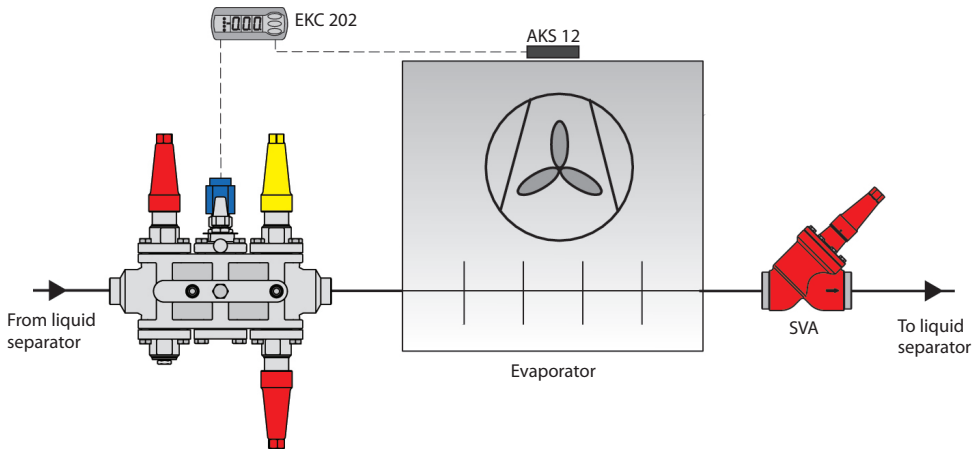

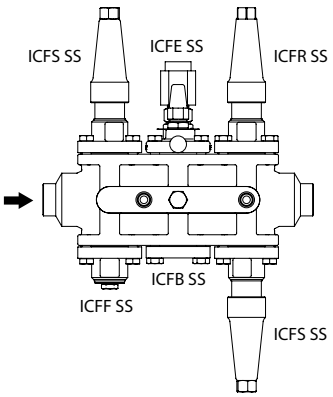

Not all valves are shown. Not to be used for construction purposes.

Example of application:
Liquid feed line /
Hot gas defrost line

Evaporator with soft opening gas powered valve ICLX in the suction line and hot gas defrost featuring:
ICF SS liquid feed station and ICF SS Hot gas station with side port to power ICLX.
ICS+CVP as a defrost regulator
(OFV optional depending on capacity).

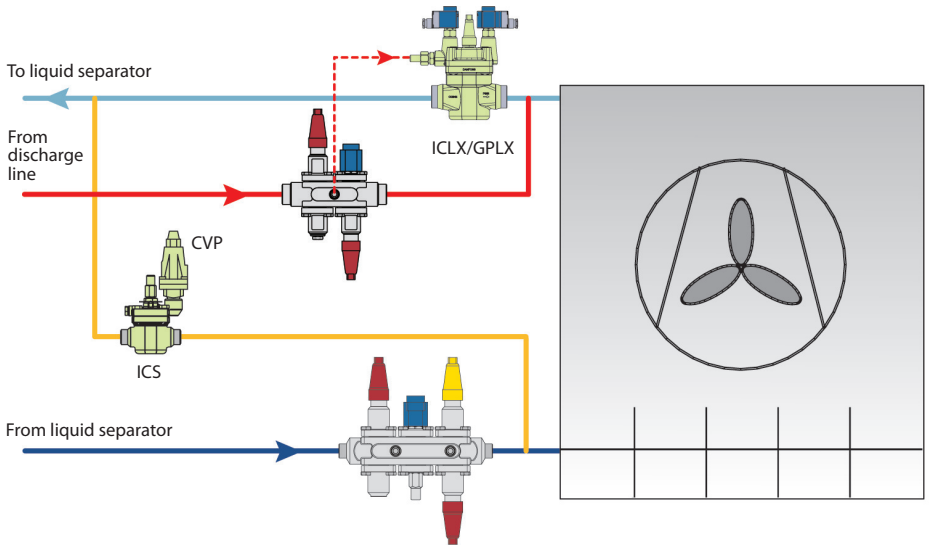

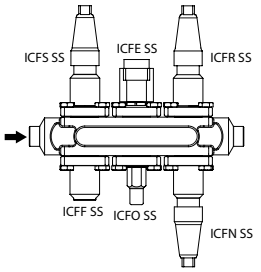

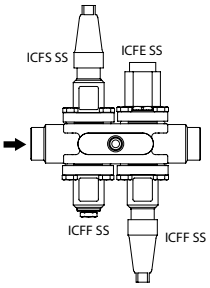

Not all valves are shown. Not to be used for construction purposes.

Example of application:
Liquid injection line

A valve combination for liquid injection to separator with electronic injection valve is required. It is requested to have a solenoid valve in front of the control valve.

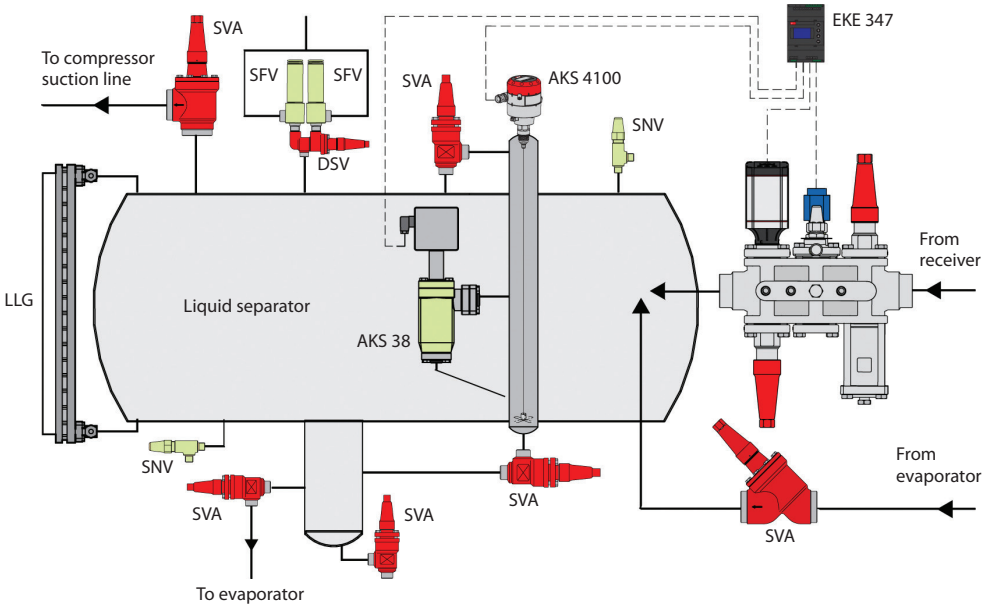

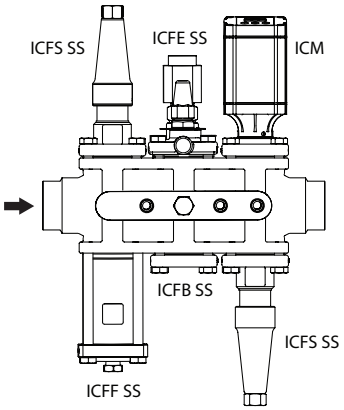

Not all valves are shown. Not to be used for construction purposes.

Example of application:
Liquid injection line

A valve combination for compressor liquid injection with electronic injection valve is required. It is a required to have a solenoid valve in front of the control valve.

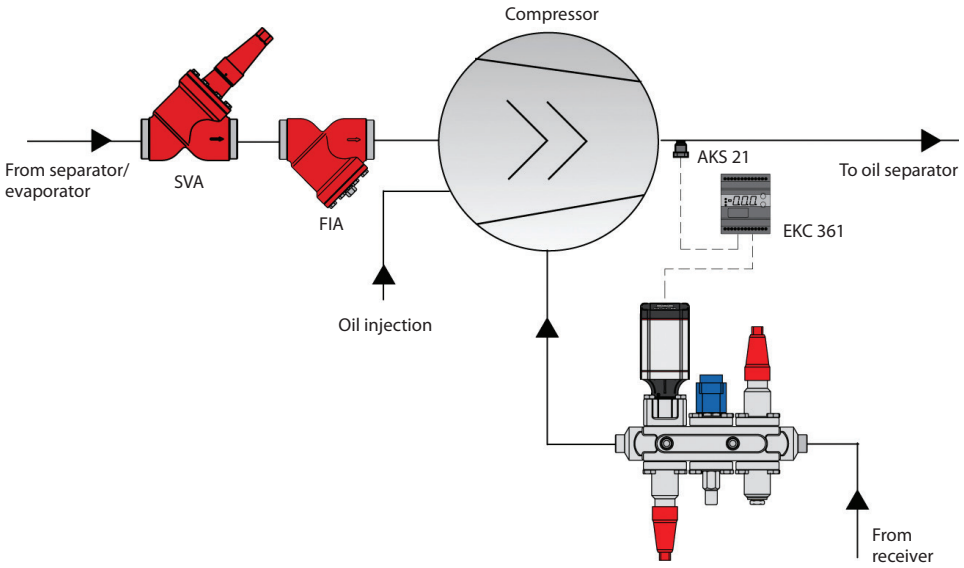

Not all valves are shown. Not to be used for construction purposes.

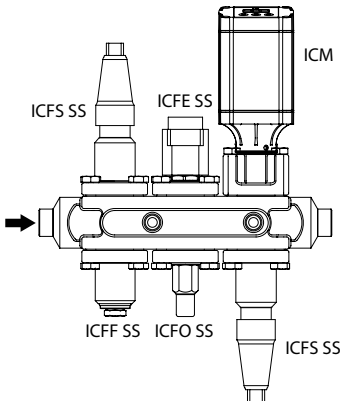

Connections

D: *Butt-weld DIN (EN 10220)*

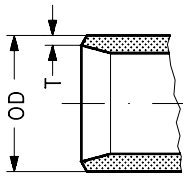

Size mm	Size in.	OD mm	T mm	OD in.	T in.		
20	(¾)	26.9	2.3	1.059	0.091		
25	(1)	33.7	2.6	1.327	0.103		
32	(1¼)	42.4	2.6	1.669	0.102		
40	(1 ½)	48.3	2.6	1.902	0.103		

A: *Butt-weld ANSI (B 36.19)*

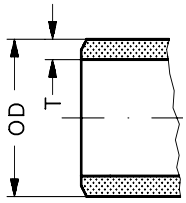

Size mm	Size in.	OD mm	T mm	OD in.	T in.	Schedule	
20	¾	26.9	2.9	1.059	0.11	40	
25	1	33.7	3.5	1.327	0.14	40	
32	1¼	42.4	3.6	1.669	0.14	40	
40	1½	48.3	3.7	1.902	0.15	40	

Ordering ICF SS valve station

Below Nomenclature show the generic configuration and application by identification of housing size, type and application group.

This designation is often used for discussion on possible solutions and will be the final identification on the valve label (see label example)

ICF SS 20 - 6 - 3

- 3: Application reference number (see the below overview)
- 6: Number of module ports
- 20: Housing size
- ICF SS: Type

For ordering, connection size and type must be chosen to get the final identification. **The final identification is done by code number only** (see next pages)

Label example:



Application overview (generic configuration - connection type and size excluded)

Application #		Sequence of functions					
Liquid feed							
1	Liquid feed (No hotgas defrost)	Stop	Filter	Solenoid	Man Open	Regul.	Stop
2	Liquid feed	Stop	Filter	Solenoid	Man Open	Regul.	Stop/Check
3	Liquid feed	Stop	Filter	Solenoid	Check	Regul.	Stop
10	Liquid feed (No hotgas defrost)	Stop	Filter	Solenoid	Regul.		
15	Liquid feed with external connection	Stop	Filter	Solenoid	Check	Welding	Regul.
Liquid injection							
5	Liquid injection (expansion)	Stop	Filter	Solenoid	Man Open	Motor	Stop
14	Liquid injection (expansion)	Stop	Filter	Motor	Stop		
Hot gas defrost							
9	Hot gas defrost	Stop	Filter	Solenoid	Stop		
Miscellaneous							
90	Multipurpose configurations						

Liquid feed

Application 1: Liquid feed (no hot gas defrost)

Type	# of modules	Appl. #	Connection size		Connection type	Module location						Weight		Code number
			[in.]	[mm]		M1	M2	M3	M4	M5	M6	kg	lbs	
ICF SS 20	6	1RA	¾	20	Butt-weld DIN-EN 10220	ICFS 20	ICFF 20	ICFE 20	ICFO 20	ICFR 20A	ICFS 20	9.5	20.9	027L4700
ICF SS 20	6	1RA	1	25	Butt-weld DIN-EN 10220	ICFS 20	ICFF 20	ICFE 20	ICFO 20	ICFR 20A	ICFS 20	9.7	21.3	027L4701
ICF SS 20	6	1RA	¾	20	Butt-weld ANSI (B 36.19)	ICFS 20	ICFF 20	ICFE 20	ICFO 20	ICFR 20A	ICFS 20	10.4	22.9	027L3555
ICF SS 20	6	1RA	1	25	Butt-weld ANSI (B 36.19)	ICFS 20	ICFF 20E	ICFE 20	ICFO 20	ICFR 20A	ICFS 20	9.9	21.8	027L3556
ICF SS 20	6	1HRB	1	25	Butt-weld ANSI (B 36.19)	ICFS 20	ICFF 20E	ICFE 20H	ICFB 20	ICFR 20B	ICFS 20	10.9	24.0	027L3578
ICF SS 20	6	1HRB	1¼	32	Butt-weld ANSI (B 36.19)	ICFS 20	ICFF 20E	ICFE 20H	ICFB 20	ICFR 20B	ICFS 20	10.9	24.0	027L3557
ICF SS 25	6	1RA	1	25	Butt-weld ANSI (B 36.19)	ICFS 25	ICFF 25E	ICFE 25	ICFB 25	ICFR 25A	ICFS 25	24.1	53.0	027L3568
ICF SS 25	6	1RA	1¼	32	Butt-weld ANSI (B 36.19)	ICFS 25	ICFF 25E	ICFE 25	ICFB 25	ICFR 25A	ICFS 25	23.8	52.4	027L3569
ICF SS 25	6	1RB	1¼	32	Butt-weld ANSI (B 36.19)	ICFS 25	ICFF 25E	ICFE 25	ICFB 25	ICFR 25B	ICFS 25	24.2	53.2	027L3584
ICF SS 25	6	1RB	1½	40	Butt-weld ANSI (B 36.19)	ICFS 25	ICFF 25E	ICFE 25	ICFB 25	ICFR 25B	ICFS 25	23.8	52.4	027L3570

Application 2: Liquid feed

Type	# of Modules	Appl. #	Connection size		Connection type	Module location						Weight		Code number
			[in.]	[mm]		M1	M2	M3	M4	M5	M6	kg	lbs	
ICF SS 20	6	2RA	¾	20	Butt-weld DIN-EN 10220	ICFS 20	ICFF 20	ICFE 20	ICFO 20	ICFR 20A	ICFN 20	10.0	22.1	027L3428
ICF SS 20	6	2RA	1	25	Butt-weld DIN-EN 10220	ICFS 20	ICFF 20E	ICFE 20	ICFO 20	ICFR 20A	ICFN 20	10.0	22.1	027L3445
ICF SS 20	6	2RA	1	25	Butt-weld DIN-EN 10220	ICFS 20	ICFF 20	ICFE 20	ICFO 20	ICFR 20A	ICFN 20	9.7	21.3	027L4758
ICF SS 20	6	2HRB	1¼	32	Butt-weld DIN-EN 10220	ICFS 20	ICFF 20	ICFE 20H	ICFB 20	ICFR 20B	ICFN 20	9.2	20.2	027L4759
ICF SS 25	6	2RB	1¼	32	Butt-weld DIN-EN 10220	ICFS 25	ICFF 25	ICFE 25	ICFB 25	ICFR 25B	ICFN 25	23.9	52.6	027L4766
ICF SS 20	6	2RA	¾	20	Butt-weld ANSI (B 36.19)	ICFS 20	ICFF 20E	ICFE 20	ICFO 20	ICFR 20A	ICFN 20	10.1	22.2	027L3571
ICF SS 20	6	2RA	1	25	Butt-weld ANSI (B 36.19)	ICFS 20	ICFF 20E	ICFE 20	ICFO 20	ICFR 20A	ICFN 20	9.9	21.8	027L3572

Application 3: Liquid feed

Type	# of Modules	Appl. #	Connection size		Connection type	Module location						Weight		Code number
			[in.]	[mm]		M1	M2	M3	M4	M5	M6	kg	lbs	
ICF SS 20	6	3RA	¾	20	Butt-weld DIN-EN 10220	ICFS 20	ICFF 20	ICFE 20	ICFC 20	ICFR 20A	ICFS 20	9.6	21.1	027L4702
ICF SS 20	6	3RA	1	25	Butt-weld DIN-EN 10220	ICFS 20	ICFF 20	ICFE 20	ICFC 20	ICFR 20A	ICFS 20	9.7	21.3	027L4703
ICF SS 20	6	3HRA	1	25	Butt-weld DIN-EN 10220	ICFS 20	ICFF 20	ICFE 20H	ICFC 20	ICFR 20A	ICFS 20	10.6	23.3	027L4717
ICF SS 25	6	3RA	1	25	Butt-weld DIN-EN 10220	ICFS 25	ICFF 25	ICFE 25	ICFC 25	ICFR 25A	ICFS 25	23.4	51.5	027L4724
ICF SS 25	6	3RA	1¼	32	Butt-weld DIN-EN 10220	ICFS 25	ICFF 25	ICFE 25	ICFC 25	ICFR 25A	ICFS 25	23.2	51.0	027L4760
ICF SS 25	6	3RB	1¼	32	Butt-weld DIN-EN 10220	ICFS 25	ICFF 25	ICFE 25	ICFC 25	ICFR 25B	ICFS 25	23.8	52.4	027L4725
ICF SS 25	6	3RB	1½	40	Butt-weld DIN-EN 10220	ICFS 25	ICFF 25	ICFE 25	ICFC 25	ICFR 25B	ICFS 25	24.0	52.8	027L4761
ICF SS 25	6	3RB	1½	40	Butt-weld DIN-EN 10220	ICFS 25	ICFF 25E	ICFE 25	ICFC 25	ICFR 25B	ICFS 25	24.7	54.3	027L4191
ICF SS 20	6	3HRB	¾	20	Butt-weld ANSI (B 36.19)	ICFS 20	ICFF 20E	ICFE 20H	ICFC 20	ICFR 20B	ICFS 20	10.7	23.5	027L3579
ICF SS 20	6	3HRB	1	25	Butt-weld ANSI (B 36.19)	ICFS 20	ICFF 20E	ICFE 20H	ICFC 20	ICFR 20B	ICFS 20	11.2	24.6	027L3580
ICF SS 20	6	3HRB	1¼	32	Butt-weld ANSI (B 36.19)	ICFS 20	ICFF 20E	ICFE 20H	ICFC 20	ICFR 20B	ICFS 20	11.3	24.9	027L3581
ICF SS 25	6	3RA	1	25	Butt-weld ANSI (B 36.19)	ICFS 25	ICFF 25E	ICFE 25	ICFC 25	ICFR 25A	ICFS 25	24.2	53.2	027L3585
ICF SS 25	6	3RA	1¼	32	Butt-weld ANSI (B 36.19)	ICFS 25	ICFF 25E	ICFE 25	ICFC 25	ICFR 25A	ICFS 25	24.1	53.0	027L3586
ICF SS 25	6	3RB	1¼	32	Butt-weld ANSI (B 36.19)	ICFS 25	ICFF 25E	ICFE 25	ICFC 25	ICFR 25B	ICFS 25	24.1	53.0	027L3587
ICF SS 25	6	3RB	1½	40	Butt-weld ANSI (B 36.19)	ICFS 25	ICFF 25E	ICFE 25	ICFC 25	ICFR 25B	ICFS 25	24.2	53.2	027L3588

Application 10: Liquid feed (no hot gas defrost)

Type	# of Modules	Appl. #	Connection size		Connection type	Module location					Weight		Code number
			[in.]	[mm]		M1	M2	M3	M4		kg	lbs	
ICF SS 20	4	10RA	¾	20	Butt-weld DIN-EN 10220	ICFS 20	ICFF 20	ICFE 20	ICFR 20B		7.4	16.2	027L3440
ICF SS 20	4	10RA	1	25	Butt-weld DIN-EN 10220	ICFS 20	ICFF 20	ICFE 20	ICFR 20A		7.2	15.8	027L4709
ICF SS 25	4	10RA	1	25	Butt-weld DIN-EN 10220	ICFS 25	ICFF 25	ICFE 25	ICFR 25A		15.9	35.0	027L4731
ICF SS 25	4	10RB	1¼	32	Butt-weld DIN-EN 10220	ICFS 25	ICFF 25	ICFE 25	ICFR 25B		15.4	33.9	027L4732
ICF SS 25	4	10RA	1	25	Butt-weld DIN-EN 10220	ICFS 25	ICFF 25E	ICFE 25	ICFR 25A		16.2	35.7	027L4590
ICF SS 20	4	10HRB	¾	20	Butt-weld ANSI (B 36.19)	ICFS 20	ICFF 20E	ICFE 20H	ICFR 20B		8.4	18.5	027L3582
ICF SS 20	4	10HRB	1	25	Butt-weld ANSI (B 36.19)	ICFS 20	ICFF 20E	ICFE 20H	ICFR 20B		7.8	17.2	027L3583
ICF SS 25	4	10RA	1	25	Butt-weld ANSI (B 36.19)	ICFS 25	ICFF 25E	ICFE 25	ICFR 25A		15.8	34.8	027L3592
ICF SS 25	4	10RB	1¼	32	Butt-weld ANSI (B 36.19)	ICFS 25	ICFF 25E	ICFE 25	ICFR 25B		16.2	35.6	027L3593
ICF SS 25	4	10RB	1½	40	Butt-weld ANSI (B 36.19)	ICFS 25	ICFF 25E	ICFE 25	ICFR 25B		16.2	35.6	027L3594

ICAD and coils are not included and must be ordered separately.

***Please Note**:*

When used in systems with CO_2, the o-rings on the ICM module can swell (grow). At service, it is therefore recommended to install new o-rings, before the ICM function module is re-installed in the ICF SS valve body. ICAD and coils are not included and must be ordered separately.

Liquid feed

Application 15: Liquid feed with external connection

Type	# of Modules	Appl. #	Connection size		Connection type	Module location						Weight		Code number
			[in.]	[mm]		M1	M2	M3	M4	M5	M6	kg	lbs	
ICF SS 25	6	15RA	1	25	Butt-weld DIN-EN 10220	ICFS 25	ICFF 25	ICFE 25	ICFC 25	ICFW 25D	ICFR 25A	21.8	48.0	027L4733
ICF SS 25	6	15RB	1¼	32	Butt-weld DIN-EN 10220	ICFS 25	ICFF 25	ICFE 25	ICFC 25	ICFW 25D	ICFR 25B	22.7	49.9	027L4734

Liquid injection

Application 5: Liquid injection (expansion)

Type	# of modules	Appl. #	Connection size		Connection type	Module location						Weight		Code number
			[in.]	[mm]		M1	M2	M3	M4	M5	M6	kg	lbs	
ICF SS 20	6	5MA33	¾	20	Butt-weld DIN-EN 10220	ICFS 20	ICFF 20-74	ICFE 20	ICFO 20	ICM 20-A33	ICFS 20	9.8	21.6	027L4714
ICF SS 20	6	5MB66	¾	20	Butt-weld DIN-EN 10220	ICFS 20	ICFF 20	ICFE 20	ICFO 20	ICM 20-B66	ICFS 20	10.1	22.3	027L3443
ICF SS 20	6	5MA	1	25	Butt-weld DIN-EN 10220	ICFS 20	ICFF 20	ICFE 20	ICFO 20	ICM 20-A	ICFS 20	9.8	21.6	027L4704
ICF SS 20	6	5MB	1	25	Butt-weld DIN-EN 10220	ICFS 20	ICFF 20	ICFE 20	ICFO 20	ICM 20-B	ICFS 20	9.6	21.1	027L4705
ICF SS 20	6	5HMB	1	25	Butt-weld DIN-EN 10220	ICFS 20	ICFF 20	ICFE 20H	ICFB 20	ICM 20-B	ICFS 20	11.4	25.1	027L4718
ICF SS 20	6	5MA33	1	25	Butt-weld DIN-EN 10220	ICFS 20	ICFF 20	ICFE 20	ICFO 20	ICM 20-A33	ICFS 20	9.6	21.1	027L4755
ICF SS 25	6	5MA	1	25	Butt-weld DIN-EN 10220	ICFS 25	ICFF 25	ICFE 25	ICFB 25	ICM 25-A	ICFS 25	22.8	50.2	027L4726
ICF SS 20	6	5MB66	1¼	32	Butt-weld DIN-EN 10220	ICFS 20	ICFF 20	ICFE 20	ICFO 20	ICM 20-B66	ICFS 20	9.6	21.1	027L4754
ICF SS 20	6	5HMB	1¼	32	Butt-weld DIN-EN 10220	ICFS 20	ICFF 20	ICFE 20H	ICFB 20	ICM 20-B	ICFS 20	10.2	22.4	027L4756
ICF SS 20	6	5MC	1½	32	Butt-weld DIN-EN 10220	ICFS 20	ICFF 20	ICFE 20	ICFO 20	ICM 20-C	ICFS 20	9.8	21.6	027L4706
ICF SS 20	6	5HMC	1¼	32	Butt-weld DIN-EN 10220	ICFS 20	ICFF 20	ICFE 20H	ICFB 20	ICM 20-C	ICFS 20	10.3	22.7	027L4719
ICF SS 25	6	5MB	1¼	32	Butt-weld DIN-EN 10220	ICFS 25	ICFF 25	ICFE 25	ICFB 25	ICM 25-B	ICFS 25	22.3	49.0	027L4727
ICF SS 25	6	5MB	1½	40	Butt-weld DIN-EN 10220	ICFS 25	ICFF 25	ICFE 25	ICFB 25	ICM 25-B	ICFS 25	22.3	49.0	027L4728
ICF SS 25	6	5MA	1½	40	Butt-weld DIN-EN 10220	ICFS 25	ICFF 25	ICFE 25	ICFB 25	ICM 25-A	ICFS 25	22.3	49.0	027L4735
ICF SS 20	6	5MA33	¾	20	Butt-weld ANSI (B 36.19)	ICFS 20	ICFF 20E	ICFE 20	ICFO 20	ICM 20-A33	ICFS 20	10.1	22.2	027L3573
ICF SS 20	6	5MA	¾	20	Butt-weld ANSI (B 36.19)	ICFS 20	ICFF 20E	ICFE 20	ICFO 20	ICM 20-A	ICFS 20	10.0	22.0	027L3574
ICF SS 20	6	5MA	1	25	Butt-weld ANSI (B 36.19)	ICFS 20	ICFF 20E	ICFE 20	ICFO 20	ICM 20-A	ICFS 20	10.1	22.2	027L3575
ICF SS 20	6	5MB	¾	20	Butt-weld ANSI (B 36.19)	ICFS 20	ICFF 20E	ICFE 20	ICFO 20	ICM 20-B	ICFS 20	9.8	21.6	027L3576
ICF SS 20	6	5MB	1	25	Butt-weld ANSI (B 36.19)	ICFS 20	ICFF 20E	ICFE 20	ICFO 20	ICM 20-B	ICFS 20	10.0	22.0	027L3577
ICF SS 25	6	5MA	1	25	Butt-weld ANSI (B 36.19)	ICFS 25	ICFF 25E	ICFE 25	ICFB 25	ICM 25-A	ICFS 25	23.1	50.8	027L3589
ICF SS 25	6	5MA	1¼	32	Butt-weld ANSI (B 36.19)	ICFS 25	ICFF 25E	ICFE 25	ICFB 25	ICM 25-A	ICFS 25	23.2	51.0	027L3590
ICF SS 25	6	5MA33	1½	40	Butt-weld ANSI (B 36.19)	ICFS 25	ICFF 25-E	ICFE 25	ICFB 25	ICM 25-A33	ICFS 25	23.1	50.8	027L3591

Application 14: Liquid injection (expansion)

Type	# of modules	Appl. #	Connection size		Connection type	Module location						Weight		Code number
			[in.]	[mm]		M1	M2	M3	M4	M5	M6	kg	lbs	
ICF SS 20	4	14MA	¾	20	Butt-weld DIN-EN 10220	ICFS 20	ICFF 20	ICM 20-A	ICFS 20			7.3	16.1	027L4710
ICF SS 20	4	14MA	¾	20	Butt-weld DIN-EN 10220	ICFS 20	ICFF 20E	ICM 20-A	ICFS 20			6.9	15.1	027L3444
ICF SS 20	4	14MB	1	25	Butt-weld DIN-EN 10220	ICFS 20	ICFF 20	ICM 20-B	ICFS 20			7.2	15.8	027L4711
ICF SS 20	4	14MB66	1	25	Butt-weld DIN-EN 10220	ICFS 20	ICFF 20	ICM 20-B66	ICFS 20			7.0	15.4	027L4722
ICF SS 20	4	14MC	1¼	32	Butt-weld DIN-EN 10220	ICFS 20	ICFF 20	ICM 20-C	ICFS 20			7.3	16.1	027L4712
ICF SS 25	4	14MB	1	25	Butt-weld DIN-EN 10220	ICFS 25	ICFF 25	ICM 25-B	ICFS 25			14.8	32.5	027L4765
ICF SS 25	4	14MB	1¼	32	Butt-weld DIN-EN 10220	ICFS 25	ICFF 25	ICM 25-B	ICFS 25			14.8	32.5	027L4764

ICAD and coils are not included and must be ordered separately.

***Please Note**:*

When used in systems with CO_2, the o-rings on the ICM module can swell (grow). At service, it is therefore recommended to install new o-rings, before the ICM function module is re-installed in the ICF SS valve body. ICAD and coils are not included and must be ordered separately.

Hot gas defrost

Application 9: Hot gas defrost

Type	# of Modules	Appl. #	Connection size		Connection type	Module location					Weight		Code number
			[in.]	[mm]		M1	M2	M3	M4		kg	lbs	
ICF SS 20	4	9	1	25	Butt-weld DIN-EN 10220	ICFS 20	ICFF 20	ICFE 20	ICFS 20		7.2	15.8	027L4707
ICF SS 20	4	9H	1	25	Butt-weld DIN-EN 10220	ICFS 20	ICFF 20	ICFE 20H	ICFS 20		8.2	18.0	027L4720
ICF SS 20	4	9	1¼	32	Butt-weld DIN-EN 10220	ICFS 20	ICFF 20	ICFE 20	ICFS 20		6.8	15.0	027L4708
ICF SS 20	4	9H	1¼	32	Butt-weld DIN-EN 10220	ICFS 20	ICFF 20	ICFE 20H	ICFS 20		7.6	16.7	027L4721
ICF SS 25	4	9	1	25	Butt-weld DIN-EN 10220	ICFS 25	ICFF 25	ICFE 25	ICFS 25		16.2	35.7	027L3429
ICF SS 25	4	9	1¼	32	Butt-weld DIN-EN 10220	ICFS 25	ICFF 25	ICFE 25	ICFS 25		15.7	34.5	027L4729
ICF SS 25	4	9	1½	40	Butt-weld DIN-EN 10220	ICFS 25	ICFF 25	ICFE 25	ICFS 25		15.7	34.5	027L4730
ICF SS 25	4	9	1½	40	Butt-weld DIN-EN 10220	ICFS 25	ICFW 25D	ICM 25-B	ICFS 25		16.6	36.6	027L4190
ICF SS 20	4	9H	¾	20	Butt-weld ANSI (B 36.19)	ICFS 20	ICFF 20E	ICFE 20H	ICFS 20		8.0	17.6	027L3552
ICF SS 20	4	9H	1	25	Butt-weld ANSI (B 36.19)	ICFS 20	ICFF 20E	ICFE 20H	ICFS 20		8.1	17.8	027L3553
ICF SS 20	4	9H	1¼	32	Butt-weld ANSI (B 36.19)	ICFS 20	ICFF 20E	ICFE 20H	ICFS 20		7.9	17.4	027L3554
ICF SS 25	4	9	1	25	Butt-weld ANSI (B 36.19)	ICFS 25	ICFF 25E	ICFE 25	ICFS 25		16.0	35.2	027L3565
ICF SS 25	4	9	1¼	32	Butt-weld ANSI (B 36.19)	ICFS 25	ICFF 25E	ICFE 25	ICFS 25		16.0	35.2	027L3566
ICF SS 25	4	9	1½	40	Butt-weld ANSI (B 36.19)½	ICFS 25	ICFF 25E	ICFE 25	ICFS 25		16.1	35.4	027L3567

Miscellaneous

Application 90: Miscellaneous

Type	# of modules	Appl. #	Connection size		Connection type	Module location						Weight		Code number
			[in.]	[mm]		M1	M2	M3	M4	M5	M6	kg	lbs	
ICF SS 20	4	90	¾	20	Butt-weld DIN-EN 10220	ICFR 20A	ICFF 20	ICFA 20	ICFN 20			6.4	14.1	027L4716
ICF SS 20	6	90	¾	20	Butt-weld DIN-EN 10220	ICFS 20	ICFF 20	ICFE 20	ICFB 20	ICFR 20-A	ICFN 20	9.7	21.3	027L4713
ICF SS 20	6	90	¾	20	Butt-weld DIN-EN 10220	ICFS 20	ICFF 20	ICFE 20	ICFC 20	ICM 20-C	ICFS 20	9.7	21.3	027L4715
ICF SS 20	6	90	¾	20	Butt-weld DIN-EN 10220	ICFS 20	ICFF 20	ICFE 20	ICFC 20	ICFR 20A	ICFW 20D	8.9	17.8	027L4740
ICF SS 20	6	90	¾	20	Butt-weld DIN-EN 10220	ICFS 20	ICFF 20	ICFE 20	ICFC 20	ICFR 20B	ICFW 20D	8.9	17.8	027L4741
ICF SS 20	6	90	¾	20	Butt-weld DIN-EN 10220	ICFS 20	ICFF 20	ICFE 20H	ICFC 20	ICFR 20A	ICFW 20D	9.8	21.5	027L4748
ICF SS 20	6	90	¾	20	Butt-weld DIN-EN 10220	ICFS 20	ICFF 20	ICFE 20H	ICFC 20	ICFR 20B	ICFW 20D	9.8	21.5	027L4749
ICF SS 20	6	90	¾	20	Butt-weld DIN-EN 10220	ICFS 20	ICFF 20	ICFE 20	ICFC 20	ICFW 20D	ICFS 20	9.3	20.6	027L4768
ICF SS 20	6	90	¾	20	Butt-weld DIN-EN 10220	ICFS 20	ICFF 20	ICFE 20	ICFB 20	ICFR 20A	ICFS 20	9.9	21.8	027L3427
ICF SS 20	6	90	1	25	Butt-weld DIN-EN 10220	ICFS 20	ICFF 20E	ICFE 20H	ICFC 20	ICFR 20B	ICFW 20D	11.5	25.3	027L4723
ICF SS 20	6	90	1	25	Butt-weld DIN-EN 10220	ICFS 20	ICFF 20	ICFE 20	ICFC 20	ICFR 20A	ICFW 20D	8.9	17.8	027L4742
ICF SS 20	6	90	1	25	Butt-weld DIN-EN 10220	ICFS 20	ICFF 20	ICFE 20	ICFC 20	ICFR 20B	ICFW 20D	8.9	17.8	027L4743
ICF SS 20	6	90	1	25	Butt-weld DIN-EN 10220	ICFS 20	ICFF 20	ICFE 20H	ICFC 20	ICFR 20A	ICFW 20D	9.8	21.5	027L4750
ICF SS 20	6	90	1	25	Butt-weld DIN-EN 10220	ICFS 20	ICFF 20	ICFE 20H	ICFC 20	ICFR 20B	ICFW 20D	9.8	21.5	027L4751
ICF SS 20	6	90	1	25	Butt-weld DIN-EN 10220	ICFS 20	ICFF 20	ICFE 20	ICFC 20	ICFW 20D	ICFS 20	9.3	20.6	027L4767
ICF SS 20	6	90	1¼	32	Butt-weld DIN-EN 10220	ICFS 20	ICFF 20	ICFE 20	ICFC 20	ICFR 20A	ICFW 20D	8.9	17.8	027L4746
ICF SS 20	6	90	1¼	32	Butt-weld DIN-EN 10220	ICFS 20	ICFF 20	ICFE 20	ICFC 20	ICFR 20B	ICFW 20D	8.9	17.8	027L4747
ICF SS 20	6	90	1¼	32	Butt-weld DIN-EN 10220	ICFS 20	ICFF 20	ICFE 20H	ICFC 20	ICFR 20A	ICFW 20D	9.8	21.5	027L4752
ICF SS 20	6	90	1¼	32	Butt-weld DIN-EN 10220	ICFS 20	ICFF 20	ICFE 20H	ICFC 20	ICFR 20B	ICFW 20D	9.8	21.5	027L4753
ICF SS 25	6	90	1	25	Butt-weld DIN-EN 10220	ICFS 25	ICFF 25	ICFE 25	ICFN 25	ICFR 25B	ICFW 25D	24.2	53.2	027L4189
ICF SS 25	6	90	1	25	Butt-weld DIN-EN 10220	ICFS 25	ICFF 25	ICM 25-A	ICFC 25	ICFB 25	ICFS 25	23.6	51.9	027L4763
ICF SS 25	6	90	1¼	32	Butt-weld DIN-EN 10220	ICFS 25	ICFF 25	ICM 25-B	ICFC 25	ICFB 25	ICFS 25	23.6	51.9	027L4762

ICAD and coils are not included and must be ordered separately.
***Please Note**:*
When used in systems with CO_2, the o-rings on the ICM module can swell (grow). At service, it is therefore recommended to install new o-rings, before the ICM function module is re-installed in the ICF SS valve body. ICAD and coils are not included and must be ordered separately.

Ordering ICF SS valve station *(continued)*

ICF SS with four modules

Function Module Type		Can be installed in these locations			
ICFS SS	Stop valve module	M1	M2	M3	M4
ICFR SS	Manual regulating valve module	M1	M2	M3	M4
ICFF SS	Filter (strainer) module		M2		M4
ICFE SS	Solenoid valve module			M3	
ICFC SS	Check valve module				M4
ICFN SS	Stop/check valve module				M4
ICM SS	Motor valve module	M1		M3	
ICFB SS	Blank top cover	M1	M2	M3	M4
ICFA SS	Electronic expansion valve module (for ICF SS 20 only)	M1		M3	
ICFE SS 20H	Solenoid valve module (for ICF SS 20 only)	M1		M3	
ICFO SS	Manual opening module				M4
ICFW SS	Welding module	M1	M2	M3	M4

ICF SS with six modules

Function Module Type		Can be installed in these locations					
ICFS SS	Stop valve module	M1	M2	M3	M4	M5	M6
ICFR SS	Manual regulating valve module	M1	M2	M3	M4	M5	M6
ICFF SS	Filter (strainer) module		M2		M4		M6
ICFE SS	Solenoid valve module			M3			
ICFC SS	Check valve module				M4		M6
ICFN SS	Stop/check valve module				M4		M6
ICM SS	Motor valve module	M1		M3		M5	
ICFB SS	Blank top cover	M1	M2	M3	M4	M5	M6
ICFA SS	Electronic expansion valve module (for ICF SS 20 only)	M1		M3		M5	
ICFE SS 20H	Solenoid valve module (for ICF SS 20 only)	M1		M3		M5	
ICFO SS	Manual opening module				M4		
ICFW SS	Welding module	M1	M2	M3	M4	M5	M6

Module locations are indicated by M1, M2, M3, M4, M5 and M6. With respect to refrigerant flow, M1 is closest to inlet.

location not possible

Ordering accessories

Blind SS plug

	Quantity	Code no.
	2 pcs. 3/8" RG	**027L4811**

Connector SS ½ in. - 3/8 in.

	Quantity	Code no.
	2	**027L4810**

Sight glass

	Quantity	Code no.
	2 pcs. 3/8" G	**027L4812**

½ in. weld connector SS

	Quantity	Code no.
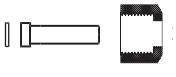	2	**148B4689**

Adapter SS G3/8 - 3/8 FPT

	Quantity	Code no.
	2	**027L4813**

ICAD 600A

Description		Code no.
ICAD 600A	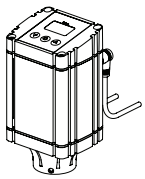	With 1,5m cable **027H9075**
ICAD 600A		Without cables **027H9120**
Cable	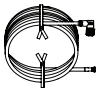	Cable set 10 m. **027H0427**
Cable		Cable set 15 m. **027H0435**
Connector		Connector set female **027H0430**
Protection cap	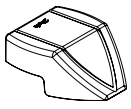	Protection cap for ICAD **027H0431**

ICAD details see literature: AI236186442940

Ordering accessories (continued)

SNV-SS

Description		Code no.
SNV-SS for ICF SS 20/SS 25 DIN butt weld connection. Side connection: G ½ in. Bottom connection: G ½ in. *Included:* Adapter SS (G ½ in. - G 3/8 in.)	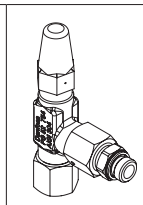	**148B6545**
SNV SS for ICF SS 20/SS 25 DIN butt weld connection. Side connection: 3/8 in. FPT Bottom connection: 3/8 in. MPT *Included:* Adapter SS (3/8 FPT - G 3/8 in.)	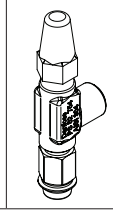	**148B3750**

Coils

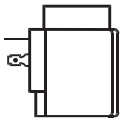

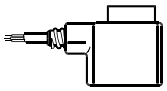

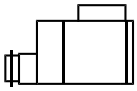

Alternating current a.c.

Valve type	Voltage V	Frequency Hz	Code no. With 1 m 3-core cable IP 67	Code no. With terminal box IP 67	Code no. With DIN plugs**)	Appendix no.*)	Power consumption
ICFE	12	50		**018F6706**		15	Holding: 10 W 21 VA Inrush: 44 VA
	24	50	**018F6257**	**018F6707**	**018F7358**	16	
	220-230	50	**018F6251**	**018F6701**	**018F7351**	31	
	115	60	**018F6260**	**018F6710**		20	

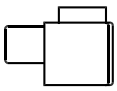

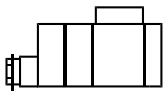

Direct current d.c. *(can not be used for ICF SS 20 configurations with ICM module)* *Coil type I*

Valve type	Voltage V	Frequency Hz	Code no. With 1 m 3-core cable IP 67	Code no. With terminal box IP 67	Code no. With DIN plugs**)	Appendix no.*)	Power consumption
ICFE/ICFA	12			**018F6856**		01	20 W
	24			**018F6857**		02	

Special coils for ICFE *(can not be used for ICF SS 20 configurations with ICM module)*

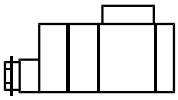

Valve type	Voltage V	Frequency Hz	Code no. With terminal box IP 67	Appendix no. Indicates voltage and frequency	Power consumption

Alternating current a.c.

ICFE	24	50	**018F6807**	16	Holding: 12 W 26 VA Inrush: 55 VA
	110	50	**018F6811**	22	
	220-230	50	**018F6801**	31	

For other coil types please refer to the technical leaflets for EVRA or AKVA valves.

Dimensions

ICF SS 20-6

This example indicates the maximum dimensions for the ICF SS valve stations.

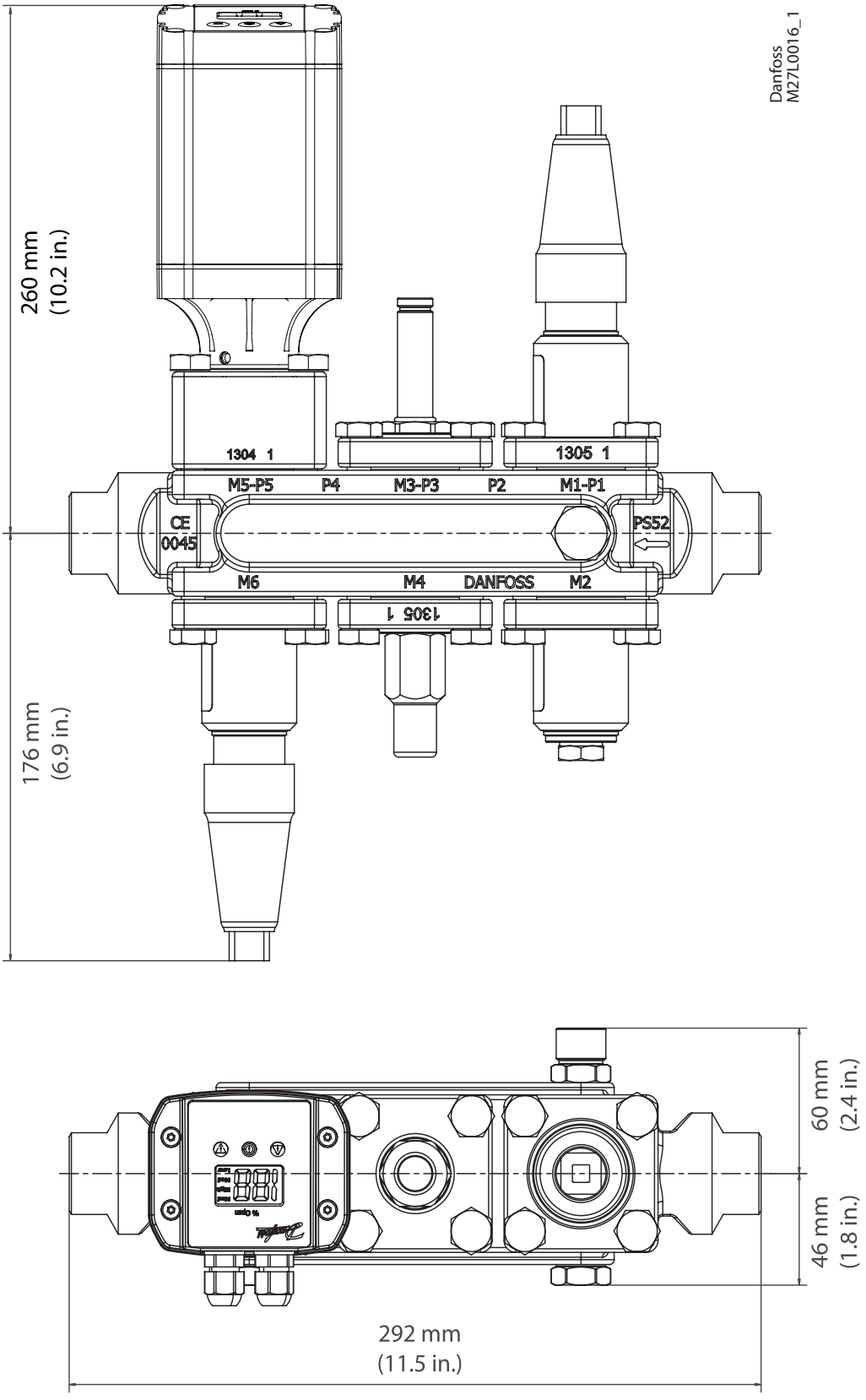

Dimensions *(continued)*

ICF SS 20-4

This example indicates the maximum dimensions for the ICF SS valve stations.

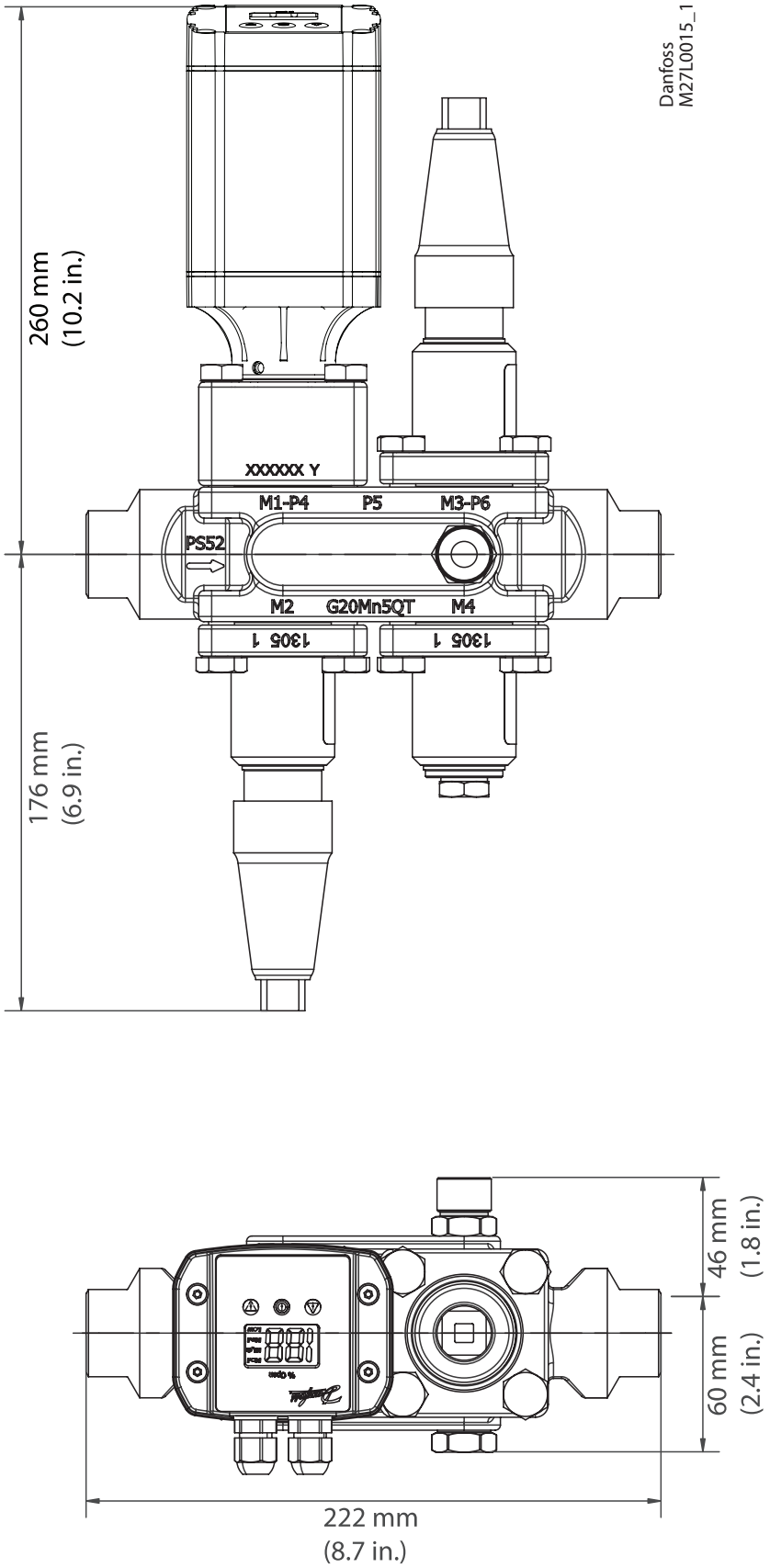

ENGINEERING
TOMORROW

FA + solenoid valve
Type ICF 15/20 EVRAT

Contents **Page**

Features 577
Technical data 578
Design 578
Material specification 579
Code number selection 581
Dimensions 582

AI183886420447en-000201 | 2016.01

ENGINEERING
TOMORROW

FA + solenoid valve
Type ICF 15/20 EVRAT

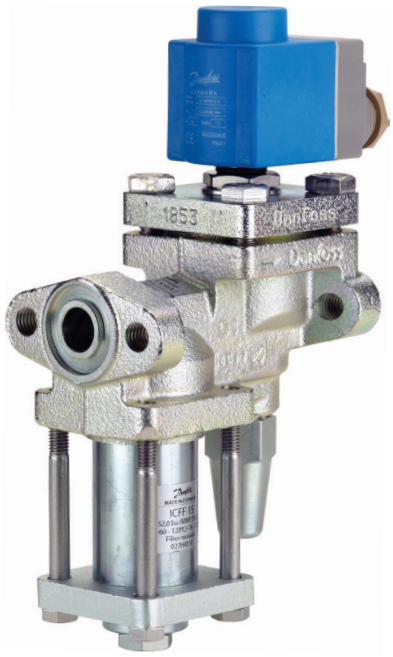

Based on advanced technology the ICF EVRAT retrofit valve incorporates three functions in one housing, which can replace the widely used direct coupled FA + EVRAT, as a drop-in solution.

The two function modules - solenoid valve and manual opener are identical to the function modules in the ICF 20 valve station concept thus facilitating logistic and service.

The solenoid valve is an assisted, servo operated valve for liquid, suction and hot gas lines with ammonia and flourinated refrigerants.

Supplied as a complete assembly, it is fully tested at high pressure and its functions are tested under factory controlled conditions.

Features

- Applicable to HCFC, non flammable HFC and R717 (Ammonia).
  The use of ICF EVRAT with flammable hydrocarbons is not recommended
- Designed for industrial refrigeration applications for a maximum working pressure of 42 bar / 610 psig
- Low temperature steel housing
- Low weight and compact design
- The solenoid valve ICFE 20 is designed to open - and stay open at a pressure drop of 0 bar thus suitable for lines with low pressure drop
- UL approved
- Classification: DNV, CRN, BV, EAC etc.
  To get an updated list of certification on the products please contact your local Danfoss Sales Company

FA + solenoid valve	
Nominal bore	DN≤ 25 (1in)
Classified for	Fluid group I
Category	Article 3, paragraph 3

Technical data

- *Refrigerants*
  Applicable to HCFC, non flammable HFC and R717 (Ammonia).
  The use of ICF EVRAT with flammable hydrocarbons is not recommended.

  For further information please contact the local Danfoss sales company.
- *Temperature range*
  -40 – 105 °C / -40 – 221°F
- Ambient temperature for ICF EVRAT
  -30°C – 50°C / -22 – 122°F
- *Surface protection*
  The external surface is zinc-TLP treated to provide corrosion protection according to EN ISO 2081:2009
  Additional on-site corrosion protection is recommended.
- *Pressure*
  The ICF EVRAT is designed for:
  Max. working pressure: 42 bar g / 610 psig

Design

The main components of the ICF EVRAT are:

- Housing
- 3 predefined function modules:
  - Filter ICFF 15
  - Solenoid valve module ICFE 20 / ICFE 20H
  - Manual opening module ICFO 20

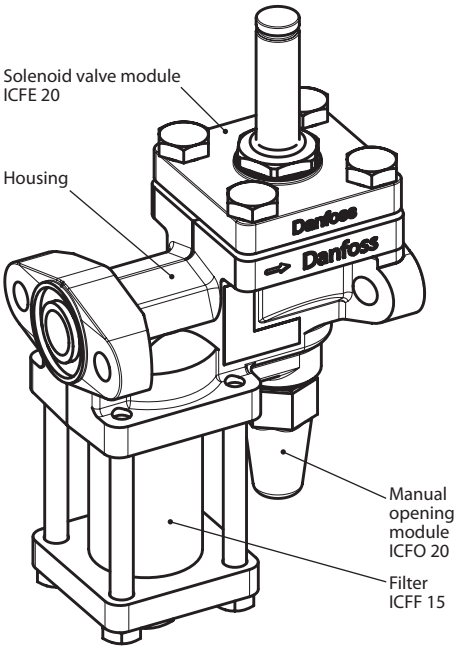

ICF 15/20 EVRAT

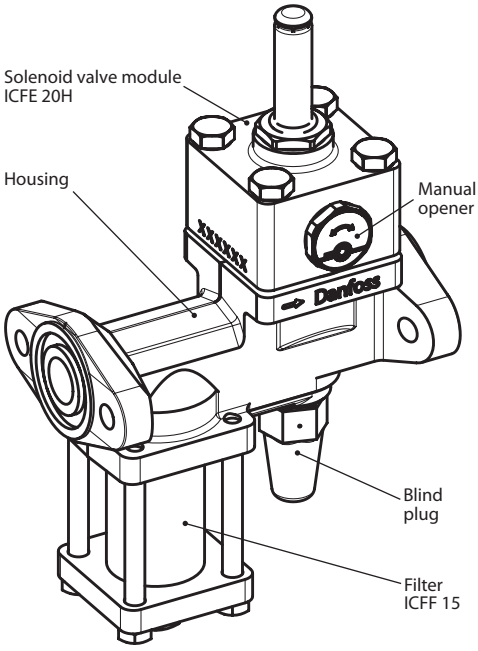

ICF 20 EVRAT

Connections
The ICF EVRAT drop-in valves matches 2 existing flange connections:

- ICF 15 EVRAT fits directly into the EVRA/T 10/15 + FA flange arrangement
- ICF 20 EVRAT fits directly into the EVRA/T 20/25 + FA flange arrangement

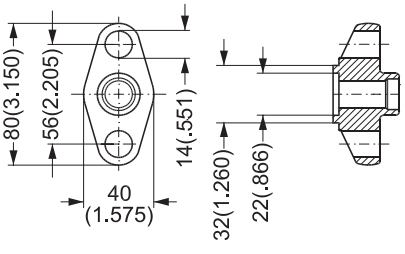

ICF 15 EVRAT

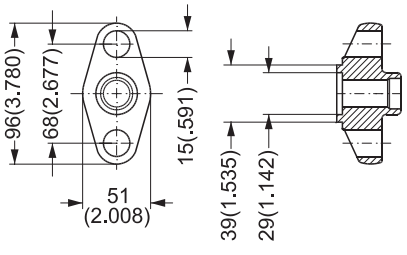

ICF 20 EVRAT

Material specification

ICF EVRAT housing

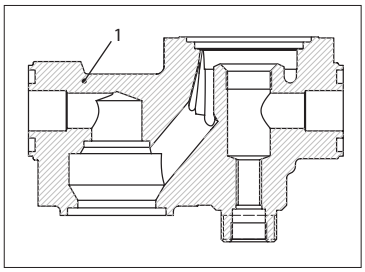

Pos.	Part	Material	EN	ASTM	JIS
1	Housing	Cast Iron	EN-GJS-400- 18-LT		

ICFF 15 filter module (Filter element 150µ (100 mesh) 60 cm² (9.3 in²)

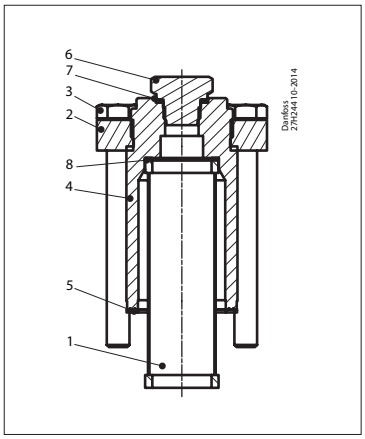

Pos.	Part	Material	EN	ASTM	JIS
1	Filter	Stainless steel			
2	Flange bonnet	Steel	G20Mn5QT, 10213-3 P285QH+QT, 10222-4 P275NL, 10028-3	LCC, A352 LF2, A350	
3	Bolt	Stainless steel	A2-70	Type 308	A2-70
4	ICFF 15 bonnet G 1/4	Steel	11SMn30	AISI 1213	Type 2
5	Flat gasket	Fiber, Non-asbestos			
6	Plug 3/8" NPT	Steel	11SMnPb30		
7	Gasket - metal joint	Aluminium			
8	Wave spring	Steel			

ICFE 20 solenoid valve module (K_v 4.5 m²/h. C_v 5.2 USgal/min)

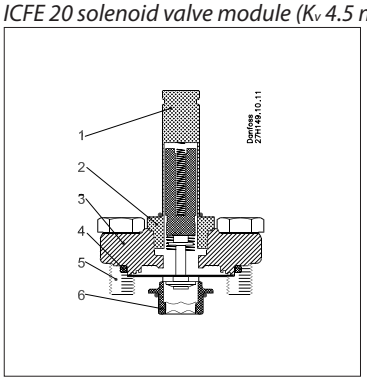

Pos.	Part	Material	EN	ASTM	JIS
1	Armature tube	Stainless steel	X2CrNi19-11 EN 10088		
2	Armature tube nut	Stainless steel	X8CrNiS18-9 EN 10088		
3	Flange	Cast Steel low temperature	G20Mn5QT EN 10213-3	A352	G5152
4	Gasket	Chloroprene (Neoprene) / Fiber non asbestos			
5	Hex-Head bolt M10 × 25	Stainless steel	A2-70 EN 24017	A320	A2-70
6	Seat	High density polymer			

ICFE 20H solenoid valve module (K_v 8 m²/h. C_v 9.3 USgal/min)

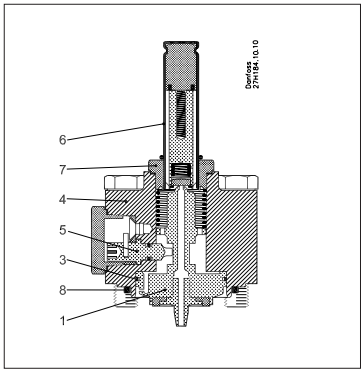

Pos.	Part	Material	EN	ASTM	JIS
1	Piston	Steel	11SMn30 EN EN 10025		
2	Seat	Teflon			
3	Piston ring				
4	Bonnet cylinder	Steel	P285QH EN 10222	A350	G3205
5	Manual opener	Steel			
6	Armature tube	Stainless steel	X2CrNi19-11 EN10028		
7	Armature tube nut	Stainless steel	X2CrNi19-11 EN10216	A320	A2-70
8	Gasket	Chloroprene (Neoprene)			

Material specification
(continued)

ICFO 20 manual opening module

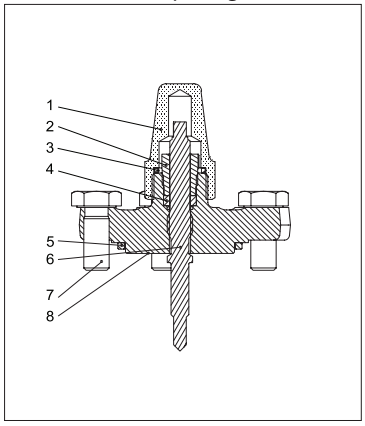

Pos.	Part	Material	EN	ASTM	JIS
1	Seal cap	Steel	DIN 1651- 9SMn28 TLP surface treatment	1213 (SAE)	SUM 22
2	Gland nut	Steel	DIN 1651 9SMn28 Zinc Chromate Surface treatment	1213 (SAE)	SUM 22
3	Seal cap gasket	Nylon	Polyamid A6	Polyamid PA6	Polyamid PA6
4	Sealing ring	Teflon	PTFE	PTFE	PTFE
5	Rubber gasket	Chloroprene rubber	CR	CR	CR
6	Spindle	Stainless steel	X8CrNiS 18-9 EN 10088	G4303 G4304	SUS 303
7	Hex-head bolt M10 × 25	Stainless steel	A2-70 EN 24017	A320	A2-70
8	Flange	Cast steel low temperature	EN10222-4 P285QH		

Code number selection

ICF EVRAT valves are intended as drop-in replacement valves.

To identify the correct code number simply select the same size as the replaced valve.

Type	Solenoid	K_v [m³h]	C_v [USgal/min]	Code number
ICF 15 EVRAT	ICFE 20	2.4	2.8	**027L4517**
ICF 20 EVRAT	ICFE 20	3.0	3.5	**027L4518**
ICF 20 EVRAT	ICFE 20H	3.7	4.3	**027L4519**

Coils

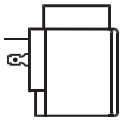

Valve type	Voltage V	Frequency Hz	Code no. With 1 m 3-core cable IP 67	Code no. With terminal box IP 67	Code no. With DIN plugs**)	Appen-dix no.*)	Power con-sumption
Alternating current AC							
ICFE	12	50		**018F6706**		15	Holding: 10 W 21 VA
	24	50	**018F6257**	**018F6707**	**018F7358**	16	
	220 – 230	50	**018F6251**	**018F6701**	**018F7351**	31	Inrush: 44 VA
	115	60	**018F6260**	**018F6710**		20	

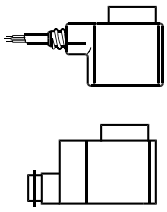

Valve type	Voltage V	Frequency Hz	Code no. With 1 m 3-core cable IP 67	Code no. With terminal box IP 67	Code no. With DIN plugs**)	Appen-dix no.*)	Power con-sumption
Direct current DC							
ICFE	12			**018F6856**		01	20 W
	24			**018F6857**		02	

Special coils for ICFE

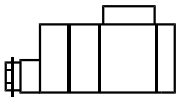

Valve type	Voltage V	Frequency Hz	Code no. With terminal box IP 67	Appendix no. Indicates voltage and frequency	Power consumption
Alternating current AC					
ICFE	24	50	**018F6807**	16	Holding: 12 W 26 VA
	110	50	**018F6811**	22	
	220 – 230	50	**018F6801**	31	Inrush: 55 VA

For other coil types please refer to the technical leaflets for EVRA or AKVA valves.

Dimensions

ICF 20 EVRAT

This example indicates the maximum dimensions for the ICF EVRAT

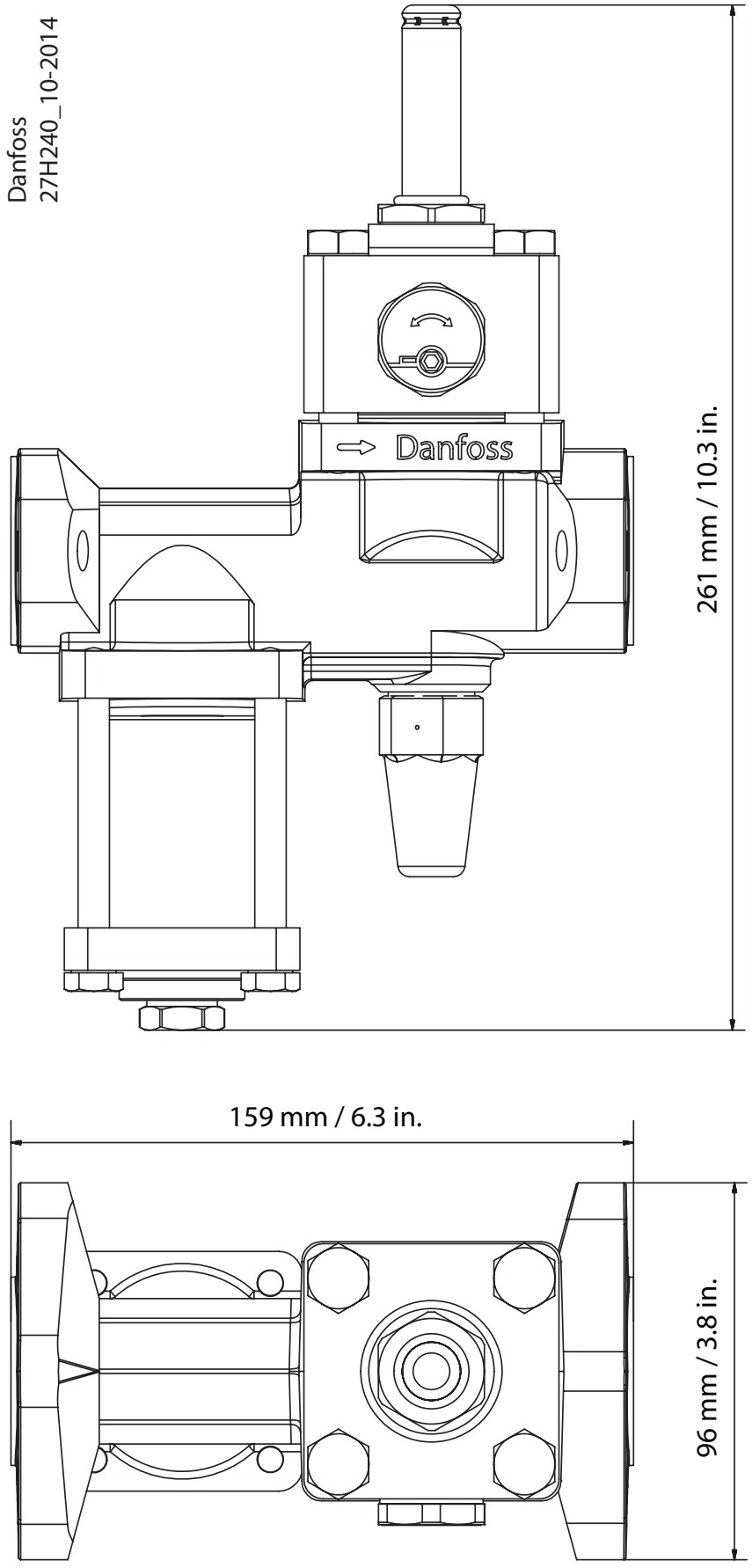

ENGINEERING TOMORROW

Check & stop valve, SCA-X, 52 bar (754 psi)
Check valve, CHV-X, 52 bar (754 psi)

Contents **Page**

Features . . . 585
Design . . . 586
Application . . . 586
Technical data . . . 587
Computation and selection . . . 587
Material specification . . . 589
Material specification . . . 590
Connections . . . 591
Dimensions and weights . . . 592
Dimensions and weights . . . 594
Ordering complete valves . . . 595
Ordering SVA-X from the parts programme . . . 597
Ordering CHV-X from the parts programme . . . 598

AI250986497520en-001001 | 2018.11

ENGINEERING TOMORROW

Check & stop valve, SCA-X, 52 bar (754 psi)
Check valve, CHV-X, 52 bar (754 psi)



SCA-X are check valves with a built-in shut-off valve function. SCA-X valves are avilable in angleway versions.

CHV-X are check valves only. CHV-X are available in both angleway and straightway versions.

The valves are designed to open at very low differential pressures, allow favourable flow conditions and are easy to disassemble for inspection and service.

The SCA-X is equipped with vented cap and has internal backseating enabling the spindle seal to be replaced whilst the valve still under pressure.

Laser cut V-ports provide excellent opening characteristics (SCA-X/CHV-X 50-125).

The valve cone has a built-in flexibility to ensure a precise and tight closing towards the valve seat.

A well balanced dampening effect between the piston and the cylinder gives an optimal protection during low loads and against pulsations.

Features

- Applicable to HCFC, HFC, R717 (Ammonia), R744 (CO_2), Propane, Butane, Iso-Butane and Ethane.
  R717 Heat Pump and Propylene applications with replaced O-ring.
- Modular Concept:
  – Each valve housing is available with several different connection types and sizes.
  – Possible to convert SCA-X or CHV-X to any other product in the FlexlineTM SVL family (Hand operated regulating valve, shut-off valve or strainer) just by replacing the complete top part.
- Fast and easy valve overhaul service. It is easy to replace the top part and no welding is needed.
- Designed to open at a very low differential pressure of 0.04 bar /0.58 psig.
- Designed with a built-in damping chamber preventing valve flutter in case of low refrigerant velocity and/or low density.
- Each valve is clearly marked with type, size and performance range.
  Additional ID ring to be installed when preparing for Ammonia Heat Pump or Propylene application.
- Easy to disassemble for inspection and service.
- Internal backseating enables replacement of the spindle seal whilst the valve is active, i.e. under pressure.
- Optimal flow characteristics ensuring quick opening to the fully open position.
- Protection against pulsation by built-in damping facility.
- Housing and bonnet material is low temperature steel according to requirements of the Pressure Equipment Directive and other international classification authorities.
- Equipped with Stainless steel bolts.
- Max. working pressure:
  52 bar g / 754 psi g
- Temperature range:
  -60 – 150 °C / -76 – 302 °F
- Classification: DNV, CRN, BV, EAC etc.
  To get an updated list of certification on the products please contact your local Danfoss Sales Company.

Design

Connections
Available with the following connections:

- Butt-weld DIN (EN 10220)
  DN 15 - 125 (½ - 5 in.)
- Butt-weld ANSI (B 36.10 Schedule 80),
  DN 15 - 40 (½ - 1½ in.)
- Butt-weld ANSI (B 36.10 Schedule 40),
  DN 50 - 125 (2 - 5 in.)
- Butt-weld GOST, (8734-75 and 8732-78)
  DN 15 - 125 (½ - 5 in.)
- Socket-weld ANSI (B 16.11),
  DN 50 (2 in.)

Housing
The housing is made from special, cold resistant steel.

Valve cone
Valve cone with built in metallic stop - prevents damage to teflon ring in case of overtightening.

Damping chamber
The chamber is filled with refrigerants (gas or liquid), which provides a damping effect when the valve opens and closes.

Spindle (SCA-X)
Made of polished stainless steel, which is ideal for O-ring sealing.

Packing Gland (SCA-X)
The "full temperature range" packing gland is the standard for the entire SVL platform.

This ensures perfect tightness throughout the whole temperature range:
–60/+150°C (–76/+302°F).

Pressure Equipment Directive (PED)
The SCA-X/CHV-X valves are approved according to the European standard specified in the Pressure Equipment Directive and are CE marked.

For further details / restrictions - see the product instruction.

Installation
The valve must be mounted vertically with the cone downwards.

The valve is designed to resist very high internal pressure. However, the piping system in general should be designed to avoid liquid traps and reduce the risk of hydraulic pressure caused by thermal expansion.

For further information refer to installation instructions for SCA-X/CHV-X.

If cold refrigeration oil having low viscosity enters and settles in the damping chamber, problems with the check valve may arise. Consequently, it may be necessary to modify the valve for more viscous liquids by enlarging the hole to the damping chamber.

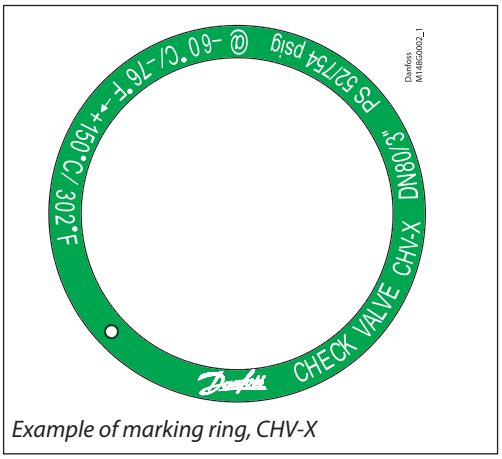

Example of marking ring, CHV-X

SCA-X/CHV-X valves			
Nominal bore	DN = < 25 mm (1 in.)	DN32-80 mm (1¼ - 3 in.)	DN100 - 125 mm (4 - 5 in.)
Classified for	Fluid group I		
Category	Article 3, paragraph 3	II	III

Application

Figure 3 shows the check & stop valve SCA-X in the discharge line of a screw compressor unit. The SCA-X valve in the discharge line prevents "back condensation" in the oil separator as well as pressure equalising through the compressor.

Compared to an ordinary shut-off and check valve arrangement the combined check & stop valve solution, as shown, is easier to install and has lower flow resistance.

Installation of the SCA-X/CHV-X in the economizer line is **not** recommended.

For horizontal installation of the function module; please contact Danfoss.

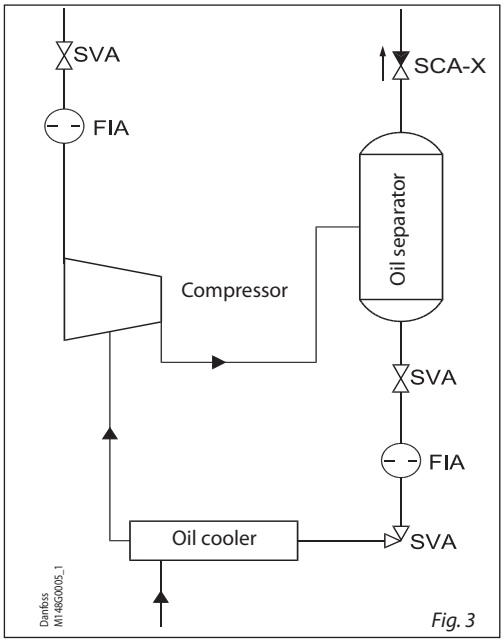

Fig. 3

Technical data

- *Refrigerants*
  Applicable to HCFC, HFC, R717 (Ammonia), R744 (CO_2), Propane, Butane, Iso-Butane and Ethane.
  R717 Heat Pump and Propylene applications with replaced O-ring.
- *Temperature range*
  -60 – 150 °C / -76 – 302 °F.
- *Max. working pressure*
  52 bar g / 754 psig.

Computation and selection

Introduction

When dimensioning SCA-X/CHV-X, it is important to select a valve that is best suited to all operating conditions. Therefore, it is necessary to consider both the nominal and part load working conditions.

The SCA-X/CHV-X valve can be calculated in two ways:
– Using the tables below.
– Using Coolselector®2

Example

SI-Units

Assumed working conditions:
Maximum flow $\dot{V}$ = 1000 m³/h
Density ρ = 3.0 kg/m³
Minimum part load = 33%

Used expressions:
Recommended velocity - C_{rec} [m/s]
Minimum recommended velocity - $C_{min, rec}$ [m/s]
Maximum velocity - C_{max} [m/s]
Part load velocity - C_{part} [m/s]

We know the density ρ ≈ 3.0 kg/m³, consequently C_{rec} as well as $C_{min, rec}$ can be found in the figure below (standard valve).

C_{rec} ≈14 m/s
$C_{min, rec}$ ≈ 3 m/s

US-Units

Assumed working conditions:
Maximum flow $\dot{V}$ = 1160 gpm
Density ρ = 0.187 lb/feet³
Minimum part load = 33%

Used expressions:
Recommended velocity - C_{rec} [ft/min]
Minimum recommended velocity - $C_{min, rec}$ [ft/min]
Maximum velocity - C_{max} [ft/min]
Part load velocity - C_{part} [ft/min]

We know the density ρ ≈ 0.187 lb/feet³, consequently C_{rec} as well as $C_{min, rec}$ can be found in the figure (standard valve).

C_{rec} ≈ 2756 ft/min
$C_{min, rec}$ ≈ 591 ft/min

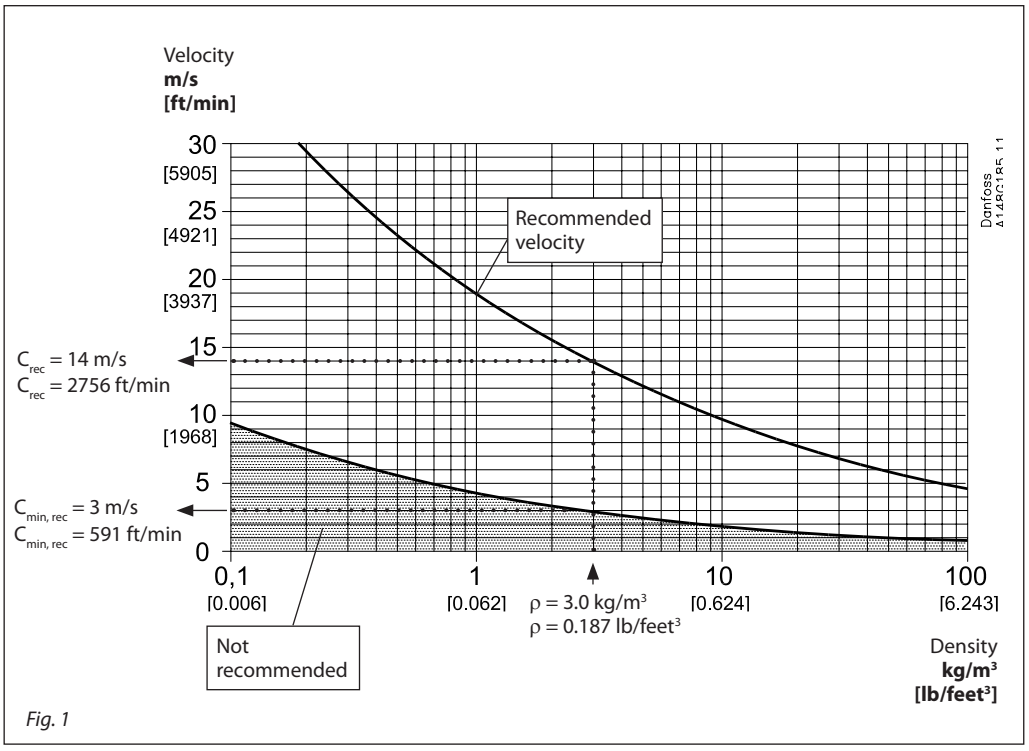

Fig. 1

Selection example continued on following page.

Computation and selection
(continued)

Knowing that $\dot{V}$ = 1000 m³/h (1160 gpm) fig. 2 gives the following choices:

For SCA-X / CHV-X in size DN 100 the maximum velocity $C_{max} \approx$ 31 m/s (6100 ft/min)
For SCA-X / CHV-X in size DN 125 the maximum velocity $C_{max} \approx$ 20 m/s (3900 ft/min)

In conclusion SCA-X in size DN 125 is selected because $C_{max} \approx$ 20 m/s (3900 ft/min) comes nearest to the recommended velocity $C_{rec} \approx$ 14 m/s (2756 ft/min) and at the same time part load conditions fulfil the requirements, as described:

We know that $C_{max} \approx$ 20 m/s (3900 ft/min) and that minimum part load is 33%. It follows that $C_{part} \approx$ 6.5 m/s (1290 ft/min). Thus, C_{part} (6.5 m/s) > $C_{min, rec}$ (3.0 m/s) and the selected SCA-X model DN125 is the perfect choice.

If the valve in question (for instance under part load conditions) provides a velocity less than $C_{min, rec}$ the valve might start hammering and become noisy. As a result the valve may wear prematurely.

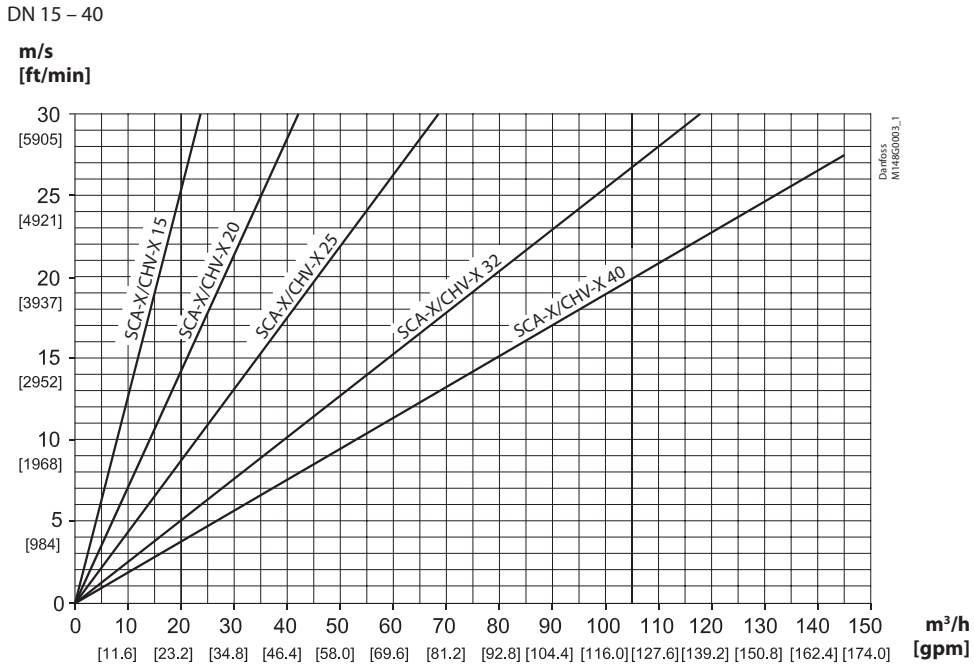

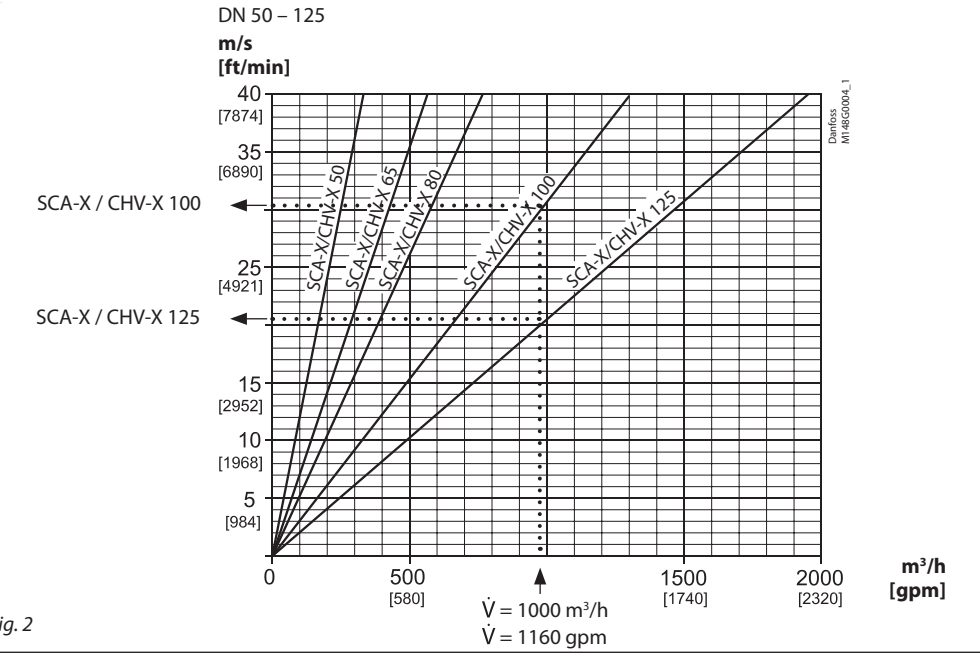

Fig. 2

Material specification

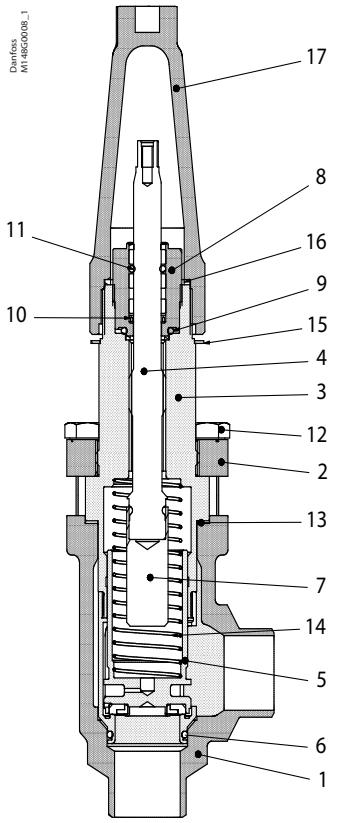

SCA-X 15 - 40

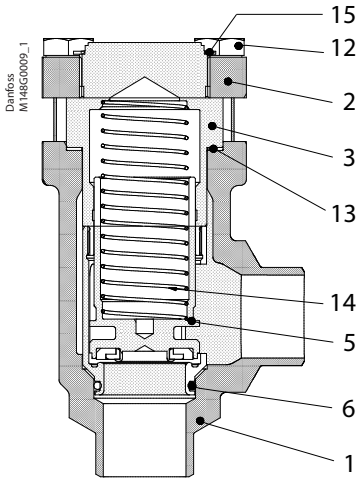

CHV-X 15 - 40

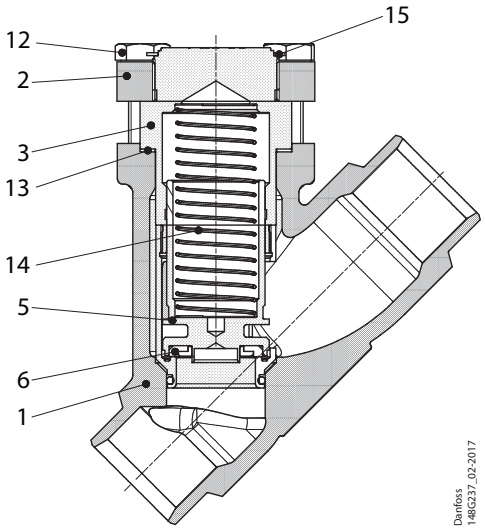

CHV-X 15 - 40

No.	Part	Material	DIN/EN	ISO	ASTM
1	Housing	Steel	P285QH EN10222-4		LF2A350
2	Bonnet, Flange	Steel	P275NL1 EN10028-3		
3	Bonnet, Insert	Steel			
4	Spindle	Stainless steel	X 10CrNiS18-9	Type 17, 17440	AISI 303, 683/13
5	Cone	Steel Teflon (PTFE)			
6	O-ring	Cloroprene (Neoprene)			
7	Spindle extension	Steel			
8	Packing gland O-rings	Steel Cloroprene (Neoprene)			
9	Packing washer	Aluminium			
10	Spring loaded seal	Teflon (PTFE)			
11	O-ring	Cloroprene (Neoprene)			
12	Bolts	Stainless steel	A2-70	A2-70	Type 308
13	Gasket	Fiber, non-asbestos			
14	Spring	Steel			
15	Identification ring	Stainless steel			
16	Seal cap gasket	Nylon			
17	Spindle seal cap	Aluminium			

Material specification

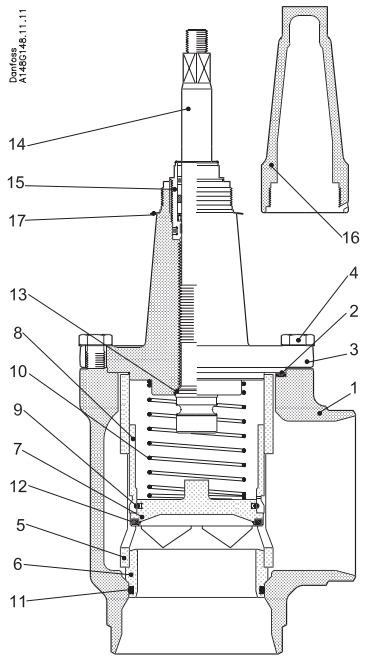

SCA-X 50 - 125

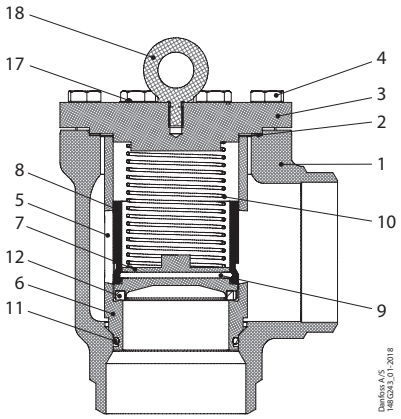

CHV-X 50 - 125

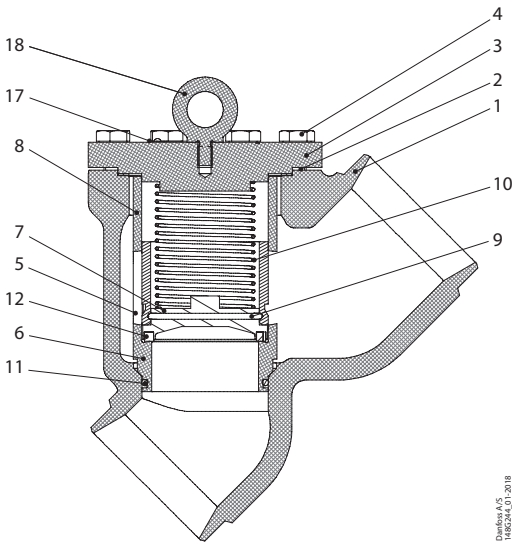

CHV-X 50 - 125

No.	Part	Material	DIN/EN	ISO	ASTM
1	Housing DN 50-65	Steel	P285 QH EN 10222-4		LF2A350
	Housing DN 80-125	Steel	G20Mn5 QT SEW 685		LCC, A352
2	Gasket	Fiber, Non-asbestos			
3	SCA-X: Valve bonnet CHV-X: End cover	Steel	P285 QH EN 10222-4		LF2A350
4	Bolts	Stainless steel	A2-70	A2-70	A-276
5	Tube	Steel			
6	Seat	Steel			
7	Valve plate	Steel			
8	Guide sleeve	Steel			
9	Spring ring	Steel			
10	Spring	Steel			
11	O-ring	Cloroprene (Neoprene)			
12	Teflon ring	Teflon (PTFE)			
13	Soft back seal	Teflon (PTFE)			
14	Spindle DN 50-65	Stainless steel	X8CrNiS18-9 17440	Type 17 R 683/13	AISI 303
	Spindle DN 80-125	Stainless steel	X5CrNi1810 17440	Type 11 683/13	AISI 304 A-276
15	Packing gland	Steel	9Mn28, 1651	Type 2, R 683/9	1213, SAE J403
16	Spindle seal cap and gasket	Aluminium			
17	Marking label	Stainless steel			
18	Eye bolt DIN 580	Steel			

Connections

DIN

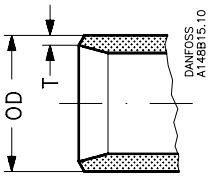

Butt-weld DIN (EN 10220)

Size mm	Size in.	OD mm	T mm	OD in.	T in.			k_v Angleway m^3/h	C_v Angleway USgal/min	K_v Straightway m^3/h	C_v Straightway USgal/min
15	½	21.3	2.3	0.839	0.091			8	9.3	4	4.6
20	¾	26.9	2.3	1.059	0.091			10	11.6	7	8.1
25	1	33.7	2.6	1.327	0.102			24	27.8	16	18.6
32	1¼	42.4	2.6	1.669	0.102			30	34.8	21	24.4
40	1½	48.3	2.6	1.902	0.102			30	34.8	21	24.4
50	2	60.3	2.9	2.37	0.11			45	53	28	34
65	2½	76.1	2.9	3.00	0.11			72	85	41	48
80	3	88.9	3.2	3.50	0.13			103	129	81	94
100	4	114.3	3.6	4.50	0.14			196	232	157	182
125	5	139.7	4.0	5.50	0.16			301	356	250	290

ANSI

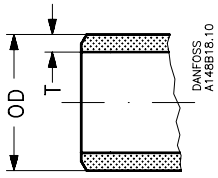

Butt-weld ANSI (B 36.10 Schedule 80)

Size mm	Size in.	OD mm	T mm	OD in.	T in.			k_v Angleway m^3/h	C_v Angleway USgal/min	K_v Straightway m^3/h	C_v Straightway USgal/min
15	½	21.3	3.7	0.839	0.146			8	9.3	4	4.6
20	¾	26.9	4.0	1.059	0.158			10	11.6	7	8.1
25	1	33.7	4.6	1.327	0.181			24	27.8	16	18.6
32	1¼	42.4	4.9	1.669	0.193			30	34.8	21	24.4
40	1½	48.3	5.1	1.902	0.201			30	34.8	21	24.4

Butt-weld ANSI (B 36.10 Schedule 40)

50	2	60.3	3.9	2.37	0.15			45	53	28	34
65	2½	73.0	5.2	2.87	0.20			72	85	41	48
80	3	88.9	5.5	3.50	0.22			103	129	81	94
100	4	114.3	6.0	4.50	0.24			196	232	157	182
125	5	141.3	6.6	5.56	0.26			301	356	250	290

GOST

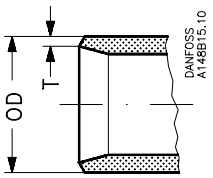

Butt-weld GOST (8734-75 and 8732-78)

Size mm	Size in.	OD mm	T mm	OD in.	T in.			k_v Angleway m^3/h	C_v Angleway USgal/min	K_v Straightway m^3/h	C_v Straightway USgal/min
15	½	18	2	0.709	0.079			8	9.3	4	4.6
20	¾	25	2.5	0.984	0.098			10	11.6	7	8.1
25	1	32	3	1.260	0.118			24	28.8	16	18.6
32	1¼	38	3	1.496	0.118			30	49.4	21	24.4
40	1½	45	3	1.772	0.118			30	52.4	21	24.4
50	2	57	3.5	2.244	0.138			45	53	28	34
65	2½	76.1	2.9	3	0.11			72	85	41	48
80	3	88.9	3.2	3.50	0.13			103	129	81	94
100	4	108	4	4.252	0.157			196	232	157	182
125	5	133	4	5.236	0.157			301	356	250	290

SOC

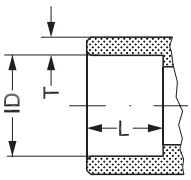

Size mm	Size in.	ID mm	T mm	ID in.	T in.	L mm	L in.				

Socket welding ANSI (B 16.11)

15	½	21.8	6	0.858	0.235	10	0.39				
20	¾	27.2	4.6	1.071	0.181	13	0.51				
25	1	33.9	7.2	1.335	0.284	13	0.51				
32	1¼	42.7	6.1	1.743	0.240	13	0.51				
40	1½	48.8	6.6	1.921	0.260	13	0.51				
50	2	61.2	6.2	2.41	0.24	16	0.63				

Dimensions and weights

SCA-X /CHV-X 15 - 40 (½- 1½ in.)

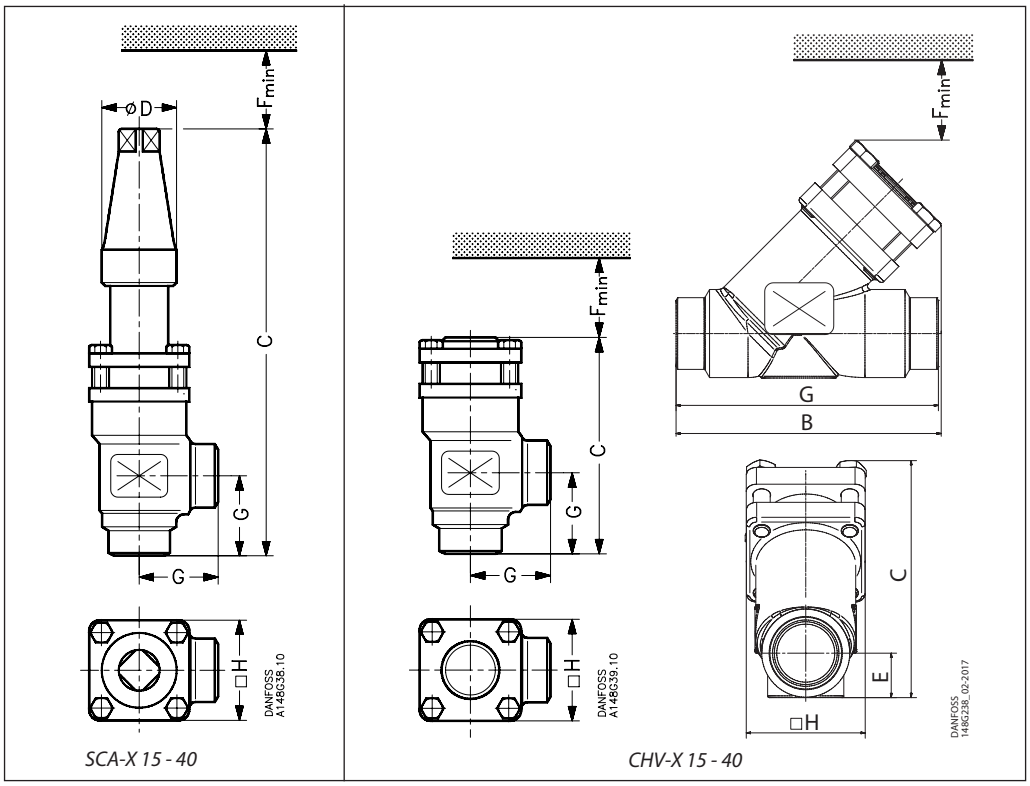

Valve size		C		G		∅D		F_{min}		□H	Weight
SCA-X 15 - 40											
SCA-X 15 (½ in.)	mm in.	212 8.35		45 1.77		38 1.50		60 2.36		60 2.36	1.6 kg 3.53 lb
SCA-X 20 (¾ in.)	mm in.	212 8.35		45 1.77		38 1.50		60 2.36		60 2.36	1.6 kg 3.53 lb
SCA-X 25 (1 in.)	mm in.	295 11.61		55 2.17		50 1.97		85 3.35		70 2.76	3.2 kg 7.05 lb
SCA-X 32 (1¼ in.)	mm in.	295 11.61		55 2.17		50 1.97		85 3.35		70 2.76	3.2 kg 7.05 lb
SCA-X 40 (1½ in.)	mm in.	295 11.61		55 2.17		50 1.97		85 3.35		70 2.76	3.2 kg 7.05 lb
CHV-X 15 - 40 Angleway											
CHV-X 15 (½ in.)	mm in.	103 4.06		45 1.77				60 2.36		60 2.36	1.2 kg 2.65 lb
CHV-X 20 (¾ in.)	mm in.	103 4.06		45 1.77				60 2.36		60 2.36	1.2 kg 2.65 lb
CHV-X 25 (1 in.)	mm in.	143 5.63		55 2.17				85 3.35		70 2.76	2.3 kg 5.07 lb
CHV-X 32 (1¼ in.)	mm in.	143 5.63		55 2.17				85 3.35		70 2.76	2.3 kg 5.07 lb
CHV-X 40 (1½ in.)	mm in.	143 5.63		55 2.17				85 3.35		70 2.76	2.3 kg 5.07 lb

Valve size		C	B	E		G		F_{min}		□H	Weight
CHV-X 15 - 40 Straightway											
CHV-X 15 (½ in.)	mm in.	99 3.90	114 4.49	19 0.75		120 4.72		60 2.36		60 2.36	1.3kg 2.87lb
CHV-X 20 (¾ in.)	mm in.	99 3.90	114 4.49	19 0.75		120 4.72		60 2.36		60 2.36	1.3kg 2.87lb
CHV-X 25 (1 in.)	mm in.	141 5.55	157 6.18	26 1.02		155 6.10		85 3.35		70 2.76	2.6kg 5.73lb
CHV-X 32 (1¼ in.)	mm in.	141 5.55	157 6.18	26 1.02		155 6.10		85 3.35		70 2.76	2.6kg 5.73lb
CHV-X 40 (1½ in.)	mm in.	141 5.55	157 6.18	26 1.02		155 6.10		85 3.35		70 2.76	2.6kg 5.73lb
CHV-X 32-40 Straightway, Socket weld											
CHV-X 32-40 (1¼ - 1½ in.)	mm in.	132 5.20	156 6.14	26 1.02		155 6.10		85 3.35		70 2.76	2.8kg 6.11lb

Specified weights are approximate values only.

Dimensions and weights

SCA-X/CHV-X 50 - 65 (2 - 2½ in.)

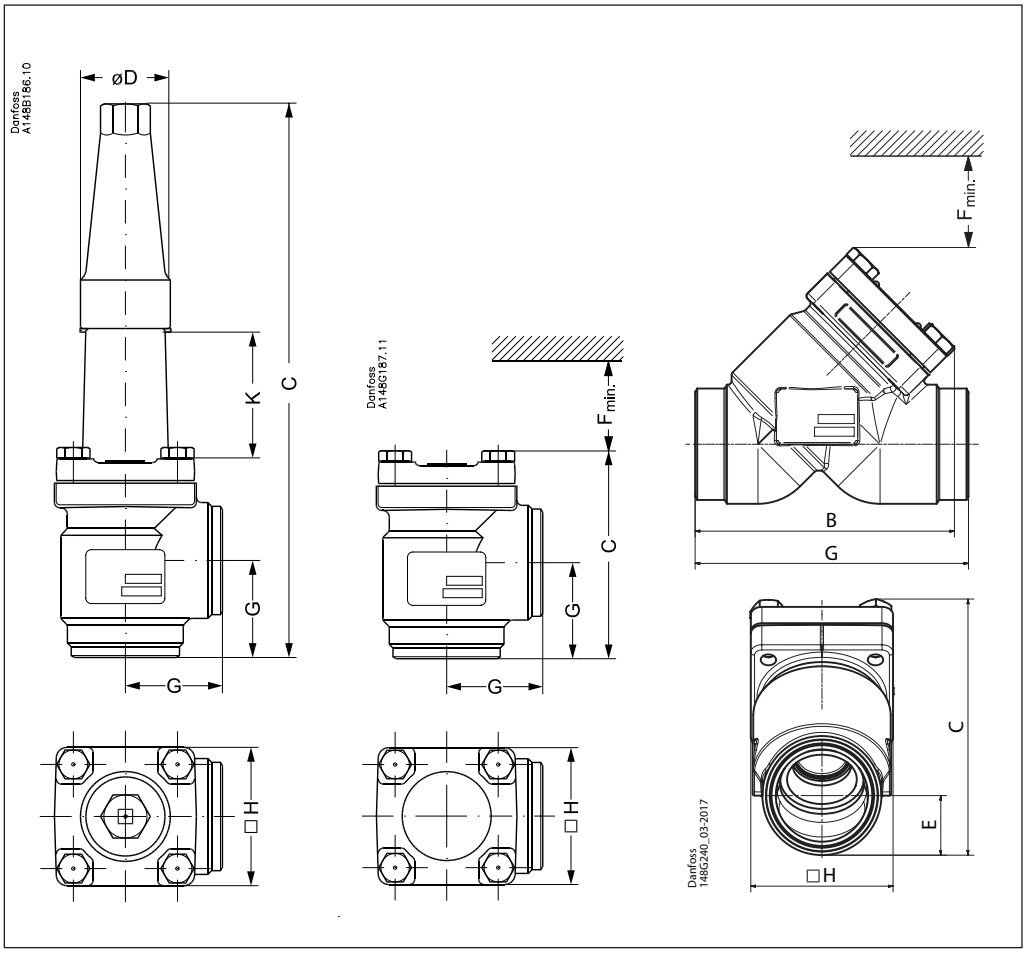

Valve size	K			C			G	∅D	□H		Weight
SCA-X											
SCA-X 50 mm SCA-X (2) in.	70 2.76			315 12.40			60 2.36	50 1.97	77 3.03		3.8 kg 8.40 lb
SCA-X 65 mm SCA-X (2½) in.	70 2.76			335 13.19			70 2.76	50 1.97	90 3.54		5.5 kg 12.16 lb

Valve size				C			G	$F_{min.}$	□H		Weight
CHV-X Angleway											
CHV-X 50 mm CHV-X (2) in.				132 5.20			60 2.36	92 3.62	77 3.03		3.2 kg 7.10 lb
CHV-X 65 mm CHV-X (2½) in.				152 5.98			70 2.76	107 4.21	90 3.54		4.5 kg 9.95 lb

Valve size				C	B	E	G	$F_{min.}$	□H		Weight
CHV-X Straightway											
CHV-X 50 mm CHV-X (2) in.				139 5.47	140 5.51	32 1.26	148 5.83	92 3.62	77 3.03		3 kg 6.72 lb
CHV-X 65 mm CHV-X (2½) in.				163 6,4	164 6,4	40 1,6	176 6,9	107 4.21	90 3.54		4.3 kg 9.44 lb
CHV-X Straightway, Socket weld											
CHV-X 50 mm CHV-X (2) in.				142 5.59	147 5.79	37 1.46	162 6.38	92 3.62	77 3.03		3.8 kg 8.33 lb

Specified weights are approximate values only.

Dimensions and weights

SCA-X/CHV-X 80 - 125 (3 - 5 in.)

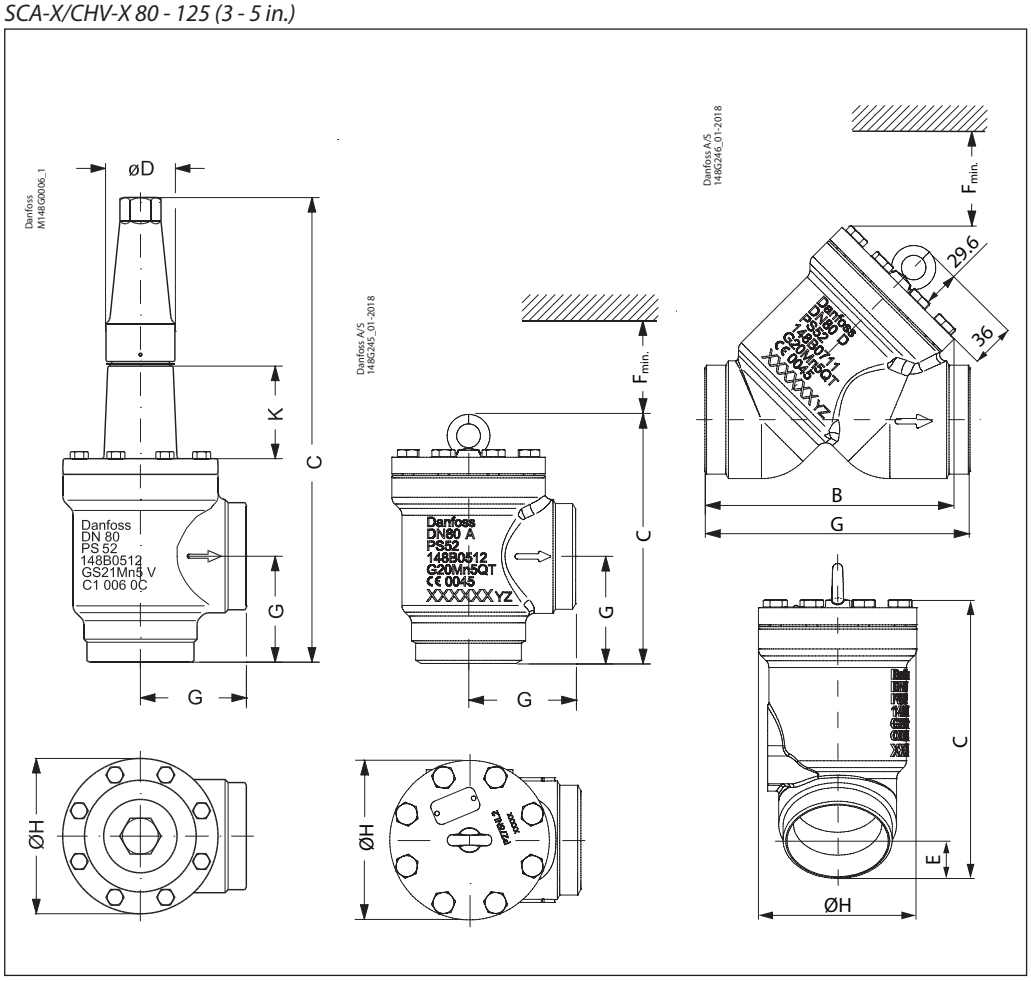

Valve size	K			C			G	ØD		ØH	Weight
SCA-X											
SCA-X 80 mm SCA-X (3) in.	76 3.00			388 15.28			90 3.54	58 2.28		129 5.08	9.7 kg 21.4 lb
SCA-X 100 mm SCA-X (4) in.	90 3.54			437 17.20			106 4.17	58 2.28		156 6.14	15.3 kg 33.7 lb
SCA-X 125 mm SCA-X (5) in.	90 3.54			533 20.98			128 5.04	74 2.91		193 7.60	28.1 kg 61.9 lb

Valve size				C			G		$F_{min.}$	ØH	Weight
CHV-X Angleway											
CHV-X 80 mm CHV-X (3) in.				218.6 8.61			90 3.54		103.4 4.07	129 5.08	8.7 kg 19.23 lb
CHV-X 100 mm CHV-X (4) in.				252.6 9.94			106 4.17		133.4 5.25	156 6.14	14.3 kg 31.60 lb
CHV-X 125 mm CHV-X (5) in.				297.6 11.72			128 5.04		160.4 6.31	193 7.60	25.6 kg 56.58 lb

Valve size				C	B	E	G		$F_{min.}$	ØH	Weight
CHV-X Straightway											
CHV-X 80 mm CHV-X (3) in.				206 8.11	204 8.03	48 1.89	216 8.50		133 5.24	129 5.08	9.3 kg 20.4 lb
CHV-X 100 mm CHV-X (4) in.				256 10.08	248 9.76	62 2.44	264 10.39		163 6.43	156 6.14	14.6 kg 32.29 lb
CHV-X 125 mm CHV-X (5) in.				314 12.36	302 11.89	74 2.91	322 12.68		190 7.48	193 7.60	32.5 kg 71.65 lb

Specified weights are approximate values only.

Ordering complete valves

How to order
The table below is used to identify the valve required.

Please note that the type codes only serve to identify the valves, some of wich may not form part of the standard product range.

For further information please contact your local Danfoss Sales Company.

Valve type	**SCA-X** **CHV-X**	Check & stop valve Check Valve				
			A	**D**	**G**	**SOC**
(valve size measured on the connection diameter)	**15**	DN 15	x	x	x	x
	20	DN 20	x	x	x	x
	25	DN 25	x	x	x	x
	32	DN 32	x	x	x	x
	40	DN 40	x	x	x	x
	50	DN 50	x	x	x	x
	65	DN 65	x	x		
	80	DN 80	x	x		
	100	DN 100	x	x	x	
	125	DN 125	x	x	x	
Connections	**A**	Welding branches: ANSI B 31.5 schedule 80 DN 15 - 40 (½ - 1½ in.) Welding branches: ANSI B 31.5 schedule 40 DN 50 - 125 (2 - 5 in.)				
	D	Welding branches: EN 10220				
	G	Butt-weld connection: GOST (8734-75 and 8732-78)				
	SOC	Socket weld: ANSI B 16.11				
Valve housing	**ANG**	Angle flow				
	STR	Straight flow				

Important!
Where products need to be certified according to specific certification societies the relevant information should be included at the time of order.

Angleway

SCA-X Butt-weld DIN (EN 10220)

Size		Type	Code No.
mm	in.		
15	½	SCA-X 15 D ANG	**148B5208**
20	¾	SCA-X 20 D ANG	**148B5308**
25	1	SCA-X 25 D ANG	**148B5408**
32	1¼	SCA-X 32 D ANG	**148B5508**
40	1½	SCA-X 40 D ANG	**148B5608**
50	2	SCA-X 50 D ANG	**148B5702**
65	2½	SCA-X 65 D ANG	**148B5803**
80	3	SCA-X 80 D ANG	**148B5902**
100	4	SCA-X 100 D ANG	**148B6002**
125	5	SCA-X 125 D ANG	**148B6102**

SCA-X Butt-weld ANSI (B 36.10 Schedule 80)

Size		Type	Code No.
mm	in.		
15	½	SCA-X 15 A ANG	**148B5209**
20	¾	SCA-X 20 A ANG	**148B5309**
25	1	SCA-X 25 A ANG	**148B5409**
32	1¼	SCA-X 32 A ANG	**148B5509**
40	1½	SCA-X 40 A ANG	**148B5609**

SCA-X Butt-weld ANSI (B 36.10 Schedule 40)

Size		Type	Code No.
mm	in.		
50	2	SCA-X 50 A ANG	**148B5703**
65	2½	SCA-X 65 A ANG	**148B5802**
80	3	SCA-X 80 A ANG	**148B5903**
100	4	SCA-X 100 A ANG	**148B6004**
125	5	SCA-X 125 A ANG	**148B6103**

SCA-X Socket welding ANSI (B 16.11)

Size		Type	Code No.
mm	in.		
50	2	SCA-X 50 SOC ANG	**148B5704**

Angleway

CHV-X Butt-weld DIN (EN 10220)

Size		Type	Code No.
mm	in.		
15	½	CHV-X 15 D ANG	**148B5236**
20	¾	CHV-X 20 D ANG	**148B5336**
25	1	CHV-X 25 D ANG	**148B5436**
32	1¼	CHV-X 32 D ANG	**148B5536**
40	1½	CHV-X 40 D ANG	**148B5636**
50	2	CHV-X 50 D ANG	**148B5736**
65	2½	CHV-X 65 D ANG	**148B5838**
80	3	CHV-X 80 D ANG	**148B5936**
100	4	CHV-X 100 D ANG	**148B6036**
125	5	CHV-X 125 D ANG	**148B6136**

CHV-X Butt-weld ANSI (B 36.10 Schedule 80)

Size		Type	Code No.
mm	in.		
15	½	CHV-X 15 A ANG	**148B5237**
20	¾	CHV-X 20 A ANG	**148B5337**
25	1	CHV-X 25 A ANG	**148B5437**
32	1¼	CHV-X 32 A ANG	**148B5537**
40	1½	CHV-X 40 A ANG	**148B5637**

CHV-X Butt-weld ANSI (B 36.10 Schedule 40)

Size		Type	Code No.
mm	in.		
50	2	CHV-X 50 A ANG	**148B5737**
65	2½	CHV-X 65 A ANG	**148B5837**
80	3	CHV-X 80 A ANG	**148B5937**
100	4	CHV-X 100 A ANG	**148B6037**
125	5	CHV-X 125 A ANG	**148B6137**

CHV-X Socket welding ANSI (B 16.11)

Size		Type	Code No.
mm	in.		
32	1¼	CHV 32 SOC ANG	**148B5539**
50	2	CHV 50 SOC ANG	**148B5740**

ANG = Angleway

Ordering complete valves
(continued)

Straightway

CHV-X Butt-weld DIN (EN 10220)

Size		Type	Code No.
mm	in.		
15	½	CHV-X 15 D STR	**148B6581**
20	¾	CHV-X 20 D STR	**148B6583**
25	1	CHV-X 25 D STR	**148B6585**
32	1¼	CHV-X 32 D STR	**148B6587**
40	1½	CHV-X 40 D STR	**148B6589**
50	2	CHV-X 50 D STR	**148B6591**
65	2½	CHV-X 65 D STR	**148B6593**
80	3	CHV-X 80 D STR	**148B6595**
100	4	CHV-X 100 D STR	**148B6597**
125	5	CHV-X 125 D STR	**148B6599**

CHV-X Butt-weld ANSI (B 36.10 Schedule 80)

Size		Type	Code No.
mm	in.		
15	½	CHV-X 15 A STR	**148B6582**
20	¾	CHV-X 20 A STR	**148B6584**
25	1	CHV-X 25 A STR	**148B6586**
32	1¼	CHV-X 32 A STR	**148B6588**
40	1½	CHV-X 40 A STR	**148B6590**

CHV-X Butt-weld ANSI (B 36.10 Schedule 40)

Size		Type	Code No.
mm	in.		
50	2	CHV-X 50 A STR	**148B6592**
65	2½	CHV-X 65 A STR	**148B6594**
80	3	CHV-X 80 A STR	**148B6596**
100	4	CHV-X 100 A STR	**148B6598**
125	5	CHV-X 125 A STR	**148B6600**

CHV-X Socket welding ANSI (B 16.11)

Size		Type	Code No.
mm	in.		
15	½	CHV-X 15 SOC STR	**148B6601**
20	¾	CHV-X 20 SOC STR	**148B6602**
25	1	CHV-X 25 SOC STR	**148B6603**
32	1¼	CHV-X 32 SOC STR	**148B6604**
40	1½	CHV-X 40 SOC STR	**148B6605**
50	2	CHV-X 50 SOC STR	**148B6606**

STR = Straightway

Ordering SVA-X from the parts programme

Example
(select from table 1 and 2)

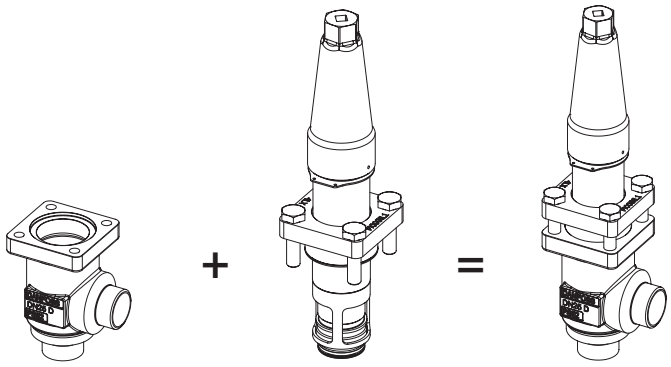

Valve housing, size 25 (1 in), DIN butt weld, angleway, **148B5452**
Table 1

Top part, SCA-X size 25 (1 in) **148B5482**
Table 2

Table 1
SVL valve housings w/different connections

DN 15 – 65 mm (½ – 2½ in)

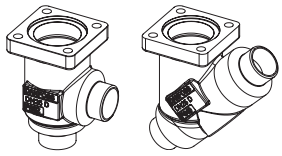

DN 80 – 125 mm (3 – 5 in)

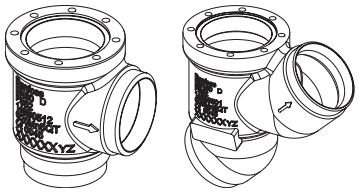

Sizes [DN]		Valve Housing SVL										
		DIN-Butt weld		ANSI-Butt weld		GOST-Butt-weld		SOC		FPT		T
[mm]	[in]	ANG	STR	ANG	STR	ANG	STR	ANG	STR	ANG	STR	ANG
15	½	**148B5252**	**148B5253**	**148B5254**	**148B5255**	**148B5391**	**148B5392**	**148B5256**	**148B5257**	**148B5258**	**148B5259**	
20	¾	**148B5352**	**148B5353**	**148B5354**	**148B5355**	**148B5393**	**148B5394**	**148B5356**	**148B5357**	**148B5358**	**148B5359**	
25	1	**148B5452**	**148B5453**	**148B5454**	**148B5455**	**148B5498**	**148B5499**	**148B5456**	**148B5457**	**148B5458**	**148B5459**	
32	1 ¼	**148B5576**	**148B5577**	**148B5578**	**148B5579**	**148B5593**	**148B5594**	**148B5580**	**148B5581**	**148B5582**	**148B5583**	
40	1 ½	**148B5652**	**148B5653**	**148B5654**	**148B5655**	**148B5681**	**148B5682**	**148B5656**	**148B5657**			
50	2	**148B5741**	**148B5742**	**148B5743**	**148B5744**	**148B5759**	**148B5760**	**148B5745**	**148B5746**			
65	2 ½	**148B5816**	**148B5817**	**148B5818**	**148B5819**	**148B5816**	**148B5817**					
80	3	**148B5912**	**148B5913**	**148B5914**	**148B5915**	**148B5912**	**148B5913**					
100	4	**148B6014**	**148B6015**	**148B6016**	**148B6017**	**148B6033**	**148B6034**					
125	5	**148B6112**	**148B6113**	**148B6114**	**148B6115**	**148B6133**	**148B6134**					

Table 2
SCA-X complete top part including gaskets and bolts

SCA-X 15-50	SCA-X 80-125

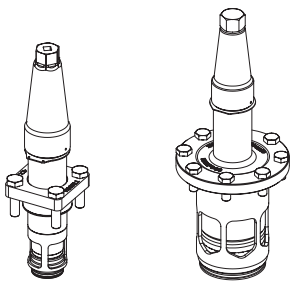

Sizes [DN]		Complete top part
[mm]	[in]	SCA-X
15	½	**148B5282**
20	¾	
25	1	**148B5482**
32	1 ¼	
40	1 ½	
50	2	**148B5735**
65	2 ½	**148B5825**
80	3	**148B5918**
100	4	**148B6019**
125	5	**148B6118**

Replacement kit (O-ring replacement) for R717 Ammonia Heat Pump and Propylene applications (including ID tag)*

Size (DN)		O-ring kit for	
mm	in.	R717 Heat pump	R1270 Propylene
15	½	**148B6070**	**148B6077**
20	¾		
25	1	**148B6071**	**148B6078**
32	1¼		
40	1½		
50	2	**148B6072**	**148B6079**
65	2½	**148B6073**	**148B6080**
80	3	**148B6074**	**148B6081**
100	4	**148B6075**	**148B6082**
125	5	**148B6076**	**148B6083**

* Replacement kits for R717 Ammonia Heat Pump is applicable for continuous operating temperature between +100°C to 150°C (212°F to 302°F)

Ordering CHV-X from the parts programme

Example
(select from table 1 and 2)

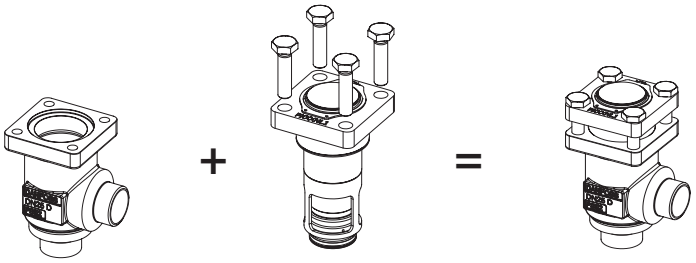

Valve housing, size 25 (1 in.), DIN butt weld, angleway, **148B5452** Table 1

Top part, CHV-X size 25 (1 in.) **148B5483** *Table 2*

Table 1
SVL valve housings w/different connections

DN 15-65 mm (½ - 2½ in.)

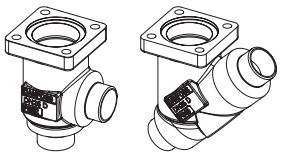

DN 80-125 mm (3 - 5 in.)

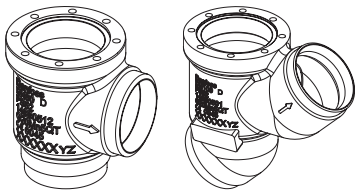

Sizes [DN]		Valve Housing SVL										
		DIN-Butt weld		ANSI-Butt weld		GOST-Butt-weld		SOC		FPT		T
mm	in.	ANG	STR	ANG	STR	ANG	STR	ANG	STR	ANG	STR	ANG
15	½	148B5252	148B5253	148B5254	148B5255	148B5391	148B5392	148B5256	148B5257	148B5258	148B5259	
20	¾	148B5352	148B5353	148B5354	148B5355	148B5393	148B5394	148B5356	148B5357	148B5358	148B5359	
25	1	148B5452	148B5453	148B5454	148B5455	148B5498	148B5499	148B5456	148B5457	148B5458	148B5459	
32	1¼	148B5576	148B5577	148B5578	148B5579	148B5593	148B5594	148B5580	148B5581	148B5582	148B5583	
40	1½	148B5652	148B5653	148B5654	148B5655	148B5681	148B5682	148B5656	148B5657			
50	2	148B5741	148B5742	148B5743	148B5744	148B5759	148B5760	148B5745	148B5746			
65	2½	148B5816	148B5817	148B5818	148B5819	148B5816	148B5817					
80	3	148B5912	148B5913	148B5914	148B5915	148B5912	148B5913					
100	4	148B6014	148B6015	148B6016	148B6017	148B6033	148B6034					
125	5	148B6112	148B6113	148B6114	148B6115	148B6133	148B6134					

Table 2
CHV-X complete top part including gaskets and bolts

CHV-X 15-50	CHV-X 80-125

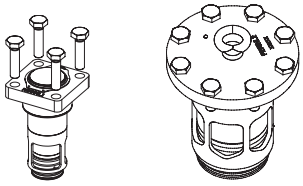

Sizes [DN]		Complete top part
mm	in.	CHV-X
15	½	148B5283
20	¾	
25	1	148B5483
32	1¼	
40	1½	
50	2	148B5747
65	2½	148B5827
80	3	148B5919
100	4	148B6022
125	5	148B6119

Replacement kit (O-ring replacement) for R717 Ammonia Heat Pump and Propylene applications (including ID tag)*

Size (DN)		O-ring kit for	
mm	in.	R717 Heat pump	R1270 Propylene
15	½	148B6070	148B6077
20	¾		
25	1	148B6071	148B6078
32	1¼		
40	1½		
50	2	148B6072	148B6079
65	2½	148B6073	148B6080
80	3	148B6074	148B6081
100	4	148B6075	148B6082
125	5	148B6076	148B6083

* Replacement kits for R717 Ammonia Heat Pump is applicable for continuous operating temperature between +100°C to 150°C (212°F to 302°F)

ENGINEERING
TOMORROW

Check & stop valve, SCA-X, 65 bar (943 psi)
Check valve, CHV-X, 65 bar (943 psi)

Contents **Page**

Features . . . 601
Technical data . . . 602
Design . . . 602
Computation and selection . . . 603
Material specification . . . 605
Application . . . 607
Dimensions and weights . . . 608
Connections . . . 611
Ordering . . . 611

AI273641142831en-000102 | 2018.06

ENGINEERING TOMORROW

Check & stop valve, SCA-X, 65 bar (943 psi)
Check valve, CHV-X, 65 bar (943 psi)



SCA-X are check valves with a built-in stop valve function. CHV-X are check valves only. SCA-X/ CHV-X are available in angleway and straightway versions.

The valves are designed to open at very low differential pressures, allow favourable flow conditions and are easy to disassemble for inspection and service.

The SCA-X is equipped with vented cap and has internal backseating enabling the spindle seal to be replaced whilst the valve still under pressure.

Laser cut V-ports provide excellent opening characteristics (SCA-X/CHV-X 50-125).

The valve cone has a built-in flexibility to ensure a precise and tight closing towards the valve seat.

A well balanced dampening effect between the piston and the cylinder gives an optimal protection during low loads and against pulsations.

Features

- Modular Concept:
  - Each valve housing is available with DIN and ANSI butt weld connection and in several different sizes.
  - Possible to convert SCA-X or CHV-X to any other product in the Flexline™ SVL family (regulating valve, shut-off valve or strainer) just by replacing the complete top part.
- Fast and easy valve overhaul service. It is easy to replace the top part and no welding is needed.
- Designed to open at a very low differential pressure of 0.04 bar (0.58 psig).
- Designed with a built-in damping chamber preventing valve flutter in case of low refrigerant velocity and/or low density.
- Each valve is clearly marked with type, size and performance range.
  At replacement of the O-ring for special application, an additional ID ring is fixed to the valve.
- Easy to disassemble for inspection and service.
- Internal backseating enables replacement of the spindle seal whilst the valve is active, i.e. under pressure.
- Optimal flow characteristics ensuring quick opening to the fully open position.
- Protection against pulsation by built-in damping facility.
- Housing and bonnet material is low temperature steel according to requirements of the Pressure Equipment Directive and other international classification authorities.
- Equipped with 42 CrMo5 bolts to withstand high pressure.
- Classification: DNV, CRN, BV, EAC etc.
  To get an updated list of certification on the products please contact your local Danfoss Sales Company.
- Service kits with replacement O-rings for R717 Heat Pump and R1270 Propylene include separate ID-ring for ID of application.

Technical data

- *Refrigerants*
  Applicable to HCFC, HFC, R717 (Ammonia), R744 (CO_2) and flammable refrigerants.
  For further information please see the installation guide for SCA-X/CHV-X.
- *Temperature range*
  –60/+150°C (–76/+302°F).
- *Max. working pressure*
  65 bar (943 psig)
  With O-ring replaced (Service kit):
  Heat pump configuration: R717 - 65 bar (943 psi) @ +100°C to +150°C (+212°F to +302°F) continuous.
  Propylene configuration: R1270 - 65 bar (943 psi) @ -60°C to 150°C (-76°F to 302°F)

Design

Housing
The housing is made from special, cold resistant steel.

Valve cone
Valve cone with built in metallic stop - prevents damage to teflon ring in case of overtightening.

Teflon ring made of reinforced teflon

Damping chamber
The chamber is filled with refrigerants (gas or liquid), which provides a damping effect when the valve opens and closes.

Spindle (SCA-X)
Made of polished stainless steel, which is ideal for O-ring sealing.

Packing Gland (SCA-X)
The "full temperature range" packing gland is the standard for the entire SVL platform.

This ensures perfect tightness throughout the whole temperature range:
–60/+150°C (–76/+302°F).

Installation
The valve must be mounted vertically with the cone downwards.

The valve is designed to resist very high internal pressure. However, the piping system in general should be designed to avoid liquid traps and reduce the risk of hydraulic pressure caused by thermal expansion.

For further information refer to installation guide for SCA-X/CHV-X.

If cold refrigeration oil having low viscosity enters and settles in the damping chamber, problems with the check valve may arise. Consequently, it may be necessary to modify the valve for more viscous liquids by enlarging the hole to the damping chamber.

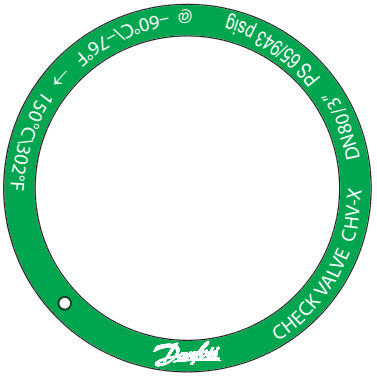

Example of marking ring, CHV-X

ID ring for special application
After converting a SCA or CHV valve for Heat Pump/Propylene applications (replacing O-ring) the color marked ID tag included in the service kit must be fixed to the valve as shown in figure to the right.

The ID tag indicates the special application and identifies the installed O-ring.

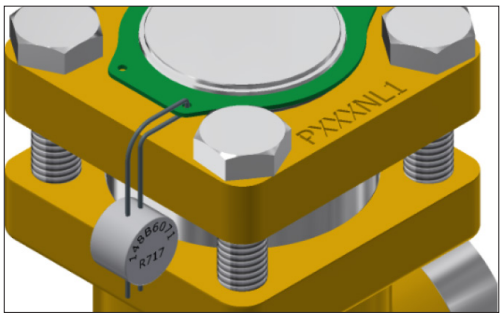

Pressure Equipment Directive (PED)

SVL valves are approved according to the European standard specified in the Pressure Equipment Directive and are CE marked.

For further details / restrictions - see Installation guide.

	SVL		
Nominal bore	DN≤ 25 mm (1 in.)	DN32-80 mm (1¼ - 3 in.)	DN100 - 200 mm (4-8 in.)
Classified for	Fluid group I		
Category	Article 3, paragraph 3	II	III

Computation and selection

Introduction

When dimensioning SCA-X/CHV-X, it is important to select a valve that is best suited to all operating conditions. Therefore, it is necessary to consider both the nominal and part load working conditions.

The SCA-X/CHV-X valve can be calculated in two ways:
– Using the tables below.
– Using Coolselector™

Example

SI-Units

Assumed working conditions:
Maximum flow $\dot{V}$ = 1000 m³/h
Density ρ = 3.0 kg/m³
Minimum part load = 33%

Used expressions:
Recommended velocity - C_{rec} [m/s]
Minimum recommended velocity - $C_{min, rec}$ [m/s]
Maximum velocity - C_{max} [m/s]
Part load velocity - C_{part} [m/s]

We know the density ρ ≈ 3.0 kg/m³, consequently C_{rec} as well as $C_{min, rec}$ can be found in the figure below (standard valve).

C_{rec} ≈14 m/s
$C_{min, rec}$ ≈ 3 m/s

US-Units

Assumed working conditions:
Maximum flow $\dot{V}$ = 1160 gpm
Density ρ = 0.187 lb/feet³
Minimum part load = 33%

Used expressions:
Recommended velocity - C_{rec} [ft/min]
Minimum recommended velocity - $C_{min, rec}$ [ft/min]
Maximum velocity - C_{max} [ft/min]
Part load velocity - C_{part} [ft/min]

We know the density ρ ≈ 0.187 lb/feet³, consequently C_{rec} as well as $C_{min, rec}$ can be found in the figure (standard valve).

C_{rec} ≈ 2756 ft/min
$C_{min, rec}$ ≈ 591 ft/min

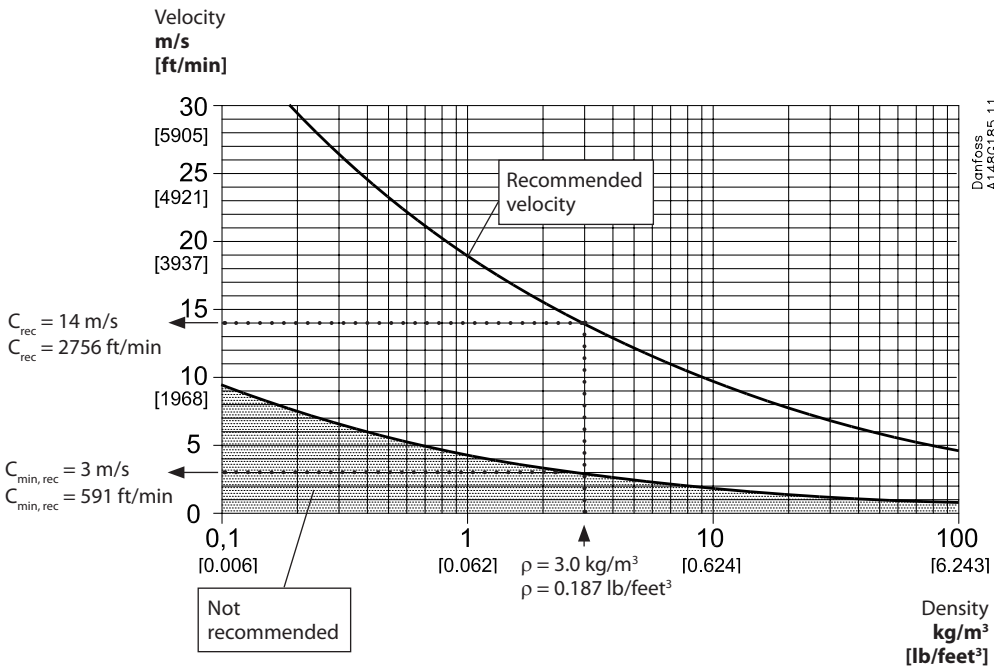

Fig. 1

Selection example continued on following page.

Computation and selection
(continued)

Knowing that $\dot{V}$ = 1000 m³/h (1160 gpm) fig. 2 gives the following choices:

For SCA-X/CHV-X in size DN 100 the maximum velocity $C_{max} \approx$ 31 m/s (6100 ft/min)
For SCA-X/CHV-X in size DN 125 the maximum velocity $C_{max} \approx$ 20 m/s (3900 ft/min)

In conclusion SCA-X in size DN 125 is selected because $C_{max} \approx$ 20 m/s (3900 ft/min) comes nearest to the recommended velocity $C_{rec} \approx$ 14 m/s (2756 ft/min) and at the same time part load conditions fulfil the requirements, as described:

We know that $C_{max} \approx$ 20 m/s (3900 ft/min) and that minimum part load is 33%. It follows that $C_{part} \approx$ 6.5 m/s (1290 ft/min). Thus, C_{part} (6.5 m/s) > $C_{min, rec}$ (3.0 m/s) and the selected SCA-X model DN125 is the perfect choice.

If the valve in question (for instance under part load conditions) provides a velocity less than $C_{min, rec}$ the valve might start hammering and become noisy. As a result the valve may wear prematurely.

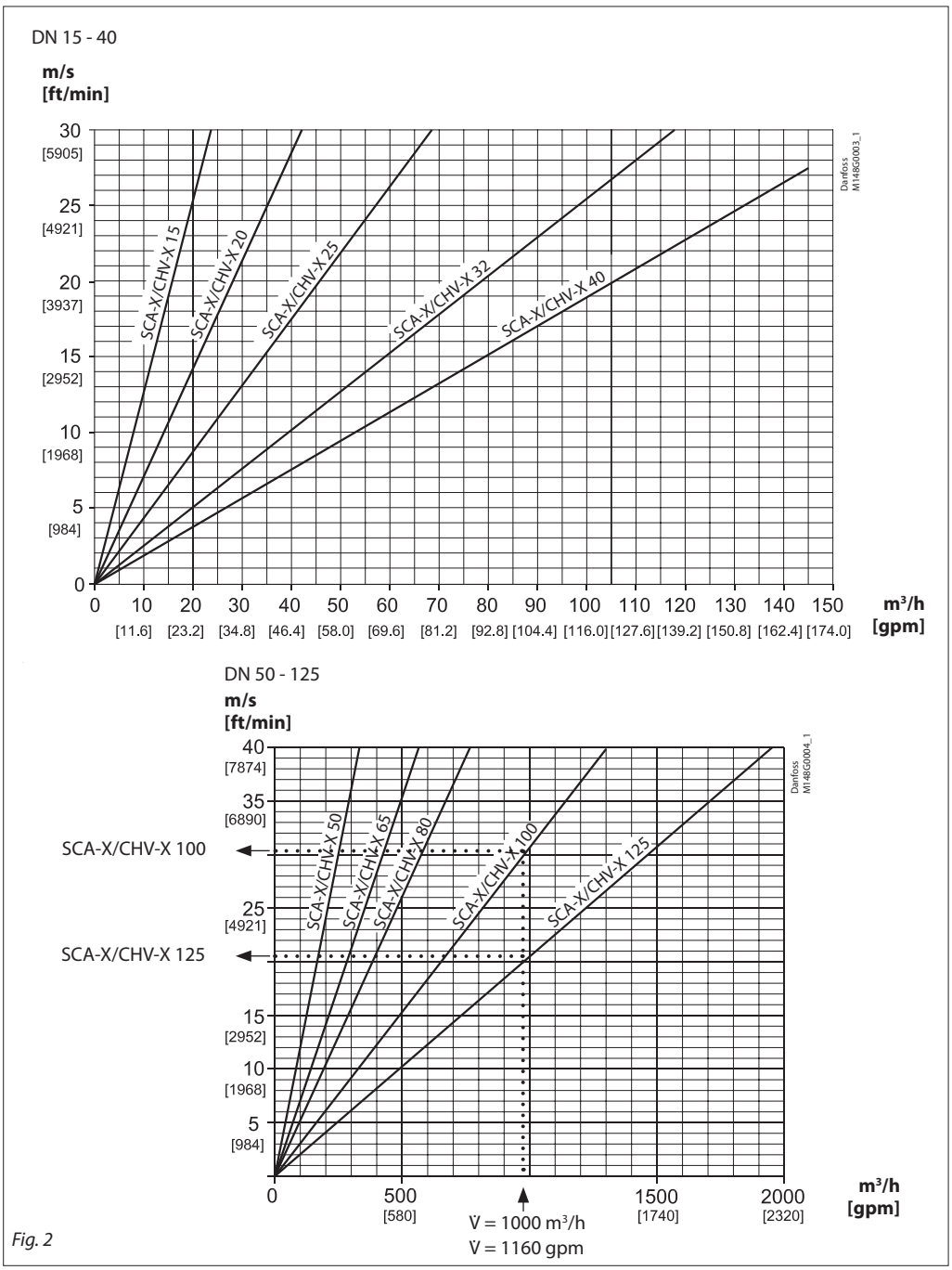

Fig. 2

Material specification

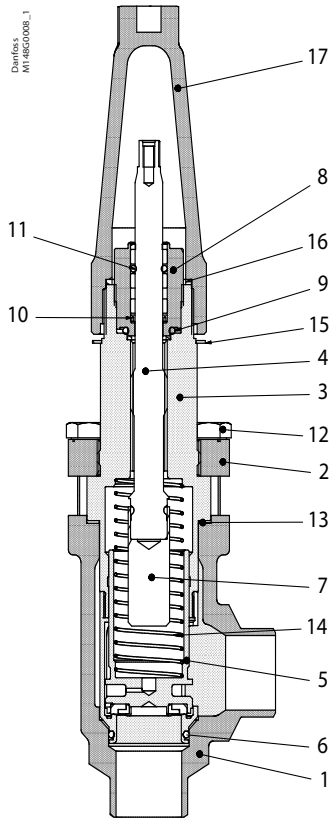

SCA-X 15 - 40

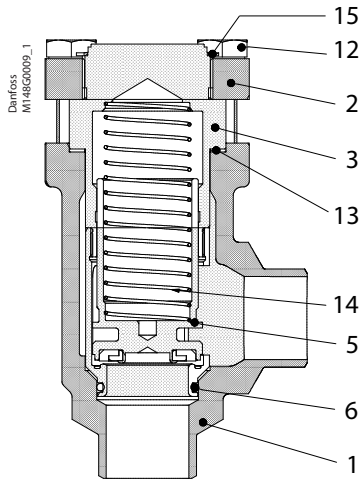

CHV-X 15 - 40

No.	Part	Material	DIN/EN	ISO	ASTM
1	Housing	Steel	G20Mn5QT, 10213-3 --- P285QH+QT, 10222-4		LCC, A352 --- LF2, A350
2	Bonnet, Flange	Steel	P275NL1 EN10028-3		LF2, A350
3	Bonnet, Insert	Steel	11SMn30 10087	Type 2 R 683/9	AISI 1213
4	Spindle	Stainless steel	X8CrNiS18-9, EN 10088-3	Type 17 683/13	AISI 303
5	Cone	Steel Teflon (PTFE)			
6	O-ring	Cloroprene (Neoprene)*			
7	Spindle extension	Steel			
8	Packing gland O-rings	Stainless steel Cloroprene (Neoprene)	X8CrNiS18-9 10088	Type 17 683/13	AISI 303
9	Packing washer	Aluminium			
10	Spring loaded seal	Teflon (PTFE)			
11	O-ring	Cloroprene (Neoprene)			
12	Bolts	High temperature steel	42CrMo5 10269		A193
13	Gasket	Fiber, non-asbestos			
14	Spring	Steel			
15	Identification ring	Stainless steel			
16	Seal cap gasket	Nylon			
17	Spindle seal cap	Aluminium			

*To be replaced in R717 Heat Pump and R1270 Propylene applications.

Material specification

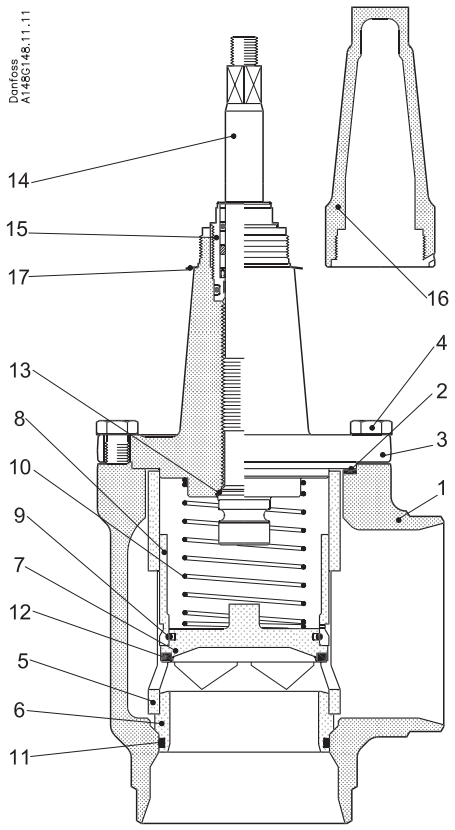

SCA-X 50 - 125

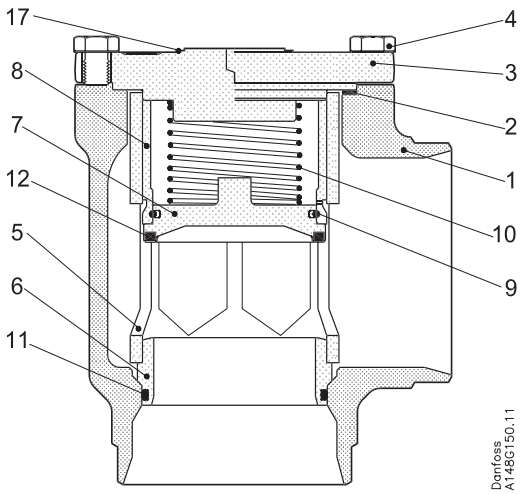

CHV-X 50 - 125

No.	Part	Material	DIN/EN	ISO	ASTM
1	Housing DN 50-65	Steel	G20Mn5QT, 10213-3 --- P285QH+QT, 10222-4		LCC, A352 --- LF2, A350
	Housing DN 80-125	Steel	G20Mn5 QT SEW 685		LCC, A352
2	Gasket	Fiber, Non-asbestos			
3	SCA-X: Valve bonnet CHV-X: End cover	Steel	P285 QH EN 10222-4 --- P275NL1 or 2 EN10028-3		LF2, A350 --- A, A662
4	Bolts	High temperature steel	42CrMo5 10269		A193
5	Tube	Steel			
6	Seat	Steel			
7	Valve plate	Steel			
8	Guide sleeve	Steel			
9	Spring ring	Steel			
10	Spring	Steel			
11	O-ring	Cloroprene (Neoprene)*			
12	Teflon ring	Teflon (PTFE)			
13	Soft back seal	Teflon (PTFE)			
14	Spindle DN 50-65	Stainless steel	X8CrNiS18-9 17440	Type 17 R 683/13	AISI 303
	Spindle DN 80-125	Stainless steel	X5CrNi1810 17440	Type 11 683/13	AISI 304 A-276
15	Packing gland	Stainless steel	X8CrNiS18-9, EN 10088-3,	Type 17 R 683/13	AISI 303
16	Spindle seal cap and gasket	Aluminium			
17	Marking label	Stainless steel			

*To be replaced in R717 Heat Pump and R1270 Propylene applications.

Application

Figure 3 shows the check & stop valve SCA-X in the discharge line of a screw compressor unit. The SCA-X valve in the discharge line prevents "back condensation" in the oil separator as well as pressure equalising through the compressor.

Compared to an ordinary stop and check valve arrangement the combined stop/check valve solution, as shown, is easier to install and has lower flow resistance.

Installation of the SCA-X/CHV-X in the economizer line is **not** recommended.

For horizontal installation of the function module; please contact Danfoss.

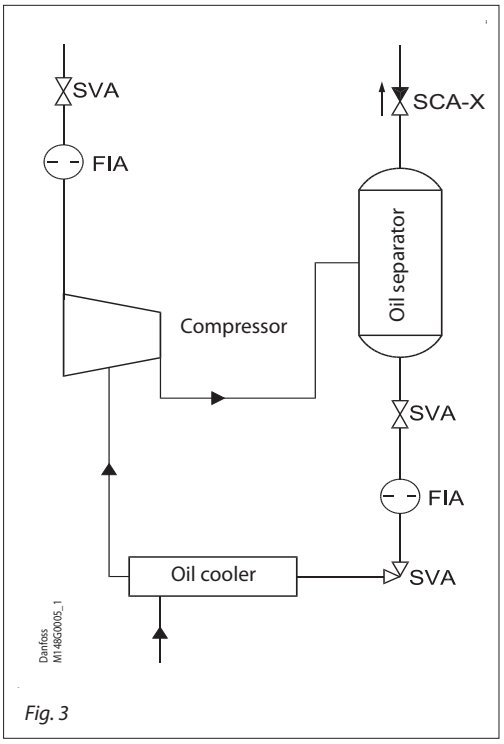

Fig. 3

Dimensions and weights

SCA-X/CHV-X 15 - 40 (½- 1½ in.)

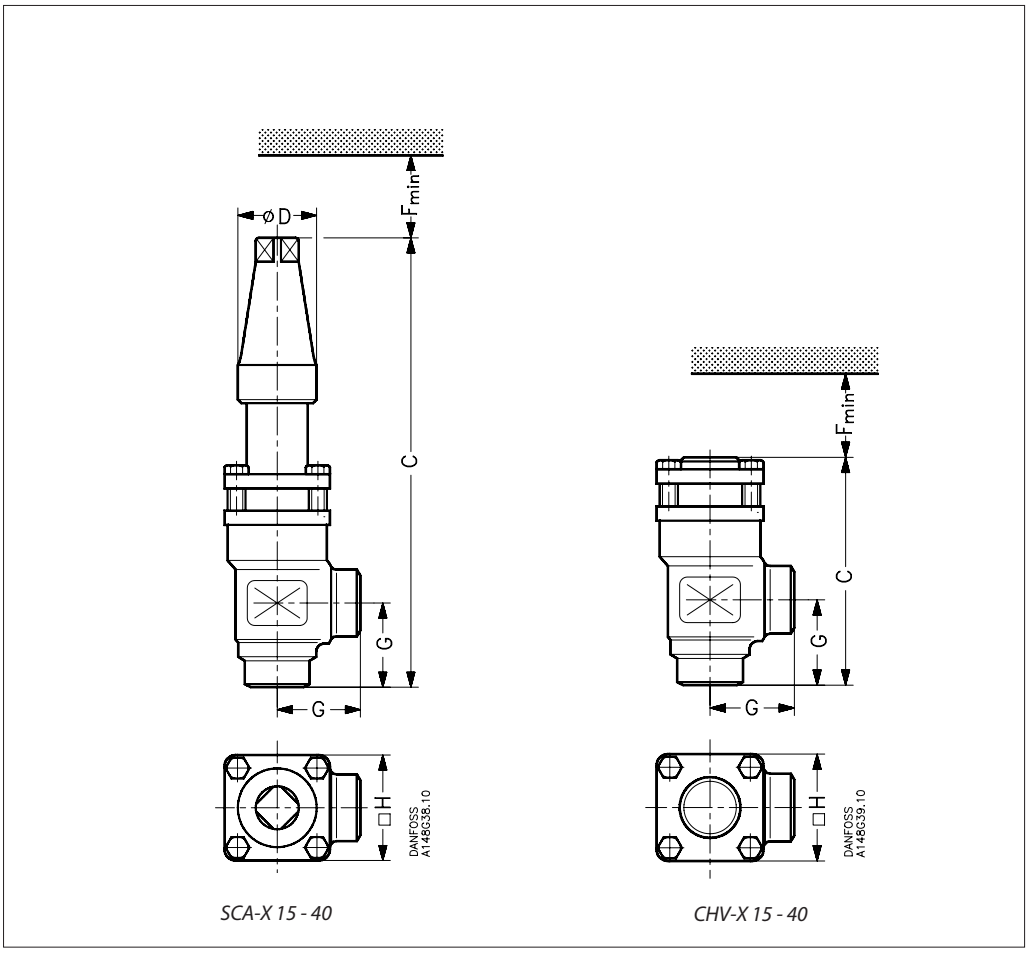

SCA-X 15 - 40 *CHV-X 15 - 40*

Valve size		C		G		∅D		F_{min}		□H	Weight
SCA-X 15 - 40											
SCA-X 15 (½ in.)	mm in.	212 8.35		45 1.77		38 1.50		60 2.36		60 2.36	1.6 kg 3.53 lb
SCA-X 20 (¾ in.)	mm in.	212 8.35		45 1.77		38 1.50		60 2.36		60 2.36	1.6 kg 3.53 lb
SCA-X 25 (1 in.)	mm in.	295 11.61		55 2.17		50 1.97		85 3.35		70 2.76	3.2 kg 7.05 lb
SCA-X 32 (1¼ in.)	mm in.	295 11.61		55 2.17		50 1.97		85 3.35		70 2.76	3.2 kg 7.05 lb
SCA-X 40 (1½ in.)	mm in.	295 11.61		55 2.17		50 1.97		85 3.35		70 2.76	3.2 kg 7.05 lb

Valve size		C		G				F_{min}		□H	Weight
CHV-X 15 - 40											
CHV-X 15 (½ in.)	mm in.	103 4.06		45 1.77				60 2.36		60 2.36	1.2 kg 2.65 lb
CHV-X 20 (¾ in.)	mm in.	103 4.06		45 1.77				60 2.36		60 2.36	1.2 kg 2.65 lb
CHV-X 25 (1 in.)	mm in.	143 5.63		55 2.17				85 3.35		70 2.76	2.3 kg 5.07 lb
CHV-X 32 (1¼ in.)	mm in.	143 5.63		55 2.17				85 3.35		70 2.76	2.3 kg 5.07 lb
CHV-X 40 (1½ in.)	mm in.	143 5.63		55 2.17				85 3.35		70 2.76	2.3 kg 5.07 lb

Specified weights are approximate values only.

Dimensions and weights

SCA-X/CHV-X 50 - 65 (2 - 2½ in.)

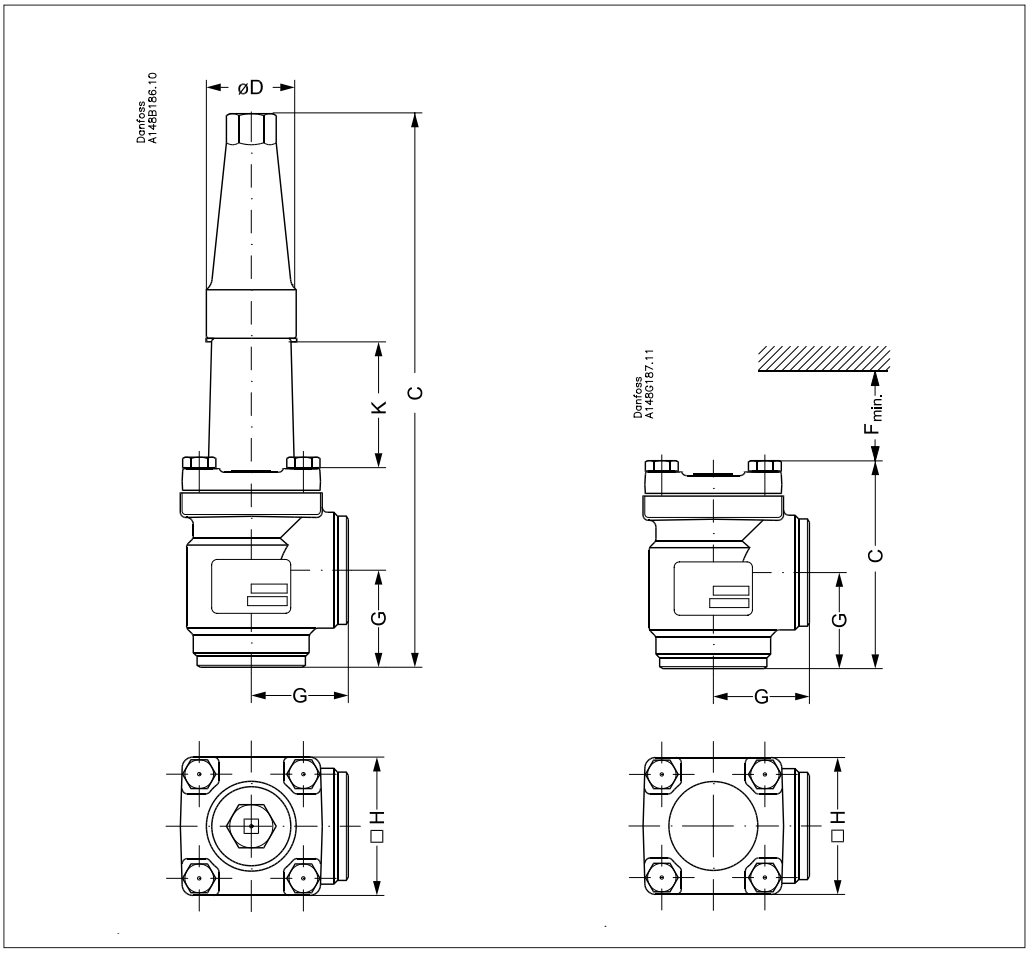

Valve size	K			C		G		∅D	□H		Weight
SCA-X											
SCA-X 50 mm SCA-X (2) in.	70 2.76			315 12.40		60 2.36		50 1.97	77 3.03		3.8 kg 8.40 lb
SCA-X 65 mm SCA-X (2½) in.	70 2.76		12.20	335 13.19		70 2.76	3.94	50 1.97	90 3.54		5.5 kg 12.16 lb

Valve size				C		G		$F_{min.}$	□H		Weight
CHV-X											
CHV-X 50 mm CHV-X (2) in.				132 5.20		60 2.36		92 3.62	77 3.03		3.2 kg 7.10 lb
CHV-X 65 mm CHV-X (2½) in.				152 5.98		70 2.76		107 4.21	90 3.54		4.5 kg 9.95 lb

Specified weights are approximate values only.

Dimensions and weights

SCA-X/CHV-X 80 - 125 (3 - 5 in.)

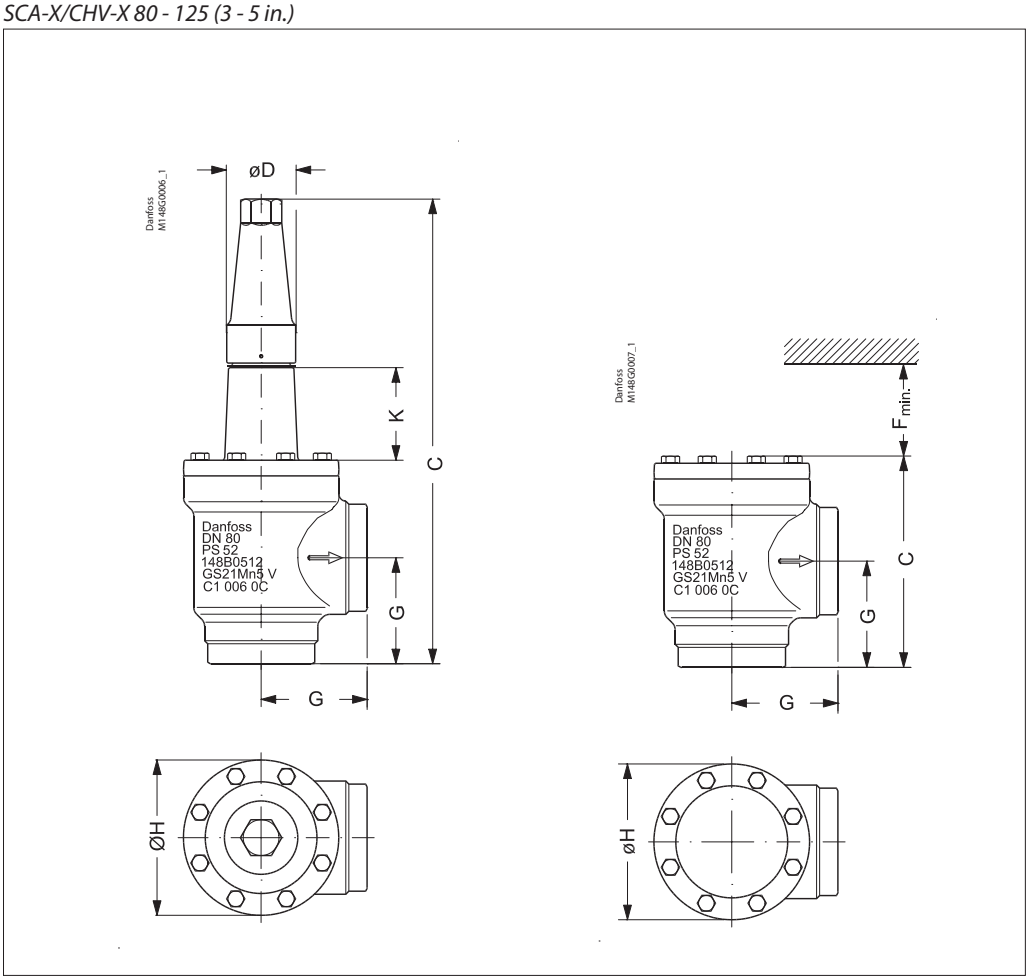

Valve size	K			C		G		ØD		ØH	Weight
SCA-X											
SCA-X 80 mm SCA-X (3) in.	76 3.00			388 15.28		90 3.54		58 2.28		129 5.08	9.7 kg 21.4 lb
SCA-X 100 mm SCA-X (4) in.	90 3.54			437 17.20		106 4.17		58 2.28		156 6.14	15.3 kg 33.7 lb
SCA-X 125 mm SCA-X (5) in.	90 3.54			533 20.98		128 5.04		74 2.91		193 7.60	28.1 kg 61.9 lb

Valve size				C		G			$F_{min.}$	ØH	Weight
CHV-X											
CHV-X 80 mm CHV-X (3) in.				189 7.44		90 3.54			133 5.24	129 5.08	8.7 kg 19.23 lb
CHV-X 100 mm CHV-X (4) in.				223 8.78		106 4.17			163 6.43	156 6.14	14.3 kg 31.60 lb
CHV-X 125 mm CHV-X (5) in.				268 10.55		128 5.04			190 7.48	193 7.60	25.6 kg 56.58 lb

Specified weights are approximate values only.

Connections

DIN

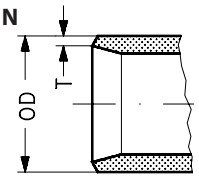

Size mm	Size in.	OD mm	T mm	OD in.	T in.			k_v-angle m^3/h	k_v-straight m^3/h	C_v-angle USgal/min	C_v-straight USgal/min
Butt-weld DIN (EN 10220)											
15	½	21.3	2.3	0.839	0.091			7.0	4.9	8.1	5.7
20	¾	26.9	2.3	1.059	0.091			14.6	10.2	16.9	11.8
25	1	33.7	2.6	1.327	0.103			24.8	17.4	28.8	20.2
32	1¼	42.4	2.6	1.669	0.102			42.6	29.8	49.4	34.6
40	1½	48.3	2.6	1.902	0.103			45.2	31.6	52.4	36.7
50	2	60.3	2.9	2.37	0.11			80	65	93	76
65	2½	76.1	2.9	3	0.11			120	97	140	113
80	3	88.9	3.2	3.50	0.13			182	152	211	176
100	4	114.3	3.6	4.50	0.14			313	278	363	323
125	5	139.7	4.0	5.50	0.16			514	470	596	545

ANSI

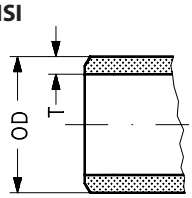

Size mm	Size in.	OD mm	T mm	OD in.	T in.			k_v-angle m^3/h	k_v-straight m^3/h	C_v-angle USgal/min	C_v-straight USgal/min
Butt-weld ANSI (B 36.10 Schedule 80)											
15	½	21.3	3.7	0.839	0.146			7.0	4.9	8.1	5.7
20	¾	26.9	4.0	1.059	0.158			14.6	10.2	16.9	11.8
25	1	33.7	4.6	1.327	0.181			24.8	17.4	28.8	20.2
32	1¼	42.4	4.9	1.669	0.193			42.6	29.8	49.4	34.6
40	1½	48.3	5.1	1.902	0.201			45.2	31.6	52.4	36.7
Butt-weld ANSI (B 36.10 Schedule 40)											
50	2	60.3	3.9	2.37	0.15			80	65	93	76
65	2½	73.0	5.2	2.87	0.20			120	97	140	113
80	3	88.9	5.5	3.50	0.22			182	152	211	176
100	4	114.3	6.0	4.50	0.24			313	278	363	323
125	5	141.3	6.6	5.56	0.26			514	470	596	545

Ordering

Size [DN]	Parts Program						Service kit*	
	Housing				Top complete		O-ring kit for	
	ANG		STR		SCA-X	CHV-X	R717 Heat Pump	R1270 Propylene
	DIN	ANSI	DIN	ANSI				
6								
10								
15	148B6622	148B6612	148B6642	148B6632	148B5769	148B5776	148B6070	148B6077
20	148B6623	148B6613	148B6643	148B6633	148B5769	148B5776	148B6070	148B6077
25	148B6624	148B6614	148B6644	148B6634	148B5770	148B5777	148B6071	148B6078
32	148B6625	148B6615	148B6645	148B6635	148B5770	148B5777	148B6071	148B6078
40	148B6626	148B6616	148B6646	148B6636	148B5770	148B5777	148B6071	148B6078
50	148B6627	148B6617	148B6647	148B6637	148B5771	148B5778	148B6072	148B6079
65	148B6628	148B6618	148B6648	148B6638	148B5772	148B5779	148B6073	148B6080
80	148B6629	148B6619	148B6649	148B6639	148B5773	148B5780	148B6074	148B6081
100	148B6630	148B6620	148B6650	148B6640	148B5774	148B5781	148B6075	148B6082
125	148B6631	148B6621	148B6651	148B6641	148B5775	148B5782	148B6076	148B6083
150								
200								

ENGINEERING TOMORROW

Check & stop valves, type SCA-X SS
Check valves, type CHV-X SS

Contents **Page**

Features . . . 615
Pressure and temperature range . . . 615
Design . . . 616
Technical data . . . 616
Connections . . . 617
Material specification . . . 618
Dimensions and weights . . . 619
Ordering complete valves . . . 620
Important! . . . 620

AI234986440164en-000602 | 2018.11

ENGINEERING TOMORROW

Check & stop valves, type SCA-X SS
Check valves, type CHV-X SS



In certain specific areas such as outdoor applications and corrosive atmospheres, such as coastal installations, there is a need for high surface protection to prevent failure due to corrosion.

Today's food safety standards often call for daily treatment with detergents to protect against bacteria growth, again producing a need for high surface protection.

SCA-X SS are check valves with a built-in stop valve function. CHV-X SS are check valves only.

The valves are designed to open at very low differential pressures, allow favourable flow conditions and are easy to disassemble for inspection and service.

The valve cone has a built-in flexibility to ensure a precise and tight closing towards the valve seat.

A well balanced dampening effect between the piston and the cylinder gives an optimal protection during low loads and against pulsations.

Features

- Applicable to HCFC, HFC, R717 (Ammonia), R744 (CO_2), Propane, Butane, Iso-Butane and Ethane.
  R717 Heat Pump and Propylene applications with replaced O-ring.
- Designed to give favourable flow conditions.
- Internal backseating enables replacement of the spindle seal whilst the valve is active, i.e. under pressure (SCA-SS)
- Housing is made of special cold resistant stainless steel approved for low temperature operations.
- Easy to disassemble for inspection and service.
- Butt-weld DIN and ANSI connections.
- Max. operating pressure:
  52 bar g (754 psig)
- Temperature range:
  –60/+150°C (–76 +302°F).
- Compact and light valves for easy handling and installation.
- Classification: DNV, CRN, BV, EAC etc.
  To get an updated list of certification on the products please contact your local Danfoss Sales Company.

Pressure and temperature range

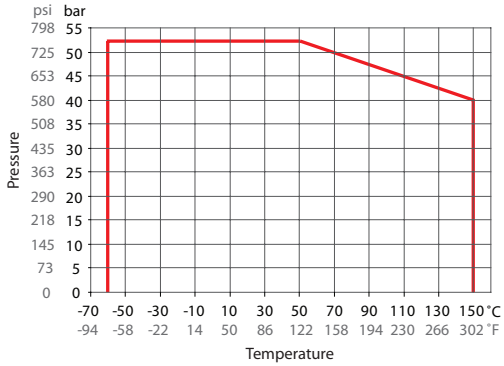

SCA-X SS/CHV-X SS DN15-DN40

Design

Connections
Available with the following connections:
- Butt-weld DIN (EN 10220)
  DN 15 - 40 (½ - 1½ in.)
- Butt-weld ANSI (B 36.19M)
  DN 20 - 40 (¾ - 1½ in.)

Housing
Made of stainless steel approved for low temperature operations.

Valve cone
Valve cone with built in metallic stop - prevents damage to teflon ring in case of overtightening.

Damping chamber
The chamber is filled with refrigerants (gas or liquid), which provides a damping effect when the valve opens and closes.

Spindle (SCA-X SS)
Made of polished stainless steel, which is ideal for O-ring sealing.

Packing Gland (SCA-X SS)
The "full temperature range" packing gland is the standard for the entire SVL platform.
This ensures perfect tightness throughout the whole temperature range:
–60/+150°C (–76/+302°F).

Pressure Equipment Directive (PED)
The SCA-X SS/CHV-X SS valves are approved according to the European standard specified in the Pressure Equipment Directive and are CE marked.

For further details / restrictions - see the product instruction.

Installation
The valve must be mounted vertically with the cone downwards.

The valve is designed to resist very high internal pressure. However, the piping system in general should be designed to avoid liquid traps and reduce the risk of hydraulic pressure caused by thermal expansion.

For further information refer to installation instructions for SCA-X SS/CHV-X SS.

If cold refrigeration oil having low viscosity enters and settles in the damping chamber, problems with the check valve may arise. Consequently, it may be necessary to modify the valve for more viscous liquids by enlarging the hole to the damping chamber.



Example of marking ring, CHV-X SS

SCA-X SS/CHV-X SS valves		
Nominal bore	DN = < 25 mm (1 in.)	DN32-40 mm (1¼ - 1½ in.)
Classified for	Fluid group I	
Category	Article 3, paragraph 3	II

Technical data

- *Refrigerants*
  Applicable to HCFC, HFC, R717 (Ammonia), R744 (CO_2), Propane, Butane, Iso-Butane and Ethane.
  R717 Heat Pump and Propylene applications with replaced O-ring.
  For further information refer to the installation guide for SCA-X SS/CHV-X SS.
- *Temperature range*
  –60/+150°C (–76/+302°F).
- *Max. working pressure*
  52 bar g (754 psig).

Connections

DIN

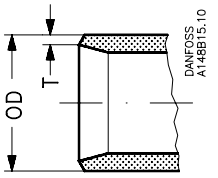

ANSI

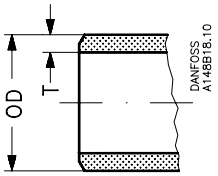

Size		OD	T
Butt-weld DIN (EN 10220)			
15	mm	21.3	2.3
½	in.	0.839	0.091
20	mm	26.9	2.3
¾	in	1.059	0.091
25	mm	33.7	2.6
1	in.	1.327	0.103
32	mm	42.4	2.6
1¼	in.	1.669	0.102
40	mm	48.3	2.6
1½	in.	1.902	0.103

Size		OD	T
Butt-weld ANSI (B 36.19M, SCHEDULE 40)			
20	mm	26.9	2.9
¾	in	1.06	0.11
25	mm	33.7	3.5
1	in.	1.33	0.14
32	mm	42.4	3.6
1¼	in.	1.67	0.14
40	mm	48.3	3.7
1½	in.	1.9	0.15

Material specification

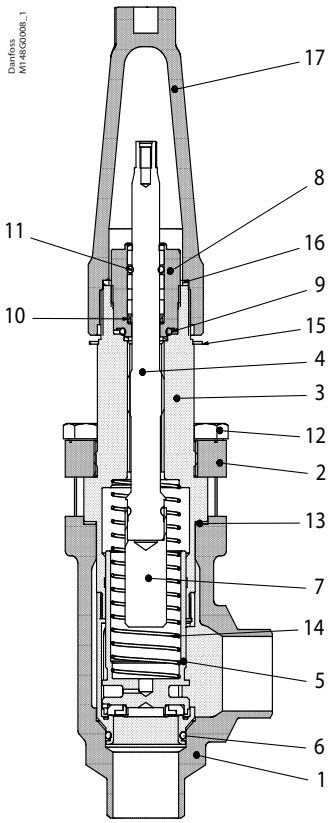

SCA-X SS 15 - 40

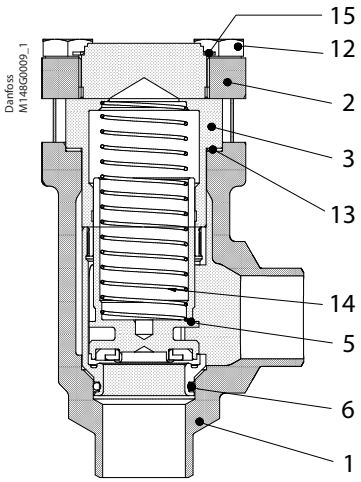

CHV-X SS 15 - 40

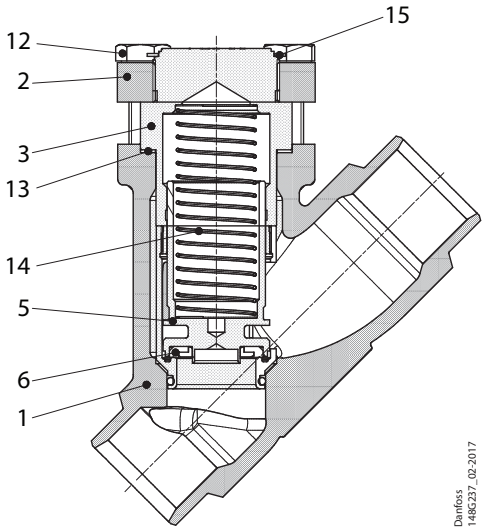

CHV-X SS 15 - 40

No.	Part	Material	DIN/EN	ISO	ASTM
1	Housing	Stainless steel	GX5CrNi19-10 EN10213-4		AISI 304
2	Bonnet, Flange	Stainless steel	X5CrNi18-10 EN10088		AISI 304
3	Bonnet, Insert	Stainless steel	X8CrNiS18-9 DIN 17440		
4	Spindle	Stainless steel	X8CrNiS18-9 DIN 17440	Type 17, 17440	AISI 303
5	Cone	Steel Teflon (PTFE)			
6	O-ring	Cloroprene (Neoprene)			
7	Spindle extension	Steel			
8	Packing gland O-rings	Stainless steel Cloroprene (Neoprene)			
9	Packing washer	Aluminium			
10	Spring loaded seal	Teflon (PTFE)			
11	O-ring	Cloroprene (Neoprene)			
12	Bolts	Stainless steel	A2-70	A2-70	Type 308
13	Gasket	Fiber, non-asbestos			
14	Spring	Steel			
15	Identification ring	Stainless steel			
16	Seal cap gasket	Nylon			
17	Spindle seal cap	Aluminium			

Dimensions and weights

SCA-X SS/CHV-X SS 15 - 40 (½- 1½ in.)

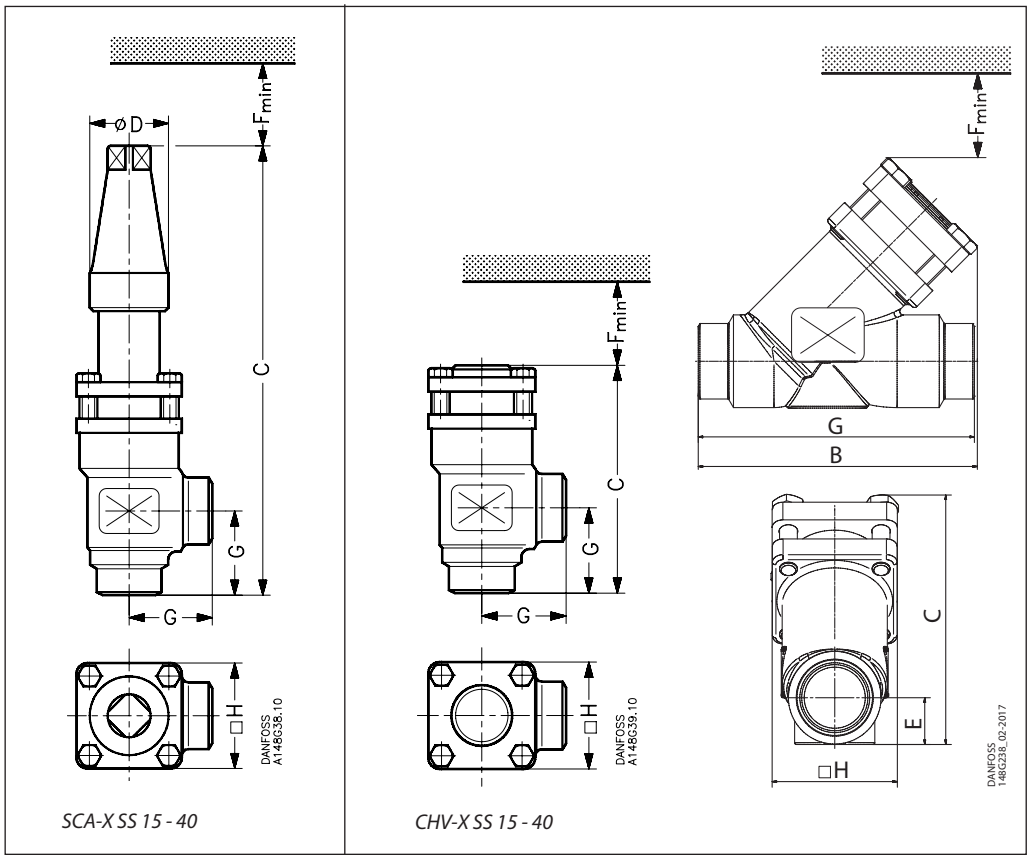

Valve size		C		G		∅D		F_{min}		□H	Weight
SCA-X SS 15 - 40											
SCA-X SS 15 (½ in.)	mm in.	212 8.35		45 1.77		38 1.50		60 2.36		60 2.36	1.6 kg 3.53 lb
SCA-X SS 20 (¾ in.)	mm in.	212 8.35		45 1.77		38 1.50		60 2.36		60 2.36	1.6 kg 3.53 lb
SCA-X SS 25 (1 in.)	mm in.	295 11.61		55 2.17		50 1.97		85 3.35		70 2.76	3.2 kg 7.05 lb
SCA-X SS 32 (1¼ in.)	mm in.	295 11.61		55 2.17		50 1.97		85 3.35		70 2.76	3.2 kg 7.05 lb
SCA-X SS 40 (1½ in.)	mm in.	295 11.61		55 2.17		50 1.97		85 3.35		70 2.76	3.2 kg 7.05 lb
CHV-X SS 15 - 40 Angleway											
CHV-X SS 15 (½ in.)	mm in.	103 4.06		45 1.77				60 2.36		60 2.36	1.2 kg 2.65 lb
CHV-X SS 20 (¾ in.)	mm in.	103 4.06		45 1.77				60 2.36		60 2.36	1.2 kg 2.65 lb
CHV-X SS 25 (1 in.)	mm in.	143 5.63		55 2.17				85 3.35		70 2.76	2.3 kg 5.07 lb
CHV-X SS 32 (1¼ in.)	mm in.	143 5.63		55 2.17				85 3.35		70 2.76	2.3 kg 5.07 lb
CHV-X SS 40 (1½ in.)	mm in.	143 5.63		55 2.17				85 3.35		70 2.76	2.3 kg 5.07 lb

Valve size		C	B	E		G		F_{min}		□H	Weight
CHV-X SS 15 - 40 Straightway											
CHV-X SS 15 (½ in.)	mm in.	99 3.90	114 4.49	19 0.75		120 4.72		60 2.36		60 2.36	1.3kg 2.87lb
CHV-X SS 20 (¾ in.)	mm in.	99 3.90	114 4.49	19 0.75		120 4.72		60 2.36		60 2.36	1.3kg 2.87lb
CHV-X SS 25 (1 in.)	mm in.	141 5.55	157 6.18	26 1.02		155 6.10		85 3.35		70 2.76	2.6kg 5.73lb
CHV-X SS 32 (1¼ in.)	mm in.	141 5.55	157 6.18	26 1.02		155 6.10		85 3.35		70 2.76	2.6kg 5.73lb
CHV-X SS 40 (1½ in.)	mm in.	141 5.55	157 6.18	26 1.02		155 6.10		85 3.35		70 2.76	2.6kg 5.73lb

Specified weights are approximate values only.

Ordering complete valves

How to order
The table below is used to identify the valve required.

Please note that the type codes only serve to identify the valves, some of wich may not form part of the standard product range.

For further information please contact your local Danfoss Sales Company.

Valve type	**SCA-X SS** **CHV-X SS**	Stop Check Valve Check Valve		
			D	**A**
(valve size measured on the connection diameter)	**15**	DN 15	x	
	20	DN 20	x	x
	25	DN 25	x	x
	32	DN 32	x	x
	40	DN 40	x	x
Connections	**D** **A**	Butt-weld connection: DIN EN 10220 Butt-weld connection: ANSI B 36.19M		
Valve housing	**ANG**	Angle flow		
	STR	Straight flow		

Important!
Where products need to be certified according to specific certification societies the relevant information should be included at the time of order.

SCA-X SS Angleway

Butt-weld DIN (EN 10220)

Size		Type	Code No.
mm	in.		
15	½	SCA-X SS 15 D ANG	**148B5293**
20	¾	SCA-X SS 20 D ANG	**148B5381**
25	1	SCA-X SS 25 D ANG	**148B5490**
32	1¼	SCA-X SS 32 D ANG	**148B5585**
40	1½	SCA-X SS 40 D ANG	**148B5664**

Butt-weld ANSI (B 36.19M SCHEDULE 40)

Size		Type	Code No.
mm	in.		
20	¾	SCA-X SS 20 A40 ANG	**148B6489**
25	1	SCA-X SS 25 A40 ANG	**148B6480**
32	1¼	SCA-X SS 32 A40 ANG	**148B6490**
40	1½	SCA-X SS 40 A40 ANG	**148B5687**

CHV-X SS Angleway

Butt-weld DIN (EN 10220)

Size		Type	Code No.
mm	in.		
15	½	CHV-X SS 15 D ANG	**148B5294**
20	¾	CHV-X SS 20 D ANG	**148B5382**
25	1	CHV-X SS 25 D ANG	**148B5491**
32	1¼	CHV-X SS 32 D ANG	**148B5586**
40	1½	CHV-X SS 40 D ANG	**148B5665**

Butt-weld ANSI (B 36.19M SCHEDULE 40)

Size		Type	Code No.
mm	in.		
20	¾	CHV-X SS 20 A40 ANG	**148B6491**
25	1	CHV-X SS 25 A40 ANG	**148B6481**
32	1¼	CHV-X SS 32 A40 ANG	**148B6492**
40	1½	CHV-X SS 40 A40 ANG	**148B5688**

CHV-X SS Straightway

Butt-weld DIN (EN 10220)

Size		Type	Code No.
mm	in.		
15	½	CHV-X SS 15 D STR	**148B5678**
20	¾	CHV-X SS 20 D STR	**148B5679**
25	1	CHV-X SS 25 D STR	**148B5680**
32	1¼	CHV-X SS 32 D STR	**148B6544**
40	1½	CHV-X SS 40 D STR	**148B6566**

Butt-weld ANSI (B 36.19M SCHEDULE 40)

Size		Type	Code No.
mm	in.		
20	¾	CHV-X SS 20 A40 STR	**148B6608**
25	1	CHV-X SS 25 A40 STR	**148B6609**
32	1¼	CHV-X SS 32 A40 STR	**148B6610**
40	1½	CHV-X SS 40 A40 STR	**148B6611**

ANG = Angleway
STR = Straightway

Replacement kit (O-ring replacement) for R717 Ammonia Heat Pump and Propylene applications (including ID tag)*

Size		O-ring kit for	
mm	in.	R717 Heat pump	R1270 Propylene
15	½	**148B6070**	**148B6077**
20	¾		
25	1	**148B6071**	**148B6078**
32	1¼		
40	1½		

* Replacement kits for R717 Ammonia Heat Pump is applicable for continuous operating temperature between +100°C to 150°C (212°F to 302°F)

ENGINEERING
TOMORROW

Check valves
Type NRVA

Contents **Page**

Features 623
Design 623
Technical data 624
Material specification 624
Ordering 624
Flange connections 625
Dimensions and weights 626
Nominal capacities 627

AI241186442960en-000501 | 2017.07

ENGINEERING TOMORROW

Check valves
Type NRVA



Check valve type NRVA can be used in liquid, suction and hot gas lines in refrigeration and air conditioning plant with ammonia.

NRVA can also be used in refrigerating systems with fluorinated refrigerants.

When the NRVA is used in liquid lines where cold, thick oil or impurities may be present, it is recommended that the standard spring be replaced by a special spring. See ordering table.

Features

- Ensures correct direction of flow.
- Valve housing made of steel.
- Available for 40 bar g / 580 psig working pressure.
- Large range of flanges with connection dimensions in accordance with standards: DIN, ANSI, SOC, SA and FPT.
- Fitted with damping piston that makes the valves suitable for installation in lines where pulsation can occur, e.g. in the discharge line from the compressor.
- Classification: DNV, CRN, BV, EAC etc. To get an updated list of certification on the products please contact your local Danfoss Sales Company.

Design

Connections
There is a very wide range of connection possibilities with NRVA check valves:

- Welding, DIN (2448)
- Welding, ANSI (B 36.10)
- Welding socket, ANSI (B 16.11)
- Solder connection, DIN (2856)
- Solder connection, ANSI (B 16.22)
- FPT internal thread, NPT (ANSI/ASME B 1.20.1)

Gaskets:
Do not contain asbestos.

Valve cone:
The valve cone has a teflon tightening ring. Teflon tightening ring renders perfect sealing at a minimum closing force.

Technical data

- *Refrigerants*
  Applicable to HCFC, HFC and R717 (Ammonia).
  For further information please see installation instruction for NRVA.
  Use with flammable hydrocarbons cannot be recommended; please contact Danfoss.
- *Temperature range*
  -50 – 140 °C / -58 – 284 °F.
- *Pressure range*
  The valve is designed for:
  Max. working pressure: 40 bar g / 580 psig.

Material specification

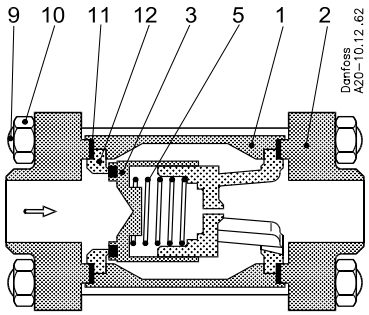

Material specification for NRVA check valves

No.	Part	Material	DIN	ISO	ASTM
1	Housing	Steel	G20Mn5QT *) EN10213-3 --- P285QH EN10222-4		LCC, A352 --- LF2,A350
2	Flanges	Steel	RSt. 37-2, 10025	Fe360 B, 630	Grade C, A 283
3	Valve cone	Stainless steel Teflon			
5	Spring	Steel			
9	Bolts	Stainless steel	A2-70		
10	Nut	Stainless steel			
11	Gasket	Non asbestos			
12	Valve seat	Steel			

*) NRVA 40 / NRVA 50 housing material is TTSt 35N until January 2006

Ordering

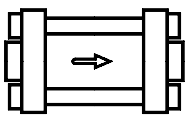

Complete valves incl. DIN 2448 flange:

Type	Weld flange connection	Code no.		Δp [2]				k_v value [3]	C_v value [4]
		Valve	Spec. spring [1]	With standard spring		With spec. spring [1]			
	[in]			[bar[	[psig]	[bar]	[psig]	[m³/h]	[gal/min]
NRVA 15	1/2	**020-2000**	**020-2307**	0.12	1.7	0.3	4.4	5	6
NRVA 20	3/4	**020-2001**	**020-2307**	0.12	1.7	0.3	4.4	6	7
NRVA 25	1	**020-2002**	**020-2317**	0.12	1.7	0.3	4.4	19	22
NRVA 32	1 1/4	**020-2003**	**020-2317**	0.12	1.7	0.3	4.4	20	23
NRVA 40	1 1/2	**020-2004**	**020-2327**	0.07	1.0	0.4	5.8	44	51
NRVA 50	2	**020-2005**	**020-2327**	0.07	1.0	0.4	5.8	44	51
NRVA 65	2 1/2	**020-2006**	**020-2337**	0.07	1.0	0.4	5.8	75	87

[1] A special type spring can be supplied to replace the standard valve spring.
[2] Δp = the minimum pressure differential at which the valve is completely open.
[3] The k_v value is the flow of water in m³/h at a pressure drop across valve of 1 bar, ρ = 1000 kg/m³.
[4] The C_v value is the flow of water in gal/min at a pressure drop across valve of 1 psig, ρ = 10 lbs/gal.

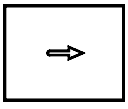

Valve body without flanges:

Type	Code no.
NRVA 15	**020-2020**
NRVA 20	**020-2020**
NRVA 25	**020-2022**
NRVA 32	**020-2022**
NRVA 40	**020-2024**
NRVA 50	**020-2024**
NRVA 65	**020-2026**

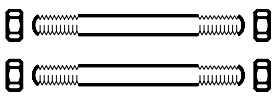

Staybolts and gaskets

Type	Dimensions	Code no.
NRVA 15 / 20	M 12 × 115 mm	**006-1107**
NRVA 25 / 32	M 12 × 148 mm	**006-1135**
NRVA 40 / 50	M 12 × 167 mm	**006-1137**
NRVA 65	M 16 × 200 mm	**006-1138**

Flange connections

Danfoss flange sets excluding gaskets, bolts and nuts, are specially made for the Danfoss product range and must only be used for the purpose described.

Select the valve based on capacity and then select the size of flanges most suitable for the application, which can be mounted on the valve.

DIN

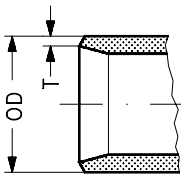

Butt welding DIN (2448)

Size [mm]	Size [in]	OD [mm]	T [mm]	OD [in]	T [in]	Flange type	For use with valve housing size	Code no.
10	3/8	18	2	0.710	0.079	1.3	NRVA 15/20	**027N1112**
15	1/2	22	2.5	0.866	0.098	1.3	NRVA 15/20	**027N1115**
20	3/4	26.9	2.3	1.059	0.091	1.3	NRVA 15/20	**027N1120**
25	1	33.7	2.6	1.327	0.103	4	NRVA 25/32	**027N1026**
32	1 1/4	42.4	2.6	1.669	0.102	4	NRVA 25/32	**027N1033**
40	1 1/2	48.3	2.6	1.902	0.103	6	NRVA 40/50	**027N1042**
50	2	60.3	2.9	2.370	0.110	6	NRVA 40/50	**027N1051**
65	2 1/2	76.1	2.9	3.000	0.110	8	NRVA 65	**027N1055**

ANSI

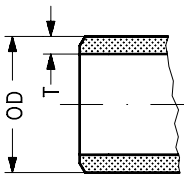

Butt welding ANSI B 36.10

Size [mm]	Size [in]	OD [mm]	T [mm]	OD [in]	T [in]	Flange type	For use with valve housing size	Code no.
10	3/8	17.2	3.2	0.677	0.126	1.3	NRVA 15/20	**027N2020**
15	1/2	21.3	3.7	0.839	0.146	1.3	NRVA 15/20	**027N2021**
20	3/4	26.9	4.0	1.059	0.158	1.3	NRVA 15/20	**027N2022**
25	1	33.7	4.6	1.327	0.181	4	NRVA 25/32	**027N2023**
32	1 1/4	42.4	4.9	1.669	0.193	4	NRVA 25/32	**027N2024**
40	1 1/2	48.3	5.1	1.902	0.201	6	NRVA 40/50	**027N2025**
50	2	60.3	3.9	2.370	0.150	6	NRVA 40/50	**027N2026**
65	2 1/2	73.0	5.2	3.000	0.200	8	NRVA 65	**027N2027**

SOC

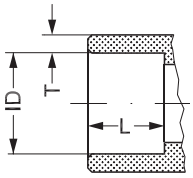

Socket welding ANSI (B 16.11)

Size [mm]	Size [in]	ID [mm]	T [mm]	ID [in]	T [in]	L [mm]	L [in]	Flange type	For use with valve housing size	Code no.
10	3/8	17.8	4.1	0.701	0.161	10	0.394	1.3	NRVA 15/20	**027N2010**
15	1/2	22	4.8	0.866	0.189	10	0.394	1.3	NRVA 15/20	**027N2011**
20	3/4	27.4	5.0	1.079	0.197	13	0.512	4	NRVA 25/32	**027N2012**
25	1	34.1	5.8	1.343	0.228	13	0.512	4	NRVA 25/32	**027N2013**
32	1 1/4	42.9	6.0	1.689	0.236	13	0.512	4	NRVA 25/32	**027N2016**
40	1 1/2	49.0	6.5	1.929	0.254	13	0.512	6	NRVA 40/50	**027N2015**

SA

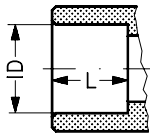

Soldering DIN (2856)

Size [mm]	Size [in]	ID [mm]		ID [in]		L [mm]	L [in]	Flange type	For use with valve housing size	Code no.
16		16.07				15		1.3	NRVA 15/20	**027L1116**
22		22.08				22		1.3	NRVA 15/20	**027L1122**
35		35.07				25		4	NRVA 25/32	**027L2335**
54		54.09				33		4	NRVA 40/50	**027L2554**

Soldering (ANSI B 16.22)

	5/8			0.628			0.807	1.3	NRVA 15/20	**027L1117**
	7/8			0.878			0.866	1.3	NRVA 15/20	**027L1123**
	1 3/8			1.375			0.984	4	NRVA 25/32	**027L2335**
	2 1/8			2.125			1.300	4	NRVA 40/50	**027L2554**

To be continued next page.

Flange connections
(Continued)

FPT

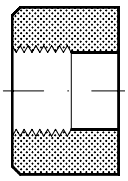

Size [mm]	Size [in]	Inside pipe thread	Flange type	For use with valve housing size	Code no.
FPT inside pipe thread, NPT (ANSI/ASME B 1.20.1)					
10	3/8	(3/8 × 18 NPT)	1.3	NRVA 15/20	**027G1005**
15	1/2	(1/2 × 14 NPT)	1.3	NRVA 15/20	**027G1006**
20	3/4	(3/4 × 14 NPT)	4	NRVA 25/32	**027G1007**

Example
NRVA 32 with 1 1/4" flanges for ANSI butt welding:

NRVA 32 + bolts + flanges (set) =
020-2022 + 006-1135 + 027N2024

NOTE:
The flanges sets are exclusive gaskets, bolts and nuts.

Dimensions and weights

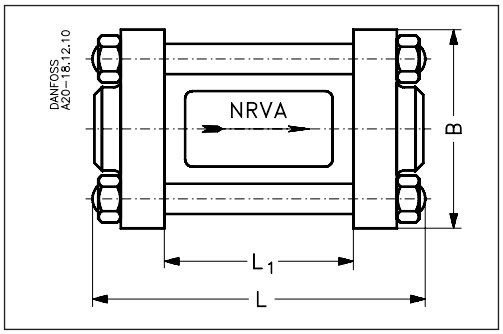

Type		L	L_1 [1])	B	Weight
NRVA 15 – 20	[mm]	115	50	80	1.4 kg
	[in]	4.53	1.97	3.15	3.09 lb
NRVA 25 – 32	[mm]	138	74	∅ 83	3.0 kg
	[in]	5.43	2.91	∅ 3.27	6.61 lb
NRVA 40 – 50	[mm]	172	94.5	∅ 103	5.0 kg
	[in]	6.77	3.72	∅ 4.05	11.02 lb
NRVA 65	[mm]	226	124	∅ 185	13.0 kg
	[in]	8.90	4.88	∅ 7.28	28.66 lb

[1]) Without flanges

Nominal capacities

Liquid line with/without phase change

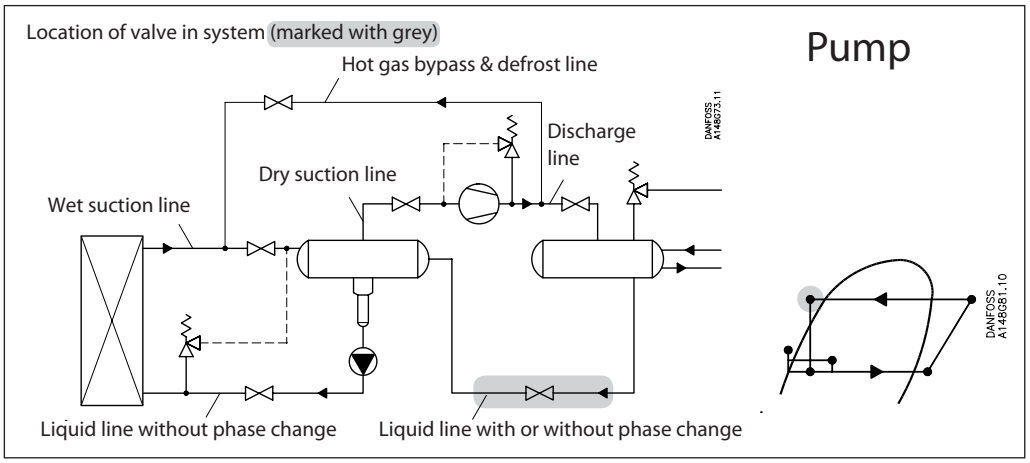

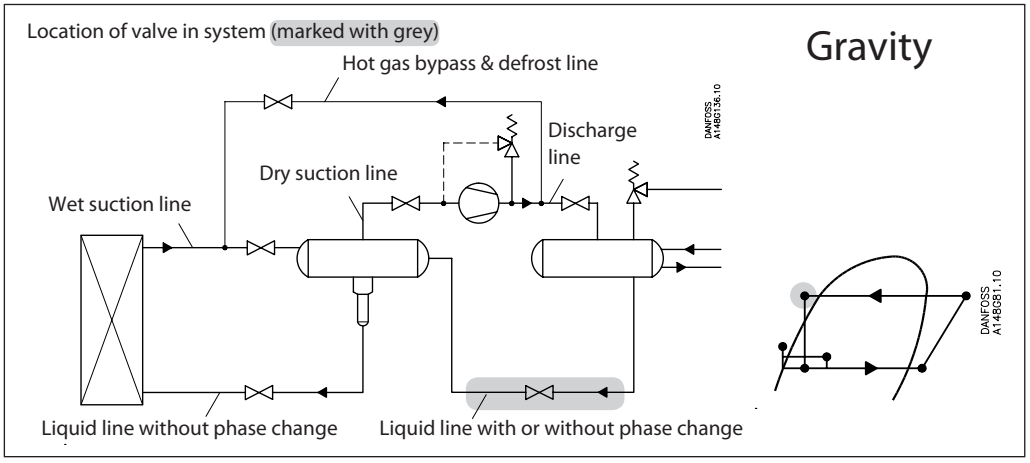

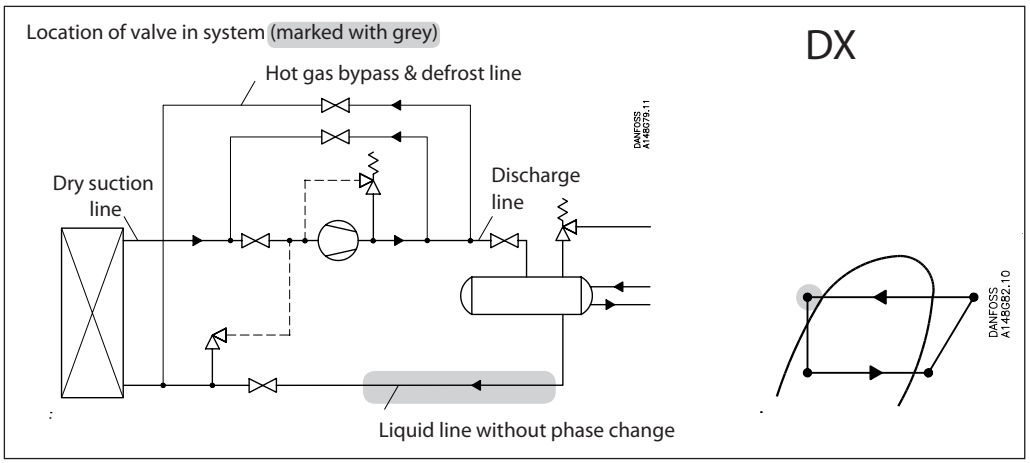

Nominal capacities

Liquid line with / without phase change

SI units

Calculation example (R 134a capacities):

Running conditions in a plant are as follows:
T_e = –20 °C
Q_0 = 300 kW
T_{liq} = 10 °C
Max. ΔP = 0.3 bar

The capacity table is based on nominal conditions (ΔP = 0.2 bar, T_{liq} = 30 °C).

The actual capacity must therefore be corrected to a nominal condition by multiplication with correction factors.

Correction factor for ΔP 0.3 bar $f_{\Delta P}$ = 0.82.
Correction factor for liquid temperature $f_{T liq}$ = 0.82.

$Q_n = Q_o \times f_{\Delta P} \times f_{T liq} = 300 \times 0.82 \times 0.82 = 202$ kW.

From the capacity table a NRVA 25 with Qn = 370 kW is the correct selection for the application.

US units

Calculation example (R 134a capacities):

Running conditions in a plant are as follows:
T_e = -20 °F
Q_o = 130 TR
T_{liq} = 50 °F
Max. ΔP = 5 psi

The capacity table is based on nominal conditions (ΔP = 3 psi, T_{liq} = 90 °F)

The actual capacity must therefore be corrected to a nominal condition by multiplication with correction factors.

Correction factor for ΔP 5 psi, $f_{\Delta P}$ = 0.79
Correction factor for liquid temperature $f_{T liq}$ = 0.81.

$Q_n = Q_o \times f_{\Delta P} \times f_{T liq} = 130 \times 0.79 \times 0.81 = 83.2$ TR

From the capacity table a NRVA 25 with Qn = 100 TR is the correct selection for the application.

Nominal capacities

Liquid line with/without phase change

SI units

Capacity table for nominal conditions, Q_N [kW],
T_{liq} = 30 °C,
ΔP = 0.2 bar

R 717

Type	k_v [m^3/h]	Evaporating temperature T_e							
		-50 °C	-40 °C	-30 °C	-20 °C	-10 °C	0 °C	10 °C	20 °C
NRVA 15	5	504	512	519	526	532	537	542	546
NRVA 20	6	605	614	623	631	638	645	651	655
NRVA 25	19	1916	1945	1973	1998	2022	2042	2060	2075
NRVA 32	20	2016	2048	2077	2104	2128	2150	2169	2185
NRVA 40	44	4436	4505	4569	4628	4682	4730	4771	4806
NRVA 50	44	4436	4505	4569	4628	4682	4730	4771	4806
NRVA 65	75	7562	7678	7787	7889	7981	8062	8133	8192

Correction factor for ΔP ($f_{\Delta P}$)

ΔP (bar)	Correction factor
0.2	**1.00**
0.25	0.89
0.3	0.82
0.4	0.71
0.5	0.63
0.6	0.58

Correction factor for liquid temperature (T_{liq})

Liquid temperature	Correction factor
-20 °C	0.82
-10 °C	0.86
0 °C	0.88
10 °C	0.92
20 °C	0.96
30 °C	**1.00**
40 °C	1.04
50 °C	1.09

US units

Capacity table for nominal conditions, Q_N [Tons of Refrigeration],
T_{liq} = 90 °F,
ΔP = 3 psi

R 717

Type	C_v [USgal/min]	Evaporating temperature T_e							
		-60 °F*	-40 °F	-20 °F	0 °F	20 °F	40 °F	60 °F	80 °F
NRVA 15	6	143.9	145.9	147.7	149.2	150.6	151.7	152.5	153.0
NRVA 20	7	173	175	177	179	181	182	183	184
NRVA 25	22	547	554	561	567	572	576	580	581
NRVA 32	23	576	583	591	597	602	607	610	612
NRVA 40	51	1266	1284	1300	1313	1325	1335	1342	1347
NRVA 50	51	1266	1284	1300	1313	1325	1335	1342	1347
NRVA 65	87	2158	2188	2215	2239	2259	2276	2288	2295

* 2 °F below min. operating temperature.

Correction factor for ΔP ($f_{\Delta P}$)

ΔP (psi)	Correction factor
3	**1.00**
4	0.87
5	0.79
6	0.72
7	0.66
8	0.62

Correction factor for liquid temperature (T_{liq})

Liquid temperature	Correction factor
-10 °F	0.82
10 °F	0.85
30 °F	0.88
50 °F	0.92
70 °F	0.96
90 °F	**1.00**
110 °F	1.04
130 °F	1.09

Nominal capacities

Liquid line with / without phase change

SI units

Capacity table for nominal conditions, Q_N [kW],
T_{liq} = 30 °C,
ΔP = 0.2 bar

R 22

Type	k_v [m³/h]	Evaporating temperature T_e							
		-50 °C	-40 °C	-30 °C	-20 °C	-10 °C	0 °C	10 °C	20 °C
NRVA 15	5	99	102	105	108	111	114	116	118
NRVA 20	6	119	123	126	130	133	136	139	142
NRVA 25	19	376	389	400	411	422	431	440	448
NRVA 32	20	396	409	421	433	444	454	463	472
NRVA 40	44	872	900	927	952	977	999	1020	1038
NRVA 50	44	872	900	927	952	977	999	1020	1038
NRVA 65	75	1486	1534	1580	1623	1665	1703	1738	1769

Correction factor for ΔP ($f_{\Delta P}$)

ΔP (bar)	Correction factor
0.2	**1.00**
0.25	0.89
0.3	0.82
0.4	0.71
0.5	0.63
0.6	0.58

Correction factor for liquid temperature (T_{liq})

Liquid temperature	Correction factor
-20 °C	0.71
-10 °C	0.75
0 °C	0.80
10 °C	0.86
20 °C	0.92
30 °C	**1.00**
40 °C	1.09
50 °C	1.22

US units

Capacity table for nominal conditions, Q_N [Tons of Refrigeration],
T_{liq} = 90 °F,
ΔP = 3 psi

R 22

Type	C_v [USgal/min]	Evaporating temperature T_e							
		-60 °F*	-40 °F	-20 °F	0 °F	20 °F	40 °F	60 °F	80 °F
NRVA 15	6	28	29	30	31	32	32	33	34
NRVA 20	7	34	35	36	37	38	39	40	41
NRVA 25	22	106	110	114	117	120	123	126	129
NRVA 32	23	112	116	120	123	127	130	133	135
NRVA 40	51	246	255	263	271	279	286	292	298
NRVA 50	51	246	255	263	271	279	286	292	298
NRVA 65	87	419	434	449	462	475	487	498	507

* 2 °F below min. operating temperature.

Correction factor for ΔP ($f_{\Delta P}$)

ΔP (psi)	Correction factor
3	**1.00**
4	0.87
5	0.79
6	0.72
7	0.66
8	0.62

Correction factor for liquid temperature (T_{liq})

Liquid temperature	Correction factor
-10 °F	0.73
10 °F	0.77
30 °F	0.82
50 °F	0.87
70 °F	0.93
90 °F	**1.00**
110 °F	1.09
130 °F	1.20

Nominal capacities

Liquid line with/without phase change

SI units

Capacity table for nominal conditions, Q_N [kW],
T_{liq} = 30 °C,
ΔP = 0.2 bar

R 134a

Type	k_v [m³/h]	Evaporating temperature T_e							
		-50 °C	-40 °C	-30 °C	-20 °C	-10 °C	0 °C	10 °C	20 °C
NRVA 15	5	89	93	97	101	105	109	113	36
NRVA 20	6	107	112	117	122	127	131	136	68
NRVA 25	19	338	354	370	385	401	415	429	90
NRVA 32	20	356	373	390	406	422	437	452	158
NRVA 40	44	783	820	857	893	928	962	994	260
NRVA 50	44	783	820	857	893	928	962	994	389
NRVA 65	75	1335	1398	1461	1522	1582	1639	1695	678

Correction factor for ΔP ($f_{\Delta P}$)

ΔP (bar)	Correction factor
0.2	**1.00**
0.25	0.89
0.3	0.82
0.4	0.71
0.5	0.63
0.6	0.58

Correction factor for liquid temperature (T_{liq})

Liquid temperature	Correction factor
-20 °C	0.66
-10 °C	0.70
0 °C	0.76
10 °C	0.82
20 °C	0.90
30 °C	**1.00**
40 °C	1.13
50 °C	1.29

US units

Capacity table for nominal conditions, Q_N [Tons of Refrigeration],
T_{liq} = 90 °F,
ΔP = 3 psi

R 134a

Type	C_v [USgal/min]	Evaporating temperature T_e							
		-60 °F*	-40 °F	-20 °F	0 °F	20 °F	40 °F	60 °F	80 °F
NRVA 15	6	25	26	28	29	30	32	33	10
NRVA 20	7	30	32	33	35	36	38	39	20
NRVA 25	22	95	100	105	110	115	120	124	26
NRVA 32	23	100	106	111	116	121	126	131	46
NRVA 40	51	220	232	244	255	266	278	288	75
NRVA 50	51	220	232	244	255	266	278	288	112
NRVA 65	87	376	396	416	435	454	473	490	196

* 2 °F below min. operating temperature.

Correction factor for ΔP ($f_{\Delta P}$)

ΔP (psi)	Correction factor
3	**1.00**
4	0.87
5	0.79
6	0.72
7	0.66
8	0.62

Correction factor for liquid temperature (T_{liq})

Liquid temperature	Correction factor
-10 °F	0.64
10 °F	0.68
30 °F	0.74
50 °F	0.81
70 °F	0.89
90 °F	**1.00**
110 °F	1.15
130 °F	1.35

Nominal capacities

Liquid line with/without phase change

SI units

Capacity table for nominal conditions, Q_N [kW],
T_{liq} = 30 °C,
ΔP = 0.2 bar

R 404A

Type	k_v [m^3/h]	Evaporating temperature T_e							
		-50 °C	-40 °C	-30 °C	-20 °C	-10 °C	0 °C	10 °C	20 °C
NRVA 15	5	57.2	61.3	65.3	69.2	73.0	76.6	79.9	82.8
NRVA 20	6	68.7	73.6	78.4	83.1	87.6	91.9	95.8	99.4
NRVA 25	19	217.5	232.9	248.2	263.1	277.4	290.9	303.5	314.7
NRVA 32	20	228.9	245.2	261.3	276.9	292.0	306.3	319.5	331.2
NRVA 40	44	503.6	539.4	574.8	609.2	642.4	673.8	702.8	728.7
NRVA 50	44	503.6	539.4	574.8	609.2	642.4	673.8	702.8	728.7
NRVA 65	75	858.5	919.4	979.7	1038.4	1094.9	1148.5	1198.0	1242.1

Correction factor for ΔP ($f_{\Delta P}$)

ΔP (bar)	Correction factor
0.2	**1.00**
0.25	0.89
0.3	0.82
0.4	0.71
0.5	0.63
0.6	0.58

Correction factor for liquid temperature (T_{liq})

Liquid temperature	Correction factor
-20 °C	0.55
-10 °C	0.60
0 °C	0.66
10 °C	0.74
20 °C	0.85
30 °C	**1.00**
40 °C	1.23
50 °C	1.68

US units

Capacity table for nominal conditions, Q_N [Tons of Refrigeration],
T_{liq} = 90 °F,
ΔP = 3 psi

R 404A

Type	C_v [USgal/min]	Evaporating temperature T_e							
		-60 °F*	-40 °F	-20 °F	0 °F	20 °F	40 °F	60 °F	80 °F
NRVA 15	6	15.7	17.0	18.2	19.5	20.7	21.8	22.8	23.7
NRVA 20	7	18.8	20.4	21.9	23.4	24.8	26.1	27.4	28.4
NRVA 25	22	59.6	64.5	69.3	74.0	78.5	82.7	86.8	89.9
NRVA 32	23	62.8	67.9	73.0	77.9	82.6	87.0	91.3	94.7
NRVA 40	51	138.1	149.4	160.6	171.4	181.7	191.4	200.9	208.2
NRVA 50	51	138.1	149.4	160.6	171.4	181.7	191.4	200.9	208.2
NRVA 65	87	235.4	254.7	273.7	292.2	309.8	326.3	342.5	355.0

* 2 °F below min. operating temperature.

Correction factor for ΔP ($f_{\Delta P}$)

ΔP (psi)	Correction factor
3	**1.00**
4	0.87
5	0.79
6	0.72
7	0.66
8	0.62

Correction factor for liquid temperature (T_{liq})

Liquid temperature	Correction factor
-10 °F	0.52
10 °F	0.57
30 °F	0.63
50 °F	0.72
70 °F	0.83
90 °F	**1.00**
110 °F	1.29
130 °F	1.92

Nominal capacities

Liquid line without phase change

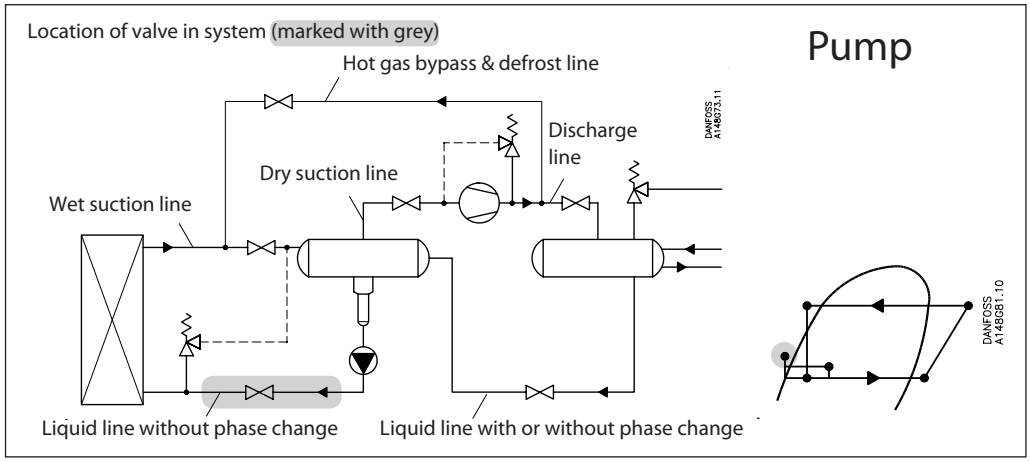

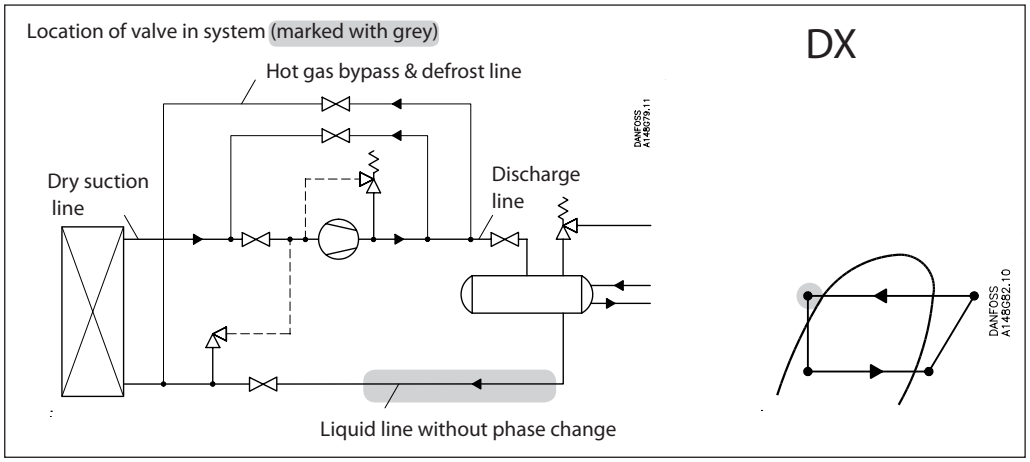

Nominal capacities

Liquid line without phase change

SI units

Calculation example (R 134a capacities):

Running conditions in a plant are as follows:

T_e = -20 °C
Q_0 = 300 kW
circulation rate = 3
Max. ΔP = 0.3 bar

The capacity table is based on nominal conditions (pressure drop ΔP = 0.2 bar, circulation rate = 4).

The actual capacity must therefore be corrected to a nominal condition by multiplication with correction factors.

Correction factor for ΔP 0.3 bar $f_{\Delta P} = 0.82$
Correction factor for circulation rate $f_{rec} = 0.75$.

$Q_n = Q_0 \times f_{\Delta p} \times f_{rec} = 300 \times 0.82 \times 0.75 = 184.5$ kW

From the capacity table a NRVA 40 with Q_n = 336 kW is the correct selection for the application.

US units

Calculation example (R 134a capacities):

Running conditions in a plant are as follows:

T_e = -20 °F
Q_0 = 130 TR
Circulation rate = 3
Max. ΔP = 5 psi

The capacity table is based on nominal conditions (pressure drop Δp = 3 psi, circulation rate = 4).

The actual capacity must therefore be corrected to a nominal condition by multiplication with correction factors.

Correction factor for ΔP 5 psi $f_{\Delta p} = 0.79$
Correction factor for circulation rate $f_{rec} = 0.75$.

$Q_n = Q_0 \times f_{\Delta P} \times f_{circ} = 130 \times 0.79 \times 0.75 = 77.0$ TR

From the capacity table a NRVA 40 with Q_n = 101 TR is the correct selection for the application.

Nominal capacities

Liquid line without phase change

SI units

Capacity table for nominal conditions, Q_N [kW], circulation rate = 4, ΔP = 0.2 bar

R 717

Type	k_v [m³/h]	Evaporating temperature T_e							
		-50 °C	-40 °C	-30 °C	-20 °C	-10 °C	0 °C	10 °C	20 °C
NRVA 15	5	182.5	177.1	171.9	166.4	160.7	154.9	148.8	142.5
NRVA 20	6	219	213	206	200	193	186	179	171
NRVA 25	19	693	673	653	632	611	589	566	541
NRVA 32	20	730	708	687	665	643	620	595	570
NRVA 40	44	1606	1559	1512	1464	1414	1363	1310	1254
NRVA 50	44	1606	1559	1512	1464	1414	1363	1310	1254
NRVA 65	75	2737	2657	2578	2495	2411	2324	2232	2137

Correction factor for ΔP ($f_{\Delta P}$)

ΔP (bar)	Correction factor
0.2	**1.00**
0.25	0.89
0.3	0.82
0.4	0.71
0.5	0.63
0.6	0.58

Correction factor for circulation rate (f_{rec})

Circulation rate	Correction factor
2	0.5
3	0.75
4	**1**
6	1.5
8	2
10	2.5

US units

Capacity table for nominal conditions, Q_N [Tons of Refrigeration], circulation rate = 4, ΔP = 3 psi

R 717

Type	C_v [USgal/min]	Evaporating temperature T_e							
		-60 °F*	-40 °F	-20 °F	0 °F	20 °F	40 °F	60 °F	80 °F
NRVA 15	6	52.8	51.1	49.5	47.8	45.9	44.0	41.9	39.8
NRVA 20	7	63.3	61.4	59.4	57.4	55.1	52.8	50.3	47.8
NRVA 25	22	200.5	194.4	188.2	181.7	174.5	167.3	159.2	151.4
NRVA 32	23	211	205	198	191	184	176	168	159
NRVA 40	51	464	450	436	421	404	387	369	351
NRVA 50	51	464	450	436	421	404	387	369	351
NRVA 65	87	792	767	743	717	689	660	628	598

* 2 °F below min. operating temperature.

Correction factor for ΔP ($f_{\Delta P}$)

ΔP (psi)	Correction factor
3	**1.00**
4	0.87
5	0.79
6	0.72
7	0.66
8	0.62

Correction factor for circulation rate (f_{rec})

Circulation rate	Correction factor
2	0.5
3	0.75
4	**1**
6	1.5
8	2
10	2.5

Nominal capacities

Liquid line without phase change

SI units

Capacity table for nominal conditions, Q_N [kW], circulation rate = 4, ΔP = 0.2 bar

R 22

Type	k_v [m^3/h]	Evaporating temperature T_e							
		-50 °C	-40 °C	-30 °C	-20 °C	-10 °C	0 °C	10 °C	20 °C
NRVA 15	5	45	43	41	40	38	36	34	32
NRVA 20	6	53	52	50	48	46	43	41	39
NRVA 25	19	169	163	157	151	144	137	130	122
NRVA 32	20	178	172	166	159	152	145	137	128
NRVA 40	44	392	378	364	350	334	318	301	283
NRVA 50	44	392	378	364	350	334	318	301	283
NRVA 65	75	668	645	621	596	570	542	513	482

Correction factor for ΔP ($f_{\Delta P}$)

ΔP (bar)	Correction factor
0.2	**1.00**
0.25	0.89
0.3	0.82
0.4	0.71
0.5	0.63
0.6	0.58

Correction factor for circulation rate (f_{rec})

Circulation rate	Correction factor
2	0.5
3	0.75
4	**1**
6	1.5
8	2
10	2.5

US units

Capacity table for nominal conditions, Q_N [Tons of Refrigeration], circulation rate = 4, ΔP = 3 psi

R 22

Type	C_v [USgal/min]	Evaporating temperature T_e							
		-60 °F*	-40 °F	-20 °F	0 °F	20 °F	40 °F	60 °F	80 °F
NRVA 15	6	12.9	12.4	11.9	11.4	10.8	10.2	9.5	8.8
NRVA 20	7	15	15	14	14	13	12	11	11
NRVA 25	22	49	47	45	43	41	39	36	34
NRVA 32	23	52	50	48	46	43	41	38	35
NRVA 40	51	114	109	105	100	95	90	84	78
NRVA 50	51	114	109	105	100	95	90	84	78
NRVA 65	87	193	186	179	171	162	153	143	133

* 2 °F below min. operating temperature.

Correction factor for ΔP ($f_{\Delta P}$)

ΔP (psi)	Correction factor
3	**1.00**
4	0.87
5	0.79
6	0.72
7	0.66
8	0.62

Correction factor for circulation rate (f_{rec})

Circulation rate	Correction factor
2	0.5
3	0.75
4	**1**
6	1.5
8	2
10	2.5

Nominal capacities

Liquid line without phase change

SI units

Capacity table for nominal conditions, Q_N [kW], circulation rate = 4, ΔP = 0.2 bar

R 134a

Type	k_v [m³/h]	Evaporating temperature T_e							
		-50 °C	-40 °C	-30 °C	-20 °C	-10 °C	0 °C	10 °C	20 °C
NRVA 15	5	41.2	39.7	38.2	36.6	34.8	33.0	31.1	32
NRVA 20	6	49	48	46	44	42	40	37.4	39
NRVA 25	19	157	151	145	139	132	126	118	122
NRVA 32	20	165	159	153	146	139	132	125	128
NRVA 40	44	363	350	336	322	307	291	274	283
NRVA 50	44	363	350	336	322	307	291	274	283
NRVA 65	75	618	596	573	549	523	496	467	482

Correction factor for ΔP ($f_{\Delta P}$)

ΔP (bar)	Correction factor
0.2	**1.00**
0.25	0.89
0.3	0.82
0.4	0.71
0.5	0.63
0.6	0.58

Correction factor for circulation rate (f_{rec})

Circulation rate	Correction factor
2	0.5
3	0.75
4	**1**
6	1.5
8	2
10	2.5

US units

Capacity table for nominal conditions, Q_N [Tons of Refrigeration], circulation rate = 4, ΔP = 3 psi

R 134a

Type	C_v [USgal/min]	Evaporating temperature T_e							
		-60 °F*	-40 °F	-20 °F	0 °F	20 °F	40 °F	60 °F	80 °F
NRVA 15	6	11.9	11.4	10.9	10.4	9.9	9.2	8.6	8.8
NRVA 20	7	14.3	13.7	13.1	12.5	11.8	11.1	10.3	11
NRVA 25	22	45	43	42	40	37	35	33	34
NRVA 32	23	48	46	44	42	39	37	34	35
NRVA 40	51	105	101	96	92	87	81	76	78
NRVA 50	51	105	101	96	92	87	81	76	78
NRVA 65	87	179	172	164	156	148	138	129	133

* 2 °F below min. operating temperature.

Correction factor for ΔP ($f_{\Delta P}$)

ΔP (psi)	Correction factor
3	**1.00**
4	0.87
5	0.79
6	0.72
7	0.66
8	0.62

Correction factor for circulation rate (f_{rec})

Circulation rate	Correction factor
2	0.5
3	0.75
4	**1**
6	1.5
8	2
10	2.5

Nominal capacities

Liquid line without phase change

SI units

Capacity table for nominal conditions, Q_N [kW], circulation rate = 4, ΔP = 0.2 bar

R 404A

Type	k_v [m^3/h]	Evaporating temperature T_e							
		-50 °C	-40 °C	-30 °C	-20 °C	-10 °C	0 °C	10 °C	20 °C
NRVA 15	5	36	35	33	31	30	28	26	23
NRVA 20	6	43	42	39	38	35	33	31	28
NRVA 25	19	138	132	125	119	112	105	97	89
NRVA 32	20	145	139	131	125	118	111	102	93
NRVA 40	44	319	306	289	276	260	244	225	205
NRVA 50	44	319	306	289	276	260	244	225	205
NRVA 65	75	543	521	492	470	444	415	384	350

Correction factor for ΔP ($f_{\Delta P}$)

ΔP (bar)	Correction factor
0.2	**1.00**
0.25	0.89
0.3	0.82
0.4	0.71
0.5	0.63
0.6	0.58

Correction factor for circulation rate (f_{rec})

Circulation rate	Correction factor
2	0.5
3	0.75
4	**1**
6	1.5
8	2
10	2.5

US units

Capacity table for nominal conditions, Q_N [Tons of Refrigeration], circulation rate = 4, ΔP = 3 psi

R 404A

Type	C_v [USgal/min]	Evaporating temperature T_e							
		-60 °F*	-40 °F	-20 °F	0 °F	20 °F	40 °F	60 °F	80 °F
NRVA 15	6	10.5	10.0	9.5	9.0	8.4	7.8	7.0	6.2
NRVA 20	7	13	12	11	11	10	9	8	7
NRVA 25	22	40	38	36	34	32	30	27	24
NRVA 32	23	42	40	38	36	34	31	28	25
NRVA 40	51	92	88	83	79	74	68	62	55
NRVA 50	51	92	88	83	79	74	68	62	55
NRVA 65	87	158	151	142	134	126	117	105	93

* 2 °F below min. operating temperature.

Correction factor for ΔP ($f_{\Delta P}$)

ΔP (psi)	Correction factor
3	**1.00**
4	0.87
5	0.79
6	0.72
7	0.66
8	0.62

Correction factor for circulation rate (f_{rec})

Circulation rate	Correction factor
2	0.5
3	0.75
4	**1**
6	1.5
8	2
10	2.5

Nominal capacities

Wet suction line

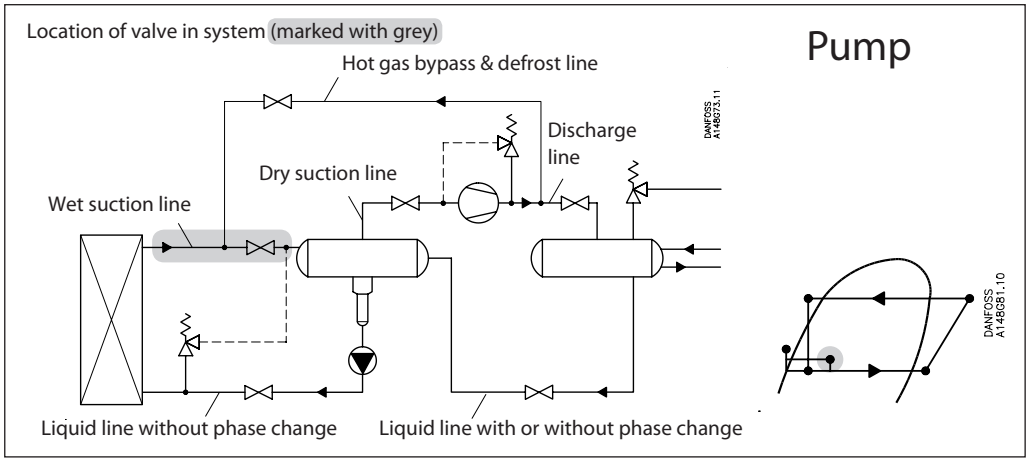

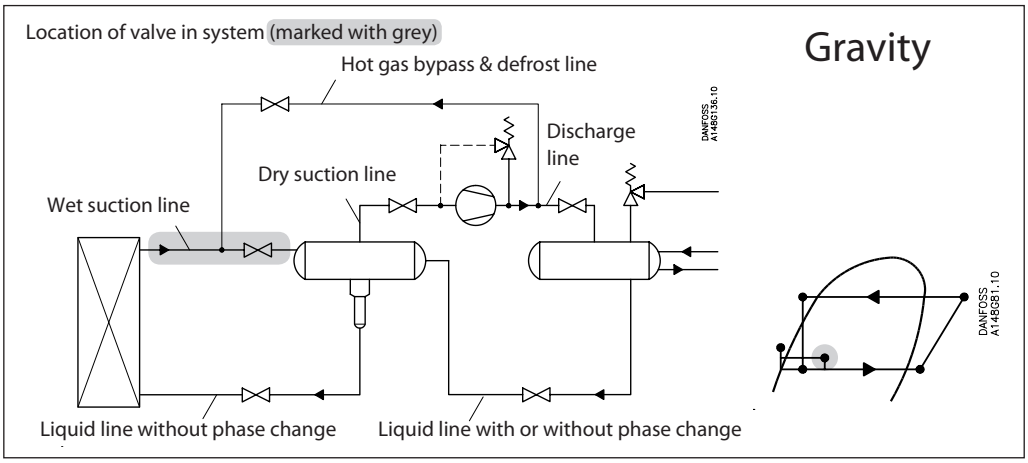

Nominal capacities

Wet suction line

SI units

Calculation example (R 717 capacities):

Running conditions in a plant are as follows:

T_e = -20 °C
Q_0 = 100 kW
Circulation rate = 3
Max. ΔP = 0.3 bar

The capacity table is based on nominal conditions (pressure drop ΔP = 0.2 bar, circulation rate = 4).

The actual capacity must therefore be corrected to a nominal condition by multiplication with correction factors.

Correction factor for ΔP 0.3 bar $f_{\Delta P}$ = 0.82
Correction factor for circulation rate f_{rec} = 0.9.

$Q_n = Q_0 \times f_{\Delta P} \times f_{rec} = 100 \times 0.82 \times 0.9 = 73{,}8$ kW.

From the capacity table a NRVA 40 with Q_n = 157 kW is the correct selection for the application.

Choosing NRVA 32 would give a slightly higher pressure drop than 0.3. Accepting this requires a plant evaluation.

US units

Calculation example (R 717 capacities):

Running conditions in a plant are as follows:

T_e = - 20 °F
Q_0 = 10 TR
Circulation rate = 3
Max. ΔP = 5 psi

The capacity table is based on nominal conditions (pressure drop ΔP = 3 psi, circulation rate = 4).

The actual capacity must therefore be corrected to a nominal condition by multiplication with correction factors.

Correction factor for ΔP 5 psi $f_{\Delta p}$ = 0.79
Correction factor for circulation rate f_{rec} = 0.9.

$Q_n = Q_0 \times f_{\Delta P} \times f_{circ} = 10 \times 0.79 \times 0.9 = 7.1$ TR

From the capacity table a NRVA 25 with Q_n = 16.5 TR is the correct selection for the application.

Nominal capacities

Wet suction line

SI units

Capacity table for nominal conditions, Q_N [kW], circulation rate = 4, ΔP = 0.2 bar

R 717

Type	k_v [m^3/h]	Evaporating temperature T_e							
		-50 °C	-40 °C	-30 °C	-20 °C	-10 °C	0 °C	10 °C	20 °C
NRVA 15	5	9.1	11.8	14.7	17.9	21.3	24.9	28.7	32.6
NRVA 20	6	11.0	14.2	17.6	21.4	25.5	29.9	34.5	39.2
NRVA 25	19	34.7	45.0	55.9	67.9	80.9	94.7	109.1	124.0
NRVA 32	20	36.6	47.3	58.8	71.5	85.1	99.7	115	131
NRVA 40	44	80.4	104.1	129.4	157	187	219	253	287
NRVA 50	44	80.4	104	129	157	187	219	253	287
NRVA 65	75	137	178	221	268	319	374	431	490

Correction factor for ΔP ($f_{\Delta P}$)

ΔP (bar)	Correction factor
0.2	**1.00**
0.25	0.89
0.3	0.82
0.4	0.71
0.5	0.63
0.6	0.58

Correction factor for circulation rate (f_{rec})

Circulation rate	Correction factor
2	0.77
3	0.90
4	**1**
6	1.13
8	1.20
10	1.25

US units

Capacity table for nominal conditions, Q_N [Tons of Refrigeration], circulation rate = 4, ΔP = 3 psi

R 717

Type	C_v [USgal/min]	Evaporating temperature T_e							
		-60 °F*	-40 °F	-20 °F	0 °F	20 °F	40 °F	60 °F	80 °F
NRVA 15	6	2.5	3.4	4.3	5.4	6.5	7.7	8.9	10.1
NRVA 20	7	3.1	4.1	5.2	6.5	7.8	9.2	10.7	12.1
NRVA 25	22	9.7	13.0	16.5	20.5	24.7	29.2	33.8	38.5
NRVA 32	23	10.2	13.7	17.3	21.6	26.0	30.8	35.5	40.5
NRVA 40	51	22.4	30.1	38.1	47.5	57.2	67.7	78.2	89.1
NRVA 50	51	22.4	30.1	38.1	47.5	57.2	67.7	78.2	89.1
NRVA 65	87	38.2	51.3	65.0	80.9	97.6	115	133	152

* 2 °F below min. operating temperature.

Correction factor for ΔP ($f_{\Delta P}$)

ΔP (psi)	Correction factor
3	**1.00**
4	0.87
5	0.79
6	0.72
7	0.66
8	0.62

Correction factor for circulation rate (f_{rec})

Circulation rate	Correction factor
2	0.77
3	0.90
4	**1**
6	1.13
8	1.20
10	1.25

Nominal capacities

Wet suction line

SI units

Capacity table for nominal conditions, Q_N [kW], circulation rate = 4, ΔP = 0.2 bar

R 22

Type	k_v [m^3/h]	Evaporating temperature T_e							
		-50 °C	-40 °C	-30 °C	-20 °C	-10 °C	0 °C	10 °C	20 °C
NRVA 15	5	4.5	5.5	6.5	7.7	8.9	10.0	11.2	12.4
NRVA 20	6	5.3	6.6	7.9	9.2	10.6	12.1	13.5	14.9
NRVA 25	19	16.9	21	25	29	34	38	43	47
NRVA 32	20	17.8	22	26	31	35	40	45	50
NRVA 40	44	39	48	58	68	78	88	99	109
NRVA 50	44	39	48	58	68	78	88	99	109
NRVA 65	75	67	82	98	115	133	151	168	186

Correction factor for ΔP ($f_{\Delta P}$)

ΔP (bar)	Correction factor
0.2	**1.00**
0.25	0.89
0.3	0.82
0.4	0.71
0.5	0.63
0.6	0.58

Correction factor for circulation rate (f_{rec})

Circulation rate	Correction factor
2	0.77
3	0.90
4	**1**
6	1.13
8	1.20
10	1.25

US units

Capacity table for nominal conditions, Q_N [Tons of Refrigeration], circulation rate = 4, ΔP = 3 psi

R 22

Type	C_v [USgal/min]	Evaporating temperature T_e							
		-60 °F*	-40 °F	-20 °F	0 °F	20 °F	40 °F	60 °F	80 °F
NRVA 15	6	1.3	1.6	1.9	2.3	2.7	3.0	3.4	3.8
NRVA 20	7	1.5	1.9	2.3	2.7	3.2	3.6	4.1	4.6
NRVA 25	22	4.8	6.0	7.3	8.7	10.1	11.5	13.1	14.4
NRVA 32	23	5.0	6.3	7.7	9.2	10.6	12.2	13.8	15.2
NRVA 40	51	11.1	13.9	16.9	20	23	27	30	33
NRVA 50	51	11.1	13.9	16.9	20	23	27	30	33
NRVA 65	87	18.9	24	29	34	40	46	52	57

* 2 °F below min. operating temperature.

Correction factor for ΔP ($f_{\Delta P}$)

ΔP (psi)	Correction factor
3	**1.00**
4	0.87
5	0.79
6	0.72
7	0.66
8	0.62

Correction factor for circulation rate (f_{rec})

Circulation rate	Correction factor
2	0.77
3	0.90
4	**1**
6	1.13
8	1.20
10	1.25

Nominal capacities

Wet suction line

SI units

Capacity table for nominal conditions, Q_N [kW], circulation rate = 4, ΔP = 0.2 bar

R 134a

Type	k_v [m³/h]	Evaporating temperature T_e							
		-50 °C	-40 °C	-30 °C	-20 °C	-10 °C	0 °C	10 °C	20 °C
NRVA 15	5	3.3	4.6	5.7	6.7	7.7	8.8	9.8	12.4
NRVA 20	6	4.0	5.5	6.8	8.0	9.3	10.5	11.8	14.9
NRVA 25	19	12.6	17.3	22	25	29	33	37	47
NRVA 32	20	13.3	18.2	23	27	31	35	39	50
NRVA 40	44	29	40.1	50	59	68	77	87	109
NRVA 50	44	29	40.1	50	59	68	77	87	109
NRVA 65	75	50	68.4	85	100	116	132	148	186

Correction factor for ΔP ($f_{\Delta P}$)

ΔP (bar)	Correction factor
0.2	**1.00**
0.25	0.89
0.3	0.82
0.4	0.71
0.5	0.63
0.6	0.58

Correction factor for circulation rate (f_{rec})

Circulation rate	Correction factor
2	0.77
3	0.90
4	**1**
6	1.13
8	1.20
10	1.25

US units

Capacity table for nominal conditions, Q_N [Tons of Refrigeration], circulation rate = 4, ΔP = 3 psi

R 134a

Type	C_v [USgal/min]	Evaporating temperature T_e							
		-60 °F*	-40 °F	-20 °F	0 °F	20 °F	40 °F	60 °F	80 °F
NRVA 15	6	1.0	1.3	1.7	2.0	2.4	2.7	3.1	3.8
NRVA 20	7	1.2	1.6	2.0	2.4	2.8	3.3	3.7	4.6
NRVA 25	22	3.7	5.1	6.4	7.7	9.0	10.3	11.6	14.4
NRVA 32	23	3.8	5.4	6.8	8.1	9.4	10.9	12.2	15.2
NRVA 40	51	8.5	11.8	14.9	17.8	21	24	27	33
NRVA 50	51	8.5	11.8	14.9	17.8	21	24	27	33
NRVA 65	87	14.4	20	25	30	35	41	46	57

* 2 °F below min. operating temperature.

Correction factor for ΔP ($f_{\Delta P}$)

ΔP (psi)	Correction factor
3	**1.00**
4	0.87
5	0.79
6	0.72
7	0.66
8	0.62

Correction factor for circulation rate (f_{rec})

Circulation rate	Correction factor
2	0.77
3	0.90
4	**1**
6	1.13
8	1.20
10	1.25

Nominal capacities

Wet suction line

SI units

Capacity table for nominal conditions, Q_N [kW], circulation rate = 4, ΔP = 0.2 bar

R 404A

Type	k_v [m³/h]	Evaporating temperature T_e							
		-50 °C	-40 °C	-30 °C	-20 °C	-10 °C	0 °C	10 °C	20 °C
NRVA 15	5	4.6	5.5	6.5	7.6	8.7	9.8	10.8	11.7
NRVA 20	6	5.5	6.7	7.8	9.1	10.4	11.7	12.9	14.0
NRVA 25	19	17.4	21.1	24.7	28.9	33.0	37.1	40.9	44.4
NRVA 32	20	18.3	22.2	26.1	30.4	34.7	39.0	43.1	46.7
NRVA 40	44	40.3	48.8	57.3	66.9	76.4	85.8	94.8	102.8
NRVA 50	44	40.3	48.8	57.3	66.9	76.4	85.8	94.8	102.8
NRVA 65	75	68.7	83.2	97.7	114.0	130.3	146.3	161.6	175.3

Correction factor for ΔP ($f_{\Delta P}$)

ΔP (bar)	Correction factor
0.2	**1.00**
0.25	0.89
0.3	0.82
0.4	0.71
0.5	0.63
0.6	0.58

Correction factor for circulation rate (f_{rec})

Circulation rate	Correction factor
2	0.77
3	0.90
4	**1**
6	1.13
8	1.20
10	1.25

US units

Capacity table for nominal conditions, Q_N [Tons of Refrigeration], circulation rate = 4, ΔP = 3 psi

R 404A

Type	C_v [USgal/min]	Evaporating temperature T_e							
		-60 °F*	-40 °F	-20 °F	0 °F	20 °F	40 °F	60 °F	80 °F
NRVA 15	6	1.3	1.6	1.9	2.3	2.6	2.9	3.3	3.5
NRVA 20	7	1.6	1.9	2.3	2.7	3.1	3.5	3.9	4.2
NRVA 25	22	4.9	6.1	7.3	8.6	9.9	11.2	12.4	13.4
NRVA 32	23	5.2	6.4	7.7	9.0	10.4	11.8	13.1	14.1
NRVA 40	51	11.4	14.1	16.9	19.9	22.9	25.9	28.8	31.1
NRVA 50	51	11.4	14.1	16.9	19.9	22.9	25.9	28.8	31.1
NRVA 65	87	19.4	24.1	28.8	33.9	39.1	44.1	49.1	52.9

* 2 °F below min. operating temperature.

Correction factor for ΔP ($f_{\Delta P}$)

ΔP (psi)	Correction factor
3	**1.00**
4	0.87
5	0.79
6	0.72
7	0.66
8	0.62

Correction factor for circulation rate (f_{rec})

Circulation rate	Correction factor
2	0.77
3	0.90
4	**1**
6	1.13
8	1.20
10	1.25

Nominal capacities

Dry suction line

Pump

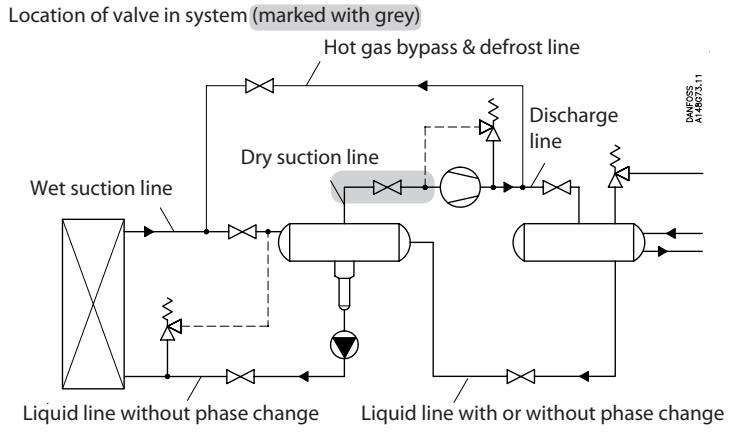

Gravity

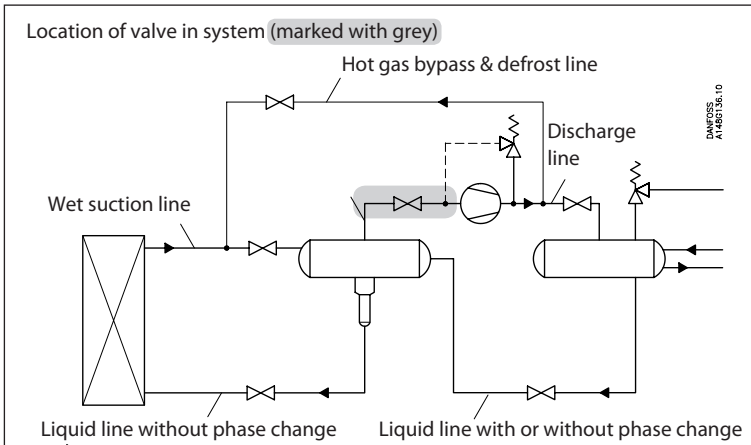

DX

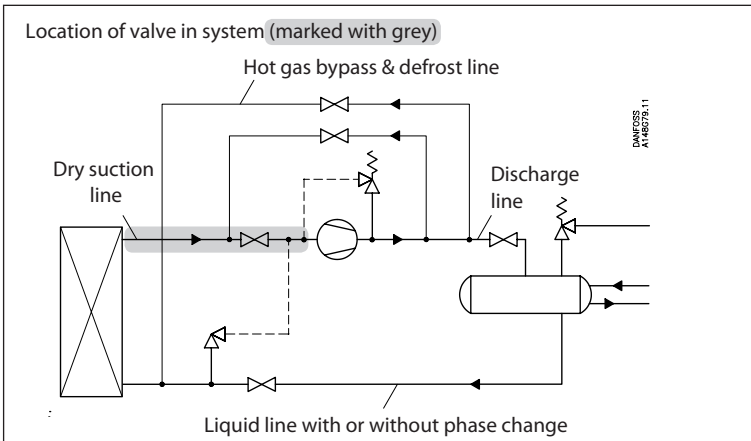

Nominal capacities

Dry suction line

SI units

Calculation example (R 134a capacities):

Running conditions in a plant are as follows:

T_e = -20 °C
Q_0 = 90 kW
T_{liq} = 10 °C
T_s = 6 °C
Max. ΔP = 0.3 bar

The capacity table is based on nominal conditions (pressure drop ΔP = 0.2 bar, T_{liq} = 30 °C), T_s = 10 °C

The actual capacity must therefore be corrected to a nominal condition by multiplication with correction factors.

Correction factor for ΔP 0.3 bar $f_{\Delta P}$ = 0.82
Correction factor for liquid temperature f_{Tliq} = 0.82
Correction factor for superheat (T_S) = 1,0

$Q_n = Q_0 \times f_{\Delta P} \times f_{Tliq} \times f_{Ts}$
$= 90 \times 0.82 \times 0.82 \times 1.0 = 60.5$ kW

From the capacity table a NRVA 40 or NRVA 50 with Q_n = 65 kW is the correct selection depending on connections for the application.

US units

Calculation example (R 134a capacities):

Running conditions in a plant are as follows:

T_e = 0 °F
Q_0 = 23 TR
T_{liq} = 50 °F
T_s = 10 °F
Max. ΔP = 5 psi

The capacity table is based on nominal conditions (pressure drop ΔP = 3 psi, T_{liq} = 90 °F), T_s = 14 °F

The actual capacity must therefore be corrected to a nominal condition by multiplication with correction factors.

Correction factor for ΔP 5 psi $f_{\Delta p}$ = 0.79
Correction factor for liquid temperature f_{Tliq} = 0.81
Correction factor for superheat (T_S) = 1,0

$Q_n = Q_0 \times f_{\Delta P} \times f_{Tliq} \times f_{Ts}$ =
23 x 0.79 x 0.81 x 1.0 = 14.7 TR

From the capacity table a NRVA 40 or NRVA 50 with Q_n = 19.3 TR is the correct selection depending on connections for the application.

Nominal capacities

Dry suction line

SI units

Capacity table for nominal conditions, Q_N [kW],
T_{liq} = 30 °C,
ΔP = 0.2 bar

R 717

Type	k_v [m³/h]	Evaporating temperature T_e							
		-50 °C	-40 °C	-30 °C	-20 °C	-10 °C	0 °C	10 °C	20 °C
NRVA 15	5	12.9	17.0	21.8	27.5	33.7	41.0	49.0	57.9
NRVA 20	6	15.5	20.4	26.2	32.9	40.5	49.2	58.9	69.5
NRVA 25	19	49.0	64.7	82.8	104.3	128.2	155.7	186	220
NRVA 32	20	51.6	68.1	87.2	109.8	135	164	196	232
NRVA 40	44	113.5	149.7	192	242	297	361	432	510
NRVA 50	44	113	150	192	242	297	361	432	510
NRVA 65	75	193	255	327	412	506	615	736	869

Correction factor for ΔP ($f_{\Delta P}$)

ΔP (bar)	Correction factor
0.2	**1.00**
0.25	0.89
0.3	0.82
0.4	0.71
0.5	0.63
0.6	0.58

Correction factor for superheat (T_S)

T_s	Correction factor
6 °C	1.00
8 °C	1.00
10 °C	1.00
12 °C	1.00

Correction factor for liquid temperature (T_{liq})

Liquid temperature	Correction factor
-20 °C	0.82
-10 °C	0.86
0 °C	0.88
10 °C	0.92
20 °C	0.96
30 °C	**1.00**
40 °C	1.04
50 °C	1.09

US units

Capacity table for nominal conditions, Q_N [Tons of Refrigeration],
T_{liq} = 90 °F,
ΔP = 3 psi

R 717

Type	C_v [USgal/min]	Evaporating temperature T_e							
		-60 °F*	-40 °F	-20 °F	0 °F	20 °F	40 °F	60 °F	80 °F
NRVA 15	6	3.6	4.9	6.4	8.2	10.4	12.8	15.4	18.3
NRVA 20	7	4.3	5.9	7.7	9.8	12.4	15.4	18.5	22.0
NRVA 25	22	13.6	18.7	24.4	31.2	39.4	48.6	58.5	69.7
NRVA 32	23	14.3	19.7	25.7	32.8	41.4	51.2	61.5	73.3
NRVA 40	51	31.5	43.2	56.5	72.2	91.2	112.6	135.4	161
NRVA 50	51	31.5	43.2	56.5	72.2	91.2	113	135	161
NRVA 65	87	53.6	73.7	96.3	123	155	192	231	275

* 2 °F below min. operating temperature.

Correction factor for ΔP ($f_{\Delta P}$)

ΔP (psi)	Correction factor
3	**1.00**
4	0.87
5	0.79
6	0.72
7	0.66
8	0.62

Correction factor for superheat (T_S)

T_s	Correction factor
10 °F	1.00
14 °F	1.00
18 °F	1.00
20 °F	1.00

Correction factor for liquid temperature (T_{liq})

Liquid temperature	Correction factor
-10 °F	0.82
10 °F	0.85
30 °F	0.88
50 °F	0.92
70 °F	0.96
90 °F	**1.00**
110 °F	1.04
130 °F	1.09

Nominal capacities

Dry suction line

SI units

Capacity table for nominal conditions, Q_N [kW],
T_{liq} = 30 °C,
ΔP = 0.2 bar

R 22

Type	k_v [m³/h]	Evaporating temperature T_e							
		-50 °C	-40 °C	-30 °C	-20 °C	-10 °C	0 °C	10 °C	20 °C
NRVA 15	5	5.1	6.6	8.3	10.4	12.7	15.3	18.2	21.4
NRVA 20	6	6.1	7.9	10.0	12.5	15.2	18.3	22	26
NRVA 25	19	19.3	25	32	40	48	58	69	81
NRVA 32	20	20	26	33	42	51	61	73	85
NRVA 40	44	45	58	73	92	112	134	160	188
NRVA 50	44	45	58	73	92	112	134	160	188
NRVA 65	75	76	99	125	156	190	229	272	320

Correction factor for ΔP ($f_{\Delta P}$)

ΔP (bar)	Correction factor
0.2	**1.00**
0.25	0.89
0.3	0.82
0.4	0.71
0.5	0.63
0.6	0.58

Correction factor for superheat (T_S)

T_s	Correction factor
6 °C	1.00
8 °C	1.00
10 °C	1.00
12 °C	1.00

Correction factor for liquid temperature (T_{liq})

Liquid temperature	Correction factor
-20 °C	0.71
-10 °C	0.75
0 °C	0.80
10 °C	0.86
20 °C	0.92
30 °C	**1.00**
40 °C	1.09
50 °C	1.22

US units

Capacity table for nominal conditions, Q_N [Tons of Refrigeration],
T_{liq} = 90 °F,
ΔP = 3 psi

R 22

Type	C_v [USgal/min]	Evaporating temperature T_e							
		-60 °F*	-40 °F	-20 °F	0 °F	20 °F	40 °F	60 °F	80 °F
NRVA 15	6	1.4	1.9	2.4	3.1	3.8	4.7	5.7	6.8
NRVA 20	7	1.7	2.2	2.9	3.7	4.6	5.6	6.8	8.1
NRVA 25	22	5.3	7.1	9.2	11.7	14.5	17.7	22	26
NRVA 32	23	5.6	7.5	9.7	12.3	15.3	18.6	23	27
NRVA 40	51	12.3	16.4	21	27	34	41	50	60
NRVA 50	51	12.3	16.4	21	27	34	41	50	60
NRVA 65	87	21	28	36	46	57	70	86	102

* 2 °F below min. operating temperature.

Correction factor for ΔP ($f_{\Delta P}$)

ΔP (psi)	Correction factor
3	**1.00**
4	0.87
5	0.79
6	0.72
7	0.66
8	0.62

Correction factor for superheat (T_S)

T_s	Correction factor
10 °F	1.00
14 °F	1.00
18 °F	1.00
20 °F	1.00

Correction factor for liquid temperature (T_{liq})

Liquid temperature	Correction factor
-10 °F	0.73
10 °F	0.77
30 °F	0.82
50 °F	0.87
70 °F	0.93
90 °F	**1.00**
110 °F	1.09
130 °F	1.20

Nominal capacities

Dry suction line

R 134a

SI units

Capacity table for nominal conditions, Q_N [kW],
T_{liq} = 30 °C,
ΔP = 0.2 bar

Type	k_v [m³/h]	Evaporating temperature T_e							
		-50 °C	-40 °C	-30 °C	-20 °C	-10 °C	0 °C	10 °C	20 °C
NRVA 15	5	4.3	5.7	7.4	9.4	11.7	14.3	17.3	21.4
NRVA 20	6	5.2	6.9	8.9	11.2	14.0	17.2	21	26
NRVA 25	19	16.4	22	28	36	44	54	66	81
NRVA 32	20	17.3	23	30	37	47	57	69	85
NRVA 40	44	38	50	65	82	103	126	153	188
NRVA 50	44	38	50	65	82	103	126	153	188
NRVA 65	75	65	86	111	140	175	215	260	320

Correction factor for ΔP ($f_{\Delta P}$)

ΔP (bar)	Correction factor
0.2	**1.00**
0.25	0.89
0.3	0.82
0.4	0.71
0.5	0.63
0.6	0.58

Correction factor for superheat (T_S)

T_s	Correction factor
6 °C	1.00
8 °C	1.00
10 °C	1.00
12 °C	1.00

Correction factor for liquid temperature (T_{liq})

Liquid temperature	Correction factor
-20 °C	0.66
-10 °C	0.70
0 °C	0.76
10 °C	0.82
20 °C	0.90
30 °C	**1.00**
40 °C	1.13
50 °C	1.29

R 134a

US units

Capacity table for nominal conditions, Q_N [Tons of Refrigeration],
T_{liq} = 90 °F,
ΔP = 3 psi

Type	C_v [USgal/min]	Evaporating temperature T_e							
		-60 °F*	-40 °F	-20 °F	0 °F	20 °F	40 °F	60 °F	80 °F
NRVA 15	6	1.2	1.7	2.2	2.8	3.6	4.6	5.6	6.8
NRVA 20	7	1.5	2.0	2.6	3.4	4.3	5.5	6.7	8.1
NRVA 25	22	4.6	6.3	8.3	10.8	13.7	17.3	21	26
NRVA 32	23	4.9	6.6	8.8	11.4	14.4	18.3	22	27
NRVA 40	51	10.7	14.6	19.3	25	32	40	49	60
NRVA 50	51	10.7	14.6	19.3	25	32	40	49	60
NRVA 65	87	18.3	25	33	43	54	68	84	102

* 2 °F below min. operating temperature.

Correction factor for ΔP ($f_{\Delta P}$)

ΔP (psi)	Correction factor
3	**1.00**
4	0.87
5	0.79
6	0.72
7	0.66
8	0.62

Correction factor for superheat (T_S)

T_s	Correction factor
10 °F	1.00
14 °F	1.00
18 °F	1.00
20 °F	1.00

Correction factor for liquid temperature (T_{liq})

Liquid temperature	Correction factor
-10 °F	0.64
10 °F	0.68
30 °F	0.74
50 °F	0.81
70 °F	0.89
90 °F	**1.00**
110 °F	1.15
130 °F	1.35

Nominal capacities

Dry suction line

SI units

Capacity table for nominal conditions, Q_N [kW],
T_{liq} = 30 °C,
ΔP = 0.2 bar

R 404A

Type	k_v [m³/h]	Evaporating temperature T_e							
		-50 °C	-40 °C	-30 °C	-20 °C	-10 °C	0 °C	10 °C	20 °C
NRVA 15	5	3.8	5.1	6.7	8.6	10.7	13.2	16.1	19.4
NRVA 20	6	4.6	6.1	8.0	10.3	12.8	15.8	19.3	23.3
NRVA 25	19	14.5	19.4	25.3	32.5	40.6	50.2	61.2	73.7
NRVA 32	20	15.3	20.4	26.7	34.3	42.8	52.8	64.4	77.6
NRVA 40	44	33.6	44.9	58.7	75.4	94	116	142	171
NRVA 50	44	33.6	44.9	59	75	94	116	142	171
NRVA 65	75	57.3	77	100	128	160	198	241	291

Correction factor for ΔP ($f_{\Delta P}$)

ΔP (bar)	Correction factor
0.2	**1.00**
0.25	0.89
0.3	0.82
0.4	0.71
0.5	0.63
0.6	0.58

Correction factor for superheat (T_S)

T_s	Correction factor
6 °C	1.00
8 °C	1.00
10 °C	1.00
12 °C	1.00

Correction factor for liquid temperature (T_{liq})

Liquid temperature	Correction factor
-20 °C	0.55
-10 °C	0.60
0 °C	0.66
10 °C	0.74
20 °C	0.85
30 °C	**1.00**
40 °C	1.23
50 °C	1.68

US units

Capacity table for nominal conditions, Q_N [Tons of Refrigeration],
T_{liq} = 90 °F,
ΔP = 3 psi

R 404A

Type	C_v [USgal/min]	Evaporating temperature T_e							
		-60 °F*	-40 °F	-20 °F	0 °F	20 °F	40 °F	60 °F	80 °F
NRVA 15	6	1.0	1.4	1.9	2.5	3.2	4.0	5.1	6.2
NRVA 20	7	1.2	1.7	2.3	3.0	3.8	4.8	6.1	7.4
NRVA 25	22	3.9	5.4	7.3	9.5	12.2	15.3	19.3	23.5
NRVA 32	23	4.1	5.7	7.6	10.0	12.8	16.1	20.3	24.7
NRVA 40	51	9.1	12.5	16.8	22.0	28.2	35.4	44.6	54.4
NRVA 50	51	9.1	12.5	16.8	22.0	28.2	35.4	44.6	54.4
NRVA 65	87	15.5	21.4	28.7	37.5	48.0	60	76	93

* 2 °F below min. operating temperature.

Correction factor for ΔP ($f_{\Delta P}$)

ΔP (psi)	Correction factor
3	**1.00**
4	0.87
5	0.79
6	0.72
7	0.66
8	0.62

Correction factor for superheat (T_S)

T_s	Correction factor
10 °F	1.00
14 °F	1.00
18 °F	1.00
20 °F	1.00

Correction factor for liquid temperature (T_{liq})

Liquid temperature	Correction factor
-10 °F	0.52
10 °F	0.57
30 °F	0.63
50 °F	0.72
70 °F	0.83
90 °F	**1.00**
110 °F	1.29
130 °F	1.92

Nominal capacities

Discharge line

Pump

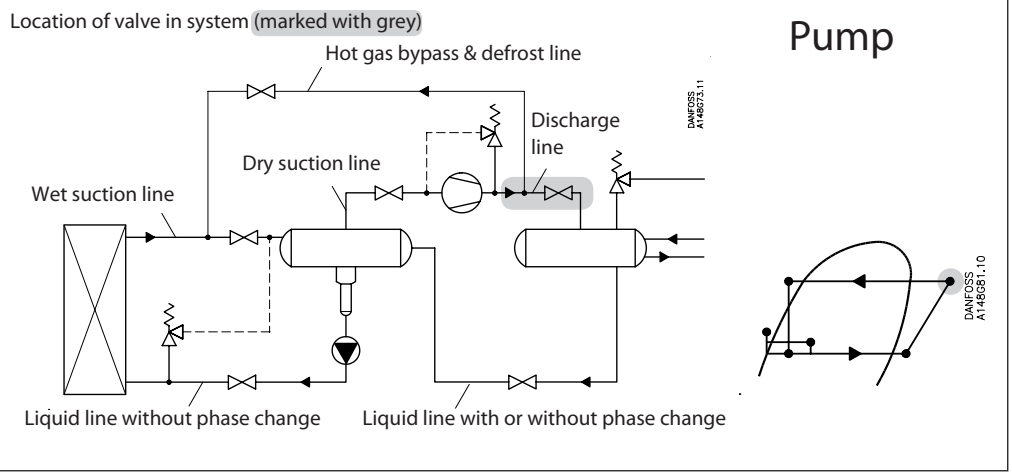

Gravity

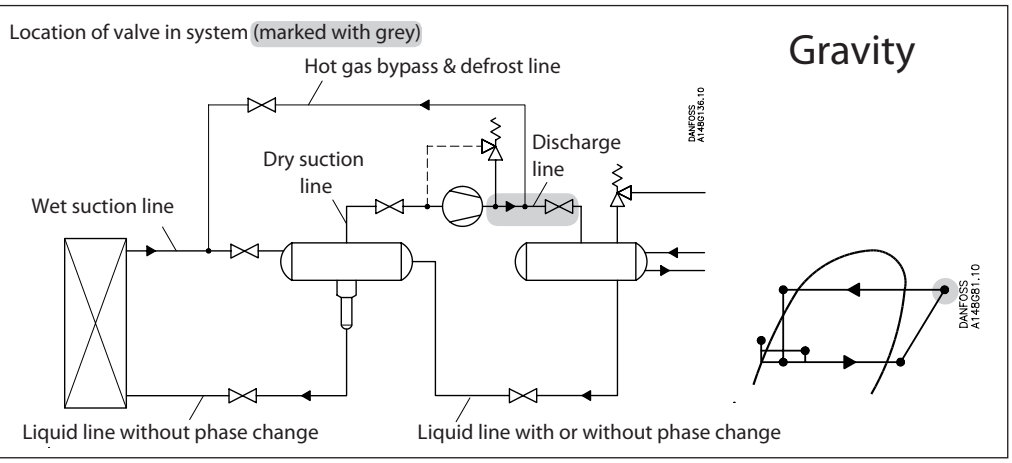

DX

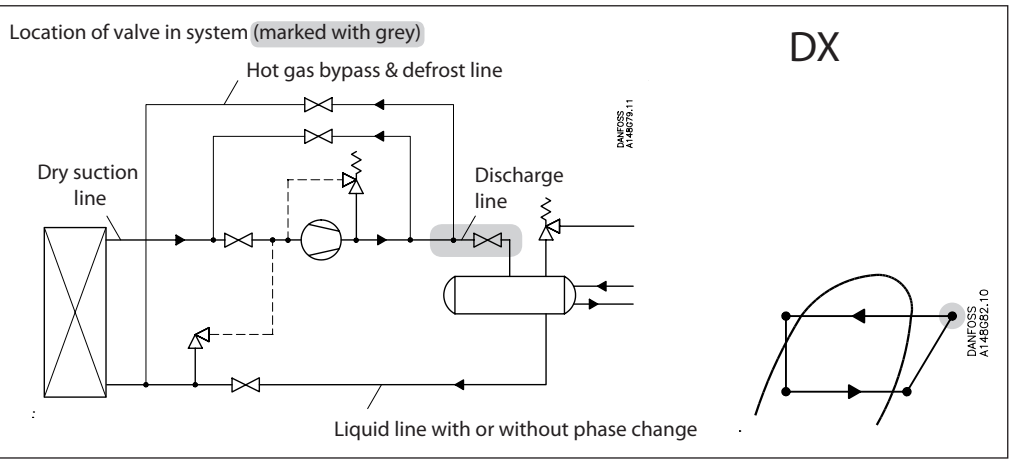

Nominal capacities

Discharge line

SI units

Calculation example (R 717 capacities):

Running conditions in a plant are as follows:

T_e = -20 °C
Q_o = 90 kW
T_{liq} = 10 °C
Max. ΔP = 0.4 bar
T_{disch} = 60 °C

The capacity table is based on nominel conditions (ΔP = 0.2 bar, T_{liq} = 30 °C, P_{disch}= 12 bar, T_{disch} = 80 °C).

The actual capacity must therefore be corrected to a nominal condition by multiplication with correction factors.

Correction factor for ΔP 0.4 bar $f_{\Delta P}$ = 0.72.
Correction factor for liquid temperature f_{Tliq} = 0.92.
Correction factor for T_{disch} 60 °C, f_{disch} = 0.97.
Correction factor for P_{disch} 12 bar, f_{pdisch} = 1.0.

$Q_n = Q_o \times f_{\Delta P} \times f_{Tliq} \times f_{Tdisch} \times f_{Pdisch}$
$= 90 \times 0.72 \times 0.92 \times 0.97 \times 1.0 = 58$ kW.

From the capacity table a NRVA 20 with Q_n = 67.5 kW is the correct selection for the application.

US units

Calculation example (R 717 capacities):

Running conditions in a plant are as follows:

T_e = 0 °F
Q_o = 18 TR
T_{liq} = 50 °F
Max. ΔP = 7 psi
T_{disch} = 120 °F

The capacity table is based on nominel conditions (ΔP = 3 psi, T_{liq} = 90 °F, P_{disch}= 185 psi, T_{disch} = 180 °F).

The actual capacity must therefore be corrected to a nominal condition by multiplication with correction factors.

Correction factor for ΔP 7 psi $f_{\Delta P}$ = 0.67.
Correction factor for liquid temperature f_{Tliq} = 0.92.
Correction factor for T_{disch} 120 °F, f_{disch} = 0.95.
Correction factor for P_{disch} 185 psi, f_{pdisch} = 1.0.

$Q_n = Q_o \times f_{\Delta P} \times f_{Tliq} \times f_{circ} \times f_{Pdisch}$
$= 18 \times 0.67 \times 0.92 \times 0.95 \times 1.0 = 10.5$ TR

From the capacity table a NRVA 15 with Q_n= 16.4 TR is the correct selection for the application.

Nominal capacities

Discharge line

SI units

Capacity table for nominal conditions, Q_N [kW],
T_{liq} = 30 °C,
$P_{disch.}$ = 12 bar,
ΔP = 0.2 bar,
$T_{disch.}$ = 80 °C

R 717

Type	k_v [m³/h]	Evaporating temperature T_e							
		-50 °C	-40 °C	-30 °C	-20 °C	-10 °C	0 °C	10 °C	20 °C
NRVA 15	5	53.9	54.8	55.5	56.3	56.9	57.5	58.0	58.4
NRVA 20	6	64.7	65.7	66.6	67.5	68.3	69.0	69.6	70.1
NRVA 25	19	205	208	211	214	216	218	220	222
NRVA 32	20	216	219	222	225	228	230	232	234
NRVA 40	44	475	482	489	495	501	506	510	514
NRVA 50	44	475	482	489	495	501	506	510	514
NRVA 65	75	809	821	833	844	854	862	870	876

Correction factor for discharge pressure (P_{disch})

P_{disch} (bar)	Correction factor
12	**1.00**
16	0.87
20	0.78

Correction factor for ΔP ($f_{\Delta P}$)

ΔP (bar)	Correction factor
0.2	**1.00**
0.4	0.72
0.6	0.59
0.8	0.52
1	0.46
1.5	0.39
2	0.34
4	0.27

Correction factor for discharge temperature (T_{disch})

Discharge temperature	Correction factor
50 °C	0.96
60 °C	0.97
80 °C	**1.00**
90 °C	1.01
100 °C	1.03
110 °C	1.04
120 °C	1.06

Correction factor for liquid temperature (T_{liq})

Liquid temperature	Correction factor
-20 °C	0.82
-10 °C	0.86
0 °C	0.88
10 °C	0.92
20 °C	0.96
30 °C	**1.00**
40 °C	1.04
50 °C	1.09

US units

Capacity table for nominal conditions, Q_N [Tons of Refrigeration],
T_{liq} = 90 °F,
ΔP = 3 psi,
$P_{disch.}$ = 185 psi,
$T_{disch.}$ = 180 °F

R 717

Type	C_v [USgal/min]	Evaporating temperature T_e							
		-60 °F*	-40 °F	-20 °F	0 °F	20 °F	40 °F	60 °F	80 °F
NRVA 15	6	15.8	16.0	16.3	16.4	16.5	16.7	16.7	16.8
NRVA 20	7	19.0	19.2	19.5	19.7	19.8	20.1	20.1	20.2
NRVA 25	22	60.1	60.9	61.8	62.3	62.8	63.5	63.6	63.9
NRVA 32	23	63	64	65	66	66	67	67	67
NRVA 40	51	139	141	143	144	145	147	147	148
NRVA 50	51	139	141	143	144	145	147	147	148
NRVA 65	87	237	241	244	246	248	251	251	252

* 2 °F below min. operating temperature.

Correction factor for discharge pressure (P_{disch})

P_{disch} (psi)	Correction factor
185	**1.00**
240	0.87
300	0.78

Correction factor for ΔP ($f_{\Delta P}$)

ΔP (psi)	Correction factor
3	**1.00**
5	0.79
7	0.67
10	0.56
15	0.47
20	0.41
30	0.35
60	0.28

Correction factor for discharge temperature (T_{disch})

Discharge temperature	Correction factor
120 °F	0.95
140 °F	0.97
180 °F	**1.00**
200 °F	1.02
210 °F	1.02
230 °F	1.04
250 °F	1.06

Correction factor for liquid temperature (T_{liq})

Liquid temperature	Correction factor
-10 °F	0.82
10 °F	0.85
30 °F	0.88
50 °F	0.92
70 °F	0.96
90 °F	**1.00**
110 °F	1.04
130 °F	1.09

Nominal capacities

Discharge line

SI units

Capacity table for nominal conditions, Q_N [kW],
T_{liq} = 30 °C,
$P_{disch.}$ = 12 bar,
ΔP = 0.2 bar,
$T_{disch.}$ = 80 °C

R 22

Type	k_v [m³/h]	Evaporating temperature T_e							
		-50 °C	-40 °C	-30 °C	-20 °C	-10 °C	0 °C	10 °C	20 °C
NRVA 15	5	17.3	17.9	18.4	18.9	19.4	19.8	20	21
NRVA 20	6	21	21	22	23	23	24	24	25
NRVA 25	19	66	68	70	72	74	75	77	78
NRVA 32	20	69	71	74	76	78	79	81	82
NRVA 40	44	152	157	162	166	171	175	178	181
NRVA 50	44	152	157	162	166	171	175	178	181
NRVA 65	75	260	268	276	284	291	297	304	309

Correction factor for discharge pressure (P_{disch})

P_{disch} (bar)	Correction factor
12	**1.00**
16	0.87
20	0.78

Correction factor for ΔP ($f_{\Delta P}$)

ΔP (bar)	Correction factor
0.2	**1.00**
0.4	0.72
0.6	0.59
0.8	0.52
1	0.46
1.5	0.39
2	0.34
4	0.27

Correction factor for discharge temperature (T_{disch})

Discharge temperature	Correction factor
50 °C	0.96
60 °C	0.97
80 °C	**1.00**
90 °C	1.01
100 °C	1.03
110 °C	1.04
120 °C	1.06

Correction factor for liquid temperature (T_{liq})

Liquid temperature	Correction factor
-20 °C	0.71
-10 °C	0.75
0 °C	0.80
10 °C	0.86
20 °C	0.92
30 °C	**1.00**
40 °C	1.09
50 °C	1.22

US units

Capacity table for nominal conditions, Q_N [Tons of Refrigeration],
T_{liq} = 90 °F,
ΔP = 3 psi,
$P_{disch.}$ = 185 psi,
$T_{disch.}$ = 180 °F

R 22

Type	C_v [USgal/min]	Evaporating temperature T_e							
		-60 °F*	-40 °F	-20 °F	0 °F	20 °F	40 °F	60 °F	80 °F
NRVA 15	6	5.0	5.1	5.3	5.5	5.6	5.8	5.9	6.0
NRVA 20	7	5.9	6.2	6.4	6.6	6.7	6.9	7.1	7.2
NRVA 25	22	18.8	19.5	20	21	21	22	22	23
NRVA 32	23	19.8	21	21	22	22	23	24	24
NRVA 40	51	44	45	47	48	49	51	52	53
NRVA 50	51	44	45	47	48	49	51	52	53
NRVA 65	87	74	77	79	82	84	86	88	90

* 2 °F below min. operating temperature.

Correction factor for discharge pressure (P_{disch})

P_{disch} (psi)	Correction factor
185	**1.00**
240	0.87
300	0.78

Correction factor for ΔP ($f_{\Delta P}$)

ΔP (psi)	Correction factor
3	**1.00**
5	0.79
7	0.67
10	0.56
15	0.47
20	0.41
30	0.35
60	0.28

Correction factor for discharge temperature (T_{disch})

Discharge temperature	Correction factor
120 °F	0.95
140 °F	0.97
180 °F	**1.00**
200 °F	1.02
210 °F	1.02
230 °F	1.04
250 °F	1.06

Correction factor for liquid temperature (T_{liq})

Liquid temperature	Correction factor
-10 °F	0.73
10 °F	0.77
30 °F	0.82
50 °F	0.87
70 °F	0.93
90 °F	**1.00**
110 °F	1.09
130 °F	1.20

Nominal capacities

Discharge line

SI units

Capacity table for nominal conditions, Q_N [kW],
T_{liq} = 30 °C,
$P_{disch.}$ = 12 bar,
ΔP = 0.2 bar,
$T_{disch.}$ = 80 °C

R 134a

Type	k_v [m³/h]	Evaporating temperature T_e						
		-40 °C	-30 °C	-20 °C	-10 °C	0 °C	10 °C	20 °C
NRVA 15	5	13.5	14.2	14.8	15.4	16.0	16.6	17.2
NRVA 20	6	16.2	17.0	17.7	18.5	19.2	19.9	21
NRVA 25	19	51	54	56	59	61	63	65
NRVA 32	20	54	57	59	62	64	66	69
NRVA 40	44	119	125	130	136	141	146	151
NRVA 50	44	119	125	130	136	141	146	151
NRVA 65	75	203	212	222	231	240	249	257

Correction factor for discharge pressure (P_{disch})

P_{disch} (bar)	Correction factor
8	**1.00**
12	0.82
16	0.70
20	0.62

Correction factor for ΔP ($f_{\Delta P}$)

ΔP (bar)	Correction factor
0.2	**1.00**
0.4	0.72
0.6	0.59
0.8	0.52
1	0.46
1.5	0.39
2	0.34
4	0.27

Correction factor for discharge temperature (T_{disch})

Discharge temperature	Correction factor
50 °C	0.96
60 °C	0.97
80 °C	**1.00**
90 °C	1.01
100 °C	1.03
110 °C	1.04
120 °C	1.06

Correction factor for liquid temperature (T_{liq})

Liquid temperature	Correction factor
-20 °C	0.66
-10 °C	0.70
0 °C	0.76
10 °C	0.82
20 °C	0.90
30 °C	**1.00**
40 °C	1.13
50 °C	1.29

US units

Capacity table for nominal conditions, Q_N [Tons of Refrigeration],
T_{liq} = 90 °F,
ΔP = 3 psi,
$P_{disch.}$ = 185 psi,
$T_{disch.}$ = 180 °F

R 134a

Type	C_v [USgal/min]	Evaporating temperature T_e						
		-40 °F	-20 °F	0 °F	20 °F	40 °F	60 °F	80 °F
NRVA 15	6	3.9	4.1	4.4	4.6	4.7	5.0	5.1
NRVA 20	7	4.7	5.0	5.2	5.5	5.7	5.9	6.2
NRVA 25	22	14.9	15.7	16.5	17.3	18.0	18.8	19.5
NRVA 32	23	15.7	16.6	17.4	18.2	19.0	19.8	21
NRVA 40	51	35	36	38	40	42	44	45
NRVA 50	51	35	36	38	40	42	44	45
NRVA 65	87	59	62	65	68	71	74	77

* 2 °F below min. operating temperature.

Correction factor for discharge pressure (P_{disch})

P_{disch} (psi)	Correction factor
120	**1.00**
185	0.83
240	0.71
300	0.64

Correction factor for ΔP ($f_{\Delta P}$)

ΔP (psi)	Correction factor
3	**1.00**
5	0.79
7	0.67
10	0.56
15	0.47
20	0.41
30	0.35
60	0.28

Correction factor for discharge temperature (T_{disch})

Discharge temperature	Correction factor
120 °F	0.95
140 °F	0.97
180 °F	**1.00**
200 °F	1.02
210 °F	1.02
230 °F	1.04
250 °F	1.05

Correction factor for liquid temperature (T_{liq})

Liquid temperature	Correction factor
-10 °F	0.64
10 °F	0.68
30 °F	0.74
50 °F	0.81
70 °F	0.89
90 °F	**1.00**
110 °F	1.15
130 °F	1.35

Nominal capacities

Discharge line

SI units

Capacity table for nominal conditions, Q_N [kW],
T_{liq} = 30 °C,
$P_{disch.}$ = 12 bar,
ΔP = 0.2 bar,
$T_{disch.}$ = 80 °C

R 404A

Type	k_v [m^3/h]	Evaporating temperature T_e							
		-50 °C	-40 °C	-30 °C	-20 °C	-10 °C	0 °C	10 °C	20 °C
NRVA 15	5	12.6	13.5	14.4	15.3	16.1	16.9	17.6	18.3
NRVA 20	6	15.2	16.2	17.3	18.4	19.4	20.3	21.2	22.0
NRVA 25	19	48.0	51.5	54.8	58.1	61.3	64.3	67.0	69.5
NRVA 32	20	50.6	54.2	57.7	61.2	64.5	67.7	70.6	73.2
NRVA 40	44	111.3	119.2	127.0	134.6	141.9	148.9	155.3	161.0
NRVA 50	44	111.3	119.2	127.0	134.6	141.9	148.9	155.3	161.0
NRVA 65	75	189.7	203.1	216.4	229.4	241.9	253.7	264.7	274.4

Correction factor for discharge pressure (P_{disch})

P_{disch} (bar)	Correction factor
12	**1**
16	0.87
20	0.78

Correction factor for ΔP ($f_{\Delta P}$)

ΔP (bar)	Correction factor
0.2	**1.00**
0.4	0.72
0.6	0.59
0.8	0.52
1	0.46
1.5	0.39
2	0.34
4	0.27

Correction factor for discharge temperature (T_{disch})

Discharge temperature	Correction factor
50 °C	0.96
60 °C	0.97
80 °C	**1.00**
90 °C	1.01
100 °C	1.03
110 °C	1.04
120 °C	1.06

Correction factor for liquid temperature (T_{liq})

Liquid temperature	Correction factor
-20 °C	0.55
-10 °C	0.60
0 °C	0.66
10 °C	0.74
20 °C	0.85
30 °C	**1.00**
40 °C	1.23
50 °C	1.68

US units

Capacity table for nominal conditions, Q_N [Tons of Refrigeration],
T_{liq} = 90 °F,
ΔP = 3 psi,
$P_{disch.}$ = 185 psi,
$T_{disch.}$ = 180 °F

R 404A

Type	C_v [USgal/min]	Evaporating temperature T_e							
		-60 °F*	-40 °F	-20 °F	0 °F	20 °F	40 °F	60 °F	80 °F
NRVA 15	6	3.5	3.8	4.0	4.3	4.6	4.8	5.1	5.3
NRVA 20	7	4.2	4.5	4.9	5.2	5.5	5.8	6.1	6.3
NRVA 25	22	13.2	14.3	15.4	16.4	17.4	18.3	19.3	20.0
NRVA 32	23	13.9	15.1	16.2	17.3	18.3	19.3	20.3	21.0
NRVA 40	51	30.7	33.2	35.6	38.0	40.3	42.5	44.6	46.2
NRVA 50	51	30.7	33.2	35.6	38.0	40.3	42.5	44.6	46.2
NRVA 65	87	52.2	56.5	60.7	64.8	68.7	72.4	76.0	78.8

* 2 °F below min. operating temperature.

Correction factor for discharge pressure (P_{disch})

P_{disch} (psi)	Correction factor
185	**1**
240	0.87
300	0.78

Correction factor for ΔP ($f_{\Delta P}$)

ΔP (psi)	Correction factor
3	**1.00**
5	0.79
7	0.67
10	0.56
15	0.47
20	0.41
30	0.35
60	0.28

Correction factor for discharge temperature (T_{disch})

Discharge temperature	Correction factor
120 °F	0.95
140 °F	0.97
180 °F	**1.00**
200 °F	1.02
210 °F	1.02
230 °F	1.04
250 °F	1.05

Correction factor for liquid temperature (T_{liq})

Liquid temperature	Correction factor
-10 °F	0.52
10 °F	0.57
30 °F	0.63
50 °F	0.72
70 °F	0.83
90 °F	**1.00**
110 °F	1.29
130 °F	1.92

ENGINEERING
TOMORROW

Check valve
Type NRVS

Contents **Page**

Features 659
Technical data 659
Materials 659
Capacities 660
Ordering 662
Dimensions and weights 662

AI173386419455en-000501 | 2015.09

ENGINEERING TOMORROW

Check valve
Type NRVS



Check valve type NRVS has no damping feature and therefore can only be used for liquid line applications. NRVS is designed to be mounted directly to PM or solenoid valves EVRA / EVRAT.

Features

- Ensures correct direction of flow
- Applicable to HCFC, HFC and R717 (Ammonia)
- Classification: DNV, CRN, BV, EAC etc.
  To get an updated list of certification on the products please contact your local Danfoss Sales Company

Technical data

- Temperature of medium:
  -50 °C – 140 °C
- Maximum working pressure:
  PS = 28 bar / 406 psig

Materials

- Valve housing made of Stainless Steel
- Gaskets are non-asbestos

Capacities

Location of valve in system (marked with grey)

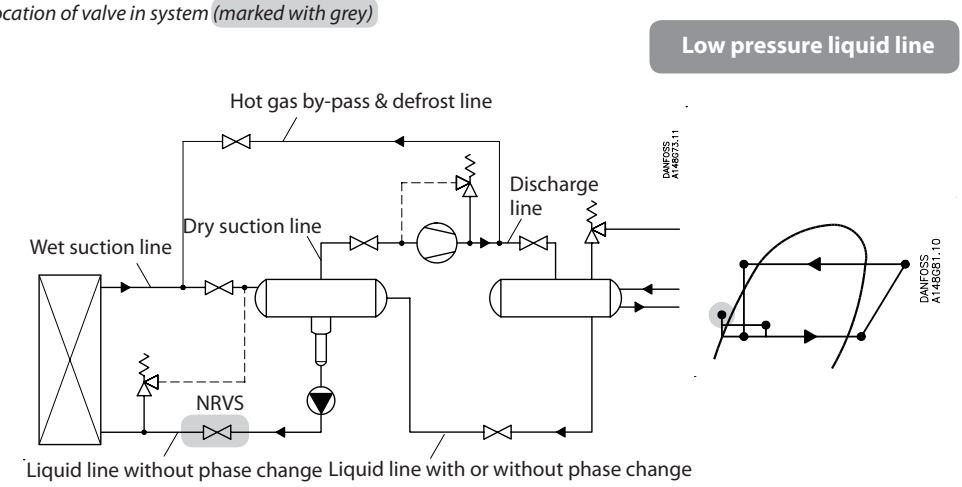

Valve combination	EVRA/EVRAT 10 + NRVS 15	EVRA/EVRAT 15 + NRVS 15	EVRA/EVRAT 20 + NRVS 25	EVRA + NRVS 25
k_v [m³/h]	1.4	2.2	4.1	7.0

Evaporating temperature T_e	Pressure Δp [bar]	Capacities (kW) Q_0 at circulation rate 1 R717			
-40 °C	0.15	172	270	504	960
	0.25	222	349	650	1110
	0.30	243	382	713	1216
	0.40	281	441	823	1405
	0.50	314	493	920	1570
-30 °C	0.15	167	262	489	835
	0.25	215	338	631	1078
	0.30	236	371	691	1180
	0.40	273	428	798	1363
	0.50	305	479	893	1524
-20 °C	0.15	161	254	473	808
	0.25	208	327	610	1042
	0.30	228	359	669	1142
	0.40	264	414	772	1319
	0.50	295	463	863	1475
-10 °C	0.15	156	245	456	780
	0.25	201	316	589	1005
	0.30	220	346	645	1102
	0.40	254	399	745	1271
	0.50	284	447	833	1422

Note: The capacities in the table must be divided by the actual circulation rate, or the evaporator capacities must be multiplied with the actual circulation rate.

Minimum opening differential pressure:

EVRA/EVRAT 10 – 20 + NRVS	0.07 bar
EVRA/EVRAT 25 + NRVS	0.11 bar

Example
An application has the following operating conditions:
Refrigerant: R717
Evaporating temperature: ..... -30 °C
Evaporator capacity (Q_0): ..... 290 kW
Circulation rate: 4
$\Delta p \leq 0.3$ bar

Solution
290 × 4 = 1160 kW
EVRAT 25 + NRVS 25: Q_0 = 1180 kW, at
$\Delta p = 0.3$ bar is chosen.

Precise valve capacities can be calculated for various refrigerants by using the "DIRcalc™" (Danfoss Industrial Refrigeration calculation programme).

Capacities
(continued)

Location of valve in system (marked with grey)

Low pressure liquid line

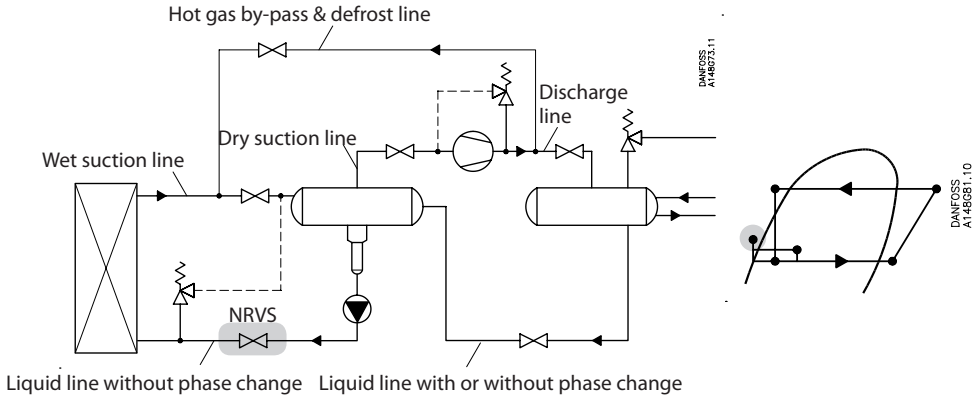

Valve combination	PM 15	PM 20	PM 25
	NRVS 25	NRVS 25	NRVS 25
k_v [m³/h]	4.0	6.0	7.5

Evaporating temperature T_e	Pressure Δp (bar)	Capacities (kW) Q_0 at circulation rate 1 R717		
-50 °C	0.15	–	–	–
	0.25	653	979	1224
	0.30	715	1072	1340
	0.40	825	1238	1547
	0.50	923	1384	1730
-40 °C	0.15	–	–	–
	0.25	635	951	1188
	0.30	695	1043	1303
	0.40	803	1204	1506
	0.50	897	1346	1683
-30 °C	0.15	–	–	–
	0.25	615	922	1152
	0.30	675	1011	1265
	0.40	779	1169	1460
	0.50	871	1306	1632
-20 °C	0.15	–	–	–
	0.25	595	894	1114
	0.30	653	979	1224
	0.40	753	1130	1412
	0.50	852	1264	1580
-10 °C	0.15	–	–	–
	0.25	575	862	1075
	0.30	629	944	1180
	0.40	727	1090	1362
	0.50	812	1219	1523

Note: The capacities in the table must be divided by the actual circulation rate, or the evaporator capacities must be multiplied with the actual circulation rate.

Minimum opening differential pressure:
PM + NRVS will be fully open at Δp = 0.25 bar.

Precise valve capacities can be calculated for various refrigerants by using the "DIRcalc™" (Danfoss Industrial Refrigeration calculation programme).

Ordering

Check valve

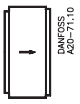

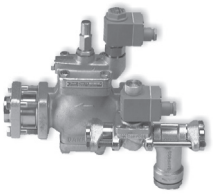

Flanges, gasket and bolts [1])

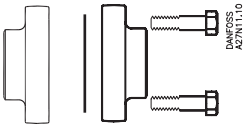

Valve type	**Code. no.**	For valve type	**Code no.**	Weight [2]) [kg]	Flange type	Connection size
NRVS 15	**020-2032**	EVRA / T 10, EVRA / T 15	**027N1255**	0.7		3/4 in
NRVS 25	**020-2033**	EVRA / T 20, EVRA / T 25, PM 15, PM 20, PM 25	**027N1254**	1.1		1 in

Flanges,gaskets and bolts for NRVS stand alone[3])

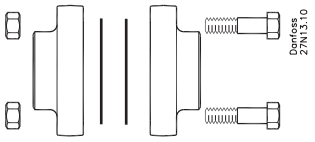

Code no.	Weight[2]) [kg]	Flange type	Connection size
027N1256	0.256		3/4 in
027N1257	0.443		1 in

[1]) Consists of one standard and one special flange, one gasket and 2 bolts.
[2]) Flange and bolts only.
[3]) Consist of flanges, gaskets, bolts and nuts only.
One standard flange and one special flange, two gasket, 2 bolts and 2 nuts.

Dimensions and weights

NRVS on valve

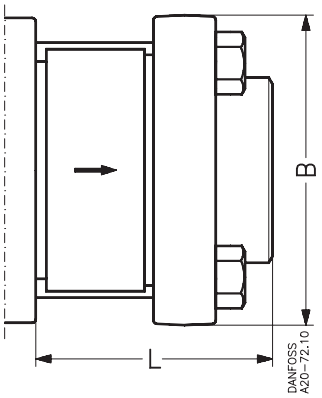

Type	L [mm]	B [mm]	Weight[1]) kg
NRVS 15	47.5	78.0	0.1
NRVS 25	60.5	96.0	0.25

[1]) NRVS without flanges and bolts

NRVS stand alone

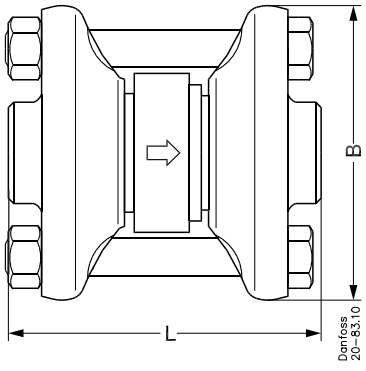

Type	L [mm]	B [mm]	Weight[1]) kg
NRVS 15	78	80	0.1
NRVS 25	98	96	0.25

[1]) NRVS without flanges and bolts

Danfoss can accept no responsibility for possible errors in catalogues, brochures and other printed material. Danfoss reserves the right to alter its products without notice. This also applies to products already on order provided that such alterations can be made without subsequential changes being necessary in specifications already agreed.
All trademarks in this material are property of the respective companies. Danfoss and the Danfoss logotype are trademarks of Danfoss A/S. All rights reserved.

ENGINEERING
TOMORROW

Strainer
Type FIA 15-200, 52 bar (754 psi)

Contents **Page**

Features 665
Design 666
Technical data 666
Selection of strainer size 667
Material specification 669
Connections 671
Dimensions and weights 672
Ordering 674

AI222586432958en-001001 | 2018.05

ENGINEERING TOMORROW

Strainer
Type FIA 15-200, 52 bar (754 psi)



FIA strainers are a range of angleway and straightway strainers, which are carefully designed to give favourable flow conditions. The design makes the strainer easy to install, and ensures quick strainer inspection and cleaning.

FIA strainers are used ahead of automatic controls, pumps, compressors etc., for initial plant start-up and where permanent filtration of the refrigerant is required. The strainer reduces the risk of undesirable system breakdowns and reduces wear and tear on plant components.

FIA strainers are equipped with a screen mesh of stainless steel, available in sizes 100, 150, 250 and 500µ (microns*), (US 150, 100, 72, 38 mesh*).

* Mesh is the number of threads per inch.
µ (microns) is the distance between two threads (1µ = 1/1000 mm).

Features

- Applicable to HCFC, HFC, R717 (Ammonia), R744 (CO_2) and all flammable refrigerants.
- Modular Concept:
  – Each valve housing is available with several different connection types and sizes.
  – Possible to convert FIA strainers to any other product in the Flexline™ SVL family (shut-off valve, hand operated regulating valve, check & stop valve or check valve) just by replacing the complete top part.
- Fast and easy overhaul service. It is easy to replace the top part and no welding is needed
- Filter net of stainless steel mounted direct without extra gaskets means easy servicing
- Two types of strainer inserts are available:
  - A plain insert of stainless steel.
  - A pleated insert (DN 15-200) with extra large surface, which ensures long intervals between cleaning and low pressure drop.
- FIA 15 – 40 (1/2 – 1 1/2 in):
  A special insert (50µ) can be used in combination with a standard version when cleaning a plant during commissioning.
- FIA 50 – 200 (2 – 8 in):
  A large capacity filter bag (50µ) can be inserted for cleaning plant during commissioning.
- FIA 80-200 (3 – 8 in) can be equipped with a magnetic insert for detention of iron particles and other magnetic particles.
- Each strainer clearly marked with type, size and performance range
- Housing and bonnet of low temperature steel in accordance with the requirements of the Pressure Equipment Directive and those of other international classification authorities
- Temperature range:
  -60 – 150 °C / -76 – 302 °F
- Max. working pressure:
  52 bar g / 754 psi g
- Classification: DNV, CRN, BV, EAC etc.
  To get an updated list of certification on the products please contact your local Danfoss Sales Company

Design

Connections
Available with the following connections:

- Butt-weld DIN (EN 10220)
  DN 15 – 200 (1/2 – 8 in)
- Butt-weld ANSI (B 36.10 Schedule 80),
  DN 15 – 40 (1/2 – 1 1/2 in)
- Butt-weld ANSI (B 36.10 Schedule 40),
  DN 50 – 200 (2 – 8 in)
- Butt-weld GOST (8734-75 and 8732-78),
- DN 15 – 150 (1/2 – 6 in)
- Socket Weld (ANSI B 16.11),
  DN 15 – 50 (1/2 – 2 in)
- FPT Female Pipe Thread, NPT
  (ANSI/ASME B 1.20.1),
  DN 15 – 32 (1/2 – 1 1/4 in)

Strainer Insert
A filter grid and filter net of stainless steel ensure long element life. The filter net offers a very high degree of cleanability.

Housing
The strainer housing is made of special, cold resistant steel.

Pressure Equipment Directive (PED)
FIA strainers are approved in accordance with the European standard specified in the Pressure Equipment Directive and are CE marked.
For further details / restrictions - see Installation Instruction

Nominal bore	DN ≤ 25 (1 in)	DN 32 – 80 mm (1 1/4 – 3 in)	DN 100 – 200 mm (4 – 8 in)
Classified for	Fluid group I		
Category	Article 3, paragraph 3	II	III

Installation / Maintenance
The strainer is designed to resist high internal pressures. However, the piping system in general should be designed to avoid liquid traps and reduce the risk of hydraulic pressure caused by thermal expansion.

Install the strainer with the cover in downward position.

Danfoss recommends replacement / cleaning of the strainer when the differential pressure loss >0.5 bar (7.3 psi) in the liquid line and >0.05 bar (0.7 psi) in the suction line. The max. permissible differential pressure is 1 bar (15 psi).

For further information refer to installation instruction for FIA.

Identification:

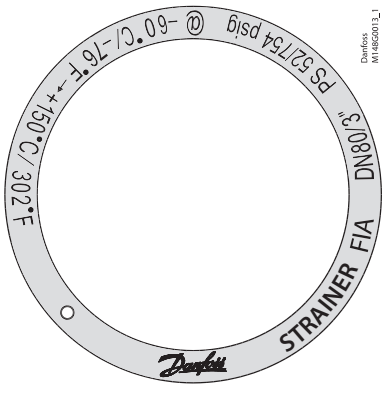

Example of marking ring, FIA

Technical data

- *Refrigerants*
  Applicable to HCFC, HFC, R717 (Ammonia), R744 (CO_2) and all flammable refrigerants.
- *Temperature range*
  -60 – 150 °C / -76 °F – 302 °F.
- *Max. working pressure:*
  52 bar g / 754 psi g.

Selection of strainer size

The mesh aperture size of the strainer must satisfy the requirements stated by the suppliers of the equipment to be protected.

The following recommendations of aperture size apply in general to refrigeration installations:

All lines
First start up: **50**µ
(Use strainer insert with removable insert for FIA DN15-40 or separate filter bag for FIA DN 50-200. 50µ insert should normally be removed after the first 24 hours of operation)

Liquid Lines
Ahead of pumps: ..... **500**µ [38 mesh]
After pumps: ..... **150**µ [100 mesh] / 250µ [72 mesh]
In front of AKVA valves ..... **100**µ [150 mesh]

Protection of automatic regulation equipment
Generally ..... **150**µ [100 mesh] / 250µ [72 mesh]
Sensitive equipment, e.g.
suction regulators with low temperature ..... **250**µ [72 mesh]

Definition
Mesh is the number of threads per inch.
µ (microns) is the distance between two threads (1µ = 1 /1000 mm).

Suction Lines
Ahead of screw compressor ..... **250**µ [72 mesh]
Ahead of piston compressor ..... **150**µ [100 mesh]

Flow coefficient (DIN/ANSI)

Connection size (DN) / **FIA**	µ	**mesh**	**wire** mm	**wire** in.	**free space** %	**screen area**			
						Plain inserts		Pleated inserts	
						cm^2	in^2	cm^2	in^2
15 - 20 (½" - ¾")	100		0.068	0.003	35	25	3.9	45	7.0
	150	100	0.10	0.004	36	25	3.9	45	7.0
	250	72	0.10	0.004	51	25	3.9	45	7.0
	500	38	0.16	0.006	57.6	25	3.9	45	7.0
25 - 40 (1" - 1½")	100		0.068	0.003	35	71	11	160	25.0
	150	100	0.10	0.004	36	71	11	160	25.0
	250	72	0.10	0.004	51	71	11	160	25.0
	500	38	0.16	0.006	57.6	71	11	160	25.0
50 (2")	100		0.068	0.003	35	71	11	200	31.2
	150	100	0.10	0.004	36	87	13.5	200	31.2
	250	72	0.10	0.004	51	87	13.5	200	31.2
	500	38	0.16	0.006	57.6	87	13.5	200	31.2
65 (2½")	150	100	0.10	0.004	36	127	19.7	305	47.6
	250	72	0.10	0.004	51	127	19.7	305	47.6
	500	38	0.16	0.006	57.6	127	19.7	305	47.6
80 (3")	150	100	0.10	0.004	36	205	31.8	450	70.2
	250	72	0.10	0.004	51	205	31.8	450	70.2
	500	38	0.16	0.006	57.6	205	31.8	450	70.2
100 (4")	150	100	0.10	0.004	36	370	57.4	790	123.2
	250	72	0.10	0.004	51	370	57.4	790	123.2
	500	38	0.16	0.006	57.6	370	57.4	790	123.2
125 (5")	150	100	0.10	0.004	36	510	79.1	1105	172.4
	250	72	0.10	0.004	51	510	79.1	1105	172.4
	500	38	0.16	0.006	57.6	510	79.1	1105	172.4
150 (6")	150	100	0.10	0.004	36	726	112.5	1600	249.6
	250	72	0.10	0.004	51	726	112.5	1600	249.6
	500	38	0.16	0.006	57.6	726	112.5	1600	249.6
200 (8")	150	100	0.10	0.004	36	1315	203.8	2900	453.1
	250	72	0.10	0.004	51	1315	203.8	2900	453.1
	500	38	0.16	0.006	57.6	1315	203.8	2900	453.1

Selection of strainer size
(Continued)

K_v values

DN	FIA angle - plain filter net				FIA angle - pleated filter net		
	µ100	µ150	µ250	µ500	µ150	µ250	µ500
15	3.3	3.4	3.5	3.7	4.2		
20	6.9	7.1	7.3	7.7	8.8		
25	13.8	14.0	14.5	15.2	17.2	17.9	
32	23.0	23.8	24.7	25.5	29.2	30.5	
40	25.1	25.5	26.4	28.1	31.4	32.6	
50	45.1	45.9	47.6	50.2	56.7	58.8	62.0
65		56.1	57.8	60.4	69.3	71.4	74.6
80		104.6	108.0	113.1	129.2	133.4	139.7
100		162.4	167.5	176.0	200.6	206.9	217.4
125		275.4	283.9	298.4	340.2	350.7	368.6
150		362.1	373.2	391.9	447.3	462.9	
200		572.9	590.8	620.5	704.9	730.0	

DN	FIA straight - plain filter net				FIA straight - pleated filter net		
	µ100	µ150	µ250	µ500	µ150	µ250	µ500
15	2.5	2.6	2.7	2.8	3.3		
20	5.3	5.4	5.6	5.9	6.9		
25	10.5	10.7	11.1	11.6	13.8	14.5	
32	17.6	18.2	18.9	19.5	23.9	24.7	
40	19.2	19.5	20.2	21.5	25.5	26.4	
50	34.5	35.1	36.4	38.4	45.9	47.6	50.2
65		42.9	44.2	46.2	56.1	57.8	60.4
80		80.0	82.6	86.5	104.6	108.0	113.1
100		124.2	128.1	134.6	162.4	167.5	176.0
125		210.6	217.1	228.2	275.4	283.9	298.4
150		276.9	285.4	299.7	362.1	374.0	
200		438.1	451.8	474.5	570.8	587.3	

Material specification

FIA 15 – 40 (1/2 in – 1 1/2 in)

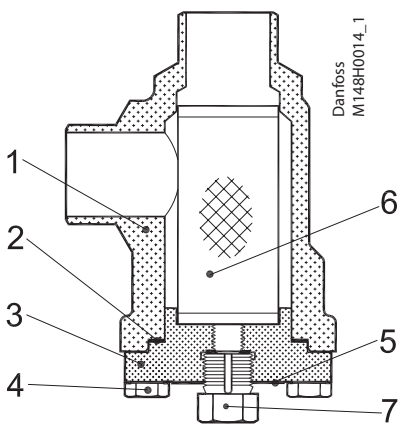

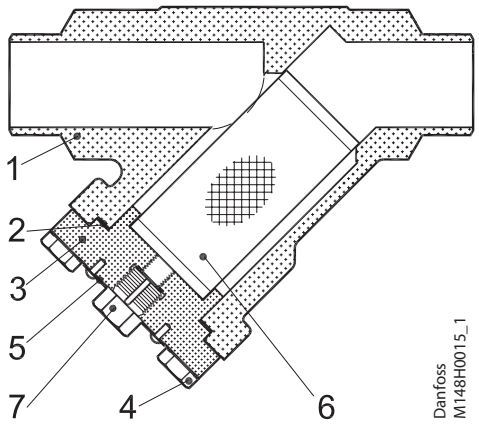

FIA 15 – 40 (1/2 – 1 1/2 in)

No.	Part	Material	DIN	ISO	ASTM
1	Housing	Steel	G20Mn5QT, 10213-3 --- P285QH+QT, 10222-4		LCC, A352 --- LF2, A350
2	Gasket	Fibre, Non-asbestos			
3	Cover	Steel	P285QH EN10222-4 --- P275NL1 or 2 EN10028-3		LF2, A350 --- A, A662
4	Bolts	Stainless steel	A2-70	A2-70	Type 308
5	Marking label	Aluminium			
6	Strainer insert	Stainless steel			
7	Pressure relief (screw)	Stainless steel			

Material specification

FIA 50 – 200 (2 in – 8 in)

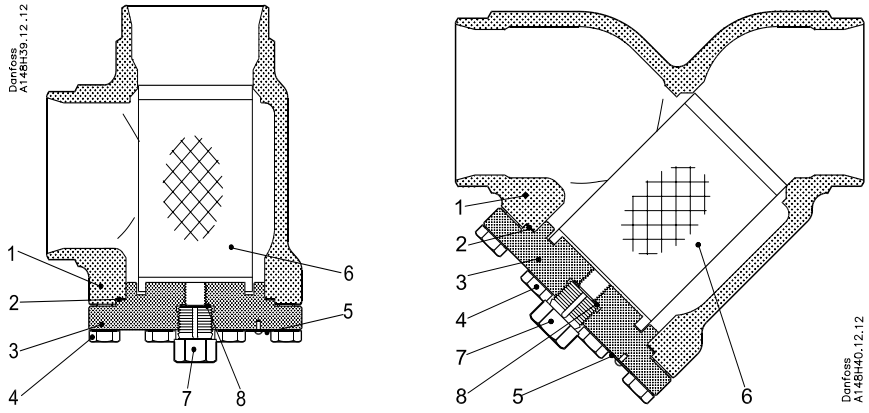

FIA 50-200 (2 in - 8 in)

No.	Part	Material	DIN	ISO	ASTM
1	Housing	Steel	G20Mn5QT, 10213-3 ---------- P285QH+QT, 10222-4		LCC, A352 ---------- LF2, A350
2	Gasket	Fibre, Non-asbestos			
3	Cover	Steel	P285QH EN10222-4 ---------- P275NL1 or 2 EN10028-3		LF2, A350 ---------- A, A662
4	Bolts	Stainless steel	A2-70	A2-70	Type 308
5	Marking label	Aluminium			
6	Strainer insert	Stainless steel			
7	Pressure relief (screw)	Stainless steel			
8*	Packing washer	Aluminium			

* pos 8 used in FIA 50-200

Connections

DIN

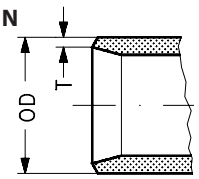

Size [mm]	Size [in]	OD [mm]	T [mm]	OD [in]	T [in]
Butt-weld DIN (EN 10220)					
15	1/2	21.3	2.3	0.839	0.091
20	3/4	26.9	2.3	1.059	0.091
25	1	33.7	2.6	1.327	0.103
32	1 1/4	42.4	2.6	1.669	0.102
40	1 1/2	48.3	2.6	1.902	0.103
50	2	60.3	2.9	2.37	0.11
65	2 1/2	76.1	2.9	3	0.11
80	3	88.9	3.2	3.50	0.13
100	4	114.3	3.6	4.50	0.14
125	5	139.7	4.0	5.50	0.16
150	6	168.3	4.5	6.63	0.18
200	8	219.1	6.3	8.63	0.25

GOST

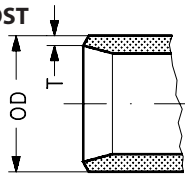

Size [mm]	Size [in]	OD [mm]	T [mm]	OD [in]	T [in]
Butt-weld GOST (8734-75 and 8732-78)					
10	3/8	14	2	0.551	0.079
15	1/2	18	2	0.709	0.079
20	3/4	25	2.5	0.984	0.098
25	1	32	3	1.260	0.118
32	1 1/4	38	3	1.496	0.118
40	1 1/2	45	3	1.772	0.118
50	2	57	3.5	2.244	0.138
65	2 1/2	76.1	2.9	3	0.11
80	3	88.9	3.2	3.50	0.13
100	4	108	4	4.252	0.157
125	5	133	4	5.236	0.157
150	6	159	4.5	6.260	0.177

ANSI

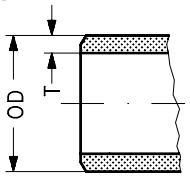

Size [mm]	Size [in]	OD [mm]	T [mm]	OD [in]	T [in]
Butt-weld ANSI (B 36.10 Schedule 80)					
15	1/2	21.3	3.7	0.839	0.146
20	3/4	26.9	4.0	1.059	0.158
25	1	33.7	4.6	1.327	0.181
32	1 1/4	42.4	4.9	1.669	0.193
40	1 1/2	48.3	5.1	1.902	0.201
Butt-weld ANSI (B 36.10 Schedule 40)					
50	2	60.3	3.9	2.37	0.15
65	2 1/2	73.0	5.2	2.87	0.20
80	3	88.9	5.5	3.50	0.22
100	4	114.3	6.0	4.50	0.24
125	5	141.3	6.6	5.56	0.26
150	6	168.3	7.1	6.63	0.28
200	8	219.1	8.2	8.63	0.32

SOC

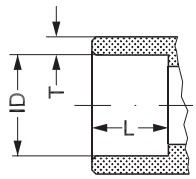

Size [mm]	Size [in]	ID [mm]	T [mm]	ID [in]	T [in]
Socket welding ANSI (B 16.11)					
15	1/2	21.8	6.0	0.858	0.235
20	3/4	27.2	4.6	1.071	0.181
25	1	33.9	7.2	1.335	0.284
32	1 1/4	42.7	6.1	1.743	0.240
40	1 1/2	48.8	6.6	1.921	0.260
50	2	61.2	6.2	2.41	0.24

FPT

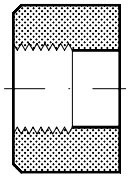

Size [mm]	Size [in]	Inside pipe tread
FPT inside pipe thread, NPT (ANSI/ASME B 1.20.1)		
15	1/2	(½ × 14 NPT)
20	3/4	(¾ × 14 NPT)
25	1	(1 × 11.5 NPT)
32	1 1/4	(1¼ × 11.5 NPT)

Dimensions and weights

FIA 15 - 65

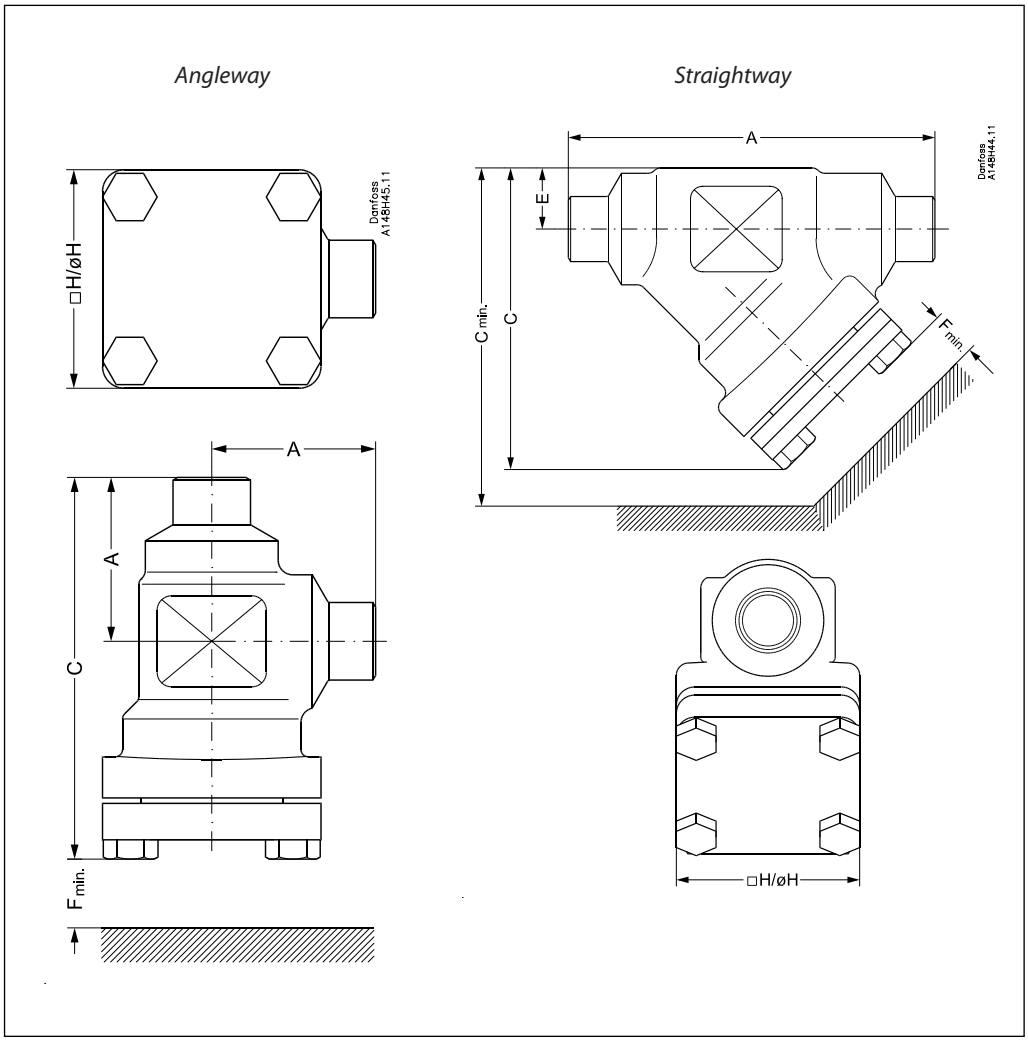

Angleway

Strainer size		A	C	H	$F_{min.}$	Weight
FIA 15 – 20	[mm]	45	105	60	68	1.1 kg
(1/2 – 3/4 in)	[in]	1.77	4.13	2.36	2.68	2.4 lbs
FIA 25 – 40	[mm]	55	132	70	95	1.7 kg
(1 – 1 1/2 in)	[in]	2.17	5.20	2.76	3.74	3.7 lbs
FIA 50	[mm]	60	132	77	92	2.8 kg
(2 in)	[in]	2.36	5.20	3.03	3.62	6.2 lbs
FIA 65	[mm]	70	152	90	107	3.8 kg
(2 1/2 in)	[in]	2.76	5.98	3.54	4.21	8.4 lbs

Straightway

Strainer size		A	C	$C_{min.}$	H	E	$F_{min.}$	Weight
FIA 15 – 20	[mm]	120	99	133	60	20	68	1.4 kg
(1/2 – 3/4 in)	[in]	4.72	3.90	5.24	2.36	0.79	2.68	3.1 lbs
FIA 25 – 40	[mm]	155	129	177	70	26	95	2.4 kg
(1 – 1 1/2 in)	[in]	6.10	5.08	6.97	2.76	1.02	3.74	5.3 lbs
FIA 50	[mm]	148	138	184	77	32	92	3.5 kg
(2 in)	[in]	5.83	5.43	7.24	3.03	1.26	3.62	7.7 lbs
FIA 65	[mm]	176	165	219	90	40	107	5.3 kg
(2 1/2 in)	[in]	6.93	6.50	8.62	3.54	1.57	4.21	11.7 lbs

Dimensions and weights

FIA 80 - 200

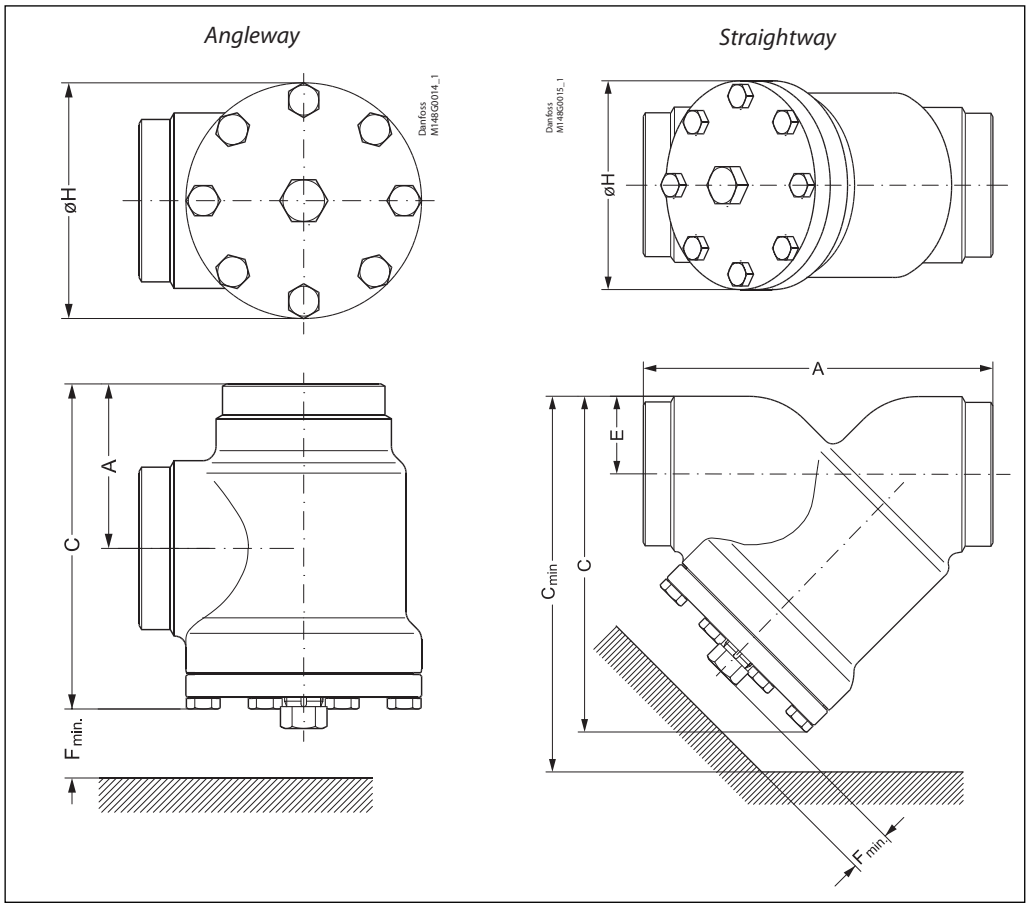

Angleway

Strainer size		A	C	H	$F_{min.}$	Weight
FIA 80	[mm]	90	189	129	133	7.3 kg
(3 in)	[in]	3.54	7.44	5.08	5.24	16.1 lbs
FIA 100	[mm]	106	223	156	163	11.9 kg
(4 in)	[in]	4.17	8.78	6.14	6.42	26.2 lbs
FIA 125	[mm]	128	268	192	190	21.2 kg
(5 in)	[in]	5.04	10.6	7.56	7.48	46.7 lbs
FIA 150	[mm]	145	303	219	223	30.5 kg
(6 in)	[in]	5.71	11.93	8.62	8.78	67.2 lbs
FIA 200	[mm]	180	372	276	280	68 kg
(8 in)	[in]	7.09	14.65	10.87	11.02	150 lbs

Straightway

Strainer size		A	C	$C_{min.}$	H	E	$F_{min.}$	Weight
FIA 80	[mm]	216	204	271	129	48	133	8.6 kg
(3 in)	[in]	8.50	8.03	10.67	5.08	1.89	5.24	19 lbs
FIA 100	[mm]	264	256	337	156	60	163	14.9 kg
(4 in)	[in]	10.39	10.08	13.27	6.14	2.36	6.42	32.8 lbs
FIA 125	[mm]	322	313	408	192	74	190	26.9 kg
(5 in)	[in]	12.68	12.32	16.06	7.56	2.91	7.48	59.3 lbs
FIA 150	[mm]	370	370	482	219	91	223	51 kg
(6 in)	[in]	14.57	14.57	18.98	8.62	3.58	8.78	112 lbs
FIA 200	[mm]	464	465	605	276	117	280	95 kg
(8 in)	[in]	18.27	18.31	23.82	10.87	4.61	11.02	209 lbs

Strainer, type FIA 15-200, 52 bar (754 psi)

Ordering

The table below is used to identify the strainer required. Please note that you have to order **FIA strainer without insert, a strainer insert** and **accessories.**

Example:
FIA 50 D ANG + FIA-X 50 150µ Strainer insert + Filter Bag = **148H5912** + **148H3130** + **148H3150**

Size mm	Size in.	Type	FIA Without strainer insert	Strainer insert 100µ 150 mesh	Strainer insert 150µ 100 mesh	Strainer insert 250µ 72 mesh	Strainer insert 500µ 38 mesh	Pleated Strainer insert 150µ 100 mesh	Pleated Strainer insert 250µ 72 mesh	Pleated Strainer insert 500µ 38 mesh
Butt-weld DIN (EN 10220) - Angleway										
15	½	FIA 15 D ANG	**148B5242**	**148H3122**	**148H3124**	**148H3126**	**148H3128**	**148H3303**	**148H3363**	-
20	¾	FIA 20 D ANG	**148B5342**							
25	1	FIA 25 D ANG	**148B5442**	**148H3123**	**148H3125**	**148H3127**	**148H3129**	**148H3304**	**148H3269**	-
32	1¼	FIA 32 D ANG	**148B5543**							
40	1½	FIA 40 D ANG	**148B5624**							
50	2	FIA 50 D ANG	**148B5712**	**148H3157**	**148H3130**	**148H3138**	**148H3144**	**148H3179**	**148H3184**	**148H3189**
65	2½	FIA 65 D ANG	**148B5812**	-	**148H3131**	**148H3139**	**148H3145**	**148H3180**	**148H3185**	**148H3190**
80	3	FIA 80 D ANG	**148B5905**	-	**148H3119**	**148H3120**	**148H3121**	**148H3181**	**148H3186**	**148H3191**
100	4	FIA 100 D ANG	**148B6006**	-	**148H3132**	**148H3140**	**148H3146**	**148H3182**	**148H3187**	**148H3192**
125	5	FIA 125 D ANG	**148B6105**	-	**148H3133**	**148H3141**	**148H3147**	**148H3183**	**148H3188**	**148H3193**
150	6	FIA 150 D ANG	**148B6202**	-	**148H3134**	**148H3142**	**148H3148**	**148H3226**	**148H3293***	-
200	8	FIA 200 D ANG	**148B6302**	-	**148H3135**	**148H3143**	**148H3149**	**148H3297**	**148H3294***	-
Butt-weld DIN (EN 10220) - Straightway										
15	½	FIA 15 D STR	**148B5243**	**148H3122**	**148H3124**	**148H3126**	**148H3128**	**148H3303**	**148H3363**	-
20	¾	FIA 20 D STR	**148B5343**							
25	1	FIA 25 D STR	**148B5443**	**148H3123**	**148H3125**	**148H3127**	**148H3129**	**148H3304**	**148H3269**	-
32	1¼	FIA 32 D STR	**148B5544**							
40	1½	FIA 40 D STR	**148B5625**							
50	2	FIA 50 D STR	**148B5713**	**148H3157**	**148H3130**	**148H3138**	**148H3144**	**148H3179**	**148H3184**	**148H3189**
65	2½	FIA 65 D STR	**148B5813**	-	**148H3131**	**148H3139**	**148H3145**	**148H3180**	**148H3185**	**148H3190**
80	3	FIA 80 D STR	**148B5906**	-	**148H3119**	**148H3120**	**148H3121**	**148H3181**	**148H3186**	**148H3191**
100	4	FIA 100 D STR	**148B6007**	-	**148H3132**	**148H3140**	**148H3146**	**148H3182**	**148H3187**	**148H3192**
125	5	FIA 125 D STR	**148B6106**	-	**148H3133**	**148H3141**	**148H3147**	**148H3183**	**148H3188**	**148H3193**
150	6	FIA 150 D STR	**148B6203**	-	**148H3134**	**148H3142**	**148H3148**	**148H3226**	**148H3293***	-
200	8	FIA 200 D STR	**148B6303**	-	**148H3135**	**148H3143**	**148H3149**	**148H3297**	**148H3294***	-
Butt-weld ANSI (B 36.10 Schedule 80) - Angleway										
15	½	FIA 15 A ANG	**148B5244**	**148H3122**	**148H3124**	**148H3126**	**148H3128**	**148H3303**	**148H3363**	-
20	¾	FIA 20 A ANG	**148B5344**							
25	1	FIA 25 A ANG	**148B5444**	**148H3123**	**148H3125**	**148H3127**	**148H3129**	**148H3304**	**148H3269**	-
32	1¼	FIA 32 A ANG	**148B5545**							
40	1½	FIA 40 A ANG	**148B5642**							
Butt-weld ANSI (B 36.10 Schedule 80) - Straightway										
15	½	FIA 15 A STR	**148B5247**	**148H3122**	**148H3124**	**148H3126**	**148H3128**	**148H3303**	**148H3363**	-
20	¾	FIA 20 A STR	**148B5347**							
25	1	FIA 25 A STR	**148B5447**	**148H3123**	**148H3125**	**148H3127**	**148H3129**	**148H3304**	**148H3269**	-
32	1¼	FIA 32 A STR	**148B5552**							
40	1½	FIA 40 A STR	**148B5644**							
Butt-weld ANSI (B 36.10 Schedule 40) - Angleway										
50	2	FIA 50 A ANG	**148B5714**	**148H3157**	**148H3130**	**148H3138**	**148H3144**	**148H3179**	**148H3184**	**148H3189**
65	2½	FIA 65 A ANG	**148B5814**	-	**148H3131**	**148H3139**	**148H3145**	**148H3180**	**148H3185**	**148H3190**
80	3	FIA 80 A ANG	**148B5907**	-	**148H3119**	**148H3120**	**148H3121**	**148H3181**	**148H3186**	**148H3191**
100	4	FIA 100 A ANG	**148B6008**	-	**148H3132**	**148H3140**	**148H3146**	**148H3182**	**148H3187**	**148H3192**
125	5	FIA 125 A ANG	**148B6107**	-	**148H3133**	**148H3141**	**148H3147**	**148H3183**	**148H3188**	**148H3193**
150	6	FIA 150 A ANG	**148B6204**	-	**148H3134**	**148H3142**	**148H3148**	**148H3226**	**148H3293***	-
200	8	FIA 200 A ANG	**148B6304**	-	**148H3135**	**148H3143**	**148H3149**	**148H3297**	**148H3294***	-
Butt-weld ANSI (B 36.10 Schedule 40) - Straightway										
50	2	FIA 50 A STR	**148B5716**	**148H3157**	**148H3130**	**148H3138**	**148H3144**	**148H3179**	**148H3184**	**148H3189**
65	2½	FIA 65 A STR	**148B5815**	-	**148H3131**	**148H3139**	**148H3145**	**148H3180**	**148H3185**	**148H3190**
80	3	FIA 80 A STR	**148B5908**	-	**148H3119**	**148H3120**	**148H3121**	**148H3181**	**148H3186**	**148H3191**
100	4	FIA 100 A STR	**148B6009**	-	**148H3132**	**148H3140**	**148H3146**	**148H3182**	**148H3187**	**148H3192**
125	5	FIA 125 A STR	**148B6108**	-	**148H3133**	**148H3141**	**148H3147**	**148H3183**	**148H3188**	**148H3193**
150	6	FIA 150 A STR	**148B6205**	-	**148H3134**	**148H3142**	**148H3148**	**148H3226**	**148H3293***	-
200	8	FIA 200 A STR	**148B6305**	-	**148H3135**	**148H3143**	**148H3149**	**148H3297**	**148H3294***	-

D = Butt-weld DIN ANG = Angleway
A = Butt-weld ANSI STR = Straightway

* 60 mesh

Strainer, type FIA 15-200, 52 bar (754 psi)

Ordering *(continued)*

Size		Type	FIA Without strainer insert	Strainer insert 100µ 150 mesh	Strainer insert 150µ 100 mesh	Strainer insert 250µ 72 mesh	Strainer insert 500µ 38 mesh	Pleated Strainer insert 150µ 100 mesh	Pleated Strainer insert 250µ 72 mesh	Pleated Strainer insert 500µ 38 mesh
mm	in.									
Butt-weld GOST - Angleway										
150	6	FIA 150 G ANG	**148B6206**	-	**148H3134**	**148H3142**	**148H3148**	**148H3226**	**148H3293***	-
Butt-weld GOST - Straightway										
150	6	FIA 150 G STR	**148B6207**	-	**148H3134**	**148H3142**	**148H3148**	**148H3226**	**148H3293***	-
FPT inside pipe thread, NPT (ANSI/ASME B 1.20.1) - Angleway										
15	½	FIA 15 FTP ANG	**148B5246**	**148H3122**	**148H3124**	**148H3126**	**148H3128**	**148H3303**	**148H3363**	-
20	¾	FIA 20 FTP ANG	**148B5346**							
25	1	FIA 25 FTP ANG	**148B5446**	**148H3123**	**148H3125**	**148H3127**	**148H3129**	**148H3304**	**148H3269**	-
32	1¼	FIA 32 FTP ANG	**148B5547**							
FPT inside pipe thread, NPT (ANSI/ASME B 1.20.1) - Straightway										
15	½	FIA 15 FTP STR	**148B5249**	**148H3122**	**148H3124**	**148H3126**	**148H3128**	**148H3303**	**148H3363**	-
20	¾	FIA 20 FTP STR	**148B5349**							
25	1	FIA 25 FTP STR	**148B5449**	**148H3123**	**148H3125**	**148H3127**	**148H3129**	**148H3304**	**148H3269**	-
32	1¼	FIA 32 FTP STR	**148B5549**							
Socket welding ANSI (B 16.11) - Angleway										
15	½	FIA 15 SOC ANG	**148B5245**	**148H3122**	**148H3124**	**148H3126**	**148H3128**	**148H3303**	**148H3363**	-
20	¾	FIA 20 SOC ANG	**148B5345**							
25	1	FIA 25 SOC ANG	**148B5445**	**148H3123**	**148H3125**	**148H3127**	**148H3129**	**148H3304**	**148H3269**	-
32	1¼	FIA 32 SOC ANG	**148B5546**							
40	1½	FIA 40 SOC ANG	**148B5643**							
50	2	FIA 50 SOC ANG	**148B5715**	**148H3157**	**148H3130**	**148H3138**	**148H3144**	**148H3179**	**148H3184**	**148H3189**
Socket welding ANSI (B 16.11) - Straightway										
15	½	FIA 15 SOC STR	**148B5248**	**148H3122**	**148H3124**	**148H3126**	**148H3128**	**148H3303**	**148H3363**	-
20	¾	FIA 20 SOC STR	**148B5348**							
25	1	FIA 25 SOC STR	**148B5448**	**148H3123**	**148H3125**	**148H3127**	**148H3129**	**148H3304**	**148H3269**	-
32	1¼	FIA 32 SOC STR	**148B5548**							
40	1½	FIA 40 SOC STR	**148B5645**							
50	2	FIA 50 SOC STR	**148B5717**	**148H3157**	**148H3130**	**148H3138**	**148H3144**	**148H3179**	**148H3184**	**148H3189**

SOC = Socket welding
FPT = Inside pipe thread
G = Butt-weld GOST

ANG = Angleway
STR = Straightway

* 60 mesh

Accessories

Part	Accessory for	**Code number**
Magnet insert	FIA 80-100	**148H3447**
	FIA 125-200	**148H3448**

Part	Accessory for	**Code number**
Strainer insert µ150 with removable insert µ50 for the first start up	FIA 15-20	**148H3301**
	FIA 25-40	**148H3302**

Part	Accessory for	**Code number**
Filter bag	FIA 50	**148H3150**
	FIA 65	**148H3151**
	FIA 80	**148H3152**
	FIA 100	**148H3153**
	FIA 125	**148H3154**
	FIA 150	**148H3155**
	FIA 200	**148H3156**

Part	Accessory for	**Code number**
Purge valve complete	FIA 50 - 300	**148B3745**
Blind nut with gasket		**148H3450**

Ordering FIA strainers from the parts programme

Example
(select from table 1 and 2)

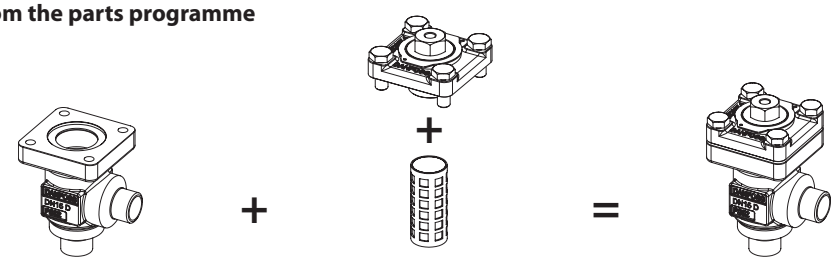

Strainer housing, size 25 (1 in.), DIN butt weld, angleway,
148B5452
Table 1

Top part, FIA, size 25 (1 in.)
148B5484
+
Strainer insert, 250µ, 72 mesh
148H3127
Table 2

Table 1
SVL valve housings w/different connections

DN 15-65 mm (½ - 2½ in.)

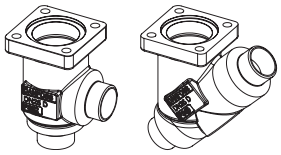

DN 80-125 mm (3 - 5 in.)

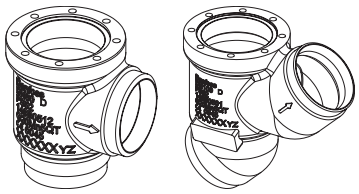

Sizes [DN]		Valve Housing SVL										
		DIN-Butt weld		ANSI-Butt weld		GOST-Butt-weld		SOC		FPT		T
mm	in.	ANG	STR	ANG	STR	ANG	STR	ANG	STR	ANG	STR	ANG
15	½	148B5252	148B5253	148B5254	148B5255	148B5391	148B5392	148B5256	148B5257	148B5258	148B5259	
20	¾	148B5352	148B5353	148B5354	148B5355	148B5393	148B5394	148B5356	148B5357	148B5358	148B5359	
25	1	148B5452	148B5453	148B5454	148B5455	148B5498	148B5499	148B5456	148B5457	148B5458	148B5459	
32	1¼	148B5576	148B5577	148B5578	148B5579	148B5593	148B5594	148B5580	148B5581	148B5582	148B5583	
40	1½	148B5652	148B5653	148B5654	148B5655	148B5681	148B5682	148B5656	148B5657			
50	2	148B5741	148B5742	148B5743	148B5744	148B5759	148B5760	148B5745	148B5746			
65	2½	148B5816	148B5817	148B5818	148B5819	148B5816	148B5817					
80	3	148B5912	148B5913	148B5914	148B5915	148B5912	148B5913					
100	4	148B6014	148B6015	148B6016	148B6017	148B6033	148B6034					
125	5	148B6112	148B6113	148B6114	148B6115	148B6133	148B6134					

Table 2
FIA complete top part including gaskets and bolts

FIA 15-65 | FIA 80-125

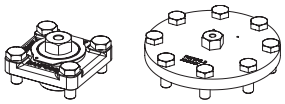



Sizes [DN]		Complete top part FIA		Strainer insert 100µ 150 mesh	Strainer insert 150µ 100 mesh	Strainer insert 250µ 72 mesh	Strainer insert 500µ 38 mesh	Pleated Strainer insert 150µ 100 mesh	Pleated Strainer insert 250µ 72 mesh	Pleated Strainer insert 500µ 38 mesh
mm	in.									
15	½	148B5284	+	148H3122	148H3124	148H3126	148H3128	148H3303	-	-
20	¾									
25	1	148B5484	+	148H3123	148H3125	148H3127	148H3129	148H3304	148H3269	-
32	1¼									
40	1½									
50	2	148B5748	+	148H3157	148H3130	148H3138	148H3144	148H3179	148H3184	148H3189
65	2½	148B5832	+	-	148H3131	148H3139	148H3145	148H3180	148H3185	148H3190
80	3	148B5922	+	-	148H3119	148H3120	148H3121	148H3181	148H3186	148H3191
100	4	148B6024	+	-	148H3132	148H3140	148H3146	148H3182	148H3187	148H3192
125	5	148B6122	+	-	148H3133	148H3141	148H3147	148H3183	148H3188	148H3193

ENGINEERING TOMORROW

Strainer
Type FIA 250-300, 52 bar (754 psi)

Contents **Page**

Features ... 679
Design ... 680
Technical data ... 681
Selection of strainer size ... 681
Material specification ... 682
Connections ... 682
Dimensions and weights ... 683
Ordering ... 684

AI270830845132en-000101 | 2018.05

ENGINEERING
TOMORROW

Strainer
Type FIA 250-300, 52 bar (754 psi)



FIA 250-300 (10-12 in.) strainers are a range of angleway strainers, which are carefully designed to give favourable flow conditions. The design makes the strainer easy to install, and ensures quick strainer inspection and cleaning.

FIA strainers are used ahead of automatic controls, pumps, compressors etc., for initial plant start-up and where permanent filtration of the refrigerant is required. The strainer reduces the risk of undesirable system breakdowns and reduces wear and tear on plant components.

FIA 250-300 (10-12 in.) strainers are equipped with a screen mesh of stainless steel, available in sizes 150 and 250 (microns*), (US 100 and 72 mesh*).

* Mesh is the number of threads per inch.
µ (microns) is the distance between two threads (1µ = 1 /1000 mm).

Features

- Applicable to HC, HCFC, HFC, R717 (Ammonia) and R744 (CO_2)
- Available with DIN and ANSI connections.
- Filter net of stainless steel mounted direct. without extra gaskets means easy servicing.
- FIA 250-300 (10-12 in.) can be equipped with a magnetic insert for detention of iron particles and other magnetic particles.
- Each strainer clearly marked with type, size and performance range.
- Housing and bonnet of low temperature steel in accordance with the requirements of the Pressure Equipment Directive and those of other international classification authorities.
- Temperature range: –60/+150°C (–76/+302°F)
- Max. working pressure: 40 bar g (580 psi g)
- Classification: DNV, CRN, BV, EAC etc. To get an updated list of certification on the products please contact your local Danfoss Sales Company.

Design

Connections
Available with the following connections:

- Butt-weld DIN (EN 10220)
  DN 250 - 300 (10-12 in.)
- Butt-weld ANSI (B 36.10 Schedule 40),
  DN 250 - 300 (10-12 in.)

Strainer Insert
A filter grid and filter net of stainless steel ensure long element life. The filter net offers a very high degree of cleanability.

Housing
The strainer housing is made of special, cold resistant steel.

Pressure Equipment Directive (PED)
FIA strainers are approved in accordance with the European standard specified in the Pressure Equipment Directive and are CE marked.
For further details / restrictions - see Installation Instruction

Nominal bore	DN 250 mm (10 in.)	DN 300 (12 in.)
Classified for	Fluid group I	
Category	III	IV

Installation/Maintenance
The strainer is designed to resist high internal pressures. However, the piping system in general should be designed to avoid liquid traps and reduce the risk of hydraulic pressure caused by thermal expansion.

Install the strainer with the cover in downward position.

Danfoss recommends replacement/cleaning of the strainer when the differential pressure loss >0.5 bar (7.3 psi) in the liquid line and >0.05 bar (0.7 psi) in the suction line. The max. permissible differential pressure is 1 bar (15 psi).

For further information refer to installation instruction for FIA.

Identification:

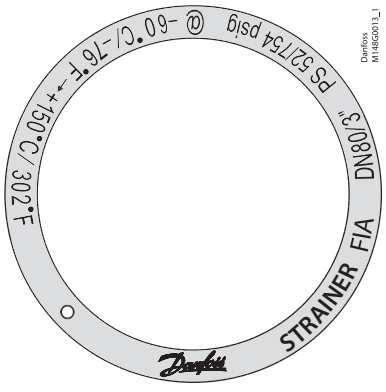

Example of marking ring, FIA

Technical data

- *Refrigerants*
  Applicable to HC, HCFC, HFC, R717 (Ammonia) and R744 (CO2)
- *Pressure range*
  40 bar g (580 psi g) at –60°C to +60°C (–76°F to +140°F)
  36 bar g (522 psi g) at +60°C to +80°C (+140°F to +176°F)
  32 bar g (464 psi g) at +80°C to +120°C (+176°F to +248°F)
  28 bar g (406 psi g) at +120°C to +150°C (+248°F to +302°F)
- *Temperature range*
  –60/+150°C (–76/+302°F)

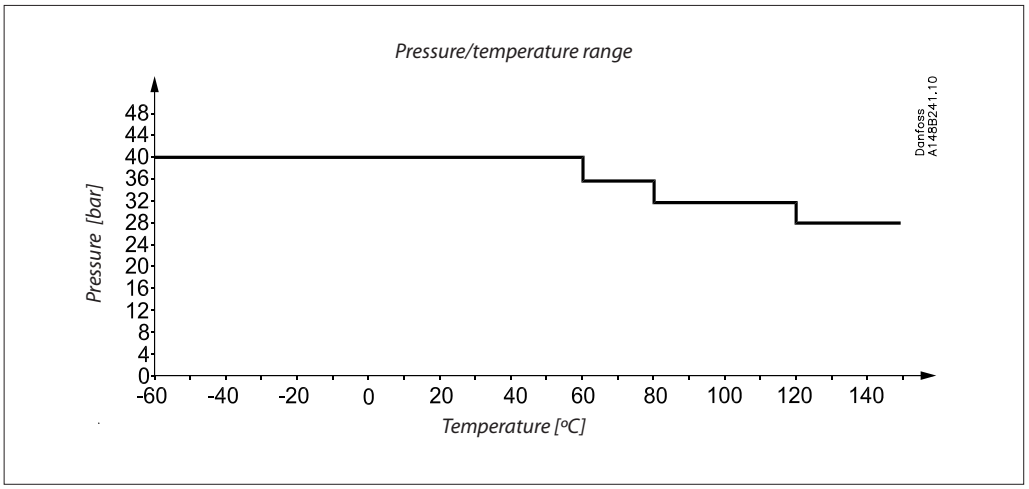

Selection of strainer size

The mesh aperture size of the strainer must satisfy the requirements stated by the suppliers of the equipment to be protected.

The following recommendations of aperture size apply in general to refrigeration installations:

Liquid Lines
After pumps: ..... **150**µ [100 mesh] / 250µ [72 mesh]
In front of AKVA valves ..... **100**µ [150 mesh]

Protection of automatic regulation equipment
Generally ..... **150**µ [100 mesh] / 250µ [72 mesh]
Sensitive equipment, e.g.
suction regulators with low temperature ..... **250**µ [72 mesh]

Definition
Mesh is the number of threads per inch. µ (microns) is the distance between two threads (1µ = 1 /1000 mm).

Suction Lines
Ahead of screw compressor ..... **250**µ [72 mesh]
Ahead of piston compressor ..... **150**µ [100 mesh]

Flow coefficient (DIN/ANSI)

Connection size (DN) / **FIA**	µ	**mesh**	**wire** mm	**wire** in.	**free space** %	**screen area** Plain inserts cm²	**screen area** Plain inserts in²
250 (10″)	150	100	0.10	0.004	36	1800	70.9
	250	72	0.10	0.004	51	1800	70.9
300 (12″)	150	100	0.10	0.004	36	2590	102.0
	250	72	0.10	0.004	51	2590	102.0

K_v values

DN	**FIA angle - plain filter net**	
	µ150	µ250
250	784.5	808.9
300	1062.3	1095.4

Material specification

FIA 250-300 (10-12 in.)

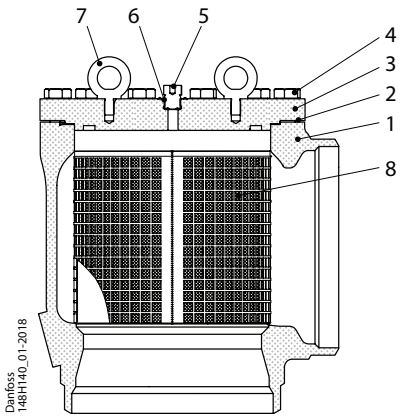

FIA 250-300 (10-12 in.)

No.	Part	Material	DIN	ISO	ASTM
1	Housing	Steel	G20Mn5QT, 10213-3 ---------- P285QH+QT, 10222-4		LCC, A352 ---------- LF2, A350
2	Gasket	Fibre, Non-asbestos			
3	Cover	Steel	P285QH EN10222-4 ---------- P275NL1 or 2 EN10028-3		LF2, A350 ---------- A, A662
4	Bolts	Stainless steel	A2-70	A2-70	Type 308
5	Pressure relief screw	Stainless Steel			
6	Packing washer	Stainless steel			
7	Eye bolts DIN 580	Steel			
8	Strainer insert	Stainless Steel			

Connections

DIN

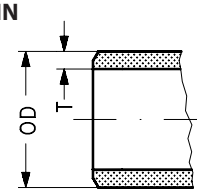

Size mm	Size in.	OD mm	T mm	OD in.	T in.
Butt-weld DIN (EN 10220)					
250	10	273	6.3	10.75	0.25
300	12	323.9	7.1	12.75	0.28

ANSI

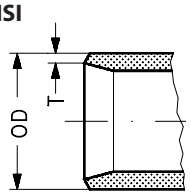

Size mm	Size in.	OD mm	T mm	OD in.	T in.
Butt-weld ANSI (B 36.10 Schedule 40)					
250	10	273	9.3	10.75	0.25
300	12	323.9	9.5	12.75	0.28

Dimensions and weights

FIA 250-300

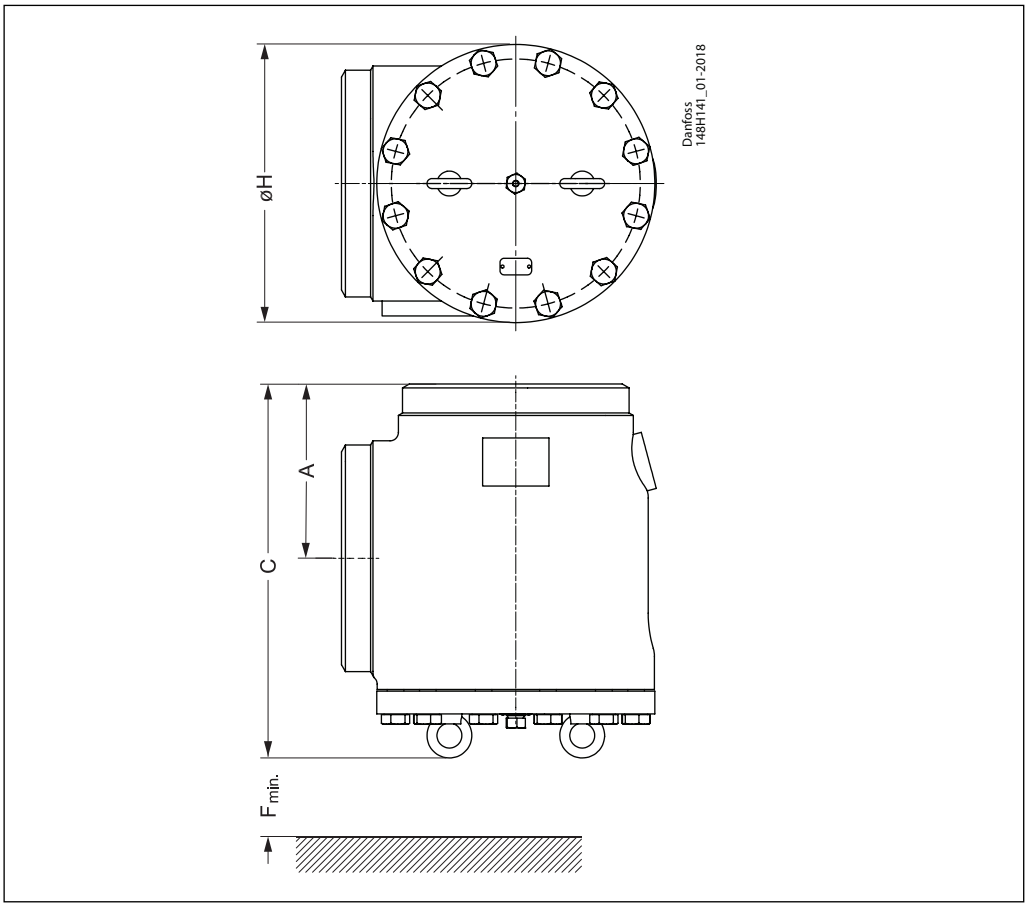

Angleway

Strainer size		A	C	H	$F_{min.}$	Weight
FIA 250	mm	210	450.5	334	285	89.6 kg
(10")	in.	8.27	17.74	13.14	11.22	197.5 lbs
FIA 300	mm	240	510.5	384	340	122 kg
(12")	in.	9.45	20.1	15.12	13.39	269 lbs

Ordering

The table below is used to identify the strainer required. Please note that you have to order **FIA strainer without insert and a strainer insert.**

Example:
FIA 250 D ANG + 150µ Strainer insert = **148H3171** + **148H3136**

Size		Type	FIA Without strainer insert	Strainer insert 150µ 100 mesh	Strainer insert 250µ 72 mesh
mm	in.				
Butt-weld DIN (EN 10220) - Angleway					
250	10	FIA 250 D ANG	**148H3171**	**148H3136**	**148H3175**
300	12	FIA 300 D ANG	**148H3172**	**148H3137**	**148H3176**
Butt-weld ANSI (B 36.10 Schedule 40) - Angleway					
250	10	FIA 250 A ANG	**148H3173**	**148H3136**	**148H3175**
300	12	FIA 300 A ANG	**148H3174**	**148H3137**	**148H3176**

D = Butt-weld DIN
A = Butt-weld ANSI
ANG = Angleway

ENGINEERING
TOMORROW

Strainer
Type FIA 15-200, 65 bar (943 psi)

Contents **Page**

Features ... 687
Technical data ... 688
Design ... 688
Selection of strainer size ... 689
Material specification ... 691
Dimensions and weights ... 693
Connections ... 695
Ordering ... 696

AI273641142831en-000102 | 2018.06

ENGINEERING TOMORROW

Strainer
Type FIA 15-200, 65 bar (943 psi)



FIA strainers are a range of angleway and straightway strainers, which are carefully designed to give favourable flow conditions. The design makes the strainer easy to install, and ensures quick strainer inspection and cleaning.

FIA strainers are used ahead of automatic controls, pumps, compressors etc., for initial plant start-up and where permanent filtration of the refrigerant is required. The strainer reduces the risk of undesirable system breakdowns and reduces wear and tear on plant components.

FIA strainers are equipped with a screen mesh of stainless steel, available in sizes 100, 150, 250 and 500µ (microns*), (US 150, 100, 72, 38 mesh*).

* Mesh is the number of threads per inch.
µ (microns) is the distance between two threads
(1µ = 1 /1000 mm).

Features

- Modular Concept:
  – Each valve housing is available with DIN and ANSI butt weld connection and in several different sizes.
  – Possible to convert FIA strainers to any other product in the SVL family (Shut-off valve, regulating valve, check & stop valve or check valve) just by replacing the complete top part.
- Fast and easy overhaul service. It is easy to replace the top part and no welding is needed.
- Filter net of stainless steel mounted direct without extra gaskets means easy servicing.
- Two types of strainer inserts are available:
  - A plain insert of stainless steel.
  - A pleated insert (DN 15-200) with extra large surface, which ensures long intervals between cleaning and low pressure drop.
- FIA 15-40 (½ – 1 ½ in.):
  A special insert (50µ) can be used in combination with a standard version when cleaning a plant during commissioning.
- FIA 50-200 (2 - 8 in.):
  A large capacity filter bag (50µ) can be inserted for cleaning plant during commissioning.
- FIA 65-200 (2½ - 8 in.) can be equipped with a magnetic insert for detention of iron particles and other magnetic particles.
- Each strainer clearly marked with type, size and performance range
- Housing and bonnet of low temperature steel in accordance with the requirements of the Pressure Equipment Directive and those of other international classification authorities
- Classification: DNV, CRN, BV, EAC etc.
  To get an updated list of certification on the products please contact your local Danfoss Sales Company.
- Equipped with 42CrMo5 bolts to withstand high pressure.

Strainer, type FIA 15-200, 65 bar (943 psi)

Technical data

- *Refrigerants*
  Applicable to HCFC, HFC, R717 (Ammonia), R744 (CO_2) and flammable refrigerants.
  For further information refer to the product instruction for FIA.
- *Temperature range*
  –60/+150°C (–76/+302°F).
- *Max. working pressure*
  65 bar (943 psig)

Design

Strainer Insert
A filter grid and filter net of stainless steel ensure long element life. The filter net offers a very high degree of cleanability.

Housing
The strainer housing is made of special, cold resistant steel.

Installation/Maintenance
The strainer is designed to resist high internal pressures. However, the piping system in general should be designed to avoid liquid traps and reduce the risk of hydraulic pressure caused by thermal expansion.
Install the strainer with the cover in downward position.

Danfoss recommends replacement/cleaning of the strainer when the differential pressure loss >0.5 bar (7.3 psi) in the liquid line and >0.05 bar (0.7 psi) in the suction line. The max. permissible differential pressure is 1 bar (15 psi).

For further information refer to installation instruction for FIA.

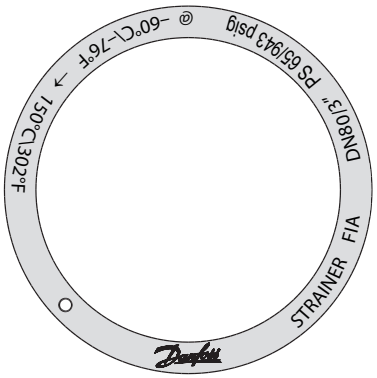

Example of marking ring, FIA

Pressure Equipment Directive (PED)
SVL valves are approved according to the European standard specified in the Pressure Equipment Directive and are CE marked.

For further details / restrictions - see Installation guide.

	SVL		
Nominal bore	DN≤ 25 mm (1 in.)	DN32-80 mm (1¼ - 3 in.)	DN100 - 200 mm (4-8 in.)
Classified for	Fluid group I		
Category	Article 3, paragraph 3	II	III

Selection of strainer size

The mesh aperture size of the strainer must satisfy the requirements stated by the suppliers of the equipment to be protected.

The following recommendations of aperture size apply in general to refrigeration installations:

All lines
First start up: **50**µ
(Use strainer element with removable insert for FIA DN15-40 or separate filter bag for FIA DN 50-200. 50µ insert should normally be removed after the first 24 hours of operation)

Liquid Lines
Ahead of pumps: ..... **500**µ [38 mesh]
After pumps: ..... **150**µ [100 mesh] / 250µ [72 mesh]
In front of AKVA valves ..... **100**µ [150 mesh]

Protection of automatic regulation equipment
Generally ..... **150**µ [100 mesh] / 250µ [72 mesh]
Sensitive equipment, e.g.
suction regulators with low temperature ..... **250**µ [72 mesh]

Definition
Mesh is the number of threads per inch.
µ (microns) is the distance between two threads (1µ = 1 /1000 mm).

Suction Lines
Ahead of screw compressor ..... **250**µ [72 mesh]
Ahead of piston compressor ..... **150**µ [100 mesh]

Flow coefficient (DIN/ANSI)

Connection size (DN) **FIA**	µ	**mesh**	**wire** mm	**wire** in.	**free space** %	**screen area** Plain elements cm²	Plain elements in²	Pleated elements cm²	Pleated elements in²
15 - 20 (1/2" - 3/4")	100		0.068	0.003	35	25	3.9	45	7.0
	150	100	0.10	0.004	36	25	3.9	45	7.0
	250	72	0.10	0.004	51	25	3.9	45	7.0
	500	38	0.16	0.006	57.6	25	3.9	45	7.0
25 - 40 (1" - 1 1/2")	100		0.068	0.003	35	71	11	160	25.0
	150	100	0.10	0.004	36	71	11	160	25.0
	250	72	0.10	0.004	51	71	11	160	25.0
	500	38	0.16	0.006	57.6	71	11	160	25.0
50 (2")	100		0.068	0.003	35	71	11	200	31.2
	150	100	0.10	0.004	36	87	13.5	200	31.2
	250	72	0.10	0.004	51	87	13.5	200	31.2
	500	38	0.16	0.006	57.6	87	13.5	200	31.2
65 (2 1/2")	150	100	0.10	0.004	36	127	19.7	305	47.6
	250	72	0.10	0.004	51	127	19.7	305	47.6
	500	38	0.16	0.006	57.6	127	19.7	305	47.6
80 (3")	150	100	0.10	0.004	36	205	31.8	450	70.2
	250	72	0.10	0.004	51	205	31.8	450	70.2
	500	38	0.16	0.006	57.6	205	31.8	450	70.2
100 (4")	150	100	0.10	0.004	36	370	57.4	790	123.2
	250	72	0.10	0.004	51	370	57.4	790	123.2
	500	38	0.16	0.006	57.6	370	57.4	790	123.2
125 (5")	150	100	0.10	0.004	36	510	79.1	1105	172.4
	250	72	0.10	0.004	51	510	79.1	1105	172.4
	500	38	0.16	0.006	57.6	510	79.1	1105	172.4
150 (6")	150	100	0.10	0.004	36	726	112.5	1600	249.6
	250	72	0.10	0.004	51	726	112.5	1600	249.6
	500	38	0.16	0.006	57.6	726	112.5	1600	249.6
200 (8")	150	100	0.10	0.004	36	1315	203.8	2900	453.1
	250	72	0.10	0.004	51	1315	203.8	2900	453.1
	500	38	0.16	0.006	57.6	1315	203.8	2900	453.1

Selection of strainer size
(Continued)

K_v values

DN	FIA angle - plain filter net				FIA angle - pleated filter net		
	µ100	µ150	µ250	µ500	µ150	µ250	µ500
15	3.3	3.4	3.5	3.7	4.2		
20	6.9	7.1	7.3	7.7	8.8		
25	13.8	14.0	14.5	15.2	17.2	17.9	
32	23.0	23.8	24.7	25.5	29.2	30.5	
40	25.1	25.5	26.4	28.1	31.4	32.6	
50	45.1	45.9	47.6	50.2	56.7	58.8	62.0
65		56.1	57.8	60.4	69.3	71.4	74.6
80		104.6	108.0	113.1	129.2	133.4	139.7
100		162.4	167.5	176.0	200.6	206.9	217.4
125		275.4	283.9	298.4	340.2	350.7	368.6
150		362.1	373.2	391.9	447.3	462.9	
200		572.9	590.8	620.5	704.9	730.0	

DN	FIA straight - plain filter net				FIA straight - pleated filter net		
	µ100	µ150	µ250	µ500	µ150	µ250	µ500
15	2.5	2.6	2.7	2.8	3.3		
20	5.3	5.4	5.6	5.9	6.9		
25	10.5	10.7	11.1	11.6	13.8	14.5	
32	17.6	18.2	18.9	19.5	23.9	24.7	
40	19.2	19.5	20.2	21.5	25.5	26.4	
50	34.5	35.1	36.4	38.4	45.9	47.6	50.2
65		42.9	44.2	46.2	56.1	57.8	60.4
80		80.0	82.6	86.5	104.6	108.0	113.1
100		124.2	128.1	134.6	162.4	167.5	176.0
125		210.6	217.1	228.2	275.4	283.9	298.4
150		276.9	285.4	299.7	362.1	374.0	
200		438.1	451.8	474.5	570.8	587.3	

Material specification

FIA 15 - 40 ($^1/_2$ in. - 1 $^1/_2$ in.)

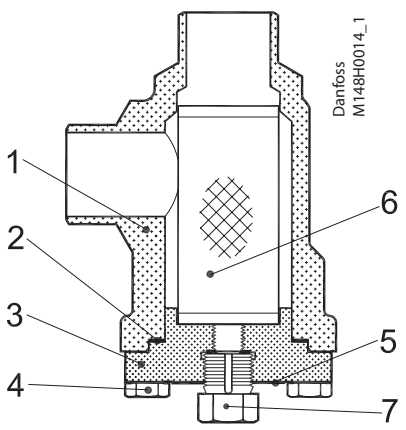

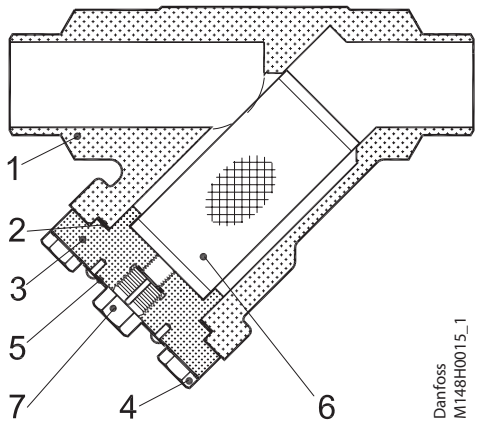

FIA 15-40 ($^1/_2$ in. - 1$^1/_2$ in.)

No.	Part	Material	DIN	ISO	ASTM
1	Housing	Steel	G20Mn5QT, 10213-3 ---------- P285QH+QT, 10222-4		LCC, A352 ---------- LF2, A350
2	Gasket	Fibre, Non-asbestos			
3	Cover	Steel	P285QH EN10222-4 ---------- P275NL1 or 2 EN10028-3		LF2, A350 ---------- A, A662
4	Bolts	High temperature steel	42CrMo5 10269		A193
5	Marking label	Aluminium			
6	Strainer element	Stainless steel			
7	Pressure relief (screw)	Stainless steel			

Material specification

FIA 50 - 200 (2 in. - 8 in.)

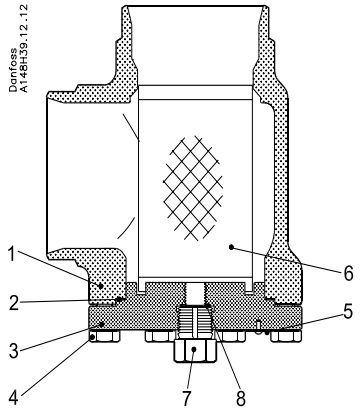

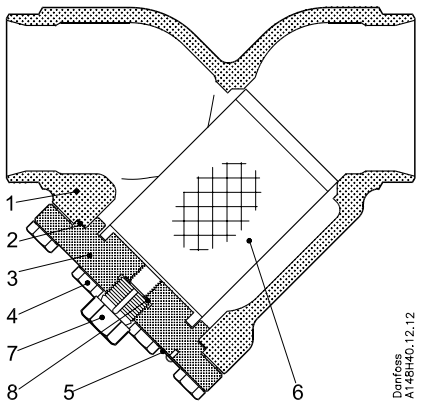

FIA 50-200 (2 in. - 8 in.)

No.	Part	Material	DIN	ISO	ASTM
1	Housing	Steel	G20Mn5QT, 10213-3 ---------- P285QH+QT, 10222-4		LCC, A352 ---------- LF2, A350
2	Gasket	Fibre, Non-asbestos			
3	Cover	Steel	P285QH EN10222-4 ---------- P275NL1 or 2 EN10028-3		LF2, A350 ---------- A, A662
4	Bolts	High temperature steel	42CrMo5 10269		A193
5	Marking label	Aluminium			
6	Strainer element	Stainless steel			
7	Pressure relief (screw)	Stainless steel			
8*	Packing washer	Aluminium			

* pos 8 used in FIA 50-200

Dimensions and weights

FIA 15 - 65

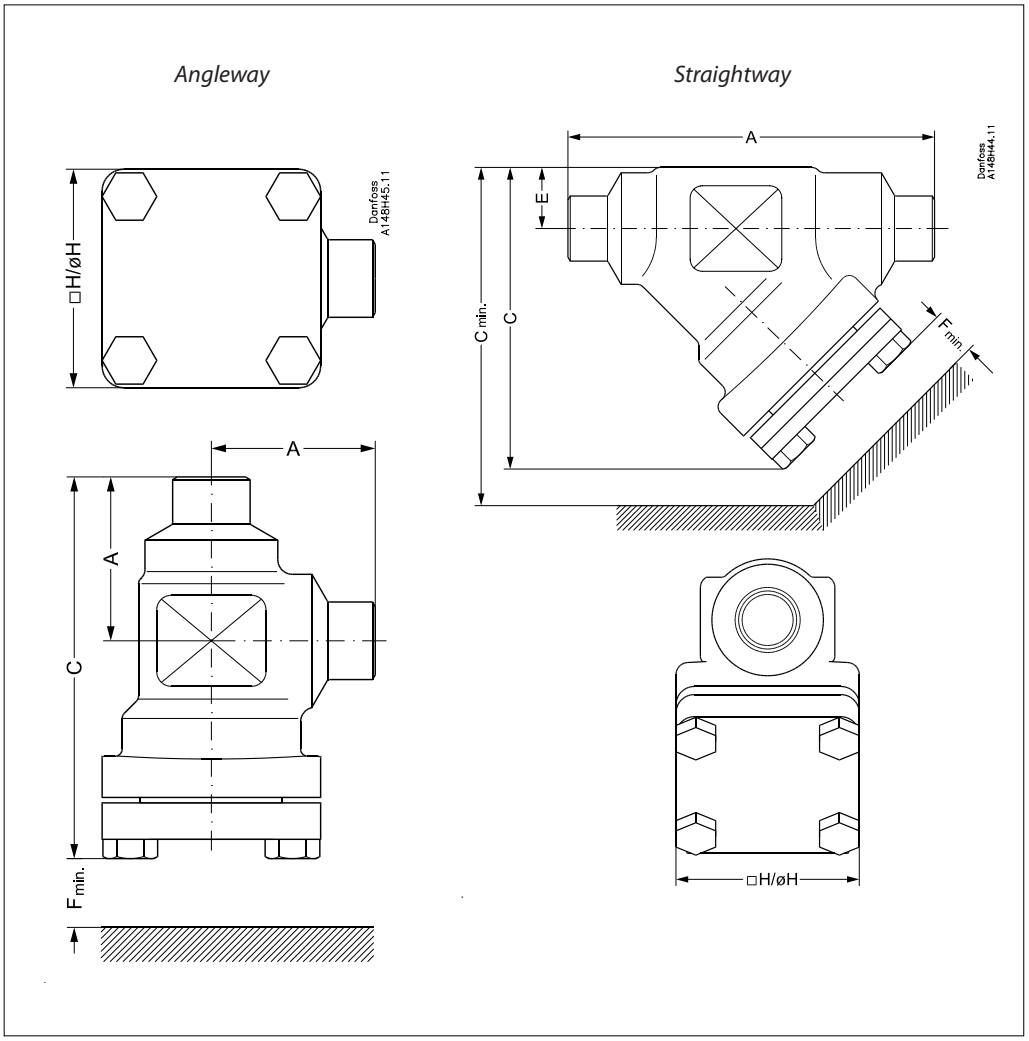

Angleway

Strainer size		A	C	H	$F_{min.}$	Weight
FIA 15-20	mm	45	105	60	68	1.1 kg
($^1/_2$" - $^3/_4$")	in.	1.77	4.13	2.36	2.68	2.4 lbs
FIA 25-40	mm	55	132	70	95	1.7 kg
(1" - 1$^1/_2$")	in.	2.17	5.20	2.76	3.74	3.7 lbs
FIA 50	mm	60	132	77	92	2.8 kg
(2")	in.	2.36	5.20	3.03	3.62	6.2 lbs
FIA 65	mm	70	152	90	107	3.8 kg
(2$^1/_2$")	in.	2.76	5.98	3.54	4.21	8.4 lbs

Straightway

Strainer size		A	C	$C_{min.}$	H	E	$F_{min.}$	Weight
FIA 15-20	mm	120	99	133	60	20	68	1.4 kg
($^1/_2$" - $^3/_4$")	in.	4.72	3.90	5.24	2.36	0.79	2.68	3.1 lbs
FIA 25-40	mm	155	129	177	70	26	95	2.4 kg
(1" - 1$^1/_2$")	in.	6.10	5.08	6.97	2.76	1.02	3.74	5.3 lbs
FIA 50	mm	148	138	184	77	32	92	3.5 kg
(2")	in.	5.83	5.43	7.24	3.03	1.26	3.62	7.7 lbs
FIA 65	mm	176	165	219	90	40	107	5.3 kg
(2$^1/_2$")	in.	6.93	6.50	8.62	3.54	1.57	4.21	11.7 lbs

Dimensions and weights

FIA 80 - 200

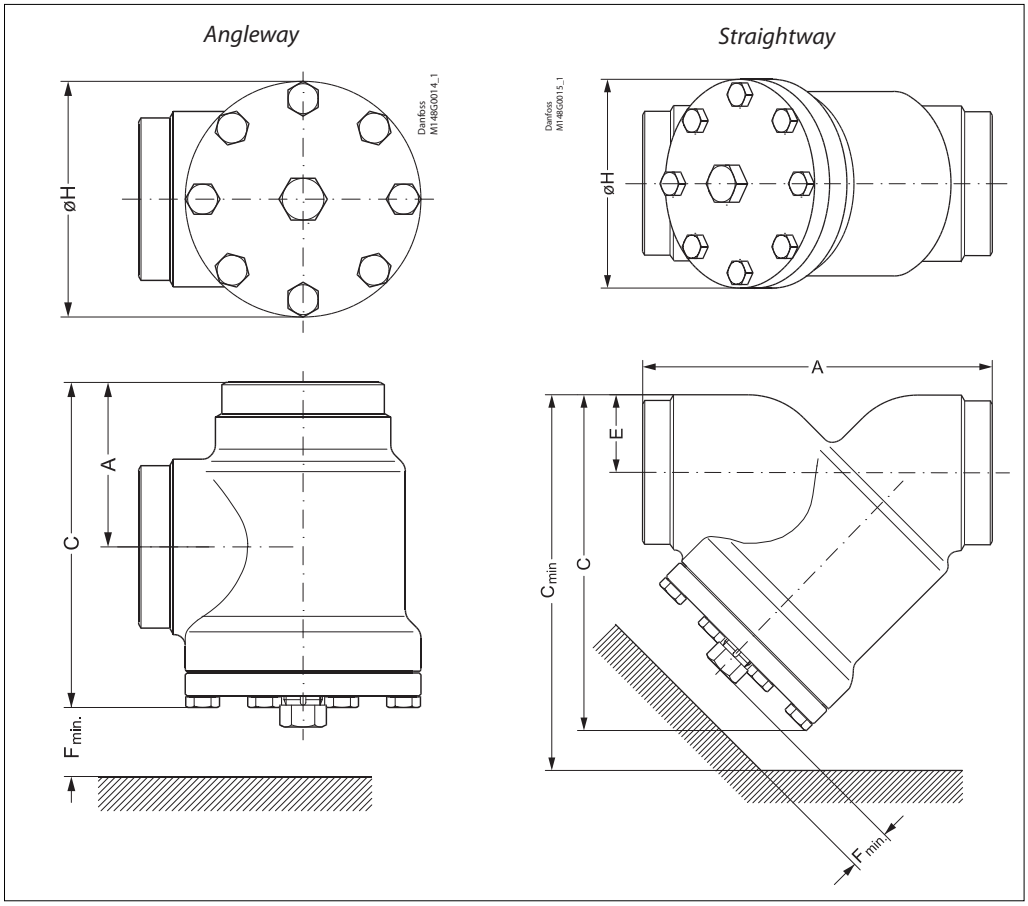

Angleway

Strainer size		A	C	H	$F_{min.}$	Weight
FIA 80	mm	90	189	129	133	7.3 kg
(3")	in.	3.54	7.44	5.08	5.24	16.1 lbs
FIA 100	mm	106	223	156	163	11.9 kg
(4")	in.	4.17	8.78	6.14	6.42	26.2 lbs
FIA 125	mm	128	268	192	190	21.2 kg
(5")	in.	5.04	10.6	7.56	7.48	46.7 lbs
FIA 150	mm	145	303	219	223	30.5 kg
(6")	in.	5.71	11.93	8.62	8.78	67.2 lbs
FIA 200	mm	180	372	276	280	68 kg
(8")	in.	7.09	14.65	10.87	11.02	150 lbs

Straightway

Strainer size		A	C	$C_{min.}$	H	E	$F_{min.}$	Weight
FIA 80	mm	216	204	271	129	48	133	8.6 kg
(3")	in.	8.50	8.03	10.67	5.08	1.89	5.24	19 lbs
FIA 100	mm	264	256	337	156	60	163	14.9 kg
(4")	in.	10.39	10.08	13.27	6.14	2.36	6.42	32.8 lbs
FIA 125	mm	322	313	408	192	74	190	26.9 kg
(5")	in.	12.68	12.32	16.06	7.56	2.91	7.48	59.3 lbs
FIA 150	mm	370	370	482	219	91	223	51 kg
(6")	in.	14.57	14.57	18.98	8.62	3.58	8.78	112 lbs
FIA 200	mm	464	465	605	276	117	280	95 kg
(8")	in.	18.27	18.31	23.82	10.87	4.61	11.02	209 lbs

Connections

DIN

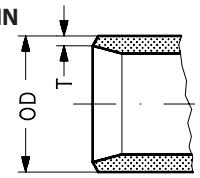

Size mm	Size in.	OD mm	T mm	OD in.	T in.			k_v-angle m^3/h	k_v-straight m^3/h	C_v-angle USgal/min	C_v-straight USgal/min
Butt-weld DIN (EN 10220)											
15	½	21.3	2.3	0.839	0.091			7.0	4.9	8.1	5.7
20	¾	26.9	2.3	1.059	0.091			14.6	10.2	16.9	11.8
25	1	33.7	2.6	1.327	0.103			24.8	17.4	28.8	20.2
32	1¼	42.4	2.6	1.669	0.102			42.6	29.8	49.4	34.6
40	1½	48.3	2.6	1.902	0.103			45.2	31.6	52.4	36.7
50	2	60.3	2.9	2.37	0.11			80	65	93	76
65	2½	76.1	2.9	3	0.11			120	97	140	113
80	3	88.9	3.2	3.50	0.13			182	152	211	176
100	4	114.3	3.6	4.50	0.14			313	278	363	323
125	5	139.7	4.0	5.50	0.16			514	470	596	545
150	6	168.3	4.5	6.63	0.18			785	597	911	693
200	8	219.1	6.3	8.63	0.25			1168	1024	1355	1188

ANSI

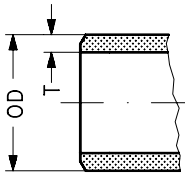

Size mm	Size in.	OD mm	T mm	OD in.	T in.			k_v-angle m^3/h	k_v-straight m^3/h	C_v-angle USgal/min	C_v-straight USgal/min
Butt-weld ANSI (B 36.10 Schedule 80)											
15	½	21.3	3.7	0.839	0.146			7.0	4.9	8.1	5.7
20	¾	26.9	4.0	1.059	0.158			14.6	10.2	16.9	11.8
25	1	33.7	4.6	1.327	0.181			24.8	17.4	28.8	20.2
32	1¼	42.4	4.9	1.669	0.193			42.6	29.8	49.4	34.6
40	1½	48.3	5.1	1.902	0.201			45.2	31.6	52.4	36.7
Butt-weld ANSI (B 36.10 Schedule 40)											
50	2	60.3	3.9	2.37	0.15			80	65	93	76
65	2½	73.0	5.2	2.87	0.20			120	97	140	113
80	3	88.9	5.5	3.50	0.22			182	152	211	176
100	4	114.3	6.0	4.50	0.24			313	278	363	323
125	5	141.3	6.6	5.56	0.26			514	470	596	545
150	6	168.3	7.1	6.63	0.28			785	597	911	693
200	8	219.1	8.2	8.63	0.32			1168	1024	1355	1188

Ordering

Size [DN]	Parts Program				
	Housing				Top complete
	ANG		STR		FIA
	DIN	ANSI	DIN	ANSI	
6					
10					
15	148B6622	148B6612	148B6642	148B6632	148B5783
20	148B6623	148B6613	148B6643	148B6633	148B5783
25	148B6624	148B6614	148B6644	148B6634	148B5784
32	148B6625	148B6615	148B6645	148B6635	148B5784
40	148B6626	148B6616	148B6646	148B6636	148B5784
50	148B6627	148B6617	148B6647	148B6637	148B5785
65	148B6628	148B6618	148B6648	148B6638	148B5786
80	148B6629	148B6619	148B6649	148B6639	148B5787
100	148B6630	148B6620	148B6650	148B6640	148B5788
125	148B6631	148B6621	148B6651	148B6641	148B5789
150					
200					

Size [DN]	Complete valve			
	FIA			
	ANG		STR	
	DIN	ANSI	DIN	ANSI
6				
10				
15				
20				
25				
32				
40				
50				
65				
80				
100				
125				
150	148B6669	148B6671	148B6670	148B6672
200	148B6677	148B6679	148B6678	148B6680

Strainer element

FIA Size		Strainer insert 100µ 150 mesh	Strainer insert 150µ 100 mesh	Strainer insert 250µ 72 mesh	Strainer insert 500µ 38 mesh	Pleated Strainer insert 150µ 100 mesh	Pleated Strainer insert 250µ 72 mesh	Pleated Strainer insert 500µ 38 mesh
mm	in.							
15	½	**148H3122**	**148H3124**	**148H3126**	**148H3128**	**148H3303**	**148H3363**	-
20	¾							
25	1	**148H3123**	**148H3125**	**148H3127**	**148H3129**	**148H3304**	**148H3269**	-
32	1¼							
40	1½							
50	2	**148H3157**	**148H3130**	**148H3138**	**148H3144**	**148H3179**	**148H3184**	**148H3189**
65	2½	-	**148H3131**	**148H3139**	**148H3145**	**148H3180**	**148H3185**	**148H3190**
80	3	-	**148H3119**	**148H3120**	**148H3121**	**148H3181**	**148H3186**	**148H3191**
100	4	-	**148H3132**	**148H3140**	**148H3146**	**148H3182**	**148H3187**	**148H3192**
125	5	-	**148H3133**	**148H3141**	**148H3147**	**148H3183**	**148H3188**	**148H3193**
150	6	-	**148H3134**	**148H3142**	**148H3148**	**148H3226**	**148H3293***	-
200	8	-	**148H3135**	**148H3143**	**148H3149**	**148H3297**	**148H3294***	-

* 60 mesh

Accessories

Part	Accessory for	Code number
Magnet insert	FIA 65-100	**148H3447**
	FIA 125-200	**148H3448**

Part	Accessory for	Code number
Strainer element µ150 with removable element µ50 for the first start up	FIA 15-20	**148H3301**
	FIA 25-40	**148H3302**

Part	Accessory for	Code number
Filter bag	FIA 50	**148H3150**
	FIA 65	**148H3151**
	FIA 80	**148H3152**
	FIA 100	**148H3153**
	FIA 125	**148H3154**
	FIA 150	**148H3155**
	FIA 200	**148H3156**

Part	Accessory for	Code number
Purge valve complete	FIA 50 - 300	**148B3745**
Blind nut with gasket		**148H3450**

ENGINEERING
TOMORROW

Strainers in stainless steel
Type FIA SS

Contents **Page**

Features ... 699
Pressure and temperature range ... 699
Design ... 700
Technical data ... 700
Connections ... 700
Selection of strainer size ... 701
Material specification ... 702
Dimensions and weights ... 703
Ordering ... 704

AI234986440196en-000701 | 2017.06

ENGINEERING TOMORROW

Strainers in stainless steel
Type FIA SS



In certain specific areas such as outdoor applications and corrosive atmospheres, such as coastal installations, there is a need for high surface protection to prevent failure due to corrosion.

Today's food safety standards often call for daily treatment with detergents to protect against bacteria growth, again producing a need for high surface protection.

FIA SS strainers are a range of angle-way and straight-way strainers which are carefully designed to give favourable flow conditions.

The design makes the strainer easy to install, and ensures quick strainer inspection and cleaning.

FIA SS strainers are used ahead of automatic controls, pumps, compressors etc., for initial plant start-up and where permanent filtration of the refrigerant is required. The strainer reduces the risk of undesirable system breakdowns and reduces wear and tear on plant components.

Features

- Applicable to HCFC, HFC, R717 (Ammonia), R744 (CO_2) and all flammable refrigerants.
- Designed to give favourable flow conditions.
- Housing is made of special cold resistant stainless steel approved for low temperature operations.
- Easy to disassemble for inspection and service.
- Butt-weld DIN and ANSI connections.
- Max. operating pressure: 52 bar g (754 psig)
- Temperature range: –60/+150°C (–76 +302°F).
- Compact and light valves for easy handling and installation.
- Classification: DNV, CRN, BV, EAC etc. To get an updated list of certification on the products please contact your local Danfoss Sales Company.

Pressure and temperature range

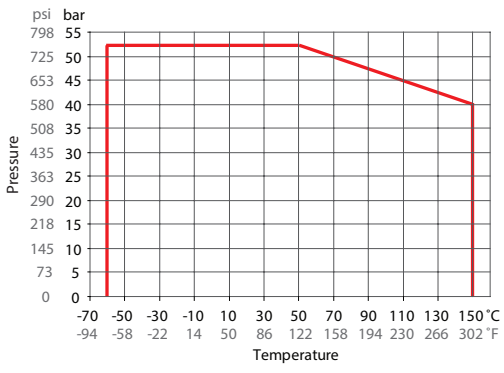

Design

Connections
Available with the following connections:

- Butt-weld DIN (EN 10220)
  DN 15 - 65 (½ - 2½ in.)
- Butt-weld ANSI (B 36.19M)
  DN 15 - 65 (½ - 2½ in.)

Strainer Insert
A filter grid and filter net of stainless steel ensure long element life. The filter net offers a very high degree of cleanability.

Housing
Made of stainless steel approved for low temperature operations.

Pressure Equipment Directive (PED)
FIA SS strainers are approved in accordance with the European standard specified in the Pressure Equipment Directive and are CE marked.
For further details / restrictions - see Installation Instruction.

Installation/Maintenance
The strainer is designed to resist high internal pressures. However, the piping system in general should be designed to avoid liquid traps and reduce the risk of hydraulic pressure caused by thermal expansion.

Install the strainer with the cover in downward position.

Danfoss recommends replacement/cleaning of the strainer when the differential pressure loss >0.5 bar (7.3 psi) in the liquid line and >0.05 bar (0.7 psi) in the suction line. The max. permissible differential pressure is 1 bar (15 psi).

For further information refer to installation instruction for FIA SS.

Identification:

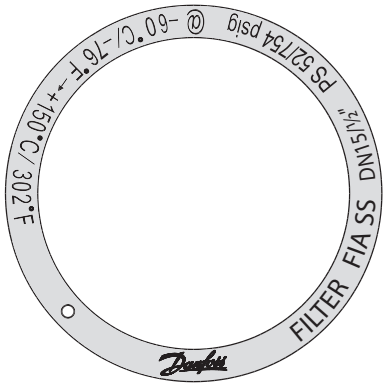

Example of marking ring, FIA SS

	FIA SS	
Nominal bore	DN ≤ 25 (1 in.)	DN 32-65 mm (1¼ - 2½ in.)
Classified for	Fluid group I	
Category	Article 3, paragraph 3	II

Technical data

- *Refrigerants*
  Applicable to HCFC, HFC, R717 (Ammonia), R744 (CO_2) and all flammable refrigerants.
  For further information please see installation instruction for FIA SS.
- *Temperature range*
  –60°C/+150°C (–76°F/+302°F).
- *Max. working pressure:*
  52 bar g (754 psi g).

Connections

DIN

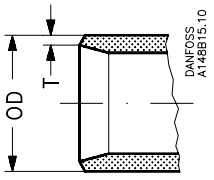

ANSI

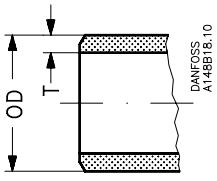

Size		OD	T
Butt-weld DIN (EN 10220)			
15	mm	21.3	2.3
½	in.	0.839	0.091
20	mm	26.9	2.3
¾	in	1.059	0.091
25	mm	33.7	2.6
1	in.	1.327	0.103
32	mm	42.4	2.6
1¼	in.	1.669	0.102
40	mm	48.3	2.6
1½	in.	1.902	0.103
50	mm	60.3	2.9
2	in.	2.37	0.11
65	mm	76.1	2.9
2½	in.	3	0.11

Size		OD	T
Butt-weld ANSI (B 36.19M, SCHEDULE 40)			
15	mm	21.3	2.8
½	in.	0.839	0.11
20	mm	26.9	2.9
¾	in	1.06	0.11
25	mm	33.7	3.5
1	in.	1.33	0.14
32	mm	42.4	3.6
1¼	in.	1.67	0.14
40	mm	48.3	3.7
1½	in.	1.9	0.15
Butt-weld ANSI (B 36.19M, SCHEDULE 10)			
50	mm	60.3	2.8
2	in.	2.37	0.11
65	mm	73	3.1
2½	in.	2.87	0.12

Selection of strainer size

The mesh aperture size of the strainer must satisfy the requirements stated by the suppliers of the equipment to be protected.

The following recommendations of aperture size apply in general to refrigeration installations:

All lines
First start up: **50**µ
(Use filter element with removable insert for FIA SS DN15-40 or separate filter bag for FIA SS DN 50-65. 50µ insert should normally be removed after the first 24 hours of operation)

Liquid Lines
Ahead of pumps: ..... **500**µ [38 mesh]
After pumps: ..... **150**µ [100 mesh] / 250µ [72 mesh]
In front of AKVA valves ..... **100**µ [150 mesh]

Protection of automatic regulation equipment
Generally ..... **150**µ [100 mesh] / 250µ [72 mesh]
Sensitive equipment, e.g.
suction regulators with low temperature ..... **250**µ [72 mesh]

Definition
Mesh is the number of threads per inch.
µ (microns) is the distance between two threads (1µ = 1 /1000 mm).

Suction Lines
Ahead of screw compressor ..... **250**µ [72 mesh]
Ahead of piston compressor ..... **150**µ [100 mesh]

Flow coefficient (DIN/ANSI)

Connection size (DN) FIA SS	µ	mesh	wire [mm]	wire [in]	free space [%]	screen area			
						Plain elements		Pleated elements	
						[cm²]	[in²]	[cm²]	[in²]
15 – 20 (½ – ¾ in)	100		0.068	0.003	35	25	3.9	45	7.0
	150	100	0.10	0.004	36	25	3.9	45	7.0
	250	72	0.10	0.004	51	25	3.9	45	7.0
	500	38	0.16	0.006	57.6	25	3.9	45	7.0
25 – 40 (1– 1 ½ in)	100		0.068	0.003	35	71	11	160	25.0
	150	100	0.10	0.004	36	71	11	160	25.0
	250	72	0.10	0.004	51	71	11	160	25.0
	500	38	0.16	0.006	57.6	71	11	160	25.0
50 (2 in)	100		0.068	0.003	35	71	11	200	31.2
	150	100	0.10	0.004	36	87	13.5	200	31.2
	250	72	0.10	0.004	51	87	13.5	200	31.2
	500	38	0.16	0.006	57.6	87	13.5	200	31.2
65 (2 ½ in)	150	100	0.10	0.004	36	127	19.7	305	47.6
	250	72	0.10	0.004	51	127	19.7	305	47.6
	500	38	0.16	0.006	57.6	127	19.7	305	47.6

K_v values

DN	FIA SS angle - plain filter net				FIA SS angle - pleated filter net		
	µ100	µ150	µ250	µ500	µ150	µ250	µ500
15	3.3	3.4	3.5	3.7	4.2		
20	6.9	7.1	7.3	7.7	8.8		
25	13.8	14.0	14.5	15.2	17.2	17.9	
32	23.0	23.8	24.7	25.5	29.2	30.5	
40	25.1	25.5	26.4	28.1	31.4	32.6	
50	45.1	45.9	47.6	50.2	56.7	58.8	62.0
65		56.1	57.8	60.4	69.3	71.4	74.6

DN	FIA SS straight - plain filter net				FIA SS straight - pleated filter net		
	µ100	µ150	µ250	µ500	µ150	µ250	µ500
15	2.5	2.6	2.7	2.8	3.3		
20	5.3	5.4	5.6	5.9	6.9		
25	10.5	10.7	11.1	11.6	13.8	14.5	
32	17.6	18.2	18.9	19.5	23.9	24.7	
40	19.2	19.5	20.2	21.5	25.5	26.4	
50	34.5	35.1	36.4	38.4	45.9	47.6	50.2
65		42.9	44.2	46.2	56.1	57.8	60.4

Material specification

FIA SS 15 – 65 (½ in – 2 ½ in)

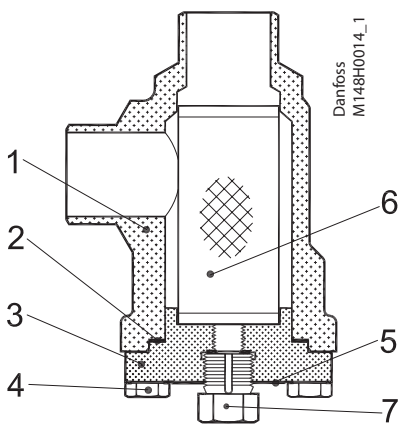

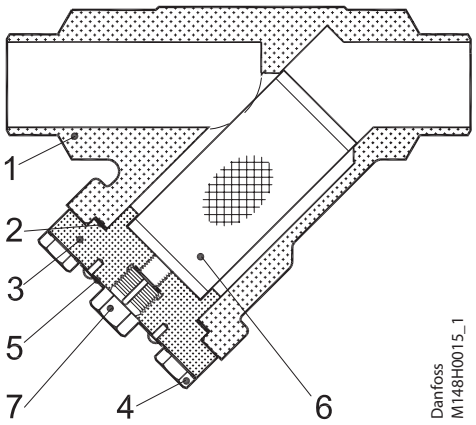

FIA SS 15-65 (½ – 2 ½ in)

No.	Part	Material	DIN	ISO	ASTM
1	Housing	Stainless steel (FIA SS only)	GX5CrNi19-10 EN10213-4		AISI 304
2	Gasket	Fibre, Non-asbestos			
3	Cover	Stainless steel (FIA SS only)	GX5CrNi19-10 EN10213-4		AISI 304
4	Bolts	Stainless steel	A2-70	A2-70	Type 308
5	Marking label	Aluminium			
6	Filter element	Stainless steel			
7	Pressure relief (screw)	Stainless steel			

Dimensions and weights

FIA SS 15 – 65

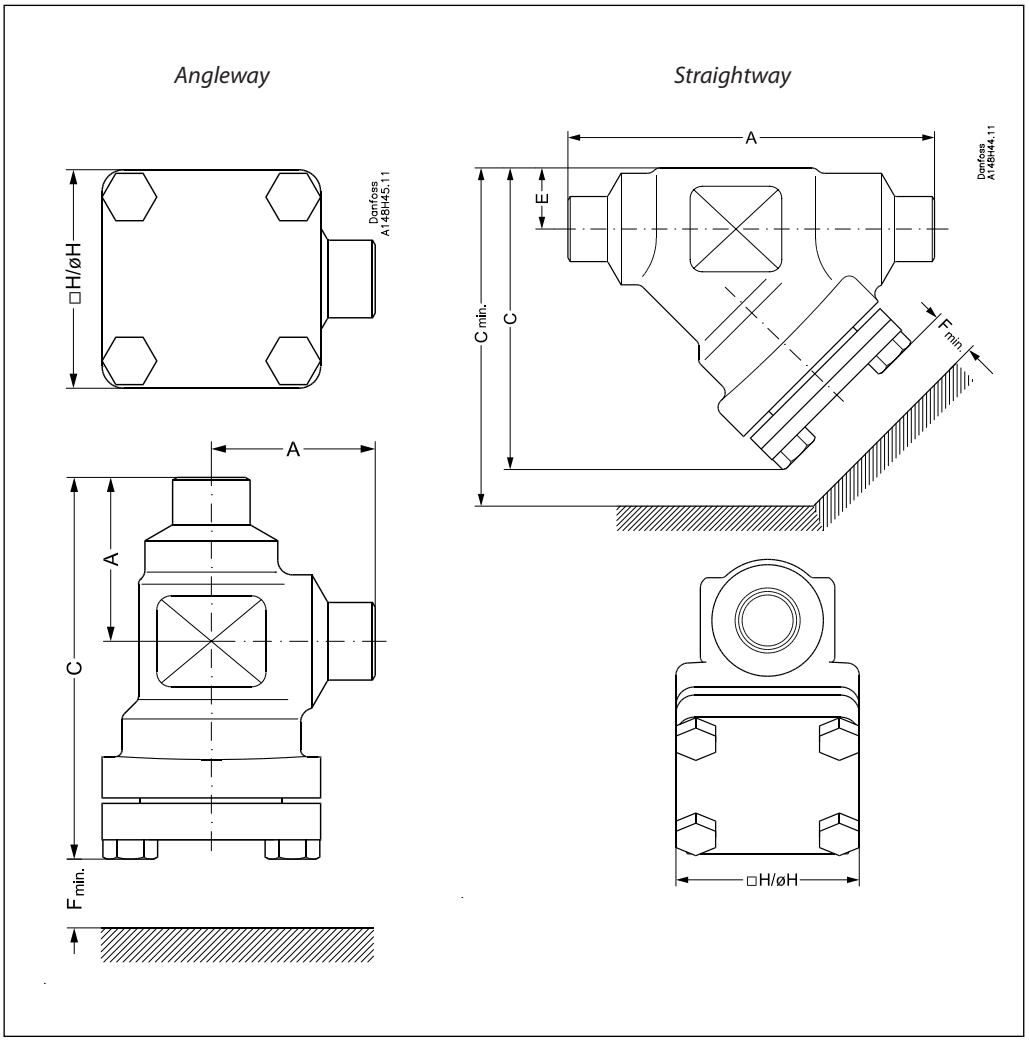

Angleway

Strainer size		A	C	H	$F_{min.}$	Weight
FIA SS 15 – 20	[mm]	45	105	60	68	1.1 kg
(½ – ¾ in)	[in]	1.77	4.13	2.36	2.68	2.4 lbs
FIA SS 25 – 40	[mm]	55	132	70	95	1.7 kg
(1 – 1 ½ in)	[in]	2.17	5.20	2.76	3.74	3.7 lbs
FIA SS 50	[mm]	60	132	77	92	2.8 kg
(2 in)	[in]	2.36	5.20	3.03	3.62	6.2 lbs
FIA SS 65	[mm]	70	152	90	107	3.8 kg
(2 ½ in)	[in]	2.76	5.98	3.54	4.21	8.4 lbs

Straightway

Valve size		A	C	$C_{min.}$	H	E	$F_{min.}$	Weight
FIA SS 15 – 20	[mm]	120	99	133	60	20	68	1.4 kg
(½ – ¾ in)	[in]	4.72	3.90	5.24	2.36	0.79	2.68	3.1 lbs
FIA SS 25 – 40	[mm]	155	129	177	70	26	95	2.4 kg
(1 – 1 ½ in)	[in]	6.10	5.08	6.97	2.76	1.02	3.74	5.3 lbs
FIA SS 50	[mm]	148	138	184	77	32	92	3.5 kg
(2 in)	[in]	5.83	5.43	7.24	3.03	1.26	3.62	7.7 lbs
FIA SS 65	[mm]	176	165	219	90	40	107	5.3 kg
(2 ½ in)	[in]	6.93	6.50	8.62	3.54	1.57	4.21	11.7 lbs

Ordering

The table below is used to identify the strainer required. Please note that you have to order **FIA SS strainer without element, a strainer element** and **accessories.**

Example:
FIA SS 50 D ANG + FIA-X 50 150µ Strainer Element + Filter Bag = **148H5757** + **148H3130** + **148H3150**

Size mm	Size in.	Type	FIA SS Without Filter Element	Filter Element 100µ 150 mesh	Filter Element 150µ 100 mesh	Filter Element 250µ 72 mesh	Filter Element 500µ 38 mesh	Pleated filter element 150µ 100 mesh	Pleated filter element 250µ 72 mesh	Pleated filter element 500µ 38 mesh
Butt-weld DIN (EN 10220) - Angleway										
15	½	FIA SS 15 D ANG	**148B5295**	**148H3122**	**148H3124**	**148H3126**	**148H3128**	**148H3303**	**148H3363**	-
20	¾	FIA SS 20 D ANG	**148B5383**							
25	1	FIA SS 25 D ANG	**148B5492**	**148H3123**	**148H3125**	**148H3127**	**148H3129**	**148H3304**	**148H3269**	-
32	1¼	FIA SS 32 D ANG	**148B5587**							
40	1½	FIA SS 40 D ANG	**148B5666**							
50	2	FIA SS 50 D ANG	**148B5757**	**148H3157**	**148H3130**	**148H3138**	**148H3144**	**148H3179**	**148H3184**	**148H3189**
65	2½	FIA SS 65 D ANG	**148B5851**	-	**148H3131**	**148H3139**	**148H3145**	**148H3180**	**148H3185**	**148H3190**
Butt-weld ANSI (B 36.19M SCHEDULE 10) - Angleway										
65	2½	FIA SS 65 A10 ANG	**148B6498**	-	**148H3131**	**148H3139**	**148H3145**	**148H3180**	**148H3185**	**148H3190**
Butt-weld DIN (EN 10220) - Straightway										
15	½	FIA SS 15 D STR	**148B5296**	**148H3122**	**148H3124**	**148H3126**	**148H3128**	**148H3303**	**148H3363**	-
20	¾	FIA SS 20 D STR	**148B5384**							
25	1	FIA SS 25 D STR	**148B5493**	**148H3123**	**148H3125**	**148H3127**	**148H3129**	**148H3304**	**148H3269**	-
32	1¼	FIA SS 32 D STR	**148B5588**							
40	1½	FIA SS 40 D STR	**148B5667**							
50	2	FIA SS 50 D STR	**148B5758**	**148H3157**	**148H3130**	**148H3138**	**148H3144**	**148H3179**	**148H3184**	**148H3189**
65	2½	FIA SS 65 D STR	**148B5852**	-	**148H3131**	**148H3139**	**148H3145**	**148H3180**	**148H3185**	**148H3190**
Butt-weld ANSI (B 36.19M SCHEDULE 40) - Straightway										
15	½	FIA SS 15 A40 STR	**148B6493**	**148H3122**	**148H3124**	**148H3126**	**148H3128**	**148H3303**	**148H3363**	-
20	¾	FIA SS 20 A40 STR	**148B6494**							
25	1	FIA SS 25 A40 STR	**148B6495**	**148H3123**	**148H3125**	**148H3127**	**148H3129**	**148H3304**	**148H3269**	-
32	1¼	FIA SS 32 A40 STR	**148B6496**							
40	1½	FIA SS 40 A40 STR	**148B6497**							
Butt-weld ANSI (B 36.19M SCHEDULE 10) - Straightway										
50	2	FIA SS 50 A10 STR	**148B5758**	**148H3157**	**148H3130**	**148H3138**	**148H3144**	**148H3179**	**148H3184**	**148H3189**
65	2½	FIA SS 65 A10 STR	**148B6499**	-	**148H3131**	**148H3139**	**148H3145**	**148H3180**	**148H3185**	**148H3190**

D = Butt-weld DIN
A = Butt-weld ANSI

ANG = Angleway
STR = Straightway

Accessories

Part	Accessory for	**Code number**
Filter element µ150 with removable element µ50 for the first start up	FIA SS 15-20	**148H3301**
	FIA SS 25-40	**148H3302**

Part	Accessory for	**Code number**
Filter bag	FIA SS 50	**148H3150**
	FIA SS 65	**148H3151**

Part	Accessory for	**Code number**
Blind nut with gasket	FIA SS 50 - 65	**148H3450**

ENGINEERING
TOMORROW

Strainers
type FA

Contents **Page**

Features 707
Technical data 707
Materials 707
Ordering 708
Design 709
Dimensions and weights 709

AI174186419498en-000301 | 2015.10

ENGINEERING
TOMORROW

Strainers
type FA



Strainer type FA with interchangeable filter insert is used in lines carrying fluorinated refrigerants, ammonia, water, brine, oil, and gas.

Features

- Retains contaminants, e.g. slag, and weld beads and swarf.
- Pressure drop insignificant
- Classification: DNV, CRN, BV, EAC etc. To get an updated list of certification on the products please contact your local Danfoss Sales Company.

Technical data

- *Temperature of media*
  -50 – 140 °C
- *Max. working pressure*
  PS = 28 bar
- *Max. test pressure*
  p' = 42 bar
- *Filter insert*
  Stainless steel weave, mesh size 150µ (100 mesh)

Materials

- Gaskets are non asbestos
- Valve housing made of GGG - 40.3

Ordering

Complete valves



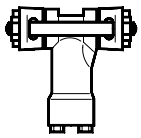

Type	Application	Connection to valve or pipeline	Strainer area [cm²]	Strainer vol. [cm³]	k_v value [1] [m³/h]	Staybolts	Code no.
FA 15	For direct fitting on valve	6 F, TE 12, CVM	40	68	3.3	M12 × 180	**006-0040** [2]
		TEA 20, TEAT 20, TEVA 20			3.3	M12 × 170	**006-0042** [2]
		EVR 15, EVRA 3			3.3	M12 × 188	**006-0043** [2]
		EVRA/T 10-15			3.3	M12 × 107	**006-1012** [2]
FA 20		EVR 20	60	145	7.0	M12 × 240	**006-0046** [2]
		TEA 85, TEAT 85, TEVA 85			7.0	M12 × 206	**006-0048** [2]
		EVRA/T 20			7.0	M12 × 127	**006-1013** [2]
FA 15	For fitting in pipelines	1/4 in weld flanges	40	68	1.9	M12 × 127	**006-0050** [3]
		3/8 in weld flanges			2.6	M12 × 127	**006-0051** [3]
		1/2 in weld flanges			3.5	M12 × 127	**006-0052** [3]
		3/4 in weld flanges			3.5	M12 × 127	**006-0053** [3]
		1/2 in solder flanges			2.6	M12 × 127	**006-0057** [3]
		5/8 in solder flanges			3.4	M12 × 127	**006-0058** [3]
		3/4 in solder flanges			3.2	M12 × 127	**006-0059** [3]
		7/8 in solder flanges			3.5	M12 × 127	**006-0075** [3]
		1 in solder flanges			3.5	M12 × 127	**006-0060** [3]
FA 20		1/2 in weld flanges	60	145	5.1	M12 × 160	**006-0065** [3]
		3/4 in weld flanges			7.4	M12 × 160	**006-0066** [3]
		1 in weld flanges			7.4	M12 × 160	**006-0067** [3]
		5/8 in solder flanges			5.1	M12 × 160	**006-0071** [3]
		1 1/8 in solder flanges			7.3	M12 × 160	**006-0074** [3]

[1] The k_v value is the flow of water in m³/h at a pressure drop in the strainer of 1 bar, ρ =1000 kg/m³.
[2] Code no. with bolts, screws and gaskets but without flanges
[3] Code no. with flanges, bolts, screws and gaskets.

Components / Accessories

Strainer housing without flanges

Type	Strainer area [cm²]	Strainer volume [cm³]	k_v value [1] [m³/h]	Code no.
FA 15	40	68	3.3	**036-0060**
FA 20	60	145	7.0	**036-0061** [2]
FA 20	60	145	7.0	**036-0062** [3]

[1] The k_v value is the flow of water in m³/h at a pressure drop in the strainer of 1 bar, ρ = 1000 kg/m³.
[2] For direct fitting in pipeline.
[3] For direct fitting on to valves.

Single flanges with flange gaskets for FA 15

Version	Type	Code no.
3/8 in weld	T	**006-1120**
	G	**006-1121**
1/2 in weld	T	**006-1122**
	G	**006-1123**
3/4 in weld	T	**006-1124**
	G	**006-1125**
5/8 in solder	T	**006-1162**
	G	**006-1163**
7/8 in solder	T	**006-1176**
	G	**006-1177**

Staybolt set with gaskets

Version	Code no.
M12 × 107 mm	**006-1101**
M12 × 127 mm	**006-1108**
M12 × 160 mm	**006-1136**
M12 × 170 mm	**006-1103**
M12 × 180 mm	**006-1102**
M12 × 188 mm	**006-1104**
M12 × 206 mm	**006-1106**
M12 × 240 mm	**006-1105**

Single flanges with flange gaskets for FA 20 [1]

Version	Type	Code no.
3/4 in weld	T	**006-1128**
	G	**006-1129**
1 in weld	T	**006-1130**
	G	**006-1131**
1 1/8 in solder	T	**006-1174**
	G	**006-1175**

[1] Only for code no. **036-0061**.

Design

1. Strainer housing
2. Strainer
3. Gasket
4. Cover
5. Screw
11. Flange (tongue)
12. Flange (groove)
13. Flange gasket
14. Flange screw

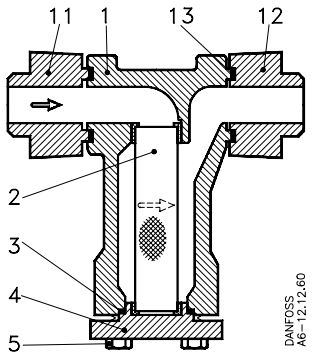

FA 15 and 20

Dimensions and weights

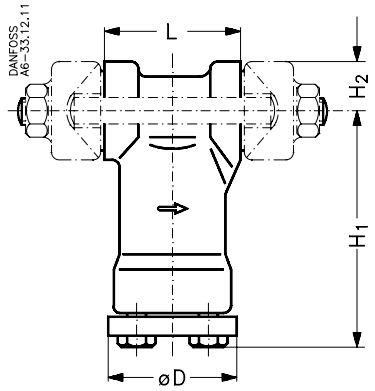

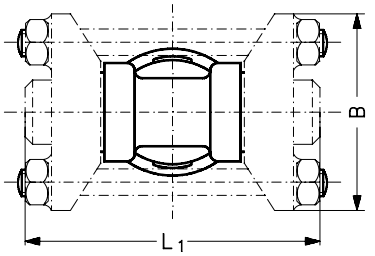

FA 15 and 20

Type	Code no.	H_1 [mm]	H_2 [mm]	L [mm]	Weld flanges L_1 [mm]	Solder flanges L_1 [mm]	B [mm]	∅ D [mm]	Weight [kg]
FA 15	**006-0040 → 006-0043**	95	20	54				51	1.2
FA 15	**006-0050 → 006-0058**	95	20		116	109	80	51	1.7
FA 20	**006-0046 → 006-0048**	106	26	72				60	2.2
FA 20	**006-0065 → 006-0074**	106	26		142	137	96	60	2.9

ENGINEERING
TOMORROW

ELIMINATOR® filter drier with replaceable solid core
Type DCR

Contents **Page**

Features ... 713
Approvals ... 714
Introduction ... 714
Technical data ... 714
Capacitiy ... 715
Type of connector and recommended soldering material ... 717
Ordering ... 717
Core selection ... 719
Identification ... 719
Design / Function ... 720
Dimensions and weights ... 721

AI222586433727en-000101 | 2017.02

ENGINEERING TOMORROW

ELIMINATOR® filter drier with replaceable solid core
Type DCR



Danfoss ELIMINATOR® filter driers with replaceable solid core, type DCR, are for use in liquid and / or suction lines in refrigeration, freezing and air-conditioning systems.

Besides being able to meet the demanding requirements of high working pressure levels when operating with R410A thanks to replaceable solid cores the DCR programme offers flexibility with respect to different applications.

Available with steel and copper connections.

Features

DCR housing:

- PED approved for PS up to 46 bar
- DCR housing (incl. core holder) are made entirely of steel and are thus compatible with all refrigerants
- DCR housings have undergone phosphate pre-treatment and have a corrosion-resistant powder-paint finish
- DCR housings are helium leak tested

Top covers for DCR housings:

- Zinc-chromated steel top covers with or without external access connection

Inserts for DCR housings - strainer

48 - F strainer - compatible with all refrigerants:

- Retains dirt particles larger than 15 µm
- For use direct in DCR housings
- Utilised in the suction or liquid line

Inserts for DCR housings - solid cores

48 - DM - 100% molecular sieve solid core suitable for HFC (R134a, R404A, R507, R407C and R410A) refrigerants:

- Provides high moisture adsorption at low and high condensing temperatures
- Effective protection against impurities

48 - DC - 80% molecular sieve and 20% activated alumina solid core suitable for HCFC (R22) refrigerants and compatible with HFC (R134a, R404A, R507, R407C and R410A) refrigerants:

- Adsorbs moisture and acid in the system throughout the entire temperature range

48 - DA - 30% molecular sieve and 70% activated alumina solid core suitable after compressor burnout and compatible with HCFC (R22) / HFC (R134a, R404A, R507, R407C and R410A) refrigerants:

- High acid adsorption and standard water adsorption

All solid cores have an optimised uniform grain size ensuring effective dirt removal and low pressure drop. The robust solid cores withstand pressure surge and vibration.

Approvals

CE marked in accordance with the European Pressure Equipment Directive - 97/23/EC

UL US listed 207 and C22.2 no. 140.3
EN 12284

Introduction

Danfoss ELIMINATOR® filter driers with replaceable solid core, type DCR, protect refrigeration, freezing and air-conditioning systems from moisture, acids, and solid particles.

With these contaminants eliminated, systems are safer from harmful chemical reactions and from abrasive impurities.

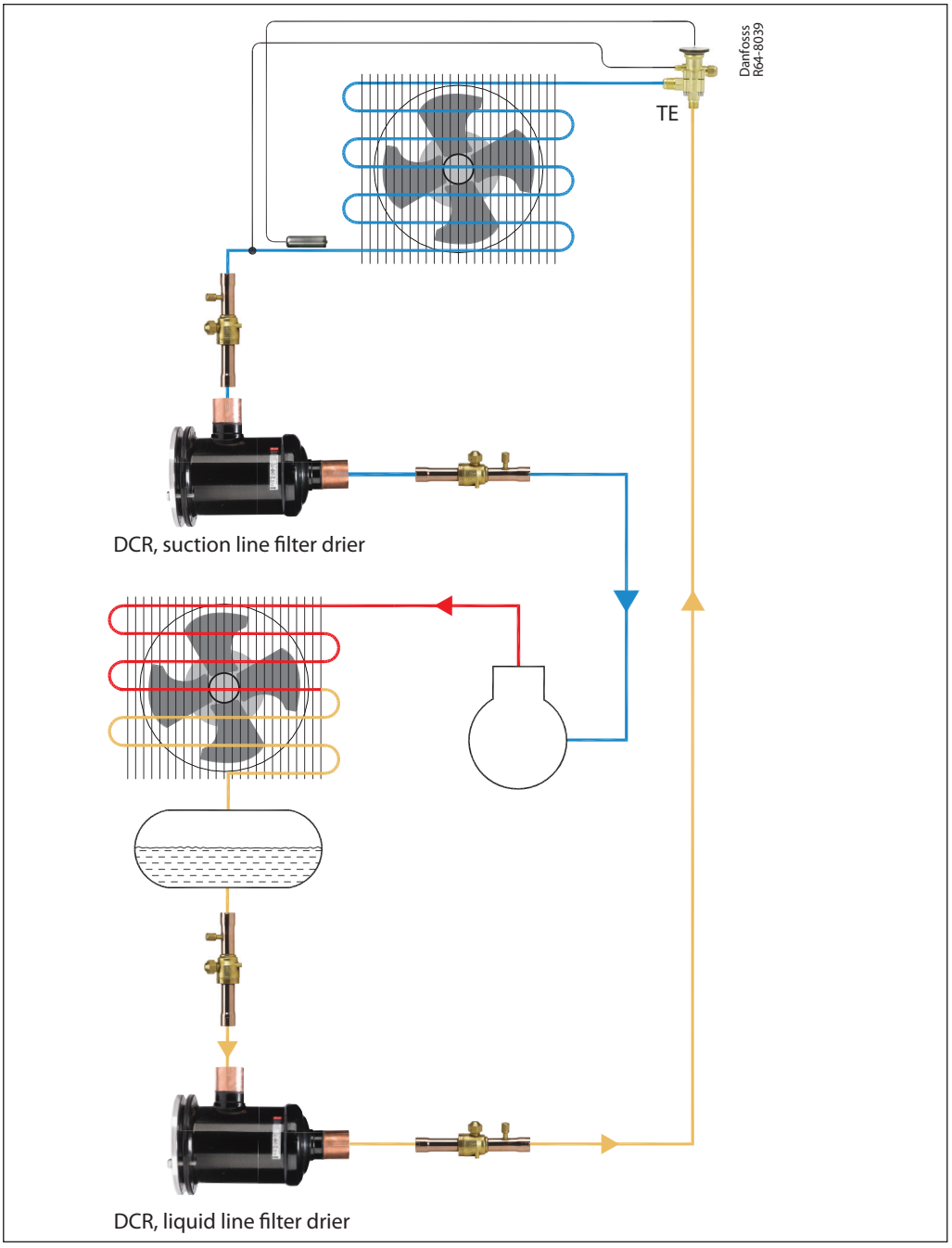

Technical data

Type	Maximum working pressure PS [bar]	Temperature range
DCR 048	46	- 40 – 70 °C
DCR 096	46	- 40 – 70 °C
DCR 144	35[1]) / 46[2])	- 40 – 70 °C
DCR 192	28[1]) / 40[2])	- 40 – 70 °C

[1]) For usage with strainer or as a receiver application
[2]) For "*drier*" application using all the permissible cores

Capacitiy

Drying and liquid capacity , type 48-DM

Type	№ of cores	Drying capacity [kg refrigerant] [1]										Liquid capacity [kW] [2]					Max. working pressure PS
		R134a		R404A		R507		R22/R407C		R410A		R134a	R404A	R507	R22 / R407C	R410A	
		[°C]															
		24	52	24	52	24	52	24	52	24	52						[bar]
DCR 0485	1	82.5	78.0	88.7	84.0	90.3	83.4	82.7	76.4	75.2	69.3	80.6	59.4	57.5	84.5	87.9	46
DCR 0487	1	82.5	78.0	88.7	84.0	90.3	83.4	82.7	76.4	75.2	69.3	128.0	92.5	89.6	132.6	136.8	46
DCR 0489	1	82.5	78.0	88.7	84.0	90.3	83.4	82.7	76.4	75.2	69.3	184.3	132.6	128.4	190.4	195.9	46
DCR 04811	1	82.5	78.0	88.7	84.0	90.3	83.4	82.7	76.4	75.2	69.3	249.3	180.5	174.8	258.5	266.8	46
DCR 04813	1	82.5	78.0	88.7	84.0	90.3	83.4	82.7	76.4	75.2	69.3	304.1	222.0	215.1	317.1	328.5	46
DCR 04817	1	82.5	78.0	88.7	84.0	90.3	83.4	82.7	76.4	75.2	69.3	434.3	324.1	314.3	459.4	480.7	46
DCR 04821	1	82.5	78.0	88.7	84.0	90.3	83.4	82.7	76.4	75.2	69.3	320.4	234.4	227.1	334.5	346.8	46
DCR 0967	2	165.0	155.0	177.3	168.1	180.5	166.8	165.3	152.8	150.5	138.7	119.6	85.7	83.0	123.2	126.6	46
DCR 0969	2	165.0	155.0	177.3	168.1	180.5	166.8	165.3	152.8	150.5	138.7	189.5	136.4	131.9	195.6	201.2	46
DCR 09611	2	165.0	155.0	177.3	168.1	180.5	166.8	165.3	152.8	150.5	138.7	259.7	187.2	181.4	268.6	276.7	46
DCR 09613	2	165.0	155.0	177.3	168.1	180.5	166.8	165.3	152.8	150.5	138.7	331.9	240.8	233.3	344.7	356.1	46
DCR 09617	2	165.0	155.0	177.3	168.1	180.5	166.8	165.3	152.8	150.5	138.7	477.2	349.1	338.3	498.2	516.6	46
DCR 1449	3	247.5	233.9	266.0	252.7	270.8	250.1	248.0	229.1	225.7	208.0	184.4	132.7	128.5	190.5	196.0	35[3] / 46[4]
DCR 14411	3	247.5	233.9	266.0	252.7	270.8	250.1	248.0	229.1	225.7	208.0	272.5	196.9	190.7	282.2	290.9	35[3] / 46[4]
DCR 14413	3	247.5	233.9	266.0	252.7	270.8	250.1	248.0	229.1	225.7	208.0	340.1	246.8	239.1	353.2	364.9	35[3] / 46[4]
DCR 14417	3	247.5	233.9	266.0	252.7	270.8	250.1	248.0	229.1	225.7	208.0	442.3	323.0	313.0	461.3	478.0	35[3] / 46[4]
DCR 19211	4	329.9	311.9	354.7	336.2	361.0	333.5	330.6	305.5	300.9	277.0	290.0	211.6	205.0	302.3	313.1	28[3] / 40[4]
DCR 19213	4	329.9	311.9	354.7	336.2	361.0	333.5	330.6	305.5	300.9	277.0	359.8	261.7	253.6	374.2	387.0	28[3] / 40[4]
DCR 19217	4	329.9	311.9	354.7	336.2	361.0	333.5	330.6	305.5	300.9	277.0	442.5	321.7	311.7	460.2	475.8	28[3] / 40[4]
DCR 19221	4	329.9	311.9	354.7	336.2	361.0	333.5	330.6	305.5	300.9	277.0	505.6	366.0	354.6	524.3	541.0	28[3] / 40[4]

Drying and liquid capacity , type 48-DC

Type	№ of cores	Drying capacity [kg refrigerant] [1]										Liquid capacity [kW] [2]					Max. working pressure PS
		R134a		R404A		R507		R22/R407C		R410A		R134a	R404A	R507	R22 / R407C	R410A	
		[°C]															
		24	52	24	52	24	52	24	52	24	52						[bar]
DCR 0485	1	64.7	61.2	69.6	65.9	70.8	65.4	64.9	59.9	59.0	54.4	80.6	59.4	57.5	84.5	87.9	46
DCR 0487	1	64.7	61.2	69.6	65.9	70.8	65.4	64.9	59.9	59.0	54.4	128.0	92.5	89.6	132.6	136.8	46
DCR 0489	1	64.7	61.2	69.6	65.9	70.8	65.4	64.9	59.9	59.0	54.4	184.3	132.6	128.4	190.4	195.9	46
DCR 04811	1	64.7	61.2	69.6	65.9	70.8	65.4	64.9	59.9	59.0	54.4	249.3	180.5	174.8	258.5	266.8	46
DCR 04813	1	64.7	61.2	69.6	65.9	70.8	65.4	64.9	59.9	59.0	54.4	304.1	222.0	215.1	317.1	328.5	46
DCR 04817	1	64.7	61.2	69.6	65.9	70.8	65.4	64.9	59.9	59.0	54.4	434.3	324.1	314.3	459.4	480.7	46
DCR 04821	1	64.7	61.2	69.6	65.9	70.8	65.4	64.9	59.9	59.0	54.4	320.4	234.4	227.1	334.5	346.8	46
DCR 0967	2	129.4	122.3	139.1	131.9	141.6	130.8	129.7	119.9	118.1	108.8	119.6	85.7	83.0	123.2	126.6	46
DCR 0969	2	129.4	122.3	139.1	131.9	141.6	130.8	129.7	119.9	118.1	108.8	189.5	136.4	131.9	195.6	201.2	46
DCR 09611	2	129.4	122.3	139.1	131.9	141.6	130.8	129.7	119.9	118.1	108.8	259.7	187.2	181.4	268.6	276.7	46
DCR 09613	2	129.4	122.3	139.1	131.9	141.6	130.8	129.7	119.9	118.1	108.8	331.9	240.8	233.3	344.7	356.1	46
DCR 09617	2	129.4	122.3	139.1	131.9	141.6	130.8	129.7	119.9	118.1	108.8	477.2	349.1	338.3	498.2	516.6	46
DCR 1449	3	194.1	183.5	208.7	197.8	212.4	196.2	194.6	179.8	177.1	162.2	184.4	132.7	128.5	190.5	196.0	35[3] / 46[4]
DCR 14411	3	194.1	183.5	208.7	197.8	212.4	196.2	194.6	179.8	177.1	162.2	272.5	196.9	190.7	282.2	290.9	35[3] / 46[4]
DCR 14413	3	194.1	183.5	208.7	197.8	212.4	196.2	194.6	179.8	177.1	162.2	340.1	246.8	239.1	353.2	364.9	35[3] / 46[4]
DCR 14417	3	194.1	183.5	208.7	197.8	212.4	196.2	194.6	179.8	177.1	162.2	442.3	323.0	313.0	461.3	478.0	35[3] / 46[4]
DCR 19211	4	258.9	244.7	278.3	263.8	283.2	261.7	259.4	239.7	236.1	217.6	290.0	211.6	205.0	302.3	313.1	28[3] / 40[4]
DCR 19213	4	258.9	244.7	278.3	263.8	283.2	261.7	259.4	239.7	236.1	217.6	359.8	261.7	253.6	374.2	387.0	28[3] / 40[4]
DCR 19217	4	258.9	244.7	278.3	263.8	283.2	261.7	259.4	239.7	236.1	217.6	442.5	321.7	311.7	460.2	475.8	28[3] / 40[4]
DCR 19221	4	258.9	244.7	278.3	263.8	283.2	261.7	259.4	239.7	236.1	217.6	505.6	366.0	354.6	524.3	541.0	28[3] / 40[4]

[1]) Drying capacity is based on following moisture content test standards before and after drying:
- R134a: 1050 – 50 ppm W
- R404A, R507: 1020 – 50 ppm W
- R407C: 1020 – 50 ppm W
- R410A: 1050 – 50 ppm W
- R22: 1050 – 60 ppm

In accordance with ARI 710-2004

[2]) Given in accordance with ARI 710-2004 for:
- t_e= -15 °C
- t_c= 30 °C
- Δp = 0.07 bar

[3]) For usage with strainer or as a receiver application

[4]) For "*drier*" application using all the permissible cores

Refrigerants other than specified in the table please contact Danfoss for the approval.

Capacitiy (continued)

Drying and acid capacity , type 48-DA

Type	Number of cores	Drying capacity [g of water] [1] Evaporating temperature t_e [°C]												Acid capacity [2]
		-40	-20	4.4	-30	-20	4.4	-40	-20	4.4	-40	-20	4.4	
		R22 / R407C			R134a			R404A / R507			R410A			[g]
DCR 048	1	28	19	12	45	38	27	47	30	19	42	35	25	26.6
DCR 096	2	56	37	24	90	77	54	94	60	37	84	70	50	53.3
DCR 144	3	84	56	36	135	115	81	142	90	56	126	105	75	79.9
DCR 192	4	112	74	48	180	153	108	189	120	75	168	140	100	106.5

[1]) Drying capacity is expressed during drying in:
- R22: EPD = 10 ppm W, corresponding to a dew point temperature = -50 °C
- R134a: EPD = 50 ppm W, corresponding to a dew point temperature = -37 °C
- R404A: EPD = 10 ppm W, corresponding to a dew point temperature = -40 °C
- R407C: EPD = 10 ppm W, corresponding to a dew point temperature = -40 °C

[2]) Adsorption capacity of oleic acid at 0.05 TAN (Total Acid Number)

Recommended plant capacity in suction line - burn-out, type 48-DA

Type	Recommended plant capacity [kW] Evaporating temperature t_e [°C]											
	-40	-20	4.4	-30	-20	4.4	-40	-20	4.4	-40	-20	4.4
	Pressure drop Δp [bar]											
	0.04	0.10	0.21	0.04	0.07	0.14	0.04	0.10	0.21	0.04	0.10	0.21
	R22 / R407C			R134a			R404A / R507			R410A		
DCR 0485	3.1	8.9	21.0	3.0	5.4	13.0	2.4	7.1	17.5	3.1	8.9	21.0
DCR 0487	5.8	16.1	37.8	5.6	9.9	23.4	4.5	12.9	31.2	5.8	16.1	37.8
DCR 0489	7.8	21.6	50.7	7.5	13.3	31.5	6.0	17.2	41.8	7.8	21.6	50.7
DCR 04811	10.0	27.3	63.3	9.6	16.8	39.5	7.7	21.8	51.9	10.0	27.3	63.3
DCR 04813	10.0	27.3	63.3	9.6	16.8	39.5	7.7	21.8	51.9	10.0	27.3	63.3
DCR 04817	10.0	27.3	63.3	9.6	16.8	39.5	7.7	21.8	51.9	10.0	27.3	63.3
DCR 04821	10.0	27.3	63.3	9.6	16.8	39.5	7.7	21.8	51.9	10.0	27.3	63.3
DCR 0965	3.3	9.1	21.4	3.2	5.7	13.4	2.5	7.4	18.0	3.3	9.2	21.6
DCR 0967	5.8	16.2	38.1	5.6	9.9	23.6	4.5	12.9	31.4	5.8	16.2	38.1
DCR 0969	8.7	24.6	58.3	8.4	15.0	35.9	6.8	19.7	48.1	8.7	24.6	58.3
DCR 09611	11.9	33.4	79.3	11.4	20.4	48.9	9.3	26.8	65.4	11.9	33.4	79.3
DCR 09613	14.1	39.9	95.2	13.6	24.3	58.5	11.0	32.0	78.7	14.1	39.9	95.2
DCR 09617	14.1	39.9	95.2	13.6	24.3	58.5	11.0	32.0	78.7	14.1	39.9	95.2
DCR 09621	14.1	39.9	95.2	13.6	24.3	58.5	11.0	32.0	78.7	14.1	39.9	95.2
DCR 1445	3.5	10.0	22.8	3.4	6.0	14.0	2.7	7.7	18.9	3.5	10.0	22.8
DCR 1447	6.6	18.9	42.9	6.3	11.2	26.4	5.1	14.5	35.6	6.6	18.9	42.9
DCR 1449	8.8	25.1	57.2	8.4	15.0	35.2	6.8	19.4	47.5	8.8	25.1	57.2
DCR 14411	13.2	38.1	92.2	12.7	23.0	56.2	10.3	30.7	76.6	13.2	38.1	92.2
DCR 14413	13.2	38.1	92.2	12.7	23.0	56.2	10.3	30.7	76.6	13.2	38.1	92.2
DCR 14417	13.2	38.1	92.2	12.7	23.0	56.2	10.3	30.7	76.6	13.2	38.1	92.2
DCR 14421	13.2	38.1	92.2	12.7	23.0	56.2	10.3	30.7	76.6	13.2	38.1	92.2
DCR 1925	4.2	11.5	27.3	4.0	7.1	16.8	3.2	9.2	22.7	4.2	11.5	27.3
DCR 1927	7.9	21.6	51.4	7.6	13.4	31.6	6.1	17.4	42.7	7.9	21.6	51.4
DCR 1929	10.6	28.9	68.9	10.2	18.0	42.1	8.2	23.3	57.2	10.6	28.9	68.9
DCR 19211	14.8	41.8	99.4	14.3	25.5	61.2	11.6	33.6	82.2	14.8	41.8	99.4
DCR 19213	18.0	51.1	122.1	17.4	31.1	75.0	14.1	41.1	101.0	18.0	51.1	122.1
DCR 19217	18.0	51.1	122.1	17.4	31.1	75.0	14.1	41.1	101.0	18.0	51.1	122.1
DCR 19221	18.0	51.1	122.1	17.4	31.1	75.0	14.1	41.1	101.0	18.0	51.1	122.1

Data given in accordance with ARI-Standard 710-2004 for t_e = 4.4 °C and t_c = 32.2 °C

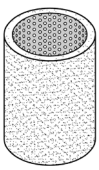

Strainer mounted in suction line, type 48-F

Refrigerant	R22 / R407C			R134a			R404A / R507			R410A		
Evaporating temperature [°C]	-40	-20	4.4	-30	-20	4.4	-40	-20	4.4	-40	-20	4.4
Pressure drop Δp [bar]	0.04	0.10	0.21	0.04	0.07	0.14	0.04	0.10	0.21	0.04	0.10	0.21
Recommended system capacity [kW]	15	47	113	15	28	69	12	38	93	15	47	113

Strainer mounted in liquid line

Refrigerant	R22 / R407C	R134a	R404A / R507	R410A
Recommended system capacity [kW]	390	350	260	390

The data given apply to DCR 04811 with 48-F core

Liquid capacity is given in accordance with ARI 710-2004 for:
- t_e = -15 °C
- t_c = 30 °C
- Δp = 0.07 bar

Type of connector and recommended soldering material

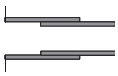	Copper ODF solder connector **Copper pipe**
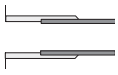	Steel ODF solder connector **Copper pipe**
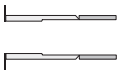	Steel butt weld connector **Steel pipe**

Solder connector	Recommended soldering material
Copper	Min. 5% Ag
Steel	Silver-flo 55 + Easy-flow flux

Ordering

DCR housing and insert are ordered separately. Select housing and top cover with all internal parts assembled from table 1 or 2 and required number of inserts from table 3.

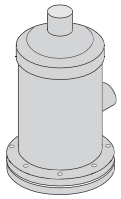

Table 1. Housing with copper connectors + top cover

Type	Number of cores	Copper connectors		Cover type	Max. working pressure PS	Code number
		Solder ODF				
		[in.]	[mm]		[bar]	
DCR 0485s	1	5/8	16	Plug	46	023U7250
DCR 0487s	1	7/8	22	Plug	46	023U7251
DCR 0487s	1	7/8	22	–	46	023U7571
DCR 0489s	1	–	28	Plug	46	023U7252
DCR 0489s	1	1 1/8	–	Plug	46	023U7253
DCR 0489s	1	–	28	–	46	023U7268
DCR 04811s	1	1 3/8	35	Plug	46	023U7254
DCR 04813s	1	1 5/8	–	Plug	46	023U7255
DCR 04813s	1	–	42	Plug	46	023U7256
DCR 04813s	1	–	42	–	46	023U7303
DCR 04817s	1	2 1/8	54	Plug	46	023U7257
DCR 04821s	1	2 5/8	–	Plug	46	023U7276
DCR 0967s	2	7/8	22	Plug	46	023U7258
DCR 0969s	2	–	28	Plug	46	023U7259
DCR 0969s	2	1 1/8	–	Plug	46	023U7260
DCR 0969s	2	1 1/8	–	–	46	023U7278
DCR 09611s	2	1 3/8	35	Plug	46	023U7261
DCR 09613s	2	1 5/8	–	Plug	46	023U7262
DCR 09613s	2	–	42	Plug	46	023U7263
DCR 09613s	2	–	42	–	46	023U7463
DCR 09617s	2	2 1/8	54	Plug	46	023U7264
DCR 09617s	2	2 1/8	54	–	46	023U7290
DCR 09621s	2	2 5/8	–	Plug	46	023U7281
DCR 1449s	3	–	28	Plug	35[1]) / 46[2])	023U7265
DCR 14411s	3	1 3/8	35	Plug	35[1]) / 46[2])	023U7267
DCR 14411s	3	1 3/8	–	–	35[1]) / 46[2])	023U7275
DCR 14413s	3	1 5/8	–	Plug	35[1]) / 46[2])	023U7282
DCR 14413s	3	–	42	Plug	35[1]) / 46[2])	023U7269
DCR 14413s	3	1 5/8	42	–	35[1]) / 46[2])	023U7297
DCR 14417s	3	2 1/8	54	Plug	35[1]) / 46[2])	023U7270
DCR 19211s	4	1 3/8	–	–	28[1]) / 40[2])	023U7083
DCR 19213s	4	1 5/8	–	Plug	28[1]) / 40[2])	023U7272
DCR 19213s	4	–	42	Plug	28[1]) / 40[2])	023U7273
DCR 19213s	4	1 5/8	–	–	28[1]) / 40[2])	023U7082
DCR 19217s	4	2 1/8	54	Plug	28[1]) / 40[2])	023U7274

[1]) For usage with strainer or as a receiver application
[2]) For "drier" application using all the permissible cores

Ordering (continued)

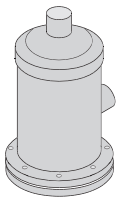

Table 2. Housing with steel connectors + top cover

Type	Number of cores	Steel connectors			Cover type	Max. working pressure PS	Code number
		Solder ODF		Butt weld			
		[in.]	[mm]	[in.]		[bar]	
DCR 0485	1	5/8	16	1/2	Plug	46	023U7050
DCR 0487	1	7/8	22	3/4	Plug	46	023U7051
DCR 0487	1	7/8	22	3/4	–	46	023U7151
DCR 0489	1	–	28	1	Plug	46	023U7052
DCR 0489	1	1 1/8	–	1	Plug	46	023U7053
DCR 04811	1	1 3/8	35	1 1/4	Plug	46	023U7054
DCR 04813	1	1 5/8	–	1 1/2	Plug	46	023U7055
DCR 04813	1	–	42	1 1/2	Plug	46	023U7056
DCR 04817	1	2 1/8	54	2	Plug	46	023U7057
DCR 04821	1	2 5/8	–	2 1/2	Plug	46	023U7076
DCR 0967	2	7/8	22	3/4	Plug	46	023U7058
DCR 0969	2	–	28	1	Plug	46	023U7059
DCR 0969	2	1 1/8	–	1	Plug	46	023U7060
DCR 09611	2	1 3/8	35	1 1/4	Plug	46	023U7061
DCR 09611	2	1 3/8	35	1 1/4	–	46	023U7161
DCR 09613	2	1 5/8	–	1 1/2	Plug	46	023U7062
DCR 09613	2	–	42	1 1/2	Plug	46	023U7063
DCR 09617	2	2 1/8	54	2	Plug	46	023U7064
DCR 1449	3	–	28	1	Plug	35 [1]) / 46 [2])	023U7065
DCR 1449	3	1 1/8	–	1	Plug	35 [1]) / 46 [2])	023U7066
DCR 14411	3	1 3/8	35	1 1/4	Plug	35 [1]) / 46 [2])	023U7067
DCR 14413	3	1 5/8	–	1 1/2	Plug	35 [1]) / 46 [2])	023U7068
DCR 14413	3	–	42	1 1/2	Plug	35 [1]) / 46 [2])	023U7069
DCR 14417	3	2 1/8	54	2	Plug	35 [1]) / 46 [2])	023U7070
DCR 19211	4	1 3/8	35	1 1/4	Plug	28 [1]) / 40 [2])	023U7071
DCR 19213	4	1 5/8	–	1 1/2	Plug	28 [1]) / 40 [2])	023U7072
DCR 19213	4	–	42	1 1/2	Plug	28 [1]) / 40 [2])	023U7073
DCR 19217	4	2 1/8	54	2	Plug	28 [1]) / 40 [2])	023U7074
DCR 19221	4	2 5/8	–	2 1/2	Plug	28 [1]) / 40 [2])	023U7086

[1]) For usage with strainer or as a receiver application
[2]) For "*drier*" application using all the permissible cores

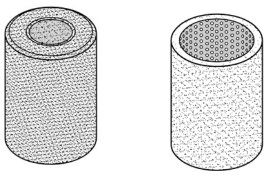

Table 3. Type DCR, inserts

Type	Material	Code number		
		Industrial pack (8 pcs.)		Multi pack (3 pcs.)
		with gasket	without gasket	with gasket
48-DM solid core	100% molecular sieve	023U1392	023U1393	023U1391
48-DC solid core	80% molecular sieve & 20% Al_3O_2	023U4381	023U4382	023U4380
48-DA solid core	30% molecular sieve & 70% Al_3O_2	023U5381	023U5382	023U5380
48-F strainer	Felt-gasket, 15 µm	023U1921	–	–

1) Not for usage with DCR 048 – 192 housings

Core surface

DM 048, DC 048 and DA 048 = 612 cm^2
DM 096, DC 096 and DA 096 = 1225 cm^2
DM 144, DC 144 and DA 144 = 1837 cm^2
DM 192, DC 192 and DA 192 = 2450 cm^2
48-F = 405 cm^2

Core volume

DM 048, DC 048 and DA 048 = 727 cm^3
DM 096, DC 096 and DA 096 = 1454 cm^3
DM 144, DC 144 and DA 144 = 2181 cm^3
DM 192, DC 192 and DA 192 = 2908 cm^3

Core selection

Refrigerant and oil types		DC	DM	DA
Refrigerant	HFC (R134a, R404A, R507, R407C and R410A)	Recommended	Recommended	Recommended
	HFO (R1234ze, R407F, R407A)	Recommended	Recommended	Recommended
	HCFC (R22)	Recommended	Recommended	Recommended
Oil	Mineral or AB	Recommended	Recommended	Recommended
	POE or PAG, pure	Recommended	Recommended	Recommended
	POE or PAG, with additives	Not recommended[1])	Recommended	Recommended

[1]) DC filter driers cores contain activated alumina, which is a polar material used for acid adsorption. Many oil additives are also polar substances and can be adsorbed by the activated alumina, rendering them useless, and reducing the drier's acid capacity, though this is not harmful to the system.

Identification

Type codes

Type	Code	Description
Filter drier	D	Drier
Solid core	C	Solid core
	R	Replaceable
Size (volume)	048	48 in³
	096	96 in³
	144	144 in³
	192	192 in³
Connection (filter connection in 1/8 of an inch increments)	5	5/8 in. / 16 mm
	7	7/8 in. / 22 mm
	9	1 1/8 in. / 28 mm
	11	1 3/8 in. / 35 mm
	13	1 5/8 in. / 42 mm
	17	2 1/8 in. / 54 mm
	21	2 5/8 in.
Connection type	(blank)	Steel connectors
	s	Copper connectors

Example for type codes

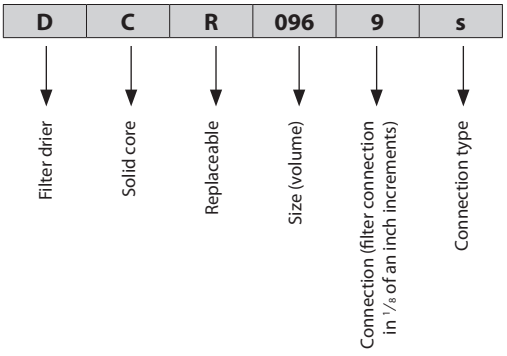

Design / Function

Example:

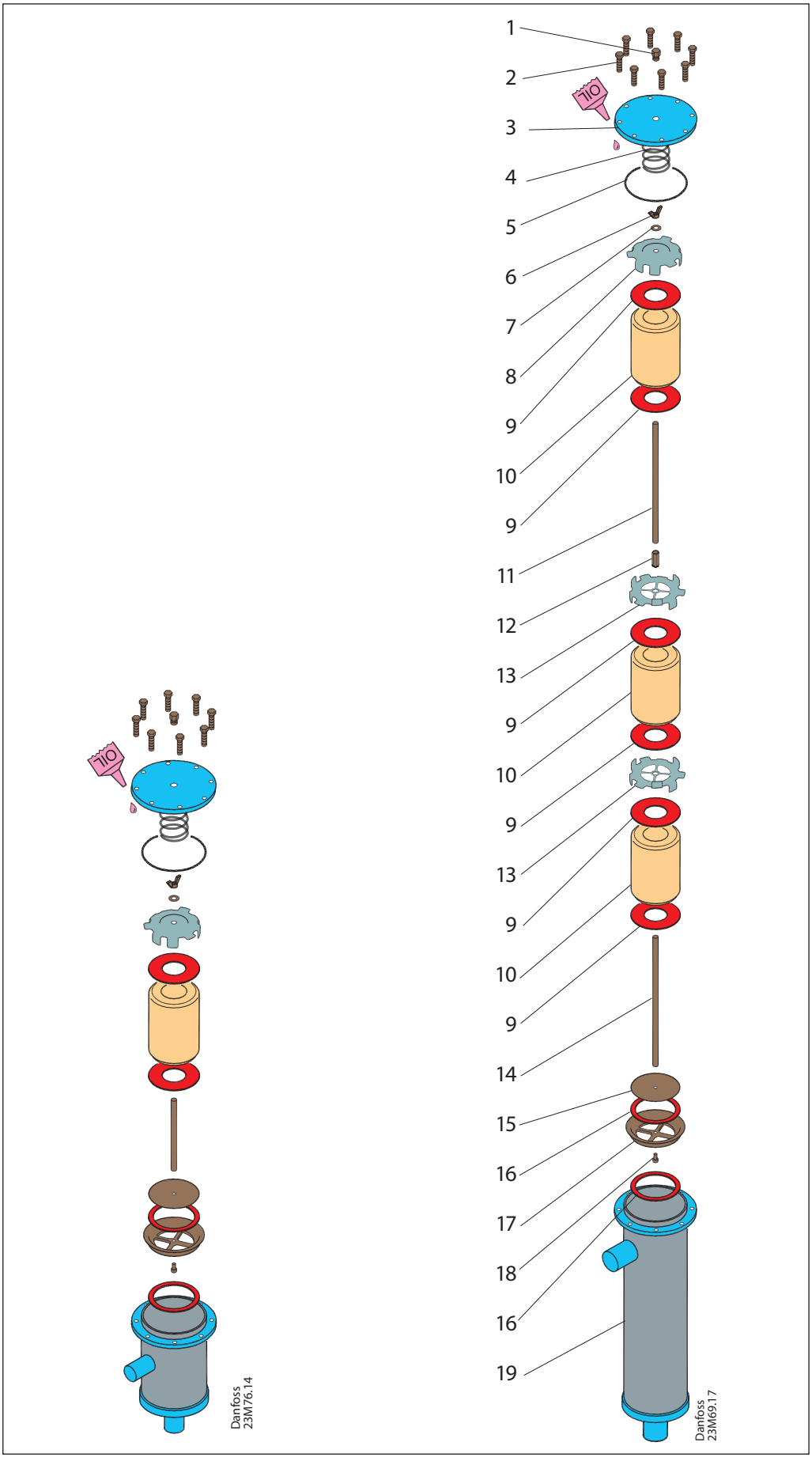

1. Plug 1/4 in. NPT
2. Top cover bolts
   M8 × 35, class 10.9
3. Top cover
4. Spring
5. Top cover gasket
   ø121.8 × ø113.6 × 0.8 mm
6. Wing nut
   M10 (torque max. 3 Nm)
7. Lock washer
8. Top plate
9. Felt gasket
   ø95.5 × ø45.5 × 2 mm
10. Solid core
11. Extension rod
12. Extension nut
13. Core plate
14. Distance rod
15. Wire mesh
16. Felt gasket
    ø95.5 × ø78 × 2 mm
17. Core holder
18. Hex socket head screw M6
19. Filter drier shell

Dimensions and weights

DCR housing

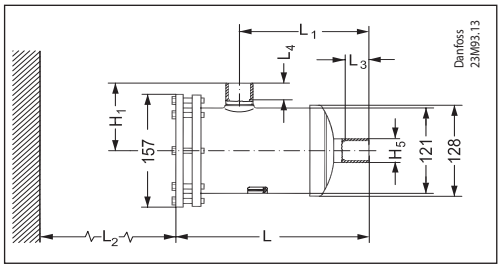

DCR top cover

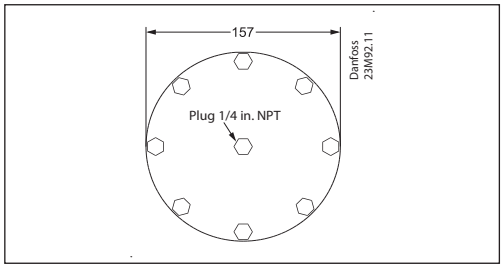

DCR solid core

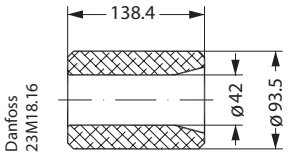

48-DM, 48-DC and 48-DA

Type	Number of cores	DCR with steel connectors							DCR with copper connectors							Net weight[1]
		L	L_1	L_2	L_3	L_4	H_1	H_5	L	L_1	L_2	L_3	L_4	H_1	H_5	
		[mm]	[mm]	[mm]	[mm]	[mm]	[mm]	[mm]	[mm]	[mm]	[mm]	[mm]	[mm]	[mm]	[mm]	[Kg]
DCR 0485(s)	1	242.9	162.7	170	12	12	96.8	21	259.9	179.7	170	12	12	112.8	19	5.2
DCR 0487(s)	1	237	156.8	170	17	17	90.3	27	259.5	179.3	170	17	17	112.8	25	5.2
DCR 0489(s)	1	240.4	160.2	170	22	22	94.3	34	261.9	181.7	170	20	20	115.8	32	5.2
DCR 0489(s)	1	240.4	160.2	170	22	22	94.3	34	261.9	181.7	170	20	20	115.8	32	5.2
DCR 04811(s)	1	242.8	162.6	170	25	25	97.3	42	264.3	184.1	170	25	25	118.8	39	5.2
DCR 04813(s)	1	248	167.8	170	29	29	103.3	48	265.5	185.3	170	29	29	120.8	46	5.2
DCR 04813(s)	1	248	167.8	170	29	29	103.3	48	265.5	185.3	170	29	29	120.8	46	5.2
DCR 04817(s)	1	253.7	173.5	170	33	33	110.8	60	267.7	187.5	170	34	34	124.8	58	5.2
DCR 04821(s)	1	256.5	176.3	170	38	38	115.8	73	269.5	189.3	170	34	34	128.8	71	5.2
DCR 0965(s)	2	381.9	301.7	310	12	12	96.8	21	398.9	318.7	310	12	12	112.8	19	6.6
DCR 0967(s)	2	376	295.8	310	17	17	90.3	27	398.5	318.3	310	17	17	112.8	25	6.6
DCR 0969(s)	2	379.4	299.2	310	22	22	94.3	34	400.9	320.7	310	20	20	115.8	32	6.6
DCR 0969(s)	2	379.4	299.2	310	22	22	94.3	34	400.9	320.7	310	20	20	115.8	32	6.6
DCR 09611(s)	2	381.8	301.6	310	25	25	97.3	42	403.3	323.1	310	25	25	118.8	39	6.6
DCR 09613(s)	2	387	306.8	310	29	29	103.3	48	404.5	324.3	310	29	29	120.8	46	6.6
DCR 09613(s)	2	387	306.8	310	29	29	103.3	48	404.5	324.3	310	29	29	120.8	46	6.6
DCR 09617(s)	2	392.7	312.5	310	33	33	110.8	60	406.7	326.5	310	34	34	124.8	58	6.6
DCR 09621(s)	2	395.5	315.3	310	38	38	115.8	73	408.5	328.3	310	34	34	128.8	71	6.6
DCR 1445(s)	3	523.9	443.7	310	12	12	96.8	21	540.9	460.7	310	12	12	112.8	19	7.8
DCR 1447(s)	3	518	437.8	310	17	17	90.3	27	540.5	460.3	310	17	17	112.8	25	7.8
DCR 1449(s)	3	521.4	441.2	310	22	22	94.3	34	542.9	462.7	310	20	20	115.8	32	7.8
DCR 1449(s)	3	521.4	441.2	310	22	22	94.3	34	542.9	462.7	310	20	20	115.8	32	7.8
DCR 14411(s)	3	523.8	443.6	310	25	25	97.3	42	545.3	465.1	310	25	25	118.8	39	7.8
DCR 14413(s)	3	529	448.8	310	29	29	103.3	48	546.5	466.3	310	29	29	120.8	46	7.8
DCR 14413(s)	3	529	448.8	310	29	29	103.3	48	546.5	466.3	310	29	29	120.8	46	7.8
DCR 14417(s)	3	534.7	454.5	310	33	33	110.8	60	548.7	468.5	310	34	34	124.8	58	7.8
DCR 14421(s)	3	537.5	457.3	310	38	38	115.8	73	550.5	470.3	310	34	34	128.8	71	7.8
DCR 1925(s)	4	663.9	583.7	310	12	12	96.8	21	680.9	600.7	310	12	12	112.8	19	9.1
DCR 1927(s)	4	658	577.8	310	17	17	90.3	27	680.5	600.3	310	17	17	112.8	25	9.1
DCR 1929(s)	4	661.4	581.2	310	22	22	94.3	34	682.9	602.7	310	20	20	115.8	32	9.1
DCR 1929(s)	4	661.4	581.2	310	22	22	94.3	34	682.9	602.7	310	20	20	115.8	32	9.1
DCR 19211(s)	4	663.8	583.6	310	25	25	97.3	42	685.3	605.1	310	25	25	118.8	39	9.1
DCR 19213(s)	4	669	588.8	310	29	29	103.3	48	686.5	606.3	310	29	29	120.8	46	9.1
DCR 19213(s)	4	669	588.8	310	29	29	103.3	48	686.5	606.3	310	29	29	120.8	46	9.1
DCR 19217(s)	4	674.7	594.5	310	33	33	110.8	60	688.7	608.5	310	34	34	124.8	58	9.1
DCR 19221(s)	4	677.5	597.3	310	38	38	115.8	73	690.5	610.3	310	34	34	128.8	71	9.1

[1]) Without core.
For total weight add 0.7 kg per core for 48-DM and 48-DC, 0.8 kg per core for 48-DA or 0.4 kg per strainer 48-F

Danfoss can accept no responsibility for possible errors in catalogues, brochures and other printed material. Danfoss reserves the right to alter its products without notice. This also applies to products already on order provided that such alterations can be made without subsequential changes being necessary in specifications already agreed.
All trademarks in this material are property of the respective companies. Danfoss and the Danfoss logotype are trademarks of Danfoss A/S. All rights reserved.

ENGINEERING
TOMORROW

2-step solenoid valve
Type ICLX 32-150

Contents **Page**

Features ... 725
The ICLX Concept ... 726
Design (valve) ... 726
Approvals ... 726
Technical data ... 727
Function ... 728
Selection of ICLX valve ... 731
Nominal capacities ... 731
Ordering from the parts programme ... 741
Accessories ... 745
Dimensions ... 748
Connections ... 750

AI236186441601en-000101 | 2017.06

ENGINEERING
TOMORROW

2-step solenoid valve
Type ICLX 32-150

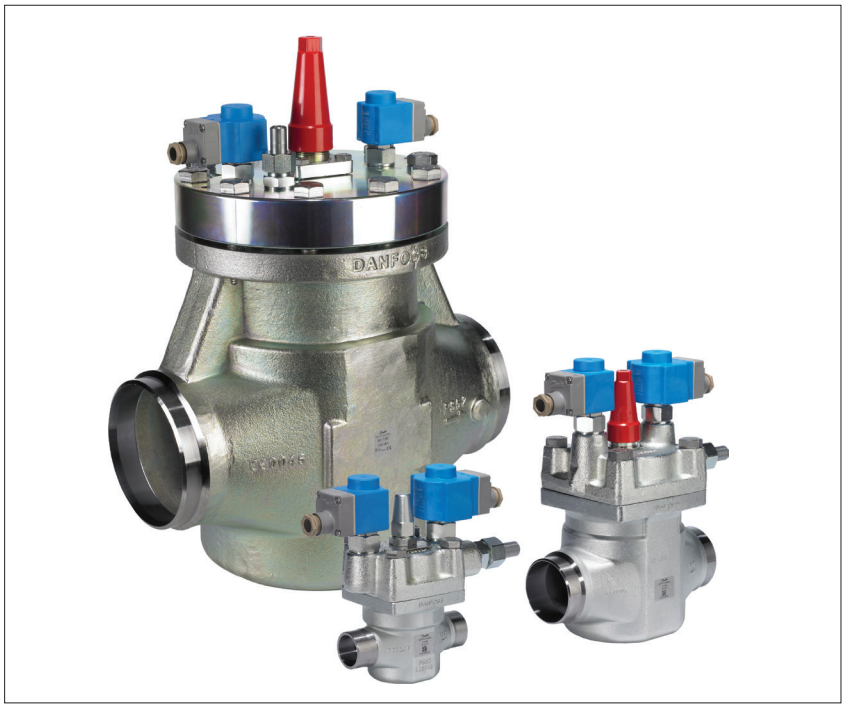

ICLX 2-step solenoid valves belong to the ICV family.

ICLX are used in suction lines for the opening against high differential pressure, e.g. after hot gas defrost in large industrial refrigeration systems with ammonia, fluorinated refrigerants or CO_2.

The ICLX valve is factory configured to open in 2 steps.

By following a simple procedure the valve can be configured to open in 1 step only.

In 2-step configuration, step 1 opens to approx. 10% of the capacity after the pilot solenoid valves are energized.

Step 2 opens automatically when the pressure differential across the valve has decreased to approx. 1.25 bar / 18 psig.

The ICLX valve comprises five main components: Valve body, top cover, function module and 2 pilot solenoid valves. On ICLX 32 – 150 the top cover and function module are factory-assembled.

Features

- Designed for Industrial Refrigeration applications for a maximum working pressure of 52 bar g / 754 psig.
- Applicable to HCFC, HFC, R717 (Ammonia) and R744 (CO_2).
- Can be used in chemical and petro-chemical applications.
- Direct welded connections.
- Connection types include butt weld, socket weld and solder connections.
- Low temperature steel body.
- Low weight and compact design.
- Only one signal required for both pilot solenoid valves.
- The ICLX main valve top cover can be oriented in any direction without the function of pilot valves being affected.
- Especially suitable for systems where low pressure drop is required.
- Stabilizes working conditions and eliminates pressure pulsations during opening after defrosting.
- Provides safety against pressure "shocks" as the valve can only open fully when $\Delta p < 1.25$ bar / 18 psig.
- Cavitation resistant valve seat.
- Manual opening possible.
- PTFE seat provides excellent valve tightness.
- Service friendly design.
- Classification: DNV, CRN, BV, EAC etc.
  To get an updated list of certification on the products please contact your local Danfoss Sales Company.

Approvals
The ICV valve concept is designed to fulfil global refrigeration requirements.

The Factory assembled ICLX is CE and UL approved. For specific approval information, please contact Danfoss.

ICLX valves			
Nominal bore	DN≤ 25 (1 in.)	DN 32 – 65 (1 ¼ – 2 ½ in.)	DN 80 – 150 (3 – 6 in.)
Classified for	Fluid group I		
Category	Article 3, paragraph 3	II	III

The ICLX Concept

The ICLX concept is developed to highest flexibility of direct welded connections. For valve sizes ICV 32 – ICV 65 a wide range of connection sizes and types is available. ICV 100 – ICV 150 are available in butt-weld DIN and butt-weld ANSI nominal sizes. The direct welded (non-flanged) connections secures low risk of leakage.

- There are seven valve bodies available.


ICV 32


ICV 40

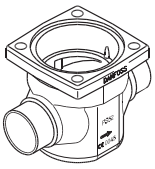
ICV 50

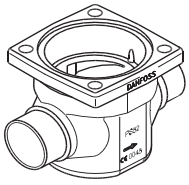
ICV 65

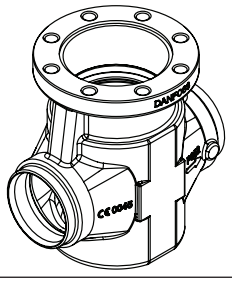
ICV 100

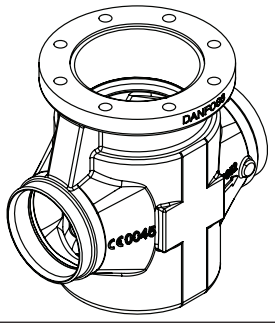
ICV 125

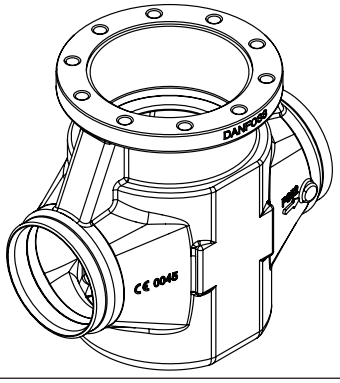
ICV 150

D	A	SOC	SD	SA
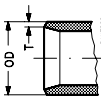	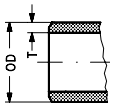	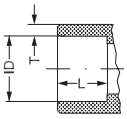	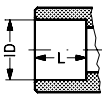	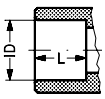
Butt-weld DIN	Butt-weld ANSI	Socket weld ANSI	Solder DIN	Solder ANSI

Design (valve)

Connections
There is a very wide range of connection types available with ICLX valves:

- D: Butt weld, EN 10220
- A: Butt weld, ANSI (B 36.10)
- SOC: Socket weld, ANSI (B 16.11)
- SD: Solder connection, EN 1254-1
- SA: Solder connection, ANSI (B 16.22)

The ICLX valves are approved in accordance with the European standard specified in the Pressure Equipment Directive and are CE marked.
For further details / restrictions - see Installation Instruction.

Valve body and top cover material
Low temperature steel

Technical data

- *Refrigerants*
  Applicable to HCFC, HFC, R717 (Ammonia) and R744 (CO_2).
  Temperature range:
  Media: -60 – 120 °C / -76 – 248 °F.
- *Pressure*
  The valve is designed for a max. working pressure of 52 bar g / 754 psi g
- *Surface protection*
  The ICLX external surface is zinc-chromated to provide good corrosion protection.
- *Max. opening pressure differential (MOPD):*
  ICLX 32 – 150
  21 bar / 305 psi @ external pressure 1.5 bar / 22 psi higher than inlet pressure of the valve.

ICLX 32-150
40 bar / 580 psi @ external pressure 2 bar (30 psi) higher than inlet pressure of the valve.

Coil requirements:
Both coils to be IP67.
EVM NC:
10W AC (or higher) for MOPD up to 21 bar
EVM NC:
20W AC for MOPD 21 – 40 bar
EVM NO:
10W AC (or higher)

	ICLX 32	ICLX 40	ICLX 50	ICLX 65	ICLX 100	ICLX 125	ICLX 150
K_v (m^3/h)	22	29	47	82	151	225	390
C_v (USgal/min)	25.5	33.6	54.5	95	175	261	452

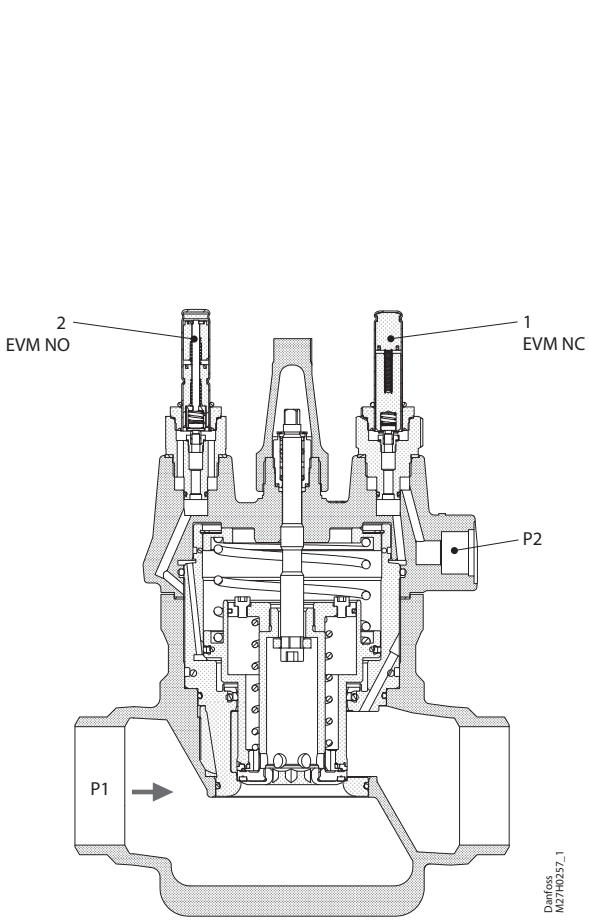

ICLX 32-65

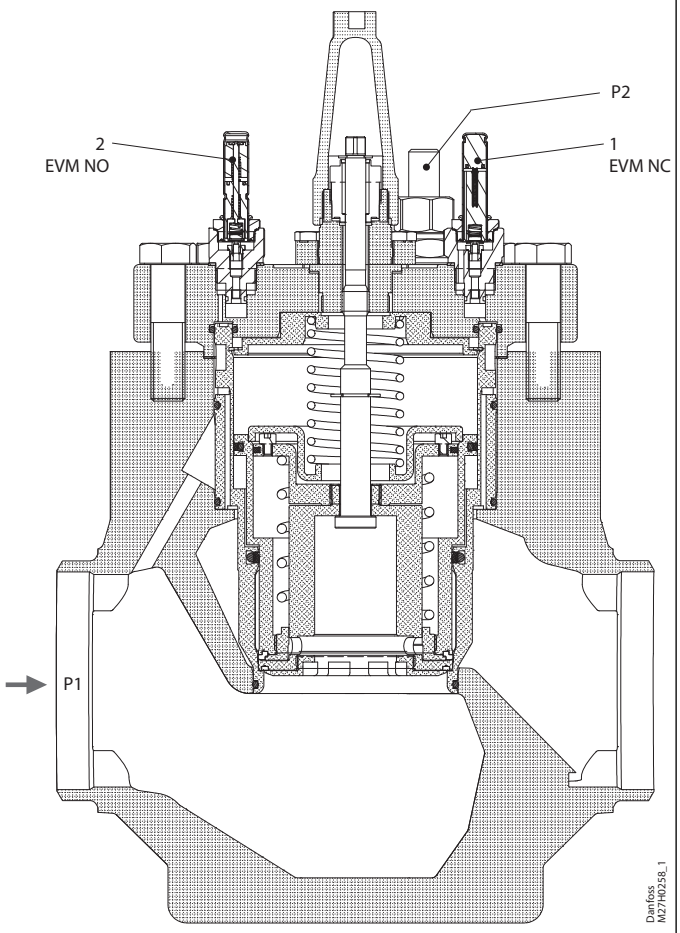

ICLX 100-150

Function

The ICLX valve is used as a shut-off valve in suction lines to open after hot gas defrost.

The valve is a pilot controlled valve operated by an external pilot pressure source. This means that the valve can operate with no internal pressure differential (P_d) at all.

Low P_d is the key objective and makes the ICLX valve ideal for applications that are sensitive to differential pressure.

Though P_d is kept low, it can still be quantified, and must be considered when choosing valve size. See section - Selection of ICLX valve - for the impact.

The main valve is provided with two pilot solenoid valves, as well as a nipple for connection to external pilot pressure.

The external pilot pressure line must be connected to a system pressure (p2) which is at least 1.5 bar / 20 psi higher than the inlet pressure (p1) of the valve. The difference between the external pilot pressure and the inlet pressure of the valve defines the maximum opening differential pressure (MOPD) of the ICLX.

The ICLX is kept open when power is applied to the coils placed on the EVM pilot solenoid valves pos. 1 and pos. 2.

The ICLX is closing and kept closed when the coils on EVM pilot solenoid valves pos. 1 and pos. 2 are de-energised.

The pilot solenoid valve (pos.1) allows external pilot pressure (p_2) to the bottom of the servo piston and thus opens the first step corresponding to approx. 10% of the valve capacity. At the same time the bleed spring will be compressed. This will start a pressure equalization of the inlet pressure (p_1) to the outlet pressure. When the differential pressure across the valve has fallen to approx. 1.25 bar / 18 psig the spring will be strong enough to open the second step and open the valve for full capacity.
This way high-pressure pulsations, which would occur when opening for full capacity in one step, can be avoided.

ICLX must not be used in pipe systems where the differential pressure across the main valve in open position can exceed 1 bar / 15 psig, otherwise the step two on the valve will close.

Function
(continued)

Two step opening principle

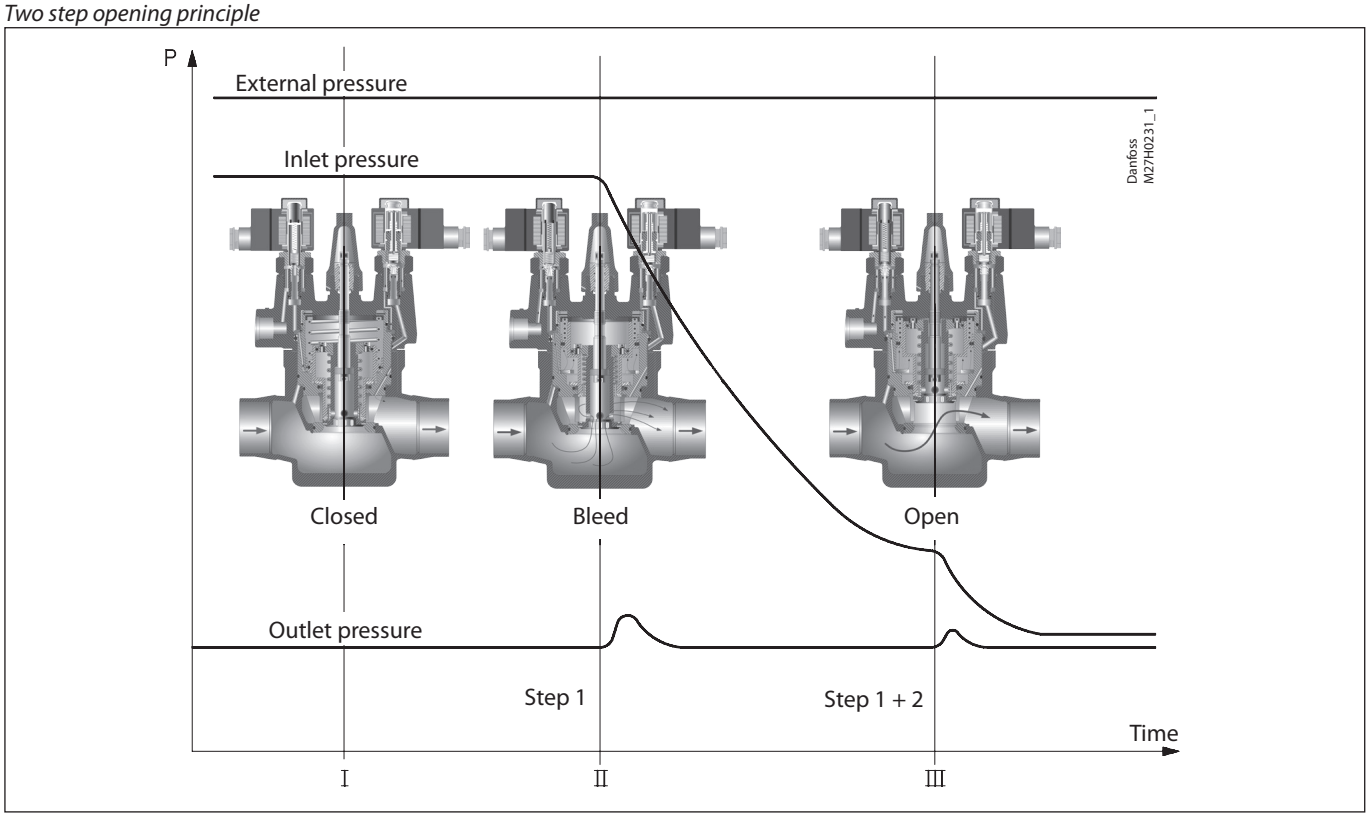

Important note for ICLX valves:
The ICLX valve is kept in its open position by hot gas. The hot gas condenses in the cold valve and creates liquid under the servo piston. When the pilot valves change status to close the ICLX, the pressure on the servo piston equalises with the suction pressure through the pilot valve (pos. 2). This equalisation takes time because condensed liquid is present in the valve.

The exact time taken from when the pilot valves change position to complete closing of the ICLX will depend on temperature, pressure, refrigerant and size of valve. Thus an exact closing time for the valves cannot be given but, in general, lower temperatures give longer closing times.

It is very important to take the closing times into consideration when hot gas defrost is performed on evaporators.

Steps must be taken to ensure that the hot gas supply valve is not opened before the ICLX in the suction line is completely closed. If the hot gas supply valve is opened before the ICLX in the suction line is closed, considerable energy will be lost and potentially dangerous situations might arise because of "liquid hammer". In ICLX valves, the spring-loaded second stage might be induced to hammer by gas and liquid being forced through the valve at $\Delta p > 1.5$ bar across the ICLX. The final result could be severe damage to the valve.

As a rule of thumb a closing time of 2 minutes can be used as a starting point.
The optimum closing time for each individual system must be determined at initial start-up of the plant at intended operational conditions.
It is recommended to check if the closing time needs to be changed when conditions changes (suction pressure, ambient temp. etc.) and closing time should be checked at service of the valve.
Once the optimum closing time has been identified it is recommended to add a safety margin of 30 sec. to the optimum closing time.

Material specification

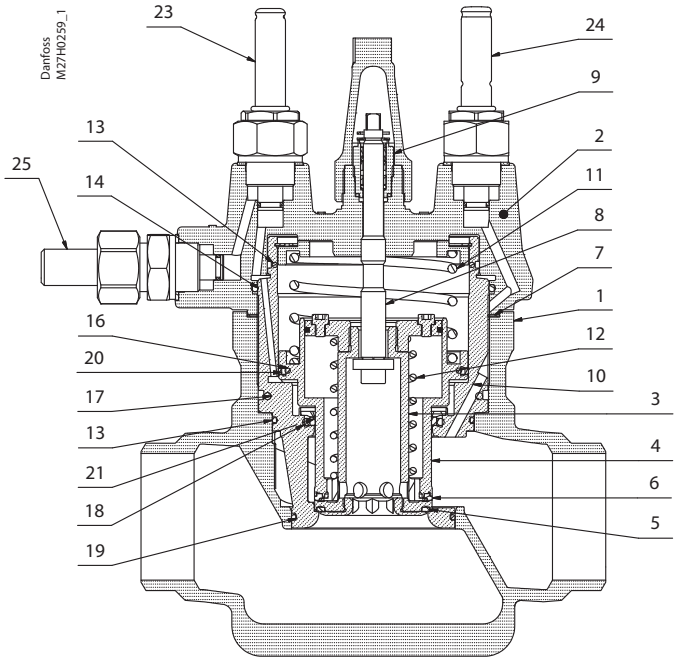

ICLX 32-65

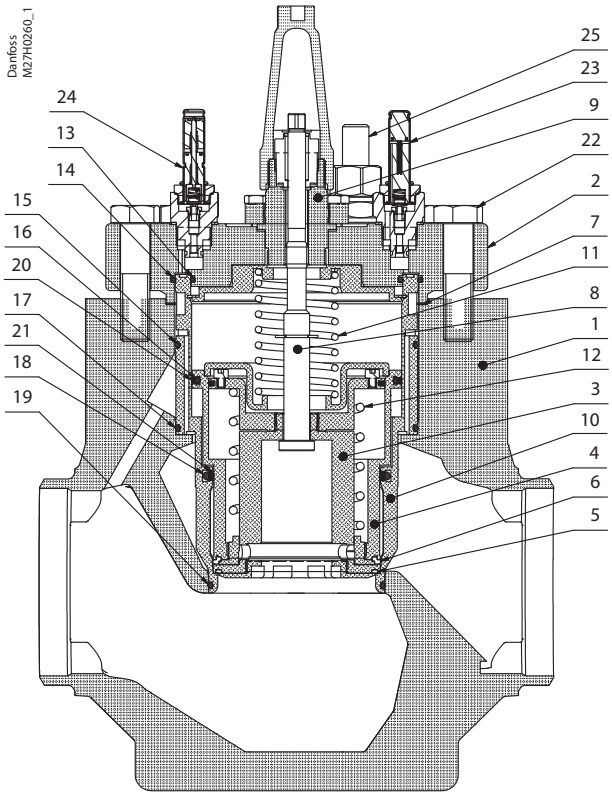

ICLX 100-150

No.	Part	Material	EN	ASTM
1	Valve body	Low temperature steel	G20Mn5QT, EN 10213-3	LCC, A352
2	Top cover	ICLX 32-65: Low temperature steel ICLX 100-150: Low temperature steel	P285QH, EN 10222-4 P275NL2, EN 10028	LF2, A350
3	Main piston	Steel		
4	Bleed piston	Steel		
5	Seat plate main	PTFE		
6	Seat plate bleed	PTFE		
7	Gasket	Fibre, non-asbestos		
8	Spindle manual opener	Stainless steel		
9	Packing gland	Steel		
10	Insert	Steel		
11	Spring - main	Stainless steel		
12	Spring - bleed	Stainless steel		
13	O-ring	Chloroprene (neoprene)		
14	O-ring	Chloroprene (neoprene)		
15	O-ring	ICLX 100-150 only, Chloroprene (neoprene)		
16	O-ring	Chloroprene (neoprene)		
17	O-ring	Chloroprene (neoprene)		
18	O-ring	Chloroprene (neoprene)		
19	O-ring	Chloroprene (neoprene)		
20	Seal	PTFE		
21	Seal	PTFE		
22	Bolt	Stainless steel	A2-70 EN 1515-1	A2-70, B1054
23	EVM pilot NC			
24	EVM pilot NO			
25	External pressure inlet			

Selection of ICLX valve

Wet suction line

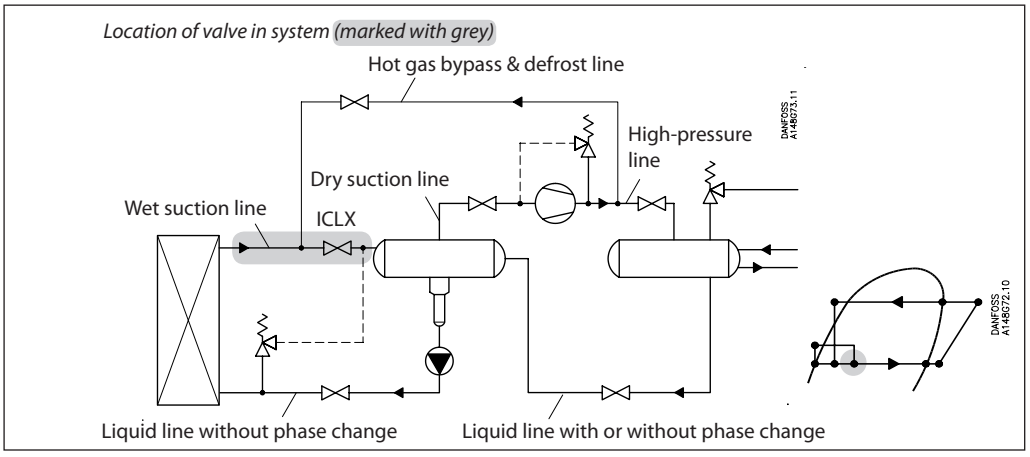

Nominal capacities

Wet suction line

SI units

Calculation example (R 717 capacities):

Running conditions in a plant are as follows:

T_e = –20 °C
Q_0 = 100 kW
Circulation ratio = 3
Max. ΔP = 0.1 bar

The capacity table is based on nominal conditions (pressure drop ΔP = 0.05 bar, circulation ratio = 4).

The actual capacity must therefore be corrected to a nominal condition by multiplication with correction factors.

Correction factor for ΔP = 0.1 bar, $f_{\Delta P}$ = 0.71
Correction factor for circulation ratio, f_{circ} = 0.9

$Q_n = Q_0 \times f_{\Delta P} \times f_{circ}$ = 100 x 0.71 x 0.9 = 63.9 kW.

From the capacity table a ICLX 50 with Q_n = 84 kW is selected.

US units

Calculation example (R 717 capacities):

Running conditions in a plant are as follows:

T_e = – 20 °F
Q_0 = 10 TR
Circulation ratio = 3
Max. ΔP = 1.25 psi

The capacity table is based on nominal conditions (pressure drop ΔP = 0.75 psi, circulation ratio = 4).

The actual capacity must therefore be corrected to a nominal condition by multiplication with correction factors.

Correction factor for ΔP = 1.25 psi, $f_{\Delta p}$ = 0.77
Correction factor for circulation ratio, f_{circ} = 0.9

$Q_n = Q_0 \times f_{\Delta P} \times f_{circ} = 10 \times 0.77 \times 0.9 = 6.9$ TR

From the capacity table a ICLX 32 with Q_n = 9.4 TR is selected.

Nominal capacities

Wet suction line

SI units

Capacity table for nominal conditions, Q_N [kW],
circulation ratio = 4,
ΔP = 0.05 bar

R 717

Type	k_v m^3/h	Evaporating temperature T_e							
		–50 °C	–40 °C	–30 °C	–20 °C	–10 °C	0 °C	10 °C	20 °C
ICLX 32	22	20	26	32	39	47	55	63	72
ICLX 40	29	27	34	43	52	62	72	83	95
ICLX 50	47	43	56	69	84	100	117	135	153
ICLX 65	83	76	99	122	148	177	207	238	271
ICLX 100	151	138	179	222	270	322	377	433	493
ICLX 125	225	206	267	331	402	480	561	645	734
ICLX 150	390	357	463	574	697	831	973	1118	1273

Correction factor for ΔP ($f_{\Delta P}$)

ΔP (bar)	Correction factor
0.01	2.24
0.03	1.29
0.05	1
0.08	0.79
0.10	0.71
0.14	0.60

Correction factor for circulation ratio (f_{circ})

Circulation ratio	Correction factor
2	0.77
3	0.90
4	1
6	1.13
8	1.20
10	1.25

US units

Capacity table for nominal conditions, Q_N [Tons of Refrigeration],
circulation ratio = 4,
ΔP = 0.75 psi

R 717

Type	C_v USgal/min	Evaporating temperature T_e							
		–60 °F*	–40 °F	–20 °F	0 °F	20 °F	40 °F	60 °F	80 °F
ICLX 32	26	5.5	7.4	9.4	12	14	17	19	22
ICLX 40	34	7.3	9.8	12	15	19	22	25	29
ICLX 50	55	12	16	20	25	30	36	41	48
ICLX 65	96	21	28	35	44	53	63	73	84
ICLX 100	175	38	51	65	80	97	114	132	153
ICLX 125	261	57	76	96	119	144	170	197	228
ICLX 150	452	98	132	167	206	250	295	342	396

* 2°F below min. operating temperature.

Correction factor for ΔP ($f_{\Delta P}$)

ΔP (psi)	Correction factor
0.15	2.24
0.45	1.29
0.75	**1**
1.25	0.77
1.75	0.65
2.25	0.58

Correction factor for circulation ratio (f_{circ})

Circulation ratio	Correction factor
2	0.77
3	0.90
4	**1**
6	1.13
8	1.20
10	1.25

Nominal capacities

Wet suction line

SI units

Capacity table for nominal conditions, Q_N [kW],
circulation ratio = 4,
ΔP = 0.05 bar

R 744

Type	k_v m³/h	Evaporating temperature T_e						
		−50 °C	−40 °C	−30 °C	−20 °C	−10 °C	0 °C	10 °C
ICLX 32	22	34	38	43	48	51	54	54
ICLX 40	29	44	50	57	63	68	71	71
ICLX 50	47	72	82	93	102	110	115	115
ICLX 65	83	126	145	164	180	193	202	203
ICLX 100	151	230	263	298	328	352	368	370
ICLX 125	225	343	392	443	488	524	548	552
ICLX 150	390	594	679	768	846	909	951	956

Correction factor for ΔP ($f_{\Delta P}$)

ΔP (bar)	Correction factor
0.01	2.24
0.03	1.29
0.05	**1**
0.08	0.79
0.10	0.71
0.14	0.60

Correction factor for circulation ratio (f_{circ})

Circulation ratio	Correction factor
2	0.77
3	0.90
4	**1**
6	1.13
8	1.20
10	1.25

US units

Capacity table for nominal conditions, Q_N [Tons of Refrigeration],
circulation ratio = 4,
ΔP = 0.75 psi

R 744

Type	C_v USgal/min	Evaporating temperature T_e						
		−60 °F*	−40 °F	−20 °F	0 °F	20 °F	40 °F	60 °F
ICLX 32	26	9.4	10.9	12.5	14	15	15	15
ICLX 40	34	12.4	14.4	16	18	20	20	20
ICLX 50	55	20	23	27	30	32	33	32
ICLX 65	96	35	41	47	52	56	58	56
ICLX 100	175	65	75	86	95	102	106	102
ICLX 125	261	96	111	128	141	152	157	153
ICLX 150	452	167	193	221	245	263	273	264

* 2°F below min. operating temperature.

Correction factor for ΔP ($f_{\Delta P}$)

ΔP (psi)	Correction factor
0.15	2.24
0.45	1.29
0.75	**1**
1.25	0.77
1.75	0.65
2.25	0.58

Correction factor for circulation ratio (f_{circ})

Circulation ratio	Correction factor
2	0.77
3	0.90
4	**1**
6	1.13
8	1.20
10	1.25

Nominal capacities

Wet suction line

SI units

Capacity table for nominal conditions, Q_N [kW],
circulation ratio = 4,
ΔP = 0.05 bar

R 134a

Type	k_v m^3/h	Evaporating temperature T_e						
		–40 °C	–30 °C	–20 °C	–10 °C	0 °C	10 °C	20 °C
ICLX 32	22	9	11	13	15	18	20	22
ICLX 40	29	11	14	17	20	23	26	30
ICLX 50	47	18	23	27	32	38	43	48
ICLX 65	83	33	40	49	57	66	75	84
ICLX 100	151	59	73	88	104	121	137	154
ICLX 125	225	88	109	132	155	180	204	229
ICLX 150	390	153	189	228	269	311	354	397

Correction factor for ΔP ($f_{\Delta P}$)

ΔP (bar)	Correction factor
0.01	2.24
0.03	1.29
0.05	**1**
0.08	0.79
0.10	0.71
0.14	0.60

Correction factor for circulation ratio (f_{circ})

Circulation ratio	Correction factor
2	0.77
3	0.90
4	**1**
6	1.13
8	1.20
10	1.25

US units

Capacity table for nominal conditions, Q_N [Tons of Refrigeration],
circulation ratio = 4,
ΔP = 0.75 psi

R 134a

Type	C_v USgal/min	Evaporating temperature T_e						
		–40 °F	–20 °F	0 °F	20 °F	40 °F	60 °F	80 °F
ICLX 32	26	2.5	3.1	4	5	5	6	7
ICLX 40	34	3.2	4	5	6	7	8	9
ICLX 50	55	5	7	8	10	11	13	15
ICLX 65	96	9	12	14	17	20	23	26
ICLX 100	175	17	21	26	31	36	42	47
ICLX 125	261	25	32	39	46	54	62	70
ICLX 150	452	44	55	67	80	94	107	121

* 2°F below min. operating temperature.

Correction factor for ΔP ($f_{\Delta P}$)

ΔP (psi)	Correction factor
0.15	2.24
0.45	1.29
0.75	**1**
1.25	0.77
1.75	0.65
2.25	0.58

Correction factor for circulation ratio (f_{circ})

Circulation ratio	Correction factor
2	0.77
3	0.90
4	**1**
6	1.13
8	1.20
10	1.25

Nominal capacities

Wet suction line

SI units

Capacity table for nominal conditions, Q_N [kW],
circulation ratio = 4,
ΔP = 0.05 bar

R 404A

Type	k_v m³/h	Evaporating temperature T_e							
		–50 °C	–40 °C	–30 °C	–20 °C	–10 °C	0 °C	10 °C	20 °C
ICLX 32	22	10	12	14	17	19	22	24	26
ICLX 40	29	13	16	19	22	25	29	31	34
ICLX 50	47	22	26	31	36	41	46	51	55
ICLX 65	83	38	46	55	64	73	82	90	98
ICLX 100	151	70	84	99	116	132	149	164	178
ICLX 125	225	104	125	148	172	197	221	244	265
ICLX 150	390	180	217	257	299	342	384	424	460

Correction factor for ΔP ($f_{\Delta P}$)

ΔP (bar)	Correction factor
0.01	2.24
0.03	1.29
0.05	**1**
0.08	0.79
0.10	0.71
0.14	0.60

Correction factor for circulation ratio (f_{circ})

Circulation ratio	Correction factor
2	0.77
3	0.90
4	**1**
6	1.13
8	1.20
10	1.25

US units

Capacity table for nominal conditions, Q_N [Tons of Refrigeration],
circulation ratio = 4,
ΔP = 0.75 psi

R 404A

Type	C_v USgal/min	Evaporating temperature T_e							
		–60 °F*	–40 °F	–20 °F	0 °F	20 °F	40 °F	60 °F	80 °F
ICLX 32	26	2.8	3.5	4.2	5	6	6	7	8
ICLX 40	34	3.7	4.6	6	7	8	8	9	10
ICLX 50	55	6	7	9	11	12	14	15	17
ICLX 65	96	11	13	16	19	22	24	27	29
ICLX 100	175	19	24	29	34	39	44	49	53
ICLX 125	261	29	36	43	51	58	66	73	79
ICLX 150	452	50	62	74	88	101	114	126	137

* 2°F below min. operating temperature.

Correction factor for ΔP ($f_{\Delta P}$)

ΔP (psi)	Correction factor
0.15	2.24
0.45	1.29
0.75	**1**
1.25	0.77
1.75	0.65
2.25	0.58

Correction factor for circulation ratio (f_{circ})

Circulation ratio	Correction factor
2	0.77
3	0.90
4	**1**
6	1.13
8	1.20
10	1.25

Nominal capacities

Dry suction line

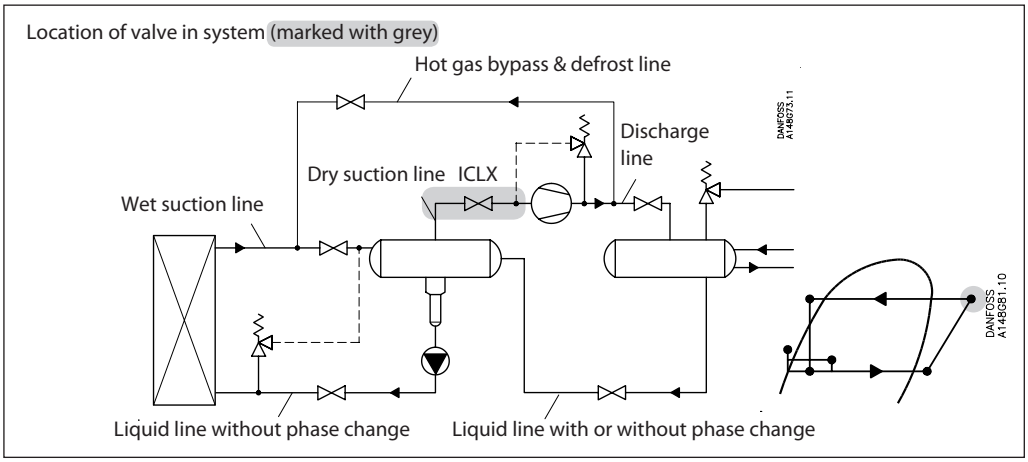

Nominal capacities

Dry suction line

SI units

Calculation example (R 717 capacities):

Running conditions in a plant are as follows:

T_e = –20 °C
Q_0 = 100 kW
T_{liq} = 10 °C
Max. ΔP = 0.1 bar

The capacity table is based on nominal conditions (pressure drop ΔP = 0.05 bar, T_{liq} = 30 °C).

The actual capacity must therefore be corrected to a nominal condition by multiplication with correction factors.

Correction factor for ΔP = 0.1 bar, $f_{\Delta P}$ = 0.71
Correction factor for liquid temperature, f_{Tliq} = 0.92

Correction factor for superheat (T_s) = 1.0
$Q_n = Q_0 \times f_{\Delta P} \times f_{Tliq} \times f_{Ts}$
$= 100 \times 0.71 \times 0.92 \times 1.0 = 65.3$ kW

From the capacity table a ICLX 40 with Q_n = 79 kW is selected.

US units

Calculation example (R 717 capacities):

Running conditions in a plant are as follows:

T_e = 0 °F
Q_0 = 30 TR
T_{liq} = 50 °F
Max. ΔP = 1.25 psi

The capacity table is based on nominal conditions (pressure drop ΔP = 0.75 psi, T_{liq} = 90 °F)

The actual capacity must therefore be corrected to a nominal condition by multiplication with correction factors.

Correction factor for ΔP = 1.25 psi, $f_{\Delta p}$ = 0.77
Correction factor for liquid temperature, f_{Tliq} = 0.92

Correction factor for superheat (T_s) = 1.0
$Q_n = Q_0 \times f_{\Delta P} \times f_{Tliq} \times f_{Ts}$
$= 30 \times 0.77 \times 0.92 \times 1.0 = 21.25$ TR

From the capacity table a ICLX 40 with Q_n = 24 TR is selected.

Nominal capacities

Dry suction line

SI units

Capacity table for nominal conditions, Q_N [kW],
T_{liq} = 30 °C,
ΔP = 0.05 bar
Superheat = 8K

R 717

Type	k_v m³/h	Evaporating temperature T_e							
		-50 °C	-40 °C	–30 °C	-20 °C	-10 °C	0 °C	10 °C	20 °C
ICLX 32	22	28	37	48	60	74	90	108	127
ICLX 40	29	37	49	63	79	98	119	142	168
ICLX 50	47	61	80	103	129	159	193	230	272
ICLX 65	83	107	141	181	227	280	340	407	481
ICLX 100	151	195	257	330	414	510	619	740	875
ICLX 125	225	290	383	491	616	760	922	1103	1304
ICLX 150	390	503	663	851	1069	1317	1598	1912	2259

Correction factor for ΔP ($f_{\Delta P}$)

ΔP (bar)	Correction factor
0.01	2.24
0.03	1.29
0.05	**1**
0.08	0.79
0.10	0.71
0.14	0.60

Correction factor for liquid temperature (T_{liq})

Liquid temperature (°C)	Correction factor
-20	0.82
-10	0.86
0	0.88
10	0.92
20	0.96
30	**1**
40	1.04
50	1.09

US units

Capacity table for nominal conditions, Q_N [Tons of Refrigeration],
T_{liq} = 90 °F,
ΔP = 0.75 psi
Superheat = 12°F

R 717

Type	C_v USgal/min	Evaporating temperature T_e							
		-60 °F*	-40 °F	-20 °F	0 °F	20 °F	40 °F	60 °F	80 °F
ICLX 32	26	7.8	10.6	14.0	18	23	28	34	40
ICLX 40	34	10.3	14.0	18	24	30	37	44	53
ICLX 50	55	17	23	30	38	48	59	72	86
ICLX 65	96	30	40	53	68	85	105	127	152
ICLX 100	175	54	73	96	123	155	191	231	276
ICLX 125	261	80	109	143	184	231	284	345	412
ICLX 150	452	139	189	248	319	400	493	598	713

* 2°F below min. operating temperature.

Correction factor for ΔP ($f_{\Delta P}$)

ΔP (psi)	Correction factor
0.15	2.24
0.45	1.29
0.75	**1**
1.25	0.77
1.75	0.65
2.25	0.58

Correction factor for liquid temperature (T_{liq})

Liquid temperature (°F)	Correction factor
-10	0.82
10	0.85
30	0.88
50	0.92
70	0.96
90	**1**
110	1.04
130	1.09

Nominal capacities

Dry suction line

R 744

SI units

Capacity table for nominal conditions, Q_N [kW],
T_{liq} = 10 °C,
ΔP = 0.05 bar
Superheat = 8K

Type	k_v m^3/h	Evaporating temperature T_e						
		-50 °C	-40 °C	-30 °C	-20 °C	-10 °C	0 °C	10 °C
ICLX 32	22	38	47	56	67	78	89	102
ICLX 40	29	50	62	74	88	103	118	134
ICLX 50	47	82	101	120	142	166	191	217
ICLX 65	83	144	178	213	251	293	337	383
ICLX 100	151	263	324	387	457	534	614	697
ICLX 125	225	391	482	577	681	795	915	1039
ICLX 150	390	678	836	1000	1181	1379	1585	1801

Correction factor for ΔP ($f_{\Delta P}$)

ΔP (bar)	Correction factor
0.01	2.24
0.03	1.29
0.05	**1**
0.08	0.79
0.1	0.71
0.14	0.6

Correction factor for liquid temperature (T_{liq})

Liquid temperature (°C)	Correction factor
-20	0.75
-10	0.81
0	0.89
10	1
15	1.08

R 744

US units

Capacity table for nominal conditions, Q_N [Tons of Refrigeration],
T_{liq} = 50 °F,
ΔP = 0.75 psi
Superheat = 12°F

Type	C_v USgal/min	Evaporating temperature T_e						
		-60 °F*	-40 °F	-20 °F	0 °F	20 °F	40 °F	60 °F
ICLX 32	26	10.6	13.4	16.3	20	23	27	31
ICLX 40	34	13.9	17.7	22	26	31	36	41
ICLX 50	55	23	29	35	42	50	58	66
ICLX 65	96	40	51	62	74	87	102	117
ICLX 100	175	73	92	112	135	159	185	213
ICLX 125	261	108	137	167	201	237	276	317
ICLX 150	452	188	238	290	348	411	478	549

* 2°F below min. operating temperature.

Correction factor for ΔP ($f_{\Delta P}$)

ΔP (psi)	Correction factor
0.15	2.24
0.45	1.29
0.75	**1**
1.25	0.77
1.75	0.65
2.25	0.58

Correction factor for liquid temperature (T_{liq})

Liquid temperature (°F)	Correction factor
-10	0.73
10	0.80
30	0.89
50	1
60	1.08

Nominal capacities

Dry suction line

SI units

Capacity table for nominal conditions, Q_N [kW],
T_{liq} = 30 °C,
ΔP = 0.05 bar
Superheat = 8K

R 134a

Type	k_v m³/h	Evaporating temperature T_e						
		–40 °C	–30 °C	–20 °C	–10 °C	0 °C	10 °C	20 °C
ICLX 32	22	10	13	16	21	26	31	38
ICLX 40	29	13	17	21	27	34	41	50
ICLX 50	47	20	27	35	44	55	67	82
ICLX 65	83	36	47	61	78	97	119	144
ICLX 100	151	65	86	112	141	176	216	262
ICLX 125	225	98	129	167	211	262	322	390
ICLX 150	390	169	223	289	365	454	558	676

Correction factor for ΔP ($f_{\Delta P}$)

ΔP (bar)	Correction factor
0.01	2.24
0.03	1.29
0.05	**1**
0.08	0.79
0.10	0.71
0.14	0.60

Correction factor for liquid temperature (T_{liq})

Liquid temperature (°C)	Correction factor
–20	0.66
–10	0.70
0	0.76
10	0.82
20	0.90
30	**1**
40	1.13
50	1.29

US units

Capacity table for nominal conditions, Q_N [Tons of Refrigeration],
T_{liq} = 90 °F,
ΔP = 0.75 psi
Superheat = 12°F

R 134a

Type	C_v USgal/min	Evaporating temperature T_e						
		–40 °F	–20 °F	0 °F	20 °F	40 °F	60 °F	80 °F
ICLX 32	26	2.7	3.7	5	6	8	10	12
ICLX 40	34	3.6	5	6	8	11	13	16
ICLX 50	55	6	8	10	13	17	21	26
ICLX 65	96	10	14	18	24	30	38	46
ICLX 100	175	19	25	34	43	55	69	84
ICLX 125	261	28	38	50	64	82	102	125
ICLX 150	452	48	65	87	112	141	177	216

* 2°F below min. operating temperature.

Correction factor for ΔP ($f_{\Delta P}$)

ΔP (psi)	Correction factor
0.15	2.24
0.45	1.29
0.75	**1**
1.25	0.77
1.75	0.65
2.25	0.58

Correction factor for liquid temperature (T_{liq})

Liquid temperature (°F)	Correction factor
–10	0.64
10	0.68
30	0.74
50	0.81
70	0.89
90	**1**
110	1.15
130	1.35

Nominal capacities

Dry suction line

R 404A

SI units

Capacity table for nominal conditions, Q_N [kW],
T_{liq} = 30 °C,
ΔP = 0.05 bar
Superheat = 8K

Type	k_v m^3/h	Evaporating temperature T_e							
		–50 °C	–40 °C	–30 °C	–20 °C	–10 °C	0 °C	10 °C	20 °C
ICLX 32	22	8	11	15	19	24	29	35	43
ICLX 40	29	11	15	19	25	31	38	47	56
ICLX 50	47	18	24	31	40	50	62	76	91
ICLX 65	83	32	42	56	71	89	109	133	161
ICLX 100	151	58	77	101	129	162	199	243	293
ICLX 125	225	86	115	151	192	241	297	362	436
ICLX 150	390	149	199	261	333	417	515	627	756

Correction factor for ΔP ($f_{\Delta P}$)

ΔP (bar)	Correction factor
0.01	2.24
0.03	1.29
0.05	**1**
0.08	0.79
0.10	0.71
0.14	0.60

Correction factor for liquid temperature (T_{liq})

Liquid temperature (°C)	Correction factor
–20	0.55
–10	0.60
0	0.66
10	0.74
20	0.85
30	**1**
40	1.23
50	1.68

R 404A

US units

Capacity table for nominal conditions, Q_N [Tons of Refrigeration],
T_{liq} = 90 °F,
ΔP = 0.75 psi
Superheat = 12°F

Type	C_v USgal/min	Evaporating temperature T_e							
		–60 °F*	–40 °F	–20 °F	0 °F	20 °F	40 °F	60 °F	80 °F
ICLX 32	26	2.3	3.2	4.3	6	7	9	11	14
ICLX 40	34	3.1	4.2	6	7	9	12	15	18
ICLX 50	55	5	7	9	12	15	19	24	29
ICLX 65	96	9	12	16	21	27	34	42	51
ICLX 100	175	16	22	30	39	49	62	77	94
ICLX 125	261	24	33	44	58	73	92	114	139
ICLX 150	452	41	57	76	100	127	160	198	242

* 2°F below min. operating temperature.

Correction factor for ΔP ($f_{\Delta P}$)

ΔP (psi)	Correction factor
0.15	2.24
0.45	1.29
0.75	**1**
1.25	0.77
1.75	0.65
2.25	0.58

Correction factor for liquid temperature (T_{liq})

Liquid temperature (°F)	Correction factor
–10	0.52
10	0.57
30	0.63
50	0.72
70	0.83
90	**1**
110	1.29
130	1.92

ICLX 32

Ordering from the parts programme

Please note:
The ICLX function modules can only be used in housings produced in or after week 49 2012; thus the week code on the housing must be 4912 or higher.

Example (select from table I and II)

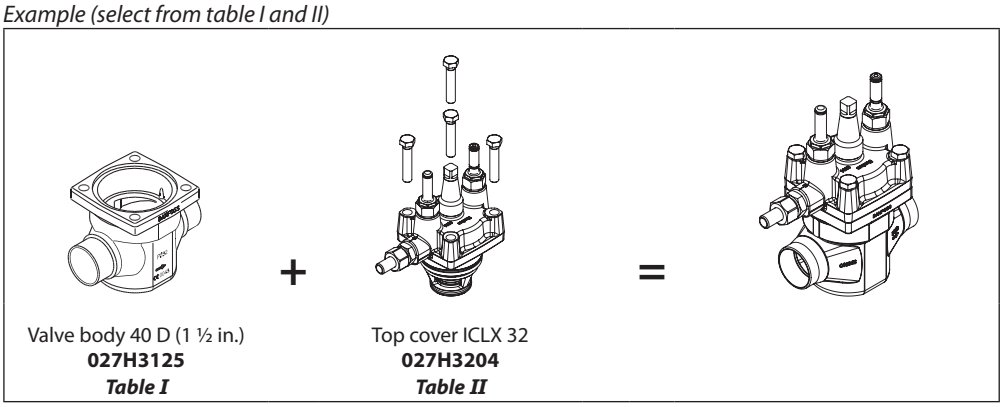

Valve body 40 D (1 ½ in.)
027H3125
Table I

Top cover ICLX 32
027H3204
Table II

ICV 32 valve body w/different connections *Table I*

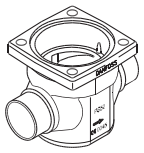

32 D (1 ¼ in.)	40 D (1 ½ in.)	42 SA (1 5/8 in.)	42 SD (15/8 in.)
027H3120	**027H3125**	**027H3127**	**027H3128**

35 SD (1 3/8 in. SA)	32 A (1 ¼ in.)	32 SOC (1 ¼ in.)	40 A (1 ½ in.)
027H3123	**027H3121**	**027H3122**	**027H3126**

D = Butt-weld DIN ; A = Butt-weld ANSI ;
SOC = Socket weld ANSI ; SD = Solder DIN ; SA = Solder ANSI ;

ICLX 32 Function module / top cover *Table II*

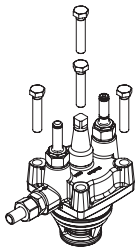

Description	Code Number
ICLX 32	**027H3204** *)

*) Including external pilot connection, NC/NO pilot valves, gasket and O-rings

Ordering complete factory assembled valve
(body, function module / top cover)

Table A

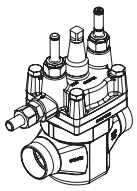

	Available connections							
	32 D (1 ¼ in.)	40 D (1 ½ in.)	42 SA (1 5/8 in.)	42 SD (1 5/8 in.)	35 SD (1 3/8 in. SA)	32 A (1 ¼ in.)	32 SOC (1 ¼ in.)	40 A (1 ½ in.)
ICLX 32	**027H3040**					**027H3041**	**027H3042**	

Select from parts programme

ICLX 40

Ordering from the parts programme

Please note:
The ICLX function modules can only be used in housings produced in or after week 49 2012; thus the week code on the housing must be 4912 or higher.

Example (select from table I and II)

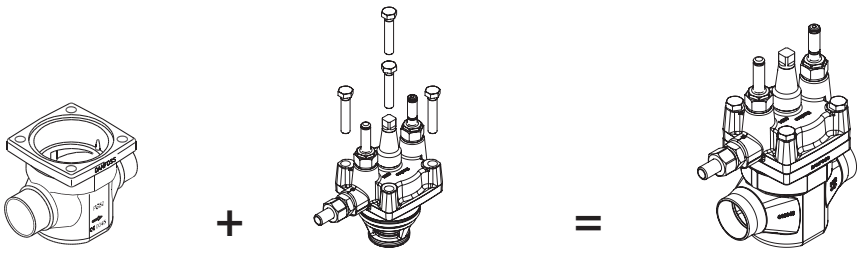

Valve body A 40 (1 ½ in.)
027H4121
Table I

Top cover ICLX 40
027H4204
Table II

ICV 40 valve body w/different connections *Table I*

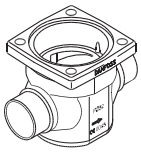

40 D (1 ½ in.)	50 D (2 in.)	42 SA (1 5/8 in.)	42 SD (1 5/8 in.)
027H4120	**027H4126**	**027H4124**	**027H4123**

40 A (1 ½ in.)	40 SOC (1 ½ in.)	50 A (2 in.)	
027H4121	**027H4122**	**027H4127**	

D = Butt-weld DIN ; A = Butt-weld ANSI ;
SOC = Socket weld ANSI ; SD = Solder DIN ; SA = Solder ANSI ;

ICLX 40 Function module / top cover *Table II*

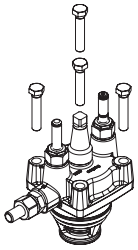

Description	Code Number
ICLX 40	**027H4204** *)

*) Including external pilot connection, NC / NO pilot valves, gasket and O-rings

Ordering complete factory assembled valve
(body, function module/top cover)

Table A

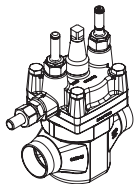

	Available connections						
	40 D (1 ½ in.)	50 D (2 in.)	42 SA (1 5/8 in.)	42 SD (1 5/8 in.)	40 A (1 ½ in.)	40 SOC (1 ½ in.)	50 A (2 in.)
ICLX 40	**027H4040**				**027H4041**	**027H4042**	

Select from parts programme

ICLX 50

Ordering from the parts programme

Please note:
The ICLX function modules can only be used in housings produced in or after week 49 2012; thus the week code on the housing must be 4912 or higher.

Example (select from table I and II)

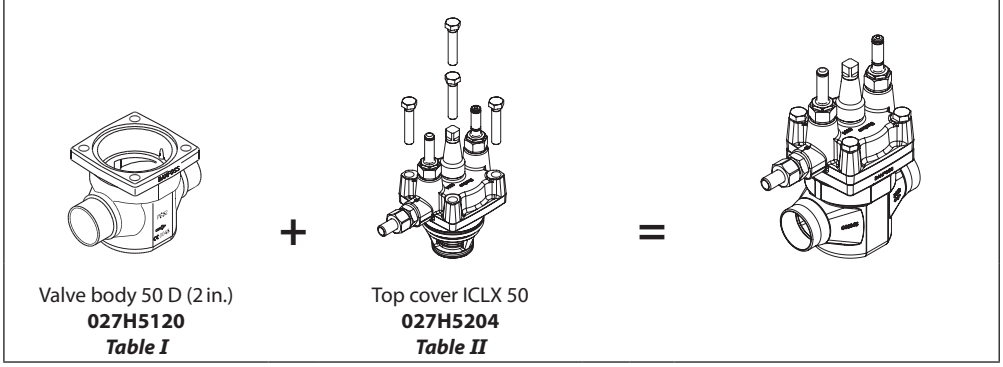

Valve body 50 D (2 in.)
027H5120
Table I

Top cover ICLX 50
027H5204
Table II

ICV 50 valve body w/different connections *Table I*

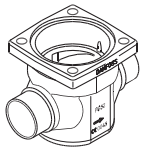

50 D (2 in.)	65 D (2 ½ in.)	54 SD (2 1/8 in. SA)	50 A (2 in.)
027H5120	**027H5124**	**027H5123**	**027H5121**

50 SOC (2 in.)	65 A (2 ½ in.)		
027H5122	**027H5125**		

D = Butt-weld DIN ; A = Butt-weld ANSI ;
SOC = Socket weld ANSI ; SD = Solder DIN ; SA = Solder ANSI ;

ICLX 50 Function module / top cover *Table II*

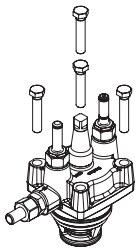

Description	Code Number
ICLX 50	**027H5204** *)

*) Including external pilot connection, NC/NO pilot valves, gasket and O-rings

Ordering complete factory assembled valve
(body, function module/top cover)

Table A

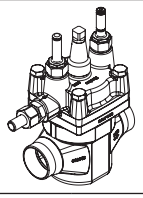

	Available connections					
	50 D (2 in.)	65 D (2 ½ in.)	54 SD (2 1/8 in. SA)	50 A (2 in.)	50 SOC (2 in.)	65 A (2 ½ in.)
ICLX 50	**027H5040**			**027H5041**	**027H5042**	

Select from parts programme

ICLX 65

Ordering from the parts programme

Please note:
The ICLX function modules can only be used in housings produced in or after week 49 2012; thus the week code on the housing must be 4912 or higher.

Example (select from table I and II)

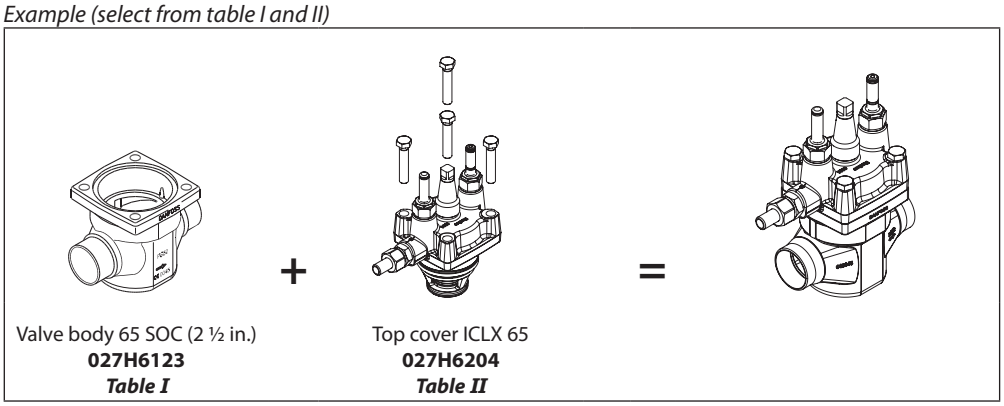

Valve body 65 SOC (2 ½ in.)
027H6123
Table I

Top cover ICLX 65
027H6204
Table II

ICV 65 valve body w/different connections *Table I*

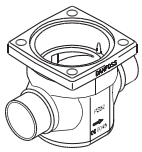

65 D (2 ½ in.)	65 A (2 ½ in.)	80 D (3 in.)	80 A (3 in.)
027H6120	**027H6121**	**027H6126**	**027H6127**

67 SA (2 5/8 in.)	76 SD (3 in.)	65 SOC (2 ½ in.)	
027H6125	**027H6124**	**027H6123**	

D = Butt-weld DIN ; A = Butt-weld ANSI ;
SOC = Socket weld ANSI ; SD = Solder DIN ; SA = Solder ANSI ;

ICLX 65 Function module / top cover *Table II*

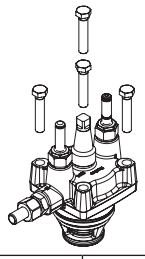

Description	Code Number
ICLX 65	**027H6204 *)**

*) Including external pilot connection, NC/NO pilot valves, gasket and O-rings

Ordering complete factory assembled valve
(body, function module / top cover)

Table A

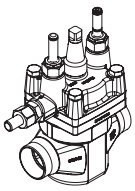

	Available connections						
	65 D (2 ½ in.)	65 A (2 ½ in.)	80 D (3 in.)	80 A (3 in.)	67 SA (2 5/8 in.)	76 SD (3 in.)	65 SOC (2 ½ in.)
ICLX 65	**027H6040**	**027H6041**	**027H8040**	**027H8042**			**027H6042**

Select from parts programme

Complete factory assembled valve

(body, function module / topcover and NC / NO pilot valves)

ICLX 100

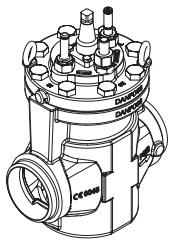

	Available connections	
	100 D (4 in.)	100 A (4 in.)
ICLX 100	**027H7147**	**027H7148**

ICLX 125

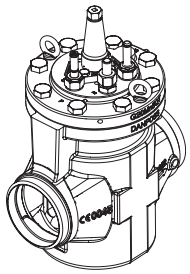

	Available connections	
	125 D (5 in.)	125 A (5 in.)
ICLX 125	**027H7157**	**027H7158**

ICLX 150

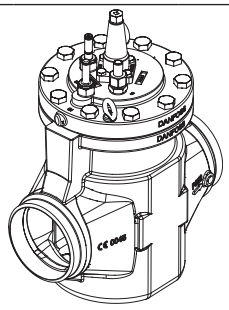

	Available connections	
	150 D (6 in.)	150 A (6 in.)
ICLX 150	**027H7167**	**027H7168**

Accessories

ICV PM flanged valve housings
ICV PM flanged valve housings can replace the PM valves on already installed refrigeration systems.

Pressure range
The ICV PM valve housing is designed for a max. working pressure of 28 bar g / 406 psig and therefore a suitable replacement for PM valves in the service market. They also offer the same drop-in dimensions as the PM valves.

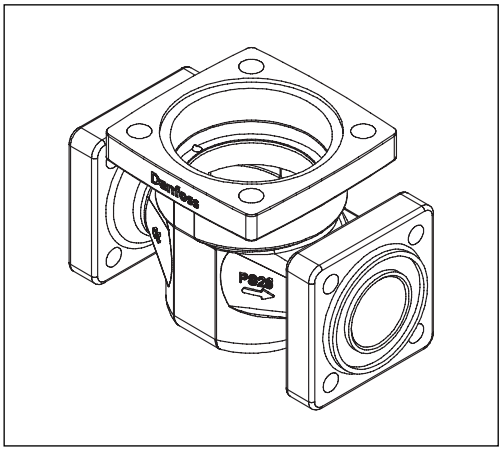

Description	Code no.
ICV 25 PM Valve housing	**027H2119 *)**
ICV 32 PM Valve housing	**027H3129 *)**
ICV 40 PM Valve housing	**027H4128 *)**
ICV 50 PM Valve housing	**027H5127 **)**
ICV 65 PM Valve housing	**027H6128 **)**

*) Includes ICV PM valve housing, flange gaskets and flange bolts.
**) Includes ICV PM valve housing, flange gaskets, flange bolts and flange nuts.

Function modules and top covers must be ordered separately (see the section "Ordering").

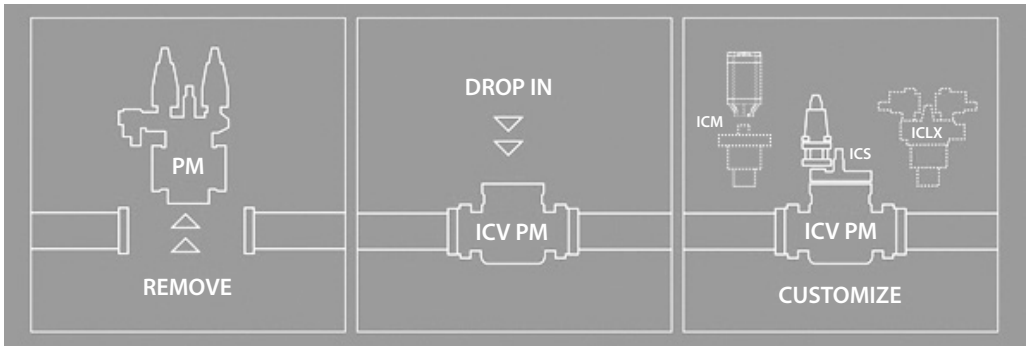

Accessories

ICV (H)A4A flanged valve housings
ICV (H)A4A flanged valve housings can replace the (H)A4A valves on already installed refrigeration systems.

Pressure range
The ICV (H)A4A valve housing is designed for a max. working pressure of 28 bar g / 406 psig and therefore a suitable replacement for (H)A4A valves in the service market. They also offer the same drop-in dimensions as the (H)A4A valves.

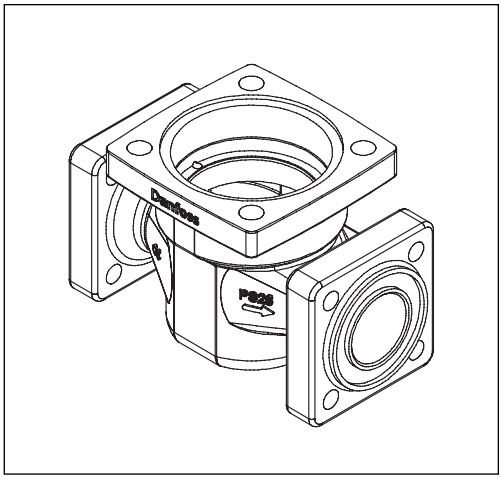

Description	Code no.
ICV 25 (H)A4A Valve housing	**027H2304** *)
ICV 32 A4A Valve housing	**027H3130** *)
ICV 32 HA4A Valve housing	**027H3131** *)
ICV 40 (H)A4A Valve housing	**027H4129** *)
ICV 50 (H)A4A Valve housing	**027H5128** **)
ICV 65 (H)A4A Valve housing	**027H6129** **)

*) Includes ICV (H)A4A valve housing, flange gaskets and flange bolts.
**) Includes ICV (H)A4A valve housing, flange gaskets, flange bolts and flange nuts.

Function modules and top covers must be ordered separately (see the section “Ordering”).

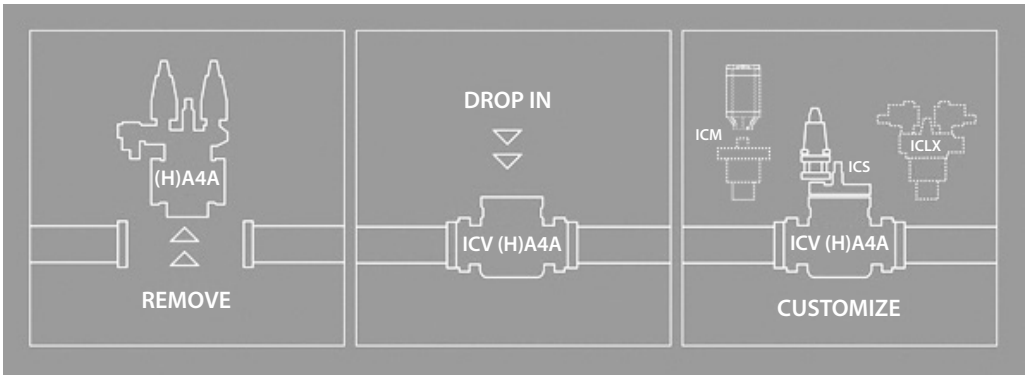

Accessories

Cap including gasket

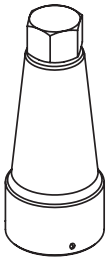

Valve size	Code number
ICLX 32 – 40	**148B3259**
ICLX 50 – 100	**148B4075**
ICLX 125 – 150	**148B4076**

External pilot connection

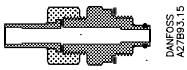

ICLX	Description	Code no.
32 – 80	External pilot connection (incl. damping orifice, D: 1.0 mm)	**027F1048**
32 – 80	External pilot connection (1/4" FPT) (incl. damping orifice, D: 1.0 mm)	**027B2065**
100 – 150	External polot connection (incl. damping orifice, D: 1.8 mm)	**027F1049**
100 – 150	External pilot connection (1/4" FPT) (incl. damping orifice, D: 1.8 mm)	**027B2066**
32 – 150	Accessory bag with seal and O-ring for pilot valve	**027F0666**

ICLX	Description	Code no.
32 – 80	Damping orifice for EVM. 10 pcs, (D: 1.0 mm)	**027F0664**
100 – 150	Damping orifice for EVM. 10 pcs, (D: 1.8 mm)	**027F0176**

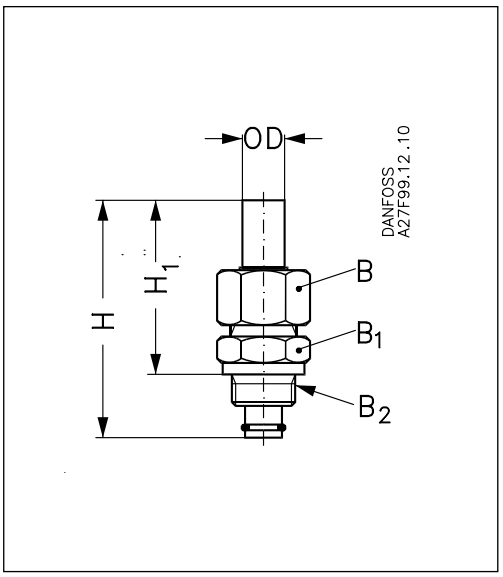

A damping orifice should be installed if the pressure difference between the low and the high pressure side is more than 6 bar.

Accessories			H	H_1	OD	B	B_1	B_2
External pilot connection								
	mm in.		90 3.54	66 2.60	18 0.71	NV 32	NV 32	M 24 × 1.5

ICLX 32-65

Dimensions

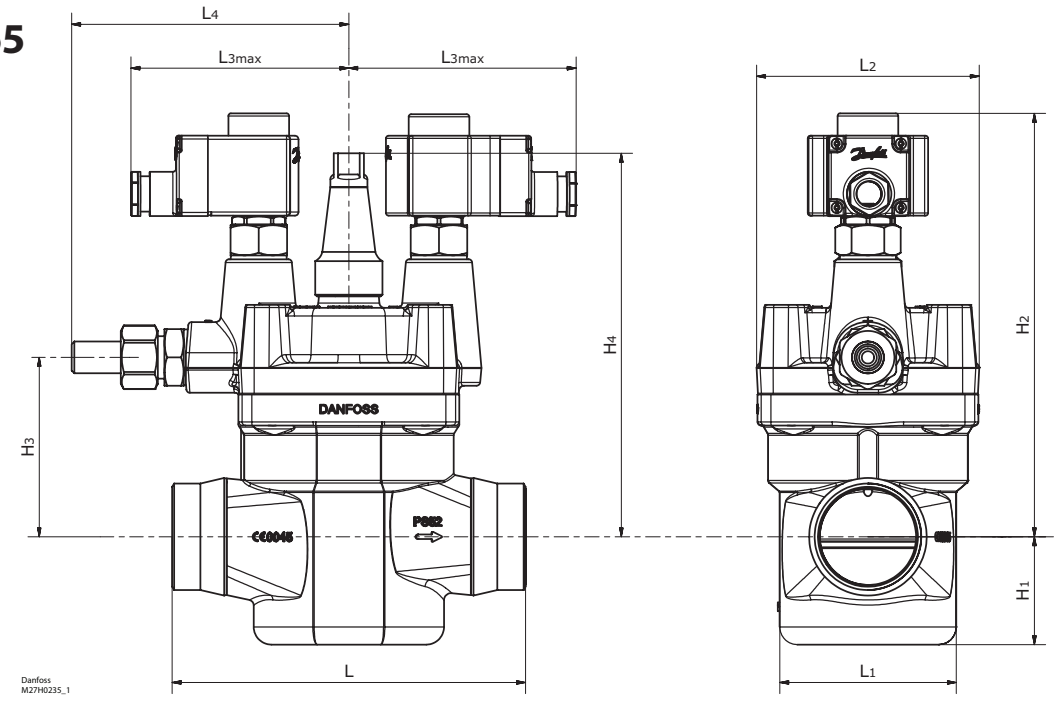

ICLX 32	L							
	32 D	40 D	32 A	40 A	32 SOC	35 SD	42 SD	42 SA
mm	145	145	145	145	148	148	148	148
in.	5.7	5.7	5.7	5.7	5.8	5.8	5.8	5.8

ICLX 32	L_1	L_2	L_3max		L_4	H_1	H_2	H_3	H_4	Net weight
			10W	20W						
mm	75	104	125	135	159	43	193	82	168	9.9 kg
in.	3.0	4.1	4.9	5.3	6.3	1.7	7.6	3.2	6.6	21.8 lb

ICLX 40	L						
	40 D	50 D	40 A	50 A	40 SOC	42 SD	42 SA
mm	160	180	160	180	180	180	180
in.	6.3	7.1	6.3	7.1	7.1	7.1	7.1

ICLX 40	L_1	L_2	L_3max		L_4	H_1	H_2	H_3	H_4	Net weight
			10W	20W						
mm	86	109	125	135	157	52	217	87	174	11.7 kg
in.	3.4	4.3	4.9	5.3	6.2	2.0	8.5	3.4	6.9	25.8 lb

ICLX 50	L					
	50 D	65 D	50 A	65 A	50 SOC	54 SD
mm	200	210	200	210	216	216
in.	7.9	8.3	7.9	8.3	8.5	8.5

ICLX 50	L_1	L_2	L_3max		L_4	H_1	H_2	H_3	H_4	Net weight
			10W	20W						
mm	100	126	125	135	157	61	240	102	217	15.3 kg
in.	3.9	5.0	4.9	5.3	6.2	2.4	9.4	4.0	8.5	33.7 lb

ICLX 65	L						
	65 D	80 D	65 A	80 A	65 SOC	76 SD	67 SA
mm	230	245	230	245	230	245	245
in.	9.1	9.6	9.1	9.6	9.1	9.6	9.6

ICLX 65	L_1	L_2	L_3max		L_4	H_1	H_2	H_3	H_4	Net weight
			10W	20W						
mm	130	141	125	135	163	69	257	123	234	20.3 kg
in.	5.1	5.6	4.9	5.3	6.4	2.7	10.1	4.8	9.2	44.7 lb

D = Butt-weld DIN ; A = Butt-weld ANSI ; SOC = Socket weld ANSI ; SD = Solder DIN ; SA = Solder ANSI

ICLX 100-150

Dimensions

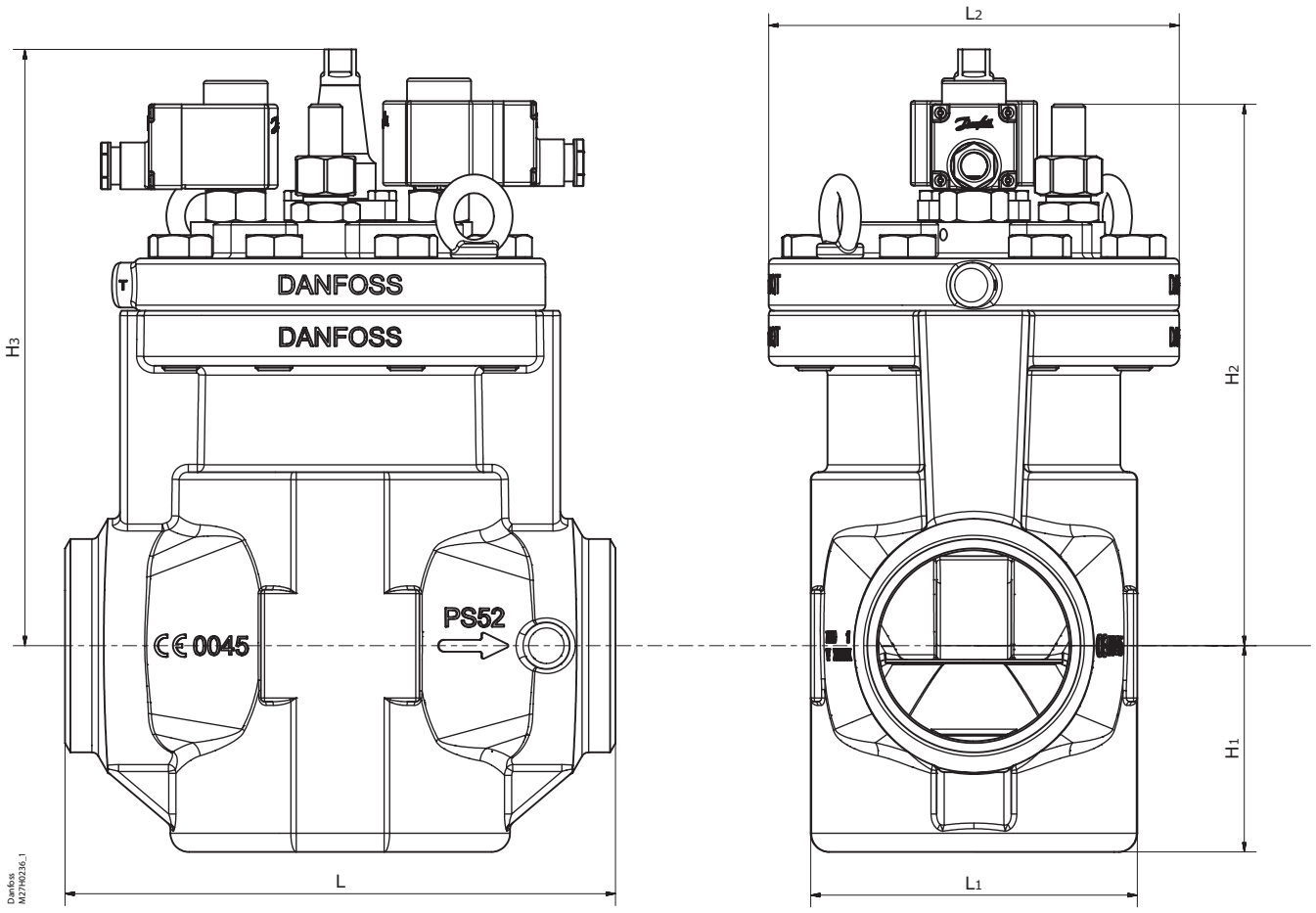

Type		L	L_1	L_2	H_1	H_2	H_3	Net weight
ICLX 100	mm	295	175	220	111	297	320	53.2 kg
	in.	11.6	6.9	8.7	4.4	11.7	12.6	117.3 lb
ICLX 125	mm	350	215	260	142	305	376	80.8 kg
	in.	13.8	8.5	10.2	5.6	12	14.8	178.1 lb
ICLX 150	mm	445	255	300	170	357	426	132.5 kg
	in.	17.5	10.0	11.8	6.7	14.1	16.8	292.1 lb

Connections

D: *Butt-weld (EN 10220)*

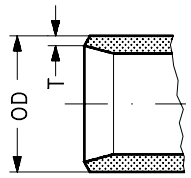

Size mm	Size in.	OD mm	T mm	OD in.	T in.		
32	(1 ¼)	42.4	2.6	1.669	0.102		
40	(1 ½)	48.3	2.6	1.902	0.103		
50	(2)	60.3	2.9	2.37	0.11		
65	(2 ½)	76.1	2.9	3	0.11		
80	(3)	88.9	3.2	3.50	0.13		
100	(4)	114.3	3.6	4.5	0.14		
125	(5)	140.7	4	5.5	0.16		
150	(6)	168.3	6.3	6.6	0.25		

A: *Butt-weld ANSI (B 36.10)*

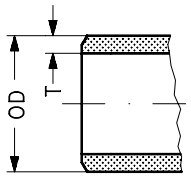

Size mm	Size in.	OD mm	T mm	OD in.	T in.	Schedule	
(32)	1 ¼	42.4	4.9	1.669	0.193	80	
(40)	1 ½	48.3	5.1	1.902	0.201	80	
(50)	2	60.3	3.9	2.37	0.15	40	
(65)	2 ½	73.0	5.2	2.87	0.20	40	
(80)	3	88.9	5.5	3.50	0.22	40	
(100)	4	114.3	6	4.5	0.24		
(125)	5	140.7	6.5	5.5	0.26		
(150)	6	168.3	7.1	6.6	0.28		

SOC:
Socket welding ANSI (B 16.11)

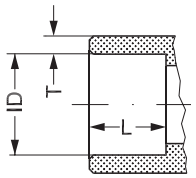

Size mm	Size in.	ID mm	T mm	ID in.	T in.	L mm	L in.
(32)	1 ¼	42.7	6.1	1.743	0.240	13	0.51
(40)	1 ½	48.8	6.6	1.921	0.260	13	0.51
(50)	2	61.2	6.2	2.41	0.24	16	0.63
(65)	2 ½	74	8.8	2.91	0.344	16	0.63

SD: *Soldering (EN 1254-1)*

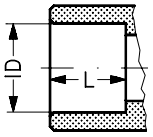

Size mm	Size in.	ID mm		ID in.		L mm	L in.
35		35.07				25	
42		42.07				28	
54		54.09				33	
76		76.1				33	

SA: Soldering (ANSI B 16.22)

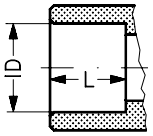

	Size in.			ID in.			L in.
	1 3/8			1.375			0.984
	1 5/8			1.625			1.102
	2 1/8			2.125			1.300
	2 ½			2.625			1.300

ENGINEERING
TOMORROW

Dual position solenoid valve
Type ICSH 25-80

Contents **Page**

Features ... 753
The ICSH Concept ... 754
Design (valve) ... 754
Technical data ... 754
Approvals ... 754
Function ... 755
Controller and Wiring ... 756
Material specification ... 757
Nominal capacities ... 758
Ordering ... 764
Accessories ... 769
Dimensions ... 771
Connections ... 773

AI260929867804en-000403 | 2018.08

ENGINEERING
TOMORROW

Dual position solenoid valve
Type ICSH 25-80



ICSH dual position solenoid valve belongs to the ICV family and consists of an ICV housing, an ICS insert together with an ICSH top cover with 2 EVM normally closed solenoid pilots installed in the top cover.

ICSH is used in hot gas lines for the opening of hot gas defrost flow to the evaporator in 2 steps. Both steps are activated by a controller or a PLC energizing the magnetic coils in a time delay sequence.

Step 1 (approx. 20% of full flow) is to allow a smooth pressure build-up in the evaporator, while the subsequent step 2 opens the flow to 100% to get the full defrost capacity.

The ICSH is designed for large industrial refrigeration systems with ammonia, fluorinated refrigerants or CO_2.

The ICSH features 2 configuration options, which is established at site.

One option is dependent configuration, which secures that step 2 can never open unless step 1 has been mechanically activated.

Second option is independent configuration that allows step 2 to open disregarding step 1. By choosing the independent option attention should be paid to the risk of liquid hammering in case the step 1 for any reason is disregarded.

Features

- Designed for Industrial Refrigeration applications for a maximum working pressure of 52 bar g / 754 psig.
- Applicable to HCFC, HFC, R717 (Ammonia) and R744 (CO_2).
- Direct welded connections.
- Connection types include butt weld, socket weld and solder connections.
- Low temperature steel body.
- Low weight and compact design.
- 2-wire connection for use with a timer relay or 4 wire connection for connecting to a controller or a PLC.
- The ICSH main valve top cover can be oriented in any direction without the function of pilot valves being affected.
- Stabilizes working conditions and eliminates pressure pulsations during opening of hot gas.
- Manual opening possible.
- PTFE seat provides excellent valve tightness.
- Service friendly design.

Approvals
The ICV valve concept has been designed to fulfill global refrigeration requirements.

ICSH valves		
Nominal bore	DN≤ 25 (1 in.)	DN 32 - 80 (1¼ - 3 in.)
Classified for	Fluid group I	
Category	Article 4, paragraph 3	II

The ICSH Concept

The ICSH concept is developed to highest flexibility of direct welded connections. For valve sizes ICV 25 – ICV 65 a wide range of connection sizes and types is available.

The direct welded (non-flanged) connections secure low risk of leakage.

- There are five valve bodies available (ICSH 80 makes use of ICV 65 housing).

		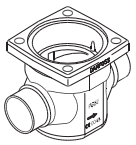	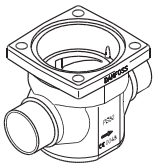	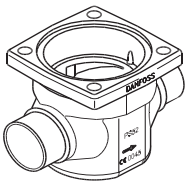
ICV 25	ICV 32	ICV 40	ICV 50	ICV 65

D	A	SOC	SD	SA
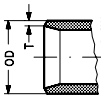	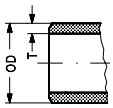	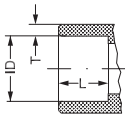	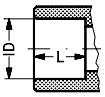	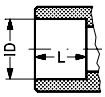
Butt-weld DIN	Butt-weld ANSI	Socket weld ANSI	Solder DIN	Solder ANSI

Design (valve)

Connections
There is a wide range of connection types available with ICSH valves:

- D: Butt weld, EN 10220
- A: Butt weld, ANSI (B 36.10)
- SOC: Socket weld, ANSI (B 16.11)
- SD: Solder connection, EN 1254-1
- SA: Solder connection, ANSI (B 16.22)

The ICSH valves are approved in accordance with the European standard specified in the Pressure Equipment Directive and are CE marked.
For further details / restrictions - see Installation Instruction.

Valve body and top cover material
Low temperature steel

Technical data

- *Refrigerants*
  Applicable to HCFC, HFC, R717 (Ammonia) and R744 (CO_2).
  Temperature range:
  Media: -60 – 120 °C / -76 – 248 °F.
- *Pressure*
  The valve is designed for a max. working pressure of 52 bar g / 754 psi g
- Step 1 20% capacity of step 2 (full capacity)
- *Surface protection*
  The ICSH external surface is zinc-chromated to provide good corrosion protection.
- *Min. opening pressure differential:*
  0.2 bar (2.9 psi) higher inlet pressure than otlet pressure for fully open.
- *Coil requirements:*
  Both coils to be IP67.

	ICSH 25-25	ICSH 32	ICSH 40	ICSH 50	ICSH 65	ICSH 80
K_v (m^3/h) (full capacity)	11.5	17	27	44	70	85
C_v (USgal/min) (full capacity)	13.3	20	31	51	81	98

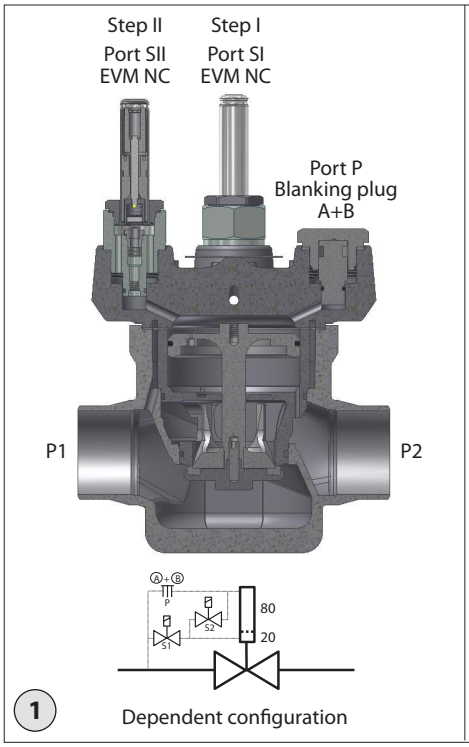

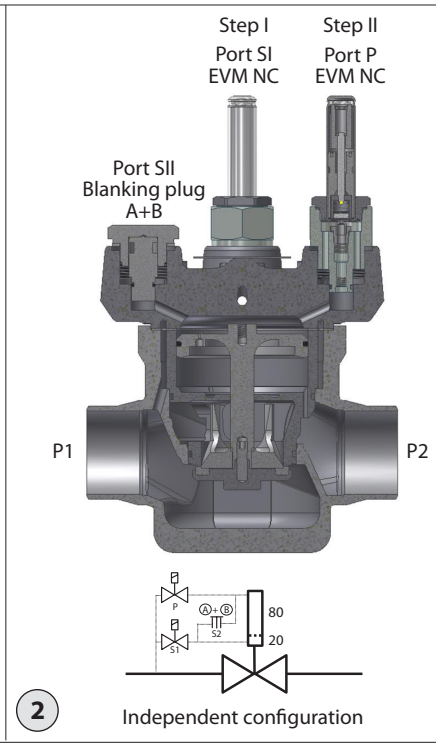

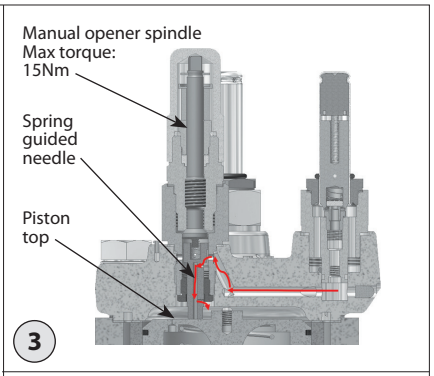

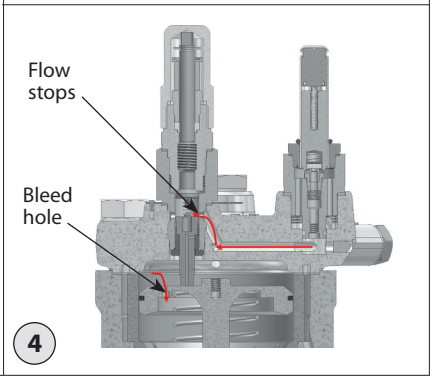

Function

The ICSH is designed for a 2 step opening of the hot gas flow for the evaporator defrost.
Step 1 (20% capacity) is intended for a smooth pressure build up in the evaporator - step 2 will open for full capacity.

The valve is pilot controlled by 2 standard EVM Normally Closed valves and the 2 EVM's are controlled by an external controller like PLC.

The external controller simply needs to activate the 2 EVM coils in a sequence with a certain time offset.

The time offset depends on the specific conditions around the ICSH and must be determined at site.

The opening of the ICSH is done by a pressure difference between the inlet pressure P1 and the outlet pressure P2, and for the main valve to open fully, a Δp of 0.2 bar (2.9 psi) is needed.

The ICSH main valve can be configured into 2 different configurations: Dependent or Independent.

The Dependent setup (fig. 1) means that fully open (step 2) can only be performed if step 1 is performed successfully. If step 1 for some reason fails, the valve will not open at all.
The matching control program should, in this case, be to activate step 1 coil followed by activation of step 2 coil.

Dependent setup is done by installing the 2 EVM's in Port SI (step 1) and Port SII (step 2), and blanking off the P port with Blanking plug A+B.

The Independent setup (fig. 2) involves the option to force step 2 to open independent of the result of step 1.

The matching control program should also in this case be to activate step 1 coil followed by activation of step 2 coil. When step 2 is activated the full flow will immediately be started.

Attention:
A risk of liquid hammering in the system might be present.

Independent setup is done by installing the 2 EVM's in Port SI (step 1) and Port P (step 2), and blanking off the SII port with Blanking plug A+B.

The internal channel structure allows in both configurations a direct flow to the step 1 EVM. By activating step 1 the flow will continue through the spring guided needle that is resting on the top of the piston (see fig. 3).

The flow will build up a pressure on top of the piston, which will start moving down i.e. start open the main valve. The spring guided needle follows the pistons movement downwards and after a predefined distance the needle reaches its stop position, where the needle closes the supply flow (see fig 4).

The bleed hole in the piston top will allow a certain flow out of the pressurized chamber thus enable the piston to move upwards, but any movement of the piston is now being controlled by the needle that compensates by opening the supply flow.

The needle will balance the supply/bleed flows and keep the piston at this position. Step I flow - equivalent to approx. 20% of capacity - has now been established.

After a predetermined period of time the step II coil is activated.
In dependent set-up further flow can only reach the step II EVM if step I EVM is open (working properly).
In independent set-up further flow can reach the step II EVM regardless the status of step I.
Once flow is passing through step II EVM it continues to the top of the piston and moves the piston to full open position.

For both configurations the valve will close and stay closed when both coils are de-energised.

The closing is achieved by drainage through the bleed hole.

ICSH is including a manual opener like all the valves in the ICV family. The operation of the opener is done by turning the spindle clockwise (opening the valve) or counterclockwise (closing the valve).

Attention should be paid to the maximum torque applied to the spindle when turning: **Never exceed 15 Nm to the spindle in any direction.**

Controller and Wiring

The 2 steps need to be activated from a PLC in a time delay sequence. The time delay itself must be determined on site since local conditions are decisive.

The wiring from the controller to the 2 coils can be done by either one or two cables.

By one cable layout only one signal is needed though an additional timer relay has to be connected according to the figure to the right.

Two cable layout requires two subsequent output signals from the PLC.

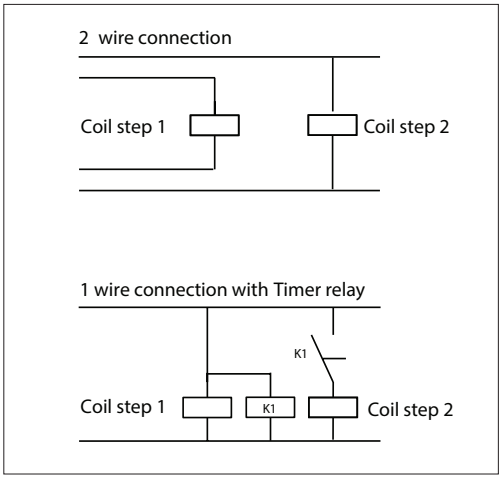

Material specification

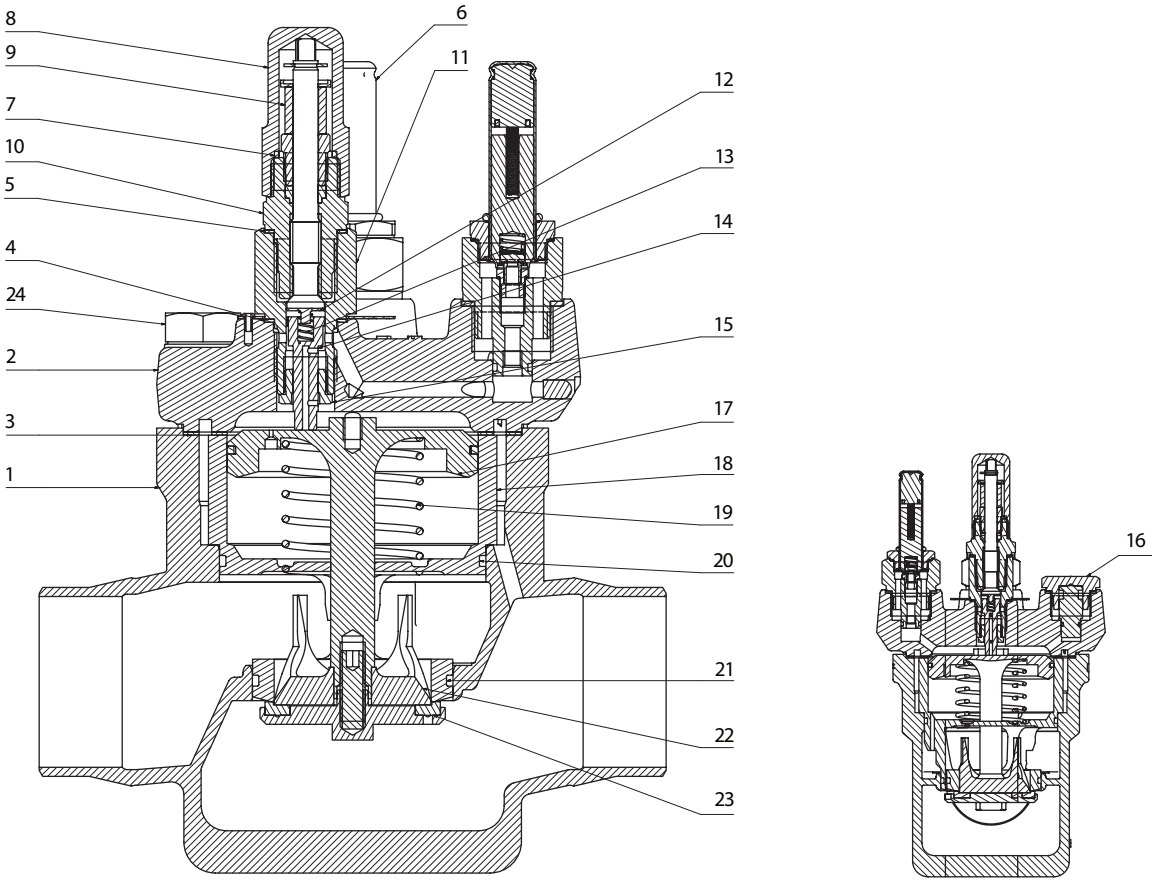

No	Part	Material	EN	ASTM
1	Body	Low temerature Steel	G20Mn5QT EN 10213-3	LCC A352
2	Top Cover	Low temperature Steel	P285QH EN-10222-4	LF2 A350
3	Gasket	Fibre non asbestos		
4	Gasket	Aluminium		
5	Gasket	Aluminium		
6	EVM NC			
7	Gasket	Nylon		
8	Cap	Steel		
9	Stopper	Nylon		
10	Manual opener	Steel		
11	Needle Housing	Stainless steel		
12	Spring Bush	Stainless steel		
13	Spring	Steel		
14	Needle	Stainless steel		
15	Nozzle	Cast iron		
16	Plug	Steel		
17	Piston	Steel		
18	Cylinder	Steel		
19	Spring	Steel		
20	O-ring	Cloroprene(Neoprene)		
21	O-ring	Cloroprene(Neoprene)		
22	Cone	Steel		
23	Valve Plate	PTFE		
24	Bolt	Stainless steel	A2-70 EN1515-1	A2-70, B1054

Nominal capacities

Hotgas line

Pump

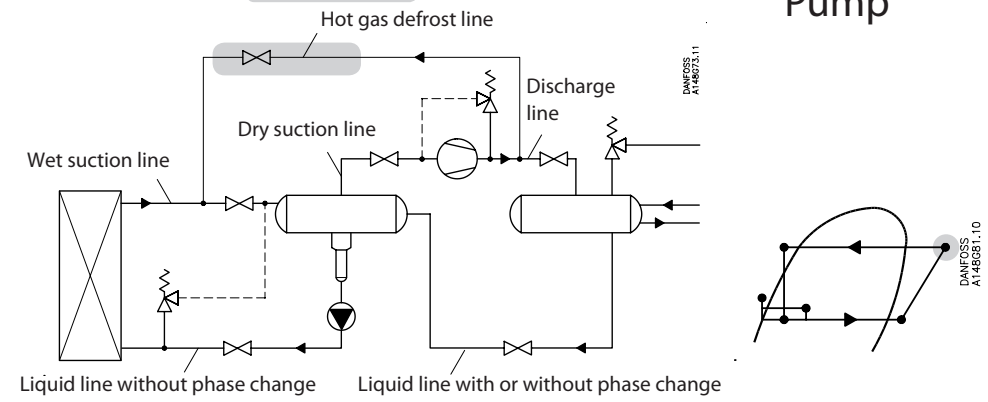

Gravity

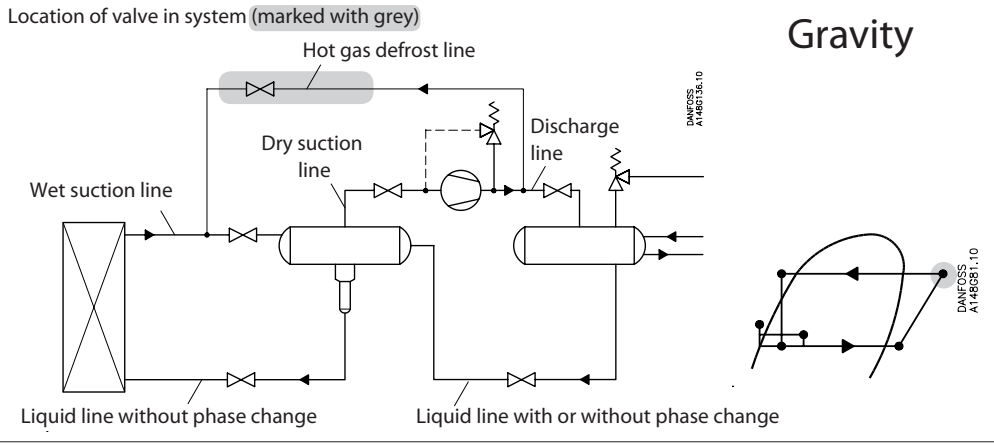

DX

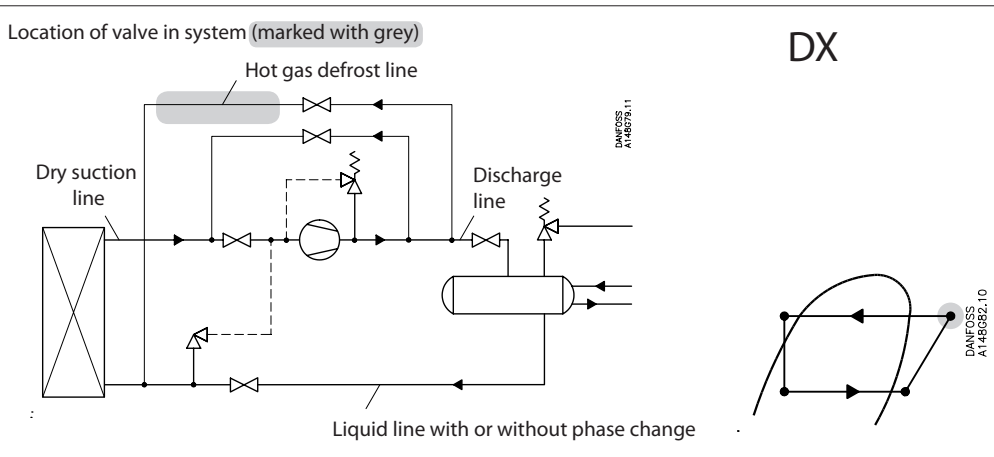

Nominal capacities

Hotgas line

SI units

Calculation example (R 717 capacities):

An application has following running conditions:

T_e = –20 °C
Q_o = 90 kW
T_{liq} = 10°C
Max. Δp = 0.4 bar
$T_{disch.}$ = 60°C

The capacity table is based on nominal condition (Δp = 0.2 bar, T_{liq} = 30°C, $P_{disch.}$= 12 bar, $T_{disch.}$= 80°C)
Therefore the actual capacity must be corrected to nominal condition by means of correction factors.

Correction factor for Δp 0.4 bar $f_{\Delta p}$ = 0.71
Correction factor for liquid temperature f_{Tliq} = 0.92
Correction factor for $T_{disch.}$ 60°C , $f_{disch.}$ = 0.97

$Q_n = Q_o \times f_{\Delta p} \times f_{Tliq} \times f_{Tdisch.} =$
$90 \times 0.71 \times 0.92 \times 0.97 = 57$ kW

From the capacity table an ICS 25-15 function module with Q_n capacity 73 kW is selected.

US units

Calculation example (R 717 capacities):

An application has following running conditions:

T_e = 0°F
Q_o = 18 TR
T_{liq} = 50 °F
Max. Δp = 5.8 psi
$T_{disch.}$ = 120°F

The capacity table is based on nominal conditions (Δp = 3 psi, T_{liq} = 90°F, $P_{disch.}$= 185 psi, $T_{disch.}$= 180°F)

Therefore the actual capacity must be corrected to nominal condition by means of correction factors.

Correction factor for Δp 5.8 psi, $f_{\Delta p}$ = 0.72
Correction factor for liquid temperature f_{Tliq} = 0.92
Correction factor for $T_{disch.}$ 120°C , $f_{disch.}$ = 0.95

$Q_n = Q_o \times f_{\Delta p} \times f_{Tliq} \times f_{Tdisch.} =$
$18 \times 0.72 \times 0.92 \times 0.95 = 11.3$ TR

From the capacity table an ICS 25-10 function module with Q_n capacity 12.0 TR is selected.

Nominal capacities

Hotgas line

SI units

Capacity table for nominal conditions, Q_N [kW],
T_{liq} = 30°C,
$P_{disch.}$ = 12 bar,
ΔP = 0.2 bar,
$T_{disch.}$ = 80°C
Superheat = 8°C

R 717

Function module	Valve body size	K_v [m³/h]	Evaporating temperature [°C]							
			–50	–40	–30	–20	–10	0	10	20
ICS25-5	25	1.7	19.8	20.2	20.5	20.7	20.9	21.1	21.3	21.5
ICS25-10		3.5	40.8	41.5	42.0	42.5	43.0	43.5	44.0	44.2
ICS25-15		6	70.0	71.0	72.0	73.0	74.0	74.8	75.4	76.0
ICS25-20		8	93.0	95.0	96.0	97.5	99.0	99.7	101	101
ICS25-25		11.5	134	136	138	140	142	143	144	145
ICS32	32	17	199	201	205	207	209	211	213	215
ICS40	40	27	315	320	325	329	333	336	339	341
ICS50	50	44	514	521	529	536	542	548	553	556
ICS65	65	70	817	829	843	854	864	872	879	885
ICS80	80	85	991	1007	1022	1035	1048	1058	1067	1074

Correction factor for ΔP ($f_{\Delta P}$)

ΔP [bar]	Correction factor
0.2	**1.00**
0.25	0.89
0.3	0.82
0.4	0.71
0.5	0.63
0.6	0.58

Correction factor for discharge temperature (T_{disch}).

Discharge temperature	Correction factor
50°C	0.96
60°C	0.97
80°C	**1.00**
90°C	1.01
100°C	1.03
110°C	1.04
120°C	1.06

Correction factor for liquid temperature (T_{liq}).

Liquid temperature	Correction factor
–20°C	0.82
–10°C	0.86
0°C	0.88
10°C	0.92
20°C	0.96
30°C	**1.00**
40°C	1.04
50°C	1.09

US units

Capacity table for nominal conditions, Q_N [Tons of Refrigeration],
T_{liq} = 90°F,
ΔP = 2.9 psi,
$P_{disch.}$ = 185 psi,
$T_{disch.}$ = 180°F
Superheat = 12°F

R 717

Function module	Valve body size	C_v [USgal/min]	Evaporating temperature [°F]							
			–60°F	–40°F	–20°F	0°F	20°F	40°F	60°F	80°F
ICS25-5	25	2	5.6	5.7	5.8	5.8	5.9	6.0	6.0	6.0
ICS25-10		4.1	11.4	11.6	11.8	12.0	12.1	12.3	12.3	12.4
ICS25-15		7	19.6	20.0	20.3	20.6	20.8	21.0	21.2	21.3
ICS25-20		9.3	26.2	26.6	27.0	27.4	27.8	28.0	28.2	28.3
ICS25-25		13.3	37.6	38.3	39.0	39.4	39.9	40.3	40.5	40.8
ICS32	32	20	55.5	56.5	57.5	58.3	59.0	59.5	60.0	60.3
ICS40	40	31	88.0	90.0	91.0	92.5	94.0	94.5	95.0	95.7
ICS50	50	51	144	146	149	151	153	154	155	156
ICS65	65	81	229	233	237	240	243	245	247	248
ICS80	80	98	275	280	285	289	292	295	297	298

Correction factor for ΔP ($f_{\Delta P}$)

ΔP [psi]	Correction factor
3	**1.00**
4	0.87
5	0.79
6	0.72
7	0.66
8	0.62

Correction factor for discharge temperature (T_{disch}).

Discharge temperature	Correction factor
120°F	0.95
140°F	0.97
180°F	1.00
200°F	1.02
210°F	1.02
230°F	1.04
250°F	1.06

Correction factor for liquid temperature (T_{liq}).

Liquid temperature	Correction factor
–10°F	0.82
10°F	0.85
30°F	0.88
50°F	0.92
70°F	0.96
90°F	1.00
110°F	1.04
130°F	1.09

Nominal capacities

Hotgas line

SI units

Capacity table for nominal conditions, Q_N [kW],
T_{liq} = 10°C,
P_{disch} = 10 bar,
ΔP = 0.2 bar
T_{disch} = 80°C
Superheat = 8°C

R 744

Function module	Valve body size	K_v [m^3/h]	Evaporating temperature [°C]							
			–50	–40	–30	–20	–10	0	10	20
ICS25-5	25	1.7	12.5	12.7	12.8	12.9	12.9	12.9	12.5	12.8
ICS25-10		3.5	25.7	26.2	26.5	26.6	26.6	26.3	25.8	26.4
ICS25-15		6	44.0	45.0	45.3	45.6	45.5	45.1	44.2	45.0
ICS25-20		8	59.0	60.0	60.2	60.7	60.7	60.1	59.0	60.0
ICS25-25		11.5	85.0	86.0	87.0	87.4	87.3	86.5	85.0	87.0
ICS32	32	17	125	127	128	129	129	128	125	128
ICS40	40	27	199	202	204	205	205	203	199	203
ICS50	50	44	324	329	332	334	334	331	324	331
ICS65	65	70	515	523	529	532	531	526	516	527
ICS80	80	85	626	636	642	646	645	640	626	640

Correction factor for ΔP ($f_{\Delta P}$)

ΔP [bar]	Correction factor
0.2	**1.00**
0.25	0.89
0.3	0.82
0.4	0.71
0.5	0.63
0.6	0.58

Correction factor for discharge temperature (T_{disch}).

Discharge temperature	Correction factor
50°C	0.96
60°C	0.97
80°C	**1.00**
90°C	1.01
100°C	1.03
110°C	1.04
120°C	1.06

Correction factor for liquid temperature (T_{liq}).

Liquid temperature	Correction factor
–20°C	0.52
–10°C	0.67
0°C	0.91
10°C	**1.00**
15°C	1.09

US units

Capacity table for nominal conditions, Q_N [Tons of Refrigeration],
T_{liq} = 90°F,
ΔP = 3 psi
P_{disch} = 120 psi,
T_{disch} = 180°F
Superheat = 12°F

R 744

Function module	Valve body size	C_v [USgal/min]	Evaporating temperature [°F]							
			–60°F	–40°F	–20°F	0°F	20°F	40°F	60°F	80°F
ICS25-5	25	2	3.4	3.4	3.5	3.5	3.4	3.3	3.2	3.1
ICS25-10		4.1	6.9	7.0	7.1	7.1	7.0	6.8	6.6	6.4
ICS25-15		7	11.9	12.1	12.2	12.2	12.0	11.7	11.3	11.0
ICS25-20		9.3	15.8	16.1	16.2	16.2	16.0	15.6	15.1	14.7
ICS25-25		13.3	22.8	23.1	23.3	23.3	23.0	22.4	21.8	21.1
ICS32	32	20	33.7	34.1	34.5	34.5	34.0	33.1	32.2	31.2
ICS40	40	31	53.4	54.3	54.7	54.7	54.0	52.5	51.0	49.6
ICS50	50	51	87.0	88.4	89.0	89.0	88.0	85.5	83.3	80.8
ICS65	65	81	138	141	142	142	140	136	132	129
ICS80	80	98	167	169	171	171	168	164	159	154

Correction factor for ΔP ($f_{\Delta P}$)

ΔP [psi]	Correction factor
3	**1.00**
4	0.87
5	0.79
6	0.72
7	0.66
8	0.62

Correction factor for discharge temperature (T_{disch}).

Discharge temperature	Correction factor
120°F	0.95
140°F	0.97
180°F	**1.00**
200°F	1.02
210°F	1.02
230°F	1.04
250°F	1.05

Correction factor for liquid temperature (T_{liq}).

Liquid temperature	Correction factor
–10°F	0.48
10°F	0.64
30°F	0.88
50°F	**1.00**

Nominal capacities

Hotgas line

SI units

Capacity table for nominal conditions, Q_N [kW],
T_{liq} = 30°C,
P_{disch} = 8 bar,
ΔP = 0.2 bar
T_{disch} = 80°C
Superheat = 8°C

R 134a

Function module	Valve body size	K_v [m^3/h]	Evaporating temperature [°C]						
			–40	–30	–20	–10	0	10	20
ICS25-5	25	1.7	5.1	5.4	5.6	5.9	6.1	6.3	6.5
ICS25-10		3.5	10.6	11.0	11.6	12.0	12.5	13.0	13.4
ICS25-15		6	18.1	19.0	19.8	20.6	21.5	22.3	23.0
ICS25-20		8	24.1	25.3	26.4	27.5	28.6	29.7	30.7
ICS25-25		11.5	34.7	36.0	38.0	39.6	41.0	42.7	44.0
ICS32	32	17	51.0	54.0	56.0	58.5	61.0	63.0	65.0
ICS40	40	27	82.0	85.0	89.0	93.0	97.0	100	104
ICS50	50	44	133	139	145	151	157	163	169
ICS65	65	70	211	221	231	241	251	260	269
ICS80	80	85	256	268	280	293	304	315	326

Correction factor for ΔP ($f_{\Delta P}$)

ΔP [bar]	Correction factor
0.2	**1.00**
0.25	0.89
0.3	0.82
0.4	0.71
0.5	0.63
0.6	0.58

Correction factor for discharge temperature (T_{disch}).

Discharge temperature	Correction factor
50°C	0.96
60°C	0.97
80°C	**1.00**
90°C	1.01
100°C	1.03
110°C	1.04
120°C	1.06

Correction factor for liquid temperature (T_{liq}).

Liquid temperature	Correction factor
–20°C	0.66
–10°C	0.70
0°C	0.76
10°C	0.82
20°C	0.90
30°C	**1.00**
40°C	1.13
50°C	1.29

US units

Capacity table for nominal conditions, Q_N [Tons of Refrigeration],
T_{liq} = 90°F,
ΔP = 3 psi
P_{disch} = 120 psi,
T_{disch} = 180°F
Superheat = 12°F

R 134a

Function module	Valve body size	C_v [USgal/min]	Evaporating temperature [°F]						
			–40°F	–20°F	0°F	20°F	40°F	60°F	80°F
ICS25-5	25	2	1.4	1.5	1.5	1.6	1.7	1.7	1.8
ICS25-10		4.1	2.3	3.0	3.1	3.3	3.4	3.6	3.7
ICS25-15		7	4.9	5.1	5.4	5.6	5.9	6.1	6.3
ICS25-20		9.3	6.5	6.8	7.2	7.5	7.8	8.1	8.4
ICS25-25		13.3	9.3	9.8	10.3	10.8	11.3	11.7	12.1
ICS32	32	20	13.8	14.5	15.2	16.0	16.6	17.3	18.0
ICS40	40	31	21.9	23.0	24.2	25.3	26.5	27.5	28.5
ICS50	50	51	35.6	37.5	39.4	41.3	43.0	44.8	46.5
ICS65	65	81	56.7	59.7	62.9	65.7	68.5	71.3	74.0
ICS80	80	98	67	72	75	79	83	86	89

Correction factor for ΔP ($f_{\Delta P}$)

ΔP [psi]	Correction factor
3	**1.00**
4	0.87
5	0.79
6	0.72
7	0.66
8	0.62

Correction factor for discharge temperature (T_{disch}).

Discharge temperature	Correction factor
120°F	0.95
140°F	0.97
180°F	**1.00**
200°F	1.02
210°F	1.02
230°F	1.04
250°F	1.05

Correction factor for liquid temperature (T_{liq}).

Liquid temperature	Correction factor
–10°F	0.64
10°F	0.68
30°F	0.74
50°F	0.81
70°F	0.89
90°F	**1.00**
110°F	1.15
130°F	1.35

Nominal capacities

Hotgas line

R 404A

SI units

Capacity table for nominal conditions, Q_N [kW],
T_{liq} = 30°C,
P_{disch} = 12 bar
ΔP = 0.2 bar,
T_{disch} = 80°C
Superheat = 8°C

Function module	Valve body size	K_v [m³/h]	Evaporating temperature [°C]							
			–50	–40	–30	–20	–10	0	10	20
ICS25-5	25	1.7	4.8	5.1	5.4	5.7	6.0	6.3	6.6	6.8
ICS25-10		3.5	9.8	10.4	11.1	11.8	12.4	13.0	13.6	14.1
ICS25-15		6	16.7	18.0	19.0	20.2	21.3	22.3	23.3	24.2
ICS25-20		8	22.3	24.0	25.4	27.0	28.3	29.7	31.0	32.0
ICS25-25		11.5	32.0	34.0	36.5	38.5	40.7	42.7	44.6	46.0
ICS32	32	17	48.0	51.0	54.0	57.0	60.0	63.0	66.0	69.0
ICS40	40	27	75.0	81.0	86.0	91.0	96.0	100	105	109
ICS50	50	44	123	131	140	148	156	163	171	177
ICS65	65	70	195	208	222	235	248	260	271	282
ICS80	80	85	238	254	270	286	301	315	330	342

Correction factor for ΔP ($f_{\Delta P}$)

ΔP [bar]	Correction factor
0.2	**1.00**
0.25	0.89
0.3	0.82
0.4	0.71
0.5	0.63
0.6	0.58

Correction factor for discharge temperature (T_{disch}).

Discharge temperature	Correction factor
50°C	0.96
60°C	0.97
80°C	**1.00**
90°C	1.01
100°C	1.03
110°C	1.04
120°C	1.06

Correction factor for liquid temperature (T_{liq}).

Liquid temperature	Correction factor
–20°C	0.55
–10°C	0.60
0°C	0.66
10°C	0.74
20°C	0.85
30°C	**1.00**
40°C	1.23
50°C	1.68

R 404A

US units

Capacity table for nominal conditions, Q_N [Tons of Refrigeration],
T_{liq} = 90°F,
ΔP = 3 psi,
P_{disch} = 120 psi,
T_{disch} = 180°F
Superheat = 12°F

Function module	Valve body size	C_v [USgal/min]	Evaporating temperature [°F]							
			–60°F	–40°F	–20°F	0°F	20°F	40°F	60°F	80°F
ICS25-5	25	2	1.2	1.3	1.4	1.5	1.6	1.7	1.8	1.8
ICS25-10		4.1	2.5	2.7	2.9	3.1	3.3	3.5	3.7	3.8
ICS25-15		7	4.4	4.7	5.0	5.4	5.7	6.0	6.3	6.5
ICS25-20		9.3	5.8	6.2	6.7	7.2	7.6	8.0	8.4	8.7
ICS25-25		13.3	8.4	8.9	9.6	10.3	10.9	11.5	12.0	12.5
ICS32	32	20	12.4	13.2	14.2	15.2	16.1	17.0	17.8	18.4
ICS40	40	31	19.6	21.0	22.6	24.1	25.6	27.0	28.2	29.3
ICS50	50	51	32.0	34.2	36.8	39.3	41.7	44.0	46.0	47.7
ICS65	65	81	51.0	54.3	58.5	62.5	66.3	70.0	73.0	76.0
ICS80	80	98	61	65	70	75	80	84	88	91

Correction factor for ΔP ($f_{\Delta P}$)

ΔP [psi]	Correction factor
3	**1.00**
4	0.87
5	0.79
6	0.72
7	0.66
8	0.62

Correction factor for discharge temperature (T_{disch}).

Discharge temperature	Correction factor
120°F	0.95
140°F	0.97
180°F	**1.00**
200°F	1.02
210°F	1.02
230°F	1.04
250°F	1.05

Correction factor for liquid temperature (T_{liq}).

Liquid temperature	Correction factor
–10°F	0.52
10°F	0.57
30°F	0.63
50°F	0.72
70°F	0.83
90°F	**1.00**
110°F	1.29
130°F	1.92

ICSH 25

Ordering from the parts programme

Example (select from table I, II and III)

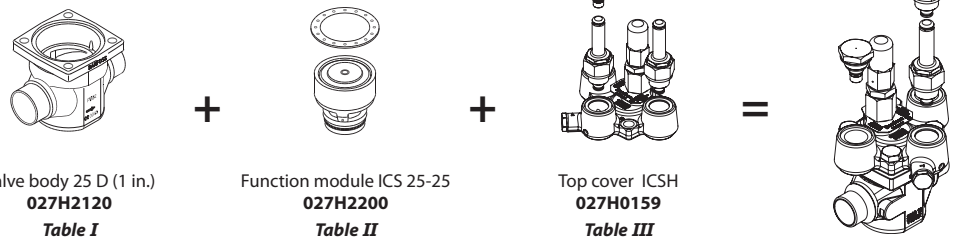

Valve body 25 D (1 in.)
027H2120
Table I

Function module ICS 25-25
027H2200
Table II

Top cover ICSH
027H0159
Table III

ICV 25 valve body w/different connections *Table I*

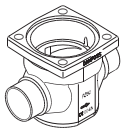

20 D (¾ in.)	25 D (1 in.)	32 D (1¼ in.)	40 D (1½ in.)
027H2128	**027H2120**	**027H2129**	**027H2135**
35 SD (1⅜ in. SA)	28 SA (1⅛ in.)	22 SA (⅞ in.)	28 SD (1⅛ in.)
027H2134	**027H2126**	**027H2125**	**027H2124**
22 SD (⅞ in.)	20 A (¾ in.)	25 A (1 in.)	32 A (1¼ in.)
027H2123	**027H2131**	**027H2121**	**027H2130**
20 SOC (¾ in.)	25 SOC (1 in.)	20 FPT (½ in.)	25 FPT (1 in.)
027H2132	**027H2122**	**027H2133**	**027H2127**

ICS 25 function module *Table II*

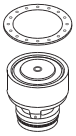

Description	Code Number
ICS 25-5	**027H2201** *)
ICS 25-10	**027H2202** *)
ICS 25-15	**027H2203** *)
ICS 25-20	**027H2204** *)
ICS 25-25	**027H2200** *)

*) Including gasket and O-rings

ICSH 25 top cover *Table III*



Description	Code Number
Top cover ICSH	**027H0159** *)

*) Including bolts, one blanking plug (A+B) and 2 EVM NC

D = Butt-weld DIN ; A = Butt-weld ANSI ; J = Butt-weld JIS ; SOC = Socket weld ANSI ; SD = Solder DIN ; SA = Solder ANSI ; FPT = Female Pipe Thread

Ordering complete factory assembled valve

(body, function module and top cover)

Table A

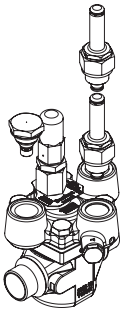

	Available connections							
	20 D (¾ in.)	25 D (1 in.)	32 D (1¼ in.)	40 D (1½ in.)	35 SD (1⅜ in. SA)	28 SA (1⅛ in.)	22 SA (⅞ in.)	28 SD (1⅛ in.)
ICSH 25-25 *)		**027H2309**						

	22 SD (⅞ in.)	20 A (¾ in.)	25 A (1 in.)	32 A (1¼ in.)	20 SOC (¾ in.)	25 SOC (1 in.)	20 FPT (½ in.)	25 FPT (1 in.)
ICSH 25-25 *)			**027H2308**			**027H2307**		

Select from parts programme

*) Including one blanking plug (A+B) and 2 EVM NC

ICSH 32

Ordering from the parts programme

Example (select from table I, II and III)

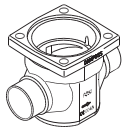

Valve body 32 D (1¼ in.)
027H3120
Table I

+

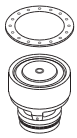

Function module ICS 32
027H3200
Table II

+

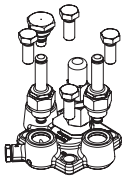

Top cover ICSH
027H0164
Table III

=

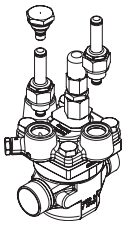

ICV 32 valve body w/different connections *Table I*



32 D (1¼ in.)	40 D (1½ in.)	42 SA (1⅝ in.)	42 SD (1⅝ in.)
027H3120	**027H3125**	**027H3127**	**027H3128**

35 SD (1⅜ in. SA)	32 A (1¼ in.)	32 SOC (1¼ in.)	40 A (1½ in.)
027H3123	**027H3121**	**027H3122**	**027H3126**

D = Butt-weld DIN ; A = Butt-weld ANSI ; J = Butt-weld JIS ; SOC = Socket weld ANSI ;
SD = Solder DIN ; SA = Solder ANSI ; FPT = Female Pipe Thread

ICS 32 function module *Table II*

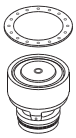

Description	Code Number
ICS 32	**027H3200** *)

*) Including gasket and O-rings

ICSH 32 top cover *Table III*

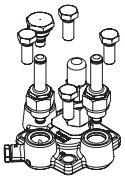

Description	Code Number
Top cover ICSH	**027H0164** *)

*) Including bolts, one blanking plug (A+B) and 2 EVM NC

Ordering complete factory assembled valve

(body, function module and top cover) *Table A*

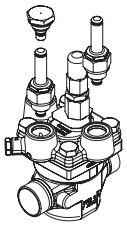

	Available connections							
	32 D (1¼ in.)	40 D (1½ in.)	42 SA (1⅝ in.)	42 SD (1⅝ in.)	35 SD (1⅜ in. SA)	32 A (1¼ in.)	32 SOC (1¼ in.)	40 A (1½ in.)
ICSH 32 *)	**027H3309**					**027H3378**	**027H3377**	

Select from parts programme

*) Including one blanking plug (A+B) and 2 EVM NC

ICSH 40

Ordering from the parts programme

Example (select from table I, II and III)



Valve body 50 D (2 in.)
027H4126
Table I

+

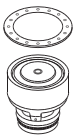

Function module ICS 40
027H4200
Table II

+

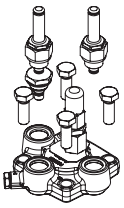

Top cover ICSH
027H0169
Table III

=

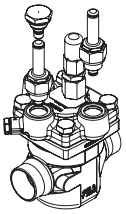

ICV 40 valve body w/different connections *Table I*



40 D (1½ in.)	50 D (2 in.)	42 SA (1⅝ in.)	42 SD (1⅝ in.)
027H4120	**027H4126**	**027H4124**	**027H4123**

40 A (1½ in.)	40 SOC (1½ in.)	50 A (2 in.)	
027H4121	**027H4122**	**027H4127**	

D = Butt-weld DIN ; A = Butt-weld ANSI ; J = Butt-weld JIS ; SOC = Socket weld ANSI ;
SD = Solder DIN ; SA = Solder ANSI ; FPT = Female Pipe Thread

ICS 40 function module *Table II*

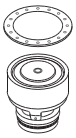

Description	Code Number
ICS 40	**027H4200** *)

*) Including gasket and O-rings

ICSH 40 top cover *Table III*

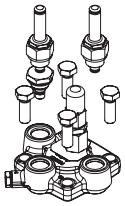

Description	Code Number
Top cover ICSH	**027H0169** *)

*) Including bolts, one blanking plug (A+B) and 2 EVM NC

Ordering complete factory assembled valve

(body, function module and top cover)

Table A

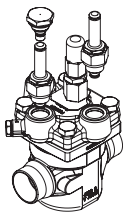

	Available connections						
	40 D (1½ in.)	50 D (2 in.)	42 SA (1⅝ in.)	42 SD (1⅝ in.)	40 A (1½ in.)	40 SOC (1½ in.)	50 A (2 in.)
ICSH 40 *)	**027H4309**				**027H4308**	**027H4307**	

Select from parts programme

*) Including one blanking plug (A+B) and 2 EVM NC

ICSH 50

Ordering from the parts programme

Example (select from table I, II and III)



Valve body 65 D (2½ in.)
027H5124
Table I

+

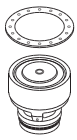

Function module ICS 40
027H5200
Table II

+

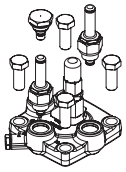

Top cover ICSH
027H0174
Table III

=

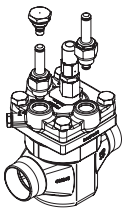

ICV 50 valve body w/different connections *Table I*



50 D (2 in.)	65 D (2½ in.)	54 SD (2⅛ in. SA)	50 A (2 in.)
027H5120	**027H5124**	**027H5123**	**027H5121**

50 SOC (2 in.)	65 A (2½ in.)		
027H5122	**027H5125**		

ICS 50 function module *Table II*

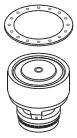

Description	Code Number
ICS 50	**027H5200** *)

*) Including gasket and O-rings

ICSH 50 top cover *Table III*

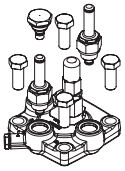

Description	Code Number
Top cover ICSH	**027H0174** *)

*) Including bolts, one blanking plug (A+B) and 2 EVM NC

D = Butt-weld DIN ; A = Butt-weld ANSI ; J = Butt-weld JIS ; SOC = Socket weld ANSI ;
SD = Solder DIN ; SA = Solder ANSI ; FPT = Female Pipe Thread

Ordering complete factory assembled valve

(body, function module and top cover)

Table A

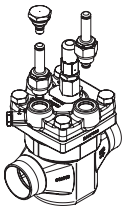

	Available connections					
	50 D (2 in.)	65 D (2½ in.)	54 SD (2⅛ in. SA)	65 A (2½ in.)	50 A (2 in.)	50 SOC (2 in.)
ICSH 50 *)	**027H5309**				**027H5308**	**027H5307**

Select from parts programme

*) Including one blanking plug (A+B) and 2 EVM NC

ICSH 65 and ICSH 80

Ordering from the parts programme

Example (select from table I, II and III)

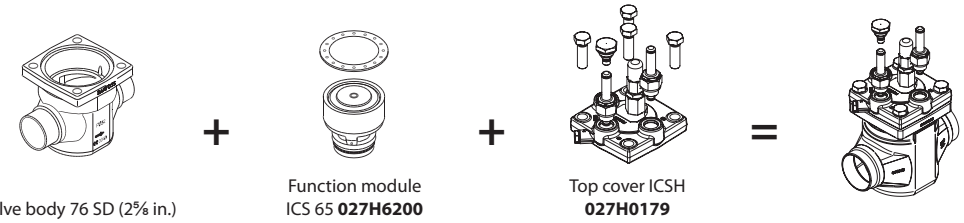

Valve body 76 SD (2⅝ in.)
027H6124
Table I

Function module
ICS 65 **027H6200**
ICS 80 **027H8200**
Table II

Top cover ICSH
027H0179
027H0227
Table III

ICV 65 valve body w/different connections *Table I*

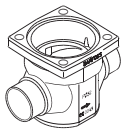

65 D (2½ in.)	65 A (2½ in.)	65 J (2½ in.)	80 D (3 in.)
027H6120	**027H6121**	**027H6122**	**027H6126**

80 A (3 in.)	67 SA (2 ⅝ in.)	76 SD (3 in.)	65 SOC (2½ in.)
027H6127	**027H6125**	**027H6124**	**027H6123**

D = Butt-weld DIN ; A = Butt-weld ANSI ; J = Butt-weld JIS ; SOC = Socket weld ANSI ;
SD = Solder DIN ; SA = Solder ANSI ; FPT = Female Pipe Thread

ICS 65/80 function module *Table II*

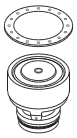

Description	Code Number
ICS 65	**027H6200** *)
ICS 80	**027H8200** *)

*) Including gasket and O-rings

ICSH 65/80 top co0ver *Table III*

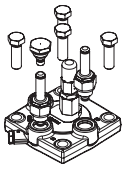

Description	Code Number
Top cover ICSH (65)	**027H0179** *)
Top cover ICSH (80)	**027H0227** *)

*) Including bolts, one blanking plug (A+B) and 2 EVM NC

Ordering complete factory assembled valve

(body, function module and top cover) *Table A*

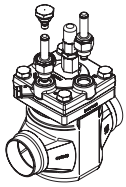

	Available connections							
	65 D (2½ in.)	65 A (2½ in.)	65 SOC (2½ in.)	80 D (3 in.)	80 A (3 in.)	67 SA (2⅝ in.)	76 SD (3 in.)	65 J (2½ in.)
ICSH 65 *)	**027H6309**	**027H6311**	**027H6308**					
ICSH 80 *)				**027H7302**	**027H7303**			

Select from parts programme

*) Including one blanking plug (A+B) and 2 EVM NC

Note:
The capacity of the ICS 80 module can only be achieved when using the valve body with 80 D or A (3 in) connections.
If any other ICV 65 valve body is used the capacity of the complete valve will be reduced by up to 6%.

Accessories

ICV PM flanged valve housings
ICV PM flanged valve housings can replace the PM valves on already installed refrigeration systems.

Pressure range
The ICV PM valve housing is designed for a max. working pressure of 28 bar g / 406 psig and therefore a suitable replacement for PM valves in the service market. They also offer the same drop-in dimensions as the PM valves.

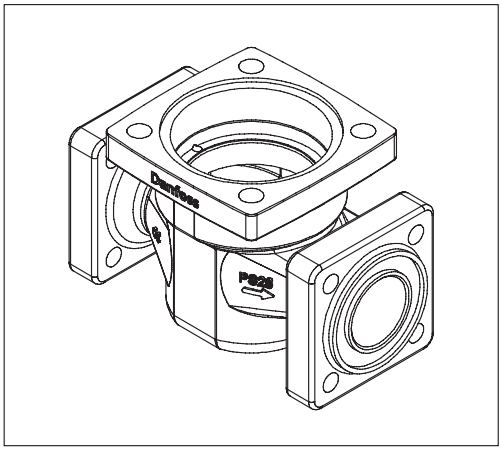

Description	Code no.
ICV 25 PM Valve housing	**027H2119 *)**
ICV 32 PM Valve housing	**027H3129 *)**
ICV 40 PM Valve housing	**027H4128 *)**
ICV 50 PM Valve housing	**027H5127 **)**
ICV 65 PM Valve housing	**027H6128 **)**

*) Includes ICV PM valve housing, flange gaskets and flange bolts.
**) Includes ICV PM valve housing, flange gaskets, flange bolts and flange nuts.

Function modules and top covers must be ordered separately (see the section "Ordering").

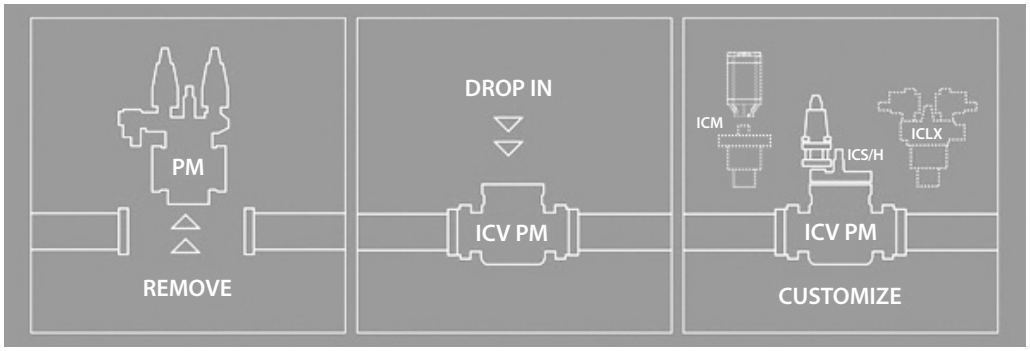

Accessories

ICV (H)A4A flanged valve housings
ICV (H)A4A flanged valve housings can replace the (H)A4A valves on already installed refrigeration systems.

Pressure range
The ICV (H)A4A valve housing is designed for a max. working pressure of 28 bar g / 406 psig and therefore a suitable replacement for (H)A4A valves in the service market. They also offer the same drop-in dimensions as the (H)A4A valves.

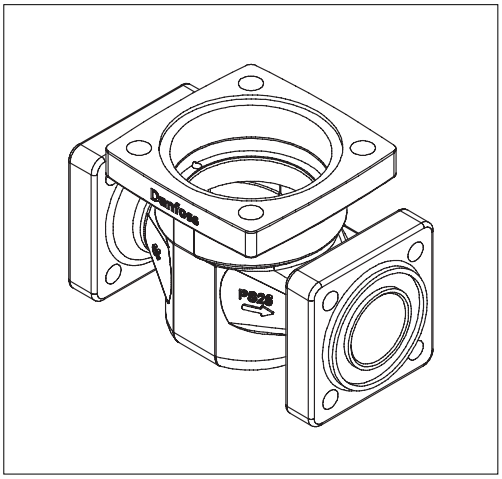

Description	Code no.
ICV 25 (H)A4A Valve housing	**027H2304** *)
ICV 32 A4A Valve housing	**027H3130** *)
ICV 32 HA4A Valve housing	**027H3131** *)
ICV 40 (H)A4A Valve housing	**027H4129** *)
ICV 50 (H)A4A Valve housing	**027H5128** *)
ICV 65 (H)A4A Valve housing	**027H6129** *)

*) Includes ICV (H)A4A valve housing, flange gaskets, flange bolts and flange nuts.

Function modules and top covers must be ordered separately (see the section "Ordering").

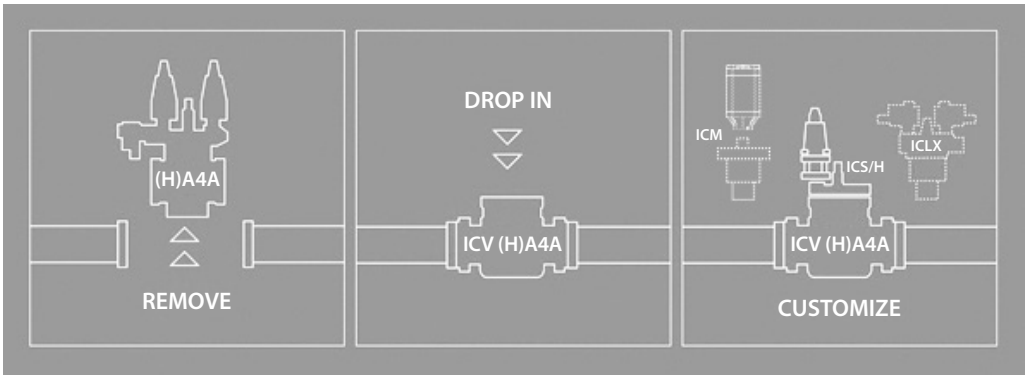

Blanking plug A + B for pilot valves



Description	Code number
Blanking plug incl. flat gasket	**027F1046**

Dimensions

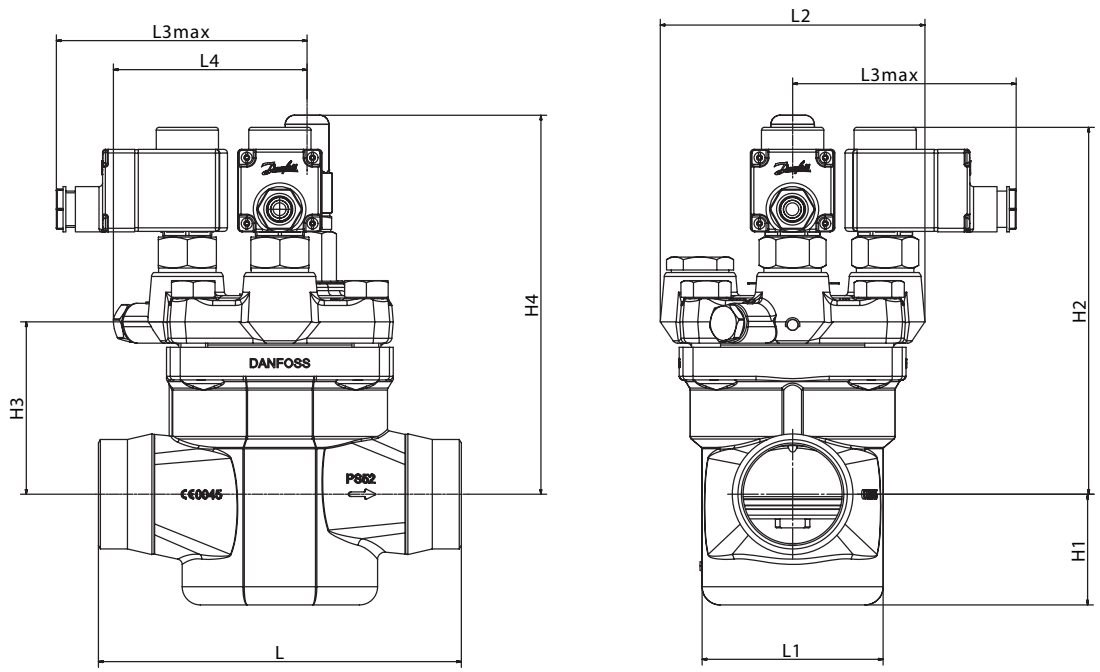

ICSH 25-25	L		
	DIN	A	SOC
mm	135	135	147
in	5.31	5.31	5.79

ICSH 25-25	L1	L2	L3max(s1)	L3max(S-2)	L4	H1	H2	H3	H4	Weight
mm	65	146.5	138	123	100.5	39.5	168.5	61	174	3.8 Kg
in	2.56	5.77	5.43	4.84	3.96	1.56	6.63	2.40	6.85	7.93lb

ICSH 32	L		
	DIN	A	SOC
mm	145	145	148
in	5.71	5.71	5.83

ICSH 32	L1	L2	L3max(s1)	L3max(S-2)	L4	H1	H2	H3	H4	Weight
mm	75	146.5	138	123	102	42.5	182	72	187.6	5.1
in	2.95	5.77	5.43	4.84	4.02	1.67	7.17	2.83	7.39	11.1lb

ICSH 40	L		
	DIN	A	SOC
mm	160	160	180
in	6.30	6.30	7.09

ICSH 40	L1	L2	L3max(s1)	L3max(S-2)	L4	H1	H2	H3	H4	Weight
mm	86	146	138	123	102	51.5	186.5	78	193	6.5 Kg
in	3.39	5.75	5.43	4.84	4.02	2.03	7.34	3.07	7.60	14lb

Dimensions

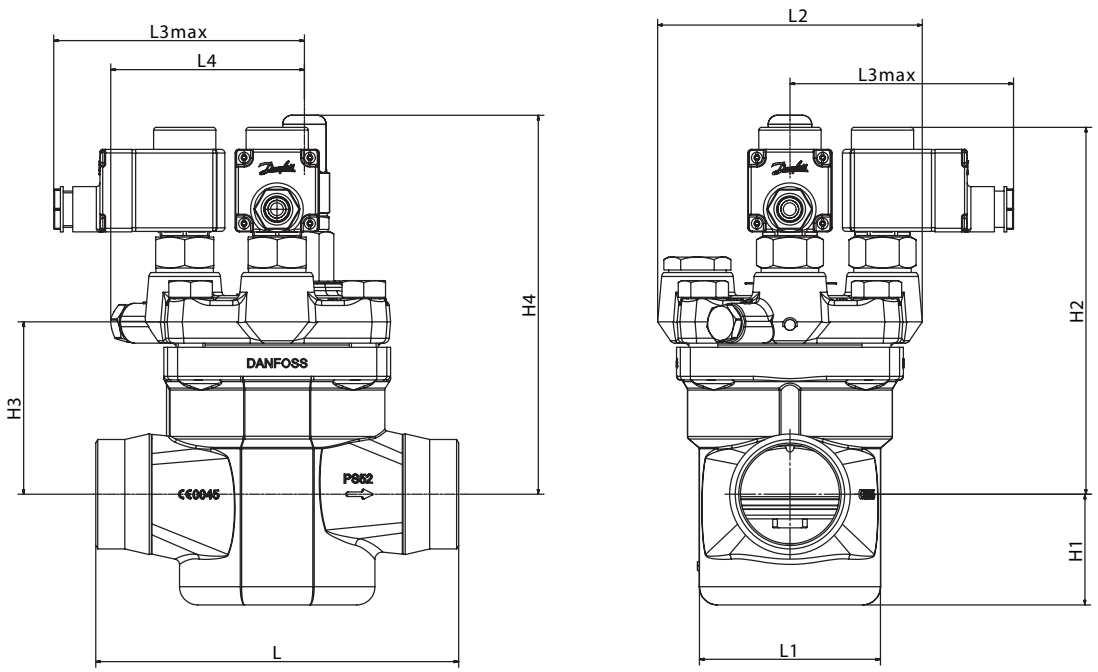

ICSH 50	L		
	DIN	A	SOC
mm	200	200	216
in	7.87	7.87	8.50

ICSH 50	L1	L2	L3max(s1)	L3max(S-2)	L4	H1	H2	H3	H4	Weight
mm	100	146	138	123	107	61	202	95	209	9.4 Kg
in	3.94	5.75	5.43	4.84	4.21	2.40	7.95	3.74	8.23	20.3lb

ICSH 65	L		
	DIN	A	SOC
mm	230	230	230
in	9.06	9.06	9.06

ICSH 65	L1	L2	L3max(s1)	L3max(S-2)	L4	H1	H2	H3	H4	Weight
mm	130	145.6	138	123	106.7	69	222.5	114.5	232	13.7 Kg
in	5.12	5.73	5.43	4.84	4.20	2.72	8.76	4.51	9.13	29.8lb

ICSH 80	L		
	DIN	A	
mm	245	245	
in	9.65	9.65	

ICSH 80	L1	L2	L3max(s1)	L3max(S-2)	L4	H1	H2	H3	H4	Weight
mm	130	145.6	138	123	106.7	69	222.5	112.5	232	13.7 Kg
in	5.12	5.73	5.43	4.84	4.20	2.72	8.76	4.43	9.13	29.8lb

Connections

D: *Butt-weld (EN 10220)*

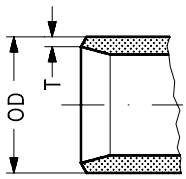

Size mm	Size in.	OD mm	T mm	OD in.	T in.
20	(¾)	26.9	2.3	1.059	0.091
25	(1)	33.7	2.6	1.327	0.103
32	(1¼)	42.4	2.6	1.669	0.102
40	(1½)	48.3	2.6	1.902	0.103
50	(2)	60.3	2.9	2.37	0.11
65	(2½)	76.1	2.9	3	0.11
80	(3)	88.9	3.2	3.50	0.13

A: *Butt-weld ANSI (B 36.10)*

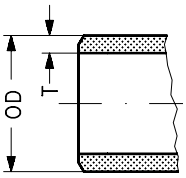

Size mm	Size in.	OD mm	T mm	OD in.	T in.	Schedule
(20)	¾	26.9	4.0	1.059	0.158	80
(25)	1	33.7	4.6	1.327	0.181	80
(32)	1¼	42.4	4.9	1.669	0.193	80
(40)	1½	48.3	5.1	1.902	0.201	80
(50)	2	60.3	3.9	2.37	0.15	40
(65)	2½	73.0	5.2	2.87	0.20	40
(80)	3	88.9	5.5	3.50	0.22	40

SOC:
Socket welding ANSI (B 16.11)

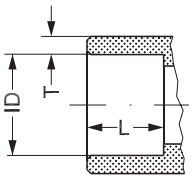

Size mm	Size in.	ID mm	T mm	ID in.	T in.	L mm	L in.
(20)	¾	27.2	4.6	1.071	0.181	13	0.51
(25)	1	33.9	7.2	1.335	0.284	13	0.51
(32)	1¼	42.7	6.1	1.743	0.240	13	0.51
(40)	1½	48.8	6.6	1.921	0.260	13	0.51
(50)	2	61.2	6.2	2.41	0.24	16	0.63
(65)	2½	74	8.8	2.91	0.344	16	0.63

SD: *Soldering (EN 1254-1)*

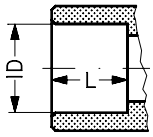

Size mm	Size in.	ID mm		ID in.		L mm	L in.
22		22.08				16.5	
28		28.08				26	
35		35.07				25	
42		42.07				28	
54		54.09				33	
76		76.1				33	

SA: Soldering (ANSI B 16.22)

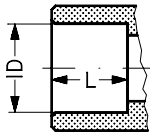

	Size in.			ID in.			L in.
	⅞			0.875			0.650
	1⅛			1.125			1.024
	1⅜			1.375			0.984
	1⅝			1.625			1.102
	2⅛			2.125			1.300
	2½			2.625			1.300

ENGINEERING
TOMORROW

Solenoid valves
EVRA and EVRAT

Contents **Page**

Technical data 777
Ordering valve with coil 778
Ordering valve without coil 778
Rated capacity 779
Material specification 789
Dimensions and weight 790

AI221486430911en-000810 | 2018.10

ENGINEERING TOMORROW

Solenoid valves
EVRA and EVRAT



EVRA is a direct or servo operated solenoid valve for liquid, suction and hot gas lines with ammonia or fluorinated refrigerants.

EVRA valves are supplied complete or as separate components, i.e. valve body, coil and flanges can be ordered separately.

EVRAT is an assisted lift, servo operated solenoid valve for liquid, suction and hot gas lines with ammonia and fluorinated refrigerants.

EVRAT is specially designed to open - and stay open - at a pressure drop of 0 bar. The EVRAT solenoid valve is thus suitable for use in all plant where the required opening differential pressure is 0 bar.

EVRAT is available as components, i.e. valve body, flanges and coil must be ordered separately.

EVRAT 10, 15 and 20 all have spindle for manual operation.

Technical data

- Refrigerants:
  Applicable to HCFC, HFC and R717 (Ammonia)
- Temperature of medium
  -40 – 105 °C
  Max. 130 °C during defrosting.
- Ambient temperature and enclosure for coil
  see "Coils for solenoid valves", AI237186440089
- Classification: DNV, CRN, BV, EAC etc.
  To get an updated list of certification on the products please contact your local Danfoss Sales Company

Type	Opening differential pressure with standard coil (Δp bar)				Temperature of medium	Max. working pressure PB [bar]	k_V-value [1]
		Max. (= MOPD) liquid [2]					
	Min.	10 W AC	12 W AC	20 W DC	[°C]		[m³/h]
EVRA 3	0.00	21	25	14	-40 – 105	42	0.23
EVRA 10	0.05	21	25	18	-40 – 105	42	1.5
EVRAT 10	0.00	14	21	16	-40 – 105	42	1.5
EVRA 15	0.05	21	25	18	-40 – 105	42	2.7
EVRAT 15	0.00	14	21	16	-40 – 105	42	2.7
EVRA 20 with AC coil	0.05	21	25	13	-40 – 105	42	4.5
EVRA 20 with DC coil	0.05	19	21	16	-40 – 105	42	4.5
EVRAT 20	0.00	14	21	13	-40 – 105	42	4.5
EVRA 25	0.20	21	25	14	-40 – 105	42	10.0
EVRA 32	0.20	21	25	14	-40 – 105	42	16.0
EVRA 40	0.20	21	25	14	-40 – 105	42	25.0

1) The k_v value is the water flow in m^3/h at a pressure drop across valve of 1 bar, $\rho = 1000$ kg/m^3.
2) MOPD for media in gas form is approx. 1 bar greater.



Ordering valve with coil

Type	Manual Stem	Inlet connection type	Orifice size [mm]	Max OPD 10W AC [bar]	Max OPD 20W DC [bar]	Coil type	Coil connection	Supply voltage [V] AC	Frequency [Hz]	Power consumption [W]	Singlepack/ Multipack (12 pcs.)	Code number
EVRA 3	No	Flange*	3	21	14	BF230AS	Cable (1 m/3.3 ft)	220 - 230	50	10	Multipack	032F310231
EVRA 3	No	Flange*	3	21	14	BE230AS	Connection Box	220 - 230	50	10	Multipack	032F310331
EVRA 3	No	Flange*	3	21	14	BE230CS	Connection Box	220 - 230	50/60	10	Multipack	032F310332
EVRA 10	No	Flange*	10	21	18	BE230AS	Connection Box	220 - 230	50	10	Multipack	032F620831
EVRA 10	Yes	Flange*	10	21	18	BF230AS	Cable (1 m/3.3 ft)	220 - 230	50	10	Singlepack	032F621231
EVRA 10	Yes	Flange*	10	21	18	BE230AS	Connection Box	220 - 230	50	10	Singlepack	032F621331
EVRA 10	Yes	Flange*	10	21	18	BE230CS	Connection Box	220 - 230	50/60	10	Singlepack	032F621332
EVRA 15	No	Flange*	15	21	18	BF230AS	Cable (1 m/3.3 ft)	220 - 230	50	10	Singlepack	032F621731
EVRA 15	No	Flange*	15	21	18	BF230CS	Cable (1 m/3.3 ft)	220 - 230	50/60	10	Singlepack	032F621732
EVRA 15	No	Flange*	15	21	18	BE230AS	Connection Box	220 - 230	50	10	Singlepack	032F621831
EVRA 15	No	Flange*	15	21	18	BE230CS	Connection Box	220 - 230	50/60	10	Singlepack	032F621832
EVRA 20	No	Flange*	20	21	13	BF230AS	Cable (1 m/3.3 ft)	220 - 230	50	10	Singlepack	032F622231
EVRA 20	No	Flange*	20	21	13	BE230AS	Connection Box	220 - 230	50	10	Singlepack	032F622331
EVRA 20	No	Flange*	20	21	13	BE230CS	Connection Box	220 - 230	50/60	10	Singlepack	032F622332
EVRA 25	Yes	Flange*	25	21	14	BE230CS	Connection Box	220 - 230	50/60	10	Singlepack	032F803432

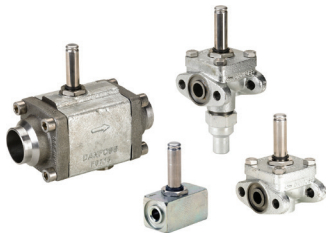

Ordering valve without coil

Type	Manual Stem	Inlet connection type	Inlet size [in]	Orifice size [mm]	Max OPD 10W AC [bar]	Max OPD 12W AC [bar]	Max OPD 20W DC [bar]	Required coil type**	Singlepack/ Multipack (12 pcs.)	Code number
EVRA 3	No	Flange*		3	21	25	14	AC / DC	Multipack	032F3050
EVRA 10	Yes	Flange*		10	21	25	18	AC / DC	Singlepack	032F6210
EVRA 10	No	Flange*		10	21	25	18	AC / DC	Singlepack	032F6211
EVRAT 10	Yes	Flange*		10	14	21	16	AC / DC	Singlepack	032F6214
EVRA 15	Yes	Flange*		15	21	25	18	AC / DC	Singlepack	032F6215
EVRAT 15	Yes	Flange*		15	14	21	16	AC / DC	Singlepack	032F6216
EVRAT 20	Yes	Flange*		20	14	21	13	AC / DC	Singlepack	032F6219
EVRA 20	Yes	Flange*		20	21	25	13	AC	Singlepack	032F6220
EVRA 20	Yes	Flange*		20	19	21	16	AC / DC	Singlepack	032F6221
EVRA 25	Yes	Flange*		25	21	25	14	AC / DC	Singlepack	032F6225
EVRA 25	No	Flange*		25	21	25	14	AC / DC	Singlepack	032F6226
EVRA 32	Yes	Butt weld DIN	1 1/4	22.2	21	25	14	AC / DC	Singlepack	042H1126
EVRA 32	No	Butt weld DIN	1 1/4	22.2	21	25	14	AC / DC	Singlepack	042H1127
EVRA 40	Yes	Butt weld DIN	1 1/2	25.4	21	25	14	AC / DC	Singlepack	042H1128
EVRA 40	No	Butt weld DIN	1 1/2	25.4	21	25	14	AC / DC	Singlepack	042H1129
EVRA 32	Yes	Butt weld DIN	1 1/2	22.2	21	25	14	AC / DC	Singlepack	042H1131
EVRA 40	Yes	Butt weld DIN	2	25.4	21	25	14	AC / DC	Singlepack	042H1132
EVRA 32	Yes	Butt weld ANSI 36.10	1 1/4	22.2	21	25	14	AC / DC	Singlepack	042H1140
EVRA 32	Yes	Butt weld ANSI 36.10	1 1/2	22.2	21	25	14	AC / DC	Singlepack	042H1141
EVRA 40	Yes	Butt weld ANSI 36.10	1 1/2	25.4	21	25	14	AC / DC	Singlepack	042H1142
EVRA 40	Yes	Butt weld ANSI 36.10	2	25.4	21	25	14	AC / DC	Singlepack	042H1143

* Includes flange gaskets and bolts. For ordering flanges; please downlad the data sheet AI249786497379 from www.danfoss.com
** For ordering coils; please download the data sheet AI237186440089 from www.danfoss.com

Rated capacity

Type	Rated capacity [1] [kW]											
	Liquid				Suction vapour				Hot gas			
	R717	R22	R134a	R404A	R717	R22	R134a	R404A	R717	R22	R134a	R404A
EVRA 3	21.8	4.6	4.3	3.2				6.5	2.1	1.7	1.7	
EVRA/T 10	142.0	30.2	27.8	21.1	9.0	3.4	2.5	3.1	42.6	13.9	11.0	11.3
EVRA/T 15	256.0	54.4	50.1	38.0	16.1	6.2	4.4	5.5	76.7	24.9	19.8	20.3
EVRA/T 20	426.0	90.6	83.5	63.3	26.9	10.3	7.3	9.2	128.0	41.5	32.9	33.9
EVRA 25	947.0	201.0	186.0	141.0	59.7	22.8	16.3	20.4	284.0	92.3	73.2	75.3
EVRA 32	1515.0	322.0	297.0	225.0	95.5	36.5	26.1	32.6	454.0	148.0	117.0	120.0
EVRA 40	2368.0	503.0	464.0	351.0	149.0	57.0	40.8	51.0	710.0	231.0	183.0	188.0

[1]) Rated liquid and suction vapour capacity is based on evaporating temperature t_e = -10 °C, liquid temperature ahead of valve t_l = +25 °C,
and pressure drop across valve Δp = 0.15 bar.

Rated hot gas capacity is based on condensing temperature t_c = +40 °C,
pressure drop across valve Δp = 0.8 bar,
hot gas temperature t_h = +65 °C,
and subcooling of refrigerant Δt_{sub} = 4 K.

Capacity

Liquid capacity Q_l kW

Type	Liquid capacity Q_e kW at pressure drop across valve Δp bar				
	0.1	0.2	0.3	0.4	0.5
R 717 (NH_3)					
EVRA 3	17.8	25.1	30.8	35.6	39.8
EVRA/T 10	116.0	164.0	201.0	232.0	259.0
EVRA/T 15	209.0	295.0	362.0	418.0	467.0
EVRA/T 20	348.0	492.0	603.0	696.0	778.0
EVRA 25	773.0	1093.0	1340.0	1547.0	1729.0
EVRA 32	1237.0	1749.0	2144.0	2475.0	2766.0
EVRA 40	1933.0	2734.0	3349.0	3867.0	4322.0
R 22					
EVRA 3	3.8	5.3	6.6	7.6	8.5
EVRA/T 10	24.7	34.9	42.7	49.3	55.1
EVRA/T 15	44.4	62.8	76.9	88.8	99.2
EVRA/T 20	73.9	105.0	128.0	148.0	165.0
EVRA 25	165.0	232.0	285.0	329.0	368.0
EVRA 32	263.0	372.0	455.0	526.0	588.0
EVRA 40	411.0	581.0	712.0	822.0	919.0
R 134a					
EVRA 3	3.5	4.9	6.0	7.0	7.8
EVRA/T 10	22.7	32.2	39.4	45.5	50.8
EVRA/T 15	40.9	57.9	70.9	81.8	91.5
EVRA/T 20	68.2	96.5	118.0	136.0	153.0
EVRA 25	152.0	214.0	263.0	303.0	339.0
EVRA 32	243.0	343.0	420.0	485.0	542.0
EVRA 40	379.0	536.0	656.0	758.0	847.0
R 404A					
EVRA 3	2.6	3.7	4.6	5.3	5.9
EVRA/T 10	17.2	24.3	29.8	34.4	38.5
EVRA/T 15	31.0	43.8	53.7	62.0	69.3
EVRA/T 20	51.7	73.0	89.5	103.0	116.0
EVRA 25	115.0	162.0	199.0	230.0	257.0
EVRA 32	184.0	260.0	318.0	367.0	411.0
EVRA 40	287.0	406.0	497.0	574.0	642.0

Capacities are based on liquid temperature t_l = 25 °C ahead of valve, evaporating temperature t_e = -10 °C, and superheat 0 K.

Correction factors

When sizing valves, the plant capacity must be multiplied by a correction factor depending on liquid temperature t_l ahead of valve/evaporator. When the corrected capacity is known, the selection can be made from the table.

t_v °C	−10	0	+10	+20	+25	+30	+40	+50
R 717 (NH_3)	0.84	0.88	0.92	0.97	1.0	1.03	1.09	1.16
R 22, R 134a	0.76	0.81	0.88	0.96	1.0	1.05	1.16	1.31
R 404A	0.70	0.76	0.84	0.94	1.0	1.07	1.24	1.47

Capacity
(continued)

Suction vapour capacity Q_e kW

Type	Pressure drop across valve Δp bar	Suction vapour capacity Q_e kW at evaporating temperature t_e °C					
		-40	-30	-20	-10	0	10
R 717 (NH_3)							
EVRA/T 10	0.1	3.4	4.5	5.9	7.3	8.9	10.6
	0.15	4.0	5.4	7.0	9.0	10.9	13.0
	0.2	4.5	6.1	7.9	10.0	12.6	15.0
EVRA/T 15	0.1	6.1	8.1	10.7	13.2	16.0	19.1
	0.15	7.2	9.7	12.5	16.1	19.6	23.4
	0.2	8.0	11.0	14.2	18.0	22.6	27.0
EVRA/T 20	0.1	10.2	13.5	17.8	21.9	26.6	31.9
	0.15	12.1	16.1	20.9	26.9	32.6	39.0
	0.2	13.4	18.3	23.7	29.9	37.7	45.1
EVRA 25	0.1	22.6	30.0	39.5	48.7	59.2	70.8
	0.15	26.7	35.9	46.3	59.7	72.5	86.7
	0.2	29.8	40.5	52.7	66.4	83.7	100.0
EVRA 32	0.1	36.2	47.8	63.2	77.9	94.7	113.0
	0.15	42.7	57.4	74.1	95.5	116.0	139.0
	0.2	47.7	64.8	84.3	106.0	134.0	160.0
EVRA 40	0.1	56.5	74.8	98.8	122.0	148.0	177.0
	0.15	66.8	89.8	116.0	149.0	181.0	217.0
	0.2	74.5	101.0	132.0	166.0	209.0	251.0
R 22							
EVRA/T 10	0.1	1.4	1.8	2.3	2.8	3.4	4.0
	0.15	1.6	2.1	2.7	3.4	4.1	4.9
	0.2	1.8	2.4	3.1	3.8	4.8	5.6
EVRA/T 15	0.1	2.5	3.2	4.1	5.0	6.1	7.2
	0.15	2.9	3.8	4.8	6.2	7.4	8.8
	0.2	3.3	4.3	5.5	6.8	8.6	10.2
EVRA/T 20	0.1	4.1	5.3	6.8	8.4	10.1	12.0
	0.15	4.9	6.4	8.1	10.3	12.3	14.7
	0.2	5.5	7.2	9.2	11.4	14.3	16.9
EVRA 25	0.1	9.1	11.8	15.2	18.6	22.4	26.6
	0.15	10.9	14.2	17.9	22.8	27.4	32.6
	0.2	12.2	16.1	20.4	25.3	31.7	37.6
EVRA 32	0.1	14.6	18.9	24.3	29.8	35.8	42.6
	0.15	17.4	22.7	28.8	36.5	43.8	52.2
	0.2	19.6	25.7	32.6	40.5	50.7	60.2
EVRA 40	0.1	22.8	29.5	38.1	46.5	56.0	66.5
	0.15	27.2	35.4	45.0	57.0	68.6	81.5
	0.2	30.5	40.2	51.0	63.3	79.2	94.0

Capacities are based on liquid temperature t_l = 25 °C ahead of evaporator.
The table values refer to the evaporator capacity and are given as a function of evaporating temperature t_e and pressure drop Δp across valve.
Capacities are based on dry, saturated vapour ahead of valve.
During operation with superheated vapour ahead of valve, the capacities are reduced by 4% for each 10 K superheat.

Correction factors
When sizing valves, the evaporator capacity must be multiplied by a correction factor depending on liquid temperature t_l ahead of expansion valve.
When the corrected capacity is known, the selection can be made from the table.

t_v °C	-10	0	10	20	25	30	40	50
R 717 (NH_3)	0.84	0.88	0.92	0.97	1.0	1.03	1.09	1.16
R 22	0.76	0.81	0.88	0.96	1.0	1.05	1.16	1.31

Capacity
(continued)

Suction vapour capacity Q_e kW

Type	Pressure drop across valve Δp bar	Suction vapour capacity Q_e kW at evaporating temperature t_e °C					
		-40	-30	-20	-10	0	10
R 134a							
EVRA/T 10	0.1	0.87	1.2	1.6	2.1	2.6	3.2
	0.15	0.99	1.4	1.9	2.4	3.2	3.9
	0.2	1.1	1.6	2.1	2.8	3.5	4.5
EVRA/T 15	0.1	1.6	2.1	2.8	3.8	4.7	5.7
	0.15	1.8	2.5	3.4	4.4	5.7	7.0
	0.2	2.0	2.8	3.8	5.0	6.3	8.1
EVRA/T 20	0.1	2.6	3.6	4.7	6.3	7.8	9.5
	0.15	3.0	4.2	5.6	7.3	9.5	11.7
	0.2	3.3	4.7	6.4	8.3	10.5	13.5
EVRA 25	0.1	5.8	7.9	10.5	13.9	17.2	21.1
	0.15	6.6	9.3	12.5	16.3	21.1	25.9
	0.2	7.3	10.4	14.1	18.5	23.4	29.9
EVRA 32	0.1	9.3	12.6	16.8	22.2	27.7	33.8
	0.15	10.6	14.9	20.0	26.1	33.8	41.4
	0.2	11.7	16.6	22.6	29.6	37.4	47.8
EVRA 40	0.1	14.5	19.8	26.3	34.8	43.3	52.8
	0.15	16.5	23.3	31.3	40.8	52.8	64.8
	0.2	18.3	26.0	35.3	46.3	58.5	74.8
R 404A							
EVRA/T 10	0.1	1.2	1.5	2.0	2.5	3.1	3.7
	0.15	1.4	1.8	2.4	3.1	3.8	4.6
	0.2	1.6	2.1	2.7	3.4	4.3	5.3
EVRA/T 15	0.1	2.1	2.7	3.6	4.5	5.5	6.6
	0.15	2.5	3.3	4.3	5.5	6.8	8.2
	0.2	2.8	3.7	4.9	6.1	7.8	9.5
EVRA/T 20	0.1	3.5	4.6	6.0	7.5	9.2	11.1
	0.15	4.1	5.5	7.1	9.2	11.3	13.6
	0.2	4.6	6.2	8.1	10.2	13.0	15.8
EVRA 25	0.1	7.7	10.1	13.3	16.6	20.4	24.6
	0.15	9.1	12.1	15.8	20.4	25.0	30.3
	0.2	10.3	13.8	18.0	22.7	28.8	35.0
EVRA 32	0.1	12.3	16.2	21.3	26.6	32.6	39.4
	0.15	14.6	19.4	25.3	32.6	40.0	48.5
	0.2	16.5	22.0	28.8	36.3	46.1	56.0
EVRA 40	0.1	19.3	25.3	33.3	41.5	51.0	61.5
	0.15	22.9	30.3	39.5	51.0	62.5	75.6
	0.2	25.8	34.5	45.0	56.8	72.1	87.5

Capacities are based on liquid temperature t_l = 25 °C ahead of evaporator.
The table values refer to the evaporator capacity and are given as a function of evaporating temperature t_e and pressure drop Δp across valve.
Capacities are based on dry, saturated vapour ahead of valve.
During operation with superheated vapour ahead of valve, the capacities are reduced by 4% for each 10 K superheat.

Correction factors
When sizing valves, the evaporator capacity must be multiplied by a correction factor depending on liquid temperature t_l ahead of expansion valve. When the corrected capacity is known, the selection can be made from the table.

t_v °C	-10	0	10	20	25	30	40	50
R 134a	0.76	0.81	0.88	0.96	1.0	1.05	1.16	1.31
R 404A	0.70	0.76	0.84	0.94	1.0	1.07	1.24	1.47

Capacity
(continued)

R 717 (NH_3)

Hot gas capacity Q_h kW

Type	Pressure drop across valve	Hot gas capacity Q_e kW				
		Evaporating temp.t_e =-10 °C. Hot gas temp. $t_h = t_c$ 25 °C.Subcooling Δt_{sub}=4K				
		Condensing temperature t_c °C				
	Δp bar	20	30	40	50	60
EVRA 3	0.1	1.8	2.1	2.3	2.5	2.6
	0.2	2.6	2.9	3.2	3.5	3.7
	0.4	3.8	4.2	4.6	4.9	5.3
	0.8	5.1	6.0	6.5	7.1	7.6
	1.6	7.4	8.3	9.1	9.9	10.9
EVRA/T 10	0.1	12.0	13.4	14.7	16.0	17.2
	0.2	17.1	19.0	20.9	22.7	24.4
	0.4	24.5	27.1	29.7	32.2	34.7
	0.8	34.0	39.0	42.6	46.1	49.5
	1.6	48.5	53.8	59.1	64.3	71.3
EVRA/T 15	0.1	21.7	24.1	26.4	28.8	31.0
	0.2	30.8	34.2	37.5	40.8	44.0
	0.4	44.1	48.8	53.5	58.0	62.4
	0.8	61.2	70.3	76.7	83.0	89.1
	1.6	87.4	96.9	106.0	116.0	128.0
EVRA/T 20	0.1	36.1	40.1	44.0	48.0	51.7
	0.2	51.4	57.0	62.6	68.0	73.2
	0.4	73.5	81.3	89.1	96.7	104.0
	0.8	102.0	117.0	128.0	138.0	148.0
	1.6	146.0	161.0	177.0	193.0	214.0
EVRA 25	0.1	80.2	89.1	98.0	107.0	115.0
	0.2	114.0	127.0	139.0	151.0	163.0
	0.4	163.0	181.0	198.0	215.0	231.0
	0.8	227.0	260.0	284.0	307.0	330.0
	1.6	324.0	358.0	394.0	429.0	475.0
EVRA 32	0.1	128.0	143.0	157.0	171.0	184.0
	0.2	183.0	203.0	223.0	242.0	260.0
	0.4	261.0	289.0	317.0	344.0	370.0
	0.8	362.0	416.0	455.0	492.0	528.0
	1.6	518.0	574.0	631.0	688.0	761.0
EVRA 40	0.1	201.0	223.0	244.0	267.0	287.0
	0.2	286.0	317.0	348.0	378.0	407.0
	0.4	408.0	452.0	495.0	537.0	578.0
	0.8	566.0	650.0	710.0	769.0	825.0
	1.6	809.0	897.0	986.0	1074.0	1188.0

An increase in hot gas temperature t_h of 10 K, based on $t_h = t_c$ 25 °C, reduces valve capacity approx. 2% and vice versa.

A change in evaporating temperature t_e changes valve capacity; see correction factor table below.

Correction factor

When sizing valves, the table value must be multiplied by a correction factor depending on evaporating temperature t_e.

t_o °C	-40	-30	-20	-10	0	10
R 717 (NH_3)	0.89	0.91	0.96	1.0	1.06	1.10

Capacity
(continued)

R 22

Hot gas capacity Q_h kW

Type	Pressure drop across valve	Hot gas capacity Q_e kW				
		Evaporating temp.t_e =-10 °C. Hot gas temp. $t_h = t_c$ 25 °C.Subcooling Δt_{sub}=4K				
		Condensing temperature t_c °C				
	Δp bar	20	30	40	50	60
EVRA 3	0.1	0.68	0.72	0.76	0.78	0.79
	0.2	0.97	1.0	1.1	1.1	1.1
	0.4	1.4	1.5	1.5	1.6	1.6
	0.8	1.9	2.0	2.1	2.3	2.3
	1.6	2.7	2.9	3.0	3.1	3.2
EVRA/T 10	0.1	4.4	4.7	4.9	5.1	5.2
	0.2	6.3	6.7	7.0	7.2	7.3
	0.4	9.0	9.6	10.0	10.3	10.4
	0.8	12.4	13.2	13.9	14.7	14.9
	1.6	17.5	18.6	19.6	20.2	20.5
EVRA/T 15	0.1	8.0	8.5	8.9	9.2	9.3
	0.2	11.4	12.1	12.6	13.0	13.2
	0.4	16.3	17.2	18.0	18.5	18.7
	0.8	22.3	23.1	24.9	26.5	26.8
	1.6	31.5	33.5	35.2	36.4	36.9
EVRA/T 20	0.1	13.3	14.1	14.8	15.3	15.5
	0.2	19.0	20.1	21.0	21.7	22.0
	0.4	27.1	28.7	30.0	30.9	31.2
	0.8	37.1	38.4	41.5	44.2	44.6
	1.6	52.5	55.9	58.6	60.6	61.5
EVRA 25	0.1	29.6	31.4	32.9	34.0	34.4
	0.2	42.1	44.6	46.7	48.2	48.8
	0.4	60.2	63.8	66.6	68.6	69.4
	0.8	82.5	87.9	92.3	98.2	99.2
	1.6	117.0	124.0	130.0	135.0	137.0
EVRA 32	0.1	47.4	50.2	52.6	54.4	55.0
	0.2	67.4	71.4	74.7	77.1	78.1
	0.4	96.3	102.0	107.0	110.0	111.0
	0.8	132.0	140.0	148.0	157.0	159.0
	1.6	187.0	199.0	209.0	216.0	219.0
EVRA 40	0.1	74.0	78.5	82.3	85.0	86.0
	0.2	105.0	112.0	117.0	121.0	122.0
	0.4	151.0	159.0	167.0	172.0	174.0
	0.8	206.0	222.0	231.0	246.0	248.0
	1.6	291.0	310.0	326.0	337.0	342.0

An increase in hot gas temperature t_h of 10 K, based on $t_h = t_c$ 25 °C, reduces valve capacity approx. 2% and vice versa.

A change in evaporating temperature t_e changes valve capacity; see correction factor table below.

Correction factor

When sizing valves, the table value must be multiplied by a correction factor depending on evaporating temperature t_e.

t_o °C	-40	-30	-20	-10	0	+10
R 22	0.90	0.94	0.97	1.0	1.03	1.05

Capacity
(continued)

R 134a

Hot gas capacity Q_h kW

Type	Pressure drop across valve	Hot gas capacity Q_e kW				
		Evaporating temp.t_e =-10 °C. Hot gas temp. $t_h = t_c$ 25 °C.Subcooling Δt_{sub}=4K				
		Condensing temperature t_c °C				
	Δp bar	20	30	40	50	60
EVRA 3	0.1	0.54	0.57	0.6	0.61	0.6
	0.2	0.77	0.82	0.85	0.86	0.85
	0.4	1.1	1.2	1.2	1.2	1.2
	0.8	1.5	1.6	1.7	1.8	1.8
	1.6	2.2	2.3	2.4	2.5	2.4
EVRA/T 10	0.1	3.5	3.7	3.9	4.0	3.9
	0.2	5.0	5.3	5.5	5.6	5.6
	0.4	7.0	7.7	7.9	8.0	7.9
	0.8	9.9	10.5	11.0	11.6	11.4
	1.6	14.3	15.1	15.7	16.0	15.9
EVRA/T 15	0.1	6.4	6.7	7.0	7.1	7.1
	0.2	9.1	9.6	10.0	10.1	10.0
	0.4	12.6	13.8	14.2	14.4	14.3
	0.8	17.9	19.0	19.8	20.8	20.5
	1.6	25.7	27.2	28.2	28.8	28.6
EVRA/T 20	0.1	10.6	11.2	11.7	11.8	11.8
	0.2	15.1	16.0	16.6	16.8	16.7
	0.4	21.0	22.9	23.7	24.0	23.8
	0.8	29.8	31.6	33.0	34.7	34.2
	1.6	42.8	45.3	47.1	47.9	47.6
EVRA 25	0.1	23.6	24.9	25.9	26.4	26.2
	0.2	33.6	35.5	36.8	37.4	37.1
	0.4	46.6	51.0	52.7	53.4	52.9
	0.8	66.2	70.2	73.2	77.0	76.0
	1.6	95.2	101.0	105.0	107.0	106.0
EVRA 32	0.1	37.6	39.8	41.4	42.1	41.8
	0.2	53.8	56.8	58.9	59.8	59.4
	0.4	74.7	81.6	84.3	85.4	84.6
	0.8	106.0	112.0	117.0	123.0	122.0
	1.6	152.0	161.0	167.0	170.0	169.0
EVRA 40	0.1	58.8	62.3	64.7	65.8	65.3
	0.2	84.1	88.8	92.1	93.5	92.8
	0.4	117.0	127.0	132.0	134.0	132.0
	0.8	166.0	176.0	183.0	192.0	190.0
	1.6	238.0	252.0	262.0	266.0	265.0

An increase in hot gas temperature t_h of 10 K, based on $t_h = t_c$ +25 °C, reduces valve capacity approx. 2% and vice versa.

A change in evaporating temperature t_e changes valve capacity; see correction factor table below.

Correction factor

When sizing valves, the table value must be multiplied by a correction factor depending on evaporating temperature t_e.

t_o °C	-40	-30	-20	-10	0	10
R 134a	0.88	0.92	0.98	1.0	1.04	1.08

Capacity
(continued)

Hot gas capacity Q_h kW

R 404A

Type	Pressure drop across valve	Hot gas capacity Q_e kW				
		Evaporating temp.t_e =-10 °C. Hot gas temp. $t_h = t_c + 25$ °C.Subcooling Δt_{sub}=4K				
		Condensing temperature t_c °C				
	Δp bar	+20	+30	+40	+50	+60
EVRA 3	0.1	0.62	0.63	0.62	0.59	0.54
	0.2	0.87	0.89	0.88	0.83	0.76
	0.4	1.2	1.3	1.3	1.2	1.1
	0.8	1.7	1.7	1.7	1.7	1.5
	1.6	2.4	2.5	2.4	2.3	2.1
EVRA/T 10	0.1	4.0	4.1	4.0	3.8	3.5
	0.2	5.7	5.8	5.7	5.5	5.0
	0.4	8.1	8.2	8.2	7.8	7.0
	0.8	11.1	11.4	11.3	11.1	10.1
	1.6	15.7	16.0	15.8	15.2	13.9
EVRA/T 15	0.1	7.3	7.4	7.3	6.9	6.3
	0.2	10.2	10.4	10.3	9.8	8.9
	0.4	14.6	14.8	14.7	14.0	12.7
	0.8	20.1	20.4	20.3	20.0	18.1
	1.6	28.3	28.8	28.4	27.4	25.0
EVRA/T 20	0.1	12.1	12.3	12.1	11.5	10.5
	0.2	17.1	17.3	17.2	16.3	14.9
	0.4	24.4	24.7	24.5	23.3	21.1
	0.8	33.4	34.0	33.9	33.3	30.2
	1.6	47.1	48.0	47.4	45.6	41.6
EVRA 25	0.1	26.8	27.4	26.9	25.6	23.3
	0.2	37.9	38.4	38.2	36.3	33.0
	0.4	54.2	54.9	54.5	51.7	47.0
	0.8	74.2	75.6	75.3	74.0	67.2
	1.6	105.0	107.0	105.0	101.0	92.5
EVRA 32	0.1	43.0	43.8	43.0	40.9	37.3
	0.2	60.6	61.4	61.1	58.1	52.8
	0.4	86.7	87.8	87.2	82.7	75.2
	0.8	119.0	121.0	120.0	118.0	107.0
	1.6	167.0	171.0	168.0	162.0	148.0
EVRA 40	0.1	67.0	68.5	67.3	64.0	58.3
	0.2	94.8	96.0	95.5	90.8	82.5
	0.4	136.0	137.0	136.0	129.0	117.0
	0.8	186.0	189.0	188.0	185.0	168.0
	1.6	262.0	266.0	263.0	253.0	231.0

An increase in hot gas temperature t_h of 10 K, based on $t_h = t_c$ +25 °C, reduces valve capacity approx. 2% and vice versa.

A change in evaporating temperature t_e changes valve capacity; see correction factor table below.

Correction factor

When sizing valves, the table value must be multiplied by a correction factor depending on evaporating temperature t_e.

t_o °C	-40	-30	-20	-10	0	10
R 404A	0.86	0.88	0.93	1.0	1.03	1.07

Capacity
(continued)

Hot gas capacity G_h kg/s

Type	Hot gas temperature t_h °C	Condensing temperature t_k °C	Hot gas capacity G_h kg/s at pressure drop across valve Δp bar								
			0.5	1	2	3	4	5	6	7	8
R 717 (NH_3)											
EVRA 3	90	25	0.003	0.005	0.006	0.007	0.007	0.007	0.007	0.007	0.007
		35	0.004	0.005	0.007	0.009	0.009	0.01	0.01	0.01	0.01
		45	0.005	0.006	0.009	0.01	0.011	0.012	0.013	0.013	0.013
EVRA/T 10		25	0.022	0.03	0.04	0.045	0.048	0.048	0.048	0.048	0.048
		35	0.026	0.036	0.048	0.056	0.061	0.064	0.065	0.065	0.065
		45	0.030	0.041	0.056	0.066	0.074	0.079	0.083	0.085	0.086
EVRA/T 15		25	0.040	0.054	0.072	0.081	0.086	0.087	0.087	0.087	0.087
		35	0.046	0.064	0.086	0.1	0.109	0.115	0.117	0.117	0.117
		45	0.053	0.074	0.101	0.12	0.133	0.142	0.149	0.153	0.155
EVRA/T 20		25	0.066	0.09	0.12	0.12	0.144	0.145	0.145	0.145	0.145
		35	0.077	0.107	0.144	0.167	0.182	0.191	0.195	0.195	0.195
		45	0.089	0.124	0.169	0.199	0.211	0.237	0.248	0.255	0.258
EVRA 25		25	0.143	0.197	0.26	0.296	0.313	0.316	0.316	0.316	0.316
		35	0.168	0.232	0.313	0.364	0.397	0.417	0.425	0.425	0.425
		45	0.194	0.269	0.368	0.434	0.482	0.516	1.54	0.555	0.561
EVRA 32		25	0.233	0.322	0.424	0.483	0.511	0.516			
		35	0.274	0.379	0.511	0.594	0.648	0.681	0.694		
		45	0.316	0.439	0.601	0.709	0.787	0.842	0.882	0.906	0.916
EVRA 40		25	0.362	0.503	0.663	0.755	0.798	0.806			
		35	0.429	0.592	0.798	0.929	1.013	1.064	1.084		
		45	0.495	0.686	0.939	1.107	1.23	1.316	1.378	1.416	1.431
R 22											
EVRA 3	90	25	0.008	0.011	0.014	0.016	0.017	0.017	0.017	0.017	0.017
		35	0.009	0.012	0.017	0.019	0.021	0.022	0.022	0.022	0.022
		45	0.010	0.014	0.019	0.022	0.025	0.026	0.027	0.028	0.028
EVRA/T 10		25	0.051	0.069	0.092	0.104	0.109	0.111	0.111	0.111	0.111
		35	0.058	0.08	0.108	0.125	0.136	0.142	0.144	0.144	0.144
		45	0.066	0.092	0.125	0.146	0.162	0.172	0.179	0.183	0.183
EVRA/T 15		25	0.091	0.125	0.165	0.187	0.197	0.199	0.199	0.199	0.199
		35	0.105	0.144	0.194	0.225	0.244	0.256	0.258	0.258	0.258
		45	0.119	0.165	0.224	0.263	0.291	0.31	0.322	0.329	0.330
EVRA/T 20		25	0.152	0.208	0.275	0.311	0.328	0.332	0.332	0.332	0.332
		35	0.174	0.241	0.323	0.375	0.407	0.425	0.431	0.431	0.431
		45	0.193	0.275	0.374	0.439	0.485	0.516	0.537	0.548	0.55
EVRA 25		25	0.331	0.453	0.599	0.677	0.715	0.722	0.722	0.722	0.722
		35	0.38	0.524	0.704	0.816	0.886	0.925	0.938	0.938	0.938
		45	0.431	0.598	0.814	0.956	1.056	1.125	1.169	1.192	1.197
EVRA 32		25	0.539	0.739	0.976	1.106	1.168	1.179			
		35	0.619	0.856	1.15	1.331	1.446	1.509	1.531		
		45	0.704	0.978	1.329	1.562	1.723	1.837	1.909	1.947	1.955
EVRA 40		25	0.843	1.155	1.525	1.728	1.825	1.843			
		35	0.968	1.338	1.798	2.08	2.26	2.358	2.393		
		45	1.1	1.528	2.078	2.44	2.693	2.87	2.383	3.043	3.055

An increase in hot gas temperature t_h of 10 K reduces valve capacity approx. 2% and vice versa.

Capacity
(continued)

Hot gas capacity G_h kg/s

Type	Varmgas-temperatur t_h °C	Kondense-ringstemp. t_k °C	Varmgaskapacitet G_h kg/s ved trykfaldet i ventilen Δp bar								
			0.5	1	2	3	4	5	6	7	8
R 134a											
EVRA 3	60	25	0.007	0.009	0.011	0.012	0.012				
		35	0.009	0.011	0.014	0.016	0.016	0.016	0.016		
		45	0.01	0.012	0.018	0.02	0.021	0.021	0.021	0.021	0.021
EVRA/T 10		25	0.048	0.06	0.074	0.077	0.077				
		35	0.055	0.071	0.092	0.103	0.104	0.104			
		45	0.06	0.084	0.111	0.127	0.134	0.135	0.135	0.135	0.135
EVRA/T 15		25	0.081	0.108	0.134	0.14	0.14				
		35	0.094	0.129	0.166	0.192	0.187	0.187	0.187		
		45	0.108	0.151	0.2	0.228	0.241	0.244	0.244	0.244	0.244
EVRA/T 20		25	0.134	0.18	0.223	0.233	0.233				
		35	0.157	0.215	0.276	0.307	0.312	0.312	0.312		
		45	0.181	0.252	0.333	0.381	0.403	0.407	0.407	0.407	0.407
EVRA 25		25	0.292	0.391	0.486	0.506	0.506				
		35	0.341	0.467	0.602	0.668	0.679	0.679	0.679		
		45	0.393	0.549	0.725	0.83	0.876	0.885	0.885	0.885	0.885
EVRA 32		25	0.478	0.638	0.793	1.826	0.826				
		35	0.556	0.763	0.994	1.091	1.108	1.108	1.108		
		45	0.641	0.897	1.197	1.354	1.432	1.446	1.446	1.446	1.446
EVRA 40		25	0.747	0.998	1.24	1.291	1.291				
		35	0.87	1.192	1.553	1.704	1.731	1.731	1.731		
		45	1.002	1.402	1.87	2.117	2.237	2.259	2.259	2.259	
R 404A											
EVRA 3	60	25	0.01	0.013	0.018	0.021	0.022	0.023	0.023	0.023	0.023
		35	0.011	0.015	0.02	0.024	0.027	0.028	0.029	0.029	0.03
		45	0.012	0.017	0.023	0.028	0.032	0.034	0.035	0.036	0.037
EVRA/T 10		25	0.063	0.087	0.116	0.134	0.145	0.148	0.149	0.149	0.149
		35	0.072	0.1	0.134	0.158	0.174	0.184	0.19	0.19	0.192
		45	0.081	0.112	0.153	0.182	0.203	0.228	0.228	0.237	0.239
EVRA/T 15		25	0.113	0.157	0.21	0.242	0.26	0.267	0.269	0.269	0.269
		35	0.129	0.18	0.242	0.285	0.313	0.332	0.341	0.342	0.346
		45	0.146	0.202	0.275	0.327	0.365	0.393	0.411	0.424	0.431
EVRA/T 20		25	0.189	0.262	0.35	0.403	0.433	0.445	0.449	0.449	0.449
		35	0.215	0.3	0.404	0.474	0.521	0.552	0.569	0.57	0.576
		45	0.243	0.337	0.459	0.545	0.609	0.656	0.684	0.707	0.719
EVRA 25		25	0.411	0.57	0.763	0.878	0.942	0.969	0.978	0.978	0.978
		35	0.468	0.653	0.881	1.032	1.136	1.203	1.239	1.241	1.253
		45	0.529	0.734	1.0	1.188	1.326	1.43	1.49	1.539	1.566
EVRA 32		25	0.672	0.931	1.245	1.432	1.539	1.581	1.581	1.581	1.581
		35	0.765	1.069	1.436	1.686	1.854	1.964	2.022	2.025	2.025
		45	0.862	1.198	1.632	1.939	1.836	2.34	2.433	2.513	2.557
EVRA 40		25	1.05	1.454	1.946	2.238	2.406	2.471	2.471	2.471	2.471
		35	1.195	1.657	2.245	2.635	2.897	3.068	3.161	3.166	3.166
		45	1.348	1.873	2.55	3.03	3.384	3.65	3.801	3.926	3.995

An increase in hot gas temperature t_h of 10 K reduces valve capacity approx. 2% and vice versa.

Design
Function

4. Coil
16. Armature
18. Valve plate / Pilot valve plate
20. Earth terminal
24. Connection for flexible steel hose
28. Gasket
29. Pilot orifice
30. O-ring
31. Piston ring
36. DIN plug
40. Terminal box
43. Valve cover
44. O-ring
45. Valve cover gasket
48. Flange gasket
49. Valve body
51. Cover / Threaded plug
53. Manual operation spindle
59. Strainer
73. Equalization hole
74. Main channel
75. Pilot channel
76. Compression spring
80. Diaphragm/Servo piston
82. Support washer
83. Valve seat
84. Main valve plate

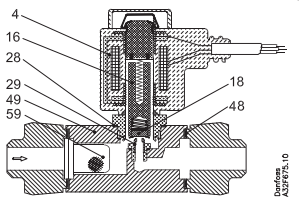

EVRA 3

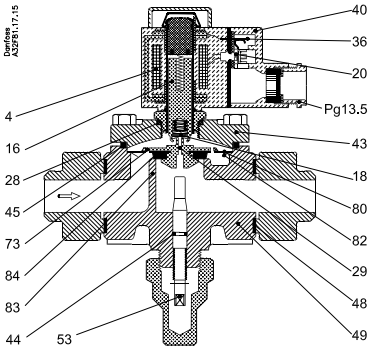

EVRA/T 10, 15 and 20

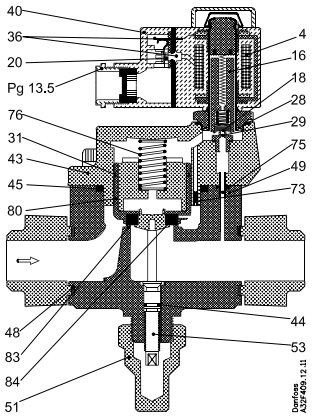

EVRA 25

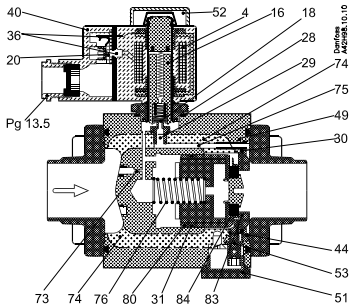

EVRA 32 and 40

EVRA solenoid valves are designed on two different principles:
1. Direct operation
2. Servo operation

1. Direct operation
EVRA 3 is direct operated. The valve opens direct for full flow when the armature (16) moves up into the magnetic field of the coil. This means that the valve operates with a min. differential pressure of 0 bar.
The teflon valve plate (18) is fitted direct on the armature (16).
Inlet pressure acts from above on the armature and the valve plate. Thus, inlet pressure, spring force and the weight of the armature act to close the valve when the coil is currentless.

2. Servo operation
EVRA/T 10 → 20 are servo operated with a "floating" diaphragm (80). The pilot orifice (29) of stainless steel is placed in the centre of the diaphragm. The teflon pilot valve plate (18) is fitted direct to the armature (16).
When the coil is currentless, the main orifice and pilot orifice are closed. The pilot orifice and main orifice are held closed by the weight of the armature, the armature spring force and the differential pressure between inlet and outlet sides.

When current is applied to the coil the armature is drawn up into the magnetic field and opens the pilot orifice. This relieves the pressure above the diaphragm, i.e. the space above the diaphragm becomes connected to the outlet side of the valve. The differential pressure between inlet and outlet sides then presses the diaphragm away from the main orifice and opens it for full flow. Therefore a certain minimum differential pressure is necessary to open the EVRA valve and keep it open. For diffential pressure 0 bar use EVRAT valves.
For EVRA 10 → 20 valves this differential pressure is 0.05 bar.
When current is switched off, the pilot orifice closes. Via the equalization holes (73) in the diaphragm, the pressure above the diaphragm then rises to the same value as the inlet pressure and the diaphragm closes the main orifice.

EVRA 25, 32 and 40 are servo operated piston valves. The valves are closed with currentless coil.
The servo piston (80) with main valve plate (84) closes against the valve seat (83) by means of the differential pressure between inlet and outlet side of the valve, the force of the compression spring (76) and possibly the piston weight.
When current to the coil is switched on, the pilot orifice (29) opens. This relieves the pressure on the piston spring side of the valve. The differential pressure will then open the valve.
The minimum differential pressure needed for full opening of the valves is 0.2 bar.

The manual opener of EVRA/EVRAT 10, 15, 20 and 25 is intended to be activated only during initial pressure testing of the refrigeration system.
After pressure testing or service-related manual forced opening of the manual opener the spindle **must** be turned fully back to back-seated position to avoid any packing gland leakage.
Furthermore it is essential that the sealing cap is properly reinstalled. This will eliminate any risk of leakage from the manual opener.

Material specification

EVRA 3

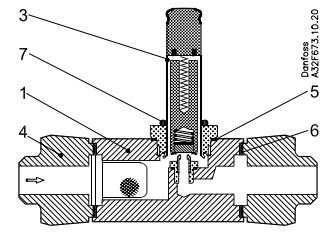

EVRA/T 10/15/20

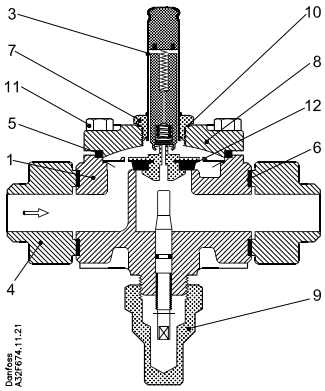

No.	Description	Solenoid valves	Material	Analysis	Mat.no.	W.no.	ISO	EN
1	Valve body	EVRA 3	Free-cutting steel	11MnPb30				10277-3
	Valve body	EVRA/T 10/15/20	Cast-iron	GJS-400-18-LT				1563
3	Armature tube	EVRA 3/10/15/20	Stainless steel	X2CrNi19-11				10088
4	Flange	EVRA/T 3/10/15/20	Steel	S235JRG2				10025
5	Gasket	EVRA 3	Aluminium	Al 99.5				10210
	Gasket	EVRA/T 10/15/20	Rubber	Cr				
6	Gasket	EVRA/T 3/10/15/20	asbestos-free					
7	Armature tube nut	EVRA/T 3/10/15/20	Stainless steel	X8CrNiS18-9				10088
8	Cover	EVRA/T 10/15/20	Cast-iron	GJS-400-18-LT				1563
9	Cover/ thread plug	EVRA/T 10/15/20	Free-cutting steel	11SMnPb30				10277-3
10	Gasket	EVRA/T 10/15/20	Aluminium	Al 99.5				10210
11	Bolts	EVRA/T 10/15/20	Stainless steel	A2-70			3506	
12	Valve seat	EVRA/T 10/15/20	Teflon (PTFE)					

EVRA 25

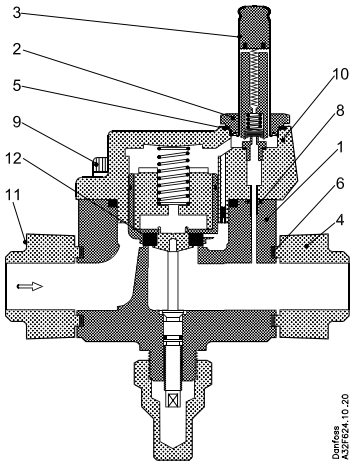

EVRA 32/40

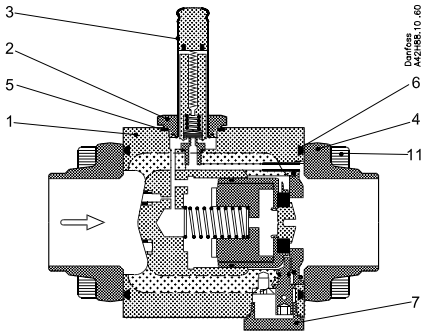

No.	Description	Solenoid valves	Material	Analysis	Mat.no.	W.no.	ISO	EN
1	Valve body	EVRA 25/32/40	Cast-iron	GJS-400-18-LT				1563
2	Armature tube nut	EVRA 25/32/40	Stainless steel	X8CrNiS 18-9				10088
3	Armature tube	EVRA 25/32/40	Stainless steel	X2CrNi19-11				10088
4	Flange	EVRA 25	Steel	S235JRG2				10025
	Flange	EVRA 32/40	Steel	P285QH				10222-4
5	Gasket	EVRA 25/32/40	Stainless steel/NBR	X10CrNi18-8				1.4310
6	Gasket	EVRA 25	asbestos-free					
	Gasket	EVRA 32/40	Rubber	Cr				
7	Cover/thread plug	EVRA 25	Free-cutting steel	11SMnPb30				10277-3
	Cover/thread plug	EVRA 32/40	Stainless steel	X5CrNi17-10				10088
8	Gasket	EVRA 25	Rubber	CR				
9	Bolts	EVRA 25	Stainless steel	A2-70			3506	
10	Cover	EVRA 25	Cast-iron	GJS-400-18-LT				1563
11	Bolts	EVRA 25/32/40	Stainless steel	A2-70			3506	
12	Valve seat	EVRA 25	Teflon (PTFE)					

Dimensions and weight

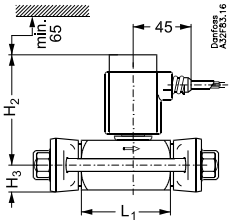

EVRA 3
Coil with cable

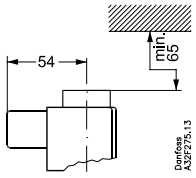

EVRA 3 → 20
Coil with DIN plugs

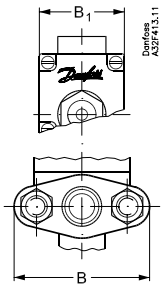

EVRA 3 → 20
Coil with terminal box

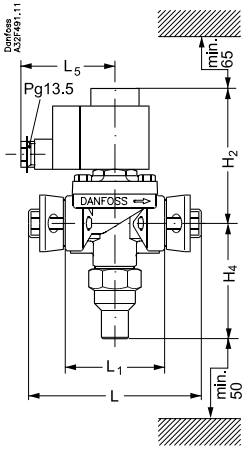

EVRA/T 10 – 20
Coil with terminal box

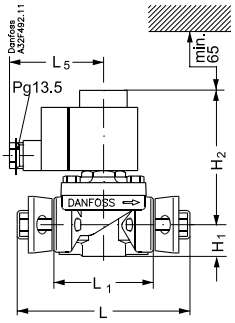

EVRA 10
Coil with terminal box

Weight of coil
10 W: approx. 0.3 kg
12 and 20 W: approx. 0.5 kg

Weight of flange set
For EVRA 3, 10 and 15: 0.6 kg
For EVRA 20: 0.9 kg

Type	H_1	H_2	H_3	H_4	L	L_1	L_5 max.		B	B_1 max.	Weight [1]
							10 W	12 W 20 W			
	[mm]	[mm]	[mm]	[mm]	[mm]	[mm]	[mm]	[mm]	[mm]	[mm]	[kg]
EVRA 3		84	19		124	65	75	85	80	68	1.2
EVRA/T 10	22	100		81	130	68			80	68	1.7
EVRA/T 15		100		81	130	68			80	68	1.8
EVRA/T 20		110		77	155	85			96	68	2.7

[1]) With coil, without flanges

Dimensions and weight
(continued)

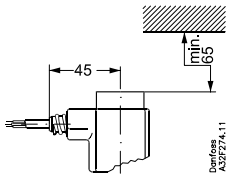

EVRA 25, 32 and 40
Coil with cable

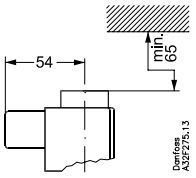

EVRA 25, 32 and 40
Coil with DIN plugs

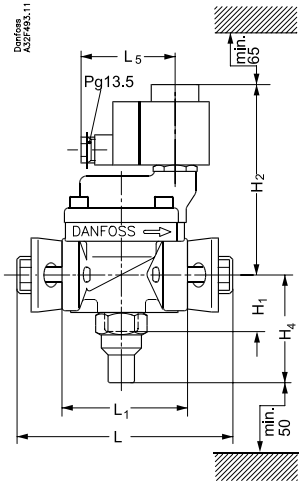

EVRA 25
Coil with terminal box

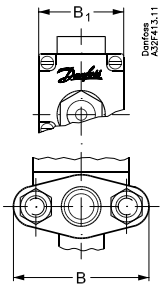

EVRA 25
Coil with terminal box

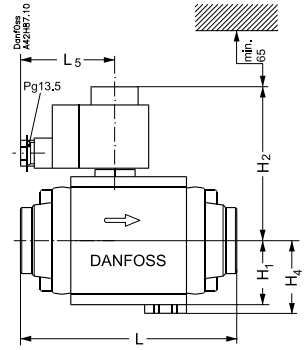

EVRA 32 and 40
Coil with terminal box

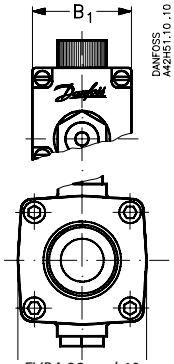

EVRA 32 and 40
Coil with terminal box

Weigh of coil
10 W: approx. 0.3 kg
12 and 20 W: approx. 0.5 kg

Weight of flange set
For EVRA 25: 0.9 kg

Type	H_1	H_2	H_3	H_4	L	L_1	L_5 max.		B	B_1 max.	Weight [1]
							10 W	12 W 20 W			
	[mm]	[mm]	[mm]	[mm]	[mm]	[mm]	[mm]	[mm]	[mm]	[mm]	[kg]
EVRA 25	46	141		78	162	92	75	85	95	68	3.0
EVRA 32	47	115		53	175				80	68	4.0
EVRA 40	47	115		53	175				80	68	4.0

[1]) With coil, without flanges

ENGINEERING
TOMORROW

Stainless steel solenoid valves
Type EVRS 3-20 and EVRST 10-20

Contents **Page**

Features 795
Technical data 795
Ordering 796
Capacity 797
Design / function 803
Material specification 804
Dimensions and weights 805

AI172886419420en-000502 | 2018.10

ENGINEERING
TOMORROW

Stainless steel solenoid valves
Type EVRS 3-20 and EVRST 10-20

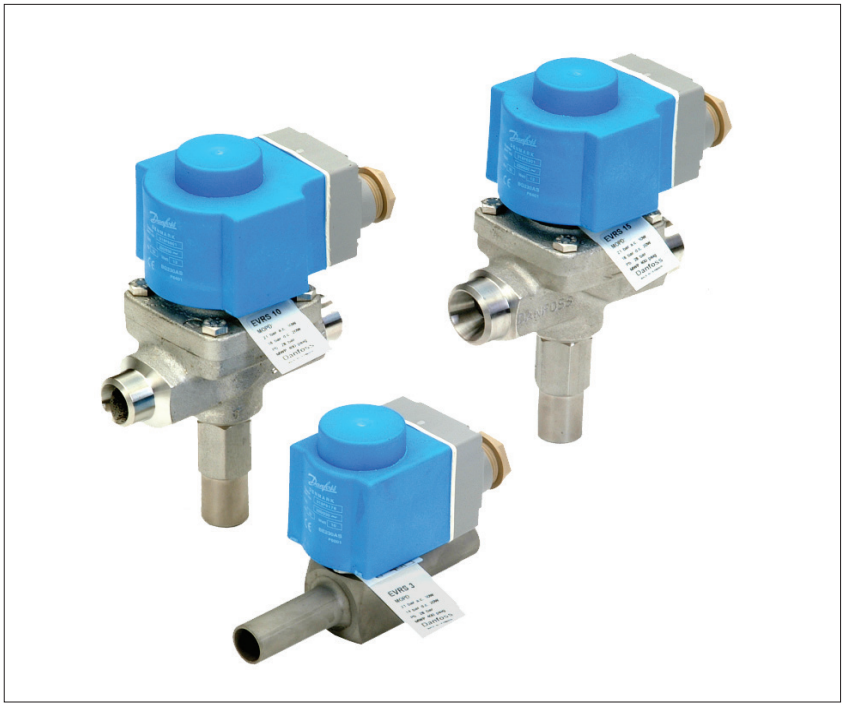

EVRS and EVRST are valves made of stainless steel.

- EVRS 3 is direct operated.
- EVRS 10, 15 and 20 are servo operated.
- EVRST 10,15 and 20 are forced servo operated.

The valves are used in liquid, suction, hot gas and oil return lines with ammonia or fluorinated refrigerants.

EVRS 3 and EVRST are designed for keeping open at a pressure drop of 0 bar.

EVRS / EVRST 10, 15 and 20 are equipped with spindel for manual opening.

EVRS and EVRST are supplied as components, i.e. valve body and coil must be separately ordered.

Features

- Stainless steel valve body and connections
- Max. working pressure 50 barg
- Applicable to HCFC, HFC, R717 (Ammonia) and R744 (CO2).
- MOPD up to 38 bar with 20 watt AC coil
- Wide choice of AC and DC coils
- Designed for temperatures of media up to 105 °C
- Manual stem on EVRS and EVRST 10, EVRST 15 and EVRST 20
- Classification: DNV, CRN, BV, EAC etc. To get an updated list of certification on the products please contact your local Danfoss Sales Company.

Approvals

The Low Voltage Directive (LVD) 73/23/EC with ammendments EN 60730-2-8

Technical data

Refrigerants
Applicable to HCFC, HFC, R717 (Ammonia) and R744 (CO_2).

Temperature of medium
-40 – 105 °C for 10 or 12 watt coil. Max. 130 °C during defrosting.
-40 – 80 °C for 20 watt coil.

Technical data
(Continued)

Ambient temperature and enclosure for coil: See "Coils for solenoid valves", lit.no. AI237186440089

Type	Opening differential pressure Δp bar					k_v value [2]	Max. working pressure
		Max. (MOPD) liquid [1]					
	Min.	10 W AC	12 W AC	20 W AC	20 W DC	[m³/h]	Ps
EVRS 3	0.0	21	25	38	14	0.23	50 barg
EVRS 10	0.05	21	25	38	18	1.5	
EVRST 10	0.0	14	21	38	16	1.5	
EVRS 15	0.05	21	25	38	18	2.7	
EVRST 15	0.0	14	21	38	18	2.7	
EVRS 20	0.05	21	25	38	13	4.5	
EVRST 20	0.0	14	21	38	13	4.5	

[1]) MOPD for media in gas form is approx. 1 bar greater.
[2]) The k_v value is the water flow in m³/h at a pressure drop in the valve of 1 bar, ρ = 1000 kg/m³.

Type	Rated capacity[1] kW														
	Liquid					Suction vapour					Hot gas				
	R717	R22	R134a	R404A	R410A	R717	R22	R134a	R404A	R410A	R717	R22	R134a	R404A	R410A
EVRS 3	21.8	4.6	4.3	3.2	4.5						6.5	2.1	1.7	1.7	2.3
EVRS / EVRST 10	142.0	30.2	27.8	21.1	29.7	9.0	3.4	2.5	3.1	4.3	42.6	13.9	11.0	11.3	14.9
EVRS / EVRST 15	256.0	54.4	50.1	38.0	53.5	16.1	6.2	4.4	5.5	7.7	76.7	24.9	19.8	20.3	26.7
EVRS / EVRST 20	426.0	90.6	83.5	63.3	89.1	26.9	10.3	7.3	9.2	12.0	128.0	41.5	32.9	33.9	44.5

[1]) Rated liquid and suction vapour capacity is based on evaporating temperature t_e = -10 °C, liquid temperature ahead of valve t_l = 25 °C, and pressure drop across valve Δp = 0.15 bar.
Rated hot gas capacity is based on condensing temperature t_c = 40 °C, pressure drop across valve Δp = 0.8 bar, hot gas temperature t_h = 60 °C, and subcooling of refrigerant Δt_{sub} = 4 K.

Type	R 744 Rated capacity kW [2]	
	Liquid	Suction
EVRS 3	6.65	-
EVRS / EVRST 10	43.3	6.9
EVRS / EVRST 15	78.0	12.4
EVRS / EVRST 20	130.0	20.7

[2]) Rated liquid and suction vapour capacity is based on evaporating temperature t_e = -40 °C, liquid temperature ahead of the vale t_l = -8 °C and pressure drop across the valve Δp = 0.15 bar
For other condition please refer to DIR-Calc or contact your local Danfoss office.

Ordering

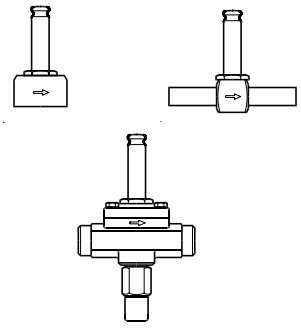

Separate valve bodies

Type	Max. working pressure Ps [barg]	Connection		Code no.	
		Weld [in]	Pipe thread ISO 228/1	With manual stem	Without manual stem
EVRS 3	50	3/8			**032F3080**
EVRS 3	50		G 1/4		**032F3081**
EVRS 10	50	1/2		**032F3082**	
EVRST 10	50	1/2		**032F3083**	
EVRS 15	50	3/4		**032F3084**	
EVRST 15	50	3/4		**032F3085**	
EVRS 20	50	1		**032F5437**	
EVRST 20	50	1		**032F5438**	

Coils See "Coils for solenoid valves", lit.no. *AI237186440089*

Capacity

Liquid capacity Q_l kW

Type	Liquid capacity Q_e kW at pressure drop across valve Δp bar				
	0.1	0.2	0.3	0.4	0.5
R717 (NH_3)					
EVRS 3	17.8	25.1	30.8	35.6	39.8
EVRS / EVRST 10	116.0	164.0	201.0	232.0	259.0
EVRS / EVRST 15	209.0	295.0	362.0	418.0	467.0
EVRS / EVRST 20	348.0	492.0	603.0	696.0	778.0
R22					
EVRS 3	3.8	5.3	6.6	7.6	8.5
EVRS / EVRST 10	24.7	34.9	42.7	49.3	55.1
EVRS / EVRST 15	44.4	62.8	76.9	88.8	99.2
EVRS / EVRST 20	73.9	105.0	128.0	148.0	165.0
R134a					
EVRS 3	3.5	4.9	6.0	7.0	7.8
EVRS / EVRST 10	22.7	32.2	39.4	45.5	50.8
EVRS / EVRST 15	40.9	57.9	70.9	81.8	91.5
EVRS / EVRST 20	68.2	96.5	118.0	136.0	153.0
R404A					
EVRS 3	2.6	3.7	4.6	5.3	5.9
EVRS / EVRST 10	17.2	24.3	29.8	34.4	38.5
EVRS / EVRST 15	31.0	43.8	53.7	62.0	69.3
EVRS / EVRST 20	51.7	73.0	89.5	103.0	116.0
R410A					
EVRS 3	3.7	5.3	6.4	7.5	8.3
EVRS / EVRST 10	24.3	34.4	42.0	48.6	54.3
EVRS / EVRST 15	43.7	61.8	75.6	87.5	97.7
EVRS / EVRST 20	72.9	103.0	126.0	146.0	163.0

Capacities are based on liquid temperature t_l = 5 °C ahead of valve, evaporating temperature t_e = -10 °C, and superheat 0 K.

Correction factors

When sizing valves, the plant capacity must be multiplied by a correction factor depending on liquid temperature t_l ahead of valve / evaporator.
When the corrected capacity is known, the selection can be made from the table.

t_v °C	-10	0	10	20	25	30	40	50
R717 (NH_3)	0.84	0.88	0.92	0.97	1.0	1.03	1.09	1.16
R22, R134a	0.76	0.81	0.88	0.96	1.0	1.05	1.16	1.31
R404A	0.70	0.76	0.84	0.94	1.0	1.07	1.24	1.47
R410A	0.73	0.79	0.86	0.95	1.0	1.06	1.23	1.47

Capacity
(continued)

Suction vapour capacity Q_e kW

R717 (NH_3)

Type	Pressure drop across valve Δp bar	Suction vapour capacity Q_e kW at evaporating temperature t_e °C					
		-40	-30	-20	-10	0	10
EVRS / EVRST 10	0.1	3.4	4.5	5.9	7.3	8.9	10.6
	0.15	4.0	5.4	7.0	9.0	10.9	13.0
	0.2	4.5	6.1	7.9	10.0	12.6	15.0
EVRS / EVRST 15	0.1	6.1	8.1	10.7	13.2	16.0	19.1
	0.15	7.2	9.7	12.5	16.1	19.6	23.4
	0.2	8.0	11.0	14.2	18.0	22.6	27.0
EVRS / EVRST 20	0.1	10.2	13.5	17.8	21.9	26.6	31.9
	0.15	12.1	16.1	20.9	26.9	32.6	39.0
	0.2	13.4	18.3	23.7	29.9	37.7	45.1

R22

EVRS / EVRST 10	0.1	1.4	1.8	2.3	2.8	3.4	4.0
	0.15	1.6	2.1	2.7	3.4	4.1	4.9
	0.2	1.8	2.4	3.1	3.8	4.8	5.6
EVRS / EVRST 15	0.1	2.5	3.2	4.1	5.0	6.1	7.2
	0.15	2.9	3.8	4.8	6.2	7.4	8.8
	0.2	3.3	4.3	5.5	6.8	8.6	10.2
EVRS / EVRST 20	0.1	4.1	5.3	6.8	8.4	10.1	12.0
	0.15	4.9	6.4	8.1	10.3	12.3	14.7
	0.2	5.5	7.2	9.2	11.4	14.3	16.9

R134a

EVRS / EVRST 10	0.1	0.87	1.2	1.6	2.1	2.6	3.2
	0.15	0.99	1.4	1.9	2.4	3.2	3.9
	0.2	1.1	1.6	2.1	2.8	3.5	4.5
EVRS / EVRST 15	0.1	1.6	2.1	2.8	3.8	4.7	5.7
	0.15	1.8	2.5	3.4	4.4	5.7	7.0
	0.2	2.0	2.8	3.8	5.0	6.3	8.1
EVRS / EVRST 20	0.1	2.6	3.6	4.7	6.3	7.8	9.6
	0.15	3.0	4.2	5.6	7.3	9.5	11.7
	0.2	3.3	4.7	6.4	8.3	10.5	13.5

R404A

EVRS / EVRST 10	0.1	1.2	1.5	2.0	2.5	3.1	3.7
	0.15	1.4	1.8	2.4	3.1	3.8	4.6
	0.2	1.6	2.1	2.7	3.4	4.3	5.3
EVRS / EVRST 15	0.1	2.1	2.7	3.6	4.5	5.5	6.6
	0.15	2.5	3.3	4.3	5.5	6.8	8.2
	0.2	2.8	3.7	4.9	6.1	7.8	9.5
EVRS / EVRST 20	0.1	3.5	4.6	6.0	7.5	9.2	11.1
	0.15	4.1	5.5	7.1	9.2	11.3	13.6
	0.2	4.6	6.2	8.1	10.2	13.0	15.8

R410A

EVRS / EVRST 10	0.1	1.9	2.3	2.9	3.5	4.2	5.0
	0.15	2.2	2.9	3.5	4.3	5.1	6.1
	0.2	2.6	3.3	4.0	5.0	5.9	7.0
EVRS / EVRST 15	0.1	3.3	4.2	5.2	6.3	7.6	9.0
	0.15	4.0	5.1	6.3	7.7	9.2	11.0
	0.2	4.7	5.9	7.3	8.9	10.7	12.7
EVRS / EVRST 20	0.1	5.6	7.0	8.6	10.5	12.6	15.0
	0.15	6.7	8.6	10.5	12.9	15.4	18.4
	0.2	7.8	9.9	12.2	14.9	17.8	21.2

Capacities are based on liquid temperature t_l = 25 °C ahead of evaporator.
The table values refer to the evaporator capacity and are given as a function of evaporating temperature t_e and pressure drop Δp in valve.
Capacities are based on dry, saturated vapour ahead of valve.
During operation with superheated vapour ahead of valve, the capacities are reduced by 4% for each 10 K superheat.

Correction factors

When sizing valves, the evaporator capacity must be multiplied by a correction factor depending on liquid temperature t_l ahead of expansion valve.

When the corrected capacity is known, the selection can be made from the table.

t_v °C	-10	0	10	20	25	30	40	50
R717 (NH_3)	0.84	0.88	0.92	0.97	1.0	1.03	1.09	1.16
R22, R134a	0.76	0.81	0.88	0.96	1.0	1.05	1.16	1.31
R404A	0.70	0.76	0.84	0.94	1.0	1.07	1.24	1.47
R410A	0.76	0.80	0.89	0.96	1.0	1.05	1.18	1.37

Capacity
(continued)

Hot gas capacity Q_e kW

Type	Pressure drop across valve Δp bar	Hot gas capacity Q_h kW Evaporating temp. t_e = -10 °C. Hot gas temp. t_h = t_c 25 °C. Subcooling Δt_{sub} = 4 K Condensing temperature t_c °C				
		20	30	40	50	60
R717 (NH_3)						
EVRS 3	0.1	1.8	2.1	2.3	2.5	2.6
	0.2	2.6	2.9	3.2	3.5	3.7
	0.4	3.8	4.2	4.6	4.9	5.3
	0.8	5.1	6.0	6.5	7.1	7.6
	1.6	7.4	8.3	9.1	9.9	10.9
EVRS / EVRST 10	0.1	12.0	3.4	14.7	16.0	17.2
	0.2	17.1	19.0	20.9	22.7	24.4
	0.4	24.5	27.1	29.7	32.2	34.7
	0.8	34.0	39.0	42.6	46.1	49.5
	1.6	48.5	53.8	59.1	64.3	1.3
EVRS / EVRST 15	0.1	21.7	24.1	26.4	28.8	31.0
	0.2	30.8	34.2	37.5	40.8	44.0
	0.4	44.1	48.8	53.5	58.0	62.4
	0.8	61.2	70.3	76.7	83.0	89.1
	1.6	87.4	96.9	106.0	116.0	128.0
EVRS / EVRST 20	0.1	36.1	40.1	44.0	48.0	51.7
	0.2	51.4	57.0	62.6	68.0	73.2
	0.4	73.5	81.3	89.1	96.7	104.0
	0.8	102.0	117.0	128.0	138.0	148.0
	1.6	146.0	161.0	177.0	193.0	214.0
R22						
EVRS 3	0.1	0.68	0.72	0.76	0.78	0.79
	0.2		1.0	1.1	1.1	1.1
	0.4	0.97	1.5	1.5	1.6	1.6
	0.8	1.4	2.0	2.1	2.3	2.3
	1.6	1.9	2.9	3.0	3.1	3.2
		2.7				
EVRS / EVRST 10	0.1	4.4	4.7	4.9	5.1	5.2
	0.2	6.3	6.7	7.0	7.2	7.3
	0.4	9.0	9.6	10.0	10.3	10.4
	0.8	12.4	13.2	13.9	14.7	14.9
	1.6	17.5	18.6	19.6	20.2	20.5
EVRS / EVRST 15	0.1	8.0	8.5	8.9	9.2	9.3
	0.2	11.4	12.1	12.6	13.0	13.2
	0.4	16.3	17.2	18.0	18.5	18.7
	0.8	22.3	23.1	24.9	26.5	26.8
	1.6	31.5	33.5	35.2	36.4	36.9
EVRS / EVRST 20	0.1	13.3	14.1	14.8	15.3	15.5
	0.2	19.0	20.1	21.0	21.7	22.0
	0.4	27.1	28.7	30.0	30.9	31.2
	0.8	37.1	38.4	44.5	44.2	44.6
	1.6	52.5	55.9	58.6	60.6	61.5

An increase in hot gas temperature t_h of 10 K reduces valve capacity approx. 2% and vice versa.

A change in evaporating temperature t_e changes valve capacity; see correction factor table below.

Correction factors
When sizing valves, the table value must be multiplied by a correction factor depending on evaporating temperature t_e.

t_o °C	-40	-30	-20	-10	0	10
R717 (NH_3)	0.89	0.91	0.96	1.0	1.06	1.10
R22	0.90	0.94	0.97	1.0	1.03	1.05

Capacity
(continued)

Hot gas capacity Q_h kW

Type	Pressure drop across valve Δp bar	Hot gas capacity Q_h kW Evaporating temp. t_e = -10 °C. Hot gas temp. $t_h = t_c$ 25 °C. Subcooling Δt_{sub} = 4 K Condensing temperature t_c °C				
		20	30	40	50	60
R134a						
EVRS 3	0.1	0.54	0.57	0.6	0.61	0.6
	0.2	0.77	0.82	0.85	0.86	0.85
	0.4	1.1	1.2	1.2	1.2	1.2
	0.8	1.5	1.6	1.7	1.8	1.8
	1.6	2.2	2.3	2.4	2.5	2.4
EVRS / EVRST 10	0.1	3.5	3.7	3.9	4.0	3.9
	0.2	5.0	5.3	5.5	5.6	5.6
	0.4	7.0	7.7	7.9	8.0	7.9
	0.8	9.9	10.5	11.0	11.6	11.4
	1.6	14.3	15.1	15.7	16.0	15.9
EVRS / EVRST 15	0.1	6.4	6.7	7.0	7.1	7.1
	0.2	9.1	9.6	10.0	10.1	10.0
	0.4	12.6	13.8	14.2	14.4	14.3
	0.8	17.9	19.0	19.8	20.8	20.5
	1.6	25.7	27.2	28.2	28.8	28.6
EVRS / EVRST 20	0.1	10.6	11.2	11.7	11.8	11.8
	0.2	15.1	16.0	16.6	16.8	16.7
	0.4	21.0	22.9	23.7	24.0	23.8
	0.8	29.8	31.6	33.0	34.7	34.2
	1.6	42.8	45.3	47.1	47.9	47.6
R404A						
EVRS 3	0.1	0.62	0.63	0.62	0.59	0.54
	0.2	0.87	0.89	0.88	0.83	0.76
	0.4	1.2	1.3	1.3	1.2	1.1
	0.8	1.7	1.7	1.7	1.7	1.5
	1.6	2.4	2.5	2.4	2.3	2.1
EVRS / EVRST 10	0.1	4.0	4.1	4.0	3.8	3.5
	0.2	5.7	5.8	5.7	5.5	5.0
	0.4	8.1	8.2	8.2	7.8	7.0
	0.8	11.1	11.4	11.3	11.1	10.1
	1.6	15.7	16.0	15.8	15.2	13.9
EVRS / EVRST 15	0.1	7.3	7.4	7.3	6.9	6.3
	0.2	10.2	10.4	10.3	9.8	8.9
	0.4	14.6	14.8	14.7	14.0	12.7
	0.8	20.1	20.4	20.3	20.0	18.1
	1.6	28.3	28.8	28.4	27.4	25.0
EVRS / EVRST 20	0.1	12.1	12.3	12.1	11.5	10.5
	0.2	17.1	17.3	17.2	16.3	14.9
	0.4	24.4	24.7	24.5	23.3	21.1
	0.8	33.4	34.0	33.9	33.3	30.2
	1.6	47.1	48.0	47.4	45.6	41.6

An increase in hot gas temperature t_h of 10 K reduces valve capacity approx. 2% and vice versa.

A change in evaporating temperature t_e changes valve capacity; see correction factor table below.

Correction factors
When sizing valves, the table value must be multiplied by a correction factor depending on evaporating temperature t_e.

t_o °C	-40	-30	-20	-10	0	10
R404A	0.86	0.88	0.93	1.0	1.03	1.07
R134a	0.88	0.92	0.98	1.0	1.04	1.08

Capacity
(continued)

Hot gas capacity Q_h kW

R410A

Type	Pressure drop across valve Δp bar	Hot gas capacity Q_h kW. Evaporating temp. t_e = -10 °C. Hot gas temp. t_h = t_c 25 °C. Subcooling Δt_{sub} = 4 K. Condensing temperature t_c °C				
		20	30	40	50	60
EVRS 3	0.1	0.8	0.8	0.8	0.8	0.7
	0.2	1.1	1.1	1.1	1.1	1.0
	0.4	1.6	1.6	1.6	1.6	1.5
	0.8	2.2	2.7	2.2	2.2	2.1
	1.6	3.1	3.2	3.2	3.2	2.9
EVRS / EVRST 10	0.1	5.1	5.2	5.3	5.2	4.8
	0.2	7.2	7.4	7.4	7.3	6.8
	0.4	10.2	10.4	10.5	10.3	9.6
	0.8	14.4	14.8	14.9	14.5	13.7
	1.6	20.3	20.8	21.0	20.5	19.1
EVRS / EVRST 15	0.1	9.2	9.4	9.4	9.3	8.6
	0.2	13.0	13.3	13.3	13.1	12.2
	0.4	18.4	18.8	18.9	18.5	17.2
	0.8	25.9	26.6	26.7	26.1	24.6
	1.6	36.6	37.5	37.8	36.9	34.5
EVRS / EVRST 20	0.1	15.3	15.7	15.8	15.5	14.4
	0.2	21.6	22.1	22.2	21.8	20.3
	0.4	30.6	31.3	31.5	30.8	28.7
	0.8	43.2	44.3	44.6	43.5	41.0
	1.6	61.0	62.6	63.0	61.6	57.4

An increase in hot gas temperature t_h of 10 K reduces valve capacity approx. 2% and vice versa.

A change in evaporating temperature t_e changes valve capacity; see correction factor table below.

Correction factors

When sizing valves, the table value must be multiplied by a correction factor depending on evaporating temperature t_e.

t_o °C	-40	-30	-20	-10	0	10
R410A	0.92	0.95	0.98	1.0	1.02	1.03

Capacity
(continued)

Hot gas capacity G_h kg/s

Type	Hot gas temperature t_h °C	Condensing temperature t_c °C	Hot gas capacity G_h kg/s at pressure drop across valve Δp bar								
			0.5	1	2	3	4	5	6	7	8
R717 (NH_3)											
EVRS 3	90	25	0.003	0.005	0.006	0.007	0.007	0.007	0.007	0.007	0.007
		35	0.004	0.005	0.007	0.009	0.009	0.01	0.01	0.01	0.01
		45	0.005	0.006	0.009	0.01	0.011	0.012	0.013	0.013	0.013
EVRS / EVRST 10		25	0.022	0.03	0.04	0.045	0.048	0.048	0.048	0.048	0.048
		35	0.026	0.036	0.048	0.056	0.061	0.064	0.065	0.065	0.065
		45	0.030	0.041	0.056	0.066	0.074	0.079	0.083	0.085	0.086
EVRS / EVRST 15		25	0.040	0.054	0.072	0.081	0.086	0.087	0.087	0.087	0.087
		35	0.046	0.064	0.086	0.100	0.109	0.115	0.117	0.117	0.117
		45	0.053	0.074	0.101	0.120	0.133	0.142	0.149	0.153	0.155
EVRS / EVRST 20		25	0.066	0.090	0.120	0.120	0.144	0.145	0.145	0.145	0.145
		35	0.077	0.107	0.144	0.167	0.182	0.191	0.195	0.195	0.195
		45	0.089	0.124	0.169	0.199	0.211	0.237	0.248	0.255	0.258
R22											
EVRS 3	90	25	0.008	0.011	0.014	0.016	0.017	0.017	0.017	0.017	0.017
		35	0.009	0.012	0.017	0.019	0.021	0.022	0.022	0.022	0.022
		45	0.010	0.014	0.019	0.022	0.025	0.026	0.027	0.028	0.028
EVRS / EVRST 10		25	0.051	0.069	0.092	0.104	0.109	0.111	0.111	0.111	0.111
		35	0.058	0.08	0.108	0.125	0.136	0.142	0.144	0.144	0.144
		45	0.066	0.092	0.125	0.146	0.162	0.172	0.179	0.183	0.183
EVRS / EVRST 15		25	0.091	0.125	0.165	0.187	0.197	0.199	0.199	0.199	0.199
		35	0.105	0.144	0.194	0.225	0.244	0.256	0.258	0.258	0.258
		45	0.119	0.165	0.224	0.263	0.291	0.31	0.322	0.329	0.330
EVRS / EVRST 20		25	0.152	0.208	0.275	0.311	0.328	0.332	0.332	0.332	0.332
		35	0.174	0.241	0.323	0.375	0.407	0.425	0.431	0.431	0.431
		45	0.193	0.275	0.374	0.439	0.485	0.516	0.537	0.548	0.550
R134a											
EVRS 3	60	25	0.007	0.009	0.011	0.012	0.012				
		35	0.009	0.011	0.014	0.016	0.016	0.016	0.016		
		45	0.01	0.012	0.018	0.02	0.021	0.021	0.021	0.021	0.021
EVRS / EVRST 10		25	0.048	0.06	0.074	0.077	0.077				
		35	0.055	0.071	0.092	0.103	0.104	0.104			
		45	0.06	0.084	0.111	0.127	0.134	0.135	0.135	0.135	0.135
EVRS / EVRST 15		25	0.081	0.108	0.134	0.14	0.14				
		35	0.094	0.129	0.166	0.192	0.187	0.187	0.187		
		45	0.108	0.151	0.2	0.228	0.241	0.244	0.244	0.244	0.244
EVRS / EVRST 20		25	0.134	0.180	0.223	0.233	0.233				
		35	0.157	0.215	0.276	0.307	0.312	0.312	0.312		
		45	0.181	0.252	0.333	0.381	0.403	0.407	0.407	0.407	0.407
R404A											
EVRS 3	60	25	0.01	0.013	0.018	0.021	0.022	0.023	0.023	0.023	0.023
		35	0.011	0.015	0.02	0.024	0.027	0.028	0.029	0.029	0.03
		45	0.012	0.017	0.023	0.028	0.032	0.034	0.035	0.036	0.037
EVRS/ EVRST 10		25	0.063	0.087	0.116	0.134	0.145	0.148	0.149	0.149	0.149
		35	0.072	0.1	0.134	0.158	0.174	0.184	0.19	0.19	0.192
		45	0.081	0.112	0.153	0.182	0.203	0.228	0.228	0.237	0.239
EVRS / EVRST 15		25	0.113	0.157	0.21	0.242	0.26	0.267	0.269	0.269	0.269
		35	0.129	0.18	0.242	0.285	0.313	0.332	0.341	0.342	0.346
		45	0.146	0.202	0.275	0.327	0.365	0.393	0.411	0.424	0.431
EVRS / EVRST 20		25	0.189	0.262	0.350	0.403	0.433	0.445	0.449	0.449	0.449
		35	0.215	0.300	0.404	0.474	0.521	0.552	0.569	0.570	0.576
		45	0.243	0.337	0.459	0.545	0.609	0.656	0.684	0.707	0.719
R410A											
EVRS 3	90	25	0.009	0.013	0.018	0.022	0.025	0.028	0.031	0.031	0.031
		35	0.010	0.014	0.020	0.025	0.029	0.032	0.035	0.038	0.038
		45	0.012	0.016	0.023	0.029	0.033	0.037	0.040	0.044	0.047
EVRS / EVRST 10		25	0.059	0.083	0.117	0.144	0.166	0.185	0.201	0.201	0.201
		35	0.067	0.094	0.133	0.163	0.189	0.211	0.231	0.249	0.249
		45	0.076	0.108	0.152	0.186	0.215	0.241	0.263	0.285	0.304
EVRS / EVRST 15		25	0.106	0.150	0.211	0.259	0.300	0.334	0.361	0.361	0.361
		35	0.120	0.170	0.240	0.294	0.340	0.380	0.416	0.449	0.449
		45	0.137	0.194	0.274	0.335	0.387	0.433	0.474	0.513	0.548
EVRS / EVRST 20		25	0.177	0.149	0.352	0.431	0.498	0.556	0.602	0.602	0.602
		35	0.200	0.283	0.400	0.490	0.566	0.633	0.693	0.748	0.748
		45	0.228	0.323	0.456	0.558	0.645	0.722	0.790	0.854	0.913

An increase in hot gas temperature t_h of 10 K reduces valve capacity approx. 2% and vice versa.

Design / function

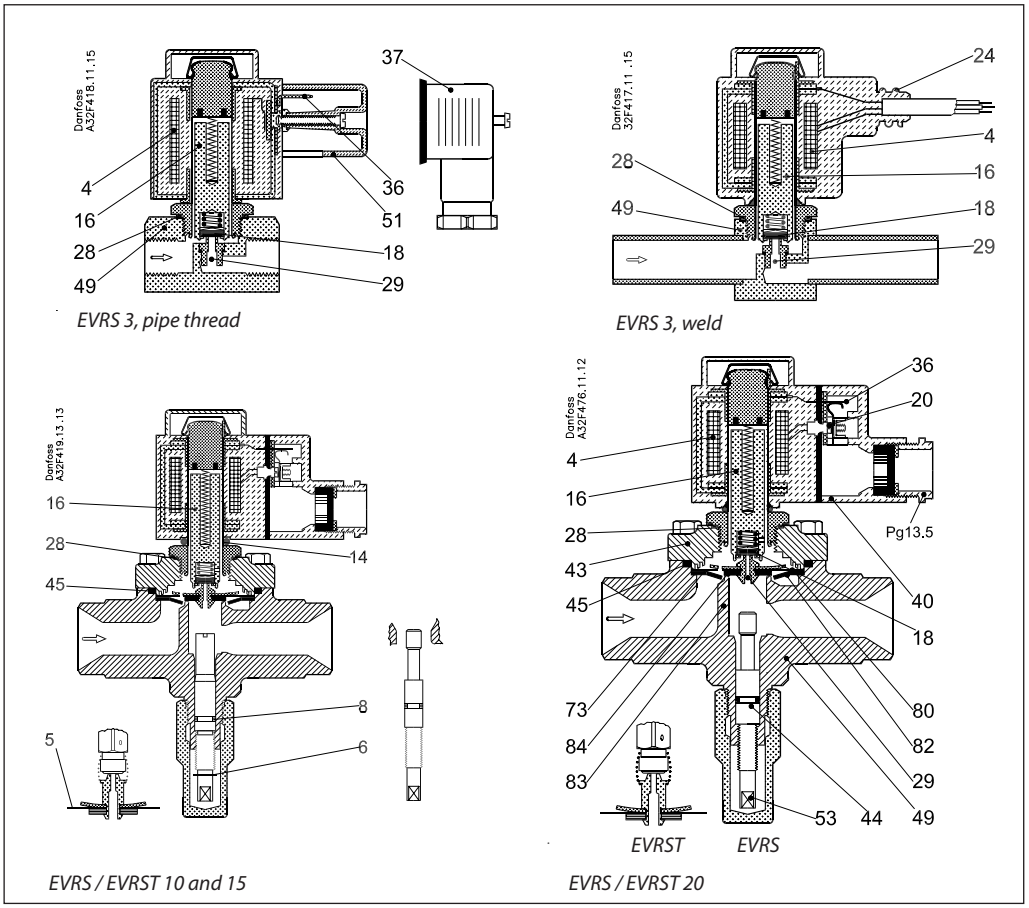

4. Coil
16. Armature
18. Pilot valve plate
20. Earth terminal
24. Connection for flexible steel hose
28. Gasket
29. Pilot orifice
36. DIN plug
40. Terminal box
43. Valve cover
44. O-ring
45. Valve cover gasket
49. Valve body
51. Cover
53. Manual operating spindle
73. Equalization hole
80. Diaphragm
82. Support washer
83. Valve seat
84. Main valve plate

The solenoid valve design is based on three different principles:
1. Direct operation
2. Servo operation
3. Forced servo operation

1. Direct operation
EVRS 3 is directly operated. The valve opens direct for full flow when the armature (16) moves up into the magnetic field of the coil. This means that the valve operates with a min. differential pressure of 0 bar.
The valve plate (18) made of teflon and is fitted direct to the armature (16).
Inlet pressure acts from above on the armature and with it the valve plate. Thus, inlet pressure, spring force and the weight of the armature act to close the valve when the coil is currentless.

2. Servo operation
EVRS 10, 15 and 20 are servo operated with a "floating" diaphragm (80). The pilot orifice (29), which is of stainless steel, is placed in the centre of the diaphragm.
The teflon pilot valve plate (18) is fitted direct to the armature (16).
With the coil currentless, the main orifice and pilot orifice are closed.
The pilot orifice and main orifice are held closed by the weight of the armature, the armature spring force and the differential pressure between inlet and outlet sides.
When current is applied to the coil the armature is drawn up into the magnetic field and opens the pilot orifice. This relieves the pressure above the diaphragm because the space above the diaphragm becomes connected to the outlet side of the valve. The differential pressure between inlet and outlet sides then presses the diaphragm away from the main orifice which opens to full flow.
Thus a certain minimum differential pressure is necessary to open the valve and keep it open. For EVRS 10, 15 and 20 valves this differential pressure is 0.05 bar.
When current is switched off, the pilot orifice closes. Then the pressure above the diaphragm rises, via the equalization holes (73) in the diaphragm, to the inlet pressure and causes the diaphragm to close the main orifice.

3. Forced servo operation
EVRST 10, 15 and 20 are forced servo operated solenoid valves.
Forced servo operation differs from servo operation in that in a forced servo operated valve the armature and the diaphragm are connected by a spring. Thus the armature helps to lift the diaphragm (80) and keep it lifted so that the pressure drop in the open valve is the least possible. These types of valves therefore require no differential pressure to keep them open.

Material specification

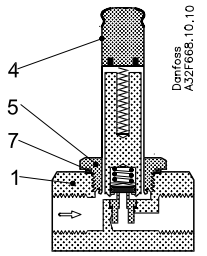

EVRS 3, Pipe thread

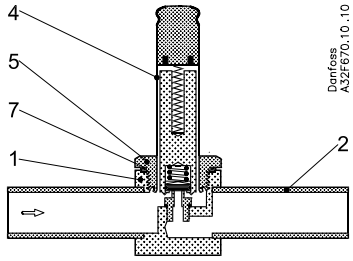

EVRS 3, welded

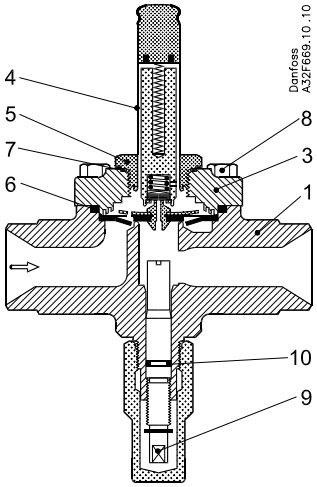

EVRS/ EVRST 10 and 15

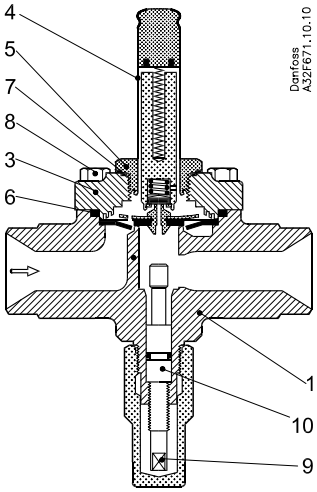

EVRS/ EVRST 20

		Solenoid valves					Standard	
No.	Description	Type	Material	Analysis	Mat.no.	W.no.	DIN	EN
1	Valve housing	EVRS 3	Stainless steel	X8 CrNiS 18-9		1.4305		10088
		EVRS (T) 10/15/20	Stainless steel	X6 CrNi 18-9		1.4308	17455	
2	Welding tube	EVRS 3	Stainless steel	X2 CrNiMo 17-12-2		1.4404	17455	
3	Cover	EVRS (T) 10(15/20	Stainless steel	X6 CrNi 18-9		1.4308	17455	
4	Armature tube	EVRS(T) 3/10/15/20	Stainless steel	X2 CrNi 19-11		1.4306		10088
5	Armature tube nut	EVRS(T) 3/10/15/20	Stainless steel	X8 CrNi 19-11		1.4305		10088
6	Gasket	EVRS(T) 3/10/15/20	Rubber	Cr				
7	Gasket armature tube	EVRS(T) 10/15/20	Al gasket	Al 99.5		3.0255		10210
8	Screws	EVRS(T) 10/15/20	Stainless steel	A2-70			3506	
9	Spindle for man. oper.	EVRS(T) 10/15/20	Stainless steel	X8 CrNiS 18-9		1.4305		10088
10	Gasket	EVRS(T) 10/15/20	Rubber	Cr				

Dimensions and weights

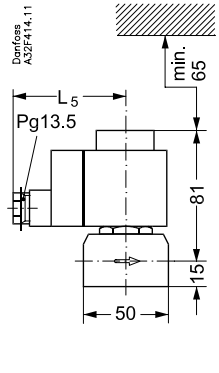

EVRS 3, pipe thread

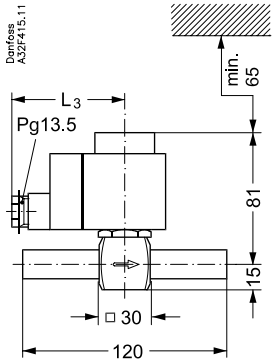

EVRS 3, weld

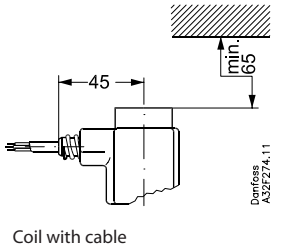

Coil with cable

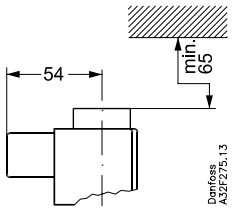

Coil with DIN plugs

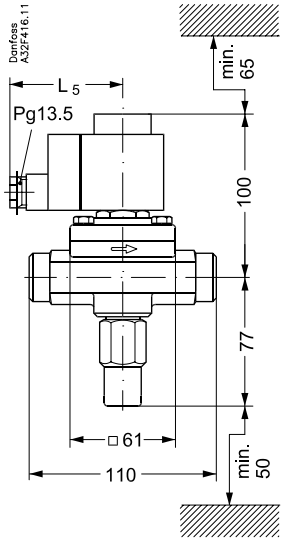

EVRS / EVRST 10 and 15
Coil with terminal box

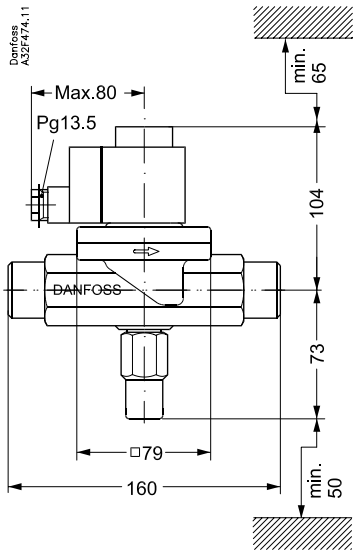

EVRS / EVRST 20
Coil with terminal box

Weight of coil
10 W: approx. 0.3 kg
12 and 20 W: approx. 0.5 kg

Type	L_5 max.		Weight with coil
	10 W	12 W 20 W	
	[mm]	[mm]	[kg]
EVRS 3, pipe thread	75	85	0.7
EVRS 3, weld	75	85	0.6
EVRS / EVRST 10	75	85	1.2
EVRS / EVRST 15	75	85	1.3
EVRS / EVRST 20	75	85	2.0

ENGINEERING
TOMORROW

Solenoid coil
Types BB, BE, BF, BG, and BN

Contents **Page**

Features 809
Technical data 810
Approvals 810
Connection 810
Ordering 811
Dimension and weight 814

AI237186440089en-0007012 | 2017.06

ENGINEERING TOMORROW

Solenoid coil
Types BB, BE, BF, BG, and BN

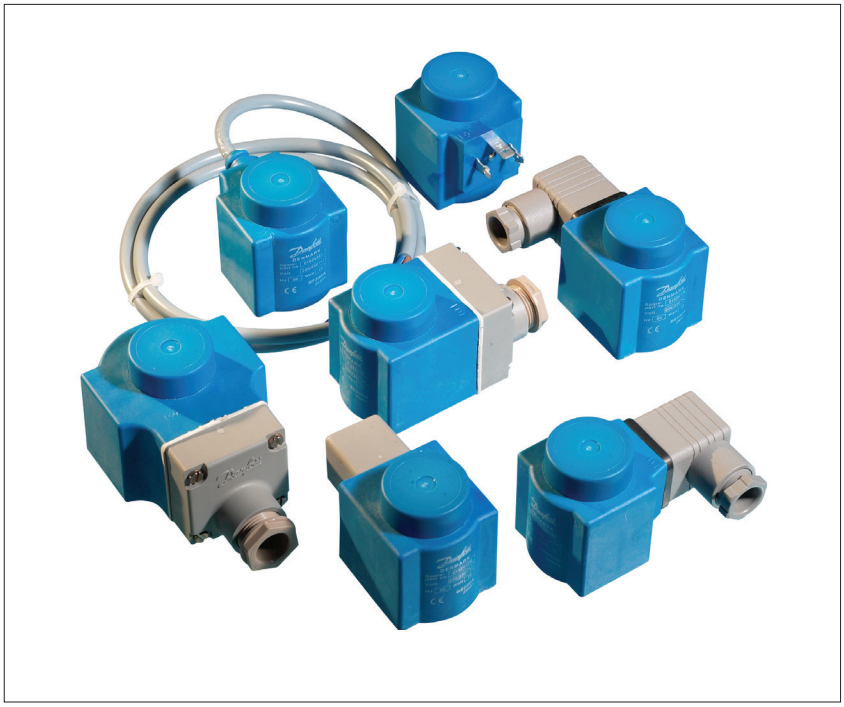

The coils are specially designed to operate in the aggressive environment of high humidity and temperature fluctuations that you find in most refrigeration systems.

The Clip-on fastening system ensures a faultless installation and makes the coils easy to mount and dismount. A Danfoss Clip-on coil can be mounted without any tools at all, and it is simple to dismount the coil by means of a screwdriver.

The Clip-on coils are available for the entire range of Danfoss solenoid valves for refrigeration, freezing and air conditioning purposes.

Features

- Encapsulated coils with long operating life, even under extreme conditions.
- Standard coils for AC or DC
- Standard coils available with 3-core cable, terminal box or DIN plugs.
- Standard coils from 12 V to 420 V, 50, 60 or 50/60 Hz.
- Standard coils dimensioned for max. opening differential pressure (MOPD) of up to 38 bar.
- Coils can be fitted without the use of tools.

Approvals

- RoHS Directive 2011/65/EU
- Low Voltage Directive (LVD) 2014/35/EU
- EMC Directive 2014/30/EU

Technical data

Data	Solenoid coil type										
	1m 3-core cable	Terminal box			DIN spade and protection cap	DIN spade	1m 3-core cable	Terminal box	DIN spade and protection cap	DIN spade	Terminal box IP67
	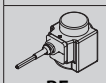										
	BF	BE	BG	BG	BE	BB	BF	BE	BE	BB	BN
Enclosure	IP67	IP67	IP67	IP67	IP20	IP00	IP67	IP67	IP20	IP00	IP67
Polution degree	4	4	4	4	3	3	4	4	3	3	3
Conductor area [mm²]	0.75	0.75 - 1.5	0.75 - 1.5	0.75 - 1.5	0.75 - 1.5	0.75 - 1.5	0.75	0.75 - 1.5	0.75 - 1.5	0.75 - 1.5	0.75 - 1.5
Cable size [mm]	Ø6.6	Ø6.0 - Ø11	Ø6.0 - Ø11	Ø6.0 - Ø11	Ø6.0 - Ø11	Ø6.0 - Ø11	Ø6.6	Ø6.0 - Ø11	Ø6.0 - Ø11	Ø6.0 - Ø11	Ø6.0 - Ø11
Rated impulse voltage [kV], if altitude < 4000 m	4	4	4	4	4	4	4	4	4	4	4
Humidity [R.H.]	0 – 100%	0 – 100%	0 – 100%	0 – 100%	0 – 97% non-con-densation condition	0 – 97% non-con-densation condition	0 – 100%	0 – 100%	0 – 97% non-con-densation condition	0 – 97% non-con-densation condition	0 – 100%
Type of control	1	1	1	1	1	1	1	1	1	1	1
Safety classification	Class I	Class I	Class I	Class I	Class I	Class I	Class I	Class I	Class I	Class I	Class I
Max. altitude above sea level [m]	4000	4000	4000	4000	4000	4000	4000	4000	4000	4000	4000

Note:
For DIN plug, impulse withstand voltage is 3.1 kV for 2000 m < Altitude < 4000 m

⚠ Safety notes for flammable refrigerants (R290, R600, R600A, R32, R1234ze, and R1234yf):
1. The products (only refer to IP65/67 coils) are validated in accordance to ISO 5149, IEC 60335 (ref. IEC/EN 60079-15). Ignition risk is evaluated in accordance to ISO 5149 and IEC 60335 (ref. IEC/EN 60079-15). See safety note below.
2. Please make sure that there is no spark, arc during the application, especially the connection of coils.
3. Follow the instruction to mount the coil correctly and apply the o-ring for sealing, to prevent the moisture penetrate inside the coils.
4. Always install a fuse ahead of the coil to avoid short circuit (fuse size should be around 2 times of rated current, and time lag: medium);
5. The coil used in an area of not more than pollution degree 2.

⚠ Safety notes:
1. The product (only refer to IP65/67 coils) can be applied on systems with R290, R600, R600A, R32, R1234ze, and R1234yf as the working fluid.
2. For countries where safety standards are not an indispensable part of the safety system Danfoss recommend the installer to get a third party approval of the system containing flammable refrigerant.
3. Note, please follow specific selection criteria stated in the datasheet for these particular refrigerants.
4. Note that the product (only refer to IP65/67 coils) has NOT been verified ATEX or IECEx or IEC 60079 series zone 2 compliant. This product is only validated for systems in compliance with ISO5149, IEC 60335 (ref. IEC/EN 60079-15). It is the responsibility of the user to verify such compliance. Improper use can cause explosion, fire, leakage potentially causing death, personal injury, or damage to property.

Approvals

See under the required solenoid valve.

Connection

3-core cable
The external thread in the screwed cable entry suits flexible steel hose or corresponding cable protection (3 x 0.75 mm²).

Terminal box
Leads are connected to terminal screws in the terminal box. The box is fitted with a Pg 13.5 screwed entry for 6 – 14 mm cable.
Max. lead cross section: 2.5 mm².

DIN plugs
The three pins on the coil can be fitted with spade tabs, 6.3 mm wide (to EN175301-803A).
The two current carrying pins can also be fitted with spade tabs, 4.8 mm wide.
Max. lead cross section: 1.5 mm².
Use of the protective cap supplied will prevent inadvertent contact with live parts.

DIN socket
(to EN175301-803A)
Leads are connected in the socket. The socket is fitted with a Pg 11 screwed entry for 6 – 12 mm.

Ordering

BF solenoid coil with 1m 3-core cable IP67

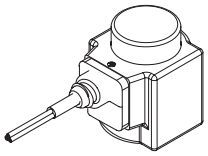

Type	Valve type	Tambient [°C]	Supply voltage [V]	Voltage variation	Frequency [Hz]	Power consumption [W]	Power consumption [VA]	Code no.
BF024AS	EVR 2 – EVR 40 (NC) EVR 6 – EVR 22 (NO) EVRH 10 – EVR 40 EVRC EVRA EVRAT EVRS / EVRST EVM (NC)	-40T80	24	-15%, +10%	50	12	20	**018F6257**
BF230AS		-40T80	230	-15%, +10%	50	12	22	**018F6251**
		-40T80	220	-15%, +10%	50	11	20	
BF240AS		-40T80	240	-15%, +10%	50	11	19	**018F6252**
BF400AS		-40T80	380 / 400	±10%	50	10	21	**018F6253**
BF024BS		-40T80	24	-15%, +10%	60	14	25	**018F6265**
BF115CS		-40T80	115	-15%, +10%	60	13	22	**018F6260**
		-40T80	100	-15%, +10%	50	11	19	
BF220BS		-40T80	220	-15%, +10%	60	14	23	**018F6264**
BF110CS		-40T50	110	±10%	50	15	29	**018F6280**
			110	±10%	60	13	23	
BF230CS		-40T50	220 – 230	±10%	50	16	31	**018F6282**
			220 - 230	±10%	60	14	24	

BE solenoid coil with terminal box IP67

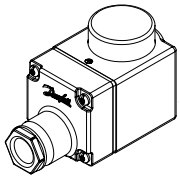

Type	Valve type	Tambient [°C]	Supply voltage [V]	Voltage variation	Frequency [Hz]	Power consumption [W]	Power consumption [VA]	Code no.
BE012AS	EVR 2 – EVR 40 (NC) EVR 6 – EVR 22 (NO) EVRH 10 – EVRH 40 EVRC EVRA EVRAT EVRS / EVRST EVM (NC)	-40T80	12	-15%, +10%	50	10	18	**018F6706**
BE024AS		-40T80	24	-15%, +10%	50	12	21	**018F6707**
BE042AS		-40T80	42	-15%, +10%	50	10	21	**018F6708**
BE048AS		-40T80	48	-15%, +10%	50	10	21	**018F6709**
BE115AS		-40T80	115	-15%, +10%	50	11	19	**018F6711**
BE230AS		-40T80	230	-15%, +10%	50	12	22	**018F6701**
		-40T80	220	-15%, +10%	50	11	19	
BE240AS		-40T80	240	-15%, +10%	50	11	19	**018F6702**
BE440CS		-40T80	380 – 400	-15%, +10%	50	13	23	**018F6703**
			440	-15%, +10%	60	14	24	
BE440AS		-40T80	420	-15%, +10%	50	11	21	**018F6704**
BE024BS		-40T80	24	-15%, +10%	60	14	25	**018F6715**
BE115CS		-40T80	100	-15%, +10%	50	11	19	**018F6710**
			115	-15%, +10%	60	13	22	
BE220BS		-40T80	220	-15%, +10%	60	13	23	**018F6714**
BE240CS		-40T80	200	-15%, +10%	50	11	20	**018F6713**
		-40T80	240	-15%, +10%	60	15	25	
BE110CS		-40T50	110	±10%	50	15	28	**018F6730**
		-40T50	110	±10%	60	13	22	
BE230CS		-40T50	220 - 230	±10%	50	17	31	**018F6732**
			220 - 230	±10%	60	14	24	

See „Opening differential pressure" under „Technical data" for the valve concerned.
When replacing a coil with terminal box, it is sufficient to change the coil unit itself. Therefore, order coil with DIN plugs and protective cap.

Ordering
BG solenoid coil with terminal box IP67

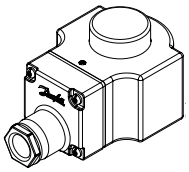

Type	Valve type	Tambient [°C]	Supply voltage [V]	Voltage variation	Frequency [Hz]	Power consumption		Code no.
						[W]	[VA]	
BG024AS	EVR 3 – EVR 40 EVRC EVRA EVRAT EVRS/ EVRST EVM (NC/ NO)	-40T80	24	-15%, +10%	50	11	21	**018F6807**
BG048AS		-40T80	48	-15%, +10%	50	12	26	**018F6809**
BG110AS		-40T80	110	-15%, +10%	50	13	25	**018F6811**
BG230AS		-40T80	230	-15%, +10%	50	15	28	**018F6801**
		-40T80	220	-15%, +10%	50	13	25	
BG240AS		-40T80	240	-15%, +10%	50	13	25	**018F6802**
BG400AS		-40T80	380 / 400	-15%, +10%	50	12	26	**018F6803**
BG024BS		-40T80	24	-15%, +10%	60	12	26	**018F6815**
BG110BS		-40T80	110	-15%, +10%	60	16	29	**018F6813**
BG220BS		-40T80	220	-15%, +10%	60	16	29	**018F6814**
BG012DS	EVR 2 – 8 EVR 25 – 40 EVRA 3 – EVRA 15 (NC) EVRA 25 – EVRA 40 (NC) EVRAT 10 – EVRAT 15 (NC) EVRS/ EVRST 3 – EVRS/ EVRST 15 EVM (NC/ NO)	-40T50	12	±10%	DC	20	–	**018F6856**
BG024DS		-40T50	24	±10%	DC	16	–	**018F6857**
BG048DS		-40T50	48	±10%	DC	20	–	**018F6859**
BG110DS		-40T50	110	±10%	DC	16	–	**018F6860**
BG115DS		-40T50	115	±10%	DC	19	–	**018F6861**
BG220DS		-40T50	220	±10%	DC	20	–	**018F6851**
BG012DS	EVR 10 – 22 EVRC 15 – 20 EVRC 20 EVRA 20 EVRAT 20 EVRST 20	-40T50	12	±10%	DC	20	–	**018F6886**
BG024DS		-40T50	24	±10%	DC	20	–	**018F6887**
BG048DS		-40T50	48	±10%	DC	20	–	**018F6889**
BG110DS		-40T50	110	±10%	DC	20	–	**018F6890**
BG220DS		-40T50	220	±10%	DC	20	–	**018F6881**

See „Opening differential pressure" under „Technical data" for the valve concerned.
When replacing a coil with terminal box, it is sufficient to change the coil unit itself. Therefore, order coil with DIN plugs and protective cap.

Ordering

BE solenoid coil with DIN spade and protection cap IP20

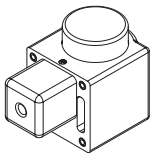

Type	Valve type	Tambient [°C]	Supply voltage [V]	Voltage variation	Frequency [Hz]	Power consumption [W]	Power consumption [VA]	Code no.
BE024AS	EVR 2 – EVR 40 (NC) EVR 6 – EVR 22 (NO) EVRH 10 – EVRH 40 EVRC EVRA EVRAT EVRS/ EVRST EVM (NC)	-40T80	24	-15%, +10%	50	12	21	**018F6182**
BE230AS		-40T80	230	-15%, +10%	50	12	22	**018F6176**
		-40T80	220	-15%, +10%	50	11	19	
BE240AS		-40T80	240	-15%, +10%	50	11	19	**018F6177**
BE420AS		-40T80	420	-15%, +10%	50	10	21	**018F6179**
BE115CS		-40T80	100	-15%, +10%	50	11	19	**018F6185**
		-40T80	115	-15%, +10%	60	13	22	
BE220BS		-40T80	220	-15%, +10%	50	13	23	**018F6189**
BE110CS		-40T50	110	±10%	50	15	28	**018F6192**
		-40T50	110	±10%	60	13	22	
BE230CS		-40T50	220-230	±10%	50	17	31	**018F6193**
		-40T50	220-230	±10%	60	14	24	

BB solenoid coil with DIN spade*)

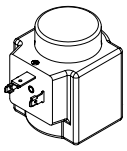

Type	Valve type	Tambient [°C]	Supply voltage [V]	Voltage variation	Frequency [Hz]	Power consumption [W]	Power consumption [VA]	Code no.
BB024AS	EVR 2 – EVR 40 (NC) EVR 6 – EVR 22 (NO) EVRH 10 – EVRH 40 EVRC EVRA EVRAT EVRS/ EVRST EVM (NC)	-40T80	24	-15%, +10%	50	11	19	**018F7358**
BB115AS		-40T80	115	-15%, +10%	50	11	19	**018F7361**
BB230AS		-40T80	220 - 230	-15%, +10%	50	11	19	**018F7351**
BB240AS		-40T80	240	-15%, +10%	50	11	19	**018F7352**
BB024BS		-40T80	24	-15%, +10%	60	14	23	**018F7365**
BB110CS		-40T50	110	±10%	50	15	28	**018F7360**
			110	±10%	60	13	22	
BB230CS		-40T50	220 - 230	±10%	50	16	31	**018F7363**
			220 - 230	±10%	60	13	24	

See „Opening differential pressure" under „Technical data" for the valve concerned.
When replacing a coil with terminal box, it is sufficient to change the coil unit itself. Therefore, order coil with DIN plugs and protective cap.
***)** *Can only be used with DIN plug.*

BN special solenoid coil with terminal box IP67

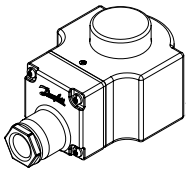

Type	Valve type	Tambient [°C]	Supply voltage [V]	Voltage variation	Frequency [Hz]	Power consumption [W]	Power consumption [VA]	Code no. [1])
BN024AS	EVR 2 – EVR 40 (NC) EVR 6 – EVR 22 (NO) EVRH 4 – EVRH 40 EVRC/ EVRA/ EVRAT/ EVRS/ EVRST/EVM (NC)	-40T50	24	-15%, +10%	50	24	49	**018F6904**
BN024BS		-40T50	24	-15%, +10%	60	22	42	**018F6906**
BN230AS		-40T50	230	-15%, +10%	50	19	43	**018F6905**

[1]) *Recommended use for EVRH with high MOPD (38 bar).*

Coil with DIN plug

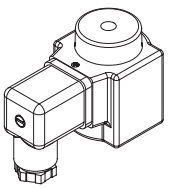

Terminal box	With built-in light emitting indicator diode for solenoid valves	**018Z0089**
DIN plug	Enclosure IP65, EN 175301-803A	**042N0156**

Dimension and weight

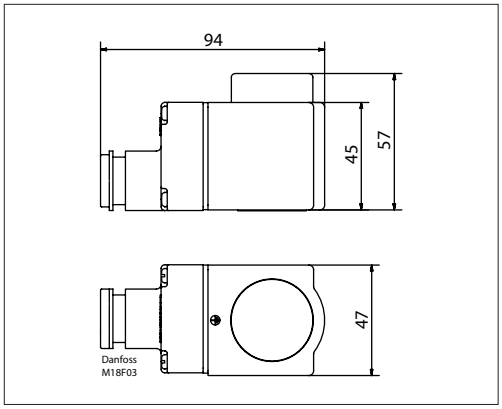

Terminal box 10 W
Weight 0.29 Kg

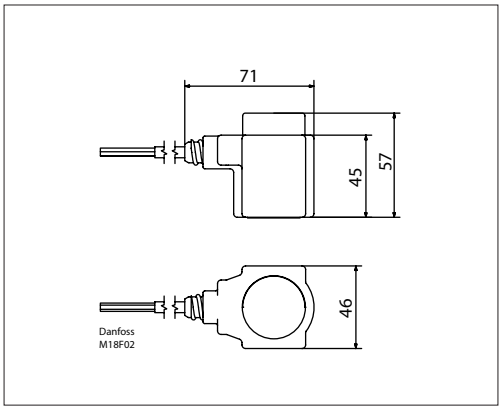

Cable 10 W
Weight 0.29 Kg

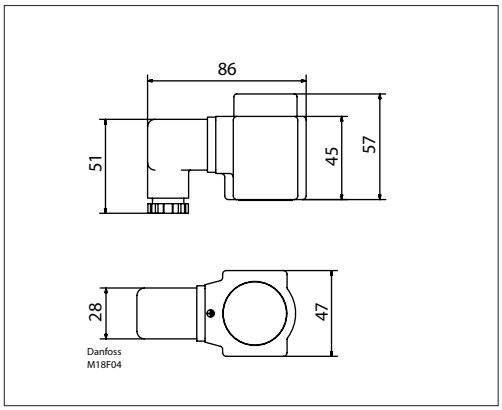

DIN socket 10 W
Weight 0.24 Kg

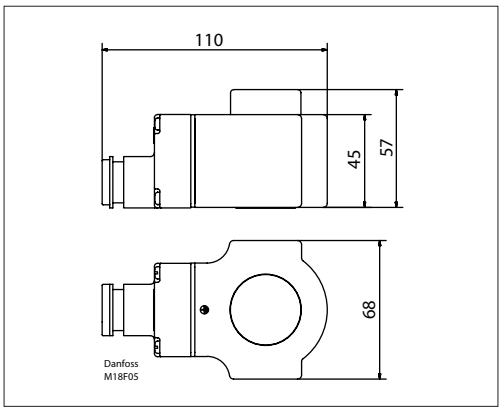

Terminal box 12 - 20 W
Weight 0.55 Kg

ENGINEERING
TOMORROW

Liquid Level Sensor
Type AKS 4100/4100U

Contents **Page**

Features ... 817
Product concept ... 818
CABLE version:. ... 818
COAXIAL D14 version:. ... 818
COAXIAL D22 version:. ... 818
Optional HMI ... 820
Measuring principle ... 821
Main technical data ... 821
Measuring range of AKS 4100/4100U - CABLE version ... 822
Measuring range of AKS 4100/4100U - COAXIAL D14 version ... 823
Measuring range of AKS 4100/4100U - COAXIAL D22 version ... 823
Ordering AKS 4100/4100U ... 824
Dimensions and weights ... 825
Technical data ... 826
Quick Setup ... 828
Entering refrigerant dielectric gas constant ... 831
Forcing mA output ... 831
Saturated vapour dielectric constant ... 832
Reset to factory setting ... 833
How to change the language setting ... 833

AI243386442914en-000201 | 2018.05

ENGINEERING
TOMORROW

Liquid Level Sensor
Type AKS 4100/4100U

AKS 4100/4100U - Cable Version



AKS 4100/4100U - Coaxial Version



The AKS 4100/4100U liquid level sensor is designed specifically to measure liquid levels in a wide range of refrigeration applications.

The AKS 4100/4100U liquid level sensor is based on a proven techhology called Time Domain Reflectometry (TDR) or Guided Micro Wave.

AKS 4100/4100U liquid level sensor can be used to measure the liquid level of many different refrigerants in vessels, accumulators, receivers, standpipes, etc.

The electrical output is a 2-wired, loop powered 4 – 20 mA output signal, which is proportional to the refrigerant liquid level.

AKS 4100/4100U in a cable version is suitable for HCFC, Non flammable HFC and R717 (Ammonia), and differing lengths from 800 mm(31.5 in) and up to 5000 mm (197 in).

The coaxial version of AKS 4100/4100U is designed for use with R744 (CO_2), HCFC, Non flammable HFC and R717 (Ammonia).

The AKS 4100/4100U coaxial version should always be used for marine applications for all refrigerant types.

The AKS 4100/4100U cable version should NOT be used for CO_2 or marine applications.

Dust, foam, vapour, agitated surfaces, boiling surfaces, changes in density or in the dielectric constant , εr, for the liquid have no influence on the AKS 4100/4100U performance.

Oil accumulated in the bottom of a standpipe will not disturb the liquid level signal and it is not necessary to remove AKS 4100/4100U for cleaning after oil has been drained out of the standpipe.

Features

- Approved and qualified by Danfoss for refrigeration applications
- One product covering several probe lengths (cable version)
- A single product for all commonly used refrigerants (cable version)
- Cable version requires less top-end clearance for installation and service
- Proven operation with all refrigerants in combination with oil
- No need to clean cable version when fully covered by oil
- The cable version is very compact and easy to handle, ship, install and use with different lengths and refrigerants
- Changes of the liquid dielectric constant (εr) do not affect operation
- 5000 mm (197 in) probe length with cable version
- 2-wire loop powered; no separate transformer needed

  Please Note:
  AKS 4100/4100U can be connected directly to Danfoss EKE 347 liquid level controller and thus be powered from EKE 347

  If used together with Danfoss EKC 347 liquid level controller, a 14 – 30 V DC supply is required.
- Multi language HMI. Level and setting readout in mm,cm,m (ft, in)

  Language HMI versions:
  - English (default), German, French, Spanish
  - English (default),Japanese, Chinese Russian

For further details regarding mechanical and electrical installation please refer to the product installation guides DKRCI.PI.SC0.D (CABLE version), DKRCI.PI.SC0.E (COAXIAL D14 version) and DKRCI.PI.SC0.H1 / DKRCI.PI.SC0.J1 (COAXIAL D22 version).

Product concept

AKS 4100/4100U is available in two different versions:

- Cable version
- Coaxial version

Both Cable and Coaxial versions are available with two different mechanical process connections:

- AKS 4100: G1 in pipe thread. Aluminium gasket included
- AKS 4100U: ¾ in NPT

CABLE version:

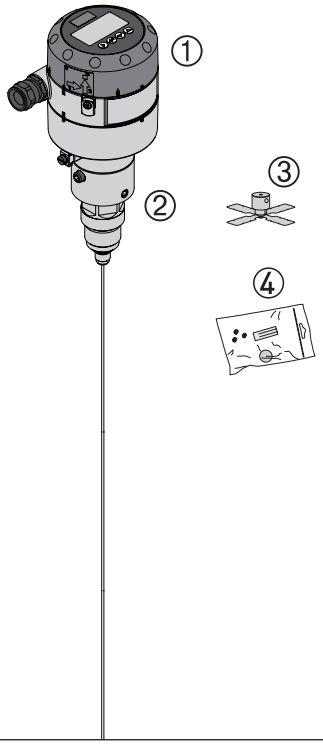

COAXIAL D14 version:

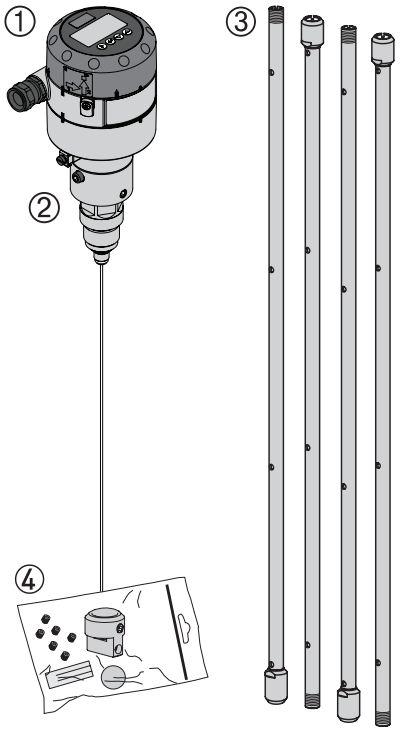

COAXIAL D22 version:

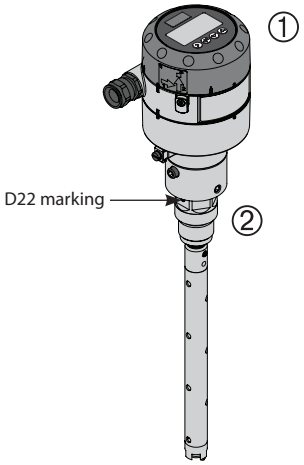

Cable version

Cable version

The cable version consists of:

① Signal converter, which can be supplied with or without HMI
② Mechanical process connection with 5 m (197 in) Ø2 mm (0.08 in) stainless cable
③ Counterweight
④ Accessory bag comprising:
3 mm set screws
Red cover to protect mechanical process connection ② prior to mounting signal converter.
Setting label.

With the cable version it is possible to adapt the AKS 4100/4100U to any possible length in the range of 800 mm (31.5 in) to 5000 mm (196.9 in)

Cable version can be used in R717 / NH_3, HCFC and HFC (εr, liquid > 5.6).

AKS 4100/4100U cable version must ALWAYS be installed in a standpipe.

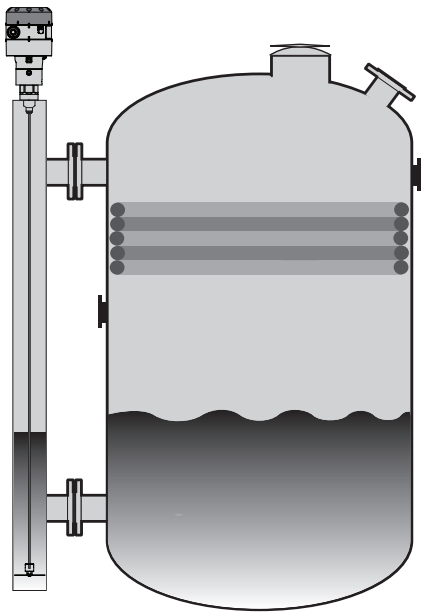

Coaxial version

Coaxial D14 version (see page 818)
The Coaxial D14 version consists of:
① Signal Converter (with or without HMI)
② Mechanical process connection with 5 m / 197 in., Ø2 mm / 0.08 stainless wire
③ Tube(s) depending on required length
④ Accessory bag comprising:
- End Connector (incl. 3 mm / 0.12 in. set screws.)
- 3 mm / 0.12 in. set crews (1 set screw pr. tube)
- Red cover to protect mechanical process connection ②, before Signal Converter is mounted.
- Setting label.

Coaxial D22 version (see page 818)
The Coaxial D22 version consists of:
① Signal Converter (with or without HMI)
② Mechanical process connection 280 mm / 11 in., . 8 mm / 0.3 in. inner rod.

The coaxial version is mandatory for use in:
- R744 / CO_2 (εr, liquid > 1.3).
- Marine applications

The Coaxial D14 version is allround for R744, R717, HCFC and Non flammable HFC.

The Coaxial D22 comes in 2 versions.
One is applicable for R717 only.
The other version is for R744, HCFC and HFC (see ordering section).

AKS 4100/4100U, Coaxial can be installed in a standpipe (a) or directly in a vessel (b).

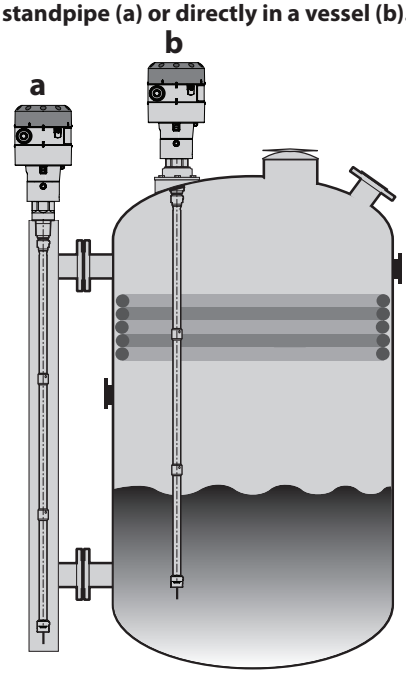

The coaxial version is available in the following probe lengths:

Danfoss type	Tube diameter		Type selection in HMI	Thread
AKS 4100, 280 mm	22 mm	0.87 in.	D22	G1 in. pipe thread
AKS 4100, 500 mm	14 mm	0. 55 in.	D14	G1 in. pipe thread
AKS 4100, 800 mm	14 mm	0.55 in.	D14	G1 in. pipe thread
AKS 4100, 1000 mm	14 mm	0.55 in.	D14	G1 in. pipe thread
AKS 4100, 1200 mm	14 mm	0.55 in.	D14	G1 in. pipe thread
AKS 4100, 1500 mm	14 mm	0.55 in.	D14	G1 in. pipe thread
AKS 4100, 1700 mm	14 mm	0.55 in.	D14	G1 in. pipe thread
AKS 4100, 2200 mm	14 mm	0.55 in.	D14	G1 in. pipe thread
AKS 4100U, 11.0 in.	22 mm	0.87 in.	D22	¾ in. NPT
AKS 4100U, 19.2 in.	14 mm	0.55 in.	D14	¾ in. NPT
AKS 4100U, 30 in.	14 mm	0.55 in.	D14	¾ in. NPT
AKS 4100U, 45 in.	14 mm	0.55 in.	D14	¾ in. NPT
AKS 4100U, 55 in.	14 mm	0.55 in.	D14	¾ in. NPT
AKS 4100U, 65 in.	14 mm	0.55 in.	D14	¾ in. NPT
AKS 4100U, 85 in.	14 mm	0.55 in.	D14	¾ in. NPT

Optional HMI

The optional HMI Service / Display unit is used for commissioning and quick on-site setup and is easily mounted on the AKS 4100/4100U.

The service unit supports mulitple languages in both SI and US units.

Supported standard languages:
English (default), German, French, Spanish, Japanese, Chinese and Russian.

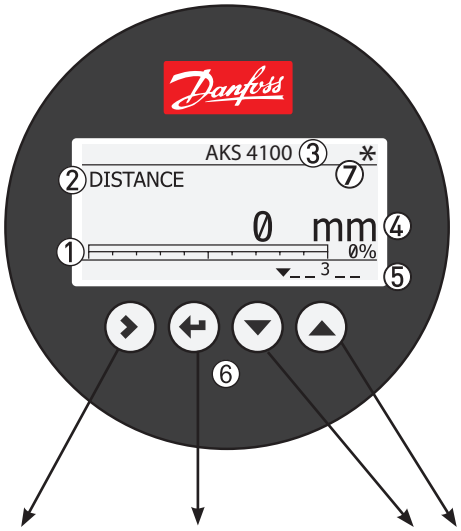

① 4 – 20 mA output displayed as bar graph and in percentage [%]

② Measurement name (in this example, DISTANCE)

③ Device tag name

④ Measurement reading and unit

⑤ Device status (markers)
Marker 1, 2 and 3 (Error)
Hardware problem; the Signal Converter hardware is defective. Contact Danfoss.

Marker 4 and 5 (Notification)
Depending on the level, the marker is ON or OFF. Used for Danfoss service information only.

⑥ Keypad buttons

⑦ Flashing star indicating unit in operation.

Enter menu system
Enter QUICK SETUP

Unit change at distance / level readout:
m, cm, mm, in, ft

Change between:
Distance*
Level**
Output (%)***
Output (mA)****

* DISTANCE is a display option.
If the display is set to "DISTANCE" the displayed value will be the distance from the Reference point to the top surface of the liquid refrigerant (see pages 822 and 823).

** LEVEL is display option.
If the display is set to "LEVEL" then the value displayed will be:
PROBE LENGTH (entered in QUICK SETUP) – DISTANCE (see pages 822 and 823)

***OUTPUT (%) is display option.
Will represent the level of refrigerant,in percent, scaled (entered in QUICK SETUP) according to: SCALE 4 mA (0%), SCALE 20 mA (100%) (see pages 822 and 823).

**** OUTPUT I (mA) is display option.
Will represent the level of refrigerant, in 4-20 milliampere, scaled (entered in QUICK SETUP) according to: SCALE 4 mA (4 mA), SCALE 20 mA (20 mA) (see pages 822 and 823).

Measuring principle (Cable and Coaxial)

1. The electromagnetic (EM) pulse is transmitted by the signal converter
2. The pulse goes down the probe at the speed of light in air, V1
3. The pulse is reflected
4. The pulse goes up the probe at speed, V1
5. The converter receives the pulse and records the signal
6. The EM pulse moves at speed, V1
7. Transmitted EM pulse
8. Half of this time is equivalent to the distance from the reference point of the device (the flange facing) to the surface of the product
9. Received EM pulse

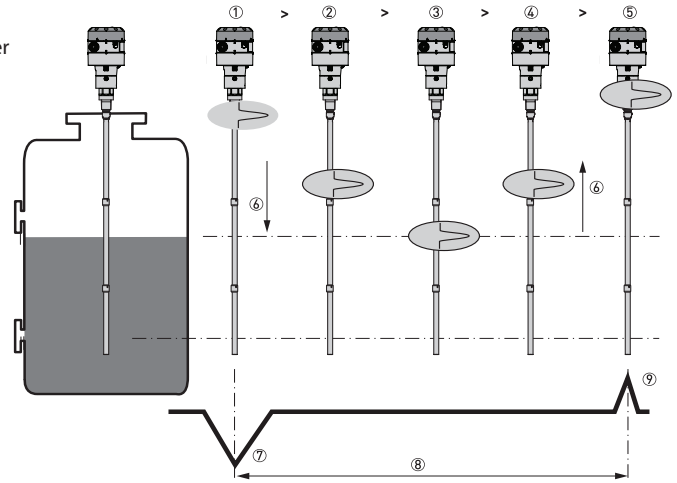

The AKS 4100/4100U electronic converter emits low-intensity, high frequency electromagnetic pulses with a width of approximately 1 nanosecond, which travel at the speed of light along the probe (wire or coaxial cable) down to the liquid surface.

The pulses are reflected by the liquid surface, guided back along the probe, and received and analysed by the AKS 4100/4100U electronic converter and then converted into a liquid level reading. This method is called time domain reflectometry (TDR) or guided microwave.

The dielectric constant, εr, of the liquid is a key parameter and has a direct impact on the degree of reflection of the high frequency electromagnetic pulses. Liquids with high εr values, such as ammonia, produce strong reflections, while liquids with low εr values, such as CO_2, produce weak reflections.

As long as the εr value of the liquid refrigerant is higher than 1.2, AKS 4100/4100U can detect the liquid level and level measurement accuracy is not affected.

If the temperature condition in the standpipe / vessel is known, a constant (dielectric constant of the refrigerant gas) can be entered (parameter 2.5.3 GAS EPS.R), in order to obtain improved Top and Bottom Dead Zone values.

Refer to pages 822 to 823 for Measuring range of AKS 4100/4100U - CABLE version and COAXIAL version.

For details of gas constant values for different temperatures and refrigerants plus the procedure for entering these via the HMI, refer to pages 831 to 832.

Main technical data

(see a complete list of all technical data on page 826)

Supply Voltage
14 – 30 V DC Min/Max. Value for an output of 22 mA at the terminal.

Ambient temperature supply voltage limitations:
-40 – 80 °C / -40 – 176 °F : 16 – 30 V DC
-20 – 80 °C / -4 – 176 °F : 14 – 30 V DC

Load
RL [Ω] ≤ ((Uext -14 V)/20 mA).
– Default (Error output set to 3.6 mA)
RL [Ω] ≤ ((Uext -14 V)/22 mA).
– (Error output set to 22 mA)

Cable gland
AKS 4100 PG 13, M20×1.5 ;
(cable diameter: 6 – 8 mm (0.24 – 0.31in)
AKS 4100U ½ in NPT

Refrigerant temperature
-60 – 100 °C / -76 – 212 °F

Ambient temperature
-40 – 80 °C / -40 – 176 °F
For HMI : -20 – 60 °C / -4 – 140 °F

Process pressure
-1 barg / 100 barg (-14.5 psig / 1450 psig)

Terminals (spring loaded)
0.5 – 1.5 mm^2 (~20-15 AWG)

Enclosure:
IP 66/67 (~NEMA type 4X)

Mechanical connection
Cable version / Coaxial version:
AKS 4100: G1 in pipe thread.
Aluminium gasket included
AKS 4100U: ¾ in NPT

Refrigerants [1])
The listed refrigerants are qualified and approved by Danfoss
R717 / NH_3 -40 – 50 °C / -40 – 122 °F
R744 / CO_2 -50 – 15 °C / -58 – 59 °F

HCFC: R22 -50 – 48 °C / -58 – 118 °F
HFC: R404A -50 – 15 °C / -58 – 59 °F
R410A -50 – 15 °C / -58 – 59 °F
R134A -40 – 50 °C / -40 – 122 °F

The listed refrigerants may be used in the complete temperature range of AKS 4100/4100U, however, the accuracy may be affected if the above listed temperature range is exceeded.

Other refrigerants within the groups of HCFC and HFC can be detected and measured if the following conditions are fulfilled:

Reference conditions
Dielectric constant
Cable version can be used in R717 / NH_3, HCFC and HFC (εr, liquid > 5.6).

The coaxial version is mandatory for use in:
- R744 / CO_2 (εr, liquid > 1.3).
- Marine applications.

The coaxial version can also be used in the refrigerants:
R717 / NH_3, HCFC and HFC.

[1]) AKS 4100 Coaxial 280mm and AKS 4100U Coaxial 11 in are only released for R717 / NH_3

Measuring range of AKS 4100/4100U - CABLE version

Bottom deadzone values based on the factory setting of dielectric constant

Refrigerant	Probe length range		Bottom dead zone	
	[mm]	[in]	[mm]	[in]
Ammonia, HFC, HCFC	800	31.5	115	4.2
	801 – 999	31.5 – 39	120	4.7
	1000 – 1999	39 – 79	150	5.9
	2000 – 2999	79 – 118	180	7.1
	3000 – 3999	118 – 157	210	8.3
	4000 – 5000	157 – 197	240	9.4

Improved Bottom dead zone values after the adjustment of dielectric constant

Refrigerant	Probe length range		Bottom dead zone	
	[mm]	[in]	[mm]	[in]
Ammonia, HFC, HCFC	800 – 5000	31.5 – 197	90	3.5

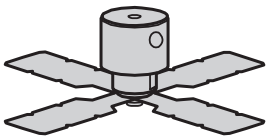

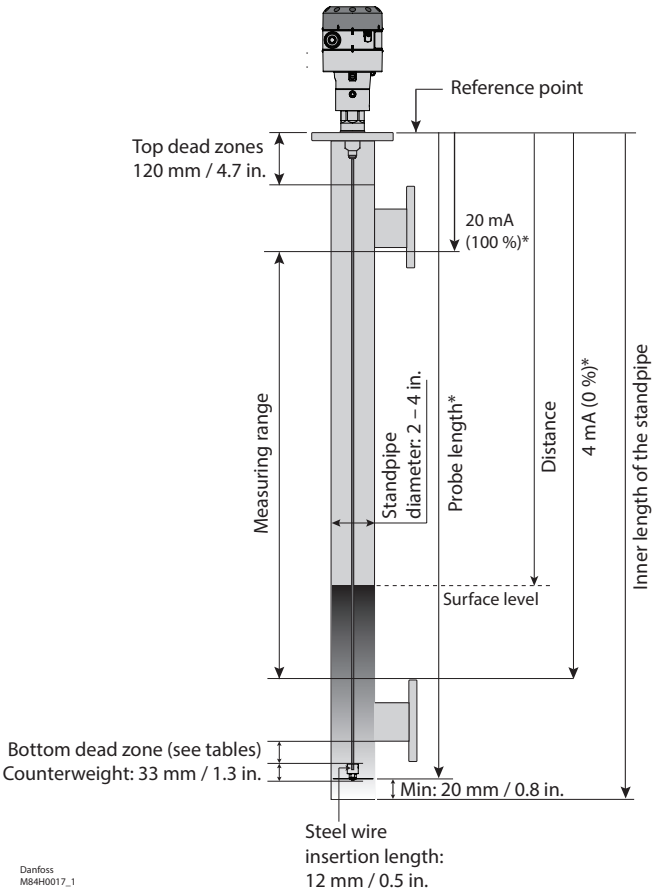

* Values to be entered into HMI Quick Setup menu and recorded on the setting label.
Stick the setting label onto the Signal Converter either inside or outside.

Measuring range of AKS 4100/4100U - COAXIAL D14 version

Please note: It is mandatory to input dielectric constant for CO_2 applications.

AKS 4100

Dielectric Constant εr always set during Quick Setup

Refrigerant	Probe Length [mm]	Probe Length [in.]	Bottom Dead Zone [mm]	Bottom Dead Zone [in.]
CO_2	500	19.7	170	6.7
	800	31.5		
	1000	39.4		
	1200	47.2		
	1500	59.1		
	1700	66.9		
	2200	86.6		

Factory setting

Refrigerant	Probe Length [mm]	Probe Length [in.]	Bottom Dead Zone [mm]	Bottom Dead Zone [in.]
Ammonia	500	19.7	95	3.7
	800	31.5	104	4.1
	1000	39.4	110	4.3
	1200	47.2	116	4.6
	1500	59.1	125	4.9
	1700	66.9	131	5.2
	2200	86.6	146	5.8

Improved Bottom dead zone values after the adjustment of dielectric constant

Refrigerant	Probe Length [mm]	Probe Length [in.]	Bottom Dead Zone [mm]	Bottom Dead Zone [in.]
Ammonia	500	19.7	80	3.2
	800	31.5		
	1000	39.4		
	1200	47.2		
	1500	59.1		
	1700	66.9		
	2200	86.6		

Factory setting

Refrigerant	Probe Length [mm]	Probe Length [in.]	Bottom Dead Zone [mm]	Bottom Dead Zone [in.]
HCFC,HFC	500	19.7	115	4.5
	800	31.5	124	4.9
	1000	39.4	130	5.1
	1200	47.2	136	5.4
	1500	59.1	145	5.7
	1700	66.9	151	5.9
	2200	86.6	166	6.5

Improved Bottom dead zone values after the adjustment of dielectric constant

Refrigerant	Probe Length [mm]	Probe Length [in.]	Bottom Dead Zone [mm]	Bottom Dead Zone [in.]
HCFC,HFC	500	19.7	100	3.9
	800	31.5		
	1000	39.4		
	1200	47.2		
	1500	59.1		
	1700	66.9		
	2200	86.6		

AKS 4100U

Dielectric Constant εr always set during Quick Setup

Refrigerant	Probe Length [in.]	Bottom Dead Zone [in.]	Bottom Dead Zone [mm]
CO_2	19.2	6.7	170
	30		
	45		
	55		
	65		
	85		

Factory setting

Refrigerant	Probe Length [in.]	Bottom Dead Zone [in.]	Bottom Dead Zone [mm]
Ammonia	19.2	3.73	95
	30	4.05	103
	45	4.50	114
	55	4.80	122
	65	5.10	130
	85	5.70	145

Improved Bottom dead zone values after the adjustment of dielectric constant

Refrigerant	Probe Length [in.]	Bottom Dead Zone [in.]	Bottom Dead Zone [mm]
Ammonia	19.2	3.1	80
	30		
	45		
	55		
	65		
	85		

Factory setting

Refrigerant	Probe Length [in.]	Bottom Dead Zone [in.]	Bottom Dead Zone [mm]
HCFC,HFC	19.2	4.52	115
	30	4.84	123
	45	5.29	134
	55	5.59	142
	65	5.89	150
	85	6.49	165

Improved Bottom dead zone values after the adjustment of dielectric constant

Refrigerant	Probe Length [in.]	Bottom Dead Zone [in.]	Bottom Dead Zone [mm]
HCFC,HFC	19.2	3.94	100
	30		
	45		
	55		
	65		
	85		

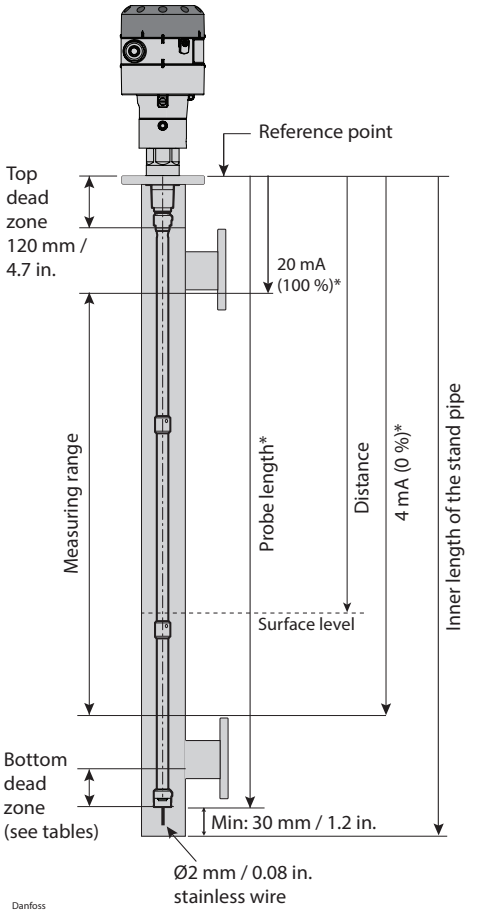

* Values to be entered into HMI Quick Setup menu and recorded on the setting label.
Stick the setting label onto the Signal Converter either inside or outside.

Measuring range of AKS 4100/4100U - COAXIAL D22 version

Factory setting

Refrigerant	Probe Length [mm]	Probe Length [in.]	Bottom Dead Zone [mm]	Bottom Dead Zone [in.]
R717 Ammonia	280	11.0	48	1.9
R744 CO_2			60	2.4
R134a			50	2
R404A				
R410A				
R22				

* Values to be entered into HMI Quick Setup menu and recorded on the setting label.
Stick the setting label onto the Signal Converter either inside or outside.

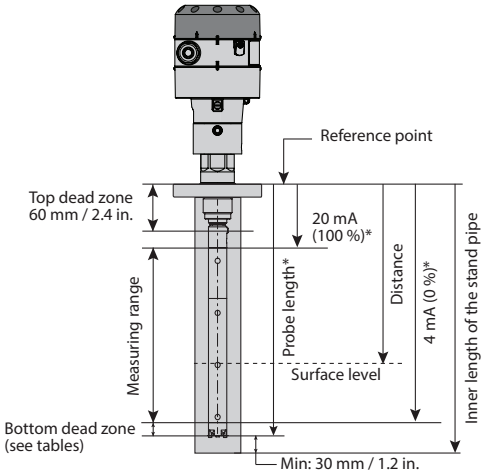

Ordering AKS 4100/4100U

*** When ordering without HMI please observe:**

Each AKS 4100/AKS 4100 must always be programmed via the HMI display unit.

The HMI display unit can be ordered separately:

- **084H4540 / 084H4590**
  AKS 4100/4100U HMI display unit with rear cover and mounting bracket.
  The mounting bracket is very useful when the AKS 4100/4100U have to be programmed.
  The same AKS 4100/4100U HMI display unit can be used to programme more AKS 4100/4100U and both Cable and Coaxial versions.
- **084H4548 / 084H4598**
  AKS 4100/4100U HMI display unit (usually spare part).

Cable *version - AKS 4100/4100U*



Description	Code number with HMI English (default) German French Spanish	Code number with HMI English (default) Japanese Chinese Russian	Code number without HMI
AKS 4100 with 5 m / 197 in., Ø2 mm / Ø0.08 in. stainless cable and counterweight	**084H4501**	**084H4550**	**084H4500**
AKS 4100U with 5 m / 197 in., Ø2 mm / Ø0.08 in. stainless cable and counterweight	**084H4521**	**084H4571**	**084H4520**

Coaxial *version - AKS 4100/4100U (available in predefined lengths, with or without HMI)*

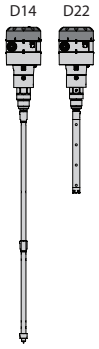

Description	Probe length mm	Probe length in.	Code number with HMI English (default) German French Spanish	Code number with HMI English (default) Japanese Chinese Russian	Code number Without HMI*
AKS 4100 - Coaxial D14	500		**084H4510**	**084H4560**	**084H4503**
AKS 4100 - Coaxial D14	800		**084H4511**	**084H4561**	**084H4504**
AKS 4100 - Coaxial D14	1000		**084H4512**	**084H4562**	**084H4505**
AKS 4100 - Coaxial D14	1200		**084H4513**	**084H4563**	**084H4506**
AKS 4100 - Coaxial D14	1500		**084H4514**	**084H4564**	**084H4507**
AKS 4100 - Coaxial D14	1700		**084H4515**	**084H4565**	**084H4508**
AKS 4100 - Coaxial D14	2200		**084H4516**	**084H4566**	**084H4509**
AKS 4100 - Coaxial D22 for R717	280		**084H4517**	**084H4567**	**084H4518**
AKS 4100 - Coaxial D22 for R744, HCFC, HFC	280		**084H4572**	**084H4573**	**084H4574**
AKS 4100U - Coaxial D14		19.2	**084H4530**	**084H4580**	**084H4524**
AKS 4100U - Coaxial D14		30	**084H4531**	**084H4581**	**084H4525**
AKS 4100U - Coaxial D14		45	**084H4532**	**084H4582**	**084H4526**
AKS 4100U - Coaxial D14		55	**084H4533**	**084H4583**	**084H4527**
AKS 4100U - Coaxial D14		65	**084H4534**	**084H4584**	**084H4528**
AKS 4100U - Coaxial D14		85	**084H4535**	**084H4585**	**084H4529**
AKS 4100U - Coaxial D22 for R717		11	**084H4536**	**084H4586**	**084H4537**
AKS 4100U - Coaxial D22 for R744, HCFC, HFC		11	**084H4575**	**084H4576**	**084H4577**

Accessories



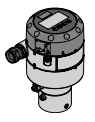

Description	Code number with HMI English (default) German French Spanish	Code number with HMI English (default) Japanese Chinese Russian
AKS 4100/4100U HMI Service/Display unit with rear cover and mounting bracket	**084H4540**	**084H4590**
AKS 4100/4100U HMI Display	**084H4548**	**084H4598**
AKS 4100/4100U Signal Converter + Metaglass **with** HMI, excluding cable gland	**084H4555**	**084H4556**
AKS 4100/4100U converter connecting cable (5 pcs.)	**084H4557**	

Ordering AKS 4100/4100U
Continued

Service kits

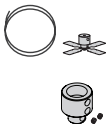

Description	Content	Code number
Cable and counterweight for **AKS 4100/4100U** - CABLE version	Cable - 5 m / 197 in., Ø2 mm / Ø0.08 in.	**084H4542**
	Crimp	
	Counterweight	
End connector incl screws for **AKS 4100/4100U** - COAXIAL D14 version	End connector (incl. 3 mm / 0.12 in. set screws)	**084H4549**

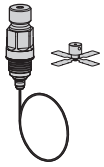

Process connection, counterweight and 5 m / 197 in., Ø2 mm / Ø0.08 in. cable for **AKS 4100** - CABLE and COAXIAL D14 version	1 in. process connection	**084H4545**
	Counterweight	
Process connection, counterweight and 5 m / 197 in., Ø2 mm / Ø0.08 in. cable for **AKS 4100U** - CABLE and COAXIAL D14 version	¾ in. NPT process connection	**084H4546**
	Counterweight	

Other spare parts



Description	Code number
AKS 4100/4100U Coaxial tube. Tube length : 680 mm / 26.8 in.	**084H4543**
AKS 4100/4100U blank top cover for signal converter	**084H4544**
AKS 4100/4100U Aluminium gaskets (10 pcs.) for 1in. process connection	**084H4547**
AKS 4100 1. in. welding connection	**027F1010**
Process connection **AKS 4100** - Coaxial D22 - G1 in. - 280 mm	**084H4551**
Process connection **AKS 4100U** - Coaxial D22 - ¾ in. NPT – 11 in.	**084H4552**

Dimensions and weights

CABLE version

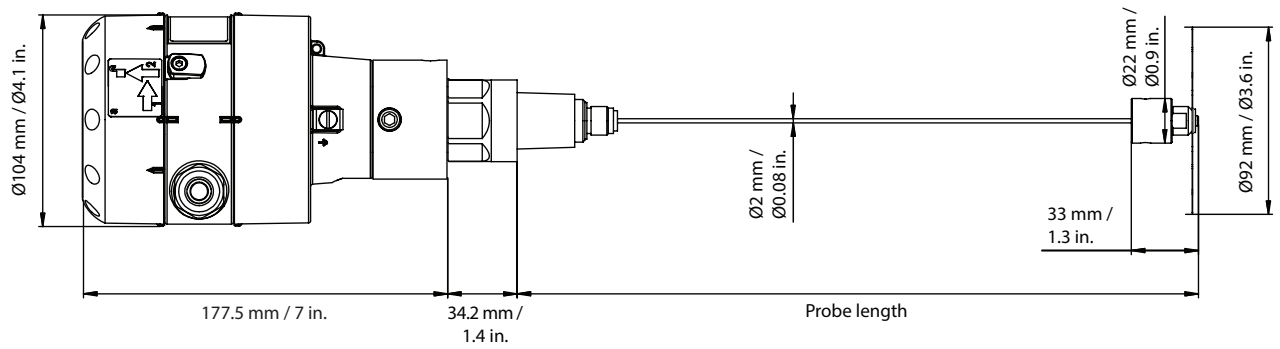

Weight: approx. 2.0 kg (4.4 lbs)

COAXIAL D14 version

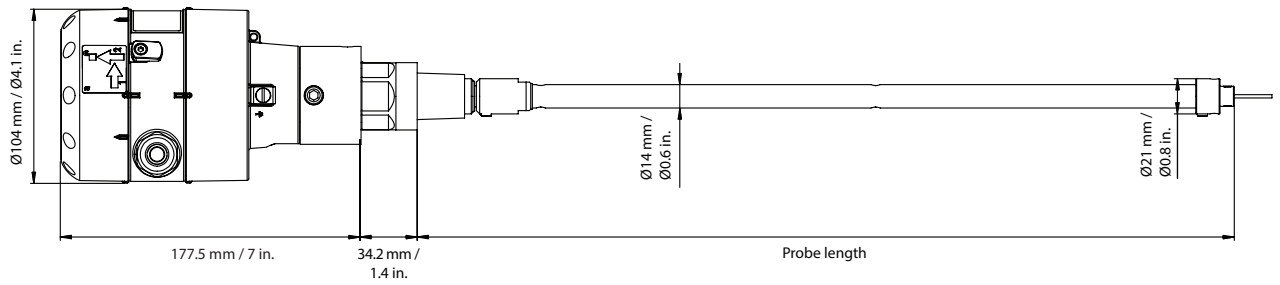

Weight: approx. 3.5 kg (7.7 lbs)

Dimensions and weights *(continued)*

COAXIAL D22 version

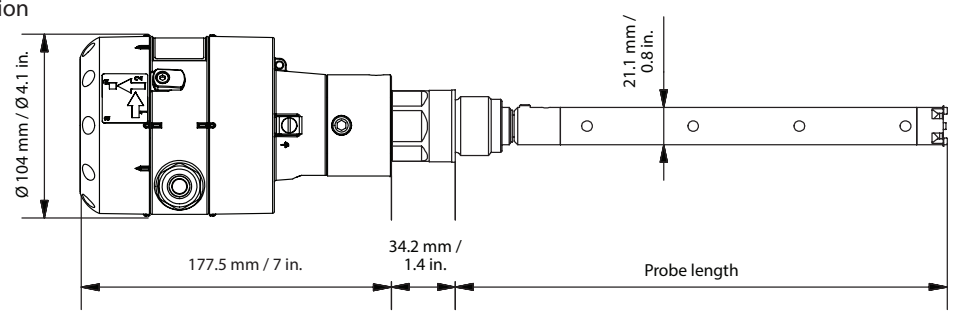

Weight: 2.1 kg (4.6 lbs)

Technical data

Measuring system

Measuring principle	2-wire loop-powered level transmitter; Time Domain Reflectometry (TDR)
Application range	Level measurement of liquid refrigerants. Approved refrigerants: Halogen Free / Environmently friendly: R717 / NH_3, R744 / CO_2 HCFC and non flammable HFC.
Primary measured value	Time between the emitted and received signal
Secondary measured value	Distance or level

Design

Options	**Probe types** *Cable* Mechanical process connection with 5 m (197 in) Ø2 mm (0.08 in) stainless cable: Mechanical thread on the mechanical process connection AKS 4100: G1 in pipe thread. Aluminium gasket included AKS 4100U: ¾ in NPT *Coaxial D14* Mechanical process connection with 5 m (197 in) Ø2 mm (0.08 in) stainless cable and 14 mm (0.55 in) outer stainless tube: Mechanical thread on the mechanical process connection AKS 4100: G1 in pipe thread. Aluminium gasket included AKS 4100U: ¾ in NPT Stainless steel tubes supporting the available probe length *Coaxial D22* Mechanical process connection with in 22 mm (0.87 in) outer stainless tube. 8 mm (0.3 in) inner rod. Mechanical thread on the mechanical process connection AKS 4100: G1 in pipe thread. Aluminium gasket included AKS 4100U: ¾ in NPT
	LCD display
Insertions (probe) length	*Coaxial D14* AKS 4100: 500, 800, 1000, 1200, 1500, 1700 and 2200 mm AKS 4100U: 19.2, 30, 45, 55, 65, 85 in *Coaxial D22* AKS 4100: 280 mm AKS 4100U: 11.0 in
	Single cable Ø2 mm / 0.08 in: 800-5000 mm (31.5 – 197 in)
Dead zone	This depends on the type of probe. (see pages 822 and 823)

Display and User interface

Display	Integrated LCD display
	128 × 64 pixels in 8-step greyscale with 4-button keypad
Interface languages	English (default), German, French, Spanish, Japanese, Chinese, Russian

Operating conditions

Temperature:

Ambient temperature	-40 – 80 °C / -40 – 175 °F For HMI : -20 – 60 °C / -4 – 140 °F
Storage temperature	-40…85 – -40…185 °F
Process connection temperature	**Standard** -60 – 100 °C / -76 – 212 °F

Pressure:

Operating pressure	**Standard:** -1 barg / 100 barg (-14.5 psig / 1450 psig)

Technical data
(continued)

Other conditions:

Liquid dielectric constant (εr)	Cable version to be used in R717 / NH_3, HCFC and HFC εr, liquid > 5.6 Coaxial version is mandatory in R744 / CO_2 εr, liquid > 1.3
Vibration resistance	EN 60721-3-4 (1...9 Hz: 3 mm / 10...200 Hz:1g; 10g shock half-wave sinusoidal: 11 ms)
Protection category	IP 66/67 equivalent to NEMA type 4X (housing) and type 6P (probe)

Installation conditions

Dimensions and weights	See pages 822 and 823

Material

Housing	Aluminium
Coaxial D14 and D22 version	Standard: Stainless steel (1.4404 / 316L)
Single cable	Standard: Stainless steel (1.4401 / 316)
Process fitting	Standard: Stainless steel (1.4404 / 316L)
Gaskets	EPDM (-50...150 – -58...300 °F
Cable gland	Plastic (black)

Process connections

Thread:

Single cable Ø2 mm / 0.08¨	AKS 4100: G1 inch pipe thread. Aluminium gasket included AKS 4100U: ¾ inch NPT
Coaxial D14 and D22 version	AKS 4100: G1 inch pipe thread. Aluminium gasket included AKS 4100U: ¾ inch NPT

Electrical connections

Power supply	**Terminals output:** 14-30 V DC Min./Max. Value for an output of 22 mA at the terminal. Ambient temperature limitations: -40 – 80 °C / -40 – 176 °F : 16 – 30 V DC -20 – 80 °C / -4 – 176 °F : 14 – 30 V DC
Current output load	RL [Ω] ≤ ((Uext -14 V)/20 mA). – Default (Error output set to 3.6 mA) RL [Ω] ≤ ((Uext -14 V)/22 mA). – (Error output set to 22 mA)
Cable gland	AKS 4100: PG 13, M20×1.5 ; (cable diameter: 6-8 mm (0.24-0.31in) AKS 4100U: ½ inch NPT
Cable entry capacity (terminal)	0.5-1.5 mm^2 (~20 – 15 AWG)

Input and output

Current output:

Output signal	4…20 mA or 3.8…20.5 mA acc. to NAMUR NE 43
Resolution	±3 µA
Temperature drift	Typically 75 ppm/K
Error signal	High: 22 mA; Low: 3.6 mA acc. to NAMUR NE 43; Hold (frozen value - not available with NAMURNE 43 compliant output.

Approvals and certification

CE	This device fufills the statutory requirements of the EMC directives. The manufacturer certifies successful testing of the product by applying the CE mark.
*Valid for AKS 4100 - **Not valid for AKS 4100U**:*	
	Pattern Approval Certificate of Measuring Instruments for the Russian Federation
EAC	In compliance with EMC regulations in the Russian Federation

Other standards and approvals:

EMC	EMC Directives 2004 / 108 / EC and 93 / 68 / EEC in conjunction with EN 61326-1 (2006) and EN 61326-2-3 (2006). The device conforms to these standards if : - the device has a coaxial probe or - the device has a single probe that is installed in a metallic tank.
LVD	Low-Voltage Directives 2006 / 95 / EC and 93 / 68 / EEC in conjunction with EN 61010-1 (2001)
NAMUR	NAMUR NE 21 Electromagnetic Compatibility (EMC) of Industrial Process and Laboratory Control Equipment
	NAMUR NE 43 Standardization of the Signal Level for the Failure Information of Digital Transmitters

Technical data
(continued)

Minimum power supply voltage

Use this graph to find the minimum power supply voltage for a given current output load:

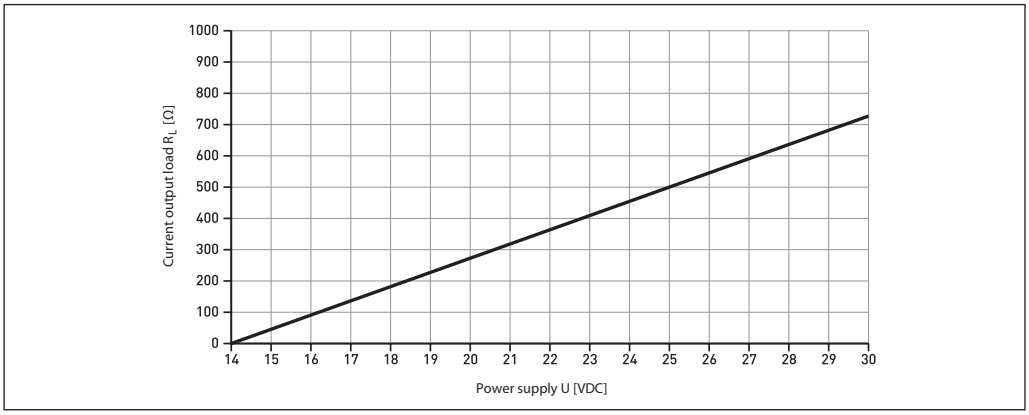

Minimum power supply voltage for an output of 22mA at the terminal

Note:
The signal converter can be programmed with or without mechanical process connector assembled.

Quick Setup (all values below are only examples)

- Connect the device to the power supply (see the section "Electrical installation / connection".
- Press (›) 3 times.

```
AKS 4100
QUICK SETUP ?
YES                NO
```

- Press (›)

```
AKS 4100
PROBE TYPE
SINGLE CABLE
```

- Press (▼) or (▲) to select between SINGLE, COAXIAL D14 and COAXIAL D22.
  Choose **SINGLE** and press (↵) to confirm.

```
AKS 4100
PROBE  LENGTH
05000 mm
```

- Press (›) to change the PROBE LENGTH.
  Press (›) to change the position of the cursor.
  Press (▼) to decrease the value or (▲) to increase the value.
  Press (↵) to confirm.

```
AKS 4100
SCALE 4 mA
04946 mm
```

- Press (›) to change of SCALE 4 mA.
  Press (›) to change the cursor position.
  Press (▼) to decrease the value or (▲) to increase the value.
  Press (↵) to confirm.

```
AKS 4100
SCALE 20 mA
00070 mm
```

- Press (›) to change of SCALE 20 mA.
  Press (›) to change the cursor position.
  Press (▼) to decrease the value or (▲) to increase the value.
  Press (↵) to confirm.

```
AKS 4100
QUICK SETUP
COMPLETED IN  8
```

- Wait for QUICK SETUP to complete 8-second timeout

```
AKS 4100
1.0.0
QUICK SETUP
```

- Press (↵) to confirm.

```
AKS 4100
1.0.0
STORE NO
```

- Press (▼) or (▲) to select either STORE NO or STORE YES.
  Press (↵) to confirm.

Default screen appears:

```
AKS 4100
DISTANCE
5000 mm
```

Quick Setup completed

You have the possibility of checking your settings by pressing (›) twice.

```
AKS 4100
SINGLE CABLE          5000 mm
(0%) 4 mA             4877 mm
(100%) 20 mA           120 mm
```

Press (↵) (▲) (↵) to return to default screen.

Note: The signal converter can be programmed with or without mechanical process connector assembled.

Quick Setup (all values below are only examples)

When CO_2 is used:

- Connect the device to the power supply (see the section "Electrical installation/ connection").
- Press (›) 3 times.

```
AKS 4100
QUICK SETUP ?
YES                NO
```

- Press (›)

```
AKS 4100
PROBE TYPE
SINGLE CABLE
```

- Press (▼) or (▲) to select between SINGLE, COAXIAL D14 and COAXIAL D22. Choose **COAXIAL D14** and press (↵) to confirm.

```
AKS 4100
LIQUID CO2 ?
YES                NO
```

- Press (›) (YES) to confirm

```
AKS 4100
GAS EPS R ?
001.000
```

- Press (›) to change GAS EPS.R. (Select the correct value from the tables on page 832)
  Press (›) to change cursor-position.
  Press (▼) to decrease the value or (▲) to increase the value.
- Press (↵) to confirm.

```
AKS 4100
PROBE LENGTH
05000 mm
```

- Press (›) to change the PROBE LENGTH.
  Press (›) to change the position of the cursor.
  Press (▼) to decrease the value or (▲) to increase the value.
  Press (↵) to confirm.

```
AKS 4100
SCALE 4 mA
02146 mm
```

- Press (›) to change of SCALE 4 mA.
  Press (›) to change the cursor position.
  Press (▼) to decrease the value or (▲) to increase the value.
  Press (↵) to confirm.

```
AKS 4100
SCALE 20 mA
00070 mm
```

- Press (›) to change of SCALE 20 mA.
  Press (›) to change the cursor position.
  Press (▼) to decrease the value or (▲) to increase the value.
  Press (↵) to confirm.

```
AKS 4100
QUICK SETUP
COMPLETED IN 8
```

- Wait for QUICK SETUP to complete. Count down from 8 sec.

```
AKS 4100
1.0.0
QUICK SETUP
```

- Press (↵) to confirm.

```
AKS 4100
1.0.0
STORE NO
```

- Press (▼) or (▲) to select between STORE NO or STORE YES.
  Press (↵) to confirm.

Default screen appears:

```
AKS 4100
DISTANCE
5000 mm
```

Quick Setup completed

You have the possibility of checking your settings by pressing (›) twice.

```
AKS 4100
COAXIAL D14          2200 mm
(0 %) 4 mA          02146 mm
(100 %) 20 mA          70 mm
```

Press (↵) (▲) (↵) to return to default screen.

For all other refrigerants:

- Connect the device to the power supply (see the section "Electrical installation/ connection").
- Press (›) 3 times.

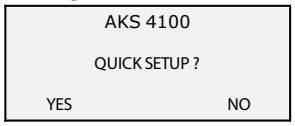

- Press (›)



- Press (▼) or (▲) to select between SINGLE, COAXIAL D14 and COAXIAL D22. Choose **COAXIAL D14** and press (↵) to confirm.

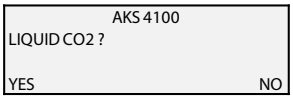

- Press (▲) (NO) to confirm

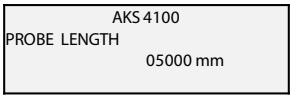

- Press (›) to change the PROBE LENGTH.
  Press (›) to change the position of the cursor.
  Press (▼) to decrease the value or (▲) to increase the value.
  Press (↵) to confirm.

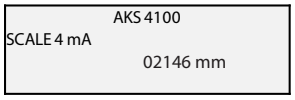

- Press (›) to change of SCALE 4 mA.
  Press (›) to change the cursor position.
  Press (▼) to decrease the value or (▲) to increase the value.
  Press (↵) to confirm.

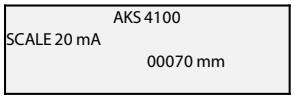

- Press (›) to change of SCALE 20 mA.
  Press (›) to change the cursor position.
  Press (▼) to decrease the value or (▲) to increase the value.
  Press (↵) to confirm.

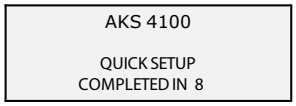

- Wait for QUICK SETUP to complete. Count down from 8 sec.



- Press (↵) to confirm.



- Press (▼) or (▲) to select between STORE NO or STORE YES.
  Press (↵) to confirm.

  Default screen appears:



Quick Setup completed

CABLE and COAXIAL version

Forcing mA output (all values below are only examples)

Default screen

AKS 4100
DISTANCE
5000 mm

- Press ▶

AKS 4100
1.0.0
QUICK SETUP

- Press ▲

AKS 4100
2.0.0
SUPERVISOR

- Press ▶

AKS 4100
2.0.0
_____

Enter password:
▶ ↵ ▼ ▲ ▶ ↵

AKS 4100
2.1.0
INFORMATION

- Press ▲

AKS 4100
2.2.0
TESTS

- Press ▶

AKS 4100
2.2.1
SET OUTPUT

- Press ▶

AKS 4100
SET OUTPUT
3.5 mA

- Press ▼ to decrease the value or ▲ to increase the value.
  Press ↵ to confirm.

AKS 4100
SET OUTPUT
8 mA

- Press ↵ 4 times to return to default screen.

Default screen appears:

AKS 4100
DISTANCE
5000 mm

Force mA completed and disabled

Optional Procedure

If the temperature condition in the stand pipe is known, a constant (dielectric constant of the refrigerant gas) **can be** entered (parameter 2.5.3 GAS EPS.R), in order to obtain lower Top and Bottom Dead Zone values **(see pages 822 and 823)**.

Entering refrigerant dielectric gas constant (all values below are only examples)

Default screen

AKS 4100
DISTANCE
5000 mm

- Press ▶

AKS 4100
1.0.0
QUICK SETUP

- Press ▲

AKS 4100
2.0.0
SUPERVISOR

- Press ▶

AKS 4100
2.0.0
_____

Enter password:
▶ ↵ ▼ ▲ ▶ ↵

AKS 4100
2.1.0
INFORMATION

- Press ▲ 4 times.

AKS 4100
2.5.0
APLICATION

- Press ▶

AKS 4100
2.5.1
TRACING VEL.

- Press ▲ 2 times.

AKS 4100
2.5.3
GAS EPS. R

- Press ▶ to change GAS EPS.R.
  (Select the correct value from the tables on page 832)
  Press ▶ to change cursor-position.
  Press ▼ to decrease the value or ▲ to increase the value.

AKS 4100
GAS EPS. R
1.066

- Press ↵ to confirm.

AKS 4100
2.5.3
GAS EPS. R

- Press ↵ 3 times.

AKS 4100
1.0.0
STORE NO

- Press ▼ or ▲ to select between STORE NO or STORE YES.
  Select STORE YES by pressing ↵

Default screen appears:

AKS 4100
DISTANCE
5000 mm

Entering the dielectric constant of refrigerant gas completed

Saturated vapour dielectric constant (default value: 1.066)

R717 (NH_3)

Temperature range:
-60 – 50 °C / -76 – 122 °F

Temperature [°C]	Temperature [°F]	Dielectric constant of refrigerant gas Parameter 2.5.3 GAS EPS.R
-60 – -42	-76 – -43	1.00
-41 – -18	42 – 0	1.01
-17 – -5	1 – 23	1.02
-4 – 4	24 – 39	1.03
5 – 12	40 – 54	1.04
13 – 18	55 – 64	1.05
19 – 24	65 – 75	1.06
25 – 28	76 – 82	1.07
29 – 33	83 – 91	1.08
34 – 37	92 – 99	1.09
38 – 40	100 – 104	1.10
41 – 44	105 – 111	1.11
45 – 47	112 – 117	1.12
48 – 50	118 – 122	1.13

R22

Temperature range:
-60 – 48 °C / -76 – 118 °F

Temperature [°C]	Temperature [°F]	Dielectric constant of refrigerant gas Parameter 2.5.3 GAS EPS.R
-60 – -50	-76 – -58	1.00
-49 – -25	57 – -13	1.01
-24 – -10	-12 – 14	1.02
-9 – 0	15 – 32	1.03
1 – 8	33 – 46	1.04
9 – 15	47 – 59	1.05
16 – 21	60 – 70	1.06
22 – 26	71 – 79	1.07
27 – 31	80 – 88	1.08
32 – 35	89 – 95	1.09
36 – 39	96 – 102	1.10
40 – 42	103 – 108	1.11
43 – 45	109 – 113	1.12
46 – 48	114 – 118	1.13

R410A

Temperature range:
-65 – 15 °C / -85 – 59 °F

Temperature [°C]	Temperature [°F]	Dielectric constant of refrigerant gas Parameter 2.5.3 GAS EPS.R
-65 – -47	-85 – -52	1.01
-46 – -35	-51 – -31	1.02
-34 – -26	-30 – -14	1.03
-25 – -19	-13 – -2	1.04
-18 – -13	-1 – 9	1.05
-12 – -8	10 – 18	1.06
-7 – -4	19 – 25	1.07
-3 – 0	26 – 32	1.08
1 – 4	33 – 40	1.09
5 – 7	41 – 45	1.10
8 – 10	46 – 50	1.11
11 – 12	51 – 54	1.12
13 – 15	55 – 59	1.13

R507

Temperature range:
-60 – 15 °C / -76 – 59 °F

Temperature [°C]	Temperature [°F]	Dielectric constant of refrigerant gas Parameter 2.5.3 GAS EPS.R
-60 – -48	-76 – -54	1.01
-47 – -36	-53 – -32	1.02
-35 – -28	-31 – -18	1.03
-27 – -21	-17 – -6	1.04
-20 – -15	-17 – -5	1.05
-14 – -10	-4 – 14	1.06
-9 – -6	13 – 22	1.07
-5 – -2	23 – 29	1.08
-1 – 2	30 – 36	1.09
3 – 5	37 – 41	1.10
6 – 8	42 – 47	1.11
9 – 11	48 – 52	1.12
12 – 13	53 – 56	1.13
14 – 15	57 – 59	1.14

R744 (CO_2)

Temperature range:
-56 – 15 °C / -69 – 59 °F

Temperature [°C]	Temperature [°F]	Dielectric constant of refrigerant gas Parameter 2.5.3 GAS EPS.R
-56.0 – -42.0	-69 – -43	1.01
-41.0 – -28.0	-42 – -18	1.02
-27.0 – -17.0	-17 – 2	1.03
-16.0 – -9.0	3 – 16	1.04
-8.0 – -3.0	17 – 27	1.05
-2.0 – 2	28 – 36	1.06
3 – 7	37 – 45	1.07
8 – 11	46 – 52	1.08
12 – 14	53 – 58	1.09
15	59	1.10

R134a

Temperature range:
-60 °C – 50 °C / -76 – 122 °F

Temperature [°C]	Temperature [°F]	Dielectric constant of refrigerant gas Parameter 2.5.3 GAS EPS.R
-60 – -42	-76 – -43	1.00
-41 – -18	-42 – -0	1.01
-17 – -4	1 – 25	1.02
-3 – 5	26 – 41	1.03
6 – 13	42 – 56	1.04
14 – 20	57 – 68	1.05
21 – 25	69 – 77	1.06
26 – 30	78 – 86	1.07
31 – 34	87 – 94	1.08
35 – 38	95 – 100	1.09
39 – 42	101 – 108	1.10
43 – 45	109 – 113	1.11
46 – 48	114 – 119	1.12
49 – 50	120 – 122	1.13

R404A

Temperature range:
-60 – 15 °C / -76 – 59 °F

Temperature [°C]	Temperature [°F]	Dielectric constant of refrigerant gas Parameter 2.5.3 GAS EPS.R
-60 – -47	-76 – -52	1.01
-46 – -35	-51 – -31	1.02
-34 – -26	-30 – -14	1.03
-25 – -19	-13 – -2	1.04
-18 – -14	-1 – 7	1.05
-13 – -9	8 – 16	1.06
-8 – -4	17 – 25	1.07
-3 – 0	26 – 32	1.08
1 – 3	33 – 38	1.09
4 – 6	39 – 43	1.10
7 – 9	44 – 49	1.11
10 – 12	50 – 54	1.12
13 – 15	55 – 59	1.13

How to change the language setting (Default: English)

Default screen

```
AKS 4100
DISTANCE
5000 mm
```

- Press (>)

```
AKS 4100
1.0.0
QUICK SETUP
```

- Press (▲)

```
AKS 4100
2.0.0
SUPERVISOR
```

- Press (>)

```
AKS 4100
2.0.0
_________
```

Enter password:
(>) (↵) (▼) (▲) (>) (↵)

```
AKS 4100
2.1.0
INFORMATION
```

- Press (▲) 6 times

```
AKS 4100
2.7.0
DISPLAY
```

- Press (>)

```
AKS 4100
2.7.1
LANGUAGE
```

- Press (>)

```
AKS 4100
LANGUAGE
ENGLISH
```

- Press (▼) or (▲) to see the language possibilities
  Press (↵) to confirm.

```
AKS 4100
2.7.1
LANGUAGE
```

- Press (↵) 3 times

```
AKS 4100
2.0.0
STORE NO
```

- Press (▼) or (▲) to select between STORE NO or STORE YES.
  Select STORE YES by pressing (↵)
  Default screen appears:

```
AKS 4100
DISTANCE
5000 mm
```

Language setup completed

Reset to factory setting

- Go to SUPERVISOR menu (see page 831).

- Go to parameter 2.9.4 Reset Factory.
- Select RESET FACTORY YES

- Press (↵) 3 times to return to default screen.

Factory reset completed.

ENGINEERING
TOMORROW

Danfoss gas detection units
Types GD Basic and Basic+

Contents **Page**

Features ... 837
Working principle/Operation ... 838
Service and maintenance ... 838
Specifications ... 839
Electrical connection ... 840
Fieldbus loop ... 841
General information ... 842
Gas types and thresholds ... 842
Alarm scheme ... 843
Ordering ... 843
Spare parts and accessories ... 844

AI272545693488en-000103 | 2018.10

ENGINEERING
TOMORROW

Danfoss gas detection units
Types GD Basic and Basic+



The Basic and Basic+ gas detection units are used for monitoring and warning of hazardous gas concentrations. They can be used for detecting commonly used refrigerants. Depending on the application, they are available with an electrochemical or a semiconductor sensor.

The Basic and Basic+ gas detection units are intended to be connected to a central system like Gas Detection Controller Unit, or a PLC, by either Analog or RS485 open Modbus communications. The central system converts the alarm signal from the Basic unit to activation of alarm devices.

The gas detection units come with a factory default, 2-step alarm set-up ready for use. The integrated software enables the user to configure two individual alarm ranges. Alarm 1, a pre-alarm indicating the gas level has passed a predefined treshold 1, and - if the gas level passes predefined treshold 2 - the final alarm 2.

Features

- Digital, factory configured and pre-calibrated gas detectors for plug-and-play installation (no adjustment required)
- Easy configuration via intuitive user-interface; helps simplify operator handling and minimize risk of operational, settings and calibration errors
- Flexible connection - by either Analog or RS485 open Modbus communications
- Fieldbus wiring - connect and power up to 96 sensors, wire length max. 900 meter per segment; expansion modules permits additional segments
- Automatic self-diagnostics to ensure correct communication and operation
- Sensor seal cap to prevent premature exposure during installation
- Digital user interface ensures higher sensor accuracy
- Reduced risk of false alarms due to temperature compensated sensors
- Password protected alarm settings allowing authorized access only
- LED status signals and alarms
- Buzzer & Light option for local audio and visual alarms (Basic+)
- On-board acknowledge button to reset alarms and to verify the that no gas leaks are present
- Service alerts on unit, controller or both, readable via service tool Display
- Quick and precise calibration procedures - either by Plug & Play replacement sensors or calibration with gas. No potentiometers or multi-meters required
- For improved safety and to optimize the lifetime of the sensor, degenerated sensors with too low sensitivity (<30%) are rejected during calibration process.
- Conformity to EN 50271, EN 61010-1, ANSI/UL 61010 1, CAN/CSA-C22.2 No. 61010-1
- Enables regulatory compliance with EN 378:2016, ISO 5149:2014, IIAR 2-2017, and ASHRAE 15:2016

Working principle/Operation

One sensor can be connected to the Basic/ Basic+ sensor board via local bus. The Sensor board provides the power supply of the sensor and prepares the measured data for digital communication.

The operation menu of the Basic/Basic+ software is accessed through the connected Gas Detection Controller or via the dedicated GD Service tool (or PC tool). The Service tool (or PC tool) is plugged directly to the board of the unit. The interfaces allow the unit configuration, setting of the unit alarm levels and calibration of the attached sensor.
The service tool (or PC tool) can be used on all units across the Basic, Premium and Heavy Duty platforms.

The alarm signals can be handled by the Gas Detection Controller (or a PLC) via the 4-20 mA (2-10V) analog output or the RS485 open Modbus communication. For additional operational safety the changing of parameters is password protected allowing authorized access only. The factory default password can easily be customized.

Service and maintenance

The Basic/Basic+ gas detection units are calibrated either by replacing of sensor heads or by calibration with gas.

Plug & Play replacement sensors are pre-calibrated and factory certified for quick and easy calibration procedure. The sensor is connected to the local bus via a plug connection enabling easy and simple exchange of sensor instead of an on-site calibration. The internal X-change routine recognizes the exchanged sensor during the exchange process and restarts the measurement mode automatically. An LED indicates the correct procedure of the exchange operation. To ensure the proper functioning of the units and to prevent human errors, the sensor head can only be replaced by the same type and ppm range (exact replacement) that match the configuration. If a different sensor head is installed, the GD unit will show a communication error.

As an alternative, calibration with gas can be performed via the service tool (or PC tool), calibration gas with correct concentration and the Danfoss calibration adapter. The Danfoss gas detection units have an integrated, digital calibration interface and procedure, which makes the calibration process easy, accurate, and time-saving. No potentiometers or multi-meters required for the calibration. The calibration procedure requires significantly less calibration gas per calibration compared to traditional routines.

Specifications

Electrical

Power supply	19 – 29 V AC/DC, DC reverse-polarity protected
Power consumption (24 V DC)	Max. 250 mA (6 VA)

Outgoing line local bus

Power supply	5 V DC, 250 mA max., overload, short-circuit and reverse-polarity protected

Serial interface

Local bus	1-wire / 19200 baud
Fieldbus	RS 485 / 19200 baud
Tool bus	2-wire / 19200 baud

General

Temperature range	-30 °C to +50 °C (-22 °F to 122 °F)
Humidity range	15 - 90 % RH not-condensing
Storage temperature	+5 °C to +30 °C (41 °F to 86 °F)
Storage time	12 months

Physical

Housing	Type A
Material	Polycarbonate
Burning behaviour	UL 94 V2
Housing colour	Black
Dimensions (W x H x D in mm)	94 x 130 x 57
Weight (kg)	Approx. 0.3kg (0.8 lbs.)
Protection class	IP 65
Installation	Wall mounting
Cable entry	2 x M12 / 3 x M20
Wire connection: Power supply, fieldbus Analog output Local bus for sensor	 Screw-type terminals 0.25 to 2.5 mm^2 (25 AWG to 14 AWG) Screw-type terminals 0.25 to 1.3 mm^2 (25 AWG to 17 AWG) 3-pin plug connector
Cable lengths local bus for remote sensor board	Max. 5 m (16.4 ft.)

Directives

EMC directives 2014/30/EU
CE
Conformity to EN 50271, EN 61010-1 ETL listed to UL 61010-1 and CSA C22.2 No.61010-1 Enables regulatory compliance with EN 378:2016, ISO 5149:2014, IIAR 2-2017, and ASHRAE 15:2016

Analog output signal

Proportional, overload and short-circuit proof, load ≤ 500 Ohm 4 - 20 mA = measuring range 3.0 < 4 mA = underrange > 20 - 21.2 mA = overrange 2.0 mA = fault

Status LED / Buzzer & light (only Basic+)

Colour	3 color light: Green, yellow, red
Acoustic pressure	> 85 dB (A) (0.1 m distance)
Frequency	2300 Hz
Protection class	IP 65

Electrical connection

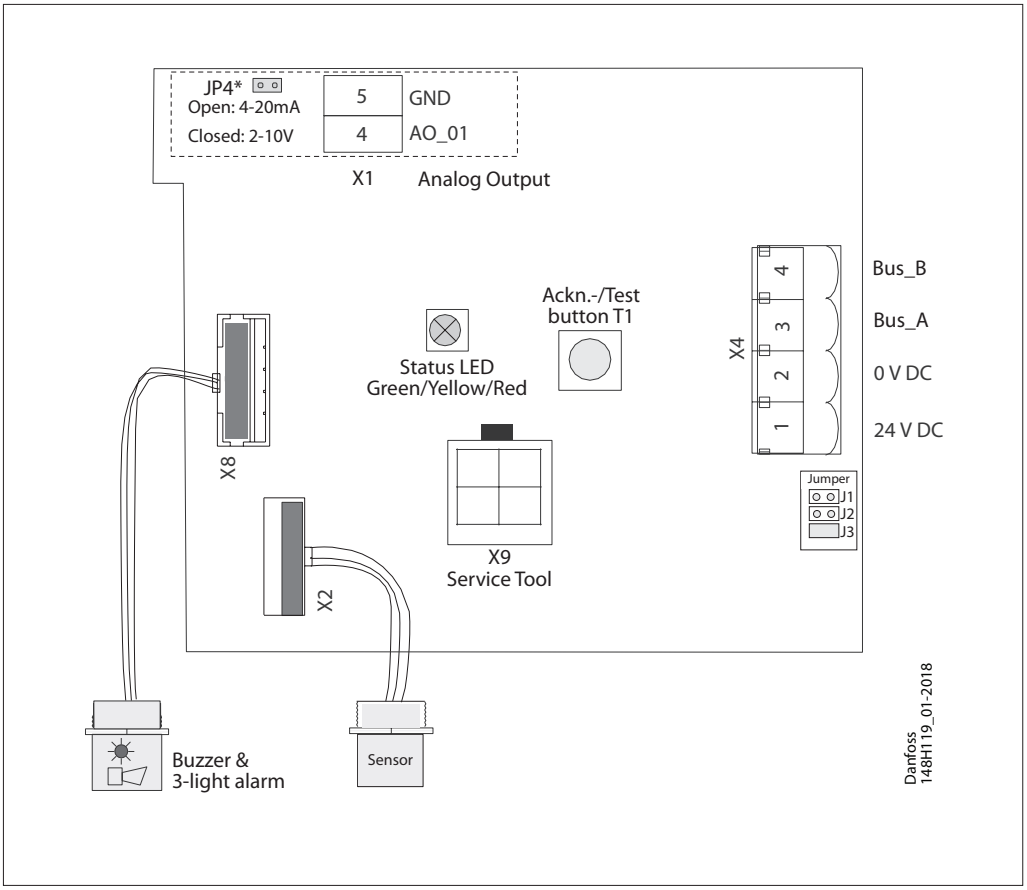

Status LED:

GREEN is power on.
- flashing if maintenance needed

YELLOW is an indicator of Error.
- when the sensor head is disconnected or not the expected type
- AO is activated but nothing connected
- flashing when sensor is in special mode (e.g. when changing parameters)

RED on alarm, similar to the buzzer & light alarm.

Ackn. -/Test button:

TEST - The button must be pressed for 20 sec.
- Alarm1 and Alarm2 is simulated, stop on release

ACKN. - Pressed while Alarm2, the audible warning switches off and goes back on after 5 min. when the alarm situation is still active.

* JP4 open → AO 4-20 mA (Default)
JP4 closed → AO 2-10 Volt

Fieldbus loop

Each GD controller can handle up to 96 sensors and handle any mix of individual Gas detection units of the types Basic, Premium and Heavy Duty.

The max. recommended loop wire length is 900 meter (2953 ft) per segment.

With additional segments (and additional controller expansion modules) the max recommended loop wire length is 7200 meter (23622 ft).

The controller and the last GDU in each segment must be provided with a resistor of 560 Ohm. A Umin of 16 V DC must be secured at any spot in the loop.

Below figure shows how to make proper connections between the controller and each GDU.

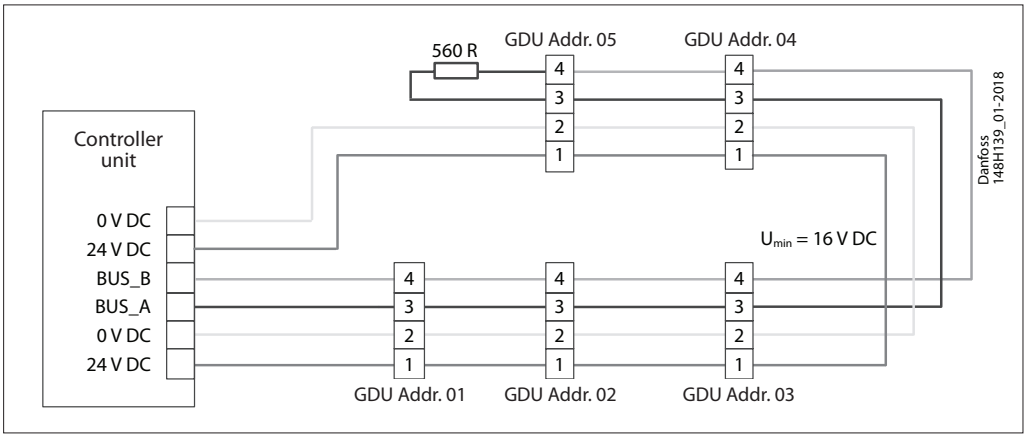

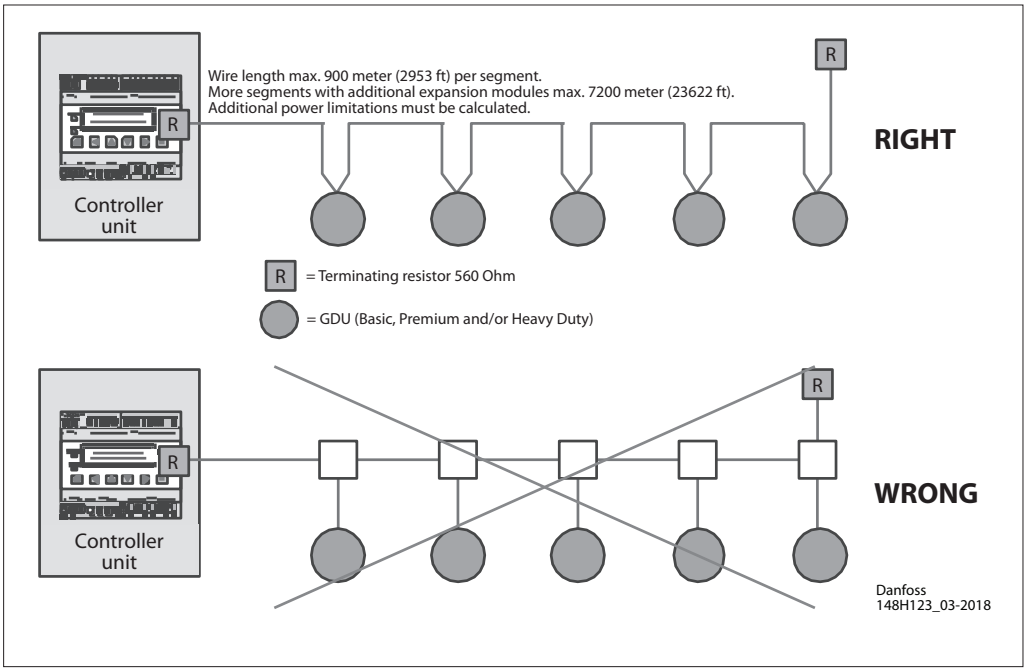

General information

- Cable gland not mounted but enclosed
- 4 mounting ears included
- Sensor head mounted bottom right
- Alarm device (Buzzer & Light) mounted bottom left (only Basic +)

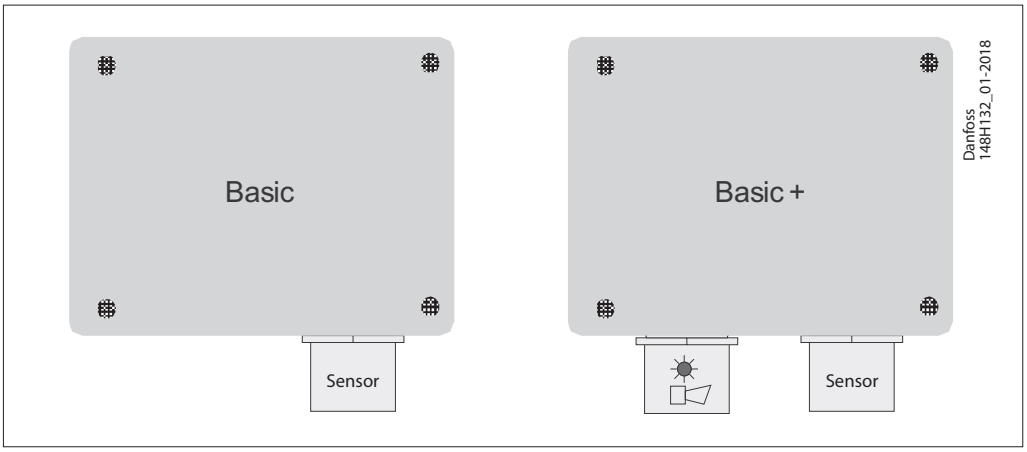

Gas types and thresholds

Sensor	Sensor Type	ppm range	Alarm 1	Alarm 2	Hysteresis
Ammonia EC 100	Electrochemical	0-100	25 ppm	35 ppm	2 ppm
Ammonia EC 300	Electrochemical	0-300	25 ppm	150 ppm	2 ppm
Ammonia EC 1000	Electrochemical	0-1000	500 ppm	900 ppm	25 ppm
Ammonia SC 1000	Semiconductor	0-1000	500 ppm	900 ppm	25 ppm
HFC R404A, R507 SC2000	Semiconductor	0-2000	500 ppm	900 ppm	25 ppm

Hysteresis = 5% of Alarm1 (rounded up to the next higher integer)

Alarm scheme

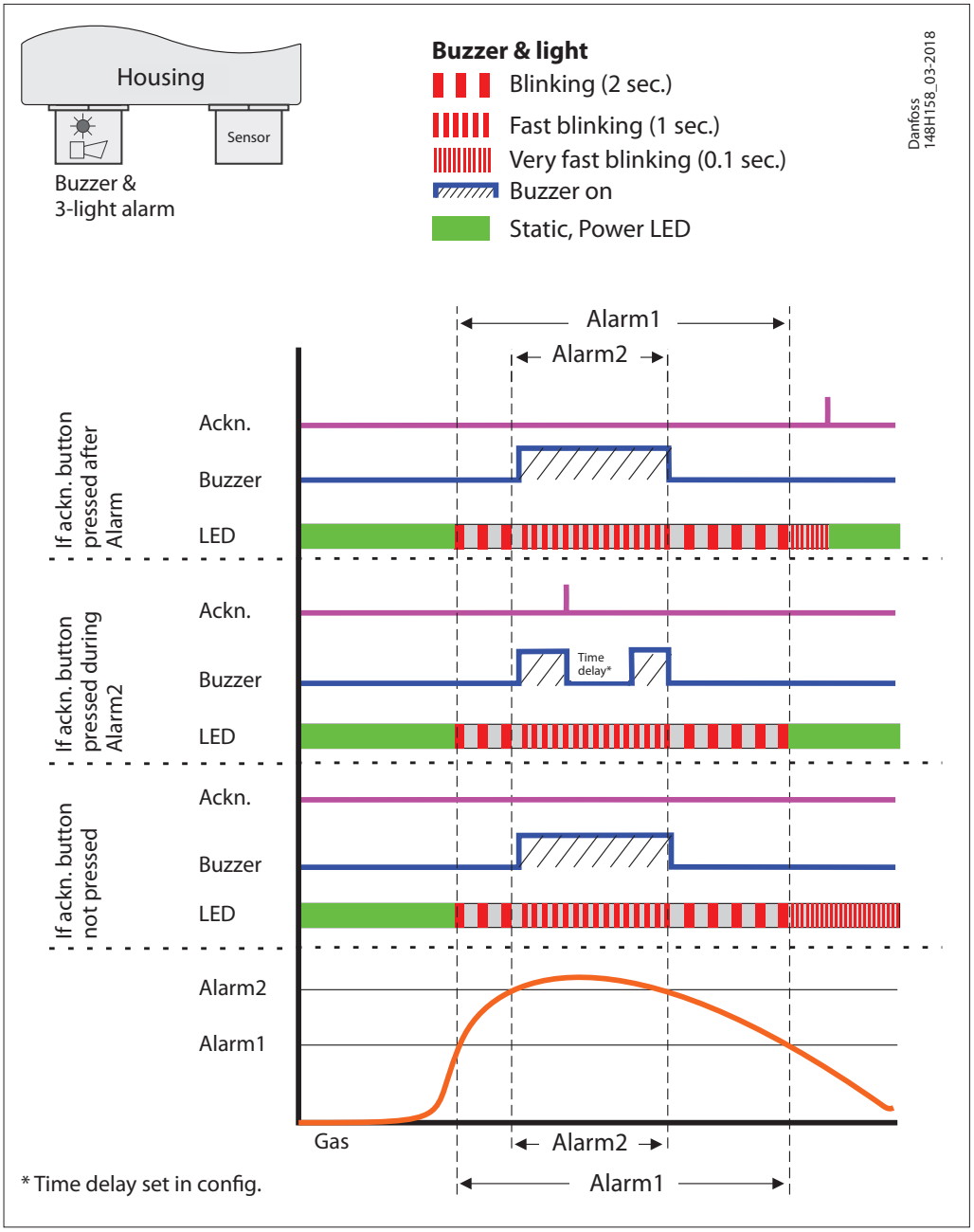

Ordering

Type	Model	Refrigerant	Sensor	ppm range	Alarm ppm	Temp. Range [°C]	Temp. Range [°F]	Code number
GDA	Basic	Ammonia	Electrochemical	0-100	25/35	-30 to +50	-22 to 122	**148H6000**
	Basic+*	Ammonia	Electrochemical	0-100	25/35	-30 to +50	-22 to 122	**148H6001**
	Basic	Ammonia	Electrochemical	0-300	25/150	-30 to +50	-22 to 122	**148H6008**
	Basic+*	Ammonia	Electrochemical	0-300	25/150	-30 to +50	-22 to 122	**148H6009**
	Basic	Ammonia	Electrochemical	0-1000	500/900	-30 to +50	-22 to 122	**148H6014**
	Basic+*	Ammonia	Electrochemical	0-1000	500/900	-30 to +50	-22 to 122	**148H6015**
	Basic	Ammonia	Semiconductor	0-1000	500/900	-10 to +50	14 to 122	**148H6023**
	Basic+*	Ammonia	Semiconductor	0-1000	500/900	-10 to +50	14 to 122	**148H6024**
GDHF	Basic	R404a, R507a, R32, R125, R407c, R434a, R488a, R410a	Semiconductor	0-2000	500/900	-10 to +50	14 to 122	**148H6045**
	Basic+*	R404a, R507a, R32, R125, R407c, R434a, R488a, R410a	Semiconductor	0-2000	500/900	-10 to +50	14 to 122	**148H6046**

* incl buzzer & Light

Spare parts and accessories

Description	Code number
Replacement sensor - Ammonia EC 100	**148H6200**
Replacement sensor - Ammonia EC 300	**148H6201**
Replacement sensor - Ammonia EC 1000	**148H6202**
Replacement sensor - Ammonia SC 1000	**148H6203**
Replacement sensor - HFC R404A, R507 SC 2000	**148H6210**
Controller unit	**148H6231**
Controller solution (controller + enclosure)	**148H6221**
Warning module (wire break monitoring module)	**148H6223**
Controller expansion module	**148H6222**
Service tool	**148H6224**
PC tool	**148H6235**
Calibration adapter	**148H6232**
Buzzer & light - acoustic buzzer and optic led	**148H6225**
Air duct set	**148H6236**
Seal cap	**148H6227**
Splash guard	**148H6226**
Gateway for controller	**148H6228**

Accessories overview

Controller unit
Used for a centralized monitoring and warning. The input signals for the controller are collected via RS485 Modbus or analog communication. The controller can handle up to 96 digital sensors via Fieldbus and four (4) analog input. An additional 28 analog input is possible using seven (7) expansion modules (4-20 mA signal interface). The total number of connected sensors should not exceed 128 sensors. The controller unit can be employed as pure analog controller, as analog/digital, or as digital controller. Configuration is menu-driven via the keypad. For fast and easy configuration, the PC Tool is recommended.

Controller solution
Controller unit placed in an enclosure ready to be connected to a power source. A separate UPS for the controller is available.

Warning module (wire break monitoring module)
The warning module is used for monitoring the circuiting to the warning/alarm devices on a centrally controlled gas detection system. Wire breaks or wire interruptions in the alarm device loop will be reported to the central control.

Controller expansion module
The gas detection Controller Expansion module is used for expansion of the cable coverage in terms of number of loops and the total wire length. Each Controller Unit can handle up to 7 Expansion modules allowing additional 7 segments with a total of 7200 meters (23622 ft.) wiring and a total of 32 relays for alarm device circuits.

Service tool
For interface with units with no display (Basic, Basic+, Premium, Premium+). Acts as a portable display and can be connected to all Danfoss gas detection units. (Heavy Duty w. adapter).

PC tool
The PC tool is a menu-driven and standalone software used for easy addressing, parameter setting, calibration, and data logging of the Basic, Premium and Heavy Duty gas detection units, and the controller unit.

Calibration adapter
The calibration adapter is required for connecting the calibration gas container, via the flow regulator, to the sensor head on the gas detection units. (Two variants, One for Basic and Premium plastic head sensors; one for heavy duty and Premium remote metal head sensors.).

Buzzer & light - acoustic buzzer and optic led
Can be installed in Basic or Premium units providing a local alarm.

Air duct set
The air duct set is specially designed to capture the airflow in air ducts. It can be connected to the standard sensor heads, except from Heavy Duty gas detection units.

Seal cap
Airtight seal cap to protect the sensor head against premature exposure during installation. The seal cap is mounted on new sensors (complete units and replacement sensors) but is also available as an accessory.

Splash guard
To protect the sensor head against water exposure during wash-down cleaning and rinsing operations.

Gateway for controller
The gateway is an addition to the controller and used for communicating via Modbus TCP/IP.

ENGINEERING
TOMORROW

Danfoss gas detection units

Types GD Premium, Premium+, Premium Duplex, Premium Remote, Premium Flex and Premium Uptime

Contents **Page**

Features ... 847
Working principle/Operation ... 848
Service & maintenance ... 848
Specifications ... 849
Electrical connection ... 850
Function ... 850
Fieldbus loop ... 851
General info ... 852
Gas types and thresholds ... 852
Alarm scheme ... 853
Ordering ... 854
Spare parts and accessories ... 855

AI272546579496en-000103 | 2018.10

ENGINEERING
TOMORROW

Danfoss gas detection units

Types GD Premium, Premium+, Premium Duplex, Premium Remote, Premium Flex and Premium Uptime



The Premium line gas detection units are used for monitoring and warning of hazardous gas concentrations. They can be used for detecting most commonly used refrigerants. Depending on the application and model, each unit is available with one or two of 4 sensor types.

The Premium line gas detection units are intended as Stand-alone, or connected to a central system like Gas Detection Controller Unit, or a PLC.

As stand-alone the on-board relays can be used for activation of alarm devices, while the Analog or RS485 Modbus connection to a central system allows additional centralized monitoring and alarm activation.

4 out of the 6 Premium models have integrated Display/keypad for direct access to the user interface

The gas detection units come with a factory default, 2-step alarm set-up ready for use. The user interface enables the user to configure two individual alarm settings. Alarm 1, a pre-alarm indicating the gas level has passed a predefined treshold 1 , and - if the gas level passes predefined treshold 2 - the final alarm 2.

Features

- Digital, factory configured and pre-calibrated gas detectors for plug-and-play installation (no adjustment required)
- Easy configuration via Display/keypad (some models) and intuitive user-interface; helps simplify operator handling and minimize risk of operational, settings and calibration errors
- Stand-alone (integrated relays) and/or flexible connection to central controller - by either Analog or RS485 open Modbus communications
- Wide selection of refrigerants, sensor types and detection ranges
- 2 Sensor versions available
- Remote sensor location possible
- Fieldbus wiring - connect and power up to 96 sensors, wire length max. 900 meters (2953 ft) per segment; expansion modules permits additional segments
- Automatic self-diagnostics to ensure correct communication and operation
- Sensor seal cap to prevent premature exposure during installation
- Digital user interface ensures higher sensor accuracy
- Reduced risk of false alarms due to temperature compensated sensors
- Password protected alarm settings allowing authorized access only
- LED status signals and alarms
- Buzzer & Light option for local audio and visual alarms (Premium+, Premium Uptime)
- On-board acknowledge button to reset alarms and to verify that no gas leaks are present
- Service alerts on unit, controller or both, readable via service tool Display
- Quick and precise calibration procedures - either by Plug & Play replacement sensors or calibration with gas. No potentiometers or multi-meters required
- For improved safety and to optimize the lifetime of the sensor, degenerated sensors with too low sensitivity (<30%) are rejected during calibration process.
- Conformity to EN 50271, EN 61010-1, ANSI/UL 61010 1, CAN/CSA-C22.2 No. 61010-1
- Enables regulatory compliance with EN 378:2016, ISO 5149:2014, IIAR 2-2017, and ASHRAE 15:2016

Working principle/Operation

One (or two) sensor(s) are connected to the Premium sensor board via local bus. The Sensor board provides the power supply of the sensor(s) and prepares the measured data for digital communication.

The operation menu of the Premium software is accessed through the Display (if fitted), or the connected Gas Detection Controller, or via the dedicated GD Service tool (or PC tool). The Service tool (or PC tool) is plugged directly to the board of the unit. These interfaces with Display allow the unit configuration, setting of the unit alarm levels and calibration of the attached sensor(s).

The service tool (or PC tool) can be used on all units across the Basic, Premium and Heavy Duty platforms.

For Stand-alone units the alarm signals are handled by the unit software, which activates the integrated relays directly. For central controlled units the alarm signals are handled by the Gas Detection Controller (or a PLC) via the 4-20 mA (2-10V) analog output or the RS485 open Modbus communication.

For additional operational safety the changing of parameters is password protected allowing authorized access only. The factory default password can easily be customized.

Service & maintenance

The Premium line gas detection units are calibrated either by replacing of sensor heads or by calibration with gas.

Plug & Play replacement sensors are pre-calibrated and factory certified for quick and easy calibration procedure. The sensor is connected to the local bus via a plug connection enabling easy and simple exchange of sensor instead of a calibration. The internal X-change routine recognizes the exchanged sensor during the exchange process and restarts the measurement mode automatically. An LED indicates the correct procedure of the exchange operation. To ensure the proper functioning of the units and to prevent human errors, the sensor head can only be replaced by the same type and ppm range (exact replacement) that match the configuration. If a different sensor head is installed, the GD unit will show a communication error.

As an alternative, calibration with gas can be performed via the service tool (or PC tool), calibration gas with correct concentration and the Danfoss calibration adapter. The Danfoss gas detection units have an integrated, digital calibration interface and procedure, which makes the calibration process easy, accurate, and time-saving. No potentiometers or multi-meters required for the calibration. The calibration procedure requires significantly less calibration gas per calibration compared to traditional routines.

Specifications

Electrical

Power supply	24 V DC ± 20 %, reverse-polarity protected
Power consumption (24 V DC)	Max. 210 mA (5.1 VA)
Alarm relays (3)	250 V AC, 5 A, potential-free, contacts (SPDT)
Transistor output (2) (connector X13)	24 V DC / 0.1 A (switching to plus) (only at 24 V DC power supply)
Analog output signal (1)	Proportional, overload and short-circuit proof, load ≤ 500 Ohm 4 - 20 mA = measuring range 3.0 < 4 mA = underrange > 20 - 21.2 mA = overrange 2.0 mA = fault
Output for local bus	5 V DC, 250 mA max. Overload, short-circuit and reverse-polarity protected

Ambient conditions

Temperature range	Sensor dependant. See ordering section.
Humidity range	15 - 95 % RH not-condensing
Storage temperature	+5 °C to +30 °C (+41 °F to +86 °F)
Storage time	12 months

Serial interface

Local bus	1-wire / 19200 Baud
Fieldbus	RS 485 / 19200 Baud
Tool bus	2-wire / 19200 Baud

Physical

Housing	Type C	Type E (Premium Uptime)
Material	Polycarbonate	
Combustion	UL 94 V2	
Housing colour	Black	
Dimensions (W x H x D in mm)	130 x 130 x 75	130 x 130 x 99
Weight (kg)	Approx. 0.6 kg	Approx. 0.7 kg
Protection class	IP 65	
Installation	Wall mounting	
Cable entry	Standard 6 x M20/25	
Wire connection: Local bus (SC2) Digital input, analog output Power supply, relays	 3-pin connector Screw-type terminal min. 0.25 mm², max. 1.3 mm² (min. 25 AWG, max. 17 AWG) Screw-type terminal min. 0.25 mm², max. 2.5 mm² (min. 25 AWG, max. 14 AWG)	
Cable lengths local bus for Remote Sensor Board	Max. 5 m (16.4 ft.)	

Directives

EMC directives 2014/30/EU
Low voltage directive 2014/35/EU
CE
Conformity to EN 50271, EN 61010-1 ETL listed to UL 61010-1 and CSA C22.2 No.61010-1 Enables regulatory compliance with EN 378:2016, ISO 5149:2014, IIAR 2-2017, and ASHRAE 15:2016

Display (not Premium and Premium+)

Temperature range	-20°C to +50°C (-4°F to 122°F)
LCD	Two lines, 16 characters each, background highlighted in two colours
Operation	Menu driven via six push-buttons
Power consumption	5 V, 60 mA, 0.3 VA

Status LED

Colour / Mode	Red / yellow / green (alarm – fault – operation - service)
Protection class	IP 65

Warning buzzer

Acoustic pressure	> 85 dB (A) (0.1 m distance)
Frequency	2300 Hz
Protection class	IP 65

UPS (only Premium Uptime)

Power unit with wide range input	90 -240 V AC - 50/60 Hz
Output rating	15 VA
Rechargeable battery	12 V, 0.8 Ah
Operating time	> 60 min

Electrical connection

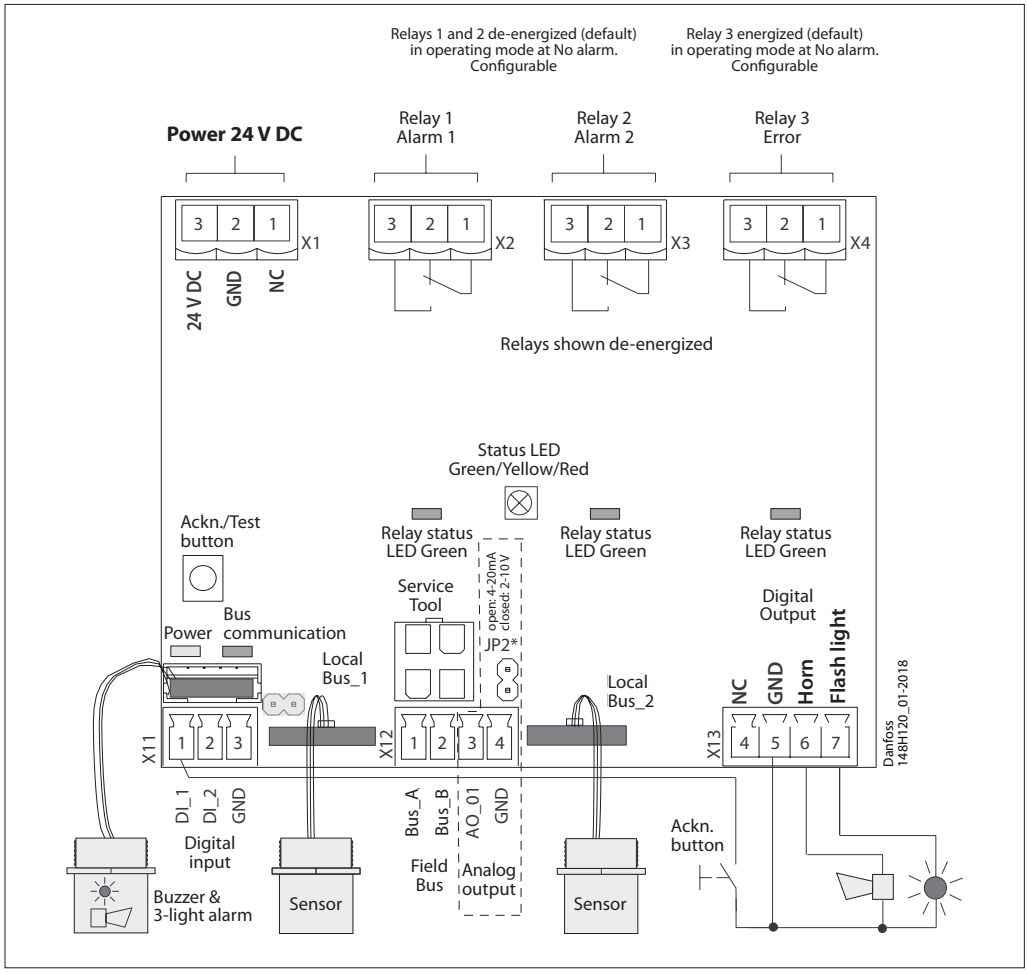

Status LED:

GREEN is power on.
- flashing if maintenance needed

YELLOW is an indicator of Error.
- when the sensor head is disconnected or not the expected type
- AO is activated but nothing connected

RED on alarm, similar to the Buzzer & light alarm.

Ackn. -/Test button:

TEST - The button must be pressed for 20 sec.
- Alarm1 and Alarm2 is simulated, stop on release

ACKN. - Pressed while Alarm2, the audible warning switches off and goes back on after 5 min. when the alarm situation is still active.

* JP2 open → AO 4-20 mA (Default)
JP2 closed → AO 2-10 Volt

Function

Digital outputs with 3 relays

Action	Reaction	Reaction	Reaction	Reaction	Reaction	Reaction
	Relay 1 (Alarm1)	Relay 2 (Alarm2)	Flashlight X13-7	Horn X13-6	Relay 3 (Fault)	LED
Gas signal < alarm threshold 1	OFF	OFF	OFF	OFF	ON	GREEN
Gas signal > alarm threshold 1	ON	OFF	OFF	OFF	ON	RED Slow blinking
Gas signal > alarm threshold 2	ON	ON	ON	ON	ON	RED Fast blinking
Gas signal ≥ alarm threshold 2, but ackn. button pressed	ON	ON	ON	OFF after delay ON		RED Fast blinking
Gas signal < (alarm threshold 2 - hysteresis) but >= alarm threshold 1	ON	OFF	OFF	OFF	ON	RED Slow blinking
Gas signal < (alarm threshold 1 - hysteresis) but not acknowledged	OFF	OFF	OFF	OFF	ON	RED Very fast blinking
No alarm, no fault	OFF	OFF	OFF	OFF	ON	GREEN
No fault, but maintenance due	OFF	OFF	OFF	OFF	ON	GREEN Slow blinking
Communication error	OFF	OFF	OFF	OFF	OFF	YELLOW

Fieldbus loop

Each GD controller can handle up to 96 sensors and handle any mix of individual Gas detection units of the types Basic, Premium and Heavy Duty.

The max. recommended loop wire length is 900 meter (2953 ft) per segment.

With additional segments (and additional controller expansion modules) the max recommended loop wire length is 7200 meter 23622 ft).

The controller and the last GDU in each segment must be provided with a resistor of 560 Ohm. A Umin of 16 V DC must be secured at any spot in the loop.

Below figure shows how to make proper connections between the controller and each GDU.

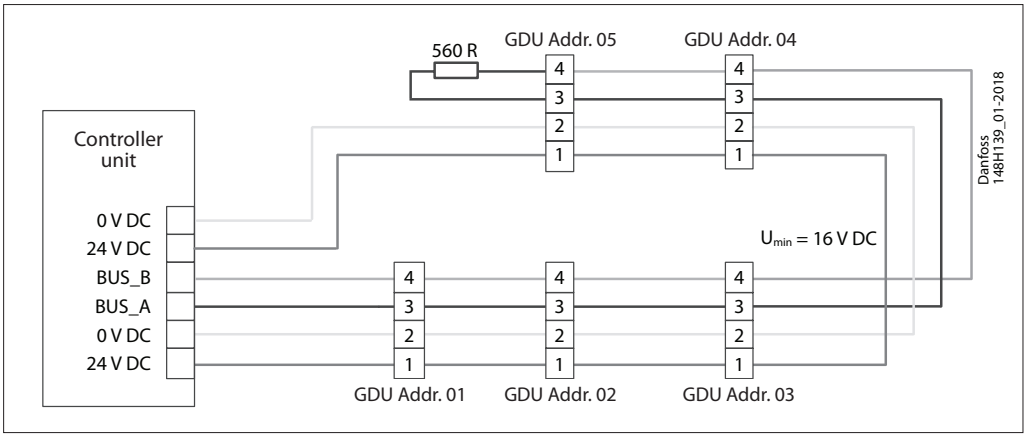

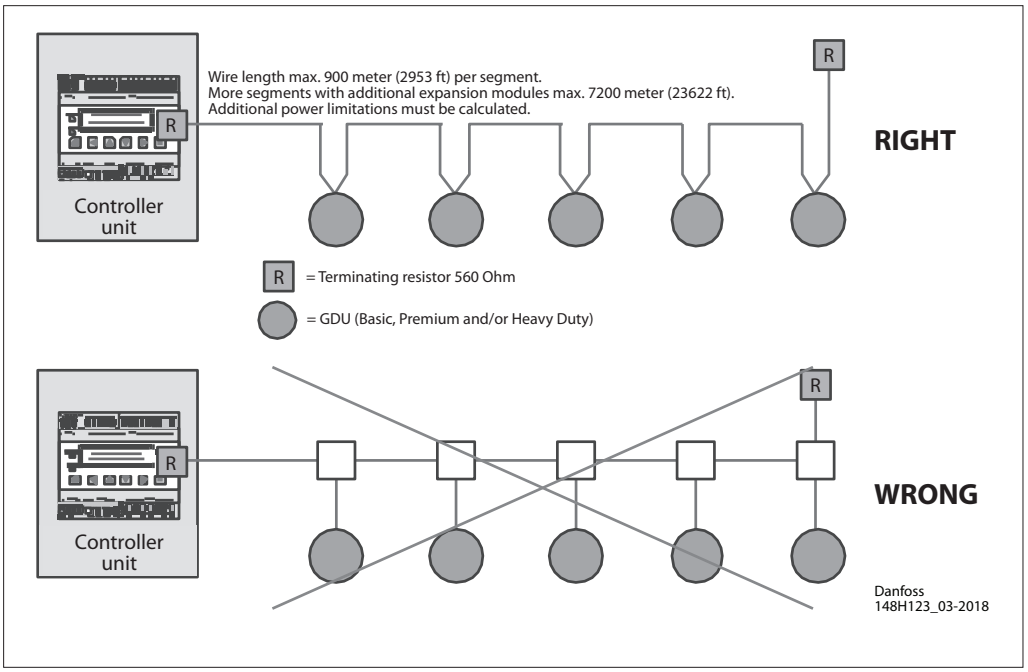

General info

- Cable gland not mounted but enclosed
- 4 mounting ears included
- Sensor head mounted bottom right (not Premium Remote)
- Alarm device (buzzer & 3 light alarm) mounted bottom left (only Premium +, Premium Uptime)

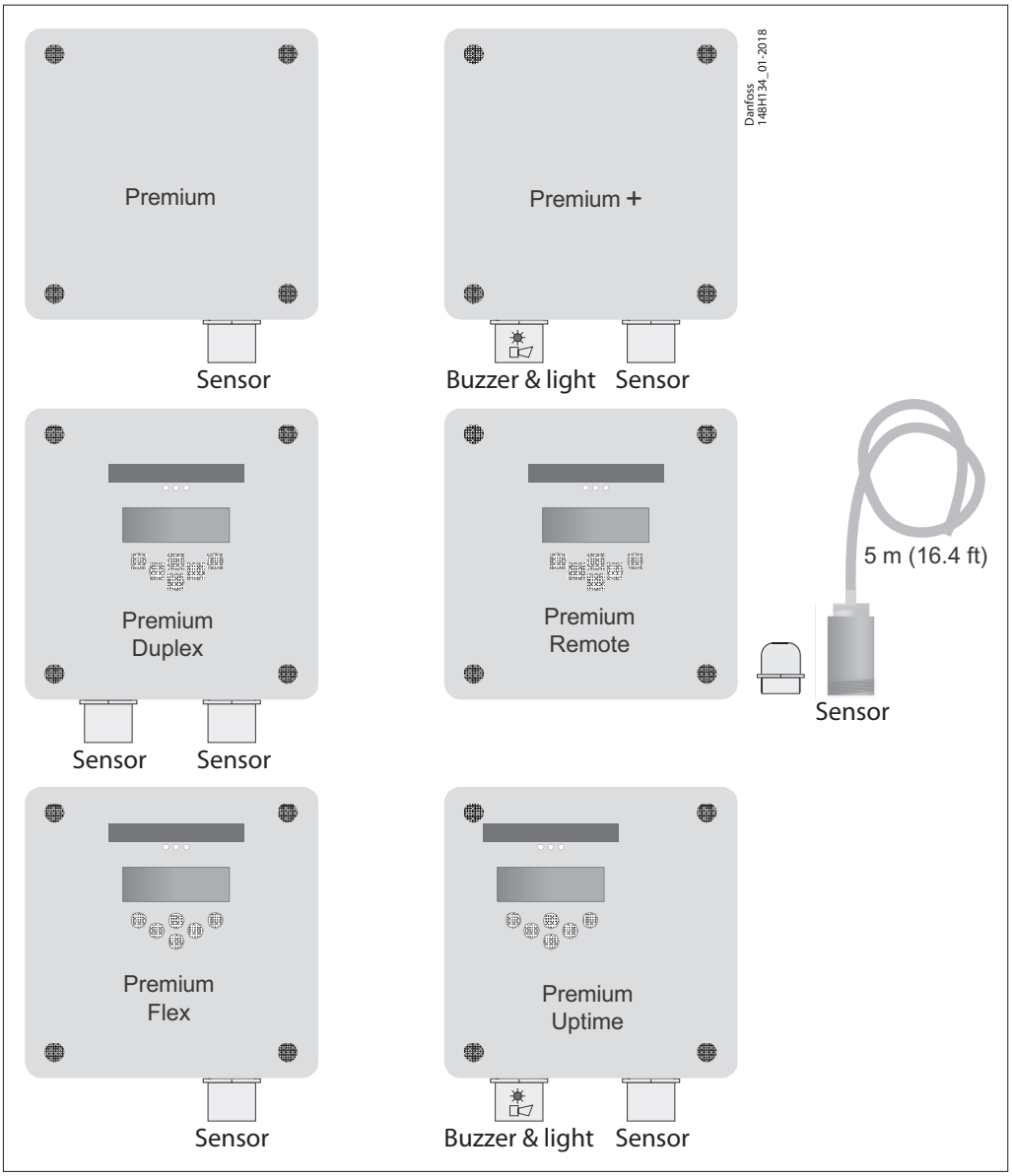

Gas types and thresholds

Sensor	Sensor Type	ppm range	Alarm1	Alarm2	Hysteresis
Ammonia EC 100	Electrochemical	0-100	25 ppm	35 ppm	2 ppm
Ammonia EC 300	Electrochemical	0-300	25 ppm	150 ppm	2 ppm
Ammonia EC 1000	Electrochemical	0-1000	500 ppm	900 ppm	25 ppm
Ammonia EC 5000	Electrochemical	0-5000	1000 ppm	4500 ppm	50 ppm
Ammonia SC 1000	Semiconductor	0-1000	500 ppm	900 ppm	25 ppm
Ammonia SC 10000	Semiconductor	0-10000	5000 ppm	9000 ppm	250 ppm
Ammonia P LEL	Pellistor	0-140000	21% LEL (30000 ppm)	21% LEL (30000 ppm)	1%
CO2 IR 20000 (2% Vol)	Infrared	0-20000	5000 ppm	9000 ppm	250 ppm
CO2 IR 50000 (5% Vol)	Infrared	0-50000	10000 ppm	18000 ppm	500 ppm
HCFC R123 SC 2000	Semiconductor	0-2000	500 ppm	900 ppm	25 ppm
HFC R404A, R507 SC 2000	Semiconductor	0-2000	500 ppm	900 ppm	25 ppm
HFC R134A SC 2000	Semiconductor	0-2000	500 ppm	900 ppm	25 ppm
HC R290/Propane P 5000	Pellistor	0-5000	800 ppm	2500 ppm	40 ppm

Hysteresis = 5% of Alarm1 (rounded up to the next higher integer)
Alarm thresholds can have the same value, therefore the relays and/or the buzzer and LED can be triggered together.

Alarm scheme

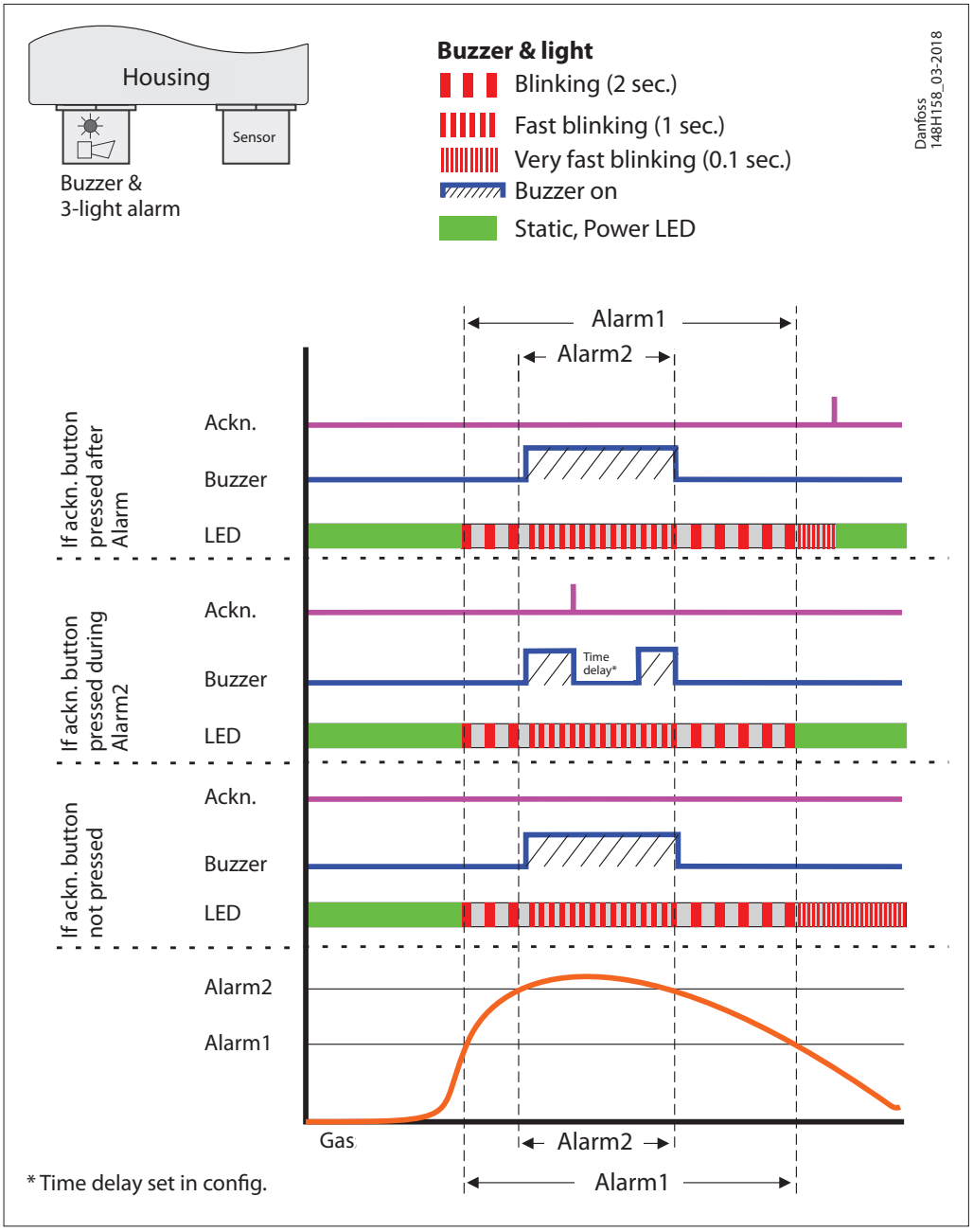

Danfoss gas detection units, types GD Premium, +, Duplex, Remote, Flex and Uptime

Ordering

Premium = Standard
Premium + = Standard + Buzzer & light warning device
Premium Duplex = Standard + 2nd sensor + Display and keyboard
Premium Remote = Remote sensor (stainless steel) with 5m cable (2nd cable gland needed) not mounted but enclosed + Display and keyboard
Premium Flex = Standard + Display and keyboard
Premium Uptime = Standard + Buzzer & light warning device + Display and keyboard + UPS

Type	Model	Refrigerant	Sensor	ppm range	Alarm ppm	2nd Sensor ppm (Alarm ppm)	Remote sensor ppm (Alarm ppm)	Buzzer & Light	Display	UPS	Temp. Range °C	Temp. Range °F	Code number
GDA	Premium	Ammonia	Electrochemical	0-100	25/35						-30 to +50	-22 to 122	**148H6002**
	Premium+	Ammonia	Electrochemical	0-100	25/35			x			-30 to +50	-22 to 122	**148H6003**
	Premium Duplex	Ammonia	Electrochemical Pellistor	0-100	25/35	0-140000 (30000)			x		-20 to +50	-4 to 122	**148H6004**
	Premium Remote	Ammonia	Electrochemical				0-100 (25/35)		x		-20 to +50	-4 to 122	**148H6005**
	Premium Flex	Ammonia	Electrochemical	0-100	25/35				x		-20 to +50	-4 to 122	**148H6006**
	Premium Uptime	Ammonia	Electrochemical	0-100	25/35			x	x	x	0 to +40	32 to 104	**148H6007**
	Premium	Ammonia	Electrochemical	0-300	25/150						-30 to +50	-22 to 122	**148H6010**
	Premium+	Ammonia	Electrochemical	0-300	25/150			x			-30 to +50	-22 to 122	**148H6011**
	Premium Duplex	Ammonia	Electrochemical Pellistor	0-300	25/150	0-140000 (30000)			x		-20 to +50	-4 to 122	**148H6012**
	Premium Flex	Ammonia	Electrochemical	0-300	25/150				x		-20 to +50	-4 to 122	**148H6013**
	Premium	Ammonia	Electrochemical	0-1000	500/900						-30 to +50	-22 to 122	**148H6016**
	Premium+	Ammonia	Electrochemical	0-1000	500/900			x			-30 to +50	-22 to 122	**148H6017**
	Premium Duplex	Ammonia	Electrochemical Pellistor	0-1000	500/900	0-140000 (30000)			x		-20 to +50	-4 to 122	**148H6018**
	Premium Remote	Ammonia	Electrochemical				0-1000 (500/900)		x		-20 to +50	-4 to 122	**148H6019**
	Premium Flex	Ammonia	Electrochemical	0-1000	500/900				x		-20 to +50	-4 to 122	**148H6020**
	Premium Uptime	Ammonia	Electrochemical	0-1000	500/900			x	x	x	0 to +40	32 to 104	**148H6021**
	Premium	Ammonia	Semiconductor	0-1000	500/900						-10 to +50	14 to 122	**148H6025**
	Premium+	Ammonia	Semiconductor	0-1000	500/900			x			-10 to +50	14 to 122	**148H6026**
	Premium Flex	Ammonia	Semiconductor	0-1000	500/900				x		-10 to +50	14 to 122	**148H6027**
	Premium+	Ammonia	Electrochemical	0-5000	1000/4500			x			-30 to +50	-22 to 122	**148H6028**
	Premium Remote	Ammonia	Electrochemical				0-5000 (1000/4500)		x		-20 to +50	-4 to 122	**148H6029**
	Premium Uptime	Ammonia	Electrochemical	0-5000	1000/4500			x	x	x	0 to +40	32 to 104	**148H6030**
	Premium	Ammonia	Semiconductor	0-10000	5000/9000						-10 to +50	14 to 122	**148H6032**
	Premium+	Ammonia	Semiconductor	0-10000	5000/9000			x			-10 to +50	14 to 122	**148H6033**
	Premium Remote	Ammonia	Semiconductor				0-10000 (5000/9000)		x		-10 to +50	14 to 122	**148H6034**
	Premium+	Ammonia	Pellistor	0-140000	30000			x			-25 to +50	-13 to 122	**148H6036**
	Premium Duplex	Ammonia	Semiconductor Pellistor	0-1000	500/900	0-140000 (30000)			x		-10 to +50	14 to 122	**148H6037**
	Premium Flex	Ammonia	Pellistor	0-140000	30000				x		-20 to +50	-4 to 122	**148H6038**
GDC	Premium Flex	CO_2	Infrared	0-20000	5000/9000				x		-20 to +50	-4 to 122	**148H6040**
	Premium Flex	CO_2	Infrared	0-50000	10000/18000				x		-20 to +50	-4 to 122	**148H6041**
GDHC	Premium	R123	Semiconductor	0-2000	500/900						-10 to +50	14 to 122	**148H6042**
	Premium+	R123	Semiconductor	0-2000	500/900			x	x		-10 to +50	14 to 122	**148H6043**
	Premium Flex	R123	Semiconductor	0-2000	500/900				x		-10 to +50	14 to 122	**148H6044**
GDHF	Premium	R404a, R507a, R32, R125, R407c, R434a, R488a, R410a	Semiconductor	0-2000	500/900						-10 to +50	14 to 122	**148H6047**
	Premium+	R404a, R507a, R32, R125, R407c, R434a, R488a, R410a	Semiconductor	0-2000	500/900			x			-10 to +50	14 to 122	**148H6048**
	Premium Flex	R404a, R507a, R32, R125, R407c, R434a, R488a, R410a	Semiconductor	0-2000	500/900				x		-10 to +50	14 to 122	**148H6049**
	Premium	R134a, R407a, R416a, R417a, R422a, R422d, R427a, R437a, R438a, R449a, R407f, R450a	Semiconductor	0-2000	500/900						-10 to +50	14 to 122	**148H6050**
	Premium+	R134a, R407a, R416a, R417a, R422a, R422d, R427a, R437a, R438a, R449a, R407f, R450a	Semiconductor	0-2000	500/900			x			-10 to +50	14 to 122	**148H6051**
	Premium Flex	R134a, R407a, R416a, R417a, R422a, R422d, R427a, R437a, R438a, R449a, R407f, R450a	Semiconductor	0-2000	500/900				x		-10 to +50	14 to 122	**148H6052**
GDH	Premium	R290/Propane	Pellistor	0-5000	800/2500						-30 to +50	-22 to 122	**148H6053**
	Premium+	R290/Propane	Pellistor	0-5000	800/2500			x			-30 to +50	-22 to 122	**148H6054**
	Premium Flex	R290/Propane	Pellistor	0-5000	800/2500				x		-20 to +50	-4 to 122	**148H6055**

Spare parts and accessories

Description	Code number
Replacement sensor - Ammonia EC 100	**148H6200**
Replacement sensor - Ammonia EC 300	**148H6201**
Replacement sensor - Ammonia EC 1000	**148H6202**
Replacement sensor - Ammonia SC 1000	**148H6203**
Replacement sensor - Ammonia EC 5000	**148H6204**
Replacement sensor - Ammonia SC 10000	**148H6205**
Replacement sensor - Ammonia P LEL	**148H6206**
Replacement sensor - CO2 IR 20000	**148H6207**
Replacement sensor - CO2 IR 50000	**148H6208**
Replacement sensor - HCFC R123 SC 2000	**148H6209**
Replacement sensor - HFC R404A, R507 SC 2000	**148H6210**
Replacement sensor - HFC R134a SC 2000	**148H6211**
Replacement sensor - HC R290/Propane P 5000	**148H6212**
Remote sensor - Ammonia EC 100 (length: 5m (16.4 ft.) - External thread M30 x 1.5)	**148H6213**
Remote sensor - Ammonia EC 1000 (length: 5m (16.4 ft.) - External thread M30 x 1.5)	**148H6214**
Remote sensor - Ammonia EC 5000 (length: 5m (16.4 ft.) - External thread M30 x 1.5)	**148H6215**
Remote sensor - Ammonia SC 10000 (length: 5m (16.4 ft.) - External thread M30 x 1.5)	**148H6216**
Controller unit	**148H6231**
Controller solution (controller + enclosure)	**148H6221**
Controller solution Uptime	**148H6237**
Warning module (wire break monitoring module)	**148H6223**
Controller expansion module	**148H6222**
Service tool	**148H6224**
PC Tool	**148H6235**
Calibration adapter	**148H6232**
Calibration adapter for remote sensors	**148H6233**
Buzzer & light - acoustic buzzer and optic led	**148H6225**
Air duct set	**148H6236**
Seal cap	**148H6227**
Remote kit	**148H6238**
Splash guard	**148H6226**
NPT adapter for remote sensor (M30 x 1.5 to NPT ¾ in.)	**148H6234**
Gateway for controller	**148H6228**

Accessories overview

Controller unit
Used for a centralized monitoring and warning. The input signals for the controller are collected via RS485 Modbus or analog communication. The controller can handle up to 96 digital sensors via Fieldbus and four (4) analog input. An additional 28 analog input is possible using seven (7) expansion modules (4-20 mA signal interface). The total number of connected sensors should not exceed 128 sensors. The controller unit can be employed as pure analog controller, as analog/digital, or as digital controller. Configuration is menu-driven via the keypad. For fast and easy configuration, the PC Tool is recommended.

Controller solution
Controller unit placed in an enclosure ready to be connected to a power source. A separate UPS for the controller is available.

Warning module (wire break monitoring module)
The warning module is used for monitoring the circuiting to the warning/alarm devices on a centrally controlled gas detection system. Wire breaks or wire interruptions in the alarm device loop will be reported to the central control.

Controller expansion module
The gas detection Controller Expansion module is used for expansion of the cable coverage in terms of number of loops and the total wire length. Each Controller Unit can handle up to 7 Expansion modules allowing additional 7 segments with a total of 7200 meters (23622 ft.) wiring and a total of 32 relays for alarm device circuits.

Service tool
For interface with units with no display (Basic, Basic+, Premium, Premium+). Acts as a portable display and can be connected to all Danfoss gas detection units. (Heavy Duty w. adapter).

PC tool
The PC tool is a menu-driven and standalone software used for easy addressing, parameter setting, calibration, and data logging of the Basic, Premium and Heavy Duty gas detection units, and the controller unit.

Calibration adapter
The calibration adapter is required for connecting the calibration gas container, via the flow regulator, to the sensor head on the gas detection units. (Two variants, One for Basic and Premium plastic head sensors; one for heavy duty and Premium remote metal head sensors.).

Buzzer & light - acoustic buzzer and optic led
Can be installed in Basic or Premium units providing a local alarm.

Air duct set
The air duct set is specially designed to capture the airflow in air ducts. It can be connected to the standard sensor heads, except from Heavy Duty gas detection units.

Seal cap
Airtight seal cap to protect the sensor head against premature exposure during installation. The seal cap is mounted on new sensors (complete units and replacement sensors) but is also available as an accessory.

Remote kit
Enabling installation of a sensor head in plastic housing 5m (16.4 ft.) from the unit. This means that the gas detection unit can be placed outside the room where the sensor is placed to detect hazardous gases, allowing reading of and interfacing with the unit without entering the dedicated space. Basic and Premium gas detection units.

Splash guard
To protect the sensor head against water exposure during wash-down cleaning and rinsing operations.

NPT adapter
The NPT adapter is a steel fitting for installation of remote sensors into NPT threads; it converts the standards M30 X 1.5 thread of the Stainless Steel remote sensor head into an External NPT ¾" thread for more convenient installation.

Gateway for controller
The gateway is an addition to the controller and used for communicating via Modbus TCP/IP.

ENGINEERING
TOMORROW

Danfoss gas detection unit
Type GD Heavy Duty

Contents **Page**

Features ... 859
Working principle/Operation ... 860
Service and maintenance ... 860
Specifications ... 861
Electrical connection ... 862
Fieldbus loop ... 863
General info ... 864
Gas types and thresholds ... 864
Alarm scheme ... 865
Ordering ... 866
Spare parts and accessories ... 866

AI272547483504en-000102 | 2018.09

ENGINEERING
TOMORROW

Danfoss gas detection unit
Type GD Heavy Duty



The Heavy Duty gas detection units are used for monitoring and warning of hazardous Ammonia gas concentrations. They are intended for ATEX/ IECEx applications and consists of a robust flame-proof metal enclosure that can be kept closed after wiring, since programming (configuration) is performed by magnetic field to the display via a magnetic pen.Depending on the application, they are available with an electrochemical, a semiconductor or a Pellistor sensor covering a wide range of ppm.

The Heavy Duty gas detection units are intended as Stand-alone, or connected to a central system like Gas Detection Controller Unit, or a PLC.

As stand-alone the on-board relay can be used for activation of alarm devices, while the Analog or RS485 Modbus connection to a central system allows additional centralized monitoring and alarm activation.

The gas detection units come with a factory default, 2-step alarm set-up ready for use. The integrated software enables the user to configure two individual alarm ranges. Alarm 1, a pre-alarm indicating the gas level has passed a predefined threshold 1, and - if the gas level passes predefined threshold 2 - the final alarm 2.

Features

- Digital, factory configured and pre-calibrated gas detectors for plug-and-play installation (no adjustment required)
- Easy configuration via Display and Magnetic pen and intuitive user-interface; helps simplify operator handling and minimize risk of operational, settings and calibration errors
- Stand-alone (integrated relay) and/or flexible connection to central controller - by either Analog or RS485 open Modbus communications
- Wide selection of sensor types and detection ranges
- Display background color indicating alarm or communication fault by turning red
- Fieldbus wiring - connect and power up to 96 sensors, wire length max. 900 meters (2953 ft) per segment; controller expansion modules permits additional segments and alarm relays
- Automatic self-diagnostics to ensure correct communication and operation. On board fault relay.
- Sensor seal cap to prevent premature exposure during installation
- Digital user interface ensures high sensor accuracy
- Reduced risk of false alarms due to temperature compensated sensors
- Password protected alarm settings allowing authorized access only
- LCD display with status LED
- Magnetic pen/On-board acknowledge button to reset alarms and to verify that no gas leaks are present
- Service alerts on unit, controller or both, readable via service tool Display
- Quick and precise calibration procedures - either by Plug & Play replacement sensors or calibration with gas.
- No potentiometers or multi-meters required
- For improved safety and to optimize the lifetime of the sensor, degenerated sensors with too low sensitivity (<30%) are rejected during calibration process.
- Conformity to Ex d EN60079-0, -1, Ex d IEC 60079-0, -1, EN 50402, EN 61508-1, -2, -3, EN 50271
- Certificate BVS 15 ATEX E 129 X, IECEx 16.0038 X
- Enables regulatory compliance with EN 378:2016, ISO 5149:2014, IIAR 2-2017, and ASHRAE 15:2016

Working principle/Operation

One sensor is connected to the Heavy Duty sensor board via local bus. The Sensor board provides the power supply of the sensor and prepares the measured data for digital communication.

The operation menu of the Heavy Duty software is accessed through the Display via a Magnetic pen, or the connected Gas Detection Controller, or via the dedicated GD Service tool (or PC tool). The Service tool (or PC tool) is plugged directly to the board of the unit by use of an adapter. These interfaces allow the unit configuration, setting of the unit alarm levels and calibration of the attached sensor.

The service tool (or PC tool) can be used on all units across the Basic, Premium and Heavy Duty platforms.

For Stand-alone units the alarm signals are handled by the unit software, which activates the integrated relay directly. For central controlled units the alarm signals are handled by the Gas Detection Controller (or a PLC) via the 4-20 mA (2-10V) analog output or the RS485 open Modbus communication.

For additional operational safety the changing of parameters is password protected allowing authorized access only. The factory default password can easily be customized.

Service and maintenance

The Heavy Duty gas detection units are calibrated either by replacing of sensor heads or by calibration with gas.

Plug & Play replacement sensors are pre-calibrated and factory certified for quick and easy calibration procedure. The sensor is connected to the local bus via a plug connection enabling easy and simple exchange of sensor instead of a calibration. The internal X-change routine recognizes the exchanged sensor during the exchange process and restarts the measurement mode automatically. An LED indicates the correct procedure of the exchange operation.

To ensure the proper functioning of the units and to prevent human errors, the sensor head can only be replaced by the same type and ppm range (exact replacement) that match the configuration. If a different sensor head is installed, the GD unit will show a communication error.

As an alternative, calibration with gas can be performed via the service tool (or PC tool), calibration gas with correct concentration and the Danfoss calibration adapter. The Danfoss gas detection units have an integrated, digital calibration interface and procedure, which makes the calibration process easy, accurate, and time-saving. No potentiometers or multi-meters required for the calibration. The calibration procedure requires significantly less calibration gas per calibration compared to traditional routines.

Specifications

Electrical

Power supply	16 – 28 V DC
Power consumption (24 V DC)	90 mA, max. 130 mA
Control unit	Microprocessor with 12 bit converter resolution
Digital filter	Averaging in order to increase the EMC immunity
Visual indications	2 LEDs for operation, alarm and communication
Analog output signal (active)	Proportional, overload and short-circuit proof, load ≤ 500 Ω 4 – 20 mA = measuring range 3.0 < 4 mA = underrange > 20 – 21.2 mA = overrange 2 mA = fault > 21.8 mA = fault High
Serial interface	Serial data bus
Fault relay	Max. 30 V AC/DC, 1 A
Alarm relay	Max. 30 V AC/DC, 1 A
LCD	2 x 16 characters, 3 status LEDs, 4 menu operating elements

Sensor data

Gas type	**Flammable gases**	**Toxic gases**	**HCFC, HFC, HFO**
Sensor element	Pellistor	Electro Chemical	Semiconductor
Measuring range	0 - 100 % LEL	0 - 1000 ppm / 0 - 5000 ppm	0 - 10000 ppm
Response time	t_{90} < 20 sec. NH_3	t_{90} < 40 sec. for NH_3	t_{90} > 120 sec. for NH_3

Sensor head housing

Material	CrNi Stahl: 1.4404
Dimensions (d x H)	30 x 56 mm (1.18 x 2.20 in.)
Protection class	Gas inlet IP64, with option splash-proof IP65
Thread	External thread M30 x 1.5

Environmental conditions

Humidity	15 to 90% r.H.
Operating temperature	P: -25 °C to +60 °C / EC: -25 °C to +50 °C / SC: -10 °C to +50 °C

Physical characteristics

Case / colour	Aluminium pressure die-casting / light grey RAL 7032, epoxy coating
Dimensions (d x H)	95 x 82 mm
Weight	Ca. 1.3 kg
Protection class	Housing protection IP66 to IP68 (depending on the cable glands used)
Mounting	Wall mounting (sensor head downwards)
Cable entry	1 x ¾ in. (Ansi B1.20.1)
Wire connection	Spring-type terminal, 0.08 to 2.5 mm^2 AWG 28 - 12
Wire length	Max. load 500 Ω (= wire resistance + controller input resistance)

ATEX marking

Ex II2G Ex d IIC T4 Gb, CE 0158

Options:

LCD display

LCD	Two lines, 16 characters each, background highlighted in two colours
Operation	Menu driven via four magnetic buttons
Power consumption	5 V, 60 mA, 0.3 VA

Status LED

Colour / Mode	Red / yellow / green (alarm – fault – operation - service)
Protection class	IP 65

Electrical connection

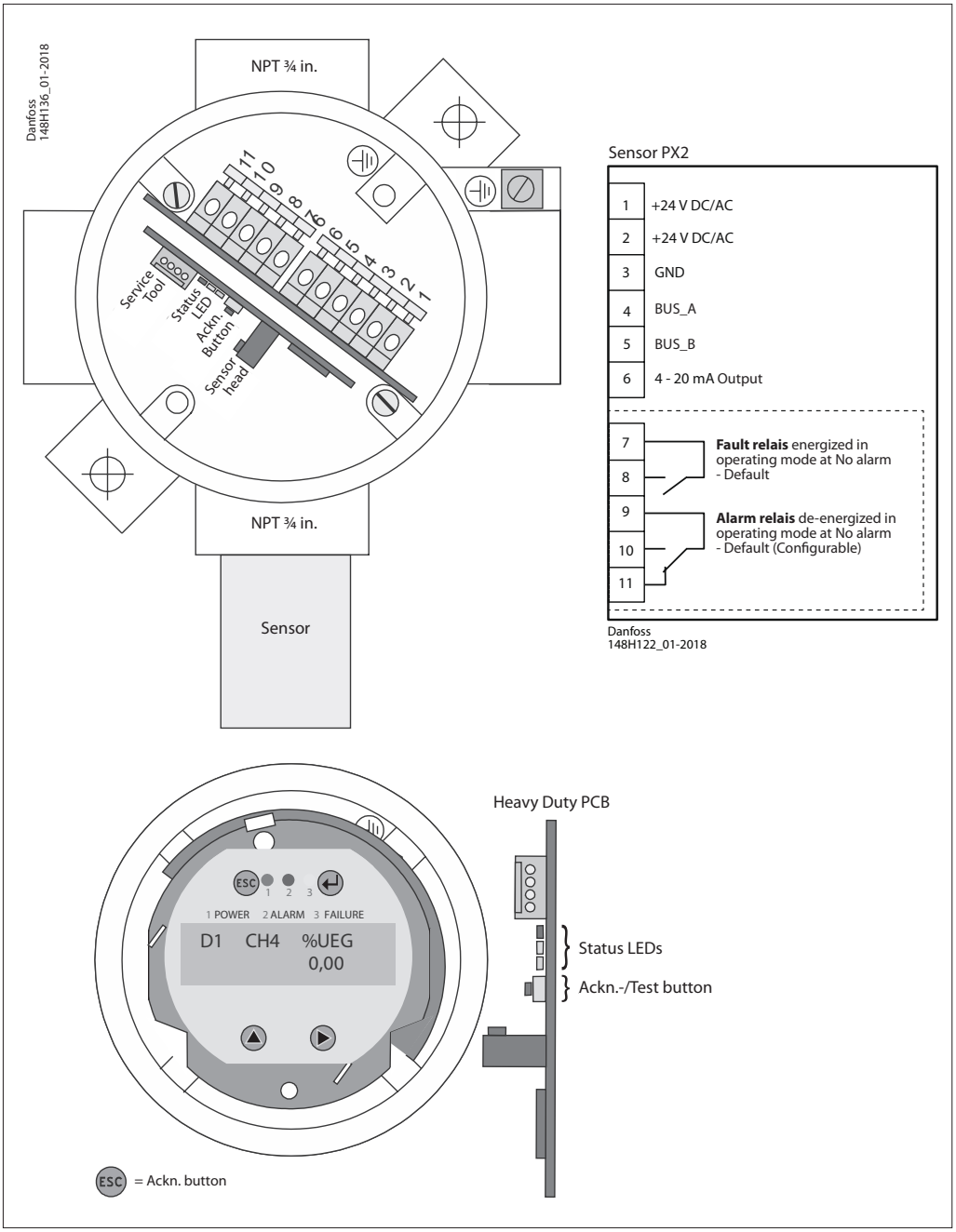

On board LED is similar to the display LED:
Green (1) is power on
- Flashing if maintenance needed

Yellow (2) is an indicator of Error.
- when the sensor head is disconnected or not the expected type
- AO is activated but nothing connected

Red (3) on alarm

On board Ackn. -/Test button:
Test: The button must be pressed for 20 sec.
- Alarm is simulated, stop on release

Ackn.: Pressed while Alarm2, the audible warning switches off and goes back on after 5 min. when the alarm situation is still active (also possible over ESC button (use the magnetic pen).

Fieldbus loop

Each GD controller can handle up to 96 sensors and handle any mix of individual Gas detection units of the types Basic, Premium and Heavy Duty.

The max. recommended loop wire length is 900 meter (2953 ft) per segment.

With additional segments (and additional controller expansion modules) the max recommended loop wire length is 7200 meter (23622 ft).

The controller and the last GDU in each segment must be provided with a resistor of 560 Ohm. A Umin of 16 V DC must be secured at any spot in the loop.

Below figure shows how to make proper connections between the controller and each GDU.

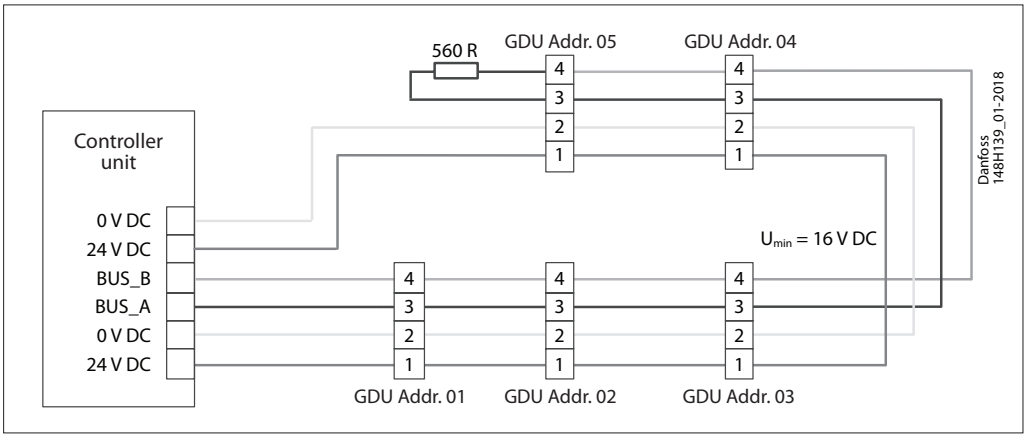

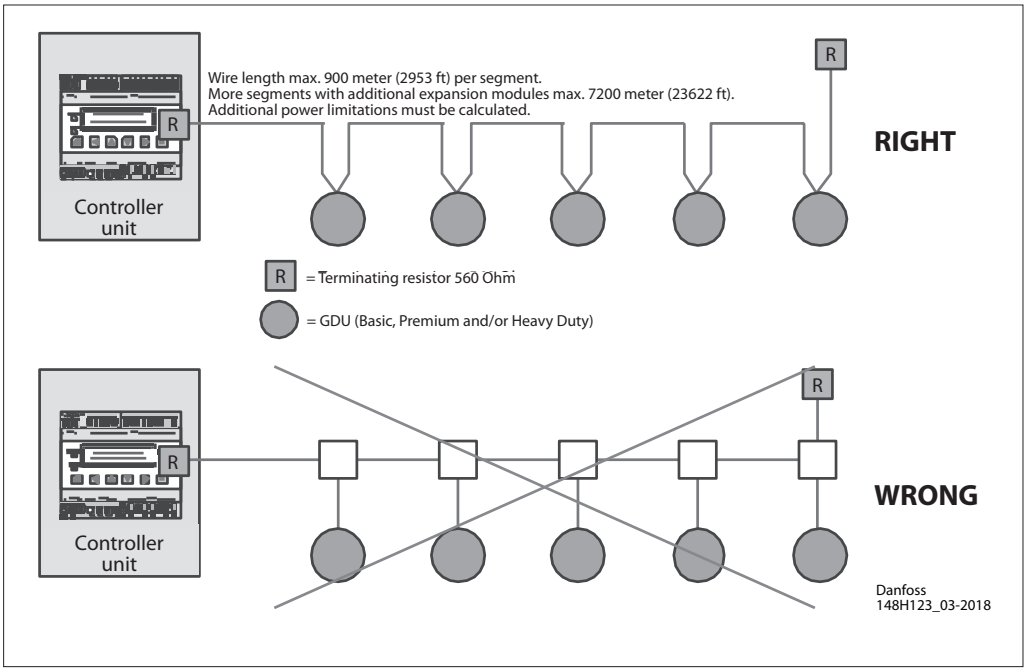

General info

- Cable gland mounted
- Sensor head (SX1) mounted bottom

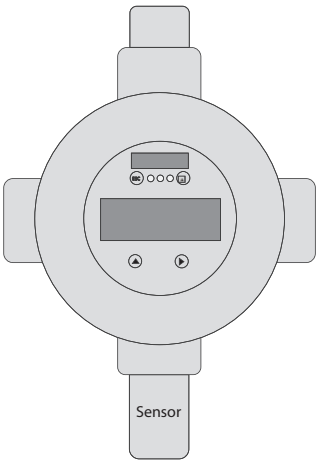

Heavy Duty

Gas types and thresholds

Sensor	Sensor Type	ppm range	Alarm 1	Alarm 2	Hysteresis
Ammonia EC 1000	Electrochemical	0-1000	500 ppm	900 ppm	25 ppm
Ammonia EC 5000	Electrochemical	0-5000	1000 ppm	4500 ppm	50 ppm
Ammonia SC 10000	Semiconductor	0-10000	5000 ppm	9000 ppm	250 ppm
Ammonia P LEL	Pellistor	0-140000 (0-100% LEL)	21% LEL (30000 ppm)	21% LEL (30000 ppm)	1% LEL

Hysteresis = 5% of Alarm1 (rounded up to the next higher integer)
Alarm thresholds can have the same value, therefore the relays and LED can be triggered together.

Alarm scheme

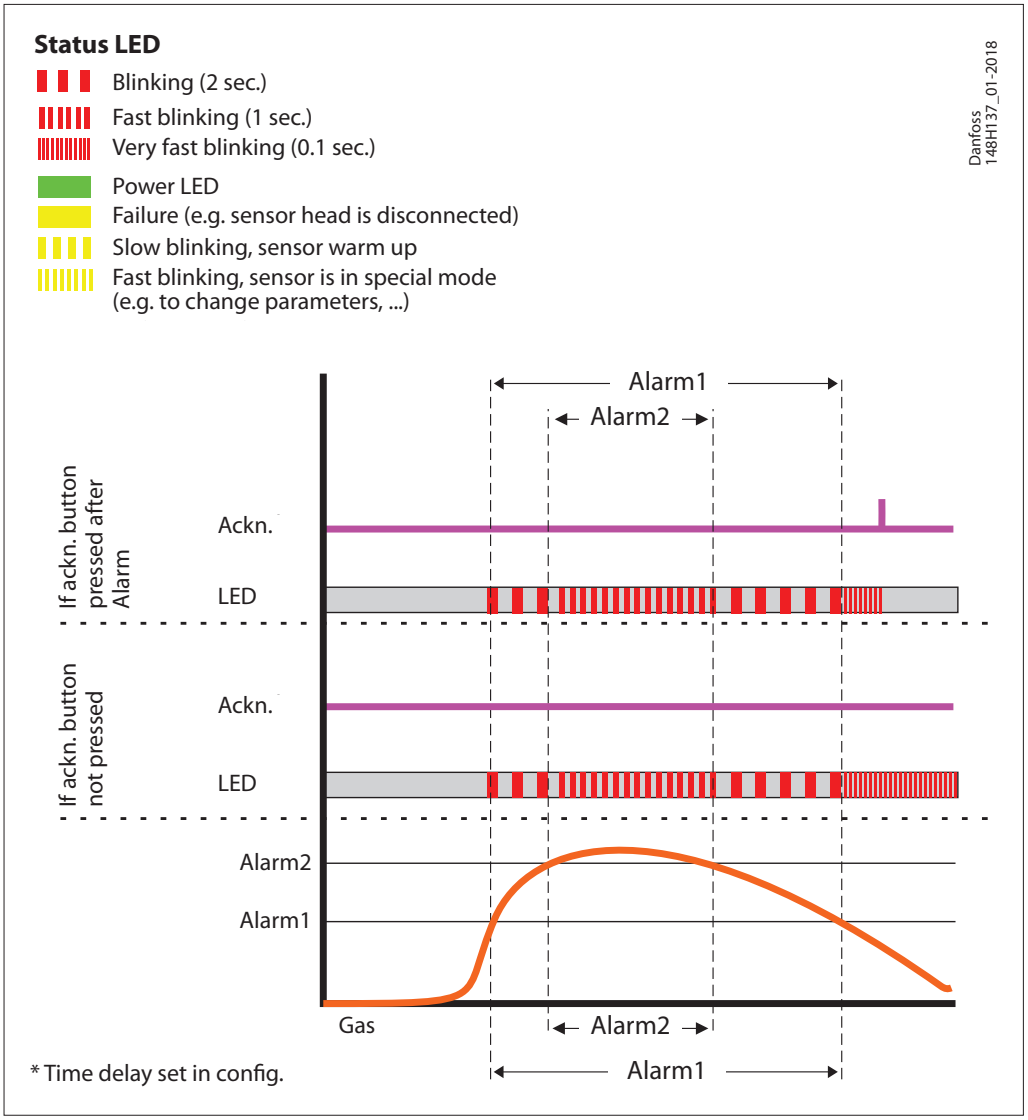

Ordering

Type	Model	Refrigerant	Sensor	ppm	Alarm ppm	Temp. Range [°C]	Temp. Range [°F]	Code number
GDA	Heavy Duty	Ammonia	Electrochemical	0-1000	500/900	-25 to +50	-13 to 122	**148H6022**
	Heavy Duty	Ammonia	Electrochemical	0-5000	1000/4500	-25 to +50	-13 to 122	**148H6031**
	Heavy Duty	Ammonia	Semiconductor	0-10000	5000/9000	-10 to +50	14 to 122	**148H6035**
	Heavy Duty	Ammonia	Pellistor	0-140000	30000	-25 to +60	-13 to 140	**148H6039**

Spare parts and accessories

Description	Code number
Replacement sensor - Heavy Duty Ammonia EC 1000	**148H6217**
Replacement sensor - Heavy Duty Ammonia EC 5000	**148H6218**
Replacement sensor - Heavy Duty Ammonia SC 10000	**148H6219**
Replacement sensor - Heavy Duty Ammonia P LEL	**148H6220**
Controller unit	**148H6231**
Controller solution (controller + enclosure)	**148H6221**
Controller solution Uptime	**148H6237**
Warning module (wire break monitoring module)	**148H6223**
Controller expansion module	**148H6222**
Service tool	**148H6224**
PC Tool	**148H6235**
Calibration adapter Heavy duty	**148H6233**
Gateway for controller	**148H6228**
Magnetic pen	**148H6229**

Accessories overview

Controller unit
Used for a centralized monitoring and warning. The input signals for the controller are collected via RS485 Modbus or analog communication. The controller can handle up to 96 digital sensors via Fieldbus and four (4) analog input. An additional 28 analog input is possible using seven (7) expansion modules (4-20 mA signal interface). The total number of connected sensors should not exceed 128 sensors. The controller unit can be employed as pure analog controller, as analog/digital, or as digital controller. Configuration is menu-driven via the keypad. For fast and easy configuration, the PC Tool is recommended.

Controller solution
Controller unit placed in an enclosure ready to be connected to a power source. A separate UPS for the controller is available.

Warning module (wire break monitoring module)
The warning module is used for monitoring the circuiting to the warning/alarm devices on a centrally controlled gas detection system. Wire breaks or wire interruptions in the alarm device loop will be reported to the central control.

Controller expansion module
The gas detection Controller Expansion module is used for expansion of the cable coverage in terms of number of loops and the total wire length. Each Controller Unit can handle up to 7 Expansion modules allowing additional 7 segments with a total of 7200 meters (23622 ft.) wiring and a total of 32 relays for alarm device circuits.

Service tool
For interface with units with no display (Basic, Basic+, Premium, Premium+). Acts as a portable display and can be connected to all Danfoss gas detection units. (Heavy Duty w. adapter).

PC tool
The PC tool is a menu-driven and standalone software used for easy addressing, parameter setting, calibration, and data logging of the Basic, Premium and Heavy Duty gas detection units, and the controller unit.

Calibration adapter
The calibration adapter is required for connecting the calibration gas container, via the flow regulator, to the sensor head on the gas detection units. (Two variants, One for Basic and Premium plastic head sensors; one for heavy duty and Premium remote metal head sensors.).

Gateway for controller
The gateway is an addition to the controller and used for communicating via Modbus TCP/IP.

Magnetic pen
The pen is used to operate the Heavy Duty unit display. The Heavy Duty enclosure does not permit direct touch.

ENGINEERING
TOMORROW

Danfoss gas detection
Controller unit

Contents **Page**

Features 869
Specifications 870
Electrical connection 871
Fieldbus loop 872
Ordering 873

ENGINEERING
TOMORROW

Danfoss gas detection
Controller unit



The gas detection Controller Unit is used for a centralized monitoring and warning of hazardous gas concentrations. The input signals for the controller are collected from the local gas detection units of the types Basic, Premium and Heavy Duty via RS485 Fieldbus or Analog communication. In total 96 gas detection sensors can be handled via Fieldbus + 4 via Analog directly on the controller (+28 additional possible if expansion modules added).

The Controller Unit comes with 4 alarm relays available for external looped alarm devices. Additional relays and sensor wiring loops is possible by adding Expansion modules to the controller.

Each local gas detection unit is assigned a unique address in the Controller and by continuous communication with the individual GDU's the Controller reacts on alarm signals from the local GDU. The parameter setting and the actual state of each local GDU can be read in the Controller display.

Features

- For connection of up to 96 sensors via fieldbus + 32 via Analog"(when 7 expansion modules added)
- Easy configuration via intuitive user-interface; helps simplify operator handling and minimize risk of operational setting errors
- Simple commissioning by standard parameter configuration
- Flexible connection to local gas detection units by either Analog or RS485 fieldbus communications
- Fieldbus wiring: Wire length up to 900 meters (2953 ft.) per segment.
- 4 relays for external alarm device circuits
- Up to 7 Expansion modules possible; allows additional 7 segments with a total of 7200 meters (23622 ft.) wiring and a total of 32 relays for alarm device circuits.
- Automatic self-diagnostics to ensure correct communication and operation
- Relay for communication error
- 6 menu languages
- Password protected settings allowing authorized access only
- Service alerts on display
- Conformity to EN 50545-1
- Enables regulatory compliance with EN 378:2016, ISO 5149:2014,

Specifications

Electrical

Power supply	24 V DC ± 20 %
Power consumption (24 V DC)	4 W, 150 mA
Analog input (4)	4 to 20 mA, overload and short-circuit- protected, input resistance 200 Ω
Tension for external analog transmitter	24 V DC (same as power supply), max. 100 mA / per sensor
Analog output (2) configurable for each input	Proportional, overload and short-circuit- protected, charge ≤ 500 Ω 4 - 20 mA = measuring range 3.0 < 4 mA = underrange >20 – 21.2 mA = overrange 2.0 mA = fault
Alarm relay (4)	250 V AC, 5 A, potential-free, change-over (SPDT)
Fault relay (1)	250 V AC, 5 A, potential-free, normally open contact (SPST)

Visualization

LCD	Two lines, 16 characters each, illuminated
Status LED (4)	Operation – fault – 1st alarm – ≥ 2nd alarm
Operation	6 push-buttons
Menu language (selectable)	German, English, Dutch, USA, French, Swedish

Interface fieldbus

Transceiver	RS 485 / 19200 Baud

Gases

Digital and analog sensors for toxic, combustible & refrigerant gases

Environmental

Humidity	15 – 95 % RH non-condensing
Working temperature	-5 °C to +40 °C (23 °F to 104 °F)
Storage temperature	0 °C to +40 °C (32 °F to 104 °F)

Physical

Enclosure	Plastic housing ABS
Colour	RAL 7035
Protection class	IP 40
Weight	0.3 kg (0.8 lb.)
Packaging volumes	Ca. 4.4 l
Mounting	Top DIN rail mounting, installation in distribution box
Dimensions (Controller unit)	(W x H x D) 106 x 110 x 62 mm (4.2 x 4.3 x 2.4 in.)
Dimensions (Controller Solution)	(W x H x D) 298 x 420 x 140 mm (11.7 x 16.5 x 5.5 in.)
Wire connection: Power supply ..... Output ..... Input	 Screw type terminal: 2.5 mm² (14 AWG) 2 x spring type terminal: min. 0.5 mm², max. 1.5 mm² (22 to 16 AWG) Spring type: min. 0.5 mm², max. 1.5 mm² (22 to 16 AWG)

Guidelines

EMC – Directive 2014/30/EU
Low voltage directive 2014/35/EU
CE
EN 50545-1, EN 50271

Interface ModBus RTU RS 485

Function	Transmission of current and average values, alarm and relay status, and analog output states in MODBus RTU RS 485 protocol to external devices

Electrical connection

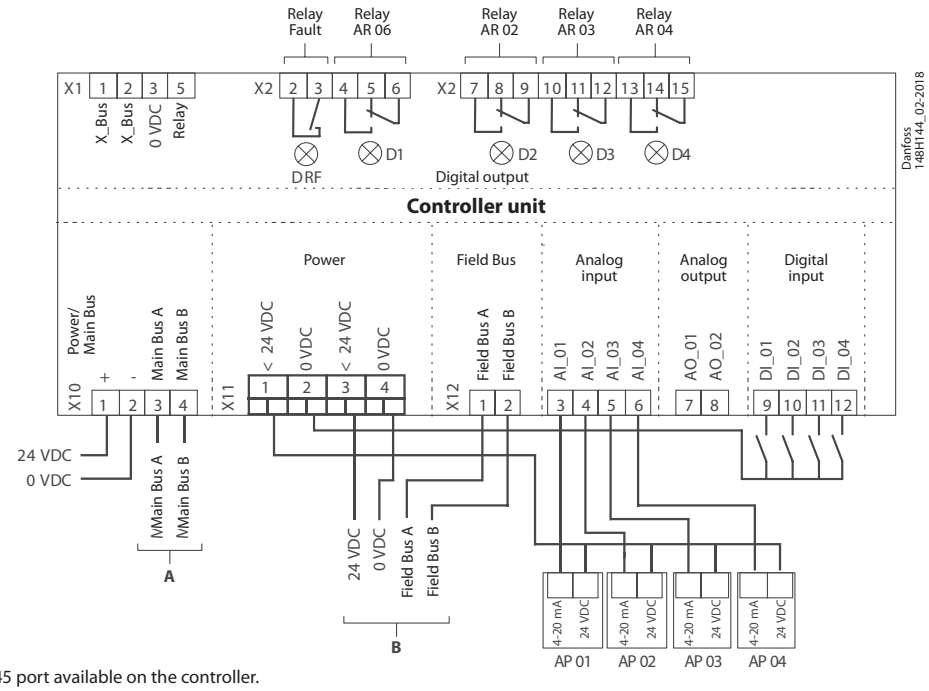

RJ45 port available on the controller.

Fieldbus loop

Each GD controller can handle up to 96 sensors and handle any mix of individual Gas detection units of the types Basic, Premium and Heavy Duty.

The max. recommended loop wire length is 900 meter (2953 ft) per segment.

With additional segments (and additional controller expansion modules) the max recommended loop wire length is 7200 meter (23622 ft).

The controller and the last GDU in each segment must be provided with a resistor of 560 Ohm. A Umin of 16 V DC must be secured at any spot in the loop.

Below figure shows how to make proper connections between the controller and each GDU.

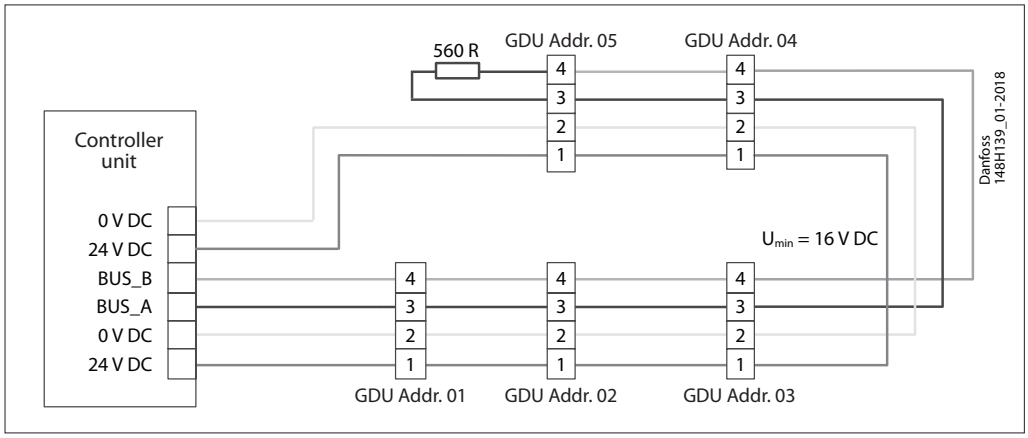

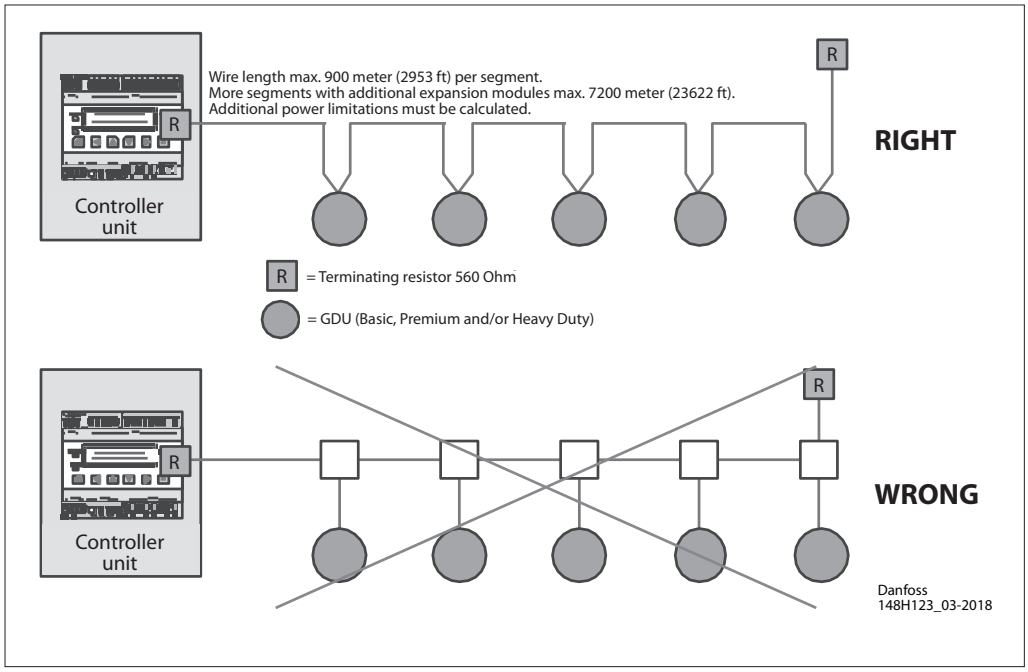

Ordering

Description	Code number
Controller unit	**148H6231**
Controller solution (controller + enclosure)	**148H6221**
Controller solution Uptime	**148H6237**
Warning module (wire break monitoring module)	**148H6223**
Controller expansion module	**148H6222**
Gateway for controller	**148H6228**

Controller solution
Controller unit placed in an enclosure ready to be connected to a power source. A separate UPS for the controller is available.

Warning module (wire break monitoring module)
The warning module is used for monitoring the circuiting to the warning/alarm devices on a centrally controlled gas detection system. Wire breaks or wire interruptions in the alarm device loop will be reported to the central control.

Controller expansion module
The gas detection Controller Expansion module is used for expansion of the cable coverage in terms of number of loops and the total wire length. Each Controller Unit can handle up to 7 Expansion modules allowing additional 7 segments with a total of 7200 meters (23622 ft.) wiring and a total of 32 relays for alarm device circuits.

Gateway for controller
The gateway is an addition to the controller and used for communicating via Modbus TCP/IP.

ENGINEERING
TOMORROW

Danfoss gas detection
Expansion module

Contents **Page**

Features 877
Installation/Connection 878
Specifications 879
Wiring configuration 880
Ordering 880

AI272553280528en-000102 | 2018.05

ENGINEERING
TOMORROW

Danfoss gas detection
Expansion module



The gas detection Controller Expansion module is used for expansion of the cable coverage in terms of number of fieldbus loops and the total wire length. Each Controller Unit can handle up to 7 Expansion modules allowing 7 additional loops of 900 meters (2953 ft) length available for local Gas Detection Units. Communication between the Controller, the Expansion modules and the Gas Detection Units is done via Analog or RS485 fieldbus.

Additional 4 relays for external looped alarm devices is made available for each Expansion module.

Expansion modules can be installed close to the Controller (Controller Solution) or alternatively in the field.

Features

- For extension of the covered site area for gas detection sensors
- 4 relays for external alarm device circuits per Expansion module
- Up to 7 Expansion modules per Controller possible; allows additional 7 segments with a total of 7200 meters (23622 ft.) wiring and a total of 32 relays for alarm device circuits.
- Flexible connection to local gas detection units by either Analog or RS485 fieldbus communications
- Located in Controller Solution or in the field
- Easy configuration via intuitive user-interface; helps simplify operator handling and minimize risk of operational setting errors
- Simple commissioning by standard parameter configuration
- Enables regulatory compliance with EN 378:2016, ISO 5149:2014,

Installation/Connection

Expansion modules are installed close to the Controller (Controller Solution) or in the field. Examples shown below:

Each cable end must be applied a Resistor of 560 Ohm.

Expansion modules installation in Controller Solution. Resistor R (560 Ohm)

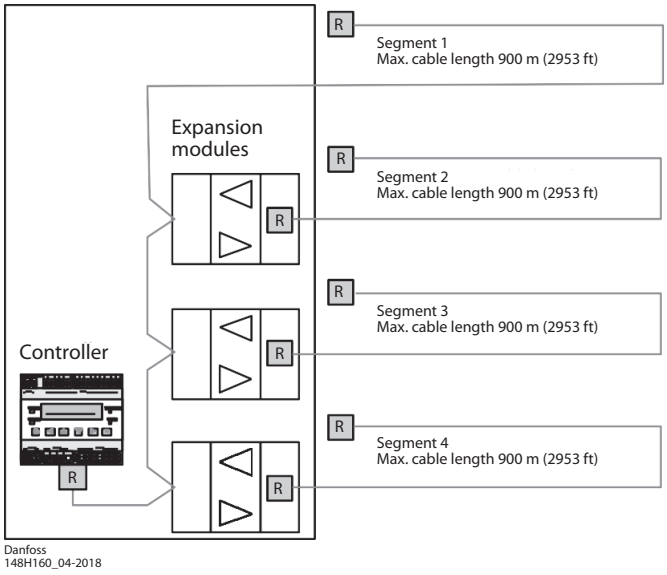

Expansion modules installation in the field. Resistor R (560 Ohm)

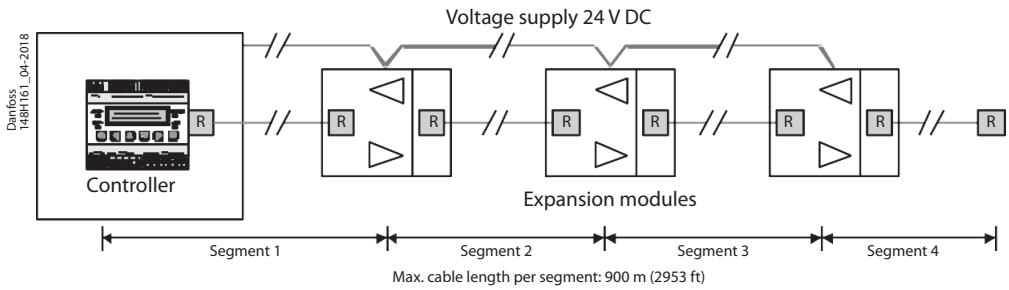

Each Cable end applied 560 Ohm

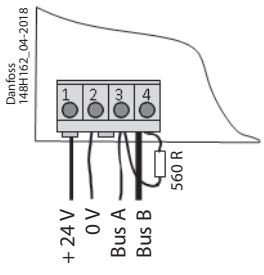

Specifications

Electrical

Power supply	24 V DC ± 20 %
Power consumption	3 W, 120 mA
Analog input (4)	4 to 20 mA, overload and short-circuit protected, input resistance 200 Ω
Tension for external analog transmitter	24 V DC (same as power supply), max. 100 mA / per sensor
Analog output (2) configurable for each input	Proportional, overload and short-circuit- protected, charge ≤ 500 Ω 4 - 20 mA = measuring range 3.0 < 4 mA = underrange > 20 – 21.2 mA = overrange 2.0 mA = fault
Alarm relay (4)	250 V AC, 5 A, potential-free, change-over (SPDT)

Interface fieldbus

Transceiver	RS 485 / 19200 Baud

Environmental

Humidity	15 – 95 % RH non-condensing
Working temperature	-10 °C to +40 °C (14 °F to 104 °F)
Storage temperature	0 °C to +40 °C (32 °F to 104 °F)

Physical

Enclosure	Plastic housing ABS
Colour	Black
Protection class	IP 40
Weight	0.2 kg (0.5 lb.)
Packaging volumes	Ca. 4.4 l
Mounting	Top hat DIN rail mounting
Dimensions	(W x H x D) 104 x 86 x 56 mm (4.1 x 3.4 x 2.2 in.)
Wire connection: Power supply Output Input	 Screw type terminal: 2.5 mm² (14 AWG) 2 x spring type terminal: min. 0.5 mm², max. 1.5 mm² (22 to 16 AWG) Spring type: min. 0.5 mm², max. 1.5 mm² (22 to 16 AWG)

Directives

EMC Directive 2014/30/EU
Low voltage directive 2014/35/EU
Conformity to: EN 50 545-1, EN 50271, EN 61010-1:2010, ANSI/UL 61010-1, CAN/CSA-C22.2 No. 61010-1

Options - control of external warning devices

Power supply of the external warning devices	24 V DC
Measuring resistance at the warning device	12 kΩ, 0.5 W, 5 %

Note:
If expansion modules are distributed along the communication bus it is recommended that each be powered by a separate DC power supply with only the ground connected to the bus.

Wiring configuration

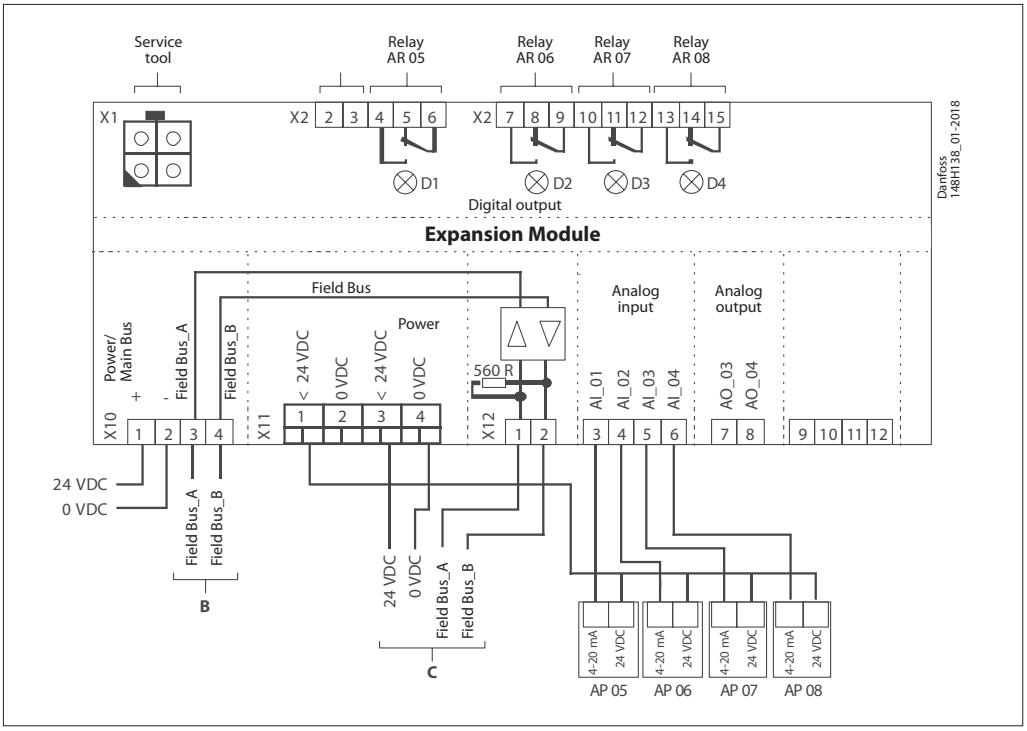

Ordering

Description	Code number
Expansion module	**148H6222**

ENGINEERING
TOMORROW

Danfoss gas detection
Warning module

Contents **Page**

Features 883
Installation/Connection 884
Specifications 884
Wiring configuration 885
Ordering 885

AI272554187536en-000102 | 2018.05

ENGINEERING
TOMORROW

Danfoss gas detection
Warning module



The gas detection warning module is used for increasing safety of a centrally controlled gas detection system by managing the warning/alarm devices and continuous monitoring the circuiting to the warning/alarm devices. Potential wire breaks or wire interruptions in the alarm device loop will be detected immediately and reported to the central control.

Communication with the controller takes place via the RS 485 fieldbus interface.

Warning modules can be installed close to the Controller (Controller Solution) or alternatively in the field.

Features

- Testing of the warning/alarm device circuiting with intervals < 1 minute
- Flexible connection to local gas detection units by either Analog or RS485 fieldbus communications
- Located in Controller Solution or in the field
- Easy configuration via intuitive user-interface; helps simplify operator handling and minimize risk of operational setting errors
- Simple commissioning by standard parameter configuration
- Conformity to Low Voltage Directive 2014/35/EU, EMC Directive 2014/30/EU, EN 50271 / IEC 615078, EN 61010-1, ANSI / UL 61010 1, CAN / CSA-C22.2 No. 61010-1

Installation/Connection

Expansion modules are installed close to the Controller (Controller Solution). See example below

Warning module installation in controller solution

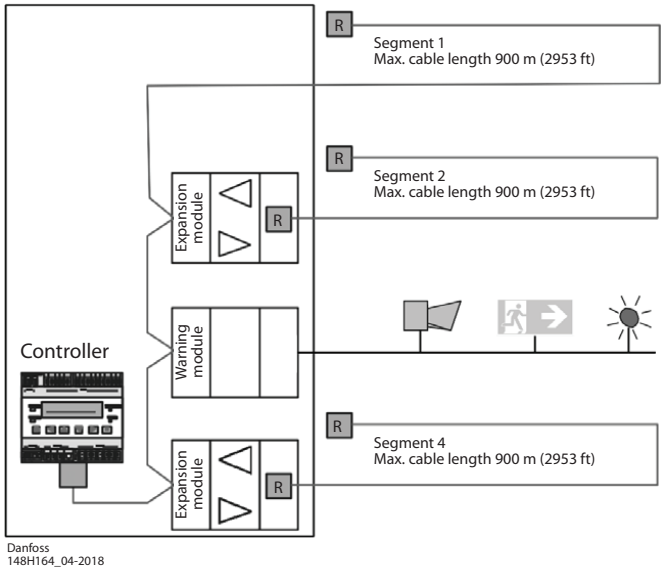

Specifications

Electrical

Power supply	16 – 29 V DC, reverse-polarity protected
Power consumption (24 V DC) only MSB2 board	100 mA (2.4 VA)

Digital input

Signal input	Potential-free contact
Function	Acknowledge or test function

Analog output

Analog output signal	Proportional, overload and short-circuit proof, load ≤ 500 Ohm 4 - 20 mA = measuring range 3.0 < 4 mA = underrange >20 - 21.2 mA = overrange 2.0 mA = fault

Digital output

Alarm relays (2)	250 V AC, 5 A, potential-free, changeover contact (SPDT)

General

Temperature range	-10 °C to +50 °C (+14 °F to +122 °F)
Humidity range	15 - 95 % RH non-condensing
Storage temperature	-10 °C to +40 °C (+14 °F to +104 °F)
Storage time	6 months

Serial interface

Fieldbus	RS 485 / 19200 Baud
Tool bus	2-wire / 19200 Baud

Physical

Protection class	IP 65
Wire connection: Fieldbus Digital input, analog output Power supply, relays	 Screw-type terminal min. 0.25 mm², max. 2.5 mm² Screw-type terminal min. 0.25 mm², max. 1.3 mm² Screw-type terminal min. 0.25 mm², max. 2.5 mm²

Standards & regulations

EMC Directive 2014/30/EU
Low voltage directive 2014/35/EU
Conformity to: EN 50271 / IEC 615078, EN 61010-1:2010, ANSI/UL 61010-1, CAN/CSA-C22.2 No. 61010-1E

Wiring configuration

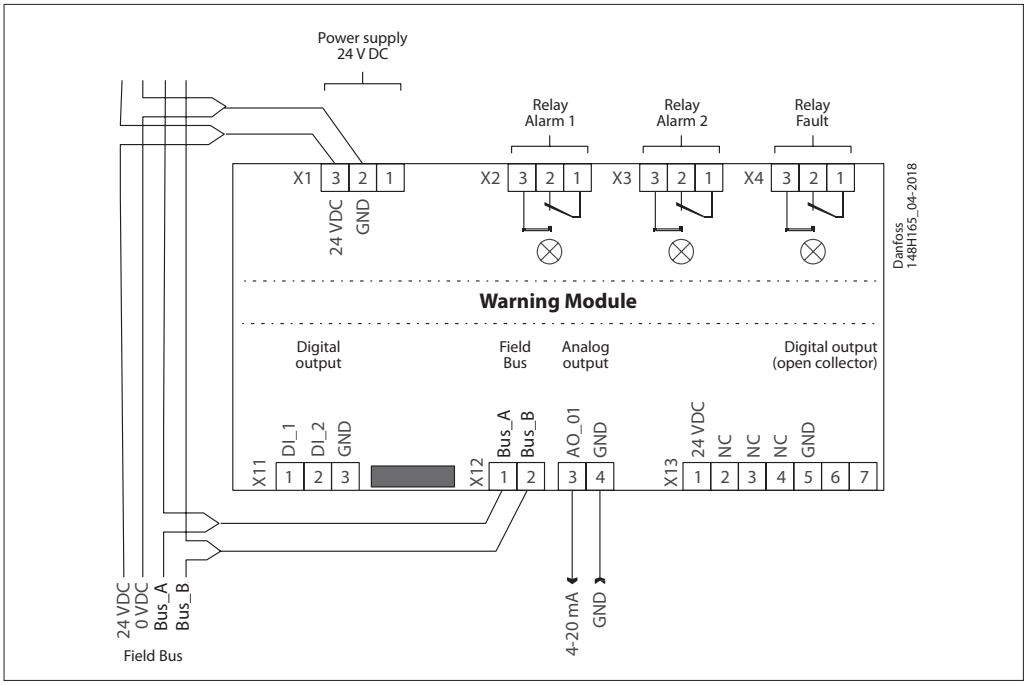

Ordering

Description	Code number
Warning module	**148H6223**

ENGINEERING
TOMORROW

Danfoss gas detection
PC tool

Contents **Page**

Features 889
Screen menu 890
Specifications 891
Ordering 891

AI272552094520en-000101 | 2018.05

ENGINEERING
TOMORROW

Danfoss gas detection
PC tool



The gas detection PC tool is a menu-driven and stand alone software used for easy Addressing, Parameter setting, Calibration and Data logging of the Basic, Premium and Heavy Duty gas detection units. Furthermore, it handles Parameter setting and Memory Read of the gas detection Controller including peripherals (Expansion module - Warning module). Power for this tool is provided from the PC via the standard USB connection.

The USB connection to the PC and the plug connection to the service tool port in the device are galvanic isolated.

The tool is Plug and Play and installation is performed automatically.

Features

- Addressing, Calibration and Parameterization of all Danfoss gas detection units.
- Long-term recording on hard disk in .csv format
- Monitoring of all measuring values at a glance, live
- Handling and print of calibration report
- Password protected
- Runs on WINDOWS 7/8/10
- EMC directives 2014/30/EU, CE
- Conformity to:
  EN 61010-1:2010
  ANSI/UL 61010-1
  CAN/CSA-C22.2 No. 61010-1

Screen menu

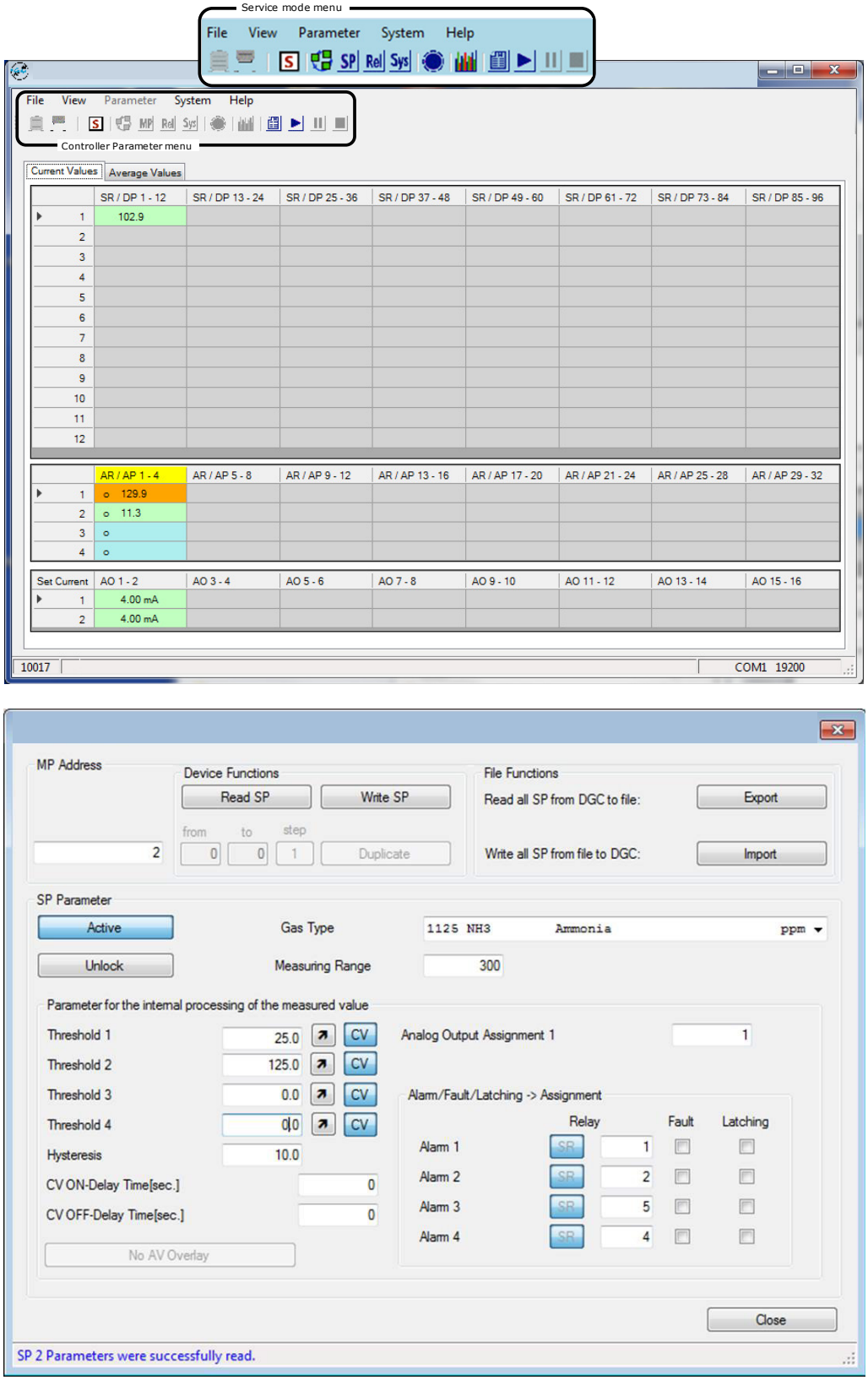

Service mode parameter setting/reading.

Specifications

Electrical

Power supply	5 V DC from PC
Serial interface central bus	RS485 / 19200 Baud

Ambient conditions

Temperature range	-10 °C bis +40 °C (14 °F to 104 °F)
Humidity range	0 - 90 % RH not-condensing

Physical

Housing	Polycarbonate black
Dimensions	110 x 60 x 40 mm
Weight	Approx. 200 g
Protection class	IP 65
Cable length	1.50 m

Standards & regulations

EMC Directive 2014/30/EU
CE
Conformity to: EN 61010-1:2010, ANSI/UL 61010-1, CAN/CSA-C22.2 No. 61010-1

Ordering

Description	Code number
PC tool	**148H6235**

ENGINEERING
TOMORROW

Safety relief valves
Type SFA 15 and SFA 15-50

Contents **Page**

Technical data 895
Design 896
Capacity 897
Material specification 900
Connections 901
Dimensions and weights 901
Ordering 902

AI194386420638en-000701 | 2016.04

ENGINEERING TOMORROW

Safety relief valves
Type SFA 15 and SFA 15-50



SFA 15 and SFA 15-50 are standard, **back pressure dependent** safety relief valves in angle-way execution, specially designed for protection of vessels and other components against excessive pressure.

SFA 15-50 has a 50% reduced capacity compared to SFA 15.

The valve is designed to meet the strict quality demands and safety requirements for refrigeration installations, specified by the international classification societies.

The spring housing is closed tightly to avoid refrigerant leakage.

The inlet flow diameters of the valves are:
- 13 mm (1/2 in) for both SFA 15 and SFA 15-50

The valves can be delivered with set pressures between 10 and 40 bar g (145 and 580 psi g).

Standard pressure setting valves having "TÜV Pressure Setting Certificate" with each valve, are also available.

Features

- Applicable for the refrigerants HCFC, HFC, R717 (Ammonia), R744 (CO_2) within a temperature range of -50 – 100 °C* / -58 – 212 °F*
- Classification: DNV, CRN, BV, EAC etc. To get an updated list of certification on the products please contact your local Danfoss Sales Company.

Technical data

- *Refrigerants*
  Applicable for the refrigerants HCFC, HFC, R717 (Ammonia), R744 (CO_2) within a temperature range of -50 – 100 °C / -58 – 212 °F.
  Flammable hydrocarbons are not recommended. For further information please contact your local Danfoss Sales Company.
- *Pressure*
  Pressure setting range: 10 – 40 bar g / 145 – 580 psi g. For further information please contact your local Danfoss Sales Company.

  Important: The SFA safety relief valve is dependent on the back pressure (if the back pressure is higher than the atmospheric pressure, the opening pressure will be higher than stated set pressure).
  Special circumstances such as vibrations (which should be avoided) and oscillating pressure may require an increased difference between the operational pressure and the closing pressure.
- *Pressure setting*
  The operating pressure of the plant should be at least 15% below the set pressure. This allows a perfect re-seating of the safety relief valve after having been activated.
- *Temperature range*
  -50 – 100 °C / -58 – 212 °F

* Below -30 °C / -22 °F full tightness can only be guaranteed when refrigerant pressure is equal to or lower than 0.5 x P_{set}

Pressure Equipment Directive (PED)
The SFA valves are approved in accordance with the European standard specified in the Pressure Equipment Directive and are CE marked.
For further details / restrictions - see Installation Instruction

SFA valves	
Nominal bore	13 mm (0.512 in)
Classified for	Fluid group I
Category	IV

Design

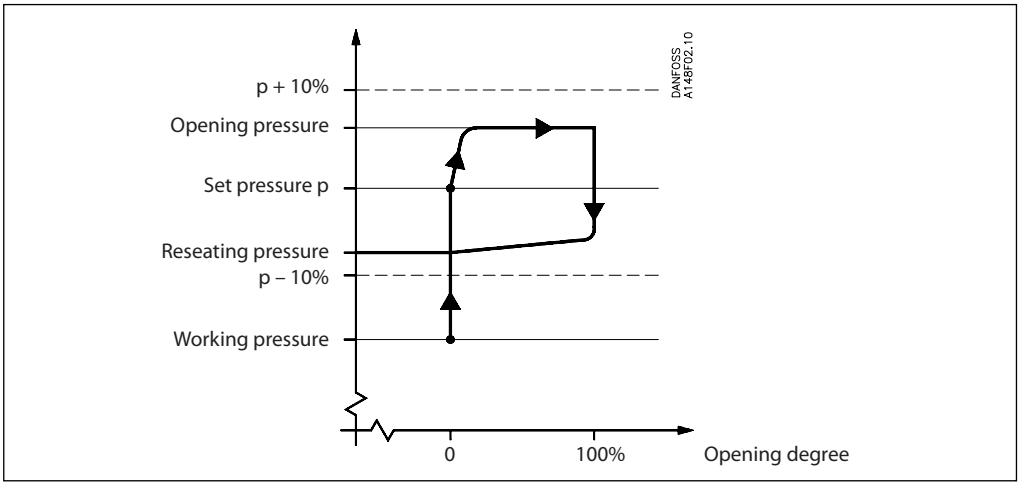

SFA is designed as a direct loaded safety valve recommended particularly for refrigeration applications. On a rise in pressure above the set pressure, the safety relief valve will initially start opening slightly, to minimise the outlet of refrigerant. If the pressure continues to increase, the valve will open fully. The safety relief valve will be fully open before the pressure is 10% higher than set pressure, and fully closed before the pressure is 10% below set pressure.

Connections
Available with the following connections:

- Outside pipe thread T (ISO 228/1)
- Welding fittings (EN 10220)

Housing
Made of special steel approved for low temperature operation. Spindle, cone, and seat are made of stainless steel, to ensure precise operation even during extraordinary conditions. The gasket of the valve cone is made of a special cloroprene (neoprene) compound.

Installation
To ensure exact operation of the safety relief valve it should be installed with the spring housing upwards. When the valve is mounted, it is important to avoid the influence of static, dynamic and thermal stress.

A very precise technique has been applied for the production of the seal. However, this seal can still be damaged, if dirt is blown from the pipe system into the valve.

It is recommended that safety relief valves exhaust into the open air with a U-pipe filled with oil on the discharge branch, to prevent dirt from penetrating into the valve. It is also recommended that the valves be installed in pairs in conjunction with the double stop valve type DSV 1 or 2. For further information please see the technical leaflet for DSV.

Re-calibration / servicing
In certain countries the authorities demand that the valves are checked at least once a year (see local rules).

Control / Identification
After adjustment of the set pressure at Danfoss, the valves are sealed. For that reason Danfoss can only guarantee correct operation, as long as the seal remains unbroken.

All valves are provided with a metal plate with the following information:
- Flow diameter
- Set pressure
- Date of production
- Production number
- Type approved code.

Transport / Handling
The valves are fitted with special protection covers and packed into purpose made transportation cartons.

It is important that the cover remains fitted around the valve until it is installed.

To ensure the exact and precise operation of the valve it must be handled with care.

Safety valve	Double stop valve		Max. pressure
	CE marked	Not CE marked	
SFA 15 and SFA 15-50	DSV 1		40 bar (580 psi)
	DSV 2		40 bar (580 psi)
		DSV 15	25 bar (363 psi)

Capacity

The design and construction of the safety relief valve has been tested and approved by TÜV. This test comprises control of the function of the valve as well as measuring of the capacity, which is the basis of the curves and tables on the following pages. The values in the table are based on saturated gas.

If e.g. back pressure or superheated gas have to be taken into consideration, the formulas or the Danfoss computation program (Coolselector2™) can be used.

Table 1.

Valve	Nominal size		Flow diameter	Flow area	De-rated, certified coefficient of discharge	Effective discharge area
	Inlet	Outlet	d_o	A_0	K_{dr}	$A_0 \times K_{dr}$
SFA 15	15 mm	20 mm	13 mm	133 mm²	0.73	97 mm²
	1/2 in	3/4 in	0.512 in	0.206 in²		0.150 in²
SFA 15-50	15 mm	20 mm	13 mm	133 mm²	0.39	52 mm²
	1/2 in	3/4 in	0.512 in	0.206 in²		0.080 in²

The discharge capacity of the safety relief valves are based on (IS0 4126-1 / EN 1313 6).

$$q_m = 0.2883 \times C \times A_0 \times K_{dr} \times K_b \sqrt{\frac{p}{v}}$$

q_m Discharge capacity (kg/h).
C Discharge function depending of the actual refrigerant (κ) see table 2 (-).
A_0 Flow area of the safety relief valve (mm²).
K_{dr} De-rated coefficient of discharge ($K_{dr} = K_d \times 0.9$), (the K_{dr} is certified by TÜV) see table 1 (-).
K_b Correction factor for sub-critical flow (-).
$K_b = 1.0$ when the back pressure is lower than approx. 0.5 × relieving pressure ($P_b < 0.5 \times p$).
For all SFV safety valves $K_b = 1.0$
v Specific volume of the vapour at the releiving pressure p. (m³/kg).
p_{set} Set pressure, the predetermined pressure at which a pressure relief valve under operation starts to open (p_{set} is indicated on the metal plate on the safety relief valve).
(bar gauge)
p_{atm} Atmospheric pressure (1 bar).
p Relieving pressure, $p = p_{set} \times 1.1 + P_{atm}$ (bar absolute).

For further details see the above-mentioned ISO or EN standards.

Table 2. Properties of refrigerants

Refrigerant	Isentropic exponent [κ]	Discharge function [C]
R22	1.17	2.54
R134a	1.12	2.50
R404A	1.12	2.49
R410A	1.17	2.54
R717 (Ammonia)	1.31	2.64
R744 (CO_2)	1.30	2.63
Air	1.40	2.70

Capacity

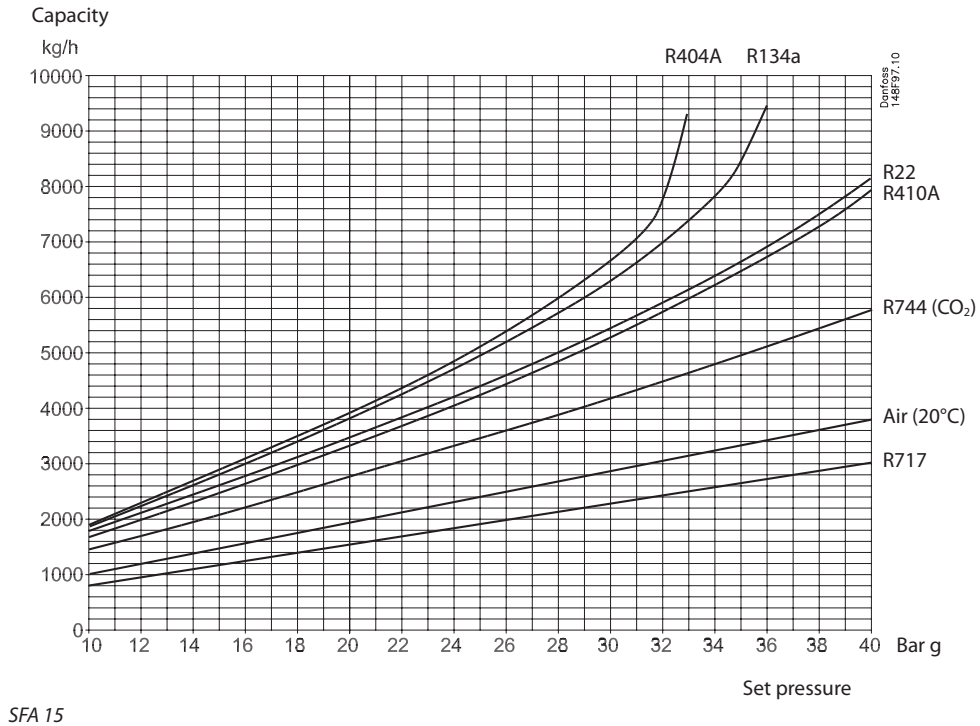

SFA 15

Capacity

Set pressure	qm	R22	R134a	R404A	R410A	R717	R744 (CO_2)	Air (20°C)
SFA 15								
10 bar g	kg/h	1749	1881	1888	1652	779	1424	1003
145 psi g	lb/min	64	69	69	61	29	52	37
15 bar g	kg/h	2592	2793	2842	2459	1135	2072	1462
218 psi g	lb/min	95	103	104	90	42	76	54
20 bar g	kg/h	3471	3804	3883	3305	1492	2747	1922
290 psi g	lb/min	128	140	143	121	55	101	71
25 bar g	kg/h	4409	4921	5101	4248	1853	3441	2381
363 psi g	lb/min	162	181	187	156	68	126	87
30 bar g	kg/h	5437	6269	6659	5250	2227	4163	2841
435 psi g	lb/min	200	230	245	193	82	153	104
35 bar g	kg/h	6633	8370		6450	2608	4936	3301
508 psi g	lb/min	244	308		237	96	181	121
40 bar g	kg/h	8104			7911	2989	5718	3760
580 psi g	lb/min	298			291	110	210	138

Capacity

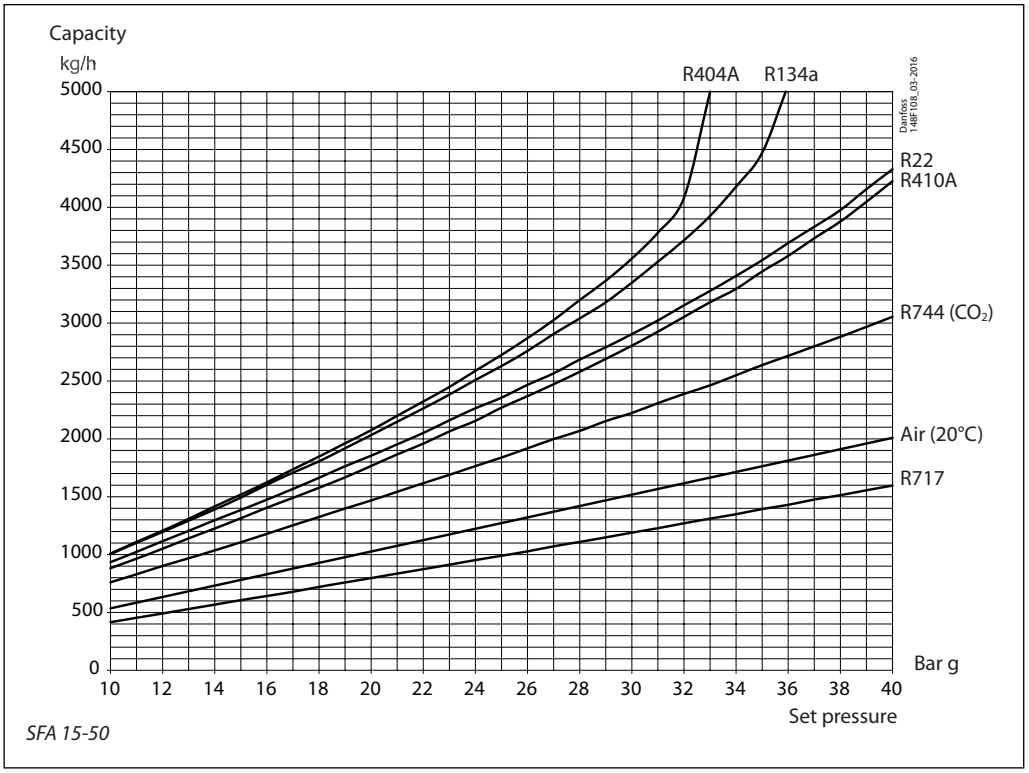

Capacity

Set pressure	qm	R22	R134a	R404A	R410A	R717	R744 (CO_2)	Air (20°C)
SFA 15-50								
10 bar g	kg/h	935	1005	1009	883	416	761	536
145 psi g	lb/min	34	37	37	32	15	28	20
15 bar g	kg/h	1385	1492	1519	1314	607	1107	781
218 psi g	lb/min	51	55	56	48	22	41	29
20 bar g	kg/h	1854	2033	2075	1766	797	1468	1027
290 psi g	lb/min	68	75	76	65	29	54	38
25 bar g	kg/h	2356	2629	2725	2270	990	1838	1272
363 psi g	lb/min	87	97	100	83	36	68	47
30 bar g	kg/h	2905	3349	3557	2805	1190	2224	1518
435 psi g	lb/min	107	123	131	103	44	82	56
35 bar g	kg/h	3544	4472		3446	1393	2637	1763
508 psi g	lb/min	130	164		127	51	97	65
40 bar g	kg/h	4329			4226	1597	3055	2009
580 psi g	lb/min	159			155	59	112	74

Material specification

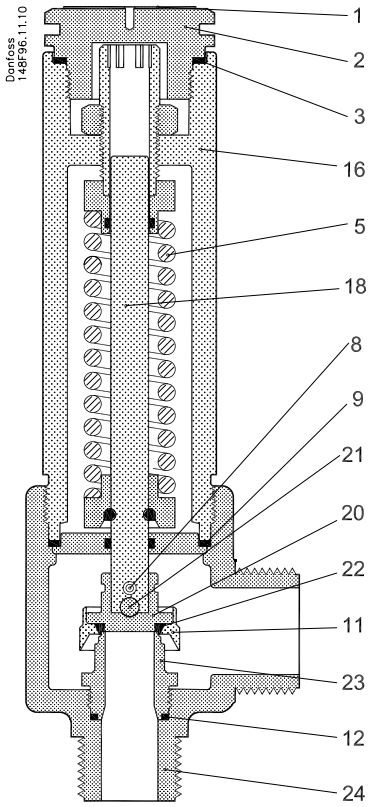

No.	Part	Material	DIN	ISO	ASTM
1	Marking label	Stainless steel			
2	Threaded plug	Steel			
3	Packing washer	Aluminium (Non-asbestos gasket)			
5	Spring	Steel	Class C, DIN17223		
8	Split	Steel	94 ELFORZ		
9	Packing washer	Aluminium (Non-asbestos gasket)			
11	Retainer	Stainless steel	X8CrNiS 18 9		AISI 303, A276
12	Packing washer	Aluminium (Non-asbestos gasket)			
16	Valve top	Steel	G20Mn5QT Alt. S235JRG2 Alt. S355J2G3	 Fe360BFN Fe510D1	LCC, A352 A284C A572-50
18	Valve spindle	Stainless steel	X5CrNi 18 10		AISI 304, A276
20	Valve cone	Stainless steel	X8CrNiS 18 9		AISI 303, A276
21	Steel ball	Steel			
22	Valve cone seal	Cloroprene (Neoprene)			
23	Valve seat	Stainless steel	X8CrNiS 18 9		AISI 303, A276
24	Valve housing	Steel	G20Mn5QT Alt. P285QH		LCC, A352 LF2, A350

Connections

T

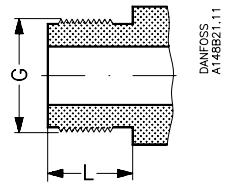

Size [mm]	Size [in]	Inlet	Outlet				L [mm]	L [in]	
T outside pipe thread, (ISO 228/1)									
15	1/2	G 3/4	G 1				15	0.59	

DIN

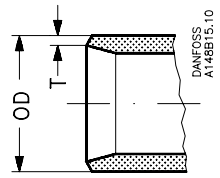

Size [mm]	Size [in]	Inlet [mm]		Inlet [in]		Outlet [mm]		Outlet [in]	
		OD	T	OD	T	OD	T	OD	T
Welding fittings, DIN (2448)									
15	1/2	21.3	2.3	0.839	0.091	26.9	2.3	1.059	0.091

Dimensions and weights

SFA 15 and SFA 15-50 with welding fittings

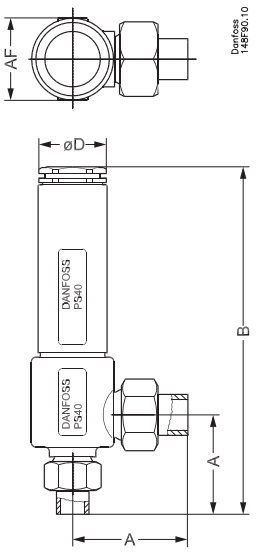

SFA 15 and SFA 15-50 T

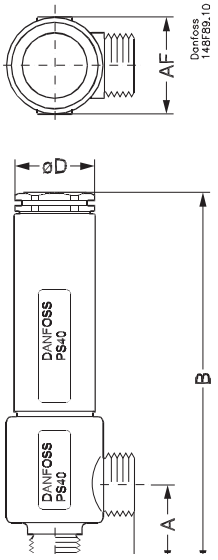

Valve size			A	B		ØD		AF		Weight
SFA 15 T, with threaded connections ISO 228/1 pipe threads										
SFA 15 and SFA 15-50 T (1/2 in)	mm in		45 1.77	210 8.27		45 1.81		55 2.17		2.2 kg 4.9 lbs
SFA with welding fittings, DIN 2448										
SFA 15 and SFA 15-50 (1/2 in)	mm in		83 3.27	248 9.76		45 1.81		55 2.17		2.5 kg 5.5 lbs

Specified weights are approximate values only.

Ordering

Certified SFA valves with standard set pressure

Size		Type	Set pressure		Code number
[mm]	[in]		[bar g]	[psi g]	
15	1/2	SFA 15 T 210	10	145	**148F3210**
15	1/2	SFA 15 T 211	11	160	**148F3211**
15	1/2	SFA 15 T 212	12	174	**148F3212**
15	1/2	SFA 15 T 213	13	189	**148F3213**
15	1/2	SFA 15 T 214	14	203	**148F3214**
15	1/2	SFA 15 T 215	15	218	**148F3215**
15	1/2	SFA 15 T 216	16	232	**148F3216**
15	1/2	SFA 15 T 217	17	247	**148F3217**
15	1/2	SFA 15 T 218	18	261	**148F3218**
15	1/2	SFA 15 T 219	19	276	**148F3219**
15	1/2	SFA 15 T 220	20	290	**148F3220**
15	1/2	SFA 15 T 221	21	305	**148F3221**
15	1/2	SFA 15 T 222	22	319	**148F3222**
15	1/2	SFA 15 T 223	23	334	**148F3223**
15	1/2	SFA 15 T 224	24	348	**148F3224**
15	1/2	SFA 15 T 225	25	363	**148F3225**
15	1/2	SFA 15 T 226	26	377	**148F3226**
15	1/2	SFA 15 T 227	27	392	**148F3227**
15	1/2	SFA 15 T 228	28	406	**148F3228**
15	1/2	SFA 15 T 229	29	421	**148F3229**
15	1/2	SFA 15 T 230	30	435	**148F3230**
15	1/2	SFA 15 T 231	31	450	**148F3231**
15	1/2	SFA 15 T 232	32	464	**148F3232**
15	1/2	SFA 15 T 233	33	479	**148F3233**
15	1/2	SFA 15 T 234	34	493	**148F3234**
15	1/2	SFA 15 T 235	35	508	**148F3235**
15	1/2	SFA 15 T 236	36	522	**148F3236**
15	1/2	SFA 15 T 237	37	537	**148F3237**
15	1/2	SFA 15 T 238	38	551	**148F3238**
15	1/2	SFA 15 T 239	39	566	**148F3239**
15	1/2	SFA 15 T 240	40	580	**148F3240**

Certified SFA valves with standard set pressure and TÜV pressure setting certificate with each valve

Size		Type	Set pressure		Code number
[mm]	[in]		[bar g]	[psi g]	
15	1/2	SFA 15 T 310	10	145	**148F3310**
15	1/2	SFA 15 T 311	11	160	**148F3311**
15	1/2	SFA 15 T 312	12	174	**148F3312**
15	1/2	SFA 15 T 313	13	189	**148F3313**
15	1/2	SFA 15 T 314	14	203	**148F3314**
15	1/2	SFA 15 T 315	15	218	**148F3315**
15	1/2	SFA 15 T 316	16	232	**148F3316**
15	1/2	SFA 15 T 317	17	247	**148F3317**
15	1/2	SFA 15 T 318	18	261	**148F3318**
15	1/2	SFA 15 T 319	19	276	**148F3319**
15	1/2	SFA 15 T 320	20	290	**148F3320**
15	1/2	SFA 15 T 321	21	305	**148F3321**
15	1/2	SFA 15 T 322	22	319	**148F3322**
15	1/2	SFA 15 T 323	23	334	**148F3323**
15	1/2	SFA 15 T 324	24	348	**148F3324**
15	1/2	SFA 15 T 325	25	363	**148F3325**
15	1/2	SFA 15 T 326	26	377	**148F3326**
15	1/2	SFA 15 T 327	27	392	**148F3327**
15	1/2	SFA 15 T 328	28	406	**148F3328**
15	1/2	SFA 15 T 329	29	421	**148F3329**
15	1/2	SFA 15 T 330	30	435	**148F3330**
15	1/2	SFA 15 T 331	31	450	**148F3331**
15	1/2	SFA 15 T 332	32	464	**148F3332**
15	1/2	SFA 15 T 333	33	479	**148F3333**
15	1/2	SFA 15 T 334	34	493	**148F3334**
15	1/2	SFA 15 T 335	35	508	**148F3335**
15	1/2	SFA 15 T 336	36	522	**148F3336**
15	1/2	SFA 15 T 337	37	537	**148F3337**
15	1/2	SFA 15 T 338	38	551	**148F3338**
15	1/2	SFA 15 T 339	39	566	**148F3339**
15	1/2	SFA 15 T 340	40	580	**148F3340**

Certified SFA valves with standard set pressure

Size		Type	Set pressure		Code number
[mm]	[in]		[bar g]	[psi g]	
15	1/2	SFA 15-50 T 210	10	145	**148F4000**
15	1/2	SFA 15-50 T 211	11	160	**148F4001**
15	1/2	SFA 15-50 T 212	12	174	**148F4002**
15	1/2	SFA 15-50 T 213	13	189	**148F4003**
15	1/2	SFA 15-50 T 214	14	203	**148F4004**
15	1/2	SFA 15-50 T 215	15	218	**148F4005**
15	1/2	SFA 15-50 T 216	16	232	**148F4006**
15	1/2	SFA 15-50 T 217	17	247	**148F4007**
15	1/2	SFA 15-50 T 218	18	261	**148F4008**
15	1/2	SFA 15-50 T 219	19	276	**148F4009**
15	1/2	SFA 15-50 T 220	20	290	**148F4010**
15	1/2	SFA 15-50 T 221	21	305	**148F4011**
15	1/2	SFA 15-50 T 222	22	319	**148F4012**
15	1/2	SFA 15-50 T 223	23	334	**148F4013**
15	1/2	SFA 15-50 T 224	24	348	**148F4014**
15	1/2	SFA 15-50 T 225	25	363	**148F4015**
15	1/2	SFA 15-50 T 226	26	377	**148F4016**
15	1/2	SFA 15-50 T 227	27	392	**148F4017**
15	1/2	SFA 15-50 T 228	28	406	**148F4018**
15	1/2	SFA 15-50 T 229	29	421	**148F4019**
15	1/2	SFA 15-50 T 230	30	435	**148F4020**
15	1/2	SFA 15-50 T 231	31	450	**148F4021**
15	1/2	SFA 15-50 T 232	32	464	**148F4022**
15	1/2	SFA 15-50 T 233	33	479	**148F4023**
15	1/2	SFA 15-50 T 234	34	493	**148F4024**
15	1/2	SFA 15-50 T 235	35	508	**148F4025**
15	1/2	SFA 15-50 T 236	36	522	**148F4026**
15	1/2	SFA 15-50 T 237	37	537	**148F4027**
15	1/2	SFA 15-50 T 238	38	551	**148F4028**
15	1/2	SFA 15-50 T 239	39	566	**148F4029**
15	1/2	SFA 15-50 T 240	40	580	**148F4030**

Certified SFA valves with standard set pressure and TÜV pressure setting certificate with each valve

Size		Type	Set pressure		Code number
[mm]	[in]		[bar g]	[psi g]	
15	1/2	SFA 15-50 T 310	10	145	**148F4100**
15	1/2	SFA 15-50 T 311	11	160	**148F4101**
15	1/2	SFA 15-50 T 312	12	174	**148F4102**
15	1/2	SFA 15-50 T 313	13	189	**148F4103**
15	1/2	SFA 15-50 T 314	14	203	**148F4104**
15	1/2	SFA 15-50 T 315	15	218	**148F4105**
15	1/2	SFA 15-50 T 316	16	232	**148F4106**
15	1/2	SFA 15-50 T 317	17	247	**148F4107**
15	1/2	SFA 15-50 T 318	18	261	**148F4108**
15	1/2	SFA 15-50 T 319	19	276	**148F4109**
15	1/2	SFA 15-50 T 320	20	290	**148F4110**
15	1/2	SFA 15-50 T 321	21	305	**148F4111**
15	1/2	SFA 15-50 T 322	22	319	**148F4112**
15	1/2	SFA 15-50 T 323	23	334	**148F4113**
15	1/2	SFA 15-50 T 324	24	348	**148F4114**
15	1/2	SFA 15-50 T 325	25	363	**148F4115**
15	1/2	SFA 15-50 T 326	26	377	**148F4116**
15	1/2	SFA 15-50 T 327	27	392	**148F4117**
15	1/2	SFA 15-50 T 328	28	406	**148F4118**
15	1/2	SFA 15-50 T 329	29	421	**148F4119**
15	1/2	SFA 15-50 T 330	30	435	**148F4120**
15	1/2	SFA 15-50 T 331	31	450	**148F4121**
15	1/2	SFA 15-50 T 332	32	464	**148F4122**
5	1/2	SFA 15-50 T 333	33	479	**148F4123**
15	1/2	SFA 15-50 T 334	34	493	**148F4124**
15	1/2	SFA 15-50 T 335	35	508	**148F4125**
15	1/2	SFA 15-50 T 336	36	522	**148F4126**
15	1/2	SFA 15-50 T 337	37	537	**148F4127**
15	1/2	SFA 15-50 T 338	38	551	**148F4128**
15	1/2	SFA 15-50 T 339	39	566	**148F4129**
15	1/2	SFA 15-50 T 340	40	580	**148F4130**

Ordering

Repair kit

Type	Code number
Repair kit SFA 15	**148F3036**
Repair kit SFA 15-50	**148F3150**

Nipples and gaskets

Type	Code number
Nipples + gaskets set for SFV 15 / SFA 15 and SFA 15-50	**148F3019**

ENGINEERING
TOMORROW

Safety relief valves
Type SFV 20-25

Contents **Page**

Technical data 907
Design 908
Capacity 909
Material specification 912
Connections 913
Dimensions and weights 913
Ordering 914

AI175286423559en-000601 | 2015.10

ENGINEERING TOMORROW

Safety relief valves
Type SFV 20-25



SFV 20 – 25 are standard, **back pressure dependent** safety relief valves in angle-way execution, specially designed for protection of vessels and other components against excessive pressure.

The valve is designed to meet the strict quality demands and safety requirements for refrigeration installations, specified by the international classification societies.

The valve is recommended as an external and internal safety relief valve in refrigeration plants. The spring housing is closed tightly to avoid refrigerant leakage.

The inlet flow diameters of the valves are:

- 18 mm (3/4 in) for SFV 20, and
- 23 mm (1 in) for SFV 25

The valves can be delivered with set pressures between 10 and 25 bar g (145 and 363 psi g).

Standard pressure setting valves having "TÜV Pressure Setting Certificate" with each valve, are also available.

Features

- Applicable for the refrigerants HCFC, HFC, R717 (Ammonia), R744 (CO_2) within a temperature range of -30 °C / 100 °C (-22 °F / 212 °F).
- Classification: DNV, CRN, BV, EAC etc. To get an updated list of certification on the products please contact your local Danfoss Sales Company.

Technical data

- *Refrigerants*
  Applicable for the refrigerants HCFC, HFC, R717 (Ammonia), R744 (CO_2) within a temperature range of -30 – 100 °C / -22 – 212 °F.
  Flammable hydrocarbons are not recommended.
  For further information please contact your local Danfoss Sales Company.
- *Pressure*
  Pressure setting range: 10 – 25 bar g / 145 – 363 psi g. For further information please contact your local Danfoss Sales Company.

  The valves are designed for:
  Strength test:
  43 bar g / 624 psi g
  Leakage safety:
  Same as set pressure

Important: The SFV safety relief valve is dependent on the back pressure (if the back pressure is higher than the atmospheric pressure, the opening pressure will be higher than stated set pressure).

Special circumstances such as vibrations (which should be avoided) and oscillating pressure may require an increased difference between the operational pressure and the closing pressure.

- *Pressure setting*
  The operating pressure of the plant should be at least 15% below the set pressure. This allows a perfect re-seating of the safety relief valve after having been activated.
- *Temperature range*
  -30 – 100 °C / -22 – 212 °F

Pressure Equipment Directive (PED)
The SFV-valves are approved in accordance with the European standard specified in the Pressure Equipment Directive and are CE marked.
For further details / restrictions - see Installation Instruction

SFV valves		
Nominal bore	18 mm (0.709 in)	23 mm (0.906 in)
Classified for	Fluid group I	
Category	IV	

Design

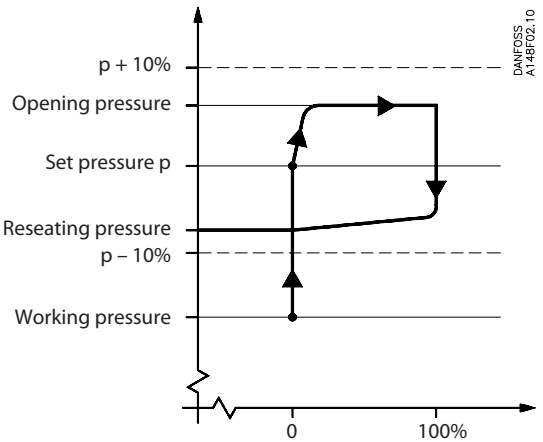

SFV is designed as a **standard safety relief valve** (DIN 3320), which are recommended for refrigeration plants. On a rise in pressure above the set pressure, the safety relief valve will initially start opening slightly, to minimise the outlet of refrigerant. If the pressure continues to increase, the valve will open fully. The safety relief valve will be fully open before the pressure is 10% higher than set pressure, and fully closed before the pressure is 10% below set pressure.

Connections
Available with the following connections:

- Outside pipe thread T (ISO 228/1)
- Welding fittings (DIN 2448)

Housing
Made of special steel approved for low temperature operation. Spindle and seat are made of stainless steel, to ensure precise operation even during extraordinary conditions. The gasket of the valve cone is made of a special cloroprene (neoprene) compound.

Installation
To ensure exact operation of the safety relief valve it should be installed with the spring housing upwards. If the valve is mounted as an internal safety relief valve without any demand for exact opening pressure, the valve may be fitted with the spring housing in other positions. When the valve is mounted, it is important to avoid the influence of static, dynamic and thermal stress.

A very precise technique has been applied for the production of the seal. However, this seal can still be damaged, if dirt is blown from the pipe system into the valve.

It is recommended that safety relief valves exhaust into the open air with a U-pipe filled with oil on the discharge branch, to prevent dirt from penetrating into the valve. It is also recommended that the valves be installed in pairs in conjunction with the double stop valve type DSV. For further information please see the DSV data sheet.

Re-calibration / servicing
In certain countries the authorities demand that the valves are checked at least once a year (see local rules).

Control / Identification
After adjustment of the set pressure at Danfoss, the valves are sealed. For that reason Danfoss can only guarantee correct operation, as long as the seal remains unbroken.

All valves are provided with a metal plate with the following information:
- Flow diameter
- Set pressure
- Date of production
- Production number
- Type approved code.

Transport / Handling
The valves are fitted with special protection covers and packed into purpose made transportation cartons.

It is important the cover remains fitted around the valve until it is installed.

To ensure the exact and precise operation of the valve it must be handled with care.

Capacity

The design and construction of the safety relief valve has been tested and approved by TÜV. This test comprises control of the function of the valve as well as measuring of the capacity, which is the basis of the curves and tables on the following pages. The values in the table are based on saturated gas.

If e.g. back pressure or superheated gas have to be taken into consideration, the formulas or the Danfoss computation program (DIRcalc™) can be used.

Table 1.

Valve	Nominal size		Flow diameter d_o	Flow area A_0	De-rated, certified coefficient of discharge K_{dr}
	Inlet	Outlet			
SFV 20	20 mm	25 mm	18 mm	254 mm²	0.54
	¾ in	1 in	0.709 in	0.394 in²	
SFV 25	25 mm	32 mm	23 mm	415 mm²	0.48
	1 in	1¼	0.906 in	0.643 in²	

The discharge capacity of the safety relief valves are based on (IS0 4126-1 / prEN 1313 6 (1998)).

$$q_m = 0.2883 \times C \times A_0 \times K_{dr} \times K_b \sqrt{\frac{p}{v}}$$

q_m Discharge capacity (kg/h)
C Discharge function depending of the actual refrigerant (κ) see table 2 (-)
A_0 Flow area of the safety relief valve (mm²).
K_{dr} De-rated coefficient of discharge ($K_{dr} = K_d \times 0.9$), (the K_{dr} is certified by TÜV) see table 1 (-)
K_b Correction factor for sub-critical flow. (-)
$K_b = 1.0$ when the back pressure is lower than approx. 0.5 × relieving pressure ($P_b < 0.5 \times p$)
For all SFV safety valves $K_b = 1.0$
v Specific volume of the vapour at the releiving pressure p. (m³/kg)
p_{set} Set pressure, the predetermined pressure at which a pressure relief valve under operation starts to open (p_{set} is indicated on the metal plate on the safety relief valve).
(bar gauge)
p_{atm} Atmospheric pressure. (1 bar)
p Relieving pressure, $p = p_{set} \times 1.1 + P_{atm}$ (bar absolute)

For further details see the above-mentioned ISO or EN standards.

Table 2. Properties of Refrigerants

Refrigerant	Isentropic exponent [κ]	Discharge function [C]
R22	1.17	2.54
R134a	1.12	2.50
R404A	1.12	2.49
R410A	1.17	2.54
R717 (Ammonia)	1.31	2.64
R744 (CO_2)	1.30	2.63
Air	1.40	2.70

Capacity
(cont.)

Capacity

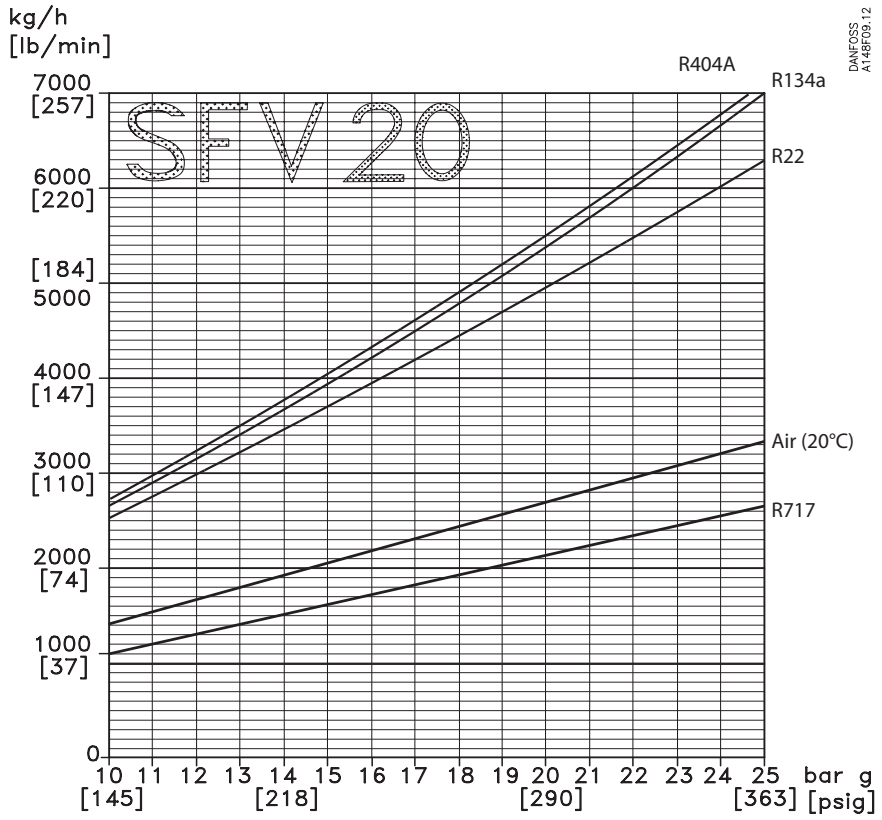

SFV 20

Capacity

Set pressure		R22	R134a	R404A	R717	Air (20°C)
SFV 20						
13 bar g	kg/h	3220	3430	3500	1415	1790
189 psi g	lb/min	118	126	129	52	66
18 bar g	kg/h	4440	4800	4900	1925	2435
261 psi g	lb/min	163	176	180	71	89
21 bar g	kg/h	5215	5680	5770	2235	2820
305 psi g	lb/min	192	209	212	82	104
25 bar g	kg/h	6285	6980	7125	2660	3335
363 psi g	lb/min	231	257	262	98	122

Capacity
(cont.)

Capacity

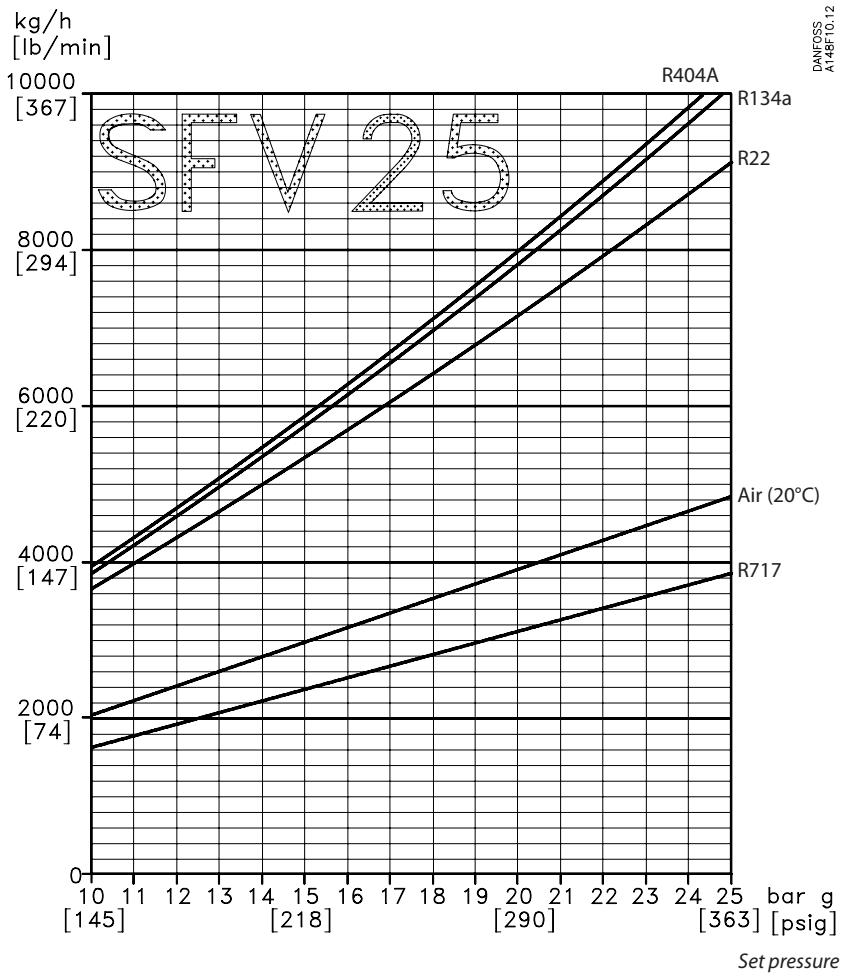

SFV 25

Capacity

Set pressure		R22	R134a	R404A	R717	Air (20°C)
SFV 25						
13 bar g 189 psi g	kg/h lb/min	4670 172	4980 183	5075 186	2050 75	2600 96
18 bar g 261 psi g	kg/h lb/min	6445 237	6965 256	7115 261	2790 103	3530 130
21 bar g 305 psi g	kg/h lb/min	7565 278	8240 303	8370 308	3240 119	4090 150
25 bar g 363 psi g	kg/h lb/min	9120 335	10135 372	10340 380	3860 142	4835 178

Material specification

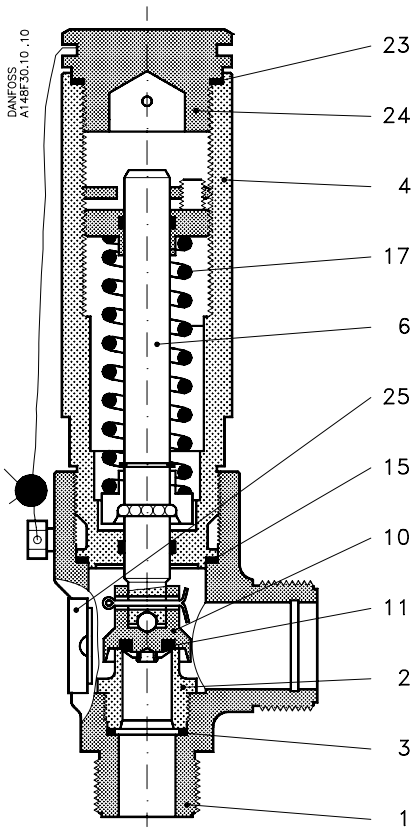

No.	Part	Material	DIN	ISO	ASTM
1	Housing	Steel	G20Mn5 QT *P285QH *TTSt35N	TW 6, 2604/3-75	Grade 1, A333, A334 * A350 LF2
2	Valve seat	Stainless steel	X10CrNiS189, 17440	Type 17, 683/13	AISI 303
3	Packing washer	Aluminium *Non-asbestos gasket			
4	Valve top	Steel	St. 37.2, 1652	Fe 360 B, 660	Grade C, A 283
6	Valve spindle	Stainless steel	X10CrNiS189, 17440	Type 17, 683/13	AISI 303
10	Valve cone	Steel			
11	Valve cone seal	Cloroprene (Neoprene)			
15	Packing washer	Aluminium *Non-asbestos gasket			
17	Spring	Steel	Class C	A 679, 17223	
23	Packing washer	Aluminum *Non-asbestos gasket			
24	Plug	Steel	9S Mn28, 1651 *R St 37.2, 17100	Type 2, R 683 Fe 360 B, 630	Grade C, A 283
25	Marking label	Aluminium			

* Alternative material

Connections

T

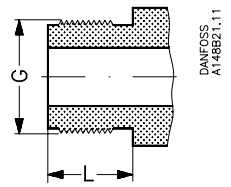

Size [mm]	Size [in]	Inlet	Outlet		L [mm]	L [in]		
T outside pipe thread, (ISO 228/1)								
20	¾	G 1 ¼	G 1 ½		20	0.79		
25	1	G 1 ¼	G 1 ½		20	0.79		

DIN

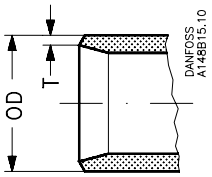

Size [mm]	Size [in]	Inlet [mm] OD	Inlet [mm] T	Inlet [in] OD	Inlet [in] T	Outlet [mm] OD	Outlet [mm] T	Outlet [in] OD	Outlet [in] T		
Welding fittings DIN (2448)											
20	¾	26.9	2.3	1.059	0.091	33.7	2.6	1.337	0.102		
25	1	33.7	2.6	1.327	0.102	42.4	2.6	1.669	0.102		

Dimensions and weights

SFV 20 - 25 T

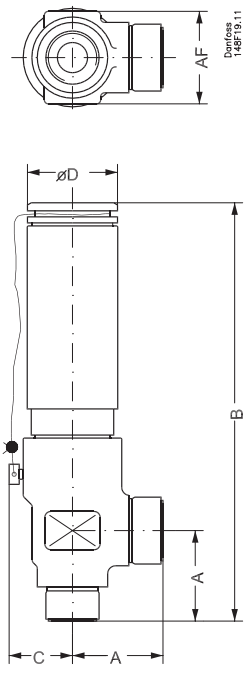

SFV 20 - 25 with welding fittings (flanges)

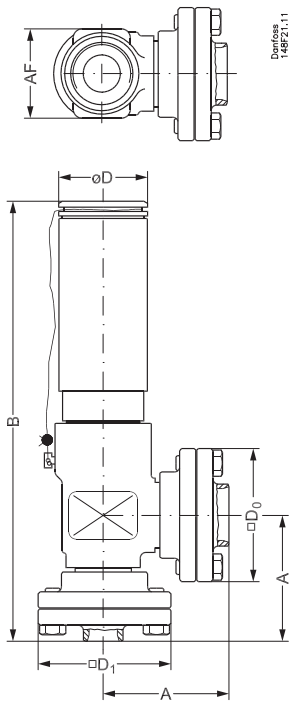

Valve size			A	B	C	□ D_0	øD	□ D_1	AF		Weight
SFV 20 - 25 T, with threaded connections ISO 228/1 pipe threads											
SFV 20 (¾ in)	mm in		55 2.17	270 10.63	40 1.57		60 2.36		60 2.36		4.2 kg
SFV 25 (1 in)	mm in		55 2.17	270 10.63	40 1.57		60 2.36		60 2.36		4.2 kg
SFV with welding fittings, DIN 2448											
SFV 20 (¾ in)	mm in		85 3.35	300 11.81		90 3.54	60 2.36	90 3.54	60 2.36		6.0 kg
SFV 25 (1 in)	mm in		85 3.35	300 11.81		90 3.54	60 2.36	90 3.54	60 2.36		6.0 kg

Specified weights are approximate values only.

Ordering

How to order
The table below is used to identify the valve required.

Please note that the type codes only serve to identify the valves, some of which may not form part of the standard product range. For further information please contact your local Danfoss Sales Company.

Example for type codes

SFV 20 T 210

Type codes

Valve type	SFV	Safety relief valve		
Nominal size in mm			Available connections	
			T	DIN welding fitting
(valve size measured on the connection diameter)	**20**	DN 20	×	×
	25	DN 25	×	×
Connections	**T**	Outside threaded connections: ISO 228/1 Pipe thread - The welding fittings for single mounted safety relief valve must be ordered separately		
Pressure setting		*Standard pressure setting: 2××*		
			SFV 20	*SFV 25*
	210	10 bar g (145 psi g)	×	×
	211	11 bar g (160 psi g)	×	×
	212	12 bar g (174 psi g)	×	×
	213	13 bar g (188 psi g)	×	×
	214	14 bar g (203 psi g)	×	×
	215	15 bar g (218 psi g)	×	×
	216	16 bar g (232 psi g)	×	×
	217	17 bar g (247 psi g)	×	×
	218	18 bar g (261 psi g)	×	×
	219	19 bar g (276 psi g)	×	×
	220	20 bar g (290 psi g)	×	×
	221	21 bar g (305 psi g)	×	×
	222	22 bar g (319 psi g)	×	×
	223	23 bar g (334 psi g)	×	×
	224	24 bar g (348 psi g)	×	×
	225	25 bar g (363 psi g)	×	×
		Standard pressure setting with TÜV certificate: 3××		
			SFV 20	*SFV 25*
	310	10 bar g (145 psi g)	×	×
	311	11 bar g (160 psi g)	×	×
	312	12 bar g (174 psi g)	×	×
	313	13 bar g (188 psi g)	×	×
	314	14 bar g (203 psi g)	×	×
	315	15 bar g (218 psi g)	×	×
	316	16 bar g (232 psi g)	×	×
	317	17 bar g (247 psi g)	×	×
	318	18 bar g (261 psi g)	×	×
	319	19 bar g (276 psi g)	×	×
	320	20 bar g (290 psi g)	×	×
	321	21 bar g (304 psi g)	×	×
	322	22 bar g (319 psi g)	×	×
	323	23 bar g (334 psi g)	×	×
	324	24 bar g (348 psi g)	×	×
	325	25 bar g (362 psi g)	×	×

Important!
Where products need to be certified according to specific certification societies, the relevant information should be included at the time of order.

Ordering
(cont.)

Certified SFV valves with standard set pressure

Size		Construction and test facilities are approved by TÜV			
[mm]	[in]	Type	[Bar g]	[psi g]	**Part no.**
20	3/4	SFV20 T 210	10	145	**2416+254**
20	3/4	SFV20 T 211	11	160	**2416+255**
20	3/4	SFV20 T 212	12	174	**2416+256**
20	3/4	SFV20 T 213	13	189	**2416+150**
20	3/4	SFV20 T 214	14	203	**2416+257**
20	3/4	SFV20 T 215	15	218	**2416+258**
20	3/4	SFV20 T 216	16	232	**2416+259**
20	3/4	SFV20 T 217	17	247	**2416+260**
20	3/4	SFV20 T 218	18	261	**2416+151**
20	3/4	SFV20 T 219	19	276	**2416+261**
20	3/4	SFV20 T 220	20	290	**2416+262**
20	3/4	SFV20 T 221	21	305	**2416+152**
20	3/4	SFV20 T 222	22	319	**2416+241**
20	3/4	SFV20 T 223	23	334	**2416+263**
20	3/4	SFV20 T 224	24	348	**2416+264**
20	3/4	SFV20 T 225	25	363	**2416+183**

Certified SFV valves with standard set pressure and TÜV pressure setting certificate with each valve

Size		Each valve is certified by a representative from TÜV			
[mm]	[in]	Type	[Bar g]	[psi g]	**Part no.**
20	3/4	SFV20 T 310	10	145	**2416+285**
20	3/4	SFV20 T 311	11	160	**2416+286**
20	3/4	SFV20 T 312	12	174	**2416+287**
20	3/4	SFV20 T 313	13	189	**2416+160**
20	3/4	SFV20 T 314	14	203	**2416+288**
20	3/4	SFV20 T 315	15	218	**2416+289**
20	3/4	SFV20 T 316	16	232	**2416+290**
20	3/4	SFV20 T 317	17	247	**2416+291**
20	3/4	SFV20 T 318	18	261	**2416+161**
20	3/4	SFV20 T 319	19	276	**2416+292**
20	3/4	SFV20 T 320	20	290	**2416+293**
20	3/4	SFV20 T 321	21	305	**2416+162**
20	3/4	SFV20 T 322	22	319	**2416+294**
20	3/4	SFV20 T 323	23	334	**2416+295**
20	3/4	SFV20 T 324	24	348	**2416+296**
20	3/4	SFV20 T 325	25	363	**2416+186**

Certified SFV valves with standard set pressure

Size		Construction and test facilities are approved by TÜV			
[mm]	[in]	Type	[Bar g]	[psi g]	**Part no.**
25	1	SFV25 T 210	10	145	**2416+265**
25	1	SFV25 T 211	11	160	**2416+266**
25	1	SFV25 T 212	12	174	**2416+267**
25	1	SFV25 T 213	13	189	**2416+153**
25	1	SFV25 T 214	14	203	**2416+268**
25	1	SFV25 T 215	15	218	**2416+269**
25	1	SFV25 T 216	16	232	**2416+270**
25	1	SFV25 T 217	17	247	**2416+271**
25	1	SFV25 T 218	18	261	**2416+154**
25	1	SFV25 T 219	19	276	**2416+272**
25	1	SFV25 T 220	20	290	**2416+273**
25	1	SFV25 T 221	21	305	**2416+155**
25	1	SFV25 T 222	22	319	**2416+242**
25	1	SFV25 T 223	23	334	**2416+274**
25	1	SFV25 T 224	24	348	**2416+275**
25	1	SFV25 T 225	25	363	**2416+184**

Certified SFV valves with standard set pressure and TÜV pressure setting certificate with each valve

Size		Each valve is certified by a representative from TÜV			
[mm]	[in]	Type	[Bar g]	[psi g]	**Part no.**
25	1	SFV25 T 310	10	145	**2416+297**
25	1	SFV25 T 311	11	160	**2416+298**
25	1	SFV25 T 312	12	174	**2416+299**
25	1	SFV25 T 313	13	189	**2416+163**
25	1	SFV25 T 314	14	203	**2416+300**
25	1	SFV25 T 315	15	218	**2416+301**
25	1	SFV25 T 316	16	232	**2416+302**
25	1	SFV25 T 317	17	247	**2416+303**
25	1	SFV25 T 318	18	261	**2416+164**
25	1	SFV25 T 319	19	276	**2416+304**
25	1	SFV25 T 320	20	290	**2416+305**
25	1	SFV25 T 321	21	305	**2416+165**
25	1	SFV25 T 322	22	319	**2416+306**
25	1	SFV25 T 323	23	334	**2416+307**
25	1	SFV25 T 324	24	348	**2416+308**
25	1	SFV25 T 325	25	363	**2416+187**

Flanges and gaskets

Type	**Code No.**
Flanges + gaskets set for SFV 20	**148F3020**
Flanges + gaskets set for SFV 25	**148F3021**

Repair kit

Type	**Code No.**
Repair kit for SFV 20 (gaskets and cone)	**2453+082**
Repair kit for SFV 25 (gaskets and cone)	**2453+083**

ENGINEERING
TOMORROW

Change-over valve
Type DSV 1 and DSV 2

Contents **Page**

Features 919
Design 920
Technical data 920
Material specification 921
Dimensions and weights for double safety valve systems 923
Dimensions and weights 925
Ordering 926

AI183186425447en-000601 | 2016.01

ENGINEERING
TOMORROW

Change-over valve
Type DSV 1 and DSV 2

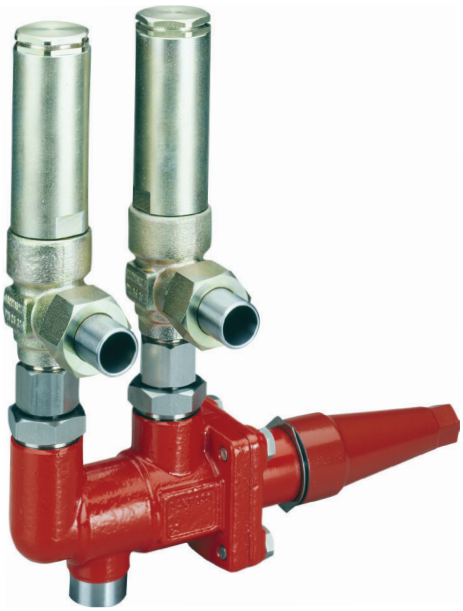

DSV 1 and DSV 2 are change-over valves, which are designed to meet all industrial refrigeration application requirements.

DSV valves are designed specifically for use with double safety valve systems.

The valves are designed to give favourable flow characteristics and are easy to dismantle for servicing. The valve cone is designed to ensure perfect closing, even with minimum torque the valve will close effectively. All valves are equipped with vented cap and nipple / flange connections, which permit easy inspection or replacement of safety valves.

Features

- Applicable to HCFC, non flammable HFC, R717 (Ammonia) and R744 (CO_2)
- Each valve type is clearly marked with type, size and performance range
- The valves and caps are prepared for sealing, to prevent operation by unauthorised persons, using a seal wire
- Can accept flow in both directions
- Housing and bonnet are made from low temperature steel according to requirements of the Pressure Equipment Directive and other international classification authorities
- Max. operating pressure:
  DSV 1 and DSV 2: 40 bar g / 580 psi g
- Temperature range:
  DSV 1 and DSV 2: -50 – 100 °C / -58 – 212 °F
- **DSV 1** when fitted with 2 x SFA 15/BSV 8 or **DSV 2** when fitted with a combination of either 2 x SFA 15, or 2 x SFV 20, or 2 x SFV 25, meet the requirements according to EN13136 "Safety Valves Calculations" regarding max. 3% pressure drop in upstream line.
- Classification: DNV, CRN, BV, EAC etc.
  To get an updated list of certification on the products please contact your local Danfoss Sales Company.

Pressure Equipment Directive (PED)
DSV valves are approved and CE-marked in accordance with Pressure Equipment Directive - 97/23/EC.

For further details / restrictions - see Installation Instruction.

	DSV 1 valves	DSV 2 valves
Nominal bore	DN ≤ 25 mm (1 in)	DN32 mm (1 ¼ in)
Classified for	Fluid group I	
Category	Article 3, paragraph 3	II

Design

Connections
Available with the following connections: - Weld branch / nipples / flanges - DIN 2448
Note: DSV valves are supplied c/w DSV inlet connection fittings, DSV outlet connection fittings, and SFA / BSV / SFV outlet connection fittings. Please refer to ordering section.

Housing and bonnet
Made from special, cold resistant steel approved for low temperature operation.

Valve cone
A Teflon tightening ring provides perfect sealing with a minimum closing torque.

Spindle
Made of polished stainless steel, which is ideal for O-ring sealing.

Packing gland
The "full temperature range" packing gland ensures perfect tightness in the whole temperature range: -50 – 100 °C / -58 – 212 °F. The packing gland is equipped with a scraper ring to prevent penetration of dirt and other foreign bodies.

Technical data

- Refrigerants
  Applicable to HCFC, non flammable HFC, R717 (Ammonia) and R744 (CO_2).
  Flammable hydrocarbons are not recommended.
  The valve is only recommended for use in closed circuits.

  For further information please contact Danfoss.
- Temperature range
  -50 – 100 °C / -58 – 212 °F.
- Pressure
  The valves are designed for:
  Max. operating pressure: 40 bar g / 580 psig
- Capacity

Type	K_v - value	C_v - value
	[m^3/h]	[Usgal/min]
DSV 1	17.5	20.3
DSV 2	30.0	34.8

- Installation
  DSV are used as changeover valves between two SFA / BSV / SFV safety valves. When the spindle is turned clockwise (fig. 1) the inlet port C is connected to B. When the spindle is turned anticlockwise (fig. 1) the inlet port C is connected to A. For further information refer to installation instruction for DSV.

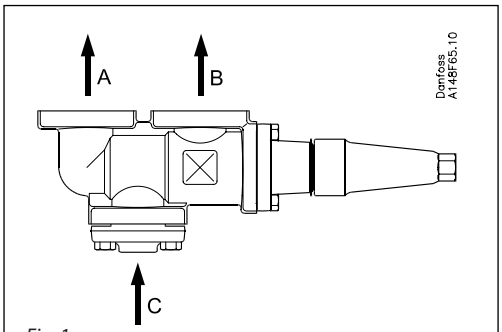

Fig. 1

Material specification

DSV 1

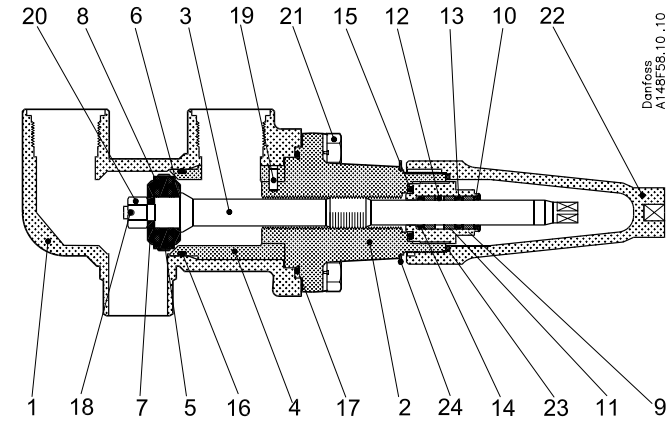

No.	Part	Material	DIN / EN	ISO	ASTM
1	Housing	Steel	P285QH, EN10222-4		LF2A350
2	Bonnet	Steel	P285QH, EN10222-4		LF2A350
3	Spindle	Stainless steel	X10CrNiS 18 9 17440	Type 17 683/13	AISI 303
4	Seat	Steel	9 SMn28, 1651	Type2, R683/9	1213, SAEJ 403
5	Cone, Middle	Steel	9 SMn28, 1651	Type2, R683/9	1213, SAEJ 403
6	Cone, Back	Steel	9 SMn28, 1651	Type2, R683/9	1213, SAEJ 403
7	Cone, Front	Steel	9 SMn28, 1651	Type2, R683/9	1213, SAEJ 403
8	Cone seal	Teflon(PTFE)			
9	Packing gland	Steel	9SMn28, 1651	Type 2, R683/9	1213,SAE J403
13-17	O-ring	Cloroprene (Neoprene)			
20	Slotted nut	Steel			
21	Screw	Steel	A2-70	A2-70	Type 308
22	Seal cap	Aluminium			
23	Gasket for seal cap	Nylon			
24	Idenfication ring	Stainless steel			

Material specification

DSV 2

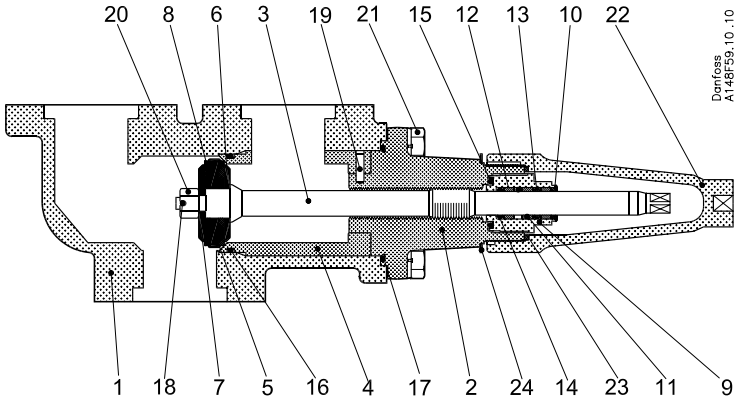

No.	Part	Material	DIN / EN	ISO	ASTM
1	Housing	Steel	P285QH, EN10222-4		LF2A350
2	Bonnet	Steel	P285QH, EN10222-4		LF2A350
3	Spindle	Stainless steel	X10CrNiS 18 9 17440	Type 17 683/13	AISI 303
4	Seat	Steel	9 SMn28, 1651	Type2, R683/9	1213, SAEJ 403
5	Cone, Middle	Steel	9 SMn28, 1651	Type2, R683/9	1213, SAEJ 403
6	Cone, Back	Steel	9 SMn28, 1651	Type2, R683/9	1213, SAEJ 403
7	Cone, Front	Steel	9 SMn28, 1651	Type2, R683/9	1213, SAEJ 403
8	Cone seal	Teflon(PTFE)			
9	Packing gland	Steel	9SMn28, 1651	Type 2, R683/9	1213,SAE J403
13 – 17	O-ring	Cloroprene (Neoprene)			
20	Slotted nut	Steel			
21	Screw	Steel	A2-70	A2-70	Type 308
22	Seal cap	Aluminium			
23	Gasket for seal cap	Nylon			
24	Idenfication ring	Stainless steel			

Dimensions and weights for double safety valve systems

DSV 1 + SFA 15

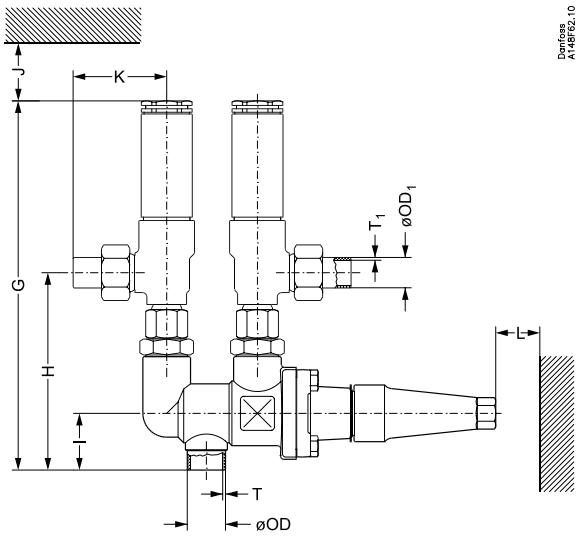

DSV 2 + SFA 15

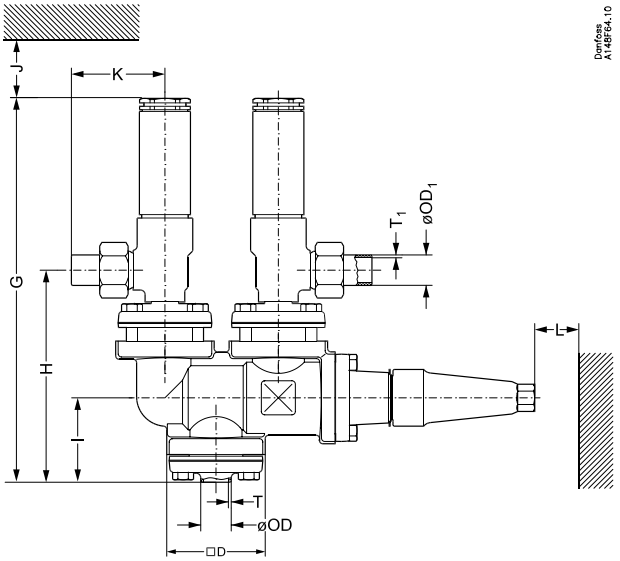

Valve size		DN	ØOD	ØOD1	T	T1		G	H	I	J	K	L	Weight
		SFA 15												
DSV 1	mm	25	33.7	26.9	2.6	2.3		339	174	50	40	82.5	80	4.55 kg
(D25)	in	1	1.33	1.06	0.10	0.09		13.35	6.85	1.97	1.58	3.25	3.15	10.03 lb

Valve size		DN	ØOD	ØOD1	T	T1	□D	G	H	I	J	K	L	Weight
		SFA 15												
DSV 2	mm	20	26.9	26.9	2.3	2.3	82.5	351	186	73.5	10	82.5	80	9.3 kg
(FD20)	in	3/4	1.06	1.06	0.09	0.09	3.25	13.82	7.32	2.89	0.39	3.25	3.15	20.5 lb

Valve size		DN	ØOD	ØOD1	T	T1	□D	G	H	I	J	K	L	Weight
		SFA 15												
DSV 2	mm	25	33.7	26.9	2.6	2.3	82.5	351	186	73.5	10	82.5	80	9.3 kg
(FD25)	in	1	1.33	1.06	0.10	0.09	3.25	13.82	7.32	2.89	0.39	3.25	3.15	20.5 lb

Valve size		DN	ØOD	ØOD1	T	T1	□D	G	H	I	J	K	L	Weight
		SFA 15												
DSV 2	mm	32	42.4	26.9	2.6	2.3	82.5	351	186	73.5	10	82.5	80	9.3 kg
(FD32)	in	1 1/4	1.67	1.06	0.10	0.09	3.25	13.82	7.32	2.89	0.39	3.25	3.15	20.5 lb

Specified weights (incl. all fittings and excl. SFA / SFV) are approximate values only.

Dimensions and weights for double safety valve systems

DSV 2 + SFV 20 / SFV 25

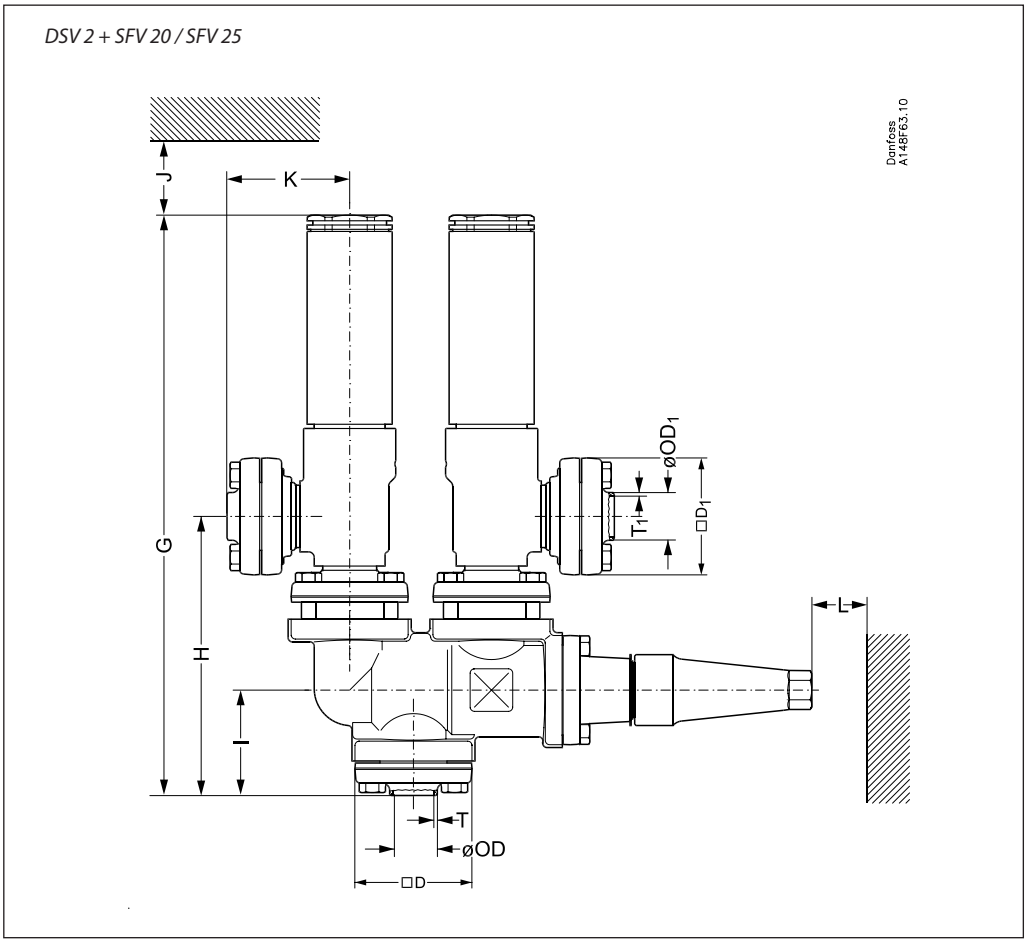

Valve size		DN	ØOD	ØOD1	T	T1	□D	□D1	G	H	I	J	K	L	Weight
		SFV 20													
DSV 2	mm	25	33.7	33.7	2.6	2.6	82.5	82.5	412	197	73.5	10	85	80	11.9 kg
(FD25)	in	1	1.33	1.33	0.10	0.10	3.25	3.25	16.22	7.76	2.89	0.39	3.35	3.15	26.23 lb

Valve size		DN	ØOD	ØOD1	T	T1	□D	□D1	G	H	I	J	K	L	Weight
		SFV 20													
DSV 2	mm	32	42.4	33.7	2.6	2.6	82.5	82.5	412	197	73.5	10	85	80	11.9 kg
(FD32)	in	1 ¼	1.67	1.33	0.10	0.10	3.25	3.25	16.22	7.76	2.89	0.39	3.35	3.15	26.23 lb

Valve size		DN	ØOD	ØOD1	T	T1	□D	□D1	G	H	I	J	K	L	Weight
		SFV 25													
DSV 2	mm	32	42.4	42.4	2.6	2.6	82.5	82.5	412	197	73.5	10	85	80	11.9 kg
(FD32)	in	1 ¼	1.67	1.67	0.10	0.10	3.25	3.25	16.22	7.76	2.89	0.39	3.35	3.15	26.23 lb

Specified weights (incl. all fittings and excl. SFA / SFV) are approximate values only.

Dimensions and weights

DSV 1

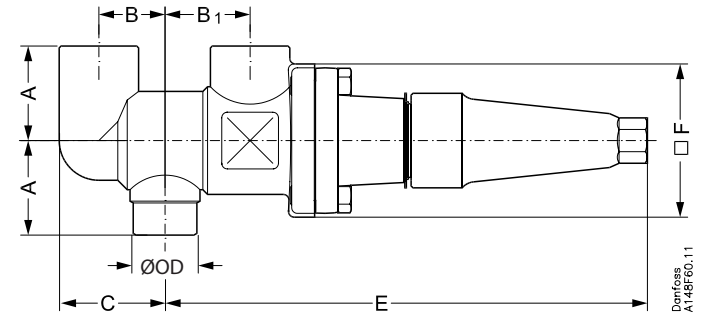

DSV 2

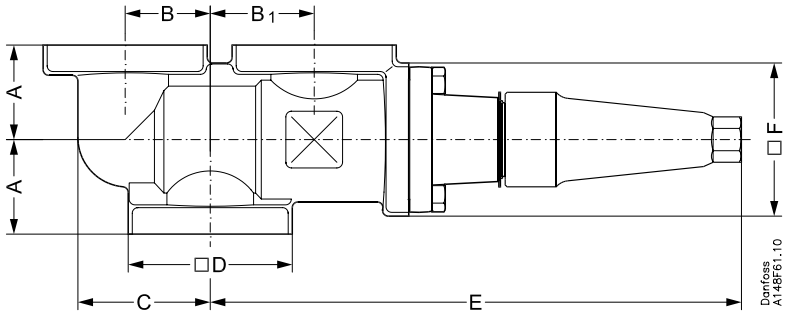

Valve size		A	B	B_1	C		ØOD	E	□F	Weight
DSV 1	mm	50	35	45	56		33.7	255	77	3.6 kg
	in	2	1.38	1.77	2.20		1.33	10.04	3.03	7.94 lb

Valve size		A	B	B_1	C	□D		E	□F	Weight
DSV 2	mm	50	45	55	70	82,5		281	77	6.1 kg
	in	2	1.77	2.17	2.76	3.25		11.06	3.03	13.45 lb

Specified weights are approximate values only.

Ordering

How to order

The table below is used to identify the valve required.

Please note that the type codes only serve to identify the valves, some of which may not form part of the standard product range. For further information please contact your local Danfoss Sales Company.

Type codes

Example

DSV 2 FD20 SFA15 = 148F3006

DSV2 = Valve type
FD20 = DSV inlet connection
SFA15 = Safety valve combination

Valve type		DSV inlet connection	DSV outlet connection	SFV outlet connection	Safety valve combination	Code No.
DSV	1	D25 (1 in)	G ¾" Union	ND20 (¾ in)	SFA 15 / BSV 8	**148F3005**
DSV	2	FD20 (¾ in)	G ¾" thread flange	ND20 (¾ in)	SFA 15 / BSV 8	**148F3006**
DSV	2	FD25 (1 in)	G ¾" thread flange	ND20 (¾ in)	SFA 15 / BSV 8	**148F3007**
DSV	2	FD32 (1 ¼ in)	G ¾" thread flange	ND20 (¾ in)	SFA 15 / BSV 8	**148F3008**
DSV	2	FD25 (1 in)	G 1 ¼" thread flange	FD25 (1 in)	SFV20	**148F3009**
DSV	2	FD32 (1 ¼ in)	G 1 ¼" thread flange	FD25 (1 in)	SFV20	**148F3010**
DSV	2	FD32 (1 ¼ in)	G 1 ¼" thread flange	FD32 (1 ¼ in)	SFV25	**148F3011**
Connection fittings:	D	Weld branches DIN 2448				
	ND	Weld nipples DIN 2448				
	FD	Weld flanges DIN 2448				

Above code numbers include:
DSV valve, DSV inlet connection fitting, DSV outlet connection fitting, SFA / BSV / SFV outlet connection fittings and necessary seals.

Safety valves SFA / BSV / SFV must be ordered separately (see SFA / BSV / SFV technical documen-tation).

Fittings and gaskets

Type	Code No.
Nipples + gaskets set for 25D / ND20 DSV1 / SFA 15 / BSV 8	**148F3037**
Flanges + gaskets set for FD20 / ND20 DSV2 / SFA 15 / BSV 8	**148F3038**
Flanges + gaskets set for FD25 / ND20 DSV2 / SFA 15 / BSV 8	**148F3039**
Flanges + gaskets set for FD32 / ND20 DSV2 / SFA 15 / BSV 8	**148F3040**
Flanges + gaskets set for FD25 / FD25 DSV2 / SFV 20	**148F3041**
Flanges + gaskets set for FD32 / FD25 DSV2 / SFV 20	**148F3042**
Flanges + gaskets set for FD32 / FD32 DSV2 / SFV 25	**148F3043**

ENGINEERING
TOMORROW

Safety relief valves
Type BSV-8

Contents **Page**

Technical data 929
Design 930
Capacity 931
Material specification 934
Connections 935
Dimension and weight 935
Ordering 936

AI183186419214en-000501 | 2016.01

ENGINEERING TOMORROW

Safety relief valves
Type BSV-8



BSV is a standard, back pressure **independent** safety relief valve, especially designed for protection of small components against excessive pressure and as a pilot valve for the pilot operated internal safety valve, type POV.

BSV is an angle-way safety relief valve which can operate with a very high back pressure. The valve is designed to meet the strict quality demands and safety requirements for refrigeration installations, specified by the international classification societies.

As the valve is not dependent on the back pressure, it is recommended for use as an internal safety relief valve. However, the valve can also be used as an external safety relief valve. The spring housing is tightly sealed to avoid refrigerant leakage.
The inlet flow diameter of the BSV 8 is 8.0 mm ($^{5}/_{16}$ in).

The valves can be delivered with set pressures between 10 and 25 bar g (145 and 363 psi g).

Standard pressure setting valves having "TÜV Pressure Setting Certificate" with each valve are also available.

Features

- Applicable for the refrigerants HCFC, HFC, R717 (Ammonia), R744 (CO_2).
- Classification: DNV, CRN, BV, EAC etc.
  To get an updated list of certification on the products please contact your local Danfoss Sales Company.

Technical data

- *Refrigerants*
  Applicable for the refrigerants HCFC, HFC, R717 (Ammonia), R744 (CO_2).
  Flammable hydrocarbons are not recommended. For further information please contact your local Danfoss Sales Company
- *Pressure*
  Pressure setting range: 10 - 25 bar g / 145 – 363 psi g, For further information please contact your local Danfoss Sales Company

  The valves are designed for:
  Strength test: 43 bar g / 624 psi g
  Leakage safety: 25 bar g / 363 psi g

  Special circumstances such as vibrations (which should be avoided) and oscillating pressure may require an increased difference between the operational pressure and the closing pressure.
- *Pressure setting*

  The operating pressure of the plant should be at least 15% below the set pressure. This allows a perfect re-seating of the safety relief valve after having been activated.
- *Temperature range for BSV used as an external safety relief valve:*
  -30 – 100 °C / -22 – 212 °F
- *Temperature range for BSV used as a pilot valve for POV:*
  -50 – 100 °C / -58 – 212 °F

  Note:
  For temperatures below -30 °C / -22 °F, the valve may not re-seat to a 100% gas tightness when activated.

Pressure Equipment Directive (PED)
The BSV-valves are approved in accordance with the European standard specified in the Pressure Equipment Directive and are CE marked.
For further details / restrictions - see Installation Instruction

	BSV 8
Nominal bore	8 mm (0.315 in)
Classified for	Fluid group I
Category	IV

Design

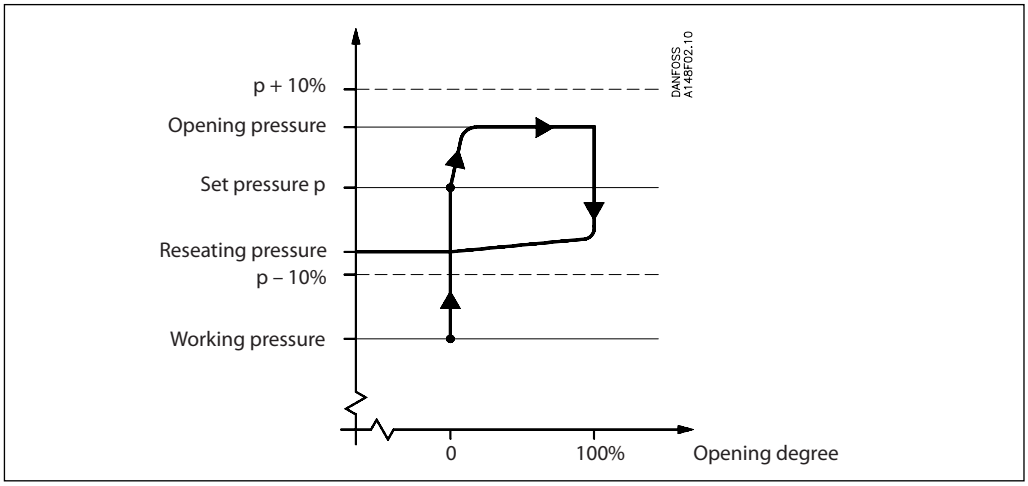

BSV is designed as a standard safety relief valve (DIN 3320) which are recommended for refrigeration plants. On a rise in pressure above the set pressure, the safety relief valve will initially start opening slightly, to minimise the outlet of refrigerant. If the pressure continues to increase, the valve will open fully. The safety relief valve will be fully open before the pressure is 10% higher than set pressure, and fully closed before the pressure is 10% below set pressure.

The valve is recommended as an internal safety relief valve because its function is independent of the back pressure. The valve can also be used as an external safety relief valve.

Connections
Available with the following connections:

- Outside pipe thread T (ISO 228/1)

Housing
Made of special steel approved for low temperature application. Spindle and seat are made of stainless steel, to ensure precise operation even during extraordinary conditions. The gasket of the valve cone is made of a special neoprene compound.

Installation
To ensure exact operation of the safety relief valve it should be installed with the spring housing upwards. If the valve is mounted as an internal safety relief valve without any demand for exact opening pressure, the valve may be fitted with the spring housing in other positions. When the valve is mounted, it is important to avoid the influence of static, dynamic and thermal stress.

A very precise technique has been applied for the production of the seal. However, this seal can still be damaged, if dirt is blown from the pipe system into the valve.

Re-calibration / servicing
In certain countries the authorities demand that the valves are checked at least once a year (see local rules).

Control / Identification
After adjustment of the set pressure at Danfoss, the valves are sealed. For that reason Danfoss can only guarantee correct operation, as long as the seal remains unbroken.

All valves are provided with a metal plate with the following information:
- Flow diameter
- Set pressure
- Date of production
- Production number
- Type approved code.

Transport / Handling
The valves are fitted with special protection covers and packed in purpose made transportation cartons. It is important that the cover remains fitted around the valve until it is installed.

To ensure the exact and precise operation of the valve it must be handled with care.

Capacity

The design and construction of the safety relief valve has been tested and approved by TÜV. This test comprises control of the function of the valve as well as measuring of the capacity, which is the basis of the curves and tables on the following pages. The values in the table are based on saturated gas.

If e.g. back pressure or superheated gas have to be taken into consideration, the formulas or the Danfoss computation program (DIRcalc™) can be used.

Table 1.

Valve	Nominal size		Flow diameter d_0	Flow area A_0	De-rated, certified coefficient of discharge K_{dr}
	Inlet	Outlet			
BSV 8	15 mm 1/2 in	20 mm 3/4 in	8 mm 0.315 in	50 mm² 0.078 in²	0.46

The discharge capacity of the safety relief valves are based on (IS0 4126-1/EN 1268-1 / prEN 1313 6 (1998)).

$$q_m = 0.2883 \times C \times A_0 \times K_{dr} \times K_b \times \sqrt{\frac{p}{v}}$$

q_m Discharge capacity (kg/h)
C Discharge function depending of the actual refrigerant (κ) see table 2.
A_0 Flow area of the safety relief valve (mm²).
K_{dr} De-rated coefficient of discharge ($K_{dr} = K_d \times 0.9$), (the K_{dr} is certifled by TÜV) see table 1.
K_b Correction factor for sub-critical flow. (-)
$K_b = 1.0$ when the back pressure is lower than approx. $0.5 \times$ relieving pressure ($P_b < 0.5 \times p$).
v Specific volume of the vapour. (m³/kg)
p_{set} Set pressure, the predetermined pressure at which a pressure relief valve under operation starts to open (p_{set} is indicated on the metal plate on the safety relief valve). (bar g)
p_{atm} Atmospheric pressure. (1 bar)
p Relieving pressure, $p = p_{set} \times 1.1 + P_{atm}$ (bar a)

For further details see the above mentioned ISO or EN standards.

Important!
For back pressure higher than $0.5 \times p$, the Danfoss computer program (DIRcalc™) or the above mentioned standard must be used when calculating the capacity.

Table 2. Properties of Refrigerants

Refrigerant	Isentropic exponent [κ]	Discharge function [C]
R22	1.17	2.54
R134a	1.12	2.50
R404A	1.12	2.49
R410A	1.17	2.54
R717 (Ammonia)	1.31	2.64
R744 (CO_2)	1.30	2.63
Air	1.40	2.70

Capacity

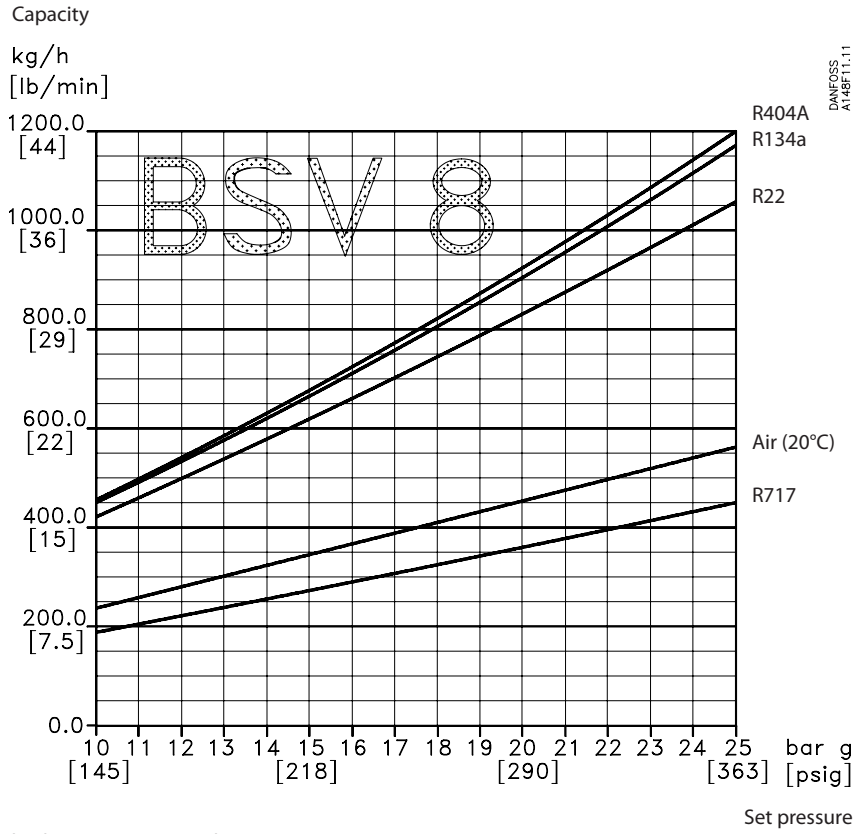

BSV 8, back pressure = atmosphere pressure

Capacity

Set pressure		R22	R134a	R404A	R717	Air (20 °C)
BSV 8. back pressure = atmosphere pressure						
13 bar g 189 psi g	kg/h lb/min	540 19.9	575 21.2	590 21.6	240 8.7	300 11.1
18 bar g 261 psi g	kg/h lb/min	745 27.5	810 29.7	825 30.3	325 11.9	410 15.0
21 bar g 305 psi g	kg/h lb/min	875 32.2	955 35.1	970 35.7	375 13.8	475 17.4
25 bar g 363 psi g	kg/h lb/min	1060 38.9	1175 43.2	1200 44.0	445 16.4	560 20.6

The capacity calculation is based on ISO 4126 - 1 / EN 1268 - 1 /prEN 13136 (1998)

Capacity

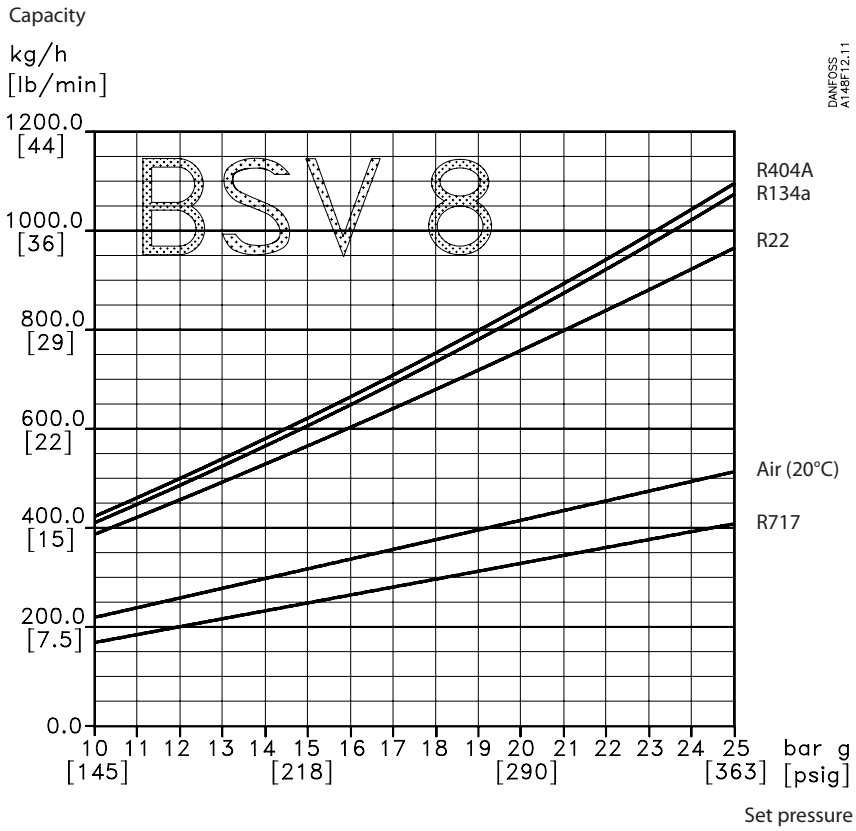

BSV 8, back pressure = 0.6 × set pressure (bar g / psi g)

Capacity

Set pressure		R22	R134a	R404A	R717	Air (20 °C)
BSV 8. back pressure = 0.6 x set pressure (bar g/psi g)						
13 bar g 189 psi g	kg/h lb/min	495 18.2	525 19.4	535 19.7	215 8.0	275 10.1
18 bar g 261 psi g	kg/h lb/min	680 25.1	740 27.1	755 27.7	295 10.9	375 13.7
21 bar g 305 psi g	kg/h lb/min	800 29.4	875 32.1	885 32.6	345 12.6	435 15.9
25 bar g 363 psi g	kg/h lb/min	965 35.5	1075 39.4	1095 40.2	410 15.0	510 18.8

The capacity calculation is based on ISO 4126 - 1 / EN 1268 - 1 /prEN 13136 (1998)

Material specification

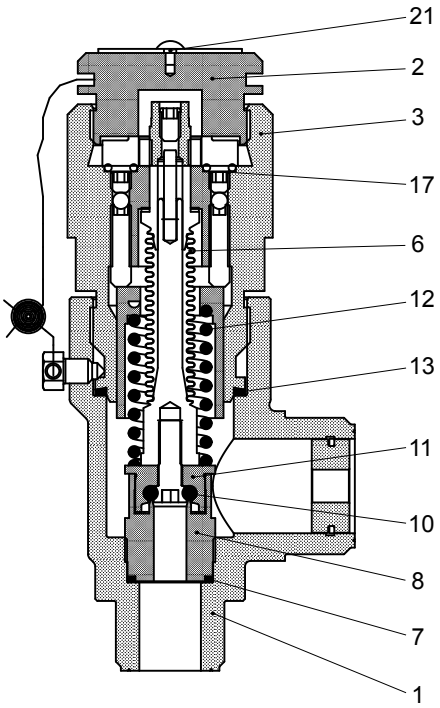

No.	Part	Material	DIN	ISO	ASTM
1	Housing	Steel	TT St 35 N/V, 17173	TW 6, 2604/3-75	Grade 1, A333, A334 A350 LF2 [1])
2	Threaded plug	Steel	9S Mn28, 1651 - 88	11S Mn28 630/9 - 88	1213 SAE J 403
3	Valve top	Steel	St. 37.2, 1652 - 2 - 90	Fe 360 B, 660 - 80	Grade C, A 283
6	Bellow	Stainless steel			
7	Gasket	Aluminium			
8	Valve seat	Stainless steel			
10	O-ring	Cloroprene (Neoprene)			
11	Valve cone	Steel			
12	Spring	Steel	Class C, 17223-1-84		A 679SAE J 403
13	O-ring	Cloroprene (Neoprene)			
17	Gasket	Aluminium			
21	Marking label	Aluminium			

[1]) Alternative material

Connections

T

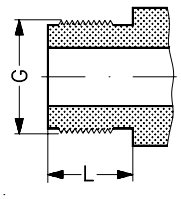

Size [mm]	Size [in]	Inlet	Outlet		L [mm]	L [in]		
T outside pipe thread, (ISO 228/1)								
8	5/16	G 3/4	G 1		17	0.67		

Dimension and weight

BSV 8

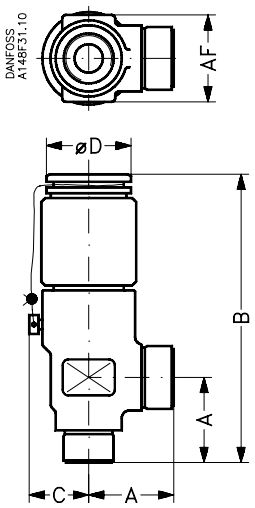

Valve size			A	B	C		∅D		AF		Weight
BSV 8, with threaded connections ISO 228/1 pipe threads											
BSV 8 (5/16 in)	mm		45	150	32		50		46		1.5 kg
	in		1.77	5.91	1.26		1.97		1.81		3.3 lb

Specified weights are approximate values only.

Ordering

How to order
The table below is used to identify the valve required.

Please note that the type codes only serve to identify the valves, some of which may not form part of the standard product range. For further information please contact your local Danfoss Sales Company.

Example for type codes

BSV	8	T	211

Type codes

Valve type	**BSV**	Back pressure independent safety valve
Nominal size in mm	**8**	DN 8
Connections	**T**	Outside threaded connections: ISO 228/1 Pipe thread - Fittings for connections must be ordered seperately - Fittings for pilot operation - The welding fittings for single mounted safety relief valve must be ordered seperately
Pressure setting		*Standard pressure setting: 2××*
	210	10 bar g (145 psi g)
	211	11 bar g (160 psi g)
	212	12 bar g (174 psi g)
	213	13 bar g (189 psi g)
	214	14 bar g (203 psi g)
	215	15 bar g (218 psi g)
	216	16 bar g (232 psi g)
	217	17 bar g (247 psi g)
	218	18 bar g (261 psi g)
	219	19 bar g (276 psi g)
	220	20 bar g (290 psi g)
	221	21 bar g (305 psi g)
	222	22 bar g (319 psi g)
	223	23 bar g (334 psi g)
	224	24 bar g (348 psi g)
	225	25 bar g (363 psi g)
		Standard pressure setting with TÜV certificate: 3××
	310	10 bar g (145 psi g)
	311	11 bar g (160 psi g)
	312	12 bar g (174 psi g)
	313	13 bar g (188 psi g)
	314	14 bar g (203 psi g)
	315	15 bar g (218 psi g)
	316	16 bar g (232 psi g)
	317	17 bar g (247 psi g)
	318	18 bar g (261 psi g)
	319	19 bar g (276 psi g)
	320	20 bar g (290 psi g)
	321	21 bar g (304 psi g)
	322	22 bar g (319 psi g)
	323	23 bar g (334 psi g)
	324	24 bar g (348 psi g)
	325	25 bar g (362 psi g)



Important!
Where products need to be certified according to specific certification societies, the relevant information should be included at the time of order.

Certified BSV valves with standard set pressure

Size		Construction and test facilities are approved by TÜV			
[mm]	[in]	Type	[bar g]	[psi g]	**Part No.**
8	5/16	BSV8 T 210	10	145	**2416+200**
8	5/16	BSV8 T 211	11	160	**2416+309**
8	5/16	BSV8 T 212	12	174	**2416+310**
8	5/16	BSV8 T 213	13	189	**2416+201**
8	5/16	BSV8 T 214	14	203	**2416+311**
8	5/16	BSV8 T 215	15	218	**2416+312**
8	5/16	BSV8 T 216	16	232	**2416+221**
8	5/16	BSV8 T 217	17	247	**2416+313**
8	5/16	BSV8 T 218	18	261	**2416+202**
8	5/16	BSV8 T 219	19	276	**2416+225**
8	5/16	BSV8 T 220	20	290	**2416+203**
8	5/16	BSV8 T 221	21	305	**2416+204**
8	5/16	BSV8 T 222	22	319	**2416+224**
8	5/16	BSV8 T 223	23	334	**2416+314**
8	5/16	BSV8 T 224	24	348	**2416+315**
8	5/16	BSV8 T 225	25	363	**2416+205**

Certified BSV valves with standard set pressure and TÜV pressure setting certificate with each valve

Size		Each valve is certified by a representative from TÜV			
[mm]	[in]	Type	[bar g]	[psi g]	**Part No.**
8	5/16	BSV8 T 310	10	145	**2416+316**
8	5/16	BSV8 T 311	11	160	**2416+317**
8	5/16	BSV8 T 312	12	174	**2416+318**
8	5/16	BSV8 T 313	13	189	**2416+206**
8	5/16	BSV8 T 314	14	203	**2416+319**
8	5/16	BSV8 T 315	15	218	**2416+320**
8	5/16	BSV8 T 316	16	232	**2416+222**
8	5/16	BSV8 T 317	17	247	**2416+321**
8	5/16	BSV8 T 318	18	261	**2416+207**
8	5/16	BSV8 T 319	19	276	**2416+322**
8	5/16	BSV8 T 320	20	290	**2416+208**
8	5/16	BSV8 T 321	21	305	**2416+209**
8	5/16	BSV8 T 322	22	319	**2416+210**
8	5/16	BSV8 T 323	23	334	**2416+323**
8	5/16	BSV8 T 324	24	348	**2416+324**
8	5/16	BSV8 T 325	25	363	**2416+211**

Nipples and gaskets

Attention: Fittings for connections must be ordered separately

Type	Code number
For stand-alone SFV 15/ SFA 15/ BSV-8: Nipples + gaskets set	**148F3019**
For system POV + BSV: Nipples + gaskets set	**148H3453**

ENGINEERING
TOMORROW

Pressure relief valve
Type POV

Contents **Page**

Features 941
Design 942
Technical data 942
Function 943
Installation of compressor pressure relief valve POV + BSV 944
Capacity 946
Material specification 953
Connections 954
Dimensions and weights 954
Ordering 955

AI183186419402en-000911 | 2018.11

ENGINEERING
TOMORROW

Pressure relief valve
Type POV

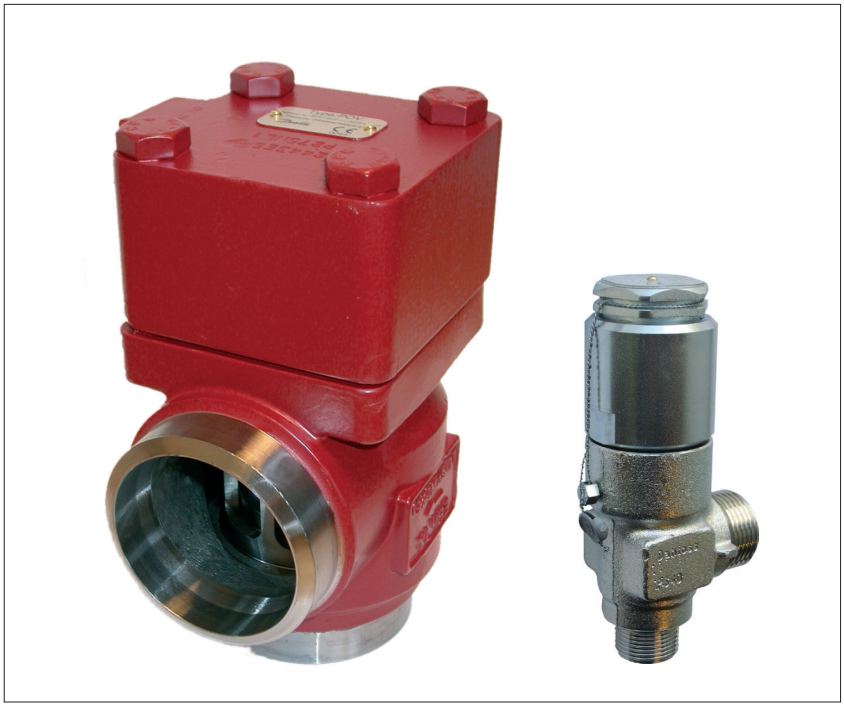

The POV pressure relief valve is used in conjunction with the BSV safety relief valve and is specifically designed for protecting compressors against excessive pressure.

Features

- Applicable for the refrigerants HCFC, HFC, R717 (Ammonia), R744 (CO_2).
- The Pilot Operated Internal pressure relief Valve System POV + BSV is available in sizes from DN 40 to DN 80.
- POV + BSV is an internal pressure relief system thus eliminating the risk of refrigerant leakage to the atmosphere.
- The system renders full protection of the compressor even on increasing back pressure.
- The POV pressure relief valve (main valve) has a very large capacity even with high back pressure when compared to direct operating back pressure independent pressure relief valves.
- Small dimensions mean easy handling and installation.
- Classification: DNV, CRN, BV, EAC etc.
  To get an updated list of certification on the products please contact your local Danfoss Sales Company.

Design

Connections
Available with the following connections:
- Welding DIN (2448)
- Welding ANSI (B 36.10):
  DN 40, Schedule 80,
  DN 65 - 80, Schedule 40

Control/Identification
All pilot valves (BSV 8 Safety Relief Valves) are adjusted, tested and sealed before leaving Danfoss A/S. For that reason Danfoss can only guarantee correct operation, as long as the seal remains unbroken.

Transport/Handling
POV and BSV are supplied separately from Danfoss. BSV safety valves are fitted with special protection covers and packed in purpose made cartons. POV valves are provided with protection covers. It is important that the protective covers remain fitted until the valve is installed.

To ensure the exact and precise operation of the valve it must be handled with care.

Installation
To ensure exact operation of the valve it should be installed with the spring housing upwards (refer to "Installation of compressor pressure relief valve POV + BSV" on the following pages).

When the valve is mounted, it is important to avoid the influence of static, dynamic and thermal stress.

Re-calibration/servicing
In certain countries the authorities demand that the valves are readjusted at least once a year (see local rules).

Capacity
The design and construction of the pressure relief relief valve has been tested and approved by TÜV. This test comprises control of the function of the valve as well as measuring of the capacity, which is the basis of the curves and tables on the following pages.

Pressure Equipment Directive (PED)
POV valves are approved according to the European standard specified in the Pressure Equipment Directive and are CE marked.

For further details / restrictions - see Installation Instruction.

POV valves		
Nominal bore	DN40 mm (1 ½ in)	DN65-80 mm (2 ½ – 3 in)
Classified for	Fluid group I	
Category	I	II

Technical data

- *Refrigerants*
  Applicable for the refrigerants HCFC, HFC, R717 (Ammonia), R744 (CO_2)
  Flammable hydrocarbons are not recommended. For further information please contact your local Danfoss Sales Company.
- *Pressure*
  The valve is designed for:
  Pressure setting range:
  15 – 25 bar g / 218 – 363 psi g
  Strength test:
  50 bar g / 725 psig
  Leakage test:
  25 bar g / 363 psig
  PB / MWP:
  40 bar (580 psig)
- Temperature range
  -50 – 150 °C / -58 – 302°F

Function

Pilot valve BSV 8
The pilot valve is actuated by the high pressure P_1 and the back pressure $P_{2'}$. The reference pressure in the stainless steel bellow (1) P_0 is the atmospheric pressure. The effective area of the bellows is equivalent to the area of the valve seating, so the back pressure $P_{2'}$ does not affect the opening pressure of the valve.

Main valve POV
The main valve is of the normally closed (N.C.) type. The high pressure P_1 acts on the valve inlet side of the valve cone (2). P_1 pressure also passes through the piston rod (3) to the upper chamber (4) of the valve, acting on the top of the piston (5). The area of the piston is larger than the area of the valve seat and this together with the spring pressure keeps the valve closed.

System BSV 8 + POV
When the pressure P_1 reaches the set pressure of the pilot valve, it starts opening. The pressure of the pilot line $P_{2'}$ and of the lower chamber (6) of the main valve increases. The pressure of the lower chamber is limited by flow through the nozzle (7). When the flow through the pilot valve exceeds the capacity of the nozzle, the pressure of the chamber (6) increases, providing the opening of the main valve. When the pressure P_1 is reduced, the pilot valve closes, and the pressure $P_{2'}$ is equalized through the nozzle (7). The spring then closes the main valve. The closing time is ≤30 seconds.

fig. 1, Inactive system (closed valve)

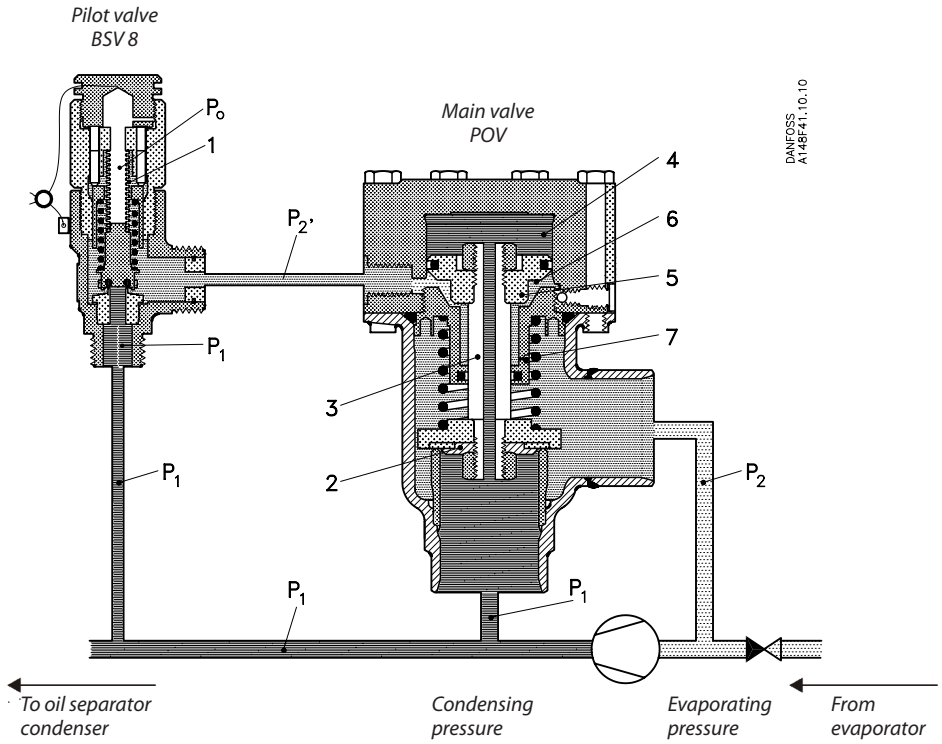

fig. 2, Active system (open valve)

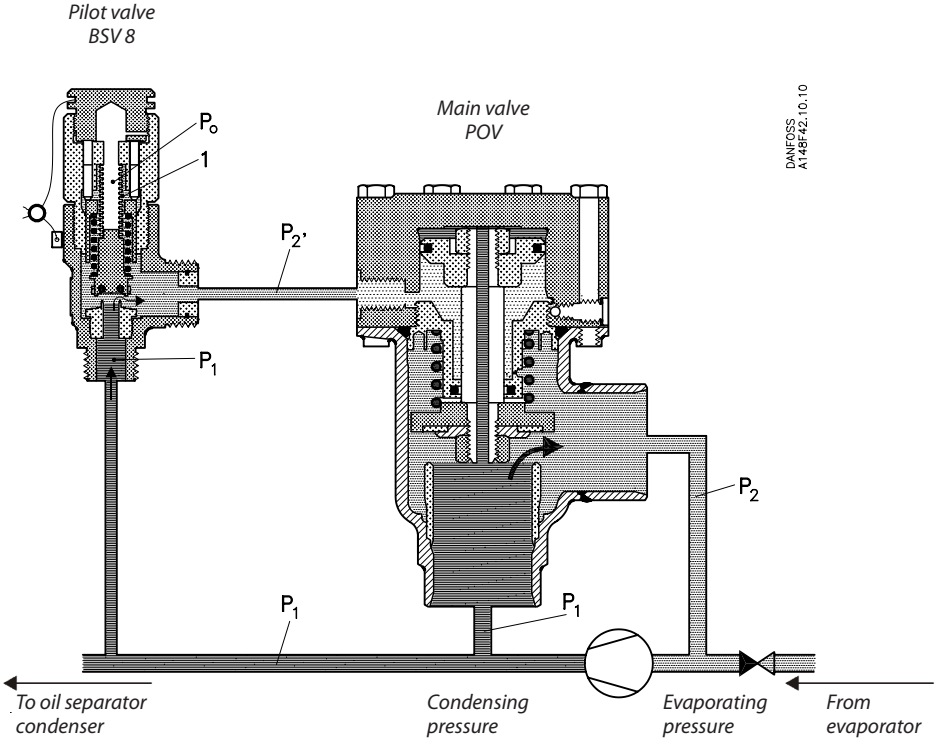

Installation of compressor pressure relief valve POV + BSV

Set pressure
The BSV 8 set pressure is factory set in the range 15 – 25 bar g (145 – 363 psi g), where 15 bar g is the minimum value for this application (fig 4).

Standard set pressures: 18.0, 21.0, or 25.0 bar g (261, 305 or 363 psi g).

The operational pressure of the plant should be at least 15% below the set pressure of the pilot valve, and the opening pressure of the pilot valve (p_{set} + 10%) must be below the reseating pressure of the safety valve protecting the plant. This implies a perfect operation of the plant.

Back pressure
$P_{2\text{-}0}$ is the effective back pressure of the POV main valve $P_{2\text{-}0} = P_{2\text{-}1} + \Delta_{Poutlet}$ where $\Delta_{Poutlet}$ is the pressure loss in the outlet line of POV (2).

$P_{2\text{-}1}$ Is normally equal to the evaporating pressure. $P_{2\text{-}0}$ must not exceed the limits in fig 4.

Pressure loss in inlet line
The pressure loss in the inlet line of the POV (1) will not affect the function of the POV + BSV system, but a high pressure drop will reduce the capacity.
If the pressure drop in the inlet line ΔP_{inlet} exceed 3% of the opening pressure, the capacity reduction must be taken into consideration by calculation.

Pressure drop in the pilot inlet line
In order to ensure a proper function of the POV + BSV system, the pilot valve must be activated by the plant pressure. It is important that the inlet line of the pilot valve is mounted in a way which ensures that the pilot pressure is identical with the plant pressure. If the pilot pressure is mounted in the inlet line of the POV valve, it must be verified that the pressure drop in the pilot inlet line (3) ΔP_{inlet} does not exceed 3% of the opening pressure.

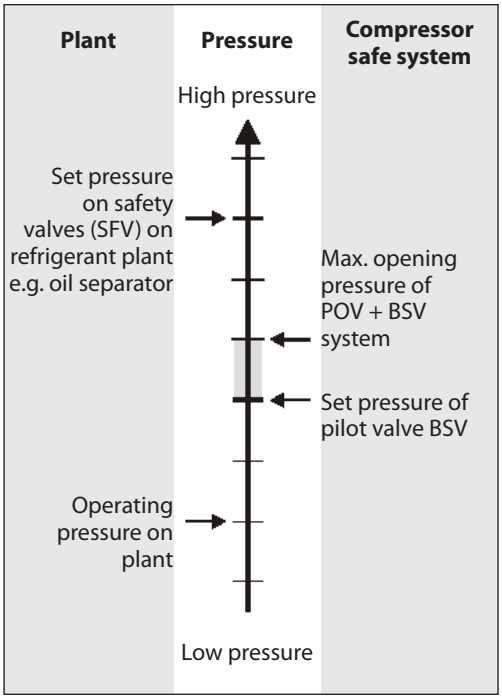

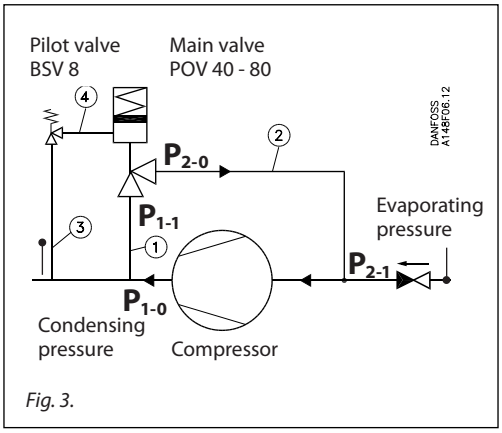

Fig. 3.

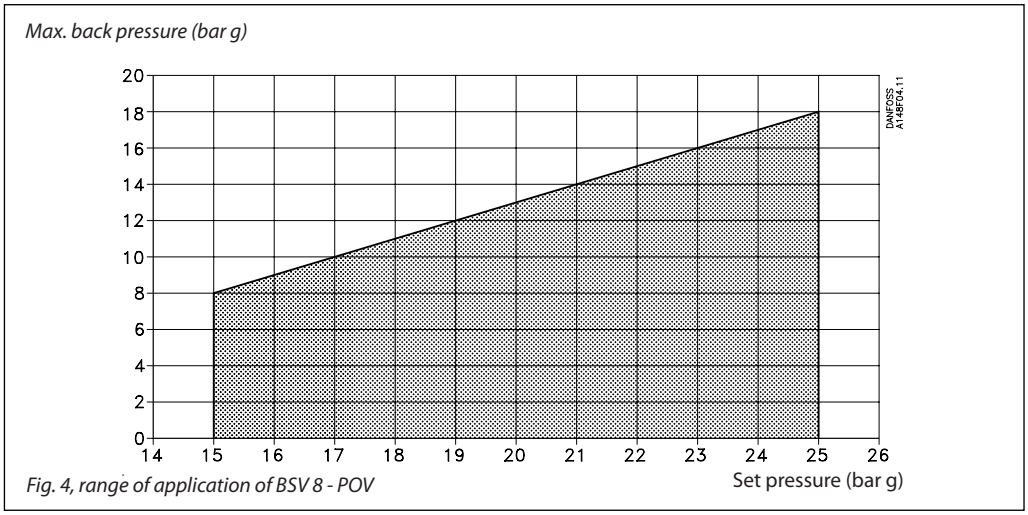

Fig. 4, range of application of BSV 8 - POV

Installation of compressor pressure relief valve POV + BSV *(continued)*

Important: When locating the inlet line to the pilot valve, it is important that the connection is mounted in the gas phase and not in an oil phase, if any.

Pressure drop in the pilot outlet line
The pressure loss in the BSV outlet line (4) $\Delta P_{P\text{-}outlet}$ is not critical.
Minimum internal diameter of the pilot outlet line 8 mm (0.314 in.)
Maximum length of pilot outlet line 1 m (3.25 ft)

Note: The Above mentioned guide lines are securing a safe function of the POV + BSV system, but there might be restrictions from national authorities.

Note!
Valve type POV is categorized as a pressure relief accessory (not as a safety accessory). Hence a safety valve (e.g. SFV) has to be installed to protect the system against excessive pressure.

Fig. 5 shows a typical application of the POV + BSV system. In the example a non return valve has been mounted in the suction line, as well as a shut-off valve in the pressure line. It is good practise and a demand from the authorities of most countries to mount a safety valve on the oil separator.

If the shut-off valve in the pressure line is closed, and all regulation equipment fails, the pressure after the compressor will rise, and the BSV + POV system is activated. Provided that the required motor effect is present, there will be a rise in temperature caused by the compression work, followed by a rise in pressure. Therefore, the safety relief valve of the oil separator must, besides being dimensioned for "normal" heat input, also be dimensioned for heat input, corresponding to the effect of the motor.

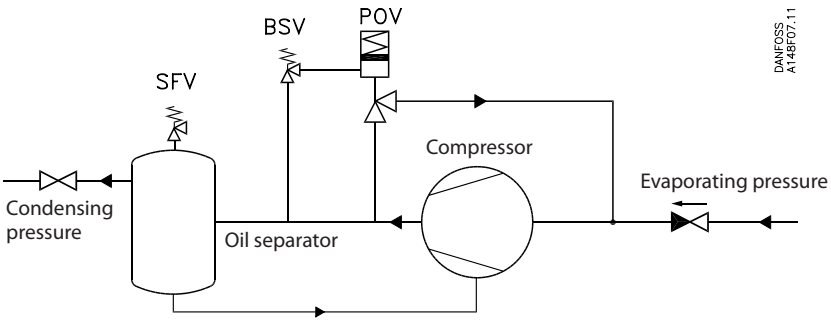

Fig. 5

Capacity

The values in the table are based on saturated gas and with 50K superheat.

If other operating conditions have to be taken into consideration, the formulas or the Danfoss computation program (Coolselector®2) can be used.

Table 1

Version	Nominal size		Flow diameter	Flow area	De-rated, certified coefficient of discharge
	Inlet	Outlet	d_0	A_0	K_{dr}
POV 600	40 mm	40 mm	32.6 mm	835 mm²	0.735
	1½ in.	1½ in.	1.28 in.	1.28 in²	
POV 1050	65 mm	65 mm	39.8 mm	1244 mm²	0.859
	2½ in.	2½ in.	1.56 in.	1.93 in²	
POV 2150	80 mm	80 mm	59 mm	2734 mm²	0.799
	3 in.	3 in.	2.32 in.	4.24 in²	

The discharge capacity of the pressure relief valves are based on (IS0 4126-1/EN 1268-1 / prEN 1313 6 (1998)).

$$q_m = 0.2883 \times C \times A_0 \times K_{dr} \times K_b \times \sqrt{\frac{p}{v}}$$

q_m Discharge capacity (kg/h)
C Discharge function depending of the actual refrigerant (κ) see table 2 (-)
A_0 Flow area of the pressure relief valve (mm²).
K_{dr} De-rated coefficient of discharge ($K_{dr} = K_d \times 0.9$), (the K_{dr} is certifled by TÜV) see table 1. (-)
K_b Correction factor for sub-critical flow. (-)
$K_b = 1.0$ when the back pressure is lower than approx. 0.5 × relieving pressure ($P_b < 0.5 \times p$).
For all BSV safety valves $K_b = 1.0$
v Specific volume of the vapour. (m³/kg)
p_{set} Set pressure, the predetermined pressure at which a pressure relief valve under operation starts to open (p_{set} is indicated on the metal plate on the safety relief valve). (bar gauge)
p_{atm} Atmospheric pressure. (1 bar)
p Relieving pressure, $p = p_{set} \times 1.1 + P_{atm}$ (bar absolute)

For further details see the above mentioned ISO or EN standards.

Important!
For back pressure higher than 0.5 × p, the Danfoss computer program (DIRcalc™) or the above mentioned standard must be used when calculating the capacity.

Table 2. Properties of Refrigerants

Refrigerant number	Isentropic exponent κ	Discharge function C
R 22	1.17	2.54
R 134a	1.12	2.50
R 404A	1.12	2.49
R 410A	1.17	2.54
R 717 (Ammonia)	1.31	2.64
R 744 (CO_2)	1.30	2.63
Air	1.40	2.70

Capacity - POV 600

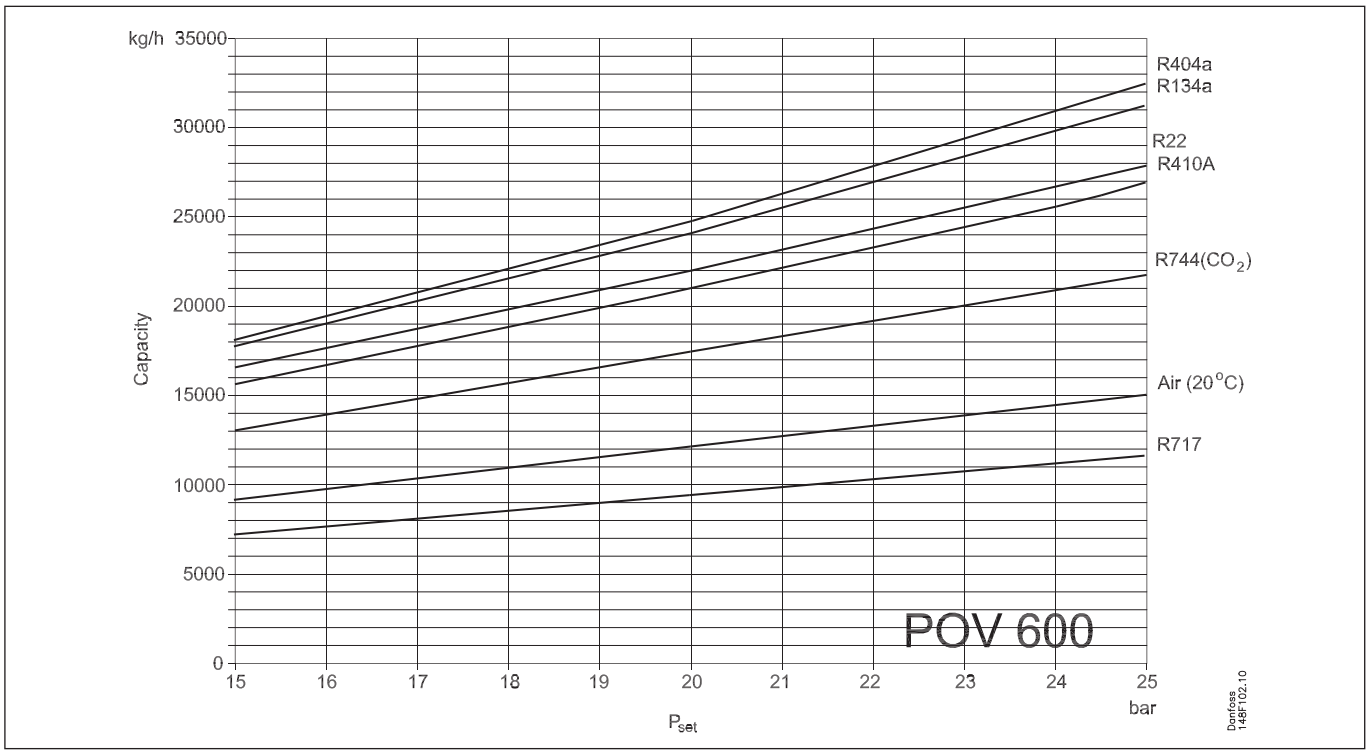

Calculation based on the formula $q_m = 0.2883 \times C \times A_o \times K_{dr} \times K_b \times \sqrt{\frac{p}{v}}$

P_{set}	Set pressure in bar g
P	Relieving pressure in bar a
C	Discharge function
v	Specific volume of the vapour at the relieving pressure P in m^3/kg
q_m	Discharge capacity in kg/h
K_b	Correction factor for sub-critical flow
d_o	Flow diameter seat mm^2
A_o	Flow area seat in mm^2
K_{dr}	De-rated coefficient of discharge at defined lifting height

P_{set}		P		R22	q_m		R134a	q_m		R404a	q_m		R717	q_m	
[bar g]	[psi g]	[bar a]	[psi a]	[v]	[kg/h]	[lb/min]	[v]	[kg/h]	[lb/min]	[v]	[kg/h]	[lb/min]	[v]	[kg/h]	[lb/min]
10	145	12.0	174	0.01974	11077	407	0.01655	11907	437	0.01629	11953	439	0.10753	4933	181
11	160	13.1	190	0.01797	12130	446	0.01502	13059	480	0.01470	13147	483	0.09867	5380	198
12	174	14.2	206	0.01638	13228	486	0.01383	14169	521	0.01346	14305	526	0.09130	5823	214
13	189	15.3	222	0.01514	14281	525	0.01273	15330	563	0.01233	15514	570	0.08461	6279	231
14	203	16.4	238	0.01400	15376	565	0.01172	16475	605	0.01128	16793	617	0.07900	6728	247
15	218	17.5	254	0.01311	16414	603	0.01094	17685	650	0.01048	17997	661	0.07383	7189	264
16	232	18.6	270	0.01229	17477	642	0.01007	19004	698	0.00973	19256	708	0.06998	7613	280
17	247	19.7	286	0.01152	18578	683	0.00940	20243	744	0.00902	20582	756	0.06636	8045	296
18	261	20.8	302	0.01080	19716	724	0.00888	21400	786	0.00842	21889	804	0.06213	8544	314
19	276	21.9	318	0.01012	20899	768	0.00828	22741	836	0.00786	23247	854	0.05898	8998	331
20	290	23.0	334	0.00961	21978	808	0.00775	24089	885	0.00738	24586	903	0.05620	9446	347
21	305	24.1	350	0.00908	23145	850	0.00727	25459	935	0.00688	26066	958	0.05350	9910	364
22	319	25.2	365	0.00861	24305	893	0.00685	26820	985	0.00645	27528	1011	0.05121	10358	381
23	334	26.3	381	0.00810	25599	941	0.00645	28235	1037	0.00606	29013	1066	0.04900	10818	397
24	348	27.4	397	0.00768	26834	986	0.00606	29733	1092	0.00565	30670	1127	0.04687	11290	415
25	363	28.5	413	0.00738	27918	1026	0.00574	31158	1145	0.00530	32295	1187	0.04514	11733	431
26	377	29.6	429	0.00699	29235	1074	0.00541	32707	1202	0.00496	34022	1250	0.04348	12183	448
27	392	30.7	445	0.00670	30410	1117	0.00506	34442	1266	0.00463	35862	1318	0.04150	12700	467
28	406	31.8	461	0.00634	31817	1169	0.00479	36028	1324	0.00429	37918	1393	0.04010	13149	483
29	421	32.9	477	0.00607	33075	1215	0.00453	37683	1385	0.00401	39892	1466	0.03870	13615	500
30	435	34.0	493	0.00579	34426	1265	0.00422	39690	1458	0.00371	42161	1549	0.03730	14098	518
31	450	35.1	509	0.00552	35824	1316	0.00392	41842	1537	0.00339	44814	1647	0.03612	14556	535
32	464	36.2	525	0.00523	37376	1373	0.00365	44036	1618	0.00300	48378	1778	0.03482	15056	553
33	479	37.3	541	0.00499	38841	1427	0.00337	46520	1709	0.00206	59262	2178	0.03370	15535	571
34	493	38.4	557	0.00475	40393	1484	0.00306	49534	1820				0.03276	15987	587
35	508	39.5	573	0.00452	41997	1543	0.00275	52994	1947				0.03158	16514	607
36	522	40.6	589	0.00428	43755	1608	0.00221	59933	2202				0.03083	16945	623
37	537	41.7	605	0.00408	45418	1669							0.02972	17491	643
38	551	42.8	621	0.00389	47124	1731							0.02901	17935	659
39	566	43.9	637	0.00365	49269	1810							0.02815	18440	678
40	580	45.0	653	0.00345	51308	1885							0.02740	18923	695

Capacity - POV 600

(Continued)

P_{set}		P		Air(20 °C)	q_m		R410a	q_m		R744 (CO_2)	q_m	
[bar g]	[psi g]	[bar a]	[psi a]	[v]	[kg/h]	[lb/min]	[v]	[kg/h]	[lb/min]	[v]	[kg/h]	[lb/min]
10	145	12.0	174	0.06790	6349	233	0.02213	10461	384	0.03196	9014	331
11	160	13.1	190	0.06220	6931	255	0.02022	11435	420	0.02930	9836	361
12	174	14.2	206	0.05738	7513	276	0.01848	12453	458	0.02690	10688	393
13	189	15.3	222	0.05325	8095	297	0.01690	13517	497	0.02514	11476	422
14	203	16.4	238	0.04968	8676	319	0.01569	14525	534	0.02352	12283	451
15	218	17.5	254	0.04656	9258	340	0.01457	15570	572	0.02201	13117	482
16	232	18.6	270	0.04381	9840	362	0.01353	16657	612	0.02061	13974	513
17	247	19.7	286	0.04136	10422	383	0.01275	17659	649	0.01932	14854	546
18	261	20.8	302	0.03917	11004	404	0.01201	18696	687	0.01825	15704	577
19	276	21.9	318	0.03721	11586	426	0.01132	19760	726	0.01726	16570	609
20	290	23.0	334	0.03543	12168	447	0.01060	20927	769	0.01645	17394	639
21	305	24.1	350	0.03381	12750	468	0.00995	22110	812	0.01560	18283	672
22	319	25.2	365	0.03233	13332	490	0.00944	23212	853	0.01485	19162	704
23	334	26.3	381	0.03098	13914	511	0.00887	24463	899	0.01420	20019	736
24	348	27.4	397	0.02974	14496	533	0.00847	25552	939	0.01355	20918	769
25	363	28.5	413	0.02859	15078	554	0.00795	26899	988	0.01299	21789	801
26	377	29.6	429	0.02753	15660	575	0.00758	28074	1032	0.01239	22736	835
27	392	30.7	445	0.02654	16242	597	0.00722	29295	1076	0.01185	23677	870
28	406	31.8	461	0.02562	16824	618	0.00687	30565	1123	0.01145	24515	901
29	421	32.9	477	0.02477	17406	640	0.00653	31888	1172	0.01093	25521	938
30	435	34.0	493	0.02396	17988	661	0.00621	33242	1221	0.01059	26358	968
31	450	35.1	509	0.02321	18570	682	0.00589	34681	1274	0.01015	27355	1005
32	464	36.2	525	0.02251	19152	704	0.00558	36185	1330	0.00978	28301	1040
33	479	37.3	541	0.02184	19734	725	0.00530	37688	1385	0.00948	29179	1072
34	493	38.4	557	0.02122	20316	746	0.00508	39059	1435	0.00910	30217	1110
35	508	39.5	573	0.02063	20898	768	0.00478	40839	1501	0.00875	31254	1148
36	522	40.6	589	0.02007	21479	789	0.00455	42437	1559	0.00847	32206	1183
37	537	41.7	605	0.01954	22062	811	0.00430	44241	1626	0.00820	33172	1219
38	551	42.8	621	0.01904	22643	832	0.00409	45957	1689	0.00794	34153	1255
39	566	43.9	637	0.01856	23225	853	0.00385	47973	1763	0.00768	35169	1292
40	580	45.0	653	0.01811	23808	875	0.00362	50089	1840	0.00743	36201	1330

Capacity - POV 1050

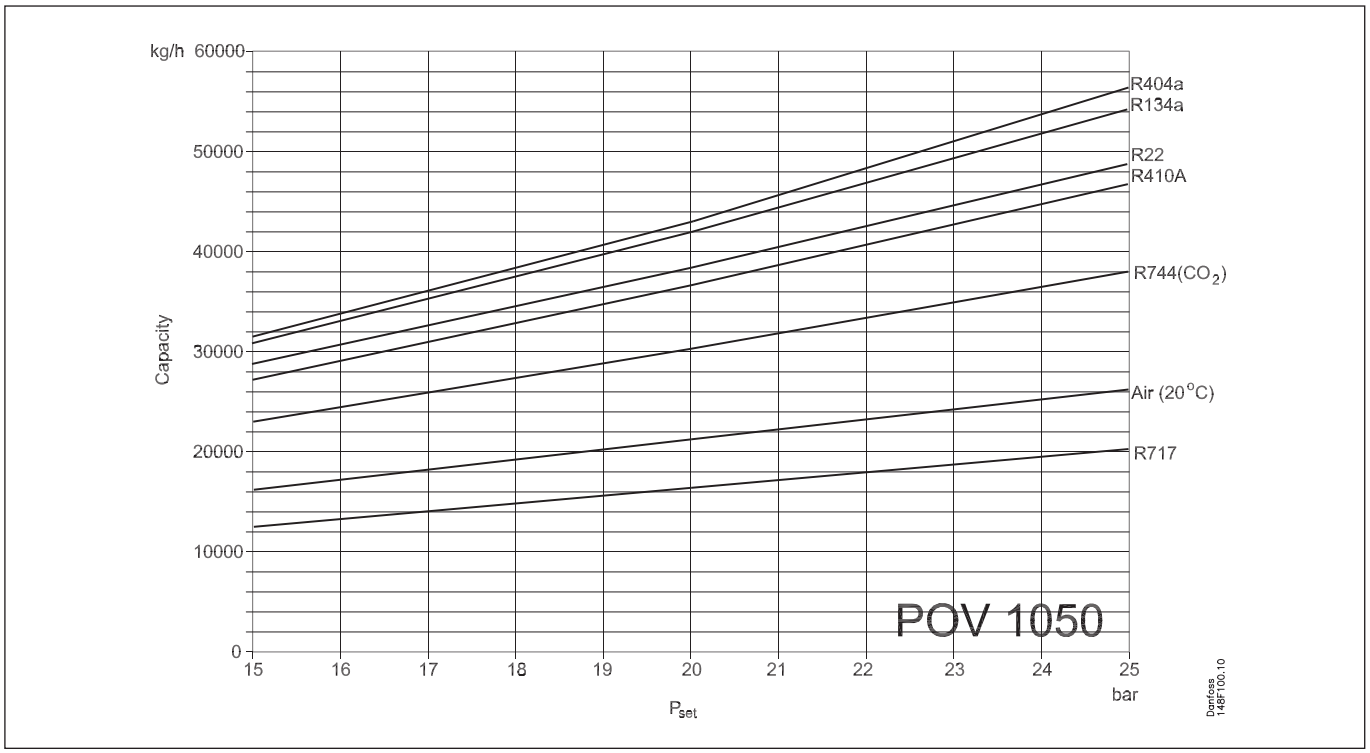

Calculation based on the formula $q_m = 0.2883 \times C \times A_0 \times K_{dr} \times K_b \times \sqrt{\frac{p}{v}}$

P_{set}	Set pressure in bar g
P	Relieving pressure in bar a
C	Discharge function
v	Specific volume of the vapour at the relieving pressure P in m^3/kg
q_m	Discharge capacity in kg/h
K_b	Correction factor for sub-critical flow
d_o	Flow diameter seat mm^2
A_o	Flow area seat in mm^2
K_{dr}	De-rated coefficient of discharge at defined lifting height

P_{set}		P		R22	q_m		R134a	q_m		R404a	q_m		R717	q_m	
[bar g]	[psi g]	[bar a]	[psi a]	[v]	[kg/h]	[lb/min]	[v]	[kg/h]	[lb/min]	[v]	[kg/h]	[lb/min]	[v]	[kg/h]	[lb/min]
10	145	12.0	174	0.01974	19295	709	0.01655	20741	762	0.01629	20822	765	0.10753	8593	316
11	160	13.1	190	0.01797	21129	776	0.01502	22748	836	0.01470	22902	841	0.09867	9372	344
12	174	14.2	206	0.01638	23042	847	0.01383	24681	907	0.01346	24918	916	0.09130	10144	373
13	189	15.3	222	0.01514	24878	914	0.01273	26703	981	0.01233	27024	993	0.08461	10938	402
14	203	16.4	238	0.01400	26785	984	0.01172	28698	1054	0.01128	29252	1075	0.07900	11719	431
15	218	17.5	254	0.01311	28592	1051	0.01094	30807	1132	0.01048	31350	1152	0.07383	12523	460
16	232	18.6	270	0.01229	30444	1119	0.01007	33104	1216	0.00973	33542	1232	0.06998	13261	487
17	247	19.7	286	0.01152	32362	1189	0.00940	35262	1296	0.00902	35853	1317	0.06636	14015	515
18	261	20.8	302	0.01080	34344	1262	0.00888	37279	1370	0.00842	38130	1401	0.06213	14883	547
19	276	21.9	318	0.01012	36405	1338	0.00828	39613	1456	0.00786	40495	1488	0.05898	15674	576
20	290	23.0	334	0.00961	38285	1407	0.00775	41961	1542	0.00738	42828	1574	0.05620	16455	605
21	305	24.1	350	0.00908	40317	1481	0.00727	44348	1630	0.00688	45405	1668	0.05350	17264	634
22	319	25.2	365	0.00861	42338	1556	0.00685	46718	1717	0.00645	47953	1762	0.05121	18043	663
23	334	26.3	381	0.00810	44593	1638	0.00645	49185	1807	0.00606	50540	1857	0.04900	18844	692
24	348	27.4	397	0.00768	46744	1718	0.00606	51793	1903	0.00565	53425	1963	0.04687	19666	723
25	363	28.5	413	0.00738	48632	1787	0.00574	54275	1994	0.00530	56257	2067	0.04514	20438	751
26	377	29.6	429	0.00699	50925	1871	0.00541	56975	2093	0.00496	59265	2178	0.04348	21223	780
27	392	30.7	445	0.00670	52974	1946	0.00506	59997	2205	0.00463	62470	2295	0.04150	22123	813
28	406	31.8	461	0.00634	55424	2036	0.00479	62760	2306	0.00429	66051	2427	0.04010	22905	842
29	421	32.9	477	0.00607	57614	2117	0.00453	65642	2412	0.00401	69489	2553	0.03870	23716	871
30	435	34.0	493	0.00579	59969	2203	0.00422	69138	2540	0.00371	73442	2699	0.03730	24557	902
31	450	35.1	509	0.00552	62404	2293	0.00392	72886	2678	0.00339	78063	2868	0.03612	25356	932
32	464	36.2	525	0.00523	65107	2392	0.00365	76708	2819	0.00300	84273	3096	0.03482	26226	964
33	479	37.3	541	0.00499	67660	2486	0.00337	81035	2978	0.00206	103232	3793	0.03370	27061	994
34	493	38.4	557	0.00475	70363	2585	0.00306	86286	3170				0.03276	27848	1023
35	508	39.5	573	0.00452	73157	2688	0.00275	92314	3392				0.03158	28767	1057
36	522	40.6	589	0.00428	76220	2801	0.00221	104400	3836				0.03083	29517	1085
37	537	41.7	605	0.00408	79116	2907							0.02972	30468	1120
38	551	42.8	621	0.00389	82087	3016							0.02901	31243	1148
39	566	43.9	637	0.00365	85825	3154							0.02815	32121	1180
40	580	45.0	653	0.00345	89377	3284							0.02740	32963	1211

Capacity - POV 1050

(Continued)

P_{set}		P		Air(20 °C)	q_m		R410a	q_m		R744 (CO_2)	q_m	
[bar g]	[psi g]	[bar a]	[psi a]	[v]	[kg/h]	[lb/min]	[v]	[kg/h]	[lb/min]	[v]	[kg/h]	[lb/min]
10	145	12.0	174	0.06790	11059	406	0.02213	18223	670	0.03196	15701	577
11	160	13.1	190	0.06220	12073	444	0.02022	19919	732	0.02930	17134	630
12	174	14.2	206	0.05738	13087	481	0.01848	21693	797	0.02690	18617	684
13	189	15.3	222	0.05325	14100	518	0.01690	23547	865	0.02514	19990	735
14	203	16.4	238	0.04968	15114	555	0.01569	25301	930	0.02352	21397	786
15	218	17.5	254	0.04656	16128	593	0.01457	27122	997	0.02201	22849	840
16	232	18.6	270	0.04381	17141	630	0.01353	29016	1066	0.02061	24343	894
17	247	19.7	286	0.04136	18155	667	0.01275	30761	1130	0.01932	25875	951
18	261	20.8	302	0.03917	19169	704	0.01201	32568	1197	0.01825	27356	1005
19	276	21.9	318	0.03721	20183	742	0.01132	34421	1265	0.01726	28864	1061
20	290	23.0	334	0.03543	21197	779	0.01060	36453	1339	0.01645	30299	1113
21	305	24.1	350	0.03381	22210	816	0.00995	38515	1415	0.01560	31849	1170
22	319	25.2	365	0.03233	23224	853	0.00944	40434	1486	0.01485	33380	1227
23	334	26.3	381	0.03098	24238	891	0.00887	42613	1566	0.01420	34873	1281
24	348	27.4	397	0.02974	25251	928	0.00847	44510	1635	0.01355	36438	1339
25	363	28.5	413	0.02859	26265	965	0.00795	46856	1722	0.01299	37955	1395
26	377	29.6	429	0.02753	27279	1002	0.00758	48903	1797	0.01239	39606	1455
27	392	30.7	445	0.02654	28293	1040	0.00722	51030	1875	0.01185	41244	1515
28	406	31.8	461	0.02562	29307	1077	0.00687	53243	1956	0.01145	42703	1569
29	421	32.9	477	0.02477	30321	1114	0.00653	55548	2041	0.01093	44457	1634
30	435	34.0	493	0.02396	31334	1151	0.00621	57906	2128	0.01059	45914	1687
31	450	35.1	509	0.02321	32348	1189	0.00589	60412	2220	0.01015	47651	1751
32	464	36.2	525	0.02251	33361	1226	0.00558	63033	2316	0.00978	49299	1811
33	479	37.3	541	0.02184	34375	1263	0.00530	65651	2412	0.00948	50828	1868
34	493	38.4	557	0.02122	35389	1300	0.00508	68040	2500	0.00910	52637	1934
35	508	39.5	573	0.02063	36403	1338	0.00478	71140	2614	0.00875	54443	2000
36	522	40.6	589	0.02007	37416	1375	0.00455	73924	2716	0.00847	56101	2061
37	537	41.7	605	0.01954	38430	1412	0.00430	77066	2832	0.00820	57784	2123
38	551	42.8	621	0.01904	39444	1449	0.00409	80055	2942	0.00794	59492	2186
39	566	43.9	637	0.01856	40458	1487	0.00385	83566	3071	0.00768	61263	2251
40	580	45.0	653	0.01811	41472	1524	0.00362	87253	3206	0.00743	63061	2317

Capacity - POV 2150

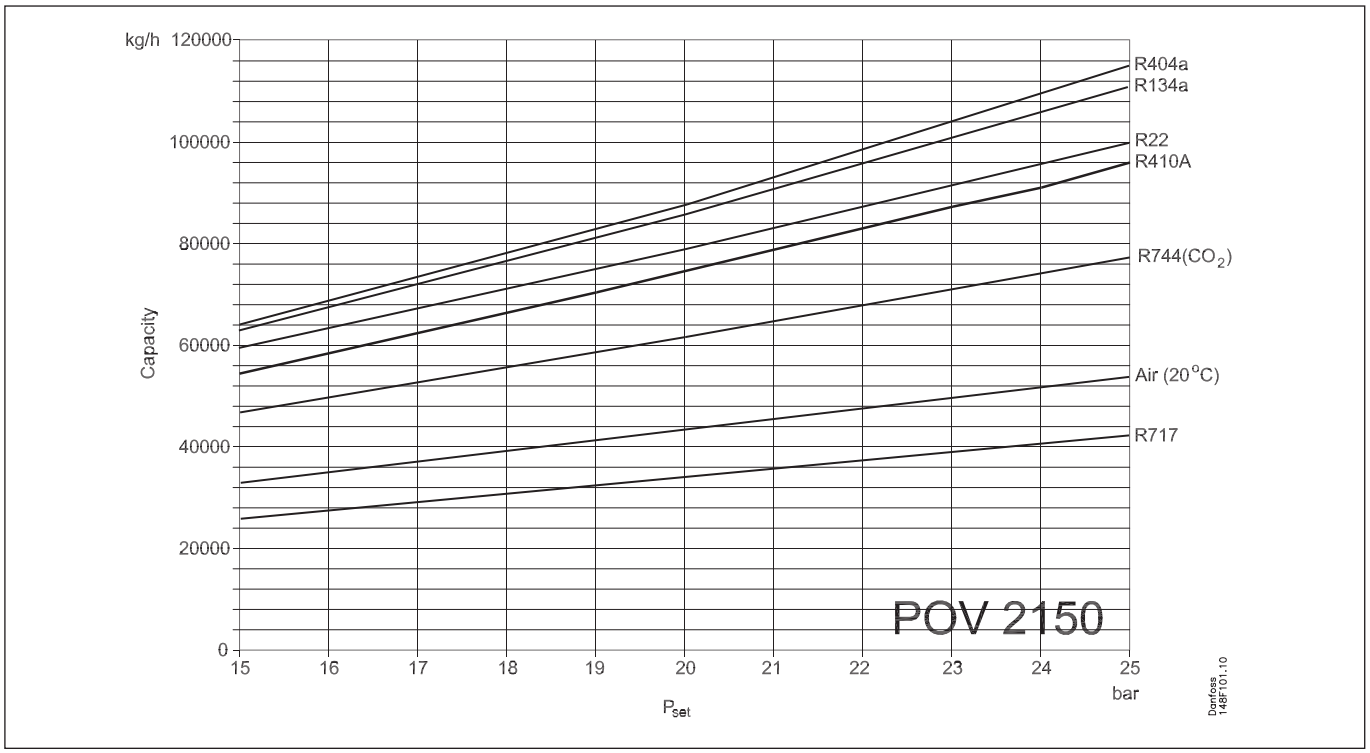

Calculation based on the formula $q_m = 0.2883 \times C \times A_0 \times K_{dr} \times K_b \times \sqrt{\frac{p}{v}}$

P_{set} Set pressure in bar g
P Relieving pressure in bar a
C Discharge function
v Specific volume of the vapour at the relieving pressure P in m^3/kg
q_m Discharge capacity in kg/h
K_b Correction factor for sub-critical flow
d_o Flow diameter seat mm^2
A_o Flow area seat in mm^2
K_{dr} De-rated coefficient of discharge at defined lifting height

P_{set}		P		**R22**	q_m		**R134a**	q_m		**R404a**	q_m		**R717**	q_m	
[bar g]	[psi g]	[bar a]	[psi a]	[v]	[kg/h]	[lb/min]	[v]	[kg/h]	[lb/min]	[v]	[kg/h]	[lb/min]	[v]	[kg/h]	[lb/min]
10	145	12.0	174	0.01974	39440	1449	0.01655	42395	1558	0.01629	42561	1564	0.10753	17564	645
11	160	13.1	190	0.01797	43190	1587	0.01502	46497	1708	0.01470	46812	1720	0.09867	19157	704
12	174	14.2	206	0.01638	47098	1731	0.01383	50450	1854	0.01346	50934	1871	0.09130	20735	762
13	189	15.3	222	0.01514	50851	1868	0.01273	54583	2006	0.01233	55239	2030	0.08461	22358	821
14	203	16.4	238	0.01400	54749	2012	0.01172	58660	2155	0.01128	59793	2197	0.07900	23955	880
15	218	17.5	254	0.01311	58444	2147	0.01094	62970	2314	0.01048	64080	2355	0.07383	25597	941
16	232	18.6	270	0.01229	62230	2287	0.01007	67665	2486	0.00973	68562	2519	0.06998	27106	996
17	247	19.7	286	0.01152	66149	2431	0.00940	72077	2648	0.00902	73285	2693	0.06636	28646	1053
18	261	20.8	302	0.01080	70200	2579	0.00888	76199	2800	0.00842	77940	2864	0.06213	30421	1118
19	276	21.9	318	0.01012	74413	2734	0.00828	80972	2975	0.00786	82774	3041	0.05898	32038	1177
20	290	23.0	334	0.00961	78257	2875	0.00775	85771	3152	0.00738	87543	3217	0.05620	33635	1236
21	305	24.1	350	0.00908	82411	3028	0.00727	90650	3331	0.00688	92811	3410	0.05350	35287	1297
22	319	25.2	365	0.00861	86540	3180	0.00685	95495	3509	0.00645	98018	3602	0.05121	36882	1355
23	334	26.3	381	0.00810	91150	3349	0.00645	100536	3694	0.00606	103306	3796	0.04900	38518	1415
24	348	27.4	397	0.00768	95546	3511	0.00606	105868	3890	0.00565	109203	4013	0.04687	40199	1477
25	363	28.5	413	0.00738	99406	3653	0.00574	110941	4076	0.00530	114992	4225	0.04514	41776	1535
26	377	29.6	429	0.00699	104094	3825	0.00541	116459	4279	0.00496	121141	4451	0.04348	43380	1594
27	392	30.7	445	0.00670	108281	3979	0.00506	122636	4506	0.00463	127692	4692	0.04150	45220	1662
28	406	31.8	461	0.00634	113289	4163	0.00479	128284	4714	0.00429	135011	4961	0.04010	46820	1720
29	421	32.9	477	0.00607	117767	4327	0.00453	134176	4930	0.00401	142040	5219	0.03870	48477	1781
30	435	34.0	493	0.00579	122580	4504	0.00422	141322	5193	0.00371	150120	5516	0.03730	50197	1844
31	450	35.1	509	0.00552	127557	4687	0.00392	148983	5474	0.00339	159565	5863	0.03612	51829	1904
32	464	36.2	525	0.00523	133083	4890	0.00365	156795	5761	0.00300	172258	6329	0.03482	53608	1970
33	479	37.3	541	0.00499	138300	5082	0.00337	165640	6086	0.00206	211011	7753	0.03370	55313	2032
34	493	38.4	557	0.00475	143826	5285	0.00306	176372	6481				0.03276	56922	2092
35	508	39.5	573	0.00452	149537	5495	0.00275	188694	6933				0.03158	58801	2161
36	522	40.6	589	0.00428	155797	5725	0.00221	213399	7841				0.03083	60334	2217
37	537	41.7	605	0.00408	161717	5942							0.02972	62278	2288
38	551	42.8	621	0.00389	167790	6165							0.02901	63861	2346
39	566	43.9	637	0.00365	175430	6446							0.02815	65657	2412
40	580	45.0	653	0.00345	182690	6713							0.02740	67378	2476

Capacity - POV 2150

(Continued)

P_{set}		P		Air(20 °C)	q_m		R410a	q_m		R744 (CO_2)	q_m	
[bar g]	[psi g]	[bar a]	[psi a]	[v]	[kg/h]	[lb/min]	[v]	[kg/h]	[lb/min]	[v]	[kg/h]	[lb/min]
10	145	12.0	174	0.06790	22605	831	0.02213	37249	1369	0.03196	32094	1179
11	160	13.1	190	0.06220	24677	907	0.02022	40716	1496	0.02930	35022	1287
12	174	14.2	206	0.05738	26750	983	0.01848	44342	1629	0.02690	38055	1398
13	189	15.3	222	0.05325	28822	1059	0.01690	48131	1768	0.02514	40861	1501
14	203	16.4	238	0.04968	30894	1135	0.01569	51717	1900	0.02352	43737	1607
15	218	17.5	254	0.04656	32966	1211	0.01457	55438	2037	0.02201	46704	1716
16	232	18.6	270	0.04381	35038	1287	0.01353	59310	2179	0.02061	49757	1828
17	247	19.7	286	0.04136	37110	1364	0.01275	62878	2310	0.01932	52890	1943
18	261	20.8	302	0.03917	39183	1440	0.01201	66570	2446	0.01825	55917	2055
19	276	21.9	318	0.03721	41254	1516	0.01132	70359	2585	0.01726	58999	2168
20	290	23.0	334	0.03543	43327	1592	0.01060	74513	2738	0.01645	61933	2276
21	305	24.1	350	0.03381	45399	1668	0.00995	78726	2893	0.01560	65101	2392
22	319	25.2	365	0.03233	47471	1744	0.00944	82648	3037	0.01485	68230	2507
23	334	26.3	381	0.03098	49543	1820	0.00887	87103	3201	0.01420	71281	2619
24	348	27.4	397	0.02974	51615	1897	0.00847	90981	3343	0.01355	74481	2737
25	363	28.5	413	0.02859	53687	1973	0.00795	95776	3519	0.01299	77582	2851
26	377	29.6	429	0.02753	55760	2049	0.00758	99961	3673	0.01239	80956	2975
27	392	30.7	445	0.02654	57832	2125	0.00722	104308	3833	0.01185	84305	3098
28	406	31.8	461	0.02562	59904	2201	0.00687	108831	3999	0.01145	87287	3207
29	421	32.9	477	0.02477	61977	2277	0.00653	113543	4172	0.01093	90872	3339
30	435	34.0	493	0.02396	64048	2353	0.00621	118362	4349	0.01059	93850	3448
31	450	35.1	509	0.02321	66121	2430	0.00589	123485	4537	0.01015	97401	3579
32	464	36.2	525	0.02251	68192	2506	0.00558	128842	4734	0.00978	100769	3703
33	479	37.3	541	0.02184	70265	2582	0.00530	134195	4931	0.00948	103894	3817
34	493	38.4	557	0.02122	72337	2658	0.00508	139076	5110	0.00910	107593	3953
35	508	39.5	573	0.02063	74410	2734	0.00478	145413	5343	0.00875	111285	4089
36	522	40.6	589	0.02007	76480	2810	0.00455	151104	5552	0.00847	114673	4214
37	537	41.7	605	0.01954	78554	2886	0.00430	157526	5788	0.00820	118114	4340
38	551	42.8	621	0.01904	80625	2962	0.00409	163636	6013	0.00794	121605	4468
39	566	43.9	637	0.01856	82697	3039	0.00385	170813	6276	0.00768	125225	4601
40	580	45.0	653	0.01811	84770	3115	0.00362	178349	6553	0.00743	128900	4736

Material specification

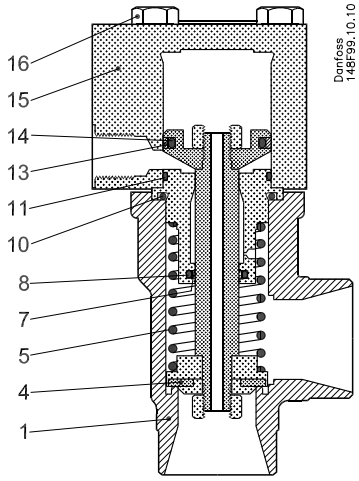

POV 600

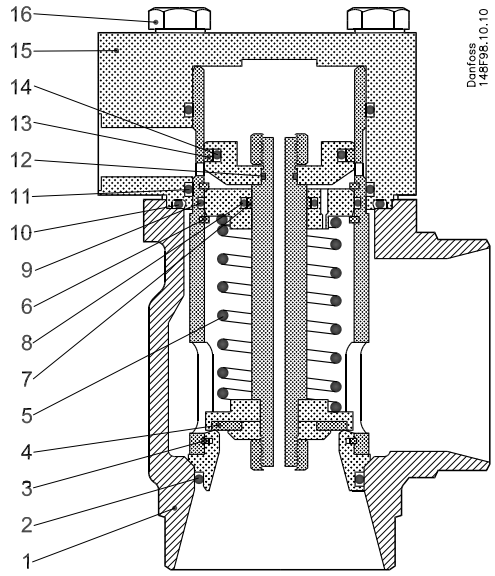

POV 1050, POV 2150

No	Part	Material	EN	ISO	ASTM
1	Housing	Steel	P285QH EN 10222-4		LF2, A350
2	O-ring	Cloropren (Neopren)			
3	Spring ring	Steel			
4	Telfon washer	PTFE(Teflon)			
5	Spring	Steel			
6	Seeger	Steel			
7	Glide ring	PTFE(Teflon)			
8-12	O-ring	Cloropren (Neopren)			
13	Glide ring	PTFE(Teflon)			
14	O-ring	Cloropren (Neopren)			
15	Top cover	Steel	P275NL1 EN 10028-3		Grade A, A662
16	Bolt	Stainless steel	A2-70 1515-1	A2-70 3506	Grade B8 A320

Connections

DIN

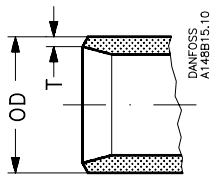

ANSI

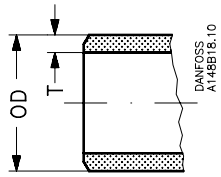

Version	Size [mm]	Size [in]	OD [mm]	T [mm]	OD [in]	T [in]	
Welding DIN (2448)							
POV 600	40	1 ½	48.3	2.6	1.902	0.103	
POV 1050	65	2 ½	76.1	2.9	3	0.11	
POV 2150	80	3	88.9	3.2	3.5	0.13	
Welding ANSI (B 36.10)							
POV 600	40	1 ½	48.3	5.1	1.902	0.201	Schedule 80
POV 1050	65	2 ½	73	5.2	2.87	0.2	Schedule 40
POV 2150	80	3	88.9	5.5	3.5	0.22	Schedule 40

Dimensions and weights

POV 600, POV 1050

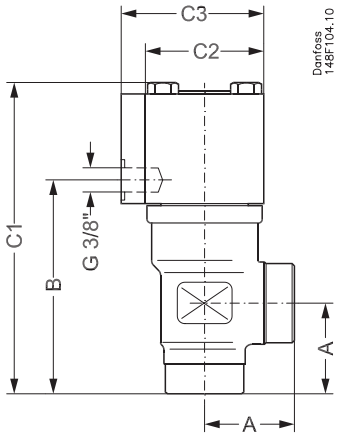

POV 2150

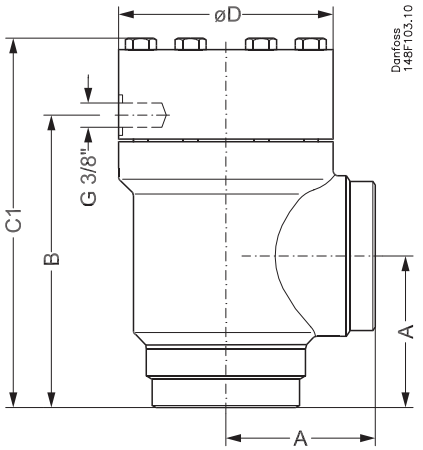

Valve size		A	B	C1	C2	C3	ØD	Weight
POV 600 1 ½ in	mm	55	130	188	73	88		5 kg
	in	2.2	5.1	7.4	2.8	3.5		
POV 1050 2 ½ in	mm	70	137	184	90	105		6 kg
	in	2.8	5.4	7.2	3.5	4.1		
POV 2150 3 in	mm	90	174	219			130	11 kg
	in	3.5	6.9	8.6			5.1	

Specified weights are approximate values only.

Ordering

Type	Code no.
POV 600 BUTT WELD DIN DN 40	**2417+232**
POV 600 BUTT WELD ANSI DN 40	**2417+047**
POV 1050 BUTT WELD DIN DN 65	**148F3026**
POV 1050 BUTT WELD ANSI DN 65	**148F3027**
POV 2150 BUTT WELD DIN DN 80	**148F3033**
POV 2150 BUTT WELD ANSI DN 80	**148F3034**

Nipples and gaskets

Attention: Fittings for connections must be ordered separately

Size		Type	Code no.
[mm]	[in]	For system POV + BSV	
15	1/2	Set of fittings	**148H3453**

Important!

Where products need to be certified according to specific certification societies or where higher pressures are required, the relevant information should be included at the time of order.

ENGINEERING
TOMORROW

Thermostatic expansion valves for ammonia
Type TEA

Contents **Page**

Features 959
Materials 959
Technical data 959
Identification 960
Ordering 960
Design / function 963
Dimensions and weights 963

AI172886422449en-000301 | 2015.09

ENGINEERING TOMORROW

Thermostatic expansion valves for ammonia
Type TEA



Thermostatic expansion valves regulate the injection of refrigerant liquid into evaporators. Injection is controlled by the refrigerant superheat.

Therefore the valves are especially suitable for liquid injection in „dry" evaporators where the superheat at the evaporator outlet follows the evaporator load proportionally.

Features

- Large temperature range: -50 – 30 °C
  Can be used in both freezing and refrigeration systems
- Interchangeable orifice assemblies
- Interchangeable thermostatic element
- Rated capacities from 3.5 – 295 kW,
  1 – 85 tons (TR)
- External superheat setting
  Can be matched to all evaporators to give optimum evaporator utilization
- Patented double contact bulb
  Fast and easy to install. Good temperature transfer from tube to bulb
- Classification: DNV, CRN, BV, EAC etc.
  To get an updated list of certification on the products please contact your local Danfoss Sales Company

Materials

Valve housing made of GGG40.3

Gaskets are non asbestos

Technical data

- Refrigerant
  R717 (Ammonia)
- Evaporating temperature range
  D: -50 to 0 °C
  P: -20 to 30 °C
- Capillary tube length
  5 m
- Connection for external pressure equalization
  1/4 inch or ∅ 6.5 / ∅ 10 mm weld nipple.
  An 8 mm self-cutting union can also be used
- Max. bulb temperature
  100 °C
- Max. working pressure
  PS / MWP = 19 bar
- Max. test pressure
  28.5 bar

Identification



Element label



Orifice assembly marking

The thermostatic element
has a white label attached to its top.
The colour refers to the refrigerant for which the valve is designed: R 717 (Ammonia).

The orifice assembly
is marked with
- valve type (TEA 20)
- rated capacity (8 TR = 28 kW)
- refrigerant R717 (NH_3)
- date stamp

Ordering

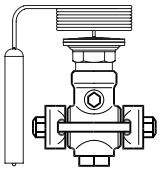

Type and rated capacity in tons (TR)	Rated capacity [1] [kW]	Connection weld flanges Inlet [in]	Outlet [in]	Code no. Assembled valve	Separate strainer [2]	Separate orifice assembly	Separate thermostatic element
TEA 20, range: -50 to 0 °C							
TEA 20-1	3.5	1/2	1/2	**068G6000**		**068G2050**	
TEA 20-2	7	1/2	1/2	**068G6001**		**068G2051**	
TEA 20-3	10.5	1/2	1/2	**068G6002**		**068G2052**	
TEA 20-5	17.5	1/2	1/2	**068G6003**	**006-0042**	**068G2053**	**068G3250**
TEA 20-8	28	1/2	1/2	**068G6004**		**068G2054**	
TEA 20-12	42	1/2	1/2	**068G6005**		**068G2055**	
TEA 20-20	70	1/2	1/2	**068G6006**		**068G2056**	
TEA 20, range : -20 to 30 °C							
TEA 20-1	3.5	1/2	1/2	**068G6137**		**068G2050**	
TEA 20-2	7	1/2	1/2	**068G6133**		**068G2051**	
TEA 20-3	10.5	1/2	1/2	**068G6134**		**068G2052**	
TEA 20-5	17.5	1/2	1/2	**068G6138**	**006-0042**	**068G2053**	**068G3252**
TEA 20-8	28	1/2	1/2	**068G6139**		**068G2054**	
TEA 20-12	42	1/2	1/2	**068G6140**		**068G2055**	
TEA 20-20	70	1/2	1/2	**068G6135**		**068G2056**	
TEA 85, range: -50 to 0 °C							
TEA85-33	115	3/4	3/4	**068G6007**		**068G2057**	
TEA 85-55	190	3/4	3/4	**068G6008**	**006-0048**	**068G2058**	**068G3250**
TEA 85-85	295	3/4	3/4	**068G6009**		**068G2059**	
TEA 85, range: -20 to 30 °C							
TEA85-33	115	3/4	3/4	**068G6141**		**068G2057**	
TEA 85-55	190	3/4	3/4	**068G6142**	**006-0048**	**068G2058**	**068G3252**
TEA 85-85	295	3/4	3/4	**068G6143**		**068G2059**	

[1] The rated capacity is the valve capacity at -15 °C evaporating temperature and 32 °C condensing temperature. The capacities are based on approx. 4 K subcooling ahead of valve.
[2] The filter is supplied with gaskets, bolts and nuts.

Note:
Subcooling of the liquid in front of the valve is essential for the function of the valve. Lack of subcooling will lead to malfunction of the valve, and increased wear on the orifice.

Capacity in kW, range -50 – 0 °C

R 717 (NH_3)

Type and rated capacity in tons (TR)	Pressure drop across valve Δp bar								Pressure drop across valve Δp bar							
	2	4	6	8	10	12	14	16	2	4	6	8	10	12	14	16
	Evaporating temperature 0 °C								**Evaporating temperature -10 °C**							
TEA 20-1	2.1	2.9	3.3	3.7	4.1	4.3	4.5	4.8		2.7	3.0	3.3	3.6	4.0	4.2	4.4
TEA 20-2	4.1	5.6	6.5	7.4	8.1	8.6	9.0	9.3		5.2	6.0	6.8	7.5	8.0	8.3	8.7
TEA 20-3	5.9	8.3	9.9	11.2	12.1	13.0	13.5	14.0		7.8	9.1	10.1	11.2	12.0	12.6	13.0
TEA 20-5	10.5	14.1	16.7	18.6	20.2	21.5	22.4	23.3		12.9	15.1	17.1	18.7	20.0	20.8	21.5
TEA 20-8	15.7	22.1	26.2	29.7	32.0	34.3	36.1	37.2		20.9	24.4	27.9	30.2	31.7	33.1	34.3
TEA 20-12	24.4	33.1	39.5	44.5	48.3	51.8	54.7	56.4		31.4	36.6	41.9	45.0	47.7	50.0	52.3
TEA 20-20	40.7	55.0	66.3	74.4	80.9	86.1	90.2	93.7		51.8	60.5	68.6	75.1	79.1	83.3	85.6
TEA 85-33	69.3	92.8	110	122	134	145	151	157		85.6	101	113	122	134	140	145
TEA 85-55	114	151	180	204	221	238	250	256		145	169	186	204	221	233	244
TEA 85-85	180	238	285	320	343	366	384	395		221	256	291	314	337	355	372
	Evaporating temperature -20 °C								**Evaporating temperature -30 °C**							
TEA 20-1		2.2	2.6	2.9	3.1	3.3	3.5	3.7			2.0	2.2	2.4	2.6	2.8	2.9
TEA 20-2		4.3	4.9	5.6	6.2	6.6	6.9	7.1			4.1	4.5	4.9	5.2	5.5	5.6
TEA 20-3		6.5	7.4	8.5	9.4	10.0	10.4	10.6			6.2	6.9	7.4	7.9	8.3	8.5
TEA 20-5		11.0	12.9	14.4	15.6	16.5	17.2	17.7			10.1	11.3	12.3	13.1	13.7	14.3
TEA 20-8		17.4	20.4	22.7	25.0	26.2	27.3	27.9			16.3	18.0	19.8	20.9	22.1	22.7
TEA 20-12		25.6	30.8	34.9	37.2	39.5	41.9	43.0			25.0	27.9	30.2	31.4	32.6	33.7
TEA 20-20		44.2	51.2	57.6	61.6	65.7	68.6	72.1			40.7	45.4	49.4	52.3	54.7	57.0
TEA 85-33		72.1	84.9	94.9	103	109	114	116			68.6	75.0	80.9	85.6	90.2	94.2
TEA 85-55		116	145	163	174	180	186	192			114	128	140	145	151	157
TEA 85-85		180	221	244	267	279	291	302			174	192	209	221	233	244
	Evaporating temperature -40°C								**Evaporating temperature -50°C**							
TEA 20-1			1.3	1.7	1.9	2.0	2.2	2.3			1.2	1.3	1.4	1.5	1.6	1.7
TEA 20-2			3.1	3.5	3.8	4.0	4.2	4.4			2.4	2.7	2.8	3.0	3.1	3.3
TEA 20-3			4.8	5.2	5.7	6.0	6.4	6.6			3.7	4.1	4.3	4.5	4.8	5.0
TEA 20-5			8.0	8.7	9.4	10.1	10.6	11.0			6.0	6.6	7.1	7.6	7.9	8.3
TEA 20-8			12.8	14.0	15.1	16.3	16.9	17.4			9.3	10.5	11.0	11.6	12.2	12.8
TEA 20-12			19.2	20.9	22.7	24.4	26.2	27.3			14.5	15.7	16.9	18.0	19.2	20.4
TEA 20-20			32.0	35.5	38.4	40.7	43.0	44.8			24.4	26.2	27.9	29.7	31.4	32.6
TEA 85-33			52.3	58.2	61.6	65.1	68.6	72.1			39.5	43.6	46.5	49.4	51.8	54.1
TEA 85-55			86.8	96.5	104	110	116	122			66.3	72.1	77.8	81.9	86.1	89.6
TEA 85-85			134	151	163	174	180	186			104	113	122	128	134	140

1) Subcooling Δt = 4K ahead of the valve.

Example

Given:
Refrigerant = R 717 (NH_3)
Evaporator capacity Q_e = 265 kW (75.3 TR)
Evaporating temperature t_e = -20 °C
(~p_e = 1.9 bar)
Condensing temperature t_c = 32 °C
(~p_c = 12.4 bar)
Subcooling Δt = 4K
If the pressure drop Δp_1 across pipelines, etc. is calculated, for example, as 0.5 bar, the effective pressure drop across the thermostatic valve becomes
$\Delta p = p_c - p_e - p_1$
Δp = 12.4 - 1.9 - 0.5 = 10 bar.

Now, from the capacity table at an evaporating temperature t_e = -20 °C and Δp = 10 bar, the capacity is 267 kW.

The column on the far left of this point gives the valve designation: TEA 85-85.

The ordering table gives the code no. for TEA 85-85: 068G6009.

Generally, the maximum capacity of a valve is approx. 20% higher than the value given in the table.

If a different capacity is subsequently required, a separate orifice assembly with a suitable rated capacity can be ordered to replace the one fitted in the installed valve.

Capacity in kW, range -20 – 30 °C

R 717 (NH_3)

Type and rated capacity in tons (TR)	Pressure drop across valve Δp bar								Pressure drop across valve Δp bar							
	2	4	6	8	10	12	14	16	2	4	6	8	10	12	14	16
	Evaporating temperature 30 °C								**Evaporating temperature 20 °C**							
TEA 20-1	2.6	3.4	3.9	4.3	4.6	4.8	5.0	5.2	2.7	3.4	3.9	4.2	4.5	4.8	4.9	5.1
TEA 20-2	4.7	6.5	7.5	8.1	8.7	9.2	9.6	9.9	4.9	6.6	7.5	8.1	8.7	9.1	9.5	9.9
TEA 20-3	5.6	7.8	9.3	10.4	11.4	12.2	12.9	13.5	5.9	8.0	9.6	10.8	11.7	12.5	13.2	13.9
TEA 20-5	11.6	16.0	19.0	20.9	22.2	23.4	24.5	25.4	12.1	16.5	19.3	20.9	22.2	23.4	24.4	25.4
TEA 20-8	19.9	27.3	31.3	34.4	36.6	38.6	40.3	41.8	20.7	28.1	31.5	34.2	36.5	38.4	40.1	41.6
TEA 20-12	29.1	39.6	45.3	49.2	52.2	55.2	57.7	59.8	30.2	40.2	45.0	48.8	52.0	54.8	57.2	59.3
TEA 20-20	42.9	66.2	74.6	81.1	86.4	90.9	94.8	98.3	50.7	65.9	73.8	80.0	85.2	89.7	93.7	97.2
TEA 85-33	83.0	106	122	133	143	150	158	164	85.0	106	120	132	141	149	156	163
TEA 85-55	134	179	205	222	236	248	259	268	137	181	202	219	233	245	256	265
TEA 85-85	196	257	297	328	353	374	392	408	200	258	296	326	351	372	390	406
	Evaporating temperature 10 °C								**Evaporating temperature 0 °C**							
TEA 20-1	2.6	3.3	3.8	4.2	4.4	4.7	4.9	5.0	2.6	3.2	3.7	4.1	4.3	4.6	4.8	5.0
TEA 20-2	5.1	6.6	7.4	8.0	8.6	9.0	9.5	9.9	5.2	6.4	7.2	7.9	8.4	8.9	9.4	9.7
TEA 20-3	6.1	8.3	9.8	11.0	12.0	12.8	13.5	14.1	6.3	8.5	10.0	11.2	12.1	12.9	13.6	14.2
TEA 20-5	12.5	17.0	19.1	20.7	22.0	23.2	24.3	25.2	12.9	16.8	18.7	20.3	21.7	22.9	23.9	24.9
TEA 20-8	21.3	27.8	31.1	33.7	36.0	37.9	39.6	41.2	21.8	27.1	30.3	33.0	35.2	37.2	39.0	40.5
TEA 20-12	30.9	39.5	44.2	47.9	51.1	53.9	56.3	58.5	31.4	38.4	42.9	46.7	49.9	52.7	55.2	57.4
TEA 20-20	51.6	64.5	72.1	78.2	83.4	88.0	92.0	95.6	51.7	62.3	69.8	76.0	81.3	85.9	90.0	93.7
TEA 85-33	84.0	104	118	129	139	147	153	160	82.0	101	114	126	135	143	151	157
TEA 85-55	140	178	198	214	228	241	251	261	139	172	192	208	223	235	246	256
TEA 85-85	200	255	292	321	346	367	385	401	196	248	285	314	339	360	378	395
	Evaporating temperature -10 °C								**Evaporating temperature -20 °C**							
TEA 20-1		3.1	3.6	3.9	4.2	4.4	4.6	4.8		2.9	3.2	3.5	3.8	4.0	4.2	4.4
TEA 20-2		6.1	6.9	7.5	8.1	8.6	9.0	9.4		5.4	6.2	6.8	7.3	7.8	8.2	8.6
TEA 20-3		8.5	10.0	11.2	12.1	12.9	13.5	14.1		8.4	9.9	11.0	11.9	12.5	13.0	13.4
TEA 20-5		15.6	17.5	19.1	20.4	21.6	22.7	23.6		13.6	15.4	17.0	18.3	19.4	20.4	21.3
TEA 20-8		24.7	27.8	30.4	32.6	34.6	36.3	37.8		21.0	24.0	26.5	28.6	30.4	32.0	33.4
TEA 20-12		36.9	41.5	45.3	48.6	51.5	54.0	56.3		32.2	36.7	40.4	43.5	46.3	48.7	50.9
TEA 20-20		59.7	67.3	73.6	79.0	83.7	87.9	91.7		56.9	64.6	71.0	76.6	81.4	85.6	89.5
TEA 85-33		97.0	111	122	131	140	147	154		92.0	107	118	128	136	144	150
TEA 85-55		165	185	202	216	229	241	251		158	178	196	211	224	235	245
TEA 85-85		239	276	306	331	352	371	388		230	267	297	323	345	364	381

1) Subcooling Δt = 4K ahead of the valve.

Design / function

TEA 20 / TEA 85

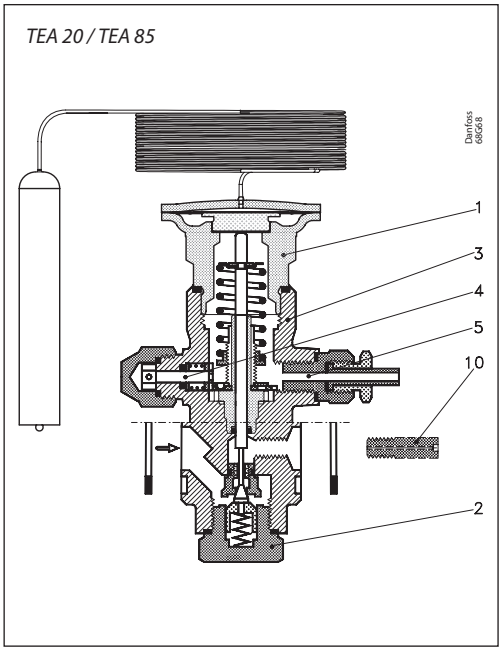

1. Thermostatic element (diaphragm)
2. Orifice assembly
3. Valve body
4. Superheat setting spindle (see „Instructions")
5. Ext. pressure equalizing connection
10. Separate outlet orifice (for TEA 20-1 only)

General

TEA is equipped with interchangeable orifice assembly and thermostatic element.
TEA is built up of three interchangeable main components:

- Thermostatic element (1)
- Orifice assembly (2)
- Valve body (3), with flange connections

The valve has external equalization.
A separate outlet orifice assembly (10) is for use with TEA 20-1 (3.5 kW) only.

The double contact bulb gives fast and precise reaction to temperature changes in the evaporator suction line, even with much reduced evaporator load. It also makes fitting the bulb quick and easy.
The valves are able to withstand the effects that normally occur with hot gas defrosting.

The movement of the setting spindle is transferred by a gearwheel mechanism that ensures smooth superheat setting.
The throttling section of the orifice assembly has a long operating life, the valve cone and seat being made of a special alloy steel with particularly good wear qualities.

Note:
The TEA is not able to close completely tight. Consequently a solenoid valve is needed to shut off liquid supply when systems stops.

Dimensions and weights

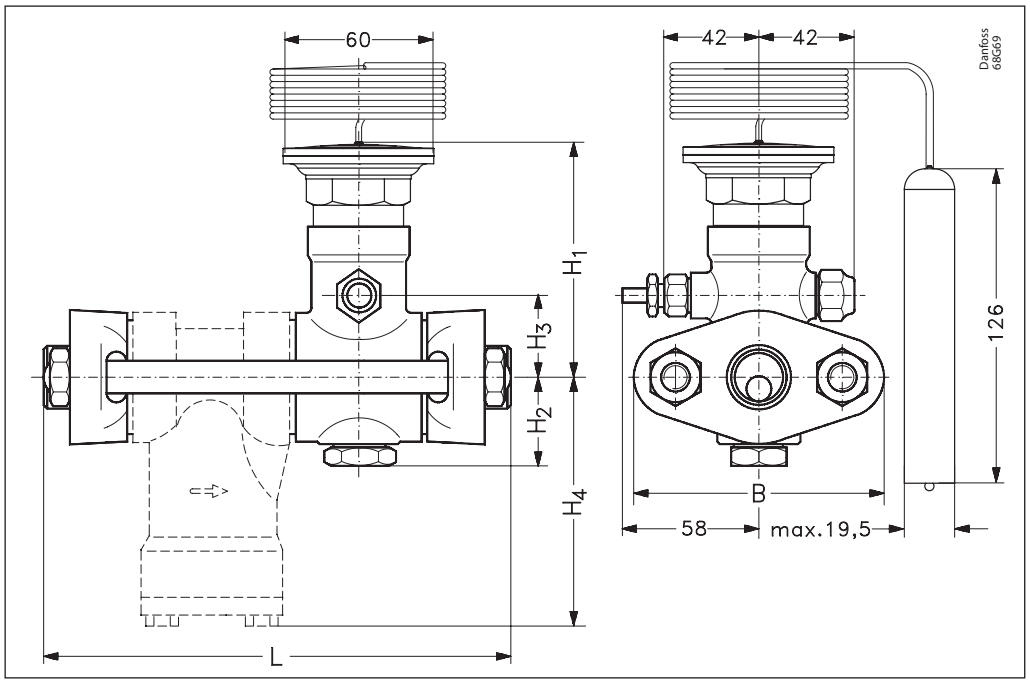

Type	H_1 [mm]	H_2 [mm]	H_3 [mm]	H_4 [mm]	L Excl.strainer [mm]	L Incl. strainer [mm]	B [mm]	Weight Excl.strainer [kg]	Weight Incl. strainer [kg]
TEA 20	94	38	25	96	110	164	80	2.1	3.0
TEA 85	104	37	35	106	125	199	95	3.0	4.5

ENGINEERING
TOMORROW

Desuperheating valve
Type TEAT

Contents **Page**

Materials 967
Technical data 967
Identification 967
Ordering TEAT 968
Rated capacity in kW 968
Extended capacities in kW 969
Design / function 969
Dimensions and weights 970

AI172886419299en-000401 | 2015.09

ENGINEERING
TOMORROW

Desuperheating valve
Type TEAT



Refrigerant injection into the suction line
TEAT valves are used to inject refrigerant into the suction line of the refrigeration system to reduce the high discharge temperatures that can occur when the system operates with highly superheated suction vapour.

This applies when, for example:
- a compressor runs either with low suction pressure or with high condensing temperature
- a compressor runs with both low suction pressure and high condensing temperature. This applies especially to systems with R 22
- a compressor receives highly superheated suction vapour
- a compressor runs with capacity regulation by hot gas bypass

Two-stage refrigeration plant
TEAT valves are also used in two-stage refrigeration plant to control liquid injection into the intercooler. The bulb is installed on the discharge line from the high-pressure compressor. The theoretically obtainable discharge temperature for given operating conditions can be found in the h, log p diagram for the refrigerant concerned.

Temperature regulation of the medium
TEAT valves have a further application: the temperature regulation of the medium, e.g. the temperature of the oil in a screw compressor.

Materials

Valve housing made of GGG40.3

Gaskets are non asbestos.

Technical data

- Refrigerants
  Applicable to HCFC, non flammable HFC and R717 (Ammonia)
- Regulation ranges
  See ordering table
- P band
  20 °C
- Capillary tube length
  5 m
- Max. bulb temperature
  150 °C

- Max. working pressure
  PS = 20 bar
- Max. test pressure
  p' = 30 bar
- Classification: DNV, CRN, BV, EAC etc.
  To get an updated list of certification on the products please contact your local Danfoss Sales Company

Identification

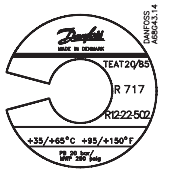

Element label



Orifice assembly marking

The thermostatic element
has a label giving valve type, temperature range and max. test pressure.

The orifice assembly
is common to TEAT, TEA and TEVA. The rated capacity, e.g. 8 TR (= 28 kW) for the refrigerant ammonia is given on the orifice assembly.

The orifice assembly can be used for both ammonia and fluorinated refrigerants.

Ordering TEAT

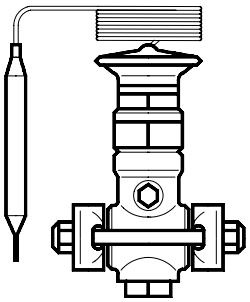

Type and rated capacity (TR)	Regulating range [°C]	Flange connection	Code no.		
			Assembled valve	Separate orifice assembly	Separate thermostatic element
TEAT 20-1	35 – 65	1/2 × 1/2	[1])	**068G2050**	**068G3262**
	55 – 95	1/2 × 1/2	[1])	**068G2050**	**068G3260**
	90 – 130	1/2 × 1/2	[1])	**068G2050**	**068G3261**
TEAT 20-2	35 – 65	1/2 × 1/2	**068G6125**	**068G2051**	**068G3262**
	55 – 95	1/2 × 1/2	**068G6062**	**068G2051**	**068G3260**
	90 – 130	1/2 × 1/2	**068G6065**	**068G2051**	**068G3261**
TEAT 20-3	35 – 65	1/2 × 1/2	[1])	**068G2052**	**068G3262**
	55 – 95	1/2 × 1/2	[1])	**068G2052**	**068G3260**
	90 – 130	1/2 × 1/2	[1])	**068G2052**	**068G3261**
TEAT 20-5	35 – 65	1/2 × 1/2	**068G6126**	**068G2053**	**068G3262**
	55 – 95	1/2 × 1/2	**068G6061**	**068G2053**	**068G3260**
	90 – 130	1/2 × 1/2	**068G6127**	**068G2053**	**068G3261**
TEAT 20-8	35 – 65	1/2 × 1/2	**068G6128**	**068G2054**	**068G3262**
	55 – 95	1/2 × 1/2	**068G6063**	**068G2054**	**068G3260**
	90 – 130	1/2 × 1/2	**068G6066**	**068G2054**	**068G3261**
TEAT 20-12	35 – 65	1/2 × 1/2	[1])	**068G2055**	**068G3262**
	55 – 95	1/2 × 1/2	[1])	**068G2055**	**068G3260**
	90 – 130	1/2 × 1/2	[1])	**068G2055**	**068G3261**
TEAT 20-20	35 – 65	1/2 × 1/2	**068G6068**	**068G2056**	**068G3262**
	55 – 95	1/2 × 1/2	**068G6064**	**068G2056**	**068G3260**
	90 – 130	1/2 × 1/2	**068G6067**	**068G2056**	**068G3261**
TEAT 85-33	35 – 65	3/4 × 3/4	**068G6129**	**068G2057**	**068G3262**
	55 – 95	3/4 × 3/4	**068G6070**	**068G2057**	**068G3260**
	90 – 130	3/4 × 3/4	**068G6072**	**068G2057**	**068G3261**
TEAT 85-55	35 – 65	3/4 × 3/4	**068G6130**	**068G2058**	**068G3262**
	55 – 95	3/4 × 3/4	**068G6073**	**068G2058**	**068G3260**
	90 – 130	3/4 × 3/4	**068G6131**	**068G2058**	**068G3261**
TEAT 85-85	35 – 65	3/4 × 3/4	**068G6069**	**068G2059**	**068G3262**
	55 – 95	3/4 × 3/4	**068G6071**	**068G2059**	**068G3260**
	90 – 130	3/4 × 3/4	**068G6132**	**068G2059**	**068G3261**

[1]) This valve size must be ordered as a complete valve + a separate orifice assemble in the required size.
Example: TEAT 20-3 must be ordered as **068G6125** + **068G2052.**
The orifice in the complete TEAT 20-2 valve must then be changed with the separate orifice assemble.

Separate filter with gaskets, staybolts and nuts
for TEAT 20, code no. **006-0042**
for TEAT 85, code no. **006-0048**.

Stainless steel bulb pocket, gasket, and union nut, code no. **993N3615**, for screwing into G 1/2 socket welded to tube or tank.

Rated capacity in kW

Type and rated capacity (TR)	Rated capacity in kW [1]) at Δp = 8 bar					
	R717 (NH_3)	R22	R134a	R404A	R12	R502
TEAT 20-1	3.3	0.8	0.7	0.6	0.5	0.6
TEAT 20-2	6.4	1.5	1.2	1.1	0.9	1.1
TEAT 20-3	9.7	2.3	1.7	1.6	1.3	1.6
TEAT 20-5	16.0	3.6	3.0	2.9	2.3	2.7
TEAT 20-8	25.6	6.2	4.6	4.4	3.5	4.4
TEAT 20-12	38.4	9.2	6.9	6.7	5.3	6.5
TEAT 20-20	64.0	15.4	13.1	12.6	10.0	10.8
TEAT 85-33	106	26	19.5	18.8	14.9	18.0
TEAT 85-55	173	42.4	31.8	30.6	24.3	27.4
TEAT 85-85	274	66.3	50.3	48.4	38.4	46.5

[1]) Rated capacity is valve capacity at 5 °C evaporating temperature, and 4K subcooling of the liquid in front of the valve.

[2]) Note: Subcooling of the liquid in front of the valve is essential for the function of the valve. Lack of subcooling will lead to malfunction of the valve and increased wear on orifice.

Extended capacities in kW

R717 [1)]

Valve size	Pressure drop across valve Δp bar				
	4	6	8	11	15
20 - 1	2.3	2.8	3.3	3.6	4.7
20 - 2	4.8	5.7	6.4	7.2	7.9
20 - 3	7.2	8.5	9.7	10.8	11.7
20 - 5	12.1	14.2	16.0	18.0	19.8
20 - 8	18.6	22.1	25.6	28.5	31.4
20 - 12	29.1	33.7	38.4	43.0	47.1
20 - 20	47.7	57.0	64.0	72.1	79.1
85 - 33	80.2	94.2	106.4	118.6	130.3
85 - 55	136.1	157.0	176.8	197.7	215.2
85 - 85	203.5	239.6	274.5	302.4	334.9

R22 [1)]

Valve size	Pressure drop across valve Δp bar				
	4	6	8	11	15
20 - 1	0.6	0.7	0.8	0.9	1.0
20 - 2	1.2	1.4	1.5	1.7	1.9
20 - 3	1.7	2.0	2.3	2.6	2.9
20 - 5	2.7	3.1	3.6	4.0	4.8
70 - 8	4.4	5.2	6.2	6.9	7.6
20 - 12	7.0	8.1	9.2	10.4	11.3
20 - 20	11.5	13.7	15.4	17.2	18.8
85 - 33	19.3	22.4	25.6	28.5	31.4
85 - 55	32.6	37.8	42.4	47.7	52.3
85 - 85	48.8	58.2	66.3	72.1	81.4

1) The rated capacity is valve capacity at 5 °C evaporating temperature, 32 °C condensing temperature and 4K subcooling of the liquid in front of the valve.

Design / function

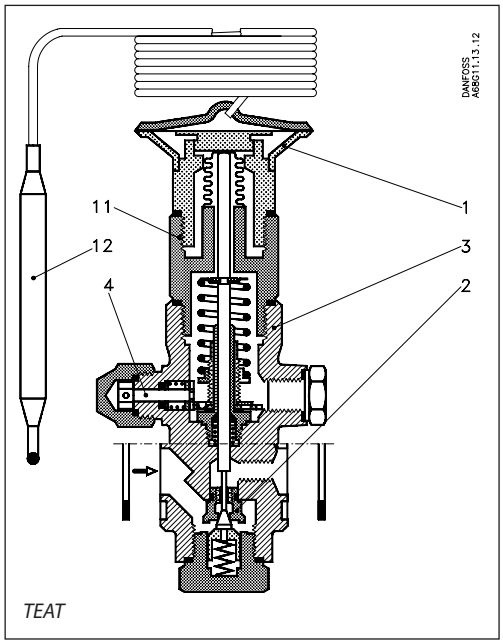

TEAT

1. Thermostatic element (diaphragm)
2. Orifice assembly
3. Valve body
4. Setting spindle
11. Intermediate section
12. Bulb

Temperature variations in the discharge pipe where the bulb is placed act on the thermal charge in the bulb (12). This changes the pressure in the thermostatic element (1) and thus gives modulating liquid injection.

If leakage in the thermostatic element does occur, it will not result in refrigerant loss.

The thermostatic element is screwed to the intermediate section (11) of the valve. A bellow on the intermediate section means that the suction pressure cannot influence the valve setting.

The movement of the setting spindle (4) is transferred through a gearwheel mechanism.

The orifice assembly (2) is identical to that of TEA thermostatic expansion valves.

Note: The TEAT is not able to close completely tight, so a solenoid valve is needed to shut off liquid supply, when the system stops.

Dimensions and weights

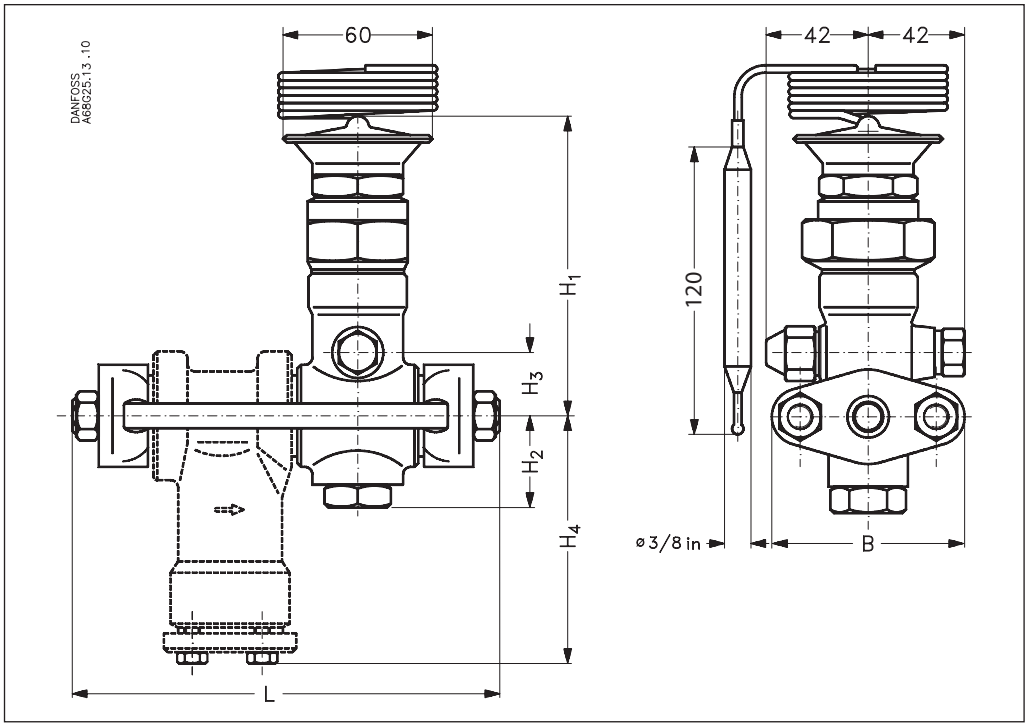

Type	H_1 [mm]	H_2 [mm]	H_3 [mm]	H_4 [mm]	L		B [mm]	Weight	
					Excl. strainer [mm]	Incl. strainer [mm]		Excl. strainer [kg]	Incl. strainer [kg]
TEAT 20	121.5	37	25	96	110	164	80	2.1	3.0
TEAT 85	131.5	37	35	106	125	199	95	3.0	4.5

ENGINEERING
TOMORROW

Electric expansion valves
Types AKVA 10, 15 & 20

Contents **Page**

Features 973
Approvals 973
Technical data 974
Rated capacity and ordering 975
Capacity 979
Dimensioning 979
Design 983
Function 984
Dimension and weight 984
Recommandations 985

AI183786440857en-000607 | 2017.10

ENGINEERING
TOMORROW

Electric expansion valves
Types AKVA 10, 15 & 20

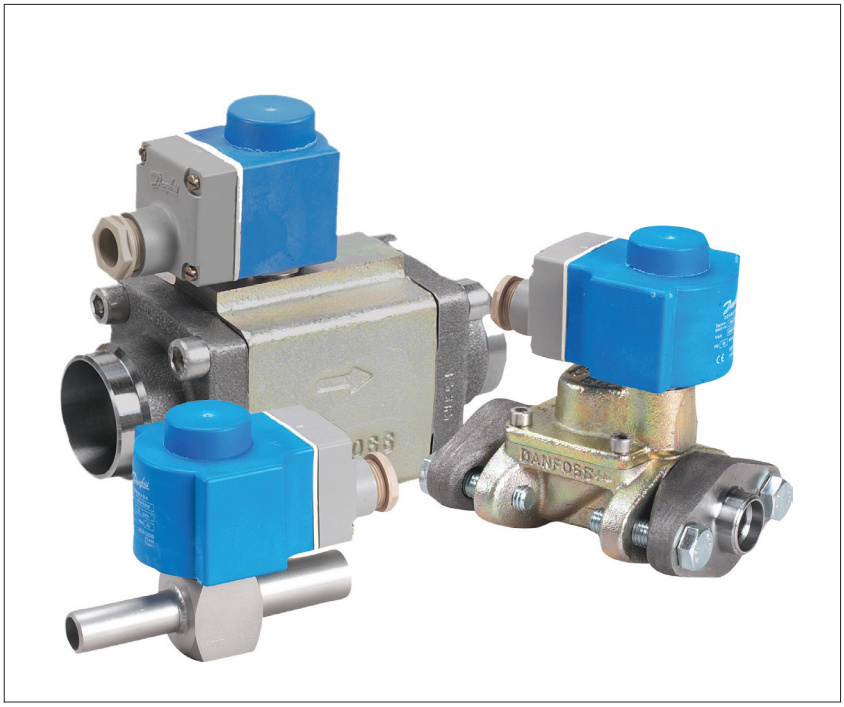

AKVA are electric expansion valves designed for ammonia refrigerating plant.

The AKVA valves are normally controlled by a controller from Danfoss' range of ADAP-KOOL® controllers.

The AKVA valves are supplied as a component programme, as follows:
- Separate valve
- Separate coil with terminal box or cable
- Spare parts in the form upper part, orifice and filter

The individual capacities are indicated with a number forming part of the type designation. The number represents the size of the orifice of the valve in question.

A valve with orifice 3 will for example be designated AKVA 10-3.

The orifice assembly is replaceable.

Features

- For HCFC, HFC, R717 (Ammonia) and R744 (CO_2)
- The valve requires no adjustment
- Wide regulation range
- Replaceable orifice assembly
- Wide range of coils for DC and AC
- Quick reaction in whole range of stated capacity.
- In some applications AKVA can be used both as expansion valve and solenoid valve.
- Classification: DNV, CRN, BV, EAC etc. To get an updated list of certification on the products please contact your local Danfoss Sales Company.

Approvals

DEMKO, Denmark
SETI, Finland
SEV, Switzerland

AKVA 20 are CE marked according to Pressure Equipment Directive 97/23

UL listed to U8.S. og Canadian standards (separate code. nos.)

Technical data

The AKVA 10 valves covers a capacity range from 4 kW to 100 kW (R 717) and are divided up into 8 capacity ranges.

The AKVA 10 valve bodies are made in stainless steel and have weld connections.

The AKVA 15 valves have flange connections. The valve covers a capacity range from 125 kW to 500 kW (R 717) and are divided up into 4 capacity ranges.

The AKVA 20 valves cover a capacity range from 500 kW to 3150 kW (R 717) and are divided up into 5 capacity ranges.

The AKVA 20 valve has weld connections.

The AKVA valves can be used for:

- Flooded evaporation (high / low pressure)
- Pump separators
- Direct expansion. See appendix

If AKVA has to be used in chillers please contact Danfoss.

The AKVA can be used for HCFC, HFC, R717 (Ammonia) and R744 (CO_2).

Valve type	AKVA 10	AKVA 15	AKVA 20
Tolerance of coil voltage	10 / –15%	10 / –15%	10 / –15%
Enclosure to IEC 529	Max. IP 67	Max. IP 67	Max. IP 67
Working principle (Pulse-width modulation)	PWM	PWM	PWM
Recommend period of time	6 seconds	6 seconds	6 seconds
Capacity (R717)	4 to 100 kW	125 to 500 kW	500 to 3150 kW
Regulation range	10 – 100%	10 – 100%	10 – 100%
Connection	Weld	Weld	Weld
Media temperature	-50 – 60 °C	-40 – 60 °C	-40 – 60 °C
Ambient temperature	-50 – 50 °C	-40 – 50 °C	-40 – 50 °C
Leak of valve seat	< 0.02% of K_v-value	< 0.02% of K_v-value	< 0.02% of K_v-value
MOPD	18 bar	22 bar	18 bar
Filter	Internal 100 µm replaceable	external 100 µm	external 100 µm
Max. working pressure	PS = 42 bar g	PS = 42 bar g	PS = 42 bar g

Rated capacity and ordering

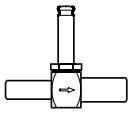

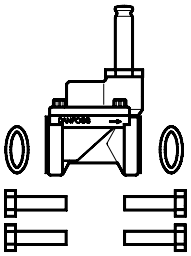

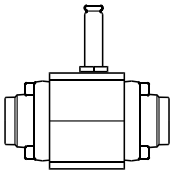

Valve type	Rated capacity[1]		k_v-value	Connections Inlet x outlet	**Code no.**	Connections Inlet x outlet	**Code no.**
	[kW]	[tons]	[m³/h]	[in]		[in]	
AKVA 10-1	4	1.1	0.010	⅜ × ½	**068F3261**	½ × ¾	**068F3281**
AKVA 10-2	6.3	1.8	0.015	⅜ × ½	**068F3262**	½ × ¾	**068F3282**
AKVA 10-3	10	2.8	0.022	⅜ × ½	**068F3263**	½ × ¾	**068F3283**
AKVA 10-4	16	4.5	0.038	⅜ × ½	**068F3264**	½ × ¾	**068F3284**
AKVA 10-5	25	7.1	0.055	⅜ × ½	**068F3265**	½ × ¾	**068F3285**
AKVA 10-6	40	11.4	0.103	⅜ × ½	**068F3266**	½ × ¾	**068F3286**
AKVA 10-7	63	17.9	0.162			½ × ¾	**068F3267**
AKVA 10-8	100	28.4	0.251			½ × ¾	**068F3268**
AKVA 15-1	125	35	0.25	Flange	**068F5020**[2]		
AKVA 15-2	200	60	0.40	Flange	**068F5023**[2]		
AKVA 15-3	300	90	0.63	Flange	**068F5026**[2]		
AKVA 15-4	500	140	1.0	Flange	**068F5029**[2]		
AKVA 20-1	500	140	1.0	1 ¼ × 1 ¼	**042H2101**		
AKVA 20-2	800	240	1.6	1 ¼ × 1 ¼	**042H2102**		
AKVA 20-3	1250	350	2.5	1 ¼ × 1 ¼	**042H2103**		
AKVA 20-4	2000	600	4.0	1 ½ × 1 ½	**042H2104**		
AKVA 20-5	3150	900	6.3	2 × 2	**042H2105**		

[1]) Rated capacities are based on
Condensing temperature t_c = 32 °C
Liquid temperature t_l = 28 °C
Evaporating temperature t_e = 5 °C

[2]) Incl. bolts and gaskets but without flanges

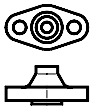

Flange set for AKVA 15

Valve type	Connection (in.)	**Code no.**
AKVA 15-1 to 4	¾	**027N1220**
	1	**027N1225**

Ordering *(continued)*
Accessories

Strainer

On plants with ammonia and similar industrial plant a strainer must be mounted in front of AKVA 15 and AKVA 20.

AKVA 10 has built-in strainer and external strainer is not necessary.

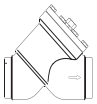

Recommended strainer for AKVA 15 / 20

Strainer type	Code no.	
	House	Strainer insert 100 µm
FIA 20 D STR	**148B5343**	**148H3122**
FIA 25 D STR	**148B5443**	**148H3123**
FIA 32 D STR	**148B5544**	
FIA 40 D STR	**148B5625**	
FIA 50 D STR	**148B5713**	**148H3157**

For further information: see Danfoss catalogue AI222586432958

Examples of combinations

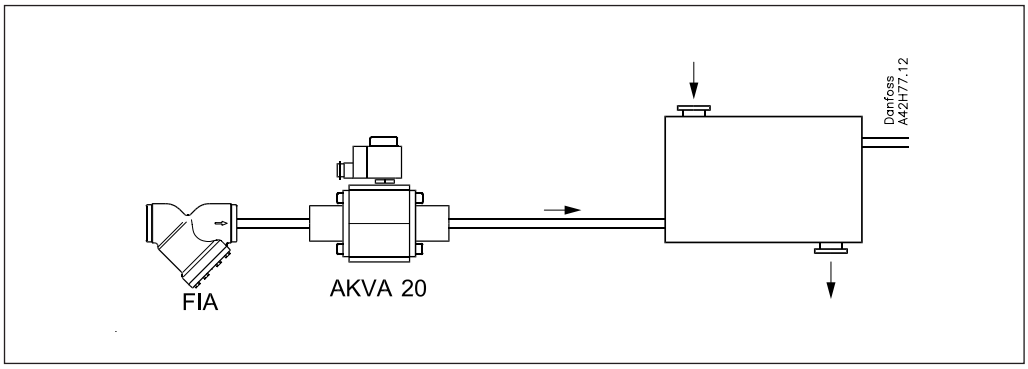

Ordering *(continued)*
Spare parts

AKVA 10

Orifice



Type	Code no.	Contents
AKVA 10-1	**068F0526**	1 pcs. orifice 1 pcs. Al. gasket 1 pcs. cap for coil
AKVA 10-2	**068F0527**	
AKVA 10-3	**068F0528**	
AKVA 10-4	**068F0529**	
AKVA 10-5	**068F0530**	
AKVA 10-6	**068F0531**	
AKVA 10-7	**068F0532**	
AKVA 10-8	**068F0533**	

Filter

	Code no.	Contents
	**068F0540**	10 pcs. filters 10 pcs. Al. gaskets

Upper part

	Code no.	Contents
	**068F5045**	1 pcs. armature 1 pcs. armature tube 1 pcs. Al. gasket

AKVA 15

Piston



Type	Code no.	Contents
AKVA 15-1	**068F5265**	1 pcs. piston assembly 1 pcs. gasket 1 pcs. O-ring 2 pcs. labels
AKVA 15-2	**068F5266**	
AKVA 15-3	**068F5267**	
AKVA 15-4	**068F5268**	

Gasket set	**068F5264**	Complete gasket set

Orifice set

	Code no.	Contents
	068F5261	Main orifice Pilot orifice Al gaskets O-rings Gasket

Upper part

	Code no.	Contents
	**068F5045**	1 pcs. armature 1 pcs. armature tube 1 pcs. Al. gasket

Filter

	Code no.	Contents
	**068F0540**	10 pcs. filters 10 pcs. Al. gaskets

AKVA 20

Piston



Type	Code no.	Contents
AKVA 20-0.6	**042H2039**	1 pcs. piston assembly 3 pcs. O-rings
AKVA 20-1	**042H2040**	
AKVA 20-2	**042H2041**	
AKVA 20-3	**042H2042**	
AKVA 20-4	**042H2043**	
AKVA 20-5	**042H2044**	

Orifice set



Type	Code no.	Contents
AKVA 20-0.6	**068F5270**	Main orifice, dia. 8 mm Pilot orifice, dia. 1.8 mm 2 pcs. Al. gaskets O-ring
AKVA 20-1	**068F5270**	
AKVA 20-2	**068F5270**	
AKVA 20-3	**068F5270**	
AKVA 20-4	**068F5271**	Main orifice, dia. 14 mm Pilot orifice, dia. 2.4 mm 2 pcs. Al. gaskets O-ring
AKVA 20-5	**068F5271**	

Gasket set	**042H0160**	Complete gasket set for new and old valves

Upper part

	Code no.	Contents
	**068F5045**	1 pcs. armature 1 pcs. armature tube 1 pcs. Al. gasket

Ordering *(continued)*
Coils for AKVA valves

AKVA 10-1 10-2 10-3 10-4 10-5	AKVA 10-6	AKVA 10-7 10-8	AKVA 15-1 15-2 15-3 15-4	AKVA 20-1 20-2 20-3	AKVA 20-4 20-5

DC coils	Code no.						
220 V DC 20 W, standard with terminal box	**018F6851**	+	+	+	+	+	+
100 V DC 18 W, special with terminal box with DIN plugs	**018F6780**	+	+	+	+	+	+
230 V DC 18 W, special with terminal box with DIN plugs	**018F6781**[1] **018F6991**[1]	+	+	+	+	+	+
230 V DC 18 W, special with 2.5 m cable with 4.0 m cable with 8.0 m cable	**018F6288**[1] **018F6278**[1] **018F6279**[1]	+	+	+	+	+	+

[1]) Recommended for commercial refrigeration plant

AC coils	Code no.						
240 V AC 10 W, 50 Hz with terminal box with DIN plugs	**018F6702** **018F6177**	+	+	–	+	–	–
240 V AC 10 W, 60 Hz with terminal box with DIN plugs	**018F6713**	+	+	–	+	–	–
240 V AC 12 W, 50 Hz with terminal box	**018F6802**	+	+	+	+	+	–
220 V AC 10 W, 50 Hz with terminal box with DIN plugs	**018F6701** **018F6176**	+	+	–	+	–	–
220 V AC 10 W, 60 Hz with terminal box with DIN plugs	**018F6714** **018F6189**	+	+	–	+	–	–
220 V AC 12 W, 50 Hz with terminal box	**018F6801**	+	+	–	+	+	–
220 V AC 12 W, 60 Hz with terminal box	**018F6814**	+	+	–	+	+	–
115 V AC 10 W, 50 Hz with terminal box with DIN plugs	**018F6711**	+	+	–	+	–	–
115 V AC 10 W, 60 Hz with terminal box with DIN plugs	**018F6710** **018F6185**	+	+	–	+	–	–
110 V AC 12 W, 50 Hz with terminal box	**018F6811**	+	+	–	+	+	–
110 V AC 12 W, 60 Hz with terminal box	**018F6813**	+	+	–	+	+	–
24 V AC 10 W, 50 Hz with terminal box with DIN plugs	**018F6707** **018F6182**	+	–	–	+	–	–
24 V AC 10 W, 60 Hz with terminal box with DIN plugs	**018F6715**	+	–	–	+	–	–
24 V AC 12 W, 50 Hz with terminal box	**018F6807**	+	–	–	+	+	+
24 V AC 12 W, 60 Hz with terminal box	**018F6815**	+	–	–	+	+	+
24 V AC 20 W, 50 Hz with terminal box	**018F6901**	+	+	+	+	+	+
24 V AC 20 W, 60 Hz with terminal box	**018F6902**	+	+	+	+	+	+

Capacity

Range: – 40 to 10°C

R 717

Valve type	Capacity in [kW] at pressure drop across valve Δp bar							
	2	4	6	8	10	12	14	16
AKVA 10 - 1	2.2	3.1	3.7	4.1	4.4	4.7	5.0	5.2
AKVA 10 - 2	3.5	4.9	5.8	6.5	7.0	7.5	7.9	8.3
AKVA 10 - 3	5.6	7.7	9.1	10.2	11.1	11.9	12.5	13.1
AKVA 10 - 4	9.1	12.4	14.7	16.5	17.9	19.2	20.2	21.1
AKVA 10 - 5	14.2	19.4	22.9	25.7	28.0	29.9	31.6	33.0
AKVA 10 - 6	23.0	31.2	36.4	41.4	45.0	48.1	50.7	53.1
AKVA 10 - 7	36.6	49.3	58.1	65.0	70.6	75.3	79.4	83.0
AKVA 10 - 8	59.1	78.9	93.5	104	112	120	126	131
AKVA 15 - 1		95.7	113	127	138	148	156	163
AKVA 15 - 2		153	181	203	221	236	250	261
AKVA 15 - 3		231	274	308	335	358	377	395
AKVA 15 - 4		383	455	510	555	593	625	655
AKVA 20 - 1		383	455	510	555	593	625	655
AKVA 20 - 2		612	726	814	886	947	999	1045
AKVA 20 - 3		959	1137	1275	1388	1482	1564	1635
AKVA 20 - 4		1552	1836	2057	2239	2391	2523	2639
AKVA 20 - 5		2479	2921	3267	3550	3789	3994	4174

Correction for subcooling

The liquid injected capacity must be corrected, if the subcooling deviates from 4 K.
Use the actual correction factor indicated in the table.

Multiply the liquid injected capacity by the correction factor to obtain the corrected capacity.

Correction factors for subcooling Δt_{sub}

Correction factor	2K	4 K	10 K	15 K	20 K	25 K	30 K	35 K	40 K	45 K	50 K
R 717	1.01	1.00	0.98	0.96	0.94	0.92	0.91	0.89	0.87	0.86	0.85

Corrected capacity = liquid injected capacity x correction factor.

Dimensioning

To obtain an expansion valve that will function correctly under different load conditions it is necessary to consider the following points when the valve has to be dimensioned:
These points must be dealt with in the following sequence:

1. Evaporator capacity
2. Pressure drop across the valve
3. Correction for subcooling
4. Correction for evaporating temperature
5. Determination of valve size
6. Correctly dimensioned liquid line

Dimensioning
(continued)

Example for a direct expansion system

1. Evaporator capacity
The evaporator capacity is found in the specifications from the evaporator supplier.

2. Pressure drop across the valve
The pressure drop across the valve directly determines the capacity and must therefore be considered.
The pressure drop across the valve is normally calculated as the condensing pressure less the evaporating pressure and sundry other pressure drops in the liquid line, distributor, evaporator, etc.
It is indicated in the following formula:
$\Delta p_{valve} = p_c - (p_e + \Delta p_1 + \Delta p_3 + \Delta p_4)$

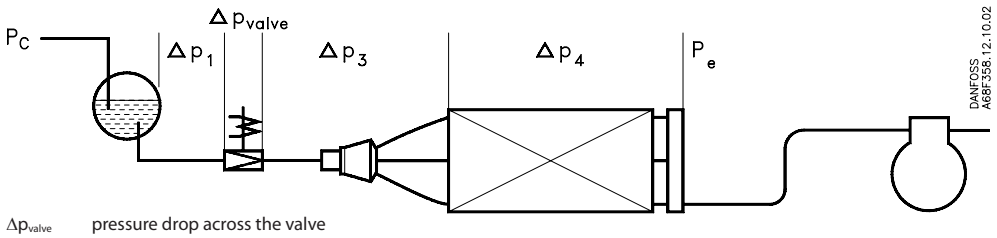

Δp_{valve}	pressure drop across the valve
p_c	condensing pressure
p_e	evaporating pressure
Δp_1	pressure drop across the liquid line
Δp_3	pressure drop across the distributor system
Δp_4	pressure drop across the evaporator

Note!
The pressure drop across the liquid line and the distributor system must be calculated on the basis of the valve's max. capacity, as the valve operates with pulse-width modulation.

Example of calculation of pressure drop across a valve:
Refrigerant: R 717
Condensing temperature: 35°C (p_c = 13.5 bar)
Evaporating temperature: –20°C (p_e = 1.9 bar)
Δp_1 = 0.2 bar
Δp_3 = 0.8 bar
Δp_4 = 0.1 bar

This will give you the following equation:
$\Delta p_{valve} = p_c - (p_e + \Delta p_1 + \Delta p_3 + \Delta p_4)$
$= 13.5 - (1.9 + 0.2 + 0.8 + 0.1)$
$= 10.5$ bar

The found value for "pressure drop across the valve" is used later in the section "Determination of valve size".

3. Correction for subcooling
The evaporator capacity used must be corrected, if the subcooling deviates from 4 K.
Use the actual correction factor indicated in the table.

Multiply the evaporator capacity by the correction factor to obtain the corrected capacity.

Correction factors for subcooling Δt_{sub}

Correction factor	2K	4 K	10 K	15 K	20 K	25 K	30 K	35 K	40 K	45 K	50 K
R 717	1.01	1.00	0.98	0.96	0.94	0.92	0.91	0.89	0.87	0.86	0.85

Corrected capacity = evaporator capacity x correction factor.

The corrected capacity is used in the section "Determination of valve size".

Note:
Too little subcooling may cause flash gas.

Example of correction:
Refrigerant: R 717
Evaporator capacity Q_e: 300 kW
Subcooling: 10 K

Correction factor according to the table = 0.98
Corrected evaporator capacity = 300 x 0.98 = 294 kW.

Dimensioning
(continued)

4. Correction for evaporating temperature (t_e)
To obtain a correctly dimensioned valve it is important that the application is considered.

Depending on the application, the valve should have an overcapacity enabling it to cope with the extra amount of refrigeration needed during certain periods, e.g. during the defrost recovery process.

The valve's opening degree should therefore be between 50 and 75% when regulating. In this way
it is ensured that the valve has a sufficiently wide regulation range, so that it can manage changed loads at or near the normal working point.
Correction factors based on the evaporating temperature are indicated below:

Correction factors for evaporating temperature (t_e)

Evaporating temperature t_e °C	5	0	– 10	–15	– 20	– 30	– 40
AKVA 10, AKVA 15, AKVA 20	1.0	1.0	1.0	1.0	1.2	1.3	1.4

5. Determination of valve size
When the valve size meeting the required capacity is selected it is important to note that the capacity indications are the valve's rated capacity, i.e. when the valve is 100% open.
In this section we tell you how the valve's size is determined.
There are three factors that have an influence on the choice of the valve:
- the pressure drop across the valve
- the corrected capacity (correction for subcooling)
- the corrected capacity for evaporating temperature

The three factors have been described earlier in this section on dimensioning. When these three factors have been established, the selection of the valve can be made:
- First you multiply the "corrected capacity" by a value stated in the table.
- Use the new value in the capacity table in combination with the pressure drop value.
- Now select the valve size.

Example of selection of valve
Use as starting point the two earlier mentioned examples, where the following two values have been obtained:
Δp_{valve} = 10.5 bar
$Q_{e\ corrected}$ = 294 kW

From tabel "Correction factors for evaporating temperature", factor 1.2 is given for the evaporating temperature -20°C.

The dimensioned capacity will then be:
1.2 x 294 kW = 353 kW.

Now select a valve size from tabel "Capacity".

With the given values Δp_{valve} = 10.5 bar and a capacity of 353 kW, AKVA 15 - 4 is selected.

This valve will have a capacity of approx.
555 kW.

---

6. Correctly dimensioned liquid line
To obtain a correct supply of liquid to the AKVA valve, the liquid line to the individual AKVA valve must be correctly dimensioned.
The liquid flow rate must not exceed 1 m/sec at a fully open valve.
This must be observed on account of the pressure drop in the liquid line (lack of subcooling) and pulsations in the liquid line.

Dimensioning of the liquid line must be based on the capacity of the valve at the pressure drop with which it is operating (cf. capacity table), and not on the evaporator's capacity, see next page

Dimensioning
(continued)

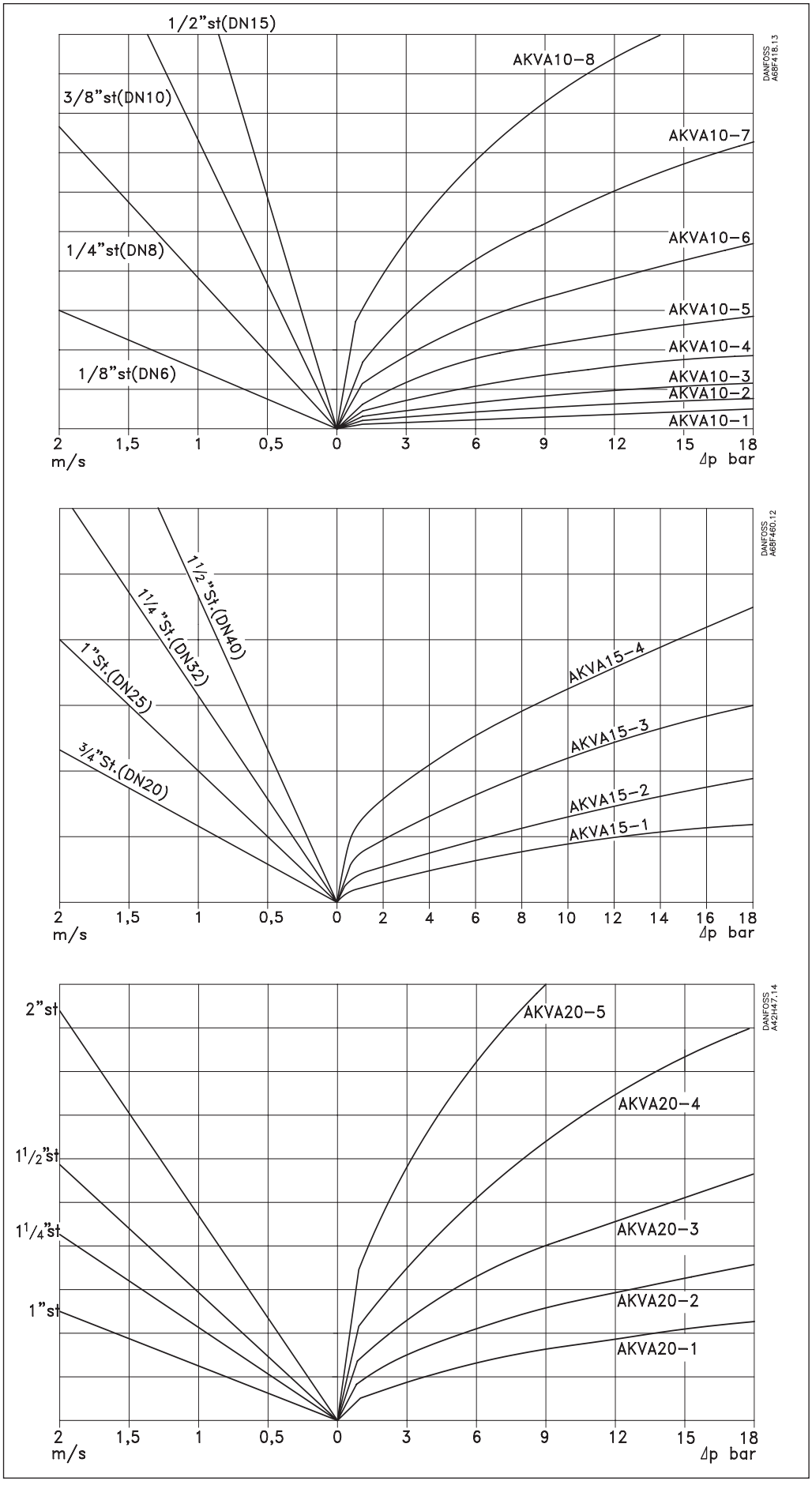

Design

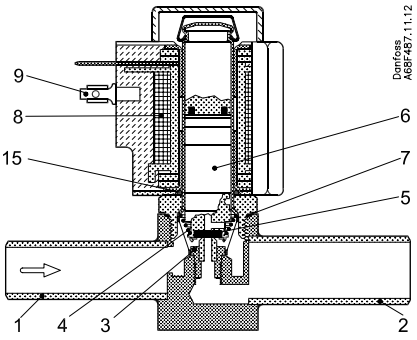

AKVA 10

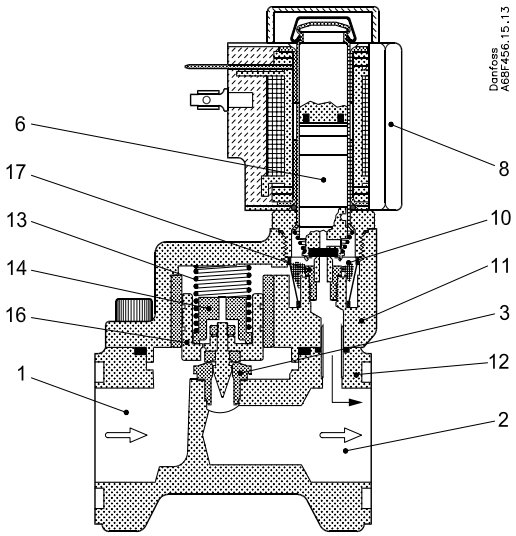

AKVA 15

1. Inlet
2. Outlet
3. Orifice
4. Filter
5. Valve seat
6. Armature
7. Aluminium gasket
8. Coil
9. DIN plug
10. Filter
11. Cover
12. Valve body
13. Spring
14. Orifice assembly
15. O-ring
16. Piston assembly
17. Pilot orifice
18. Pilot valve

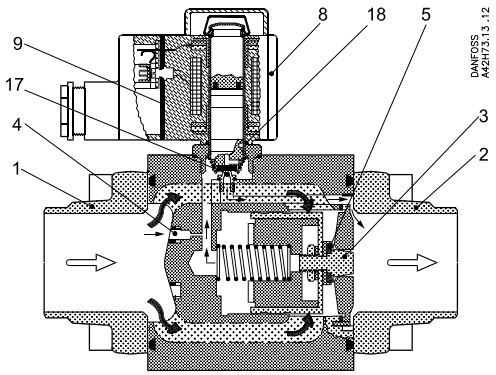

AKVA 20

Function

The valve capacity is regulated by means of pulse-width modulation. Within a period of six seconds a voltage signal from the controller will be transmitted to and removed from the valve coil. This makes the valve open and close for the flow of refrigerant.

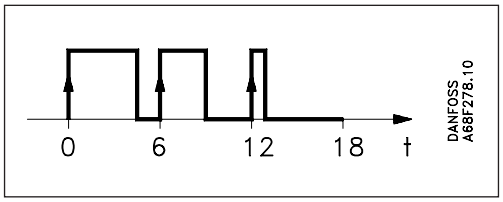

The relation between this opening and closing time indicates the actual capacity. If there is an intense need for refrigeration, the valve will remain open for almost all six seconds of the period. If the required amount of refrigeration is modest, the valve will only stay open during a fraction of the period. The amount of refrigeration needed is determined by the controller.
When no refrigeration is required, the valve will remain closed.
In some applications, AKVA can advantage-ously be used both as expansion valve and solenoid valve. See appendix.

Dimension and weight

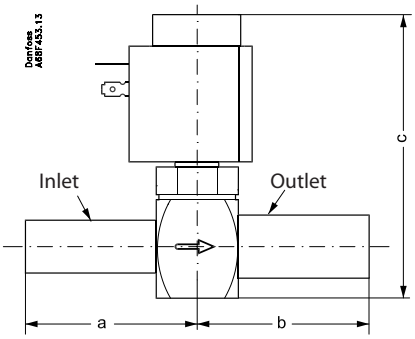

AKVA 10

Valve type		A [mm]	B [mm]	C [mm]	Connection Inlet [in]	Connection Outlet [in]	Weight without coil [kg]
AKVA 10	1 → 6	60	60	113	3/8	1/2	0.35
AKVA 10	7 → 8	60	60	113	1/2	3/4	0.35

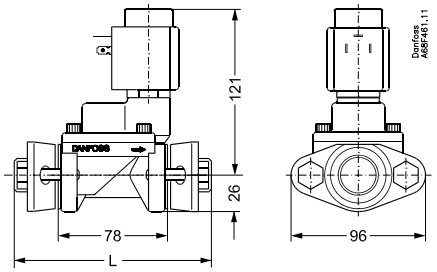

AKVA 15

L = 148 mm
Weight without coil = 2.0 kg

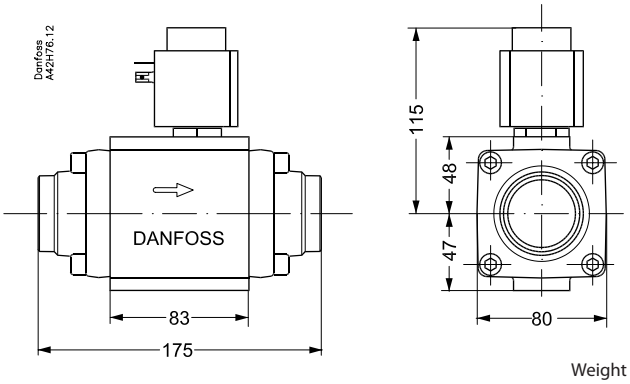

AKVA 20

Weight without coil = 4.1 kg

Appendix

Recommandations

It is important to realize when AKVA is operating, that the valve always is fully open or fully closed.

That means that this way of operation should always be considered during the refrigeration design. (Piping, liquid velocity, sub cooling etc.)

Danfoss have the following recommandations/ guidelines to be taken into considerations.

- In 1:1 applications (1 evaporator, 1 condenser and 1 compressor) chillers with a small amount of refrigerant or installed in front of a Plate Heat Exchangers, it must be observed that every time the AKVA is fully open or closed it will have a significant impact on the hole system. (e.g. pressure variations on suction side).

  Please observe that the performance of such a system is not only related to one component. (e.g. AKVA) Other factors which is very important to include in the overall refrigeration system design:

  – Liquid distribution at and design of evaporator

  – total evaporator coil is of adequate length thus superheat can be controlled within the entered period time (normal 6 sec. or 3 sec.)

  – mounting principle of temperature sensor, to ensure a steady and fast signal can be detected by the electronic system.

- If pressure dependent valves like, PM with pilots like CVP e.t.c., is installed between evaporator and compressor, it can effect the lifetime of PM, because the piston of the PM will operate together with operation of AKVA. Type of refrigerant and evaporator has a big influende of the size of pulsations after the evaporator and in front of the PM.
- AKVA is a direct pressure independent valve unlike TQ, PHTQ and TEAQ, which all are pressure dependent. That means that if non-Danfoss electronic controllers is used, intelligent and fast optimal control is needed, because the quick pressure changes only can be detected and compensated via the electronic control system.
- Liquid lines must be designed according to AKVA capacity and not evaporator capacity.
- To avoid flash-gas ensure sufficient sub-cooling or design liquid lines thus to big pressure drop is avoided, when AKVA is open. If not sufficient subcooling is not obtained (normally 4K) it will have an impact on the lifetime of the vale).
- Where the demand for safety level is extremely high, (e.g. Liquid Level Control in a pump seperator) an extra valve can be installed in front of AKVA to avoid leakage. This valve must be Danfoss type EVRAT.
- Always install a 100 µm filter in front of AKVA 15 and AKVA 20 valves.
- If AKVA has to be used in chillers. Please contact Danfoss.

ENGINEERING TOMORROW

Liquid level controller
EKE 347

Contents **Page**

Features . . . 989
Signaltransmitter . . . 990
EKE 347 . . . 990
Expansions valve . . . 990
MODBUS communication . . . 990
Remote Display - option . . . 990
Application examples . . . 991
Control Panel . . . 992
Display . . . 992
Menus . . . 993
Setup & service menu - COMMISSIONING . . . 994
Alarm and error codes . . . 995
Ordering . . . 996
Data . . . 996
Connection . . . 997
Dimensions . . . 997
Connections - Upper level . . . 998
Connections - Lower level . . . 999
EKE 347 - ON / OFF Application . . . 1000
Connection examples . . . 1000
MASTER / SLAVE configuration . . . 1001
Multivalve . . . 1001
I/O configuration . . . 1002
Remote display . . . 1002
Modbus parameters. Software version: 1.62.xx . . . 1004

AI190286434038en-000401 | 2016.04

ENGINEERING
TOMORROW

Liquid level controller
EKE 347



The EKE 347 controller is used for regulation of the liquid level in:
Pump reservoirs

- Separators
- Intermediate coolers
- Economisers
- Condensers
- Receivers

The controller is communicating with a transmitter that continuously measures the liquid level in the actual reservoir.

By comparing the measured value with the level setpoint entered by the customer, the controller dictates the valve to increase or decrease the liquid flow to or from the reservoir.

Features

- Liquid level control
- Alarm if the set alarm limits are exceeded
- Relay outputs for upper and lower level limits and for alarm level
- User friendly and easy setup Wizard for first time configuration
- PI control
- Low or High side control
- When AKV/A is selected, a MASTER / SLAVE system can run up to 3 AKV/A with distributed Opening Degree
- Manual control of output
- Limitation of Opening degree possible
- ON / OFF operation with hysteresis
- Programming menu with 3 access levels and separate passwords
- Connection to other EKE 347 controllers possible
- Wired remote display possible
- BUS communication:
  - CAN Bus (Danfoss internal only)
  - MODBUS RTU RS485 for communication with e.g. PLC

Signaltransmitter

With the guided micro wave rod AKS 4100/4100U it is possible to set the refrigerant level within a wide range.

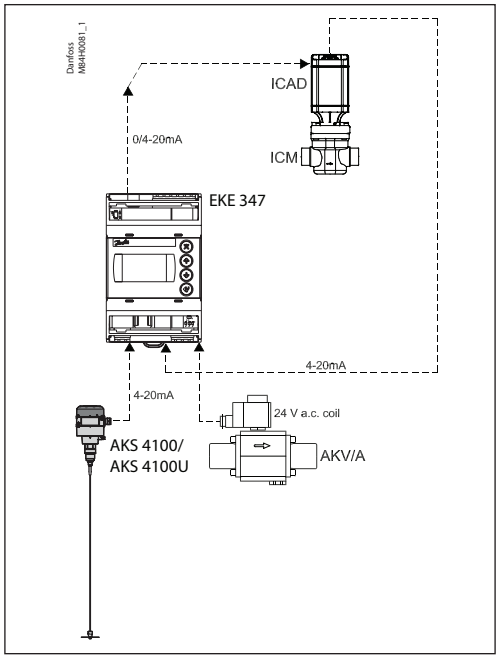

EKE 347

The controller receive a signal which enable it to contol low or high side applications (see page 991).

EKE 347 does support 2 types of Danfoss expansion valves. (see below)
One analog input is available as feed back from ICM in order to indicate opening degree of the ICM.

Expansions valve

Two types of Danfoss expansion valves can be used

- *ICM*
  ICM are direct operated motorized valves driven by digital stepper motor type ICAD
- *AKV/A*
  AKVA or AKV are pulse-width modulating expansion valves.

MODBUS communication

EKE 347 include as standard RS 485 based MODBUS-RTU bus communication interface to third party equipment like PLC.
Via the MODBUS it is possible to read and write parameters to the EKE 347
Operation, monitoring and data collection can then be performed via PLC from a SCADA system.

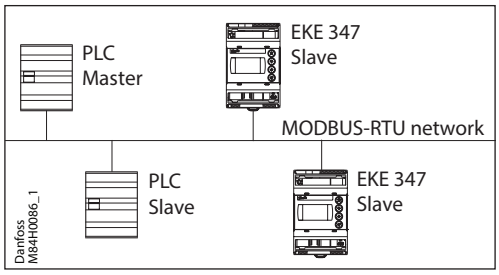

Remote Display - option

A remote display for panel mounting is available. From the remote display a full overview and access is possible to all individual EKE 347 controllers connected to the internal Danfoss CAN bus.

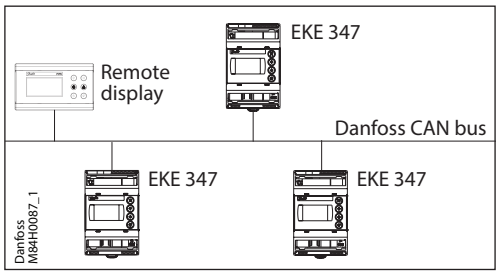

Application examples

Pump reservoir

Modulating control of injection for a more stable liquid level and suction pressure.

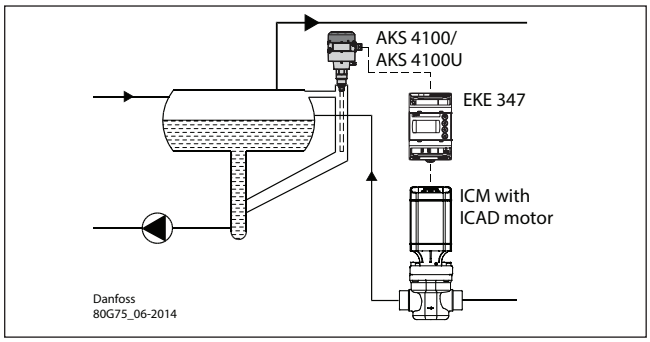

System configuration ICAD
Regulating principle: Low
Level Signal setup: AKS 4100/U

Separator on flooded evaporator

Modulating control and the valve's large capacity range ensure a stable level - even under conditions of quickly changing loads.

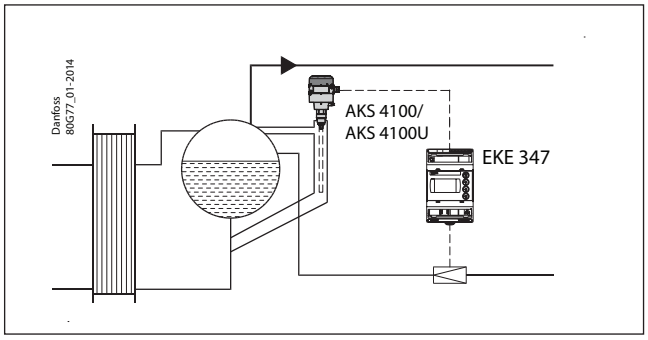

System configuration AKV/A
Regulating principle: Low
Level Signal setup: AKS 4100/U

Intermediate cooler

The level transmitter's wide measuring range enables it to monitor the liquid at all levels of the reservoir - and hence to use the signal for safety functions in connection with the max. permissible level

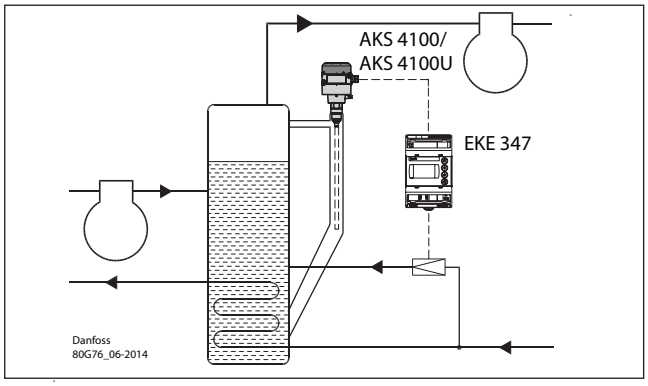

System configuration AKV/A
Regulating principle: Low
Level Signal setup: AKS 4100/U

Receiver / condenser

The control system's short reaction time makes it very suited for high-pressure float systems with small refrigerant charges.

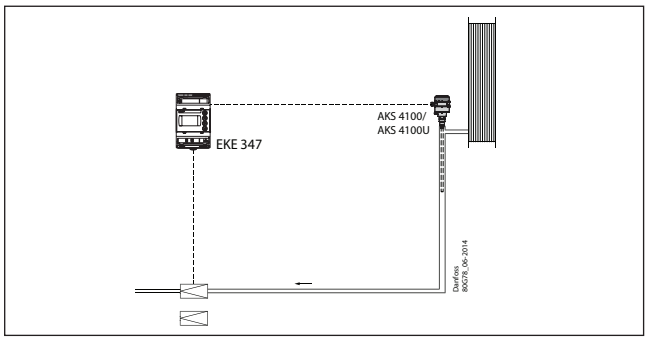

System configuration AKV/A
Regulating principle: High
Level Signal setup: AKS 4100/U

Control Panel



The user interface of the control panel consists of a multiline display and 4 individual push buttons: Enter button, Scroll up button, Scroll down button and Back button.

The figure shows the Home display image, which give the actual overview. This is the starting point for entering into menus, and you will revert to this image by pushing ⊗ 1 – 3 times (depending on actual position).

Display

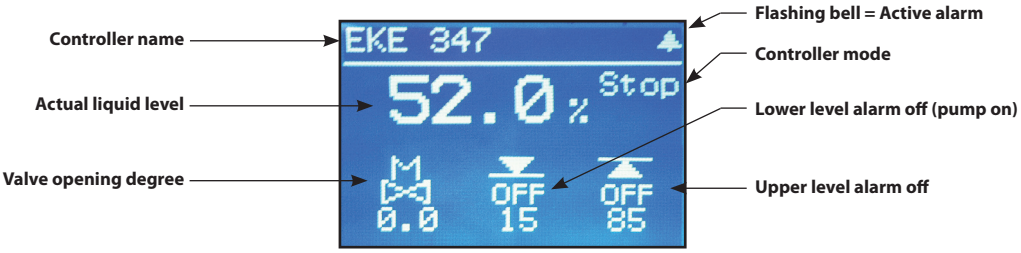

The display itself show the state of **Liquid level, Controller Mode** (controller On / Off), **Valve opening degree, Lower level alarm** (off = no alarm present) and **Upper level alarm** (off = no alarm present).

Additional to the external connected alarm audio / video sources, a Bell symbol will flash in the upper right corner in case of an alarm.

To see more details on system performance and setting of parameters, 2 different main menu levels can be reached by operation of the push buttons.

From Home image the **Status menu** can be reached by **1 push** on Enter.
From Home image the **Setup & service menu** can be reached by **1 push and hold** on Enter.
For entrance a Log In is required by the password given during Commisioning.

Menus

Status menu

To enter Status menu from Home image:
Push ⏎ once.

The Status menu is an open menu accessible for all. Therefore only 1 parameter can be changed from here. A selection of other parameters can be seen from the status menu.

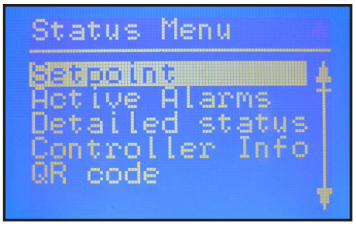

Status menu (Open menu)

	Options
Setpoint	
Liquid level setpoint	0 – 100%
Active alarms Example of alarm content. The list will be empty in normal operation as no alarm is active.	
Level signal out of range	hours minutes
Standby mode	hours minutes
Detailed status	
Controller state	Stop, Manual, Auto, Slave, IO
Actual level	0.0 – 100%
Actual reference	0.0 – 100%
Actual OD	0.0 – 100%
Digital input status	On / Off
Actual level signal current	mA
Oscillation amplitude	0.0 – 100%
Oscillation period	sec
Controller Info	
Type	
Name (Controller name)	
SW (Software version)	
Bios (Bios version)	
Adr (Controller address)	
SN (Serial Number)	
PV (Product version)	
Site (Production site)	
QR code	
Code	

Read & Write
Read only

Setup & service menu (Requires log-in password assigned in Commisioning menu)

To enter Setup and service menu from Home image:
Push and hold ⏎.

Maneuvering in the Status menu and the Setup and service menu's are done by use of the 4 push buttons shown on page 992.

The Setup & service menu is divided into 3 access levels, where personnel have individual authority.

Most advanced level is **Commissioning**, where you have access to change all allowable parameters, including password issuing and re-run of Setup wizard.

Service level is for service personnel and has fewer rights than commissioning.

The lowest level is for **Daily** use, and allows only a few changes.

The table on the next page shows authority given to the Commisioning level.

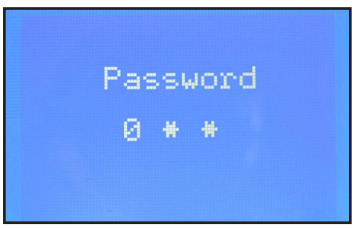



Setup & service menu - COMMISSIONING

Parameter		Options	Default values
Reference	Main switch	On, Off	Off
	Liquid level setpoint	0 – 100%	50.0%
	Operation mode	Master, IO, Slave	Master
Alarm setup	Lower level limit	0 – 100%	15%
	Upper level limit	0 – 100%	85%
	Level alarm mode	Time, Hysteresis	Time
	Lower delay	0 – 999 sec	10 sec
	Upper delay	0 – 999 sec	50 sec
	Lower level hysteresis	0 – 20%	3%
	Upper level hysteresis	0 – 20%	5%
	Function common alarm	Not follow; Follow up; Follow low; Follow all	Not follow
	Oscillation detect band	0 – 100%	100%
	Oscillation detect timeout	2 – 30 min	20 min
	Force pump OFF in stop mode	Yes / No	No
	IO Lower level limit	0 – 100%	5%
	IO Upper level limit	0 – 100%	95%
	IO Lower level hysteresis	0 – 20%	3%
	IO Upper level hysteresis	0 – 20%	3%
	IO Lower delay	0 – 999 sec	10 sec
	IO Upper delay	0 – 999 sec	50 sec
	IO Level limit	0 – 100%	50%
	IO Level delay	0 – 999 sec	10 sec
	IO Level hysteresis	0 – 20%	3%
	IO Level action	Falling,Rising	Falling
Control	Control Method	On/Off ,P, PI	PI
	Regulating principle	Low, High	Low
	P-band	5 – 200%	30.0%
	Integration time Tn	60 – 600 sec	400 sec
	Neutral zone	0 – 25%	2.0%
	Difference	0,5 – 25%	2%
	Period time for AKV/AKVA	3–15 sec	6 sec
	Minimum OD	0 – 99%	0%
	Maximum OD	1 – 100%	100%
Display	Language	EN,CN,PT,RU,SP,FR,IT, GER, ARAB	EN
	Output indication	level, OD	Level
	Login timeout	1 – 120 min	10 min
	Backlight timeout	0 – 120 min	2 min
	Password daily	3 - digit, 0 – 999	100
	Password service	3 - digit, 0 – 999	200
	Password commission	3 - digit, 0 – 999	300
IO config	System configuration	ICAD+NC, ICAD, AKV/A+NC, AKV/A, NC only	ICAD + NC
	Level signal setup	AKS 4100, AKS 41, Current, Voltage	AKS4100
	Voltage at low liquid level	0 – 10V	0 V
	Voltage at high liquid level	0 – 10V	10 V
	Current at low liquid level	0 – 20 mA	4 mA
	Current at high liquid level	0 – 20 mA	20 mA
	Valve position setup	Not used, Current, Voltage	Not used
	Voltage at closed valve position	0 – 10V	0 V
	Voltage at open valve position	0 – 10V	10 V
	Current at closed valve position	0 – 20 mA	4 mA
	Current at open valve position	0 – 20 mA	20 mA
	Common alarm setup	D04, High alarm, D03, Disp only	High alarm
	Multiple valve setup	Not used, 2 same cap, 2 dif cap, 3 same cap, 3 dif cap	Not used
	Multiple valve pattern	Parallel,Sequence	Parallel
	Valve A capacity	0 – 100%	50%
	Valve B capacity	0 – 100%	50%
	Valve C capacity	0 – 100%	30%
	ICAD takeover OD	0 – 100%	80%
	IO module setup	Used, Not used	Not used
Communication	CAN ID	1 – 127	1
	CAN baudrate	20k, 50k, 125k, 250k, 500k, 1M	500k
	Modbus ID	0 – 120	1
	Modbus baudrate	0, 1200, 2400, 4800, 9600, 14400, 19200, 28800, 38400	19200
	Modbus mode	8N1, 8E1, 8N2	8E1
	Modbus mapping	Operation, Setup	Operation
	Valve B CAN ID	1 – 127	2
	Valve C CAN ID	1 – 127	3
	IO Mod. CAN ID	1 – 127	4

To be continued.....

Setup & service menu - COMMISSIONING *(Continued)*

Parameter		Options	Default values
Service	Controller state		–
	Actual level		–
	Actual referrence		–
	Actual OD		–
	Actual valve position		
	Digital input status		–
	Actual level signal voltage		
	Actual level signal current		–
	Actual position signal voltage		
	Actual position signal current		
	Actual OD A		
	Actual OD B		
	Actual OD C		
	Manual Mode	On, Off	Off
	Manual OD	0 – 100%	50.0%
	Manual low alarm	Off-On	Off
	Manual high alarm	Off-On	Off
	Manual common alarm	Off-On	On
	Apply defaults	None, Factory	None
Setup wizard	Setup wizard	Re-run Setup wizard	–
I/O check	Main switch EKE act:		Off
	AKS 4100 EKE act:		–
	ICAD EKE act:		–
	Nor. Close (NC) EKE act:		–
	Upper lvl (alarm) EKE act:		–
	Lower lvl (alarm) EKE act:		–
Controller name	Controller name	Type in controller name	–

	Read & Write
	Read only

Alarm and error codes

When detecting an alarm from external sources or the flashing bell in the display, the alarm description can be found as a text message in the Status menu under Active alarms.

Both alarms and errors will be shown here.
If more alarms / errors occur simultaneously, they will be shown as subsequent text lines.

Alarms:

Upper level
Lower level
Standby mode
Valve B CAN ID conflict
Valve C CAN ID conflict
IO module CAN ID conflict
IO module communication
Communication to master lost
Min / max OD conflict
Common alarm HW conflict
Control method conflict
Multiple valve setup conflict
Valve C alarm
Valve B alarm
Oscillation in level signal
Valve position
Multiple valve capacity
Valve C communication
Valve B communication

Errors:

Internal error
Level signal out of range
Valve position signal out of range
Sensor supply overload
AKS 4100 error
Too much current AI3
Too much current AI4
DO4 overload

Ordering

Type		Description	Code No.
EKE 347	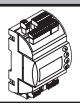	Liquid level controller	**080G5000**
MMIGRS2		Remote display, Panel, S	**080G0294**
–		Wire for display unit, L = 1.5 m, 1 pcs.	**080G0075**
–		Wire for display unit, L = 3 m, 1 pcs.	**080G0076**
–		EKE / EKC accessory for panel mounting	**027F0309**

Data

Supply voltage	24 V AC ±20% 50 / 60 Hz or 24 V DC ±20% (the supply voltage is galvanically separated from the input and output signals. Input/output are not individual galvanic isolated)	
Power consumption	Controller 20 W coil for AKV or AKVA	15 VA / 10W 55 VA
Input signal * Ri = 0(4) – 20mA: 33 ohm 0(2) – 10 V: 100 kohm	Level signal *	4 – 20 mA or 0 – 10 V
	ICM valve feedback signal *	From ICAD 0/4 – 20 mA
	Contact function start / stop of regulation	
Relay output	3 pcs. SPDT (Lower level alarm, Upper level alarm, Common alarm / NC Solenoid)	Normally Open: 3 A GP*, 2.2 FLA / 13.2 LRA, 1/6 hp, PD 220 VA, 250 V AC 100 k 3 FLA / 18 LRA, 1/10 hp, PD 150 VA, 125 V AC 100 k Normally Closed: 3 A GP*, 250 V AC 100 k (*GP = General purpose). Max 240 V AC or 24 V AC / DC can be used, but same voltage type must be used on DO3 and DO2
Current output	0 – 20 mA or 4 – 20 mA Max. load: 500 ohm	
Valve connection	ICM - via current output AKV/A- via 24 AC Pulse-Width Modulating output	
Data communication	MODBUS RTU: Communication to system controller, MODBUS on RS485: galvanic isolation (500 V DC) CAN: Communication to other EKE controllers	
Supported Modbus Commands	Supported commands with max of 50 ms response time	03 (0x03) Read Holding Registers 04 (0x04) Read Input Registers 06 (0x06) Write Single Register
	Supported commands without defined max response time	08 (0x08) Diagnostics 16 (0x10) Write Multiple Registers (up to 20 registers) 43 (0x2b) Read Device Identification
Environments	-20 – 55 °C, during operation -30 – 80 °C, during storage	
	90% Rh, not condensed	
	No shock influence / vibrations	
Enclosure	IP 20 / IP 40 for the front mounted into a panel	
Weight	193 g	
Mounting	DIN rail	
Display	Graphical LCD display	
Terminals	plugs 1.5 or 2.5 mm² multicore	
Approvals	EU Low Voltage Directive and EMC demands re CE-marking complied with. LVD-tested acc. to EN 60730-1 and EN 60730-2-9 EMC-tested acc. to EN61000-6-3 and EN 61000-6-2 UL file E31024	

Connection

Necessary connections

Terminals:

28 – 29 Supply voltage 24 V AC or DC
1 – 7 Signal from level transmitter type AKS 4100/4100U **or**
7 – 10 Signal from level transmitter type AKS 41
36 – 37 Expansion valve type AKV or AKVA **or**
23 – 24 Expansion valve type: ICM with ICAD
13 – 14 Switch function for start / stop of controller. If a switch is not connected, terminals 13 and 14 must be short-circuited.

See the figures on the next pages.

Application dependent connections

Terminals:

33 – 35 Relay for common alarm.
Installer can choose between Normally Open (33 – 34) or Normally Closed (34 – 35) circuits.
The relay will switch according to the programmed setting.
25 – 27 Relay for low level limit.
Installer can choose between Normally Open (26 – 27) or Normally Closed (25 – 26) circuits.
The relay will switch when the set value is passed.
30 – 32 Relay for upper level limit.
Installer can choose between Normally Open (30 – 31) or Normally Closed (31 – 32) circuits.
The relay will switch when the set value is passed.
6 – 10 ICM valve feedback signal from ICAD 0/4 – 20 mA

Dimensions

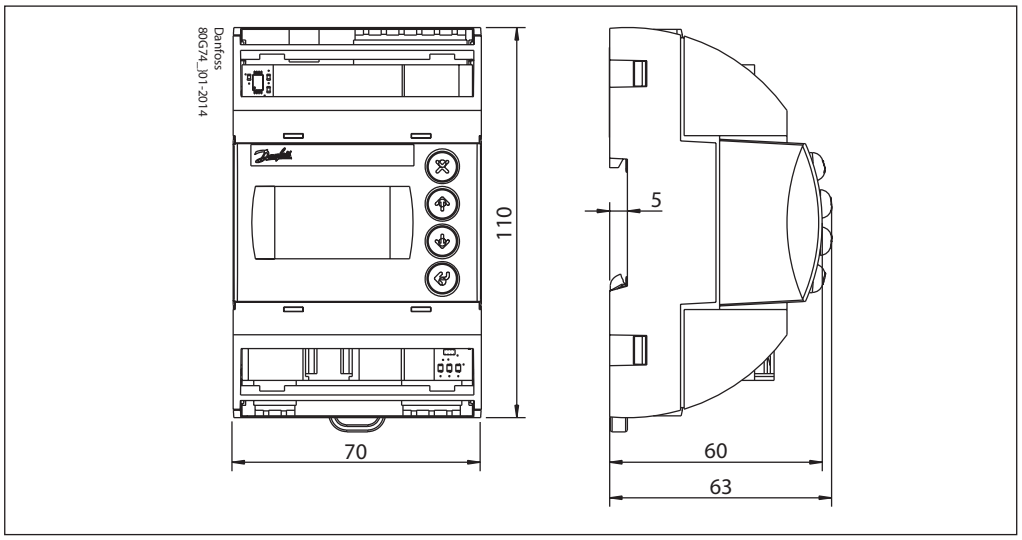

Connections - Upper level

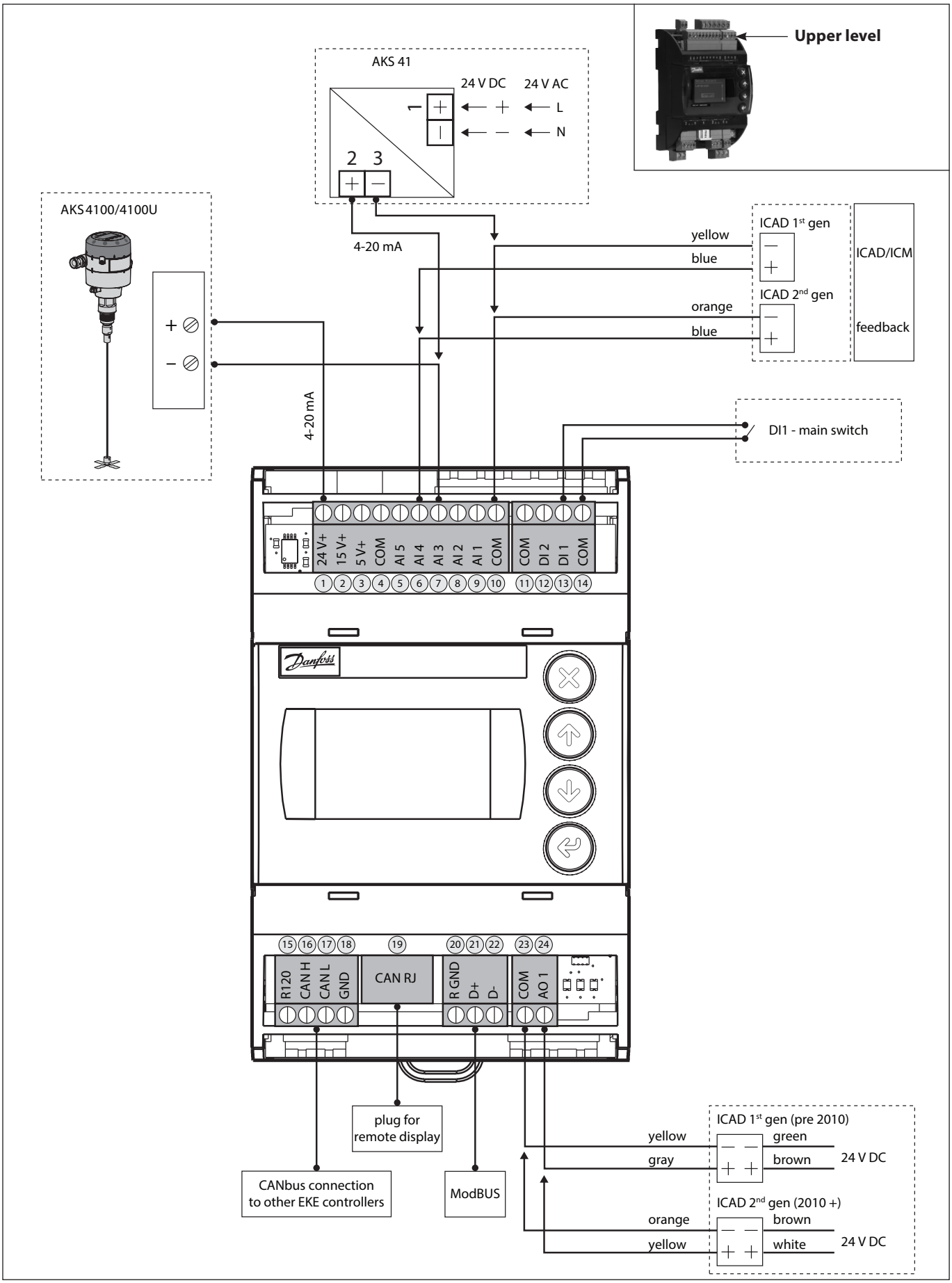

Connections - Lower level



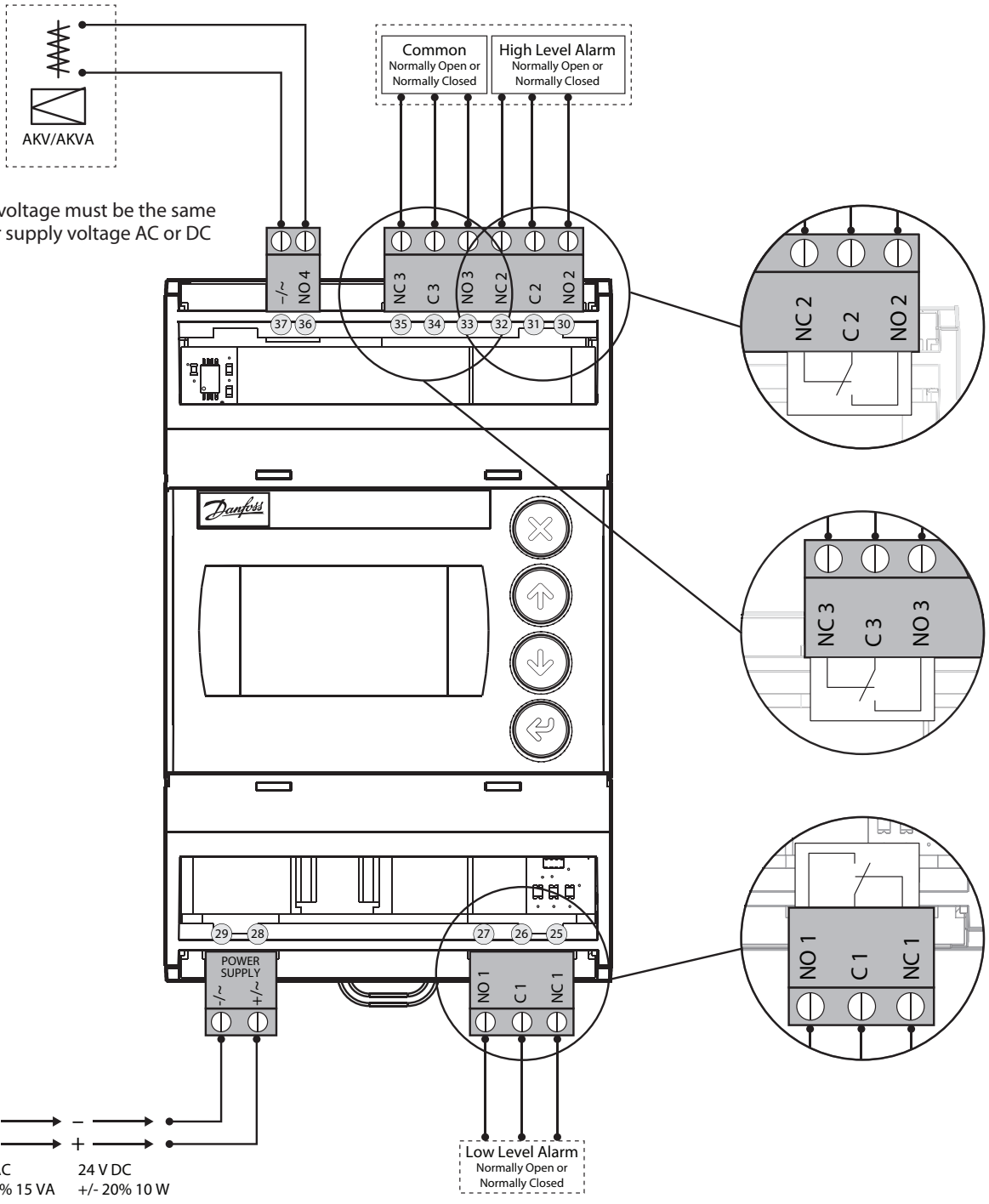

Note:
AKV(A) Coil voltage must be the same as controller supply voltage AC or DC

If AKV(A) is used, the power supply must cover the AKV(A) coil wattage additional

EKE 347 - ON / OFF Application
Open/Close solenoid valve with coil 24 V – 230V

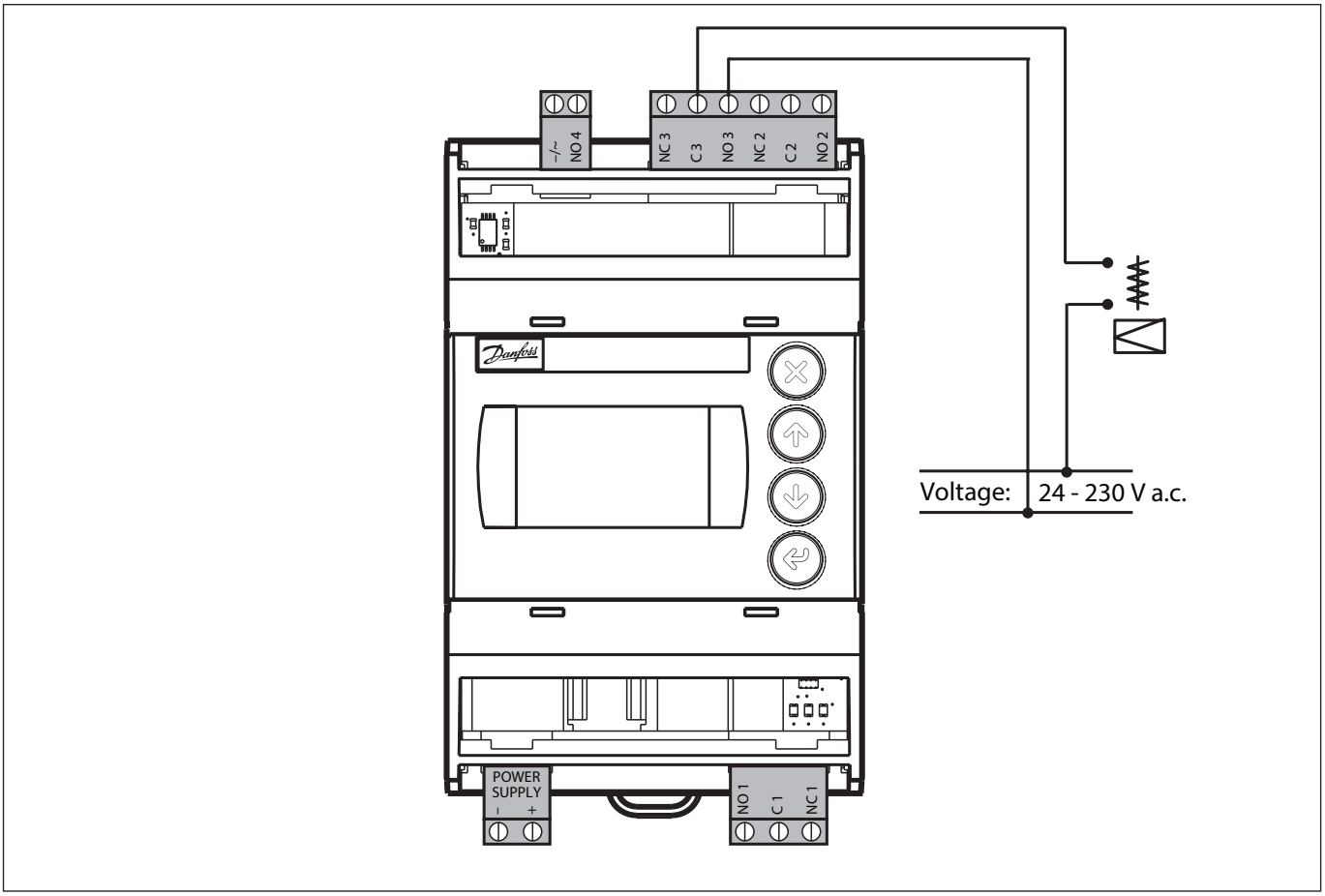

Connection examples

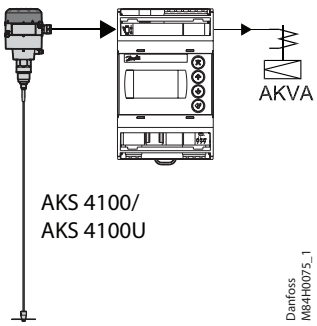

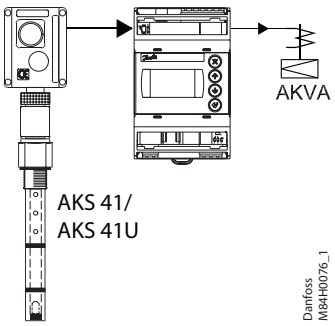

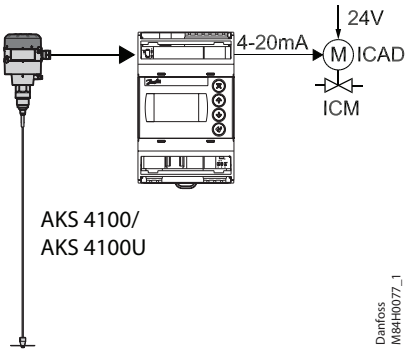

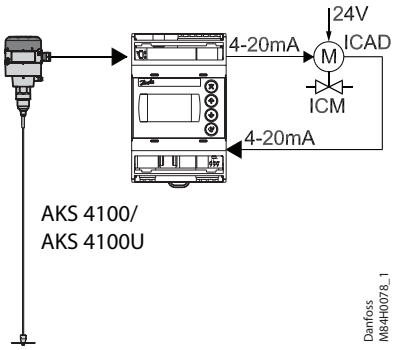

MASTER / SLAVE configuration

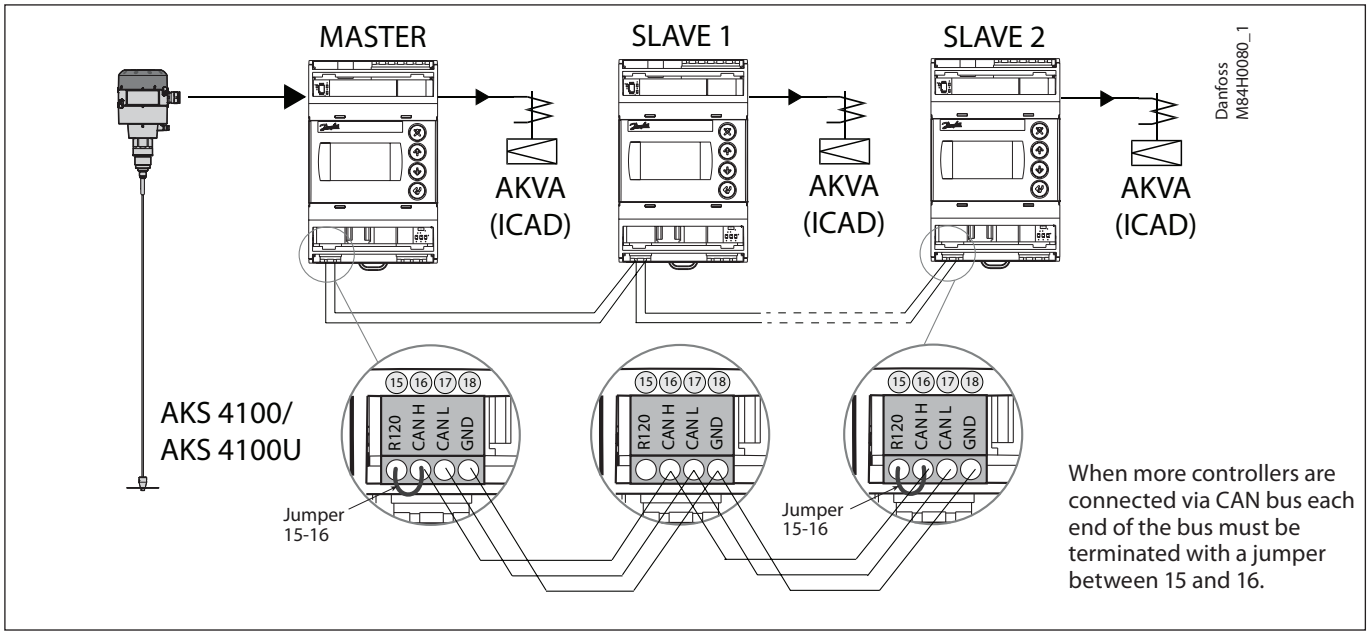

Multivalve

If the system capacity requires more than one control valve; up to three valves can be controlled simultaneously in a Master / Slave configuration, where the master and each slave controls one valve respectively.

The configuration is programmed in the master EKE 347 IO config menu - Multiple valve setup - with one of these options:

- 2 valves with same capacity
- 2 valves with different capacity
- 3 valves with same capacity
- 3 valves with different capacity

Additionally the master must be programmed in IO config menu - Multiple valve pattern - for either:

- **Valves in parallel**
  (valves regulate simultaneously)
  or
- **Valves sequential**
  (mainly one valve regulating at any time)

See principle below.

The slave EKE's only need identification of Slave and valve CAN ID (communication menu).

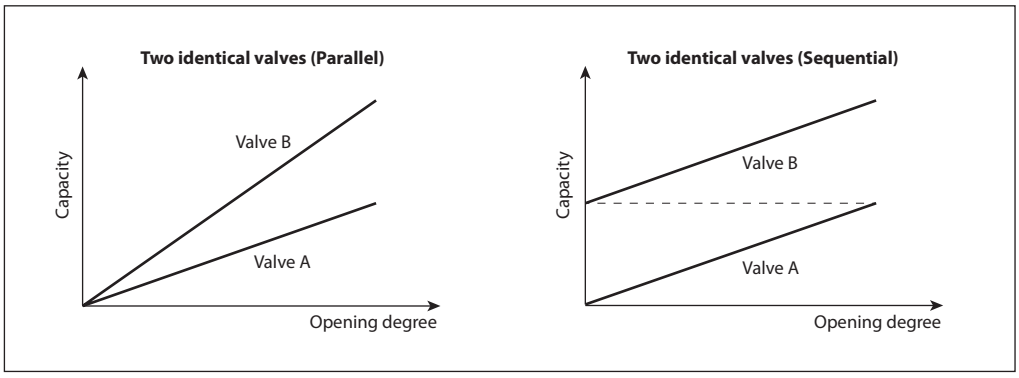

The default display of the master EKE will show the standard information together with a symbol of multiple valves and the actual total opening degree (see below).

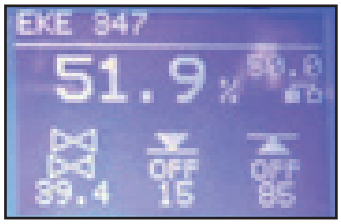

The default display of the slave EKE will show the actual liquid level (as the master), symbol of multiple valves, actual total opening degree and the opening degree of the individual valves involved (see below).



I/O configuration

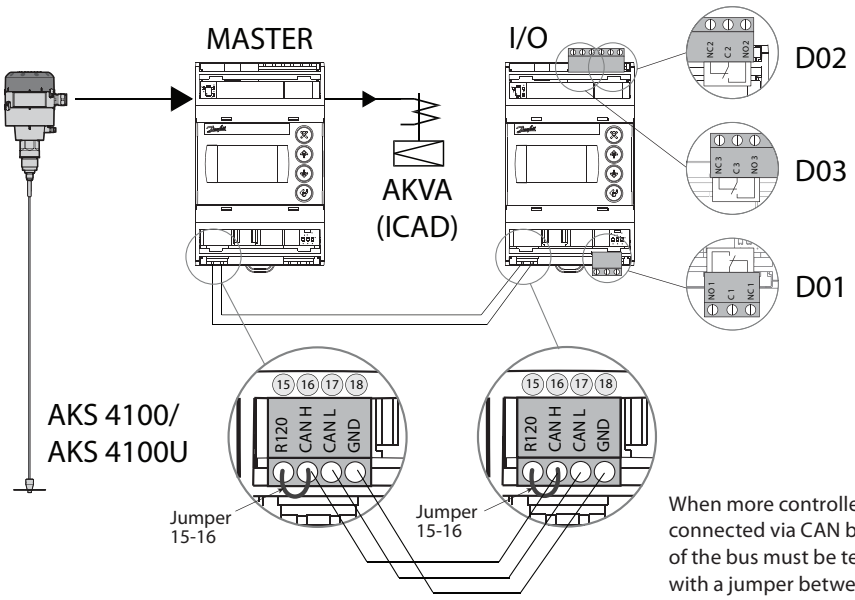

When more controllers are connected via CAN bus each end of the bus must be terminated with a jumper between 15 and 16.

Remote display

The daily operation can be set up directly on the controller or via an external display device.

Example 1

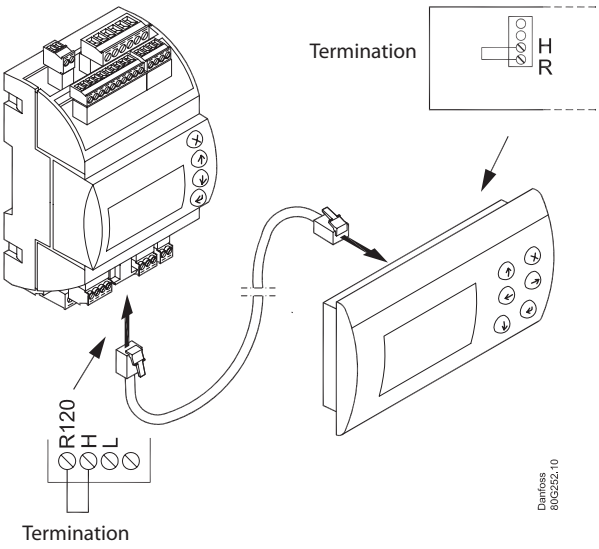

Example 2

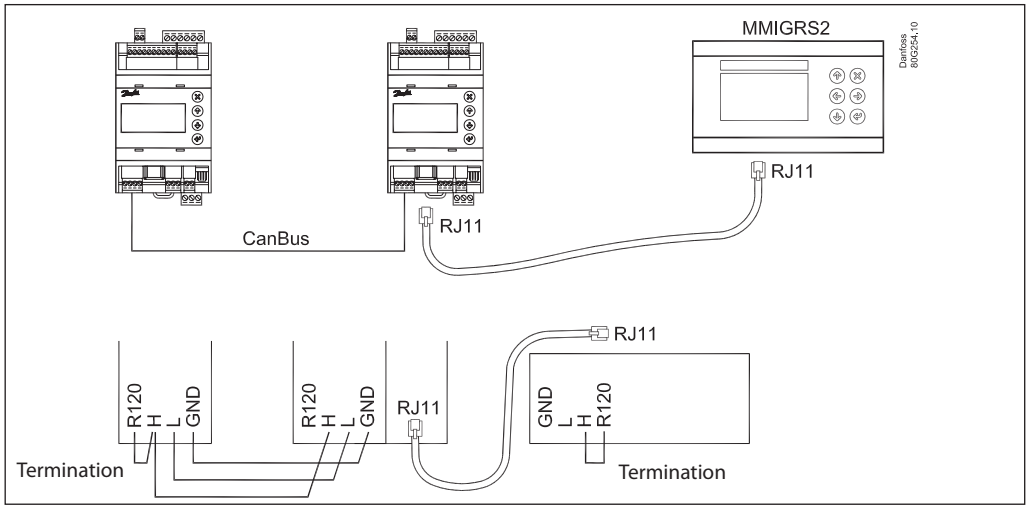

Example 3

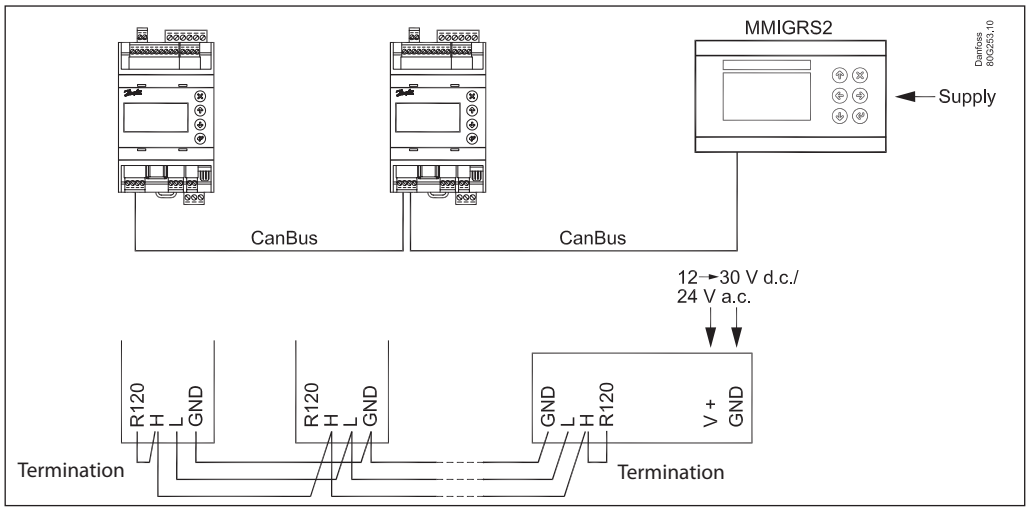

ERR31

Alarm on the external display - MMIGRS2

If the communication to the display is not carried out correctly, it will send an "ERR31" error notification.
This may be caused by the displayed terminations not being installed, or that there have been interruptions in data communication during the time when the display retrieves the basic information from the controller.
Once the terminations have been inspected, you should then check the software version of the external display.
This is done by holding down the Enter key and the X key for 5 seconds, until the Bios menu appears. Next, press the X key and read off the software version in the bottom right corner. The software version must be 1.13 or newer.

Once the display's software version has been checked, check the display's settings as follows:
1. Hold the Enter key and the X key down for 5 seconds, until the Bios menu appears.
2. Select the "MCX selection" menu
   - Select the "Clear UI" line and press Enter
   - Select the "Autodetect" line and press Enter
3. Press the X key to return to the Bios menu
4. Select the "COM selection" menu
   - Select the "CAN" line and press Enter
5. Press the X key to return to the Bios menu
6. Select the "Start up mode" menu
   - Select the "Remote application" line and press Enter
7. Press the X key to return to the Bios menu
8. Select the "CAN" menu
   - Select the "Baudrate" line and then select the "Autobaud" setting and press Enter
   - Select the "Node ID" line and set the value to 126 and press Enter
9. Press the X key to return to the Bios menu
10. Select the "Application" menu and press Enter.

The display will once again retrieve data from the controller. This process will take about 5 minutes.

Modbus parameters. Software version: 1.62.xx

Label	Parameter name	Min value	Max value	Default	Unit	Deci-mals	Modbus PNU	Locked by main switch	EEPROM	Enumeration
r12	Main switch	0	1	0		0	3001	NO	YES	0 = Off | 1 = On
R01	Liquid level setpoint	0	100	50	%	1	3002	NO	YES	
N07	Operation Mode	0	2	0		0	3003	YES	YES	0 = Master | 1 = Slave | 2 = IO
a02	Lower level limit	0	100	15	%	0	3004	NO	YES	
a01	Upper level limit	0	100	85	%	0	3005	NO	YES	
a07	Level alarm mode	0	1	0		0	3006	NO	YES	0 = Time | 1 = Hysteresis
a04	Lower delay	0	999	10	s	0	3007	NO	YES	
a03	Upper delay	0	999	50	s	0	3008	NO	YES	
a06	Lower level hysteresis	0	20	3	%	1	3009	NO	YES	
a05	Upper level hysteresis	0	20	5	%	1	3010	NO	YES	
a08	Function common alarm	0	3	0		0	3011	NO	YES	0 = Not follow | 1 = Follow up | 2 = Follow low | 3 = Follow all
a12	Oscillation detect band	0	100	100	%	0	3012	NO	YES	
a13	Oscillation detect timeout	2	30	20	min	0	3013	NO	YES	
a25	Force pump OFF in stopped mode	0	1	0		0	3117	NO	YES	0 = Off | 1 = On
a14	IO Lower level limit	0	100	5	%	0	3101	NO	YES	
a15	IO Upper level limit	0	100	95	%	0	3102	NO	YES	
a16	IO Lower level hysteresis	0	20	3	%	1	3103	NO	YES	
a17	IO Upper level hysteresis	0	20	3	%	1	3104	NO	YES	
a18	IO Lower delay	0	999	10	s	0	3105	NO	YES	
a19	IO Upper delay	0	999	50	s	0	3106	NO	YES	
a20	IO Level limit	0	100	50	%	0	3107	NO	YES	
a21	IO Level delay	0	999	10	s	0	3108	NO	YES	
a22	IO Level hysteresis	0	20	3		1	3109	NO	YES	
a23	IO Level action	0	1	0		0	3110	NO	YES	0 = Falling | 1 = Rising
N03	Control Method	0	2	2		0	3014	NO	YES	0 = On / off | 1 = P-ctrl | 2 = PI-ctrl
n35	Regulating principle	0	1	0		0	3015	NO	YES	0 = Low | 1 = High
n04	P-band	5	200	30	%	1	3016	NO	YES	
n05	Integration time Tn	60	600	400	s	0	3017	NO	YES	
n34	Neutral zone	0	25	2	%	1	3018	NO	YES	
N06	Difference	0,5	25	2	%	1	3019	NO	YES	
n13	Period time for AKV / AKVA	3	15	6	s	1	3020	NO	YES	
n33	Minimum OD	0		0	%	0	3021	NO	YES	
n32	Maximum OD	1	100	100	%	0	3022	NO	YES	
o11	Language	0	0	0		0	3023	YES	YES	0 = $ActiveLanguageList
o17	Output indication	0	1	0		0	3024	NO	YES	0 = Level | 1 = OD
K04	Login timeout	1	120	10	min	0	3025	NO	YES	
K06	Backlight timeout	0	120	2	min	0	3026	NO	YES	
o05	Password daily	0	999	100		0	3027	NO	YES	
K02	Password service	0	999	200		0	3028	NO	YES	
K03	Password commission	0	999	300		0	3029	NO	YES	
K05	Contrast	0	100	40	%	0	3030	NO	YES	
K01	Brightness	0	100	80	%	0	3031	NO	YES	
I09	System configuration	0	4	0		0	3032	YES	YES	0 = ICAD+NC | 1 = ICAD | 2 = AKV/A+NC | 3 = AKV/A | 4 = NC only
o31	Level signal setup	0	3	0		0	3033	YES	YES	0 = AKS4100 | 1 = AKS41 | 2 = Current | 3 = Voltage
o32	Voltage at low liquid level	0		0	V	1	3034	NO	YES	
o33	Voltage at high liquid level		10	10	V	1	3035	NO	YES	
I06	Current at low liquid level	0		4	mA	1	3036	NO	YES	
I07	Current at high liquid level		20	20	mA	1	3037	NO	YES	
o34	Valve position setup	0	2	0		0	3038	YES	YES	0 = Not used | 1 = Current | 2 = Voltage
I02	Voltage at closed valve position	0		0	V	1	3039	NO	YES	
I03	Voltage at open valve position		10	10	V	1	3040	NO	YES	
I04	Current at closed valve position	0		4	mA	1	3041	NO	YES	
I05	Current at open valve position		20	20	mA	1	3042	NO	YES	
I18	Common alarm setup	0	3	1		0	3043	YES	YES	0 = DO4 | 1 = High Alarm | 2 = DO3 | 3 = Disp only
I08	Multiple valve setup	0	4	0		0	3044	YES	YES	0 = Not used | 1 = 2 same cap | 2 = 2 dif cap | 3 = 3 same cap | 4 = 3 dif cap
I13	Multiple valve pattern	0	1	0		0	3045	NO	YES	0 = Parallel | 1 = Sequence
I10	Valve A capacity	0	100	50	%	0	3046	YES	YES	

I11	Valve B capacity	0	100	50	%	0	3047	YES	YES	
I12	Valve C capacity	0	100	33	%	0	3048	YES	YES	
I17	ICAD takeover OD	0	100	80	%	0	3052	NO	YES	
I19	IO module setup	0	1	0		0	3091	YES	YES	0 = Not used | 1 = Used
G01	CAN ID	1	127	1		0	4032	NO	NO	
G02	Can baudrate	0	5	4		0	4033	NO	NO	0 = 20k | 1 = 50k | 2 = 125k | 3 = 250k | 4 = 500k | 5 = 1M
G06	Modbus ID	0	120	1		0	3055	NO	YES	
G05	Modbus baudrate	0	8	6		0	3056	NO	YES	0 = 0 | 1 = 1200 | 2 = 2400 | 3 = 4800 | 4 = 9600 | 5 = 14400 | 6 = 19200 | 7 = 28800 | 8 = 38400
G08	Modbus mode	0	2	1		0	3057	NO	YES	0 = 8N1 | 1 = 8E1 | 2 = 8N2
G07	Modbus mapping	0	1	0		0	3058	NO	YES	0 = Operation | 1 = Setup
G09	Valve B CAN ID	1	127	2		0	3088	YES	YES	
G10	Valve C CAN ID	1	127	3		0	3089	YES	YES	
G11	IO Mod. CAN ID	1	127	4		0	3090	YES	YES	
B01	Controller state	0	6	0		0	4001	YES	NO	0 = Powerup | 1 = Stop | 2 = Auto | 3 = Manual | 4 = Slave | 5 = IO | 6 = Safe
u01	Actual level	0	100	0	%	1	4002	NO	NO	
u02	Actual reference	0	100	0	%	1	4003	YES	NO	
u24	Actual OD	0	100	0	%	1	4004	NO	NO	
u33	Actual valve position	0	100	0	%	1	4005	NO	NO	
u10	Digital input status	0	1	0		0	4006	NO	NO	0 = Off | 1 = On
u31	Actual level signal voltage	0	100	0	V	1	4007	NO	NO	
u30	Actual level signal current	0	24	0	mA	1	4008	NO	NO	
B02	Actual position signal voltage	0	100	0	V	1	4009	NO	NO	
u32	Actual position signal current	0	100	0	mA	1	4010	NO	NO	
B03	Actual OD A	0	100	0	%	1	4011	NO	NO	
B04	Actual OD B	0	100	0	%	1	4012	NO	NO	
B05	Actual OD C	0	100	0	%	1	4013	NO	NO	
o18	Manual Mode	0	1	0		0	4014	NO	NO	0 = Off | 1 = On
o45	Manual OD	0	100	50	%	1	3059	NO	NO	
B08	Manual low alarm	0	1	0		0	3060	NO	NO	0 = Off | 1 = On
B06	Manual high alarm	0	1	0		0	3061	NO	NO	0 = Off | 1 = On
B07	Manual common alarm	0	1	0		0	3062	NO	NO	0 = Off | 1 = On
B09	Apply defaults	0	1	0		0	3063	YES	NO	0 = None | 1 = Factory
B11	Oscillation amplitude	0	100	0	%	1	4028	YES	NO	
B10	Oscillation period	0	3600	0	s	0	4029	YES	NO	

Label	Alarm name	Modbus PNU	Bit number
A1	Upper level	1901	8
A2	Lower level	1901	9
A92	Oscillation in level signal	1901	10
A96	Valve position	1901	14
A97	Multiple valve capacity	1901	15
E1	Internal error	1901	0
E21	Level signal out of range	1901	1
E22	Valve position signal out of range	1901	2
E96	AKS 4100 error	1901	3
A45	Standby mode	1901	4
A99	Valve B communication	1901	5
A98	Valve C communication	1901	6
A85	Communication to master lost	1901	7
A91	Valve B alarm	1902	8

A90	Valve C alarm	1902	9
A88	Control method conflict	1902	10
A87	Common alarm HW conflict	1902	11
A86	Min / max OD conflict	1902	12
E95	Sensor supply overload	1902	13
E99	DO4 overload	1902	14
E97	Too much current AI3	1902	15
E98	Too much current AI4	1902	0
A89	Multiple valve setup conflict	1902	1
A80	Valve B CAN ID conflict	1902	2
A81	Valve C CAN ID conflict	1902	3
A82	IO module CAN ID conflict	1902	4
A83	IO module communication	1902	5

ENGINEERING
TOMORROW

Media temperature controller
EKC 361

Contents **Page**

Features 1009
Introduction 1010
Application examples 1011
Extra options 1011
Function 1012
Survey of functions 1013
Operation 1016
Menu survey 1016
Data 1017
Connections 1017
Ordering 1017
Data communication 1018
Start of controller 1020
If the temperature fluctuates 1020
Trouble shooting - ICS / PM with CVQ 1020
Fine adjustments 1021

BC153186426245en-000201 | 2015.11

ENGINEERING TOMORROW

Media temperature controller
EKC 361



The controller and valve can be used where there are stringent requirements to accurate temperature control in connection with refrigeration.

E.g.:
- Cold room for fruits and food products
- Refrigerating systems
- Work premises in the food industry
- Process cooling of liquids

Features

- The temperature is kept within an accuracy of ±0.25 °C or better after a transient phenomenon
- The evaporator's temperature is kept as high as possible, so that the air humidity is kept high and waste is limited
- A transient phenomenon can be controlled with the adaptive function. Select either:
  - Fast build-up where underswings are allowed
  - Not quite so fast build-up where under swings are less pronounced
  - Build-up without underswings
- PID regulation
- p_0 limitation

Introduction

Functions

- Modulating temperature control
- Digital ON / OFF input for start / stop of regulation ICS / PM or forced closing of ICM
- Alarm if the set alarm limits are exceeded
- Relay output for fan
- Relay output for solenoid valves
- Analog input signal that can displace the temperature reference
- Analog Output signal corresponding to selecting temperature as running display value. Please observe : Not possible if ICM is selected as valve

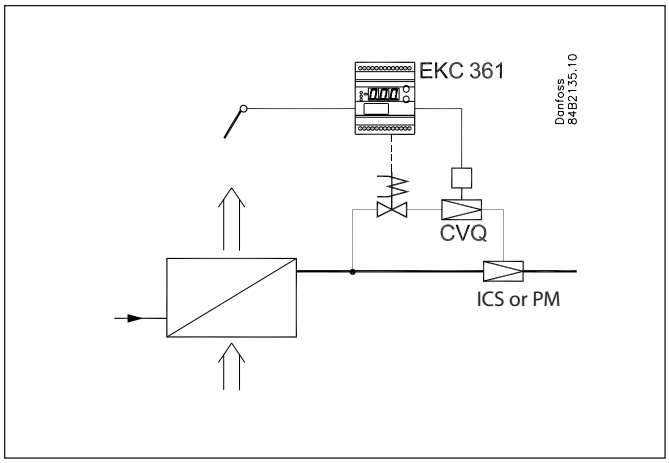

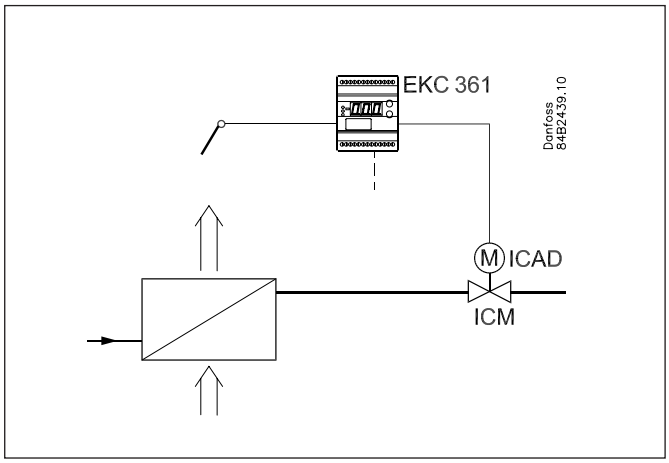

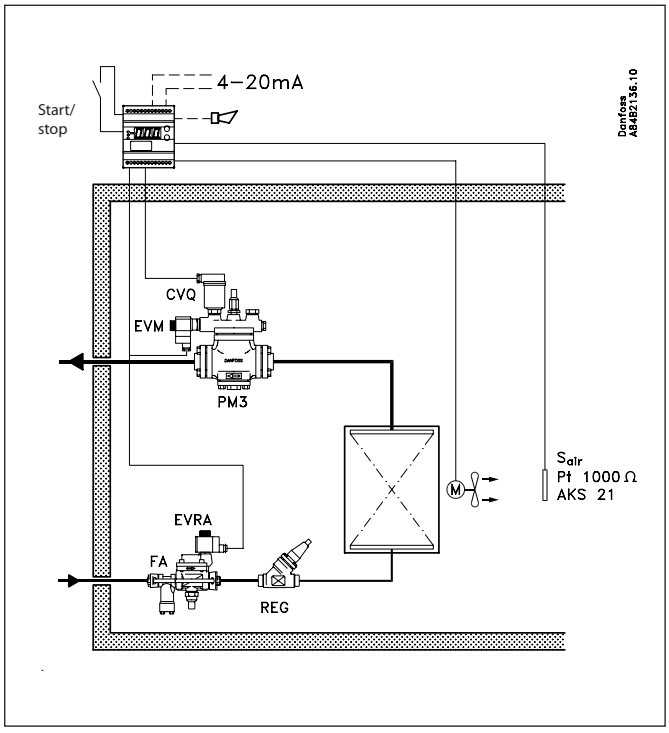

Application examples

ICS / PM
ICS / PM with CVQ is a pilot-operated and pressure-dependent valve for controlling media temperature.
The ICS or PM must be equipped with a CVQ pilot valve in order to position ICS or PM. The CVQ valve is operated by the EKC 361 controller.
Please notice that a power failure will cause the CVQ pilot valve to fully open ICS / PM. If it is required that ICS / PM must close at power failure, the pilot valve type EVM-NC can be installed.
If the Digital Input is ON, it releases the ICS / PM for controlling temperature. If the Digital Input is OFF, if stops controlling PM / ICS, but EKC 361 will maintain a CVQ minimum temperature. (Parameter n02)
Please see separate literature for ICS / PM
ICS : AI241186442033

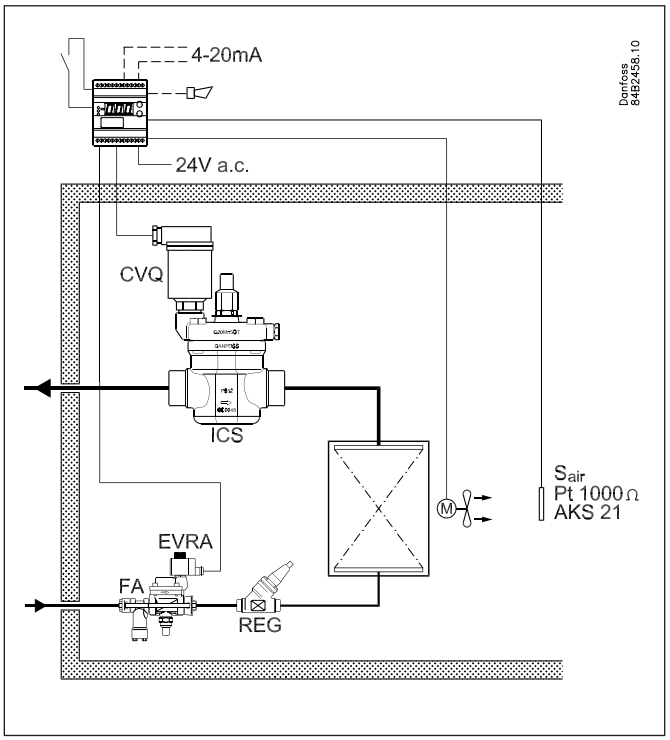

ICM
ICM is a direct activating and pressure independent valve for controlling media temperature.
When ICM is selected, the ICM is positioned directly via the analog output 0/4 – 20mA output from the EKC 361.
If the Digital Input is ON, it releases the ICM for controlling temperature. If the Digital Input is OFF, the ICM is forced to close.
The opening degree OD 0 – 100% can be limited by parameter n32 and n33.
Please see separate literature for ICM
ICM : AI236186442940

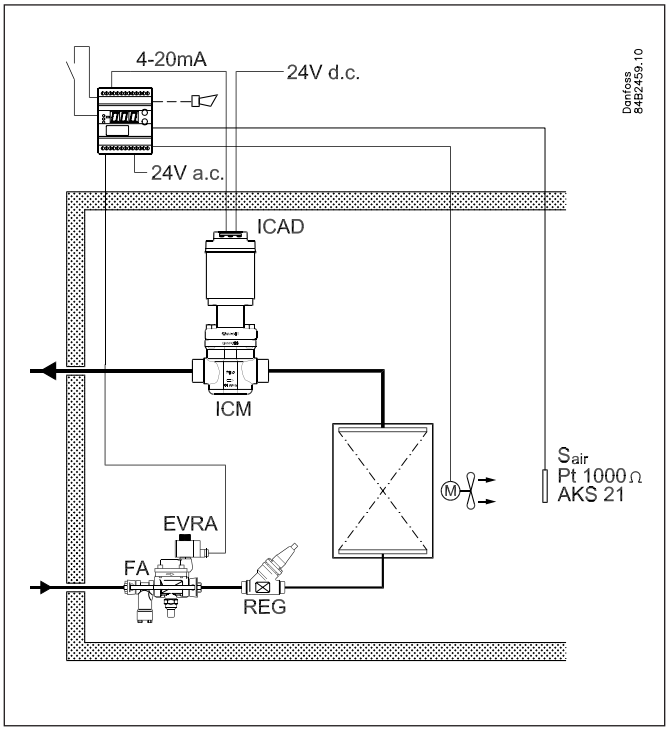

General for ICS / PM and ICM
The EKC 361 can also operate a solenoid valve in the liquid line (Digital output on terminal 9 and 10). It will follow the status of Digital Input, however if a low temperature alarm is detected (A2 alarm) the solenoid valve in the liquid line will be closed.
The EKC 361 can also operate a fan (Digital output on terminal 8 and 10). It will follow the status of Digital Input.
The Parameter (r12) must be ON in order to ensure general operation. If Parameter (r12) is OFF, EKC 361 will operate corresponding to if Digital Input is OFF
As media temperature sensor is S_{air} is used. Please observe that S_{air} can also be used to control liquid.
As option an auxiliary temperature sensor S_{aux} can be installed but only for monitoring.
S_{air} / S_{aux} can both be shown as running display value selected by parameter o17. The selected sensor (S_{air} or S_{aux}) will be sent out on the Analog Output as 0/4 – 20 mA.
Temperature scaling with parameter o27 and o28. Please observe by ICM the Analog Output is not available for sending temperature signals (S_{air} or S_{aux}).
It is normally recommended, on a aircooler, to install S_{air}, at the evaporator air outlet side.

Extra options

- PC operation
  The controller can be provided with data communication, so that it may be hooked up with other products in the ADAP-KOOL® range of refrigeration controls. Operation, monitoring and data collection can then be performed from a PC - either in situ or at a service company.

Function

Very accurate temperature control
With this system where controller, pilot valve and main valve have been adapted for optimum use in the refrigerating plant, the refrigerated products may be stored with temperature fluctuations of less than ±0.25 °C.

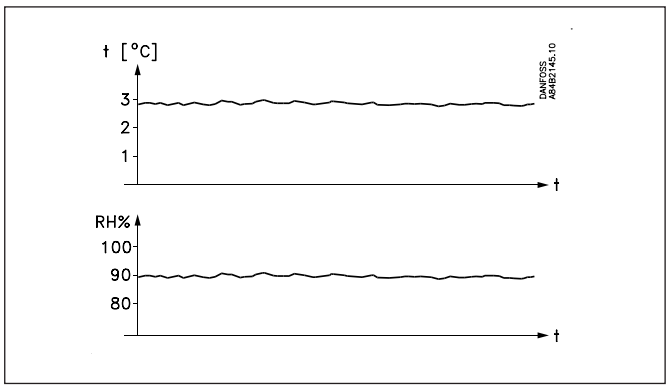

High air humidity
As the evaporating temperature is constantly adapted to the refrigeration needs and will always be as high as possible with a very small temperature fluctuation, the relative air humidity in the room will be kept at a maximum.
Drying-out of the products will in this way be reduced to a minimum.

Temperature is quickly attained
With the built-in PID control and the possibility of choosing between three transient phenomena, the controller can be adapted to a kind of temperature performance that is optimum for this particular refrigerating plant. See parameter (n07).
- **Fastest** possible cooling
- Cooling with **less** underswing
- Cooling where underswing is **unwanted.**

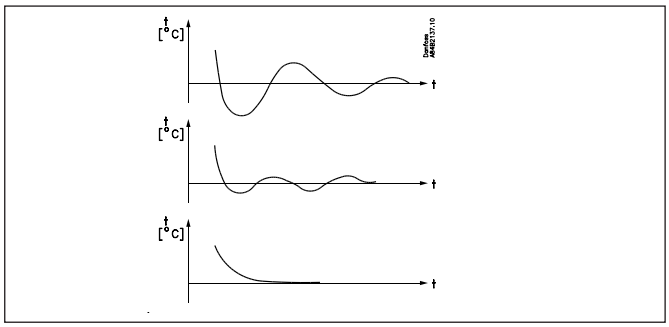

Regulation ICS / PM with CVQ
The controller receives signals from room sensor S_{air}. This room sensor must be placed at the air outlet from the evaporator to obtain the best possible regulation. The controller sees to it that the required room temperature is maintained.
Built-in between the controller and the actuator is a so-called inner control loop which constantly checks the temperature (pressure) in the actuator's pressure vessel. In this way a very stable control system is obtained.
If there is a deviation between the required and the registered temperature the controller will immediately send more or fewer pulses to the actuator to counteract the error. A change of the number of pulses will act on the temperature and hence the pressure in the pressure vessel. As the charging pressure and the evaporating pressure p_0 follow each other, a changed charging pressure will produce the effect that the valve's opening degree is also changed. The ICS / PM with CVQ system maintains the pressure in the evaporator whatever pressure changes there may be on the suction side (on the ICS / PM valve's outlet).

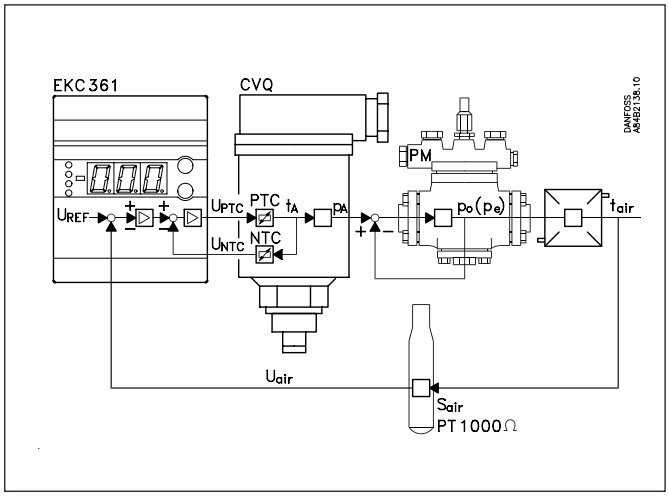

Evaporating pressure limitation (p_0 limitation)
The inner control loop mentioned above also causes the evaporating pressure to stay within a fixed limit. In this way the system is safeguarded against a too low supply air temperature.
It offers the following advantages:
- High-temperature systems can be connected to low-temperature compressor units
- Protection against icing on evaporator
- Frost protection of liquid coolers

The allowed temperature in the actuator determines the evaporating pressure

Actuator temperature

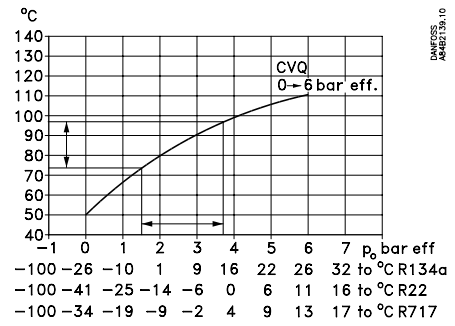

Regulation with ICM
When using ICM as selected valve the system will still control ICM in order to maintain S_{air} according to entered setpoint.
This system does not include any inner control loop.
It is a direct operating and pressure independent valve for controlling media temperature. (S_{air}).

Survey of functions

Function	Para-meter	Parameter by operation via data com-munication
Normal display		

Normally S_{air} (017=Air) will be shown as running display value. If lower button is activated S_{aux} will be displayed for 5 sec, and then return to S_{air}
 	
If (017=Au) S_{aux} will be shown as running display value. If lower button is activated S_{air} will be displayed for 5 sec, and then return to S_{aux}
 	
If ICM has been selected (n03=6)
If (017=Air) S_{air} (017=Air) will be shown as running display value. If lower button is activated OD (u24) will be displayed for 5 sec, and then return to S_{air}.
If (017=Au) OD (u24) will be shown as running display value. If lower button is activated S_{air} will be displayed for 5 sec, and then return to OD (u24)
		Air temp.

Reference		
Setpoint Regulation is performed based on the set value provided that there is no external contribution (o10). (Push both buttons simultaneously to set the setpoint).	–	SP Temp.
Temperature unit Here you select whether the controller is to indicate the temperature values in °C or in °F. If indication in °F is selected, other temperature settings will also change over to Fahrenheit, either as absolute values or as delta values.	r05	Temp unit °C=0, °F=1 (In AKM only °C is displayed whatever the setting)
External contribution to the setpoint This setting determines how large a contribution (in °C / °F) is to be added to the set setpoint when the input signal is max. (20 mA).	r06	Ext. Ref.off set (°C / °F)
Correction of signal from S_{air} (Compensation possibility through long sensor cable).	r09	Adjust S_{Air} (°C / °F)
Correction of signal from S_{aux} (Compensation possibility through long sensor cable).	r10	Adjust S_{Aux} (°C / °F)
Start / stop of refrigeration With this setting refrigeration can be started and stopped. Start / stop of refrigeration can also be accomplished with the external switch function. See also appendix 1.	r12	Main Switch
Alarm		
The controller can give alarm in different situations. When there is an alarm all the light-emitting diodes (LED) will flash on the controller front panel, and the alarm relay will cut in.		
Alarm for upper deviation The alarm for too high S_{air} temperature is set here. The value is set in Kelvin. The alarm becomes active when the S_{air} temperature exceeds the actual reference plus A01. (The actual reference (SP + r06) can be seen in u02).	A01	Upper deviation
Alarm for lower deviation The alarm for too low S_{air} temperature is set here. The value is set in Kelvin. The alarm becomes active when the S_{air} temperature drops below the actual reference minus A02. If a low temperature alarm is detected (A2 alarm) the solenoid valve in the liquid line (Digital output on terminal 9 and 10) will be closed	A02	Lower deviation
Alarm delay If one of the two limit values is exceeded, a timer function will commence. The alarm will not become active until the set time delay has been passed. The time delay is set in minutes.	A03	Temp alarm delay
		With data communication the importance of the individual alarms can be defined. Setting is carried out in the "Alarm destinations" menu. See also page 912.
Control parameters		
Actuator's max. temperature Set the temperature (°C) the actuator is to have at the limit of the regulating range. The setting ensures that the actuator will not become superheated and work itself away from the regulating range. Due to tolerances in the actuator the value must be set 10K higher than indicated in the curves on page 1019.	n01	Q-max. temp.
Actuator's min. temperature Set the temperature (°C) the actuator will have at the limit of the regulating range. The setting ensures that the actuator will not become too cold and work itself away from the regulating range. Due to tolerances in the actuator the value must be set 10K lower than indicated in the curves on page 1019.	n02	Q-min. temp.

Actuator type Here you define the actuator mounted in the system: 1: CVQ -1 – 5 bar 2: CVQ 0 – 6 bar 3: CVQ 1.7 – 8 bar 4: CVMQ 5: KVQ 6: ICM	n03	Valve type
P: Amplification factor Kp If the Kp value is reduced the regulation becomes slower.	n04	Kp factor
I: Integration time Tn The I-setting can be cancelled by setting the value to max. (600s). If it is set to 600s, parameter n07 must be set to "0". (If the Tn value is increased the regulation becomes slower).	n05	Tn sec.
D: Differentiation time Td The D-setting can be cancelled by setting the value to min. (0).	n06	Td sec.
Transient phenomenon If the refrigeration requires a very fast transient phenomenon or must not have an underswing or temperature shift, this function can be used. (see page 1012) 0: Ordinary regulating technique 1: Fast building-up where a minor underswing is allowed 2: Not quite so fast building-up, but without underswing	n07	Q-ctrl. mode
OD - Opening degree Max. Limitation - ICM only When ICM has been selected (n03=6) the Maximum OD can be entered. ICM will never go above this value. (If n32=n33, ICM is forced to this value)	n32	ICM OD Max.
OD - Opening degree Min. Limitation - ICM only When ICM has been selected (n03=6) the Minimum OD can be entered. ICM will never go below this value. (If n32=n33, ICM is forced to this value)	n33	ICM OD Min.
Miscellaneous		

Output signal
The controller can transmit a current signal via the analog output (terminal 2 and 5). Range of current signal can be selected below:
If (017=Air) S_{air} will send out to the analog output.
If (017=Au) S_{aux} will send out to the analog output
S_{air} / S_{aux} min. value (0 or 4 mA) will correspond to the setting in "o27"
S_{air} / S_{aux} max. value (20 mA) will correspond to the setting in "o28"
 	
If ICM has been selected (n03=6)
OD (u24) to control ICM, is send out to the analog output
(o27) and (o28) is not active
 	
Range for current signal:
0: No output signal
1: 4 – 20 mA
2: 0 – 20 mA
	o09	AO type

Input signal If you wish to connect a signal that is to displace the controller's control reference, the signal must be defined in this menu. 0: No signal 1: 4 – 20 mA 2: 0 – 20 mA (4 or 0 mA will not give a displacement. 20 mA will displace the reference by the value set in menu r06).	o10	AI type
Data communication If the controller is built into a network with data communication, it must have an address, and the master gateway of the data communication must then know this address. These settings can only be made when a data communication module has been mounted in the controller and the installation of the data communication cable has been completed. This installation is mentioned in a separate document AN234886440486		Following installation of a data communication module, the controller can be operated on a par with the other controllers in ADAP-KOOL® refrigeration controls.
The address is set between 1 and 60	o03	-
The address is sent to the gateway when the menu is set in pos. ON (The setting will automatically change back to Off after a few seconds.)	o04	-
Language This setting is only required if data communication is connected to the controller. Settings: 0=English, 1=German, 2=French, 3=Danish, 4=Spanish and 6=Swedish When the controller is operated via data communication, the texts in the right-hand column will be shown in the selected language. When you change the setting to an other language you must activate o04 before "the new language" can be visible from the AKM program.	o11	Language
Frequency Set the net frequency.	o12	50 / 60 Hz (50=0, 60=1)

Selection of running display value
If S_{air} (017=Air) will be shown as running display value. If lower button is activated S_{aux} will be displayed for 5 sec, and then return to S_{air}
S_{air} will send out to the analog output. See also (o09),(o27),(o28)
 	
If (017=Au) S_{aux} will be shown as running display value. If lower button is activated S_{air} will be displayed for 5 sec, and then return to S_{aux}
S_{aux} will send out to the analog output. See also (o09),(o27),(o28)
 	
If ICM has been selected (n03=6)
If (017=Air) S_{air} (017=Air) will be shown as running display value. If lower button is activated OD (u24) will be displayed for 5 sec, and then return to S_{air}
 	
If (017=Au) OD (u24) will be shown as running display value. If lower button is activated S_{air} will be displayed for 5 sec, and then return to OD (u24)
	o17	Display Aux / Air
		Aux =0
		Air = 1

(Setting for the function o09) Set the temperature value where the output signal must be minimum (0 or 4 mA)	o27	Temp. at AO min.
(Setting for the function o09) Set the temperature value where the output signal must be maximum (20 mA). (With a temperature range of 50 °C (differential between the settings in o27 and o28) the dissolution will be better than 0.1 °C. With 100°C the dissolution wil be better than 0.2 °C.)	o28	Temp. at AO max.
Service		
A number of controller values can be printed for use in a service situation		
Read the temperature at the S_{air} sensor (calibrated value)	u01	Air temp.
Read the control reference (Setpoint + any contribution from external signal)	u02	Air reference
Read temperature at the S_{aux} sensor (calibrated value) (This showing can also be uploaded from the normal display, if you push the lowermost button for almost a second)	u03	Aux. temp.
Read valve's actuator temperature	u04	Actuator temp.
Read reference for valve's actuator temperature	u05	Actuator Ref.
Read value of external current signal	u06	AI mA
Read value of transmitted current signal	u08	AO mA
Read status of input DI (start / stop input)	u10	DI
ICM opening degree. Only active if (n03)=6	u24	OD%
	--	DO1 Alarm Read status of alarm relay
	--	DO2 Cooling Read status of relay for solenoid valve
	--	DO3 Fan Read status of relay for fan
Operating status		
Operating status of the controller can be called forth in the display. Push briefly (1s) the upper button. If there is a status code, it will be shown on the display. (Status codes have lower priority than alarm codes. In other words, you cannot see a status code, if there is an active alarm). The individual status codes have the following meanings:		EKC State (0 = regulation)
S10: Refrigeration stopped by the internal or external start / stop		10
S12: Refrigeration stopped due to low S_{air}		12

Operation

Display

The values will be shown with three digits, and with a setting you can determine whether the temperature is to be shown in °C or in °F.

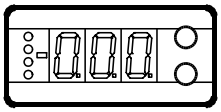

Light-emitting diodes (LED) on front panel

There are LED's on the front panel which will light up when the corresponding relay is activated.
The three lowest LED's will flash, if there is an error in the regulation.
In this situation you can upload the error code on the display and cancel the alarm by giving the uppermost button a brief push.

The controller can give the following messages:		
E1	**Error message**	Errors in the controller
E7		Cut-out S_{air}
E8		Short circuited S_{air}
E11		Valve's actuator temperature outside its range
E12		Analog input signal is outside the range
A1	**Alarm message**	High-temperature alarm
A2		Low-temperature alarm

The buttons

When you want to change a setting, the two buttons will give you a higher or lower value depending on the button you are pushing. But before you change the value, you must have access to the menu. You obtain this by pushing the upper button for a couple of seconds - you will then enter the column with parameter codes. Find the parameter code you want to change and push the two buttons simultaneously. When you have changed the value, save the new value by once more pushing the two buttons simultaneously.

Gives access to the menu (or cutout an alarm)

Gives access to changes

Saves a change

Examples of operations

Set set-point
1. Push the two buttons simultaneously
2. Push one of the buttons and select the new value
3. Push both buttons again to conclude the setting

Set one of the other menus
1. Push the upper button until a parameter is shown
2. Push one of the buttons and find the parameter you want to change
3. Push both buttons simultaneously until the parameter value is shown
4. Push one of the buttons and select the new value
5. Push both buttons again to conclude the setting

Menu survey

SW =1.5x

Function	Para-meter	Min.	Max.	Fac. setting
Normal display				
Shows the temperature at the selected sensor At ICM valve OD also can be selected	-		°C	
Reference				
Set the required room temperature	-	-70 °C	160 °C	10 °C
Temperature unit	r05	°C	°F	°C
Input signal's temperature influence	r06	-50 °C	50 °C	0.0
Correction of the signal from S_{air}	r09	-10,0 °C	10,0 °C	0.0
Correction of the signal from S_{aux}	r10	-10,0 °C	10,0 °C	0.0
Start / stop of refrigeration	r12	OFF / 0	On / 1	On / 1
Alarm				
Upper deviation (above the temperature setting)	A01	0	50 K	5.0
Lower deviation (below the temperature setting)	A02	0	50 K	5.0
Alarm's time delay	A03	0	180 min	30
Regulating parameters				
Actuator max. temperature	n01	41 °C	140 °C	140
Actuator min. temperature	n02	40 °C	139 °C	40
Actuator type (1=CVQ-1 to 5 bar, 2=CVQ 0 to 6 bar, 3=CVQ 1.7 to 8 bar, 4= CVMQ, 5=KVQ, 6= ICM)	n03	1	6	2
P: Amplification factor Kp	n04	0,5	50	3
I: Integration time Tn (600 = off)	n05	60 s	600 s	240
D: Differentiation time Td (0 = off)	n06	0 s	60 s	10
Transient phenomenon 0: Ordinary control 1: Underswing minimised 2: No underswing	n07	0	2	2
OD - Opening degree - max. limit - ICM only	n32	0%	100%	100
OD - Opening degree min limit - ICM only	n33	0%	100%	0
Miscellaneous				
Controller's address (0-120)	o03*	0	990	0
ON / OFF switch (service-pin message)	o04*	-	-	
Define output signal of analog output: 0: no signal, 1: 4 - 20 mA, 2: 0 - 20 mA	o09	0	2	0
Define input signal of analog input 0: no signal, 1: 4 - 20 mA, 2: 0 - 20 mA	o10	0	2	0
Language (0=english, 1=German, 2=French, 3=Danish, 4=Spanish and 6=Swedish.)When you change the setting to an other language you must activate o04 before "the new language" can be visible from the AKM program.	011*	0	6	0
Set supply voltage frequency	o12	50 Hz / 0	60 Hz / 1	0
Select of running display value	o17	Au / 0	Air / 1	Air / 1
(Setting for the function o09) Set the temperature value where the output signal must be minimum (0 or 4 mA)	o27	-70 °C	160 °C	-35
(Setting for the function o09) Set the temperature value where the output signal must be maximum (20 mA)	o28	-70 °C	160 °C	15
Service				
Read temperature at the S_{air} sensor	u01		°C	
Read regulation reference	u02		°C	
Read temperature at the S_{aux} sensor	u03		°C	
Read valve's actuator temperature	u04		°C	
Read reference of the valve's actuator temperature	u05		°C	
Read value of external current signal	u06		mA	
Read value of transmitted current signal	u08		mA	
Read status of input DI	u10		on / off	
ICM opening degree. (only at ICM)	u24		%	

*) This setting will only be possible if a data communication module has been installed in the controller.

Factory setting
If you need to return to the factory-set values, it can be done in this way:
- Cut out the supply voltage to the controller
- Keep both buttons depressed at the same time as you reconnect the supply voltage

Data

Supply voltage	24 V AC ±15% 50 / 60 Hz, 80 VA (the supply voltage is galvanically separated from the input and output signals)	
Power consumption	Controller Actuator	5 VA 75 VA
Input signal	Current signal	4 – 20 mA or 0 – 20 mA
	Digital input from external contact function	
Sensor input	2 pcs. Pt 1000 ohm	
Output signal	Current signal	4-20 mA or 0 – 20 mA Max. load: 200 ohm
Relay output	2 pcs. SPST	AC-1: 4 A (ohmic) AC-15: 3 A (inductive)
Alarm relay	1 pcs. SPST	
Actuator	Input	Temperature signal from sensor in the actuator
	Output	Pulsating 24 V AC to actuator
Data communication	Possible to connect a data communication module	
Ambient temperature	During operation During transport	-10 – 55 °C -40 – 70 °C
Enclosure	IP 20	
Weight	300 g	
Mounting	DIN rail	
Display	LED, 3 digits	
Terminals	max. 2.5 mm² multicore	
Approvals	EU Low Voltage Directive and EMC demands re CE-marking complied with. LVD-tested acc. to EN 60730-1 and EN 60730-2-9 EMC-tested acc. to EN50081-1 and EN 50082-2	

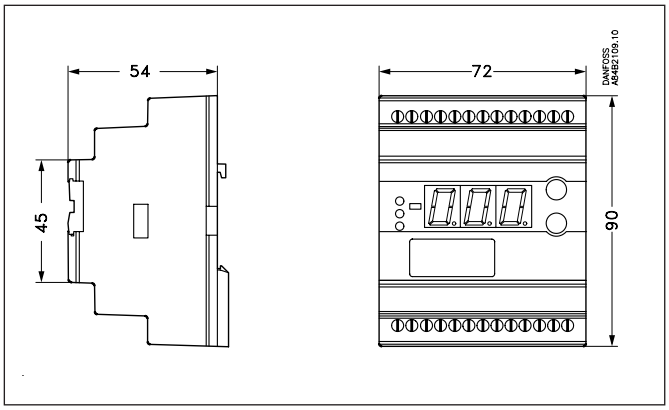

Capacitive load
The relays cannot be used for the direct connection of capacitive loads such as LEDs and on / off control of EC motors.
All loads with a switch mode power supply must be connected with a suitable contactor or similar.

Ordering

Type	Function	Code No.
EKC 361	Evaporating pressure controller	**084B7060**
EKA 174	Data communication module (accessories), (RS 485 module) with galvanic separation	**084B7124**

Temperature sensor Pt 1000 ohm: Kindly refer to catalogue AF151486422482
Valves: AI236186442940

Connections

Necessary connections
Terminals:
25 – 26 Supply voltage 24 V AC
17 – 18 Signal from actuator (from NTC)
23 – 24 Supply to actuator (to PTC)
20 – 21 Pt 1000 sensor at evaporator outlet
1 – 2 Switch function for start / stop of regulation. If a switch is not connected, terminals 1 and 2 must be short circuited.

Application dependent connections
Terminal:
12 – 13 Alarm relay
There is connection between 12 and 13 in alarm situations and when the controller is dead
8 – 10 Relay switch for start / stop of fan
9 – 10 Relay switch for start / stop of solenoid valves
18 – 19 Current signal from other regulation (Ext.Ref.)
21 – 22 Pt 1000 sensor for monitoring
2 – 5 Current output for S_{air} / S_{aux} temperature or ICAD actuator for ICM valve
3 – 4 Data communication
Mount only, if a data communication module has been mounted.
It is <u>important</u> that the installation of the data communication cable be done correctly. Cf. separate literature No. AN234886440486

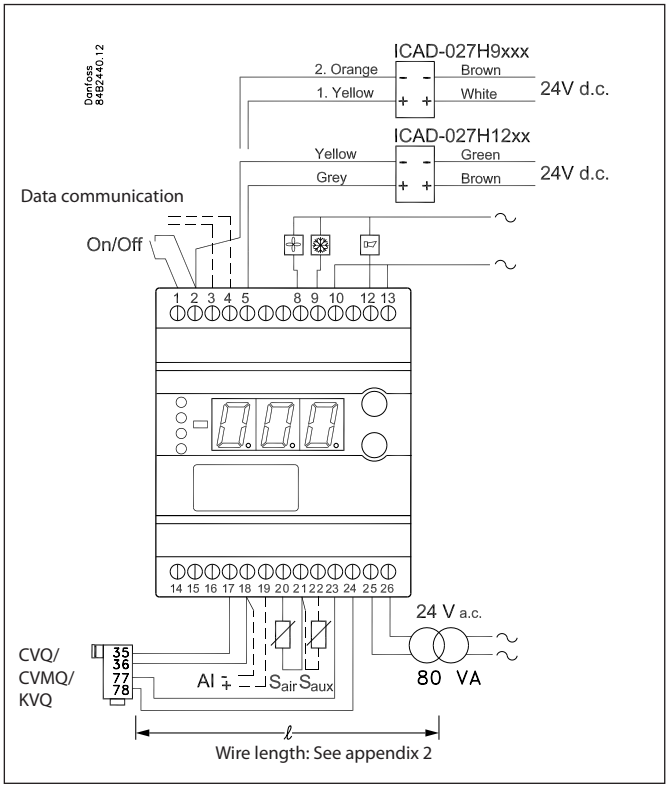

Data communication

This page contains a description of a few of the possibilities you will have when the controller is provided with data communication.

If you want to know more about operation of controllers via PC, you may order additional literature.

Examples

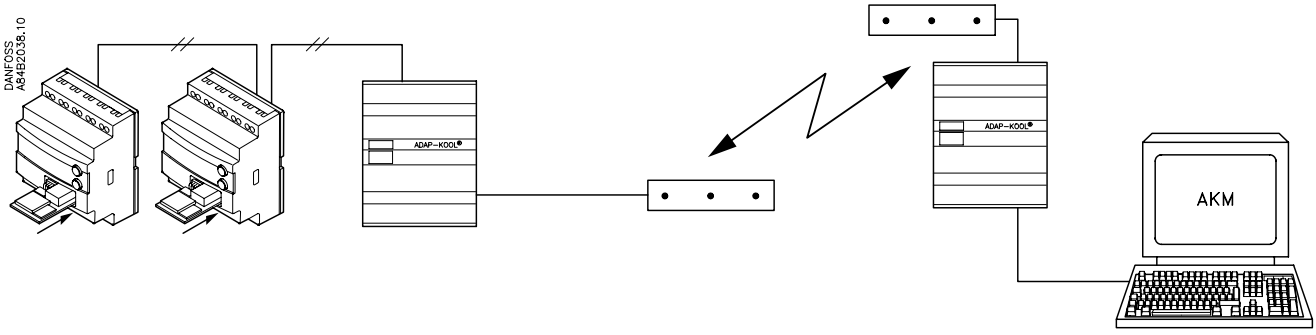

Each controller is provided with a plug-in module.

The controllers are then connected to a two-core cable.

The cable can be connected to a gateway type AKA 245.

This gateway will now control the communication to and from the controllers.

It will collect temperature values and it will receive alarms. When there is an alarm the alarm relay will be activated for two minutes

The gateway can now be connected to a modem.

When an alarm occurs from one of the controllers, the gateway will - via the modem - make a phone call to the service company.

At the service company a modem, gateway and PC with system software type AKM have been installed.

All the controllers' functions can now be operated from the various menu displays.

The programme will for example upload all the collected temperature values once a day.

Example of menu display

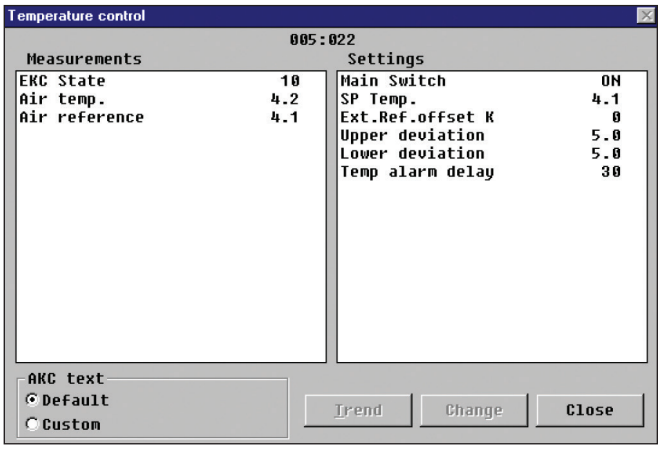

- Measurements are shown at one side and settings at the other.
- You will also be able to see the parameter names of the functions on page 1013-1015.
- With a simple change-over the values can also be shown in a trend diagram.
- If you wish to check earlier temperature measurements, you can see them in the log collection.

Alarms

If the controller is extended with data communication, it will be possible to define the importance of the transmitted alarms.
The importance is defined with the setting: 1, 2, 3 or 0. When the alarm then arises at some time, it will result in one of the following activities:

1 = Alarm
The alarm message is sent off with alarm status 1. This means that the gateway that is the master in the system will have its alarm relay output activated for two minutes. Later, when the alarm ceases, the alarm text will be retransmitted, but now with status value 0.

2 = Message
The alarm text is transmitted with status value 2. Later, when the "message" lapses, the alarm text is retransmitted, but now with status value 0.

3 = Alarm
As "1", but the master gateway's relay output is not activated.

0 = Suppressed information
The alarm text is stopped at the controller. It is transmitted nowhere.

Appendix 1

Interaction between internal and external start / stop functions and active functions.

Internal Start / stop	Off	Off	On	On
External Start / stop	Off	On	Off	On
Refrigeration	Off			On
Actuator	Stand-by			Regulating
Actuator temperature	"n02"			"n02" to "n01"
Fan relay	Off			On
Expansion valve relay	Off			On
Temperature monitoring	No			Yes
Sensor monitoring	Yes			Yes

Appendix 2

Cable length for the CVQ actuator
The actuator must be supplied with 24 V AC ±10%.
To avoid excessive voltage loss in the cable to the actuator, use a thicker cable for large distances.

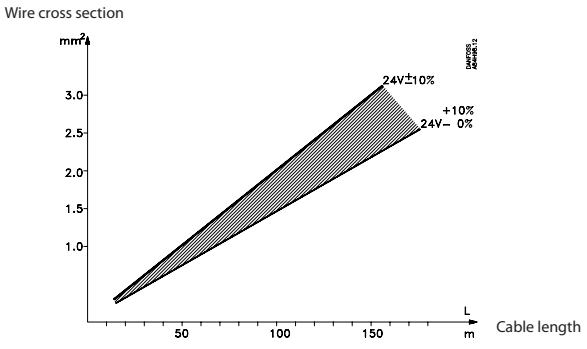

Appendix 3

Connection between the evaporating temperature and the actuator's temperature (the values are approximate).

n01: The highest regulated room temperature will have a belonging t_o value which in turn indicates the value of the n01 setting. Due to tolerances in the actuator, the setting value must be 10 K **higher** than shown in the curve.

n02: The lowest occurring suction pressure will have a belonging t_o value which in turn indicates the value of the n02 setting. Due to tolerances in the actuator, the setting value must be 10 K **lower** than shown in the curve.

CVMQ

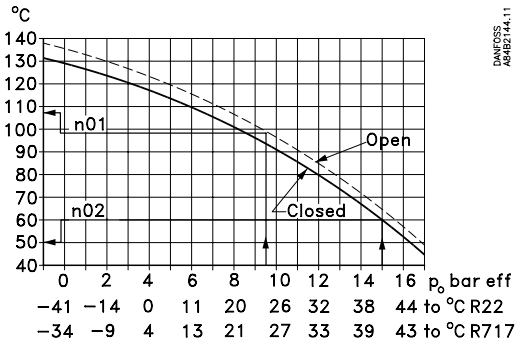

CVQ

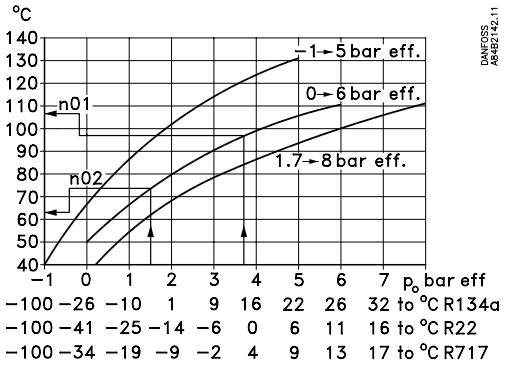

KVQ

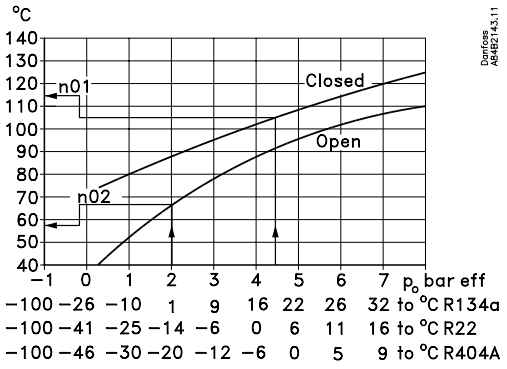

Start of controller

When the electric wires have been connected to the controller, the following points have to be attended to before the regulation starts:

1. Switch off the external ON / OFF switch that starts and stops the regulation.
2. Follow the menu survey on page 1015, and set the various parameters to the required values.
3. Switch on the external ON / OFF switch, and regulation will start.
4. If the system has been fitted with a thermostatic expansion valve, it must be set to minimum stable superheating. (If a specific T0 is required for the adjustment of the expansion valve, the two setting values for the actuator temperature (n01 and n02) can be set to the belonging value while the adjustment of the expansion valve is carried out. Remember to reset the values).
5. Follow the actual room temperature on the display. (On terminals 2 and 5 a current signal can be transmitted which represents the room temperature. Connect a data collection unit, if applicable, so that the temperature performance can be followed).

If the temperature fluctuates

When the refrigerating system has been made to work steadily, the controller's factory-set control parameters should in most cases provide a stable and relatively fast regulating system.
If the system on the other hand oscillates, you must register the periods of oscillation and compare them with the set integration time T_n, and then make a couple of adjustments in the indicated parameters.

If the time of oscillation is longer than the integration time:
($T_p > T_n$, (T_n is, say, 4 minutes))
1. Increase T_n to 1.2 times T_p
2. Wait until the system is in balance again
3. If there is still oscillation, reduce K_p by, say, 20%
4. Wait until the system is in balance
5. If it continues to oscillate, repeat 3 and 4

If the time of oscillation is shorter than the integration time:
($T_p < T_n$, (T_n is, say, 4 minutes))
1. Reduce K_p by, say, 20% of the scale reading
2. Wait until the system is in balance
3. If it continues to oscillate, repeat 1 and 2

Trouble shooting - ICS / PM with CVQ

In addition to the error messages transmitted by the controller, the table below may help identifying errors and defects.

Symptom	Defect	Confirmation of defect
Media temperature too low. Actuator feels cold.	Short-circuited NTC resistor in actuator.	If less than 100 ohm is measured across terminals 17 and 18 (disassemble the lead), the NTC or the leads are short-circuited. Check the leads.
	Defective PTC resistor (heating element) in actuator.	If more than 30 ohm or 0 ohm is measured across terminal 23 and 24 (disassemble the lead), either the PTC or the leads are defective. Check the leads.
Media temperature too low. Actuator fells warm.	Undersized cable to CVQ.	Measure voltage across terminals 77 and 78 (min. 18 V AC). Measure resistance in power cables to CVQ (max. 2 ohm)
	Undersized 24 V transformer.	Measure voltage across transformer output terminals (24 V AC +10 / -15%) under all working conditions. If voltage drops under some working conditions the transformer is undersized.
	Loss of charge in actuator.	Replace actuator.
Media temperature too high. Actuator feels cold.	Fault in refrigerant plant.	Examine plant for ther defects.
Media temperature too high. Actuator feels warm.	Cut out NTC resistor in actuator.	If more than 200 kohm is measured across terminals 17 and 18 (disassemble the lead), either the NTC or leads are disconnected. Check the leads.

Fine adjustments

When the system has been operating for a while, it may be required for some systems to optimise some of the adjustments. Below we have a look at settings having an influence on the speed and accuracy of the regulation.

Adjustment of the actuator's min. and max. temperatures
At the first setting these values were set to 10 K outside of the expected temperature in order to eliminate the tolerances in the actuator. By adjusting the two values to the values where the valve is exactly in mesh, the valve will all the time remain active in its regulation.
If the actuator is replaced at a later date, this procedure must be repeated for the new actuator.

Min.
By adjusting the actuator's min. temperature you obtain a limit for how low a pressure can occur in the evaporator (the point is where the valve starts a limitation of the refrigerant flow).
The system must be put in an operating situation where max. capacity is called for (large refrigeration need).
The min. temperature must now be changed upwards step by step, at the same time as the evaporating pressure is read on the system's manometer.
When a change of the evaporating pressure is registered, this is the point where the valve is exactly in mesh. (If frost protection is required for the system, the value can be raised to the belonging value).

Max.
By adjusting the actuator's max. temperature you obtain a limit for how high a pressure can occur in the evaporator (the refrigerant flow is blocked completely).
The system is put in an operating situation where there is no call for refrigeration capacity (no refrigerant flow).
The max. temperature is now changed downwards step by step, at the same time as the evaporating pressure is read on the system's manometer.
When a change of the evaporating pressure is registered, this is the point where the valve opens. Adjust the setting a little upwards, so that the valve will again close completely for the refrigerant flow. (If the actual application has a requirement regarding max. evaporating pressure, a lower setting may of course be selected, so that the pressure is limited).

Method for fixing Kp, Tn and Td
Described below is a method (Ziegler-Nichols) for fixing Kp, Tn and Td.

1. The system is made to regulate the temperature at the required reference with a typical load. It is important that the valve regulates, and that it is not fully open.
2. Parameter u05 is read. The actuator's min. and max. setting is adjusted, so that the average of the min. and max. values is equal to the read u05.
3. The controller is set, so that it will regulate as a P-controller. (Td is set to 0, Tn in pos. OFF (600), and Q-Ctrl.mode is set at 0).
4. The stability of the system is examined by stopping the system for, say, one minute (using the start / stop setting or the switch). Now check how the building-up of the temperature proceeds. If the building-up peters out, raise Kp a little and repeat the start / stop operation. Continue with this until you obtain a building-up which does **not** peter out.
5. Kp is in this case the critical amplification ($Kp_{critical}$) and the building-up time for the continued oscillation is the critical building-up time ($T_{critical}$).
6. Based on these values, the regulating parameters can now be calculated and subsequently set:
   - If PID regulation is required:
     $Kp < 0.6x\ Kp_{critical}$
     $Tn > 0.5x\ T_{critical}$
     $Td < 0.12x\ T_{critical}$
   - If PI regulation is required:
     $Kp < 0.45x\ Kp_{critical}$
     $Tn > 0.85x\ T_{critical}$
7. Reset the values for the controller's min. and max. temperatures and Q-Ctrl.mode.

ENGINEERING
TOMORROW

Interface
EKC 366

Contents **Page**

Application 1025
System 1026
Function 1026
Survey of functions 1027
Operation 1028
Menu survey 1028
Valve's working temperature 1029
Data 1030
Connections 1030
Ordering 1030
Data communication 1031

BC085186426119en-000101 | 2015.11

ENGINEERING
TOMORROW

Interface
EKC 366



The controller is used for regulating a valve in a refrigerating system - for example in connection with:

- Long-term storage of fruits and vegetables
- Refrigerating plant
- Brewery systems
- Processing plant

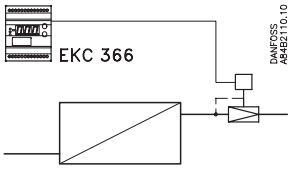

Application

Here the controller has been specially designed for the following functions:

Maintenance of a constant evaporating pressure
A temperature sensor in the valve's actuator will regulate its temperature. This temperature is an indication of the pressure in the valve, and the interface module will keep this temperature constant.

The media temperature is regulated by a PLC or similar device
Here the interface module receives a variable signal from the PLC and will subsequently regulate the valve, so that the refrigeration will be as accurate as possible.

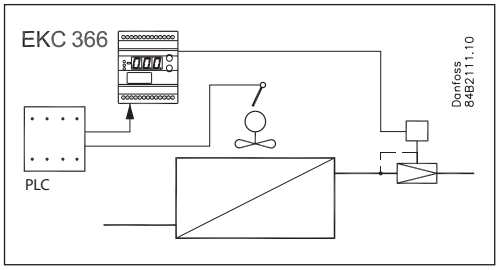

System

The controller must always be used in conjunction with a pilot valve of the types shown here.
The most commonly used one is pilot valve CVQ in conjunction with main valve PM3 (sketched out above).

Valve types:
- CVQ + PM
- KVQ
- TQ
- PHTQ
- TEAQ
- CVMQ



Function

The valve constantly receives feedback of the pressure in the evaporator. Whatever the variations in the suction pressure from the compressor, this feedback will produce the result that the evaporating pressure is kept constant.

In conjunction with the controller, an electronic constant-pressure valve is thus obtained.

Inserted between the controller and the actuator is a so-called inner regulating loop. This loop will - via an NTC resistance - constantly control the temperature in the actuator.

In an application where a PLC or similar device is used for regulating a media temperature, the regulating system will in this way be supplied with an outer regulating loop - which will result in great regulating accuracy.

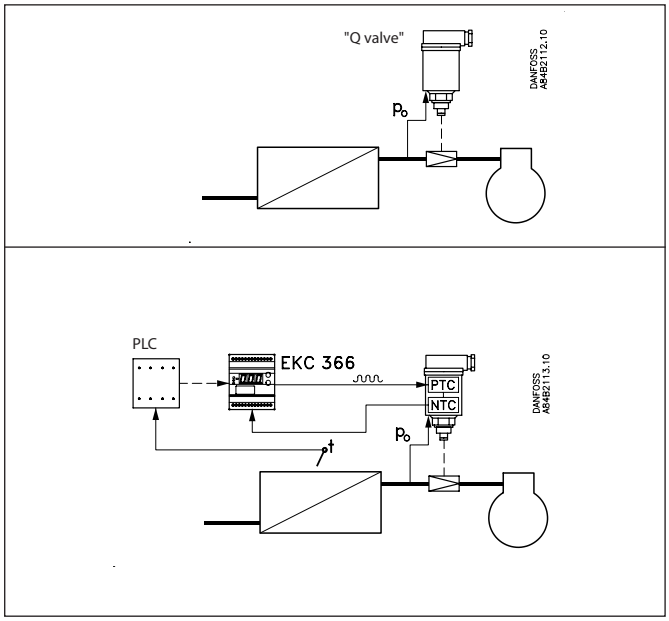

Survey of functions

Function	Para-meter	Parameter by operation via data communication
Temperature **regulation**		**Actuator temperature**
Display of valve temperature The display constantly shows the valve's temperature. The display is filtered over a period of approx. 10 seconds	–	Actuator temp.
Valve's basic temperature reference This temperature setting is the valve's basic setting. At this value no signal must be received from an external regulation. The setting value is taken from one of the curves shown and may be fine-adjusted later when the valve has reached the temperature (read the manometer in the system). (Push both buttons simultaneously to set the menu)	–	SP Temp.
Temperature **uni**t Set here whether the controller is to show the temperature values in °C or in °F. If indication in °F is selected, other temperature settings will also change over to Fahrenheit, either as absolute values or as delta values.	r05	Temp. unit (°C=0, °F=1) (In AKM only °C is displayed, whatever the setting).
Input signal's temperature influence This setting determines how much the input signal has to raise the temperature in the valve. You should aim at selecting the value, so that the valve can close at the highest occurring evaporating pressure when the input signal is maximum (value to be set in Kelvin)	r06	Ext.Ref.offset K
Reference The valve's temperature is regulated on the basis of the basic setting plus the signal from the external regulation. (Reference = SP Temp + percentage of "r06".) The reference can be seen when you push the lower of the two buttons	–	Actuator Ref.
Sundry configurations		**Miscellaneous**
External signal Here you set the signal that is to be connected to the controller. 0: no signal 1: 4 – 20 mA 2: 0 – 20 mA 3: 0 – 10 V 4: 2 – 10 V	o10	AI Type
Frequency Set network frequency	o12	50 / 60 Hz (50=0, 60=1)
Data communication If the controller is built into a network with data communication, it must have an address, and the master gateway of the data communication must then know this address. These settings can only be made when a data communication module has been mounted in the controller and the installation of the data communication cable has been completed. This installation is mentioned in a separate document AN234886440486		Following installation of a data communication module, the controller can be operated on a par with the other controllers in ADAP-KOOL® refrigeration controls.
The address is set between 1 and 60	o03	
The address is sent to the gateway when the menu is set in pos. ON	o04	
Language This setting is only required when data communication is connected to the controller. Settings: 0=English, 1=German, 2=French, 3=Danish, 4=Spanish, and 6= Swedish When the controller is operated via data communication, the texts in the right-hand column will be shown in the selected language. When you change the setting to an other language you must activate o04 before "the new language" can be visible from the AKM program.	o11	Language
Service		
The signal will be constantly updated. If you wish to follow the signal beyond the 20 seconds, the time-out period, push one of the two buttons before the time-out period expires		
External current signal Here you can read the value of the current signal received by the controller at its input	u06	AI mA
External voltage signal Here you can read the value of the voltage signal received by the controller at its input	u07	AI Volt

Operation

Display

The values will be shown with three digits, and with a setting you can determine whether they are to be shown in °C or in °F.

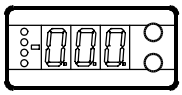

LED's on the front panel

There is one LED on the front panel which will light up when power is sent to the pilot valve.

There are furthermore three LED's which will flash if there is an error in the regulation. In this situation you can show the error code on the display and cut out the alarm by giving the upper button a brief push.

The controller can give the following messages:	
E1	Errors in the controller
E11	Valve's actuator temperature outside its range
E12	Input signal outside its range

The buttons

When you want to change a setting, the two buttons will give you a higher or lower value depending on the button you are pushing. But before you change the value, you must have access to the menu. You obtain this by pushing the upper button for a couple of seconds - you will then enter the column with parameter codes. Find the parameter code you want to change and push the two buttons simultaneously. When you have changed the value, save the new value by once more pushing the two buttons simultaneously.

Gives access to the menu

Gives access to changes

Saves a change

Examples of operations

Set the valve's basic temperature reference
1. Push the two buttons simultaneously
2. Push one of the buttons and select the new value
3. Push both buttons again to conclude the setting

Read the valve's regulating reference
1. Push the lower button
   (After approx. 20 seconds the controller automatically returns to its setting, and it again shows the valve's actual temperature)

Set one of the other menus
1. Push the upper button until a parameter is shown
2. Push one of the buttons and find the parameter you want to change
3. Push both buttons simultaneously until the parameter value is shown
4. Push one of the buttons and select the new value
5. Push both buttons again to conclude the setting

Menu survey

SW =1.2x

Function	Para-meter	Min.	Max.
Read valve's actual temperature (standard display)	-		°C
Set valve's basic temperature reference	-	40.0 °C	140 °C
Read valve's regulation reference	-		°C
Select temperature unit (°C / °F)	r05	°C	°F
Input signal's temperature influence	r06	-99.9 K	99.9 K
Controller's address	o03*	1	60
ON / OFF switch (service-pin message)	o04*	-	-
Define input signal 0: no signal 1: 4 – 20 mA 2: 0 – 20 mA 3: 0 – 10 V 4: 2 – 10 V	o10	0	4
Language (0=English, 1=German, 2=french, 3=Danish, 4=Spanish, 6=Swedish). When you change this setting you must also activate o04.	011*	0	6
Set supply voltage frequency	o12	50 Hz	60 Hz
Service information			
Read value of external current signal	u06		mA
Read value of external voltage signal	u07		V

*) This setting will only be possible if a data communication module has been installed in the controller.

Factory setting
If you need to return to the factory-set values, it can be done in this way:
- Cut out the supply voltage to the controller
- Keep both buttons depressed at the same time as you reconnect the supply voltage

Valve's working temperature

Without external signal
The working temperature must be set on the basis of one of the following curves. Find the actuator temperature corresponding to the required evaporating temperature (push). Set the value in the controller as mentioned under "Set the valve's basic temperature reference".

With external signal
If the valve is to be operated with an external signal, two settings have to be made. One is as mentioned to the left, and the other determines how much the signal must be able to raise the temperature in the valve. This value is also read on one of the following curves.
Set the value in the r06 menu.
If the set value is too low, the valve will not be able to close / open fully.

CVQ

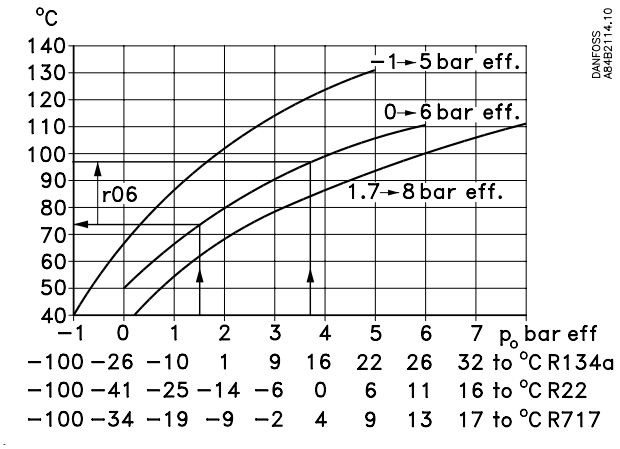

KVQ

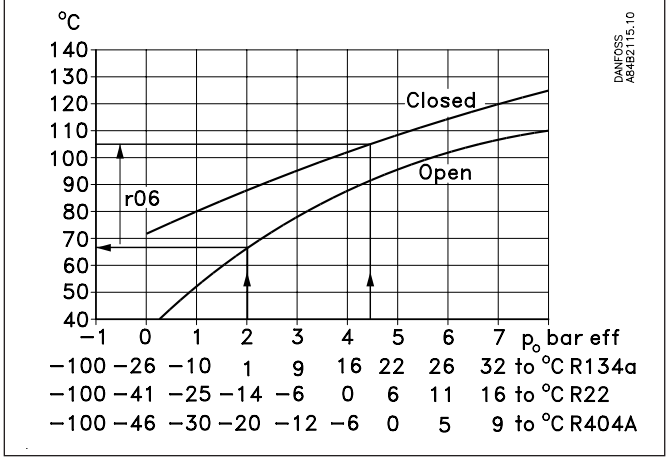

TQ

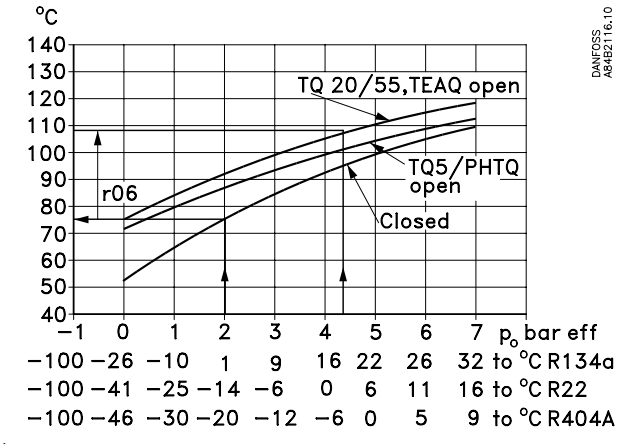

All the curves shown are approximate.

CVMQ

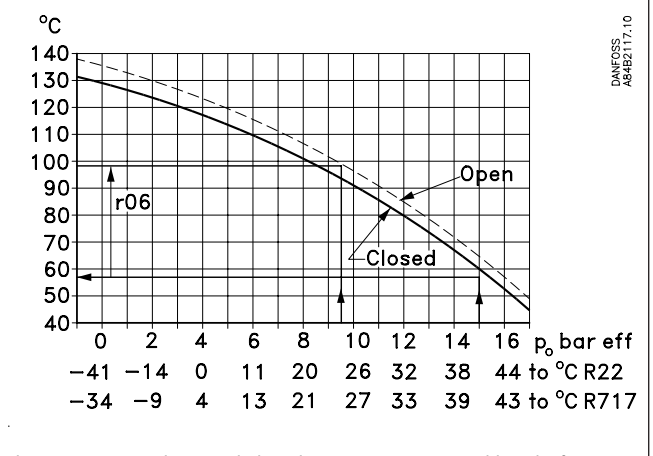

The two curves are shown with the valve's spring setting equal-ling the factory setting. If the spring setting is changed to a higher pressure, the curve will be displaced correspondingly to a higher temperature.

Example
CVQ type = 0 – 6 bar
Refrigerant = R_{717}
A constant evaporating temperature or input pressure to the valve of -9 °C (2 bar) is required.
According to the CVQ curve this will require a temperature in the actuator of 80 °C.
Set the valve's basic temperature reference at 80 °C.

When the valve has reached its working temperature, it may be necessary to fine-adjust the setting from the system's manometer.

Data

Supply voltage	24 V AC ±15% 50 / 60 Hz, 80 VA (the supply voltage is galvanically separated from the input and output signals)	
Power consumption	Controller Valve	5 VA 75 VA
Input signal	4 – 20 mA, 0 – 20 mA, 0 – 10V DC or 2 – 10 V DC	
Actuator	Input	Temperature signal from sensor in actuator
	Output	Pulsating 24 V AC to actuator
Data communication	Possible to connect a data communication module	
Ambient temperature	During operation During transport	-10 – 55°C -40 – 70°C
Enclosure	IP 20	
Weight	300 g	
Mounting	DIN rail	
Display	LED, 3 digits	
Terminals	max. 2.5 mm² multicore	
Approvals	EU Low Voltage Directive and EMC demands re CE-marking complied with. LVD-tested acc. to EN 60730-1 and EN 60730-2-9 EMC-tested acc. to EN 50081-1 and EN 50082-2	

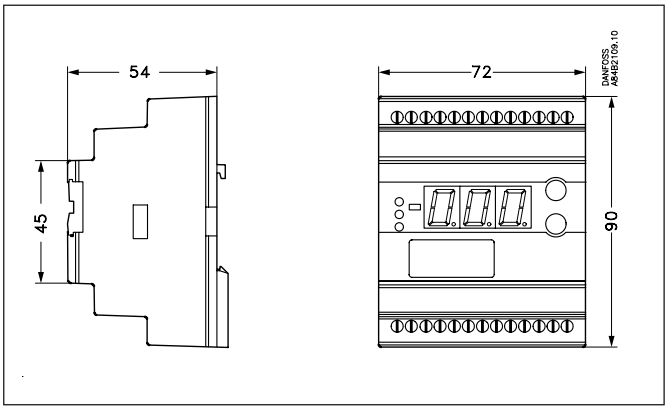

Ordering

Type	Function	Code No.
EKC 366	Interface module	**084B7076**
EKA 174	Data communication module (accessories), (RS 485 module) with galvanic separation	**084B7124**

Valves: Kindly refer to catalogue AF151486422482

Connections

Necessary connections
Terminals:
25 – 26 Supply voltage 24 V AC 80 VA
17 – 18 Signal from NTC sensor in valve
23 – 24 Supply to valve's PTC resistance

Control signal, if applicable (see also o10)
Either terminals:
15 – 16 Voltage signal
or
18 – 19 Current signal

Data communication, if applicable
Terminals:
3 – 4 Mount only, if a data communication module has been mounted.
It is important that the installation of the data communication cable be done correctly. Cf. separate literature No. AN234886440486

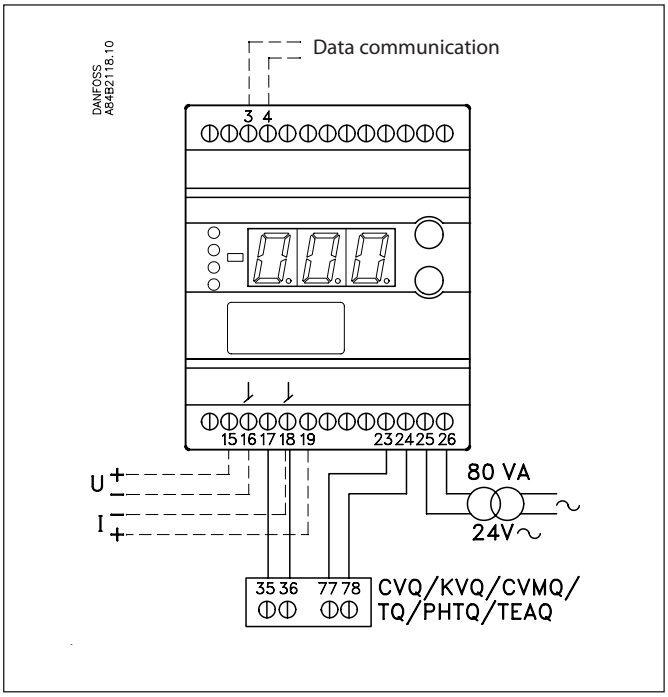

Data communication

This page contains a description of a few of the possibilities you will have when the controller is provided with data communication.

If you want to know more about operation of controllers via PC, you may order additional literature.

Examples

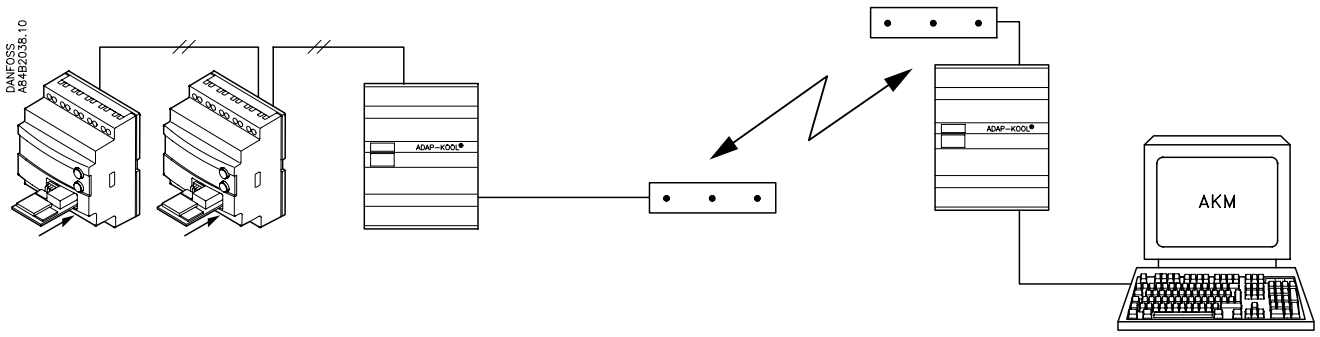

Each controller is provided with a plug-in module.

The controllers are then connected to a two-core cable.

Up to 60 controllers may be connected to one cable.

This cable is also connected to a gateway type AKA 243.

This gateway will now control the communication to and from the controllers.

It will collect temperature values and it will receive alarms. When there is an alarm the alarm relay will be activated for two minutes

The gateway can now be connected to a modem.

When an alarm occurs from one of the controllers, the gateway will - via the modem - make a phone call to the service company.

At the service company a modem, gateway and PC with system software type AKM have been installed.

All the controllers' functions can now be operated from the various menu displays.

The programme will for example upload all the collected temperature values once a day.

Example of menu display

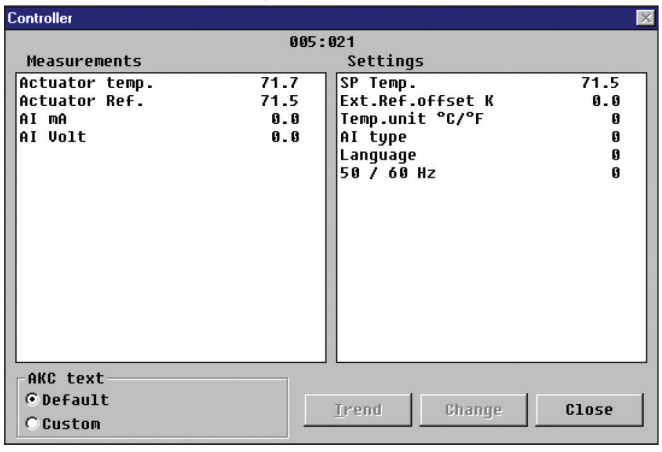

Measurements are shown at one side and settings at the other.

You will also be able to see the parameter names of the functions on page 1027.

With a simple change-over the values can also be shown in a trend diagram.

If you prefer to see the earlier temperature measurements, you may upload a log collection.

Alarms

If the controller is extended with data communication, it will be possible to define the importance of the transmitted alarms.
The importance is defined with the setting: 1, 2, 3 or 0. When the alarm then arises at some time, it will result in one of the following activities:

1 = Alarm
The alarm message is sent off with alarm status 1. This means that the gateway that is the master in the system will have its alarm relay output activated for two minutes. Later, when the alarm ceases, the alarm text will be retransmitted, but now with status value 0.

2 = Message
The alarm text is transmitted with status value 2. Later, when the "message" lapses, the alarm text is retransmitted, but now with status value 0.

3 = Alarm
As "1", but the master gateway's relay output is not activated.

0 = Suppressed information
The alarm text is stopped at the controller. It is transmitted nowhere.

ENGINEERING
TOMORROW

Superheat controller
EKC 315A

Contents **Page**

Advantages 1035
Introduction 1036
Operation 1037
Survey of functions 1038
Operation 1042
Menu survey 1042
Data 1044
Connections 1044
Ordering 1044
Installation considerations 1045
Start of controller 1047
If the superheating fluctuates 1047
If the superheat has excessive underswing during start-up 1047

BC153186428422en-000201 | 2015.03

ENGINEERING TOMORROW

Superheat controller
EKC 315A



The controller and valve can be used where there are requirements to accurate control of superheat and temperature in connection with refrigeration.
E.g.:
- Cold store (air coolers)
- Processing plant (water chillers)
- A/C plant

Advantages

- The evaporator is charged optimally – even when there are great variations of load and suction pressure
- Energy savings – the adaptive regulation of the refrigerant injection ensures optimum utilisation of the evaporator and hence a high suction pressure
- Exact temperature control – the combination of adaptive evaporator and temperature control ensures great temperature accuracy for the media
- The superheating is regulated to the lowest possible value at the same time as the media temperature is controlled by the thermostat function

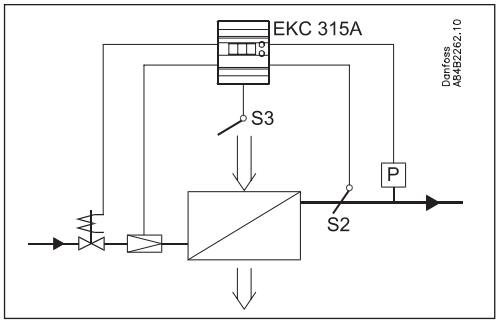

Introduction

Functions
- Regulation of superheat
- Temperature control
- MOP function
- ON / OFF input for start / stop of regulation
- Input signal that can displace the superheat reference or the temperature reference
- Alarm if the set alarm limits are exceeded
- Relay output for solenoid valve
- PID regulation
- Output signal following the temperature showing in the display

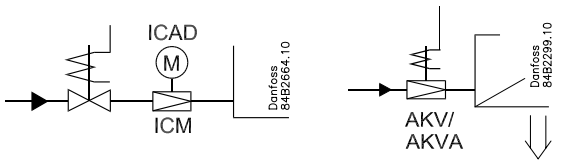

Water chiller application | Air cooler application

System
The superheat in the evaporator is controlled by one pressure transmitter P and one temperature sensor S2.
The valve can be one of the following types:
- ICM
- AKV (AKVA)

ICM is an electronically, directly run engine valve, controlled by an ICAD type actuator. It is used with a solenoid valve in the liquid line.
TQ valve
The controller can also control a TQ type valve. This valve has been discontinued from the product range, but the settings are still described in this manual.
AKV is a pulsating valve.
Where the AKV valve is used it also functions as solenoid valve.
Temperature control is performed based on a signal from temperature sensor S3 which is placed in the air current before the evaporator. Temperature control is in the shape of an ON / OFF thermostat that shuts off the liquid flow in the liquid line.

Operation

Superheat function
You may choose between two kinds of superheat, either:
- Adaptive superheat or
- Load-defined superheat

MOP
The MOP function limits the valve's opening degree as long as the evaporating pressure is higher than the set MOP value.

Override function
Via the analog input a displacement can be made of the temperature reference or of the superheat reference. The signal can either be a 0 – 20 mA signal or a 4 – 20 mA signal. The reference can be displaced in positive or negative direction.

External start / stop of regulation
The controller can be started and stopped externally via a contact function connected to input terminals 1 and 2. Regulation is stopped when the connection is interrupted. The function must be used when the compressor is stopped. The controller then closes the solenoid valve so that the evaporator is not charged with refrigerant.

Relays
The relay for the solenoid valve will operate when refrigeration is required. The relay for the alarm function works in such a way that the contact is cut-in in alarm situations and when the controller is de-energised.

Modulating / pulsating expansion valve
In 1:1 systems (one evaporator, one compressor and one condenser) with small refrigerant charge ICM is recommended.

In a system with an AKV valve the capacity can be distributed by up to three valves if slave modules are mounted. The controller will displace the opening time of the AKV valves, so that they will not pulsate at the same time.
Used as slave module is a controller of the type EKC 347.

Analog output
The controller is provided with an analog current output which can be set to either 0 – 20 mA or 4 – 20 mA. The signal will either follow the superheat, opening degree of the valve or the air temperature.
When an ICM valve is in use, the signal is used for control of the valve via the ICAD actuator.

PC operation
The controller can be provided with data communication so that it can be connected to other products in the range of ADAP-KOOL® refrigeration controls. In this way operation, monitoring and data collection can be performed from one PC – either on the spot or in a service company.

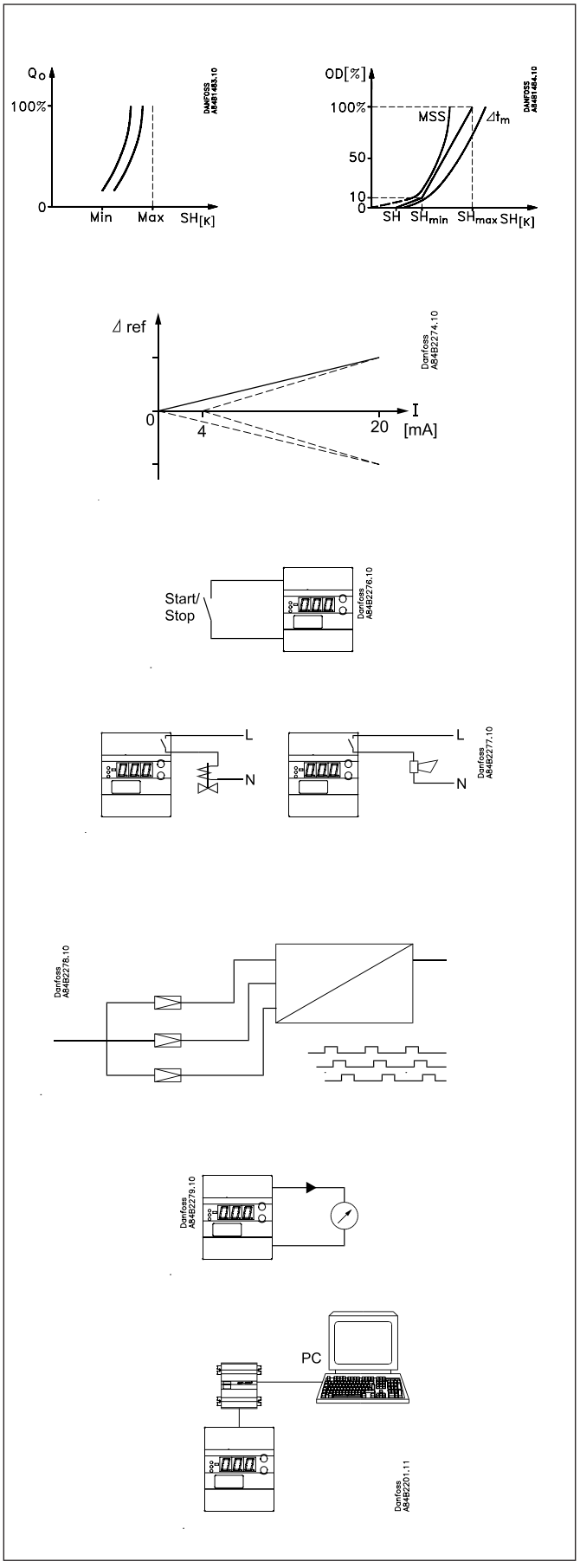

Survey of functions

Function	Para-meter	Parameter by operation via data communication
Normal display		
Normally the superheat is shown (but the valve's opening degree or air temperature may also be selected. See o17).		SH / OD% / S3 temp
Reference		
Se point Regulation is performed based on the set value provided that there is no external contribution (o10). (Push both buttons simultaneously to set the setpoint).	-	TempSetpoint.
Differential When the temperature is higher than the reference plus the set differential, the solenoid valve's relay will be activated. It will become deactivated when the temperature drops below the set reference. 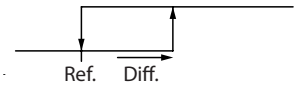 	r01	Differential
Unit Here you select whether the controller is to indicate the temperature values in °C or in °F. If indication in °F is selected, other temperature settings will also change over to Fahrenheit, either as absolute values or as delta values The combination of temperature unit and pressure unit is depicted to the right.	r05	Units 0: °C + bar 1: °F + psig (in AKM only °C + bar – is displayed – whatever the setting).
External contribution to the reference This setting determines how large a contribution is to be added to the set setpoint when the input signal is max. (20 mA). See o10.	r06	ExtRefOffset
Correction of signal from S2 (Compensation possibility through long sensor cable).	r09	Adjust S2
Correction of signal from S3 (Compensation possibility through long sensor cable).	r10	Adjust S3
Start / stop of refrigeration With this setting refrigeration can be started and stopped. Start / stop of refrigeration can also be accomplished with the external switch function. See also appendix 1.	r12	Main Switch
Define thermostat function 0: No thermostat function. Only the superheat is regulated 1: Thermostat function as well as regulation of superheat.	r14	Therm. Mode
Alarm		
The controller can give alarm in different situations. When there is an alarm all the light-emitting diodes (LED) will flash on the controller front panel, and the alarm relay will cut in.		
Alarm for upper deviation The alarm for too high S3 temperature is set here. The value is set in Kelvin. The alarm becomes active when the S3 temperature exceeds the actual reference plus A01. (The actual reference can be seen in u28).	A01	Hgh.TempAlrm
Alarm for lower deviation The alarm for too low S3 temperature is set here. The value is set in Kelvin. The alarm becomes active when the S3 temperature drops below the actual reference minus A02.	A02	Low.TempAlrm
Alarm delay If one of the two limit values is exceeded, a timer function will commence. The alarm will not become active until the set time delay has been passed. The time delay is set in minutes.	A03	TempAlrmDel
		With data communication the importance of the individual alarms can be defined. Setting is carried out in the "Alarm destinations" menu.

Control parameters		
P: Amplification factor Kp If the Kp value is reduced the regulation becomes slower.	n04	Kp factor
I: Integration time Tn If the Tn value is increased the regulation becomes slower	n05	Tn sec.
D: Differentiation time Td The D-setting can be cancelled by setting the value to min. (0).)	n06	Td sec.
Max. value for the superheat reference	n09	Max SH
Min. value for the superheat reference Warning! Due to the risk of liquid flow the setting should not be lower than approx. 2 – 4 K.	n10	Min SH
MOP If no MOP function is required, select pos. Off.	n11	MOP (Bar) (A value of 60 bar corresponds to Off)
AKV valve's time period in seconds Should only be set to a lower value if it is a decentralised plant and the suction pressure fluctuates a lot and in line with the opening of the AKV valve.	n13	AKV per. time
Stability factor for regulation of superheat With a higher value the control function will allow a greater fluctuation of the superheat before the reference is changed. The value should only be changed by specially trained staff.	n18	Stability
Damping of amplification near reference value This setting damps the normal amplification Kp, but only just around the reference value. A setting of 0.5 will reduce the KP value by half. The value should only be changed by specially trained staff.	n19	Kp Min
Amplification factor for the superheat (only in 1:1 plant) This setting determines the ICM or AKV valve's opening degree as a function of the change in evaporating pressure. An increase of the evaporating pressure will result in a reduced opening degree. When there is a drop-out on the low-pressure thermostat during start-up the value must be raised a bit. If there is pendling during start-up the value must be reduced a little. The value should only be changed by specially trained staff.	n20	Kp T0
Definition of superheat regulation (Ref. appendix 6) 1: Lowest permissible superheat (MSS). Adaptive regulation. 2: Load-defined superheat. The reference is established based on the line formed by the three points: n09, n10 and n22.	n21	SH mode
Value of min. superheat reference for loads under 10% (The value must be smaller than "n10").	n22	SH Close
Standby temperature when valve closed (TQ only) The TQ actuator is kept warm when the valve reaches its closing point. As the closing point cannot be defined completely accurately due to tolerances and pressure variations, the setting can be changed, as required (how "tightly"/securely the valve is to close). See also appendices 1 and 5.	n26	TQ Kmin
Standby temperature when valve open (TQ only) The TQ actuator's temperature is kept low when the valve reaches its fully open position. Here you set how many degrees the temperature is to be above the expected open temperature in completely open position. The greater the value, the surer it is that the valve will be open, but it will also react more slowly when it has to close again.	n27	TQ Kmax
Max. opening degree The ICM or AKV valve's opening degree can be limited. The value is set in %. The value should only be changed by specially trained staff.	n32	OD Max
Min. opening degree The ICM or AKV valve's opening degree can be set to a specified min. value, disabling full closure. The value should only be changed by specially trained staff.	n33	OD Min

Miscellaneous		
Address If the controller is built into a network with data communication, it must have an address, and the master gateway of the data communication must then know this address. These settings can only be made when a data communication module has been mounted in the controller and the installation of the data communication cable has been completed. This installation is mentioned in a separate document AN234886440486		Following installation of a data communication module, the controller can be operated on a par with the other controllers in ADAP-KOOL® refrigeration controls.
The address is set between 0 and 119	o03	-
The address is sent to the gateway when the menu is set in pos. ON (The setting will automatically change back to Off after a few seconds.)	o04	-
Valve and output signal Define here the valve that is to regulate and the current signal to be transmitted to the analog output "AO". The current signal will show the superheat if o17=1. Or opening degree of the valve, if O17=2. Or the S3 temperature if o17=3 0:Off 1: TQ valve and 0 – 20 mA 2: TQ valve and 4 – 20 mA 3: AKV valve and 0 – 20 mA 4: AKV valve and 4 – 20 mA 5: AKV valve and signal for an other controller. See appendix 3. 6: ICM and ICM OD% /0 – 20 mA 7: ICM and ICM OD% /4 – 20 mA	o09	Valve / AO type
Input signal for reference displacement Definition of function and signal range. 0: No signal 1: Displacement of temperature reference with 0 – 20 mA 2: Displacement of temperature reference with 4 – 20 mA 3: Displacement of superheat reference with 0 – 20 mA 4: Displacement of superheat reference with 4 – 20 mA (4 or 0 mA will not give a displacement. 20 mA will displace the reference by the value set in menu r06)	o10	AI A type
Frequency Set the net frequency.	o12	50 / 60 Hz (50=0, 60=1)
Select signal for showing display Here you can select the signal to be shown in the normal display. The signal is also transmitted to the analog output. See O09. 1: Superheat 2: Valve's opening degree 3: Air temperature (If you during operation give the lower button a brief push, you can see the following: The S3 temperature, if 1 has been selected. The superheat, if 2 has been selected. Temperature reference if 3 has been selected).	o17	Display mode
Manual control of outputs For service purposes the individual relay outputs and the AKV/A output can be forced into position ON. However only when regulation has been stopped. OFF: No override 1: Relay to the solenoid valve is ON. 2: AKV/A output is ON. 3: Alarm relay is activated (connection established between terminals 12 and 13).	o18	-
Working range for pressure transmitter Depending on the application a pressure transmitter with a given working range is used. This working range (say, -1 – 12 bar) must be set in the controller. The min. value is set.	o20	MinTrans Pres.
The max. value is set	o21	Max TransPres.
(Setting for the function o09 and only if the valve is TQ or AKV) Set the temperature value or opening degree of the valve where the output signal must be minimum (0 or 4 mA)	o27	AO min. value
(Setting for the function o09 and only if the valve is TQ or AKV) Set the temperature value or opening degree of the valve where the output signal must be maximum (20 mA). (With a temperature range of 50 K (differential between the settings in o27 and o28) the dissolution will be better than 0.1 K. With 100 K the dissolution wil be better than 0.2 K.)	o28	AO max. value

Refrigerant setting Before refrigeration can be started, the refrigerant must be defined. You can select the following refrigerants: 1=R12. 2=R22. 3=R134a. 4=R502. 5=R717. 6=R13. 7=R13b1. 8=R23. 9=R500. 10=R503. 11=R114. 12=R142b. 13=User defined. 14=R32. 15=R227. 16=R401A. 17=R507. 18=R402A. 19=R404A. 20=R407C. 21=R407A. 22=R407B. 23=R410A. 24=R170. 25=R290. 26=R600. 27=R600a. 28=R744. 29=R1270. 30=R417A. 31=R422A. 32=R413A. 33=R422D. 34=R427A. 35=R438A (Warning: Wrong selection of refrigerant may cause damage to the compressor).	o30	Refrigerant
Service		
A number of controller values can be printed for use in a service situation		
Read valve's actuator temperature (TQ)	u04	Actuator temp.
Read reference for valve's actuator temperature (TQ)	u05	Actuator Ref.
Read value of external current signal (AIA)	u06	AI A mA
Read value of transmitted current signal	u08	AO mA
Read status of input DI (start / stop input)	u10	DI
Read the ongoing cutin time for the thermostat or the duration of the last completed cutin	u18	Ther. RunTime
Read the temperature at the S2 sensor	u20	S2 temp.
Read superheat	u21	SH
Read the control's actual superheat reference	u22	SH ref.
Read the valve's opening degree	u24	OD%
Read evaporating pressure	u25	Evap. pres. Pe
Read evaporating temperature	u26	Evap. temp Te
Read the temperature at the S3 sensor	u27	S3 temp.
Read control reference (Set setpoint + any contribution from external signal)	u28	Temp. ref
Read value of current signal from pressure transmitter (AIB)	u29	AI B mA
	--	DO1 Alarm Read status of alarm relay
	--	DO2 Liq. Valv Read status of relay for solenoid valve
Operating status		
The controller's operating status can be called forth by a brief (1s) activation of the upper button. If a status code exists it will be shown. (Status codes have lower priority than alarm codes. This means that status codes cannot be seen if there is an active alarm code. The individual status codes have the following meanings:		EKC State (0 = regulation)
S10: Refrigeration stopped by the internal or external start/ stop.		10
S11: Thermostat is cutout		11

Operation

Display

The values will be shown with three digits, and with a setting you can determine whether the temperature are to be shown in °C or in °F.

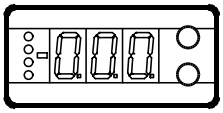

Light-emitting diodes (LED) on front panel

There are LED's on the front panel which will light up when the belonging relay is activated.
The upper LED will indicate the valve's opening degree. A short pulse indicates a small liquid flow and a long pulse a heavy liquid flow. The other LED will indicate when the controller calls for refrigeration.
The three lowermost LED's will flash, if there is an error in the regulation.
In this situation you can upload the error code on the display and cancel the alarm by giving the uppermost button a brief push.

The buttons

When you want to change a setting, the two buttons will give you a higher or lower value depending on the button you are pushing. But before you change the value, you must have access to the menu. You obtain this by pushing the upper button for a couple of seconds - you will then enter the column with parameter codes. Find the parameter code you want to change and push the two buttons simultaneously. When you have changed the value, save the new value by once more pushing the two buttons simultaneously.

 Gives access to the menu (or cutout an alarm)

 Gives access to changes

 Saves a change

Examples of operations

Set set-point
1. Push the two buttons simultaneously
2. Push one of the buttons and select the new value
3. Push both buttons again to conclude the setting

Set one of the other menus
1. Push the upper button until a parameter is shown
2. Push one of the buttons and find the parameter you want to change
3. Push both buttons simultaneously until the parameter value is shown
4. Push one of the buttons and select the new value
5. Push both buttons again to conclude the setting

Menu survey

SW =1.4x

Function	Para-meter	Min.	Max.	Factory setting
Normal display				
Shows the actual superheat / valve's opening degree / temperature Define view in o17	–		K	
Temperature, superheating, or the temp. reference is displayed if the bottom button is pressed briefly. Define view in o17	–		%	
Reference				
Set the required set point	-	-60 °C	50 °C	10
Differential	r01	0.1 K	20 K	2.0
Units (0=°C+bar / 1=°F+psig)	r05	0	1	0
External contribution to the reference	r06	-50 K	50 K	0
Correction of signal from S2	r09	-50.0 K	50.0 K	0.0
Correction of signal from S3	r10	-50.0 K	50.0 K	0.0
Start / stop of refrigeration	r12	OFF	On	0
Define thermostat function (0= no thermostat function, 1=On/off thermostat)	r14	0	1	0
Alarm				
Upper deviation (above the temperature setting)	A01	3.0 K	20 K	5.0
Lower deviation (below the temperature setting)	A02	1 K	10 K	3.0
Alarm's time delay	A03	0 min.	90 min.	30
Regulating parameters				
P: Amplification factor Kp	n04	0.5	20	3.0
I: Integration time T	n05	30 s	600 s	120
D: Differentiation time Td (0 = off)	n06	0 s	90 s	0
Max. value of superheat reference	n09	2 K	50 K	6
Min. value of superheat reference	n10	1 K	12 K	4
MOP (max = off)	n11	0.0 bar	60 bar	60
Period time (only when AKV/A valve is used)	n13	3 s	10 s	6
Stability factor for superheat control. Changes should only be made by trained staff	n18	0	10	5
Damping of amplification around reference value Changes should only be made by trained staff	n19	0.2	1.0	0.3
Amplification factor for superheat Changes should only be made by trained staff	n20	0.0	10.0	0.4
Definition of superheat control 1=MSS, 2=LOADAP	n21	1	2	1
Value of min. superheat reference for loads under 10%	n22	1	15	2
Standby temperature when valve closed (TQ valve only) Changes should only be made by trained staff	n26	0 K	20 K	0
Standby temperature when valve open (TQ valve only) Changes should only be made by trained staff	n27	-15 K	70 K	20
Max. opening degree Changes should only be made by trained staff	n32	0	100	100
Min. opening degree Changes should only be made by trained staff	n33	0	100	0
Miscellaneous				
Controller's address	o03*	0	119	-
ON/OFF switch (service-pin message)	o04*	-	-	-
Define valve and output signal: 0: Off 1: TQ. AO: 0 – 20 mA 2: TQ. AO: 4 – 20 mA 3: AKV, AO: 0 – 20 m 4: AKV, AO: 4 – 20 mA 5: AKV, AO: EKC 347 – SLAVE 6: ICM, AO: 0 – 20 mA / ICM OD% 7: ICM, AO: 4 – 20 mA / ICM OD%	o09	0	7	0

Define input signal on the analog input AIA: 0: no signal, 1: Temperature setpoint. 0 – 20 mA 2: Temperature setpoint. 4 – 20 mA 3: Displacement of superheat reference. 0 – 20 mA 4: Displacement of superheat reference. 4 – 20 mA	o10	0	4	0
Set supply voltage frequency	o12	50 Hz	60 Hz	0
Select display for "normal picture" (Display the item indicated in parenthesis by briefly pressing the bottom button) 1: Superheat (Temperature) 2: Valve's opening degree (Superheat) 3: Air temperature (Temperature reference)	o17	1	3	1
Manual control of outputs: OFF: no manual control 1: Relay for solenoid valve: select ON 2: AKV/A output: select ON 3: Alarm relay activated (cut out)	o18	off	3	Off
Working range for pressure transmitter – min. value	o20	-1 bar	60 bar	-1.0
Working range for pressure transmitter – max. value	o21	-1 bar	60 bar	12
(Setting for the function o09, only AKV and TQ) Set the temperature value or opening degree where the output signal must be minimum (0 or 4 mA)	o27	-70°C	160°C	-35
(Setting for the function o09, only AKV and TQ) Set the temperature value or opening degree where the output signal must be maximum (20 mA)	o28	-70°C	160°C	15
Refrigerant setting 1=R12. 2=R22. 3=R134a. 4=R502. 5=R717. 6=R13. 7=R13b1. 8=R23. 9=R500. 10=R503. 11=R114. 12=R142b. 13=User defined. 14=R32. 15=R227. 16=R401A. 17=R507. 18=R402A. 19=R404A. 20=R407C. 21=R407A. 22=R407B. 23=R410A. 24=R170. 25=R290. 26=R600. 27=R600a. 28=R744. 29=R1270. 30=R417A. 31=R422A. 32=R413A. 33=R422D. 34=R427A. 35=R438A	o30	0	35	0
Service				
TQ valve's actuator temperature	u04			°C
Reference of the valve's actuator temperature	u05			°C
Analog input AIA (18 – 19)	u06			mA
Analog output AO (2 – 5)	u08			mA
Read status of input DI	u10			on/off
Thermostat cut-in time	u18			min.
Temperature at S2 sensor	u20			°C
Superheat	u21			K
Superheat reference	u22			K
Read AKV valve's opening degree	u24			%
Read evaporating pressure	u25			bar
Read evaporating temperature	u26			°C
Temperature at S3 sensor	u27			°C
Temperature reference	u28			°C
Read signal at pressure transmitter input	u29			mA

*) This setting will only be possible if a data communication module has been installed in the controller.

The controller can give the following messages:		
E1	**Error message**	Fault in controller
E11		Valve's actuator temperature outside its range
E15		Cut-out S2 sensor
E16		Shortcircuited S2 sensor
E17		Cut-out S3 sensor
E18		Shortcircuited S3 sensor
E19		The input signal on terminals 18-19 is outside the range.
E20		The input signal on terminals 14-15 is outside the range (P0 signal)
A1	**Alarm message**	High-temperature alarm
A2		Low-temperature alarm
A11		No refrigerant has been selected

Factory setting
If you need to return to the factory-set values, it can be done in this way:
- Cut out the supply voltage to the controller
- Keep both buttons depressed at the same time as you reconnect the supply voltage

Data

Supply voltage	24 V AC ±15% 50 / 60 Hz, (80 VA) (the supply voltage is galvanically separated from the input and output signals)	
Power consumption	Controller TQ actuator AKV coil	5 VA 75 VA 55 VA
Input signal	Current signal	4 – 20 mA or 0 – 20 mA
	Pressure transmitter	4 – 20 mA from AKS 33
	Digital input from external contact function	
Sensor input	2 pcs. Pt 1000 ohm	
Output signal	Current signal	4 – 20 mA or 0 – 20 mA
	Load	Max. 200 ohm
Relay output	1 pcs. SPST	250 V AC AC-1: 4 A (ohmic) AC-15: 3 A (inductive)
Alarm relay	1 pcs. SPST	
Actuator	Input (from TQ)	Temperature signal from sensor in the TQ actuator
	Output (AKV, TQ)	Pulsating 24 V AC to actuator
	Output ICAD mounted on ICM	Current signal 4 – 20 mA or 0 – 20 mA
Data communication	Possible to connect a data communication module	
Environments	0 – 55 °C, during operations -40 – 70 °C, during transport	
	20 – 80% Rh, not condensed	
	No shock influence / vibrations	
Enclosure	IP 20	
Weight	300 g	
Mounting	DIN rail	
Display	LED, 3 digits	
Terminals	max. 2.5 mm² multicore	
Approvals	EU Low Voltage Directive and EMC demands re CE-marking complied with. LVD-tested acc. to EN 60730-1 and EN 60730-2-9 EMC-tested acc. to EN50081-1 and EN 50082-2	

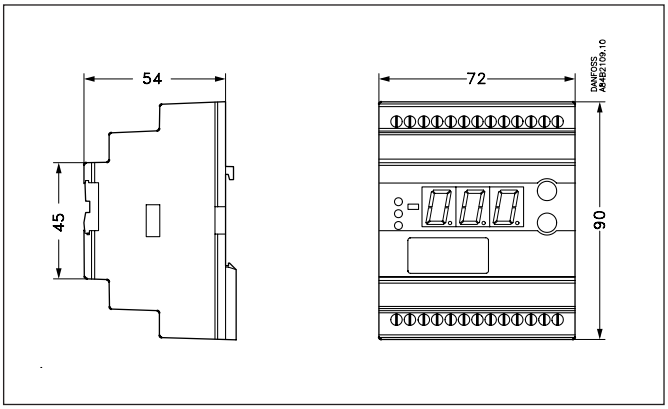

Ordering

Type	Function	Code no.
EKC 315A	Superheat controller	**084B7086**
EKA 175	Data communication module (accessories), (RS 485 module)	**084B7093**
EKA 174	Data communication module (accessories), (RS 485 module) with galvanic separation	**084B7124**

Temperature sensor Pt 1000 ohm / Pressure transmitter type AKS 33 / TQ
Valves / AKV valves: ....Kindly refer to catalogue AF151486422482
ICM/ICAD valves: .....Kindly refer to AI236186442940

Connections

Necessary connections
Terminals:
25 – 26 Supply voltage 24 V AC
17 – 18 Only at TQ actuator: Signal from actuator
20 – 21 Pt 1000 sensor at evaporator outlet (S2)
14 – 15 Pressure transmitter type AKS 33
9 – 10 Relay switch for start / stop of solenoid valve
1 – 2 Switch function for start / stop of regulation. If a switch is not connected, terminals 1 and 2 must be shortcircuited.

Application dependent connections
Terminals:
21 – 22 Pt 1000 sensor for measuring air temperature (S3)
12 – 13 Alarm relay
There is connection between 12 and 13 in alarm situations and when the controller is dead
18 – 19 Current signal from other regulation (Ext.Ref.)
23 – 24 Supply to actuator AKV / TQ
2 – 5 Current output for showing superheat or air temperature. Or for signal to a slave module. Or control from ICM valve.
3 – 4 Data communication
Mount only, if a data communication module has been mounted.
It is important that the installation of the data communication cable be done correctly. Cf. separate literature No. AN234886440486

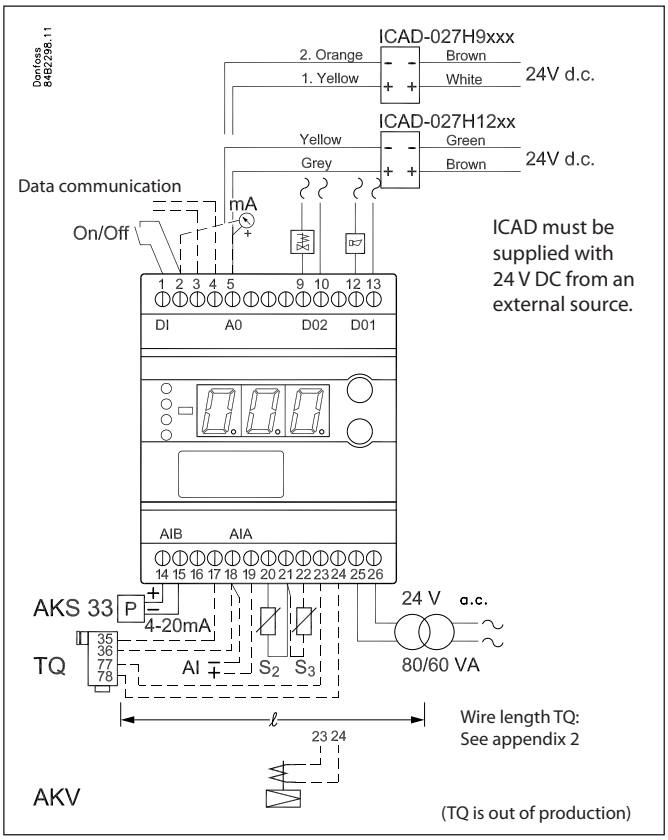

Installation considerations

Accidental damage, poor installation, or site conditions, can give rise to malfunctions of the control system, and ultimately lead to a plant breakdown.
Every possible safeguard is incorporated into our products to prevent this. However, a wrong installation, for example, could still present problems. Electronic controls are no substitute for normal, good engineering practice.

Danfoss wil not be responsible for any goods, or plant components, damaged as a result of the above defects. It is the installer's responsibility to check the installation thoroughly, and to fit the necessary safety devices.
Particular attention is drawn to the need for a "force closing" signal to controllers in the event of compressor stoppage, and to the requirement for suction line accumulators.

Your local Danfoss agent will be pleased to assist with further advice, etc.

Appendix 1

Interaction between internal and external start / stop functions and active functions.

Internal Start / stop	Off	Off	On	On
External Start / stop (DI)	Off	On	Off	On
Refrigeration (DO2)	Off			On
TQ actuator	Standby temperature			Regulating
Expansion valve relay	Off			On
Temperature monitoring	No			Yes
Sensor monitoring	Yes			Yes
ICM	Closed			Regulating

Appendix 2

Cable length for the TQ actuator
The actuator must be supplied with 24 V AC ± 10%.
To avoid excessive voltage loss in the cable to the actuator, use a thicker cable for large distances.

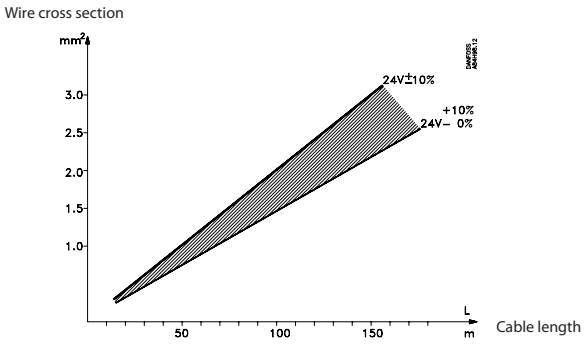

Appendix 3

If the flow of refrigerant is to be distributed to several expansion valves, this can be accomplished by using AKV valves and EKC controllers as slave modules.

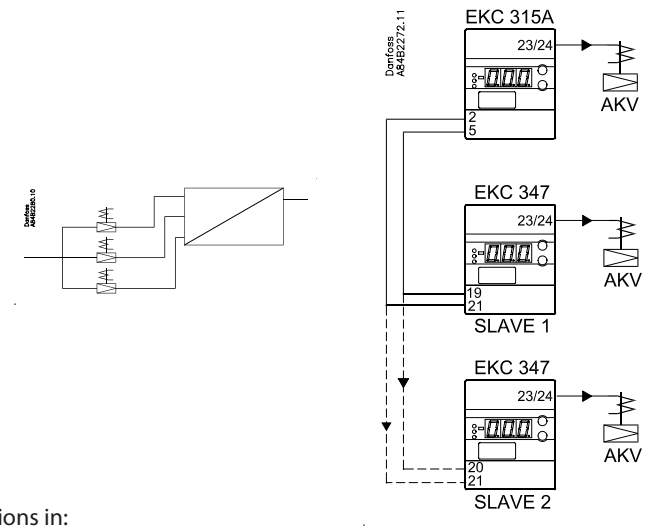

Remember to open the functions in:
- EKC 315A's menu o09
- EKC 347's menu o09

Appendix 5

Standby temperatures for TQ valves.

TQ valve
The valve's actuator temperature is limited, both when regulation is stopped and when the valve is right out at the opening point and closing point.
(The opening and closing points may fluctuate a couple of degrees up or down, depending on pressures and tolerances).

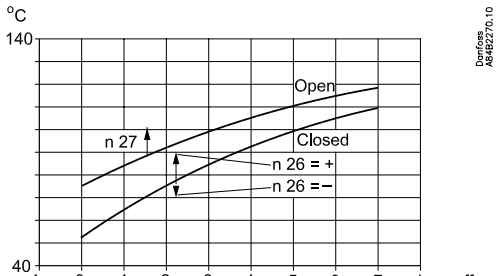

n26
The setting is based on the TQ valve's closing curve. With a plus value the valve can be kept slightly open. With a minus value the valve can be closed completely. If the minus value is high you can be sure that the valve will close, but then it will also react slowly when it has to open again.

n27
This setting defines the number of degrees the actuator has to be warmer when the valve is completely open. If the value is high you can be sure that the valve is completely open, but then it will also react slowly when it has to close again.

Appendix 6

The two types of regulation for superheat are, as follows:

Adaptive superheat

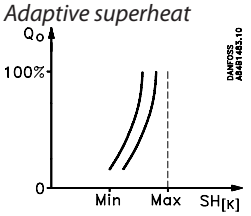

Regulation is here based on the evaporator's load by means of MSS search (MSS = lowest permissible superheat).
(The superheat reference is lowered to the exact point where instability sets in).
The superheat is limited by the settings for min.and max. superheat.

Load-defined superheat

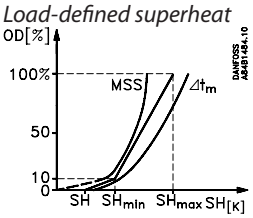

The reference follows a defined curve.This curve is defined by three values: the closing value, the min. value and the max. value. These three values must be selected in such a way that the curve is situated between the MSS curve and the curve for average temperature difference ΔTm (temperature difference between media temperature and evaporating temperature. Setting example = 4, 6 and 10 K).

Start of controller

When the electric wires have been connected to the controller, the following points have to be attended to before the regulation starts:

1. Switch off the external ON / OFF switch that starts and stops the regulation.
2. Follow the menu survey on page 1042, and set the various parameters to the required values.
3. Switch on the external switch, and regulation will start.
4. Follow the actual room temperature or superheat on the display.
   (On terminals 2 and 5 a current signal can be transmitted which represents the display view. Connect a data collection unit, if applicable, so that the temperature performance can be followed).

If the superheating fluctuates

When the refrigerating system has been made to work steadily, the controller's factory-set control parameters should in most cases provide a stable and relatively fast regulating system.
If the system however fluctuates this may be due to the fact that too low superheat parameters have been selected:

If adaptive superheat has been selected:
Adjust: n09, n10 and n18.

If load-defined superheat has been selected:
Adjust: n09, n10 and n22.

Alternatively it may be due to the fact that the set regulation parameters are not optimal.

If the time of oscillation is longer than the integration time:
($T_p > T_n$, (T_n is, say, 240 seconds))
1. Increase T_n to 1.2 times T_p
2. Wait until the system is in balance again
3. If there is still oscillation, reduce K_p by, say, 20%
4. Wait until the system is in balance
5. If it continues to oscillate, repeat 3 and 4

If the time of oscillation is shorter than the integration time:
($T_p < T_n$, (T_n is, say, 240 seconds))
1. Reduce K_p by, say, 20% of the scale reading
2. Wait until the system is in balance
3. If it continues to oscillate, repeat 1 and 2.

If the superheat has excessive underswing during start-up

If you regulate with valve type ICM or AKV:
Adjust n22 a little bit up and / or n04 a little bit down.

If you regulate with valve type TQ:
Adjust n26 a littlle bit down

ENGINEERING
TOMORROW

Temperature controller
EKC 319A

Contents **Page**

System 1051
Temperature sensor 1051
Valve 1051
Alarm function 1051
Extra options 1052
Survey of functions 1053
Operation 1055
Menu survey 1055
Connnections 1056
Data 1056
Ordering 1056
Data communication 1057

BC000086420244en-000101 | 2005.09

ENGINEERING TOMORROW

Temperature controller
EKC 319A



The controller limits the pressure gas temperature in compressors by opening up for liquid injection in the suction line.

System

A temperature sensor will register the pressure gas temperature.
If the temperature reaches the set temperature value, opening of the valve will be commenced.
A PI regulation will adapt the opening degree of the valve so that the temperature will be limited.

Temperature sensor

Type AKS 21 can be used. It can stand the high temperature.

Valve

If the liquid injection is carried out directly in the suction line an expansion valve type AKV, or a type AKVA (for NH_3), is used. The capacity requirement is determined by the size of the valve. If the compressor is provided with a connection for liquid injection a pulse solenoid valve type EVRP is used in the liquid supply.

Alarm function

The controller will sound an alarm if the set alarm limit is exceeded.
The alarm will activate the alarm relay.

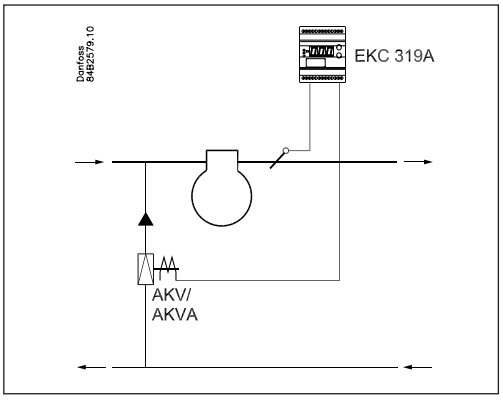

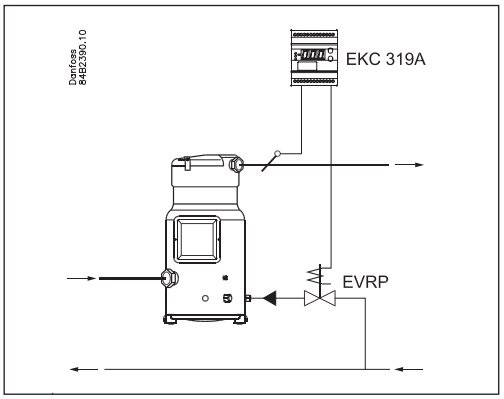

Extra options
PC operation
The controller can be provided with data communication, so that it may be hooked up with other products in the ADAP-KOOL® range of refrigeration controls. Operation, monitoring and data collection can then be performed from a PC - either in situ or at a service company.

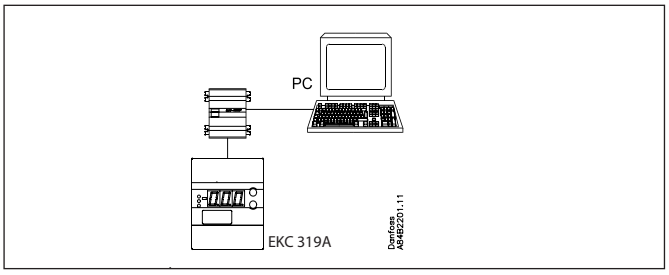

Literature survey:
Manual for EKC 319A.....BC000086420244
Instructions for EKC 319A.....AN000086419141
Installation guide, "Data communication link for ADAP-KOOL® ".....AN234886440486

Survey of functions

Function	Para-meter	Parameter by operation via data communication
Normal display		
The temperature sensor registers the discharge gas temperature. The value is shown in the display.	–	Temperature
The valve's actual opening degree can be displayed by giving the lower button a brief push (1s). Cf. also o17.	–	OD %
Reference		**Temperature control**
Reference The liquid injection starts when the set value is passed. Push both buttons simultaneously to set the setpoint.	–	Temperature Ref
Start / stop of regulation With this setting the regulation can be started and stopped. Start / stop can also be performed with the external contact function. Regulation is stopped if just one of them is OFF.	r12	Main Switch
Alarm		
The controller can give alarm in different situations. When there is an alarm the three lowest LED's at the front of the controller will flash, and the alarm relay is cut in. See also A19.		
Alarm limit A temperature limit can be set where the alarm is to be activated.	A16	Limit Alarm
Time delay for alarm When the temperature value is exceeded a timer function will start. The alarm will not become activated until the set time delay has been passed. The time delay is set in seconds.	A17	Limit Alm. delay
Activation of the alarm relay Set here whether the alarm relay is to be activated when the time delay has been passed: 0: Alarm relay active 1: Alarm relay not active	A19	Alarm type (With setting = 0 the alarm is also transmitted via the data communication)
		With data communication the importance of the individual alarms can be defined. Setting is carried out in the "Alarm destinations" menu.
Control parameters		**Control Settings**
P - band If the value is reduced the regulating range will be reduced. (The P-band will be over the reference).	n04	Kp factor
I: Integration time Tn The I-link can be made passive by setting the value at max. (600s) (If the Tn value is increased the regulation becomes slower).	n05	Tn sec.
Periode time The valve is operated with pulses of a given length. The length depends on the opening degree required. If a large opening degree is required, the pulse will last for an entire period time. A period time will thus comprise both open and closed valve.	n13	Period time
Miscellaneous		**Miscellaneous**
Address If the controller is built into a network with data communication, it must have an address, and the master gateway of the data communication must then know this address. These settings can only be madewhen a data communication modulehas been mounted in the controller and the installation of the data communication cable has been completed. This installation is mentioned in a separate document AN234886440486		Following installation of a data communication module, the controller can be operated on a par with the other controllers in ADAP-KOOL® refrigeration controls.
The address is set between 1 and 60 (119)	o03	–
The address is sent to the gateway when the menu is set in pos. ON (The setting will automatically change back to Off after a few seconds.)	o04	–
Frequency Set the net frequency.	o12	50 / 60 Hz (50=0, 60=1)

Selection of display The normal display can be defined to show either: 0: Discharge gas temperature 1: Opening degree of valve Later during the regulation: If the second display is to be read, the controller's lowermost button must be activated briefly. After five seconds the normal display will reappear.	o17	Display
Manual control of outputs In connection wit service the alarm relay and the valve output can be put in pos. ON. But not until regulation has been stopped. OFF: No override 1: Valve output is ON 2. Alarm relay is activated (terminals 12 and 13 will be cutin)	o18	-
Service		**Service**
A number of controller values can be printed for use in a service situation		
Read discharge gas temperature	u01	Temperature
Read the temperature reference	u02	Temperature ref
Read status of input DI (start / stop input)	u10	DI
Read valve's opening degree	u24	OD %
	--	DO1 limit alarm Read status of alarm relay ON is operating status with alarm
Operating status		
Operating status of the controller can be called forth in the display. Push briefly (1s) the upper button. If there is a status code, it will be shown on the display. (Status codes have lower priority than alarm codes. In other words, you cannot see a status code, if there is an active alarm). The individual status codes have the following meanings:		EKC Status (0 = regulation)
S10: The regulation stopped by the internal or external start / stop		10

Operation

Display

The values will be shown with three digits, and after an operation the controller will return to its standard mode and show the measured discharge temperature.

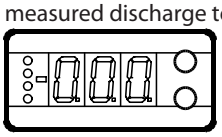

Light-emitting diodes (LED) on front panel

There are LED's on the front panel which will light up when the corresponding relay is activated.
The upper LED will indicate the valve's opening degree. A short pulse indicates a slow liquid flow and a long pulse a fast liquid flow.
The three lowest LED's will flash, if there is an error in the regulation.
In this situation you can upload the error code on the display and cancel the alarm by giving the uppermost button a brief push.

The buttons

When you want to change a setting, the two buttons will give you a higher or lower value depending on the button you are pushing. But before you change the value, you must have access to the menu. You obtain this by pushing the upper button for a couple of seconds - you will then enter the column with parameter codes. Find the parameter code you want to change and push the two buttons simultaneously. When you have changed the value, save the new value by once more pushing the two buttons simultaneously.

Gives access to the menu (or cutout an alarm)

Gives access to changes

Saves a change

Examples of operations

Set reference
1. Push the two buttons simultaneously
2. Push one of the buttons and select the new value
3. Push both buttons again to conclude the setting

Set one of the other menus
1. Push the upper button until a parameter is shown
2. Push one of the buttons and find the parameter you want to change
3. Push both buttons simultaneously until the parameter value is shown
4. Push one of the buttons and select the new value
5. Push both buttons again to conclude the setting

Error messages

The controller can give the following messages:		
E1	**Error message**	Errors in the controller
E17		The temperature sensor is disconnected
E18		The temperature sensor is shortcircuited
A3	**Alarm message**	Alarm temperature limit is reached

Menu survey

SW = 1.1x

Function	Para-meter	Min.	Max.	Fac. setting
Normal display				
Read the measured discharge gas temperature	-		°C	
If you wish to see the actual opening degree, give the lower button a brief push	-		%	
If you wish to set the temperature reference you obtain access by pushing both buttons simultaneously	-	-70°C	160 °C	125
Display / Control				
Select unit (0=°C, 1=°F)	r05	0	1	0
Start / stop of regulation	r12	OFF	ON / on	on
Alarm				
Alarm limit	A16	-50 °C	150 °C	135
Time delay for alarm	A17	0 s	999 s	0
Function of the alarm relay when the temperature exceed the alarm limit 0: Alarm relay active 1: Alarm relay not active	A19	0	1	1
Regulating parameters				
Proportionale factor Kp	n04	0,5	30	15
I: Integration time Tn	n05	60 s	600 s / Off	120
Periode time	n13	3 s	10 s	3
Miscellaneous				
Controller's address	o03*	0	119	-
ON/OFF switch (service-pin message)	o04*	OFF	ON	-
Set supply voltage frequency	o12	0 / 50 Hz	1 / 60 Hz	50
Select the showing of the "normal display": 0: Discharge gas temperature is shown 1: Valve's opening degree is shown	o17	0	1	0
Manual control of outputs: OFF: No manual control 1: Valve output put in pos. ON 2: Alarm relay activated (cut out)	o18	OFF	2	off
Service				
Read discharge gas temperature	u01		°C	
Read temperature reference	u02		°C	
Read status of input DI	u10			
Read valve's opening degree	u24		%	

*) This setting will only be possible if a data communication module has been installed in the controller.

Factory setting
If you need to return to the factory-set values, it can be done in this way:
- Cut out the supply voltage to the controller
- Keep both buttons depressed at the same time as you reconnect the supply voltage

Connnections

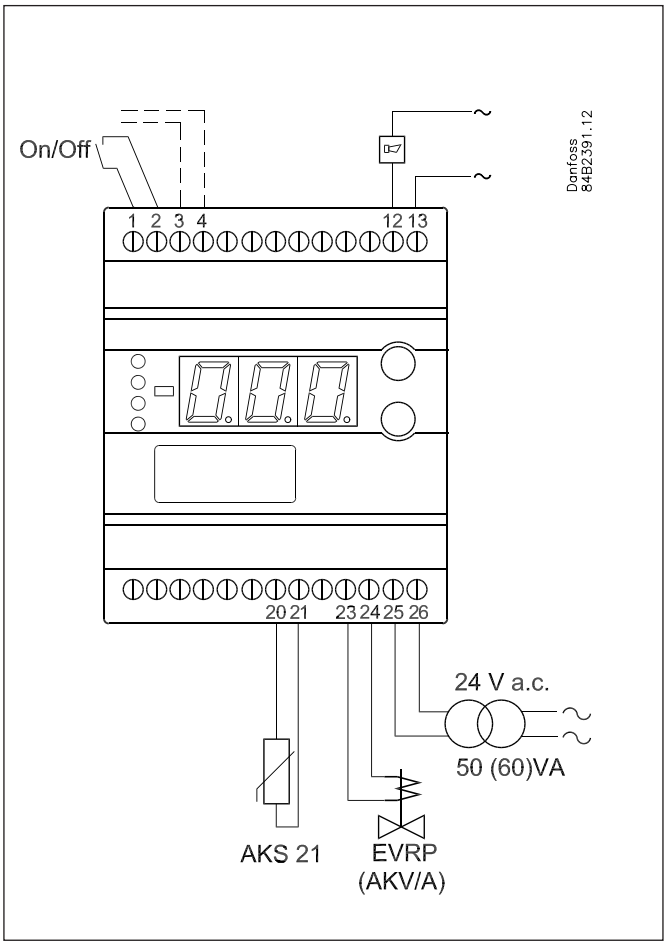

Necessary connections

Terminals:

25-26 Supply voltage 24 V AC

20-21 Signal from temperature sensor

23-24 Solenoid valve type EVRP / expansion valve type AKV or AKVA

1-2 Switch function for start / stop of regulation. If a switch is not connected, terminals 1 and 2 must be shortcircuited.

Application dependent connections

Terminal:

12-13 Alarm relay.
There is connection between 12 and 13 in alarm situations and when the supply voltage to the controller is interrupted

3-4 Data communication
Mount only, if a data communication module has been mounted.
It is <u>important</u> that the installation of the data communication cable be done correctly. Cf. separate literature No. AN234886440486

Data

Supply voltage	24 V AC ±15% 50 / 60 Hz, 60 VA (the supply voltage is galvanically separated from the input and output signals. Input/output are not individual galvanic isolated)	
Power consumption	Controller 20 W coil for AKV / A Coil for EVRP	5 VA 55 VA 40 VA
Input signal	Temperature sensor	Pt 1000 ohm / 0 °C
	Contact function start/stop of regulation	
Alarm relay	SPST	AC-1: 4 A (ohmic) AC-15: 3 A (inductive)
Valve connection	AKV, AKVA or EVRP via 24 AC Pulse-Width Modulating output	
Data communication	Possible to connect a data communication module	
Environments	0 – 55 °C, during operation -40 – 70 °C, during transport	
	20 - 80% Rh, not condensed	
	No shock influence / vibrations	
Enclosure	IP 20	
Weight	300 g	
Montage	DIN Rail	
Display	LED, 3-digits	
Terminals	max. 2.5 mm² multicore	
Approvals	EU Low Voltage Directive and EMC demands re CE-marking complied with. LVD-tested acc. to EN 60730-1 and EN 60730-2-9 EMC-tested acc. to EN50081-1 and EN 50082-2	

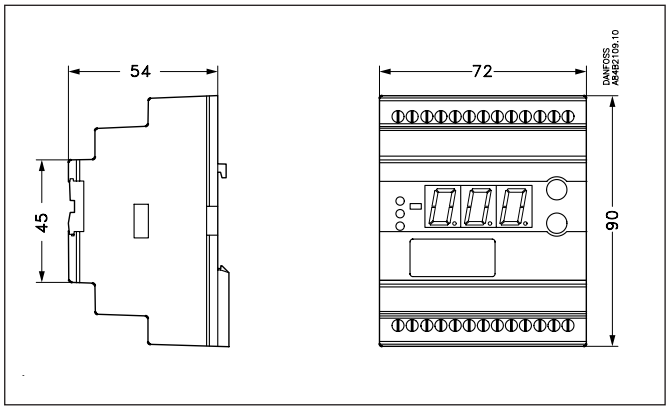

Ordering

Type	Function	Code no.
EKC 319A	Temperature controller	**084B7251**
EKA 175	Data communication module (accessories), (RS 485 modul)	**084B7093**

Temperature sensor.....Kindly refer to catalogue AF151486422482
AKV / AKVA Valves.....Kindly refer to catalogue AF151486422482
EVRP valves.....Kindly refer to data sheet AI226086443404

Data communication

This page contains a description of a few of the possibilities you will have when the controller is provided with data communication.

If you want to know more about operation of controllers via PC, you may order additional literature.

Examples

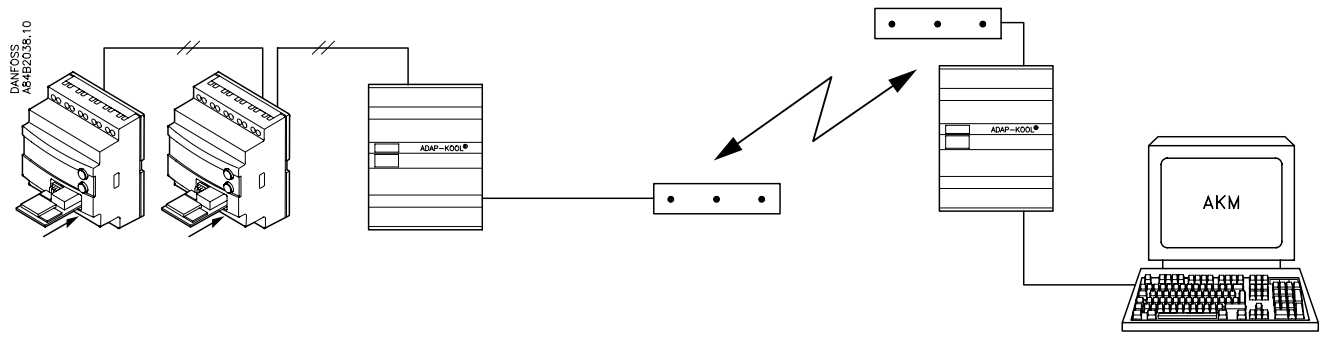

Each controller is provided with a plug-in module.

The controllers are then connected to a two-core cable.

The cable can be connected to a gateway type AKA 245.

This gateway will now control the communication to and from the controllers.

It will collect temperature values and it will receive alarms. When there is an alarm the alarm relay will be activated for two minutes.

The gateway can now be connected to a modem.

When an alarm occurs from one of the controllers, the gateway will - via the modem - make a phone call to the service company.

At the service company a modem, gateway and PC with system software type AKM have been installed.

All the controllers' functions can now be operated from the various menu displays.

The programme will for example upload all the collected temperature values once a day.

Example of menu display

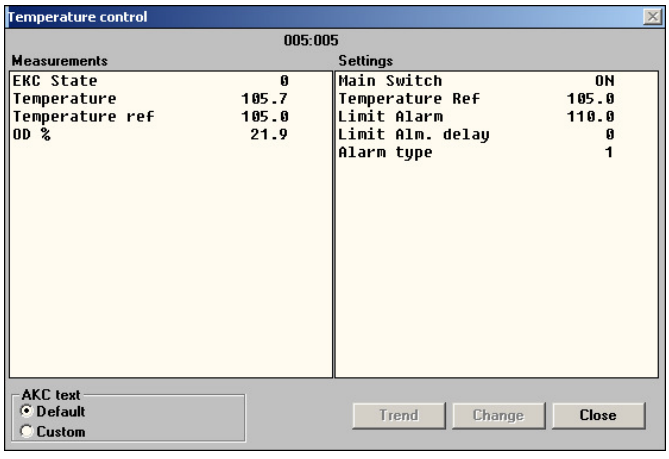

- Measurements are shown at one side and settings at the other.
- You will also be able to see the parameter names of the functions on page 1053-1054.
- With a simple change-over the values can also be shown in a trend diagram.
- If you wish to check earlier temperature measurements, you can see them in the log collection.

Alarms

If the controller is extended with data communication, it will be possible to define the importance of the transmitted alarms.
The importance is defined with the setting: 1, 2, 3 or 0. When the alarm then arises at some time, it will result in one of the following activities:

1 = Alarm
The alarm message is sent off with alarm status 1. This means that the gateway that is the master in the system will have its alarm relay output activated for two minutes. Later, when the alarm ceases, the alarm text will be retransmitted, but now with status value 0.

2 = Message
The alarm text is transmitted with status value 2. Later, when the "message" lapses, the alarm text is retransmitted, but now with status value 0.

3 = Alarm
As "1", but the master gateway's relay output is not activated.

0 = Suppressed information
The alarm text is stopped at the controller. It is transmitted nowhere.

ENGINEERING
TOMORROW

Capacity controller
EKC 331

Contents **Page**

Advantages 1061
Function 1061
Survey of functions 1063
Operation 1066
Menu survey 1066
Data 1067
Connections 1067
Ordering 1067
Data communication 1068

BC000086426081en-000201 | 2000.10

ENGINEERING
TOMORROW

Capacity controller
EKC 331



The controller is used for capacity regulation of compressors or condensers in small refrigerating systems.

Advantages

- Patented neutral zone regulation
- Sequential or cyclic operation

Function

Regulation

- Regulation with up to four relay outputs can be carried out. Regulation takes place with a set reference which is compared to a signal from a pressure transmitter.

Relay module

- It is possible to use the controller as relay module, so that the relays are cut in or out by means of an external voltage signal.

Alarmfunction

- A relay becomes activated when the set alarm limits are exceeded.

Digital input

- The digital input can be used for:
  - *night operation where the suction pressure is raised*
  - *heat recovery where the condensing pressure is raised*
  - *external start / stop of the regulation.*

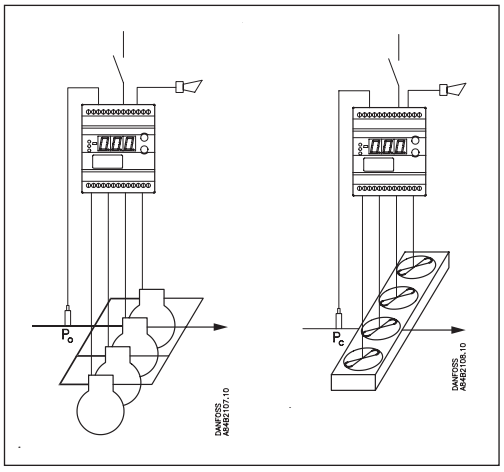

Function

Capacity regulation

The cut-in capacity is controlled by signals from the connected pressure transmitter and the set reference.
Outside the reference a neutral zone is set where the capacity will neither be cut in nor out.
Outside the neutral zone (in the hatched areas named +zone and -zone) the capacity will be cut in or out if the regulation registers a change of pressure "away" from the neutral zone. Cutin and cutout will take place with the set time delays.
If the pressure however "approaches" the neutral zone, the controller will make no changes of the cut-in capacity.
The size of the +zone and -zone is identical and defined to be constantly 0.7 times the set value of the neutral zone.
If regulation takes place outside the hatched area (named ++zone and --zone), changes of the cut-in capacity will occur somewhat faster than if it were in the hatched area. The set time delays will here be reduced by factor 0.3.
Cutin of steps can be defined for either sequential or cyclic operation.

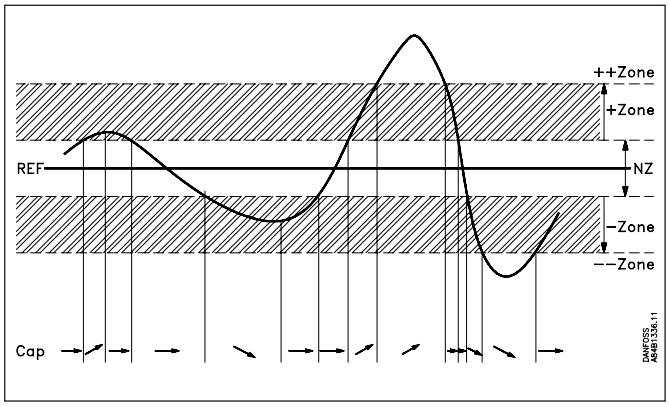

Relay module

The controller can also be used as a relay module where the relays in the module will then be controlled by the received voltage signal.
Depending on the definition of the signal and the number of relays used, the relays will be "distributed" over the signal.
A hysteresis around the individual cutin and cutout points will ensure that the relay will not cut in or out when it is not called for.

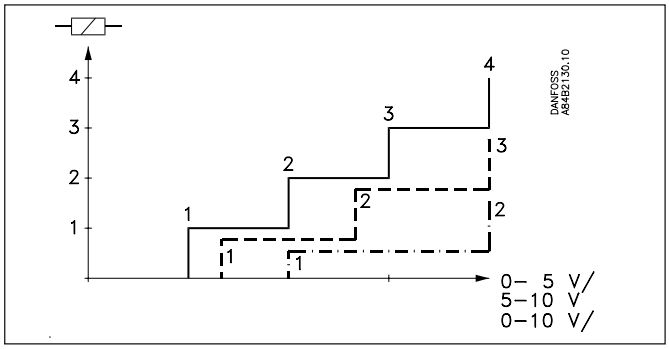

Survey of functions

Function	Para-meter	Parameter by operation via data communication
Normal display		
Normally the signal from the pressure transmitter is shown. If the controller is used as relay module, U_{in} will appear on the display.		Pressure
Pressure regulation		**Reference**
Regulation reference Regulation is based on the set value. A change of the set value can be limited / locked with the settings in r02 and r03 (Push both buttons simultaneously to set the menu.)	-	Press. set point
Neutral zone There is a neutral zone around the reference. See also page 1062.	r01	Neutral zone
Displacement of reference The set reference may be displaced with a fixed value when a signal is received at the DI input. Regulation will then be based on the set reference plus the value set here.	r13	Pressure offset
The total reference can be seen when you push the lower of the two buttons. (Cf. also Definition of DI input).		Reference
Reference limitation The controller's setting range for the reference can be narrowed down, so that you cannot accidentally set a too high or too low value - that may result in damage to the system. With these settings the reference can only be set between the two values.		
Max. permissible reference value.	r02	Max. set point
Min. permissible reference value.	r03	Min. set point
Pressure unit Here you can select whether the controller is to indicate the pressure in bar or psig. (When psig is selected, the settings must also be in psig).	r05	Unit bar=0 psig=1 (In AKM only bar is used, whatever the setting).
Alarm		**Alarm settings**
The controller can give alarm in different situations. When there is an alarm all the light-emitting diodes (LED) will flash on the controller front panel, and the alarm relay will cut in.		
Upper deviation Here you set when the alarm at high pressure is to enter into effect. The value is set as an absolute value. See also emergency procedure page 1065.	A10	Max. pressure
Lower deviation Here you set when the alarm at low pressure is to enter into effect. The value is set as an absolute value. See also emergency procedure page 1065.	A11	Min. pressure
Alarm delay If one of the two limit values is exceeded, a timer function will commence. The alarm will not become active until the set time delay has been passed. The time delay is set in seconds.	A03	Alarm delay
Give the top button a brief push to zeroset the alarm and to have the message shown on the display.		Reset alarm The function zerosets all alarms when set in pos. ON.
		Alarm relay Here you can read the status of the alarm relay. (ON indicates operation with alarm).
		With data communication the importance of the individual alarms can be defined. Setting is carried out in the "Alarm destinations" menu. See also page 1068.

Capacity		Capacity
Running time To prevent irregular operation, values have to be set for how the relays are to cut in and out.		
Min. ON time for relays.	c01	Min.ON time
Time delay for cutin of relays.	c05	Step delay inc.
Time delay for cutout of relays.	c06	Step delay dec.
Min. time period between cutin of same relay.	c07	Min recycle time
Coupling Cutin and cutout can take place in three ways: 1. Sequential: First relay 1 cuts in, then relay 2, etc. Cutout takes place in the opposite sequence. 2. Cyclic: An automatic operating time equalisation is arranged here, so that all steps will have the same operating time. (The relay with the fewest number of operating hours cuts in or out before the others). 3. Cyclic with unloader: The function can only be used when there are two compressors with one unloader each. The cyclic operation is performed on relays 1 and 3. The unloaders are mounted on relays 2 and 4 (relays 1 and 2 belong to the first compressor, relays 3 and 4 to the other). The above mentioned "Min. ON time for relays" is not used by the two unloaders. In connection with cutout, the two unloaders are cut out before the compressors are cut out.	c08	Step mode
Unloaders' cutin and cutout mode (Only in connection with cutin / cutout mode 3. See above). The relays for the two unloaders can be set to switch on when more capacity is required (setting = 0), or they can switch off when more capacity is called for (setting = 1).	c09	Unloader (switch on = 0) (switch off = 1)
Miscellaneous		**Miscellaneous**
External signal Here you set the signal to be connected to the controller. 0: No signal / regulation stopped (display will then show OFF) 1: 4 – 20 mA from pressure transmitter for compressor regulation 2: 4 – 20 mA from pressure transmitter for condenser regulation 3: Pressure transmitter type AKS 32R for compressor regulation 4: Pressure transmitter type AKS 32R for condenser regulation 5: 0 – 10 V from other regulation 6: 0 – 5 V from other regulation 7: 5 – 10 V from other regulation	o10	Application mode
Number of relays Depending on the application, up to four relays may be used. This number must be set in the controller. (The relays are always used in numerical sequence).	o19	Number of steps
Pressure transmitter's working range Depending on the pressure, a pressure transmitter with a given working range is used. This working range must be set in the controller (e.g.: -1 to 12 bar).		
Min. value	o20	Min. trans. press
Max. value	o21	Max trans. press
Use of DI input The digital input can be connected to a contact function, and the contact can now be used for one of the following functions: Setting / function: 0: DI input not used 1: Regulation reference displaced when contact is cut in 2: Regulation is started and stopped when the contact is cut in and out, respectively.	o22	Di input control
Operating hours The operating hours for the four relays can be read in the following menus. The read value is multiplied by 10 to obtain the number of hours. On reaching 999 hours the counter stops and must now be reset to, say, 0. There will be no alarm or error message for counter overflow.		(In the AKM display the hour number has not been multiplied)
Value for relay number 1	o23	DO 1 run hour
Value for relay number 2	o24	DO 2 run hour
Value for relay number 3	o25	DO 3 run hour
Value for relay number 4	o26	DO 4 run hour

Manual control From this menu the relays can be cut in and out manually. OFF gives no override, but a number between 1 and 4 will cut in a corresponding number of relays. Cutins and cutouts always take place from relay number 1. When there is manual operation, the display will show "- - x". Where x is 0 - 4.	o18	Manual control Only when "Manual control" has been put in pos. ON will it be possible to operate the individual relays. DO relay 1 DO relay 2 DO relay 3 DO relay 4 Alarm relay set When this function is used, the buttons on the controller cannot be used.
Language This setting is only required when data communication has been connected to the controller. Settings: 0=English, 3=Danish. When the controller is operated via data communication, the texts in the right-hand column will be shown in the selected language. When you change the setting to an other language you must activate o04 before "the new language" can be visible from the AKM program.	o11	Language
Frequency Set the net frequency.	o12	Main freq (50=0, 60=1)
Address If the controller is built into a network with data communication, it must have an address, and the master gateway of the data communication must then know this address. These settings can only be madewhen a data communication modulehas been mounted in the controller and the installation of the data communication cable has been completed. This installation is mentioned in a separate document AN234886440486		Following installation of a data communication module, the controller can be operated on a par with the other controllers in ADAP-KOOL® refrigeration controls.
The address is set between 1 and 60	o03	
The address is sent to the gateway when the menu is set in pos. ON (The setting will automatically change back to Off after a few seconds.)	o04	
Access code If the settings in the controller are to be protected by a numerical code, you can set a numerical value between 0 and 100. If not, you can cancel the function with setting OFF.	o05	
Operating status		
The controller goes through some regulating situations where it is just waiting for the next point of the regulation. To make these "why is nothing happening" situations visible, you can see an operating status on the display. Push briefly (1s) the upper button. If there is a status code, it will be shown on the display. The individual status codes have the following meanings:		EKC state (0 = regulation)
S2: When the relay is operated, it must be activated for min. x minutes		2
S5: Renewed cutin of the same relay must not take place more often than every x minutes		5
S8: The next relay must not cut in until x minutes have elapsed		8
S9: The next relay must not cut out until x minutes have elapsed		9
S16: Regulation is stopped due to manual operation via o18		16

Warning ! Direct start of compressors *
To prevent compressor breakdown parameter c01 and c07 should be set according to suppliers requirements or in general :
Hermetic Compressors c07 min. 5 minutes
Semihermetic Compressors c07 min. 8 minutes and c01 min. 2 to 5 minutes (Motor from 5 to 15 KW)
*) Direct activating of solenoid valves does not require settings different from factory (0)

Emergency procedure
If the controller registers irregularities in the registered signals, it will start an emergency procedure:

For compressor regulation:
- If the signal from the pressure transmitter becomes smaller than expected, the controller will continue operating with the average capacity that has been cut in during the past 60 minutes. This cut-in capacity will gradually decline as time passes.
- If the signal for the suction pressure becomes smaller than the set value of A11, the capacity will instantly be cut out.

For condenser regulation:
- If the signal from the pressure transmitter becomes smaller than expected, or if the condensing pressure becomes bigger than the set value of A10, the entire capacity will instantly be cut in.

Operation

Display
The values will be shown with three digits, and with a setting you can determine whether the pressure are to be shown in bar or in psig.

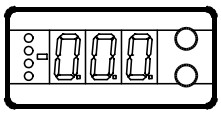

Light-emitting diodes (LED) on front panel
There are four LED's on the front panel which will light up when the relays are operated.
All LED's will flash if there is an error in the regulation. In this situation you can upload the error code on the display and cancel the alarm by pushing the top button briefly.

The controller can give the following messages:		
E1	**Error message**	Errors in the controller
E2		Regulation out of range or control signal is defect.
A1	**Alarm message**	High pressure alarm
A2		Low pressure alarm

The buttons
When you want to change a setting, the two buttons will give you a higher or lower value depending on the button you are pushing. But before you change the value, you must have access to the menu. You obtain this by pushing the upper button for a couple of seconds - you will then enter the column with parameter codes. Find the parameter code you want to change and push the two buttons simultaneously. When you have changed the value, save the new value by once more pushing the two buttons simultaneously.

 Gives access to the menu (or cutout an alarm)

 Gives access to changes

 Saves a change

Examples of operations
Set the regulation's reference
1. Push the two buttons simultaneously
2. Push one of the buttons and select the new value
3. Push both buttons again to conclude the setting

Set one of the other menus
1. Push the upper button until a parameter is shown
2. Push one of the buttons and find the parameter you want to change
3. Push both buttons simultaneously until the parameter value is shown
4. Push one of the buttons and select the new value
5. Push both buttons again to conclude the setting

Menu survey

SW: 1.1x

Function	Parameter	Min.	Max.
Normal display			
Shows the signal from the pressure transmitter	-		bar
Reference			
Set the regulation's pressure reference	-	-1 bar	40 bar
Neutral zone	r01	0,1 bar	5 bar
Max. limitation of pressure setting	r02	-1 bar	40 bar
Min. limitation of pressure setting	r03	-1 bar	40 bar
Select unit (0=bar / 1=psig)	r05	0	1
Reference displacement by signal at DI input	r13	-5 bar	5 bar
Alarm			
Upper alarm limit (absolute value)	A10	-1 bar	40 bar
Lower alarm limit (absolute value)	A11	-1 bar	40 bar
Alarm's time delay	A03	1 s	300 s
Capacity			
Min. ON time for relays	c01	0 s	900 s
Time delay for cutin of relays (+Zone)	c05	5 s	900 s
Time delay for cutout of relays (-Zone)	c06	5 s	900 s
Min. time period between cutins of same relay	c07	0 s	900 s
Definition of regulation mode 1: Sequential 2: Cyclic 3: Cyclic with unloaders	c08	1	3
If the regulation mode 3 has been selected, the relays for the unloaders can be defined to: 0: Cut in when more capacity is required 1: Cut out when more capacity is required	c09	0	1
Miscellaneous			
Controllers address	o03*	1	60
On / off switch (service-pin message)	o04*	-	-
Access code	o05	off(-1)	100
Define input signal and application: 0: no signal / regulation stopped 1: 4 – 20 mA pressure transmitter - compressor reg. 2: 4 – 20 mA pressure transmitter - condenser reg. 3: AKS 32R pressure transmitter - compressor reg. 4: AKS 32R pressure transmitter - condenser reg. 5: 0 – 10 V relay module 6: 0 – 5 V relay module 7: 5 – 10 V relay module	o10	0	7
Language (0=english, 3=danish). When you change this setting you must also activate O04.	011*	0	3
Set supply voltage frequency	o12	50 Hz	60 Hz
Manual operation with "x" relays	o18	0	4
Define number of relay outputs	o19	1	4
Pressure transmitter's working range - min. value	o20	-1 bar	0 bar
Pressure transmitter's working range - max. value	o21	1 bar	40 bar
Define DI input: 0: not used 1: Contact displaces reference 2: Contact starts and stops regulation	o22	0	2
Operating hours of relay 1 (value times 10)	o23	0 h	999 h
Operating hours of relay 2 (value times 10)	o24	0 h	999 h
Operating hours of relay 3 (value times 10)	o25	0 h	999 h
Operating hours of relay 4 (value times 10)	o26	0 h	999 h

*) This setting will only be possible if a data communication moduel has been installed in the controller.

Factory setting
If you need to return to the factory-set values, it can be done in this way:
- Cut out the supply voltage to the controller
- Keep both buttons depressed at the same time as you reconnect the supply voltage

Data

Supply voltage	230 V AC ±15% 50 / 60 Hz, 5 VA	
Input signal	Pressure transmitter*) with 4 – 20 mA or voltage signal (0 – 5 V, 0 – 10 V or 5 – 10 V)	
	Digital input to external contact function	
Relay output	4 pcs. SPST	AC-1: 4 A (ohmic) AC-15: 3 A (inductive)
Alarmrelay	1 pcs. SPST	AC-1: 4 A (ohmic) AC-15: 1 A (inductive)
Data communication	Possible to connect a data communication module	
Ambient temperature	During operation During transport	-10 – 55 °C -40 – 70 °C
Enclosure	IP 20	
Weight	300 g	
Mounting	DIN rail	
Display	LED, 3 digits	
Terminals	max. 2,5 mm² multicore	
Approvals	EU Low voltage Directive and EMC demands re CE-marking complied with. LVD-tested acc. to EN 60730-1 and EN 60730-2-9 EMC-tested acc. to EN61000-6-3 and EN 61000-4-(2-6,8,11)	

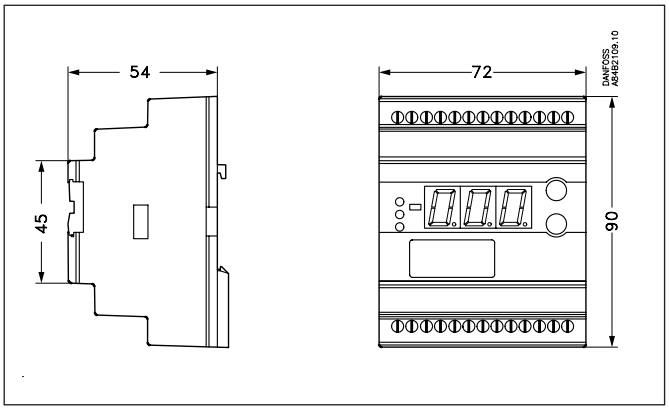

***) Pressure transmitter**
As pressure transmitter can be used AKS 3000 or AKS 33 (AKS 33 has a higher accuracy than AKS 3000).
It is also possible to use an AKS 32R. This pressure transmitter is only supplied in large quantities as per arrangement with Danfoss. Please refer to catalogue AF151486422482

Ordering

Type	Function	Code No.
EKC 331	Capacity controller	**084B7104**
EKA 175	Data communication module (accessories), (RS 485 module)	**084B8579**

Connections

Necessary connections
Terminals:
25 – 26 Supply voltage 230 V AC
3 – 10 Relay connections no. 1, 2, 3 and 4
12 – 13 Alarm relay
There is connection between 12 and 13 in alarm situations and when the controller is dead
Control signal (see also o10)
Either terminals:
14 – 16 Voltage signal from AKS 32R
or
17 – 18 Current signal from AKS 3000 or AKS 33
or
15 – 16 Voltage signal from an other regulation.

External contact function, if applicable
19 – 20 Contact function for displacement of reference or start / stop of the regulation.

Data communication, if applicable
21 – 22 Mount only, if a data communication module has been mounted.
It is important that the installation of the data comm unication cable be done correctly. Cf. separate literature No. AN234886440486

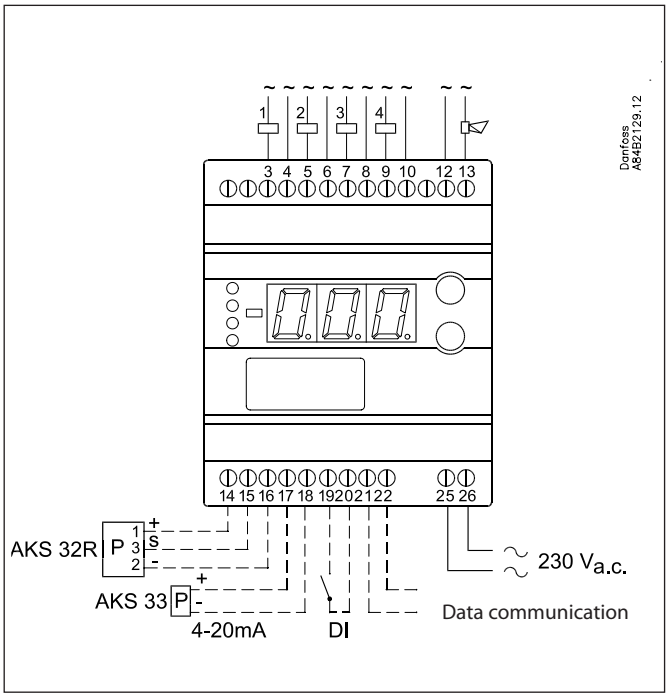

Data communication

This page contains a description of a few of the possibilities you will have when the controller is provided with data communication.

If you want to know more about operation of controllers via PC, you may order additional literature.

Example

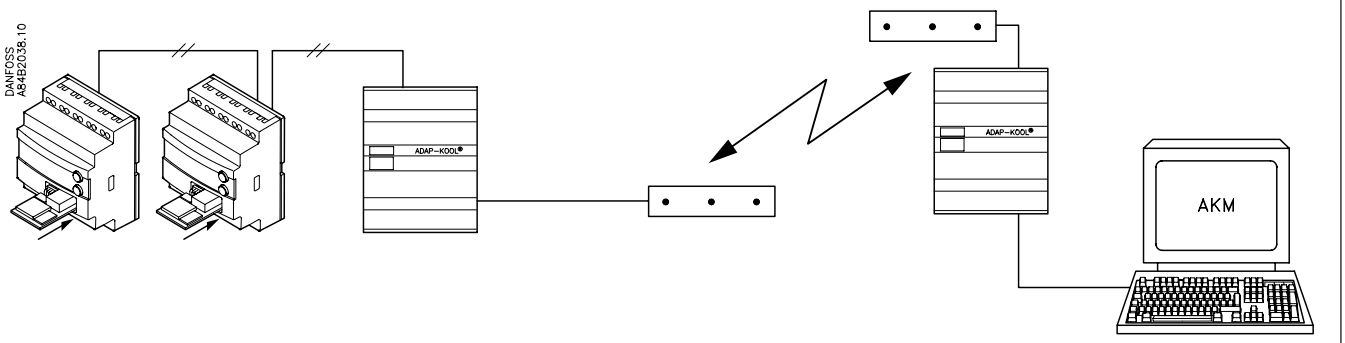

Each controller is provided with a plug-in module.

The controllers are then connected to a two-core cable.

Up to 60 controllers may be connected to one cable.

This cable is also connected to a gateway type AKA 243.

This gateway will now control the communication to and from the controllers.

It will collect pressure values and it will receive alarms. When there is an alarm the alarm relay will be activated for two minutes

The gateway can now be connected to a modem.

When an alarm occurs from one of the controllers, the gateway will - via the modem - make a phone call to the service company.

At the service company a modem, gateway and PC with system software type AKM have been installed.

All the controllers' functions can now be operated from the various menu displays.

The programme will for example upload all the collected temperature values once a day.

Example of menu display

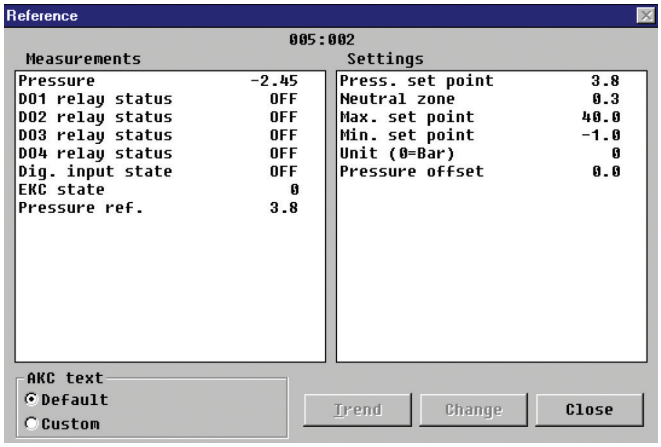

Measurements are shown at one side and settings at the other.

You will also be able to see the parameter names of the functions on page 1063-1065.

With a simple change-over the values can also be shown in a trend diagram.

If you wish to check earlier pressure measurements, you can see them in the log collection.

Alarms

If the controller is extended with data communication, it will be possible to define the importance of the transmitted alarms.
The importance is defined with the setting: 1, 2, 3 or 0. When the alarm then arises at some time, it will result in one of the following activities:

1 = Alarm
The alarm message is sent off with alarm status 1. This means that the gateway that is the master in the system will have its alarm relay output activated for two minutes. Later, when the alarm ceases, the alarm text will be retransmitted, but now with status value 0.

2 = Message
The alarm text is transmitted with status value 2. Later, when the "message" lapses, the alarm text is retransmitted, but now with status value 0.

3 = Alarm
As "1", but the master gateway's relay output is not activated.

0 = Suppressed information
The alarm text is stopped at the controller. It is transmitted nowhere.

ENGINEERING
TOMORROW

Capacity controller
EKC 331T

Contents **Page**

Function 1071
Advantages 1071
Suvey of functions 1074
Operation 1078
Menu survey 1078
Data 1079
Ordering 1079
Connections 1080

BC055586425216en-000501 | 2012.08

ENGINEERING
TOMORROW

Capacity controller
EKC 331T



The controller is used for capacity regulation of compressors or condensers in small refrigerating systems.
Regulation can be carried out with up to four identical capacity steps.

Advantages
- Patented neutral zone regulation
- Sequential or cyclic operation

Function

Regulation
- Regulation with up to four relay outputs can be carried out. Regulation takes place with a set reference which is compared to a signal from a pressure transmitter or a temperature sensor.

Relay module
- It is possible to use the controller as relay module, so that the relays are cut in or out by means of an external voltage signal.

- *Alarm function*
- A relay becomes activated when the set alarm limits are exceeded.

Digital input
- The digital input can be used for:
  - *night operation where the suction pressure is raised*
  - *heat recovery where the condensing pressure is raised*
  - *external start/stop of the regulation.*
  - *Monitoring of safety circuit*

Reverse function
- The regulation can be reversed so that the relays are activated in case of falling temperature, rather than by the rising temperature.

Possibility of data communication

Display
A signal from a pressure transmitter will always be converted and shown as a temperature value.
Settings are made as for temperature values.

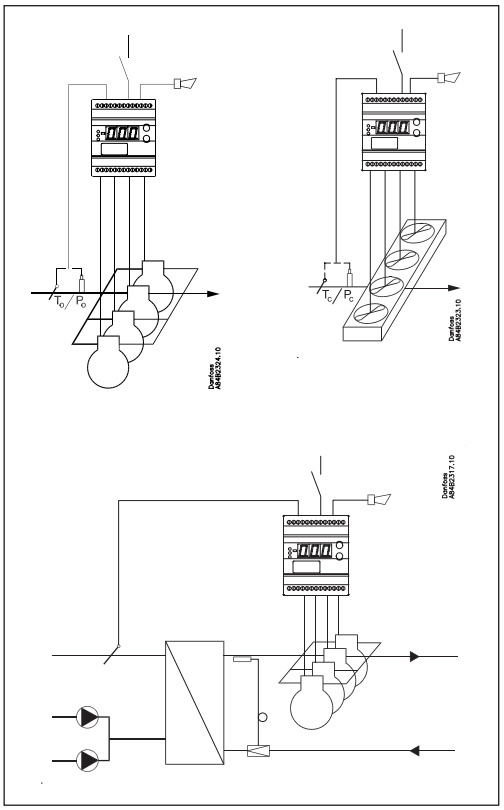

Function

Capacity regulation

The cut-in capacity is controlled by signals from the connected pressure transmitter (temperature sensor) and the set reference. Outside the reference a neutral zone is set where the capacity will neither be cut in nor out.

Outside the neutral zone (in the hatched areas named +zone and -zone) the capacity will be cut in or out if the regulation registers a change of pressure (the temperature) "away" from the neutral zone. Cutin and cutout will take place with the set time delays.

If the pressure (the temperature) however "approaches" the neutral zone, the controller will make no changes of the cut-in capacity.

If regulation takes place outside the hatched area (named ++zone and --zone), changes of the cut-in capacity will occur somewhat faster than if it were in the hatched area.

Cutin of steps can be defined for either sequential or cyclic operation.

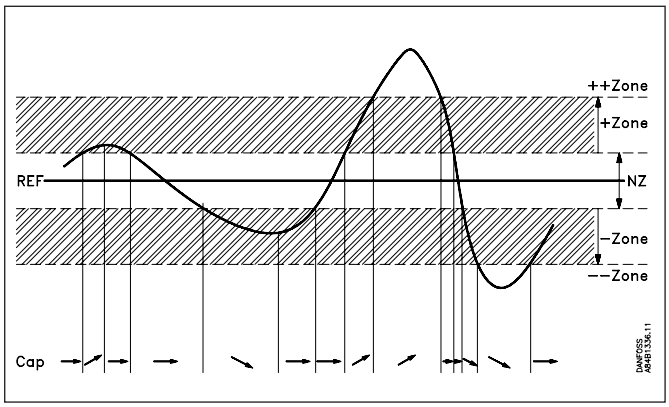

Sequential
The relays are here cut in in sequence – first relay number 1, then 2, etc.
Cutout takes place in the opposite sequence, i.e. the last cut-in relay will be cut out first.

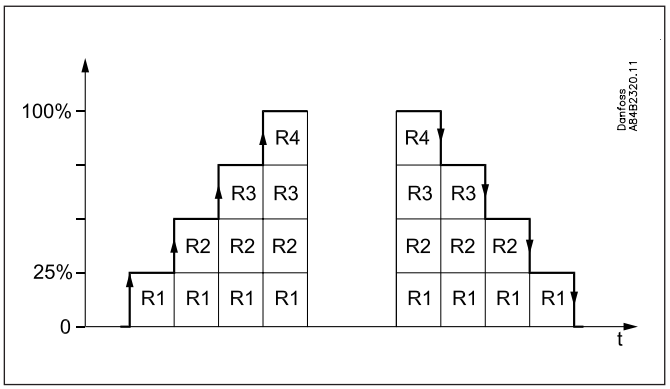

Cyclic
The relays are coupled here so that the operating time of the individual relays will become equalised.
At each cutin the regulation scans the individual relays' timer, cutting in the relay with least time on it.
At each cutout a similar thing happens. Here the relay is cut out that has most hours on the timer.

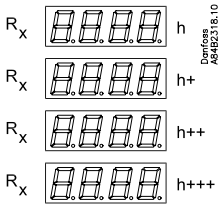

Rx = random relay
h = number of hours

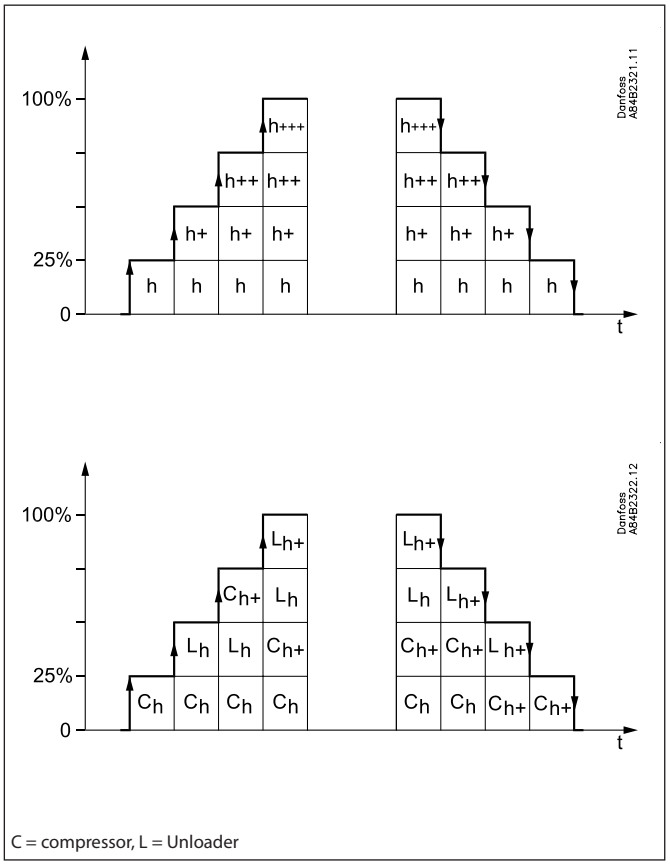

C = compressor, L = Unloader

If capacity regulation is carried out on two compressors with one unloader each, the following function can be used:
Relays 1 and 3 are connected to the compressor motor.
Relays 2 and 4 are connected to the unloaders.
Relays 1 and 3 will operate in such a way that the operating time for the two relays will become equalised.

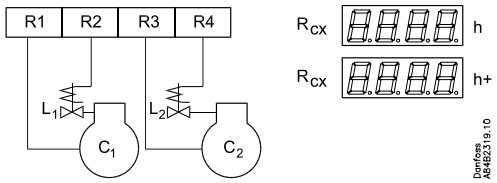

Relay module
The controller can also be used as a relay module where the relays in the module are operated by the received voltage signal. The signal must be connected to terminal 15 – 16.
Depending on the definition of the signal and the number of relays used, the relays will be "distributed" over the signal.
A hysteresis at the individual coupling points will ensure that the relay will not cut in or out when not required.

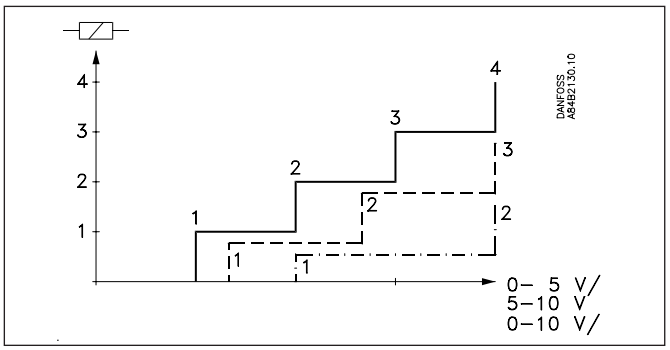

Suvey of functions

Function	Para-meter	Parameter by operation via data communication
Normal display		
Normally the signal from the pressure transmitter / temperature sensor is shown If the controller is used as relay module, U_{in} will appear on the display.		Pressure / Temp °C
Pressure regulation		**Reference Settings**
Regulation setpoint Regulation is based on the set value. A change of the set value can be limited / fixed by means of the settings in r02 and r03. (Push both buttons simultaneously to set the menu.)	-	Set point °C
Neutral zone There is a neutral zone around the reference. See also page 1071.	r01	Neutral zone
Start/stop of refrigeration With this setting the refrigeration can be started and stopped. Start/stop of refrigeration may also be performed with an external contact function connected to the input named "DI".	r12	Main switch
Reference The set reference may be displaced with a fixed value when a signal is received at the DI input. Regulation will then be based on the set point plus the value set here. (Cf. also Definition of DI input).	r13	Ref. offset
Night setback **OFF:** No change of the reference **ON:** (1) Offset value in "r13" forms part of the reference	r27	NightSetback
The total reference can be seen when you push the lower of the two buttons	-	Reference
Reference limitation With these settings the setpoint can only be set between the two values. (This also apply if regulation with displacements of the reference).		
Max. permissible reference value.	r25	Max. reference
Min. permissible reference value.	r26	Min. reference
Correction of temperature measurement An offset adjustment of the registered temperature can be made. The function is used if correction for a too long sensor cable has to be made.	r04	Adjust sensor
Unit Here you can select whether the display is to indicate SI units or US units (°C and bar or °F and psig) Setting = "C-b" will give °C and bar Setting = "F-P" will give °F and psig. All settings made in ° C or ° F. Excluding o20 and o21, which is set in the bar / PSIG.	r05	(In AKM only °C and bar is used, whatever the setting)
Capacity		**Capacity Settings**
Running time To prevent frequent start / stop, values have to be set for how the relays are to cut in and out.		
Min. ON time for relays.	c01	Min.ON time
Min. time period between cutin of same relay.	c07	Recycle time
Coupling (compressor and condensor) Cutin and cutout can take place in three ways: 1. Sequential: First relay 1 cuts in, then relay 2, etc. Cutout takes place in the opposite sequence. ("First in, last out"). 2. Cyclic: An automatic operating time equalisation is arranged here, so that all steps will have the same operating time. (The relay with the fewest number of operating hours cuts in or out before the others) (Or put differently: "First in, last out"). 3. Compressor(s) with unloader: The cyclic operation is performed on relays 1 and 3. The unloaders are mounted on relays 2 and 4 (relays 1 and 2 belong to the first compressor, relays 3 and 4 to the other). The above mentioned "Min. On-time" and "Min. recycle time" are not used for unloaders. In connection with cutout, the two unloaders are cut out before the compressors are cut out.	c08	Step mode
Unloaders' cutin and cutout mode (Only in connection with cutin / cutout mode 3. See above). The relays for the two unloaders can be set to switch on when more capacity is required (setting = no), or they can switch off when more capacity is called for (setting = nc).	c09	Unloader (switch on = 0) (switch off = 1)

Setting for neutral zone regulation Regulation band under the neutral zone	 c10	 + Zone K
Time delay between step cut-ins in the regulation band over the neutral zone	c11	+ Zone m
Time delay between step cut-ins in the regulation band over the "+Zone band".	c12	+ + Zone s
Regulation band over the neutral zone	c13	- Zone K
Time delay between step cut-outs in the regulation band under the neutral zone	c14	- Zone m
Time delay between step cut-outs in the regulation band under the "-Zone band"	c15	- - Zone s
Manual control of compressor capacity This sets the capacity that is to be cut in when switching to manual control.	c31	ManualCap %
Manual control Manual control of the compressor capacity is enabled here. When set to ON, the capacity that is set in "c31" is cut in.	c32	ManualCap
	-	Capacity % Read cut-in compressor capacity
Alarm		**Alarm settings**
The controller can give alarm in different situations. When there is an alarm all the light-emitting diodes (LED) will flash on the controller front panel, and the alarm relay will cut in.		
Upper deviation Here you set when the alarm at high temperature / pressure is to enter into effect. The value is set as an absolute value. See also emergency procedure page 1077.	A10	Max. Al. limit
Lower deviation Here you set when the alarm at low temperature / pressure is to enter into effect. The value is set as an absolute value. See also emergency procedure page 1077.	A11	Min. Al. limit
Alarm delay If one of the two limit values is exceeded, a timer function will commence. The alarm will not become active until the set time delay has been passed. The time delay is set in minutes.	A03	Alarm delay
Give the top button a brief push to zeroset the alarm and to have the message shown on the display.		Reset alarm The function zerosets all alarms when set in pos. ON.
		With data communication the importance of the individual alarms can be defined. Setting is carried out in the "**Alarm destinations**" menu.
Miscellaneous		**Miscellaneous**
External signal Here you set the signal to be connected to the controller. 0: No signal / regulation stopped (display will then show OFF) 1: 4 – 20 mA from pressure transmitter for compressor regulation 2: 4 – 20 mA from pressure transmitter for condenser regulation 3: Pressure transmitter type AKS 32R for compressor regulation 4: Pressure transmitter type AKS 32R for condenser regulation 5: 0 – 10 V from other regulation 6: 0 – 5 V from other regulation 7: 5 – 10 V from other regulation 8: Pt1000 ohm temperature sensor for compressor regulation 9: Pt1000 ohm temperature sensor for condenser regulation 10: PTC1000 ohm temperature sensor for compressor regulation 11: PTC1000 ohm temperature sensor for condenser regulation	o10	Application mode
Number of relays Depending on the application, up to four relays may be used. This number must be set in the controller. (The relays are always used in numerical sequence).	o19	Number of steps
Pressure transmitter's working range Depending on the pressure, a pressure transmitter with a given working range is used. This working range must be set in the controller (e.g.: -1 – 12 bar) The values must be set in bar if display in °C has been selected. And in psig, if °F has been selected.		If the two values are to be set from the AKM programme, they must be set in bar.
Min. value	o20	Min. Trs. pres
Max. value	o21	Max Trs. pres

Use of DI input The digital input can be connected to a contact function, and the contact can now be used for one of the following functions: Setting / function: 0: DI input not used 1: Regulation reference displaced when contact is cut in 2: Regulation is started and stopped when the contact is cut in and out, respectively. 3: Monitoring of the compressor's safety circuit. When the contact on the DI input cuts out, all relay outputs will immediately be cut out. At the same time the alarm will sound.	o22	Di control
Operating hours The operating hours for the four relays can be read in the following menus. The read value is multiplied by 1000 to obtain the number of hours. On reaching 999 hours the display stops and must now be reset to, say, 0. There will be no alarm or error message for counter overflow.		(In the AKM display the hour number has not been multiplied)
Value for relay number 1	o23	DO 1 run hour
Value for relay number 2	o24	DO 2 run hour
Value for relay number 3	o25	DO 3 run hour
Value for relay number 4	o26	DO 4 run hour
Refrigerant setting Before refrigeration is started, the refrigeration must be defined. You may choose between the following refrigerants: 1=R12. 2=R22. 3=R134a. 4=R502. 5=R717. 6=R13. 7=R13b1. 8=R23. 9=R500. 10=R503. 11=R114. 12=R142b. 13=User defined. 14=R32. 15=R227. 16=R401A. 17=R507. 18=R402A. 19=R404A. 20=R407C. 21=R407A. 22=R407B. 23=R410A. 24=R170. 25=R290. 26=R600. 27=R600a. 28=R744. 29=R1270. 30=R417A. 31=R422A. 32=R413A. 33=R422D. 34=R427A. 35=R438A. 36=XP10. 37=R407F. Warning: Wrong selection of refrigerant may cause damage to the compressor.	o30	Refrigerant
Manual control From this menu the relays can be cut in and out manually. OFF gives no override, but a number between 1 and 4 will cut in a corresponding relay. The other relays will be off.	o18	
Frequency Set the net frequency.	o12	50 / 60 Hz (50=0, 60=1)
Address If the controller is built into a network with data communication, it must have an address, and the master gateway of the data communication must then know this address. These settings can only be made when a data communication module has been mounted in the controller and the installation of the data communication cable has been completed. This installation is mentioned in a separate documentAN234886440486		Following installation of a data communication module, the controller can be operated on a par with the other controllers in ADAP-KOOL® refrigeration controls.
The address is set between 1 and 60	o03	
The address is sent to the gateway when the menu is set in pos. ON	o04	
Access code If the settings in the controller are to be protected by a numerical code, you can set a numerical value between 0 and 100. If not, you can cancel the function with setting OFF.	o05	
Cooling or heating Cooling: Relays are cut in when the temperature is above the reference. Heating: Relays are cut in when the temperature is below the reference.	o07	Refg. / Heat

Operating status		
The controller goes through some regulating situations where it is just waiting for the next point of the regulation. To make these "why is nothing happening" situations visible, you can see an operating status on the display. Push briefly (1s) the upper button. If there is a status code, it will be shown on the display. The individual status codes have the following meanings		EKC state Ctrl. state (0 = regulation)
S2: When the relay is operated, it must be activated for min. x minutes (cf. C01)		2
S5: Renewed cutin of the same relay must not take place more often than every x minutes (cf. C07)		5
S8: The next relay must not cut in until x minutes have elapsed (cf. C11-C12)		8
S9: The next relay must not cut out until x minutes have elapsed (cf. C14-C15)		9
S10: Regulation stopped with the internal og external start/stop		10
S20: Emergency control		20
S25: Manual regulation of outputs		25
PS: Password required. Set password		PS
Alarm messages		**Alarms**
A1: High temperature alarm (cf. A10)		High temp. alarm
A2: Low temperature alarm (cf. A11)		Low temp. alarm
A11: No refrigerant has been selected (cf. o30)		RFG not selected
A12: Regulation stopped due to interrupted signal on the DI input		DI Alarm
A45: Regulation stopped with setting or with external switch		A45 Stand by
E1: Error in the controller		Controller fault
E2: Control signal outside the range (short-circuited / interrupted)		Out of range
Service		
u07: Voltage signal on the analogue input		
u10: Status on DI- input		
u15: Status on relay output DO1		
u25: Signal on pressure transmitter input (bar / PSIG)		
u58: Status on relay output DO2		
u59: Status on relay output DO3		
u60: Status on relay output DO4		
u62: Status on relay output "alarm"		

Warning ! Direct start of compressors *
To prevent compressor breakdown parameter c01 and c07 should be set according to suppliers requirements or in general :
Hermetic Compressors c07 min. 5 minutes
Semihermetic Compressors c07 min. 8 minutes and c01 min. 2 to 5 minutes (Motor from 5 to 15 KW)
*) Direct activating of solenoid valves does not require settings different from factory (0)

Emergency procedure
If the controller registers irregularities in the registered signals, it will start an emergency procedure:

For compressor regulation:
- If the signal from the temperature sensor / pressure transmitter becomes smaller than expected, the controller will continue operating with the average capacity that has been cut in during the past 60 minutes. This cut-in capacity will gradually decline as time passes.
- If the signal becomes smaller than the set value of A11, the capacity will instantly be cut out.

For condenser regulation:
- If the signal from the temperature sensor / pressure transmitter becomes smaller than expected, or if the condensing pressure becomes bigger than the set value of A10, the entire capacity will instantly be cut in.

Operation

Display

The values will be shown with three digits, and with a setting you can determine whether the temperature are to be shown in °C or in °F.

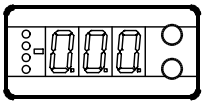

Light-emitting diodes (LED) on front panel

There are four LED's on the front panel which will light up when the relays are operated.
All LED's will flash if there is an error in the regulation. In this situation you can upload the error code on the display and cancel the alarm by pushing the top button briefly.

The controller can give the following messages:		
E1	**Error message**	Errors in the controller
E2		Regulation out of range or control signal is defect.
A1	**Alarm message**	High pressure alarm
A2		Low pressure alarm
A11		No refrigerant selected
A12		Regulation stopped due to interrupted signal on the DI input
A45		Regulation is stopped
PS		Password is required

The buttons

When you want to change a setting, the two buttons will give you a higher or lower value depending on the button you are pushing. But before you change the value, you must have access to the menu. You obtain this by pushing the upper button for a couple of seconds - you will then enter the column with parameter codes. Find the parameter code you want to change and push the two buttons simultaneously. When you have changed the value, save the new value by once more pushing the two buttons simultaneously.

Gives access to the menu (or cutout an alarm)

Gives access to changes

Saves a change

Examples of operations

Set the regulation's set point
1. Push the two buttons simultaneously
2. Push one of the buttons and select the new value
3. Push both buttons again to conclude the setting

Set one of the other menus
1. Push the upper button until a parameter is shown
2. Push one of the buttons and find the parameter you want to change
3. Push both buttons simultaneously until the parameter value is shown
4. Push one of the buttons and select the new value
5. Push both buttons again to conclude the setting

Menu survey

SW: 2.0x

Function	Parameter	Min.	Max.	Factory setting
Normal display				
Shows the signal from the temperature sensor / pressure transmitter	–		°C	–
Reference				
Set the regulation's set point	-	-60 °C	170 °C	3
Neutral zone	r01	0,1 K	20 K	4.0
Correction of signal from the sensor	r04	-20 K	20 K	0.0
Select SI or US display: 0=SI (bar / °C). 1=US (Psig / °F)	r05	c-b	F-P	c-b
Start / stop of regulation (0=off)	r12	0	1	0
Reference displacement by signal at DI input	r13	-50 K	50 K	0
Reference limitation. Max. value	r25	-50 °C	170°C	50 °C
Reference limitation. Min. value	r26	-60 °C	50°C	-60 °C
Displacement of reference (On=activ "r13")	r27	Off	On	Off
Capacity				
Min. ON time for relays	c01	0 min.	30 min	2
Min. time period between cutins of same relay	c07	0 min.	60 min.	4
Definition of regulation mode 1: Sequential (step mode / FILO) 2: Cyclic (step mode / FIFO) 3: Compressor with unloader	c08	1	3	1
If the regulation mode 3 has been selected, the relays for the unloaders can be defined to: no: Cut in when more capacity is required nc: Cut out when more capacity is required	c09	no	nc	no
Regulation parameter for + Zone	c10	0,1 K	20 K	3
Regulation parameter for + Zone min.	c11	0,1 min.	60 min.	2
Regulation parameter for ++ Zone seconds	c12	1 s	180 s	30
Regulation parameter for - Zone	c13	0,1 K	20 K	3
Regulation parameter for - Zone min.	c14	0,1 min.	60 min.	1
Regulation parameter for - - Zone seconds	c15	1 s	180 s	30
Cutin capacity at manual control. See also "c32"	c31	0%	100%	0%
Manual control of capacity (when On the value in "c31" will be used*)	c32	Off	On	Off
Alarm				
Alarm time delay	A03	1 min.	90 min.	30
Upper alarm limit (absolute value)	A10	-60 °C	170 °C	50
Lower alarm limit (absolute value)	A11	-60 °C	120 °C	-60
Miscellaneous				
Controllers address	o03*	1	240	0
On/off switch (service-pin message)	o04*	–	–	–
Access code	o05	off(-1)	100	-
Inverse function (HE: heating at relays = on)	o07	rE	HE	rE
Define input signal and application: 0: no signal / regulation stopped 1: 4 – 20 mA pressure transmitter - compressor reg. 2: 4 – 20 mA pressure transmitter - condenser reg. 3: AKS 32R pressure transmitter - compressor reg. 4: AKS 32R pressure transmitter - condenser reg. 5: 0 – 10 V relay module 6: 0 – 5 V relay module 7: 5 – 10 V relay module 8: Pt 1000 ohm sensor - compressor reg. 9: Pt 1000 ohm sensor - condenser reg. 10: PTC 1000 ohm sensor - compressor reg. 11: PTC 1000 ohm sensor - condenser reg.	o10	0	11	0
Set supply voltage frequency	o12	50 Hz	60 Hz	50
Manual operation with "x" relays	o18	0	4	0

Continued

Define number of relay outputs	o19	1	4	4
Pressure transmitter's working range - min. value	o20	-1 bar	5 bar	-1
Pressure transmitter's working range - max. value	o21	6 bar	199 bar	12
Define DI input: 0: not used 1: Contact displaces reference 2: Contact starts and stops regulation 3: Interrupted contact will cut out the capacity, and alarm will be given.	o22	0	3	0
Operating hours of relay 1 (value times 1000)	o23	0 h	99,9 h	0
Operating hours of relay 2 (value times 1000)	o24	0 h	99,9 h	0
Operating hours of relay 3 (value times 1000)	o25	0 h	99,9 h	0
Operating hours of relay 4 (value times 1000)	o26	0 h	99,9 h	0
Setting of refrigerant 1=R12. 2=R22. 3=R134a. 4=R502. 5=R717. 6=R13. 7=R13b1. 8=R23. 9=R500. 10=R503. 11=R114. 12=R142b. 13=User defined. 14=R32. 15=R227. 16=R401A. 17=R507. 18=R402A. 19=R404A. 20=R407C. 21=R407A. 22=R407B. 23=R410A. 24=R170. 25=R290. 26=R600. 27=R600a. 28=R744. 29=R1270. 30=R417A. 31=R422A. 32=R413A. 33=R422D. 34=R427A. 35=R438A. 36=XP10. 37=R407F.	o30	0	37	0

*) This setting will only be possible if a data communication moduel has been installed in the controller.

Service	
Voltage on the analogue input	u07
Status on DI- input	u10
Status on relay output DO1	u15
Signal on pressure transmitter input (bar / PSIG)	u25
Status on relay output DO2	u58
Status on relay output DO3	u59
Status on relay output DO4	u60
Status on relay output "alarm"	u62

Factory setting
If you need to return to the factory-set values, it can be done in this way:
- Cut out the supply voltage to the controller
- Keep both buttons depressed at the same time as you reconnect the supply voltage

Data

Supply voltage	230 V AC ±15% 50 / 60 Hz, 5 VA	
Input signal	Pressure transmitter*) with 4 – 20 mA or temperature sensor Pt 1000 ohm or temperature sensor PTC 1000 ohm or voltage signal (0 – 5 V, 0 – 10 V or 5 – 10 V)	
	Digital input to external contact function	
Relay output	4 pcs. SPST	AC-1: 4 A (ohmic) AC-15: 3 A (inductive)
Alarmrelay	1 pcs. SPST	AC-1: 4 A (ohmic) AC-15: 1 A (inductive)
Data communication	Possible to connect a data communication module	
Environments	-10 – 55 °C, during operation -40 – 70 °C, during transport	
	20 – 80% Rh, not condensed	
	No shock influence / vibrations	
Enclosure	IP 20	
Weight	300 g	
Mounting	DIN rail	
Display	LED, 3 digits	
Terminals	max. 2.5 mm² multicore	
Approvals	EU Low voltage Directive and EMC demands re CE-marking complied with. LVD-tested acc. to EN 60730-1 and EN 60730-2-9 EMC-tested acc. to EN 61000-6-3 and EN 61000-4-(2-6,8,11)	

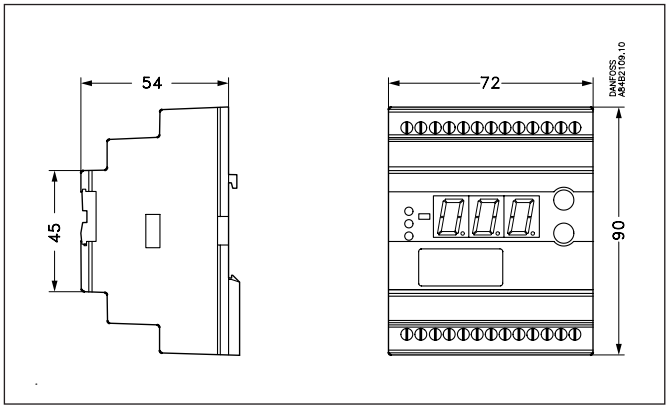

***) Pressure transmitter**
As pressure transmitter can be used AKS 3000 or AKS 33 (AKS 33 has a higher accuracy than AKS 3000).
It is also possible to use an AKS 32R.
Please refer to catalogue AF151486422482

Ordering

Type	Function	Code No.
EKC 331T	Capacity controller	**084B7105**
EKA 175	Data communication module (accessories), (RS 485 module)	**084B8579**

Connections

Necessary connections
Terminals:
25 – 26 Supply voltage 230 V AC
3 – 10 Relay connections no. 1, 2, 3 and 4
12 – 13 Alarm relay
There is connection between 12 and 13 in alarm situations and when the controller is dead
Control signal (see also o10)
Either terminals:
14 – 16 Voltage signal from AKS 32R
or
17 – 18 Current signal from AKS 3000 or AKS 33
or
15 – 16 Sensor signal from AKS 21, AKS 12 or EKS 111
or
15 – 16 Voltage signal from an other regulation.

External contact function, if applicable
19 – 20 Contact function for displacement of reference or start / stop of the regulation or for monitoring of safety circuit.

Data communication, if applicable
21 – 22 Mount only, if a data communication module has been mounted.
It is <u>important</u> that the installation of the data communication cable be done correctly. Cf. separate literature No. AN234886440486

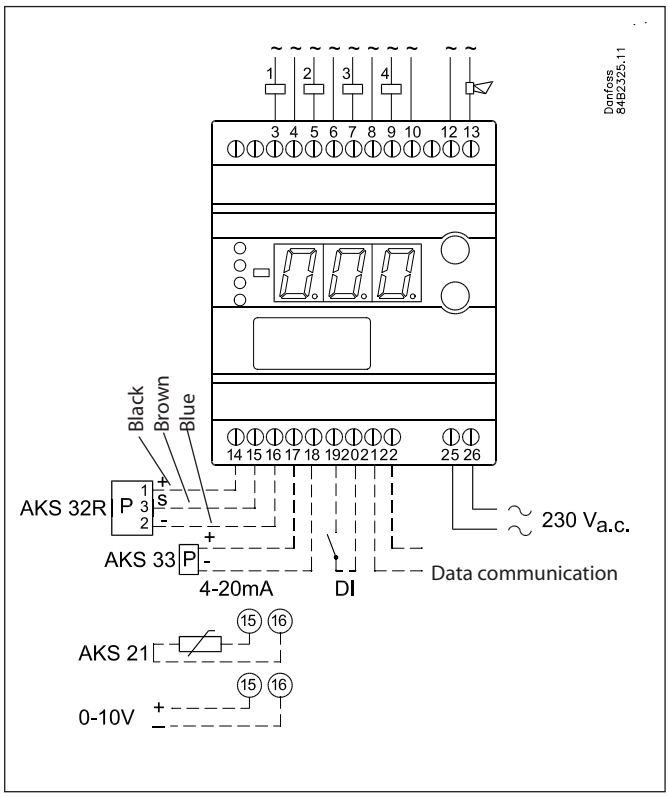

ENGINEERING
TOMORROW

Temperature sensors
AKS 11, AKS 12, AKS 21, AK-HS 1000

Contents **Page**

Technical data and ordering. 1083
Functional description 1083
Dimensioning 1084

AF151486422482en-000601_Pages 184-185 | 2015.03

ENGINEERING TOMORROW

Temperature sensors
AKS 11, AKS 12, AKS 21, AK-HS 1000



These sensors are recommended for accurate temperature measurement in applications such as superheating, food safety logs, and other important temperature measurement applications.

Functional description
The sensor unit consists of a platinum element the resistance value of which changes proportionally with the temperature.
Pt 1000 ohm sensor (1000 ohm at 0 °C).
The sensors are adjusted and meet the tolerance requirements of EN 60751 Class B.

Technical data and ordering

Type	Description	Temperature range [°C]	Sensor / sensor body	Connection / cable	Enclosure	Time constant [s]	Cable length [m]	Qty	Code
AKS 11 *)	Surface and duct sensor for control and monitoring	-50 – 100	Top: PPO (Noryl) Bottom: stainless steel	PVC cable, 2 x 0.2 mm²	IP 67	3 [1] 10 [2] 35 [3]	3.5 m	1	084N0003
							3.5 m + AMP	110	084N0050
							5.5 m	1	084N0005
							5.5 m + AMP	70	084N0051
							8.5 m	1	084N0008
							8.5 m + AMP	50	084N0052
AKS 12	Air temperature sensor for monitoring	-40 – 100	18/8 stainless steel	PVC cable 2 x 0.22 mm²	IP 67	15 [2]	1.5 m	1	084N0036
								30	084N0035
							3.5 m	30	084N0039
							5.5 m	30	084N0038
							5.5 m + AMP	30	084N0037
AKS 21A **)	Surface sensor with clip	-70 – 180	18/8 stainless steel	Fire-resistant silicone rubber cable, 2 x 0.2 mm²	IP 67	6 [1] 14 [2] 35 [3]	2.5 m	1	084N2007
							5.0 m	1	084N2008
	Surface sensor with shielded cable and clip	-70 – 180					2.0 m	1	084N2024
AKS 21M	Multipurpose sensor	-70 – 180					2.5 m	1	084N2003
AKS 21W	Immersion sensor with cable and sensor pocket, welded version	-70 – 180	Immersion sensor, 18/8 stainless steel tube	Fire-resistant silicone rubber cable, 2 x 0.2 mm²	IP 56	18 [1]	2.5 m	1	084N2017
			Weld nipple: 18/8 stainless steel						
			Thread nipple: free cutting steel						
AK-HS 1000	Product sensor for HACCP logging	-30 – 50	ABS and PC	PVC cable 2 x 0.25 mm²	IP 54	180-900 [3]	5.5 m	1	084N1007

*) Recommended for measuring superheat
**) Recommended for hot gas systems

[1]) Agitated liquid.
[2]) Clamped to pipe.
[3]) Air 4 m/s.

Dimensioning

AKS 11, AKS 12, AKS 21, AK-HS 1000

°C	ohm	°C	ohm
0	1000.0		1000.0
1	1003.9	-1	996.1
2	1007.8	-2	992.2
3	1011.7	-3	988.3
4	1015.6	-4	984.4
5	1019.5	-5	980.4
6	1023.4	-6	976.5
7	1027.3	-7	972.6
8	1031.2	-8	968.7
9	1035.1	-9	964.8
10	1039.0	-10	960.9
11	1042.9	-11	956.9
12	1046.8	-12	953.0
13	1050.7	-13	949.1
14	1054.6	-14	945.2
15	1058.5	-15	941.2
16	1062.4	-16	937.3
17	1066.3	-17	933.4
18	1070.2	-18	929.5
19	1074.0	-19	925.5
20	1077.9	-20	921.6
21	1081.8	-21	917.7
22	1085.7	-22	913.7
23	1089.6	-23	909.8
24	1093.5	-24	905.9
25	1097.3	-25	901.9
26	1101.2	-26	898.0
27	1105.1	-27	894.0
28	1109.0	-28	890.1
29	1112.8	-29	886.2
30	1116.7	-30	882.2
31	1120.6	-31	878.3
32	1124.5	-32	874.3
33	1128.3	-33	870.4
34	1132.2	-34	866.4
35	1136.1	-35	862.5
36	1139.9	-36	858.5
37	1143.8	-37	854.6
38	1147.7	-38	850.6
39	1151.5	-39	846.7
40	1155.4	-40	842.7
41	1159.3	-41	838.8
42	1163.1	-42	835.0
43	1167.0	-43	830.8
44	1170.8	-44	826.9
45	1174.7	-45	822.9
46	1178.5	-46	818.9
47	1182.4	-47	815.0
48	1186.3	-48	811.0
49	1190.1	-49	807.0
50	1194.0	-50	803.1

approx. 3.9 ohm/K

The tolerance of a Pt 1000 sensor is less than ±(0.3 + 0.005 T).
This translates into a temperature error of less than 0.5 degree for refrigeration control.

AKS 11

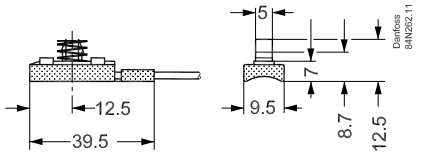

AKS 12

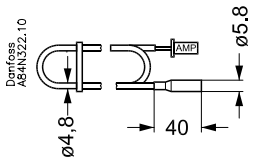

AKS 21A,
AKS 21M

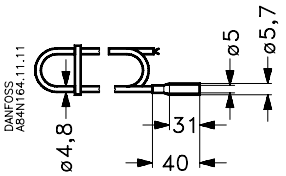

AKS 21W

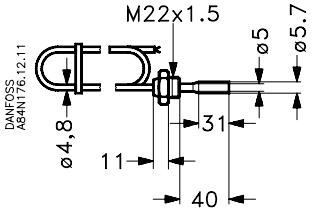

AKS 21W
welded version

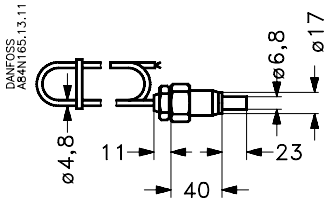

Pocket in welded version
for AKS 21W

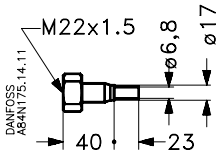

Product sensor
for HACCP
AK-HS 1000

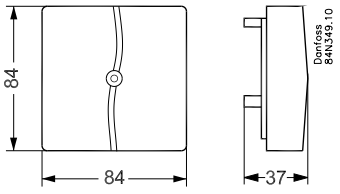

Sensors with AMP plug:
connector type AMP ital mod 2, housing 280 358,
crimp contacts type 280 708-2

ENGINEERING
TOMORROW

Pressure transmitters
AKS 32, AKS 33, AKS 32R, AKS 2050

Contents **Page**

Advantages 1087
Output signal 1088
Ordering data 1088
Dimensions and weights 1090

AF151486422482en-000601_pages 190-192 | 2015.03

ENGINEERING
TOMORROW

Pressure transmitters
AKS 32, AKS 33, AKS 32R, AKS 2050



Introduction

AKS 32 and AKS 33 are pressure transmitters that measure a pressure and convert the measured value to a standard signal:
- 1 → 5 V DC for AKS 32
- 4 → 20 mA for AKS 33

AKS 32R and AKS 2050 are ratiometric pressure transmitters that convert the measured pressure to a linear output signal. The minimum value of the output signal is 10% of the actual supply voltage. The maximum value is 90% of the actual supply voltage.

With a supply voltage of 5 V, this yields a linear output signal with a value of:
- 0.5 V at the minimum pressure of the pressure transmitter;
- 4.5 V at the maximum pressure of the pressure transmitter.

Application
- A/C systems
- Refrigeration systems
- Process control
- Laboratories

Advantages

- Advanced sensor technology enables high pressure control accuracy, which essential for precise and energy-efficient capacity regulation in refrigeration systems
- Temperature compensation for low-pressure and high-pressure pressure transmitters specifically designed for refrigeration systems:
  - *Low pressure:*
    -30 – 40 °C (≤16 bar)
  - *High pressure:*
    0 – 80 °C (>16 bar)
- Compatible with all refrigerants, including ammonia, for reduced parts inventory and greater application flexibility
- Effective moister protection allows the sensors to be used in very harsh environments, such as a suction line surrounded by ice
- Robust construction provides protection against mechanical factors as shock, vibration, and pressure surges. AKS sensors can be fitted directly on the system components
- No adjustment is necessary. Thanks to the advanced sensor technology and sealed gauge construction, the accuracy of the factory calibration is maintained regardless of changes in ambient temperature and atmospheric pressure. This is essential for reliable control of evaporating pressure in air conditioning and refrigeration systems
- Built-in voltage regulator
- EMC protection compliant with the EU EMC Directive (CE marking)
- UL approved

Output signal

AKS 32, AKS 33

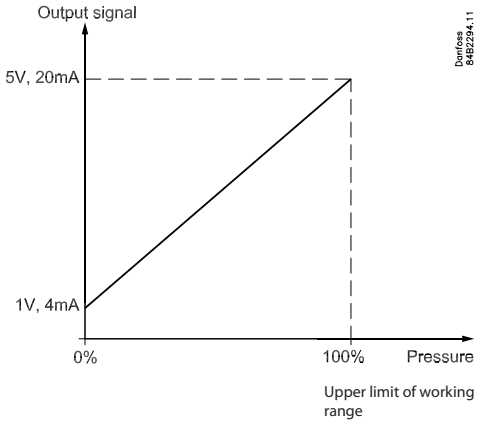

AKS 32R, AKS 2050

The plot shows the relationship between the AKS 32R (or AKS 2050) output signal from , the supply voltage and the pressure.

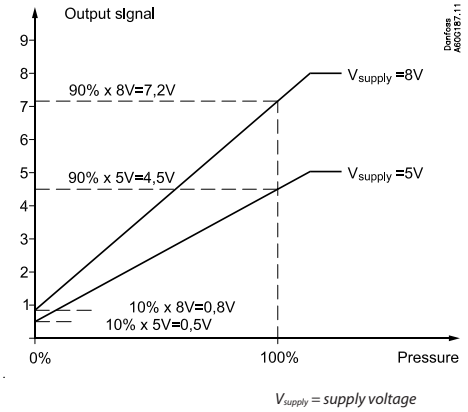

V_{supply} = *supply voltage*

Ordering data

AKS 32, version 1 – 5 V

	Operating range [bar]	Allowable working pressure PB [bar]	Compensated temperature range [°C]	Code no. EN 175301-803 plug Pg 9 ¼ NPT [1]	G ⅜ A [2]	¼ flare [3]
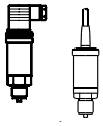	-1 – 6	33	-30 – 40	**060G2000**	**060G2004**	**060G2068**
	-1 – 12	33	-30 – 40	**060G2001**	**060G2005**	**060G2069**
	-1 – 20	40	0 – 80	**060G2002**	**060G2006**	**060G2070**
	-1 – 34	55	0 – 80	**060G2003**	**060G2007**	**060G2071**
	-1 – 50	100	0 – 80			**060G2155**

AKS 33, version 4 – 20 mA

	Operating range [bar]	Allowable working pressure PB [bar]	Compensated temperature range [°C]	Code no. EN 175301-803 plug Pg 9 ¼ NPT [1]	G ⅜ A [2]	¼ flare [3]	Cable ¼ NPT [1]	G ⅜ A [2]	¼ flare [3]
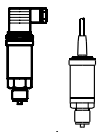	-1 – 5	33	-30 – 40	**060G2112**	**060G2108**	**060G2047**			
	-1 – 6	33	-30 – 40	**060G2100**	**060G2104**	**060G2048**		**060G2120**	
	-1 – 9	33	-30 – 40	**060G2113**	**060G2111**	**060G2044**			**060G2062**
	-1 – 12	33	-30 – 40	**060G2101**	**060G2105**	**060G2049**	**060G2117**		
	-1 – 20	40	0 – 80	**060G2102**	**060G2106**	**060G2050**	**060G2118**		
	-1 – 34	55	0 – 80	**060G2103**	**060G2107**	**060G2051**	**060G2119**		**060G2065**
	0 – 16	40	0 – 80	**060G2114**	**060G2109**				
	0 – 25	40	0 – 80	**060G2115**	**060G2110**	**060G2045**		**060G2127**	**060G2067**

Pressure transmitters, types AKS 32, AKS 33, AKS 32R, AKS 2050

AKS 32R, AKS 2050

	Type	Operating range [bar]	Allowable working pressure PB [bar]	Compensated temperature range [°C]	Code no.				
					1/4 NPT 1)	G 3/8 A 2)	1/4 flare 3)	3/8 solder	1/4 female flare 4)
	AKS 32R	-1 – 12	33	-30 – 40	**060G1037**	**060G1038**	**060G1036**	**060G3551**	**060G6323**
		-1 – 34	55	0 – 80			**060G0090**	**060G3552**	**060G6341**
	AKS 2050	-1 – 59	100	-30 – 40	**060G6342**	**060G5750**		**060G6408**	
		-1 – 99	150	-30 – 40	**060G6343**	**060G5751**			
		-1 – 159	250	0 – 80	**060G6344**	**060G5752**			
	Mating plug with 5 m cable (rated IP 67 when fitted to pressure transmitter)				**060G1034**				
	Plug Pg 9				**060G0008**				

1) 1/4 – 18 NPT.
2) Thread ISO 228/1 - G 3/8 A (BSP).
3) 7/16 – 20 UNF.
4) With depressor pin for Schraeder valve. 7/16 – 20 UNF.

Compact pressure transmitter for CO_2

Advantage:
- Designed for CO_2 plants
- Compact design
- High accuracy

Additional information available:
Technical brochure: AI225286434835

MBS 8250	Operating range [bar]	Allowable working pressure PB [bar]	Compensated temperature range [°C]	Signal	Code no.
					1/4 NPT 1)
	-1 – 159	250	-20 – 100	Ratiometric	**064G1131**
				4 – 20 mA	**064G1132**
	Round Packard Metri-Pack. Connection plug with 10 m cable				**064G0910**

Dimensions and weights

AKS 32, AKS 33

Version with EN 175301-803 plug Pg 9

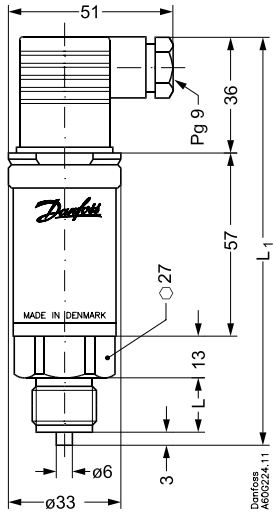

Cable version

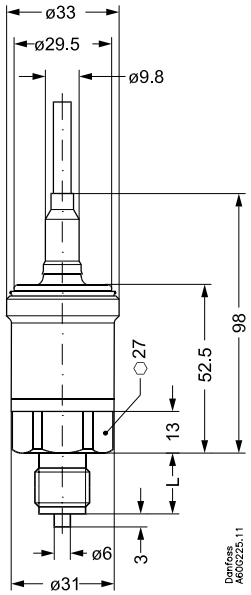

Pressure connection	¼ – 18 NPT	G ⅜ A ISO 228/1	¼ in. flare 7/16 – 20 UNF
L_1 [mm]	122	127	122.5
L [mm]	16	18	16.5

Weight approx. 0.3 kg

AKS 32R, AKS 2050

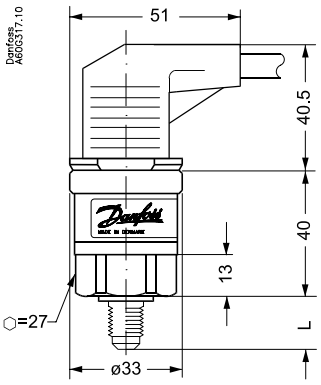

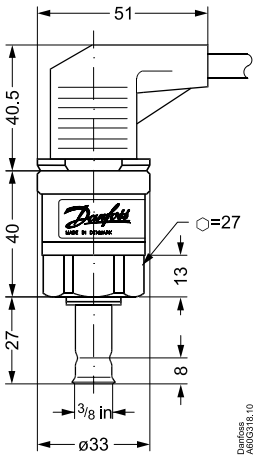

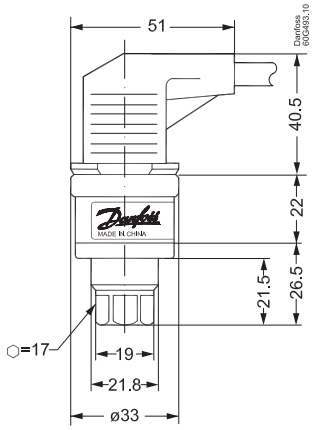

Pressure connection	¼ – 18 NPT	G ⅜ A ISO 228/1	¼ in. flare 7/16 – 20 UNF	⅜ Solder
L [mm]	16	21	16.5	30

Weight approx. 0.15 kg

Additional information available:
AKS 32 and AKS 33
Technical brochure: AI191486421667
AKS 32R and AKS 2050
Technical brochure: AI215486424533

MBS 8250
Technical brochure: AI225286434835

ENGINEERING
TOMORROW

Danfoss Industrial Refrigeration
A world of expertise at the click of a button

Turn to Danfoss if you want to combine quality components with expert knowhow and support. Try out these free tools, designed to make your work much easier.



DIRbuilder
DIRbuilder is designed to make selection processes for industrial refrigeration projects easier and less time-consuming. Specify the valves you need from an extensive pool of configuration options. The DIRbuilder library comprises all Danfoss Industrial Refrigeration valves. Free of charge – no software needed.



Coolselector® 2 – New calculation software for Industrial Refrigeration
Coolselector® 2 is a calculation and support tool for contractors and system designers, offering complete pressure drop calculations, analysis of pipe and valve design and the ability to generate performance reports. It replaces the well-known DIRcalc™ software and offers several new functionalities.



Danfoss IR app
The free IR App gives you a spare parts tool, which makes it easy for you to find the spare part number for a given Danfoss industrial refrigeration valve.



Download 3D CAD symbols
From our online product catalogue on our website, you can download 3D CAD symbols and illustrations to help you when designing refrigeration plants.



IR application tool
With this interactive PowerPoint slideshow, you can explore all the details of a two-stage ammonia plant. You will find detailed cut-away drawings and information on the valves in the installation along with links to videos, literature and product animations.



Application handbook
The Application Handbook is designed to help you every step of the way when working with industrial refrigeration systems. Among many other things, it contains examples of how to select control methods for different refrigeration systems, their design and which components to choose.

Visit **www.danfoss.com/IR-tools** and find all the tools you need.

Danfoss can accept no responsibility for possible errors in catalogues, brochures and other printed material. Danfoss reserves the right to alter its products without notice. This also applies to products already on order provided that such alterations can be made without subsequential changes being necessary in specifications already agreed.
All trademarks in this material are property of the respective companies. Danfoss and the Danfoss logotype are trademarks of Danfoss A/S. All rights reserved.