ENGINEERING
TOMORROW

Data sheet

Actuator for modulating control
AME 55QM

Description

Actuator is used with pressure independent balancing and control large valve type AB-QM DN 125 and DN 150.

Features:
- "Self stroking" function
- Load related "Switch off" function that prevents overloading
- Diagnostic LED

Main data:
- Nominal voltage: 24 VAC, 50 Hz/60 Hz
- Control input signal:
  - 0(4)-20 mA
  - 0(2)-10 V
- Force: 2000 N
- Stroke: 40 mm
- Speed: 8 s/mm
- Max. medium temperature: 200 °C
- Manual operation

Ordering

Type	Supply voltage	Code No.
AME 55 QM	24 V~	**082H3078**

Technical data

Power supply	V	24~; +10 to – 15%
Power consumption	VA	9
Frequency	Hz	50 / 60
Control input Y	V	0 – 10 (2 – 10) Ri = 24 kΩ
	mA	0 – 20 (4 – 20) Ri = 500 Ω
Output signal X	V	0 – 10 (2 – 10)
Close of force	N	2000
Max. stroke	mm	40
Speed	s/mm	8
Max. medium temperature	°C	200
Ambient temperature		0 – 55
Storage and transport temp.		–40 to +70
Ambient humidity		95% r.h., non-condensing
Protection class		III safety extra-low voltage
Degree of protection		IP 54
Weight	kg	3.8
CE - marking in accordance with standards		Low Voltage Directive 73/23/EEC
		EMC-Directive 2006/95/EEC, EN 60730-1, EN 60730-2-14

Installation

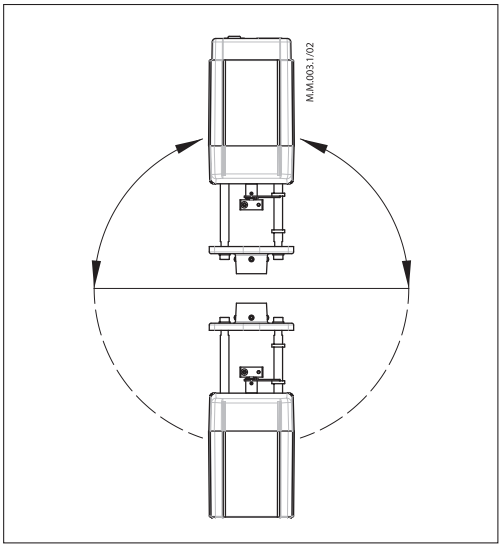

Mechanical

The actuator should be mounted with the valve stem in either horizontal position or pointing upwards. Use a 4 mm Allen key (not supplied) to fit the actuator to the valve body.
Allow for necessary clearance for maintenance purposes.

The valve has position indication rings which should be pushed together before commissioning; after stroking they indicate the ends of the stroke.

Electrical

Electrical connections can be accessed by removing the cover. Two M16 × 1.5 cable entries are provided. Both entries are provided with a rubber grommet for use with flexible cable. Note that in order to maintain the enclosure IP rating, appropriate cable glands must be used.

Disposal

The actuator must be dismantled and the elements sorted into various material groups before disposal.

Wiring

24 Vac only.

Wiring length	Recommended square of the wiring
0-50 m	0.75 mm²
> 50 m	1.5 mm²

Automatic self stroking feature

When power is first applied, the actuator will automatically adjust to the length of the valve stroke. Subsequently, the self stroking feature can be re-initialised by changing position of SW9.

Diagnostic LED

The red diagnostic LED is located on the pcb under the cover. It provides indication of three operational states:

- Actuator Healthy (Permanently ON),
- Self Stroking (Flashes once per second),
- Error (Flashes 3 times per second - seek technical assistance).

Wiring for modulating control

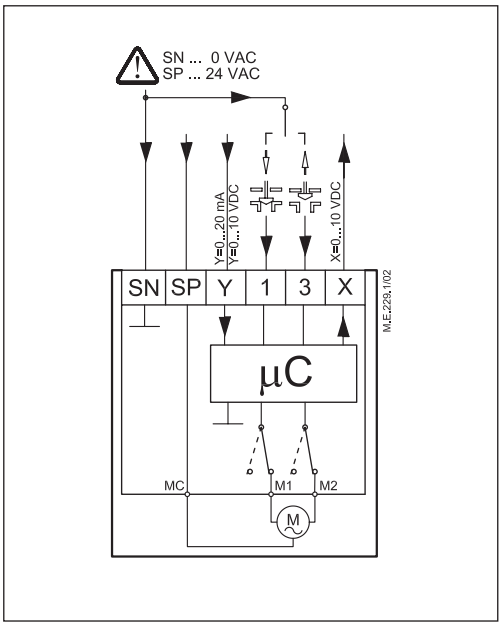

Wiring for 3-point control

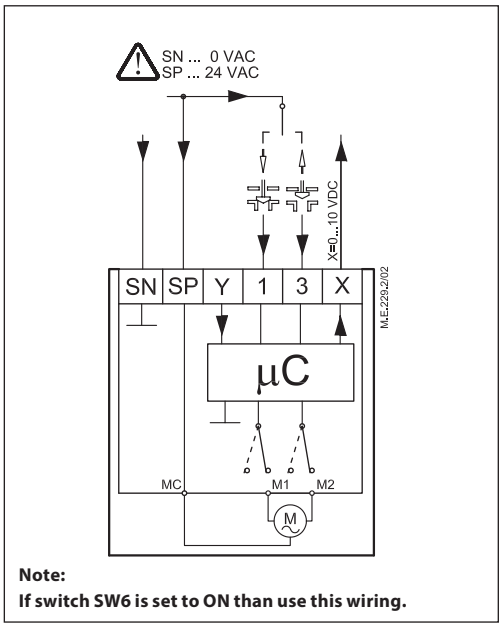

Note:
If switch SW6 is set to ON than use this wiring.

DIP switch setting

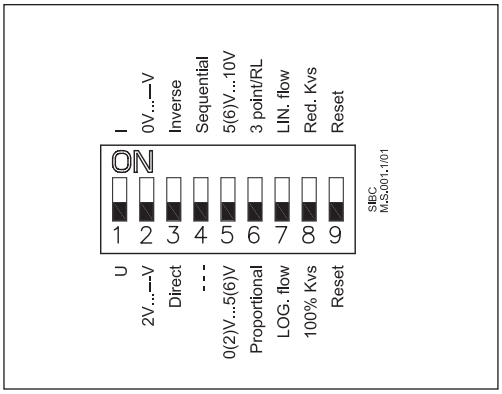

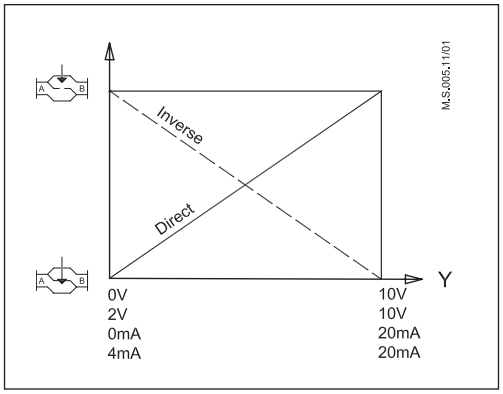

The actuator has a function selection DIP switch under the removable cover. In particular, if SW6 is set to ON, the actuator will perform as 3-point actuator.
The switch provides the following functions:

• SW1: U/I - Input signal type selector:
If set to OFF position, voltage input is selected. If set to ON position, current input is selected.

• SW2: 0/2 - Input signal range selector:
If set to OFF position, the input signal is in the range from 2 V to 10 V (voltage input) or from 4 mA to 20 mA (current input). If set to ON position, the input signal is in the range from 0 V to 10 V (voltage input) or from 0 mA to 20 mA (current input).

• SW3: D/I - Direct or inverse acting selector:
If set to OFF position, the actuator is direct acting (stem contracts as voltage increases). If actuator is set to ON position the actuator is inverse acting (stem extracts as voltage increases).

• SW4: —/Seq - Normal or sequential mode selector:
If set to OFF position, the actuator is working in range 0(2)..10V or 0(4)..20mA. If set to ON position, the actuator is working in sequential range; 0(2)..5 (6)V or (0(4)..10 (12)mA) or (5(6)..10V) or (10(12)..20mA).

• SW5: 0..5V/5...10V - Input signal range in sequential mode:
If set to OFF position, the actuator is working in sequential range 0(2)..5 (6)V or 0(4)..10 (12)mA.
If set to ON position, the actuator is working in sequential range; 5(6)..10V or 10(12)..20mA.

• SW6: Prop./3-pnt - Modulating or 3-point mode selector:

If set to OFF position, the actuator is working normally according to control signal. If set to ON position, the actuator is working as 3-point actuator.

For this operation please refer to page 2 *(wiring 3-point control).*

When DIP switch SW6 is set to ON than all functions from other DIP switch become inactive.

• SW7: LOG/LIN - Equal percentage or linear flow through valve selector:
If set to OFF position, the flow through valve is equal percentage. If set to ON position, the flow through valve is linear according to control signal.

• **SW8: 100% K_{VS}/Reduced K_{VS}:**
To be set to OFF position (no sense in combination with AB-QM).

• **SW9: Reset:**
Changing this switch position will cause the actuator to go through a self stroking cycle.

Commissioning

Complete the mechanical and electrical installation and perform the necessary checks and tests:

- Isolate control medium. (e.g. self stroking in a steam application without suitable mechanical isolation could cause a hazard).
- Apply the power. Note that the actuator will now perform the self stroking function.
- Apply the appropriate control signal and check the valve stem direction is correct for the application.
- Ensure that the actuator drives the valve over its full stroke, by applying the appropriate control signal. This action will set the valve stroke length.

The unit is now fully commissioned.

Commissioning / testing feature
The actuator can be driven to the fully open or closed positions (depending on valve type) by connecting SN to terminals 1 or 3.

Data sheet **Actuator for modulating control AME 55 QM**

Manual override

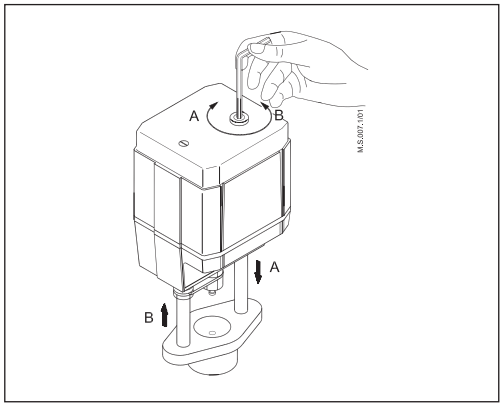

The manual override is applied by rotating the 4 mm Allen key (not supplied) to the required position. Observe the direction of the rotation symbol.

- Disconnect power supply
- Adjust valve position using an Allen key
- Set valve to closed position
- Restore power supply

If manual override has been used then X and Y signal are not correct until the actuator reaches its end position. If this is not accepted reset the actuator, or apply accessory active return signal kit.

Dimensions

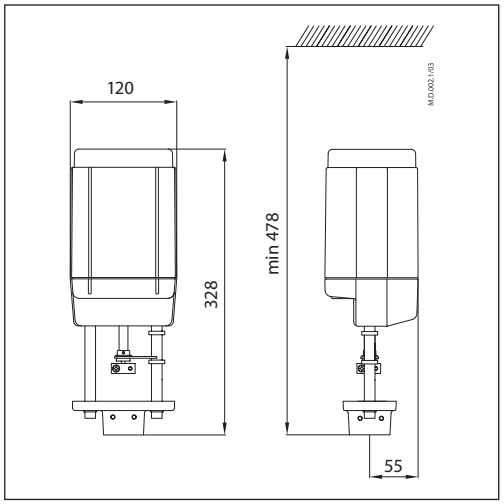

Actuator - valve combinations

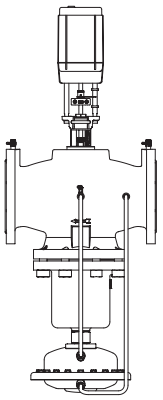

AME 55 QM + AB-QM DN 125

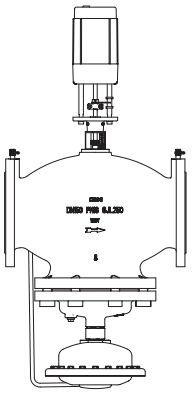

AME 55 QM + AB-QM DN 150

Danfoss can accept no responsibility for possible errors in catalogues, brochures and other printed material. Danfoss reserves the right to alter its products without notice. This also applies to products already on order provided that such alterations can be made without subsequential changes being necessary in specifications already agreed.
All trademarks in this material are property of the respective companies. Danfoss and the Danfoss logotype are trademarks of Danfoss A/S. All rights reserved.