Service Kit Instructions

H1 pump

Electrical displacement control (EDC) sensor replacement procedure

Removal of Sensor and Protection Cover

1. Clean pump externally with clean solvent to remove debris.
2. Remove and discard protection cover screws (D767) using a 2.5 mm internal hex wrench.
3. Remove the protection cover from the control.
4. If protection cover is damaged, discard.
5. Remove and discard sensor screws (D770) using a 2.5 mm internal hex wrench.
6. Remove and discard the sensor.
7. Clean the threads with a thread cutter.

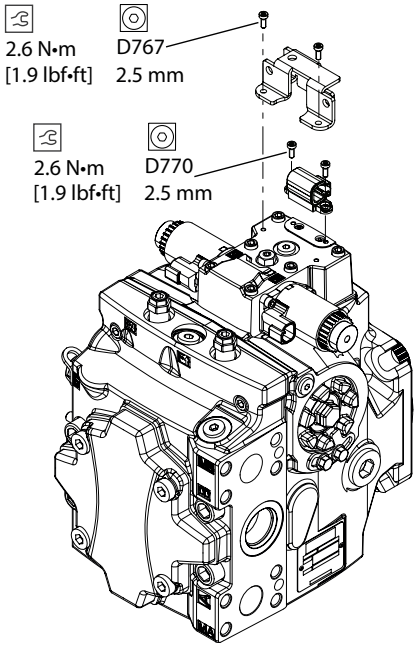

Installation of Sensor and Protection Cover

1. Position sensor on control housing.
2. Using a 2.5 mm internal hex wrench, fasten sensor to control housing with new screws provided in the service kit (D770). Torque screws to 2.6 N•m [1.9 lbf•ft].
3. Postion protection cover on control housing over sensor.
4. Using a 2.5 mm internal hex wrench, fasten protection cover with new screws provided in the service kit (D767). Torque the screws to 2.6 N•m [1.9 lbf•ft].

Warning

Calibration of sensor output in vehicle software is mandidtory after sensor replacement because output signal can vary from one sensor to the next.

© Danfoss, 2016