Service Kit Instructions

H1 pump
Electrical displacement control (EDC) with angle sensor replacement procedure

Removal of EDC

1. Clean pump externally with clean solvent to remove debris.
2. Remove control screws (D250) using a 5 mm internal hex wrench.
3. Remove the control from the pump.

Dowel pins (D300) must remain in pump housing.

4. Remove and discard the control gasket.

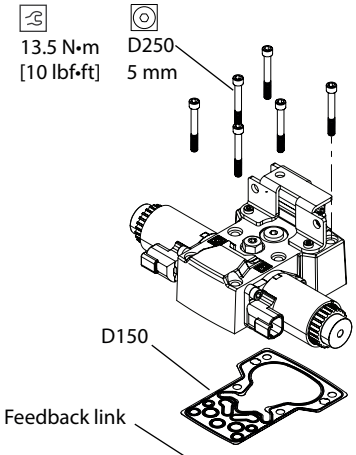

Installation of EDC

1. Install new control gasket (D150).
2. Before positioning the control on the pump housing ensure assembly fixture is positioned over the linkage spring in EDC center as shown on the right.
3. Position control on pump housing. Ensure that feedback pin on swashplate is positioned properly in control arm.
4. Pull assembly fixture out before installing control screws.

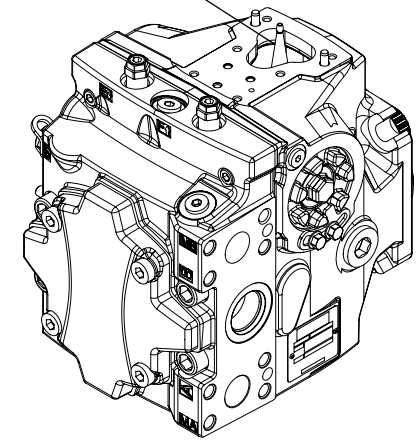

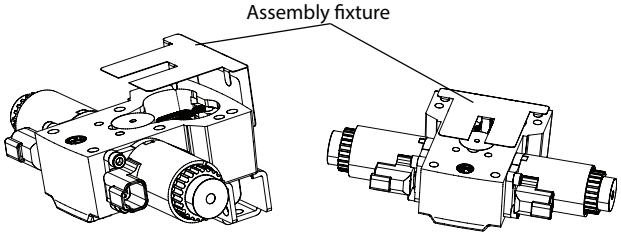

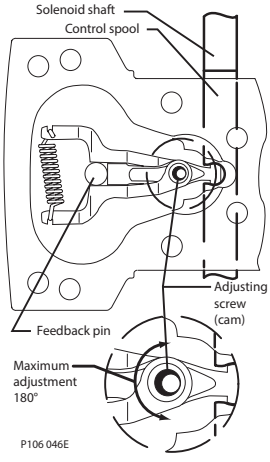

Remove plug (D065) and verify the swashplate feedback pin is properly positioned between control feedback arms.

5. Using a 5 mm internal hex wrench, fasten control to pump with screws (D250). Torque screws to 13.5 N•m [10 lbf•ft] following torque sequence shown to the right.

Torque sequence (6 screw control)

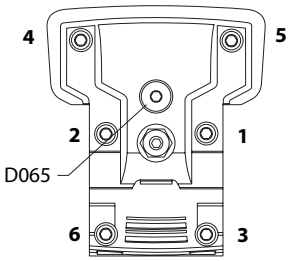

Caution

Calibration of sensor output in vehicle software is mandidtory after control replacement because output signal can vary from one control to the next.

© Danfoss, 2016

EDC adjustment

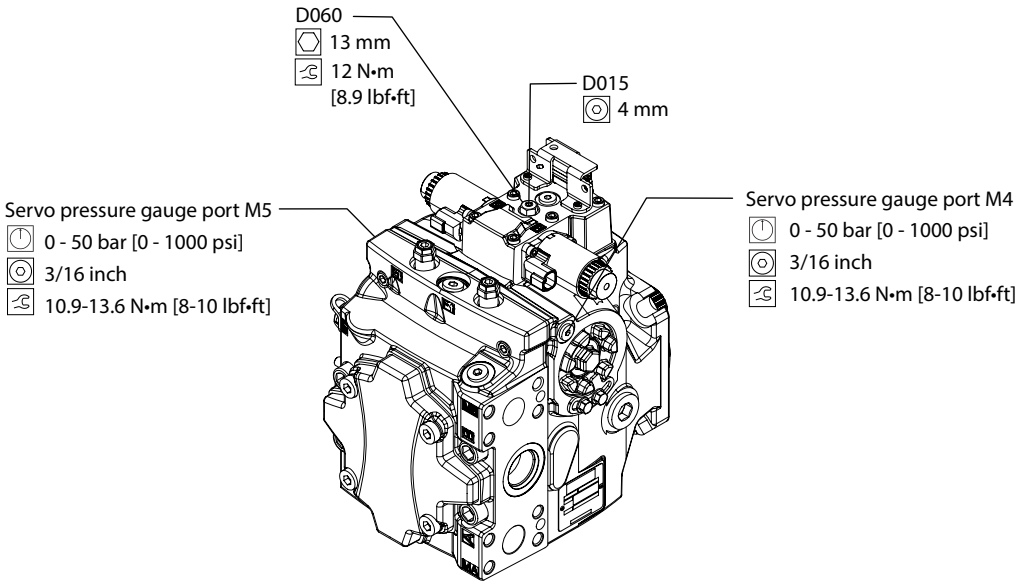

The neutral adjustment is the only adjustment that can be made on electrical displacement controls. All other functions are preset at the factory. The neutral adjustment must be made with the pump running on a test stand or on the vehicle/machine with the prime mover operating.

Warning

Unintended movement of the machine or mechanism may cause injury to the technician or bystanders. To protect against unintended movement, secure the machine or disable/disconnect the mechanism while servicing.

1. Install a 50 bar [1000 psi] pressure gauge in each of the two servo gauge ports (M4 and M5). Disconnect the external control input (electrical connection) from the control. Start the prime mover and operate at normal speed.
2. Use a 4 mm internal hex wrench to hold the neutral adjusting screw (D015) stationary while loosening the lock nut (D060) with a 13 mm wrench.
3. If necessary, turn adjusting screw to reduce any existing pressure differential.
4. Rotate the neutral adjusting screw (D015) clockwise until the pressure increases in one of the pressure gauges. Note the angular position of the wrench. Then rotate the neutral adjusting screw counterclockwise until the pressure increases by an equal amount on the other gauge. Again note the angular position of the wrench.
5. Rotate the neutral adjusting screw clockwise half the distance between the wrench position noted above. The gauges should read the same pressure, indicating that the control is in its neutral position.
6. Hold the neutral adjusting screw stationary. Tighten the lock nut (D060). Torque lock nut to 12 N•m [8.9 lbf•ft]. Do not overtorque the nut.
7. When the neutral position is set, stop the prime mover, remove the gauges, and install the gauge port plugs. Reconnect the external control input.

Caution

Adjustment of the EDC is very sensitive. Be sure to hold the hex wrench steady while loosening the lock nut.

A small pressure differential is acceptable. Final adjustment must be within 2 bar differential. Achieving zero differential is not possible.

© Danfoss, 2016