ENGINEERING
TOMORROW

Data Sheet

Pressure Transmitter Type **DST P110**

For cooling applications

The Danfoss DST P110 series pressure transmitter is designed for demanding refrigeration, air conditioning and industrial cooling applications, such as:

- Chillers
- Transport refrigeration
- Commercial refrigeration
- Variable speed HVAC
- Heat pumps
- Variable refrigerant flow (VRF)

Drawn from over 30 years of experience with MEMS pressure sensing, the DST P110 offers outstanding performance in a compact and durable stainless-steel package.

Running a powerful ARM-based microcontroller, the DST P110 offers diagnostic features and scalable performance features at a competitive price.

Features

- Hermetically sealed media interface (all stainless steel, fully welded)
- Compatible with all refrigerants
- Industry leading accuracy over a broad temperature range
- Compact and cost effective design for OEM applications
- Self-diagnostics minimize warranty costs
- Enables harness fault detection
- Superior shock and vibration resistance
- High overload and burst pressure
- Robust electronics platform for harsh electrical environments
- Low heat conduction Bi-metal solder tube (Copper/Stainless Steel) version available.

Product specification

Technical data

Total error band	± 1% FS (within specified temperature range[1])
Durability, P: 10%-110%	10 x 10^6 cycles

[1] See code number table for focused accuracy ranges

Table 1: Overload and burst pressure

Burst pressure	300 bar
Overload pressure	4 x FS pressure
Response time	< 2 ms

Table 2: Environmental conditions

Media temperature range		-40 – 135 °C
Ambient temperature range		-40 – 125 °C[2]
Storage temperature range		-50 – 125 °C
Voltage supply		5 V ± 10%
Load [R_L] (load connected to ground)		R_L ≥ 2 kΩ at 5 V DC
Output modes		Ratiometric (10-90% Vss)
Output limiting (clamping)		Low clamp 4% Vss High clamp 99% Vss
Over and reverse voltage		Protected to 16 V
Short circuit		Protected to 16 V
Miswiring		Protected
Diagnostic fault signal		2% Vss
EMC compatibility		EN 61000-6-3 EN 61000-6-2
ESD		IEC 61000-4-2 8 kV contact, 15 kV air
Insulation resistance		>100M Ohm at 500 V DC
Vibration resistance	16.5 g (20-2000 Hz)	EN 60068-2-64
Shock resistance	1000 g (half sinus, 1 ms)	EN 60068-2-27
Enclosure material		AISI 304L Stainless steel and PBT (30% glass reinforced)
Material with media contact		AISI 304L Stainless steel; AISI 316L Stainless steel
Weight		approx. 61 g for solder tube & 62 g for female flare
Enclosure		IP 67

[2] Contact Danfoss for higher temperatures

Output and diagnostics

Ratiometric example

Figure 1: Output and Diagnostics

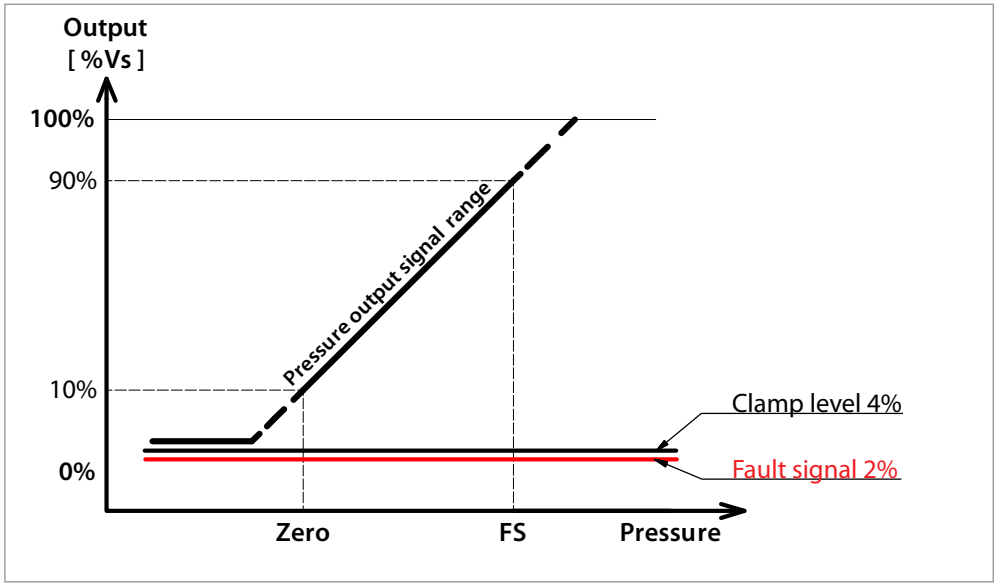

Output range
- Defines the measuring range of the sensor

Output clamp levels
- Limit the pressure output signal if the pressure rises above or falls below the normal range

Sensor fault signal
- Placed below the pressure output range. Output at this level signals a sensor fault

Harness fault detection
- Low leakage current of the sensor allows the controller to recognize harness fault conditons. (Requires a pull-down or pull-up resistor at controller interface).

If the connected controller has an internal pull up or pull down resistor at the analog channel input, then the loss of ground or supply voltage (Vss) connection to the sensor will result in a near Vss or near ground signal voltage.

Contact Danfoss for detailed information and requirements.

Dimensions / Combinations

Table 3: Dimensions

Metri-Pack 150 (Round)	Metri-Pack 150 (Round)
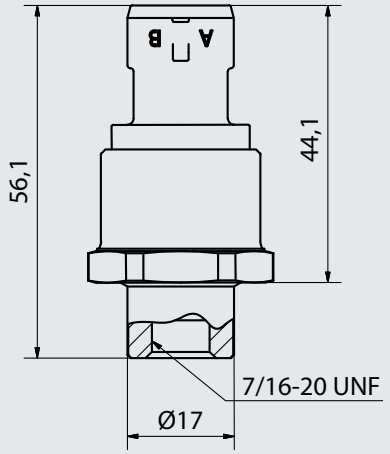	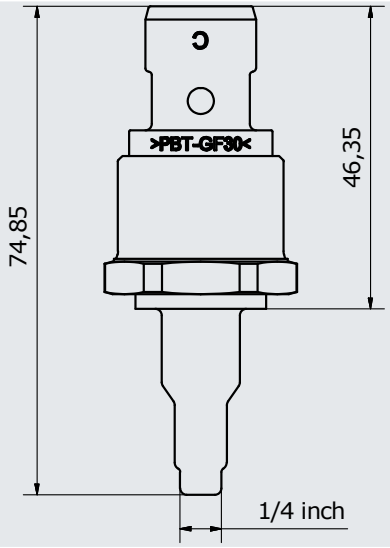
SAE female flare	**Solder tube**

Electrical connections

Table 4: Electrical connection specifications

HEX 27	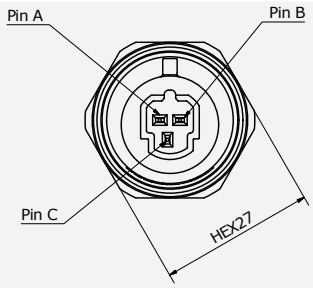
Pin-plating	Tin (Sn)
	Pin A: ÷Supply Pin B: +Supply Pin C: Output

Ordering

Table 5: Standard ordering type

Type	Operating range	Units	Colour code electrical connector	Focus temperature range (1% TEB)	Pressure port	Code no.	Code no. I-Pack[2]
DST P110	0 – 150	psia	Green	-20 °C – 40 °C	7/16 UNF, female [1]	075G1014	075G4003
	0 – 200	psia	Green	-20 °C – 40 °C		075G1016	075G4005
	0 – 400	psi sg	Black	0 °C – 80 °C		075G1019	075G4008
	0 – 500	psi sg	Black	0 °C – 80 °C		075G1021	075G4010
	-1 – 12	bar sg	Green	-20 °C – 40 °C		075G1013	075G4002
	-1 – 34	bar sg	Black	0 °C – 80 °C		075G1018	075G4007
	-1 - 49	bar sg	Black	-30 °C – 40 °C		075G1080	075G4058
	0 – 10	bar sg	Green	0 °C – 80 °C		075G1012	075G4001
	0 – 15	bar sg	Green	-20 °C – 40 °C		075G1085	075G4063
	0 – 20	bar sg	Green	-20 °C – 40 °C		075G1015	075G4004
	0 – 30	bar sg	Black	0 °C – 80 °C		075G1017	075G4006
	0 – 32	bar sg	Black	0 °C – 80 °C		075G1036	075G4019
	0 – 50	bar sg	Black	0 °C – 80 °C		075G1020	075G4009
	0 – 10	bar	Green	-40 °C – 40 °C	Solder tube	075G1072	075G4051
	0 – 30	bar	Black	0 °C – 100 °C		075G1071	075G4050
Electrical connection			Round Packard , Metri-Pack				

[1] ¼" flare with a deflator pin
[2] I- Pack contains 60 pcs. per box for 7/16 UNF & 55 pcs. per box for solder tube

Electrical connector colour coding:
- Black: High pressure profile
- Green: Low pressure profile

CO2 application: Sensors with an overload pressure exceeding 90bar can be used for CO2 applications - see overload pressure specification on Table 1: Overload and burst pressure

Accessories

Table 6: Cable accessories

Type	I-Pack Code no.	Qty/Box	Description
Cable with Metri-Pack 150 (Round) mating connector	060G8085	60 pcs.	0.8 m with outer sheath
Cable with Metri-Pack 150 (Round) mating connector	060g8086	60 pcs.	1.3 m with outer sheath
Cable with Metri-Pack 150 (Round) mating connector	064G0910[1]	14 pcs.	10 m with outer sheath

[1] Multi Pack code number is 064G0950

For more options and info, please go to https://store.danfoss.com/

Certificates, declarations, and approvals

The list contains all certificates, declarations, and approvals for this product type. Individual code number may have some or all of these approvals, and certain local approvals may not appear on the list.

Some approvals may change over time. You can check the most current status at danfoss.com or contact your local Danfoss representative if you have any questions.

Table 7: Certificates and declarations

File name	Document type	Document topic	Approval authority
060R3142.06	Manufacturers Declaration	PED	Danfoss
075R0015.00	Manufacturers Declaration	R32 & R290 ignition statement	Danfoss
E494625	Electrical - Safety Certificate	-	UL
E510763	Electrical - Safety Certificate	-	UL

Conformity

- CE marked
- RoHS compliant
- UL file for refrigeration: E31024
- UL file for Hazloc: E510763

ENGINEERING
TOMORROW

Online support

Danfoss offers a wide range of support along with our products, including digital product information, software, mobile apps, and expert guidance. See the possibilities below.

The Danfoss Product Store

The Danfoss Product Store is your one-stop shop for everything product related—no matter where you are in the world or what area of the cooling industry you work in. Get quick access to essential information like product specs, code numbers, technical documentation, certifications, accessories, and more.
Start browsing at store.danfoss.com.

Find technical documentation

Find the technical documentation you need to get your project up and running. Get direct access to our official collection of data sheets, certificates and declarations, manuals and guides, 3D models and drawings, case stories, brochures, and much more.

Start searching now at www.danfoss.com/en/service-and-support/documentation.

Danfoss Learning

Danfoss Learning is a free online learning platform. It features courses and materials specifically designed to help engineers, installers, service technicians, and wholesalers better understand the products, applications, industry topics, and trends that will help you do your job better.

Create your Danfoss Learning account for free at www.danfoss.com/en/service-and-support/learning.

Get local information and support

Local Danfoss websites are the main sources for help and information about our company and products. Find product availability, get the latest regional news, or connect with a nearby expert—all in your own language.

Find your local Danfoss website here: www.danfoss.com/en/choose-region.

Spare Parts

Get access to the Danfoss spare parts and service kit catalog right from your smartphone. The app contains a wide range of components for air conditioning and refrigeration applications, such as valves, strainers, pressure switches, and sensors.

Download the Spare Parts app for free at www.danfoss.com/en/service-and-support/downloads.

Danfoss can accept no responsibility for possible errors in catalogues, brochures and other printed material. Danfoss reserves the right to alter its products without notice. This also applies to products already on order provided that such alterations can be made without subsequential changes being necessary in specifications already agreed. All trademarks in this material are property of the respective companies. Danfoss and the Danfoss logotype are trademarks of Danfoss A/S. All rights reserved.