ENGINEERING TOMORROW

Data Sheet

Safety relief valve
Type **SFA 10, SFA 10H** and **SFA 15**

Reliable vessel overpressure protection

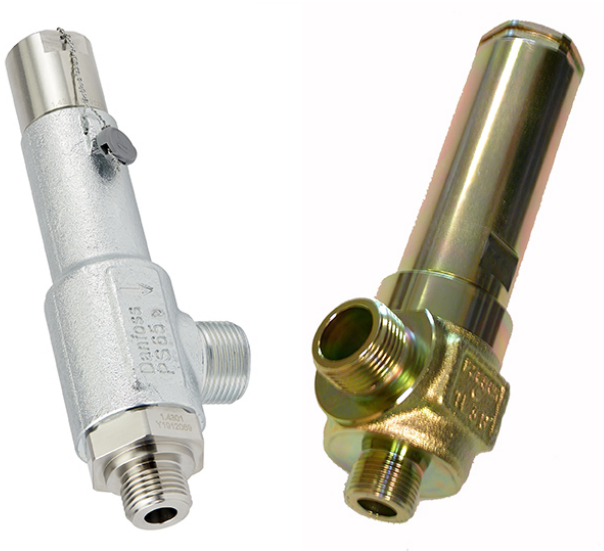

The SFA 10 and SFA 15 are standard, **back pressure dependent** safety relief valves in angle-way execution, specially designed for protection of vessels and other components against excessive pressure.

The valve is designed to meet the strict quality demands and safety requirements for refrigeration installations, specified by the international classification societies.

The spring housing is closed tightly to avoid refrigerant leakage.

The inlet flow diameters of the valves are:
- 6.8 mm (¼ in.) for SFA 10
- 13 mm (½ in.) for SFA 15

The valves can be ordered with set pressure:
- between 10 and 27 bar (145 and 392 psig) for SFA 10
- between 28 and 65 bar (406 and 943 psig) for SFA 10H
- between 10 and 40 bar (145 and 580 psig) for SFA 15

Standard pressure setting valves having "TÜV Pressure Setting Certificate" with each valve, are also available.

Features

- SFA 10 and SFA 15 applicable for the refrigerants HCFC, HFC, R717 (Ammonia), R744 (CO_2)
- SFA 10H applicable for CO_2 with POE and PAG oil
- Easy installation by threaded connections and Union fitted welding nipples
- Wide capacity range
- Stable set-point and reliable resetting
- Leak proof internal and external
- Easy selection by use of Cool selector
- Available with or without TÜV pressure setting certificate

Media

Refrigerants

SFA 10 and SFA 15 are with CR O-ring and applicable for the refrigerants HCFC, HFC, R717 (Ammonia), R744 (CO_2) within a temperature range of -50 °C to 100 °C (-58 °F to 212 °F) and a set pressure not lower than -30 °C (-22 °F) saturation temperature.

SFA 10H is with EPDM O-ring and applicable for CO_2 with POE and PAG oil only within a temperature range of -50 °C to 100 °C (-58 °F to 212 °F).

Flammable hydrocarbons are not recommended. For further information please contact your local Danfoss Sales Company.

New refrigerants

Danfoss products are continually evaluated for use with new refrigerants depending on market requirements.

When a refrigerant is approved for use by Danfoss, it is added to the relevant portfolio, and the R number of the refrigerant (e.g. R513A) will be added to the technical data of the code number. Therefore, products for specific refrigerants are best checked at store.danfoss.com/en/, or by contacting your local Danfoss representative.

Product specification

Technical data

For SFA 10 and SFA 15 with CR O-ring:

- At static temperatures below -30 °C (-22 °F) the O-ring becomes harder and full tightness of the valve cannot be guaranteed. Above -30 °C (-22 °F) the O-ring will become soft and fully functional again.
- Observe for R744 (CO_2)! Due to above the min. set pressure for correct functional valve in R744 (CO_2) is 27 bar (392 psig), to ensure proper function of the valve in case of a sudden relief.
- At static temperatures above 60 °C (140 °F) the lifetime of the CR O-ring will be gradually reduced, and the valve should be serviced more frequently.

In case the valve has relieved please refer to the SFA 10 installation guide.

Pressure

- Pressure setting range:
  - SFA 10: 10 – 27 bar (145 – 392 psig)
  - SFA 10H: 28 – 65 bar (406 – 943 psig)
  - SFA 15: 10 – 40 bar (145 – 580 psig)

IMPORTANT:
The SFA safety relief valve is dependent on the back pressure (if the back pressure is higher than the atmospheric pressure, the opening pressure will be higher than stated set pressure).

Pressure setting
The operating pressure of the plant should be at least 15% below the set pressure and the upstream pressure loss <3% of the valve set pressure. This allows a perfect re-seating of the safety relief valve after having been activated.

Special circumstances such as vibrations (which should be avoided) and oscillating pressure may require an increased difference between the operational pressure and the closing pressure.

Design

Figure 1: SFA pressure relief

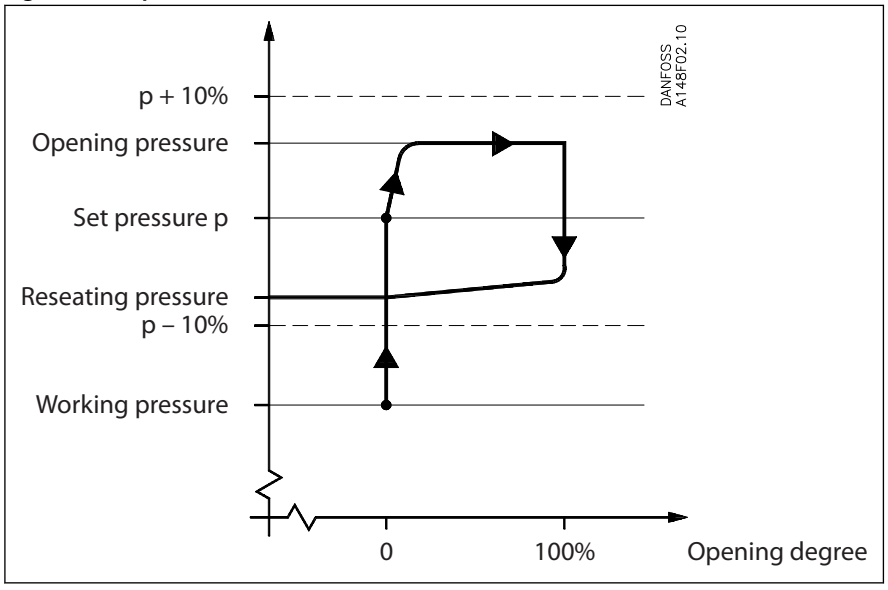

SFA is designed as a direct loaded safety valve recommended particularly for refrigeration applications. On a rise in pressure above the set pressure, the safety relief valve will initially start opening slightly, to minimize the outlet of refrigerant.

If the pressure continues to increase, the valve will open fully. The safety relief valve will be fully open before the pressure is 10% higher than set pressure, and fully closed before the pressure is 10% below set pressure.

Housing
Made of special steel approved for low temperature operation. Spindle, cone, and seat are made of stainless steel, to ensure precise operation even during extraordinary conditions.

Installation
To ensure exact operation of the safety relief valve it should be installed with the spring housing upwards. When the valve is mounted, it is important to avoid the influence of static, dynamic and thermal stress.

A very precise technique has been applied for the production of the seal. However, this seal can still be damaged, if dirt is blown from the pipe system into the valve.

It is recommended that safety relief valves exhaust into the open air with a U-pipe filled with oil on the discharge branch, to prevent dirt from penetrating into the valve.

In extreme environments it is recommended to use a valve with bellow instead, to protect the valve from refrigerant contaminated with dirt and particles.

It is also recommended that the valves be installed in pairs in conjunction with the double stop valve type DSV10, DSV1 or DSV2. For further information please see the data sheet for DSV.

Re-calibration/servicing
In certain countries the authorities demand that the valves are checked at least once a year (see local rules).

Control/Identification
After adjustment of the set pressure at Danfoss, the valves are sealed. For that reason Danfoss can only guarantee correct operation, if the seal remains unbroken.

All valves are provided with a metal plate with the following information:
- Flow diameter
- Set pressure
- Date of production
- Production number
- Type approved code.

Transport/Handling
The valves are fitted with special protection covers and packed into purpose made transportation cartons.

It is important that the cover remains fitted around the valve until it is installed.

To ensure the exact and precise operation of the valve it must be handled with care.

Capacity

The design and construction of the safety relief valve has been tested and approved by TÜV. This test comprises control of the function of the valve as well as measuring of the capacity, which is the basis of the curves and tables on the following pages. The values in the table are based on saturated gas.

If e.g. back pressure or superheated gas have to be taken into consideration, the formulas or the Danfoss computation program (Coolselector2™) can be used.

Table 1: SFA valve characteristics

Valve	Nominal size		Flow diameter d_o	Flow area A_0	De-rated, certified co-efficient of discharge K_{dr}	Effective discharge area $A_0 \times K_{dr}$
	Inlet	Outlet				
SFA 10 and SFA 10H	10 mm	15 mm	6.8 mm	36.3 mm²	0.85	30.9 mm²
	⅜ in.	½ in.	0.268 in.	0.056 in²		0.048 in²
SFA 15	15 mm	20 mm	13 mm	133 mm²	0.73	97 mm²
	½ in.	¾ in.	0.512 in.	0.206 in²		0.150 in²

The discharge capacity of the safety relief valve is based on (IS0 4126-1 / EN 1313 6).

$$q_m = 0.2883 \times C \times A_0 \times K_{dr} \times K_b \sqrt{\frac{p}{v}}$$

q_m	Discharge capacity (kg/h).
C	Discharge function depending of the actual refrigerant (κ) see Table 2: Properties of refrigerants.
A_0	Flow area of the safety relief valve (mm^2).
K_{dr}	De-rated coefficient of discharge ($K_{dr} = K_d \times 0.9$), (the K_{dr} is certified by TÜV) see Table 1: SFA valve characteristics.
K_b	Correction factor for sub-critical flow (-). K_b = 1.0 when the back pressure is lower than approx. 0.5 × relieving pressure ($P_b < 0.5 \times p$). For all SFV safety valves K_b = 1.0
v	Specific volume of the vapour at the releiving pressure p. (m3/kg).
p_{set}	Set pressure, the predetermined pressure at which a pressure relief valve under operation starts to open (pset is indicated on the metal plate on the safety relief valve).
p_{atm}	Atmospheric pressure (1 bar).
p	Relieving pressure, $p = p_{set} \times 1.1 + P_{atm}$ (bar absolute).

For further details see the above-mentioned ISO or EN standards.

Table 2: Properties of refrigerants

Refrigerant	Isentropic exponent κ	Discharge function C
R22	1.17	2.54
R134a	1.12	2.50
R404A	1.12	2.49
R410A	1.17	2.54
R717 (Ammonia)	1.31	2.64
R744 (CO2)	1.30	2.63
Air	1.40	2.70

Figure 2: SFA 10 and SFA 10H Capacity / set pressure graph

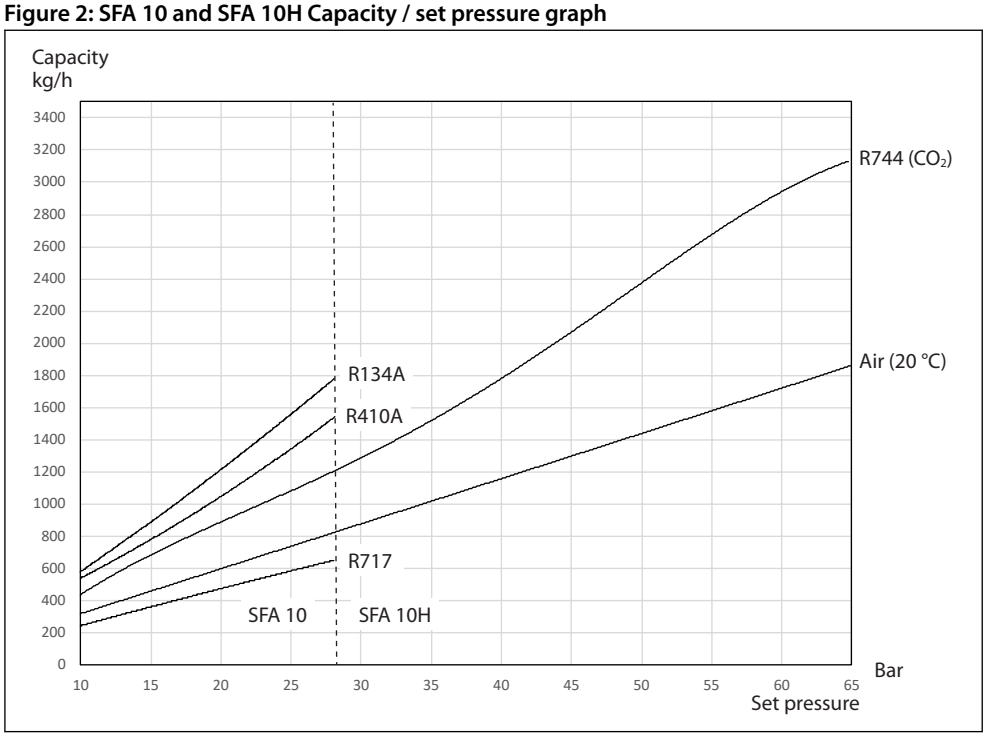

Table 3: SFA 10 and SFA 10H Capacity / set pressure

Set pressure	qm	R134a	R410A	R717	R744 (CO_2)	Air (20 °C)
10 bar 145 psig	kg/h lb/min	595.1 22.0	533.4 19.7	248.3 9.2	453.2 16.8	315.3 11.7
15 bar 218 psig	kg/h lb/min	889.0 32.9	791.2 29.3	361.7 13.4	662.7 24.5	460.5 17.0
20 bar 290 psig	kg/h lb/min	1208 44.7	1064 39.4	476.8 17.6	877.6 32.5	605.8 22.4
25 bar 363 psig	kg/h lb/min	1567 58.0	1359 50.3	593.9 22.0	1099 40.7	751.0 27.8
30 bar 392 psig	kg/h lb/min				1299 48.1	875.1 32.4
35 bar 145 psig	kg/h lb/min				1535 56.9	1017 37.7
40 bar 218 psig	kg/h lb/min				1784 66.1	1159 42.9
45 bar 290 psig	kg/h lb/min				2050 75.9	1301 48.2
50 bar 363 psig	kg/h lb/min				2341 86.7	1442 53.4
55 bar 392 psig	kg/h lb/min				2668 98.8	1584 58.7
60 bar 363 psig	kg/h lb/min				2994 110.9	1756 65.0
65 bar 392 psig	kg/h lb/min				3115 115.4	1868 69.2

Figure 3: SFA 15 Capacity / set pressure graph

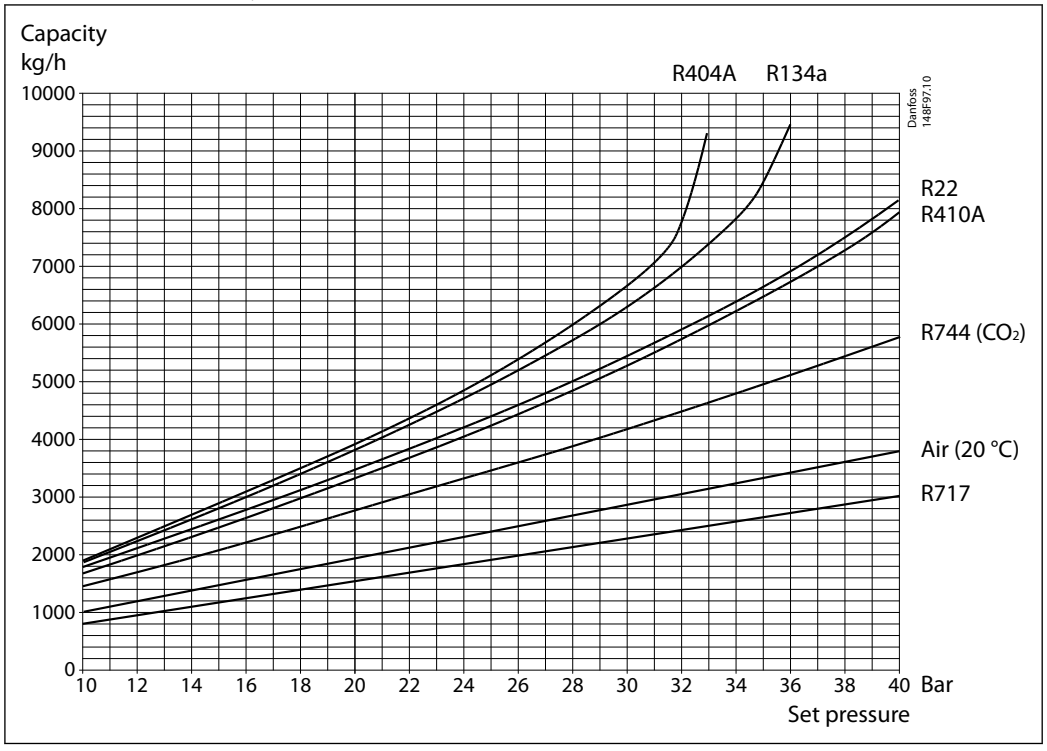

Table 4: SFA 15 Capacity / set pressure

Set pressure	qm	R22	R134a	R404A	R410A	R717	R744 (CO_2)	Air (20 °C)
10 bar 145 psig	kg/h lb/min	1749 64	1881 69	1888 69	1652 61	779 29	1424 52	1003 37
15 bar 218 psig	kg/h lb/min	2592 95	2793 103	2842 104	2459 90	1135 42	2072 76	1462 54
20 bar 290 psig	kg/h lb/min	3471 128	3804 140	3883 143	3305 121	1492 55	2747 101	1922 71
25 bar 363 psig	kg/h lb/min	4409 162	4921 181	5101 187	4248 156	1853 68	3441 126	2381 87

Set pressure	qm	R22	R134a	R404A	R410A	R717	R744 (CO_2)	Air (20 °C)
30 bar 435 psig	kg/h lb/min	5437 200	6269 230	6659 245	5250 193	2227 82	4163 153	2841 104
35 bar 508 psig	kg/h lb/min	6633 244	8370 308		6450 237	2608 96	4936 181	3301 121
40 bar 580 psig	kg/h lb/min	8104 298			7911 291	2989 110	5718 210	3760 138

Material specification SFA 10 and SFA 10H

Figure 4: SFA 10 and SFA 10H

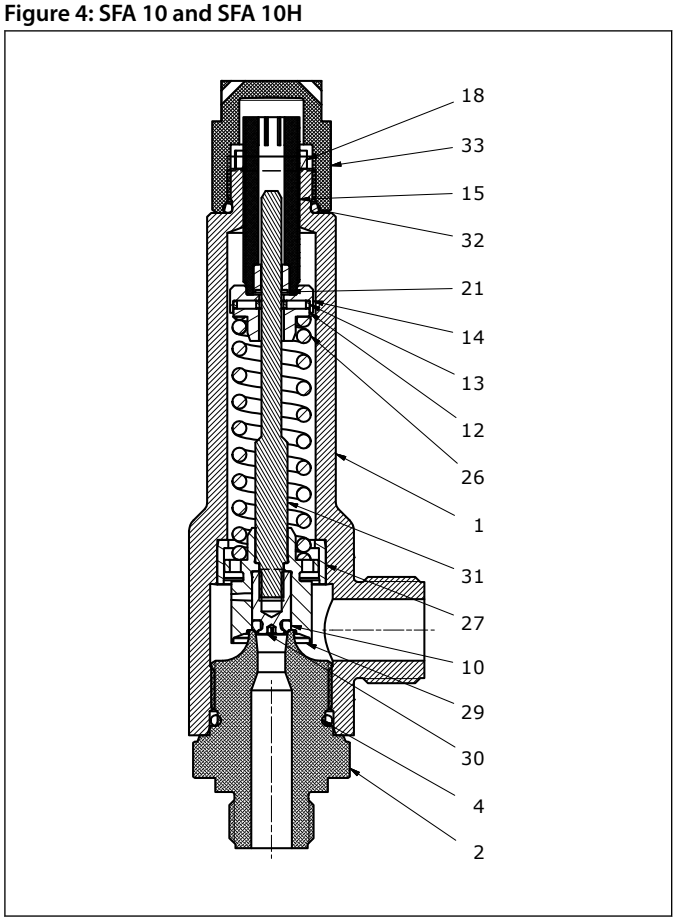

Table 5: Material and parts list

No.	Part	Material	DIN	ISO	ASTM
1	Bonnet long version	Steel, Carbon	P285QH	-	-
2	Inlet body, SFA 10	Stainless Steel, Austenitic	X5CrNi 18-10	-	AISI 304
4	O-ring 25.07 x 2.62 CR	Chloroprene	-	-	-
10	O-ring 6.02 x 2.62 CR	SFA 10 Chloroprene SFA 10H EPDM	-	-	-
12	Lower bearing retainer	Stainless Steel, Austenitic	X8CrNiS18-9	-	AISI 303
13	Needle roller thrust bearings	Stainless Steel	SUS304-JIS G4305 G102Cr18Mo-GB/T3086	-	AISI 304
14	Top bearing retainer	Stainless Steel, Austenitic	X8CrNiS18-9	-	AISI 303
15	Adjusting screw	Stainless Steel	X5CrNi 18-10	-	AISI 304
18	Locknut SFA 10	Steel	11SMn30	-	-
21	Bushing PTFE	Polystyrene, High Impact	-	-	-
26	Spring	Steel	-	-	-
27	Bushing SFA 10	Stainless Steel	X2CrNiMo17	-	AISI 316L
29	Cone for SFA 10	Stainless Steel	X5CrNi 18-10	-	AISI 304
30	O-ring Lock screw	Stainless Steel	X5CrNi 18-10	-	AISI 304

No.	Part	Material	DIN	ISO	ASTM
31	Spindle SFA 10	Stainless Steel	X5CrNi 18-10	-	AISI 304
32	O-ring 19.30 x 2.40	Chloroprene	-	-	-
33	Cap on SFA 10	Stainless Steel	X5CrNi 18-10	-	AISI 304

Material specification SFA 15

Figure 5: SFA 15

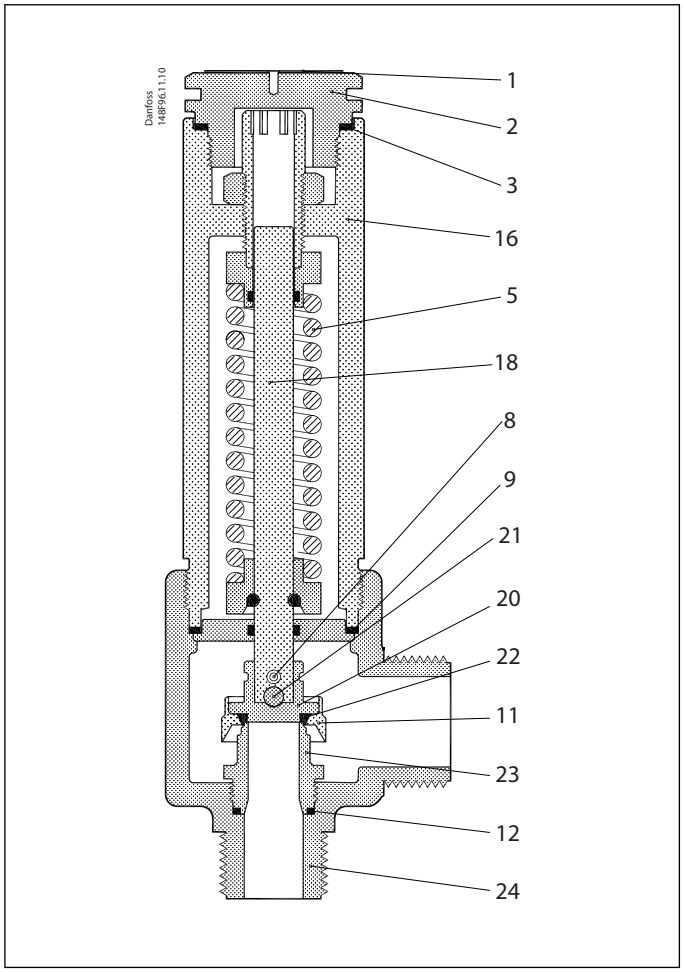

Table 6: Material and parts list

No.	Part	Material	DIN	ISO	ASTM
1	Marking label	Stainless steel	-	-	-
2	Threaded plug	Steel	-	-	-
3	Packing washer	Aluminium (Non-asbestos gasket)	-	-	-
5	Spring	Steel	Class C, DIN17223	-	-
8	Split	Steel	94 ELFORZ	-	-
9	Packing washer	Aluminium (Non-asbestos gasket)	-	-	-
11	Retainer	Stainless steel	X8CrNiS 18-9	-	AISI 303, A276
12	Packing washer	Aluminium (Non-asbestos gasket)	-	-	-
16	Valve top	Steel	G20Mn5QT Alt. S235JRG2 Alt. S355J2G3	Fe360BFN Fe510D1	LCC, A352 A284C A572-50
18	Valve spindle	Stainless steel	X5CrNi 18-10	-	AISI 304, A276
20	Valve cone	Stainless steel	X8CrNiS 18-9	-	AISI 303, A276
21	Steel ball	Steel	-	-	-
22	Valve cone seal	Cloroprene (Neoprene)	-	-	-
23	Valve seat	Stainless steel	X8CrNiS 18-9	-	AISI 303, A276
24	Valve housing	Steel	G20Mn5QT Alt. P285QH	-	LCC, A352 LF2, A350

Connections

Available with the following connections:

- Outside pipe thread T (ISO 228/1)
- Welding fittings, outlet (EN 10220)
- NPT male (ANSI/ASME B1.20.1) SFA 10(H) only

Figure 6: T outside pipe thread

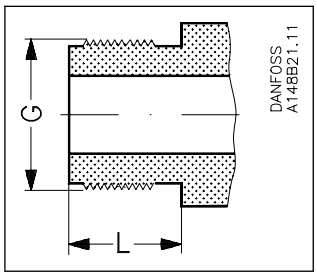

Table 7: T outside pipe thread, (ISO 228/1)

Type	Size mm	Size in.	Inlet	Outlet	L mm	L in.
SFA 10 and SFA 10H	10	⅜	G ½	G ¾	18	0.71
SFA 15	15	½	G ¾	G 1	15	0.59

Figure 7: NPT outside pipe thread

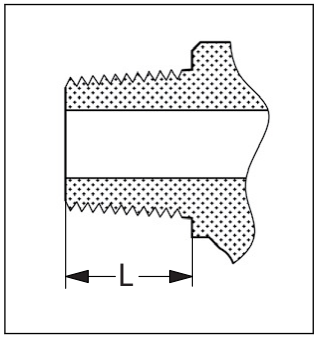

Table 8: NPT outside pipe thread, (ANSI/ASME B 1.20.1)

Type	Size mm	Size in.	Inlet	Outlet	L mm	L in.
SFA 10 and SFA 10H	10	⅜	NPT ½	NPT ¾	24	0.94

Figure 8: Welding fittings, DIN

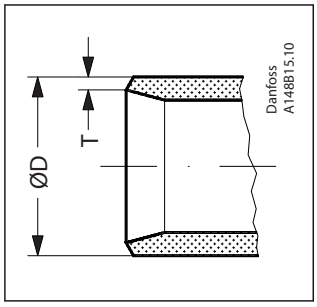

Table 9: Welding fittings, DIN (2448)

Type	Size		Inlet (mm)		Inlet (in.)		Outlet (mm)		Outlet (in.)	
	mm	in.	OD	T	OD	T	OD	T	OD	T
SFA 10 and SFA 10H	10	⅜	-	-	-	-	21.1	2.2	0.83	0.087
SFA 15	15	½	21.3	2.3	0.839	0.091	26.9	2.3	1.059	0.091

Dimensions and weights

SFA 10(H) ND with welding fittings

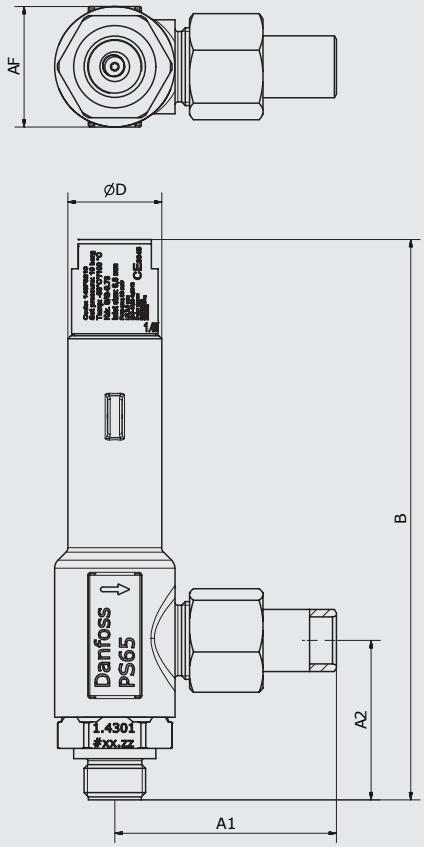

SFA 10(H) T and NPT

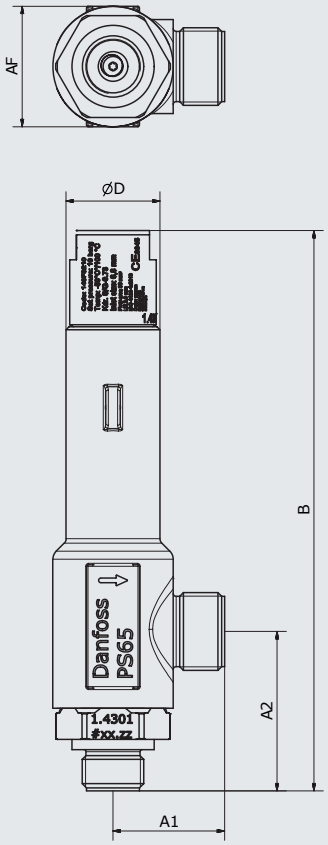

Table 10: Valve size's and weight

Valve size		A1	A2	B	ØD	AF	Weight
SFA 10 T	mm	38	54	175	32	41	0.95 kg
	in.	1.5	2.13	6.89	1.26	1.61	2.1 lbs
SFA 10 ND	mm	76	54	175	32	41	1.25 kg
	in.	2.99	2.13	6.89	1.26	1.61	2.75 lbs
SFA 10 NPT	mm	44	64	185	32	41	0.95 kg
	in.	1.73	2.52	7.28	1.26	1.61	2.1 lbs
SFA 10H T	mm	38	54	191	32	41	1.1 kg
	in.	1.5	2.13	7.52	1.26	1.61	2.42 lbs
SFA 10H ND	mm	76	54	191	32	41	1.4 kg
	in.	2.99	2.13	7.52	1.26	1.61	3.1 lbs
SFA 10H NPT	mm	44	64	201	32	41	1.1 kg
	in.	1.73	2.52	7.91	1.26	1.61	2.42 lbs

NOTE:
Specified weights are approximate values only.

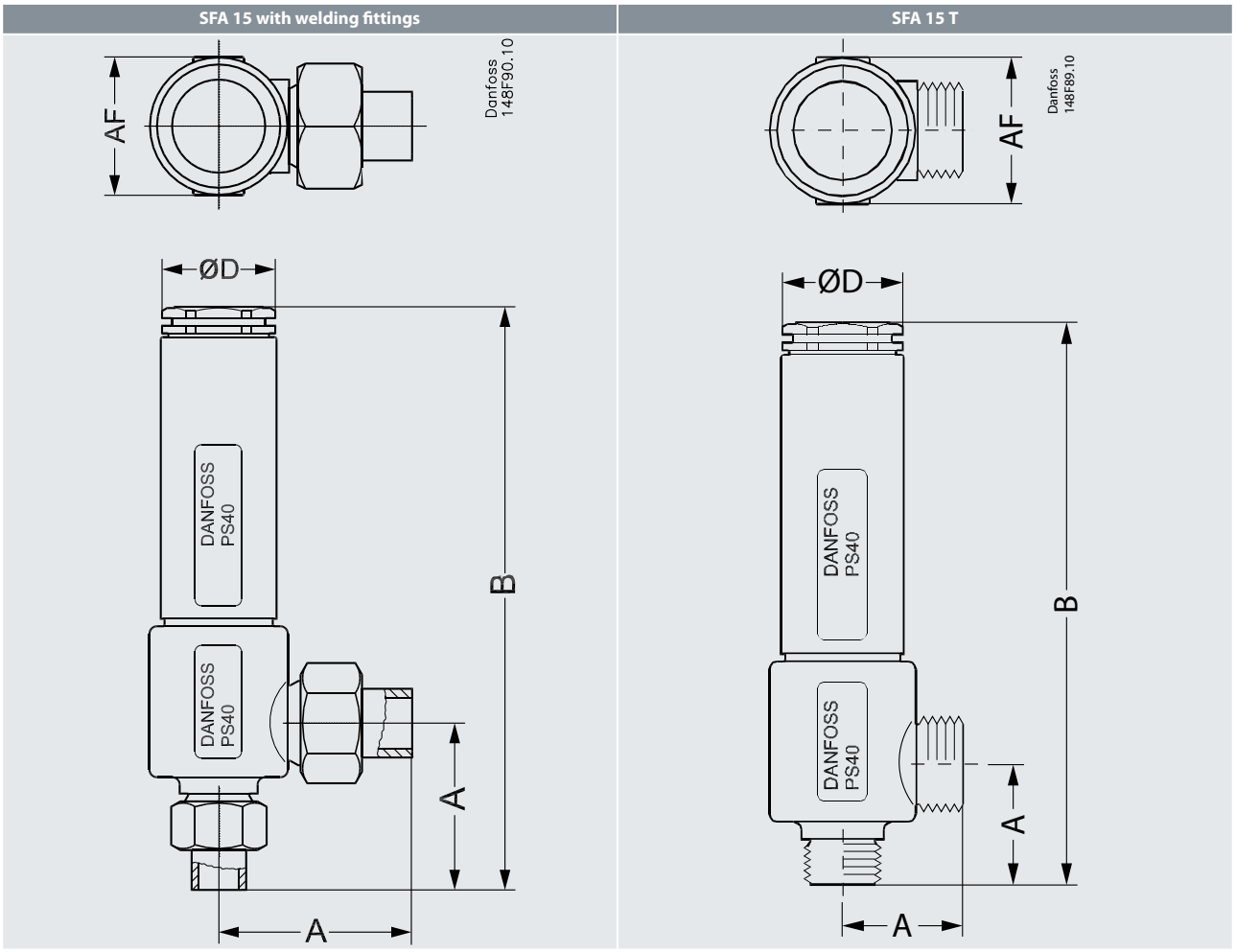

Table 11: Valve size's and weight

Valve size		A	B	ØD	AF	Weight
SFA 15 T, with threaded connections ISO 228/1 pipe threads						
SFA 15 T (½ in.)	mm	45	210	45	55	2.2 kg
	in.	1.77	8.27	1.81	2.17	4.9 lbs
SFA 15 with welding fittings, DIN 2448						
SFA 15 (½ in.)	mm	83	248	45	55	2.5 kg
	in.	3.27	9.76	1.81	2.17	5.5 lbs

NOTE:
Specified weights are approximate values only.

Ordering

Table 12: Certified SFA 10 G thread valves with standard set pressure

Size		Type	Set pressure bar (psig)	Code number
mm.	in.			
10	⅜	SFA 10 T 210	10 (145)	**148F4210**
10	⅜	SFA 10 T 211	11 (160)	**148F4211**
10	⅜	SFA 10 T 212	12 (174)	**148F4212**
10	⅜	SFA 10 T 213	13 (189)	**148F4213**
10	⅜	SFA 10 T 214	14 (203)	**148F4214**
10	⅜	SFA 10 T 215	15 (218)	**148F4215**
10	⅜	SFA 10 T 216	16 (232)	**148F4216**
10	⅜	SFA 10 T 217	17 (247)	**148F4217**
10	⅜	SFA 10 T 218	18 (261)	**148F4218**
10	⅜	SFA 10 T 219	19 (276)	**148F4219**
10	⅜	SFA 10 T 220	20 (290)	**148F4220**
10	⅜	SFA 10 T 221	21 (305)	**148F4221**
10	⅜	SFA 10 T 222	22 (319)	**148F4222**
10	⅜	SFA 10 T 223	23 (334)	**148F4223**
10	⅜	SFA 10 T 224	24 (348)	**148F4224**
10	⅜	SFA 10 T 225	25 (363)	**148F4225**
10	⅜	SFA 10 T 226	26 (377)	**148F4226**
10	⅜	SFA 10 T 227	27 (392)	**148F4227**

Table 13: Certified SFA 10 G-thread valves with standard set pressure and TÜV pressure setting certificate with each valve

Size		Type	Set pressure bar (psig)	Code number
mm.	in.			
10	⅜	SFA 10 T 310	10 (145)	**148F4310**
10	⅜	SFA 10 T 311	11 (160)	**148F4311**
10	⅜	SFA 10 T 312	12 (174)	**148F4312**
10	⅜	SFA 10 T 313	13 (189)	**148F4313**
10	⅜	SFA 10 T 314	14 (203)	**148F4314**
10	⅜	SFA 10 T 315	15 (218)	**148F4315**
10	⅜	SFA 10 T 316	16 (232)	**148F4316**
10	⅜	SFA 10 T 317	17 (247)	**148F4317**
10	⅜	SFA 10 T 318	18 (261)	**148F4318**
10	⅜	SFA 10 T 319	19 (276)	**148F4319**
10	⅜	SFA 10 T 320	20 (290)	**148F4320**
10	⅜	SFA 10 T 321	21 (305)	**148F4321**
10	⅜	SFA 10 T 322	22 (319)	**148F4322**
10	⅜	SFA 10 T 323	23 (334)	**148F4323**
10	⅜	SFA 10 T 324	24 (348)	**148F4324**
10	⅜	SFA 10 T 325	25 (363)	**148F4325**
10	⅜	SFA 10 T 326	26 (377)	**148F4326**
10	⅜	SFA 10 T 327	27 (392)	**148F4327**

Table 14: Certified SFA 10H G-thread valves with standard set pressure

Size		Type	Set pressure bar (psig)	Code number
mm.	in.			
10	⅜	SFA 10H T 228	28 (406)	**148F4228**
10	⅜	SFA 10H T 229	29 (421)	**148F4229**
10	⅜	SFA 10H T 230	30 (435)	**148F4230**
10	⅜	SFA 10H T 231	31 (450)	**148F4231**
10	⅜	SFA 10H T 232	32 (464)	**148F4232**
10	⅜	SFA 10H T 233	33 (479)	**148F4233**
10	⅜	SFA 10H T 234	34 (493)	**148F4234**
10	⅜	SFA 10H T 235	35 (508)	**148F4235**
10	⅜	SFA 10H T 236	36 (522)	**148F4236**

Size		Type	Set pressure bar (psig)	Code number
mm.	in.			
10	⅜	SFA 10H T 237	37 (537)	**148F4237**
10	⅜	SFA 10H T 238	38 (551)	**148F4238**
10	⅜	SFA 10H T 239	39 (566)	**148F4239**
10	⅜	SFA 10H T 240	40 (580)	**148F4240**
10	⅜	SFA 10H T 241	41 (595)	**148F4241**
10	⅜	SFA 10H T 242	42 (609)	**148F4242**
10	⅜	SFA 10H T 243	43 (624)	**148F4243**
10	⅜	SFA 10H T 244	44 (638)	**148F4244**
10	⅜	SFA 10H T 245	45 (653)	**148F4245**
10	⅜	SFA 10H T 246	46 (667)	**148F4246**
10	⅜	SFA 10H T 247	47 (682)	**148F4247**
10	⅜	SFA 10H T 248	48 (696)	**148F4248**
10	⅜	SFA 10H T 249	49 (711)	**148F4249**
10	⅜	SFA 10H T 250	50 (725)	**148F4250**
10	⅜	SFA 10H T 251	51 (740)	**148F4251**
10	⅜	SFA 10H T 252	52 (754)	**148F4252**
10	⅜	SFA 10H T 253	53 (769)	**148F4253**
10	⅜	SFA 10H T 254	54 (783)	**148F4254**
10	⅜	SFA 10H T 255	55 (798)	**148F4255**
10	⅜	SFA 10H T 256	56 (812)	**148F4256**
10	⅜	SFA 10H T 257	57 (827)	**148F4257**
10	⅜	SFA 10H T 258	58 (841)	**148F4258**
10	⅜	SFA 10H T 259	59 (856)	**148F4259**
10	⅜	SFA 10H T 260	60 (870)	**148F4260**
10	⅜	SFA 10H T 261	61 (885)	**148F4261**
10	⅜	SFA 10H T 262	62 (899)	**148F4262**
10	⅜	SFA 10H T 263	63 (914)	**148F4263**
10	⅜	SFA 10H T 264	64 (928)	**148F4264**
10	⅜	SFA 10H T 265	65 (943)	**148F4265**

Table 15: Certified SFA 10H G-thread valves with standard set pressure and TÜV pressure setting certificate with each valve

Size		Type	Set pressure bar (psig)	Code number
mm.	in.			
10	⅜	SFA 10H T 328	28 (406)	**148F4328**
10	⅜	SFA 10H T 329	29 (421)	**148F4329**
10	⅜	SFA 10H T 330	30 (435)	**148F4330**
10	⅜	SFA 10H T 331	31 (450)	**148F4331**
10	⅜	SFA 10H T 332	32 (464)	**148F4332**
10	⅜	SFA 10H T 333	33 (479)	**148F4333**
10	⅜	SFA 10H T 334	34 (493)	**148F4334**
10	⅜	SFA 10H T 335	35 (508)	**148F4335**
10	⅜	SFA 10H T 336	36 (522)	**148F4336**
10	⅜	SFA 10H T 337	37 (537)	**148F4337**
10	⅜	SFA 10H T 338	38 (551)	**148F4338**
10	⅜	SFA 10H T 339	39 (566)	**148F4339**
10	⅜	SFA 10H T 340	40 (580)	**148F4340**
10	⅜	SFA 10H T 341	41 (595)	**148F4341**
10	⅜	SFA 10H T 342	42 (609)	**148F4342**
10	⅜	SFA 10H T 343	43 (624)	**148F4343**
10	⅜	SFA 10H T 344	44 (638)	**148F4344**
10	⅜	SFA 10H T 345	45 (653)	**148F4345**
10	⅜	SFA 10H T 346	46 (667)	**148F4346**
10	⅜	SFA 10H T 347	47 (682)	**148F4347**
10	⅜	SFA 10H T 348	48 (696)	**148F4348**
10	⅜	SFA 10H T 349	49 (711)	**148F4349**
10	⅜	SFA 10H T 350	50 (725)	**148F4350**
10	⅜	SFA 10H T 351	51 (740)	**148F4351**

Size		Type	Set pressure bar (psig)	Code number
mm.	in.			
10	⅜	SFA 10H T 352	52 (754)	**148F4352**
10	⅜	SFA 10H T 353	53 (769)	**148F4353**
10	⅜	SFA 10H T 354	54 (783)	**148F4354**
10	⅜	SFA 10H T 355	55 (798)	**148F4355**
10	⅜	SFA 10H T 356	56 (812)	**148F4356**
10	⅜	SFA 10H T 357	57 (827)	**148F4357**
10	⅜	SFA 10H T 358	58 (841)	**148F4358**
10	⅜	SFA 10H T 359	59 (856)	**148F4359**
10	⅜	SFA 10H T 360	60 (870)	**148F4360**
10	⅜	SFA 10H T 361	61 (885)	**148F4361**
10	⅜	SFA 10H T 362	62 (899)	**148F4362**
10	⅜	SFA 10H T 363	63 (914)	**148F4363**
10	⅜	SFA 10H T 364	64 (928)	**148F4364**
10	⅜	SFA 10H T 365	65 (943)	**148F4365**

Table 16: Certified SFA 10 NPT valves with standard set pressure

Size		Type	Set pressure bar (psig)	Code number
mm.	in.			
10	⅜	SFA 10 NPT 213	13 (189)	**148F5213**
10	⅜	SFA 10 NPT 216	16 (232)	**148F5216**
10	⅜	SFA 10 NPT 217	17 (247)	**148F5217**
10	⅜	SFA 10 NPT 218	18 (261)	**148F5218**
10	⅜	SFA 10 NPT 220	20 (290)	**148F5220**
10	⅜	SFA 10 NPT 221	21 (305)	**148F5221**
10	⅜	SFA 10 NPT 222	22 (319)	**148F5222**
10	⅜	SFA 10 NPT 224	24 (348)	**148F5224**
10	⅜	SFA 10 NPT 225	25 (363)	**148F5225**

Table 17: Certified SFA 10 NPT valves with standard set pressure + DSV 10 NPT

Size		Type	Set pressure bar (psig)	Code number
mm.	in.			
10	⅜	SFA 10/DSV 10 NPT 213	13 (189)	**148F6313**
10	⅜	SFA 10/DSV 10 NPT 216	16 (232)	**148F6316**
10	⅜	SFA 10/DSV 10 NPT 217	17 (247)	**148F6317**
10	⅜	SFA 10/DSV 10 NPT 218	18 (261)	**148F6318**
10	⅜	SFA 10/DSV 10 NPT 220	20 (290)	**148F6320**
10	⅜	SFA 10/DSV 10 NPT 221	21 (305)	**148F6321**
10	⅜	SFA 10/DSV 10 NPT 222	22 (319)	**148F6322**
10	⅜	SFA 10/DSV 10 NPT 224	24 (348)	**148F6324**
10	⅜	SFA 10/DSV 10 NPT 225	25 (363)	**148F6325**

Table 18: Certified SFA 10H NPT valves with standard set pressure

Size		Type	Set pressure bar (psig)	Code number
mm.	in.			
10	⅜	SFA 10H NPT 228	28 (406)	**148F5228**
10	⅜	SFA 10H NPT 232	32 (464)	**148F5232**
10	⅜	SFA 10H NPT 235	35 (508)	**148F5235**
10	⅜	SFA 10H NPT 238	38 (551)	**148F5238**
10	⅜	SFA 10H NPT 240	40 (580)	**148F5240**
10	⅜	SFA 10H NPT 250	50 (725)	**148F5250**
10	⅜	SFA 10H NPT 252	52 (754)	**148F5252**
10	⅜	SFA 10H NPT 260	60 (870)	**148F5260**
10	⅜	SFA 10H NPT 265	65 (943)	**148F5265**

Table 19: Certified SFA 10H NPT valves with standard set pressure + DSV 10 NPT

Size		Type	Set pressure bar (psig)	Code number
mm.	in.			
10	⅜	SFA 10H/DSV 10 NPT 228	28 (406)	**148F6328**
10	⅜	SFA 10H/DSV 10 NPT 232	32 (464)	**148F6332**
10	⅜	SFA 10H/DSV 10 NPT 235	35 (508)	**148F6335**
10	⅜	SFA 10H/DSV 10 NPT 238	38 (551)	**148F6338**
10	⅜	SFA 10H/DSV 10 NPT 240	40 (580)	**148F6340**
10	⅜	SFA 10H/DSV 10 NPT 250	50 (725)	**148F6350**
10	⅜	SFA 10H/DSV 10 NPT 252	52 (754)	**148F6352**
10	⅜	SFA 10H/DSV 10 NPT 260	60 (870)	**148F6360**
10	⅜	SFA 10H/DSV 10 NPT 265	65 (943)	**148F6365**

Table 20: Certified SFA 15 T valves with standard set pressure

Size		Type	Set pressure bar (psig)	Code number
mm.	in.			
15	½	SFA 15 T 210	10 (145)	**148F3210**
15	½	SFA 15 T 211	11 (160)	**148F3211**
15	½	SFA 15 T 212	12 (174)	**148F3212**
15	½	SFA 15 T 213	13 (189)	**148F3213**
15	½	SFA 15 T 214	14 (203)	**148F3214**
15	½	SFA 15 T 215	15 (218)	**148F3215**
15	½	SFA 15 T 216	16 (232)	**148F3216**
15	½	SFA 15 T 217	17 (247)	**148F3217**
15	½	SFA 15 T 218	18 (261)	**148F3218**
15	½	SFA 15 T 219	19 (276)	**148F3219**
15	½	SFA 15 T 220	20 (290)	**148F3220**
15	½	SFA 15 T 221	21 (305)	**148F3221**
15	½	SFA 15 T 222	22 (319)	**148F3222**
15	½	SFA 15 T 223	23 (334)	**148F3223**
15	½	SFA 15 T 224	24 (348)	**148F3224**
15	½	SFA 15 T 225	25 (363)	**148F3225**
15	½	SFA 15 T 226	26 (377)	**148F3226**
15	½	SFA 15 T 227	27 (392)	**148F3227**
15	½	SFA 15 T 228	28 (406)	**148F3228**
15	½	SFA 15 T 229	29 (421)	**148F3229**
15	½	SFA 15 T 230	30 (435)	**148F3230**
15	½	SFA 15 T 231	31 (450)	**148F3231**
15	½	SFA 15 T 232	32 (464)	**148F3232**
15	½	SFA 15 T 233	33 (479)	**148F3233**
15	½	SFA 15 T 234	34 (493)	**148F3234**
15	½	SFA 15 T 235	35 (508)	**148F3235**
15	½	SFA 15 T 236	36 (522)	**148F3236**
15	½	SFA 15 T 237	37 (537)	**148F3237**
15	½	SFA 15 T 238	38 (551)	**148F3238**
15	½	SFA 15 T 239	39 (566)	**148F3239**
15	½	SFA 15 T 240	40 (580)	**148F3240**

Table 21: Certified SFA 15 T valves with standard set pressure and TÜV pressure setting certificate with each valve

Size		Type	Set pressure bar (psig)	Code number
mm.	in.			
15	½	SFA 15 T 310	10 (145)	**148F3310**
15	½	SFA 15 T 311	11 (160)	**148F3311**
15	½	SFA 15 T 312	12 (174)	**148F3312**
15	½	SFA 15 T 313	13 (189)	**148F3313**
15	½	SFA 15 T 314	14 (203)	**148F3314**
15	½	SFA 15 T 315	15 (218)	**148F3315**
15	½	SFA 15 T 316	16 (232)	**148F3316**
15	½	SFA 15 T 317	17 (247)	**148F3317**

Size		Type	Set pressure bar (psig)	Code number
mm.	in.			
15	½	SFA 15 T 318	18 (261)	**148F3318**
15	½	SFA 15 T 319	19 (276)	**148F3319**
15	½	SFA 15 T 320	20 (290)	**148F3320**
15	½	SFA 15 T 321	21 (305)	**148F3321**
15	½	SFA 15 T 322	22 (319)	**148F3322**
15	½	SFA 15 T 323	23 (334)	**148F3323**
15	½	SFA 15 T 324	24 (348)	**148F3324**
15	½	SFA 15 T 325	25 (363)	**148F3325**
15	½	SFA 15 T 326	26 (377)	**148F3326**
15	½	SFA 15 T 327	27 (392)	**148F3327**
15	½	SFA 15 T 328	28 (406)	**148F3328**
15	½	SFA 15 T 329	29 (421)	**148F3329**
15	½	SFA 15 T 330	30 (435)	**148F3330**
15	½	SFA 15 T 331	31 (450)	**148F3331**
15	½	SFA 15 T 332	32 (464)	**148F3332**
15	½	SFA 15 T 333	33 (479)	**148F3333**
15	½	SFA 15 T 334	34 (493)	**148F3334**
15	½	SFA 15 T 335	35 (508)	**148F3335**
15	½	SFA 15 T 336	36 (522)	**148F3336**
15	½	SFA 15 T 337	37 (537)	**148F3337**
15	½	SFA 15 T 338	38 (551)	**148F3338**
15	½	SFA 15 T 339	39 (566)	**148F3339**
15	½	SFA 15 T 340	40 (580)	**148F3340**

Spare parts

Table 22: Spare part kits

Type	Code number
SFA 10 (H)/DSV 10 Inspection kit	**148F3068**
SFA 10 Repair Kit 10 – 27 bar[1]	**148F3069**
SFA 10H Repair Kit 28 – 65 bar[1]	**148F3070**
SFA 15/DSV 1 inspection kit	**148F3029**
Repair kit SFA 15	**148F3036**

[1] Inspection kit should be ordered with any repair kit

Accessories

Table 23: Accessories

Type	Code number
DSV/SFA/SFV Non-stick grease	**148F3064**
DSV 10 Cap and alu gasket for testing (1 set)	**148F3063**
DSV 10 T Plug ½" NPT (1 set)	**148F3072**
SFA 10(H) G Inlet weld connector	**148F3075**
SFA 10(H) NPT Inlet weld connector	**148F3076**
Nipples + gaskets set for SFA 10(H), SFV 15/SFA 15[1]	**148F3019**

[1] Weld nipple for SFA 10(H) inlet (G ½") not included in **148F3019**. Order **148F3075** in addition to.

Certificates and declarations

The list contains all certificates, declarations, and approvals for this product type. Individual code number may have some or all of these approvals, and certain local approvals may not appear on the list.

Some approvals may change over time. You can check the most current status at danfoss.com or contact your local Danfoss representative if you have any questions.

Table 24: Pressure Equipment Directive (PED)

CE	The SFA valves are approved in accordance with the European standard specified in the Pressure Equipment Directive and are CE marked.

For further details / restrictions - see Installation guide.

Table 25: SFA 10, SFA 10H and SFA 15

	SFA 10 / SFA 10H	SFA 15
Nominal bore	6.8 mm (¼ in.)	13 mm (0.512 in.)
Classified for	Fluid group I	
Category	IV	

Table 26: Certificates and declarations

File name	Document type	Document topic	Approval authority
Д-DK.БЛ08.B.03706	EAC Declaration	Machinery & Equipment	RU
0045 202 1204 Z 00354 19 D 001(00)	Pressure - Safety Certificate	-	TÜV
C-DK.БЛ08.B.01096_20	Pressure - Safety Certificate	PED	EAC
033F0691.AE	Manufacturers Declaration	RoHS	Danfoss
033F0473.AD	Manufacturers Declaration	ATEX	Danfoss
0045 202 1201 Z 00662 19 D 001 (01)	Pressure - Safety Certificate	-	TÜV
033F0685.AK	EU Declaration	EMCD/PED	Danfoss
39409-B0 BV	Marine - Safety Certificate	-	BV
07 202 1423 Z 0080-14-D-0120	Pressure - Safety Certificate	PED	TÜV
SV 19-1104	Pressure - Safety Certificate	-	TÜV
TSF700E49-2023	Manufacturing Permission	TSG	AQSIQ
TAP000000M	Marine - Safety Certificate	-	DNV GL
033F0685.AK	EU Declaration	EMCD/PED	Danfoss
19.10327.266	Marine - Safety Certificate	-	RMRS

ENGINEERING
TOMORROW

Online support

Danfoss offers a wide range of support along with our products, including digital product information, software, mobile apps, and expert guidance. See the possibilities below.

The Danfoss Product Store

The Danfoss Product Store is your one-stop shop for everything product related—no matter where you are in the world or what area of the cooling industry you work in. Get quick access to essential information like product specs, code numbers, technical documentation, certifications, accessories, and more.
Start browsing at store.danfoss.com.

Find technical documentation

Find the technical documentation you need to get your project up and running. Get direct access to our official collection of data sheets, certificates and declarations, manuals and guides, 3D models and drawings, case stories, brochures, and much more.

Start searching now at www.danfoss.com/en/service-and-support/documentation.

Danfoss Learning

Danfoss Learning is a free online learning platform. It features courses and materials specifically designed to help engineers, installers, service technicians, and wholesalers better understand the products, applications, industry topics, and trends that will help you do your job better.

Create your Danfoss Learning account for free at www.danfoss.com/en/service-and-support/learning.

Get local information and support

Local Danfoss websites are the main sources for help and information about our company and products. Find product availability, get the latest regional news, or connect with a nearby expert—all in your own language.

Find your local Danfoss website here: www.danfoss.com/en/choose-region.

Spare Parts

Get access to the Danfoss spare parts and service kit catalog right from your smartphone. The app contains a wide range of components for air conditioning and refrigeration applications, such as valves, strainers, pressure switches, and sensors.

Download the Spare Parts app for free at www.danfoss.com/en/service-and-support/downloads.

Coolselector®2 - find the best components for you HVAC/R system

Coolselector®2 makes it easy for engineers, consultants, and designers to find and order the best components for refrigeration and air conditioning systems. Run calculations based on your operating conditions and then choose the best setup for your system design.

Download Coolselector®2 for free at coolselector.danfoss.com.

Danfoss can accept no responsibility for possible errors in catalogues, brochures and other printed material. Danfoss reserves the right to alter its products without notice. This also applies to products already on order provided that such alterations can be made without subsequential changes being necessary in specifications already agreed. All trademarks in this material are property of the respective companies. Danfoss and the Danfoss logotype are trademarks of Danfoss A/S. All rights reserved.