ENGINEERING
TOMORROW

Data Sheet

Thermostatic Expansion Valves Type **TR6**

The TR6 series is a hermetic design which is developed with features especially for use in applications such as:

- Residential air conditioning systems
- Split systems
- Roof top units
- Heat pumps
- Chillers
- Light commercial air conditioning systems

The TR6 design incorporates a forged brass body with the entire power element, including the capillary tube and bulb, fabricated from stainless steel. All valves are designed with balanced port which reduces the influence from varying condensing pressures. The valves can be delivered with special connections and fittings both at the inlet, outlet, and the equalizer connection.

AI318728845972en-000401

Features

- Compact size - hermetic design, straightway configuration with external equalization
- Refrigerants & rated capacities ranging up to
  - R22/R407C: 23.6 kW / 6.7 TR
  - R410A: 24.5 kW / 7 TR
- Laser-welded power element
  - Longer diaphragm life
  - High corrosion resistant
- Stainless steel capillary tube
  - Tolerates more bending for easier installation and longer life
  - High strength and vibration resistance
- Stainless steel bulb
  - Self aligning
- Balance port design
- A complete program with and without internal check valve
- Internal check valve design with low pressure drop in reverse flow
- Adjustable or non-adjustable superheat, for customer specific factory setting
- Bleed function available
- Solder, chatleff and aeroquip connections
- With external equalization
- UL listed, file SA7200
- Anti-hunt bulb charge

Application

Traditional air conditioning system, cooling only

Figure 1: Traditional air conditioning system, cooling only

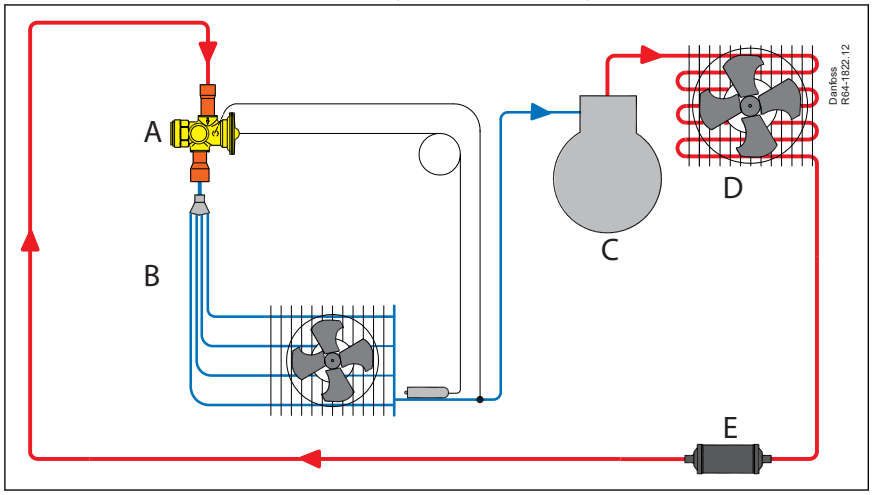

A	TR6 with / without internal check valve
B	RD Distributor
C	Compressor
D	Outdoor coil
E	DCL/DML

Illustrates the diagram of a traditional air conditioning system where the TR6 is controlling liquid injection in one direction only.

Traditional air conditioning / heat pump system

Figure 2: Traditional air conditioning / heat pump system

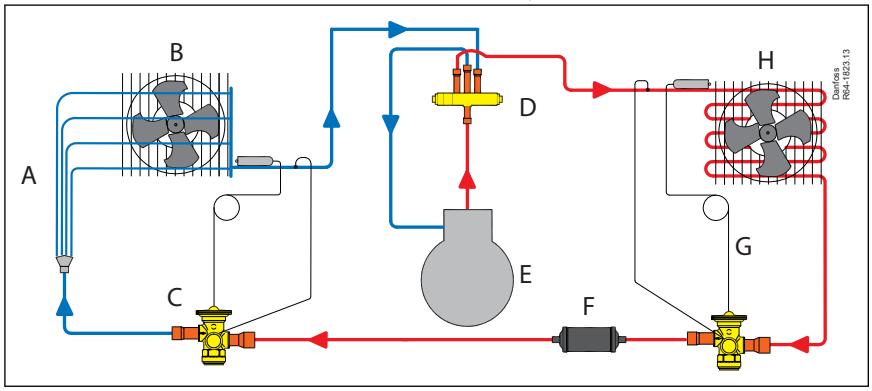

A	RD Distributor
B	Indoor coil
C	TR6 with internal check valve
D	4-way valve
E	Compressor
F	DCB/DMB
G	TR6 with internal check valve
H	Outdoor coil

Illustrates a split air conditioning / heat pump system with two thermostatic expansion valves, one for cooling mode and one for heating mode. The thermostatic expansion valves each has a built-in check valve, which has the function of preventing flow in one direction and allowing the flow in the opposite direction. It means that one thermostatic expansion valve is controlling liquid injection into the indoor coil while the other thermostatic expansion valve is bypassing the metering device with the open check valve.

Simplified air conditioning / heat pump system (bi-flow)

Figure 3: Simplified air conditioning / heat pump system (bi-flow)

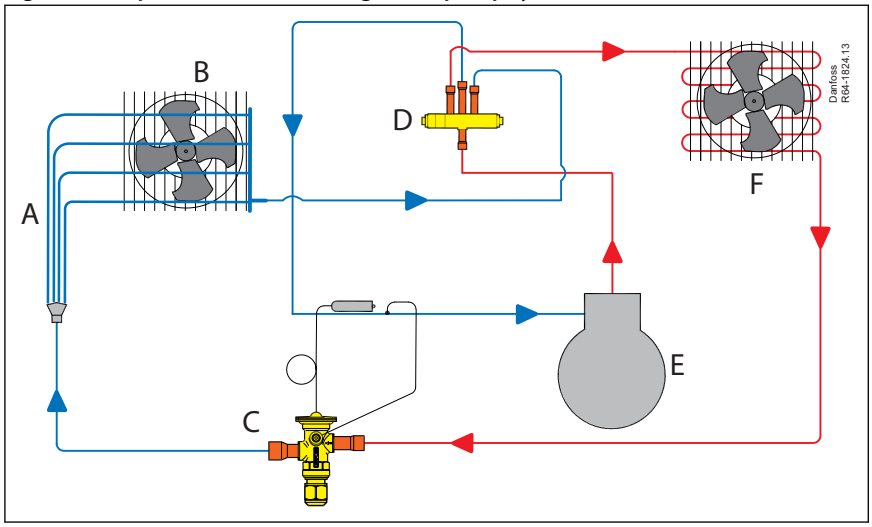

A	RD Distributor
B	Indoor coil
C	TR6 without check valve
D	4-way valve
E	Compressor
F	Outdoor coil

Illustrates a packaged air conditioning / heat pump system with a short distance between the indoor and outdoor heat-exchangers. The two TR6 valves from fig 6 can be replace by one TR6 valve without internal check valve, making use of the bi-flow feature of this thermostatic expansion valve. The single valve is controlling the liquid injection in both directions. The normal flow direction marked with an arrow on the valve body should be used for the primary function, i.e. cooling or heating.

Product specification

Technical data

Max. operating temperature
- Thermostatic element:
  - R22 / R407C: max. 100°C / 212°F
  - R410A: max. 100°C / 212°F
- Valve body:160 °C / 320 °F

Max. working pressure PS / MWP
49 bar / 711 psig

Valve program

Standard versions

Refrigerants:
R22 / R407C and R410A

Operating range:
-10 to 15°C / 15 to 60°F

Setting:
- Fixed setting:
  - Static superheat in accordance with customers' specifications
- Adjustable setting:
  R22 / R407C
  Factory static superheat of 4 K / 7.2 °F
  R410A
  Factory static superheart of 3 K / 5.4 °F

Packing
Single or Multipack
Industrial Pack for OEM specific valves only

Versions:
All valves are in straightway versions with or without internal check valve

Standard connections:
Inlet solder ⅜ in. ODF x Outlet solder ⅜ in. ODF
Equalizer capillary tube ¼ in. flare; 24.3 in. length

Capillary tube length: 800 mm / 31.5 in.

Options on request

Capillary tube lengths(approx.):
450 mm / 17.7 in.
975 mm / 38.4 in.

Options for Connections:
Inlet/Outlet:
Inlet: Solder ODM ⅜ in., solder ODF ⅜ in., solder ODF ½ in., Chatleff male ⅝ in. and aeroquip male ⅝ in.

Outlet: Solder ODF ⅜ in., solder ODF ½ in., solder ODF ⅝ in., chatleff female ¾ in., short and long tail, aeroquip female ⅝ in., short and long tail.

Equalizer:
Copper capillary tube size (approx.): Ø⅛ in.

Available configurations:
Solder ODM ⅛ in., lengths 9.5 in., 16.9 in., 24.3 in., 31.7 in.
Solder ODF ¼ in., lengths 31.7 in. and 39.1 in.
Flare nut ¼ in., lengths 9.5 in., 16.9 in., 24.3 in., 31.7 in.

Identification

Figure 4: Main valve data example:

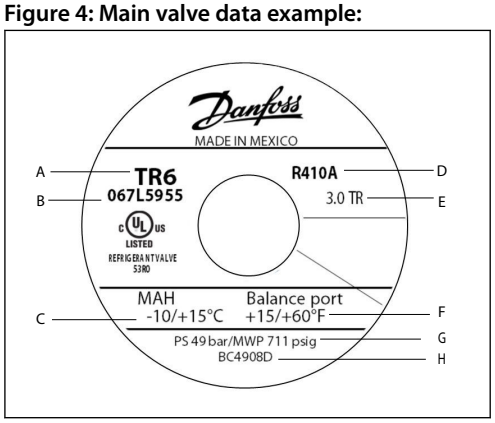

A	Valve type
B	Code number
C	Evaporating temperature range in °C
D	Refrigerant
E	Rated capacity Qnom in Tons of refrigeration
F	Evaporating temperature range in °F
G	Max. working pressure in bar and psig
H	Date making (BC=Mexico, week 49, year 2017, weekday D=Thursday)

Essential valve data is given on the power element.

Check valve capacity

Figure 5: Internal check valve for orifice bypass in reverse flow (flow rate as a function of pressure differential)

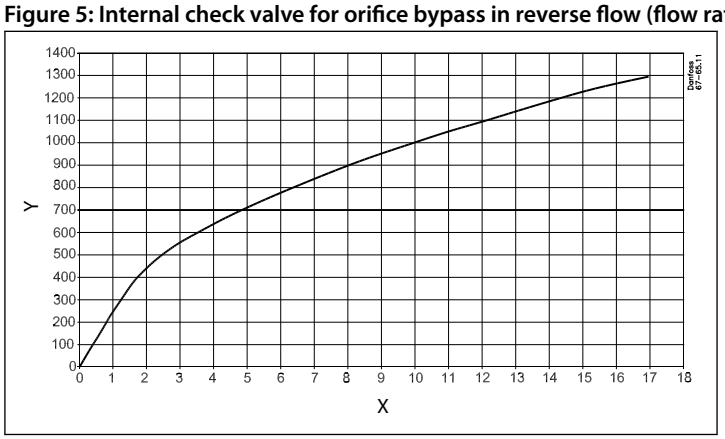

X	Dp (psi)
Y	Mass flow lb/h

T_C= 32 °C / 90 °F
T_I= 24 °C / 75 °F

Valve selection based on capacity calculation

As for extended capacity calculations and valve selection based on capacities and refrigerants, please refer to Coolselector®2. Rated and extended capacities are calculated with the Coolselector®2 calculation engine to ARI standards with the ASEREP equations based on laboratory measurements of selected valves.

Download Coolselector®2 for free at coolselector.danfoss.com.

Design and function

Table 1: Design and function

TR6 with fixed setting

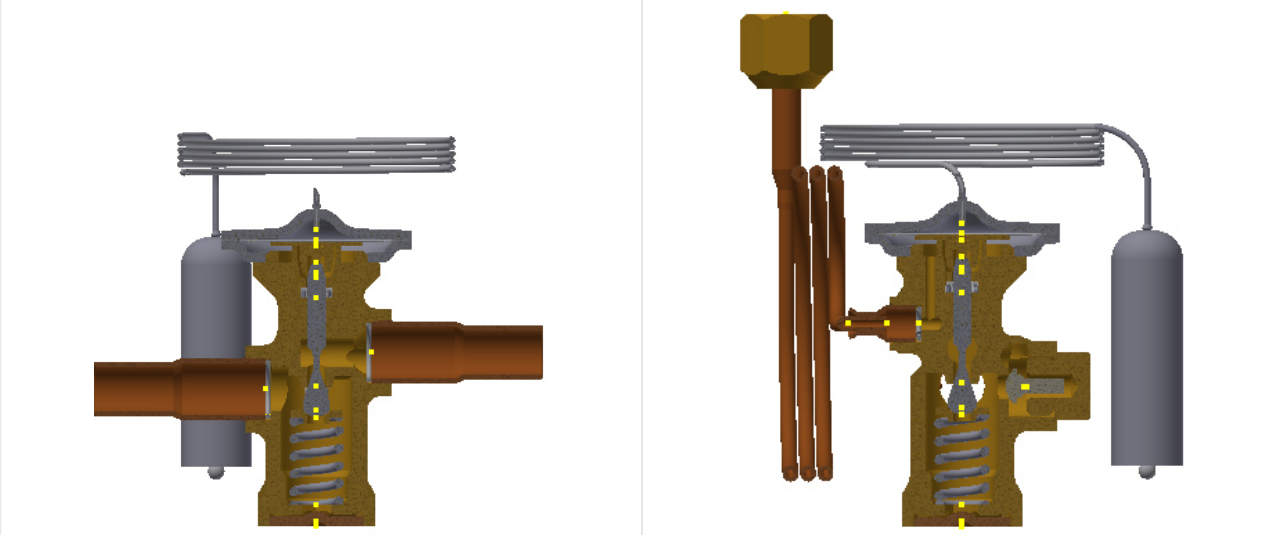

TR6 with adjustable setting

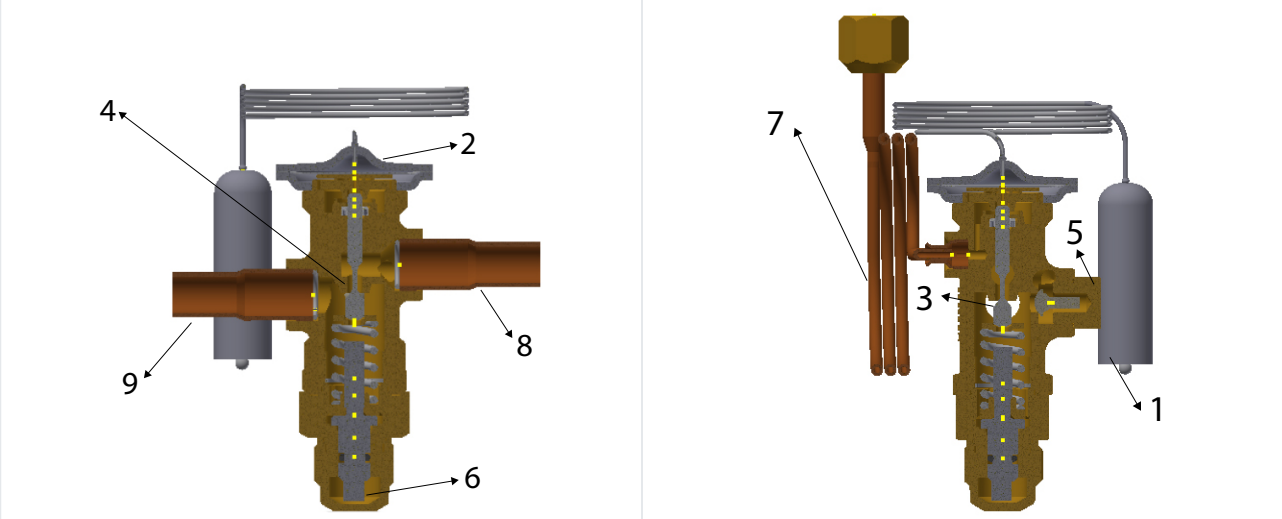

1	Bulb	**6**	Setting spindle for adjustment of static superheat (SS)
2	Thermostatic element	**7**	Equalizer
3	Push pin seal	**8**	Inlet connection
4	Balanced port	**9**	Outlet connection
5	Check valve		

Figure 6: Static/opening superheat graph

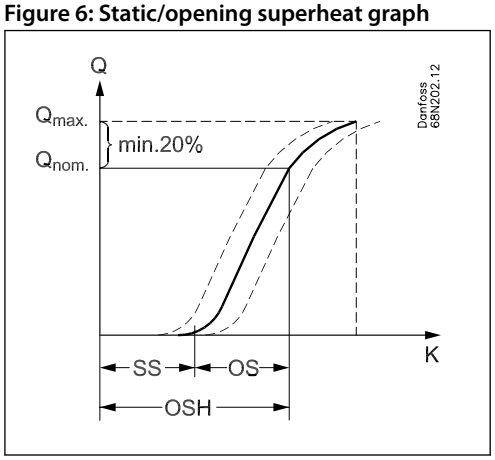

SS	Static superheat
OS	Opening superheat at nominal/ rated capacity
OSH	SS + OS = Operating superheat

The central push pin is sealed with a robust seal (pos. 3) that ensures maximum tightness and minimum friction through the lifetime of the valve.

The balanced port (pos. 4) ensures minimal superheat changes when condensing pressure varies. This feature makes the valve ideal for bi-flow operation.

Static superheat (SS) can be adjusted with the setting spindle (pos. 6).

Example
Static superheat
SS = 4 K / 7.2 °F (factory setting)
or according to customer specification

Opening superheat at nominal/ rated capacity OS = 4 K / 7.2 °F

Opening superheat is defined as the required superheat to open the valve to nominal capacity

Dimensions and weights

Fixed setting

Table 2: Fixed setting

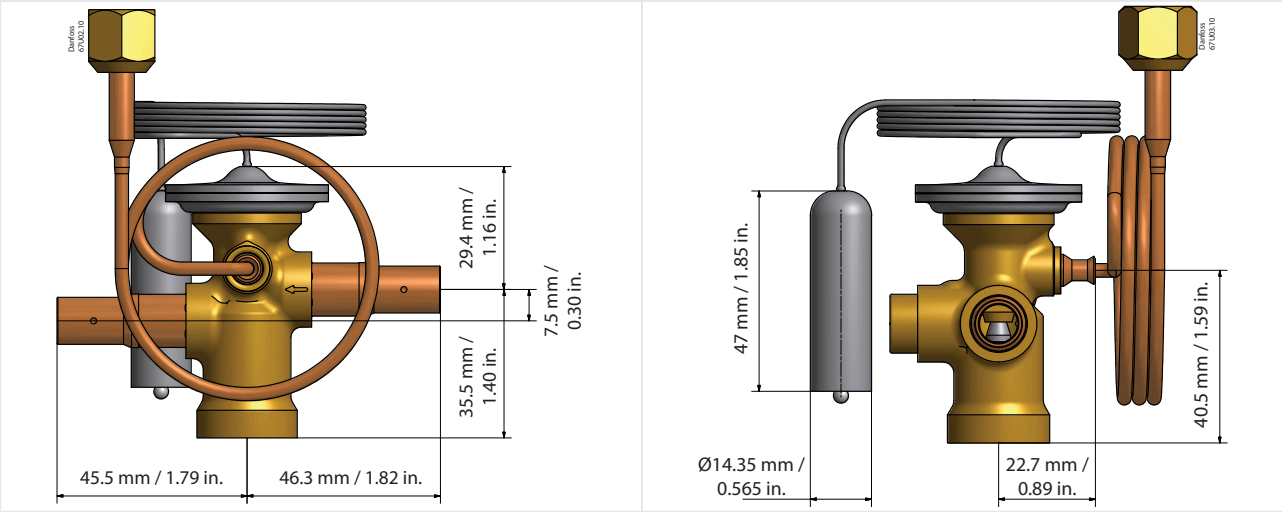

Weight 0.305 kg, 0.672 lbs

Adjustable setting

Table 3: Adjustable setting

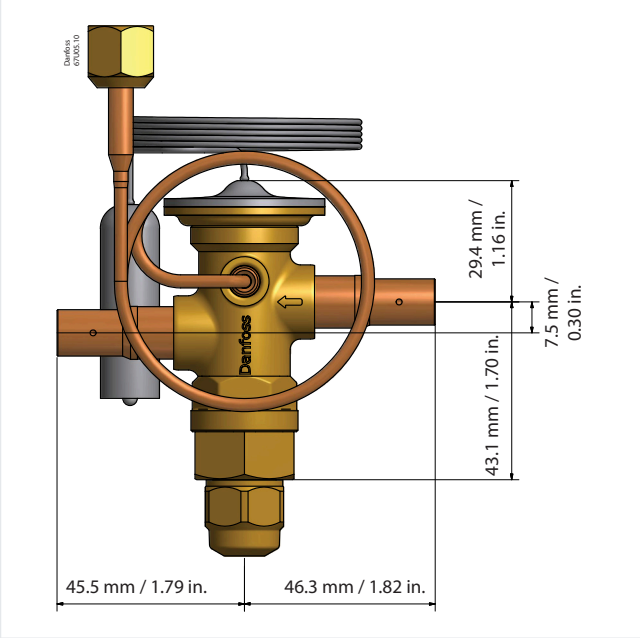

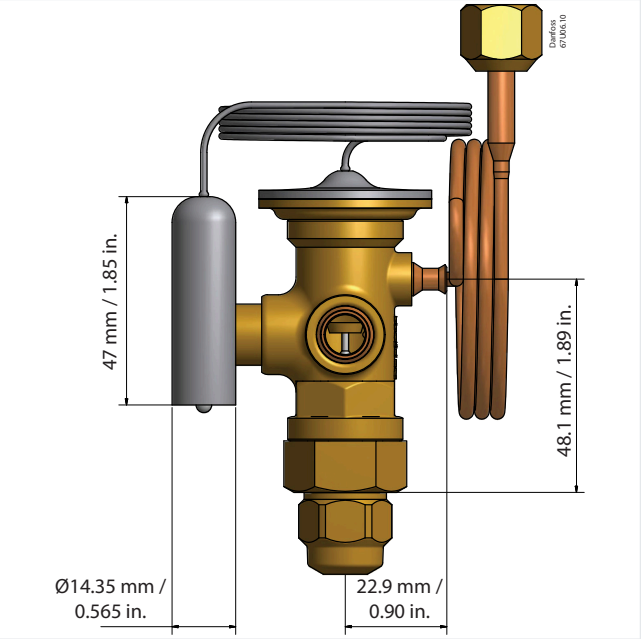

Weight 0.361 kg; 0.795 lbs

Ordering

R22 / R407C and R410A

Figure 7: Adjustable setting

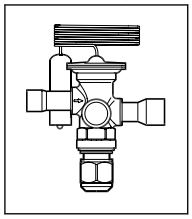

Table 4: R22 / R407C and R410A

Valve type	Orifice no.	Rated capacity						Connections solder ODF		Code no. Multi pack [1]
		R410A[2]		R407C		R22		Inlet x Outlet [in.]	Pressure equalization [in.]	
		[KW]	[TR]	[KW]	[TR]	[KW]	[TR]			
TR6	3	–	–	9.8	2.8	11	3.1	3⁄8 × 3⁄8	1⁄4	067L5855
TR6	4	–	–	13.8	3.9	15.5	4.4	3⁄8 × 3⁄8	1⁄4	067L5856
TR6	5	–	–	16.4	4.7	18.4	5.2	3⁄8 × 3⁄8	1⁄4	067L5857
TR6	6	–	–	17.4	4.9	19.6	5.6	3⁄8 × 3⁄8	1⁄4	067L5858
TR6	7	–	–	20.9	6	23.8	6.8	3⁄8 × 3⁄8	1⁄4	067L5859
TR6	3	11.3	3.2	–	–	–	–	3⁄8 × 3⁄8	1⁄4	067L5955
TR6	4	15.9	4.5	–	–	–	–	3⁄8 × 3⁄8	1⁄4	067L5956
TR6	5	19	5.4	–	–	–	–	3⁄8 × 3⁄8	1⁄4	067L5957
TR6	6	20.2	5.8	–	–	–	–	3⁄8 × 3⁄8	1⁄4	067L5958
TR6	7	24.5	7	–	–	–	–	3⁄8 × 3⁄8	1⁄4	067L5959

[1] Kit part numbers consist of a valve, bulb strap, insulation tape, installation guide, and the following connectors:
1 Chatleff female 3⁄4 in. connector
1 Aeroquip female 5⁄8 in. connector
1 Flare 3⁄8 in. connector

[2] The rated capacity is based on:
Evaporating temperature t_e : 4.4 °C / 40 °F
Condensing temperature t_c : 38 °C / 100 °F
Refrigerant temperature ahead of valve t_l : 37 °C / 98 °F

Temperature range = -10 to 15 °C / 15 to 60 °F = 4 K / 7.2 °F
TR6 with fixed superheat setting are available upon request.
Single pack = 1 valve kit in a box
Industrial pack = 12 pieces in one box

Sizing

Figure 8: Sizing

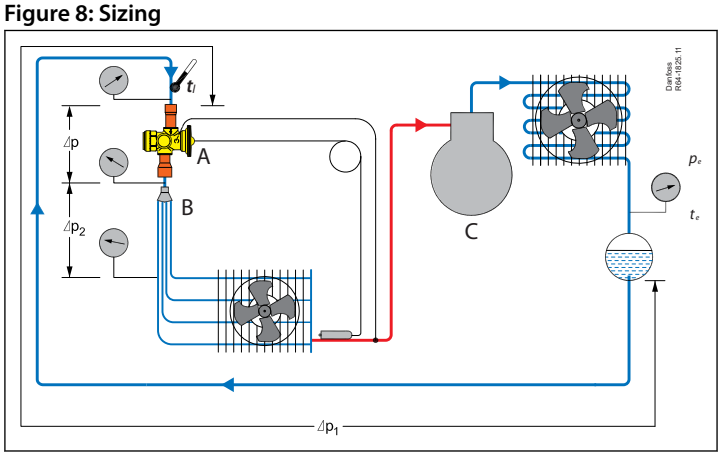

A	TR6
B	RD Distributor
C	Compressor

Example:
Refrigerant=R410A

Evaporating temperature=(te=45 °F;pe=131 psig)
Condensing temperature =(tc=110 °F;pc=368 psi
Liquid line tl= 100 °F
pressure drop in liquid line, drier and distributor system Dp2+ Dp1=35 psi
Pressure drop in valve Dp = 368 - 131 - 35 = 202 psi
Subcooling Δtsub = tc – tl=10 °F
Evaporator capacity = 4.0 TR
Correction factor from table= 1.02

The corrected evaporator capacity then becomes 4.0 × 1.02 = 4.08 TR
As the selected valve must be equal to or slightly larger than the corrected evaporator capacity of 4.08 TR, the TR6 with orifice 4 would be a suitable choice. Reference table below for rated capacities.

Certificates, declarations, and approvals

The list contains all certificates, declarations, and approvals for this product type. Individual code number may have some or all of these approvals, and certain local approvals may not appear on the list.

Some approvals may change over time. You can check the most current status at danfoss.com or contact your local Danfoss representative if you have any questions.

Table 5: Declaration for TR6

File name	Document type	Document topic	Approval authority
067U9601 Vr.AB	Manufacturers Declaration	China RoHs	Danfoss

ENGINEERING
TOMORROW

Online support

Danfoss offers a wide range of support along with our products, including digital product information, software, mobile apps, and expert guidance. See the possibilities below.

The Danfoss Product Store

The Danfoss Product Store is your one-stop shop for everything product related—no matter where you are in the world or what area of the cooling industry you work in. Get quick access to essential information like product specs, code numbers, technical documentation, certifications, accessories, and more.
Start browsing at store.danfoss.com.

Find technical documentation

Find the technical documentation you need to get your project up and running. Get direct access to our official collection of data sheets, certificates and declarations, manuals and guides, 3D models and drawings, case stories, brochures, and much more.

Start searching now at www.danfoss.com/en/service-and-support/documentation.

Danfoss Learning

Danfoss Learning is a free online learning platform. It features courses and materials specifically designed to help engineers, installers, service technicians, and wholesalers better understand the products, applications, industry topics, and trends that will help you do your job better.

Create your Danfoss Learning account for free at www.danfoss.com/en/service-and-support/learning.

Get local information and support

Local Danfoss websites are the main sources for help and information about our company and products. Find product availability, get the latest regional news, or connect with a nearby expert—all in your own language.

Find your local Danfoss website here: www.danfoss.com/en/choose-region.

Coolselector®2 - find the best components for you HVAC/R system

Coolselector®2 makes it easy for engineers, consultants, and designers to find and order the best components for refrigeration and air conditioning systems. Run calculations based on your operating conditions and then choose the best setup for your system design.

Download Coolselector®2 for free at coolselector.danfoss.com.

Danfoss can accept no responsibility for possible errors in catalogues, brochures and other printed material. Danfoss reserves the right to alter its products without notice. This also applies to products already on order provided that such alterations can be made without subsequential changes being necessary in specifications already agreed. All trademarks in this material are property of the respective companies. Danfoss and the Danfoss logotype are trademarks of Danfoss A/S. All rights reserved.