ENGINEERING
TOMORROW

Data Sheet

Pilot valve
Type **CVP, CVPP, CVC**
CVE, EVM and **CVH**

Intended for mechanical control of a main valve

Pilot valves are intended for mechanical control of a main valve and are ready for direct installation in the top cover of the main valve.

Small capacities can be controlled by the pilot valve directly without a main valve when installed in the matching CVH housing.

The extensive range of Danfoss pilot valves include:

- Constant-pressure pilot valve, type CVP
- Differential-pressure pilot valve, type CVPP
- Pressure-operated pilot valve with reference pressure connection, type CVC
- Electronically operated constant-pressure pilot valve, type CVE
- Solenoid pilot valve, type EVM (NC)
- Solenoid pilot valve, type EVM (NO)
- Housing, type CVH for pilot valves, for mounting in external pilot lines

Features

- Applicable to HCFC, non flammable HFC, R717 (Ammonia) and R744 (CO_2). The use of Pilots with flammable hydrocarbons is not recommended
- Extremely accurate pressure and temperature control.
- The pilot valves can be screwed directly into the main valve, thus avoiding the necessity of welding, soldering and separate pilot lines.
- The pilot valves can be mounted directly in the ICS, PM or ICF valve or it can be connected via an external pilot line and a CVH housing.
- All pilot valves can be used on all sizes of main valves.
- Several pilot valves can be connected in series or in parallel to provide many functions in the same ICS or ICF valve.
- All pilot valves are delivered with gaskets.

Functions

Constant-pressure pilot valve, type CVP

The k_v/C_v value is measured with the pilot valve mounted in a CVH housing for external pilot lines. The value can vary slightly, depending on the setting value.

Figure 1: CVP

CVP is a constant-pressure pilot valve for a max. working pressure (MWP) of 52 bar (754 psig) and with 3 setting ranges covering settings of -0.66 to 52 bar (19.5 in. Hg to 754 psig). This pilot valve is used for maintaining a constant pressure on the inlet side of the main valve.

When a CVP is mounted in a CVH housing, it can be used as a separate constant-pressure valve or a pressure relief valve (e.g. to prevent hydraulic overpressure in an entrapped liquid).

NOTE:
The CVP pilot can be used for most applications in the refrigeration system including hot gas relief systems.

Differential-pressure pilot valve, type CVPP

The k_v/C_v value is measured with the pilot valve mounted in a CVH housing for external pilot lines. The value can vary slightly, depending on the setting value.

Figure 2: CVPP

CVPP is a differential-pressure pilot valve for a max. working pressure (MWP) of 52 bar (754 psig) and with 2 setting ranges covering settings of -0.66 to 28 bar (19.5 in. Hg to 406 psig). The pilot valve is used for maintaining a constant differential pressure between the CVPP valve reference pressure connection and the main valve inlet pressure.

CVPP incorporates a diaphragm so that the reference pressure and the refrigerant in the valve are physically separated. The pilot valve can therefore also be used as a pneumatic control valve either to control a main valve or as a separate pneumatic valve mounted in a CVH housing.

Pressure-operated pilot valve with reference pressure connection, type CVC

The reference pressure must be connected to the low-pressure side of the system. The k_v/C_v value is measured with the pilot valve mounted in a CVH housing for external pilot lines. The value can vary slightly, depending on the setting value.

Figure 3: CVC

CVC is a constant pressure pilot valve at an external reference point for a max. working pressure (MWP) of 52 bar (754 psig) and with 2 setting ranges covering settings of -0.66 to 28 bar (19.5 in. Hg to 406 psig). The CVC-pilot is designed to maintain a constant pressure at an external reference point in the system.

CVC pilot valve installed in an ICS servo valve are used for e.g.:
- Outlet pressure regulator to regulate max. suction pressure, e.g. as a compressor crankcase pressure regulator.
- Outlet pressure regulator as a pressure limiter, e.g. for hot gas defrost of hot gas lines.

Electronically operated constant-pressure (constant pressure difference) pilot valve, type CVE

The k_v/C_v value is measured with the pilot valve mounted in a CVH housing for external pilot lines. The value can vary slightly, depending on the setting value.

Figure 4: CVE

CVE is, when fitted with the ICAD 1200A stepper motor, a constant pressure pilot valve with electronic change of set-point for a max. working pressure (MWP) of 52 bar (754 psig) and with electronic controlled full range settings of -0.66 to 8 bar gauge (19.5 in. Hg to 116 psig). The CVE interface to the ICAD is hermetic closed and rotation force is transferred from the ICAD by magnetic forces.

The CVE pilot valve is designed to maintain a constant and very accurate inlet pressure of an ICS servo valve, e.g. evaporator pressure regulation.

The CVE/ICAD unit can be either stand-alone or connected to a remote EKC 361/EKE 400 or PLC with appropriate controller function.

The stand-alone arrangement allows the on-site ICAD setting - and the remote wiring allows remote setting of the desired set pressure.

Solenoid pilot valve, type EVM (NC) and EVM (NO)

The k_v/C_v value is measured with the pilot valve mounted in a CVH housing for external pilot lines.
MOPD: Maximum opening differential pressure with a 10 W a.c. coil.
With:
20 W a.c. coil: 40 bar (580 psig)
20 W d.c. coil: 14 bar (203 psig)
MCPD: Maximum closing differential pressure with a 10/12 W a.c. coil or a 20 W d.c.coil.

Table 1: Solenoid pilot valve, type EVM (NC) and type EVM (NO)

EVM (NC)	EVM (NO)

EVM is a solenoid pilot valve for use when on/ off operation of the main valve is required. EVM valves are intended for use with Danfoss solenoid valve coils (“Coils for solenoid valves”, data sheet DKRCC.PD.BS0.F). Together with CVH, an EVM can also be used as an independent solenoid valve.

Media

Refrigerants

Applicable to HCFC, non flammable HFC, R717 (Ammonia) and R744 (CO_2). The use of pilot valves with flammable hydrocarbons is not recommended

New refrigerants

Danfoss products are continually evaluated for use with new refrigerants depending on market requirements.

When a refrigerant is approved for use by Danfoss, it is added to the relevant portfolio, and the R number of the refrigerant (e.g. R513A) will be added to the technical data of the code number. Therefore, products for specific refrigerants are best checked at store.danfoss.com/en/, or by contacting your local Danfoss representative.

Product specification

Design

Each pilot valve is designed to give the optimum control accuracy within the specific function range of the valve. Several pilot valves can be mounted in series and/or in parallel on the main valve (ICS, ICF or the discontinued PM) to suit numerous applications.

Mounted in a CVH housing, the pilot valves can be used in external lines, either as independently operating valves or as external control valves for the main valve. Mounted in a CVH housing, the pilot valves can be used in external lines, either as independently operating valves or as external control valves for the main valve.

Pressure and temperature data

Temperature range: -60 °C/+120 °C (-76 °F/+248 °F)

Pressure range: The pilot valves are designed for a max. working pressure of 52 bar (754 psig). Pressure setting ranges are given separately for the specific pilot valve. For further information please see installation guides for ICS or ICF valves.

Table 2: Technical data for CVP

Valve type	Max. working pressure		k_v / C_v value		Temperature range		Pressure range MOPD/MCPD		Code no.
	[bar]	[psig]	[m^3/h]	[$US_{gal/min}$]	[°C]	[°F]	[bar]	[psig]	
CVP-L	52	754	0.40	0.46	-60/+120	-76/+248	-0.66 - 7	19.5 in Hg to 102	027B0920
CVP-M	52	754	0.40	0.46	-60/+120	-76/+248	4 - 28	58 - 406	027B0921
CVP-H	52	754	0.40	0.46	-60/+120	-76/+248	25 - 52	363 - 754	027B0922

P-band for a valve system regulated by CVP and ICS or PM main valve: < 0.2 bar (2.9 psig)

Table 3: Technical data for CVPP

Valve type	Max. working pressure		k_v / C_v value		Temperature range		Pressure range MOPD/MCPD		Code no.
	[bar]	[psig]	[m^3/h]	[$US_{gal/min}$]	[°C]	[°F]	[bar]	[psig]	
CVPP-L	52	754	0.40	0.46	-60/+120	-76/+248	-0.66 - 7	19.5 in Hg to 102	027B0930
CVPP-M	52	754	0.40	0.46	-60/+120	-76/+248	4 - 28	58 - 406	027B0931

P-band for a valve system regulated by CVPP and ICS, ICF or PM main valve: <0.2 bar (2.9 psig).

Table 4: Technical data for CVC

Valve type	Max. working pressure		k_v / C_v value		Temperature range		Pressure range MOPD/MCPD		Code no.
	[bar]	[psig]	[m^3/h]	[$US_{gal/min}$]	[°C]	[°F]	[bar]	[psig]	
CVC-L	52	754	0.20	0.23	-60/+120	-76/+248	-0.66 - 7	19.5 in Hg to 102	027B0940
CVC-M	52	754	0.20	0.23	-60/+120	-76/+248	4 - 28	58 - 406	027B0941

P-band for a valve system regulated by CVC and ICS/PM/PMC: < 0.3 bar (4.4 psig).

Table 5: Technical data for CVE

Valve type	Max. working pressure		k_v / C_v value		Temperature range		Pressure range MOPD/MCPD		Code no.
	[bar]	[psig]	[m^3/h]	[$US_{gal/min}$]	[°C]	[°F]	[bar]	[psig]	
CVE-L	52	754	0.4	0.46	-60/+120	-76/+248	-0.66 - 8	19.5 in. Hg to 116	027B0980

Table 6: ICAD 1200A is the suitable stepper motor for CVE

ICAD 1200A with 1.5 m. / 60 in. cables	ICAD 1200A without cable
027H9077	027H9122

CVE Pressure setting (see the installation guide AN213086423355 for ICAD setup)

Table 7: ICAD readings

bar(g)	-0.66	0	1	2	3	4	5	6	7	8
psig	19.5 in. Hg	0	14.5	29	43.50	58	72.5	87	101.5	116
mA	18.3	17.1	15.9	14.7	13.5	12.3	11.1	9.9	8.7	7.5
ICAD reading %	90%	83%	75%	67%	60%	53%	45%	37%	30%	23%

Figure 5: ICAD readings

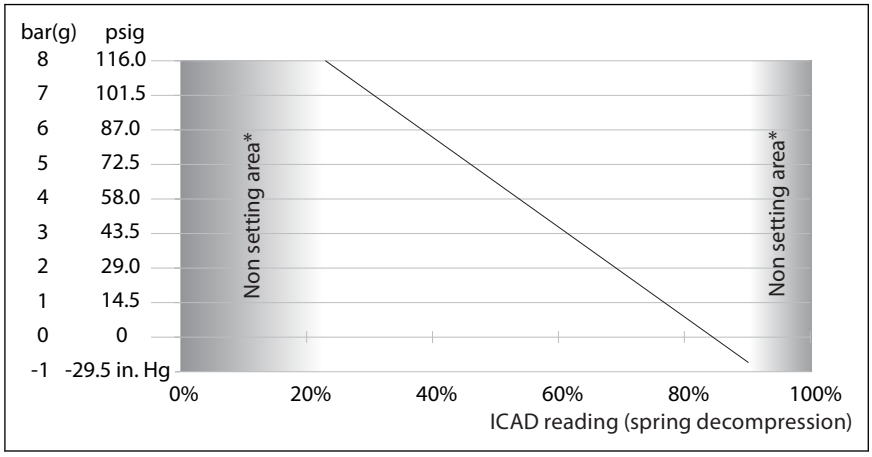

These areas are dedicated regulation band for the pilot valve. It is recommended not to exceed the limits in above table value.

Table 8: Technical data for EVM (NC) and EVM (NO)

Valve type	Max. working pressure		k_v / C_v value		Temperature range		Pressure range MOPD/MCPD		Code no.
	[bar]	[psig]	[m^3/h]	[$US_{gal/min}$]	[°C]	[°F]	[bar]	[psig]	
EVM NC	65	940	0.28	0.32	-60/+120	-76/+248	21	305	027B1120
EVM NO	52	754	0.12	0.14	-60/+120	-76/+248	19	276	027B1130
EVM NO	52	754	0.12	0.14	-60/+120	-76/+248	40	580	027B1132

Dimension and weight

Figure 6: CVP

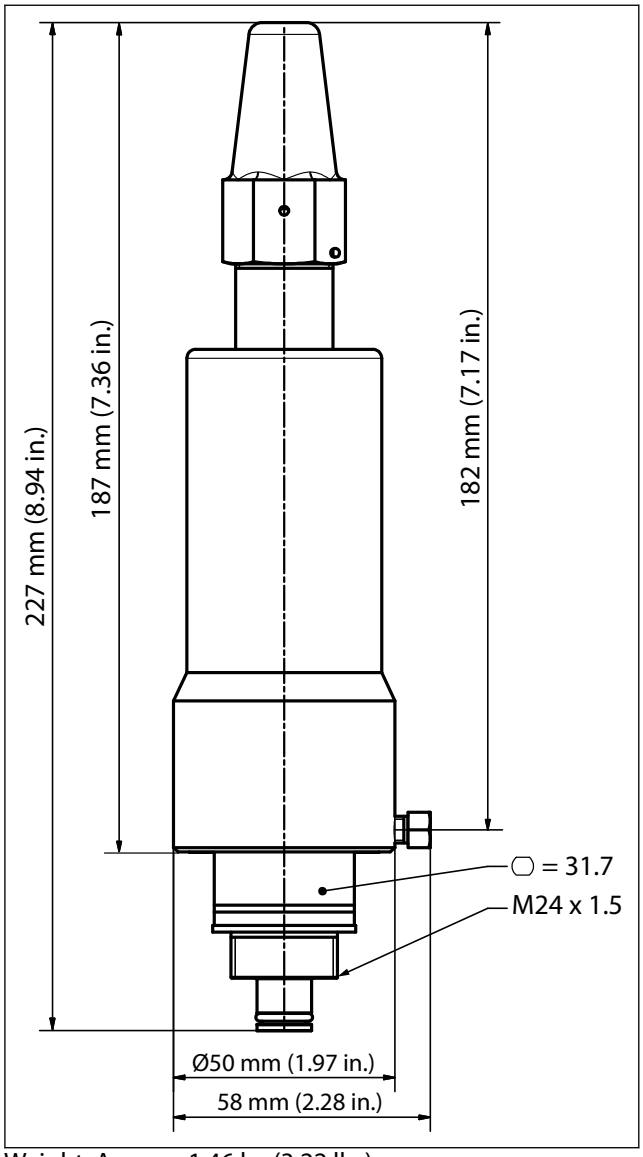

Weight: Approx. 1.46 kg (3.22 lbs)

Figure 7: CVPP

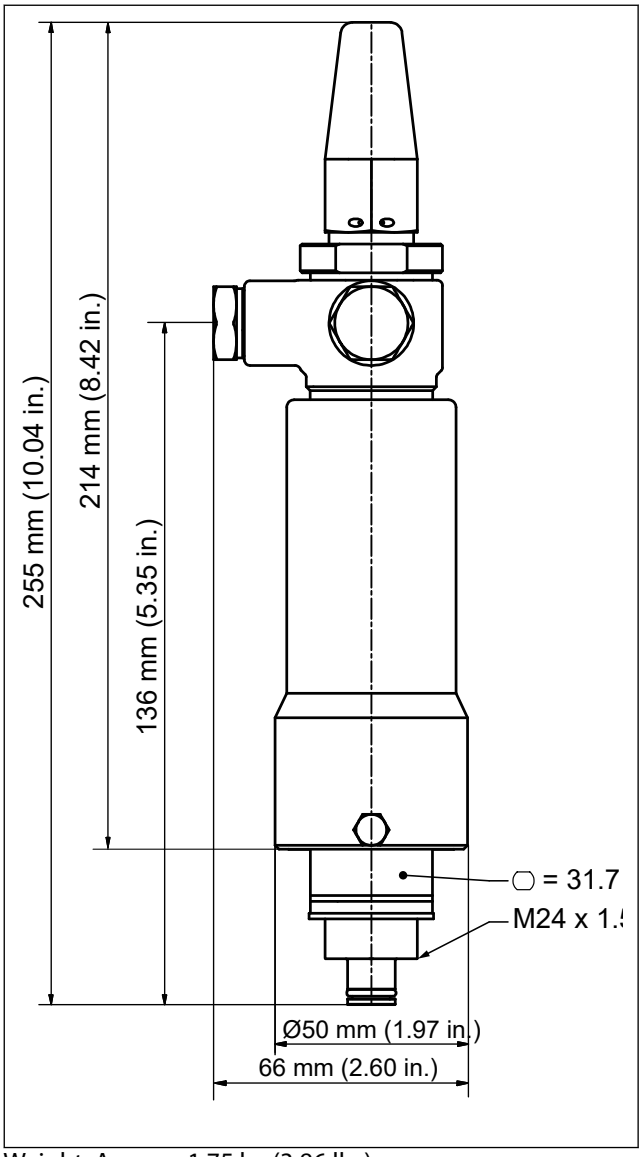

Weight: Approx. 1.75 kg (3.86 lbs)

Figure 8: CVC

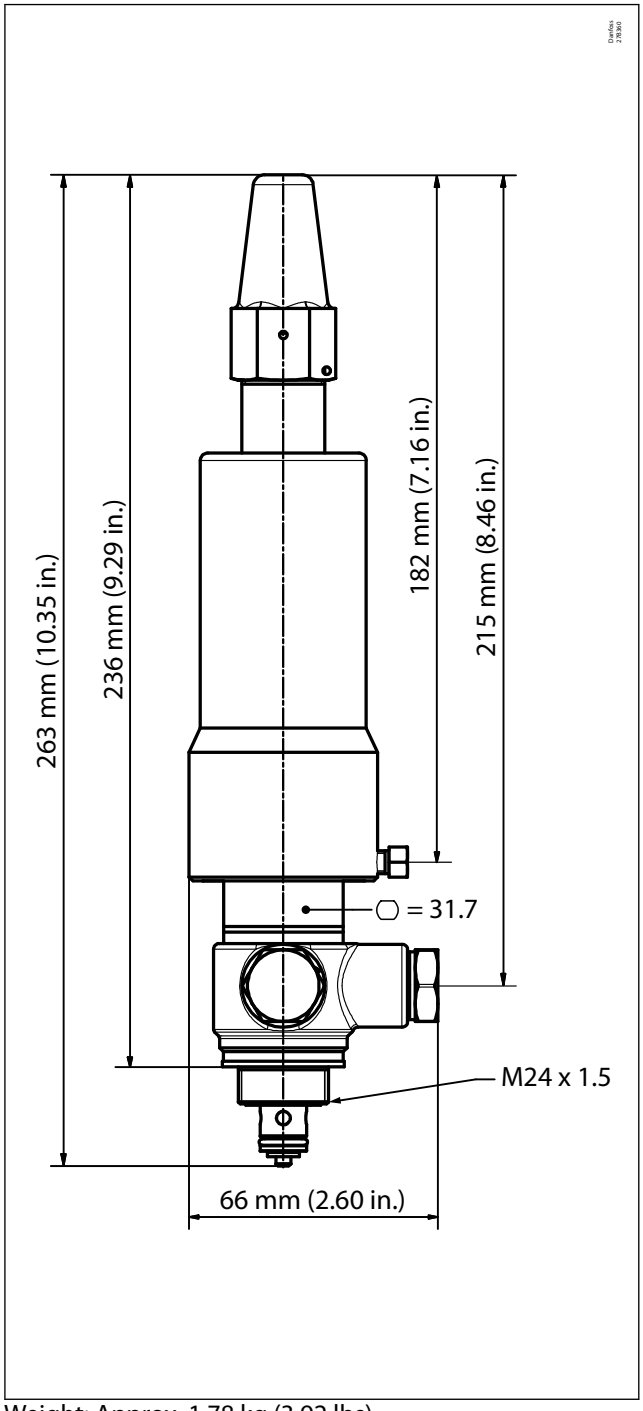

Weight: Approx. 1.78 kg (3.92 lbs)

Figure 9: CVE

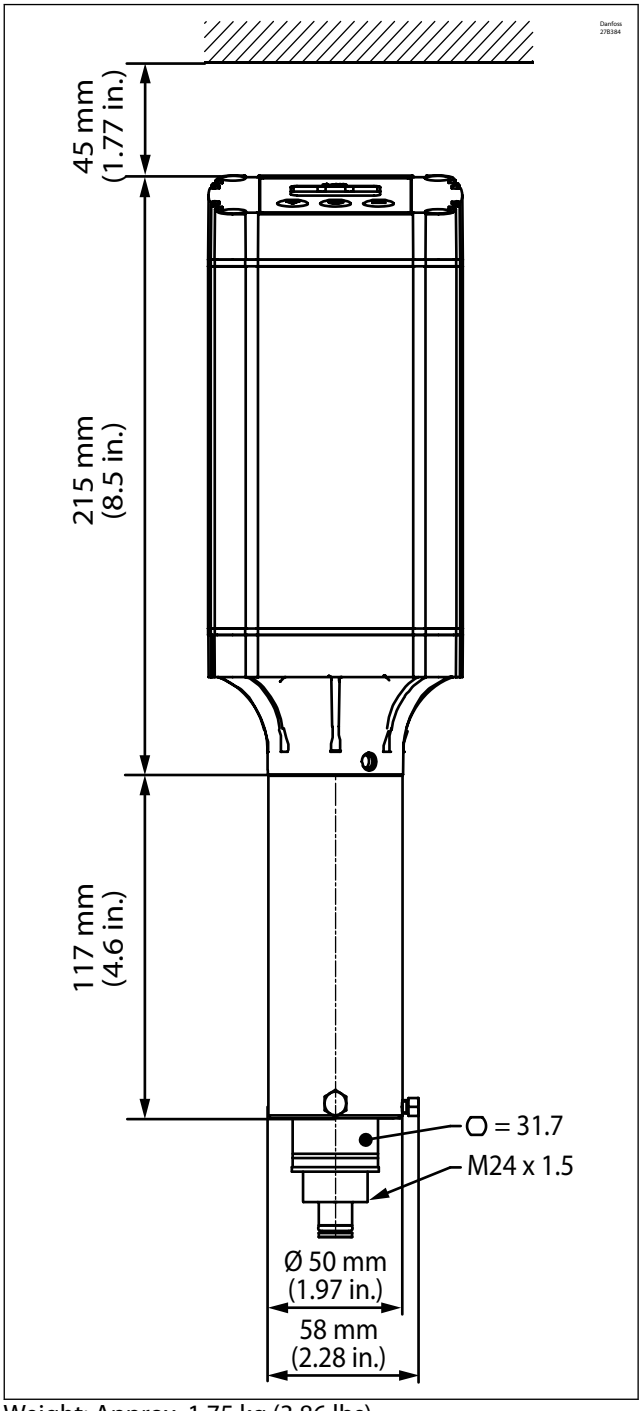

Weight: Approx. 1.75 kg (3.86 lbs)

Figure 10: EVM

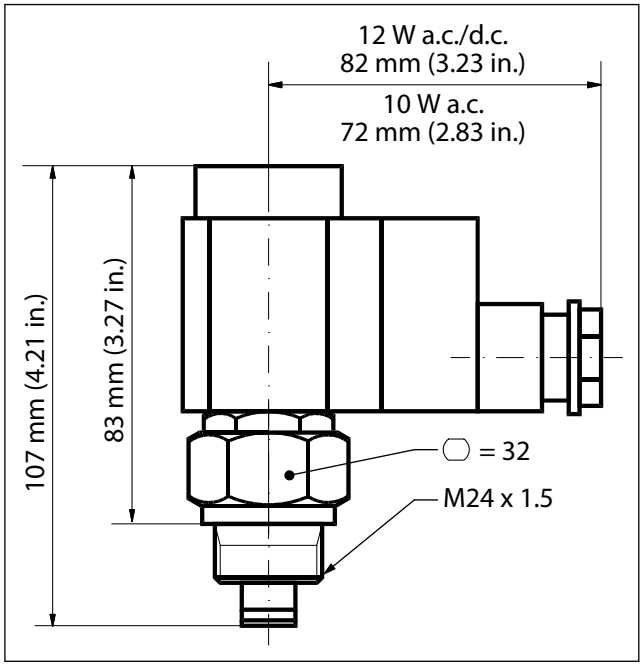

Weight: Approx. 0.25 kg (0.6 lbs) - without coil

Material specification

Figure 11: CVP

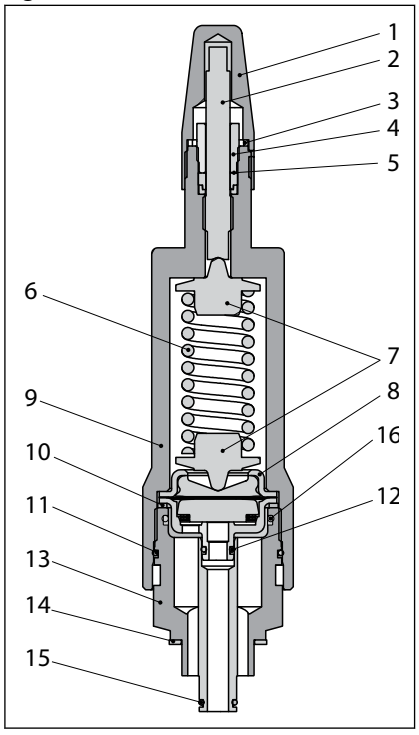

Table 9: Material specification - CVP

No.	Part	Material
1	Protective cap	Steel
2	Setting spindle	Stainless steel
3	Cap seal	Nylon
4	Packing gland	Steel
5	Seal	Teflon
6	Spring	Steel

No.	Part	Material
7	Spring plate	Steel
8	Diaphragm assembly	Stainless steel
9	Valve bonnet	Steel
10	Cover seal	Alu
11	Back up O-ring	
12	O-ring	
13	Base part	Steel
14	Seal	Fiber gasket
15	O-ring	
16	O-ring	

Figure 12: CVPP

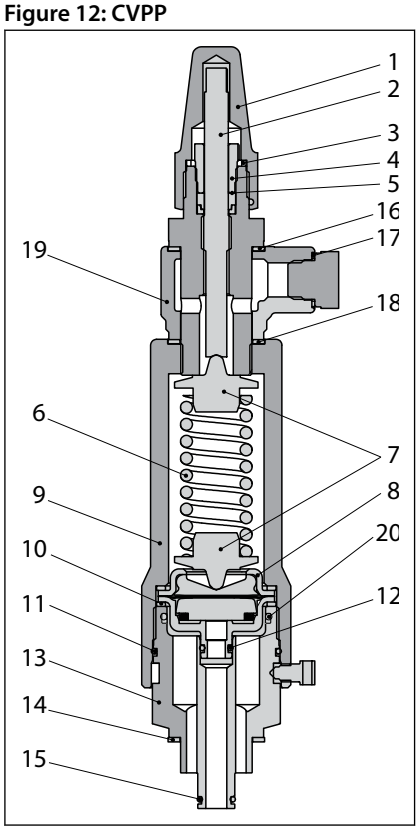

Table 10: Material specification - CVPP

No.	Part	Material
1	Protective cap	Steel
2	Setting spindle	Stainless steel
3	Cap seal	Nylon
4	Packing gland	Steel
5	Seal	Teflon
6	Spring	Steel
7	Spring plate	Steel
8	Diaphragm assembly	Stainless steel
9	Valve bonnet	Steel
10	Cover seal	Alu
11	Back up O-ring	
12	O-ring	
13	Base part	Steel
14	Seal	Fiber gasket
15	O-ring	
16	Seal	Fiber gasket
17	Plug for external pressure G1/4	Steel

No.	Part	Material
18	Seal	Fiber gasket
19	Banjo	Steel
20	O-ring	

Figure 13: CVC

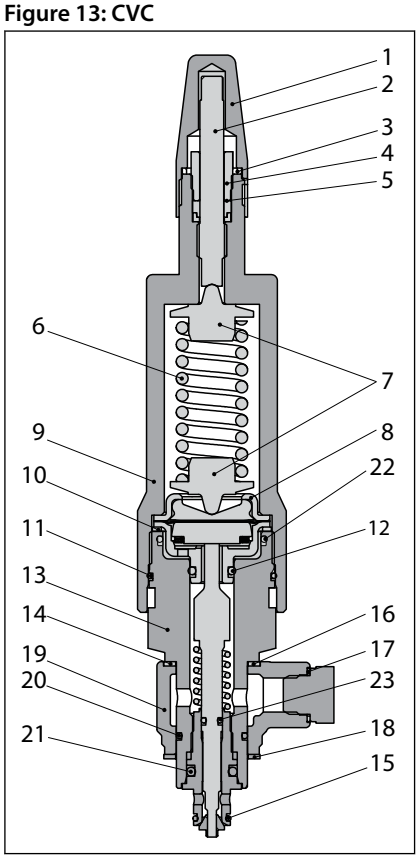

Table 11: Material specification - CVC

No.	Part	Material
1	Protective cap	Steel
2	Setting spindle	Stainless steel
3	Cap seal	Nylon
4	Packing gland	Steel
5	Seal	Teflon
6	Spring	Steel
7	Spring plate	Steel
8	Diaphragm assembly	Stainless steel
9	Valve bonnet	Steel
10	Cover seal	Alu
11	Back up O-ring	
12	O-ring	
13	Base part	Steel
14	Seal	Fiber gasket
15	O-ring	
16	Seal	Fiber gasket
17	Plug for external pressure G1/4	Steel
18	Seal	Fiber gasket
19	Banjo	Steel
20	O-ring	
21	O-ring	
22	O-ring	

Figure 14: CVE

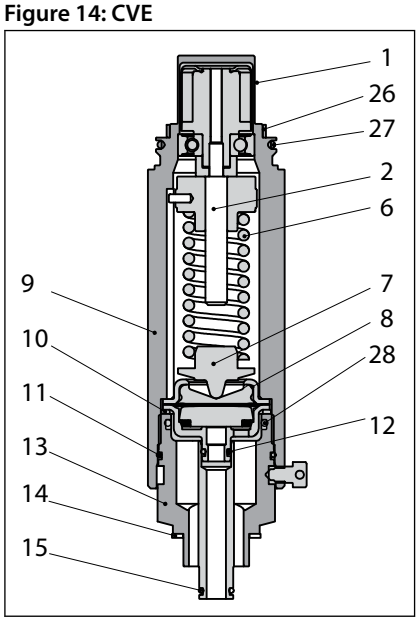

Table 12: Material specification - CVE

No.	Part	Material
1	Adapter	Stainless steel
2	Setting spindle	Stainless steel
6	Spring	Steel
7	Spring plate	Steel
8	Diaphragm assembly	Stainless steel
9	Valve bonnet	Stainless steel
10	Cover seal	Alu
11	Back up O-ring	
12	O-ring	
13	Base part	Steel
14	Seal	Fiber gasket
15	O-ring	
26	Seal	Teflon
27	O-ring	Chloroprene (Neoprene)
28	O-ring	

Figure 15: EVM

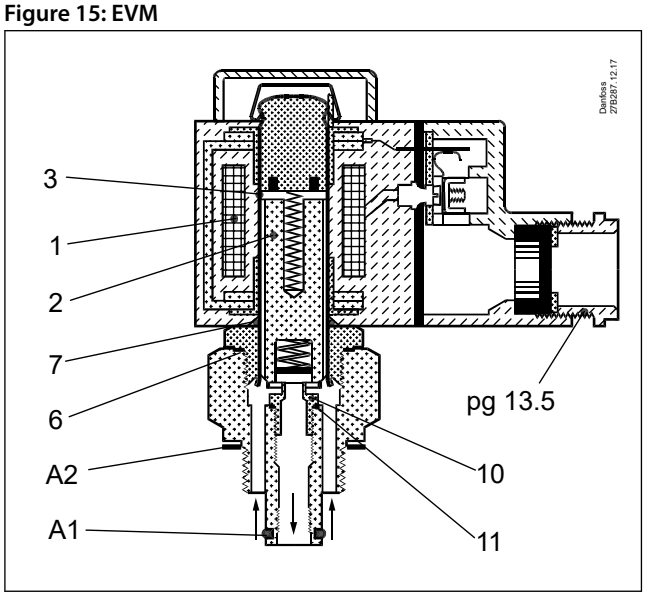

Table 13: Material specification - EVM

No.	Part	Material
1	Coil	
2	Armature	Stainless steel
3	Armature tube	Stainless steel
A2	Seal	Non-asbestos
A1	O-ring	Chloroprene (Neoprene)
6	Seal	Aluminium
7	Spacing ring	
8	Nut	
9	Lock button	
10	Valve body	Steel
11	Valve seat	Teflon (PTFE)

Housing for pilot valves, type CVH, for mounting in external pilot lines

Figure 16: Pilot valve

Figure 17: Internal pipe thread

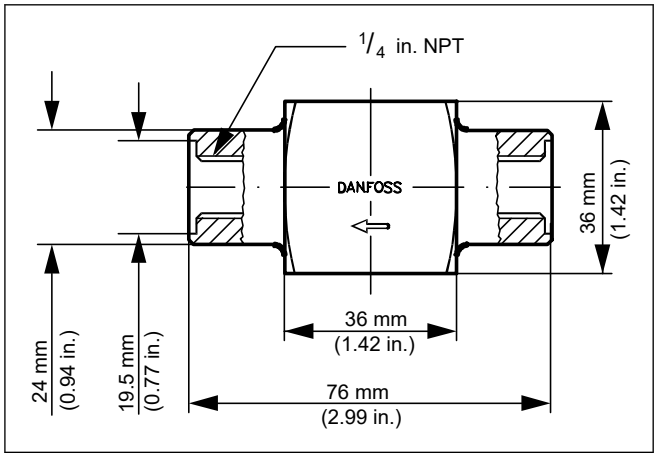

Weight: 0.35 kg. (0.8 lb.)

Table 14: Internal pipe thread

DN	Standard	Material	Code no.
6	ANSI/ASME B1.20.1	DIN 9SMnPb 28, W no. 1.0718	027F1159

Figure 18: Internal pipe thread

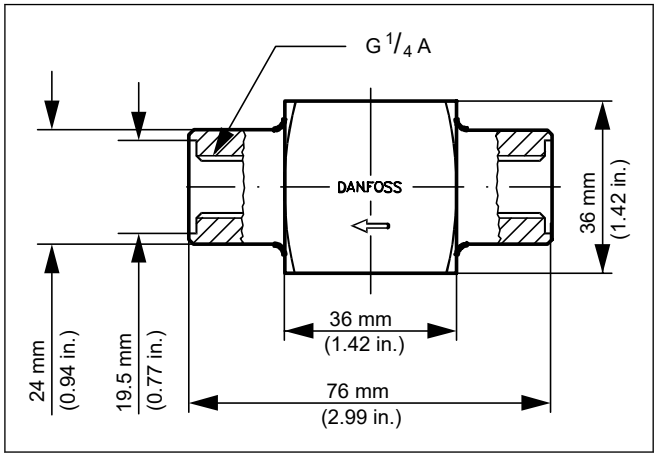

Weight: 0.35 kg. (0.8 lb.)

Table 15: Internal pipe thread

DN	Standard	Material	Code no.
6	ISO 228-1	DIN 9SMnPb 28, W no. 1.0718	027F1160

Figure 19: 3/8 in. butt weld

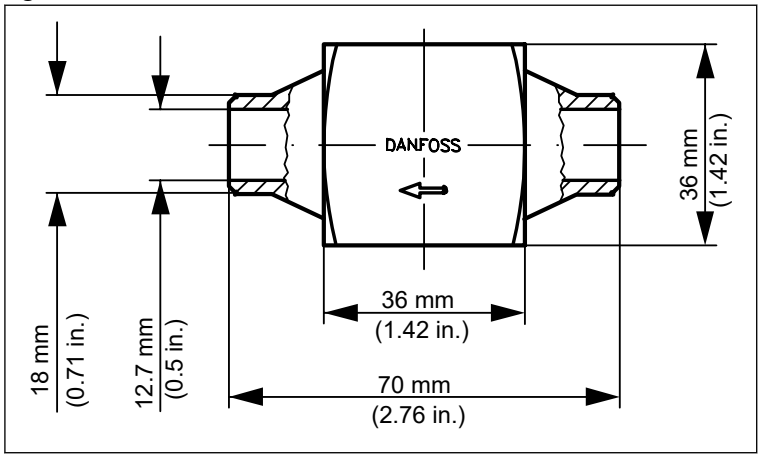

Weight: 0.33 kg. (0.7 lb.)

Table 16: 3/8 in. butt weld

DN	Standard	Material	Code no.
10	ASME B 36.10M, SCHEDULE 80	DIN. CK 15, W no. 1.1141	027F1047

Figure 20: ½ in. butt weld

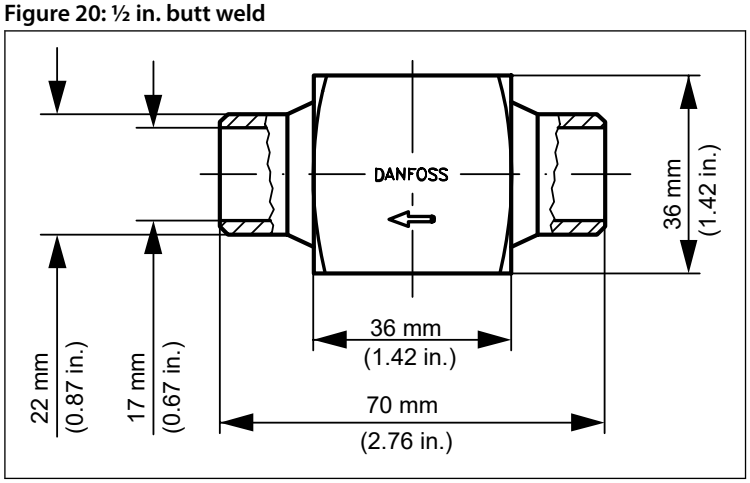

Weight: 0.34 kg. (0.7 lb.)

Table 17: ½ in. butt weld

DN	Standard	Material	Code no.
15	ASME B 36.10M, SCHEDULE 80	DIN. CK 15, W no. 1.1141	027F1090

Figure 21: ½ in. socket weld

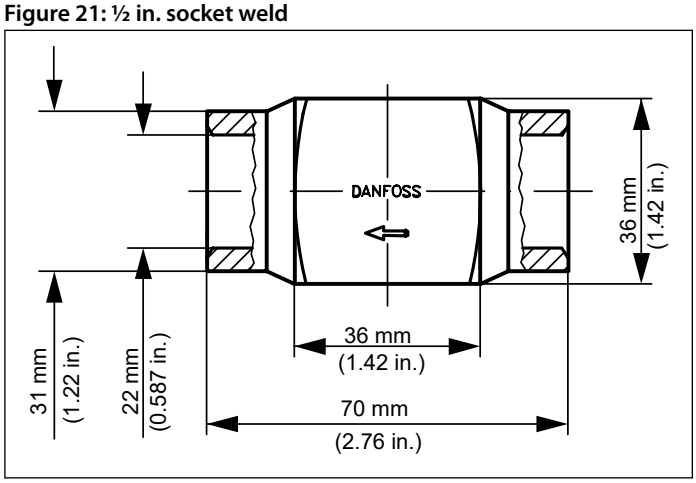

Weight: 0.40 kg. (0.9 lb.)

Table 18: ½ in. socket weld

DN	Standard	Material	Code no.
15	ASME B 16.11	DIN. CK 15, W no. 1.1141	027F1091

Ordering

Ordering for CVPP and CVC

Figure 22: Ordering for CVPP and CVC

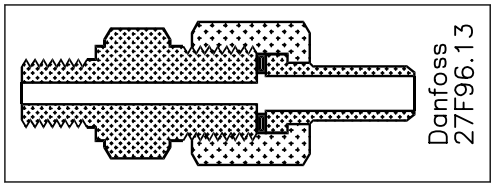

Table 19: Ordering for CVPP

Description	Code no.
∅ 6.5 mm / ∅ 10 mm (∅ 0.26 in. / ∅ 0.39 in.) weld / solder	027B2035

Figure 23: Connector

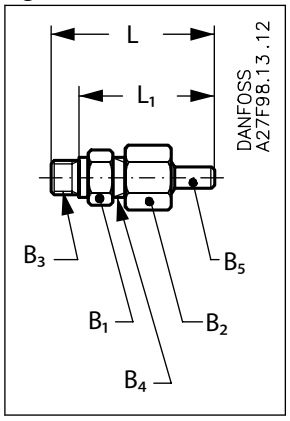

Table 20: Dimensions

	L	L1	B1	B2	B3	B4	B5
mm	66	54	AF 19	AF 22	G 1/4 A	G 3/8 A	∅6.5 / ∅10
in.	2.6	2.13					∅0.26/ ∅0.39

Certificates, declarations and approvals

The list contains all certificates, declarations, and approvals for this product type. Individual code number may have some or all of these approvals, and certain local approvals may not appear on the list.

Some approvals may change over time. You can check the most current status at danfoss.com or contact your local Danfoss representative if you have any questions.

Table 21: Certificates, declarations and approvals

File name	Document type	Document topic	Approval Authority
RU Д-DK.БЛ08.B.00191_18	EAC Declaration	Machinery & Equipment	EAC
MD 033F0691.AE	Manufacturers Declaration	RoHS	Danfoss
MD 033F0686.AH	Manufacturers Declaration	PED	Danfoss
CRN.0C18990.5123467890YTN	Pressure - Safety Certificate	CRN	TSSA
19.10325.266	Marine - Safety Certificate		RMRS
SA7200	Mechanical - Safety Certificate		UL
RU Д-DK.БЛ08.B.03639	EAC Declaration	Machinery & Equipment	EAC
RU Д-DK.БЛ08.B.00189_18	EAC Declaration	EMC	EAC
033F0474.AC	Manufacturers Declaration	ATEX	Danfoss
033F0686.AG	Manufacturers Declaration	PED	Danfoss
033F0453.AD	Manufacturers Declaration	ATEX	Danfoss

ENGINEERING
TOMORROW

Online support

Danfoss offers a wide range of support along with our products, including digital product information, software, mobile apps, and expert guidance. See the possibilities below.

The Danfoss Product Store

The Danfoss Product Store is your one-stop shop for everything product related—no matter where you are in the world or what area of the cooling industry you work in. Get quick access to essential information like product specs, code numbers, technical documentation, certifications, accessories, and more.
Start browsing at store.danfoss.com.

Find technical documentation

Find the technical documentation you need to get your project up and running. Get direct access to our official collection of data sheets, certificates and declarations, manuals and guides, 3D models and drawings, case stories, brochures, and much more.

Start searching now at www.danfoss.com/en/service-and-support/documentation.

Danfoss Learning

Danfoss Learning is a free online learning platform. It features courses and materials specifically designed to help engineers, installers, service technicians, and wholesalers better understand the products, applications, industry topics, and trends that will help you do your job better.

Create your Danfoss Learning account for free at www.danfoss.com/en/service-and-support/learning.

Get local information and support

Local Danfoss websites are the main sources for help and information about our company and products. Find product availability, get the latest regional news, or connect with a nearby expert—all in your own language.

Find your local Danfoss website here: www.danfoss.com/en/choose-region.

Spare Parts

Get access to the Danfoss spare parts and service kit catalog right from your smartphone. The app contains a wide range of components for air conditioning and refrigeration applications, such as valves, strainers, pressure switches, and sensors.

Download the Spare Parts app for free at www.danfoss.com/en/service-and-support/downloads.

Coolselector®2 - find the best components for you HVAC/R system

Coolselector®2 makes it easy for engineers, consultants, and designers to find and order the best components for refrigeration and air conditioning systems. Run calculations based on your operating conditions and then choose the best setup for your system design.

Download Coolselector®2 for free at coolselector.danfoss.com.

Danfoss can accept no responsibility for possible errors in catalogues, brochures and other printed material. Danfoss reserves the right to alter its products without notice. This also applies to products already on order provided that such alterations can be made without subsequential changes being necessary in specifications already agreed. All trademarks in this material are property of the respective companies. Danfoss and the Danfoss logotype are trademarks of Danfoss A/S. All rights reserved.