ENGINEERING
TOMORROW

Service Manual

Open Circuit Axial Piston Pumps
Series 45 Frame K and L

Revision history

Table of revisions

Date	Changed	Rev
April 2021	Changed document number from 'AX00000040' and '520L0532' to 'AX152886485004' and corrected electric control drawing	0504
August 2016	Updated tables and Adjustments chapter	0401
April 2016	minor deits - Engineering Tomorrow	0301
October 2014	updates for DITA CMS	BB
August 2014	Danfoss layout	BA

Contents

Introduction

Using this manual....5
Safety precautions....5
Unintended machine movement....5
Flammable cleaning solvents....5
Fluid under pressure....5
Personal safety....5
Symbols used in Danfoss literature....6
General description....6
The system circuit....7

Technical specifications

General specifications....9
Type of mounting....9
Auxiliary mounting pad options....9
Control options....9
Port options....9
Direction of rotation....9
Installation position....9
Technical specifications....9
Hydraulic parameters....10
Inlet pressure....10
Pressure compensator valve setting....10
Case pressure....10
Hydraulic fluid....10
Temperature range (1)....10
Fluid viscosity....10
Filtration....10

Features

Displacement limiter....11
Auxiliary mounting pads....11
Input shafts....11
Control options....11
Operation....11
Electronic Controls....14

Pressure measurement

Required tools....15
Port locations and gauge installation....15

Initial start-up procedures

General....16
Start-up procedure....16

Fluid and filter maintenance

Recommendations....17

Troubleshooting

Excessive noise and/or vibration....18
Actuator response is sluggish....18
System operating hot....18
Low pump output flow....19
Pressure or flow instability....19
System pressure not reaching PC setting....20
High inlet vacuum....20

Adjustments

PC control....21
LS control....22
Displacement limiter....23

Minor repair

Contents

Shaft seal replacement....25
Auxiliary pads....25
LS and PC Controls....27
Electric Controls....29
Servo Control Orifice....31
Plug and fitting sizes and torques....31

Introduction

Using this manual

This manual includes information for the normal operation, maintenance, and service of the Series 45 frame K and L open circuit pumps. The manual includes a description of the units and their individual components, troubleshooting information, adjustment instructions and minor repair procedures. Unit warranty obligations should not be affected if maintenance, adjustment and minor repairs are performed according to the procedures described in this manual.

Many service and adjustment activities can be performed without removing the unit from the vehicle or machine. However, adequate access to the unit must be available, and the unit must be thoroughly cleaned before beginning maintenance, adjustment, or repair activities. Since dirt and contamination are the greatest enemies of any type of hydraulic equipment, follow cleanliness requirements strictly. This is especially important when changing the system filter and when removing hoses or plumbing.

A worldwide network of Danfoss Authorized Service Centers (ASCs) is available should major repairs be needed. Contact any Danfoss ASC for details. A list of all ASCs can be found in bulletin BLN-2-40527, or in brochure SAW (Ident. No. 698266), or you can locate your nearest ASC using the distributor locator at *http://www.powersolutions.danfoss.com*

Safety precautions

Always consider safety precautions before beginning a service procedure. Protect yourself and others from injury. Take the following general precautions whenever servicing a hydraulic system.

Unintended machine movement

Warning

Unintended movement of the machine or mechanism may cause injury to the technician or bystanders. To protect against unintended movement, secure the machine or disable / disconnect the mechanism while servicing.

Flammable cleaning solvents

Warning

Some cleaning solvents are flammable. To avoid possible fire, do not use cleaning solvents in an area where a source of ignition may be present.

Fluid under pressure

Warning

Escaping hydraulic fluid under pressure can have sufficient force to penetrate your skin causing serious injury and/or infection. This fluid may also be hot enough to cause burns. Use caution when dealing with hydraulic fluid under pressure. Relieve pressure in the system before removing hoses, fittings, gauges, or components. Never use your hand or any other body part to check for leaks in a pressurized line. Seek medical attention immediately if you are cut by hydraulic fluid.

Personal safety

Warning

Protect yourself from injury. Use proper safety equipment, including safety glasses, at all times.

Introduction

Symbols used in Danfoss literature

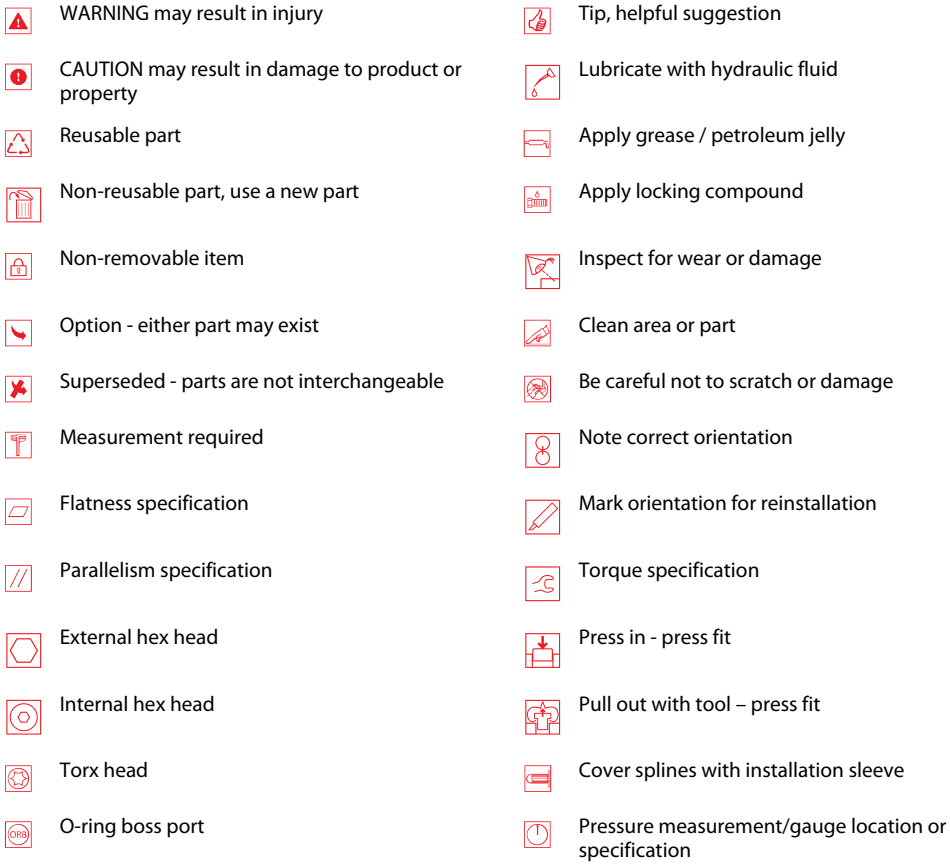

The symbols above appear in the illustrations and text of this manual. They are intended to communicate helpful information at the point where it is most useful to the reader. In most instances, the appearance of the symbol itself denotes its meaning. The legend above defines each symbol and explains its purpose.

General description

Danfoss Series 45 K and L frame open circuit piston pumps convert input torque into hydraulic power. Rotational force is transmitted through the input shaft to the cylinder block. The input shaft is supported by tapered roller bearings at the front and rear of the pump and is splined into the cylinder block . A lip-seal at the front end of the pump prevents leakage where the shaft exits the pump housing. The spinning cylinder block contains nine reciprocating pistons. Each piston has a brass slipper connected at one end by a ball joint. The slippers are held to the swashplate by the spring retainer and block spring. The block spring also holds the cylinder block to the valve plate. The reciprocating movement of the pistons occurs as the slippers slide against the inclined swashplate during rotation. Via the valve plate, one half of the cylinder block is connected to pump inlet and the other half to pump outlet. As each piston cycles in and out of its bore, fluid is drawn from the inlet and displaced to the outlet thereby imparting power into the system circuit. A small amount of fluid is allowed to leak from the cylinder block / valve plate and slipper / swashplate interfaces for lubrication and cooling. Case drain ports are provided to return this fluid to the reservoir.

The volume of fluid displaced into the system circuit is controlled by the angle of the swashplate. The swashplate is forced into an inclined position (into stroke) by the bias spring. The servo piston opposes the action of the bias spring forcing the swashplate out of stroke when hydraulic pressure in the control circuit rises above the spring force.

Introduction

The pump control, by varying the pressure at the servo piston, controls the displacement of fluid in the system circuit. Controls designed for Pressure Compensation (PC) or Load Sensing (LS) are available. For a detailed description of control operation, refer to *Control options, operation*.

Pump and control sectional view

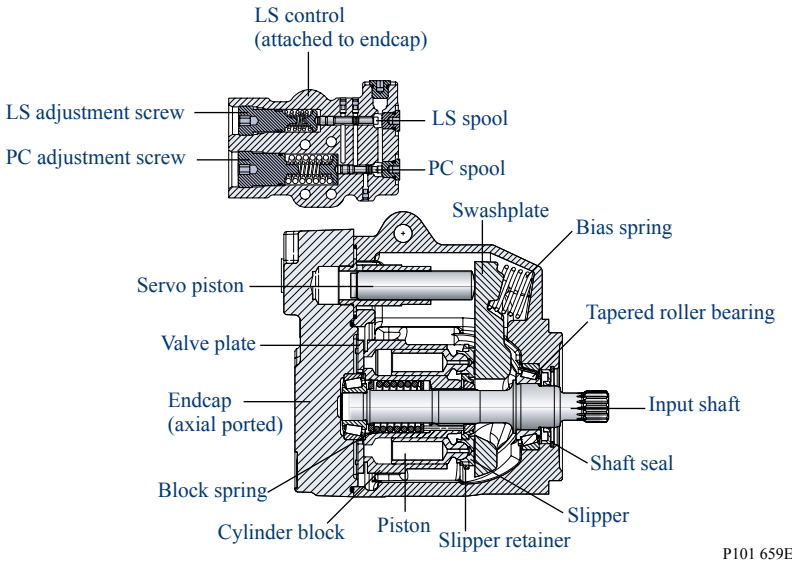

The system circuit

The pump receives fluid directly from the reservoir through the inlet line. A screen placed in the inlet protects the pump from large contaminants. The output of the pump is directed to a PVG-32 multi-section load sensing directional control valve which directs fluid to the actuators in the system. Fluid returning from the system is cooled by a heat exchanger and cleaned by a filter before returning to the reservoir.

The speed of the actuators in the system depends on the volume of fluid being provided by the pump. The operating pressure varies depending on actuator load, but is limited to an adjustable maximum setting by the PC section of the pump control and by a system relief valve integrated into the side module of the PVG valve.

The position of the PVG valve sets the demand for flow in the system and communicates this to the pump control by means of a hydraulic signal (load sense signal). The pump will provide as much flow to the system as it demands while limiting the maximum pressure. Therefore flow and pressure in the system are compensated to meet requirements.

Introduction

Pictorial circuit diagram

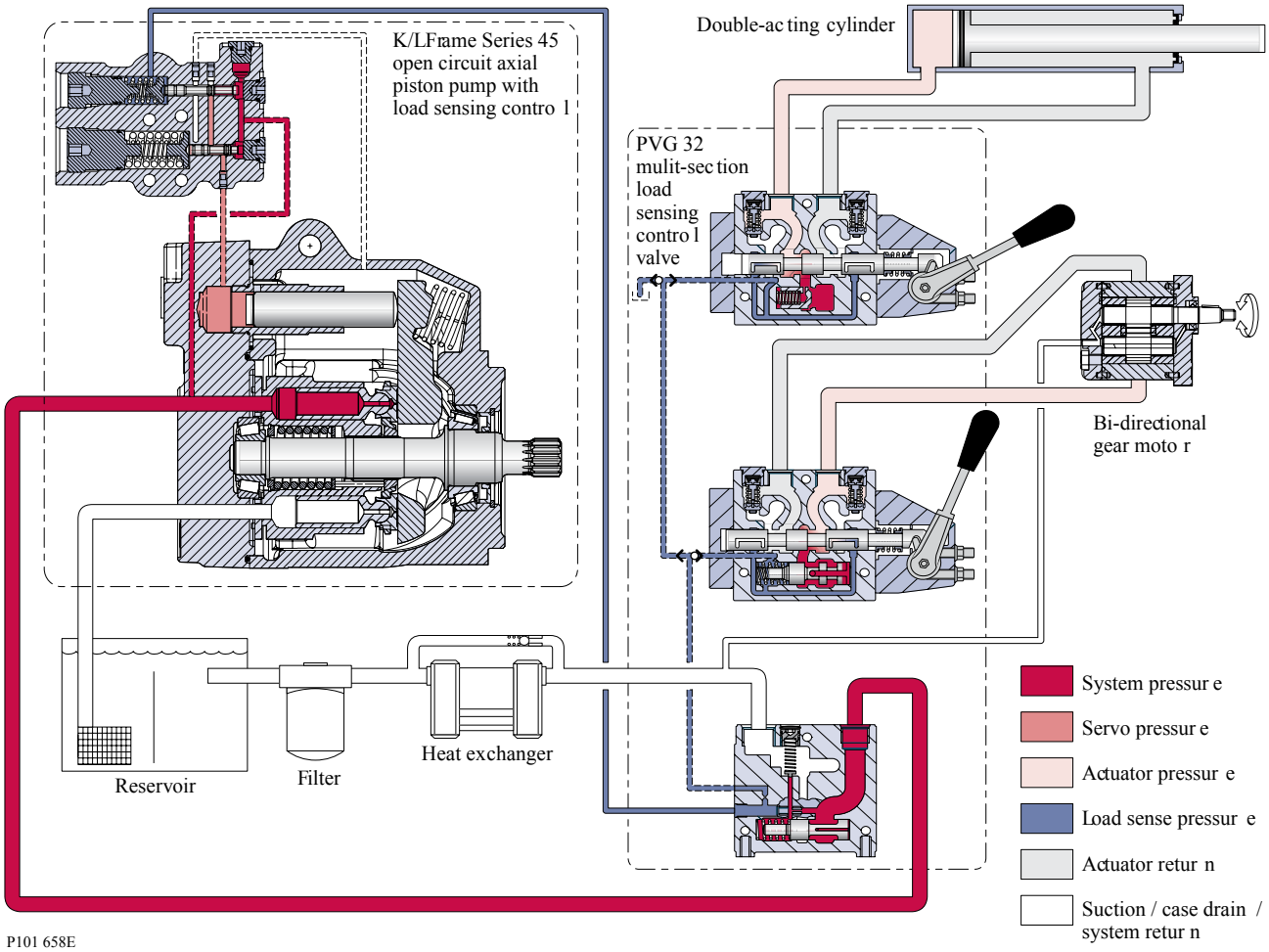

P101 658E

Full available flow is a function of pump displacement, operating speed, and efficiency. Refer to *Series 45 Axial Piston Open Circuit Pumps Technical Information,* ***BLN-10128*** for details.

Technical specifications

General specifications

Type of mounting

SAE-B mounting flange.

Auxiliary mounting pad options

SAE-A, SAE-B, or SAE-B-B

Control options

PC: Pressure Compensator

LS: Load Sensing (with PC)

Port options

Inlet and system ports:

- SAE flanged ports, code 61 or O-ring boss ports.
- Axial (end) ports or radial (side) ports.

All other ports:

- SAE straight thread O-ring boss.

Direction of rotation

Clockwise or counterclockwise.

Installation position

Installation position is discretionary. To satisfy inlet pressure conditions, it is recommended that the pump always be located below the lowest level of hydraulic fluid in the reservoir. The housing must always be filled with hydraulic fluid.

Technical specifications

Ratings

Specification		Unit	Frame L		Frame K	
Displacement		cm^3 [in^3]	25 [1.53]	30 [183]	38 [2.32]	45 [2.75]
Input speed	minimum	min^{-1} (rpm)	500	500	500	500
	continuous		3200	3200	2650	2650
	maximum		3600	3600	2800	2800
Working pressure - maximum (peak)		bar [psi]	350 [5075]	300 [4350]	350 [5075]	300 [4350]
Continuous working pressure						
Flow at rated speed		l/min [gal/min]	76.2 [20.3]	90.0 [24.0]	108.3 [20.9]	126.0 [33.6]
Theoretical input torque at maximum displacement		N•m/bar [lbf•in/ 1000 psi]	0.395 [243]	0.477 [291]	0.605 [369]	0.716 [437]
Mass moment of inertia of internal rotating components		$kg•m^2$[$lbm•ft^2$]	0.0016 [0.037]	0.0015 [0.035]	0.0017 [0.040]	0.0020 [0.047]
Weight	Axial ports	kg [lbm]	19 [42]	19 [42]	19 [42]	19 [42]
	Radial ports		24 [53]	24 [53]	24 [53]	24 [53]

Technical specifications

Hydraulic parameters

Inlet pressure

Minimum pressure, continuous = 0.8 bar absolute [23.2 in Hg] (at reduced maximum pump speed)

Minimum pressure, cold start = 0.5 bar absolute [14.8 in Hg]

Pressure compensator valve setting

Minimum: 100 bar [1450 psi]

Maximum: 260 bar [3770 psi]

Case pressure

Maximum continuous: 0.5 bar [7 psi] Above inlet

Intermittent: 2 bar [29 psi] Cold start

Hydraulic fluid

Refer to Danfoss publication *Fluids and Filtration BLN-9887 or BC152886484524*. For information on biodegradable fluids refer to *Biodegradable Hydraulic Fluids* **520L0465**. See *Fluid and filter maintenance* for recommended fluid and filter change intervals.

Temperature range (1)

Intermittent (cold start): - 40° C [- 40° F]

Continuous: 82° C [180° F]

Maximum: (2) 104° C [220° F]

(1) Hydraulic fluid viscosity must be maintained within the prescribed limits.
(2) As measured at the hottest point in the system, e.g. drain line.

Fluid viscosity

Viscosity limits

Rating		mm2/s (cSt) [SUS]
v continuous	minimum	9 [58]
	maximum	110 [500]
v intermittent	minimum	6.4 [47]
	maximum (cold start)	1000 [4700]

Filtration

Required cleanliness level: ISO 4406 Class 18/13 or better. Refer to Danfoss publications *Fluids and Filtration BLN-9887 or* **BC152886484524** and *Design Guidelines for Selecting and Maintaining the Required Hydraulic Fluid Cleanliness* **520L0465**. See *Fluid and filter maintenance* for recommended fluid and filter change intervals.

Features

Displacement limiter

Frame K and L Series 45 pumps are available with an optional maximum displacement limiter. If installed, this longer servo piston will limit the maximum displacement to 92%. This displacement limiter is not adjustable.

Displacement limiter

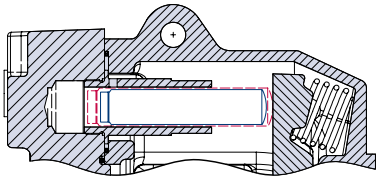

P101 660

Auxiliary mounting pads

Auxiliary mounting pads are available for all radial ported Series 45 pumps. These pads are typically used for mounting auxiliary hydraulic pumps.

Since the auxiliary pad operates under case pressure, an O-ring must be used to seal the auxiliary pump mounting flange to the pad. The drive coupling is lubricated by oil from the main pump case. For details refer to *Series 45 Axial Piston Open Circuit Pumps Technical Information BLN-10128*.

Auxiliary mounting pads

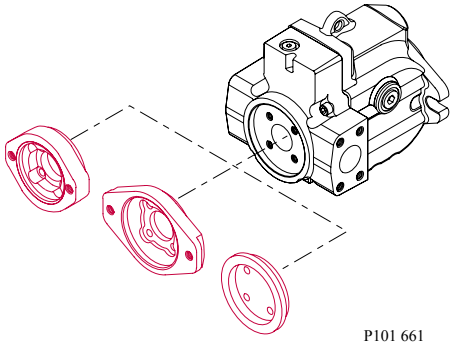

P101 661

Input shafts

Series 45 K and L frame pumps are available with a variety of splined, straight keyed, and tapered end shafts. For information on shafts refer to *Series 45 Axial Piston Open Circuit Pumps Technical Information BLN-10128*.

Control options

The Series 45 Frames K and L have two possible control options, a Load Sensing (LS) control with Pressure Compensator (PC) or a PC only control.

Operation

General

The bias spring (1) acts at all times to push the swashplate (2) to maximum angle causing the pump to stroke. The servo piston (3) acts against the bias spring to reduce the swashplate angle causing the pump

Features

to de-stroke. Swashplate angle determines pump outlet flow. The pump control, depending on conditions in the system circuit, sets swashplate angle by metering system pressure to the servo piston.

Cross-section pump: Bias spring and servo piston set swashplate position

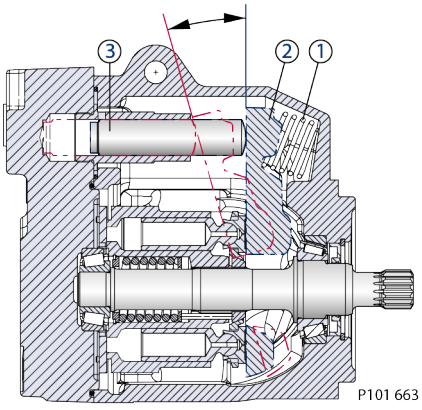

PC control

The PC control is designed to maintain a constant pressure in the hydraulic circuit as flow varies. The PC control modulates pump flow accordingly to maintain system pressure at the PC setting as defined by the PC adjustment screw (4) and spring (5).

When system pressure, acting on the non-spring end of the PC spool (6), overcomes the force of the PC spring, the spool shifts porting system pressure to the servo piston and the swashplate angle decreases. When system pressure drops below the PC setting, the PC spring shifts the spool in the opposite direction connecting the servo piston to pump case and the swashplate angle increases. The swashplate is maintained at whatever angle is required to keep system pressure at the PC setting.

Cross-section PC control: PC spool shifts to port system pressure to servo piston

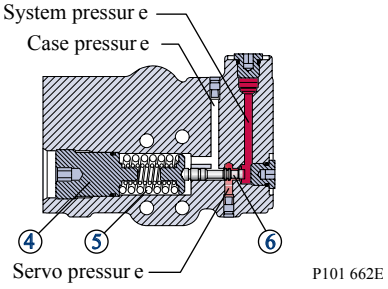

LS control

The LS control is designed to match pump flow with system demand. The flow demand of the system is sensed by the LS control as a pressure drop across the External Control Valve (ECV). As the ECV opens and closes, the pressure delta across the valve changes. When opening, the delta decreases. When closing, the delta increases. The LS control then increases or decreases pump flow to the system until the pressure delta becomes equal to the LS setting as defined by the LS adjustment screw (7) and spring (8).

Features

Typical load-sensing control valve:Pressure drop across external control valve defines system demand

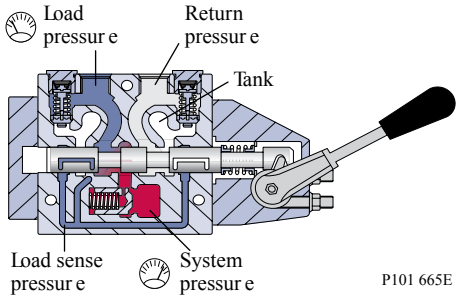

Cross-section LS control: LS spool shifts to port system pressure to servo piston

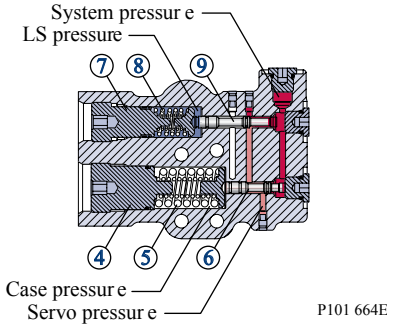

The LS control consists of two spool valves that connect the servo piston either to pump case or system pressure. The PC spool (6) controls the pressure-compensating function of the control as described in the previous section. The LS spool (9) controls the load-sensing function. The PC spool has priority over the LS spool.

Via internal porting, system pressure (upstream of ECV) is applied to the non-spring end of the LS spool and via hydraulic line connected at port X, LS pressure (downstream of ECV) is applied to the spring end. This arrangement allows the LS spool to act on the delta between system pressure and LS pressure. The LS spring sets the threshold of operation (LS setting).

Because the swashplate is biased to maximum angle, the pump attempts to deliver full flow to the hydraulic system. When the flow being delivered exceeds demand, the pressure delta across the ECV is great enough to overcome spring force and shift the LS spool porting system pressure to the servo piston. The pump de-strokes reducing flow until the delta across the ECV becomes equal to the LS setting. When flow being delivered is less than demand, the delta across the ECV drops below the LS setting and the LS spring shifts the spool connecting the servo piston to pump case. The pump strokes increasing flow until the delta across the ECV becomes equal to the LS setting.

When the external control valve is placed in neutral, it connects the LS signal line to drain. With no LS pressure acting on the non-spring end of the LS spool, the pump adjusts stroke to whatever position necessary to maintain system pressure at the LS setting. The pump is now in standby mode.

Because of the series arrangement of the LS and PC spools, the PC spool will override the LS spool. If at any time system pressure reaches the PC setting, the PC spool will shift blocking the passage that connects the LS spool with the servo piston and porting system pressure to the servo piston causing the pump to de-stroke.

Features

Electronic Controls

L and K Controls PLUS+1 Compliance

All Series 45 Electric controls have met and passed the Danfoss PLUS+1® compliance standard testing and, as such, this Series 45 control is PLUS+1® compliant. PLUS+1® compliance blocks are available on the Danfoss website, within the PLUS+1 Guide section.

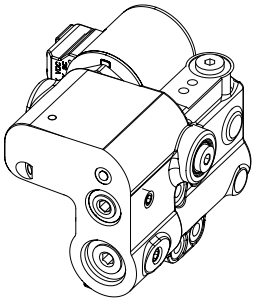

Electric Proportional Control Principle

The Electric Proportional Control consists of a proportional solenoid integrated into a Remote Pressure Compensated control. This control allows the pump to be operated at any pressure limit between the Load Sense and Pressure Compensation settings by varying the current sent to the solenoid.

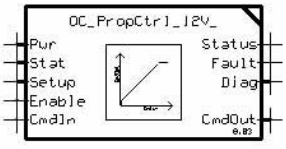

Electric On-Off Control Principle

The Electric On/Off Control consists of an On/Off solenoid integrated into a Remote Pressure Compensated control. This control allows the pump to be operated at either the Load Sense pressure setting when On, or the Pressure Compensation pressure setting when Off.

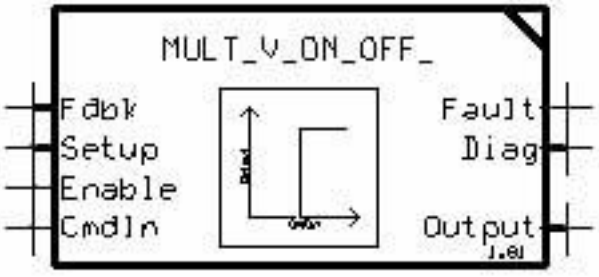

Pressure measurement

Required tools

The service procedures described in this manual can be performed using common mechanic's hand tools. Special tools, if required are shown. Calibrate pressure gauges frequently to ensure accuracy. Use snubbers to protect gauges.

Port locations and gauge installation

Gauge port locations are shown below. Recommended pressure gauges and fittings are detailed in the table.

Gauge and port information

Port	Purpose	Range of gauge	Fitting
M2	System pressure	0-300 bar [0-5000 psi]	7/16 - 20 O-ring fitting
M4	Servo pressure	0-300 bar [0-5000 psi]	7/16 - 20 O-ring fitting
L1, L2	Case drain port	0-10 bar [0-100 psi]	7/8 - 14 O-ring fitting
X1	LS signal	0-300 bar [0-5000 psi]	7/16 - 20 O-ring fitting (tee into LS signal line)

Gauge port locations, axial ported units

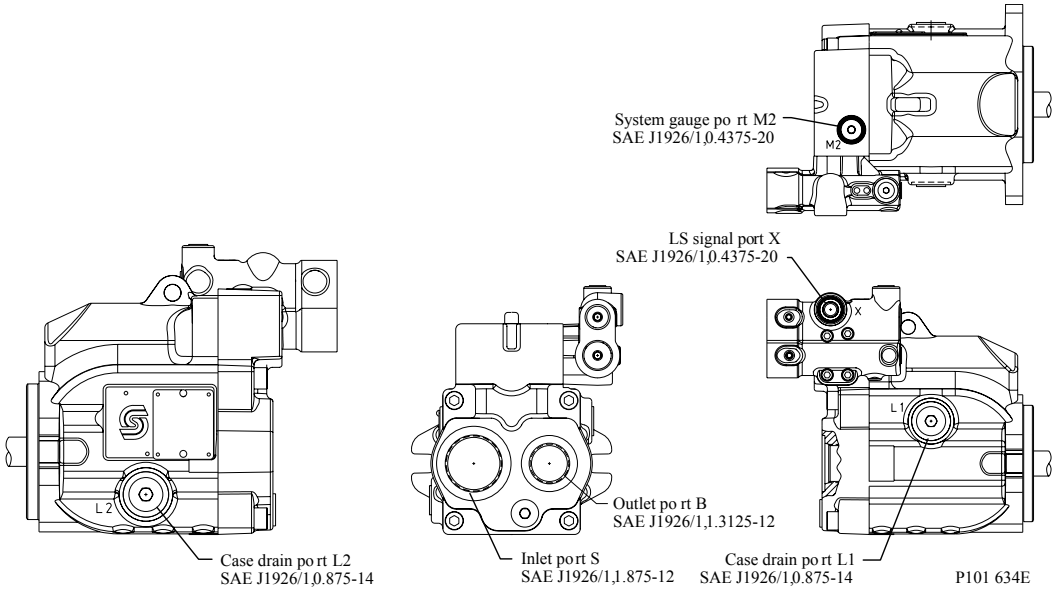

Gauge port locations, radial ported units

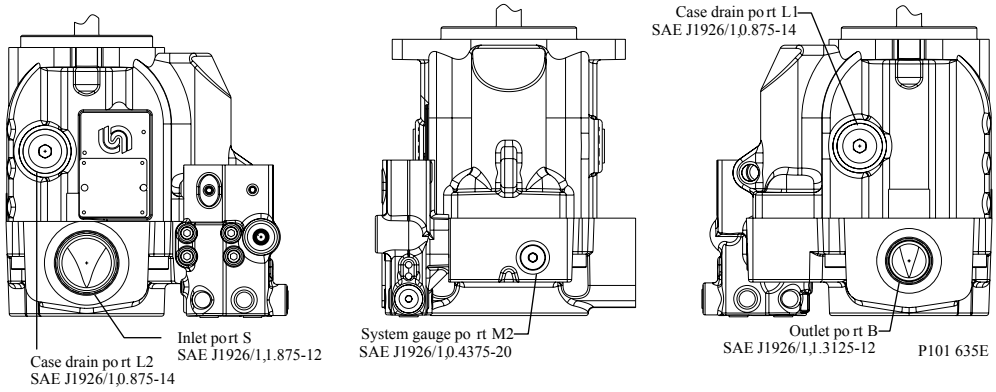

Initial start-up procedures

General

Follow this procedure when starting-up a new Series 45 installation or when restarting an installation in which the pump has been removed.

Warning

Unintended movement of the machine or mechanism may cause injury to the technician or bystanders. To protect against unintended movement, secure the machine or disable / disconnect the mechanism while servicing.

Prior to installing the pump, inspect for damage incurred during shipping. Make certain all system components (reservoir, hoses, valves, fittings, heat exchanger, etc.) are clean prior to filling with fluid.

Start-up procedure

1. Connect the pump to the prime mover. Ensure that pump shaft is properly aligned with the shaft of the prime mover.

   Caution

   Incorrect shaft alignment may result in damage to drive shaft, bearings, or seal which can cause external oil leakage.
2. Fill the reservoir with recommended hydraulic fluid. Always filter fluid through a 10 micron filter pouring into the reservoir. Never reuse hydraulic fluid.
3. Fill the main pump housing with clean hydraulic fluid. Pour filtered oil directly into the upper most case drain port.
4. Fill the inlet line leading from the pump to the reservoir. Check the inlet line for properly tightened fittings and be certain it is free of restrictions and air leaks.
5. To ensure the pump stays filled with oil, install the case drain line in the upper most case drain port.
6. Install a gauge at port M2 (or equivalent system pressure measurement port if M2 not present) to monitor system pressure during start up.

   Follow recommendations in the vehicle / machine operator's manual for prime mover start up procedures.
7. While watching the pressure gauge installed at M2 or equivalent system pressure measurement port, jog the prime mover or run at the lowest possible speed until system pressure builds to normal levels (minimum 11 bar [160psi]). Once system pressure is established, increase to full operating speed. If system pressure is not maintained, shut down the prime mover, determine cause, and take corrective action. Refer to *Troubleshooting* on page 18.
8. Operate the hydraulic system for at least fifteen minutes under light load conditions.
9. Check and adjust control settings as necessary after installation. Refer to *Adjustments* on page 21.
10. Shut down the prime mover and remove the pressure gauge. Replace plug at port M2 or equivalent.
11. Check the fluid level in the reservoir; add clean filtered fluid if necessary.

The pump is now ready for operation.

Fluid and filter maintenance

Recommendations

To ensure optimum life of Series 45 products, perform regular maintenance of the fluid and filter. Contaminated fluid is the main cause of unit failure. Take care to maintain fluid cleanliness when servicing.

Check the reservoir daily for proper fluid level, the presence of water, and rancid fluid odor. Water in the fluid may be noted by a cloudy or milky appearance or free water in the bottom of the reservoir. Rancid odor indicates the fluid has been exposed to excessive heat. Change the fluid immediately if these conditions occur. Correct the problem immediately.

Change the fluid and filter per the vehicle / machine manufacturer's recommendations or at these intervals:

Change the fluid more frequently if it becomes contaminated with foreign matter (dirt, water, grease, etc.) or if the fluid is subjected to temperature levels greater that the recommended maximum.

Dispose of used hydraulic fluid properly. Never reuse hydraulic fluid.

Change filters whenever the fluid is changed or when the filter indicator shows that it is necessary to change the filter. Replace all fluid lost during filter change.

Fluid and filter change interval

Reservoir type	Maximum change interval
Sealed	2000 hours
Breather	500 hours

Troubleshooting

Excessive noise and/or vibration

Item	Description	Action
Check fluid level in reservoir.	Insufficient hydraulic fluid causes cavitation.	Fill the reservoir to proper level.
Check for air in system.	Air in system causes noisy, erratic control.	Purge air and tighten fittings. Check inlet for leaks.
Check pump inlet pressure/vacuum.	Improper inlet conditions cause erratic behavior and low output flow.	Correct pump inlet pressure/vacuum conditions. Refer to the *Hydraulic Parameters* topic.
Inspect shaft couplings.	A loose or incorrect shaft coupling causes excessive noise and/or vibration.	Repair or replace coupling and ensure that correct coupling is used.
Check shaft alignment.	Misaligned shafts create excessive noise and/or vibration.	Correct shaft misalignment.
Hydraulic fluid viscosity above acceptable limits.	Hydraulic fluid viscosity above acceptable limits or low fluid temperature will not allow the pump to fill or control to operate properly.	Allow system to warm up before operating, or use fluid with the appropriate viscosity grade for expected operating temperatures. See *Hydraulic Fluids and Lubricants Technical Information Manual*, **BC152886484524**.

Actuator response is sluggish

Item	Description	Action
Check external system relief valve setting.	Low external relief valve setting slows down system.	Adjust external relief valve setting following manufacturer's recommendations. External relief setting must be above PC setting to operate properly.
Check PC and LS control setting.	Low PC setting prevents the pump from achieving full stroke. Low LS setting limits output flow.	Adjust PC and LS setting. Refer to the *Adjustments* chapter.
Check LS control signal pressures.	Incorrect LS signal will not allow pump to operate correctly.	Inspect system to ensure that proper LS signal transmit to pump.
Internal system leaks.	Worn internal parts don't allow the pump to operate properly.	Refer to Authorized Service Center for required repair.
Hydraulic fluid viscosity above acceptable limits.	Hydraulic fluid viscosity above acceptable limits or low fluid temperature will not allow the pump to fill or control to operate properly.	Allow system to warm up before operation or sue fluid with the appropriate viscosity grade for expected operating temperatures. See *Hydraulic Fluids and Lubricants Technical Information Manual*, **BC152886484524**.
Check external system valving.	Malfunctioning valving may not allow system to respond properly.	Repair or replace system valving as required.
Check pump case pressure.	High case pressure causes the system to be sluggish.	Correct case drain line restrictions.
Check pump inlet pressure/vacuum.	High inlet vacuum causes low output flow.	Correct inlet pressure conditions.

System operating hot

Item	Description	Action
Check fluid level in reservoir.	Insufficient volume of hydraulic fluid will not meet cooling demands of system.	Fill reservoir to proper level. Verify proper size of reservoir.
Hydraulic fluid viscosity above acceptable limits.	Fluid viscosity above acceptable limits or low fluid temperature will not allow the pump to fill or control to operate properly.	Allow system to warm up before operation or use fluid with the appropriate viscosity grade for expected operating temperatures. See *Hydraulic fluids, Series 45 Technical Information Manual* , ***BC152886483703***.

Troubleshooting

Item	Description	Action
Check external system relief valve setting.	Fluid passing through relief valve adds heat to system.	Adjust external system relief valve setting following manufacturer's recommendations. External relief valve setting must be above PC setting for proper operation.
Check PC and LS control setting.	Low PC setting will prevent the pump from achieving full stroke. Low LS setting will limit output flow.	Adjust PC and LS setting. Refer to *Adjustments* on page 21.
Check pump inlet pressure/vacuum.	High inlet vacuum adds heat to system.	Correct inlet pressure/vacuum conditions.
Check input speed.	Low input speeds decrease flow.	Adjust input speed.
Check pump rotation.	Incorrect rotational configuration will cause low flow.	Use pump with appropriate rotational configuration.

Low pump output flow

Item	Description	Action
Check fluid level in reservoir.	Insufficient hydraulic fluid will limit output flow and cause internal damage to pump.	Fill the reservoir to proper level.
Hydraulic fluid viscosity above acceptable limits.	Fluid viscosity above acceptable limits or low fluid temperature will not allow the pump to fill or control to operate properly.	Allow system to warm up before operating, or use fluid with the appropriate viscosity grade for expected operating temperatures. See *Hydraulic Fluids and Lubricants Technical Information Manual*, **BC152886484524**.
Check external system relief valve setting.	Eternal relief valve set below PC setting causes low output flow.	Adjust external relief valve following manufacturer's recommendation. External relief valve setting must be above PC setting to operate properly.
Check PC and LS control setting.	Low PC setting prevents the pump from achieving full stroke.	Adjust PC and LS setting. Refer to the *Adjustments* chapter.
Check pump inlet pressure/vacuum.	High inlet vacuum causes low output flow.	Correct inlet pressure conditions.
Check input speed.	Low input speeds decrease flow.	Adjust input speed.
Check pump rotation.	Incorrect rotational configuration causes low flow.	Use pump with appropriate rotational configuration.

Pressure or flow instability

Item	Description	Action
Check for air in system.	Air in system causes erratic operation.	Activate PC allowing system to bleed air. Check inlet line for leaks and eliminate source of air ingression.
Check control spools.	Sticking control spools cause erratic operation.	Inspect spools for free movement in bore. Clean or replace.
Check LS setting.	Low LS setting may cause instability.	Adjust LS setting to proper level. See the *Adjustments* chapter.
Check LS signal line.	Blocked LS signal line interferes with proper LS operation.	Remove blockage.
Check external relief valve and PC setting.	Insufficient pressure differential between PC setting and external relief valve.	Adjust external relief valve or PC control settings to appropriate level. Relief valve setting must be above PC setting to operate properly.
Check external relief valve.	Chattering external relief valve may cause unstable feedback to pump control.	Adjust or replace relief valve.

Troubleshooting

System pressure not reaching PC setting

Item	Description	Action
Check PC control setting.	System pressure will not rise above PC setting.	Adjust PC to appropriate setting. Refer to the *Adjustments* chapter.
Check external relief valve.	External relief valve setting below PC setting presents pressure compensation.	Adjust external relief valve according to manufacturer's recommendations. External relief valve must be set above PC setting to operate properly.
Inspect PC control spring.	Broken, damaged, or missing spring will cause erratic operation.	Replace the spring as required.
Inspect PC spool for wear.	Wear of PC spool causes internal leakage in the control.	Replace the spool as required.
Inspect PC spool for proper orientation.	Improper orientation results in poor operation.	Correct orientation of spool.
Check PC control for contamination.	Contamination may interfere with movement of the PC spool.	Clean PC control components, take appropriate action to eliminate contamination.

High inlet vacuum

Caution

High inlet vacuum causes cavitation which can damage internal pump components.

Item	Description	Action
Check fluid temperature.	Low temperature increases viscosity. High fluid viscosity causes high inlet vacuum.	Allow system to warm up before operating.
Inspect inlet screen.	Blocked or restricted inlet screen causes high inlet vacuum.	Clean screen/remove blockage.
Check inlet piping.	Too many fittings, bends, or long piping causes high inlet vacuum.	Eliminate fittings to make path more direct.
Hydraulic fluid viscosity above acceptable limits.	High fluid viscosity causes high inlet vacuum.	Select fluid with appropriate viscosity for expected operating temperature. See *Hydraulic Fluids and Lubricants Technical Information Manual*, **BC152886484524**.

Adjustments

PC control

PC setting is indicated in the pump model code. Refer to the *Series 45 Open Circuit Axial Piston Pumps Technical Information Manual*, **BLN-10128**, for more information.

Before performing adjustments, read *Pressure measurement*, for recommendations.

1. Install a pressure gauge in port M2 to measure system pressure. Install a pressure gauge in case drain port L1 or L2 to measure case pressure.

   Warning

   Unintended movement of the machine or mechanism may cause injury to the technician or bystanders. To protect against unintended movement, secure the machine or disable / disconnect the mechanism while servicing.

   Caution

   Contamination can damage internal components and void the manufacturer's warranty. Take precautions to ensure system cleanliness when removing and reinstalling system lines.
2. Start the prime mover and allow fluid to reach normal operating temperature. Operate a hydraulic function to its full extension, loading the pump at maximum pressure and zero flow.
3. Loosen the PC set screw and turn the PC adjustment screw until the desired setting is indicated on the pressure gauge at port M2[1]. Clockwise rotation will increase pressure, counterclockwise rotation will decrease; approximate gain = 35 bar [507 psi] per turn.

   If the pressure does not increase, an external system relief valve may require adjustment. External system relief valve must be set above the PC setting for proper operation.
4. While holding the position of the PC adjustment screw, torque the PC set screw to 9 N•m [7 lbf•ft].
5. Stop the prime mover, remove the pressure gauges, and return the system to its normal operating configuration.

PC control adjustment: Adjustment screw, set screw, and gauge locations shown

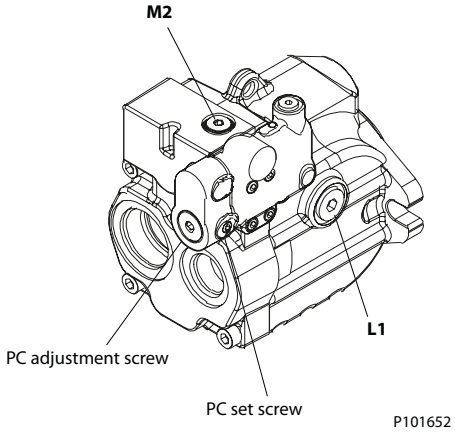

Item	Description	Gauge	Port size	Wrench size	Torque
M2	Gauge port	300 bar [5000 psi]	9/16-18	1/4 inch internal hex	51 N•m [38 lbf•ft]
			M14	4 mm internal hex	31 N•m [23 lbf•ft]

[1] PC setting is referenced to case pressure. Subtract case pressure from system pressure to compute the actual setting.

Adjustments

Item	Description	Gauge	Port size	Wrench size	Torque
L1	Case drain port	10 bar [100 psi]	7/8-14	3/8 internal hex	95 N•m [70 lbf•ft]
PC adj. screw	PC adjustment screw	-	-	6 mm internal hex	-
PC set screw	PC set screw	-	-	4 mm	9 N•m [7 lbf•ft]

LS control

The LS setting is indicated in the pump model code. Refer to the *Series 45 Open Circuit Axial Piston Pumps Technical Information Manual*, **BC152886483703**, for more information.

Before performing adjustments, read *Pressure measurement*, for recommendations.

1. Install a pressure gauge in port M2 (or equivalent system pressure measurement port if M2 not present) to measure system pressure. Install a pressure gauge in drain port L1 or L2 to measure case pressure. Tee-in a gauge to the LS / remote PC signal line (port X).

   Warning

   Escaping hydraulic fluid under pressure can have sufficient force to penetrate your skin causing serious injury and/or infection. Relieve pressure in the system before removing hoses, fittings, gauges, or components.

   Unintended movement of the machine or mechanism may cause injury to the technician or bystanders. To protect against unintended movement, secure the machine or disable / disconnect the mechanism while servicing.

   Caution

   Contamination can damage internal components and void the manufacturer's warranty. Take precautions to ensure system cleanliness when removing and reinstalling system lines.
2. Start the prime mover and allow fluid to reach normal operating temperature. Slowly operate a hydraulic function which will demand approximately half flow from the pump, but keep system pressure below the PC set point.
3. Loosen the LS set screw. While watching the pressure gauges, turn the LS adjustment screw until the desired pressure differential between the system port gauge (port M2 if available) and port X is achieved. Clockwise rotation will increase the setting, counterclockwise rotation will decrease; approximate gain = 12 bar [170 psi] per turn.
4. While holding the position of the LS adjustment screw, torque the LS set screw to 9 N•m [7 lbf•ft].
5. Operate a hydraulic function to its full extension loading the pump at maximum pressure and zero flow.
6. Loosen the PC set screw and turn the PC adjustment screw until the desired setting is indicated on the pressure gauge at port M22. Clockwise rotation will increase pressure, counterclockwise rotation will decrease; approximate gain = 35 bar [507 psi] per turn.[2]

   If the pressure does not increase, an external system relief valve may require adjustment. External system relief valve must be set above the PC setting for proper operation.
7. While holding the position of the PC adjustment screw, torque the PC set screw to 9 N•m [7 lbf•ft].

[2] PC setting is referenced to case pressure. Subtract case pressure from system pressure to compute the actual setting.

Adjustments

8. Stop the prime mover, remove the pressure gauges, and return the system to its normal operating configuration.

LS control adjustment: Adjustment screw, set screw, and gauge locations shown

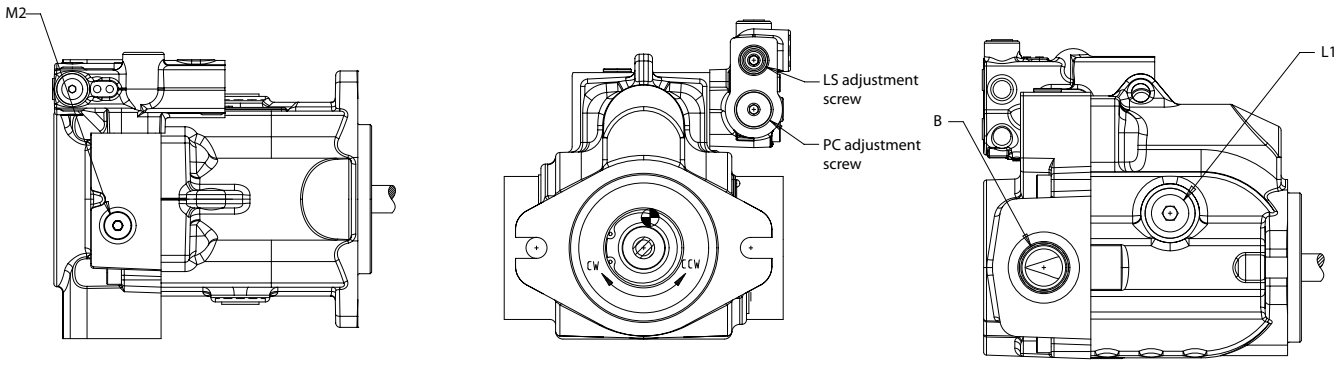

Item	Description	Gauge	Port size	Wrench size	Torque
M2[1]	Gauge port	300 bar [5000 psi]	9/16-18	1/4 inch internal hex	51 N•m [38 lbf•ft]
			M14	4 mm internal hex	31 N•m [23 lbf•ft]
L1	Case drain port	10 bar [100 psi]	7/8-14	3/8 internal hex	95 N•m [70 lbf•ft]
X	LS/remote PC signal port	-	-	-	-
LS adj. screw	LS adjustment screw	-	-	6 mm internal hex	-
LS set screw	LS set screw	-	-	4 mm	9 N•m [7 lbf•ft]
PC adj. screw	PC adjustment screw	-	-	6 mm internal hex	-
PC set screw	PC set screw	-	-	4 mm	9 N•m [7 lbf•ft]

[1] The M2 port is not available as a standard option.

Displacement limiter

L and K Frame open circuit pumps are available with an optional adjustable displacement limiter. This adjustable stop limits the pump's maximum displacement.

Cross-Section

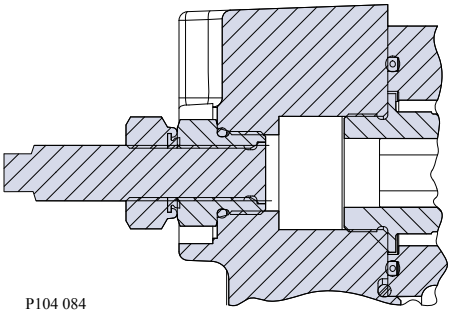

Setting range

L25C	0 to 25 cm^3 [0 to 1.53 in^3]
L30D	0 to 30 cm^3 [0 to 1.83 in^3]
K38C	0 to 38 cm^3 [0 to 2.32 in^3]
K45D	0 to 45 cm^3 [0 to 2.75 in^3]

Adjustments

Displacement per turn

L25C	1.20 cm^3/rev [0.07 in^3/rev]
L30D	1.43 cm^3/rev [0.09 in^3/rev]
K38C	1.81 cm^3/rev [0.11 in^3/rev]
K45D	2.15 cm^3/rev [0.13 in^3/rev]

Installation Dimensions

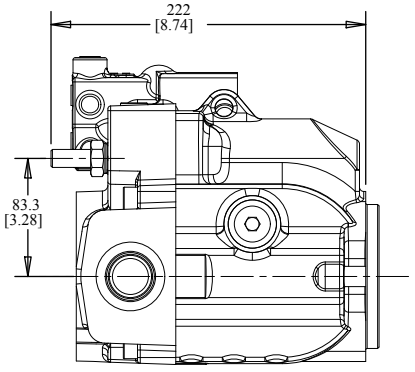

P104 065E

Minor repair

Shaft seal replacement

A lip type shaft seal is used in the Series 45 open circuit variable pumps. This seal can be replaced without major disassembly of the unit. Replacement of the shaft seal requires removal of the pump from the machine.

Shaft seal and retaining ring

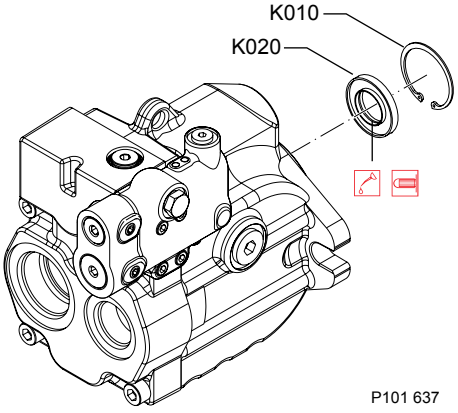

1. Using the appropriate snap-ring pliers, remove the retaining ring (K010) from the housing.
2. Remove the shaft seal (K020) from the bore in the pump housing and discard. Avoid damaging the pump housing or shaft.

   Puncture the face of the seal with a packing hook, or use a slide-hammer type puller to remove the seal.
3. Inspect the pump housing and new seal for damage. Inspect the sealing area on the shaft for rust, wear, or contamination. Polish the sealing area on the shaft if necessary.
4. Lubricate the lip of the new shaft seal with clean hydraulic fluid. Place a protective sleeve over the shaft end to prevent damage to the seal during installation.

   Caution

   Premature bearing failure can result if the shaft seal contacts the shaft bearing.
   Press the seal into the housing only far enough to clear the retaining ring groove.
5. Keeping the seal perpindicular to the shaft, press the new seal into the housing just far enough to clear the retaining ring groove. Install seal with the cupped side toward the shaft bearing. Do not damage the seal during installation.
6. Using the appropriate snap ring pliers, install the seal retaining ring.
7. Remove the installation sleeve.

Auxiliary pads

Auxiliary mounting pads may be installed on pumps equipped with through-drive radial ported endcaps. Follow these steps to either remove, replace, or exchange auxiliary mounting pads.

Minor repair

Auxiliary mounting pads

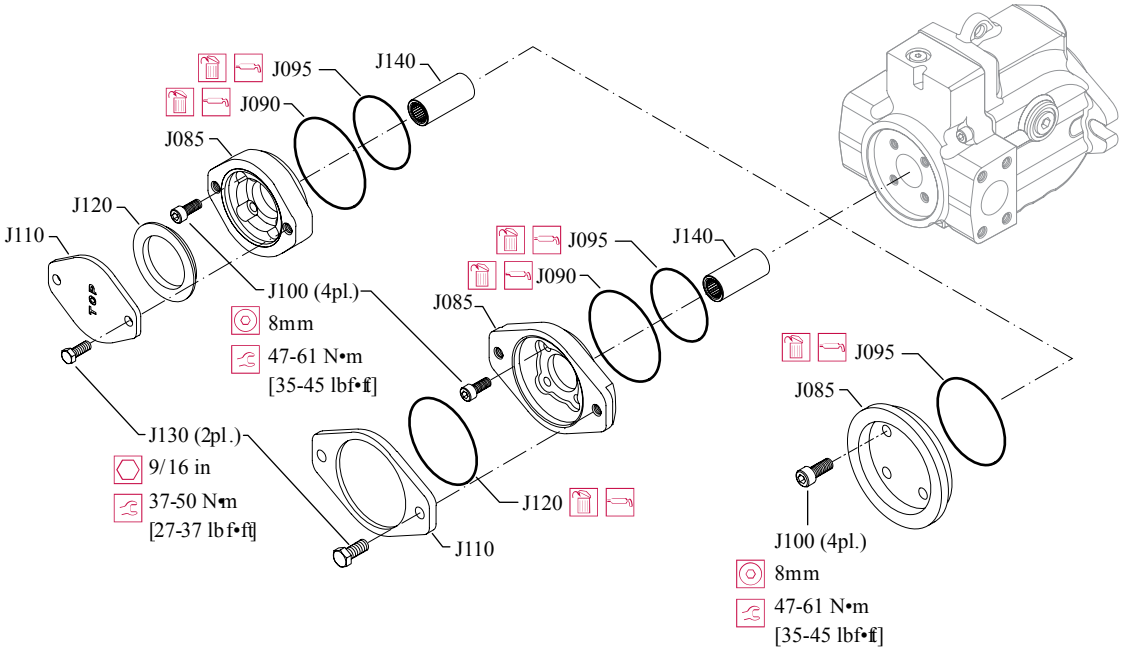

1. Remove two screws (J130) retaining the cover plate (J110) or auxiliary pump (not shown). Remove the shipping cover or auxiliary pump and its sealing O-ring (J120). Discard the O-ring.
2. Remove the drive coupling (J140).
3. Remove the four screws (J100) retaining the pad adapter (J085) to the endcap. Discard the two pad adapter O-rings (J090, J095).
4. Lubricate new O-rings with petroleum jelly. Install the pad adapter to the endcap.
5. Install the four screws and torque to 47-61 N•m [35-45 lbf•ft].
6. Install the drive coupling.
7. Install shipping cover or auxiliary pump with new O-ring.

Caution

Shipping cover is intended only to retain coupling during shipment and storage. Do not operate pump with coupling and shipping cover installed.

8. Install two screws (J130) and torque to 37-50 N•m [27-37 lbf•ft].

Minor repair

LS and PC Controls

Control assembly: LS control shown; parts C106 and C112 through C118 are not used on PC control

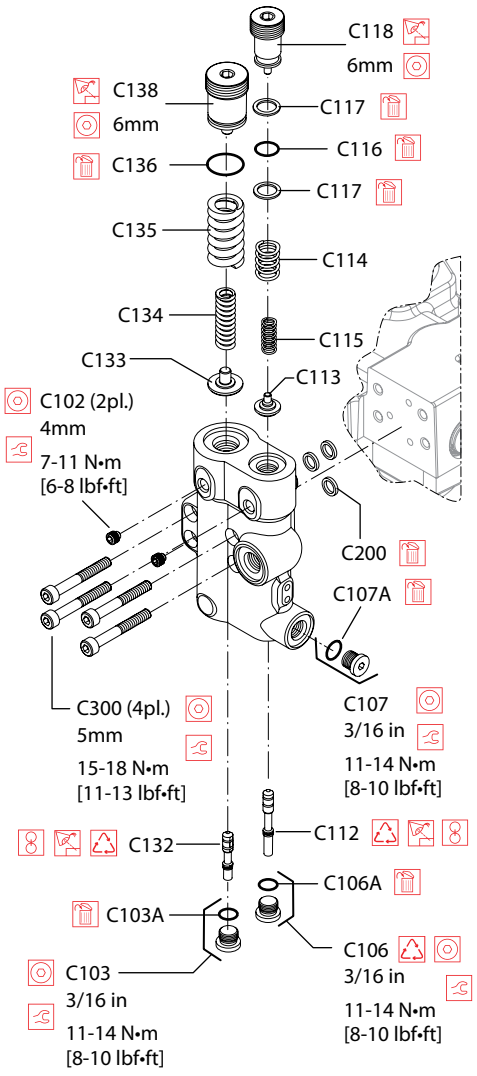

P101 667

Disassembly

1. Remove the four screws (C300) holding the control housing onto the end cap.
2. Remove the control and discard the three interface O-rings (C200).
3. Remove the PC set screw (C102), PC adjustment screw (C138), O-ring (C136), springs (C135, C134), and seat (C133). Discard the O-ring.
4. Remove the plug (C103), O-ring (C103A), and PC spool (C132) from the control housing; discard the O-ring. Note orientation of the spool for reassembly.
5. Remove the plug (C107) and O-ring (C107A); discard the O-ring.

   For PC only controls, skip steps 6 and 7.

6. Remove the LS set screw (C102), LS adjustment screw (C118), O-ring (C116), back-up rings (C117), springs (C114, C115), and seat (C113); discard the O-ring.
7. Remove the plug (C106), O-ring (C106A), and LS spool (C112) from the control housing; discard the O-ring. Note orientation of the spool for reassembly.

Minor repair

Inspection

1. Inspect the adjustment screws for wear at the tips and where they contact the springs; replace as necessary
2. Inspect the springs and spring guides for wear or damage; replace as necessary.
3. Carefully inspect the spools. Ensure the sealing lands are free of nicks and scratches. Check the ends that contact the spring guides for wear. Replace spools as necessary.
4. Inspect the control housing for damage. Check the spool bores for excessive wear.
5. Clean all parts and lubricate spools, springs, guides and new O-rings with clean hydraulic fluid.

Reassembly

1. Install the PC spool, spherical end first, into the PC bore. The PC spool is the shorter of the two. Using a new O-ring, install the plug (C103). Torque to 11-14 N•m [8-10 lbf•ft].
2. Place the two PC springs onto the spring guide and install into the PC bore. Place a new O-ring onto the PC adjustment screw and thread it into the PC bore until flush, then make another full turn. Install and torque the set screw to 7-11 N•m [6-8 lbf•ft].

   For PC only controls, skip steps 15 and 16.
3. Install the LS spool, spherical end first, into the LS bore. The LS spool is the longer of the two. Using a new O-ring, install the plug (C106). Torque to 11-14 N•m [8-10 lbf•ft].
4. Place the two LS springs onto the spring guide and install into the LS bore. Place a new O-ring and back-up rings onto the LS adjustment screw and thread it into the LS bore until flush, then make another full turn. Install and torque the set screw to 7-11 N•m [6-8 lbf•ft].
5. Using a new O-ring, install the plug (C107). Torque to 11-14 N•m [8-10 lbf•ft].
6. Using petroleum jelly to retain them, install the three interface O-rings (C200) in the recesses on the control housing.
7. Install the control assembly onto the endcap using the four screws (C300). Torque to 15-18 N•m [11-13 lbf•ft]. Torque screws in a criss-cross pattern and re-torque the first screw to ensure proper torque retention.
8. Check and adjust the control setting. See *Adjustments*.

Minor repair

Electric Controls

Control assembly

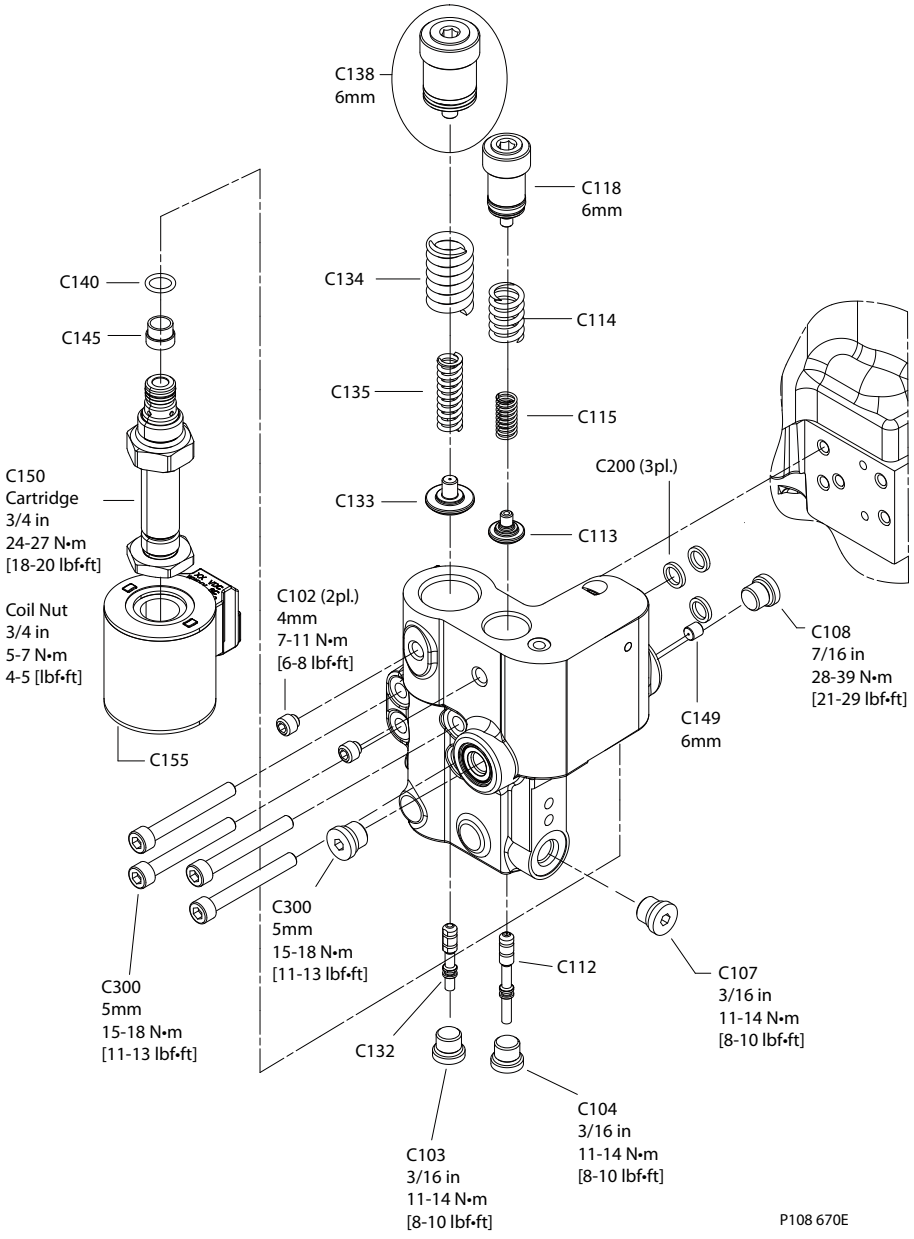

Disassembly

1. Remove four screws (C300).
2. Remove the control and discard the three O-rings (C200).
3. Remove set screws (C102), PC adjusting screw (C138), springs (C134, C135), and seat (C133).
4. Remove plug (C103). Remove PC spool (C132). Note orientation of the spool for reassembly.
5. Remove the plug (C107).
6. Remove the LS set screw (C102), LS adjustment screw assembly (C118), springs (C114, C115), and seat (C113). Discard the LS adjustment screw assembly.
7. Remove plug (C104), and spool (C112). Note the orientation of the spool for reassembly.

Minor repair

8. Remove the plug (C105).
9. Remove the solenoid coil nut, and electric solenoid coil (C155). Remove the cartridge valve (C150). Remove filter screen plug (C145), and O-ring (C140).
10. Remove the plug (C108) and electric control manifold drain orifice (C149).

Inspection

1. Inspect the adjusting plugs for wear at the tips and where they contact the springs; replace as necessary.
2. Inspect the springs and spring guides for wear or damage; replace as necessary.
3. Carefully inspect the spools. Ensure the sealing lands are free of nicks and scratches. Check the ends that contact the spring guides for wear. Replace spools as necessary.
4. Inspect the control housing for damage. Check the spool bores for excessive wear.
5. Ensure the electric control manifold drain orifice is clean. Remove debris from orifice if necessary.
6. Clean all parts and lubricate spools, springs, guides and new O-rings with clean hydraulic fluid.

Reassembly

1. Install the PC spool, spherical end first, into the PC bore. The PC spool is the shorter of the two. Install plug (C103). Torque to 11-14 N•m [8-10 lbf•ft].
2. Thread the PC adjustment screw into the PC bore until flush, then make another full turn. Install and torque the set screw (C102) to 7-11 N•m [6-8 lbf•ft].
3. Install the LS spool, spherical end first, into the LS bore. The LS spool is the longer of the two. Install plug (C106). Torque to 11-14 N•m [8-10 lbf•ft].
4. Place the two LS springs onto the spring guide and install into the LS bore. Use a new LS adjustment screw assembly (C118) and thread it into the LS bore until flush, then make another full turn. Install and torque the set screw (C102) to 7-11 N•m [6-8 lbf•ft].
5. Install plug (C107). Torque to 11-14 N•m [8-10 lbf•ft].
6. Install plug (C105). Torque to 11-14 N•m [8-10 lbf•ft].
7. Install filter screen plug (C145) and O-ring (C140). Install the cartridge valve (C150) and torque to 24-27 N•m [18-20 lbf•ft]. DO NOT OVERTORQUE the cartridge valve. Install the electric solenoid coil (C155) and solenoid coil nut; torque the nut to 5-7 N•m [4-5 lbf•ft].
8. Install the electric control manifold drain orifice (C149), torque to 2-3.4 N•m [18-30 in•lb]. Install plug (C108). Torque the plug to 11-14 N•m [8-10 lbf•ft].
9. Using petroleum jelly to retain them, install the three interface O-rings (C200).
10. Install the control assembly onto the endcap using the four screws (C300). Torque to 15-18 N•m [11-13 lbf•ft]. Torque screws in a criss-cross pattern and re-torque the first screw to ensure proper torque retention.
11. Check and adjust the control setting. See *Adjustments*.

Minor repair

Servo Control Orifice

Control assembly

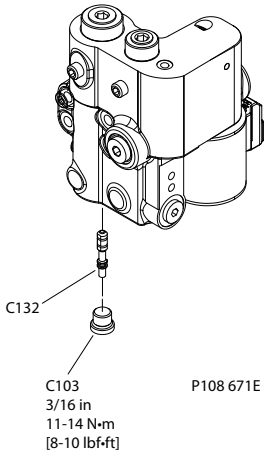

Disassembly

Remove plug (C103) and PC spool (C132) from the control housing. Keep the O-ring.

Note the orientation of the spool for reassembly.

Reassembly

1. Ensure the preferred orifice spool (C132) is selected.
2. Install the PC spool, spherical end first, into the PC bore. Install plug (C103). Torque to 11-14 N•m [8-10 lbf•ft].

Plug and fitting sizes and torques

If any plugs or fittings are removed from the unit during service, install and torque as indicated here. This drawing is a composite. Your configuration may differ but the appropriate wrench size and torque can be found here.

Minor repair

Plug locations, sizes, and torques

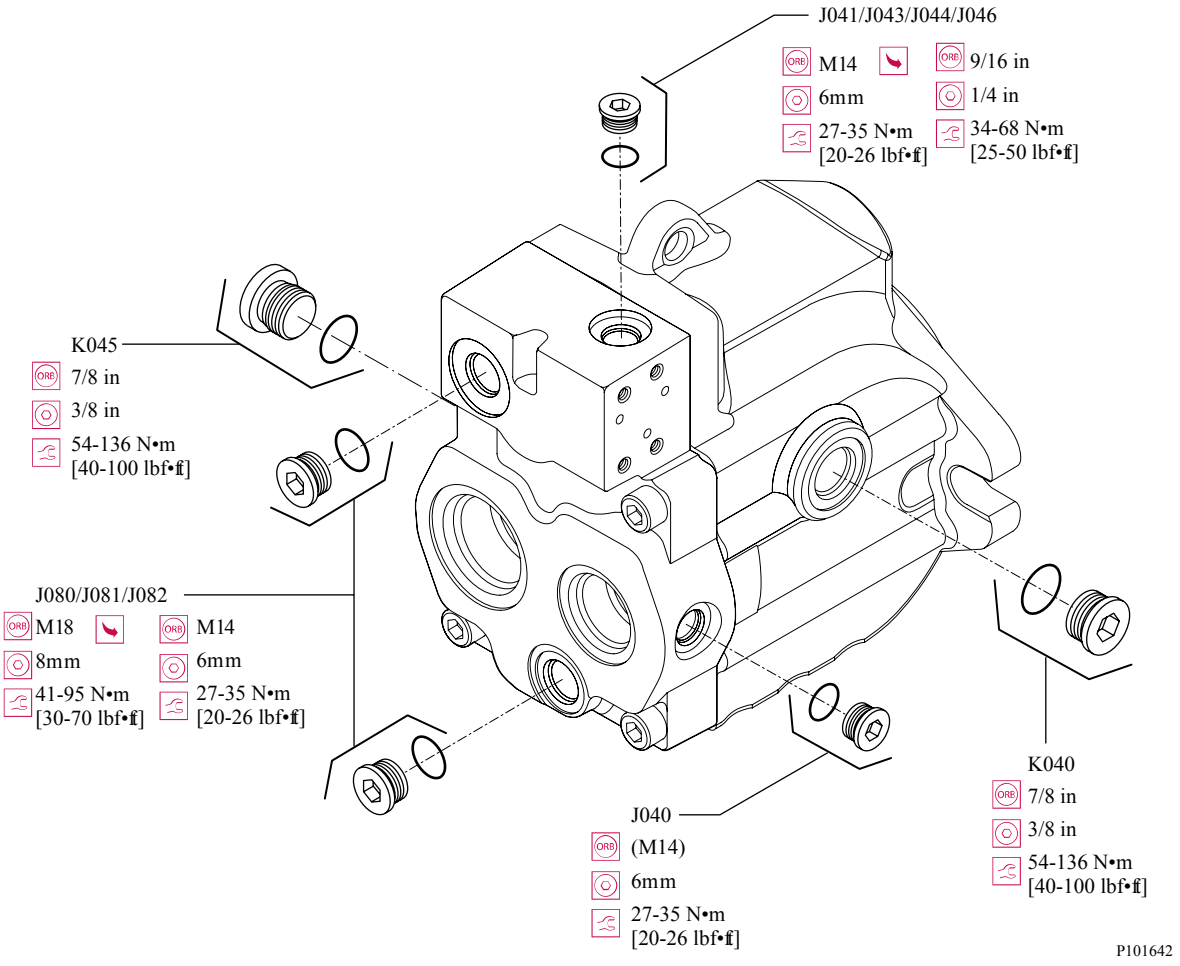

ENGINEERING
TOMORROW

Products we offer:

- Cartridge valves
- DCV directional control valves
- Electric converters
- Electric machines
- Electric motors
- Gear motors
- Gear pumps
- Hydraulic integrated circuits (HICs)
- Hydrostatic motors
- Hydrostatic pumps
- Orbital motors
- PLUS+1® controllers
- PLUS+1® displays
- PLUS+1® joysticks and pedals
- PLUS+1® operator interfaces
- PLUS+1® sensors
- PLUS+1® software
- PLUS+1® software services, support and training
- Position controls and sensors
- PVG proportional valves
- Steering components and systems
- Telematics

Hydro-Gear
www.hydro-gear.com

Daikin-Sauer-Danfoss
www.daikin-sauer-danfoss.com

Danfoss Power Solutions is a global manufacturer and supplier of high-quality hydraulic and electric components. We specialize in providing state-of-the-art technology and solutions that excel in the harsh operating conditions of the mobile off-highway market as well as the marine sector. Building on our extensive applications expertise, we work closely with you to ensure exceptional performance for a broad range of applications. We help you and other customers around the world speed up system development, reduce costs and bring vehicles and vessels to market faster.

Danfoss Power Solutions – your strongest partner in mobile hydraulics and mobile electrification.

Go to www.danfoss.com for further product information.

We offer you expert worldwide support for ensuring the best possible solutions for outstanding performance. And with an extensive network of Global Service Partners, we also provide you with comprehensive global service for all of our components.

Local address:

Danfoss
Power Solutions (US) Company
2800 East 13th Street
Ames, IA 50010, USA
Phone: +1 515 239 6000

Danfoss
Power Solutions GmbH & Co. OHG
Krokamp 35
D-24539 Neumünster, Germany
Phone: +49 4321 871 0

Danfoss
Power Solutions ApS
Nordborgvej 81
DK-6430 Nordborg, Denmark
Phone: +45 7488 2222

Danfoss
Power Solutions Trading (Shanghai) Co., Ltd.
Building #22, No. 1000 Jin Hai Rd
Jin Qiao, Pudong New District
Shanghai, China 201206
Phone: +86 21 2080 6201

Danfoss can accept no responsibility for possible errors in catalogues, brochures and other printed material. Danfoss reserves the right to alter its products without notice. This also applies to products already on order provided that such alterations can be made without subsequent changes being necessary in specifications already agreed.
All trademarks in this material are property of the respective companies. Danfoss and the Danfoss logotype are trademarks of Danfoss A/S. All rights reserved.