ENGINEERING
TOMORROW

Data Sheet

Dynamic Valve™ Type RA-DV Pressure Independent Radiator Valve

Application

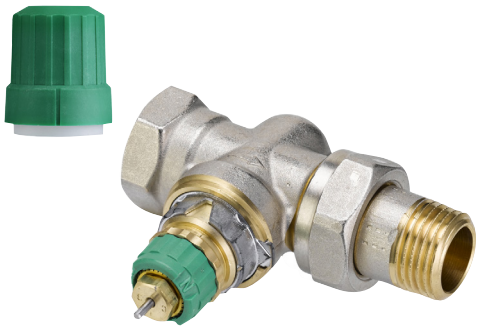

RA-DV straight version

RA-DV angle version

RA-DV angle right and left

RA-DV UK (Axial)

RA-DV is a series of pressure independent radiator valves, designed for use in 2-pipe heating systems together with all types of thermostatic sensors with Danfoss RA coupling.

RA-DV dynamic valves are fitted with a flow limiting device for presetting of the maximum water flow. The valves are available with maximum water flow of 10 - 135 l/h.

RA-DV has a built-in pressure regulator, which keeps the differential pressure at a constant level of 0.1 bar, thus maintaining the set flow.

RA-DV is supplied with a protective cap, which can be used for manual regulation during the construction phase.

The protective cap must not be used as manual shut off device. A special manual shut off device (code no. 013G5002) should be used.

To be able to distinguish between other valve bodies of the Danfoss RA series the RA-DV protective cap and presetting ring are green.

RA-DV valve bodies are manufactured from brass with a nickel plating.

The gland seal pressure pin is chrominium steel and works in a lifetime lubricated O-ring. The complete gland seal assembly can be replaced without draining down the system.

Should water treatment be used it is essential that the manufacturer's dosing instructions are strictly observed. Formulations containing mineral oil should be avoided.

In order to avoid deposition and corrosion the composition of the hot water must be in accordance with the VDI 2035.

Quality

027

RA-DV *Dynamic Valves*™ with sensors RAW, RAE and RAS-C are certified according to the European standard EN 215.

All Danfoss radiator thermostats are manufactured in factories, assessed and certified by BSI (British Standard Institution) against ISO 9000 and ISO 14001.

Data Sheet *Dynamic Valve*™ Type RA-DV - Pressure Independent Radiator Valve

Principles

Application example 1

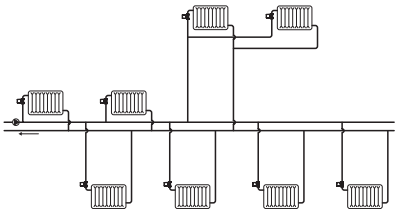

Application example 2

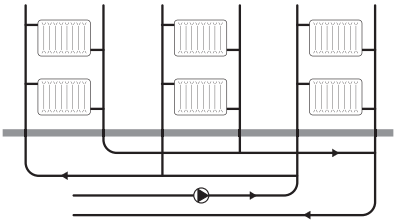

Ordering

Valve Type	Size	Connection		Design	Code no.
		Inlet	Outlet		
RA-DV	DN10	Rp ³/₈	R ³/₈	Angle	**013G7721**
RA-DV	DN10	Rp ³/₈	R ³/₈	Straight	**013G7722**
RA-DV	DN10	Rp ³/₈	R ³/₈	Angle	**013G7711**
RA-DV	DN10	Rp ³/₈	R ³/₈	Straight	**013G7712**
RA-DV	DN10	Rp ³/₈	R ³/₈	UK (Axial)	**013G7709**
RA-DV	DN10	Rp ³/₈	R ³/₈	Angle Right	**013G7717**
RA-DV	DN10	Rp ³/₈	R ³/₈	Angle Left	**013G7718**
RA-DV	DN15	Rp ½	R ½	Angle	**013G7723**
RA-DV	DN15	Rp ½	R ½	Straight	**013G7724**
RA-DV	DN15	Rp ½	R ½	Angle	**013G7713**
RA-DV	DN15	Rp ½	R ½	Straight	**013G7714**
RA-DV	DN15	Rp ½	Rp ½	UK (Axial)	**013G7710**
RA-DV	DN15	Rp ½	Rp ½	Angle Right	**013G7719**
RA-DV	DN15	Rp ½	Rp ½	Angle Left	**013G7720**
RA-DV	DN20	Rp ¾	Rp ¾	Angle	**013G7725**
RA-DV	DN20	Rp ¾	Rp ¾	Straight	**013G7726**
RA-DV	DN20	Rp ¾	Rp ¾	Angle	**013G7715**
RA-DV	DN20	Rp ¾	Rp ¾	Straight	**013G7716**

Accessories	Code no.
Gland seal, 10 pcs.	**013G0290**
Δp tool for pump optimization	**013G7861**
Valve insert with Regulator 5 pieces	**013G7831**

© © Danfoss Climate Solutions | 07/2021 | AI125086402935en-010601

Data Sheet *Dynamic Valve*™ Type RA-DV - Pressure Independent Radiator Valve

Compression fittings*	Tube dimension	For valve type	Code no.
For PEX plastic tubing, 10 pcs.	12 x 1.1 mm	RA-DV 15	**013G4143**
	12 x 2 mm	RA-DV 15	**013G4142**
	14 x 2 mm	RA-DV 15	**013G4144**
	15 x 2.5 mm	RA-DV 15	**013G4147**
	16 x 2 mm	RA-DV 15	**013G4146**
For Alupex tubing, 10 pcs.	12 x 2 mm	RA-DV 15	**013G4172**
	14 x 2 mm	RA-DV 15	**013G4174**
	16 x 2 mm	RA-DV 15	**013G4176**
For steel and copper tubing, 10 pcs.	10 mm	RA-DV 10	**013G4100**
	12 mm	RA-DV 10	**013G4102**
	10 mm	RA-DV 15	**013G4110**
	12 mm	RA-DV 15	**013G4112**
	14 mm	RA-DV 15	**013G4114**
	15 mm	RA-DV 15	**013G4115**

** For more information on Danfoss compression fittings, please refer to the compression fittings data sheet.*

Technical Data

Max. working pressure[1)]	10 bar							
Max. differential pressure	0.6 bar							
Min. differential pressure	0.1 bar							
Test pressure	16 bar							
Max. working temperature	95° C							
Min. working temperature	2° C							
Presetting	**1**	**2**	**3**	**4**	**5**	**6**	**7**	**N**
• Max[3)]	10 l/h	15 l/h	20 l/h	35 l/h	50 l/h	80 l/h	100 l/h	135 l/h
• with RA 2000 sensor[2)]	9 l/h	14 l/h	18 l/h	30 l/h	45 l/h	70 l/h	90 l/h	130 l/h
• with RAW, RAE or RAS-C sensor[2)]	8 l/h	12 l/h	16 l/h	25 l/h	40 l/h	65 l/h	85 l/h	110 l/h

[1)] Working pressure = static + differential pressure. The maximum differential pressure specified is the maximum pressure at which the valves give satisfactory regulation.

[2)] At setting N the value is stated according to EN 215, at XP = 2K i.e. the valve is closed at 2° C higher room temperature. At lower settings the XP value is reduced to 0.5K of the setting value 1. All values are max. flow at 0.1 bar.

[3)] The value states the max. flow at maximum lift, i.e. at fully open valve at 0.1 bar.

Presetting

The presetting values of RA-DV valves can be adjusted easily and accurately without the use of tools (default setting = N).

Presetting can be selected in steps from 1 to 7:
- Remove protective cap / thermostatic sensor.
- Find reference mark (R).
- Turn setting ring until the aquired presetting aligns with the reference mark.

At setting N the valve is fully open. This setting can be used as a flushing position, if the system has to be flushed out because of dirt problems.

When the thermostatic sensor has been installed, the presetting is protected against unintended regulation.

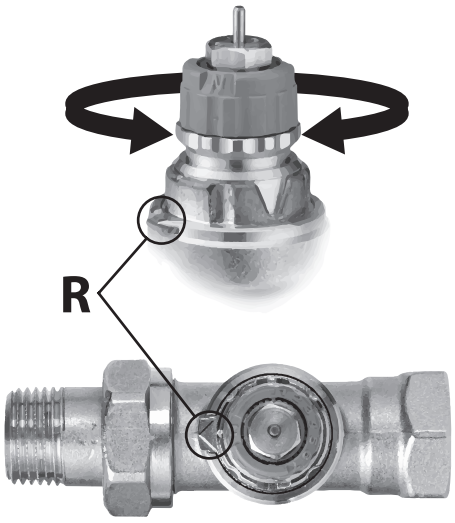

Data Sheet *Dynamic Valve*™ Type RA-DV - Pressure Independent Radiator Valve

Design

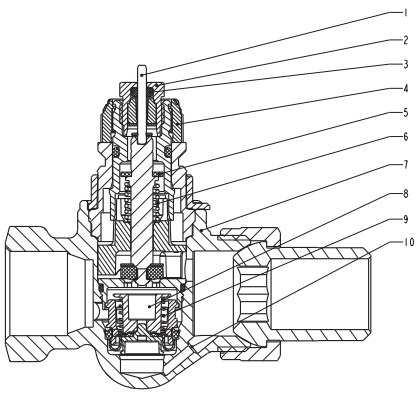

1. Pressure pin
2. Gland seal
3. O-ring
4. Setting dial
5. Seal
6. Regulation spring
7. Valve body
8. Regulator
9. Spring
10. Impulse connection

The thermostatic radiator valve consist of a sensor and the valve body RA-DV.
Sensor and valve body are ordered separately.

The gland seal of the valve can be changed in operation, i.e. with water and pressure on the system. Counter hold with star spanner number 17 and loosen the gland seal with spanner number 10.

Materials in contact with water

Valve body and other metal parts	Brass
Valve body surface	Nickle plated
Flow-limiter	PPS
O-ring	EPDM
Valve cone	NBR
Pressure pin and spring	Chrome steel
Regulator	Brass/PPS/EPDM

Capacities

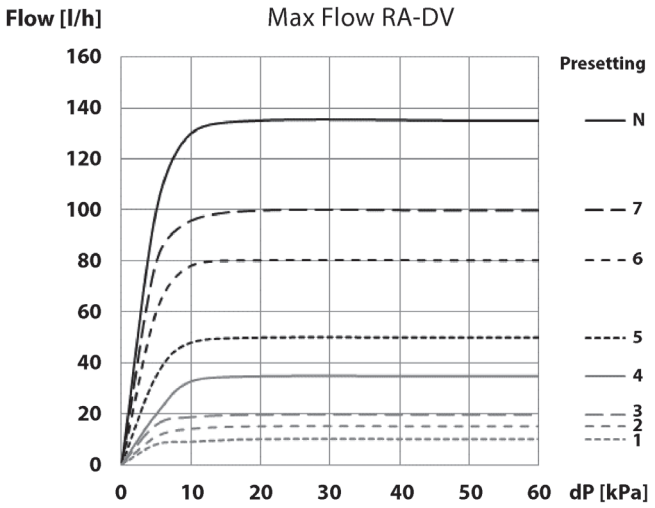

Sizing example

Required heat	700 W
Cooling across radiator	20 °C
Flow through radiator	$Q = \frac{700}{20 \times 1.16} = 30$ l/h
Min. pressure for constant flow	0.1 bar
Valve setting*	4

**Alternatively the setting can be read directly in the table "Technical Data".*

© © Danfoss Climate Solutions | 07/2021 | AI125086402935en-010601

Data Sheet *Dynamic Valve*™ Type RA-DV - Pressure Independent Radiator Valve

Dimensions

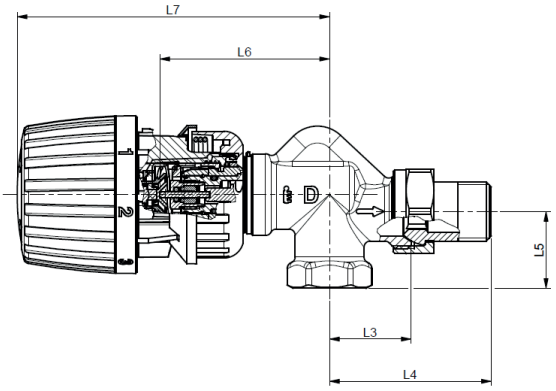

RA-DV UK Axial / RA2990 sensor

Type	Code no.	ISO 7-1			L_1	L_2	L_3	L_4	L_5	L_6	L_7	Arc. flats	
		DN	D	d_2								S_1	S_2
RA-DV 10 UK	013G7709	10	Rp ³/₈	R ³/₈	-	-	26	51	22	61	112	22	27
RA-DV 15 UK	013G7710	15	Rp ½	R ½	-	-	29	58	27	61	112	27	30

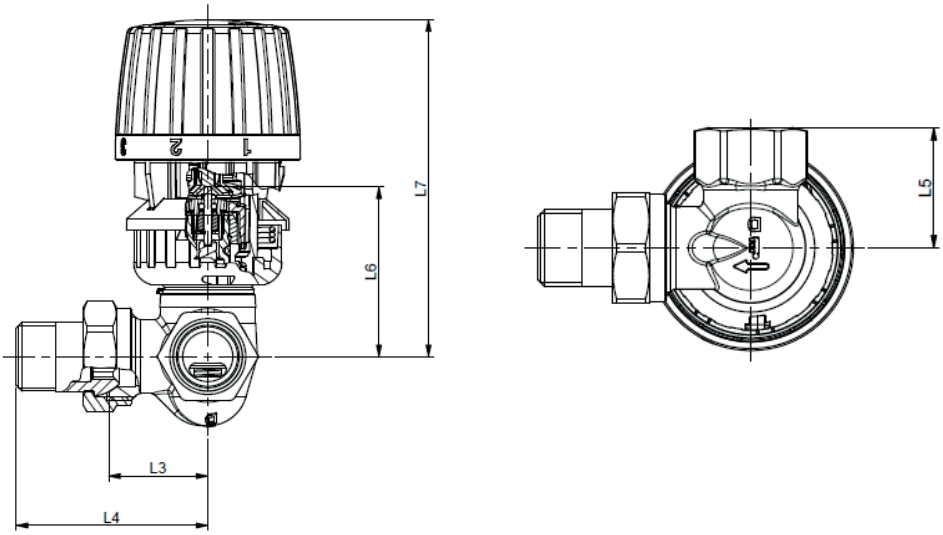

RA-DV Left and Right valve / RA 2990 sensor

Type	Code no.	ISO 7-1			L_1	L_2	L_3	L_4	L_5	L_6	L_7	Arc. flats	
		DN	D	d_2								S_1	S_2
RA-DV 10 right	013G7717	10	Rp ³/₈	R ³/₈	-	-	27	52	27	52	103	22	27
RA-DV 10 left	013G7718	10	Rp ³/₈	R ³/₈	-	-	27	52	27	52	103	22	27
RA-DV 15 right	013G7719	15	Rp ½	R ½	-	-	30	58	33	52	103	27	30
RA-DV 15 left	013G7720	15	Rp ½	R ½	-	-	30	58	33	52	103	27	30

Dimensions

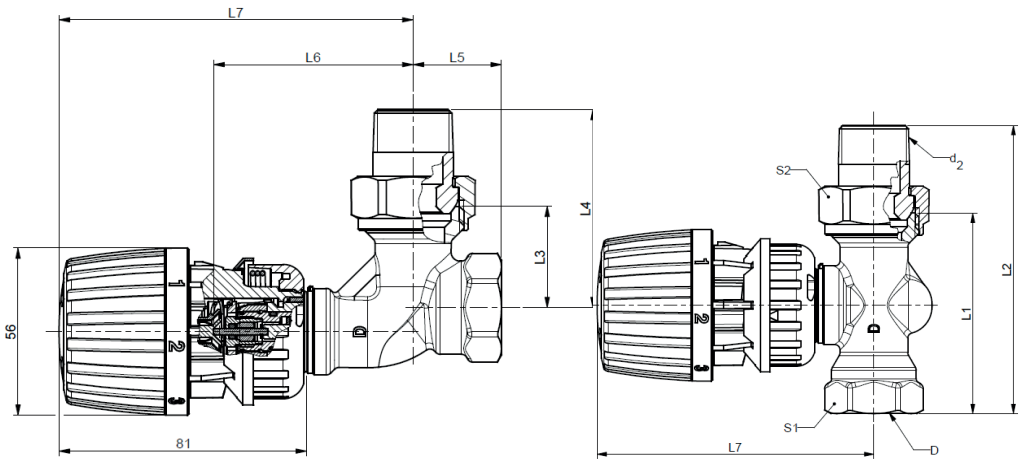

RA-DV Angle & Straight valve /+ RA 2990 sensor

Type	Code no.	ISO 7-1			L_1	L_2	L_3	L_4	L_5	L_6	L_7	Arc. flats	
		DN	D	d_2								S_1	S_2
RA-DV 10 angle	013G7711	10	Rp 3/8	R 3/8	-	-	24	49	20	64	114	22	27
RA-DV 10 straight	013G7712	10	Rp 3/8	R 3/8	50	75	-	-	-	-	102	22	27
RA-DV 15 angle	013G7713	15	Rp 1/2	R 1/2	-	-	26	53	23	66	117	27	30
RA-DV 15 straight	013G7714	15	Rp 1/2	R 1/2	55	82	-	-	-	-	102	27	30
RA-DV 10 angle	013G7721	10	Rp 3/8	R 3/8	-	-	26	51	22	64	114	22	27
RA-DV 10 straight	013G7722	10	Rp 3/8	R 3/8	58	84	-	-	-	-	102	22	27
RA-DV 15 angle	013G7723	15	Rp 1/2	R 1/2	-	-	29	57	26	66	117	27	30
RA-DV 15 straight	013G7724	15	Rp 1/2	R 1/2	65	94	-	-	-	-	102	27	30
RA-DV 20 angle	013G7715	20	Rp 3/4	R 3/4	-	-	30	63	26	66	117	32	37
RA-DV 20 straight	013G7716	20	Rp 3/4	R 3/4	65	97	-	-	-	-	103	32	37
RA-DV 20 angle	013G7725	20	Rp 3/4	R 3/4	-	-	34	67	29	66	117	32	37
RA-DV 20 straight	013G7726	20	Rp 3/4	R 3/4	74	107	-	-	-	-	103	32	37

Note:
If RAW, RAE or RAS-C sensors are used instead of sensors from the RA2000 series the L7 measurement is extended with 12 mm.

Danfoss A/S
Heating Segment • heating.danfoss.com • +45 7488 2222 • E-Mail: heating@danfoss.com

Danfoss can accept no responsibility for possible errors in catalogues, brochures and other printed material. Danfoss reserves the right to alter its products without notice. This also applies to products already on order provided that such alterations can be made without subsequential changes being necessary in specifications already agreed.
All trademarks in this material are property of the respective companies. Danfoss and all Danfoss logotypes are trademarks of Danfoss A/S. All rights reserved.