ENGINEERING
TOMORROW

Data sheet

Free Flow Plate Heat Exchangers (DN 25 / 1” - DN 400 / 16”)

SF11 / SF25A/ SF53 / SF150 / SF101 / SF123 / SF131 / SF229 / SF160 / SF160TY / SF230

Description

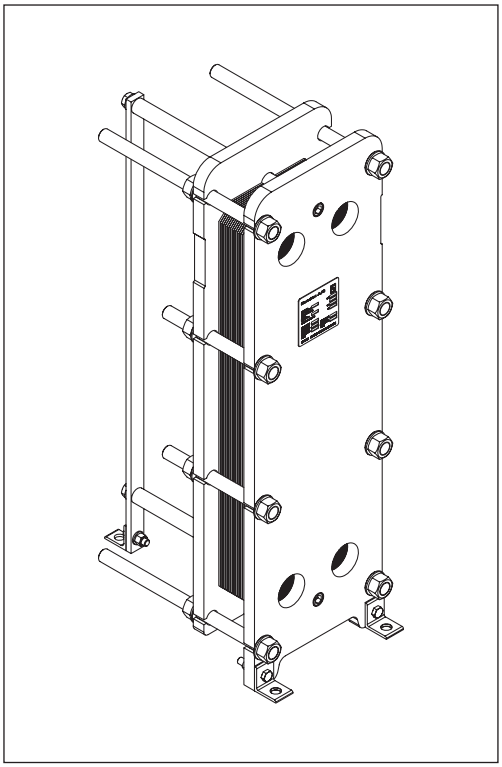

Our SONDEX® Free Flow plate heat exchangers are excellent choices for applications that use media with particle-rich contents, fouling tendency, or high viscosity. We customize each Free Flow heat exchanger to suit your application and media type. The contact-free plate channels ensure an unimpeded flow and long intervals between cleaning.

We set the new standard for improved performance and reliability when your media require gentle treatment and are unsuitable for regular heat exchangers due to viscosity, fouling tendency, or particle contents.

Benefits:
- Gentle treatment and even distribution of the media provide the highest possible product output quality.
- High heat transfer efficiency and extended intervals between cleaning ensure operation for an entire campaign with minimum downtime and maximum value for money.
- Large plate gap designed to counteract fouling with sizeable plate channels and no stagnant zones.

Common applications:
- Dairy/food/beverage industry
- Sugar industry
- Biogas industry
- Wastewater industry
- Pulp and paper industry
- Mining industry

Main data:
- Min. temperature –10 °C
- Max. temperature 180 °C
- Max. working pressure 10 / 16 bar
- Water and different fluids, steam
- Connection size DN 25 /1” - DN 400 / 16”

Approvals:
- Please contact your local Danfoss/SONDEX® sales representative for an overview of the available approvals in your region

Construction standard:
- EN13445 (PED 2014/68/EU)
- ASME sec VIII, Div. 1

Naming of units

SF25A-IG10-21-TKTL89

- TKTL89 - Plate grouping [3]
- 21 - Number of plates in the heat exchanger
- 10 - Design pressure of the heat exchanger
- IG - Frame type [2]
- 25A – Type of heat exchanger [1]
- SF – Free Flow plate heat exchanger

[1] **Type of heat exchanger:**
25A - …
Letter A shows type of the attachment of gasket to plate:
e.g. 25 (without A) – SonderLock
25A (with A) – Hang-on
TY - asymmetric channel design

[2] **Description of frame types:**
There are few different frame types which can be offered for different applications and duties.
IS – with suspension roller,
IG – without suspension roller,
FS – food/sanitary with suspension roller,
FG - food/sanitary,

[3] **Channel grouping:**
In this example, the heat exchanger combines TK and TL channels. The share of TL channels equals 89% of the total number of channels.
The number of channels is defined as “the number of plates - 1”.

Heat exchanger design

Gasketed heat exchangers consist of

Anatomy of a SONDEX® plate heat exchanger - IS frame.

Heat exchanger design
(continued)

Multi-pass design

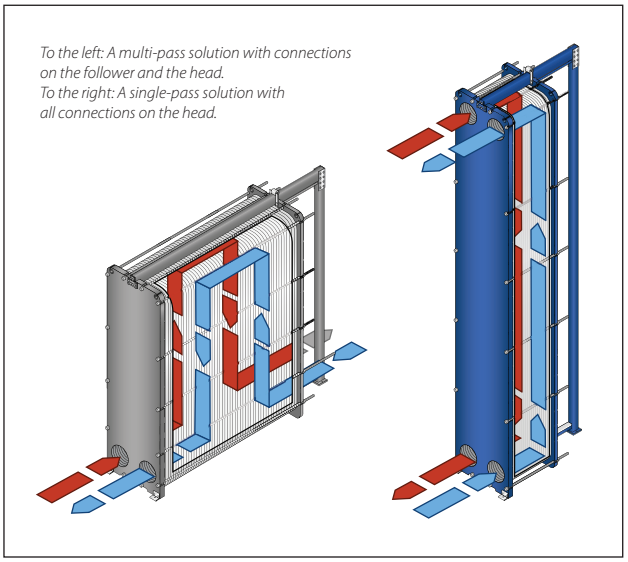

Connections

The heat exchanger may have connections on both front and back end sides of the unit.

Connections on the front-end plate are marked with F and connections on the back-end plate are marked with B. The numbers 1, 2, 3 and 4 designate the position of the connection on the end-plate from the top-left port clockwise.

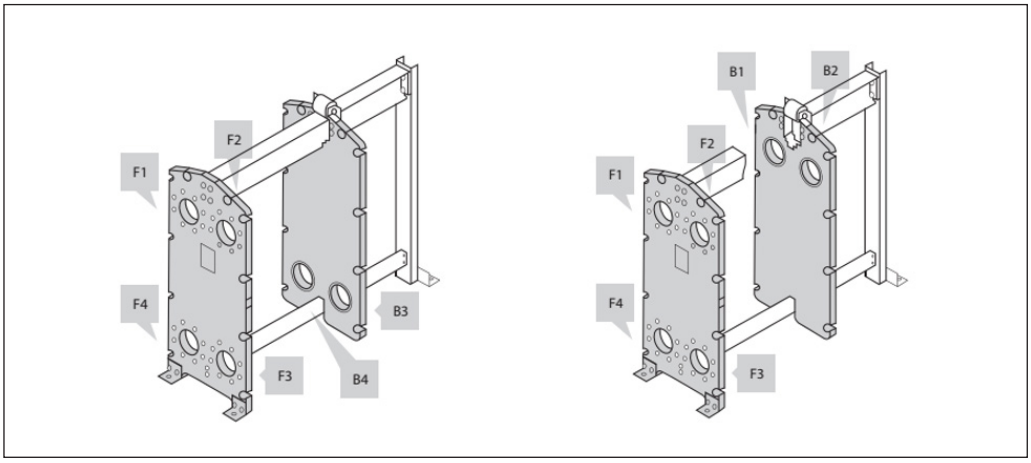

Technical data

Heat exchanger **SF11 / SF25A/ SF53 / SF101 / SF123 / SF131 / SF150 / SF160 / SF160TY / SF229**

Type		SF11	SF25A	SF53	SF150	SF101	SF123	SF131	SF229	SF160	SF160TY	SF230
Max. working pressure	PN (bar)	10 (16)[1]										
Max. operating temperature	°C	Up to 180										
Min. operating temperature	°C	-10										
Flow medium		Water and different fluids, steam										
Volume / channel	l	0.7	1.4	3	17/8	6.6	8.6	8.6	14	14	18.2/9.8	19.3
Connection size		1.25"	DN 50/2"	DN 100/4"	DN 150/6"	DN 200/8"				DN 300/12"		DN 400/16"
Connection type		• 1.25" threaded pipe in stainless steel or titanium (other materials available on request) • DN 50 / 2" - DN 300 / 12" flanges. Carbon steel, rubberlined or cladded with AISI 316L (other materials available on request) • DN 25 / 1", DN 50 /2", DN 80 / 3", Dairy union (for food/sanitary industry frames only)										
Plate material		Stainless steel EN 1.4404 (AISI 316L), EN 1.4301 (AISI 304), SMO254, Hastelloy C276, titanium Gr.1 Other materials available on request										
Plate thickness	mm	0.8; 0.9 (ti)[1] Other thicknesses available on request										
Gasket material		NBR, EPDM, FKM Other materials available on request										
Gasket attachment type		Hang-on; Sonder Lock										
Liners in connections		• Rubber NBR, EPDM, FKM • Stainless steel EN 1.4404 (AISI 316L), EN 1.4301 (AISI 304), SMO254, Hastelloy C276, titanium Gr.1										
Frame		• Painted frame, color RAL 5010 (other colors available on request) • Stainless steel frame, designed for the sanitary applications (e.g. food and dairy industries)										
Frame painting specification		Painting available for corrosion categories C2L, C4M, C5M										

[1] *Not available for all frame variations*

Using the right plate for each individual duty is very important, as it greatly impacts the efficiency of the entire installation.
It is important that the length of the plates and the type of pattern match the requirements of individual thermal duty.
We have developed a wide plate portfolio to provide the perfect plate and connection size for any duty.
No application is too small or too big for us - we provide the optimal technical solution every time.

Our extensive SONDEX® plate portfolio includes plates that lie outside the commonly manufactured plate sizes to cover all thermal duties optimally.

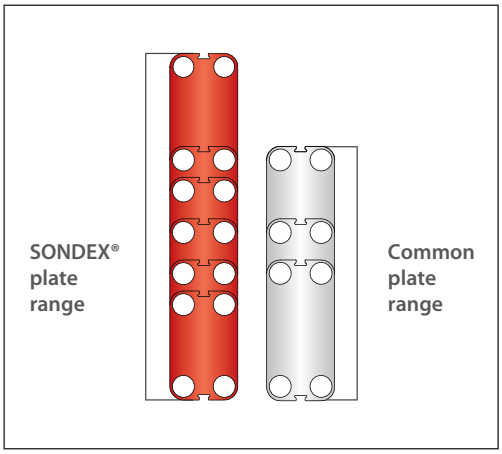

Accessories

Insulation

Recommended applications:
The insulation jacket for the plate heat exchanger is used in different applications with high temperatures and cooling systems.

Application	Heating	Cooling
Material	45 mm mineral wool Not flammable DIN EN 4102A2	40 mm PU-foam DIN 4102-1 B2
Outer cap	1 mm aluminium "Stucco" Embossed	
Internal insulation	0.05 mm aluminium foil	
Panel fixation	Plastic rivets	
Temperature	20 … 200 °C	-50 … -80 °C
U-value	0.55 W/m²K	0.38 W/m²K
Insulation class	3 [1)]	4 [1)]
Heat loss	17.1 W/m²	-

Please note:
Inlet and outlet temperatures in the exchanger have been based on 90/50 – 30/70 °C.

[1)] The loss of heating/cooling is stated per m² surface on the insulation jacket.
The bottom of the heat exchanger is not insulated and this fact has been excluded.
A possible loss of ventilation, largely dependent on the mounting of the heat exchanger, has not been taken into account either.

Drip trays

Recommended Applications:
The drip tray is available in two types. A "fail-safe" solution which prevents water or liquid from leaking onto the floor, or when the heat exchangers is dismantled, or opened for inspection and maintenance. And an insulated drip tray for cooling applications, which collects condensate formed outside of the plate heat exchanger.

Materials
Drip tray consists of:
- 1 mm galvanized steel frame
- Hanging brackets in galvanized steel
- 60 mm Polyurethane insulation for cooling applications
- Draining valve.

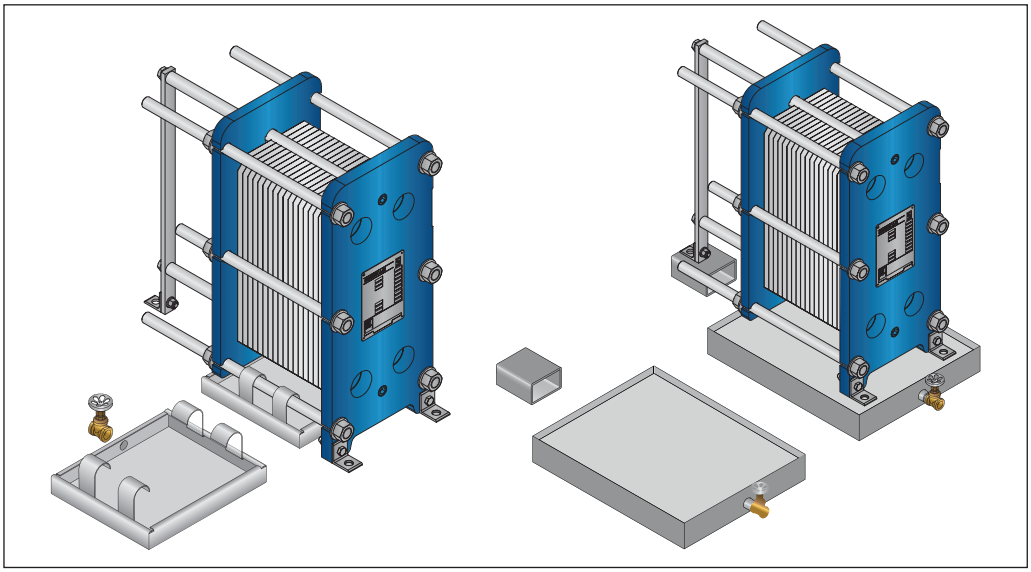

Spare parts

Spare parts for gasketed heat exchangers, such as plates, gaskets, frame parts can be ordered for maintenance, repair, increasing heat exchanger capacity, etc.

Please contact your local Danfoss or SONDEX® sales representative to provide you with information on spare parts available for gasketed heat exchangers.

Selection and ordering

Please contact your local SONDEX® or Danfoss sales representative for the selection and / or ordering of the heat exchangers, spare parts, and accessories.

For contact information please visit *https://www.danfoss.com/en/contact-us.*

Dimensions
Non-sanitary applications

Any connection can be used for primary side in.
All the rest are made correspondingly.

SF11 (DN32) frames

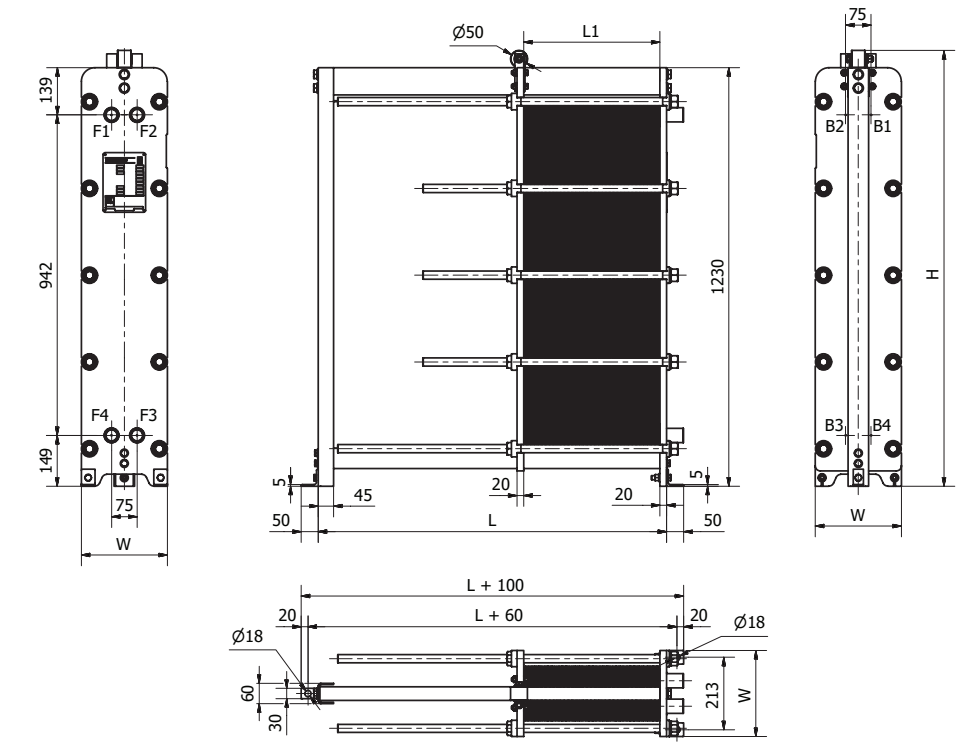

Drawing of SF11 IS10 frame

Number of plates [1]	L (frame length) (mm)	W (mm)	H (mm)	Weight max, empty [2] (kg)	Connection type
SF11 IS10					
7 – 21	424	253 (9.96”)	1280 (50.4”)	151	1.25” threaded pipe DN 25 / 1” Dairy union
22 – 40	624			184	
41 - 78	1024			253	
79 - 106	1324			304	
107 - 125	1524			339	

[1] *the indicated maximum number of plates is based on the minimum plate thickness allowable for the PN level of the unit;*
[2] *the maximum weight of the empty unit with the maximum allowable number of plates;*

Dimensions *(continued)*
Non-sanitary applications

SF25A (DN 50) frames

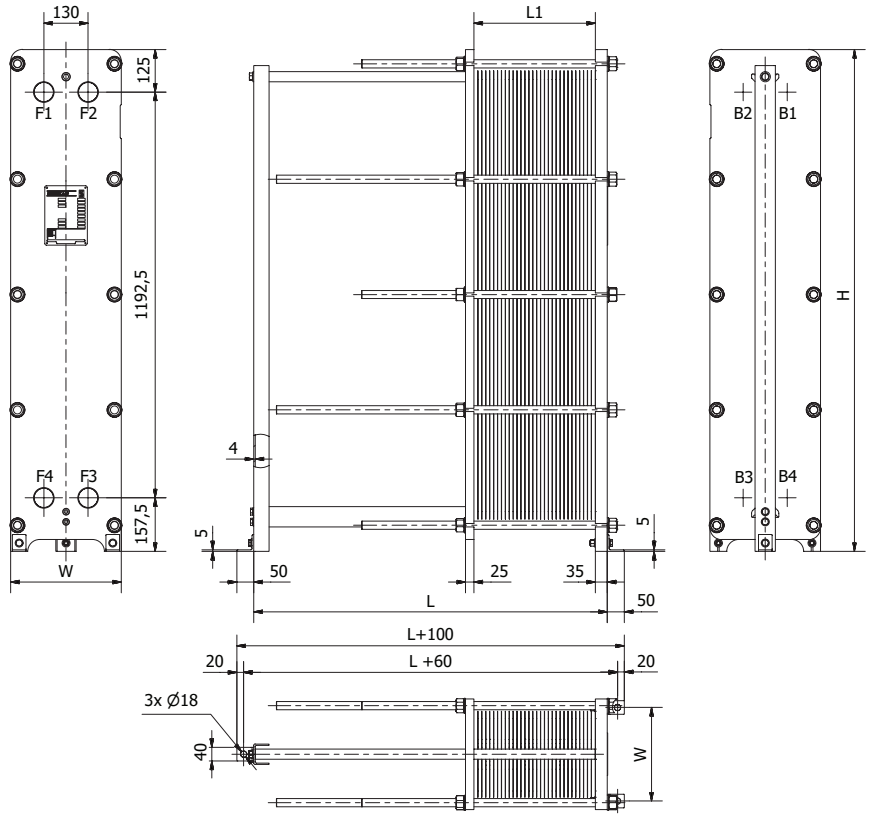

Drawing of SF25A IG10 frame

Number of plates [1]	L (frame length) (mm)	W (mm)	H (mm)	Weight max, empty [2] (kg)	Connection type
SF25A IG10					
7 – 3	429	325 (12.80”)	1475 (58.07”)	210	DN 50 or 2” flange DN 50 or 2 “ dairy union
4 – 12	529			236	
13 - 22	629			265	
23 - 61	1029			389	
SF25A IS16					
7 – 22[3]	690	370 (14.57”)	1577 (62.09”)	479	DN 50 or 2” flange DN 50 or 2 “ Dairy union
23 – 61[3]	1090			623	
62 – 89[3]	1390			726	
90 – 109[3]	1590			799	
110 – 157[3]	2090			976	
158 – 205[3]	2590			1153	

[1] *the indicated maximum number of plates is based on the minimum plate thickness allowable for the PN level of the unit;*
[2] *the maximum weight of the empty unit with the maximum allowable number of plates;*
[3] *the indicated maximum number of plates is for units without intermediate frames. Adding an intermediate frame reduces the maximum allowable number of plates in the unit;*

Dimensions *(continued)*
Sanitary applications

SF25A (DN50) frames

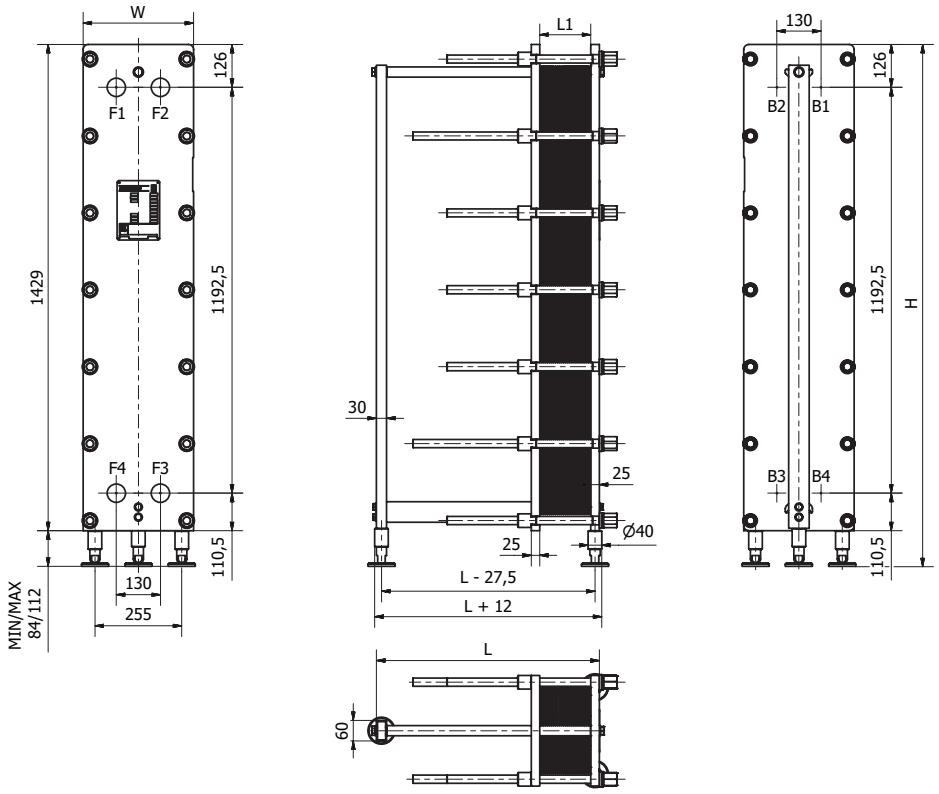

Drawing of SF25A FG10 frame

Number of plates [1]	L (frame length) (mm)	W (mm)	H (mm)	Weight max, empty [2] (kg)	Connection type
SF25A FG10					
7 – 3	455	325 (12.80")	1513-1541[4] (59.57 - 60.67")	236	DN 50 or 2 " Dairy union
4 – 12	555			269	
13 – 22	655			305	
23 – 61	1055			448	
SF25A FS10					
7 – 21[3]	700	680 (26.77")	1721-1749[4] (67.76 - 68.86")	473	DN 50 or 2 " Dairy union
22 – 59[3]	1100			611	
60 – 88[3]	1400			716	
89 – 107[3]	1600			787	
108 – 155[3]	2100			961	

[1] *the indicated maximum number of plates is based on the minimum plate thickness allowable for the PN level of the unit;*
[2] *the maximum weight of the empty unit with the maximum allowable number of plates;*
[3] *the indicated maximum number of plates is for units without intermediate frames. Adding an intermediate frame reduces the maximum allowable number of plates in the unit;*
[4] *the height of the heat exchanger can be modified with special adjustable feet.*

Dimensions *(continued)*
Non-sanitary applications

SF53 (DN100) frames

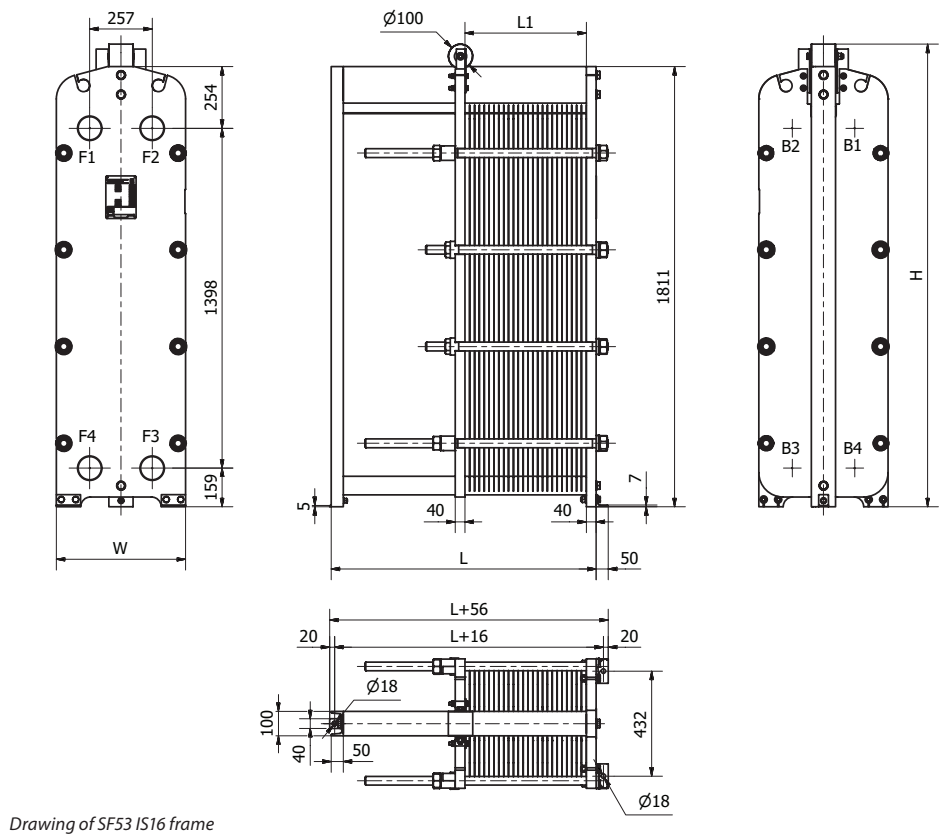

Drawing of SF53 IS16 frame

Number of plates [1]	L (frame length) (mm)	W (mm)	H (mm)	Weight max, empty [2] (kg)	Connection type
SF53 IS16					
7 - 59[3]	1090	532 (20.94”)	1903 (74.92”)	1171	DN 100 or 4” flange
60 - 107[3]	1590			1505	
108 - 155[3]	2090			1839	
156 - 203[3]	2590			2173	
204 - 251[3]	3090			2507	
252 - 348[3]	4090			3181	

[1] *the indicated maximum number of plates is based on the minimum plate thickness allowable for the PN level of the unit;*
[2] *the maximum weight of the empty unit with the maximum allowable number of plates;*
[3] *the indicated maximum number of plates is for units without intermediate frames. Adding an intermediate frame reduces the maximum allowable number of plates in the unit;*

Dimensions *(continued)*
Sanitary applications

SF53 (DN100) frames

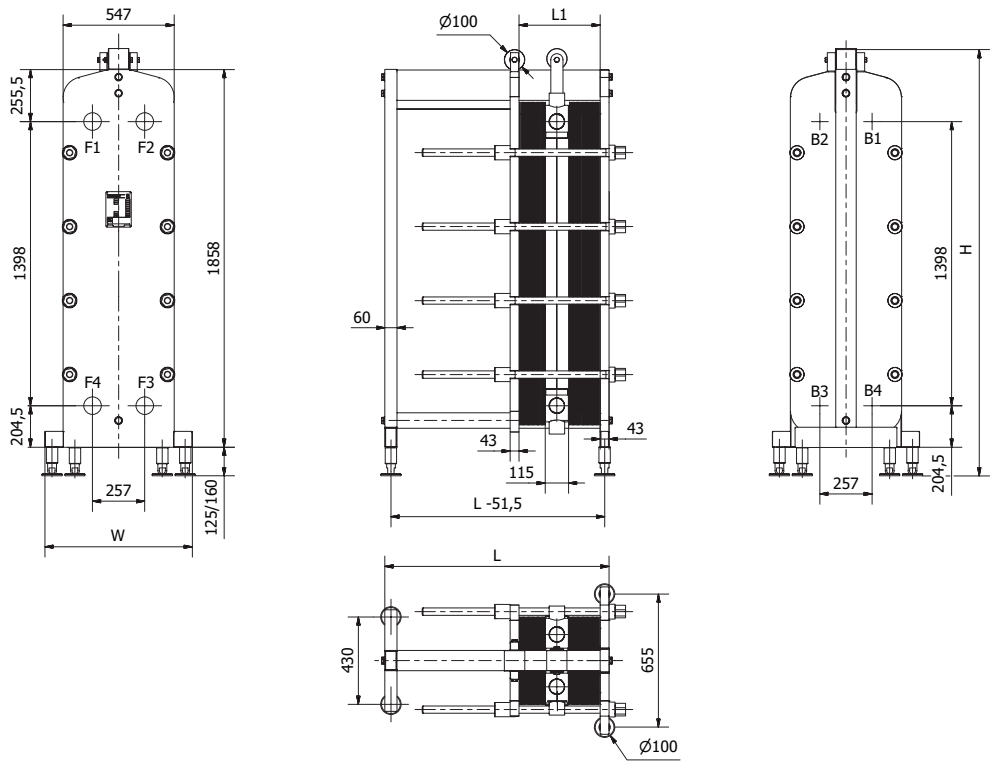

Drawing of SF53 FS10 frame

Number of plates [1]	L (frame length) (mm)	W (mm)	H (mm)	Weight max, empty [2] (kg)	Connection type
SF53 FS10					
7 – 59[3]	1103	725 (28.54”)	2081-2117[4] (81.93- 83.35”)	1347	DN 80 or 3” Dairy union
60 – 107[3]	1603			1660	
108 - 155[3]	2103			1973	
156 - 203[3]	2603			2286	
204 – 251[3]	3103			2599	
252 – 347[3]	4103			3226	

[1] *the indicated maximum number of plates is based on the minimum plate thickness allowable for the PN level of the unit;*
[2] *the maximum weight of the empty unit with the maximum allowable number of plates;*
[3] *the indicated maximum number of plates is for units without intermediate frames. Adding an intermediate frame reduces the maximum allowable number of plates in the unit;*
[4] *the height of the heat exchanger can be modified with special adjustable feet.*

Dimensions *(continued)*
Non-sanitary applications

SF150 (DN150) frames

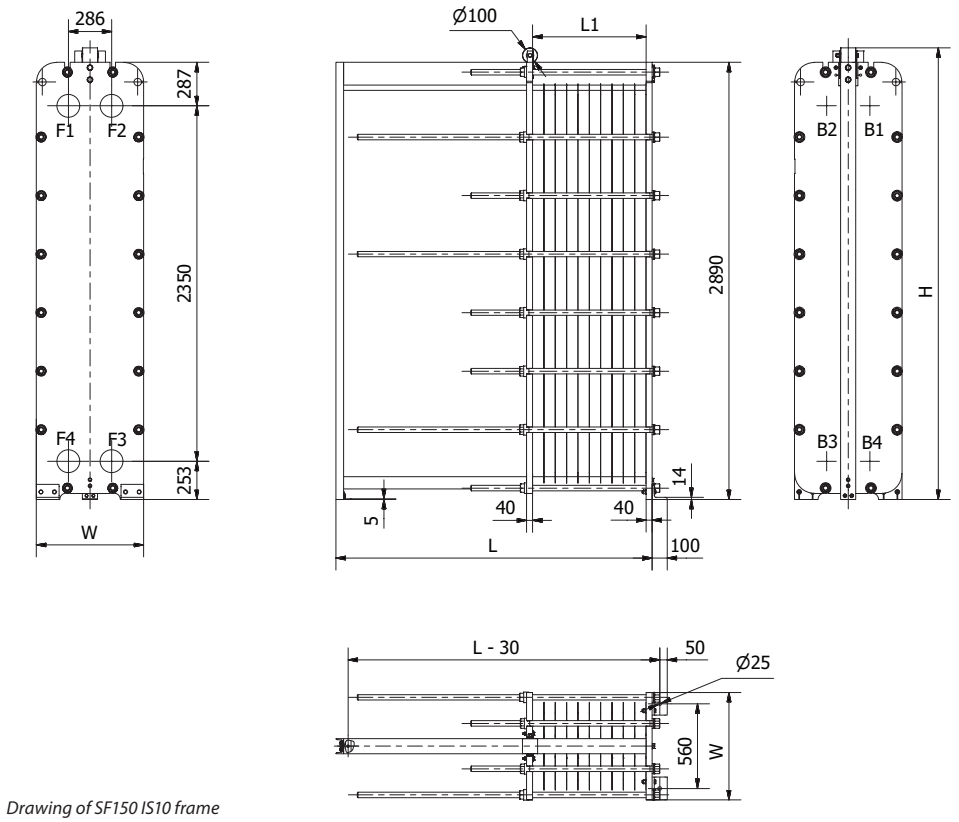

Drawing of SF150 IS10 frame

Number of plates [1]	L (frame length) (mm)	W (mm)	H (mm)	Weight max, empty [2] (kg)	Connection type
SF150 IS10					
7 – 13	690	710 (27.95”)	2986 (117.56”)	1546	DN 150 flange or 6”
14 – 38	1090			1872	
39 - 57	1390			2119	
58 - 70	1590			2288	
71 – 101	2090			2691	
102 – 133	2590			3161	
134 – 165	3090			3587	
166 – 228	4090		3195 (125.79”)	4427	

[1] *the indicated maximum number of plates is based on the minimum plate thickness allowable for the PN level of the unit;*
[2] *the maximum weight of the empty unit with the maximum allowable number of plates;*

Dimensions *(continued)*
Non-sanitary applications

SF101 (DN200) frames

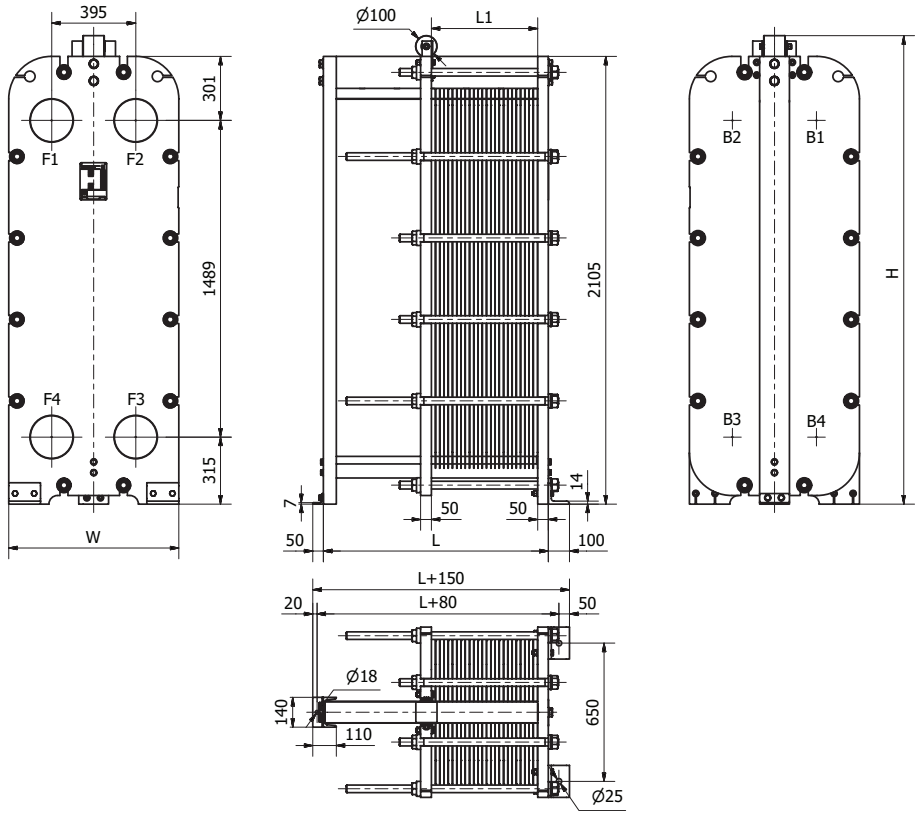

Drawing of SF101 IS10 frame

Number of plates [1]	L (frame length) (mm)	W (mm)	H (mm)	Weight max, empty [2] (kg)	Connection type
SF101 IS10					
7 – 34	657	800 (31.50″)	2202 (86.69″)	1897	DN 200 flange or 8″
35 – 71	1057			2284	
72 – 99	1357			2576	
100 – 117	1557			2764	
118 – 163	2057			3246	
164 – 210	2557			3735	
211 – 256	3057			4217	
257 – 349	4057			5186	
350 – 441	5200			6148	
442 – 534	6200			7119	

[1] *the indicated maximum number of plates is based on the minimum plate thickness allowable for the PN level of the unit;*
[2] *the maximum weight of the empty unit with the maximum allowable number of plates;*

Dimensions *(continued)*
Non-sanitary applications

SF123 (DN200) frames

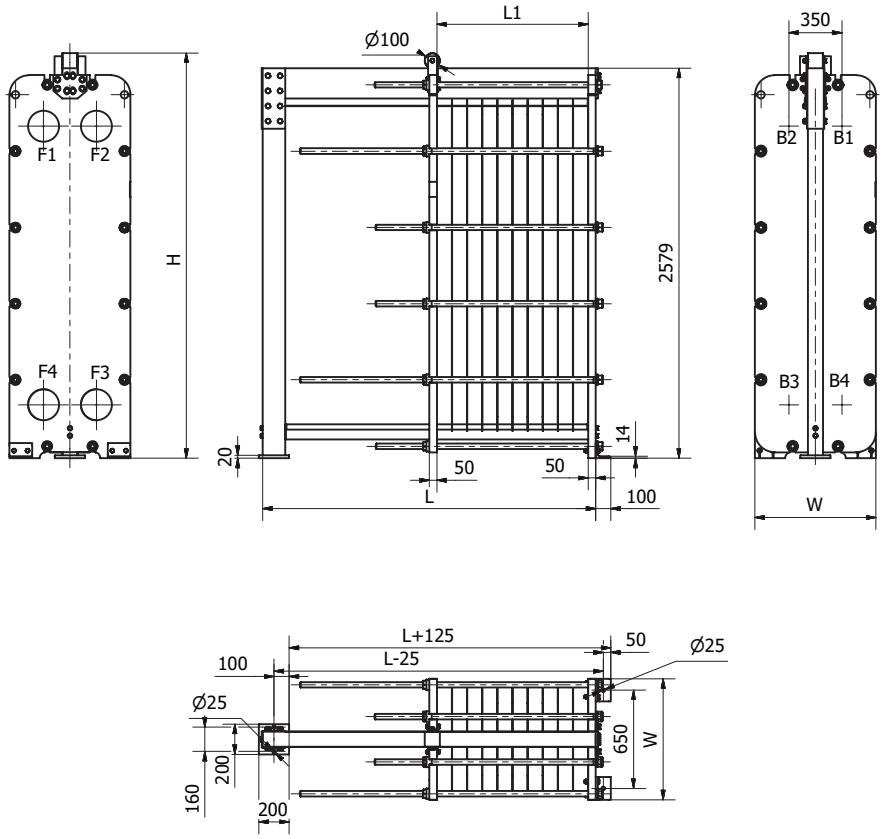

Drawing of SF123 IS10 frame

Number of plates [1]	L (frame length) (mm)	W (mm)	H (mm)	Weight max, empty [2] (kg)	Connection type
SF123 IS10					
7 – 18	800	800 (31.50”)	2679 (105.47”)	1958	DN 200 flange or 8”
19 – 39	1200			2266	
40 – 54	1500			2515	
55 – 65	1700			2703	
66 – 91	2200			3122	
92 – 117	2700			3624	
118 – 143	3200			4073	
144 – 194	4200			4957	
195 – 246	5200		2936 (115.59”)	5721	
247 – 298	6200			6590	

[1] *the indicated maximum number of plates is based on the minimum plate thickness allowable for the PN level of the unit;*
[2] *the maximum weight of the empty unit with the maximum allowable number of plates;*

Dimensions *(continued)*
Non-sanitary applications

SF131 (DN200) frames

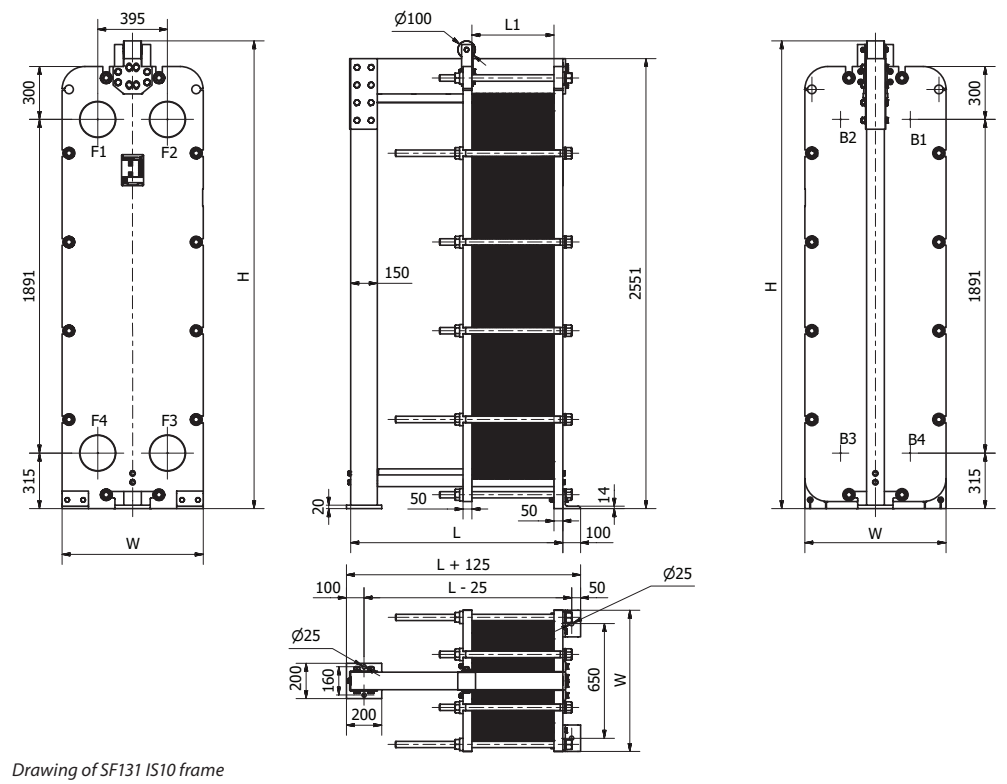

Drawing of SF131 IS10 frame

Number of plates [1]	L (frame length) (mm)	W (mm)	H (mm)	Weight max, empty [2] (kg)	Connection type
SF131 IS10					
7 – 33	800	800 (31.50″)	2651 (104.37″)	2009	DN 200 flange or 8″
34 – 70	1200			2445	
71 - 98	1500			2787	
99 - 116	1700			3016	
117 – 162	2200			3565	
163 – 209	2700			4145	
210 – 255	3200			4794	
256 – 348	4200			5970	
349 – 440	5200	1000 (39.37″)	2908 (114.49″)	7169	
441 – 533	6200			8349	

[1] *the indicated maximum number of plates is based on the minimum plate thickness allowable for the PN level of the unit;*
[2] *the maximum weight of the empty unit with the maximum allowable number of plates;*

Dimensions *(continued)*
Non-sanitary applications

SF229 (DN200) frames

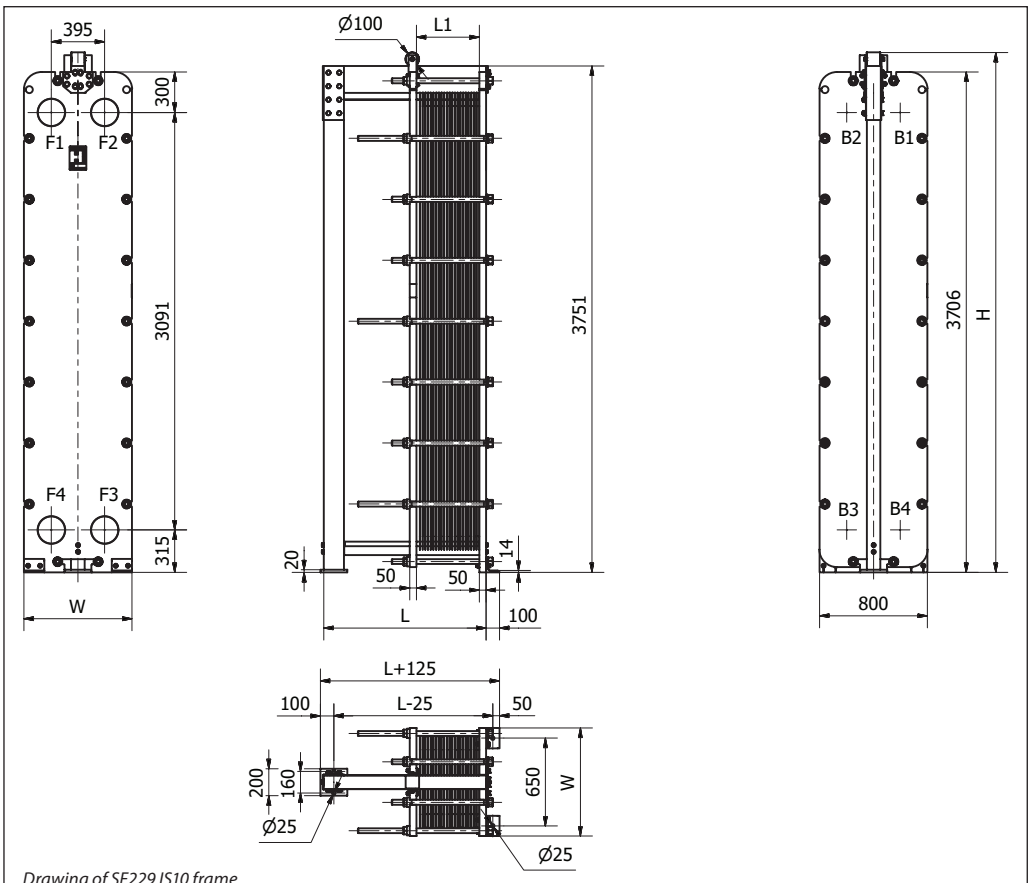

Drawing of SF229 IS10 frame

Number of plates [1]	L (frame length) (mm)	W (mm)	H (mm)	Weight max, empty [2] (kg)	Connection type
SF229 IS10					
7 – 33	800	800 (31.50″)	2651 (104.37″)	3324	DN 200 flange or 8″
34 – 70	1200			4015	
71 - 98	1500			4537	
99 - 116	1700			4873	
117 – 162	2200			5733	
163 – 209	2700			6609	
210 – 255	3200			7468	
256 – 348	4200			9202	
349 – 440	5200	1000 (39.37″)	4108 (161.73″)	10921	
441 – 533	6200			12655	

[1] *the indicated maximum number of plates is based on the minimum plate thickness allowable for the PN level of the unit;*
[2] *the maximum weight of the empty unit with the maximum allowable number of plates;*

Dimensions *(continued)*
Non-sanitary applications

SF160 / SF160TY (DN300) frames

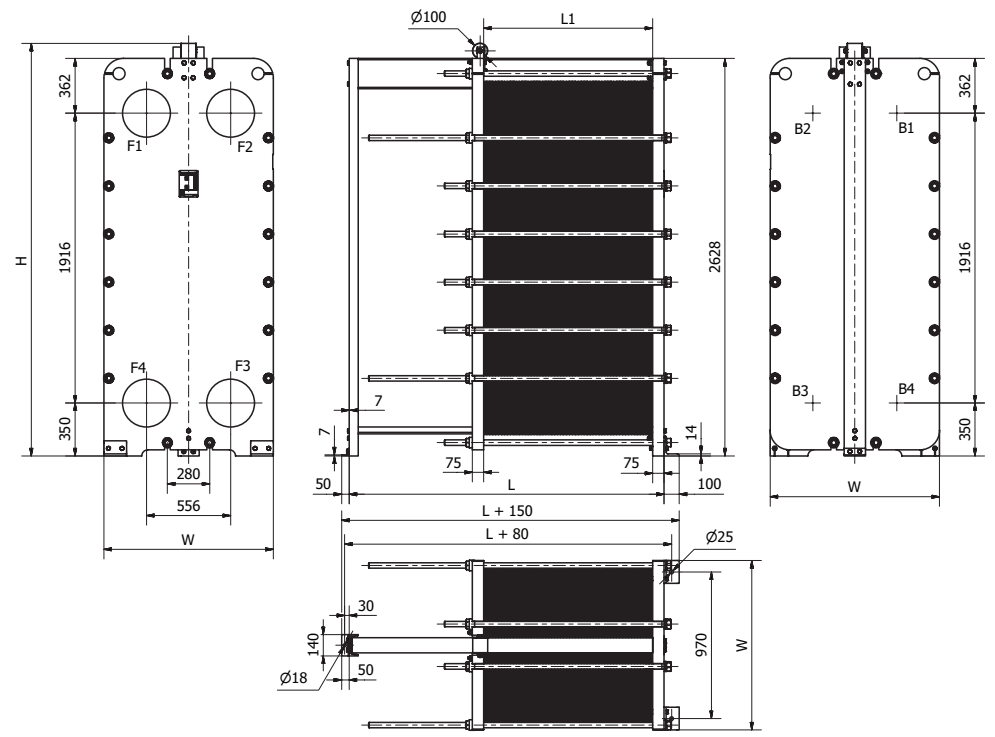

Drawing of SF160 IS10 frame

Number of plates [1]	L (frame length) (mm)	W (mm)	H (mm)	Weight max, empty [2] (kg)	Connection type
SF160 IS10					
7 – 19	682	1120 (44.09”)	2728 (107.40”)	3710	DN 300 flange or 12”
20 – 43	1082			4236	
44 – 61	1382			4642	
62 – 73	1582			4925	
74 – 102	2082			5576	
103 – 132	2725		2781 (109.49”)	6327	
133 – 161	3225			7085	
162 – 221	4225			8515	
222 – 280	5225			9951	
281 – 339	6225			11362	
SF160TY IS10					
7 – 19	682	1120 (44.09”)	2728 (107.40”)	3980	DN 300 flange or 12”
20 – 43	1082			4564	
44 – 61	1382			5001	
62 – 73	1582			5294	
74 – 102	2082			6002	
103 – 132	2725		2781 (109.49”)	6733	
133 – 161	3225			7442	
162 – 221	4225			8902	
222 – 280	5225			10340	
281 – 339	6225			11779	

[1] *the indicated maximum number of plates is based on the minimum plate thickness allowable for the PN level of the unit;*
[2] *the maximum weight of the empty unit with the maximum allowable number of plates;*

Dimensions *(continued)*
Non-sanitary applications

SF230 (DN400) frames

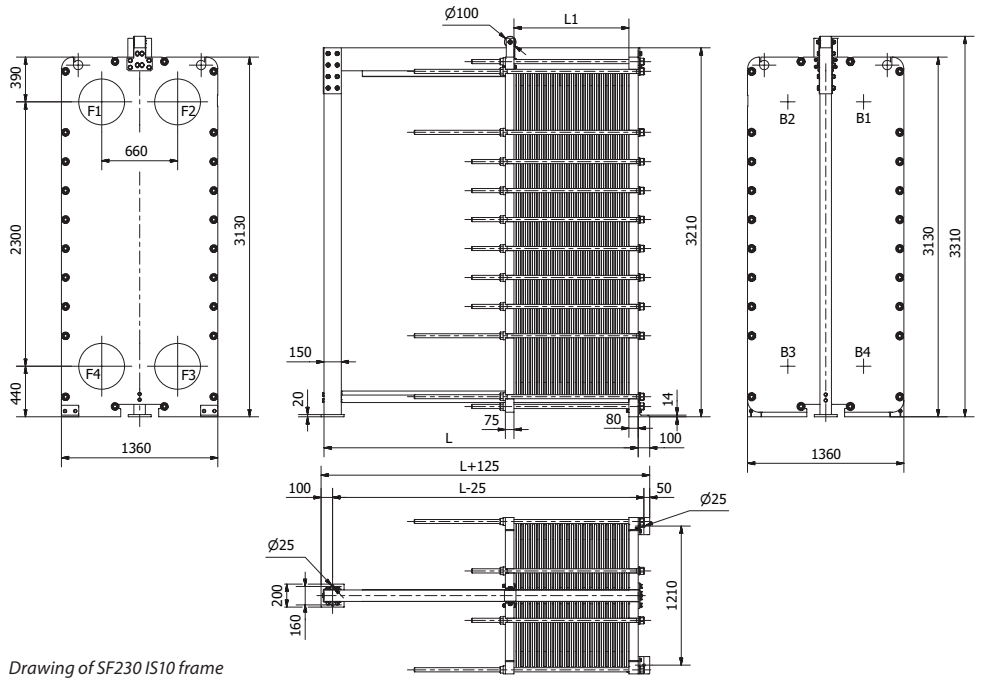

Drawing of SF230 IS10 frame

Number of plates [1]	L (frame length) (mm)	W (mm)	H (mm)	Weight max, empty [2] (kg)	Connection type
SF230 IS10					
7 – 45	1730	1360 (53.54”)	3310 (130.31”)	6417	DN 400 flange or 16”
46 – 75	2230			7346	
76 - 104	2730			8282	
105 - 133	3230			9247	
134 – 192	4230	1360 (53.54”)	3560 (140.16”)	11253	
193 – 251	5230			13236	
252 – 310	6230			15035	

[1] *the indicated maximum number of plates is based on the minimum plate thickness allowable for the PN level of the unit;*
[2] *the maximum weight of the empty unit with the maximum allowable number of plates;*

Sondex A/S • Member of the Danfoss Group
Heating Segment • heatexchangers.danfoss.com • +45 7630 6100 • E-Mail: info@sondex.dk

Danfoss can accept no responsibility for possible errors in catalogues, brochures and other printed material. Danfoss reserves the right to alter its products without notice. This also applies to products already on order provided that such alterations can be made without subsequential changes being necessary in specifications already agreed.
All trademarks in this material are property of the respective companies. Danfoss and all Danfoss logotypes are trademarks of Danfoss A/S. All rights reserved.