ENGINEERING TOMORROW

Operating Guide
VLT® Decentral Drive FCD 302





vlt-drives.danfoss.com

Contents

1 Introduction 3

1.1 Purpose of the Manual 3

1.2 Additional Resources 3

1.3 Document and Software Version 3

1.4 Product Overview 3

1.5 Approvals and Certifications 6

1.6 Symbols and Conventions 7

2 Safety 8

2.1 Safety Symbols 8

2.2 Qualified Personnel 8

2.3 Safety Precautions 8

3 Mechanical Installation 10

3.1 Unpacking 10

3.1.1 Items Supplied 10

3.1.2 Product Identification 10

3.2 Mounting 10

4 Electrical Installation 13

4.1 Safety Instructions 13

4.2 EMC-compliant Installation 13

4.3 Grounding 13

4.4 Wiring Schematic 16

4.5 Location of Terminals 18

4.6 Terminal Types 19

4.7 Motor Connection 20

4.7.1 Connecting Several Motors 20

4.8 AC Mains Connection 21

4.9 Motor and Mains Connection with Service Switch 21

4.10 Control Wiring 21

4.11 Brake Resistor 22

4.12 Mechanical Brake 22

4.13 Connection of Sensors/Actuators on M12 Sockets 23

4.14 DIP Switches 23

4.15 RS485 Serial Communication 23

4.16 Safe Torque Off (STO) 24

4.17 Installation Check List 24

5 Commissioning 26

Danfoss A/S © 11/2016 All rights reserved.

5.1 Applying Power 26
5.2 Local Control Panel Operation 26
5.2.1 Graphic Local Control Panel Layout 27
5.3 Basic Programming 28
5.4 System Start-up 29
5.4.1 Local Control Test 29
5.4.2 System Start-up 29
5.5 Operation 30
5.5.1 Uploading/Downloading Data to/from the LCP 30
5.5.2 Changing Parameter Settings 30
5.5.3 Restoring Default Settings 30

6 Maintenance, Diagnostics, and Troubleshooting 31
6.1 Introduction 31
6.2 Maintenance and Service 31
6.2.1 Cleaning 31
6.3 Frontal LEDs 31
6.4 Status Messages 32
6.5 Warning and Alarm Types 34
6.6 List of Warnings and Alarms 34

7 Specifications 43
7.1 Electrical Data 43
7.2 Mains Supply 44
7.3 Motor Output and Motor Data 44
7.4 Ambient Conditions 45
7.5 Cable Specifications 45
7.6 Control Input/Output and Control Data 45
7.7 Fuses and Circuit Breakers 49

8 Appendix 50
8.1 Quick Menu Parameters 50
8.2 Parameter Menu Structure 53

Index 59

 Danfoss A/S © 11/2016 All rights reserved.

1 Introduction

1.1 Purpose of the Manual

This operating guide provides information for safe installation and commissioning of the frequency converter.

The operating guide is intended for use by qualified personnel.
Read and follow the instructions to use the frequency converter safely and professionally, and pay particular attention to the safety instructions and general warnings. Always keep this operating guide available with the frequency converter.

VLT® is a registered trademark.

1.2 Additional Resources

Supplementary publications and manuals are available.

- The *VLT® AutomationDrive FC 301/302 Programming Guide* provides greater detail on working with parameters and many application examples.
- The *VLT® Decentral Drive FCD 302 Design Guide* provides detailed information about capabilities and functionality to design motor control systems.
- Instructions for operation with optional equipment.

See *www.danfoss.com/BusinessAreas/DrivesSolutions/Documentations/VLT+Technical+Documentation.htm*.

1.3 Document and Software Version

This manual is regularly reviewed and updated. All suggestions for improvement are welcome. *Table 1.1* shows the document version and the corresponding software version.

Edition	Remarks	Software version
MG04F5xx	STO functionality has been updated.	7.5X

Table 1.1 Document and Software Version

1.4 Product Overview

1.4.1 Intended Use

The frequency converter is an electronic motor controller intended for:

- Regulation of motor speed in response to system feedback or to remote commands from external controllers. A power drive system consists of the frequency converter, the motor, and equipment driven by the motor.
- System and motor status surveillance.

The frequency converter can also be used for motor overload protection.

Depending on the configuration, the frequency converter can be used in standalone applications or form part of a larger appliance or installation.

The *VLT® Decentral Drive FCD 302* is designed for decentral mounting, for example, in the food and beverage industry, or for other material handling applications. With the FCD 302, it is possible to reduce costs by placing the power electronics decentrally. Central panels are then rendered obsolete, saving cost, space, and effort for installation and wiring. The basic design is service-friendly, with a pluggable electronic part, and a flexible and "spacious" wiring box. It is easy to change electronics without the need for rewiring.

The FCD 302 is designed according to the EHEDG guidelines, suitable for installation in environments with high focus on ease of cleaning.

NOTICE

Only frequency converters configured as hygienic enclosure designation, FCD 302 P XXX T4 W69, have the EHEDG certification.

Installation environment
The frequency converter is allowed for use in residential, industrial, and commercial environments in accordance with local laws and standards.

NOTICE

In a residential environment, this product can cause radio interference, in which case supplementary mitigation measures can be required.

Foreseeable misuse
Do not use the frequency converter in applications which are non-compliant with specified operating conditions and environments. Ensure compliance with the conditions specified in *chapter 7 Specifications*.

Danfoss A/S © 11/2016 All rights reserved.

1

1.4.2 Exploded Views

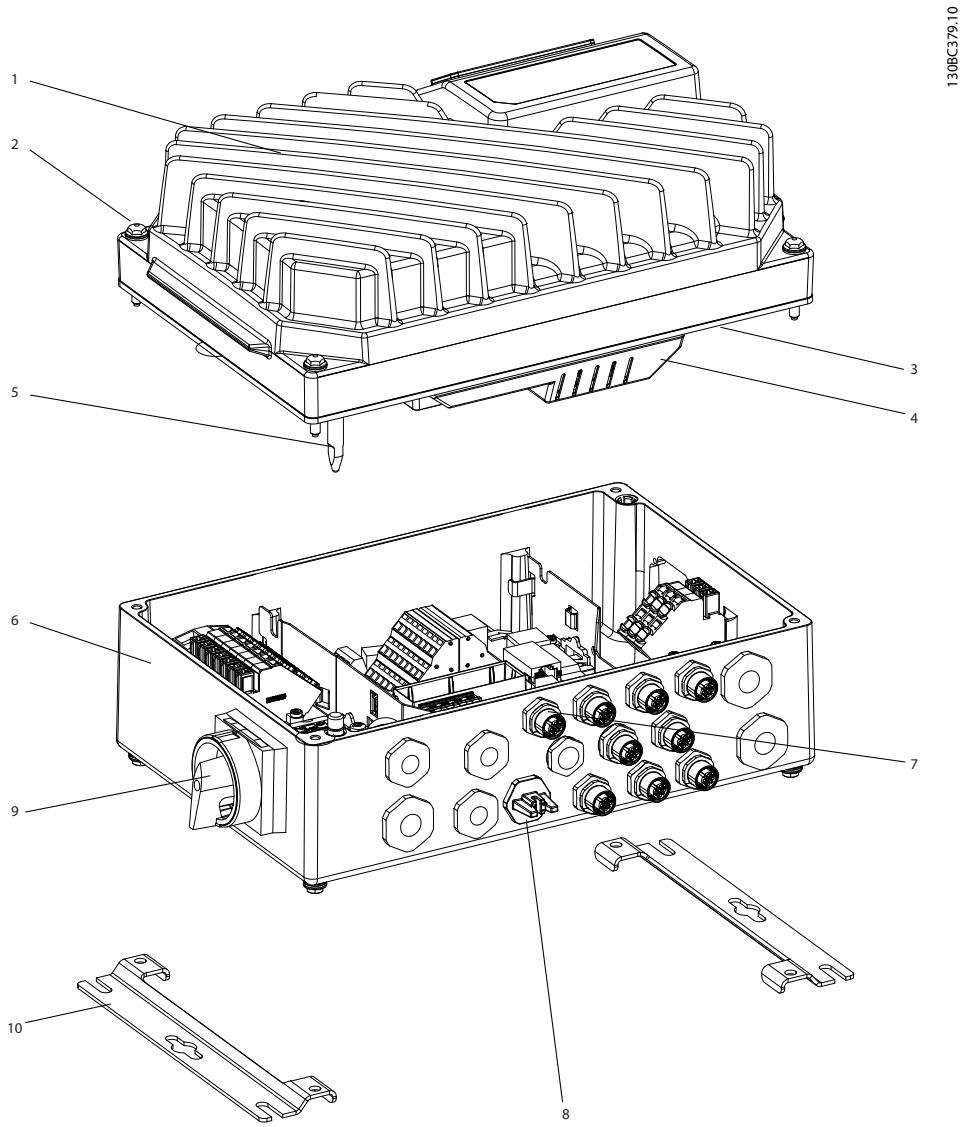

1	Inverter part	6	Installation box
2	Fastening screws (4 x, 1 in each corner)	7	Display connection
3	Sealing gasket	8	Access to USB port
4	Inverter part plastic cover	9	Service switch-motor side (alternatively, switch located on mains side, or not mounted)
5	Ground connection pin	10	Flat mounting brackets

Illustration 1.1 Exploded View Small Unit

Danfoss A/S © 11/2016 All rights reserved.

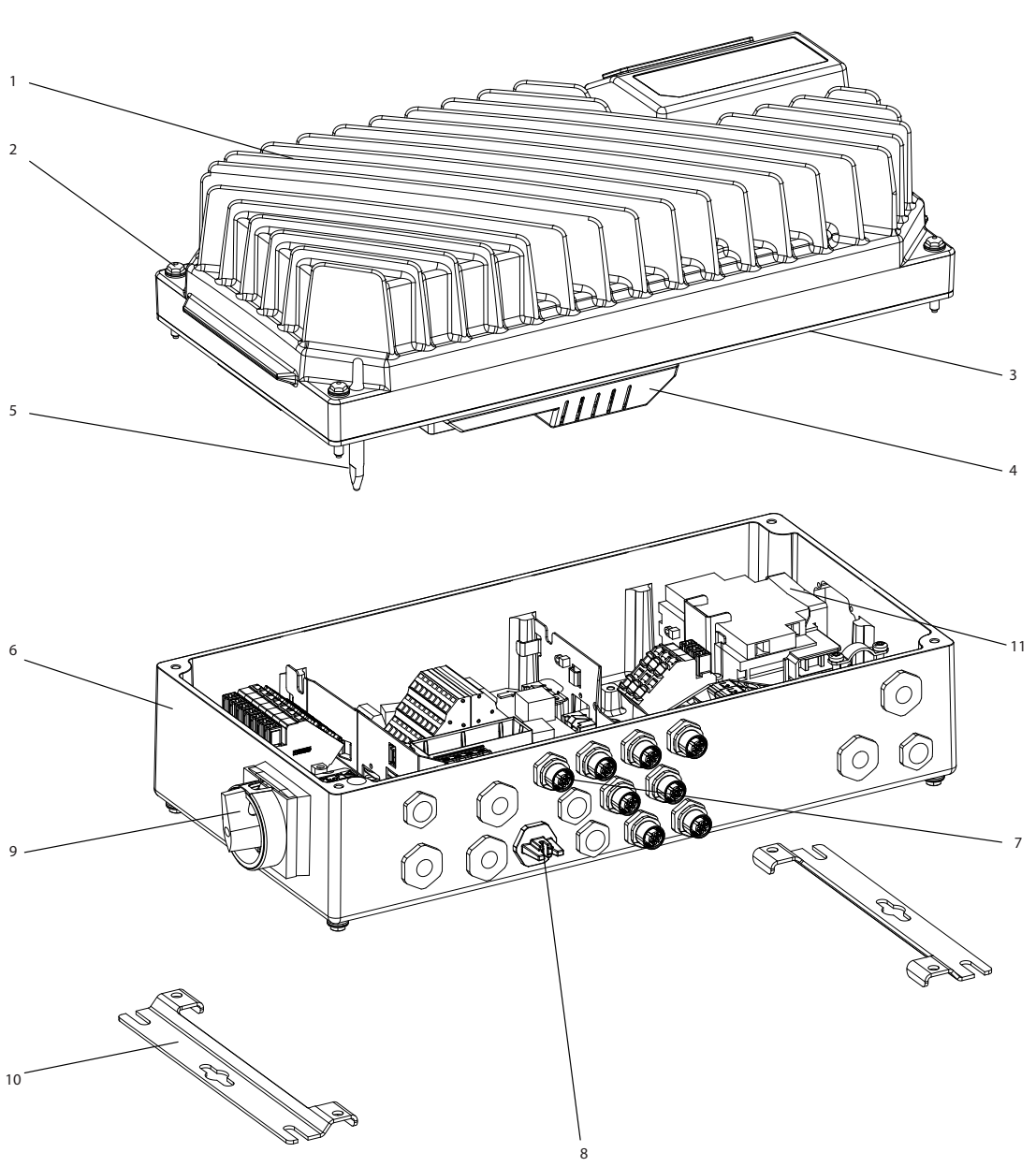

1	Inverter part	7	Display connection
2	Fastening screws (4 x, 1 in each corner)	8	Access to USB port
3	Sealing gasket	9	Service switch[1)] - motor side (alternatively, switch located on mains side, or not mounted)
4	Inverter part plastic cover	10	Flat mounting brackets
5	Ground connection pin	11	Circuit breaker[1)] (optional)
6	Installation box	–	–
1) The unit can be configured with either service switch or circuit breaker, not both. The illustration shown is not configurable in practice, but is shown to illustrate the respective positions of components only.			

Illustration 1.2 Exploded View Large Unit

1

1.4.3 Block Diagram

Illustration 1.3 is a block diagram of the internal components of the frequency converter.

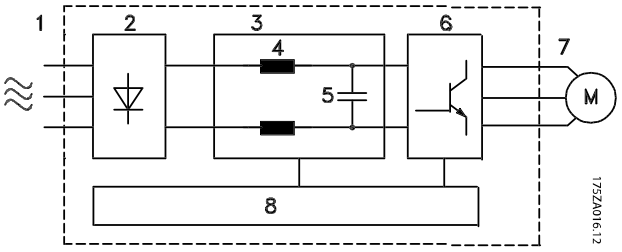

Area	Title	Functions
1	Mains input	3-phase AC mains supply to the frequency converter.
2	Rectifier	The rectifier bridge converts the AC input to DC current to supply inverter power.
3	DC bus	Intermediate DC-bus circuit handles the DC current.
4	DC reactors	• Filter the intermediate DC circuit voltage. • Provide mains transient protection. • Reduce RMS current. • Raise the power factor reflected back to the line. • Reduce harmonics on the AC input.
5	Capacitor bank	• Stores the DC power. • Provides ride-through protection for short power losses.
6	Inverter	The inverter converts the DC into a controlled PWM AC waveform for a controlled variable output to the motor.
7	Output to motor	Regulated 3-phase output power to the motor.
8	Control circuitry	• Input power, internal processing, output, and motor current are monitored to provide efficient operation and control. • User interface and external commands are monitored and performed. • Status output and control can be provided.

Illustration 1.3 Frequency Converter Block Diagram

1.5 Approvals and Certifications

Table 1.2 Approvals and Certifications

More approvals and certifications are available. Contact the local Danfoss partner. Frequency converters of enclosure size T7 (525–690 V) are UL certified for only 525–600 V.

The frequency converter complies with UL 508C thermal memory retention requirements. For more information, refer to the section *Motor Thermal Protection* in the product-specific *design guide*.

For compliance with the European Agreement concerning International Carriage of Dangerous Goods by Inland Waterways (ADN), refer to *ADN-compliant Installation* in the product-specific design guide.

Danfoss A/S © 11/2016 All rights reserved.

1.6 Symbols and Conventions

The following symbols are used in this manual:

⚠WARNING

Indicates a potentially hazardous situation that could result in death or serious injury.

⚠CAUTION

Indicates a potentially hazardous situation that could result in minor or moderate injury. It may also be used to alert against unsafe practices.

NOTICE

Indicates important information, including situations that may result in damage to equipment or property.

The following conventions are used in this manual:

- Numbered lists indicate procedures.
- Bullet lists indicate other information and description of illustrations.
- Italicized text indicates:
  - Cross-reference.
  - Link.
  - Footnote.
  - Parameter name.
  - Parameter group name.
  - Parameter option.
- All dimensions in drawings are in mm (inch).

Danfoss A/S © 11/2016 All rights reserved.

2 Safety

2

2.1 Safety Symbols

The following symbols are used in this guide:

⚠WARNING

Indicates a potentially hazardous situation that could result in death or serious injury.

⚠CAUTION

Indicates a potentially hazardous situation that could result in minor or moderate injury. It can also be used to alert against unsafe practices.

NOTICE

Indicates important information, including situations that can result in damage to equipment or property.

2.2 Qualified Personnel

Correct and reliable transport, storage, installation, operation, and maintenance are required for the trouble-free and safe operation of the frequency converter. Only qualified personnel are allowed to install and operate this equipment.

Qualified personnel are defined as trained staff, who are authorized to install, commission, and maintain equipment, systems, and circuits in accordance with pertinent laws and regulations. Also, the qualified personnel must be familiar with the instructions and safety measures described in this manual.

2.3 Safety Precautions

⚠WARNING

HIGH VOLTAGE

Frequency converters contain high voltage when connected to AC mains input, DC supply, or load sharing. Failure to perform installation, start-up, and maintenance by qualified personnel can result in death or serious injury.

- **Only qualified personnel must perform installation, start-up, and maintenance.**

⚠WARNING

UNINTENDED START

When the frequency converter is connected to AC mains, DC supply, or load sharing, the motor may start at any time. Unintended start during programming, service, or repair work can result in death, serious injury, or property damage. The motor can start via an external switch, a fieldbus command, an input reference signal from the LCP, or after a cleared fault condition.

To prevent unintended motor start:

- **Disconnect the frequency converter from the mains.**
- **Press [Off/Reset] on the LCP before programming parameters.**
- **Completely wire and assemble the frequency converter, motor, and any driven equipment before connecting the frequency converter to AC mains, DC supply, or load sharing.**

⚠WARNING

DISCHARGE TIME

The frequency converter contains DC-link capacitors, which can remain charged even when the frequency converter is not powered. High voltage can be present even when the warning indicator lights are off. Failure to wait the specified time after power has been removed before performing service or repair work could result in death or serious injury.

1. **Stop the motor.**
2. **Disconnect AC mains, permanent magnet type motors, and remote DC-link supplies, including battery back-ups, UPS, and DC-link connections to other frequency converters.**
3. **Wait for the capacitors to discharge fully before performing any service or repair work. The discharge time is specified in *Table 2.1*.**

 Danfoss A/S © 11/2016 All rights reserved.

Voltage [V]	Minimum waiting time (minutes)		
	4	7	15
200–240	0.25–3.7 kW (0.34–5 hp)	–	5.5–37 kW (7.5–50 hp)
380–500	0.25–7.5 kW (0.34–10 hp)	–	11–75 kW (15–100 hp)
525–600	0.75–7.5 kW (1–10 hp)	–	11–75 kW (15–100 hp)
525–690	–	1.5–7.5 kW (2–10 hp)	11–75 kW (15–100 hp)

Table 2.1 Discharge Time

⚠WARNING

LEAKAGE CURRENT HAZARD

Leakage currents exceed 3.5 mA. Failure to ground the frequency converter properly can result in death or serious injury.

- **Ensure the correct grounding of the equipment by a certified electrical installer.**

⚠WARNING

EQUIPMENT HAZARD

Contact with rotating shafts and electrical equipment can result in death or serious injury.

- **Ensure that only trained and qualified personnel perform installation, start-up, and maintenance.**
- **Ensure that electrical work conforms to national and local electrical codes.**
- **Follow the procedures in this guide.**

⚠WARNING

UNINTENDED MOTOR ROTATION WINDMILLING

Unintended rotation of permanent magnet motors creates voltage and can charge the unit, resulting in death, serious injury, or equipment damage.

- **Ensure that permanent magnet motors are blocked to prevent unintended rotation.**

⚠CAUTION

INTERNAL FAILURE HAZARD

An internal failure in the frequency converter can result in serious injury when the frequency converter is not properly closed.

- **Ensure that all safety covers are in place and securely fastened before applying power.**

Danfoss A/S © 11/2016 All rights reserved.

3 Mechanical Installation

3.1 Unpacking

3.1.1 Items Supplied

The packaging contains:

- Accessories bag, supplied only with order of installation box. Contents:
  - 2 cable clamps
  - Bracket for motor cables and loads cables
  - Elevation bracket for cable clamp
  - Screw 4 mm x 20 mm
  - Thread forming 3.5 mm x 8 mm
- Operating Guide
- Frequency converter

Depending on options fitted, the box contains 1 or 2 bags and 1 or more booklets.

Procedure

1. Make sure the items supplied and the information on the nameplate correspond to the order confirmation.
2. Check the packaging and the frequency converter visually for damage caused by inappropriate handling during shipment. File any claim for damage with the carrier. Retain damaged parts for clarification.

3.1.2 Product Identification

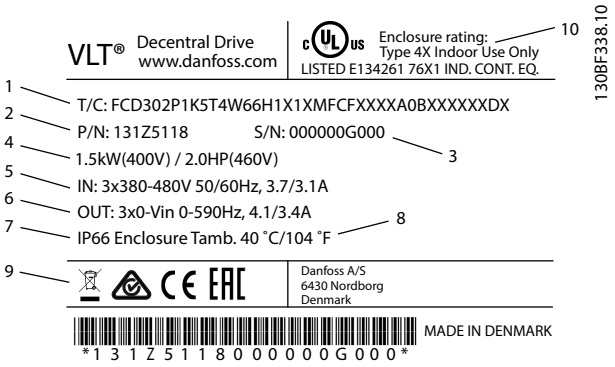

1	Type code
2	Ordering number
3	Serial number
4	Power rating
5	Input voltage, frequency, and current (at low/high voltages)
6	Output voltage, frequency, and current (at low/high voltages)
7	IP rating
8	Maximum ambient temperature
9	Certifications
10	NEMA enclosure type

Illustration 3.1 Product Nameplate (Example)

NOTICE

Do not remove the nameplate from the frequency converter (loss of warranty).

3.2 Mounting

NOTICE

In environments with airborne liquids, particles, or corrosive gases, ensure that the IP/type rating of the equipment matches the installation environment. Failure to meet requirements for ambient conditions can reduce the lifetime of the frequency converter. Ensure that requirements for air humidity, temperature, and altitude are met.

Vibration and shock

The frequency converter complies with requirements for units mounted on the walls and floors of production premises, and in panels bolted to walls or floors.

For detailed ambient conditions specifications, refer to *chapter 7.4 Ambient Conditions*.

3.2.1 Recommended Tools and Equipment

Equipment	Size	Description
Screwdrivers	–	–
Socket (hex)	8	For fastening inverter screws/mounting of brackets
Slotted	0.4x2.5	For spring loaded power and control terminals
Slotted/torx	1.0x5.5/TX20	For cable clamps inside the installation box
Spanner	19, 24, 28	For blind-plugs
LCP, ordering number 130B1078	–	Local control panel
LCP cable, ordering number 130B5776	–	Connection cable for local control panel

Table 3.1 Recommended Tools and Equipment

3.2.2 Mechanical Dimensions

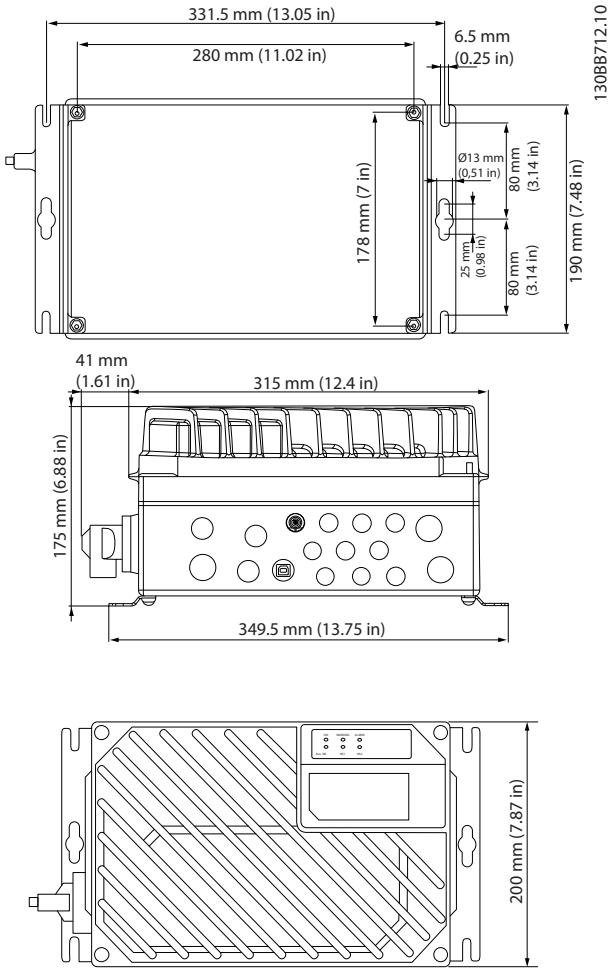

Illustration 3.2 Cable Entries and Hole Sizes (Small Unit)

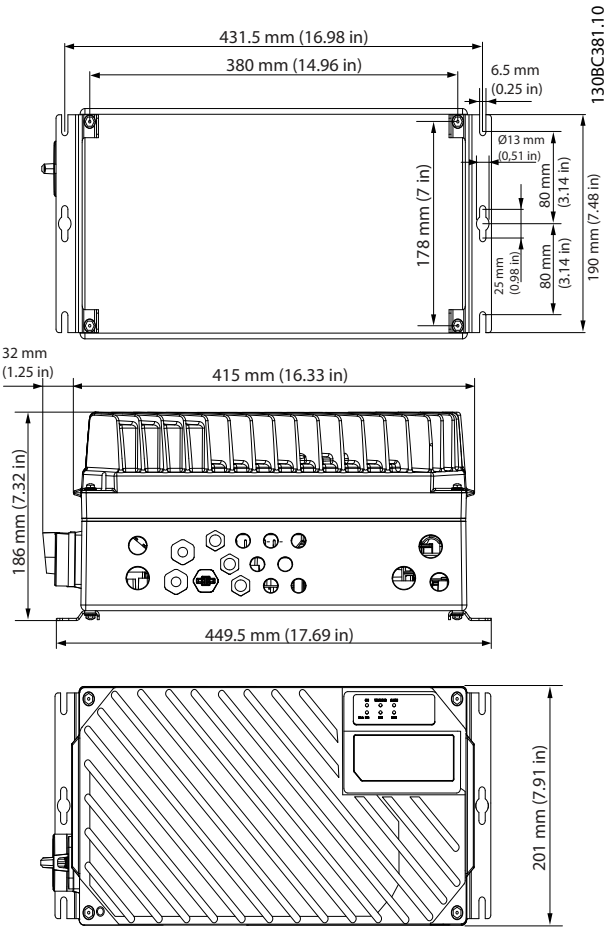

Illustration 3.3 Cable Entries and Hole Sizes (Large Unit)

Motor side	1xM20, 1xM25
Control side	2xM20, 9xM16[1)]
Mains side	2xM25

Table 3.2 Mechanical Dimensions

1) Also used for 4xM12/6xM12 sensor/acuator sockets.

3.2.3 Mounting

The *VLT® Decentral Drive FCD 302* consists of 2 parts:

- The installation box
- The inverter part

See *chapter 1.4.2 Exploded Views*.

Danfoss A/S © 11/2016 All rights reserved.

3

3.2.3.1 Allowed Mounting Positions

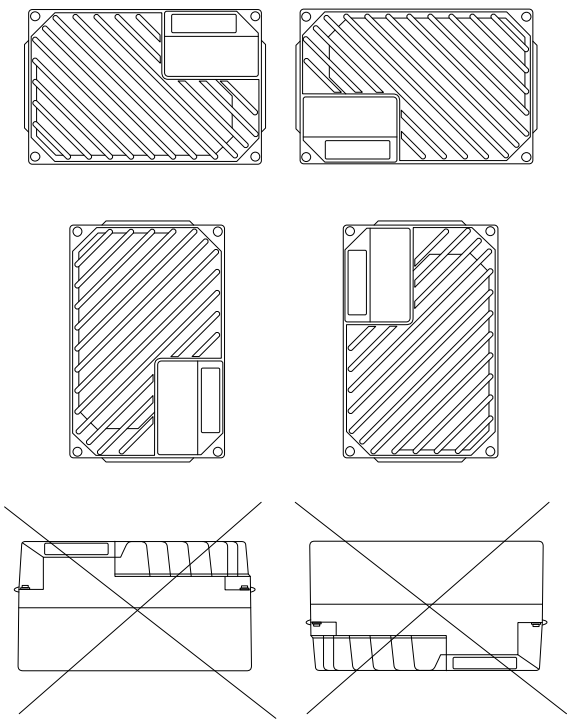

Illustration 3.4 Allowed Mounting Positions - Standard Applications

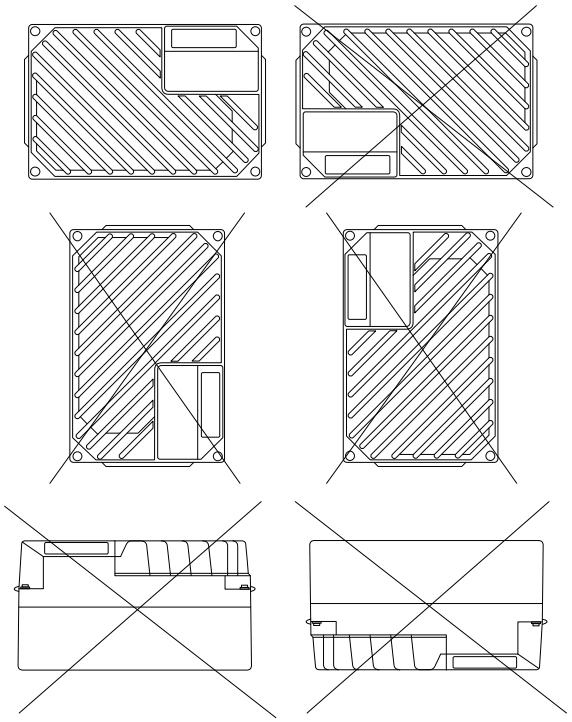

Illustration 3.5 Allowed Mounting Positions - Hygienic Applications

3.2.3.2 Mounting the Installation Box

⚠CAUTION

ELECTRICAL HAZARD

Do not apply power to the unit at this stage, as this could result in death or serious injury.

⚠CAUTION

DAMAGE OR PERSONAL INJURY

Failure to tighten the 4 mounting screws can result in personal injury or material damage.

- **Ensure that the strength of the mounting location can support the unit weight.**

Prerequisites:

- Use the holes on the rear of the installation box to fix the mounting brackets.
- Use proper mounting screws or bolts.
- For hygienic versions, use cable glands designed to meet hygienic application requirements, for example Rittal HD 2410.110/120/130.

1. Mount the VLT® Decentral Drive FCD 302 vertically on a wall or machine frame. For hygienic versions, ensure that liquids drain off the enclosure and orient the unit so the cable glands are located at the base.

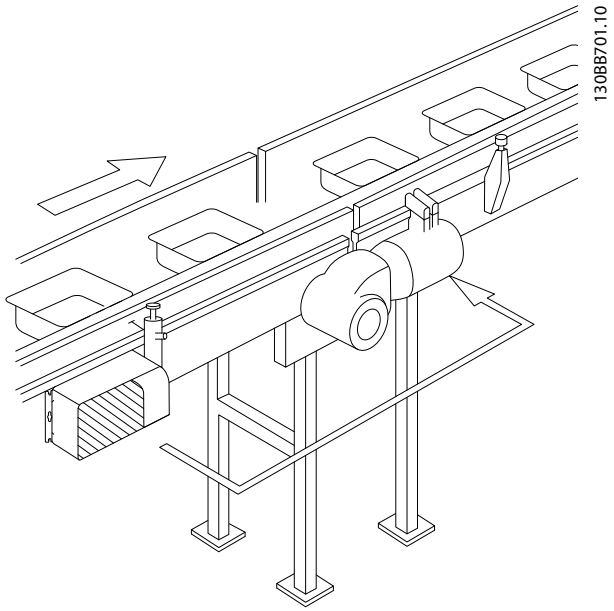

Illustration 3.6 FCD 302 Standalone Mounted with Mounting Brackets

 Danfoss A/S © 11/2016 All rights reserved.

4 Electrical Installation

4.1 Safety Instructions

See *chapter 2 Safety* for general safety instructions.

⚠WARNING

INDUCED VOLTAGE

Induced voltage from output motor cables that run together can charge equipment capacitors, even with the equipment turned off and locked out. Failure to run output motor cables separately or use shielded cables could result in death or serious injury.

- **Run output motor cables separately, or**
- **Use shielded cables.**

⚠CAUTION

SHOCK HAZARD

The frequency converter can cause a DC current in the PE conductor. Failure to follow the recommendation below means that the RCD may not provide the intended protection.

- **When a residual current-operated protective device (RCD) is used for protection against electrical shock, only an RCD of Type B is allowed on the supply side.**

Overcurrent protection

- Additional protective equipment, such as short-circuit protection or motor thermal protection between frequency converter and motor, is required for applications with multiple motors.
- Input fusing is required to provide short circuit and overcurrent protection. If not factory-supplied, the installer must provide the fuses. See UL/cUL approved pre-fuses in *chapter 7.7 Fuses and Circuit Breakers*.

Wire type and ratings

- All wiring must comply with local and national regulations regarding cross-section and ambient temperature requirements.
- Power connection wire recommendation: Minimum 75 °C (167 °F) rated copper wire.

See *chapter 7.1 Electrical Data* and *chapter 7.5 Cable Specifications* for recommended wire sizes and types.

4.2 EMC-compliant Installation

To obtain an EMC-compliant installation, follow the instructions provided in *chapter 4.3 Grounding*, *chapter 4.4 Wiring Schematic*, *chapter 4.7 Motor Connection*, and *chapter 4.10 Control Wiring*.

4.3 Grounding

⚠WARNING

LEAKAGE CURRENT HAZARD

Leakage currents exceed 3.5 mA. Failure to ground the frequency converter properly could result in death or serious injury.

- **Ensure the correct grounding of the equipment by a certified electrical installer.**

For electrical safety

- Ground the frequency converter in accordance with applicable standards and directives.
- Use a dedicated ground wire for input power, motor power, and control wiring.
- Do not ground one frequency converter to another in a daisy chain fashion.
- Keep the ground wire connections as short as possible.
- Follow motor manufacturer wiring requirements.
- Minimum cable cross-section: 10 mm^2 (7 AWG) (or 2 rated ground wires terminated separately).

For EMC-compliant installation

- Establish electrical contact between the cable shield and the frequency converter enclosure by using metal cable glands or by using the clamps provided on the equipment.
- To reduce burst transient, use high-strand wire.
- Do not use pigtails.

Danfoss A/S © 11/2016 All rights reserved.

NOTICE

POTENTIAL EQUALISATION

Risk of burst transient, when the ground potential between the frequency converter and the control system is different. Install equalizing cables between the system components. Recommended cable cross-section: 16 mm² (5 AWG).

4

⚠CAUTION

PE CONNECTION

The metal pins in the corners of the electronic part and the holes on the corner of the installation box are essential for the protective earth connection. Make sure that they are not loosened, removed, or violated in any way. Tightening torque requirement is 3 Nm. (26 in-lb). See *Illustration 4.1*.

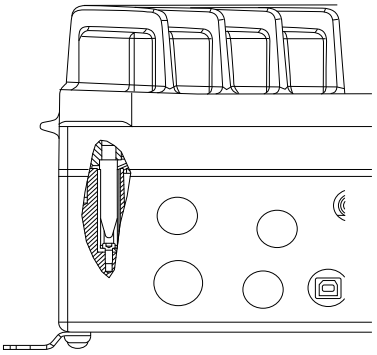

130BC391.10

Illustration 4.1 PE Connection between the Installation Box and the Electronic Part

NOTICE

The external grounding terminal is available as an accessory (part no: 130B5833).

Grounding shielded cable

Grounding clamps are provided for motor and control wiring (see *Illustration 4.2*).

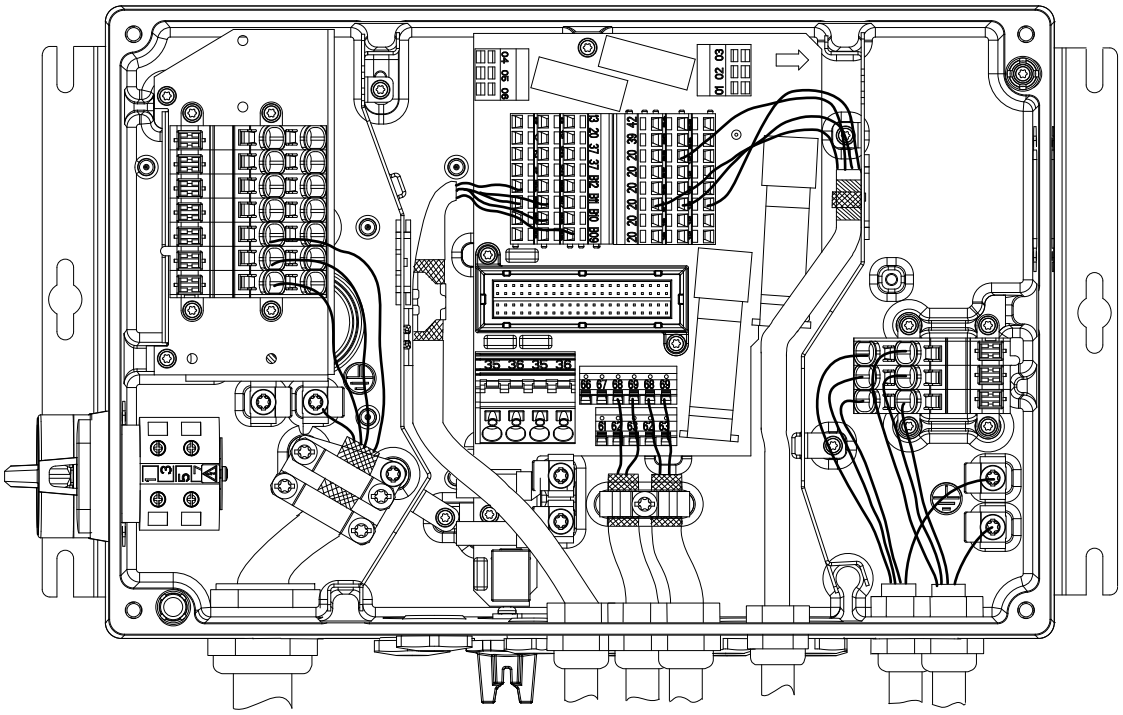

130BC403.10

Illustration 4.2 Grounding for Motor and Control Wiring (Small Unit)

Danfoss A/S © 11/2016 All rights reserved.

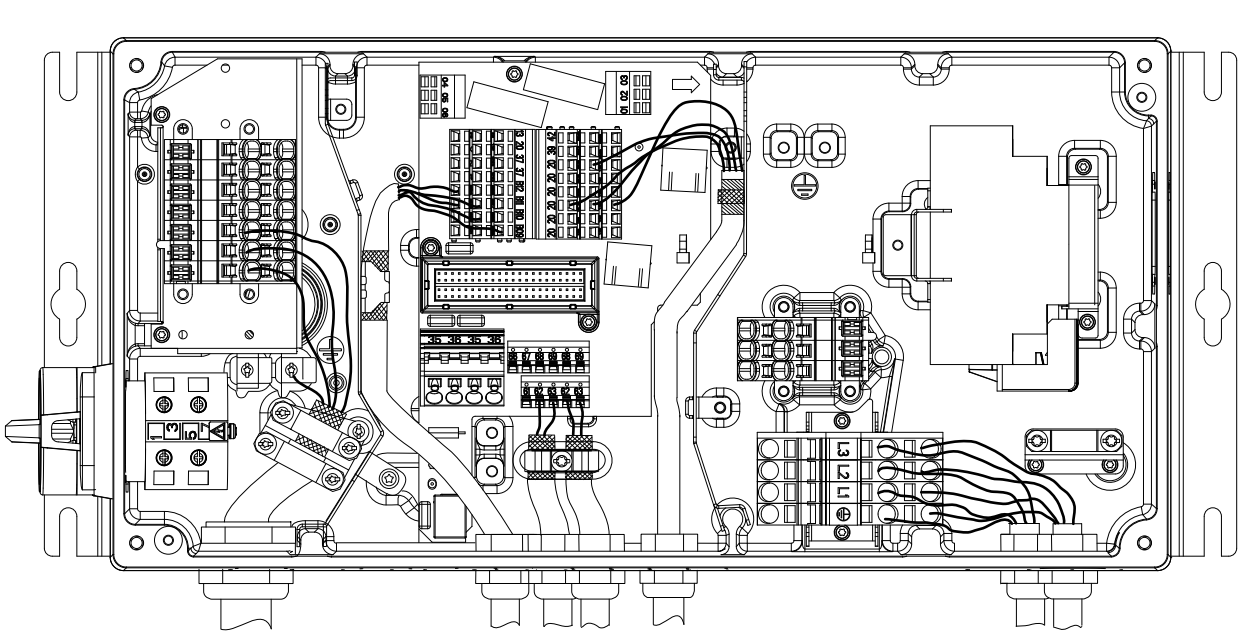

Illustration 4.3 Grounding Clamp for Motor and Control Wiring (Large Unit)

1. To remove the insulation for proper grounding, use a wire stripper.
2. Secure the grounding clamp to the stripped portion of the wire with the screws provided.
3. Secure the grounding wire to the grounding clamp provided.

Danfoss A/S © 11/2016 All rights reserved.

4.4 Wiring Schematic

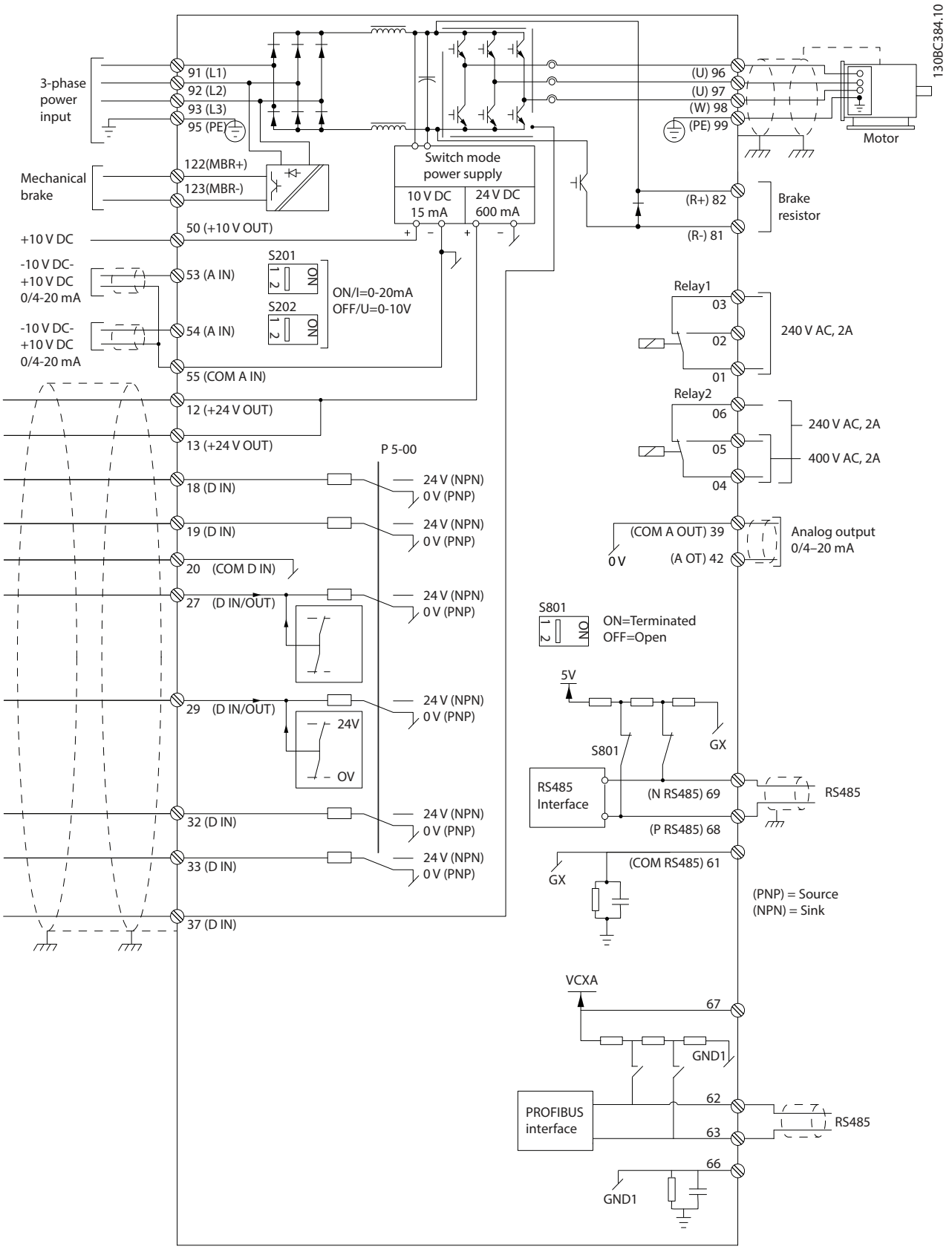

Illustration 4.4 Basic Wiring Schematic

Danfoss A/S © 11/2016 All rights reserved.

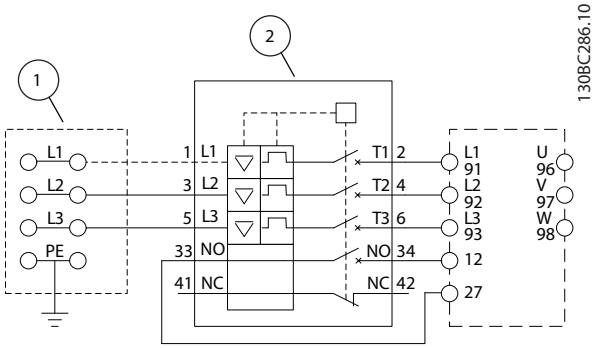

1	Looping terminals
2	Circuit breaker

Illustration 4.5 Large Unit only: Circuit Breaker and Mains Disconnect

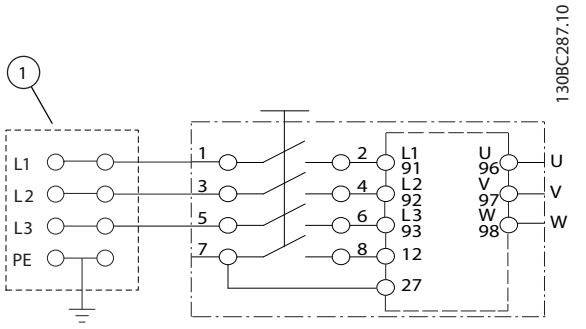

1	Looping terminals

Illustration 4.6 Large Unit only: Service Switch at Mains with Looping Terminals

NOTICE

EMC INTERFERENCE

Use shielded cables for motor and control wiring and separate cables for input power, motor wiring, and control wiring. Failure to isolate power, motor, and control cables can result in unintended behavior or reduced performance. Minimum clearance requirement between power, motor, and control cables is 200 mm (7.9 in).

Danfoss A/S © 11/2016 All rights reserved.

4.5 Location of Terminals

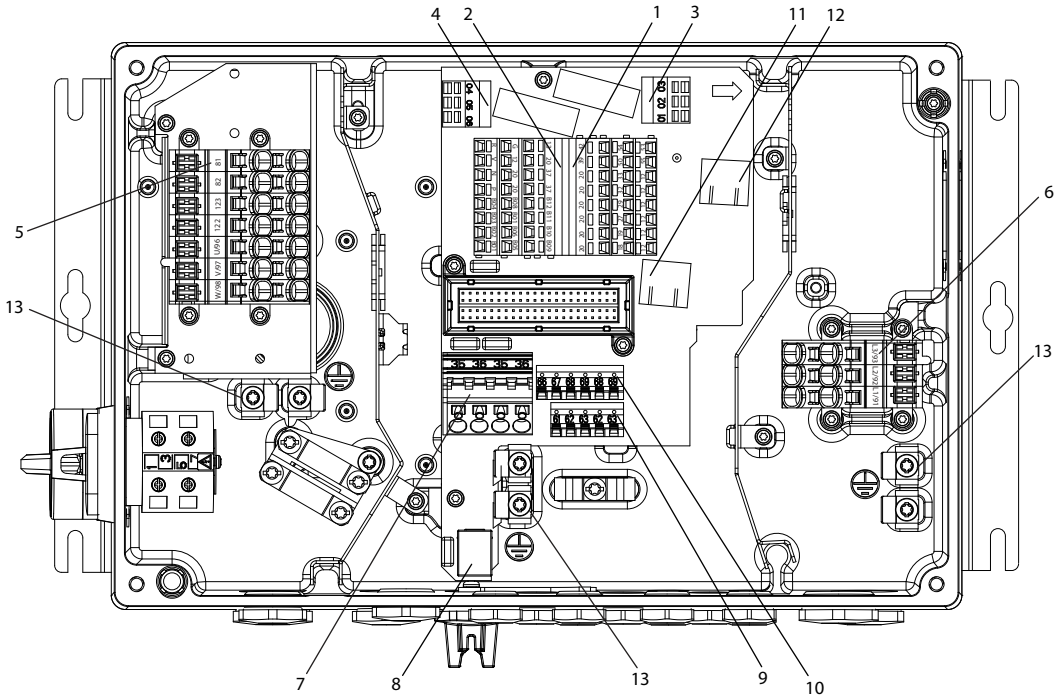

1	Digital and analog inputs/outputs	8	USB port
2	Safe Torque Off (STO), LCP connection, B-option	9	Standard bus/RS485
3	Relay 1	10	PROFIBUS
4	Relay 2	11	Ethernet port
5	Motor, mechanical brake, brake resistor	12	Ethernet port
6	Mains	13	Protective earth (PE)
7	24 V DC back-up input	–	–

Illustration 4.7 Location of Terminals (Small Unit)

Danfoss A/S © 11/2016 All rights reserved.

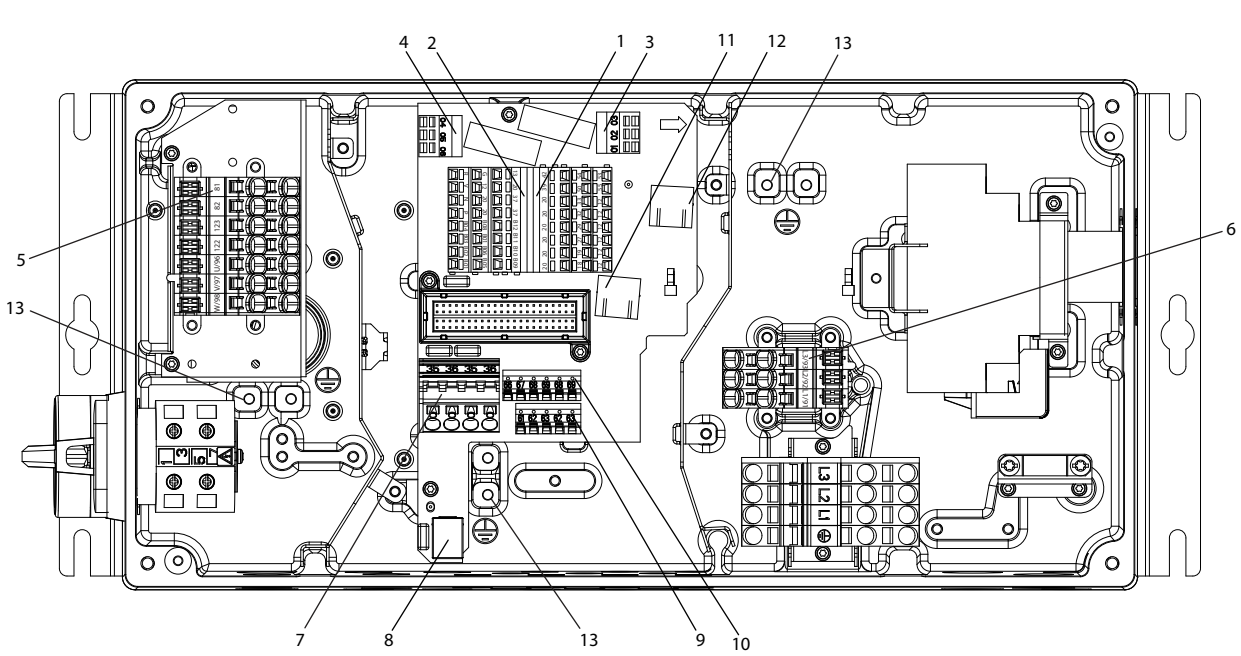

1	Digital and analog inputs/outputs	8	USB port
2	Safe Torque Off (STO), LCP connection, B-option	9	Standard bus/RS485
3	Relay 1	10	PROFIBUS
4	Relay 2	11	Ethernet port
5	Motor, mechanical brake, brake resistor	12	Ethernet port
6	Mains	13	Protective Earth (PE)
7	24 V DC back-up input	–	–

Illustration 4.8 Location of Terminals (Large Unit)

For both small and large units, the service switch is optional. The switch is shown mounted on the motor side. Alternatively, the switch can be on the mains side, or omitted.

For the large unit, the circuit breaker is optional. The large unit can be configured with either service switch or circuit breaker, not both. The setup shown in *Illustration 4.8*, is not configurable in practice, but is shown to illustrate the respective positions of components only.

4.6 Terminal Types

Motor, control, and mains terminals are spring loaded (Cage-clamp) type.

1. Open the contact by inserting a small screwdriver into the slot above the contact, as shown in *Illustration 4.9*.
2. Insert the stripped wire into the contact.
3. Remove the screwdriver to fasten the wire into the contact.
4. Ensure that the contact is firmly established and not loose. Loose wiring can result in equipment faults or injury.

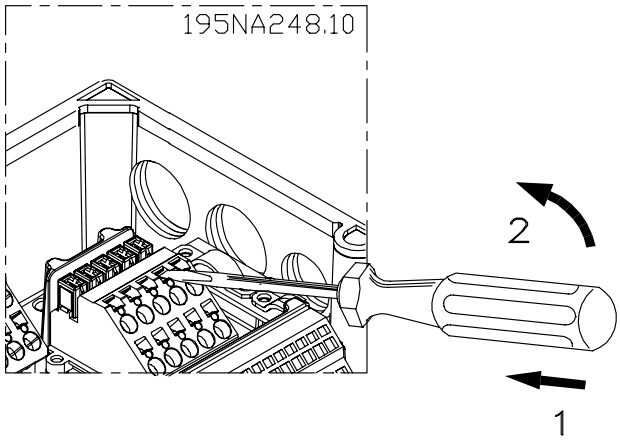

Illustration 4.9 Opening the Terminals

4.7 Motor Connection

⚠WARNING

INDUCED VOLTAGE

Induced voltage from output motor cables that run together can charge equipment capacitors even with the equipment turned off and locked out. Failure to run output motor cables separately or to use shielded cables, could result in death or serious injury.

4

NOTICE

MOTOR OVERLOAD PROTECTION

Protection against motor overload is not included in the factory setting. If this function is needed, set *parameter 1-90 Motor Thermal Protection* to either 1 of the trip options or 1 of the warning options. Refer to the *VLT® AutomationDrive FC 301/302 Programming Guide* for further information.

1. Connect the motor to terminals 96, 97, 98.
2. Connect ground to the PE-terminal.
3. Make sure that the shield of the motor cable is properly grounded at both ends (motor and frequency converter).
4. For correct dimensioning of cable cross-section, see *chapter 7.1 Electrical Data*.

Number			
96	97	98	Motor voltage 0–100% of mains voltage.
U	V	W	3 wires out of motor.
U1	V1	W1	6 wires out of motor.
W2	U2	V2	
U1	V1	W1	6 wires out of motor, star connected. Connect U2, V2, W2 separately (optional terminal block).
PE	–	–	Ground connection.

Table 4.1 Terminals 96, 97, 98

NOTICE

Do not install power factor correction capacitors between the frequency converter and the motor.
Do not wire a starting or pole-changing device between the frequency converter and the motor.

4.7.1 Connecting Several Motors

Parallel connection of motors

The frequency converter can control several parallel-connected motors. The total current consumption of the motors must not exceed the rated output current $I_{M,N}$ for the frequency converter.

NOTICE

- **Installations with cables connected in a common joint as in *Illustration 4.10*, is only recommended for short cable lengths (maximum 10 m (32.8 ft)).**
- **When motors are connected in parallel, *parameter 1-29 Automatic Motor Adaptation (AMA)* cannot be used.**

NOTICE

The electronic thermal relay (ETR) of the frequency converter cannot be used as motor overload protection for the individual motor in systems with parallel-connected motors. Provide further motor overload protection by thermistors in each motor or individual thermal relays. Circuit breakers are not suitable as protection.

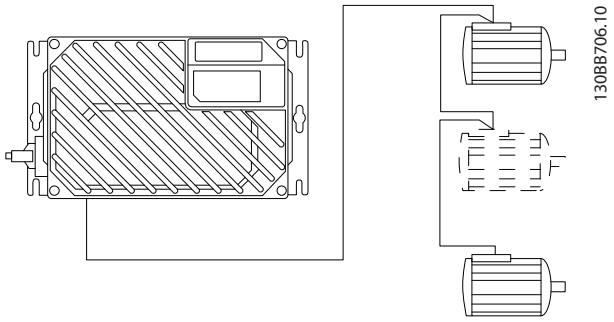

Illustration 4.10 Parallel Connection of Motors

Problems can occur at start-up and at low RPM values, when motor sizes differ widely. Motors of low rated motor power have a relatively high ohmic resistance in the stator. This high-resistance calls for a higher voltage at start and at low RPM values.

To resolve such a problem:

- Reduce the load during start-up on the motor of lowest rated motor power.
- Configure parallel connections only between motors of comparable rated motor power.

 Danfoss A/S © 11/2016 All rights reserved.

4.8 AC Mains Connection

Size wiring based on the input current of the frequency converter. See the maximum wire size in *Table 7.1* in *chapter 7 Specifications*.

Comply with local and national electrical codes for cable sizes.

Procedure

1. Connect 3-phase AC input power wiring to terminals L1, L2, and L3.
2. Depending on the configuration of the equipment, connect the input power to the mains terminals or the input disconnect.
3. Ground the cable in accordance with grounding instructions provided in *chapter 4.3 Grounding*.
4. When supplied from an isolated mains source (IT mains or floating delta) or TT/TN-S mains with a grounded leg (grounded delta), set *parameter 14-50 RFI Filter* to OFF. When set to OFF, the internal RFI filter capacitors between the chassis and the DC link are isolated to avoid damage to the DC link and to reduce ground capacity currents in accordance with IEC 61800-3.

Number			
91	92	93	Mains voltage 3x380–480 V
L1	L2	L3	–
PE	–	–	Ground connection

Table 4.2 Terminal 91, 92, and 93

4.9 Motor and Mains Connection with Service Switch

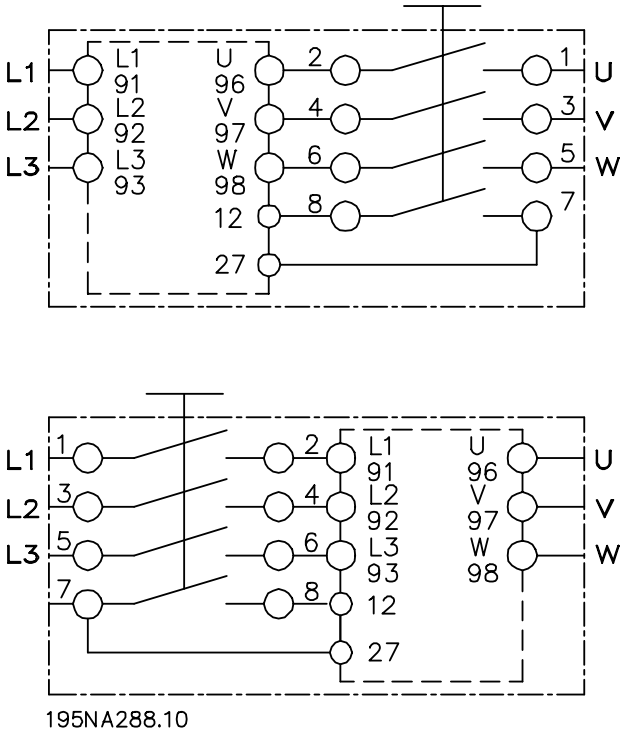

Illustration 4.11 Motor and Mains Connection with Service Switch

4.10 Control Wiring

⚠WARNING

UNINTENDED START

When the frequency converter is connected to AC mains, DC supply, or load sharing, the motor may start at any time. Unintended start during programming, service, or repair work can result in death, serious injury, or property damage. The motor can start via an external switch, a fieldbus command, an input reference signal from the LCP, or after a cleared fault condition.

To prevent unintended motor start:

- **Disconnect the frequency converter from the mains.**
- **Press [Off/Reset] on the LCP before programming parameters.**
- **Completely wire and assemble the frequency converter, motor, and any driven equipment before connecting the frequency converter to AC mains, DC supply, or load sharing.**

 Danfoss A/S © 11/2016 All rights reserved.

- It is recommended that control wiring is rated for 600 V.
- Isolate control wiring from high-power components in the frequency converter.
- If the frequency converter is connected to a thermistor, for PELV isolation, ensure that control wiring is reinforced/double insulated.

4

Terminal number	Function
01, 02, 03	Relay 1 output. Usable for AC or DC voltage and resistive or inductive loads.
04, 05, 06	Relay 2 output. Usable for AC or DC voltage and resistive or inductive loads.
12, 13	24 V DC digital supply voltage. Useable for digital inputs and external transducers. To use the 24 V DC for digital input common, program *parameter 5-00 Digital I/O Mode* for PNP operation.
18, 19, 32, 33	Digital inputs. Selectable for NPN or PNP function in *parameter 5-00 Digital I/O Mode*. Default is PNP.
27, 29	Digital inputs or outputs. Programmable for either *parameter 5-01 Terminal 27 Mode* for terminal 27 and *parameter 5-02 Terminal 29 Mode* for terminal 29 selects input/output function. Default setting is input.
35	Common (-) for external 24 V control back-up supply. Optional.
36	External + 24 V control back-up supply. Optional.
37	Safe Torque Off. See *chapter 4.16 Safe Torque Off (STO)* for details.
20	Common for digital inputs. To use for digital input common, program *parameter 5-00 Digital I/O Mode* for NPN operation.
39	Common for analog output.
42	Analog output. Programmable for various functions in *parameter group 6-5* Analog Output 1*. The analog signal is 0–20 mA or 4–20 mA at a maximum of 500 Ω.
50	10 V DC analog supply voltage. 15 mA maximum commonly used for a potentiometer or thermistor.
53, 54	Analog input. Selectable for voltage (0 to ±10 V) or current (0 or 4 to ±20 mA). Closed is for current and open is for voltage. Switches are located on the frequency converter control card. See *chapter 4.14 DIP Switches*
55	Common for analog inputs.
61	Common for serial communication (RS485 interface). See *chapter 4.3 Grounding*
68 (+), 69 (-)	RS485 interface. When the frequency converter is connected to an RS485 serial communication bus, a switch on the control card is provided for termination resistance. Set the switch to ON for termination and OFF for no termination.
62	RxD/TxD –P (red cable) for PROFIBUS. See the *VLT® PROFIBUS DP MCA 101 Installation Guide* for details.
63	RxD/TxD –N (green cable) for PROFIBUS.
66	0 V for PROFIBUS.
67	+5 V for PROFIBUS.
B01–B12	B-option. See dedicated literature for details.
G, R, V, N, P	Connection of LCP.

Table 4.3 Terminal Description

4.11 Brake Resistor

Number	Function	
81 (optional function)	R-	Brake resistor terminals
82 (optional function)	R+	

Table 4.4 Brake Resistor Terminals

The connection cable to the brake resistor must be shielded/armored. Connect the shield to the metal cabinet of the frequency converter and to the metal cabinet of the brake resistor with cable clamps.

Dimension the cross-section of the brake cable to match the brake torque.

4.12 Mechanical Brake

Number	Function	
122 (optional function)	MBR+	Mechanical brake UDC = 0.45 x RMS mains voltage
123 (optional function)	MBR-	Maximum current = 0.8 A

Table 4.5 Mechanical Brake Terminals

In hoisting/lowering applications, control of electro-mechanical brake is required:

- The brake is controlled using the special mechanical brake control/supply terminals 122 and 123.
- Select *[32] Mechanical brake control* in *parameter group 5-4* Relays*, *[1] Array,* Relay 2 for applications with an electro-mechanical brake.
- The brake is released when the motor current exceeds the preset value in *parameter 2-20 Release Brake Current*.
- The brake is engaged when the output frequency is less than the frequency set in *parameter 2-21 Activate Brake Speed [RPM]* or *parameter 2-22 Activate Brake Speed [Hz]*. The brake engages only when the frequency converter performs a stop command.

When the frequency converter enters alarm mode or is exposed to an overvoltage situation, the mechanical brake

 Danfoss A/S © 11/2016 All rights reserved.

immediately cuts in. For more detailed information, refer to the *VLT® AutomationDrive FC 301/302 Programming Guide*.

NOTICE

When the mechanical brake control/supply terminals 122 and 123 are set through *parameter group 5-4* Relays*, *[1] Array*, relay 2, only 1 relay output (relay 1) is available for free programming.

4.13 Connection of Sensors/Actuators on M12 Sockets

Pin	Wire color	Terminal	Function
1	Brown	12	+24 V
3	Blue	20	0 V
4	Black	18, 19, 32, 33	Digital input

Table 4.6 4xM12 Connection Input

Pin	Wire color	Terminal	Function
1	Brown	Reserved[1)]	Reserved
3	Blue	20	0 V
4	Black	02, 05	NO (24 V)

Table 4.7 2xM12 Connection Output

1) When reserved wires for option are used. If not utilized, they can be cut off.

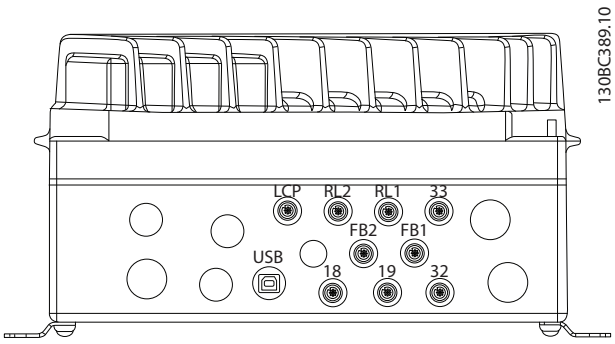

Illustration 4.12 Connection of Sensors/Actuators on M12 Sockets

4.14 DIP Switches

- Select analog input terminals 53 and 54 for either voltage (0–10 V) or current (0–20 mA) input signals.
- Set switches S201 (terminal 53) and S202 (terminal 54) to select the signal type. ON is for current, OFF for voltage.
- Terminal 53 default is for a speed reference in open loop.
- Terminal 54 default is for a feedback signal in closed loop.

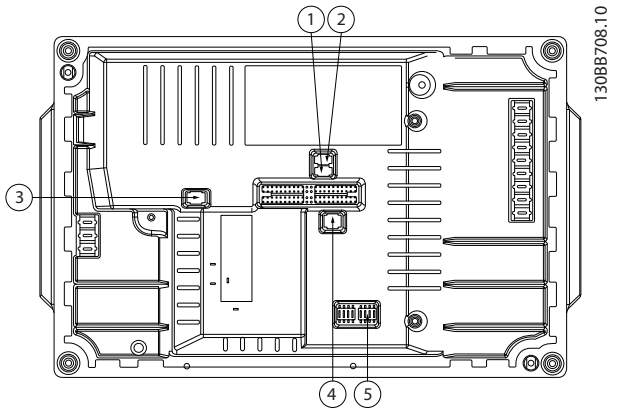

1	S201 - terminal 53
2	S202 - terminal 54
3	S801 - standard bus termination
4	PROFIBUS termination
5	Fieldbus address

Illustration 4.13 Location of DIP Switches

NOTICE

Switches 4 and 5 are only valid for units fitted with fieldbus options.

Refer to *VLT® PROFIBUS DP MCA 101 Programming Guide* for further information.

4.15 RS485 Serial Communication

Connect RS485 serial communication wiring to terminals (+)68 and (-)69.

- Use shielded serial communication cable (recommended).
- See *chapter 4.3 Grounding* for proper grounding.

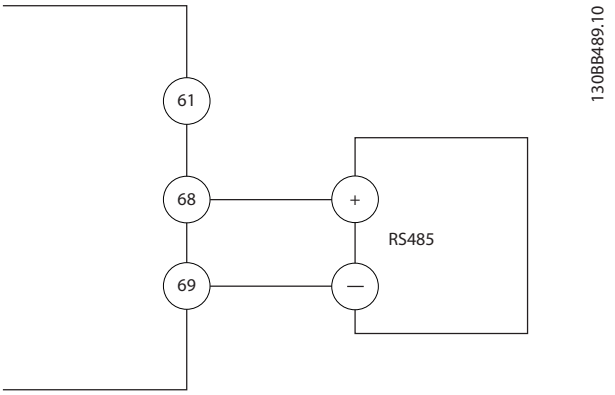

Illustration 4.14 Serial Communication Wiring Diagram

For basic serial communication set-up, select the following:

1. Protocol type in *parameter 8-30 Protocol*.
2. Frequency converter address in *parameter 8-31 Address*.
3. Baud rate in *parameter 8-32 Baud Rate*.

Two communication protocols are internal to the frequency converter.

- Danfoss FC
- Modbus RTU

Functions can be programmed remotely using the protocol software and RS485 connection or in *parameter group 8-** Communications and Options*.

Selecting a specific communication protocol changes various default parameter settings to match that protocol's specifications and makes additional protocol-specific parameters available.

Option cards for the frequency converter are available to provide additional communication protocols. See the option card documentation for installation and operation instructions.

4.16 Safe Torque Off (STO)

To run STO, additional wiring for the frequency converter is required. Refer to *VLT® Frequency Converters Safe Torque Off Operating Instructions* for further information.

4.17 Installation Check List

Before completing installation of the unit, inspect the entire installation as detailed in *Table 4.8*. Check and mark the items when completed.

Inspect for	Description	☑
Auxiliary equipment	• Look for auxiliary equipment, switches, disconnects, or input fuses/circuit breakers located on input power side of the frequency converter, or output side to motor. Examine their operational readiness and ensure that they are ready in all respects for operation at full speed. • Check function and installation of any sensors used for feedback to the frequency converter. • Remove power factor correction caps on motor(s), if present.	
Cable routing	Ensure that input power, motor wiring, and control wiring are separated or in 3 separate metallic conduits for high frequency noise isolation.	
Control wiring	• Check for broken or damaged wires and connections. • Check the voltage source of the signals, if necessary. • The use of shielded cable or twisted pair is recommended. Ensure that the shield is terminated correctly at both ends.	
EMC considerations	Check for proper installation regarding electromagnetic compatibility.	

Inspect for	Description	☑
Environmental considerations	See equipment label for the maximum ambient operating temperature limits. Temperature is not to exceed 40 °C (104 °F). Humidity levels must be 5–95% non-condensing.	
Cooling clearance	Units require top and bottom clearance adequate to ensure proper airflow for cooling.	
Fusing and circuit breakers	Check that all fuses are inserted firmly and in operational condition and that all circuit breakers are in the open position. Check for proper fusing or circuit breakers.	
Input and output power wiring	• Check for loose connections. • Check for proper fusing or circuit breakers.	
Switches	Ensure that all switch and disconnect settings are in the proper position.	
Grounding	The equipment requires a dedicated ground wire from its chassis to the plant ground. Check for good ground connections that are tight and free of oxidation.	
Installation box and electronics part	Ensure the installation box and the electronics part is properly closed. Check that all 4 fastening screws are tightened with the right torque.	

 Danfoss A/S © 11/2016 All rights reserved.

Inspect for	Description	☑
Cable glands and blind plugs	Ensure that the cable glands and blind plugs are properly tightened, to guarantee the right enclosure protection degree is achieved. Liquids and/or excessive dust ingress in the frequency converter can cause suboptimal performance or damage.	
Vibration	Ensure that the equipment is not exposed to a high level of vibration. Mount the panel solidly or use shock mounts as necessary.	

Table 4.8 Start-Up Check List

⚠CAUTION

POTENTIAL HAZARD IN THE EVENT OF INTERNAL FAILURE
Risk of personal injury if the frequency converter is not properly closed.

- **Before applying power, ensure that all safety covers are in place and securely fastened.**

4.18.1 Installing the Inverter Part

To compress the gasket between the 2 parts:

1. Tighten the 4 connection screws to torque 2.8–3.0 Nm. (24–26 in-lb).
2. Tighten the 4 screws in diagonally opposite order.
3. Tighten the 2 grounding spears to torque 3.0 Nm. (26 in-lb).

Danfoss A/S © 11/2016 All rights reserved.

5 Commissioning

5.1 Applying Power

⚠WARNING

UNINTENDED START

When the frequency converter is connected to AC mains, DC supply, or load sharing, the motor may start at any time. Unintended start during programming, service, or repair work can result in death, serious injury, or property damage. The motor can start via an external switch, a fieldbus command, an input reference signal from the LCP, or after a cleared fault condition.

To prevent unintended motor start:

- **Disconnect the frequency converter from the mains.**
- **Press [Off/Reset] on the LCP before programming parameters.**
- **Completely wire and assemble the frequency converter, motor, and any driven equipment before connecting the frequency converter to AC mains, DC supply, or load sharing.**

See *chapter 2 Safety* for general safety instructions.

⚠WARNING

HIGH VOLTAGE

Frequency converters contain high voltage when connected to AC mains input power. Failure to perform installation, start-up, and maintenance by qualified personnel could result in death or serious injury.

- **Installation, start-up, and maintenance must be performed by qualified personnel only.**

Before applying power:

1. Close the cover properly.
2. Check that all cable glands are firmly tightened.
3. Ensure that input power to the unit is off and locked out. Do not rely on the frequency converter disconnect switches for input power isolation.
4. Verify that there is no voltage on input terminals L1 (91), L2 (92), and L3 (93), phase-to-phase, and phase-to-ground.
5. Verify that there is no voltage on output terminals 96 (U), 97 (V), and 98 (W), phase-to-phase, and phase-to-ground.
6. Confirm continuity of the motor by measuring Ω values on U–V (96–97), V–W (97–98), and W–U (98–96).
7. Check for proper grounding of the frequency converter and the motor.
8. Inspect the frequency converter for loose connections on the terminals.
9. Confirm that the supply voltage matches the voltage of the frequency converter and the motor.

Apply power to the frequency converter using the following steps:

1. Confirm that the input voltage is balanced within 3%. If not, correct the input voltage imbalance before proceeding. Repeat this procedure after the voltage correction.
2. Ensure that any optional equipment wiring matches the installation application.
3. Ensure that all operator devices are in the OFF position. Panel doors must be closed and covers securely fastened.
4. Apply power to the unit. Do not start the frequency converter now. For units with a disconnect switch, turn it to the ON position to apply power to the frequency converter.

5.2 Local Control Panel Operation

The local control panel (LCP) is the combined display and keypad on the front of the unit.

The LCP has several user functions:

- Start, stop, and control speed when in local control.
- Show operational data, status, warnings, and cautions.
- Program frequency converter functions.
- Manually reset the frequency converter after a fault when auto reset is inactive.

NOTICE

For commissioning via PC, install the MCT 10 Set-up Software. The software is available for download (basic version) or for ordering (advanced version, code number 130B1000). For more information and downloads, see *www.danfoss.com/BusinessAreas/DrivesSolutions/Software+MCT10/MCT10+Downloads.htm*.

 Danfoss A/S © 11/2016 All rights reserved.

NOTICE

During start-up, the LCP shows the message *INITIALISING*. When this message is no longer shown, the frequency converter is ready for operation. Adding or removing options can extend the duration of start-up.

5.2.1 Graphic Local Control Panel Layout

The graphic local control panel (GLCP) is divided into 4 functional groups (see *Illustration 5.1*).

A. Display area.

B. Display menu keys.

C. Navigation keys and indicator lights.

D. Operation keys and reset.

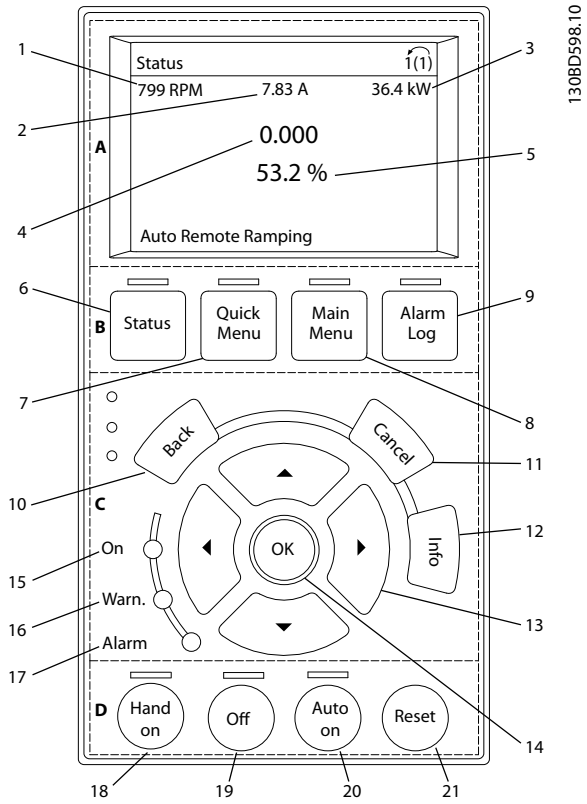

Illustration 5.1 GLCP

A. Display area

The display area is activated when the frequency converter receives power from the mains voltage, a DC bus terminal, or a 24 V DC external supply.

The information shown on the LCP can be customized for user applications. Select options in the *Quick Menu Q3-13 Display Settings*.

Display	Parameter	Default setting
1	*Parameter 0-20 Display Line 1.1 Small*	*[1617] Speed [RPM]*
2	*Parameter 0-21 Display Line 1.2 Small*	*[1614] Motor Current*
3	*Parameter 0-22 Display Line 1.3 Small*	*[1610] Power [kW]*
4	*Parameter 0-23 Display Line 2 Large*	*[1613] Frequency*
5	*Parameter 0-24 Display Line 3 Large*	*[1602] Reference %*

Table 5.1 Legend to *Illustration 5.1*, Display Area

B. Display menu keys

Menu keys are used for menu access for parameter set-up, toggling through status display modes during normal operation, and viewing fault log data.

	Key	Function
6	Status	Shows operational information.
7	Quick Menu	Allows access to programming parameters for initial set-up instructions and many detailed application instructions.
8	Main Menu	Allows access to all programming parameters.
9	Alarm Log	Shows a list of current warnings, the last 10 alarms, and the maintenance log.

Table 5.2 Legend to *Illustration 5.1*, Display Menu Keys

C. Navigation keys and indicator lights (LEDs)

Navigation keys are used for programming functions and moving the display cursor. The navigation keys also provide speed control in local operation. There are also 3 frequency converter status indicator lights in this area.

	Key	Function
10	Back	Reverts to the previous step or list in the menu structure.
11	Cancel	Cancels the last change or command as long as the display mode is not changed.
12	Info	Press for a definition of the function being showed.
13	Navigation Keys	Press the navigation keys to move between items in the menu.
14	OK	Press to access parameter groups or to enable a selection.

Table 5.3 Legend to *Illustration 5.1*, Navigation Keys

Danfoss A/S © 11/2016 All rights reserved.

	Indicator	Color	Function
15	On	Green	The ON indicator light activates when the frequency converter receives power from the mains voltage, a DC bus terminal, or a 24 V external supply.
16	Warn	Yellow	When warning conditions are met, the yellow WARN indicator light comes on and text appears in the display area identifying the problem.
17	Alarm	Red	A fault condition causes the red alarm LED to flash and an alarm text is shown.

Table 5.4 Legend to *Illustration 5.1*, Indicator Lights (LEDs)

D. Operation keys and reset
Operation keys are at the bottom of the LCP.

	Key	Function
18	[Hand On]	Starts the frequency converter in local control. • An external stop signal by control input or serial communication overrides the local hand on.
19	Off	Stops the motor but does not remove power to the frequency converter.
20	[Auto On]	Puts the system in remote operational mode. • Responds to an external start command by control terminals or serial communication.
21	Reset	Resets the frequency converter manually after a fault has been cleared.

Table 5.5 Legend to *Illustration 5.1*, Operation Keys and Reset

NOTICE

To adjust the display contrast, press [Status] and the [▲]/[▼] keys.

5.3 Basic Programming

Frequency converters require basic operational programming before running for best performance. Basic operational programming requires entering motor nameplate data for the motor being operated and the minimum and maximum motor speeds. Enter the data in accordance with the following procedure. See *chapter 5.2 Local Control Panel Operation*, for detailed instructions on entering data through the LCP. Enter the data with power ON, but before operating the frequency converter.

1. Press [Quick Menu] on the LCP.
2. Use the navigation keys to scroll to *parameter group Q2 Quick Setup* and press [OK].

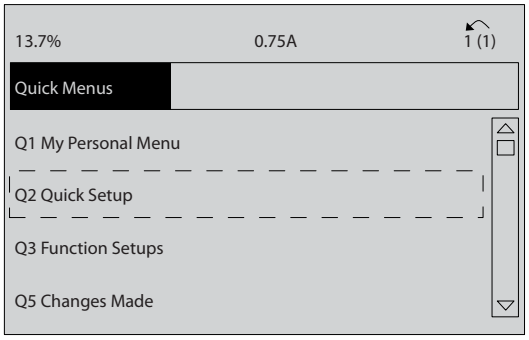

Illustration 5.2 Parameter Group Q2 Quick Setup

3. Select language and press [OK].
4. Then enter the motor data in *parameter 1-20 Motor Power [kW]/ parameter 1-21 Motor Power [HP]* through *parameter 1-25 Motor Nominal Speed*. The information can be found on the motor nameplate. The entire quick menu is shown in *International/North American Default Parameter Settings*
   - 4a *Parameter 1-20 Motor Power [kW]*
   - 4b *Parameter 1-21 Motor Power [HP]*
   - 4c *Parameter 1-22 Motor Voltage*
   - 4d *Parameter 1-23 Motor Frequency*
   - 4e *Parameter 1-24 Motor Current*
   - 4f *Parameter 1-25 Motor Nominal Speed*

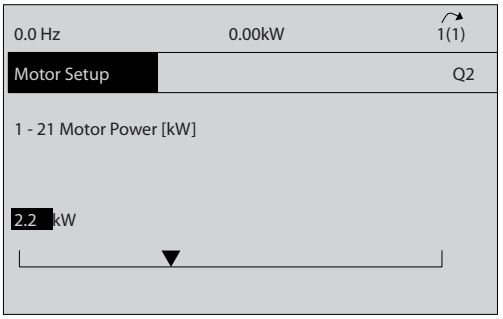

Illustration 5.3 Motor Set-up

5. Continue the set-up of Quick Menu parameters:
   - 5a *Parameter 5-12 Terminal 27 Digital Input*. If terminal default is *Coast inverse*, it is possible to change this setting to *No function*.
   - 5b *Parameter 1-29 Automatic Motor Adaptation (AMA)*. Set the desired AMA

 Danfoss A/S © 11/2016 All rights reserved.

function. Enable complete AMA is recommended. See details in *chapter 5.4 System Start-up*.

5c *Parameter 3-02 Minimum Reference*. Set the minimum speed of the motor shaft.

5d *Parameter 3-03 Maximum Reference*. Set the maximum speed of the motor shaft.

5e *Parameter 3-41 Ramp 1 Ramp Up Time*. Set the ramping up time regarding synchronous motor speed, ns.

5f *Parameter 3-42 Ramp 1 Ramp Down Time*. Set the ramping down time regarding synchronous motor speed, ns.

5g *Parameter 3-13 Reference Site*. Set the site from where the reference must work.

See *chapter 8.1 Quick Menu Parameters* for further details.

5.4 System Start-up

Automatic motor adaptation (AMA) is a test procedure which measures the electrical characteristics of the motor. The AMA procedure optimizes compatibility between the frequency converter and the motor. The frequency converter builds a mathematical model of the motor for regulating output motor current. The procedure also tests the input phase balance of electrical power and compares the motor characteristics with the data entered in *parameters 1–20 to 1–25*. Run this procedure at start-up. It does not cause the motor to run and it does not harm the motor. For best result, run the procedure on a cold motor.

To run AMA

1. Enter the motor nameplate data in the frequency converter, as described in *chapter 5.3 Basic Programming*.
2. Connect terminal 37 to terminal 13.
3. Connect terminal 27 to terminal 12 or set *parameter 5-12 Terminal 27 Digital Input* to *[0] No function*.
4. Activate *parameter 1-29 Automatic Motor Adaptation (AMA)*.
5. Select either complete or reduced AMA.
6. Press [OK]. The display shows *Press [Hand On] to start*.
7. Press [Hand On]. A progress bar indicates that the AMA is in progress.

Stop the AMA during operation

Press [Off] - the frequency converter enters alarm mode, and the display shows that the AMA procedure is terminated.

Successful AMA

1. The display shows *Press [OK] to finish AMA*.
2. Press [OK] to exit the AMA state.

Unsuccessful AMA

1. The frequency converter enters alarm mode. A description of the alarm can be found in *chapter 6.6 List of Warnings and Alarms*.
2. *Report Value* in the [Alarm Log] shows the last measuring sequence carried out by the AMA, before the frequency converter entered alarm mode. This number along with the description of the alarm helps with troubleshooting. If contacting Danfoss for service, make sure to mention number and alarm description.

NOTICE

Frequent causes of unsuccessful AMA:

- **Incorrectly registered motor nameplate data.**
- **Too great a difference between the motor power size and the frequency converter power size.**

5.4.1 Local Control Test

1. Press [Hand On] to provide a local start command to the frequency converter.
2. Accelerate the frequency converter by pressing [▲] to full speed. Moving the cursor left of the decimal point provides quicker input changes.
3. Note any acceleration problems.
4. Press [Off]. Note any deceleration problems.

If acceleration or deceleration problems occur see *chapter 6 Maintenance, Diagnostics, and Troubleshooting*. See *chapter 6.6 List of Warnings and Alarms* for resetting the frequency converter after a trip.

5.4.2 System Start-up

The procedure in this section requires wiring and application programming to be completed. The following procedure is recommended after application set-up is completed.

1. Press [Auto On].
2. Apply an external run command.
3. Adjust the speed reference throughout the speed range.
4. Remove the external run command.
5. Check the sound and vibration levels of the motor to ensure that the system is working as intended.

 Danfoss A/S © 11/2016 All rights reserved.

If warnings or alarms occur, see *chapter 6.5 Warning and Alarm Types* or *chapter 6.6 List of Warnings and Alarms*.

5.5 Operation

5.5.1 Uploading/Downloading Data to/from the LCP

1. Press [Off] to stop the motor before uploading or downloading data.
2. Press [Main Menu], select *parameter 0-50 LCP Copy* and press [OK].
3. Select *[1] All to LCP* to upload data to the LCP or select *[2] All from LCP* to download data from the LCP.
4. Press [OK]. A progress bar shows the uploading or downloading progress.
5. Press [Hand On] or [Auto On] to return to normal operation.

5.5.2 Changing Parameter Settings

Access and change parameter settings from the *Quick Menu* or from the *Main Menu*. The *Quick Menu* only gives access to a limited number of parameters.

1. Press [Quick Menu] or [Main Menu] on the LCP.
2. Press [▲] [▼] to browse through the parameter groups, press [OK] to select a parameter group.
3. Press [▲] [▼] to browse through the parameters, press [OK] to select a parameter.
4. Press [▲] [▼] to change the value of a parameter setting.
5. Press [◄] [►] to shift digit when a decimal parameter is in the editing state.
6. Press [OK] to accept the change.
7. Press either [Back] twice to enter *Status*, or press [Main Menu] once to enter the *Main Menu*.

View changes
Quick Menu Q5 - Changes Made lists all parameters changed from default settings.

- The list only shows parameters, which are changed in the current edit set-up.
- Parameters, which were reset to default values, are not listed.
- The message *Empty* indicates that no parameters are changed.

5.5.3 Restoring Default Settings

NOTICE

Risk of losing programming, motor data, localization, and monitoring records by restoration of default settings. To provide a back-up, upload data to the LCP before initialization.

Restoring the default parameter settings is done by initialization of the frequency converter. Initialization is carried out through *parameter 14-22 Operation Mode* (recommended) or manually.

- Initialization using *parameter 14-22 Operation Mode* does not reset the frequency converter settings such as hours run, serial communication selections, personal menu settings, fault log, alarm log, and other monitoring functions.
- Manual initialization erases all motor, programming, localization, and monitoring data and restores factory default settings.

Recommended initialization procedure via *parameter 14-22 Operation Mode*

1. Press [Main Menu] twice to access parameters.
2. Scroll to *parameter 14-22 Operation Mode* and press [OK].
3. Scroll to *[2] initialization* and press [OK].
4. Remove power to the unit and wait for the display to turn off.
5. Apply power to the unit.

Default parameter settings are restored during start-up. The start-up may take slightly longer than normal.

6. *Alarm 80, Drive initialized to default value* is shown.
7. Press [Reset] to return to operating mode.

Manual initialization procedure

1. Remove power to the unit and wait for the display to turn off.
2. Press and hold [Status], [Main Menu], and [OK] at the same time while applying power to the unit (approximately 5 s or until audible click and fan starts).

Factory default parameter settings are restored during start-up. The start-up may take slightly longer than usual.

Manual initialization does not reset the following frequency converter information:

- *Parameter 15-00 Operating hours*.
- *Parameter 15-03 Power Up's*.
- *Parameter 15-04 Over Temp's*.
- *Parameter 15-05 Over Volt's*.

 Danfoss A/S © 11/2016 All rights reserved.

6 Maintenance, Diagnostics, and Troubleshooting

6.1 Introduction

This chapter includes:

- Maintenance and service guidelines.
- Status messages.
- Warnings and alarms.
- Basic troubleshooting.

6.2 Maintenance and Service

Under normal operating conditions and load profiles, the frequency converter is maintenance-free throughout its designed lifetime. To prevent breakdown, danger, and damage, examine the frequency converter at regular intervals depending on the operating conditions. Replace worn or damaged parts with original spare parts or standard parts. For service and support, contact the local Danfoss supplier.

⚠WARNING

UNINTENDED START

When the frequency converter is connected to AC mains, DC supply, or load sharing, the motor can start at any time. Unintended start during programming, service, or repair work can result in death, serious injury, or property damage. The motor can start with an external switch, a fieldbus command, an input reference signal from the LCP or LOP, via remote operation using MCT 10 Set-up Software, or after a cleared fault condition.

To prevent unintended motor start:

- **Press [Off/Reset] on the LCP before programming parameters.**
- **Disconnect the frequency converter from the mains.**
- **Completely wire and assemble the frequency converter, motor, and any driven equipment before connecting the frequency converter to AC mains, DC supply, or load sharing.**

6.2.1 Cleaning

The enclosure (IP66/NEMA type 4x indoor) provides protection against dirt and water ingress. The enclosure is suitable for cleaning methods and solvents used in food and beverage plants. Use the solvent concentration recommended by the manufacturer. Avoid high-pressure hot water cleaning at close proximity or of long duration, because this method of cleaning can damage gaskets and labels.

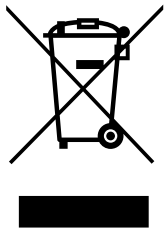

Do not dispose of equipment containing electrical components together with domestic waste.
Collect it separately in accordance with local and currently valid legislation.

6.3 Frontal LEDs

The actual status can be read via 6 LEDs, which signal the actual status of the unit. The meaning of each LED is described in *Table 6.1*.

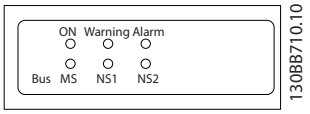

Illustration 6.1 Frontal LEDs

Name	Color	Status	Indication
ON	Green	On	The frequency converter receives power from mains voltage, or 24 V external supply.
		Off	No power from mains voltage, or 24 V external supply.
Warning	Yellow	On	Warning situation is present.
		Off	No warning is present.
Alarm	Red	Flashing	Alarm is present.
		Off	No alarm is present
Bus MS	Only relevant if optional fieldbus is present. See the *VLT® AutomationDrive FC 302 PROFIBUS Converter Operating Instructions*, *VLT® Ethernet/IP MCA 121 Installation Guide*, and *VLT® PROFINET MCA 120 Installation Guide* for specific information.		Bus module status
Bus NS1			Bus network status 1
Bus NS2			Bus network status 2

Table 6.1 LED Status

Danfoss A/S © 11/2016 All rights reserved.

6.4 Status Messages

When the frequency converter is in *Status* mode, status messages are generated automatically and appear in the bottom line of the display (see *Illustration 6.2*).

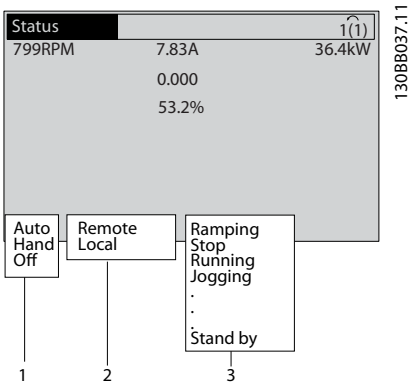

1	Operating mode (see *Table 6.2*)
2	Reference site (see *Table 6.3*)
3	Operation status (see *Table 6.4*)

Illustration 6.2 Status Display

Table 6.2 to *Table 6.4* describe the status messages shown.

Off	The frequency converter does not react to any control signal until [Auto On] or [Hand On] is pressed.
Auto On	The frequency converter is controlled from the control terminals and/or the serial communication.
Hand On	Control the frequency converter via the navigation keys on the LCP. Stop commands, reset, reversing, DC brake, and other signals applied to the control terminals override local control.

Table 6.2 Operating Mode

Remote	The speed reference is given from external signals, serial communication, or internal preset references.
Local	The frequency converter uses [Hand On] control or reference values from the LCP.

Table 6.3 Reference Site

AC Brake	*[2] AC brake* is selected in *parameter 2-10 Brake Function*. The AC brake overmagnetizes the motor to achieve a controlled slow down.
AMA finish OK	AMA was carried out successfully.
AMA ready	AMA is ready to start. Press [Hand On] to start.
AMA running	AMA process is in progress.
Braking	The brake chopper is in operation. Generative energy is absorbed by the brake resistor.
Braking max.	The brake chopper is in operation. The power limit for the brake resistor defined in *parameter 2-12 Brake Power Limit (kW)* has been reached.
Coast	• *[2] Coast inverse* was selected as a function for a digital input (*parameter group 5-1* Digital Inputs*). The corresponding terminal is not connected. • Coast activated by serial communication.
Ctrl. ramp-down	*[1] Control Ramp-down* was selected in *parameter 14-10 Mains Failure*. • The mains voltage is below the value set in *parameter 14-11 Mains Voltage at Mains Fault* at mains fault. • The frequency converter ramps down the motor using a controlled ramp down.
Current High	The frequency converter output current is above the limit set in *parameter 4-51 Warning Current High*.
Current Low	The frequency converter output current is below the limit set in *parameter 4-52 Warning Speed Low*.
DC Hold	*[1] DC hold* is selected in *parameter 1-80 Function at Stop*, and a stop command is active. The motor is held by a DC current set in *parameter 2-00 DC Hold/Preheat Current*.
DC Stop	The motor is held with a DC current (*parameter 2-01 DC Brake Current*) for a specified time (*parameter 2-02 DC Braking Time*). • The DC brake cut-in speed is reached in *parameter 2-03 DC Brake Cut In Speed [RPM]*, and a stop command is active. • *[5] DC-brake inverse* is selected as a function for a digital input (*parameter group 5-1* Digital Inputs*). The corresponding terminal is not active. • The DC brake is activated via serial communication.
Feedback high	The sum of all active feedbacks is above the feedback limit set in *parameter 4-57 Warning Feedback High*.
Feedback low	The sum of all active feedbacks is below the feedback limit set in *parameter 4-56 Warning Feedback Low*.

 Danfoss A/S © 11/2016 All rights reserved.

Freeze output	The remote reference is active, which holds the present speed. • *[20] Freeze output* is selected as a function for a digital input (*parameter group 5-1* Digital Inputs*). The corresponding terminal is active. Speed control is only possible via the terminal options *[21] Speed up* and *[22] Speed down*. • Hold ramp is activated via serial communication.
Freeze output request	A freeze output command was given, but the motor remains stopped until a run permissive signal is received.
Freeze ref.	*[19] Freeze reference* is selected as a function for a digital input (*parameter group 5-1* Digital Inputs*). The corresponding terminal is active. The frequency converter saves the actual reference. Changing the reference is now only possible via terminal options *[21] Speed up* and *[22] Speed down*.
Jog request	A jog command was given, but the motor remains stopped until a run permissive signal is received via a digital input.
Jogging	The motor is running as programmed in *parameter 3-19 Jog Speed [RPM]*. • *[14] Jog* was selected as a function for a digital input (*parameter group 5-1* Digital Inputs*). The corresponding terminal (for example, terminal 29) is active. • The jog function is activated via the serial communication. • The jog function is selected as a reaction for a monitoring function (for example, for the no signal function). The monitoring function is active.
Motor check	In *parameter 1-80 Function at Stop*, *[2] Motor Check* is selected. A stop command is active. To ensure that a motor is connected to the frequency converter, a permanent test current is applied to the motor.
OVC control	Overvoltage control is activated via *parameter 2-17 Over-voltage Control*, *[2] Enabled*. The connected motor supplies the frequency converter with generative energy. The overvoltage control adjusts the V/Hz ratio to run the motor in controlled mode and to prevent the frequency converter from tripping.
PowerUnit Off	(Only frequency converters with a 24 V external supply installed). Mains supply to the frequency converter was removed, and the control card is supplied by the external 24 V.
Protection md	Protection mode is active. The unit detected a critical status (overcurrent or overvoltage). • To avoid tripping, the switching frequency is reduced to 4 kHz. • If possible, protection mode ends after approximately 10 s. • Protection mode can be restricted in *parameter 14-26 Trip Delay at Inverter Fault*.
Qstop	The motor is decelerating using *parameter 3-81 Quick Stop Ramp Time*. • *[4] Quick stop inverse* is selected as a function for a digital input (*parameter group 5-1* Digital Inputs*). The corresponding terminal is not active. • The quick stop function is activated via serial communication.
Ramping	The motor accelerates/decelerates using the active ramp up/down. The reference, a limit value, or a standstill is not yet reached.
Ref. high	The sum of all active references is above the reference limit set in *parameter 4-55 Warning Reference High*.
Ref. low	The sum of all active references is below the reference limit set in *parameter 4-54 Warning Reference Low*.
Run on ref.	The frequency converter runs in the reference range. The feedback value matches the setpoint value.
Run request	A start command was given, but the motor remains stopped until a run permissive signal is received via digital input.
Running	The frequency converter drives the motor.
Sleep Mode	The energy-saving function is enabled. The motor has stopped, but restarts automatically when required.
Speed high	Motor speed is above the value set in *parameter 4-53 Warning Speed High*.
Speed low	Motor speed is below the value set in *parameter 4-52 Warning Speed Low*.
Standby	In auto-on mode, the frequency converter starts the motor with a start signal from a digital input or serial communication.
Start delay	In *parameter 1-71 Start Delay*, a delay starting time was set. A start command is activated, and the motor starts after the start delay time expires.
Start fwd/rev	*[12] Enable start forward* and *[13] Enable start reverse* are selected as options for 2 different digital inputs (*parameter group 5-1* Digital Inputs*). The motor starts in forward or reverse direction depending on which terminal is activated.

Danfoss A/S © 11/2016 All rights reserved.

Stop	The frequency converter received a stop command from the LCP, digital input, or serial communication.
Trip	An alarm occurred and the motor is stopped. Once the cause of the alarm is cleared, the frequency converter can be reset manually by pressing [Reset] or remotely by control terminals or serial communication.
Trip lock	An alarm occurred, and the motor is stopped. When the cause of the alarm is cleared, cycle power to the frequency converter. The frequency converter can then be reset manually by pressing [Reset], or remotely by control terminals or serial communication.

Table 6.4 Operation Status

NOTICE

In auto/remote mode, the frequency converter requires external commands to execute functions.

6.5 Warning and Alarm Types

Warnings
A warning is issued when an alarm condition is impending, or when an abnormal operating condition is present and may result in the frequency converter issuing an alarm. A warning clears by itself when the abnormal condition ceases.

Alarms
An alarm indicates a fault that requires immediate attention. The fault always triggers a trip or a trip lock. Reset the system after an alarm.

Trip
An alarm is issued when the frequency converter is tripped, meaning that the frequency converter suspends operation to prevent frequency converter or system damage. The motor coasts to a stop. The frequency converter logic continues to operate and monitor the frequency converter status. After the fault condition is remedied, the frequency converter can be reset. It is then ready to start operation again.

Resetting the frequency converter after trip/trip lock
A trip can be reset in any of 4 ways:

- Press [Reset] on the LCP.
- Digital reset input command.
- Serial communication reset input command.
- Auto reset.

Trip lock
Input power is cycled. The motor coasts to a stop. The frequency converter continues to monitor the frequency converter status. Remove input power to the frequency converter, correct the cause of the fault, and reset the frequency converter.

Warning and alarm displays

- A warning is shown in the LCP along with the warning number.
- An alarm flashes along with the alarm number.

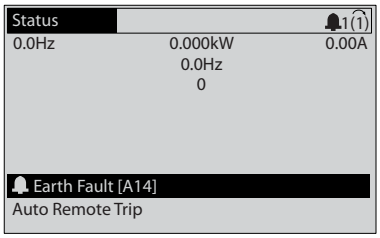

Illustration 6.3 Alarm Example

In addition to the text and alarm code in the LCP, there are 3 status indicator lights.

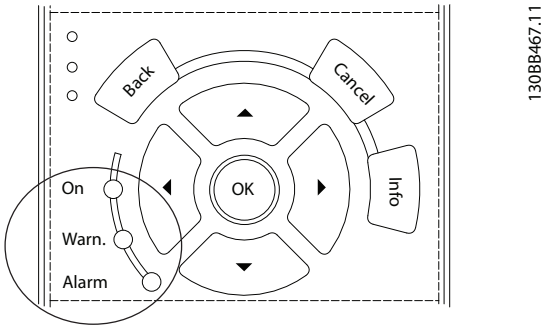

	Warning indicator light	Alarm indicator light
Warning	On	Off
Alarm	Off	On (flashing)
Trip lock	On	On (flashing)

Illustration 6.4 Status Indicator Lights

6.6 List of Warnings and Alarms

The following warning and alarm information defines each warning or alarm condition, provides the probable cause for the condition, and details a remedy or troubleshooting procedure.

WARNING 1, 10 Volts low
The control card voltage is less than 10 V from terminal 50. Remove some of the load from terminal 50, as the 10 V supply is overloaded. Maximum 15 mA or minimum 590 Ω.

A short circuit in a connected potentiometer or incorrect wiring of the potentiometer can cause this condition.

Troubleshooting

- Remove the wiring from terminal 50. If the warning clears, the problem is with the wiring. If the warning does not clear, replace the control card.

Danfoss A/S © 11/2016 All rights reserved.

WARNING/ALARM 2, Live zero error
This warning or alarm only appears if programmed in *parameter 6-01 Live Zero Timeout Function*. The signal on 1 of the analog inputs is less than 50% of the minimum value programmed for that input. Broken wiring or a faulty device sending the signal can cause this condition.

Troubleshooting

- Check connections on all analog mains terminals.
  - Control card terminals 53 and 54 for signals, terminal 55 common.
  - VLT® General Purpose I/O MCB 101 terminals 11 and 12 for signals, terminal 10 common.
  - VLT® Analog I/O Option MCB 109 terminals 1, 3, and 5 for signals, terminals 2, 4, and 6 common.
- Check that the frequency converter programming and switch settings match the analog signal type.
- Perform an input terminal signal test.

WARNING/ALARM 3, No motor
No motor is connected to the output of the frequency converter.

WARNING/ALARM 4, Mains phase loss
A phase is missing on the supply side, or the mains voltage imbalance is too high. This message also appears for a fault in the input rectifier. Options are programmed in *parameter 14-12 Function at Mains Imbalance*.

Troubleshooting

- Check the supply voltage and supply currents to the frequency converter.

WARNING 5, DC link voltage high
The DC-link voltage (DC) is higher than the high-voltage warning limit. The limit depends on the frequency converter voltage rating. The unit is still active.

WARNING 6, DC link voltage low
The DC-link voltage (DC) is lower than the low voltage warning limit. The limit depends on the frequency converter voltage rating. The unit is still active.

WARNING/ALARM 7, DC overvoltage
If the DC-link voltage exceeds the limit, the frequency converter trips after a certain time.

Troubleshooting

- Connect a brake resistor.
- Extend the ramp time.
- Change the ramp type.
- Activate the functions in *parameter 2-10 Brake Function*.
- Increase *parameter 14-26 Trip Delay at Inverter Fault*.
- If the alarm/warning occurs during a power sag, use kinetic back-up (*parameter 14-10 Mains Failure*).

WARNING/ALARM 8, DC under voltage
If the DC-link voltage drops below the undervoltage limit, the frequency converter checks for 24 V DC back-up supply. If no 24 V DC back-up supply is connected, the frequency converter trips after a fixed time delay. The time delay varies with unit size.

Troubleshooting

- Check that the supply voltage matches the frequency converter voltage.
- Perform an input voltage test.
- Perform a soft-charge circuit test.

WARNING/ALARM 9, Inverter overload
The frequency converter has run with more than 100% overload for too long and is about to cut out. The counter for electronic thermal inverter protection issues a warning at 98% and trips at 100% with an alarm. The frequency converter cannot be reset until the counter is below 90%.

Troubleshooting

- Compare the output current shown on the LCP with the frequency converter rated current.
- Compare the output current shown on the LCP with the measured motor current.
- Show the thermal frequency converter load on the LCP and monitor the value. When running above the frequency converter continuous current rating, the counter increases. When running below the frequency converter continuous current rating, the counter decreases.

WARNING/ALARM 10, Motor overload temperature
According to the electronic thermal protection (ETR), the motor is too hot.

Select 1 of these options:

- The frequency converter issues a warning or an alarm when the counter is >90% if *parameter 1-90 Motor Thermal Protection* is set to warning options.
- The frequency converter trips when the counter reaches 100% if *parameter 1-90 Motor Thermal Protection* is set to trip options.

The fault occurs when the motor runs with more than 100% overload for too long.

Troubleshooting

- Check for motor overheating.
- Check if the motor is mechanically overloaded.
- Check that the motor current set in *parameter 1-24 Motor Current* is correct.
- Ensure that the motor data in *parameters 1-20* to *1-25* are set correctly.

Danfoss A/S © 11/2016 All rights reserved.

- If an external fan is in use, check that it is selected in *parameter 1-91 Motor External Fan*.
- Running AMA in *parameter 1-29 Automatic Motor Adaptation (AMA)* tunes the frequency converter to the motor more accurately and reduces thermal loading.

WARNING/ALARM 11, Motor thermistor overtemp
Check whether the thermistor is disconnected. Select whether the frequency converter issues a warning or an alarm in *parameter 1-90 Motor Thermal Protection*.

Troubleshooting

- Check for motor overheating.
- Check if the motor is mechanically overloaded.
- When using terminal 53 or 54, check that the thermistor is connected correctly between either terminal 53 or 54 (analog voltage input) and terminal 50 (+10 V supply). Also check that the terminal switch for 53 or 54 is set for voltage. Check that *parameter 1-93 Thermistor Resource* selects terminal 53 or 54.
- When using terminal 18, 19, 31, 32, or 33 (digital inputs), check that the thermistor is connected correctly between the digital input terminal used (digital input PNP only) and terminal 50. Select the terminal to use in *parameter 1-93 Thermistor Resource*.

WARNING/ALARM 12, Torque limit
The torque has exceeded the value in *parameter 4-16 Torque Limit Motor Mode* or the value in *parameter 4-17 Torque Limit Generator Mode*. *Parameter 14-25 Trip Delay at Torque Limit* can change this warning from a warning-only condition to a warning followed by an alarm.

Troubleshooting

- If the motor torque limit is exceeded during ramp-up, extend the ramp-up time.
- If the generator torque limit is exceeded during ramp-down, extend the ramp-down time.
- If torque limit occurs while running, increase the torque limit. Make sure that the system can operate safely at a higher torque.
- Check the application for excessive current draw on the motor.

WARNING/ALARM 13, Over current
The inverter peak current limit (approximately 200% of the rated current) is exceeded. The warning lasts approximately 1.5 s, then the frequency converter trips and issues an alarm. Shock loading or quick acceleration with high-inertia loads can cause this fault. If the acceleration during ramp-up is quick, the fault can also appear after kinetic back-up. If extended mechanical brake control is selected, a trip can be reset externally.

Troubleshooting

- Remove the power and check if the motor shaft can be turned.
- Check that the motor size matches the frequency converter.
- Check that the motor data is correct in *parameters 1-20* to *1-25*.

ALARM 14, Earth (ground) fault
There is current from the output phase to ground, either in the cable between the frequency converter and the motor, or in the motor itself. The current transducers detect the ground fault by measuring current going out from the frequency converter and current going into the frequency converter from the motor. Ground fault is issued if the deviation of the 2 currents is too large. The current going out of the frequency converter must be the same as the current going into the frequency converter.

Troubleshooting

- Remove power to the frequency converter and repair the ground fault.
- Check for ground faults in the motor by measuring the resistance to ground of the motor cables and the motor with a megohmmeter.
- Reset any potential individual offset in the 3 current transducers in the frequency converter. Perform the manual initialization or perform a complete AMA. This method is most relevant after changing the power card.

ALARM 15, Hardware mismatch
A fitted option is not operational with the present control card hardware or software.

Record the value of the following parameters and contact Danfoss.

- *Parameter 15-40 FC Type*.
- *Parameter 15-41 Power Section*.
- *Parameter 15-42 Voltage*.
- *Parameter 15-43 Software Version*.
- *Parameter 15-45 Actual Typecode String*.
- *Parameter 15-49 SW ID Control Card*.
- *Parameter 15-50 SW ID Power Card*.
- *Parameter 15-60 Option Mounted*.
- *Parameter 15-61 Option SW Version* (for each option slot).

ALARM 16, Short circuit
There is short-circuiting in the motor or motor wiring.

Troubleshooting

- Remove the power to the frequency converter and repair the short circuit.

Danfoss A/S © 11/2016 All rights reserved.

⚠WARNING

HIGH VOLTAGE

Frequency converters contain high voltage when connected to AC mains input, DC supply, or load sharing. Failure to use qualified personnel to install, start up, and maintain the frequency converter can result in death or serious injury.

- **Disconnect power before proceeding.**

WARNING/ALARM 17, Control word timeout
There is no communication to the frequency converter. The warning is only active when *parameter 8-04 Control Word Timeout Function* is NOT set to *[0] Off*.
If *parameter 8-04 Control Word Timeout Function* is set to *[5] Stop and trip*, a warning appears, and the frequency converter ramps down to a stop and shows an alarm.

Troubleshooting

- Check the connections on the serial communication cable.
- Increase *parameter 8-03 Control Word Timeout Time*.
- Check the operation of the communication equipment.
- Verify that proper EMC installation was performed.

WARNING/ALARM 20, Temp. input error
The temperature sensor is not connected.

WARNING/ALARM 21, Parameter error
The parameter is out of range. The parameter number is reported in the display.

Troubleshooting

- Set the affected parameter to a valid value.

WARNING/ALARM 22, Hoist mechanical brake
The value of this warning/alarm shows the type of warning/alarm.
0 = The torque reference was not reached before timeout (*parameter 2-27 Torque Ramp Up Time*).
1 = Expected brake feedback was not received before timeout (*parameter 2-23 Activate Brake Delay*, *parameter 2-25 Brake Release Time*).

WARNING 23, Internal fan fault
The fan warning function is a protective function that checks if the fan is running/mounted. The fan warning can be disabled in *parameter 14-53 Fan Monitor* (*[0] Disabled*).

For frequency converters with DC fans, there is a feedback sensor mounted in the fan. If the fan is commanded to run and there is no feedback from the sensor, this alarm appears. For frequency converters with AC fans, the voltage to the fan is monitored.

Troubleshooting

- Check for proper fan operation.
- Cycle power to the frequency converter and check that the fan operates briefly at start-up.
- Check the sensors on the control card.

WARNING 24, External fan fault
The fan warning function is a protective function that checks if the fan is running/mounted. The fan warning can be disabled in *parameter 14-53 Fan Monitor* (*[0] Disabled*).

For frequency converters with DC fans, there is a feedback sensor mounted in the fan. If the fan is commanded to run and there is no feedback from the sensor, this alarm appears. For frequency converters with AC fans, the voltage to the fan is monitored.

Troubleshooting

- Check for proper fan operation.
- Cycle power to the frequency converter and check that the fan operates briefly at start-up.
- Check the sensors on the heat sink.

WARNING 25, Brake resistor short circuit
The brake resistor is monitored during operation. If a short circuit occurs, the brake function is disabled and the warning appears. The frequency converter is still operational, but without the brake function.

Troubleshooting

- Remove the power to the frequency converter and replace the brake resistor (refer to *parameter 2-15 Brake Check*).

WARNING/ALARM 26, Brake resistor power limit
The power transmitted to the brake resistor is calculated as a mean value over the last 120 s of run time. The calculation is based on the DC-link voltage and the brake resistor value set in *parameter 2-16 AC brake Max. Current*. The warning is active when the dissipated braking power is higher than 90% of the brake resistor power. If option *[2] Trip* is selected in *parameter 2-13 Brake Power Monitoring*, the frequency converter trips when the dissipated braking power reaches 100%.

WARNING/ALARM 27, Brake chopper fault
The brake transistor is monitored during operation, and if a short circuit occurs, the brake function is disabled, and a warning is issued. The frequency converter is still operational, but since the brake transistor has short-circuited, substantial power is transmitted to the brake resistor, even if it is inactive.

Troubleshooting

- Remove power to the frequency converter and remove the brake resistor.

WARNING/ALARM 28, Brake check failed
The brake resistor is not connected or not working.

Troubleshooting

- Check *parameter 2-15 Brake Check*.

 Danfoss A/S © 11/2016 All rights reserved.

ALARM 29, Heat Sink temp
The maximum temperature of the heat sink is exceeded. The temperature fault is not reset until the temperature drops below a defined heat sink temperature. The trip and reset points are different based on the frequency converter power size.

Troubleshooting
Check for the following conditions:

- The ambient temperature is too high.
- The motor cables are too long.
- Incorrect airflow clearance above and below the frequency converter.
- Blocked airflow around the frequency converter.
- Damaged heat sink fan.
- Dirty heat sink.

ALARM 30, Motor phase U missing
Motor phase U between the frequency converter and the motor is missing.

⚠WARNING

HIGH VOLTAGE

Frequency converters contain high voltage when connected to AC mains input, DC supply, or load sharing. Failure to use qualified personnel to install, start up, and maintain the frequency converter can result in death or serious injury.

- **Disconnect power before proceeding.**

Troubleshooting

- Remove the power from the frequency converter and check motor phase U.

ALARM 31, Motor phase V missing
Motor phase V between the frequency converter and the motor is missing.

⚠WARNING

HIGH VOLTAGE

Frequency converters contain high voltage when connected to AC mains input, DC supply, or load sharing. Failure to use qualified personnel to install, start up, and maintain the frequency converter can result in death or serious injury.

- **Disconnect power before proceeding.**

Troubleshooting

- Remove the power from the frequency converter and check motor phase V.

ALARM 32, Motor phase W missing
Motor phase W between the frequency converter and the motor is missing.

⚠WARNING

HIGH VOLTAGE

Frequency converters contain high voltage when connected to AC mains input, DC supply, or load sharing. Failure to use qualified personnel to install, start up, and maintain the frequency converter can result in death or serious injury.

- **Disconnect power before proceeding.**

Troubleshooting

- Remove the power from the frequency converter and check motor phase W.

ALARM 33, Inrush fault
Too many power-ups have occurred within a short time period.

Troubleshooting

- Let the unit cool to operating temperature.

WARNING/ALARM 34, Fieldbus communication fault
The fieldbus on the communication option card is not working.

WARNING/ALARM 35, Option fault
An option alarm is received. The alarm is option-specific. The most likely cause is a power-up or a communication fault.

WARNING/ALARM 36, Mains failure
This warning/alarm is only active if the supply voltage to the frequency converter is lost and *parameter 14-10 Mains Failure* is not set to *[0] No function*.

Troubleshooting

- Check the fuses to the frequency converter and mains supply to the unit.

ALARM 37, Phase imbalance
There is a current imbalance between the power units.

ALARM 38, Internal fault
When an internal fault occurs, a code number defined in *Table 6.5* is shown.

Troubleshooting

- Cycle power.
- Check that the option is properly installed.
- Check for loose or missing wiring.

It may be necessary to contact the Danfoss supplier or service department. Note the code number for further troubleshooting directions.

Number	Text
0	The serial port cannot be initialized. Contact the Danfoss supplier or Danfoss service department.
256–258	The power EEPROM data is defective or too old. Replace the power card.
512–519	Internal fault. Contact the Danfoss supplier or Danfoss service department.

 Danfoss A/S © 11/2016 All rights reserved.

Number	Text
783	Parameter value outside of minimum/maximum limits.
1024–1284	Internal fault. Contact the Danfoss supplier or the Danfoss service department.
1299	The option software in slot A is too old.
1300	The option software in slot B is too old.
1302	The option software in slot C1 is too old.
1315	The option software in slot A is not supported/ allowed.
1316	The option software in slot B is not supported/ allowed.
1318	The option software in slot C1 is not supported/ allowed.
1379–2819	Internal fault. Contact the Danfoss supplier or Danfoss service department.
1792	Hardware reset of digital signal processor.
1793	Motor-derived parameters not transferred correctly to the digital signal processor.
1794	Power data not transferred correctly at power-up to the digital signal processor.
1795	The digital signal processor has received too many unknown SPI telegrams. The frequency converter also uses this fault code if the MCO does not power up correctly. This situation can occur due to poor EMC protection or improper grounding.
1796	RAM copy error.
2561	Replace the control card.
2820	LCP stack overflow.
2821	Serial port overflow.
2822	USB port overflow.
3072–5122	Parameter value is outside its limits.
5123	Option in slot A: Hardware incompatible with the control board hardware.
5124	Option in slot B: Hardware incompatible with the control board hardware.
5125	Option in slot C0: Hardware incompatible with the control board hardware.
5126	Option in slot C1: Hardware incompatible with the control board hardware.
5376–6231	Internal fault. Contact the Danfoss supplier or Danfoss service department.

Table 6.5 Internal Fault Codes

ALARM 39, Heat sink sensor
No feedback from the heat sink temperature sensor.

The signal from the IGBT thermal sensor is not available on the power card. The problem could be on the power card, on the gatedrive card, or the ribbon cable between the power card and gatedrive card.

WARNING 40, Overload of digital output terminal 27
Check the load connected to terminal 27 or remove the short circuit connection. Check *parameter 5-00 Digital I/O Mode* and *parameter 5-01 Terminal 27 Mode*.

WARNING 41, Overload of digital output terminal 29
Check the load connected to terminal 29 or remove the short-circuit connection. Also check *parameter 5-00 Digital I/O Mode* and *parameter 5-02 Terminal 29 Mode*.

WARNING 42, Overload of digital output on X30/6 or overload of digital output on X30/7
For terminal X30/6, check the load connected to terminal X30/6 or remove the short-circuit connection. Also check *parameter 5-32 Term X30/6 Digi Out (MCB 101)* (VLT® General Purpose I/O MCB 101).

For terminal X30/7, check the load connected to terminal X30/7 or remove the short-circuit connection. Check *parameter 5-33 Term X30/7 Digi Out (MCB 101)* (VLT® General Purpose I/O MCB 101).

ALARM 43, Ext. supply
VLT® Extended Relay Option MCB 113 is mounted without external 24 V DC. Either connect a 24 V DC external supply or specify that no external supply is used via *parameter 14-80 Option Supplied by External 24VDC*, *[0] No*. A change in *parameter 14-80 Option Supplied by External 24VDC* requires a power cycle.

ALARM 45, Earth fault 2
Ground fault.

Troubleshooting

- Check for proper grounding and loose connections.
- Check for proper wire size.
- Check the motor cables for short circuits or leakage currents.

ALARM 46, Power card supply
The supply on the power card is out of range.

There are 3 supplies generated by the switch mode supply (SMPS) on the power card:

- 24 V.
- 5 V.
- ±18 V.

When powered with VLT® 24 V DC Supply MCB 107, only the 24 V and 5 V supplies are monitored. When powered with 3-phase mains voltage, all 3 supplies are monitored.

Troubleshooting

- Check for a defective power card.
- Check for a defective control card.
- Check for a defective option card.
- If a 24 V DC supply is used, verify proper supply power.

WARNING 47, 24 V supply low
The supply on the power card is out of range.

There are 3 supplies generated by the switch mode supply (SMPS) on the power card:

 Danfoss A/S © 11/2016 All rights reserved.

- 24 V.
- 5 V.
- ±18 V.

Troubleshooting

- Check for a defective power card.

WARNING 48, 1.8 V supply low
The 1.8 V DC supply used on the control card is outside of the allowable limits. The supply is measured on the control card.

Troubleshooting

- Check for a defective control card.
- If an option card is present, check for overvoltage.

6

WARNING 49, Speed limit
The warning is shown when the speed is outside of the specified range in *parameter 4-11 Motor Speed Low Limit [RPM]* and *parameter 4-13 Motor Speed High Limit [RPM]*. When the speed is below the specified limit in *parameter 1-86 Trip Speed Low [RPM]* (except when starting or stopping), the frequency converter trips.

ALARM 50, AMA calibration failed
Contact the Danfoss supplier or Danfoss service department.

ALARM 51, AMA check U_{nom} and I_{nom}
The settings for motor voltage, motor current, and motor power are wrong.

Troubleshooting

- Check the settings in *parameters 1-20* to *1-25*.

ALARM 52, AMA low I_{nom}
The motor current is too low.

Troubleshooting

- Check the settings in *parameter 1-24 Motor Current*.

ALARM 53, AMA motor too big
The motor is too large for the AMA to operate.

ALARM 54, AMA motor too small
The motor is too small for the AMA to operate.

ALARM 55, AMA parameter out of range
The AMA cannot run because the parameter values of the motor are outside of the acceptable range.

ALARM 56, AMA interrupted by user
The AMA is manually interrupted.

ALARM 57, AMA internal fault
Try to restart the AMA. Repeated restarts can overheat the motor.

ALARM 58, AMA Internal fault
Contact the Danfoss supplier.

WARNING 59, Current limit
The current is higher than the value in *parameter 4-18 Current Limit*. Ensure that motor data in *parameters 1-20* to *1-25* is set correctly. Increase the current limit if necessary. Ensure that the system can operate safely at a higher limit.

WARNING 60, External interlock
A digital input signal indicates a fault condition external to the frequency converter. An external interlock has commanded the frequency converter to trip. Clear the external fault condition. To resume normal operation, apply 24 V DC to the terminal programmed for external interlock, and reset the frequency converter.

WARNING/ALARM 61, Feedback error
An error between calculated speed and speed measurement from feedback device.

Troubleshooting

- Check the settings for warning/alarm/disabling in *parameter 4-30 Motor Feedback Loss Function*.
- Set the tolerable error in *parameter 4-31 Motor Feedback Speed Error*.
- Set the tolerable feedback loss time in *parameter 4-32 Motor Feedback Loss Timeout*.

WARNING 62, Output frequency at maximum limit
The output frequency has reached the value set in *parameter 4-19 Max Output Frequency*. Check the application for possible causes. Possibly increase the output frequency limit. Be sure that the system can operate safely at a higher output frequency. The warning clears when the output drops below the maximum limit.

ALARM 63, Mechanical brake low
The actual motor current has not exceeded the release brake current within the start delay time window.

WARNING 64, Voltage Limit
The load and speed combination demands a motor voltage higher than the actual DC-link voltage.

WARNING/ALARM 65, Control card over temperature
The cutout temperature of the control card is 85 °C (185 °F).

Troubleshooting

- Check that the ambient operating temperature is within the limits.
- Check for clogged filters.
- Check the fan operation.
- Check the control card.

WARNING 66, Heat sink temperature low
The frequency converter is too cold to operate. This warning is based on the temperature sensor in the IGBT module. Increase the ambient temperature of the unit. Also, a trickle amount of current can be supplied to the frequency converter whenever the motor is stopped by setting *parameter 2-00 DC Hold/Preheat Current* to 5% and *parameter 1-80 Function at Stop*.

Danfoss A/S © 11/2016 All rights reserved.

ALARM 67, Option module configuration has changed
One or more options have either been added or removed since the last power-down. Check that the configuration change is intentional and reset the unit.

ALARM 68, Safe Stop activated
Safe Torque Off (STO) has been activated. To resume normal operation, apply 24 V DC to terminal 37, then send a reset signal (via bus, digital I/O, or by pressing [Reset]).

ALARM 69, Power card temperature
The temperature sensor on the power card is either too hot or too cold.

Troubleshooting

- Check that the ambient operating temperature is within limits.
- Check for clogged filters.
- Check fan operation.
- Check the power card.

ALARM 70, Illegal FC configuration
The control card and power card are incompatible. To check compatibility, contact the Danfoss supplier with the type code from the unit nameplate and the part numbers of the cards.

ALARM 71, PTC 1 safe stop
STO has been activated from the VLT® PTC Thermistor Card MCB 112 (motor too warm). Normal operation can be resumed when the MCB 112 applies 24 V DC to terminal 37 again (when the motor temperature reaches an acceptable level), and when the digital input from the MCB 112 is deactivated. When that happens, send a reset signal (via bus or digital I/O, or press [Reset]).

ALARM 72, Dangerous failure

STO with trip lock. An unexpected combination of STO commands has occurred:

- VLT® PTC Thermistor Card MCB 112 enables X44/10, but STO is not enabled.
- MCB 112 is the only device using STO (specified through selection *[4] PTC 1 alarm* or *[5] PTC 1 warning* in *parameter 5-19 Terminal 37 Safe Stop*), STO is activated, and X44/10 is not activated.

WARNING 73, Safe Stop auto restart
STO activated. With automatic restart enabled, the motor can start when the fault is cleared.

ALARM 74, PTC Thermistor
Alarm related to VLT® PTC Thermistor Card MCB 112. The PTC is not working.

ALARM 75, Illegal profile sel.
Do not write the parameter value while the motor is running. Stop the motor before writing the MCO profile to *parameter 8-10 Control Word Profile*.

WARNING 77, Reduced power mode
The frequency converter is operating in reduced power mode (less than the allowed number of inverter sections). This warning is generated on power cycle when the frequency converter is set to run with fewer inverters and remains on.

ALARM 78, Tracking error
The difference between setpoint value and actual value exceeds the value in *parameter 4-35 Tracking Error*.

Troubleshooting

- Disable the function or select an alarm/warning in *parameter 4-34 Tracking Error Function*.
- Investigate the mechanics around the load and motor. Check feedback connections from motor encoder to frequency converter.
- Select motor feedback function in *parameter 4-30 Motor Feedback Loss Function*.
- Adjust the tracking error band in *parameter 4-35 Tracking Error* and *parameter 4-37 Tracking Error Ramping*.

ALARM 79, Illegal power section configuration
The scaling card has an incorrect part number or is not installed. The MK102 connector on the power card could not be installed.

ALARM 80, Drive initialised to default value
Parameter settings are initialized to default settings after a manual reset. To clear the alarm, reset the unit.

ALARM 81, CSIV corrupt
CSIV file has syntax errors.

ALARM 82, CSIV parameter error
CSIV failed to initialize a parameter.

ALARM 83, Illegal option combination
The mounted options are incompatible.

ALARM 84, No safety option
The safety option was removed without applying a general reset. Reconnect the safety option.

ALARM 88, Option detection
A change in the option layout is detected.
Parameter 14-89 Option Detection is set to *[0] Frozen configuration* and the option layout has been changed.

- To apply the change, enable option layout changes in *parameter 14-89 Option Detection*.
- Alternatively, restore the correct option configuration.

WARNING 89, Mechanical brake sliding
The hoist brake monitor detects a motor speed exceeding 10 RPM.

ALARM 90, Feedback monitor
Check the connection to encoder/resolver option and, if necessary, replace VLT® Encoder Input MCB 102 or VLT® Resolver Input MCB 103.

 Danfoss A/S © 11/2016 All rights reserved.

ALARM 91, Analog input 54 wrong settings
Set switch S202 in position OFF (voltage input) when a KTY sensor is connected to analog input terminal 54.

ALARM 99, Locked rotor
Rotor is blocked.

WARNING/ALARM 104, Mixing fan fault
The fan is not operating. The fan monitor checks that the fan is spinning at power-up or whenever the mixing fan is turned on. The mixing-fan fault can be configured as a warning or an alarm trip in *parameter 14-53 Fan Monitor*.

Troubleshooting

- Cycle power to the frequency converter to determine if the warning/alarm returns.

6

WARNING/ALARM 122, Mot. rotat. unexp.
The frequency converter performs a function that requires the motor to be at standstill, for example DC hold for PM motors.

WARNING 163, ATEX ETR cur.lim.warning
The frequency converter has run above the characteristic curve for more than 50 s. The warning is activated at 83% and deactivated at 65% of the allowed thermal overload.

ALARM 164, ATEX ETR cur.lim.alarm
Operating above the characteristic curve for more than 60 s within a period of 600 s activates the alarm, and the frequency converter trips.

WARNING 165, ATEX ETR freq.lim.warning
The frequency converter is running for more than 50 s below the allowed minimum frequency (*parameter 1-98 ATEX ETR interpol. points freq.*).

ALARM 166, ATEX ETR freq.lim.alarm
The frequency converter has operated for more than 60 s (in a period of 600 s) below the allowed minimum frequency (*parameter 1-98 ATEX ETR interpol. points freq.*).

WARNING 250, New spare part
The power or switch mode supply has been exchanged. Restore the frequency converter type code in the EEPROM. Select the correct type code in *parameter 14-23 Typecode Setting* according to the label on the frequency converter. Remember to select Save to EEPROM at the end.

WARNING 251, New typecode
The power card or other components are replaced, and the type code has changed.

 Danfoss A/S © 11/2016 All rights reserved.

7 Specifications

7.1 Electrical Data

7.1.1 Overview

Mains supply 3x380–480 V AC								
Frequency converter		**PK37**	**PK55**	**PK75**	**P1K1**	**P1K5**	**P2K2**	**P3K0**
Rated shaft output [kW]		0.37	0.55	0.75	1.1	1.5	2.2	3.0
Rated shaft output [hp]		0.5	0.75	1.0	1.5	2.0	3.0	4.0
Maximum input current								
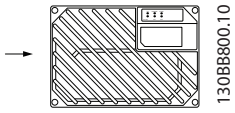 130BB800.10	Continuous (3x380–440 V) [A]	1.2	1.6	2.2	2.7	3.7	5.0	6.5
	Intermittent (3x380–440 V) [A]	1.9	2.6	3.5	4.3	5.9	8.0	10.4
	Continuous (3x441–480 V) [A]	1.0	1.4	1.9	2.7	3.1	4.3	5.7
	Intermittent (3x441–480 V) [A]	1.6	2.2	3.0	4.3	5.0	6.9	9.1
	Recommended maximum fuse size (non-UL)	gG-25						
	Built-in circuit breaker (large unit)	CTI-25M Danfoss part number: 047B3151						
	Recommended circuit breaker Danfoss CTI-25M (small and large unit) part number:							
	0.37, 0.55 kW	Danfoss part number: 047B3148						
	0.75, 1.1 kW	Danfoss part number: 047B3149						
	1.5 kW, 2.2 kW, and 3 kW	Danfoss part number: 047B3151						
	Recommended circuit breaker Danfoss CTI-45MB[1] (small unit) part number:							
	0.55, 0.75 kW	Danfoss part number: 047B3160						
	1.1 kW	Danfoss part number: 047B3161						
	1.5 kW	Danfoss part number: 047B3162						
	2.2 kW	Danfoss part number: 047B3163						
	Power loss at maximum load [W][2]	35	42	46	58	62	88	116
	Efficiency[3]	0.93	0.95	0.96	0.96	0.97	0.97	0.97
	Weight, small unit [kg]	9.8 (21.6 lb)						–
	Weight, large unit [kg]	13.9 (30.6 lb)						
Output current								
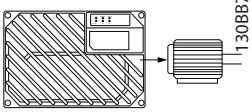 130BB799.10	Continuous (3x380–440 V) [A]	1.3	1.8	2.4	3.0	4.1	5.2	7.2
	Intermittent (3x380–440 V) [A]	2.1	2.9	3.8	4.8	6.6	8.3	11.5
	Continuous (3x441–480 V) [A]	1.2	1.6	2.1	3.0	3.4	4.8	6.3
	Intermittent (3x441–480 V) [A]	1.9	2.6	3.4	4.8	5.4	7.7	10.1
	Continuous kVA (400 V AC) [kVA]	0.9	1.3	1.7	2.1	2.8	3.9	5.0
	Continuous kVA (460 V AC) [kVA]	0.9	1.3	1.7	2.4	2.7	3.8	5.0
	Maximum cable size: (Mains, motor, brake) [mm²/AWG]	Solid cable 6/10 Flexible cable 4/12						

Table 7.1 VLT® Decentral Drive FCD 302 Shaft Output, Output Current, and Input Current

1) Type CTI-45MB circuit breakers are not available for 3 kW (4 hp) units.

2) Applies for dimensioning of frequency converter cooling. If the switching frequency is higher than the default setting, the power losses may increase. LCP and typical control card power consumptions are included. For power loss data according to EN 50598-2, refer to www.danfoss.com/vltenergyefficiency.

3) Efficiency measured at nominal current. For energy efficiency class, see chapter 7.4 Ambient Conditions. For part load losses, see www.danfoss.com/vltenergyefficiency.

7.2 Mains Supply

Mains supply (L1, L2, L3)[1]	
Supply voltage	380–480 V ±10%[2]
Supply frequency	50/60 Hz ± 5%
Maximum imbalance temporary between mains phases	3.0% of rated supply voltage
True power factor (λ)	≥ 0.9 nominal at rated load
Displacement power factor (cos ϕ)	Near unity (> 0.98)
Switching on input supply L1, L2, L3 (power-ups)	Maximum 2 times/minute

1) The unit is suitable for use on a circuit capable of delivering not more than 100000 RMS symmetrical Amperes, 480 V maximum.

2) Mains voltage low/mains drop-out:
During low mains voltage or a mains drop-out, the frequency converter continues until the DC-link voltage drops below the minimum stop level, which corresponds typically to 15% below the frequency converter's lowest rated supply voltage. Power-up and full torque cannot be expected at mains voltage lower than 10% below the frequency converter's lowest rated supply voltage.

7

7.3 Motor Output and Motor Data

Motor output (U, V, W)	
Output voltage	0–100% of supply voltage
Output frequency	0–590 Hz
Output frequency in flux mode	0–300 Hz
Switching on output	Unlimited
Ramp times	0.01–3600 s

Torque characteristics	
Starting torque (constant torque)	Maximum 160% for 60 s[1]
Starting torque	Maximum 180% up to 0.5 s[1]
Overload torque (constant torque)	Maximum 160% for 60 s[1]
Starting torque (variable torque)	Maximum 110% for 60 s[1]
Overload torque (variable torque)	Maximum 110% for 60 s[1]

1) Percentage relates to the nominal torque.

Danfoss A/S © 11/2016 All rights reserved.

7.4 Ambient Conditions

Surroundings	
Enclosure rating	IP66/Type 4X (indoor)
Vibration test for units with no circuit breaker	1.7 g RMS
Mounts unit with integrated circuit breaker on a level, vibration-proof, and torsionally rigid support structure	
Maximum relative humidity	5–95% (IEC 60 721-3-3; Class 3K3 (non-condensing) during operation
Ambient temperature	Maximum 40 °C (75 °F) (24-hour average maximum 35 °C (95 °F))
Temperature during storage/transport	-25 to +65/70 °C (-13 to +149/158 °F)
Derating for high ambient temperature	
Minimum ambient temperature during full-scale operation	0 °C (32 °F)
Minimum ambient temperature at reduced performance	-10 °C (14 °F)
Maximum altitude above sea level	1000 m (3280.8 ft)
Energy efficiency class[1)]	IE2

Derating for high altitude

1) Determined according to EN 50598-2 at:

- *Rated load*
- *90% rated frequency*
- *Switching frequency factory setting*
- *Switching pattern factory setting*

7.5 Cable Specifications

Cable lengths and cross-sections for control cables[1)]	
Maximum motor cable length, shielded	10 m (32.8 ft)
Maximum motor cable length, unshielded, without fulfilling emission specification.	10 m (32.8 ft)
Maximum cross-section to control terminals, flexible/rigid wire without cable end sleeves	1.5 mm^2/16 AWG
Maximum cross-section to control terminals, flexible wire with cable end sleeves	1.5 mm^2/16 AWG
Maximum cross-section to control terminals, flexible wire with cable end sleeves with collar	1.5 mm^2/16 AWG
Minimum cross-section to control terminals	0.25 mm^2/24 AWG

1) Power cables, see tables in chapter Electrical Data and Wire Sizes in the VLT® Decentral Drive FCD 302 Design Guide.

7.6 Control Input/Output and Control Data

Digital inputs	
Programmable digital inputs	4 (6)[1)]
Terminal number	18, 19, 27[1)], 29[1)], 32, 33
Logic	PNP or NPN
Voltage level	0–24 V DC
Voltage level, logic 0 PNP	<5 V DC
Voltage level, logic 1 PNP	>10 V DC
Voltage level, logic 0 NPN[2)]	>19 V DC
Voltage level, logic 1 NPN[2)]	<14 V DC
Maximum voltage on input	28 V DC
Pulse frequency range	0–110 kHz
(Duty cycle) Minimum pulse width	4.5 ms
Input resistance, R_i	Approximately 4 kΩ

All digital inputs are galvanically isolated from the supply voltage (PELV) and other high-voltage terminals.

1) Terminals 27 and 29 can also be programmed as output.

Safe Torque Off terminal 37 (terminal 37 is fixed PNP logic)	
Voltage level	0–24 V DC
Voltage level, logic 0 PNP	<4 V DC
Voltage level, logic 1 PNP	20 V DC
Nominal input current at 24 V	50 mA rms
Nominal input current at 20 V	60 mA rms
Input capacitance	400 nF

Analog inputs	
Number of analog inputs	2
Terminal number	53, 54
Modes	Voltage or current
Mode select	Switch S201 and switch S202
Voltage mode	Switch S201/switch S202=OFF (U)
Voltage level	-10 V to +10 V (scaleable)
Input resistance, R_i	Approximately 10 kΩ
Maximum voltage	±20 V
Current mode	Switch S201/switch S202=ON (I)
Current level	0/4–20 mA (scaleable)
Input resistance, R_i	Approximately 200Ω
Maximum current	30 mA
Resolution for analog inputs	10 bit (+ sign)
Accuracy of analog inputs	Maximum error 0.5% of full scale
Bandwidth	100 Hz

The analog inputs are galvanically isolated from the supply voltage (PELV) and other high-voltage terminals.

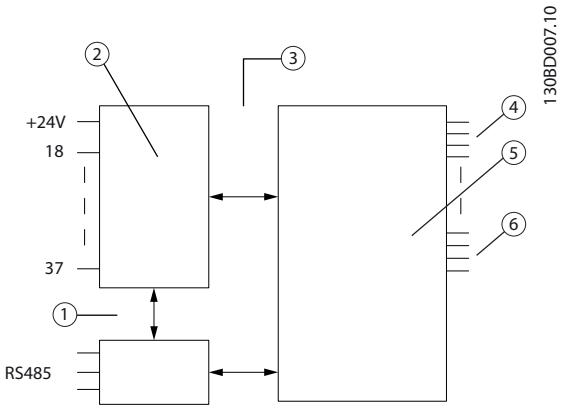

Item	Description
1	Functional isolation
2	Control
3	PELV isolation
4	Mains
5	High voltage
6	Motor

Illustration 7.1 Analog Inputs

Danfoss A/S © 11/2016 All rights reserved.

Pulse/encoder inputs	
Programmable pulse/encoder inputs	2/1
Terminal number pulse/encoder	29, 33[1)]/32[2)], 33[2)]
Maximum frequency at terminal 29, 32, 33	110 kHz (Push-pull driven)
Maximum frequency at terminal 29, 32, 33	5 kHz (open collector)
Minimum frequency at terminal 29, 32, 33	4 Hz
Voltage level	See *Digital Inputs* in this section
Maximum voltage on input	28 V DC
Input resistance, R_i	Approximately 4 kΩ
Pulse input accuracy (0.1–1 kHz)	Maximum error: 0.1% of full scale
Encoder input accuracy (1–110 kHz)	Maximum error: 0.05% of full scale

The pulse and encoder inputs (terminals 29, 32, 33) are galvanically isolated from the supply voltage (PELV) and other high-voltage terminals.

1) Pulse inputs are 29 and 33

2) Encoder inputs: 32=A, and 33=B

Analog output	
Number of programmable analog outputs	1
Terminal number	42
Current range at analog output	0/4 to 20 mA
Maximum load GND - analog output less than	500 Ω
Accuracy on analog output	Maximum error: 0.5% of full scale
Resolution on analog output	12 bit

The analog output is galvanically isolated from the supply voltage (PELV) and other high-voltage terminals.

Control card, RS485 serial communication	
Terminal number	68 (P, TX+, RX+), 69 (N, TX-, RX-)
Terminal number 61	Common for terminals 68 and 69

The RS485 serial communication circuit is functionally separated from other central circuits and galvanically isolated from the supply voltage (PELV).

Digital output	
Programmable digital/pulse outputs	2
Terminal number	27, 29[1)]
Voltage level at digital/frequency output	0–24 V
Maximum output current (sink or source)	40 mA
Maximum load at frequency output	1 kΩ
Maximum capacitive load at frequency output	10 nF
Minimum output frequency at frequency output	0 Hz
Maximum output frequency at frequency output	32 kHz
Accuracy of frequency output	Maximum error: 0.1% of full scale
Resolution of frequency outputs	12 bit

1) Terminal 27 and 29 can also be programmed as input.

The digital output is galvanically isolated from the supply voltage (PELV) and other high-voltage terminals.

Control card, 24 V DC output	
Terminal number	12, 13
Output voltage	24 V +1, -3 V
Maximum load	600 mA

The 24 V DC supply is galvanically isolated from the supply voltage (PELV), but has the same ground potential as the analog and digital inputs and outputs.

 Danfoss A/S © 11/2016 All rights reserved.

Relay outputs	
Programmable relay outputs	2
Relay 01 terminal number	1-3 (break), 1-2 (make)
Maximum terminal load (AC-1)[1)] on 1-3 (NC), 1-2 (NO) (Resistive load)	240 V AC, 2A
Maximum terminal load (AC-15)[1)] (Inductive load @ cosφ 0.4)	240 V AC, 0.2 A
Maximum terminal load (DC-1)[1)] on 1-2 (NO), 1-3 (NC) (Resistive load)	48 V DC, 1 A
Maximum terminal load (DC-13)[1)] (Inductive load)	24 V DC, 0.1 A
Relay 02 terminal number	4-6 (break), 4-5 (make)
Maximum terminal load (AC-1)[1)] on 4-5 (NO) (Resistive load)[2)3)] Overvoltage cat. II	240 V AC, 2 A
Maximum terminal load (AC-15)[1)] on 4-5 (NO) (Inductive load @ cosφ 0.4)	240 V AC, 0.2 A
Maximum terminal load (DC-1)[1)] on 4-5 (NO) (Resistive load)	80 V DC, 2 A
Maximum terminal load (DC-13)[1)] on 4-5 (NO) (Inductive load)	24 V DC, 0.1 A
Maximum terminal load (AC-1)[1)] on 4-6 (NC) (Resistive load)	240 V AC, 2 A
Maximum terminal load (AC-15)[1)] (Inductive load @ cosφ 0.4)	240 V AC, 0.2 A
Maximum terminal load (DC-1)[1)] on 4-6 (NO), 4-5 (NC) (Resistive load)	48 V DC, 1 A
Maximum terminal load (DC-13)[1)] (Inductive load)	24 V DC, 0.1 A
Minimum terminal load on 1-3 (NC), 1-2 (NO), 4-6 (NC), 4-5 (NO)	24 V DC 10 mA, 24 V AC 20 mA

1) IEC 60947 part 4 and 5

The relay contacts are galvanically isolated from the rest of the circuit by reinforced isolation (PELV).

2) Overvoltage Category II

3) UL applications 300 V AC 2A

Control card, 10 V DC output	
Terminal number	±50
Output voltage	10.5 V ±0.5 V
Maximum load	15 mA

The 10 V DC supply is galvanically isolated from the supply voltage (PELV) and other high-voltage terminals.

Control characteristics	
Resolution of output frequency at 0–590 Hz	±0.003 Hz
Repeat accuracy of precise start/stop (terminals 18, 19)	≤±0.1 ms
System response time (terminals 18, 19, 27, 29, 32, 33)	≤2 ms
Speed control range (open loop)	1:100 of synchronous speed
Speed control range (closed loop)	1:1000 of synchronous speed
Speed accuracy (open loop)	30–4000 RPM: error ±8 RPM
Speed accuracy (closed loop), depending on resolution of feedback device	0–6000 RPM: error ±0.15 RPM
Torque control accuracy (speed feedback)	Maximum error ±5% of rated torque

All control characteristics are based on a 4-pole asynchronous motor.

Control card performance	
Scan interval	1 ms

Control card, USB serial communication	
USB standard	1.1 (Full speed)
USB plug	USB type B plug

Connection to PC is carried out via a standard host/device USB cable.

The USB connection is galvanically isolated from the supply voltage (PELV) and other high-voltage terminals.

*The USB ground connection is **not** galvanically isolated from protection ground. Use only an isolated laptop as PC connection to the USB connector on the frequency converter.*

Danfoss A/S © 11/2016 All rights reserved.

7.7 Fuses and Circuit Breakers

- American Wire Gauge. Maximum cable cross-section is the largest cable cross-section that can be attached to the terminals. Always observe national and local regulations.
- Type gG pre-fuses must be used. To maintain UL/cUL, use pre-fuses of these types (see *Table 7.2*).
- Measured using a 10 m (32.8 ft) shielded/armoured motor cable with a rated load and rated frequency.

Recommended maximum pre-fuse size 25 A

Brand	Fuse type	UL file number	UL Category (CCN code)
Bussmann	FWH-[1)]	E91958	JFHR2
Bussmann	KTS-R[1)]	E4273	RK1/JDDZ
Bussmann	JKS-[1)]	E4273	J/JDDZ
Bussmann	JJS-[1)]	E4273	T/JDDZ
Bussmann	FNQ-R-[1)]	E4273	CC/JDDZ
Bussmann	KTK-R-[1)]	E4273	CC/JDDZ
Bussmann	LP-CC-[1)]	E4273	CC/JDDZ
SIBA	5017906-[1)]	E180276	RK1/JDDZ
Littelfuse	KLS-R[1)]	E81895	RK1/JDDZ
Ferraz Shawmut	ATM-R[1)]	E2137	CC/JDDZ
Ferraz Shawmut	A6K-R[1)]	E2137	RK1/JDDZ
Ferraz Shawmut	HSJ[1)]	E2137	J/HSJ

Table 7.2 FCD 302 Pre-fuses Meeting UL/cUL Requirements

1) 5 A (0.37 kW/0.5 hp), 7A (0.55 kW/0.73 hp), 9 A (0.75 kW/1 hp), 12 A (1.1 kW/1.5 hp), 15 A (1.5 kW/2 hp), 20 A (2.2 kW/3 hp), 25 A (3 kW/4 hp)

DC voltage level	380–480 V units (V DC)
Inverter undervoltage disable	373
Undervoltage warning	410
Inverter undervoltage re-enable (warning reset)	398
Overvoltage warning (without brake)	778
Dynamic brake turn on	778
Inverter overvoltage re-enable (warning reset)	795
Overvoltage warning (with brake)	810
Overvoltage trip	820

Table 7.3 FCD 302 DC Voltage Level

Fuses
The unit is suitable for use on a circuit capable of delivering not more than 100000 RMS symmetrical Amperes, 500 V maximum.

Circuit breaker
The unit is suitable for use on a circuit capable of delivering not more than 10000 RMS symmetrical Amperes, 500 V maximum.

7

Danfoss A/S © 11/2016 All rights reserved.

8 Appendix

8.1 Quick Menu Parameters

0-01 Language		
Option:		**Function:**
		Defines display language. The frequency converter is delivered with 4 different language packages. English and German are included in all packages. English cannot be erased or manipulated.
[0] *	English	Part of language packages 1–4
[1]	Deutsch	Part of language packages 1–4
[2]	Francais	Part of language package 1
[3]	Dansk	Part of language package 1
[4]	Spanish	Part of language package 1
[5]	Italiano	Part of language package 1
[6]	Svenska	Part of language package 1
[7]	Nederlands	Part of language package 1
[10]	Chinese	Part of language package 2
[20]	Suomi	Part of language package 1
[22]	English US	Part of language package 4
[27]	Greek	Part of language package 4
[28]	Bras.port	Part of language package 4
[36]	Slovenian	Part of language package 3
[39]	Korean	Part of language package 2
[40]	Japanese	Part of language package 2
[41]	Turkish	Part of language package 4
[42]	Trad.Chinese	Part of language package 2
[43]	Bulgarian	Part of language package 3
[44]	Srpski	Part of language package 3
[45]	Romanian	Part of language package 3
[46]	Magyar	Part of language package 3
[47]	Czech	Part of language package 3
[48]	Polski	Part of language package 4
[49]	Russian	Part of language package 3
[50]	Thai	Part of language package 2
[51]	Bahasa Indonesia	Part of language package 2
[52]	Hrvatski	Part of language package 3

1-20 Motor Power [kW]		
Range:		**Function:**
Size related*	[0.09 - 3000.00 kW]	***NOTICE*** **This parameter cannot be adjusted while the motor is running.** Enter the nominal motor power in kW according to the motor nameplate data. The default value corresponds to the nominal rated output of the frequency converter. This parameter is visible in the LCP if *parameter 0-03 Regional Settings* is set to *[0] International*.

1-22 Motor Voltage		
Range:		**Function:**
Size related*	[10 - 1000 V]	Enter the nominal motor voltage according to the motor nameplate data. The default value corresponds to the nominal rated output of the frequency converter.

1-23 Motor Frequency		
Range:		**Function:**
Size related*	[20 - 1000 Hz]	***NOTICE*** **From software version 6.72 onwards, the output frequency of the frequency converter is limited to 590 Hz.** Select the motor frequency value from the motor nameplate data. If a value other than 50 Hz or 60 Hz is selected, adapt the load-independent settings in *parameter 1-50 Motor Magnetisation at Zero Speed* to *parameter 1-53 Model Shift Frequency*. For 87 Hz operation with 230/400 V motors, set the nameplate data for 230 V/50 Hz. To run at 87 Hz, adapt *parameter 4-13 Motor Speed High Limit [RPM]* and *parameter 3-03 Maximum Reference*.

 Danfoss A/S © 11/2016 All rights reserved.

1-24 Motor Current

Range:		Function:
Size related*	[0.10 - 10000.00 A]	***NOTICE*** **This parameter cannot be adjusted while the motor is running.** Enter the nominal motor current value from the motor nameplate data. The data is used for calculating motor torque, motor thermal protection, and so on.

1-25 Motor Nominal Speed

Range:		Function:
Size related*	[100 - 60000 RPM]	***NOTICE*** **This parameter cannot be adjusted while the motor is running.** Enter the nominal motor speed value from the motor nameplate data. The data is used for calculating automatic motor compensations.

5-12 Terminal 27 Digital Input

Option: Function:

Select the function from the available digital input range.

No operation	[0]
Reset	[1]
Coast inverse	[2]
Coast and reset inverse	[3]
Quick stop inverse	[4]
DC-brake inverse	[5]
Stop inverse	[6]
Start	[8]
Latched start	[9]
Reversing	[10]
Start reversing	[11]
Enable start forward	[12]
Enable start reverse	[13]
Jog	[14]
Preset ref bit 0	[16]
Preset ref bit 1	[17]
Preset ref bit 2	[18]
Freeze reference	[19]
Freeze output	[20]
Speed up	[21]
Speed down	[22]
Set-up select bit 0	[23]
Set-up select bit 1	[24]
Catch up	[28]
Slow down	[29]
Pulse input	[32]
Ramp bit 0	[34]
Ramp bit 1	[35]
Mains failure inverse	[36]
DigiPot increase	[55]
DigiPot decrease	[56]
DigiPot clear	[57]
Reset counter A	[62]
Reset counter B	[65]

5-12 Terminal 27 Digital Input

Option: Function:

1-29 Automatic Motor Adaptation (AMA)

Option: Function:

		The AMA function optimizes dynamic motor performance by automatically optimizing the advanced motor parameters (*parameter 1-30 Stator Resistance (Rs)* to *parameter 1-35 Main Reactance (Xh)*) at motor standstill. Activate the AMA function by pressing [Hand on] after selecting *[1]* or *[2]*. See also *chapter 5.4 System Start-up*. After a normal sequence, the display reads: "Press [OK] to finish AMA". After pressing [OK] the frequency converter is ready for operation. ***NOTICE*** **This parameter cannot be adjusted while the motor is running.**
[0] *	OFF	
[1]	Enable complete AMA	Performs AMA of the stator resistance R_S, the rotor resistance R_r, the stator leakage reactance X_1, the rotor leakage reactance X_2 and the main reactance X_h.
[2]	Enable reduced AMA	Performs a reduced AMA of the stator resistance R_s in the system only. Select this option if an LC filter is used between the frequency converter and the motor.

Note:

- For the best adaptation of the frequency converter, run AMA on a cold motor.
- AMA cannot be performed while the motor is running.
- AMA cannot be performed on permanent magnet motors.

8

Danfoss A/S © 11/2016 All rights reserved.

NOTICE

It is important to set motor *parameter group 1-2* Motor Data* correctly, since these parameters form part of the AMA algorithm. An AMA must be performed to achieve optimum dynamic motor performance. Depending on the power rating of the motor, it takes up to 10 minutes

NOTICE

Avoid generating external torque during AMA, by disconnecting the motor shaft from the application.

NOTICE

If 1 of the settings in *parameter group 1-2* Motor Data* is changed, *parameter 1-30 Stator Resistance (Rs)* to *parameter 1-39 Motor Poles*, the advanced motor parameters return to default setting.

3-02 Minimum Reference		
Range:		**Function:**
Size related*	[-999999.999 - par. 3-03 ReferenceFeedbackUnit]	Enter the minimum reference. The minimum reference is the lowest value obtainable by summing all references. Minimum reference is active only when *parameter 3-00 Reference Range* is set to *[0] Min.- Max.* The minimum reference unit matches: • The configuration of *parameter 1-00 Configuration Mode*: for *[1] Speed closed loop*, RPM; for *[2] Torque*, Nm. • The unit selected in *parameter 3-01 Reference/ Feedback Unit*. If option *[10] Synchronization* is selected in *parameter 1-00 Configuration Mode*, this parameter defines the maximum speed deviation when performing the position offset defined in *parameter 3-26 Master Offset*.

3-03 Maximum Reference		
Range:		**Function:**
Size related*	[par. 3-02 - 999999.999 ReferenceFeedbackUnit]	Enter the maximum reference. The maximum reference is the highest value obtainable by summing all references. The maximum reference unit matches: • The configuration selected in *parameter 1-00 Configuration Mode*: For *[1] Speed closed loop*, RPM; for *[2] Torque*, Nm. • The unit selected in *parameter 3-00 Reference Range*. If *[9] Positioning* is selected in *parameter 1-00 Configuration Mode*, this parameter defines the default speed for positioning.

3-41 Ramp 1 Ramp Up Time		
Range:		**Function:**
Size related*	[0.01 - 3600 s]	Enter the ramp-up time, that is the acceleration time from 0 RPM to the synchronous motor speed n_S. Select a ramp-up time which prevents the output current from exceeding the current limit in *parameter 4-18 Current Limit* during ramping. The value 0.00 corresponds to 0.01 s in speed mode. See ramp-down time in *parameter 3-42 Ramp 1 Ramp Down Time*. $Par.\ 3-41 = \frac{t_{acc}\,[s] \times n_s\,[RPM]}{ref\,[RPM]}$

3-42 Ramp 1 Ramp Down Time		
Range:		**Function:**
Size related*	[0.01 - 3600 s]	Enter the ramp-down time, that is the deceleration time from the synchronous motor speed n_s to 0 RPM. Select a ramp-down time such that no overvoltage occurs in the inverter due to regenerative operation of the motor, and such that the generated current does not exceed the current limit set in *parameter 4-18 Current Limit*. The value 0.00 corresponds to 0.01 s in speed mode. See ramp-up time in *parameter 3-41 Ramp 1 Ramp Up Time*. $Par.\ 3-42 = \frac{t_{dec}\,[s] \times n_s\,[RPM]}{ref\,[RPM]}$

Danfoss A/S © 11/2016 All rights reserved.

8.2 Parameter Menu Structure

Changes during operation
True means that the parameter can be changed while the frequency converter is in operation and false means that it must be stopped before a change can be made.

4-Set-up
All set-ups: The parameters can be set individually in each of the 4 set-ups, that is, 1 single parameter can have 4 different data values.
In all set-ups 1 set-up: Data value is the same.

Conversion index
This number refers to a conversion figure used when writing or reading to and from the frequency converter.

Conversion index	Conversion factor
100	1
67	1/60
6	1000000
5	100000
4	10000
3	1000
2	100
1	10
0	1
-1	0.1
-2	0.01
-3	0.001
-4	0.0001
-5	0.00001
-6	0.000001

Data type	Description	Type
2	Integer 8	Int8
3	Integer 16	Int16
4	Integer 32	Int32
5	Unsigned 8	Uint8
6	Unsigned 16	Uint16
7	Unsigned 32	Uint32
9	Visible String	VisStr
33	Normalized value 2 bytes	N2
35	Bit sequence of 16 boolean variables	V2
54	Time difference w/o date	TimD

See the *VLT® Decentral Drive FCD 302 Design Guide* for further information about data types 33, 35, and 54.

Danfoss A/S © 11/2016 All rights reserved.

8.2.1 Software 7.XX

0- **	**Operation / Display**
0-0*	**Basic Settings**
0-01	Language
0-02	Motor Speed Unit
0-03	Regional Settings
0-04	Operating State at Power-up (Hand)
0-09	Performance Monitor
0-1*	**Set-up Operations**
0-10	Active Set-up
0-11	Edit Set-up
0-12	This Set-up Linked to
0-13	Readout: Linked Set-ups
0-14	Readout: Edit Set-ups / Channel
0-15	Readout: actual setup
0-2*	**LCP Display**
0-20	Display Line 1.1 Small
0-21	Display Line 1.2 Small
0-22	Display Line 1.3 Small
0-23	Display Line 2 Large
0-24	Display Line 3 Large
0-25	My Personal Menu
0-3*	**LCP Custom Readout**
0-30	Unit for User-defined Readout
0-31	Min Value of User-defined Readout
0-32	Max Value of User-defined Readout
0-33	Source for User-defined Readout
0-37	Display Text 1
0-38	Display Text 2
0-39	Display Text 3
0-4*	**LCP Keypad**
0-40	[Hand on] Key on LCP
0-41	[Off] Key on LCP
0-42	[Auto on] Key on LCP
0-43	[Reset] Key on LCP
0-44	[Off/Reset] Key on LCP
0-45	[Drive Bypass] Key on LCP
0-5*	**Copy/Save**
0-50	LCP Copy
0-51	Set-up Copy
0-6*	**Password**
0-60	Main Menu Password
0-61	Access to Main Menu w/o Password
0-65	Quick Menu Password
0-66	Access to Quick Menu w/o Password
0-67	Bus Password Access
0-68	Safety Parameters Password
0-69	Password Protection of Safety Parameters
1- **	**Load and Motor**
1-0*	**General Settings**
1-00	Configuration Mode
1-01	Motor Control Principle
1-02	Flux Motor Feedback Source
1-03	Torque Characteristics
1-04	Overload Mode
1-05	Local Mode Configuration
1-06	Clockwise Direction
1-07	Motor Angle Offset Adjust
1-1*	**Special Settings**
1-10	Motor Construction
1-11	Motor Model
1-14	Damping Gain
1-15	Low Speed Filter Time Const.
1-16	High Speed Filter Time Const.
1-17	Voltage filter time const.
1-18	Min. Current at No Load
1-2*	**Motor Data**
1-20	Motor Power [kW]
1-21	Motor Power [HP]
1-22	Motor Voltage
1-23	Motor Frequency
1-24	Motor Current
1-25	Motor Nominal Speed
1-26	Motor Cont. Rated Torque
1-29	Automatic Motor Adaptation (AMA)
1-3*	**Adv. Motor Data**
1-30	Stator Resistance (Rs)
1-31	Rotor Resistance (Rr)
1-33	Stator Leakage Reactance (X1)
1-34	Rotor Leakage Reactance (X2)
1-35	Main Reactance (Xh)
1-36	Iron Loss Resistance (Rfe)
1-37	d-axis Inductance (Ld)
1-38	q-axis Inductance (Lq)
1-39	Motor Poles
1-40	Back EMF at 1000 RPM
1-41	Motor Angle Offset
1-44	d-axis Inductance Sat. (LdSat)
1-45	q-axis Inductance Sat. (LqSat)
1-46	Position Detection Gain
1-47	Torque Calibration
1-48	Inductance Sat. Point
1-5*	**Load Indep. Setting**
1-50	Motor Magnetisation at Zero Speed
1-51	Min Speed Normal Magnetising [RPM]
1-52	Min Speed Normal Magnetising [Hz]
1-53	Model Shift Frequency
1-54	Voltage reduction in fieldweakening
1-55	U/f Characteristic - U
1-56	U/f Characteristic - F
1-58	Flying Start Test Pulses Current
1-59	Flying Start Test Pulses Frequency
1-6*	**Load Depen. Setting**
1-60	Low Speed Load Compensation
1-61	High Speed Load Compensation
1-62	Slip Compensation
1-63	Slip Compensation Time Constant
1-64	Resonance Damping
1-65	Resonance Damping Time Constant
1-66	Min. Current at Low Speed
1-67	Load Type
1-68	Motor Inertia
1-69	System Inertia
1-7*	**Start Adjustments**
1-70	PM Start Mode
1-71	Start Delay
1-72	Start Function
1-73	Flying Start
1-74	Start Speed [RPM]
1-75	Start Speed [Hz]
1-76	Start Current
1-8*	**Stop Adjustments**
1-80	Function at Stop
1-81	Min Speed for Function at Stop [RPM]
1-82	Min Speed for Function at Stop [Hz]
1-83	Precise Stop Function
1-84	Precise Stop Counter Value
1-85	Precise Stop Speed Compensation Delay
1-9*	**Motor Temperature**
1-90	Motor Thermal Protection
1-91	Motor External Fan
1-93	Thermistor Resource
1-94	ATEX ETR cur.lim. speed reduction
1-95	KTY Sensor Type
1-96	KTY Thermistor Resource
1-97	KTY Threshold level
1-98	ATEX ETR interpol. points freq.
1-99	ATEX ETR interpol points current
2- **	**Brakes**
2-0*	**DC-Brake**
2-00	DC Hold Current
2-01	DC Brake Current
2-02	DC Braking Time
2-03	DC Brake Cut In Speed [RPM]
2-04	DC Brake Cut In Speed [Hz]
2-05	Maximum Reference
2-06	Parking Current
2-07	Parking Time
2-1*	**Brake Energy Funct.**
2-10	Brake Function
2-11	Brake Resistor (ohm)
2-12	Brake Power Limit (kW)
2-13	Brake Power Monitoring
2-15	Brake Check
2-16	AC brake Max. Current
2-17	Over-voltage Control
2-18	Brake Check Condition
2-19	Over-voltage Gain
2-2*	**Mechanical Brake**
2-20	Release Brake Current
2-21	Activate Brake Speed [RPM]
2-22	Activate Brake Speed [Hz]
2-23	Activate Brake Delay
2-24	Stop Delay
2-25	Brake Release Time
2-26	Torque Ref
2-27	Torque Ramp Up Time
2-28	Gain Boost Factor
2-29	Torque Ramp Down Time
2-3*	**Adv. Mech Brake**
2-30	Position P Start Proportional Gain
2-31	Speed PID Start Proportional Gain
2-32	Speed PID Start Integral Time
2-33	Speed PID Start Lowpass Filter Time
3- **	**Reference / Ramps**
3-0*	**Reference Limits**
3-00	Reference Range
3-01	Reference/Feedback Unit
3-02	Minimum Reference
3-03	Maximum Reference
3-04	Reference Function
3-1*	**References**
3-10	Preset Reference
3-11	Jog Speed [Hz]
3-12	Catch up/slow Down Value
3-13	Reference Site
3-14	Preset Relative Reference
3-15	Reference Resource 1
3-16	Reference Resource 2
3-17	Reference Resource 3
3-18	Relative Scaling Reference Resource
3-19	Jog Speed [RPM]
3-4*	**Ramp 1**
3-40	Ramp 1 Type
3-41	Ramp 1 Ramp Up Time
3-42	Ramp 1 Ramp Down Time
3-45	Ramp 1 S-ramp Ratio at Accel. Start
3-46	Ramp 1 S-ramp Ratio at Accel. End
3-47	Ramp 1 S-ramp Ratio at Decel. Start
3-48	Ramp 1 S-ramp Ratio at Decel. End
3-5*	**Ramp 2**
3-50	Ramp 2 Type
3-51	Ramp 2 Ramp Up Time
3-52	Ramp 2 Ramp Down Time
3-55	Ramp 2 S-ramp Ratio at Accel. Start
3-56	Ramp 2 S-ramp Ratio at Accel. End
3-57	Ramp 2 S-ramp Ratio at Decel. Start
3-58	Ramp 2 S-ramp Ratio at Decel. End
3-6*	**Ramp 3**
3-60	Ramp 3 Type
3-61	Ramp 3 Ramp up Time
3-62	Ramp 3 Ramp down Time
3-65	Ramp 3 S-ramp Ratio at Accel. Start
3-66	Ramp 3 S-ramp Ratio at Accel. End
3-67	Ramp 3 S-ramp Ratio at Decel. Start
3-68	Ramp 3 S-ramp Ratio at Decel. End
3-7*	**Ramp 4**
3-70	Ramp 4 Type
3-71	Ramp 4 Ramp up Time
3-72	Ramp 4 Ramp Down Time
3-75	Ramp 4 S-ramp Ratio at Accel. Start
3-76	Ramp 4 S-ramp Ratio at Accel. End
3-77	Ramp 4 S-ramp Ratio at Decel. Start
3-78	Ramp 4 S-ramp Ratio at Decel. End
3-8*	**Other Ramps**
3-80	Jog Ramp Time
3-81	Quick Stop Ramp Time
3-82	Quick Stop Ramp Type
3-83	Quick Stop S-ramp Ratio at Decel. Start
3-84	Quick Stop S-ramp Ratio at Decel. End
3-89	Ramp Lowpass Filter Time
3-9*	**Digital Pot.Meter**
3-90	Step Size
3-91	Ramp Time
3-92	Power Restore
3-93	Maximum Limit
3-94	Minimum Limit
3-95	Ramp Delay
4- **	**Limits / Warnings**
4-1*	**Motor Limits**
4-10	Motor Speed Direction
4-11	Motor Speed Low Limit [RPM]
4-12	Motor Speed Low Limit [Hz]
4-13	Motor Speed High Limit [RPM]
4-14	Motor Speed High Limit [Hz]
4-16	Torque Limit Motor Mode
4-17	Torque Limit Generator Mode
4-18	Current Limit
4-19	Max Output Frequency
4-2*	**Limit Factors**
4-20	Torque Limit Factor Source
4-21	Speed Limit Factor Source
4-23	Brake Check Limit Factor Source
4-24	Brake Check Limit Factor
4-3*	**Motor Speed Mon.**
4-30	Motor Feedback Loss Function
4-31	Motor Feedback Speed Error
4-32	Motor Feedback Loss Timeout
4-34	Tracking Error Function
4-35	Tracking Error
4-36	Tracking Error Timeout
4-37	Tracking Error Ramping
4-38	Tracking Error Ramping Timeout
4-39	Tracking Error After Ramping Timeout
4-4*	**Speed Monitor**
4-43	Motor Speed Monitor Function
4-44	Motor Speed Monitor Max
4-45	Motor Speed Monitor Timeout
4-5*	**Adj. Warnings**
4-50	Warning Current Low
4-51	Warning Current High
4-52	Warning Speed Low
4-53	Warning Speed High
4-54	Warning Reference Low
4-55	Warning Reference High
4-56	Warning Feedback Low
4-57	Warning Feedback High
4-58	Missing Motor Phase Function
4-59	Motor Check At Start
4-6*	**Speed Bypass**
4-60	Bypass Speed From [RPM]
4-61	Bypass Speed From [Hz]
4-62	Bypass Speed To [RPM]
4-63	Bypass Speed To [Hz]
5- **	**Digital In/Out**
5-0*	**Digital I/O mode**
5-00	Digital I/O Mode
5-01	Terminal 27 Mode
5-02	Terminal 29 Mode
5-1*	**Digital Inputs**
5-10	Terminal 18 Digital Input

Danfoss A/S © 11/2016 All rights reserved.

5-11	Terminal 19 Digital Input
5-12	Terminal 27 Digital Input
5-13	Terminal 29 Digital Input
5-14	Terminal 32 Digital Input
5-15	Terminal 33 Digital Input
5-16	Terminal X30/2 Digital Input
5-17	Terminal X30/3 Digital Input
5-18	Terminal X30/4 Digital Input
5-19	Terminal 37 Safe Stop
5-20	Terminal X46/1 Digital Input
5-21	Terminal X46/3 Digital Input
5-22	Terminal X46/5 Digital Input
5-23	Terminal X46/7 Digital Input
5-24	Terminal X46/9 Digital Input
5-25	Terminal X46/11 Digital Input
5-26	Terminal X46/13 Digital Input
5-3*	**Digital Outputs**
5-30	Terminal 27 Digital Output
5-31	Terminal 29 Digital Output
5-32	Term X30/6 Digi Out (MCB 101)
5-33	Term X30/7 Digi Out (MCB 101)
5-4*	**Relays**
5-40	Function Relay
5-41	On Delay, Relay
5-42	Off Delay, Relay
5-5*	**Pulse Input**
5-50	Term. 29 Low Frequency
5-51	Term. 29 High Frequency
5-52	Term. 29 Low Ref./Feedb. Value
5-53	Term. 29 High Ref./Feedb. Value
5-54	Pulse Filter Time Constant #29
5-55	Term. 33 Low Frequency
5-56	Term. 33 High Frequency
5-57	Term. 33 Low Ref./Feedb. Value
5-58	Term. 33 High Ref./Feedb. Value
5-59	Pulse Filter Time Constant #33
5-6*	**Pulse Output**
5-60	Terminal 27 Pulse Output Variable
5-62	Pulse Output Max Freq #27
5-63	Terminal 29 Pulse Output Variable
5-65	Pulse Output Max Freq #29
5-66	Terminal X30/6 Pulse Output Variable
5-68	Pulse Output Max Freq #X30/6
5-7*	**24V Encoder Input**
5-70	Term 32/33 Pulses Per Revolution
5-71	Term 32/33 Encoder Direction
5-8*	**I/O Options**
5-80	AHF Cap Reconnect Delay
5-9*	**Bus Controlled**
5-90	Digital & Relay Bus Control
5-93	Pulse Out #27 Bus Control
5-94	Pulse Out #27 Timeout Preset
5-95	Pulse Out #29 Bus Control
5-96	Pulse Out #29 Timeout Preset
5-97	Pulse Out #X30/6 Bus Control
5-98	Pulse Out #X30/6 Timeout Preset
6-**	**Analog In/Out**
6-0*	**Analog I/O Mode**
6-00	Live Zero Timeout Time
6-01	Live Zero Timeout Function
6-1*	**Analog Input 1**
6-10	Terminal 53 Low Voltage
6-11	Terminal 53 High Voltage
6-12	Terminal 53 Low Current
6-13	Terminal 53 High Current
6-14	Terminal 53 Low Ref./Feedb. Value
6-15	Terminal 53 High Ref./Feedb. Value
6-16	Terminal 53 Filter Time Constant
6-2*	**Analog Input 2**
6-20	Terminal 54 Low Voltage
6-21	Terminal 54 High Voltage
6-22	Terminal 54 Low Current
6-23	Terminal 54 High Current
6-24	Terminal 54 Low Ref./Feedb. Value
6-25	Terminal 54 High Ref./Feedb. Value
6-26	Terminal 54 Filter Time Constant
6-3*	**Analog Input 3**
6-30	Terminal X30/11 Low Voltage
6-31	Terminal X30/11 High Voltage
6-34	Term. X30/11 Low Ref./Feedb. Value
6-35	Term. X30/11 High Ref./Feedb. Value
6-36	Term. X30/11 Filter Time Constant
6-4*	**Analog Input 4**
6-40	Terminal X30/12 Low Voltage
6-41	Terminal X30/12 High Voltage
6-44	Term. X30/12 Low Ref./Feedb. Value
6-45	Term. X30/12 High Ref./Feedb. Value
6-46	Term. X30/12 Filter Time Constant
6-5*	**Analog Output 1**
6-50	Terminal 42 Output
6-51	Terminal 42 Output Min Scale
6-52	Terminal 42 Output Max Scale
6-53	Term 42 Output Bus Ctrl
6-54	Terminal 42 Output Timeout Preset
6-55	Analog Output Filter
6-6*	**Analog Output 2**
6-60	Terminal X30/8 Output
6-61	Terminal X30/8 Min. Scale
6-62	Terminal X30/8 Max. Scale
6-63	Terminal X30/8 Bus Control
6-64	Terminal X30/8 Output Timeout Preset
6-7*	**Analog Output 3**
6-70	Terminal X45/1 Output
6-71	Terminal X45/1 Min. Scale
6-72	Terminal X45/1 Max. Scale
6-73	Terminal X45/1 Bus Control
6-74	Terminal X45/1 Output Timeout Preset
6-8*	**Analog Output 4**
6-80	Terminal X45/3 Output
6-81	Terminal X45/3 Min. Scale
6-82	Terminal X45/3 Max. Scale
6-83	Terminal X45/3 Bus Control
6-84	Terminal X45/3 Output Timeout Preset
7-**	**Controllers**
7-0*	**Speed PID Ctrl.**
7-00	Speed PID Feedback Source
7-01	Speed PID Droop
7-02	Speed PID Proportional Gain
7-03	Speed PID Integral Time
7-04	Speed PID Differentiation Time
7-05	Speed PID Diff. Gain Limit
7-06	Speed PID Lowpass Filter Time
7-07	Speed PID Feedback Gear Ratio
7-08	Speed PID Feed Forward Factor
7-09	Speed PID Error Correction w/ Ramp
7-1*	**Torque PI Ctrl.**
7-10	Torque PI Feedback Source
7-12	Torque PI Proportional Gain
7-13	Torque PI Integration Time
7-16	Torque PI Lowpass Filter Time
7-18	Torque PI Feed Forward Factor
7-19	Current Controller Rise Time
7-2*	**Process Ctrl. Feedb**
7-20	Process CL Feedback 1 Resource
7-22	Process CL Feedback 2 Resource
7-3*	**Process PID Ctrl.**
7-30	Process PID Normal/ Inverse Control
7-31	Process PID Anti Windup
7-32	Process PID Start Speed
7-33	Process PID Proportional Gain
7-34	Process PID Integral Time
7-35	Process PID Differentiation Time
7-36	Process PID Diff. Gain Limit
7-38	Process PID Feed Forward Factor
7-39	On Reference Bandwidth
7-4*	**Adv. Process PID I**
7-40	Process PID I-part Reset
7-41	Process PID Output Neg. Clamp
7-42	Process PID Output Pos. Clamp
7-43	Process PID Gain Scale at Min. Ref.
7-44	Process PID Gain Scale at Max. Ref.
7-45	Process PID Feed Fwd Resource
7-46	Process PID Feed Fwd Normal/ Inv. Ctrl.
7-48	PCD Feed Forward
7-49	Process PID Output Normal/ Inv. Ctrl.
7-5*	**Adv. Process PID II**
7-50	Process PID Extended PID
7-51	Process PID Feed Fwd Gain
7-52	Process PID Feed Fwd Ramp up
7-53	Process PID Feed Fwd Ramp down
7-56	Process PID Ref. Filter Time
7-57	Process PID Fb. Filter Time
8-**	**Comm. and Options**
8-0*	**General Settings**
8-01	Control Site
8-02	Control Word Source
8-03	Control Word Timeout Time
8-04	Control Word Timeout Function
8-05	End-of-Timeout Function
8-06	Reset Control Word Timeout
8-07	Diagnosis Trigger
8-08	Readout Filtering
8-1*	**Ctrl. Word Settings**
8-10	Control Word Profile
8-13	Configurable Status Word STW
8-14	Configurable Control Word CTW
8-17	Configurable Alarm and Warningword
8-19	Product Code
8-3*	**FC Port Settings**
8-30	Protocol
8-31	Address
8-32	FC Port Baud Rate
8-33	Parity / Stop Bits
8-34	Estimated cycle time
8-35	Minimum Response Delay
8-36	Max Response Delay
8-37	Max Inter-Char Delay
8-4*	**FC MC protocol set**
8-40	Telegram Selection
8-41	Parameters for Signals
8-42	PCD Write Configuration
8-43	PCD Read Configuration
8-45	BTM Transaction Command
8-46	BTM Transaction Status
8-47	BTM Timeout
8-48	BTM Maximum Errors
8-49	BTM Error Log
8-5*	**Digital/Bus**
8-50	Coasting Select
8-51	Quick Stop Select
8-52	DC Brake Select
8-53	Start Select
8-54	Reversing Select
8-55	Set-up Select
8-56	Preset Reference Select
8-57	Profidrive OFF2 Select
8-58	Profidrive OFF3 Select
8-8*	**FC Port Diagnostics**
8-80	Bus Message Count
8-81	Bus Error Count
8-82	Slave Messages Rcvd
8-83	Slave Error Count
8-9*	**Bus Jog**
8-90	Bus Jog 1 Speed
8-91	Bus Jog 2 Speed
9-**	**PROFIdrive**
9-00	Setpoint
9-07	Actual Value
9-15	PCD Write Configuration
9-16	PCD Read Configuration
9-18	Node Address
9-19	Drive Unit System Number
9-22	Telegram Selection
9-23	Parameters for Signals
9-27	Parameter Edit
9-28	Process Control
9-44	Fault Message Counter
9-45	Fault Code
9-47	Fault Number
9-52	Fault Situation Counter
9-53	Profibus Warning Word
9-63	Actual Baud Rate
9-64	Device Identification
9-65	Profile Number
9-67	Control Word 1
9-68	Status Word 1
9-70	Edit Set-up
9-71	Profibus Save Data Values
9-72	ProfibusDriveReset
9-75	DO Identification
9-80	Defined Parameters (1)
9-81	Defined Parameters (2)
9-82	Defined Parameters (3)
9-83	Defined Parameters (4)
9-84	Defined Parameters (5)
9-85	Defined Parameters (6)
9-90	Changed Parameters (1)
9-91	Changed Parameters (2)
9-92	Changed Parameters (3)
9-93	Changed Parameters (4)
9-94	Changed Parameters (5)
9-99	Profibus Revision Counter
10-**	**CAN Fieldbus**
10-0*	**Common Settings**
10-00	CAN Protocol
10-01	Baud Rate Select
10-02	MAC ID
10-05	Readout Transmit Error Counter
10-06	Readout Receive Error Counter
10-07	Readout Bus Off Counter
10-1*	**DeviceNet**
10-10	Process Data Type Selection
10-11	Process Data Config Write
10-12	Process Data Config Read
10-13	Warning Parameter
10-14	Net Reference
10-15	Net Control
10-2*	**COS Filters**
10-20	COS Filter 1
10-21	COS Filter 2
10-22	COS Filter 3
10-23	COS Filter 4
10-3*	**Parameter Access**
10-30	Array Index
10-31	Store Data Values
10-32	Devicenet Revision
10-33	Store Always
10-34	DeviceNet Product Code
10-39	Devicenet F Parameters
10-5*	**CANopen**
10-50	Process Data Config Write.
10-51	Process Data Config Read.
12-**	**Ethernet**
12-0*	**IP Settings**
12-00	IP Address Assignment
12-01	IP Address
12-02	Subnet Mask
12-03	Default Gateway
12-04	DHCP Server
12-05	Lease Expires
12-06	Name Servers
12-07	Domain Name
12-08	Host Name
12-09	Physical Address

12-1* Ethernet Link Parameters
12-10 Link Status
12-11 Link Duration
12-12 Auto Negotiation
12-13 Link Speed
12-14 Link Duplex
12-18 Supervisor MAC
12-19 Supervisor IP Addr.
12-2* Process Data
12-20 Control Instance
12-21 Process Data Config Write
12-22 Process Data Config Read
12-23 Process Data Config Write Size
12-24 Process Data Config Read Size
12-27 Master Address
12-28 Store Data Values
12-29 Store Always
12-3* EtherNet/IP
12-30 Warning Parameter
12-31 Net Reference
12-32 Net Control
12-33 CIP Revision
12-34 CIP Product Code
12-35 EDS Parameter
12-37 COS Inhibit Timer
12-38 COS Filter
12-4* Modbus TCP
12-40 Status Parameter
12-41 Slave Message Count
12-42 Slave Exception Message Count
12-5* EtherCAT
12-50 Configured Station Alias
12-51 Configured Station Address
12-59 EtherCAT Status
12-6* Ethernet PowerLink
12-60 Node ID
12-62 SDO Timeout
12-63 Basic Ethernet Timeout
12-66 Threshold
12-67 Threshold Counters
12-68 Cumulative Counters
12-69 Ethernet PowerLink Status
12-8* Other Ethernet Services
12-80 FTP Server
12-81 HTTP Server
12-82 SMTP Service
12-83 SNMP Agent
12-84 Address Conflict Detection
12-85 ACD Last Conflict
12-89 Transparent Socket Channel Port
12-9* Advanced Ethernet Services
12-90 Cable Diagnostic
12-91 Auto Cross Over
12-92 IGMP Snooping
12-93 Cable Error Length
12-94 Broadcast Storm Protection
12-95 Inactivity timeout
12-96 Port Config
12-97 QoS Priority
12-98 Interface Counters
12-99 Media Counters
13- Smart Logic**
13-0* SLC Settings
13-00 SL Controller Mode
13-01 Start Event
13-02 Stop Event
13-03 Reset SLC
13-1* Comparators
13-10 Comparator Operand
13-11 Comparator Operator
13-12 Comparator Value
13-1* RS Flip Flops
13-15 RS-FF Operand S
13-16 RS-FF Operand R
13-2* Timers
13-20 SL Controller Timer
13-4* Logic Rules
13-40 Logic Rule Boolean 1
13-41 Logic Rule Operator 1
13-42 Logic Rule Boolean 2
13-43 Logic Rule Operator 2
13-44 Logic Rule Boolean 3
13-5* States
13-51 SL Controller Event
13-52 SL Controller Action
14- Special Functions**
14-0* Inverter Switching
14-00 Switching Pattern
14-01 Switching Frequency
14-03 Overmodulation
14-04 Acoustic Noise Reduction
14-06 Dead Time Compensation
14-1* Mains Failure
14-10 Mains Failure
14-11 Mains Fault Voltage Level
14-12 Response to Mains Imbalance
14-14 Kin. Back-up Time-out
14-15 Kin. Back-up Trip Recovery Level
14-16 Kin. Back-up Gain
14-2* Trip Reset
14-20 Reset Mode
14-21 Automatic Restart Time
14-22 Operation Mode
14-24 Trip Delay at Current Limit
14-25 Trip Delay at Torque Limit
14-26 Trip Delay at Inverter Fault
14-28 Production Settings
14-29 Service Code
14-3* Current Limit Ctrl.
14-30 Current Lim Ctrl, Proportional Gain
14-31 Current Lim Ctrl, Integration Time
14-32 Current Lim Ctrl, Filter Time
14-35 Stall Protection
14-36 Field-weakening Function
14-37 Fieldweakening Speed
14-4* Energy Optimising
14-40 VT Level
14-41 AEO Minimum Magnetisation
14-42 Minimum AEO Frequency
14-43 Motor Cosphi
14-5* Environment
14-50 RFI Filter
14-51 DC-Link Compensation
14-52 Fan Control
14-53 Fan Monitor
14-55 Output Filter
14-56 Capacitance Output Filter
14-57 Inductance Output Filter
14-59 Actual Number of Inverter Units
14-7* Compatibility
14-72 Legacy Alarm Word
14-73 Legacy Warning Word
14-74 Leg. Ext. Status Word
14-8* Options
14-80 Option Supplied by External 24VDC
14-88 Option Data Storage
14-89 Option Detection
14-9* Fault Settings
14-90 Fault Level
15- Drive Information**
15-0* Operating Data
15-00 Operating hours
15-01 Running Hours
15-02 kWh Counter
15-03 Power Up's
15-04 Over Temp's
15-05 Over Volt's
15-06 Reset kWh Counter
15-07 Reset Running Hours Counter
15-1* Data Log Settings
15-10 Logging Source
15-11 Logging Interval
15-12 Trigger Event
15-13 Logging Mode
15-14 Samples Before Trigger
15-2* Historic Log
15-20 Historic Log: Event
15-21 Historic Log: Value
15-22 Historic Log: Time
15-3* Fault Log
15-30 Fault Log: Error Code
15-31 Fault Log: Value
15-32 Fault Log: Time
15-4* Drive Identification
15-40 FC Type
15-41 Power Section
15-42 Voltage
15-43 Software Version
15-44 Ordered Typecode String
15-45 Actual Typecode String
15-46 Frequency Converter Ordering No
15-47 Power Card Ordering No
15-48 LCP Id No
15-49 SW ID Control Card
15-50 SW ID Power Card
15-51 Frequency Converter Serial Number
15-53 Power Card Serial Number
15-54 Config File Name
15-59 Filename
15-6* Option Ident
15-60 Option Mounted
15-61 Option SW Version
15-62 Option Ordering No
15-63 Option Serial No
15-70 Option in Slot A
15-71 Slot A Option SW Version
15-72 Option in Slot B
15-73 Slot B Option SW Version
15-74 Option in Slot C0/E0
15-75 Slot C0/E0 Option SW Version
15-76 Option in Slot C1/E1
15-77 Slot C1/E1 Option SW Version
15-8* Operating Data II
15-80 Fan Running Hours
15-81 Preset Fan Running Hours
15-89 Configuration Change Counter
15-9* Parameter Info
15-92 Defined Parameters
15-93 Modified Parameters
15-98 Drive Identification
15-99 Parameter Metadata
16- Data Readouts**
16-0* General Status
16-00 Control Word
16-01 Reference [Unit]
16-02 Reference %
16-03 Status Word
16-05 Main Actual Value [%]
16-06 Actual Position
16-09 Custom Readout
16-1* Motor Status
16-10 Power [kW]
16-11 Power [hp]
16-12 Motor Voltage
16-13 Frequency
16-14 Motor current
16-15 Frequency [%]
16-16 Torque [Nm]
16-17 Speed [RPM]
16-18 Motor Thermal
16-19 KTY sensor temperature
16-20 Motor Angle
16-21 Torque [%] High Res.
16-22 Torque [%]
16-23 Motor Shaft Power [kW]
16-24 Calibrated Stator Resistance
16-25 Torque [Nm] High
16-3* Drive Status
16-30 DC Link Voltage
16-31 System Temp.
16-32 Brake Energy /s
16-33 Brake Energy Average
16-34 Heatsink Temp.
16-35 Inverter Thermal
16-36 Inv. Nom. Current
16-37 Inv. Max. Current
16-38 SL Controller State
16-39 Control Card Temp.
16-40 Logging Buffer Full
16-41 LCP Bottom Statusline
16-45 Motor Phase U Current
16-46 Motor Phase V Current
16-47 Motor Phase W Current
16-48 Speed Ref. After Ramp [RPM]
16-49 Current Fault Source
16-5* Ref. & Feedb.
16-50 External Reference
16-51 Pulse Reference
16-52 Feedback[Unit]
16-53 Digi Pot Reference
16-57 Feedback [RPM]
16-6* Inputs & Outputs
16-60 Digital Input
16-61 Terminal 53 Switch Setting
16-62 Analog Input 53
16-63 Terminal 54 Switch Setting
16-64 Analog Input 54
16-65 Analog Output 42 [mA]
16-66 Digital Output [bin]
16-67 Freq. Input #29 [Hz]
16-68 Freq. Input #33 [Hz]
16-69 Pulse Output #27 [Hz]
16-70 Pulse Output #29 [Hz]
16-71 Relay Output [bin]
16-72 Counter A
16-73 Counter B
16-74 Prec. Stop Counter
16-75 Analog In X30/11
16-76 Analog In X30/12
16-77 Analog Out X30/8 [mA]
16-78 Analog Out X45/1 [mA]
16-79 Analog Out X45/3 [mA]
16-8* Fieldbus & FC Port
16-80 Fieldbus CTW 1
16-82 Fieldbus REF 1
16-84 Comm. Option STW
16-85 FC Port CTW 1
16-86 FC Port REF 1
16-87 Bus Readout Alarm/Warning
16-89 Configurable Alarm/Warning Word
16-9* Diagnosis Readouts
16-90 Alarm Word
16-91 Alarm Word 2
16-92 Warning Word
16-93 Warning Word 2
16-94 Ext. Status Word
17- Position Feedback**
17-1* Inc. Enc. Interface
17-10 Signal Type
17-11 Resolution (PPR)
17-2* Abs. Enc. Interface
17-20 Protocol Selection
17-21 Resolution (Positions/Rev)
17-22 Multiturn Revolutions
17-24 SSI Data Length

Danfoss A/S © 11/2016 All rights reserved.

17-25 Clock Rate
17-26 SSI Data Format
17-34 HIPERFACE Baudrate
17-5* Resolver Interface
17-50 Poles
17-51 Input Voltage
17-52 Input Frequency
17-53 Transformation Ratio
17-56 Encoder Sim. Resolution
17-59 Resolver Interface
17-6* Monitoring and App.
17-60 Feedback Direction
17-61 Feedback Signal Monitoring
17-7* Position Scaling
17-70 Position Unit
17-71 Position Unit Scale
17-72 Position Unit Numerator
17-73 Position Unit Denominator
17-74 Position Offset
18- Data Readouts 2**
18-3* Analog Readouts
18-36 Analog Input X48/2 [mA]
18-37 Temp. Input X48/4
18-38 Temp. Input X48/7
18-39 Temp. Input X48/10
18-4* PGIO Data Readouts
18-43 Analog Out X49/7
18-44 Analog Out X49/9
18-45 Analog Out X49/11
18-5* Active Alarms/Warnings
18-55 Active Alarm Numbers
18-56 Active Warning Numbers
18-6* Inputs & Outputs 2
18-60 Digital Input 2
18-7* Rectifier Status
18-70 Mains Voltage
18-71 Mains Frequency
18-72 Mains Imbalance
18-75 Rectifier DC Volt.
18-9* PID Readouts
18-90 Process PID Error
18-91 Process PID Output
18-92 Process PID Clamped Output
18-93 Process PID Gain Scaled Output
22- Appl. Functions**
22-0* Miscellaneous
22-00 External Interlock Delay
30- Special Features**
30-0* Wobbler
30-00 Wobble Mode
30-01 Wobble Delta Frequency [Hz]
30-02 Wobble Delta Frequency [%]
30-03 Wobble Delta Freq. Scaling Resource
30-04 Wobble Jump Frequency [Hz]
30-05 Wobble Jump Frequency [%]
30-06 Wobble Jump Time
30-07 Wobble Sequence Time
30-08 Wobble Up/ Down Time
30-09 Wobble Random Function
30-10 Wobble Ratio
30-11 Wobble Random Ratio Max.
30-12 Wobble Random Ratio Min.
30-19 Wobble Delta Freq. Scaled
30-2* Adv. Start Adjust
30-20 High Starting Torque Time [s]
30-21 High Starting Torque Current [%]
30-22 Locked Rotor Protection
30-23 Locked Rotor Detection Time [s]
30-24 Locked Rotor Detection Speed Error [%]
30-25 Light Load Delay [s]
30-26 Light Load Current [%]
30-27 Light Load Speed [%]
30-5* Unit Configuration
30-50 Heat Sink Fan Mode
30-8* Compatibility (I)
30-80 d-axis Inductance (Ld)
30-81 Brake Resistor (ohm)
30-83 Speed PID Proportional Gain
30-84 Process PID Proportional Gain
31- Bypass Option**
31-00 Bypass Mode
31-01 Bypass Start Time Delay
31-02 Bypass Trip Time Delay
31-03 Test Mode Activation
31-10 Bypass Status Word
31-11 Bypass Running Hours
31-19 Remote Bypass Activation
32- MCO Basic Settings**
32-0* Encoder 2
32-00 Incremental Signal Type
32-01 Incremental Resolution
32-02 Absolute Protocol
32-03 Absolute Resolution
32-04 Absolute Encoder Baudrate X55
32-05 Absolute Encoder Data Length
32-06 Absolute Encoder Clock Frequency
32-07 Absolute Encoder Clock Generation
32-08 Absolute Encoder Cable Length
32-09 Encoder Monitoring
32-10 Rotational Direction
32-11 User Unit Denominator
32-12 User Unit Numerator
32-13 Enc.2 Control
32-14 Enc.2 node ID
32-15 Enc.2 CAN guard
32-3* Encoder 1
32-30 Incremental Signal Type
32-31 Incremental Resolution
32-32 Absolute Protocol
32-33 Absolute Resolution
32-35 Absolute Encoder Data Length
32-36 Absolute Encoder Clock Frequency
32-37 Absolute Encoder Clock Generation
32-38 Absolute Encoder Cable Length
32-39 Encoder Monitoring
32-40 Encoder Termination
32-43 Enc.1 Control
32-44 Enc.1 node ID
32-45 Enc.1 CAN guard
32-5* Feedback Source
32-50 Source Slave
32-51 MCO 302 Last Will
32-52 Source Master
32-6* PID Controller
32-60 Proportional factor
32-61 Derivative factor
32-62 Integral factor
32-63 Limit Value for Integral Sum
32-64 PID Bandwidth
32-65 Velocity Feed-Forward
32-66 Acceleration Feed-Forward
32-67 Max. Tolerated Position Error
32-68 Reverse Behavior for Slave
32-69 Sampling Time for PID Control
32-70 Scan Time for Profile Generator
32-71 Size of the Control Window (Activation)
32-72 Size of the Control Window (Deactiv.)
32-73 Integral limit filter time
32-74 Position error filter time
32-8* Velocity & Accel.
32-80 Maximum Velocity (Encoder)
32-81 Shortest Ramp
32-82 Ramp Type
32-83 Velocity Resolution
32-84 Default Velocity
32-85 Default Acceleration
32-86 Acc. up for limited jerk
32-87 Acc. down for limited jerk
32-88 Dec. up for limited jerk
32-89 Dec. down for limited jerk
32-9* Development
32-90 Debug Source
33- MCO Adv. Settings**
33-0* Home Motion
33-00 Force HOME
33-01 Zero Point Offset from Home Pos.
33-02 Ramp for Home Motion
33-03 Velocity of Home Motion
33-04 Behaviour during HomeMotion
33-1* Synchronization
33-10 Sync Factor Master
33-11 Sync Factor Slave
33-12 Position Offset for Synchronization
33-13 Accuracy Window for Position Sync.
33-14 Relative Slave Velocity Limit
33-15 Marker Number for Master
33-16 Marker Number for Slave
33-17 Master Marker Distance
33-18 Slave Marker Distance
33-19 Master Marker Type
33-20 Slave Marker Type
33-21 Master Marker Tolerance Window
33-22 Slave Marker Tolerance Window
33-23 Start Behaviour for Marker Sync
33-24 Marker Number for Fault
33-25 Marker Number for Ready
33-26 Velocity Filter
33-27 Offset Filter Time
33-28 Marker Filter Configuration
33-29 Filter Time for Marker Filter
33-30 Maximum Marker Correction
33-31 Synchronisation Type
33-32 Feed Forward Velocity Adaptation
33-33 Velocity Filter Window
33-34 Slave Marker filter time
33-4* Limit Handling
33-40 Behaviour atEnd Limit Switch
33-41 Negative Software End Limit
33-42 Positive Software End Limit
33-43 Negative Software End Limit Active
33-44 Positive Software End Limit Active
33-45 Time in Target Window
33-46 Target Window LimitValue
33-47 Size of Target Window
33-5* I/O Configuration
33-50 Terminal X57/1 Digital Input
33-51 Terminal X57/2 Digital Input
33-52 Terminal X57/3 Digital Input
33-53 Terminal X57/4 Digital Input
33-54 Terminal X57/5 Digital Input
33-55 Terminal X57/6 Digital Input
33-56 Terminal X57/7 Digital Input
33-57 Terminal X57/8 Digital Input
33-58 Terminal X57/9 Digital Input
33-59 Terminal X57/10 Digital Input
33-60 Terminal X59/1 and X59/2 Mode
33-61 Terminal X59/1 Digital Input
33-62 Terminal X59/2 Digital Input
33-63 Terminal X59/1 Digital Output
33-64 Terminal X59/2 Digital Output
33-65 Terminal X59/3 Digital Output
33-66 Terminal X59/4 Digital Output
33-67 Terminal X59/5 Digital Output
33-68 Terminal X59/6 Digital Output
33-69 Terminal X59/7 Digital Output
33-70 Terminal X59/8 Digital Output
33-8* Global Parameters
33-80 Activated Program Number
33-81 Power-up State
33-82 Drive Status Monitoring
33-83 Behaviour afterError
33-84 Behaviour afterEsc.
33-85 MCO Supplied by External 24VDC
33-86 Terminal at alarm
33-87 Terminal state at alarm
33-88 Status word at alarm
33-9* MCO Port Settings
33-90 X62 MCO CAN node ID
33-91 X62 MCO CAN baud rate
33-94 X60 MCO RS485 serial termination
33-95 X60 MCO RS485 serial baud rate
34- MCO Data Readouts**
34-0* PCD Write Par.
34-01 PCD 1 Write to MCO
34-02 PCD 2 Write to MCO
34-03 PCD 3 Write to MCO
34-04 PCD 4 Write to MCO
34-05 PCD 5 Write to MCO
34-06 PCD 6 Write to MCO
34-07 PCD 7 Write to MCO
34-08 PCD 8 Write to MCO
34-09 PCD 9 Write to MCO
34-10 PCD 10 Write to MCO
34-2* PCD Read Par.
34-21 PCD 1 Read from MCO
34-22 PCD 2 Read from MCO
34-23 PCD 3 Read from MCO
34-24 PCD 4 Read from MCO
34-25 PCD 5 Read from MCO
34-26 PCD 6 Read from MCO
34-27 PCD 7 Read from MCO
34-28 PCD 8 Read from MCO
34-29 PCD 9 Read from MCO
34-30 PCD 10 Read from MCO
34-4* Inputs & Outputs
34-40 Digital Inputs
34-41 Digital Outputs
34-5* Process Data
34-50 Actual Position
34-51 Commanded Position
34-52 Actual Master Position
34-53 Slave Index Position
34-54 Master Index Position
34-55 Curve Position
34-56 Track Error
34-57 Synchronizing Error
34-58 Actual Velocity
34-59 Actual Master Velocity
34-60 Synchronizing Status
34-61 Axis Status
34-62 Program Status
34-64 MCO 302 Status
34-65 MCO 302 Control
34-66 SPI Error Counter
34-7* Diagnosis readouts
34-70 MCO Alarm Word 1
34-71 MCO Alarm Word 2
35- Sensor Input Option**
35-0* Temp. Input Mode
35-00 Term. X48/4 Temperature Unit
35-01 Term. X48/4 Input Type
35-02 Term. X48/7 Temperature Unit
35-03 Term. X48/7 Input Type
35-04 Term. X48/10 Temperature Unit
35-05 Term. X48/10 Input Type
35-06 Temperature Sensor Alarm Function
35-1* Temp. Input X48/4
35-14 Term. X48/4 Filter Time Constant
35-15 Term. X48/4 Temp. Monitor
35-16 Term. X48/4 Low Temp. Limit
35-17 Term. X48/4 High Temp. Limit
35-2* Temp. Input X48/7
35-24 Term. X48/7 Filter Time Constant

35-25 Term. X48/7 Temp. Monitor
35-26 Term. X48/7 Low Temp. Limit
35-27 Term. X48/7 High Temp. Limit
35-3* Temp. Input X48/10
35-34 Term. X48/10 Filter Time Constant
35-35 Term. X48/10 Temp. Monitor
35-36 Term. X48/10 Low Temp. Limit
35-37 Term. X48/10 High Temp. Limit
35-4* Analog Input X48/2
35-42 Term. X48/2 Low Current
35-43 Term. X48/2 High Current
35-44 Term. X48/2 Low Ref./Feedb. Value
35-45 Term. X48/2 High Ref./Feedb. Value
35-46 Term. X48/2 Filter Time Constant
36- Programmable I/O Option**
36-0* I/O Mode
36-03 Terminal X49/7 Mode
36-04 Terminal X49/9 Mode
36-05 Terminal X49/11 Mode
36-4* Output X49/7
36-40 Terminal X49/7 Analogue Output
36-42 Terminal X49/7 Min. Scale
36-43 Terminal X49/7 Max. Scale
36-44 Terminal X49/7 Bus Control
36-45 Terminal X49/7 Timeout Preset
36-5* Output X49/9
36-50 Terminal X49/9 Analogue Output
36-52 Terminal X49/9 Min. Scale
36-53 Terminal X49/9 Max. Scale
36-54 Terminal X49/9 Bus Control
36-55 Terminal X49/9 Timeout Preset
36-6* Output X49/11
36-60 Terminal X49/11 Analogue Output
36-62 Terminal X49/11 Min. Scale
36-63 Terminal X49/11 Max. Scale
36-64 Terminal X49/11 Bus Control
36-65 Terminal X49/11 Timeout Preset
42- Safety Functions**
42-1* Speed Monitoring
42-10 Measured Speed Source
42-11 Encoder Resolution
42-12 Encoder Direction
42-13 Gear Ratio
42-14 Feedback Type
42-15 Feedback Filter
42-17 Tolerance Error
42-18 Zero Speed Timer
42-19 Zero Speed Limit
42-2* Safe Input
42-20 Safe Function
42-21 Type
42-22 Discrepancy Time
42-23 Stable Signal Time
42-24 Restart Behaviour
42-3* General
42-30 External Failure Reaction
42-31 Reset Source
42-33 Parameter Set Name
42-35 S-CRC Value
42-36 Level 1 Password
42-4* SS1
42-40 Type
42-41 Ramp Profile
42-42 Delay Time
42-43 Delta T
42-44 Deceleration Rate
42-45 Delta V
42-46 Zero Speed
42-47 Ramp Time
42-48 S-ramp Ratio at Decel. Start
42-49 S-ramp Ratio at Decel. End
42-5* SLS
42-50 Cut Off Speed
42-51 Speed Limit
42-52 Fail Safe Reaction
42-53 Start Ramp
42-54 Ramp Down Time
42-6* Safe Fieldbus
42-60 Telegram Selection
42-61 Destination Address
42-8* Status
42-80 Safe Option Status
42-81 Safe Option Status 2
42-82 Safe Control Word
42-83 Safe Status Word
42-85 Active Safe Func.
42-86 Safe Option Info
42-87 Time Until Manual Test
42-88 Supported Customization File Version
42-89 Customization File Version
42-9* Special
42-90 Restart Safe Option
43- Unit Readouts**
43-0* Component Status
43-00 Component Temp.
43-01 Auxiliary Temp.
43-1* Power Card Status
43-10 HS Temp. ph.U
43-11 HS Temp. ph.V
43-12 HS Temp. ph.W
43-13 PC Fan A Speed
43-14 PC Fan B Speed
43-15 PC Fan C Speed
43-2* Fan Pow.Card Status
43-20 FPC Fan A Speed
43-21 FPC Fan B Speed
43-22 FPC Fan C Speed
43-23 FPC Fan D Speed
43-24 FPC Fan E Speed
43-25 FPC Fan F Speed
600- PROFIsafe**
600-22 PROFIdrive/safe Tel. Selected
600-44 Fault Message Counter
600-47 Fault Number
600-52 Fault Situation Counter
601- PROFIdrive 2**
601-22 PROFIdrive Safety Channel Tel. No.

Danfoss A/S © 11/2016 All rights reserved.

Index

A

AC mains connection ... 21
Alarm log ... 27
Alarms ... 34
AMA
- AMA ... 29, 32
- Automatic Motor Adaptation ... 29, 51
- Warning ... 40

Analog
- input ... 46
- output ... 47
- Signal ... 35

Approval ... 6
Auto on ... 28, 29, 32, 33
Auto-reset ... 26

B

Brake
- control ... 36
- limit ... 37
- resistor ... 22, 35
- Braking ... 32
- Mechanical brake ... 22

Burst transient ... 13

C

Cable lengths ... 45
Certification ... 6
Circuit breaker ... 49
Cleaning ... 31
Communication option ... 38
Conduit ... 24
Control
- characteristics ... 48
- signal ... 32
- terminal ... 28, 32, 34
- wiring ... 13, 17, 21, 24
- word timeout ... 37
- Local control ... 26, 28, 32

Control card
- Control card performance ... 48
- Control card, 24 V DC output ... 47
- DC Output, 10 V ... 48
- Live zero error ... 35
- RS485 ... 47
- Serial communication ... 47
- USB serial communication ... 48

Cooling clearance ... 24
Cross-sections ... 45
Current
- rating ... 35
- DC current ... 13, 32
- Leakage current ... 13
- Output current ... 32, 35
- Overcurrent protection ... 13

D

DC link ... 35
DC output, 10 V ... 48
Default settings ... 30, 53
Digital input ... 45
Digital output ... 47
DIP Switches ... 23
Discharge time ... 8
Disconnect switch ... 26

E

Efficiency ... 43
Electrical data ... 43
EMC ... 13, 24
EMC interference ... 17
Energy efficiency class ... 45
Equipment ... 11
External command ... 34
External controller ... 3

F

Fault log ... 27
FC ... 24
Feedback ... 24, 32, 39
Fuse ... 13, 24, 38, 49
Fusing ... 24

G

Ground wire ... 13
Grounding ... 24, 26

H

Hand on ... 28, 32
Heat sink ... 39
High voltage ... 8, 26
Hygienic installation ... 12

I

Initialization ... 30

Danfoss A/S © 11/2016 All rights reserved.

Input
Analog ... 35
Analog input ... 46
Digital ... 36
Digital input ... 33, 45
power ... 13, 17, 24, 34
terminal ... 26
voltage ... 26
Pulse/encoder input ... 47
Installation
Installation ... 24
environment ... 10
Installation ... 24
Intended use ... 3
Intermediate circuit ... 35
see also *DC link*
Items supplied ... 10

L

Language package ... 50
LCP ... 26
Leakage current ... 9
LED ... 31
Load sharing ... 8, 21, 26
Local control panel ... 26

M

Main menu ... 27
Main reactance ... 51
Mains
supply (L1, L2, L3) ... 44
voltage ... 27, 32
Maintenance ... 31
Manual initialization ... 30
MCT 10 ... 26
Mechanical brake ... 22
Mechanical dimensions ... 11
Menu key ... 27
Menu structure ... 27
Modbus RTU ... 24
Motor
cable ... 13, 20
connection ... 20
current ... 27, 40
data ... 35, 40
output ... 44
power ... 13, 27, 40
protection ... 3
status ... 3
wiring ... 17, 24
Unintended motor rotation ... 9
Mounting ... 11
Multiple frequency converters ... 20

N

Nameplate ... 10
Navigation key ... 27, 32
Noise isolation ... 24

O

Operation key ... 27
Optional equipment ... 26
Output
Analog output ... 47
Digital output ... 47
Output performance (U, V, W) ... 44
Overheating ... 36
Overtemperature ... 36
Overvoltage ... 33

P

Phase loss ... 35
Potential equalization ... 14
Power
Input power ... 26
connection ... 13
factor ... 24
Programming ... 26, 27

Q

Qualified personnel ... 8
Quick menu ... 27

R

Reference
Reference ... 27, 32, 33
Remote reference ... 33
Speed reference ... 32
Relay output ... 48
Remote command ... 3
Reset ... 26, 27, 28, 30, 34, 35, 36, 41
RS485
RS485 ... 47
serial communication ... 23
Run command ... 29
Run permissive ... 33

S

Safe Torque Off ... 24
Safety ... 9

 Danfoss A/S © 11/2016 All rights reserved.

Serial communication
RS485 ... 47
Serial communication ... 28, 32, 33, 34, 47, 48
Service ... 31
Setpoint ... 33
Set-up ... 29
Shielded cable ... 17, 24
Shock ... 10
Short circuit ... 36
Sleep mode ... 33
Specifications ... 24
Speed reference ... 29
Start-up ... 30
Stator leakage reactance ... 51
Status display ... 32
Status mode ... 32
STO ... 24
Supplementary information ... 3
Supply voltage ... 26, 38
Surroundings ... 45
Switching frequency ... 33
System feedback ... 3

T

Terminal
Location of terminals ... 18
Output terminal ... 26
types ... 19
Thermal protection
Thermal protection ... 6
Tightening torques ... 25
Tools ... 11
Torque
Limit ... 36
characteristics ... 44
Trip
Trip ... 34
lock ... 34

U

Unintended start ... 8, 21, 26, 31

V

Vibration ... 10
Voltage imbalance ... 35
Voltage level ... 45

W

Warnings ... 34
Windmilling ... 9
Wire size ... 13
Wiring schematic ... 16

 Danfoss A/S © 11/2016 All rights reserved.

Danfoss can accept no responsibility for possible errors in catalogues, brochures and other printed material. Danfoss reserves the right to alter its products without notice. This also applies to products already on order provided that such alterations can be made without subsequential changes being necessary in specifications already agreed. All trademarks in this material are property of the respective companies. Danfoss and the Danfoss logotype are trademarks of Danfoss A/S. All rights reserved.

Danfoss A/S
Ulsnaes 1
DK-6300 Graasten
vlt-drives.danfoss.com

130R0208 MG04F502 11/2016