MAKING MODERN LIVING POSSIBLE

Operating Instructions

VLT® AutomationDrive FC 302 Low Harmonic Drive
132-630 kW



www.danfoss.com/drives

VLT® THE REAL DRIVE

Contents

1 Safety 4
1.1 Safety 4
2 Introduction 5
2.1 Exploded View Drawings 5
2.2 Purpose of the Manual 13
2.3 Approvals 13
2.3.1 Approvals 13
2.4 Additional Resources 13
2.5 Product Overview 13
2.6 Internal Equipment Functions 14
2.6.1 Working Principle 14
2.6.2 IEEE519 Compliance 14
3 Installation 15
3.1 Installation Site Checklist 15
3.2 Equipment Pre-Installation Checklist 15
3.3 Mechanical Installation 15
3.3.1 Cooling and Airflow 15
3.3.2 Lifting 17
3.3.3 Terminal Locations for Frame Size D13 18
3.3.4 Terminal Locations for Frame Size E9 19
3.3.5 Terminal Locations - Frame Size F18 20
3.3.6 Torque 23
3.4 Electrical Installation 23
3.4.1 EMC Interference 25
3.4.2 Extra Protection (RCD) 26
3.4.3 RFI Switch 26
3.4.4 Shielded Cables 26
3.4.5 Motor Cable 26
3.4.6 Brake Cable 27
3.4.7 Brake Resistor Temperature Switch 27
3.4.8 Mains Connection 27
3.4.9 External Fan Supply 27
3.4.10 Power and Control Wiring for Unscreened Cables 28
3.4.11 Mains Disconnects 29
3.4.12 F-Frame Circuit Breakers 29
3.4.13 F-Frame Mains Contactors 29
3.4.14 Motor Insulation 29
3.4.15 Motor Bearing Currents 29

 Danfoss A/S © Rev. 2014-07-29 All rights reserved.

3.4.16 Motor Thermal Protection 30
3.4.17 Control Cable Routing 30
3.4.18 Access to Control Terminals 31
3.4.19 Electrical Installation, Control Terminals 31
3.4.20 Electrical Installation, Control Cables 33
3.4.21 Switches S201, S202, and S801 34
3.4.22 Serial Communication 34
3.5 Final Set-up and Test 34
3.6 Additional Connections 35
3.6.1 Mechanical Brake Control 35
3.6.2 Parallel Connection of Motors 35
3.6.3 F-frame Options 36

4 Start Up and Functional Testing 38
4.1 Pre-start 38
4.2 Applying Power to the Equipment 39
4.3 Basic Operational Programming 39
4.4 Local Control Test 40
4.5 System Start Up 41

5 User Interface 42
5.1 How to Operate 42
5.1.1 Modes of Operation 42
5.1.2 How to Operate Graphical LCP (GLCP) 42
5.1.3 Changing Data 45
5.1.4 Changing a Text Value 46
5.1.5 Changing a Group of Numeric Data Values 46
5.1.6 Changing of Data Value, Step-by-Step 46
5.1.7 Read-out and Programming of Indexed Parameters 46
5.1.8 Quick Transfer of Parameter Settings with the LCP 46
5.1.9 Initialisation to Default Settings 47
5.1.10 RS-485 Bus Connection 47
5.1.11 Connection to a PC 47
5.1.12 PC Software Tools 48

6 Programming 49
6.1 How to Programme the Frequency Converter 49
6.1.1 Quick Setup Parameters 49
6.1.2 Basic Setup Parameters 51
6.2 How to Programme the Active Filter 71
6.2.1 Using the Low Harmonic Drive in NPN Mode 72

 Danfoss A/S © Rev. 2014-07-29 All rights reserved.

6.3 Parameter Lists - Frequency Converter 72
6.3.1 Parameter Selection 73
6.4 Parameter Lists - Active Filter 106

7 Application Examples 112
7.1 Introduction 112
7.2 Application Examples 112
7.3 Connection Examples for Control of Motor with External Signal Provider 117
7.3.1 Start/Stop 117
7.3.2 Pulse Start/Stop 117
7.3.3 Speed Up/Down 117
7.3.4 Potentiometer Reference 118

8 Status Messages 119
8.1 Status Display 119
8.2 Status Message Definitions 119

9 Warnings and Alarms 122
9.1 System Monitoring 122
9.2 Warning and Alarm Types 122
9.2.1 Warnings 122
9.2.2 Alarm Trip 122
9.2.3 Alarm Trip-lock 122
9.3 Warning and Alarm Displays 122
9.4 Warnings and Alarm Definitions - Frequency Converter 123
9.5 Active Filter Warning and Alarm Definitions 131

10 Basic Start-up Troubleshooting 136

11 Specifications 139
11.1 Power-Dependent Specifications 139
11.1.1 Mains Supply 3x380-480 V AC 139
11.1.2 Derating for Temperature 142
11.2 Mechanical Dimensions 143
11.3 General Technical Data - Frequency Converter 145
11.4 General Technical Data - Filter 149
11.5 Fuses 153
11.5.1 Non UL compliance 153
11.5.2 Fuse Tables 154
11.5.3 Supplementary Fuses - High Power 154
11.6 General Torque Tightening Values 155

Index 157

 Danfoss A/S © Rev. 2014-07-29 All rights reserved.

1

1 Safety

1.1 Safety

⚠WARNING

HIGH VOLTAGE

Frequency converters contain high voltage when connected to AC mains input power. Qualified personnel only should perform installation, start up, and maintenance. Failure to perform installation, start up, and maintenance by qualified personnel could result in death or serious injury.

⚠WARNING

UNINTENDED START

When the frequency converter is connected to AC mains, the motor may start at any time. The frequency converter, motor, and any driven equipment must be in operational readiness. Failure to be in operational readiness when the frequency converter is connected to AC mains could result in death, serious injury, equipment, or property damage.

⚠WARNING

DISCHARGE TIME

Frequency converters contain DC-link capacitors that can remain charged even when the frequency converter is not powered. To avoid electrical hazards, disconnect AC mains, any permanent magnet type motors, and any remote DC-link power supplies, including battery back-ups, UPS, and DC-link connections to other frequency converters. Wait for the capacitors to fully discharge before performing any service or repair work. The amount of wait time is listed in the *Discharge Time* table. Failure to wait the specified time after power has been removed before doing service or repair could result in death or serious injury.

Voltage [V]	Power range [kW]	Minimum waiting time (minutes)
380-500	160-250 kW*	20
	315-710 kW	40

Table 1.1 Discharge Times

**Power ranges are for normal overload operation.*

Danfoss A/S © Rev. 2014-07-29 All rights reserved.

2 Introduction

2.1 Exploded View Drawings

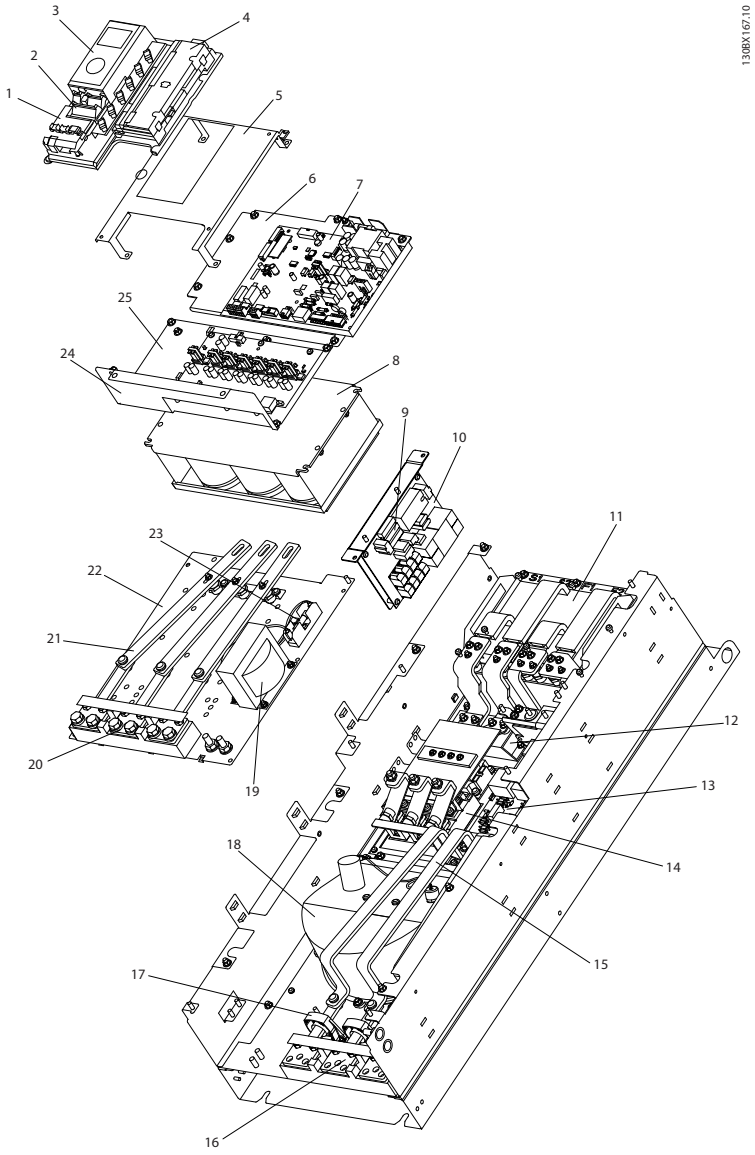

1	Control card	14	SCR/diode module
2	Control input terminals	15	IGBT output bus bar
3	Local control panel (LCP)	16	Output motor terminals
4	Control card C option	17	Current sensor
5	Mounting bracket	18	Fan assembly
6	Power card mounting plate	19	Fan transformer
7	Power card	20	AC input terminals
8	Capacitor bank assembly	21	AC input bus bar
9	Soft charge fuses	22	Input terminal mounting plate assembly
10	Soft charge card	23	Fan fuse
11	DC inductor	24	Capacitor bank cover plate
12	Soft charge module	25	IGBT gate drive card
13	IGBT module		

Illustration 2.1 Frame Size D13 Drive Enclosure

Danfoss A/S © Rev. 2014-07-29 All rights reserved.

2

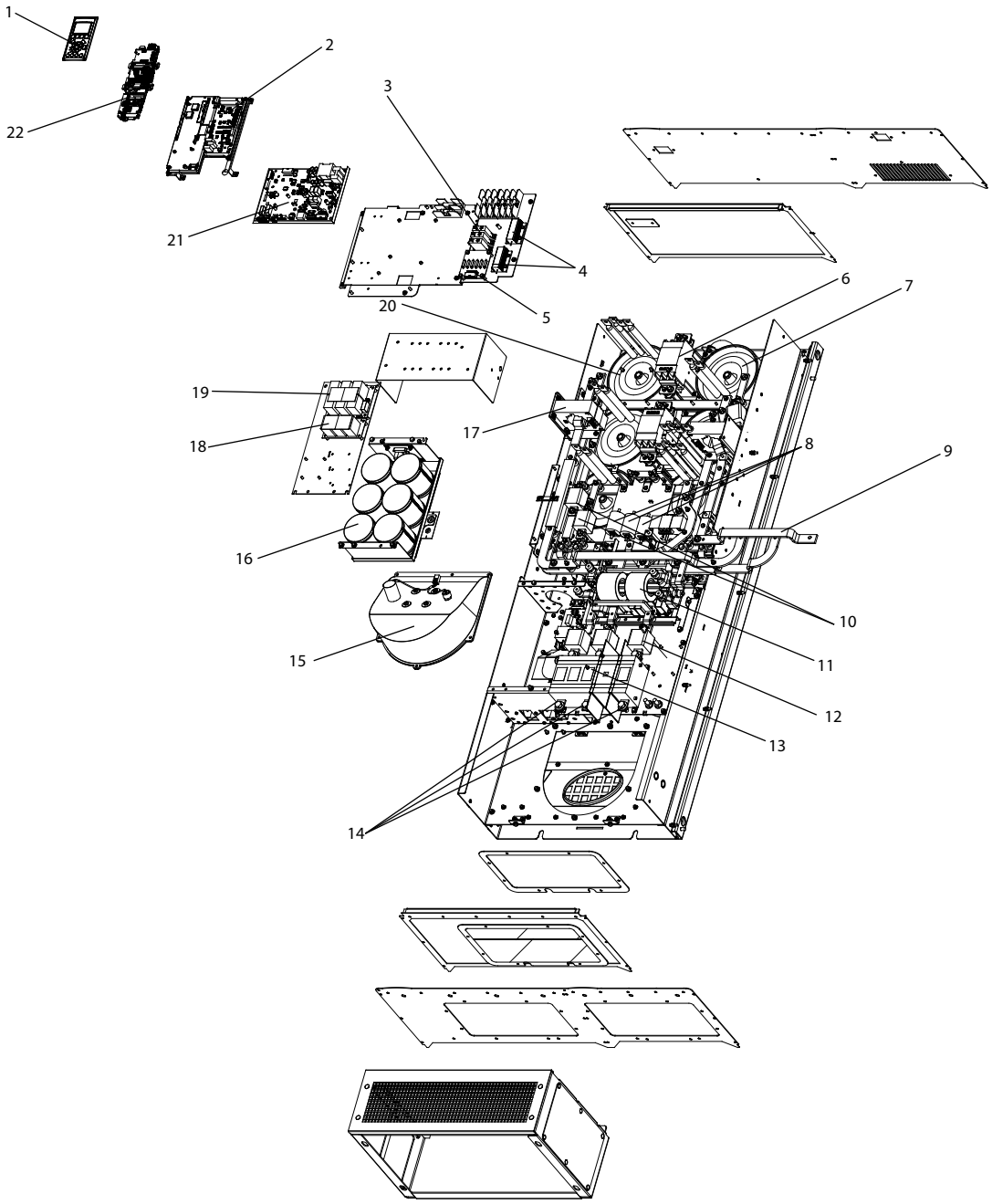

1	Local control panel (LCP)	13	Mains fuses
2	Active filter card (AFC)	14	Mains disconnect
3	Metal oxide varistor (MOV)	15	Mains terminals
4	Soft charge resistors	16	Heat sink fan
5	AC capacitors discharge board	17	DC capacitor bank
6	Mains contactor	18	Current transformer
7	LC inductor	19	RFI differential mode filter
8	AC capacitors	20	RFI common mode filter
9	Mains bus bars to drive input	21	HI inductor
10	IGBT fuses	22	Power card
11	RFI		

Illustration 2.2 Frame Size D13 Filter Enclosure

Danfoss A/S © Rev. 2014-07-29 All rights reserved.

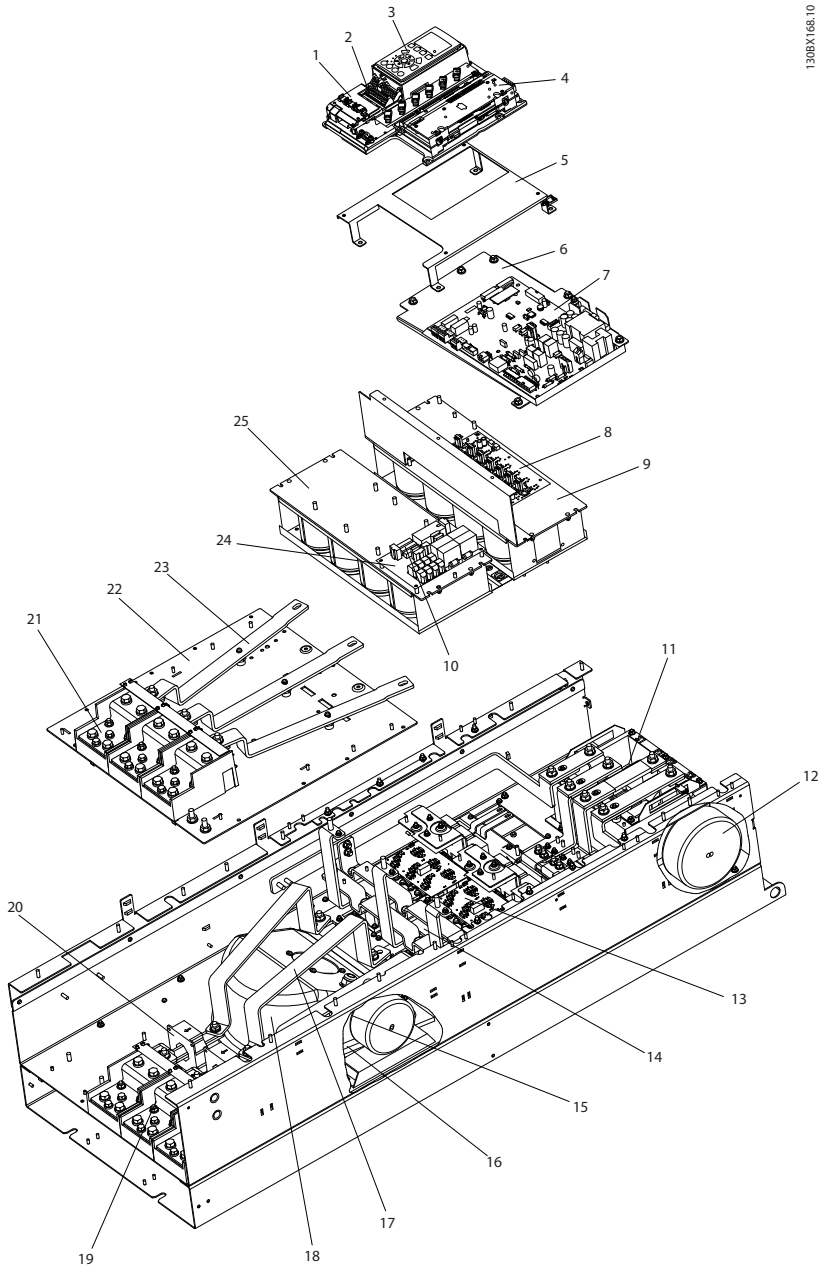

1	Control card	14	SCR and diode
2	Control input terminals	15	Fan inductor (not on all units)
3	Local control panel (LCP)	16	Soft charge resistor assembly
4	Control card C option	17	IGBT output bus bar
5	Mounting bracket	18	Fan assembly
6	Power card mounting plate	19	Output motor terminals
7	Power card	20	Current sensor
8	IGBT gate drive card	21	Mains AC power input terminals
9	Upper capacitor bank assembly	22	Input terminal mounting plate
10	Soft charge fuses	23	AC input bus bar
11	DC inductor	24	Soft charge card
12	Fan transformer	25	Lower capacitor bank assembly
13	IGBT module		

Illustration 2.3 Frame Size E9 Drive Enclosure

 Danfoss A/S © Rev. 2014-07-29 All rights reserved.

2

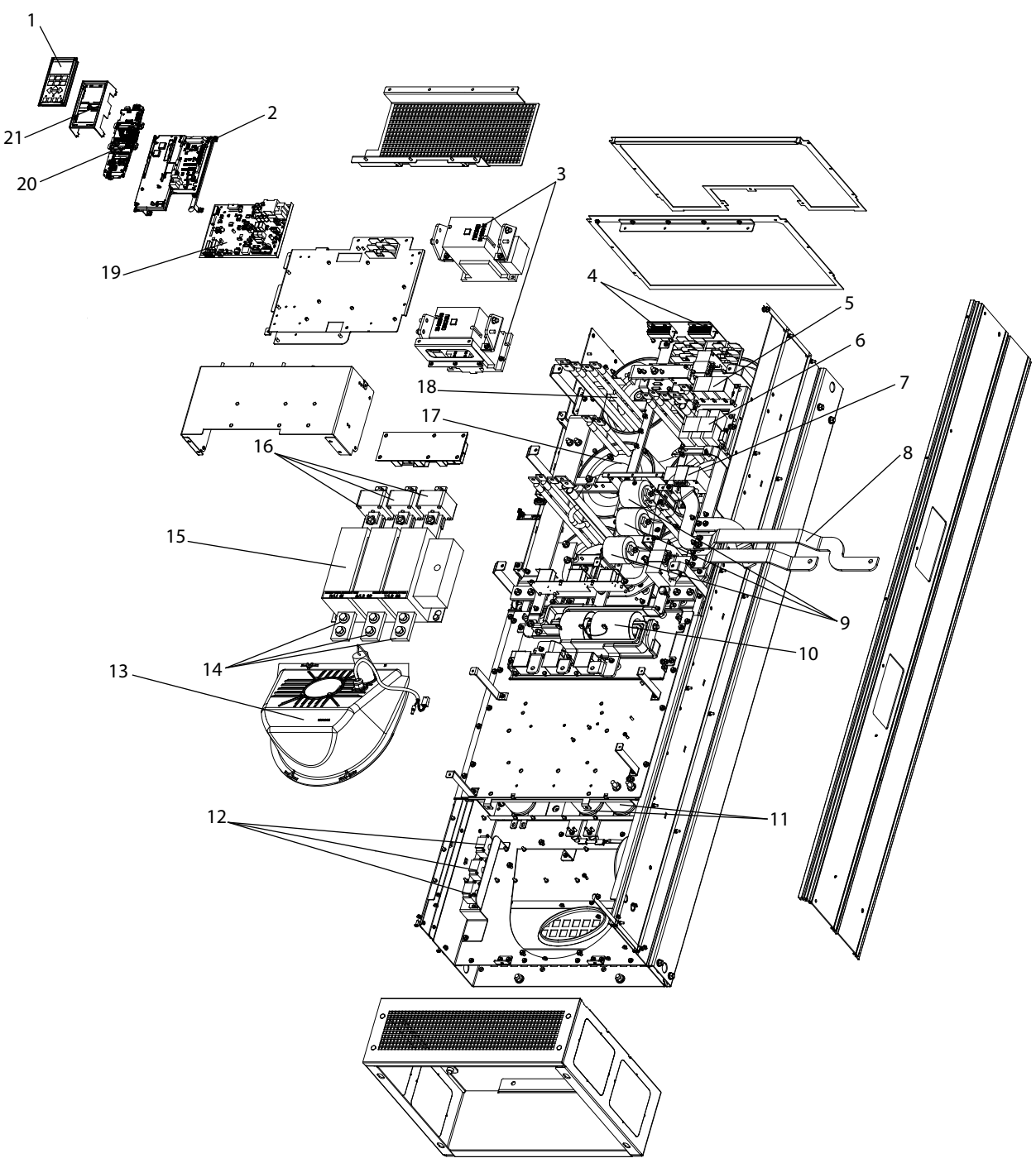

1	Local control panel (LCP)	12	AC capacitor current transducers
2	Active filter card (AFC)	13	Heat sink fan
3	Mains contactors	14	Mains terminals
4	Soft charge resistors	15	Mains disconnect
5	RFI differential mode filter	16	Mains fuses
6	RFI common mode filter	17	LC inductor
7	Current transformer (CT)	18	HI inductor
8	Mains bus bars to drive output	19	Power card
9	AC capacitors	20	Control card
10	RFI	21	LCP cradle
11	Lower DC capacitor bank		

Illustration 2.4 Frame Size E9 Filter Enclosure

 Danfoss A/S © Rev. 2014-07-29 All rights reserved.

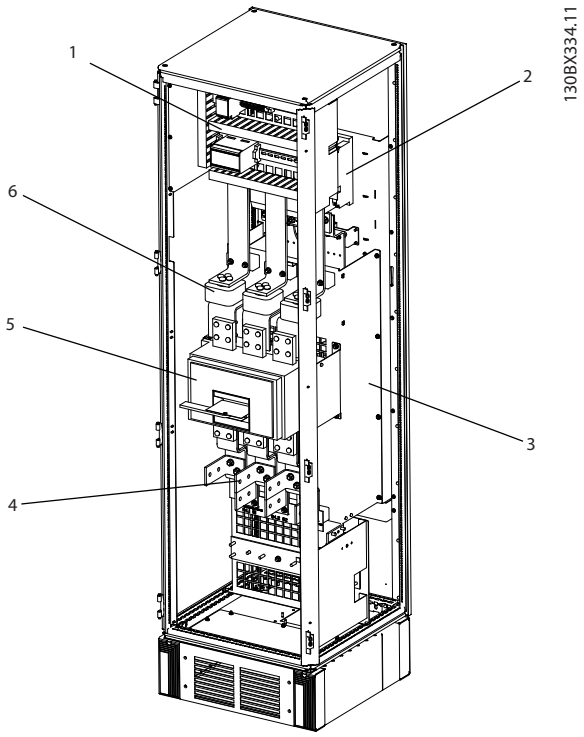

1	Contactor	4	Circuit breaker or disconnect (if purchased)
2	RFI filter	5	AC mains/line fuses (if purchased)
3	Mains AC power input terminals		

Illustration 2.5 Frame Size F18 Input Options Cabinet

Danfoss A/S © Rev. 2014-07-29 All rights reserved.

2

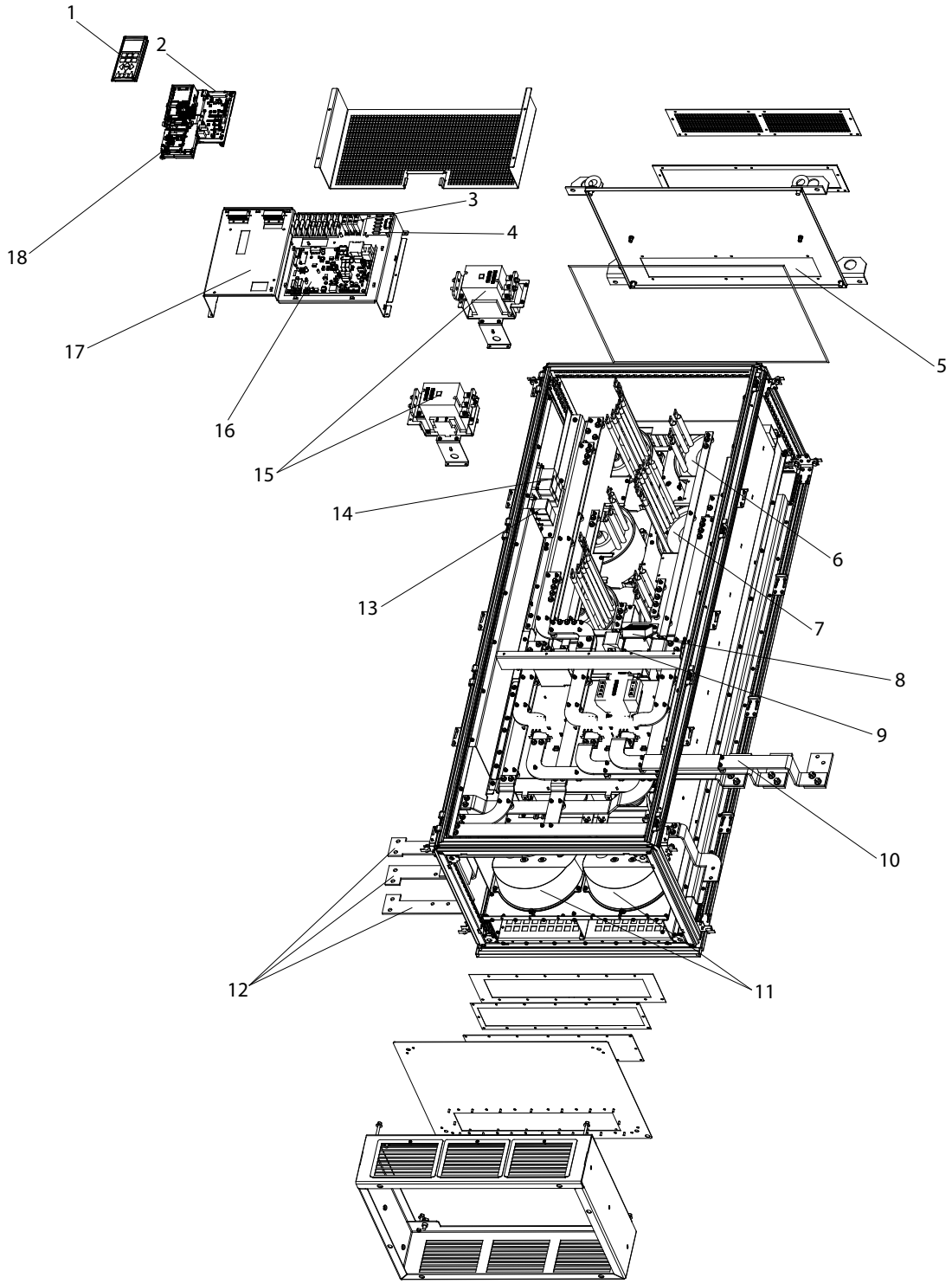

1	Local control panel (LCP)	10	Mains bus bars to drive input
2	Active filter card (AFC)	11	Heat sink fans
3	Soft charge resistors	12	Mains terminals (R/L1, S/L2, T/L3) from options cabinet
4	Metal oxide varistor (MOV)	13	RFI differential mode filter
5	AC capacitors discharge board	14	RFI common mode filter
6	LC inductor	15	Mains contactor
7	HI inductor	16	Power card
8	Mixing fan	17	Control card
9	IGBT fuses	18	LCP cradle

Illustration 2.6 Frame Size F18 Filter Cabinet

Danfoss A/S © Rev. 2014-07-29 All rights reserved.

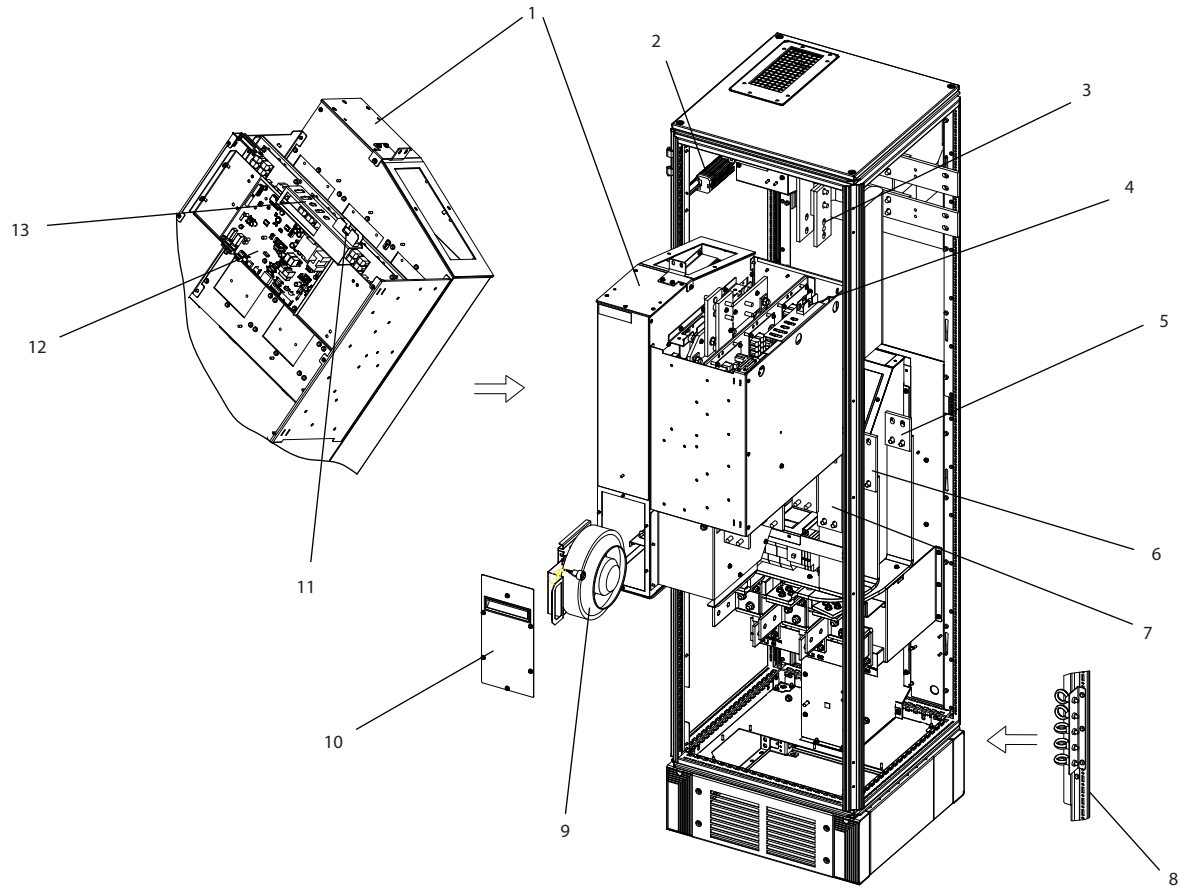

1	Rectifier module	7	Module lifting eye bolts (mounted on a vertical strut)
2	DC bus bar	8	Module heat sink fan
3	SMPS fuse	9	Fan door cover
4	(Optional) back AC fuse mounting bracket	10	SMPS fuse
5	(Optional) middle AC fuse mounting bracket	11	Power card
6	(Optional) front AC fuse mounting bracket	12	Panel connectors

Illustration 2.7 Frame Size F18 Rectifier Cabinet

Danfoss A/S © Rev. 2014-07-29 All rights reserved.

2

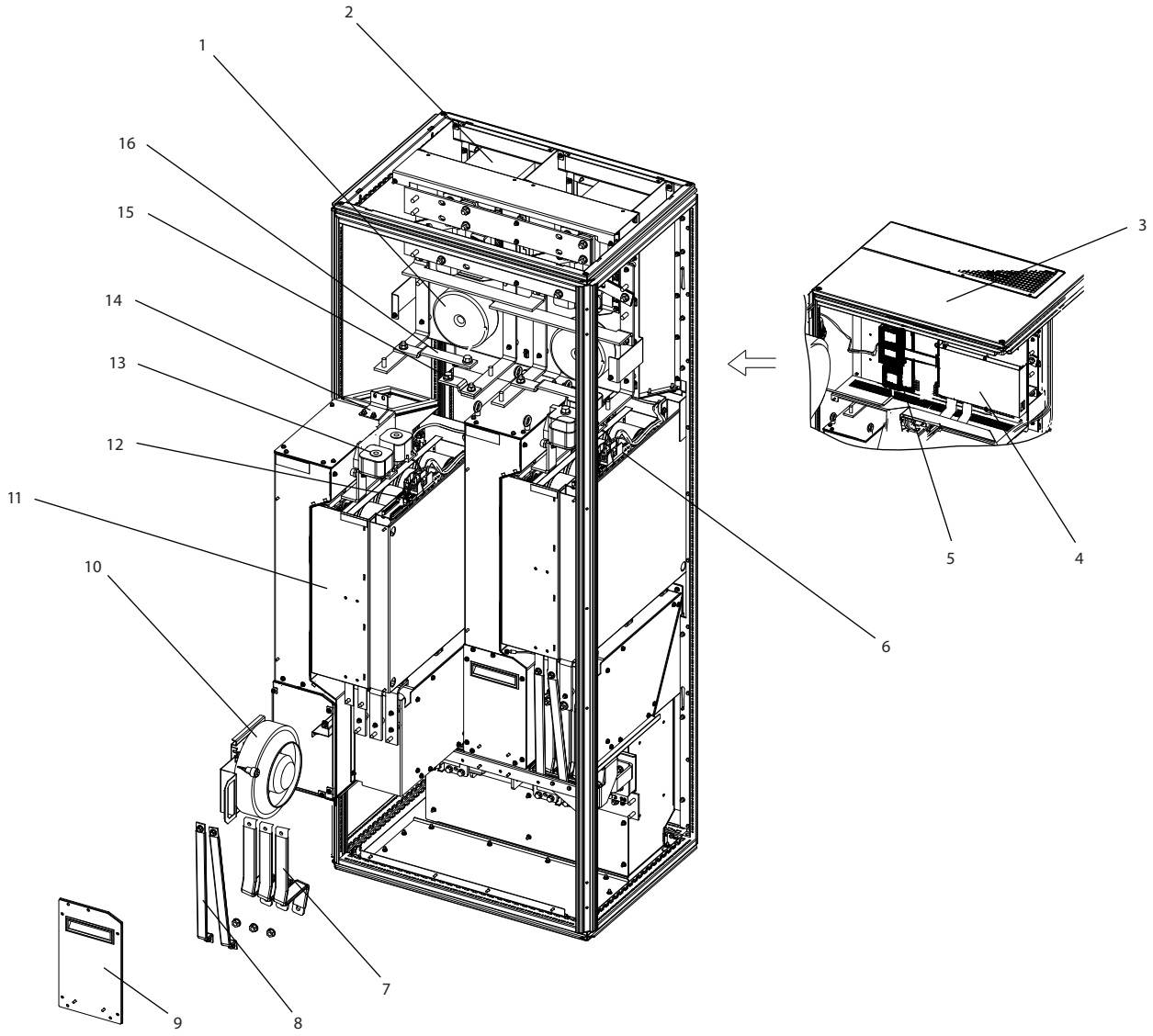

1	Fan transformer	9	Fan door cover
2	DC link inductor	10	Module heat sink fan
3	Top cover plate	11	Inverter module
4	MDCIC board	12	Panel connectors
5	Control card	13	DC fuse
6	SMPS fuse and fan fuse	14	Mounting bracket
7	Motor output bus bar	15	(+) DC bus bar
8	Brake output bus bar	16	(-) DC bus bar

Illustration 2.8 Frame Size F18 Inverter Cabinet

Danfoss A/S © Rev. 2014-07-29 All rights reserved.

2.2 Purpose of the Manual

The purpose of this manual is to provide information for the installation and operation of a VLT® Low Harmonic Drive. The manual includes relevant safety information for installation and operation. *Chapter 1 Safety*, *chapter 2 Introduction*, and *chapter 3 Installation* introduce the unit function and cover proper mechanical and electrical installation procedures. There are chapters on start-up and commissioning, applications and basic troubleshooting. *Chapter 11 Specifications* provides a quick reference for ratings and dimensions, as well as other operating specifications. This manual provides a basic knowledge of the unit and explains setup and basic operation.
VLT® is a registered trademark.

2.3 Approvals

2.3.1 Approvals

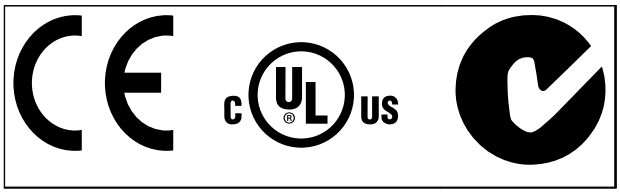

Table 2.1 Compliance Marks: CE, UL, and C-Tick

The frequency converter complies with UL508C thermal memory retention requirements. For more information, refer to .

2.4 Additional Resources

Other resources are available to understand advanced functions and programming.

- The *VLT® AutomationDrive FC 302Operating Instructions* provide details on installation and operation of the frequency converter.
- The *VLT® AutomationDrive FC 302 Programming Guide* provides greater detail on working with parameters and many application examples.
- The *VLT® AutomationDrive FC 302 Design Guide* provides detailed capabilities and functionality to design motor control systems.
- Supplemental publications and manuals are available from Danfoss.
  See *www.danfoss.com/BusinessAreas/DrivesSolutions/Documentations/Technical+Documentation.htm* for listings.
- Optional equipment may change some of the procedures described. Reference the instructions supplied with those options for specific requirements. Contact the local Danfoss supplier or visit the Danfoss website: *www.danfoss.com/BusinessAreas/DrivesSolutions/Documentations/Technical+Documentation.htm*, for downloads or additional information.
- The *VLT® Active Filter AAF00x Operating Instructions* provide additional information about the filter portion of the Low Harmonic Drive.

2.5 Product Overview

A frequency converter (also called a drive) is an electronic motor controller that converts DC into a variable AC waveform output. The frequency and voltage of the output are regulated to control the motor speed or torque. The frequency converter can vary the speed of the motor in response to system feedback, such as with position sensors on a conveyor belt. The frequency converter can also regulate the motor by responding to remote commands from external controllers.

The frequency converter

- monitors the system and motor status
- issues warnings or alarms for fault conditions
- starts and stops the motor
- optimises energy efficiency

Operation and monitoring functions are available as status indications to an outside control system or serial communication network.

A Low Harmonic Drive (LHD) is a single unit that combines the frequency converter with an advanced active filter (AAF) for harmonic mitigation. The frequency converter and filter are 2 separate pieces packaged together in an integrated system, but each functions independently. In this manual, there are separate specifications for the frequency converter and the filter. Since the frequency converter and filter are together in the same enclosure, the unit is transported, installed, and operated as a single entity.

 Danfoss A/S © Rev. 2014-07-29 All rights reserved.

2.6 Internal Equipment Functions

2

2.6.1 Working Principle

The VLT Low Harmonic Drive is a high-power frequency converter with an integrated active filter. An active filter is a device that actively monitors harmonic distortion levels and injects compensative harmonic current onto the line to cancel the harmonics.

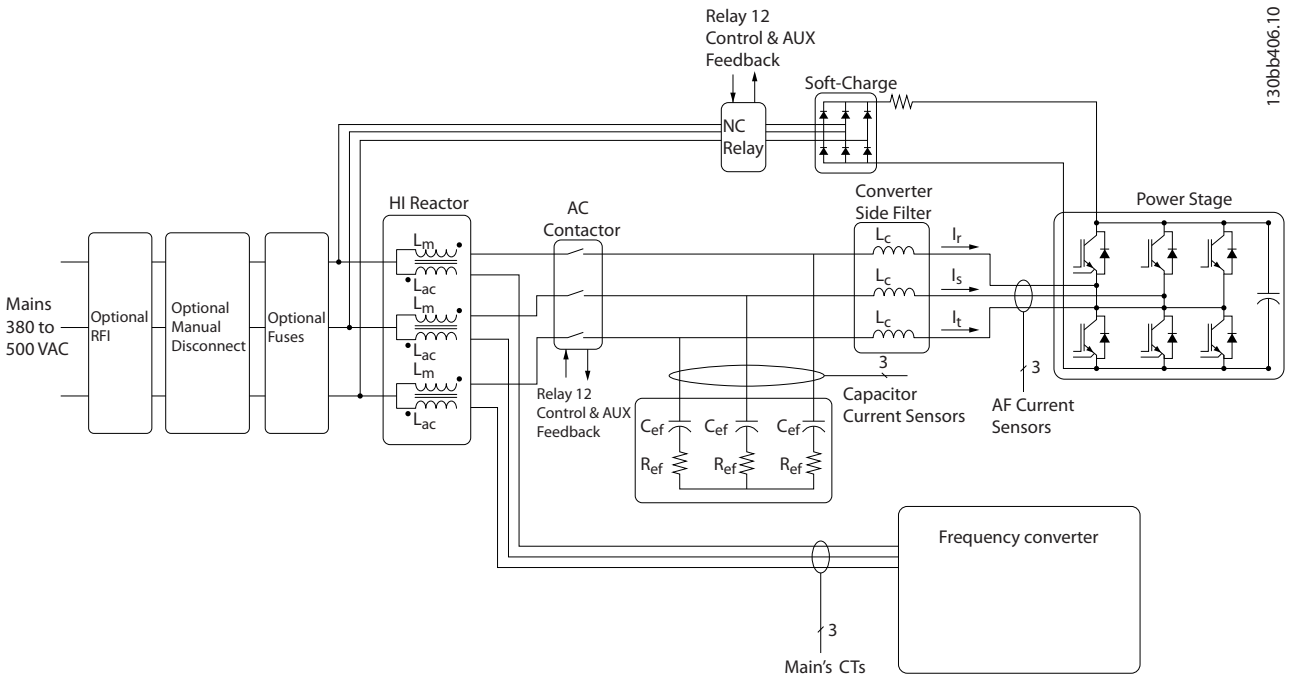

Illustration 2.9 Basic Layout for the Low Harmonic Drive

Low Harmonic Drives are designed to draw an ideal sinusoidal current waveform from the supply grid with a power factor of 1. Where traditional non-linear load draws pulse-shaped currents, the Low Harmonic Drive compensates that via the parallel filter path, lowering the stress on the supply grid. The Low Harmonic Drive meets the highest harmonic standards with a THiD less than 5% at full load for <3% pre-distortion on a 3% unbalanced 3-phase grid.

2.6.2 IEEE519 Compliance

The Low Harmonic Drive is designed to meet IEEE519 recommendation for Isc/Il >20 for even individual harmonic levels. The filter has a progressive switching frequency that creates a wide frequency spread, giving lower individual harmonic levels above the 50th.

 Danfoss A/S © Rev. 2014-07-29 All rights reserved.

3 Installation

3.1 Installation Site Checklist

3.1.1 Planning the Installation Site

Select the best possible operation site by considering the following (see details on the following pages, and in the *Design Guide*):

- Ambient operating temperature
- Installation method
- Cooling
- Position of the unit
- Cable routing
- Voltage and current supply from power source
- Current rating within range
- Fuse ratings if not using built-in fuses

3.2 Equipment Pre-Installation Checklist

- Before unpacking the frequency converter, examine the packaging for signs of damage. If the unit is damaged, refuse delivery and immediately contact the shipping company to claim the damage.
- Before unpacking the frequency converter, locate it as close as possible to the final installation site
- Compare the model number on the nameplate to what was ordered to verify the proper equipment
- Ensure each of the following are rated for the same voltage:
  - Mains (power)
  - Frequency converter
  - Motor
- Ensure the output current rating is equal to or greater than the motor full load current for peak motor performance.
  - Motor size and frequency converter power must match for proper overload protection.
  - If frequency converter rating is less than that of the motor, full motor output is impossible.

3.3 Mechanical Installation

3.3.1 Cooling and Airflow

Cooling
Cooling can be obtained in different ways, by using the cooling ducts in the bottom and the top of the unit, by taking air in and out the back of the unit or by combining the cooling possibilities.

Back cooling
The backchannel air can also be ventilated in and out the back of a Rittal TS8 enclosure for frame size F18 LHD. This offers a solution where the backchannel could take air from outside the facility and return the heat losses outside the facility thus reducing air-conditioning requirements.

NOTICE

A door fan(s) is required on the enclosure to remove the heat losses not contained in the backchannel of the drive and any additional losses generated from other components installed inside the enclosure. The total required air flow must be calculated so that the appropriate fans can be selected. Some enclosure manufacturers offer software for performing the calculations (i.e. Rittal Therm software).

Airflow
The necessary airflow over the heat sink must be secured. The flow rate is shown in *Table 3.1*.

Enclosure protection	Frame size	Door fan/top fan airflow Total airflow of multiple fans	Heat sink fan Total airflow for multiple fans
IP21/NEMA 1 IP54/NEMA 12	D13 P160–P250 (LHD120)	3 door fans, 510 m^3/h (300 cfm) (2+1, 3x170=510)	2 heat sink fans, 1530 m^3/h (900 cfm) (1+1, 2x765=1530)
	E9 P315–P400 (LHD210)	4 door fans, 680 m^3/h (400 cfm) (2+2, 4x170=680)	2 heat sink fans, 2675 m^3/h (1574 cfm) (1+1, 1230+1445=2675)
	F18 P500–P710 (LHD330)	6 door fans, 3150 m^3/h (1854 cfm) (6x525=3150)	5 heat sink fans, 4485 m^3/h (2639 cfm) 2+1+2, ((2x765)+(3x985)=4485)

Table 3.1 Heat Sink Air Flow

Danfoss A/S © Rev. 2014-07-29 All rights reserved.

3

NOTICE

For the drive section, the fan runs for the following reasons:

- **AMA**
- **DC Hold**
- **Pre-Mag**
- **DC Brake**
- **60% of nominal current is exceeded**
- **Specific heat sink temperature exceeded (power size dependent)**
- **Specific power card ambient temperature exceeded (power size dependent)**
- **Specific control card ambient temperature exceeded**

Once the fan is started, it runs for minimum 10 minutes.

NOTICE

For the active filter, the fan runs for the following reasons:

- **Active filter running**
- **Active filter not running, but mains current exceeding limit (power size dependent)**
- **Specific heat sink temperature exceeded (power size dependent)**
- **Specific power card ambient temperature exceeded (power size dependent)**
- **Specific control card ambient temperature exceeded**

Once the fan is started, it runs for minimum 10 minutes.

External ducts
If additional duct work is added externally to the Rittal cabinet, the pressure drop in the ducting must be calculated. Use the charts below to derate the frequency converter according to the pressure drop.

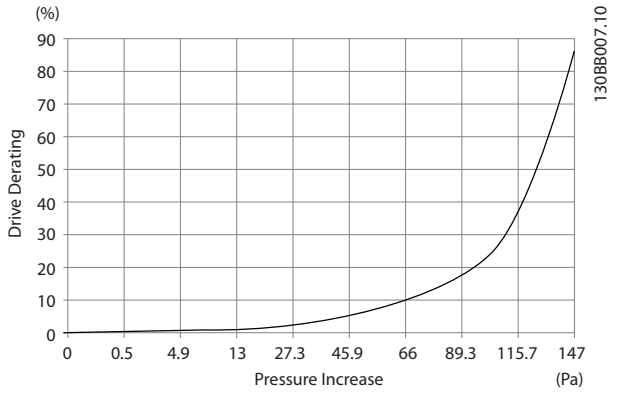

Illustration 3.1 D-Frame Derating vs. Pressure Change
Drive Air Flow: 450 cfm (765 m^3/h)

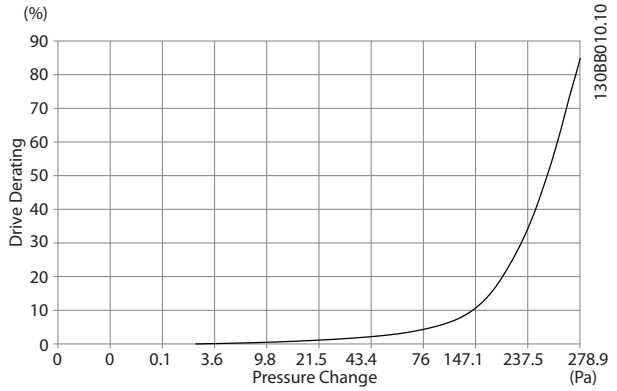

Illustration 3.2 E-Frame Derating vs. Pressure Change (Small Fan), P315
Drive Air Flow: 650 cfm (1105 m^3/h)

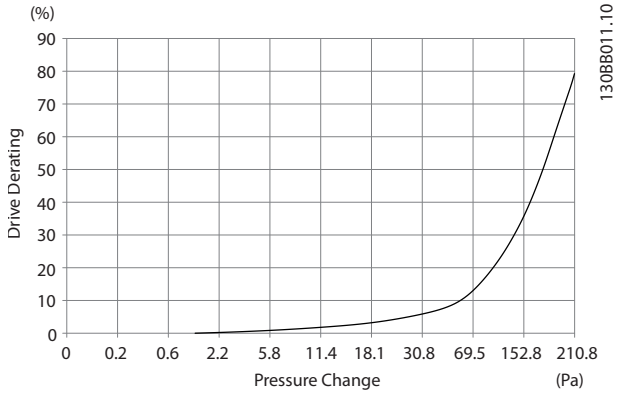

Illustration 3.3 E-Frame Derating vs. Pressure Change (Large Fan) P355-P450
Drive Air Flow: 850 cfm (1445 m^3/h)

Danfoss A/S © Rev. 2014-07-29 All rights reserved.

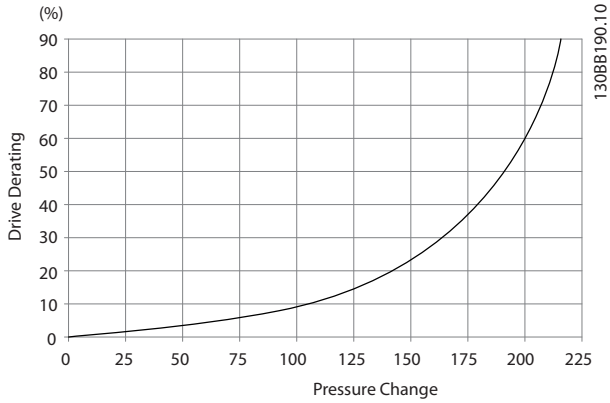

Illustration 3.4 F-Frame Derating vs. Pressure Change
Drive Air Flow: 580 cfm (985 m^3/h)

3.3.2 Lifting

Lift the frequency converter using the dedicated lifting eyes. For all D-frames, use a bar to avoid bending the lifting holes of the frequency converter.

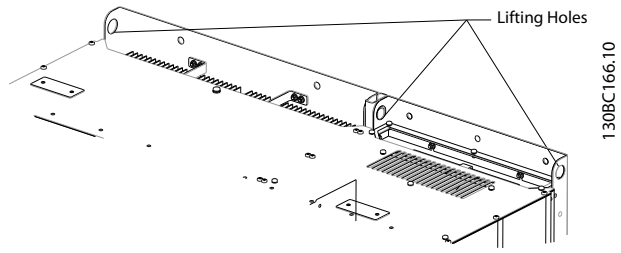

Illustration 3.5 Recommended Lifting Method, Frame Size D13

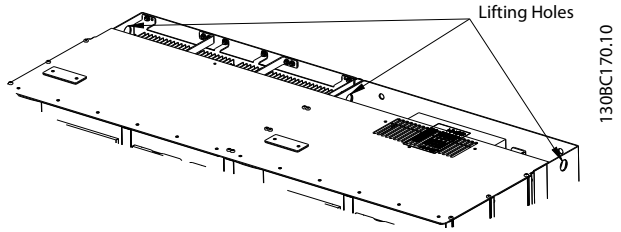

Illustration 3.6 Recommended Lifting Method, Frame Size E9

⚠WARNING

The lifting bar must be able to handle the weight of the frequency converter. See *chapter 11.2 Mechanical Dimensions* for the weight of the different frame sizes. Maximum diameter for bar is 2.5 cm (1 inch). The angle from the top of the frequency converter to the lifting cable should be 60° or greater.

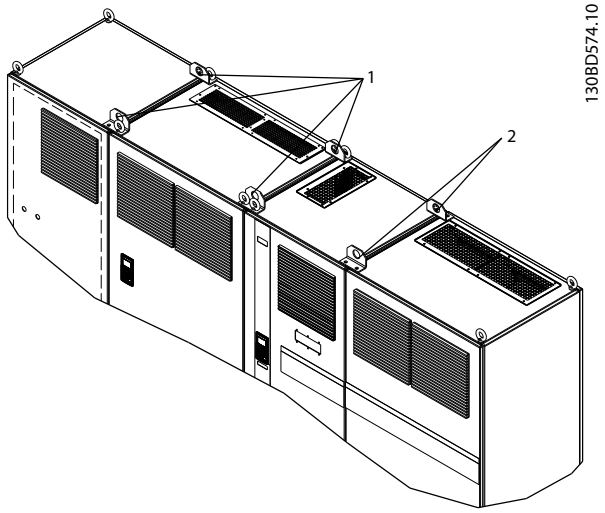

1	Lifting holes for the filter
2	Lifting holes for the frequency converter

Illustration 3.7 Recommended Lifting Method, Frame Size F18

NOTICE

A spreader bar is also an acceptable way to lift the F-frame.

NOTICE

The F18 pedestal is packaged separately and included in the shipment. Mount the frequency converter on the pedestal in its final location. The pedestal allows proper airflow and cooling.

3

3.3.3 Terminal Locations for Frame Size D13

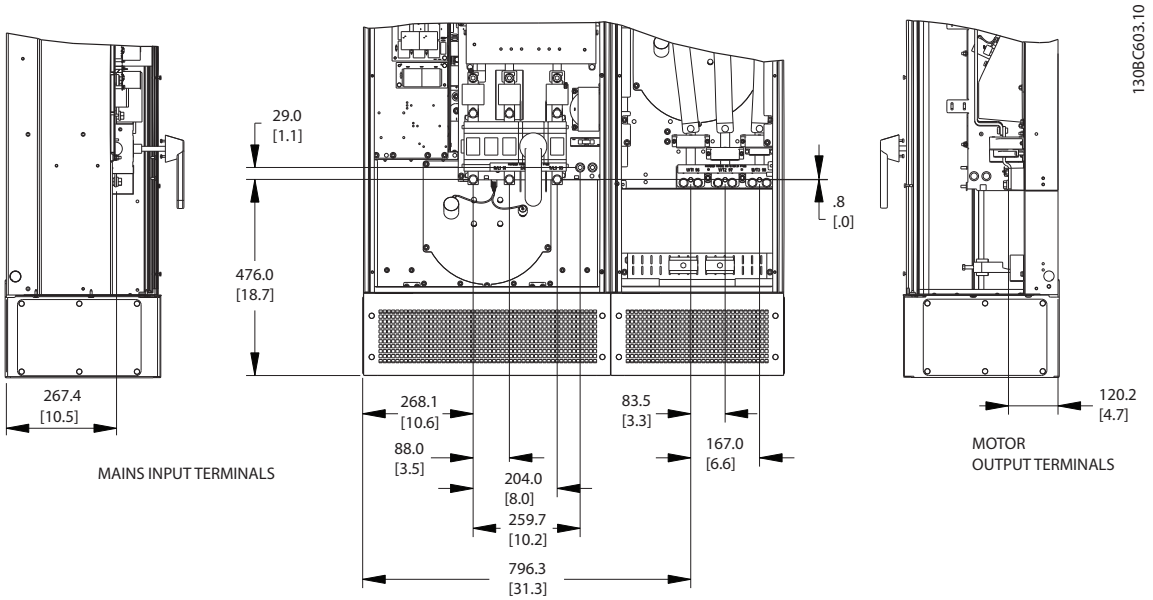

Illustration 3.8 Frame Size D13 Terminal Locations

Allow for bend radius of heavy power cables.

NOTICE

All D-frames are available with standard input terminals, fuse, or disconnect switch.

 Danfoss A/S © Rev. 2014-07-29 All rights reserved.

3.3.4 Terminal Locations for Frame Size E9

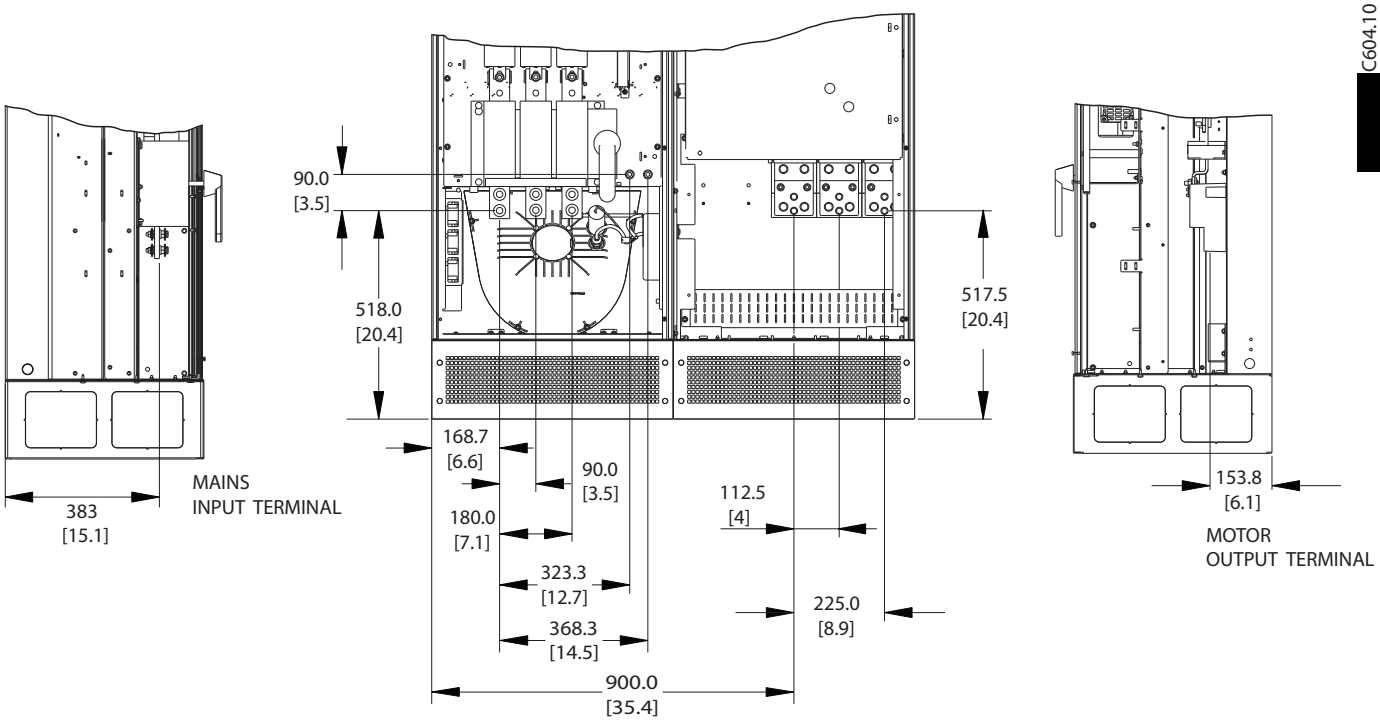

Illustration 3.9 Frame Size E9 Terminal Locations

Allow for bend radius of heavy power cables.

NOTICE

All E-frames are available with standard input terminals, fuse, or disconnect switch.

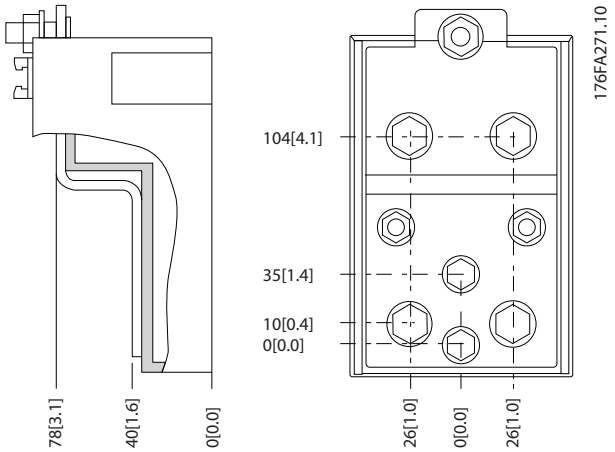

Illustration 3.10 Close-up Terminal Diagrams

3.3.5 Terminal Locations - Frame Size F18

Take the position of the terminals into consideration when designing the cable access.

F-frame units have four interlocked cabinets:

1. Input options cabinet (not optional for LHD)
2. Filter cabinet
3. Rectifier cabinet
4. Inverter cabinet

See *chapter 2.1 Exploded View Drawings* for exploded views of each cabinet. Mains inputs are located in the input option cabinet, which conducts power to the rectifier via interconnecting bus bars. Output from the unit is from the inverter cabinet. No connection terminals are located in the rectifier cabinet. Interconnecting bus bars are not shown.

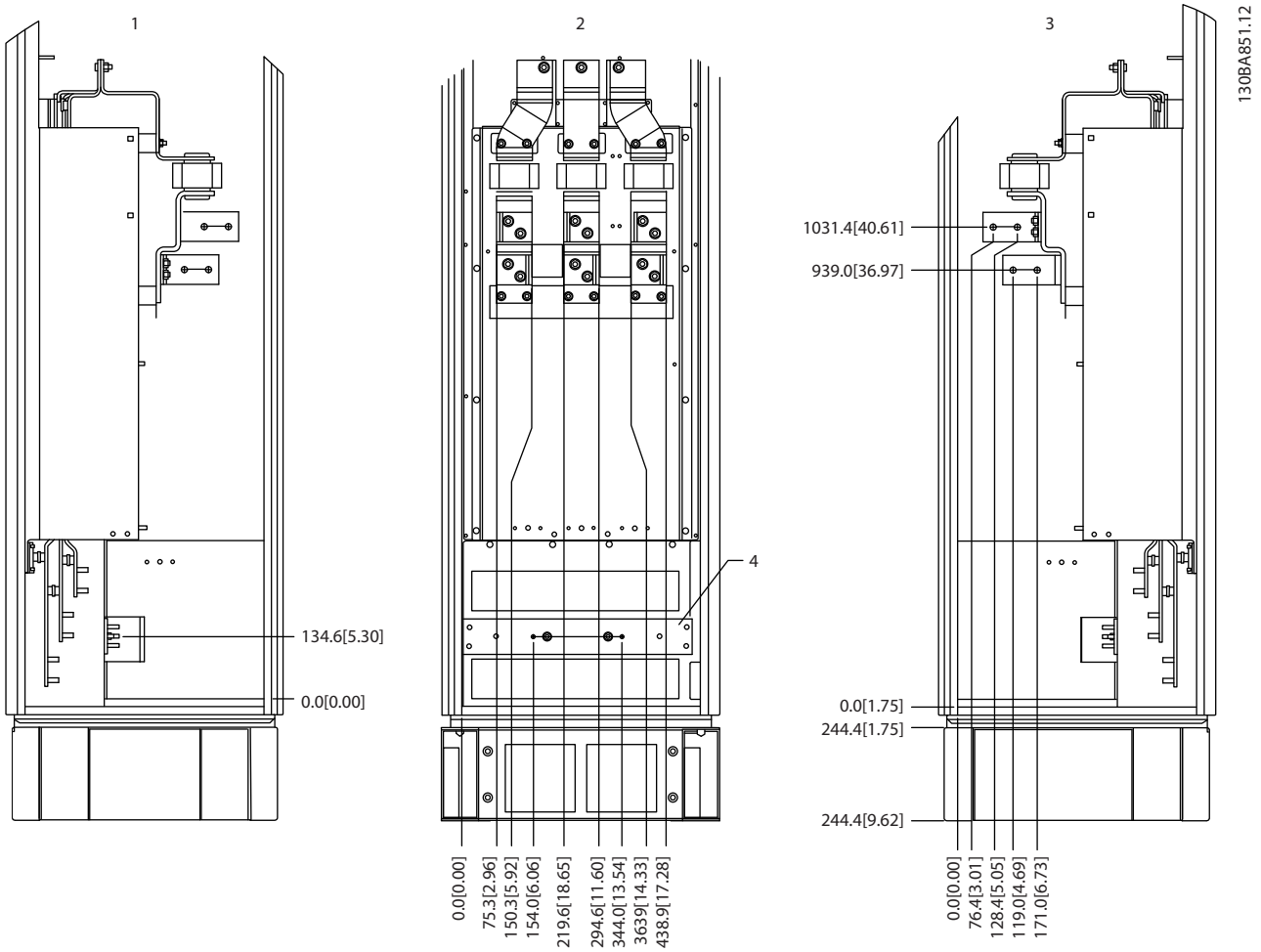

1	Right side cutaway	3	Left side cutaway
2	Front view	4	Earth/ground bar

Illustration 3.11 Frame Size F18 Input Option Cabinet - Fuses Only

The gland plate is 42 mm below the 0 level. Shown are the left side view, front, and right.

Danfoss A/S © Rev. 2014-07-29 All rights reserved.

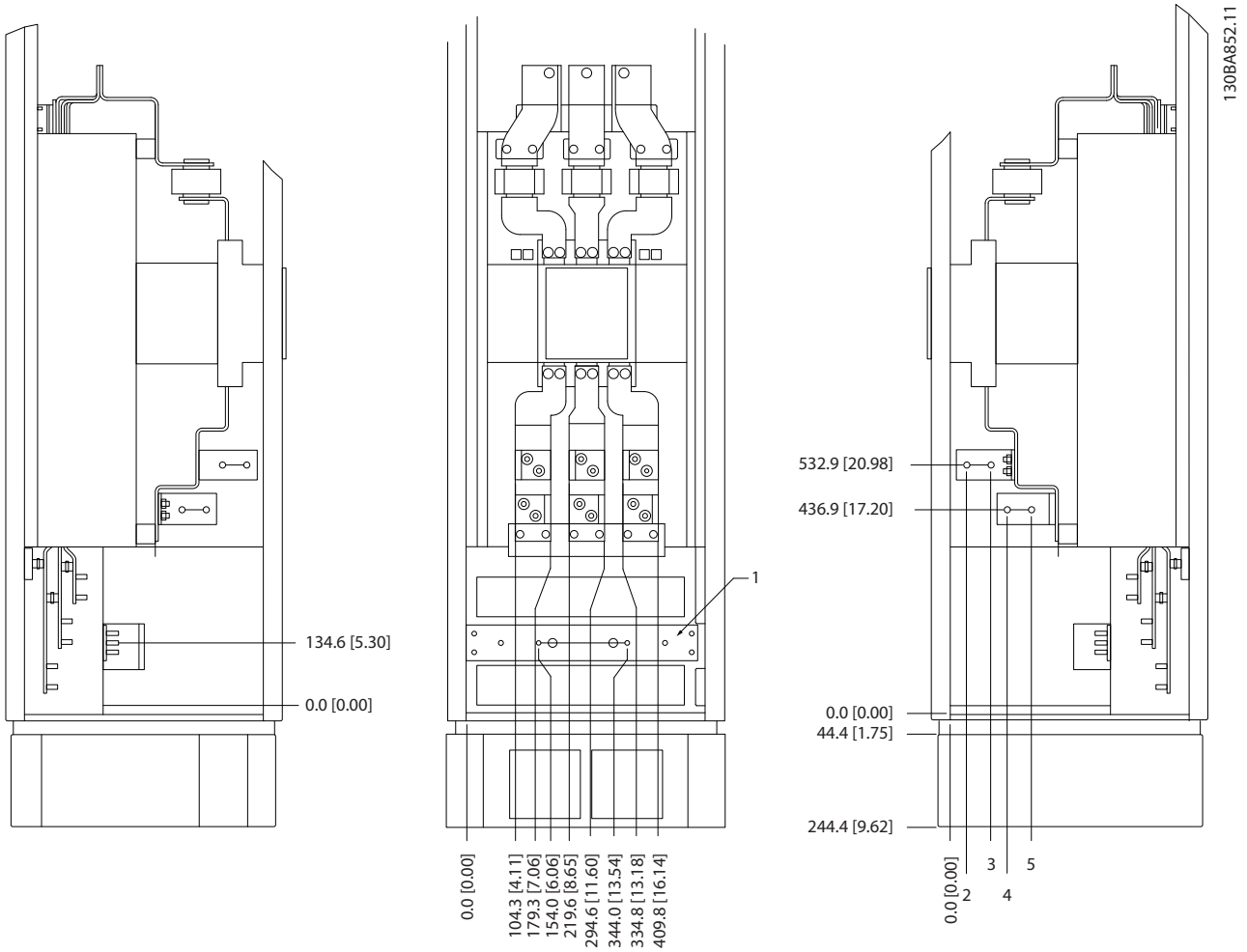

	450 kW	500–630 kW
1	Ground Bar	
2	34.9 [1.4]	46.3 [1.8]
3	86.9 [3.4]	98.3 [3.9]
4	122.2 [4.8]	119 [4.7]
5	174.2 [6.9]	171 [6.7]

Illustration 3.12 Frame Size F18 Input Option Cabinet with Circuit Breaker

The gland plate is 42 mm below the 0 level. Shown are the left side view, front, and right.

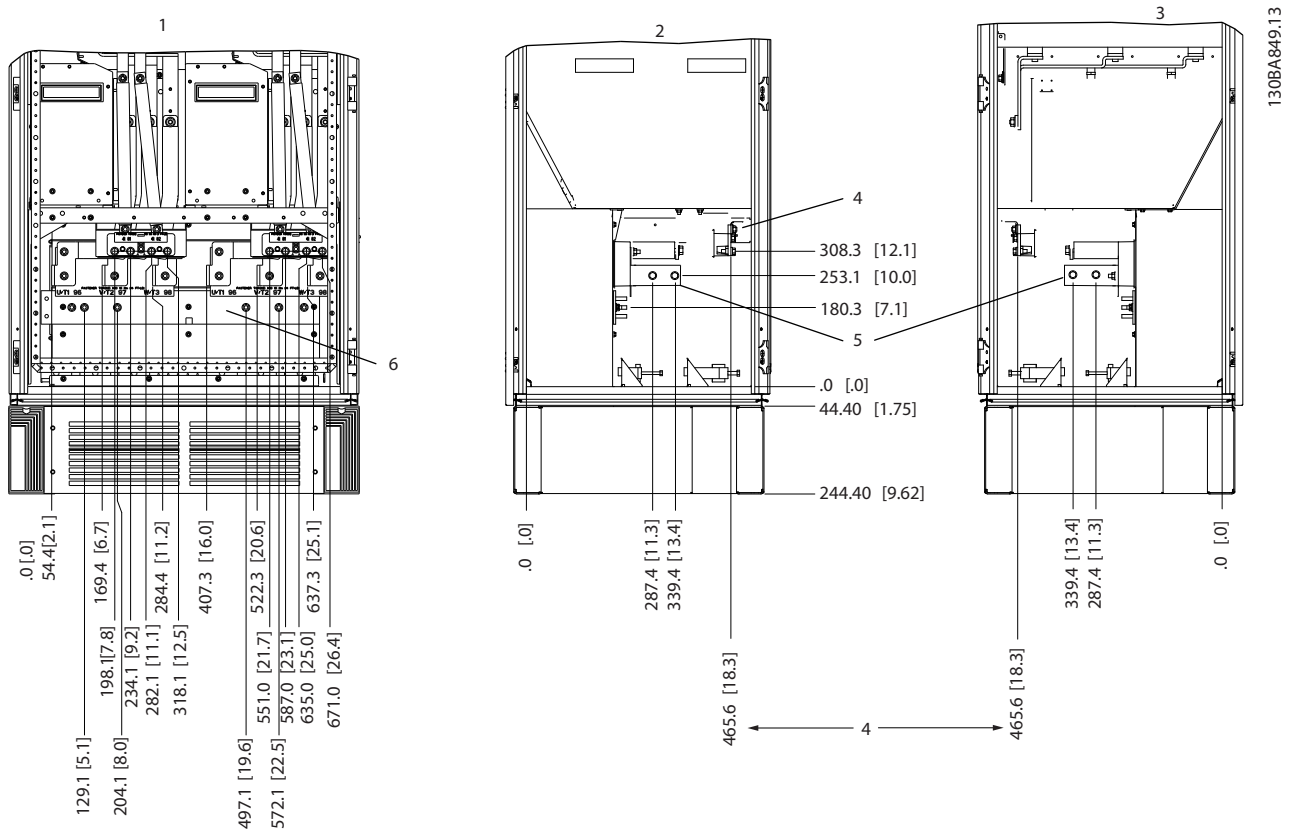

1	Front View	4	Brake Terminals
2	Left Side View	5	Earth/ground bar
3	Right Side View		

Illustration 3.13 Frame Size F18 Inverter Cabinet

The gland plate is 42 mm below the 0 level. Shown are the left side view, front, and right.

 Danfoss A/S © Rev. 2014-07-29 All rights reserved.

3.3.6 Torque

Correct torque is imperative for all electrical connections. The correct torque values are listed in *Table 3.2*. Incorrect torque results in a bad electrical connection. Use a torque wrench to ensure correct torque.

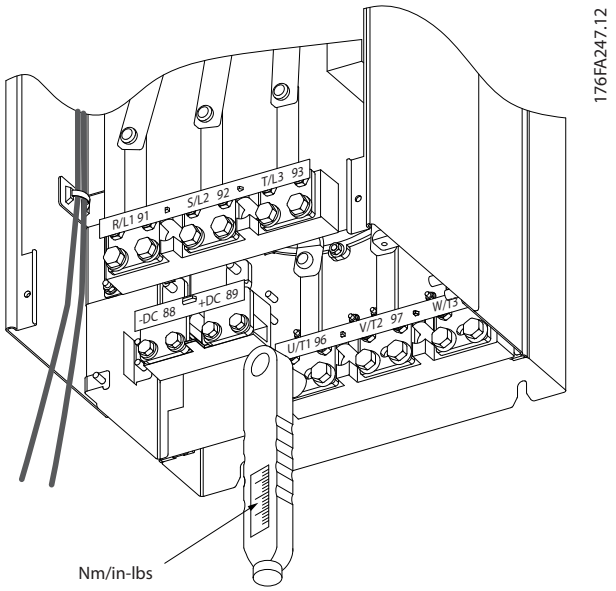

Illustration 3.14 Use a Torque Wrench to Tighten the Bolts

Frame size	Terminal	Torque [Nm] (in-lbs)	Bolt size
D	Mains Motor	19–40 (168–354)	M10
	Load sharing Brake	8.5–20.5 (75–181)	M8
E	Mains Motor Load sharing	19–40 (168–354)	M10
	Brake	8.5–20.5 (75–181)	M8
F	Mains Motor	19–40 (168–354)	M10
	Load sharing	19–40 (168–354)	M10
	Brake	8.5–20.5 (75–181)	M8
	Regen	8.5–20.5 (75–181)	M8

Table 3.2 Torque for Terminals

3.4 Electrical Installation

NOTICE

Cables–General Information

All cabling must comply with national and local regulations on cable cross-sections and ambient temperature. UL applications require 75 °C copper conductors. For non-UL applications, 75 and 90 °C copper conductors are thermally acceptable.

The power cable connections are situated as shown in *Illustration 3.15*. Dimension cable cross-section in accordance with the current ratings and local legislation. See *chapter 11.3.1 Cable lengths and cross-sections* for details.

For protection of the frequency converter, use the recommended fuses if there are no built-in fuses. Fuse recommendations are provided in *chapter 11.5 Fuses*. Ensure that proper fusing is made according to local regulation.

The mains connection is fitted to the mains switch, if included.

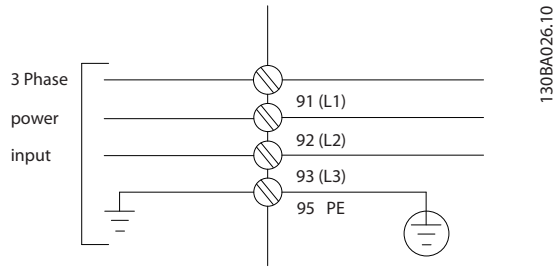

Illustration 3.15 Power Cable Connections

NOTICE

To comply with EMC emission specifications, screened/armoured cables are recommended. If an unscreened/unarmoured cable is used, see *chapter 3.4.10 Power and Control Wiring for Unscreened Cables*.

See *chapter 11 Specifications* for correct dimensioning of motor cable cross-section and length.

Screening of cables

Avoid installation with twisted screen ends (pigtails). They spoil the screening effect at higher frequencies. If breaking the screen is necessary to install a motor isolator or contactor, continue the screen at the lowest possible HF impedance.

Connect the motor cable screen to both the de-coupling plate of the frequency converter and to the metal housing of the motor.

Make the screen connections with the largest possible surface area (cable clamp). Use the installation devices within the frequency converter.

Cable-length and cross-section
The frequency converter has been EMC tested with a given length of cable. Keep the motor cable as short as possible to reduce the noise level and leakage currents.

Switching frequency
When frequency converters are used together with sine-wave filters to reduce the acoustic noise from a motor, the switching frequency must be set according to *14-01 Switching Frequency*.

Term. no.	96	97	98	99	
	U	V	W	PE[1)]	Motor voltage 0–100% of mains voltage. 3 wires out of motor
	U1	V1	W1	PE[1)]	Delta-connected
	W2	U2	V2		6 wires out of motor
	U1	V1	W1	PE[1)]	Star-connected U2, V2, W2 U2, V2, and W2 to be interconnected separately.

Table 3.3 Terminal Connections

1) Protective Earth Connection

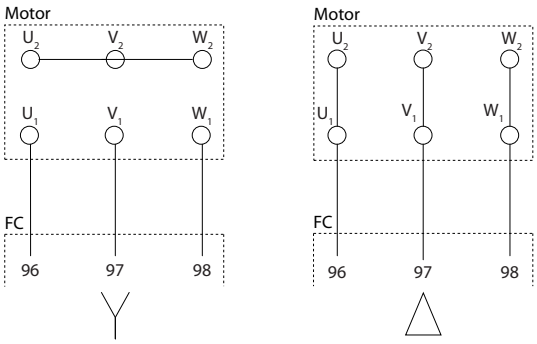

Illustration 3.16 Y and Delta Terminal Configurations

Consider the following basic issues for electromagnetic compatibility (EMC) during installation:

- Safety grounding: The frequency converter has a high leakage current and must be grounded appropriately for safety reasons. Apply local safety regulations.
- High-frequency grounding: Keep the ground wire connections as short as possible.

Connect the different ground systems at the lowest possible conductor impedance. Keep the conductor as short as possible and use the greatest possible surface area for the lowest possible conductor impedance.
The metal cabinets of the different devices are mounted on the cabinet rear plate using the lowest possible HF impedance. Doing so avoids different HF voltages for individual devices and the risk of radio interference currents running in connection cables between the devices. The radio interference is reduced.
To obtain a low HF impedance, use the fastening bolts of the devices as HF connection to the rear plate. Remove insulating paint or similar from the fastening points.

 Danfoss A/S © Rev. 2014-07-29 All rights reserved.

3.4.1 EMC Interference

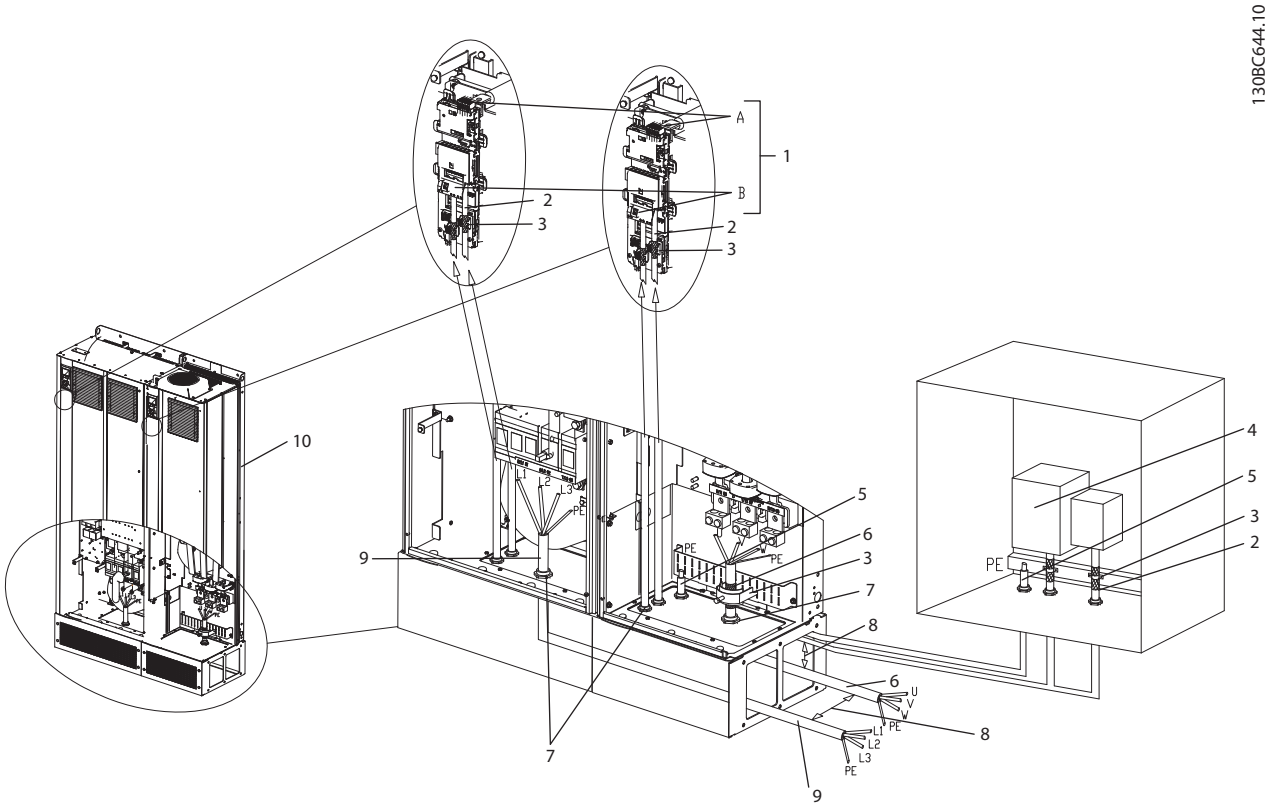

1	Customer control termination points–options A and B	6	Motor output cable, 3-phase and PE (screened)
2	Screened control wiring	7	Cable gland
3	Cable clamp	8	Clearance, minimum 200 mm
4	Customer control input	9	Mains input cable, 3-phase and reinforce PE
5	Potential equialisation wire [minimum 16 mm^2]	10	Low harmonic drive (LHD)

Illustration 3.17 EMC-correct Installation

NOTICE

EMC Interference

Use screened cables for motor and control wiring. Separate the LHD mains input cable, motor cable, and control wiring. Minimum 200 mm (7.9 in) clearance between power, motor, and control cables is required. Maximise this clearance to minimise EMC emissions. This reduces the risk of interference between the LHD and other electronic devices.

3

3.4.2 Extra Protection (RCD)

ELCB relays, multiple protective grounding, or standard grounding provide extra protection, if local safety regulations are followed.

In the case of a ground fault, a DC component develops in the fault current.

If using ELCB relays, observe local regulations. Relays must be suitable for protection of 3-phase equipment with a bridge rectifier and for a brief discharge on power-up.

3.4.3 RFI Switch

Mains supply isolated from ground
If the frequency converter is supplied from an isolated mains source or TT/TN-S mains with grounded leg, turn off the RFI switch via *14-50 RFI Filter* on both frequency converter and the filter. For further reference, see IEC 364-3. When optimum EMC performance is needed, parallel motors are connected, or the motor cable length is above 25 m, set *14-50 RFI Filter* to [ON].
In OFF, the internal RFI capacitors (filter capacitors) between the chassis and the intermediate circuit are cut off to avoid damage to the intermediate circuit and reduce ground capacity currents (IEC 61800-3).
Refer to the application note *VLT on IT mains*. It is important to use isolation monitors that work together with power electronics (IEC 61557-8).

3.4.4 Shielded Cables

It is important to connect shielded cables properly to ensure high EMC immunity and low emissions.

Connection can be made using either cable glands or clamps:

- EMC cable glands: Generally available cable glands can be used to ensure an optimum EMC connection.
- EMC cable clamp: Clamps allowing easy connection are supplied with the unit.

3.4.5 Motor Cable

Connect the motor to terminals U/T1/96, V/T2/97, W/T3/98, on the far right of the unit. Ground to terminal 99. All types of 3-phase asynchronous standard motors can be used with a frequency converter. The factory setting is for clockwise rotation with the frequency converter output connected as follows:

Terminal No.	Function
96, 97, 98	Mains U/T1, V/T2, W/T3
99	Ground

Table 3.4 Terminal Functions

- Terminal U/T1/96 connected to U-phase
- Terminal V/T2/97 connected to V-phase
- Terminal W/T3/98 connected to W-phase

The direction of rotation can be changed by switching 2 phases in the motor cable or by changing the setting of *4-10 Motor Speed Direction*.

Motor rotation check can be performed via *1-28 Motor Rotation Check* and following the steps shown in the display.

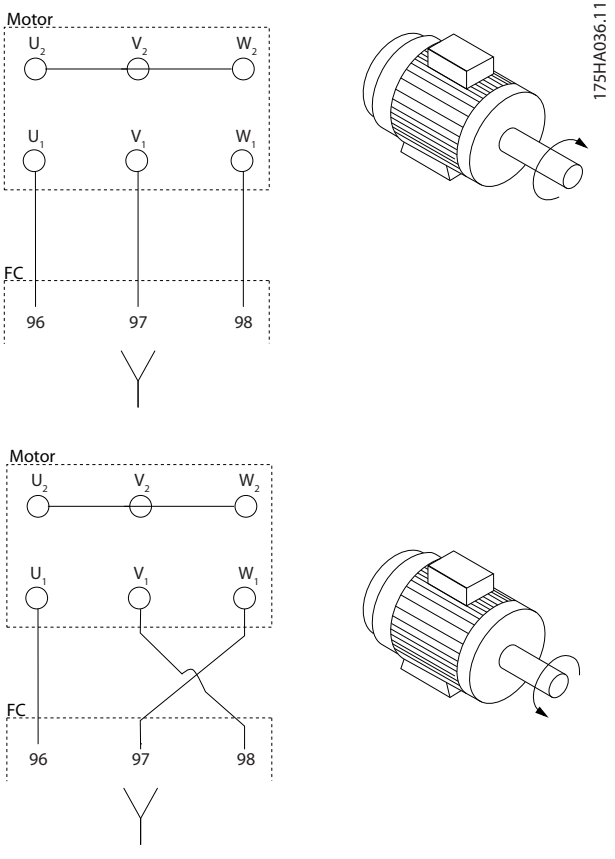

Illustration 3.18 Motor Rotation Check

F-frame requirements
Use motor phase cables in quantities of 2, resulting in 2, 4, 6, or 8 to obtain an equal number of wires on both inverter module terminals. The cables are required to be equal length within 10% between the inverter module terminals and the first common point of a phase. The recommended common point is the motor terminals.

 Danfoss A/S © Rev. 2014-07-29 All rights reserved.

Output junction box requirements
The length, minimum 2.5 m, and quantity of cables must be equal from each inverter module to the common terminal in the junction box.

NOTICE

If a retrofit application requires an unequal number of wires per phase, consult the factory or use the top/ bottom entry side cabinet option, instruction 177R0097.

3.4.6 Brake Cable

Frequency converters with factory installed brake chopper option

(Only standard with letter B in position 18 of type code).

The connection cable to the brake resistor must be screened and the max. length from frequency converter to the DC bar is limited to 25 m.

Terminal No.	Function
81, 82	Brake resistor terminals

Table 3.5 Terminal Functions

The connection cable to the brake resistor must be screened. Connect the screen with cable clamps to the conductive back plate of the frequency converter and the metal cabinet of the brake resistor.
Size the brake cable cross-section to match the brake torque.

⚠WARNING

Note that voltages up to 790 V DC, depending on the supply voltage, are possible on the terminals.

F-frame requirements
The brake resistors must be connected to the brake terminals in each inverter module.

3.4.7 Brake Resistor Temperature Switch

The input for the brake resistor temperature switch can be used to monitor the temperature of an externally connected brake resistor. If the connection between 104 and 106 is removed, the frequency converter trips on warning/alarm 27, Brake IGBT.
Install a Klixon switch that is 'normally closed' in series with the existing connection on either 106 or 104. Any connection to this terminal must be double insulated against high voltage to maintain PELV.
Normally closed: 104–106 (factory installed jumper).

Terminal No.	Function
106, 104, 105	Brake resistor temperature switch.

Table 3.6 Terminal Functions

⚠CAUTION

If the temperature of the brake resistor is too high and the thermal switch drops out, the frequency converter stops braking. The motor coasts.

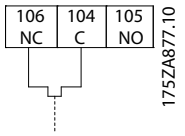

Illustration 3.19 Factory-installed Jumper

3.4.8 Mains Connection

Mains must be connected to terminals 91, 92 and 93 on the far left of the unit. Ground is connected to the terminal on the right of terminal 93.

Terminal No.	Function
91, 92, 93	Mains R/L1, S/L2, T/L3
94	Ground

Table 3.7 Terminal Functions

Ensure that the power supply can supply the necessary current to the frequency converter.

If the unit is without built-in fuses, ensure that the appropriate fuses have the correct current rating.

3.4.9 External Fan Supply

If the frequency converter is supplied by DC or the fan must run independently of the power supply, use an external power supply. Make the connection on the power card.

Terminal No.	Function
100, 101	Auxiliary supply S, T
102, 103	Internal supply S, T

Table 3.8 Terminal Functions

The connector on the power card provides the connection of line voltage for the cooling fans. The fans are connected from the factory to be supplied from a common AC line (jumpers between 100–102 and 101–103). If external power supply is needed, remove the jumpers and connect the supply to terminals 100 and 101. Protect with a 5 A fuse. In UL applications, use a LittelFuse KLK-5 or equivalent.

3

3.4.10 Power and Control Wiring for Unscreened Cables

⚠WARNING

INDUCED VOLTAGE

Induced voltage from coupled output motor cables charges equipment capacitors even with the equipment turned off and locked out. Run motor cables from multiple frequency converters separately. Failure to run output cables separately could result in death or serious injury.

⚠CAUTION

COMPROMISED PERFORMANCE

The frequency converter runs less efficiently if wiring is not isolated properly. To isolate high frequency noise, place the following in separate metallic conduits:

- **power wiring**
- **motor wiring**
- **control wiring**

Failure to isolate these connections could result in less than optimum controller and associated equipment performance.

Because the power wiring carries high frequency electrical pulses, it is important to run input power and motor power in separate conduit. If incoming power wiring is in the same conduit as motor wiring, these pulses can couple electrical noise back onto the power grid. Isolate control wiring from high-voltage power wiring.
When screened/armoured cable is not used, at least 3 separate conduits are connected to the panel options cabinet (see *Illustration 3.20*).

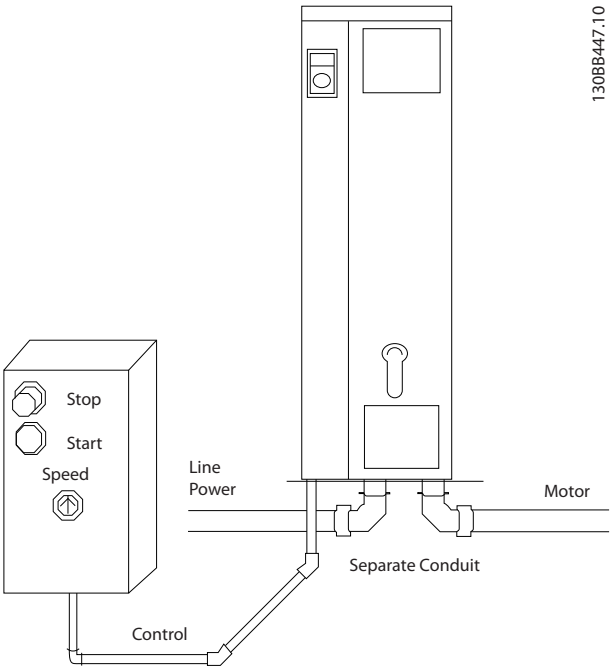

Illustration 3.20 Proper Electrical Installation Using Conduit

Danfoss A/S © Rev. 2014-07-29 All rights reserved.

3.4.11 Mains Disconnects

Frame size	Power & Voltage	Type
D	P132-P200 380–500 V	OT400U12-9 or ABB OETL-NF400A
E	P250 380-500 V	ABB OETL-NF600A
E	P315-P400 380-500 V	ABB OETL-NF800A
F	P450 380-500 V	Merlin Gerin NPJF36000S12AAYP
F	P500-P630 380-500 V	Merlin Gerin NRK36000S20AAYP

Table 3.9 Recommended Mains Disconnects

3.4.12 F-Frame Circuit Breakers

Frame size	Power & Voltage	Type
F	P450 380-500 V	Merlin Gerin NPJF36120U31AABSCYP
F	P500-P630 380-500 V	Merlin Gerin NRJF36200U31AABSCYP

Table 3.10 Recommended Circuit Breakers

3.4.13 F-Frame Mains Contactors

Frame size	Power & Voltage	Type
F	P450-P500 380-500 V	Eaton XTCE650N22A
F	P560-P630 380-500 V	Eaton XTCEC14P22B

Table 3.11 Recommended Contactors

3.4.14 Motor Insulation

For motor cable lengths ≤ the maximum cable length, the motor insulation ratings listed in *Table 3.12* are recommended. The peak voltage can be twice the DC-link voltage or 2.8 times mains voltage, due to transmission line effects in the motor cable. If a motor has lower insulation rating, use a dU/dt or sine wave filter.

Nominal Mains Voltage	Motor Insulation
$U_N \leq 420$ V	Standard U_{LL} = 1,300 V
420 V < $U_N \leq 500$ V	Reinforced U_{LL} = 1,600 V

Table 3.12 Recommended Motor Insulation Ratings

3.4.15 Motor Bearing Currents

Motors with a rating 110 kW or higher combined with frequency converters are best with NDE (Non-Drive End) insulated bearings to eliminate circulating bearing currents caused by motor size. To minimise DE (Drive End) bearing and shaft currents, proper grounding is required for:

- Frequency converter
- Motor
- Motor-driven machine
- Motor to the driven machine

Although failure due to bearing currents is infrequent, use the following strategies to reduce the likelihood:

- Use an insulated bearing
- Apply rigorous installation procedures
- Ensure that the motor and load motor are aligned
- Strictly follow the EMC Installation guideline
- Reinforce the PE so the high frequency impedance is lower in the PE than the input power leads
- Provide a good high frequency connection between the motor and the frequency converter
- Ensure that the impedance from frequency converter to building ground is lower than the grounding impedance of the machine. Make a direct ground connection between the motor and load motor.
- Apply conductive lubrication
- Try to ensure that the line voltage is balanced to ground.
- Use an insulated bearing as recommended by the motor manufacturer (note: Motors from reputable manufacturers typically have insulated bearings as standard in motors of this size)

 Danfoss A/S © Rev. 2014-07-29 All rights reserved.

3

If found to be necessary and after consultation with Danfoss:

- Lower the IGBT switching frequency
- Modify the inverter waveform, 60° AVM vs. SFAVM
- Install a shaft grounding system or use an isolating coupling between motor and load
- Use minimum speed settings if possible
- Use a dU/dt or sine-wave filter

3.4.16 Motor Thermal Protection

The electronic thermal relay in the frequency converter has received UL-approval for single motor protection, when *parameter 1-90 Motor Thermal Protection* is set for *ETR Trip* and *1-24 Motor Current* is set to the rated motor current (see the motor name plate).
For thermal motor protection, it is also possible to use the MCB 112 PTC Thermistor Card option. This card provides ATEX certificate to protect motors in explosion hazardous areas, Zone 1/21 and Zone 2/22. When *parameter 1-90 Motor Thermal Protection*, set to *[20] ATEX ETR*, is combined with the use of MCB 112, it is possible to control an Ex-e motor in explosion hazardous areas. Consult the *Programming Guide* for details on how to set up the frequency converter for safe operation of Ex-e motors.

To run STO, additional wiring for the frequency converter is required. Refer to *VLT® Frequency Converters Safe Torque Off Operating Instructions* for further information.

3.4.17 Control Cable Routing

Tie down all control wires to the designated control cable routing as shown in *Illustration 3.21*, *Illustration 3.22*, and *Illustration 3.23*. Remember to connect the shields in a proper way to ensure optimum electrical immunity.

Fieldbus connection
Connections are made to the relevant options on the control card. For details, see the relevant fieldbus instruction. The cable must be placed in the provided path inside the frequency converter and tied down together with other control wires (see *Illustration 3.21* and *Illustration 3.22*).

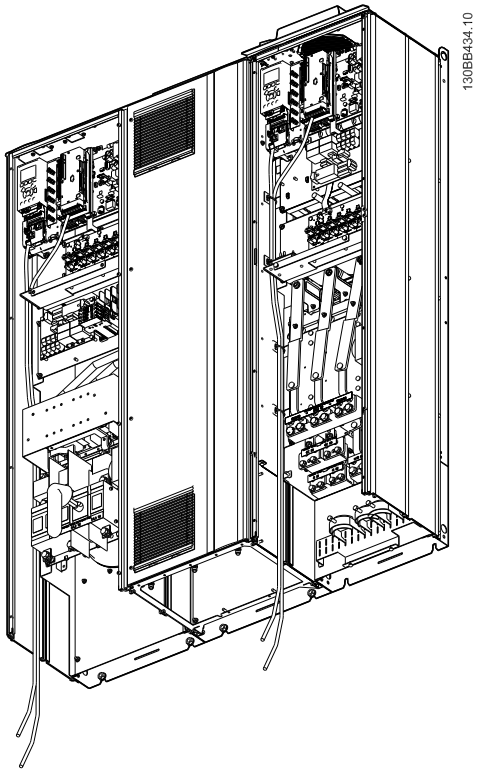

Illustration 3.21 Control Card Wiring Path for Frame Size D13

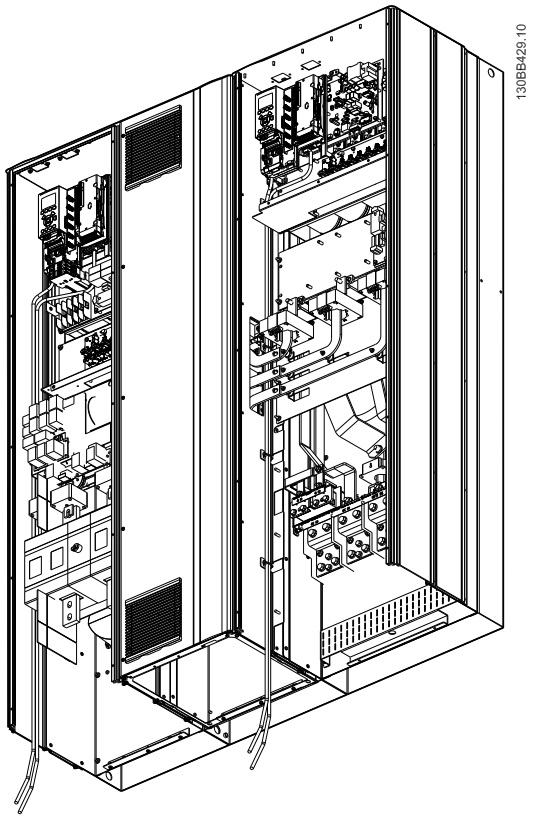

Illustration 3.22 Control Card Wiring Path for Frame Size E9

 Danfoss A/S © Rev. 2014-07-29 All rights reserved.

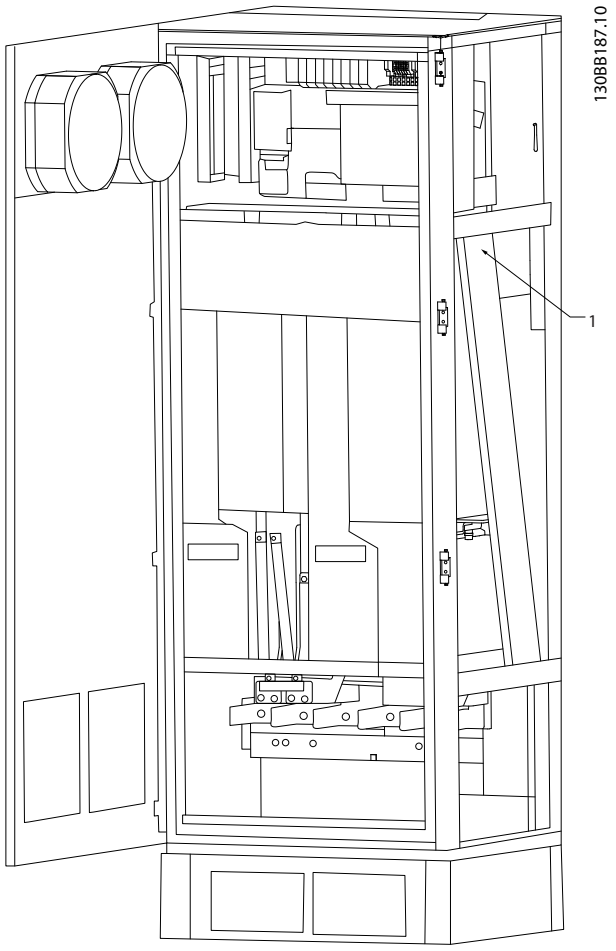

1	Routing path for the control card wiring, inside the frequency converter enclosure.

Illustration 3.23 Control Card Wiring Path for Frame Size F18

3.4.18 Access to Control Terminals

All terminals for the control cables are located beneath the LCP (both filter and frequency converter LCPs). They are accessed by opening the door of the unit.

3.4.19 Electrical Installation, Control Terminals

To connect the cable to the terminal:

1. Strip insulation by about 9–10 mm

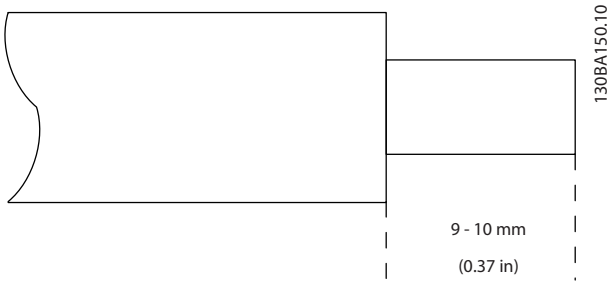

Illustration 3.24 Length to Strip the Insulation

2. Insert a screwdriver (max. 0.4x2.5 mm) in the square hole.
3. Insert the cable in the adjacent circular hole.

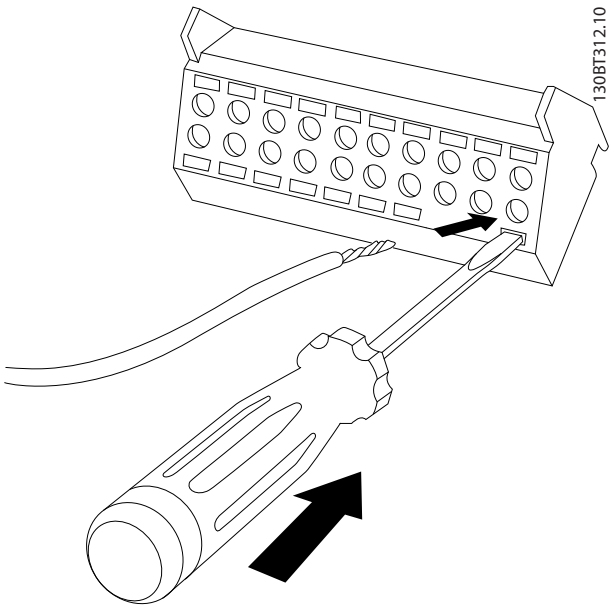

Illustration 3.25 Inserting the Cable in the Terminal Block

4. Remove the screwdriver. The cable is now mounted in the terminal.

To remove the cable from the terminal:

1. Insert a screwdriver (max. 0.4 x 2.5 mm) in the square hole.
2. Pull out the cable.

3

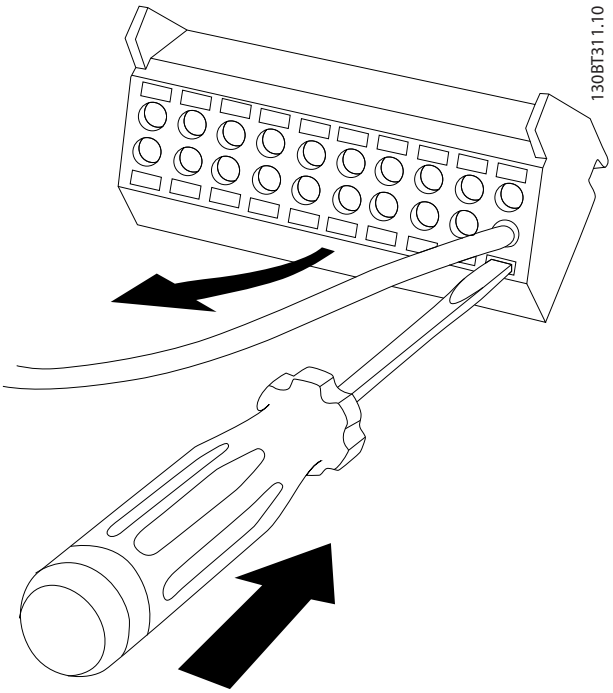

Illustration 3.26 Removing the Screwdriver after Cable Insertion

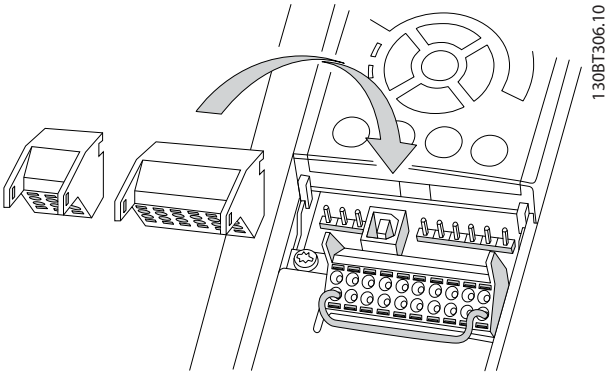

Illustration 3.27 Control Terminal Locations

Danfoss A/S © Rev. 2014-07-29 All rights reserved.

3.4.20 Electrical Installation, Control Cables

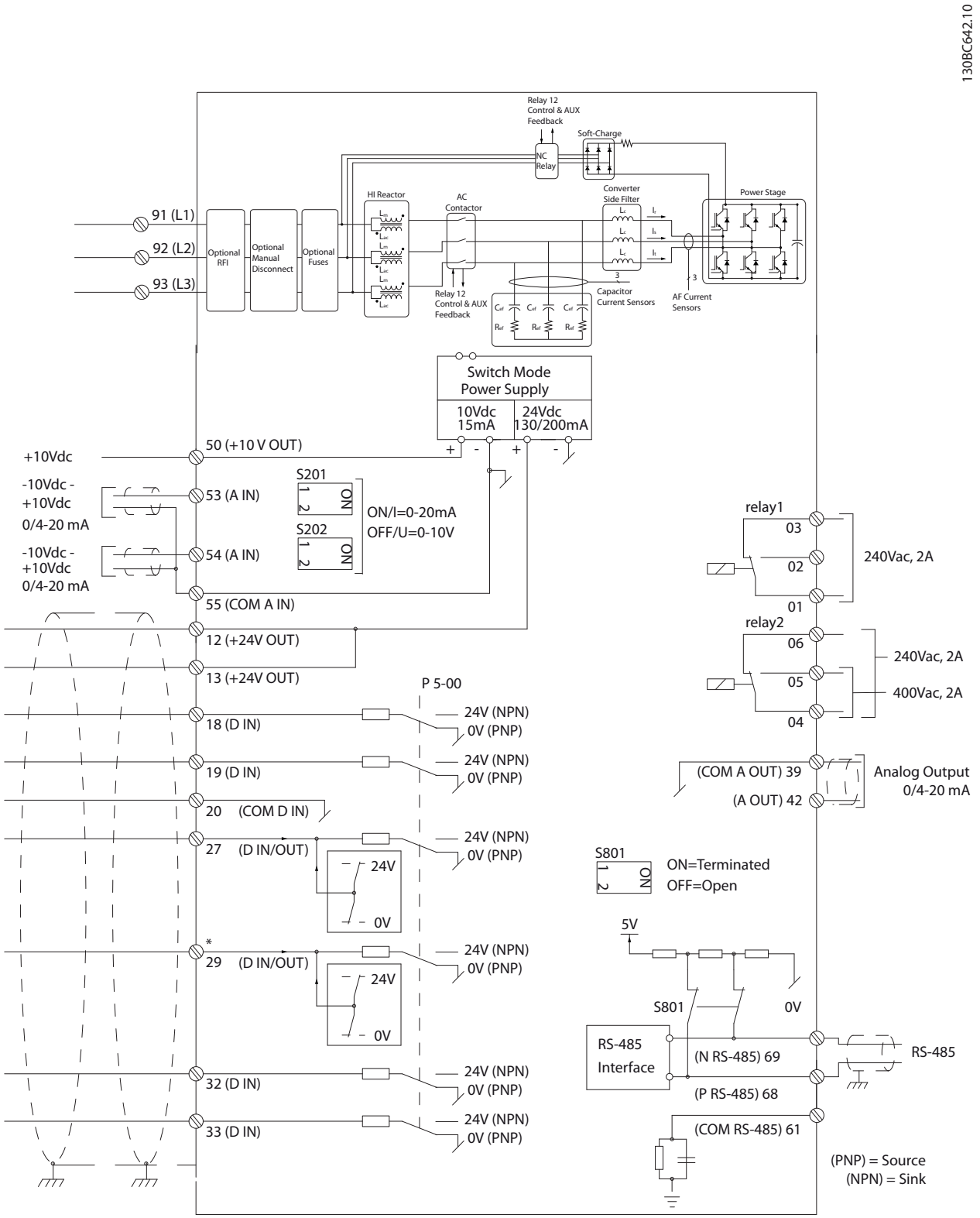

Illustration 3.28 Terminal Diagram

To run STO, additional wiring for the frequency converter is required. Refer to *VLT® Frequency Converters Safe Torque Off Operating Instructions* for further information.

3.4.21 Switches S201, S202, and S801

Use switches S201 (A53) and S202 (A54) to select a current (0-20 mA) or a voltage (-10 V to 10 V) configuration of the analog input terminals 53 and 54.

Switch S801 (BUS TER.) can be used to enable termination on the RS-485 port (terminals 68 and 69).

See *Illustration 3.28*.

Default setting:

S201 (A53) = OFF (voltage input)

S202 (A54) = OFF (voltage input)

S801 (Bus termination) = OFF

NOTICE

When changing the function of S201, S202 or S801 do not use force for the switch-over. Remove the LCP cradle when operating the switches. The switches must not be operated with power on the frequency converter.

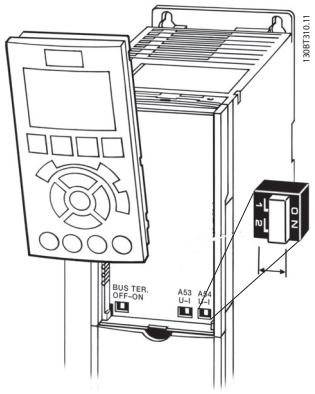

Illustration 3.29 Remove the LCP Cradle to Access Switches

3.4.22 Serial Communication

RS-485 is a 2-wire bus interface compatible with multi-drop network topology, i.e. nodes can be connected as a bus, or via drop cables from a common trunk line. A total of 32 nodes can be connected to one network segment. Repeaters divide networks.

NOTICE

Each repeater functions as a node within the segment in which it is installed. Each node connected within a given network must have a unique node address, across all segments.

Terminate each segment at both ends, using either the termination switch (S801) of the frequency converters or a biased termination resistor network. Always use screened twisted pair (STP) cable for bus cabling, and always follow good common installation practice.
Low-impedance ground connection of the screen at every node is important, including at high frequencies. Thus, connect a large surface of the screen to ground, for example with a cable clamp or a conductive cable gland. It may be necessary to apply potential-equalizing cables to maintain the same ground potential throughout the network - particularly in installations with long cables.
To prevent impedance mismatch, always use the same type of cable throughout the entire network. When connecting a motor to the frequency converters, always use screened motor cable.

Cable	Screened twisted pair (STP)
Impedance	120 Ω
Cable length [m]	Max. 1200 (including drop lines) Max. 500 station-to-station

Table 3.13 Cable Recommendations

3.5 Final Set-up and Test

Correct torque is imperative for all electrical connections. Incorrect torque results in a bad electrical connection. Use a torque wrench to ensure correct torque.

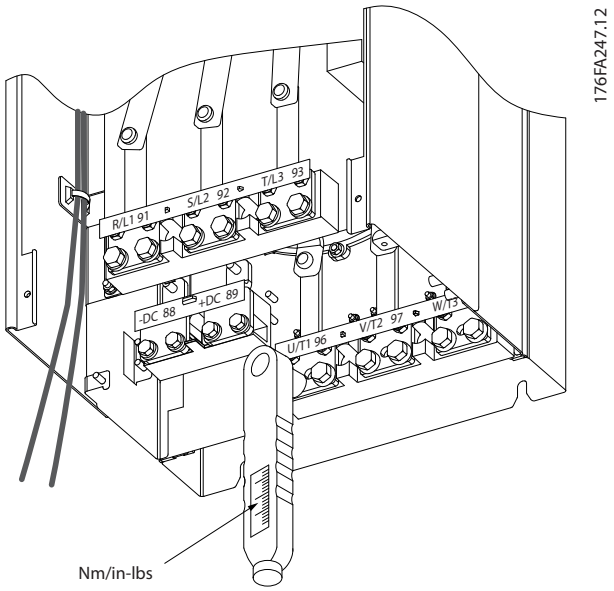

Illustration 3.30 Use a Torque Wrench to Tighten the Bolts

Danfoss A/S © Rev. 2014-07-29 All rights reserved.

Frame size	Terminal	Torque	Bolt size
D	Mains Motor	19–40 Nm (168–354 in-lbs)	M10
	Load sharing Brake	8.5–20.5 Nm (75–181 in-lbs)	M8
E	Mains Motor Load sharing	19–40 Nm (168–354 in-lbs)	M10
	Brake	8.5–20.5 Nm (75–181 in-lbs)	M8
F	Mains Motor	19–40 Nm (168–354 in-lbs)	M10
	Load sharing	19–40 Nm (168–354 in-lbs)	M10
	Brake	8.5–20.5 Nm (75–181 in-lbs)	M8
	Regen	8.5–20.5 Nm (75–181 in-lbs)	M8

Table 3.14 Torque for terminals

3.6 Additional Connections

3.6.1 Mechanical Brake Control

In hoisting/lowering applications, it is necessary to be able to control an electro-mechanical brake:

- Control the brake using any relay output or digital output (terminal 27 or 29).
- Keep the output closed (voltage-free) as long as the frequency converter is unable to 'support' the motor, due to the load being too heavy, for example.
- Select *[32] Mechanical brake control* in parameter group *5-4* Relays* for applications with an electro-mechanical brake.
- The brake is released when the motor current exceeds the preset value in *parameter 2-20 Release Brake Current*.
- The brake engages when the output frequency is less than the frequency set in *parameter 2-21 Activate Brake Speed [RPM]* or *parameter 2-22 Activate Brake Speed [Hz]*, only if the frequency converter completes a stop command.

If the frequency converter is in alarm mode or in an overvoltage situation, the mechanical brake immediately cuts in.

3.6.2 Parallel Connection of Motors

The frequency converter can control several parallel-connected motors. The total current consumption of the motors must not exceed the rated output current $I_{M,N}$ for the frequency converter.

NOTICE

Installations with cables connected in a common joint as in *Illustration 3.31*, is only recommended for short cable lengths.

NOTICE

When motors are connected in parallel, *1-29 Automatic Motor Adaptation (AMA)* cannot be used.

NOTICE

The electronic thermal relay (ETR) of the frequency converter cannot be used as motor protection for the individual motor in systems with parallel-connected motors. Provide further motor protection with thermistors in each motor or individual thermal relays. Circuit breakers are not suitable as protection.

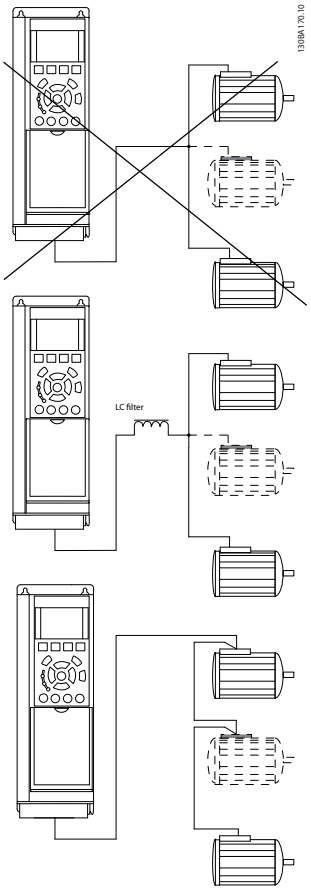

Illustration 3.31 Installations with Cables Connected in a Common Joint

Problems are possible at start and at low RPM values if motor sizes vary widely. The relatively high ohmic resistance in the stator of small motors calls for a higher voltage at start and at low RPM values.

3

3.6.3 F-frame Options

Space heaters and thermostat
There are space heaters mounted on the cabinet interior of F-frame frequency converters. These heaters are controlled by an automatic thermostat and help control humidity inside the enclosure. The thermostat default settings turn on the heaters at 10 °C (50 °F) and turn them off at 15.6 °C (60 °F).

Cabinet light with power outlet
A light mounted on the cabinet interior of F-frame frequency converters increases visibility during servicing and maintenance. The housing includes a power outlet for temporarily powering tools or other devices, available in 2 voltages:

- 230 V, 50 Hz, 2.5 A, CE/ENEC
- 120 V, 60 Hz, 5 A, UL/cUL

Transformer tap set-up
If the cabinet light and outlet and/or the space heaters and thermostat are installed, transformer T1 requires its taps to be set to the proper input voltage. A 380-480/500 V frequency converter is initially set to the 525 V tap and a 525-690 V frequency converters is set to the 690 V tap to ensure no overvoltage of secondary equipment occurs if the tap is not changed before applying power. See *Table 3.15* to set the proper tap at terminal T1 located in the rectifier cabinet.

Input voltage range [V]	Tap to select [V]
380 V-440	400
441 V-490	460
491 V-550	525
551 V-625	575
626 V-660	660
661 V-690	690

Table 3.15 Transformer Tap Set-up

NAMUR terminals
NAMUR is an international association of automation technology users in the process industries, primarily chemical and pharmaceutical industries in Germany. Selecting this option provides terminals organised and labeled to the specifications of the NAMUR standard for frequency converters input and output terminals. This requires VLT® PTC Thermistor Card MCB 112 VLT® Extended Relay Card MCB 113.

RCD (Residual Current Device)
Uses the core balance method to monitor ground fault currents in grounded and high-resistance grounded systems (TN and TT systems in IEC terminology). There is a pre-warning (50% of main alarm set-point) and a main alarm set-point. Associated with each set-point is an SPDT alarm relay for external use. Requires an external "window-type" current transformer (supplied and installed by the customer).

- Integrated into the frequency converter safe torque off circuit
- IEC 60755 Type B device monitors AC, pulsed DC, and pure DC ground fault currents
- LED bar graph indicator of the ground fault current level from 10–100% of the set-point
- Fault memory
- TEST/RESET button

Insulation Resistance Monitor (IRM)
Monitors the insulation resistance in ungrounded systems (IT systems in IEC terminology) between the system phase conductors and ground. There is an ohmic pre-warning and a main alarm set-point for the insulation level. An SPDT alarm relay for external use is associate with each setpoint.

NOTICE

Only one insulation resistance monitor can be connected to each ungrounded (IT) system.

- Integrated into the frequency converter safe torque off circuit
- LCD display of the ohmic value of the insulation resistance
- Fault memory
- INFO, TEST, and RESET buttons

IEC emergency stop with Pilz safety relay
Includes a redundant 4-wire emergency-stop push button mounted on the front of the enclosure and a Pilz relay that monitors it in conjunction with the frequency converter STO (safet torque off) circuit and the mains contactor located in the options cabinet.

Manual motor starters
Provide 3-phase power for electric blowers often required for larger motors. Power for the starters is provided from the load side of any supplied contactor, circuit breaker, or disconnect switch. Power is fused before each motor starter, and is off when the incoming power to the frequency converters is off. Up to 2 starters are allowed (one if a 30 A, fuse-protected circuit is ordered), and are integrated into the frequency converter STO circuit.
Unit features include:

- Operation switch (on/off)
- Short-circuit and overload protection with test function
- Manual reset function

 Danfoss A/S © Rev. 2014-07-29 All rights reserved.

30 A, fuse-protected terminals

- 3-phase power matching incoming mains voltage for powering auxiliary customer equipment
- Not available if 2 manual motor starters are selected
- Terminals are off when the incoming power to the frequency converter is off
- Power for the fused protected terminals is provided from the load side of any supplied contactor, circuit breaker, or disconnect switch

In applications where the motor is used as a brake, energy is generated in the motor and sent back into the frequency converter. If the energy cannot be transported back to the motor, it increases the voltage in the frequency converter DC line. In applications with frequent braking and/or high inertia loads, this increase may lead to an overvoltage trip in the frequency converter and finally a shut down. Brake resistors are used to dissipate the excess energy resulting from the regenerative braking. The resistor is selected based on its ohmic value, its power dissipation rate and its physical size. Danfoss offers a wide variety of different resistors that are specifically designed for Danfoss frequency converters.

Load sharing

Load sharing is a feature on standard frequency converters, but is not available on the LHD unit.

 Danfoss A/S © Rev. 2014-07-29 All rights reserved.

4 Start Up and Functional Testing

4.1 Pre-start

⚠CAUTION

Before applying power to the unit, inspect the entire installation as detailed in *Table 4.1*. Check mark those items when completed.

4

Inspect for	Description	☑
Auxiliary equipment	• Look for auxiliary equipment, switches, disconnects, or input fuses/circuit breakers on the input power side of the frequency converter or output side to the motor. Ensure that they are ready for full speed operation. • Check function and installation of any sensors used for feedback to the frequency converter. • Remove power factor correction caps on motors, if present.	
Cable routing	• Use separate metallic conduits for each of the following: - Input power - Motor wiring - Control wiring	
Control wiring	• Check for broken or damaged wires and loose connections. • Check that control wiring is isolated from power and motor wiring for noise immunity. • Check the voltage source of the signals, if necessary. • Use shielded or twisted pair cable. Ensure that the shield is terminated correctly.	
Cooling clearance	• Measure that top and bottom clearance is adequate to ensure proper air flow for cooling.	
EMC considerations	• Check for proper installation regarding electromagnetic compatibility.	
Environmental considerations	• See equipment label for the maximum ambient operating temperature limits. • Humidity levels must be 5–95%, non-condensing.	
Fusing and circuit breakers	• Check for proper fusing or circuit breakers. • Check that all fuses are inserted firmly and in operational condition and that all circuit breakers are in the open position.	
Grounding	• The unit requires a ground wire from its chassis to the building ground. • Check for good ground connections that are tight and free of oxidation. • Grounding to conduit or mounting the back panel to a metal surface is not sufficient.	
Input and output power wiring	• Check for loose connections. • Check that motor and mains are in separate conduit or separated screened cables.	
Panel interior	• Inspect that the unit interior is free of debris and corrosion.	
Switches	• Ensure that all switch and disconnect settings are in the proper positions.	
Vibration	• Check that the unit is mounted solidly or that shock mounts are used, as necessary. • Check for an unusual amount of vibration.	

Table 4.1 Start-up Checklist

Danfoss A/S © Rev. 2014-07-29 All rights reserved.

4.2 Applying Power to the Equipment

⚠WARNING

HIGH VOLTAGE!

Frequency converters contain high voltage when connected to AC mains. Installation, start-up and maintenance should be performed by qualified personnel only. Failure to comply could result in death or serious injury.

⚠WARNING

UNINTENDED START!

When the frequency converter is connected to AC mains, the motor may start at any time. The frequency converter, motor, and any driven equipment must be in operational readiness. Failure to comply could result in death, serious injury, equipment, or property damage.

1. Confirm that the input voltage is balanced within 3%. If not, correct input voltage imbalance before proceeding.
2. Ensure that optional equipment wiring, if present, matches the installation application.
3. Ensure that all operator devices are off. Panel doors should be closed or cover mounted.
4. Apply power to the unit. Do not start the frequency converter at this time. For units with a disconnect switch, turn the switch on to apply power.

NOTICE

If the status line at the bottom of the LCP reads AUTO REMOTE COASTING or *Alarm 60 External Interlock* is displayed, this indicates that the unit is ready to operate but is missing an input signal on terminal 27.

4.3 Basic Operational Programming

Frequency converters require basic operational programming before running for best performance. Basic operational programming requires entering motor-nameplate data for the motor being operated and the minimum and maximum motor speeds. Parameter settings recommended are intended for start up and checkout purposes. Application settings may vary. See *chapter 5.1 How to Operate* for detailed instructions on entering data through the LCP.

Enter data with power ON, but before operating the frequency converter. There are 2 ways of programming the frequency converter: either by using the Smart Application Set-up (SAS) or by using the procedure described further down. The SAS is a quick wizard for setting up the most commonly used applications. At the first power-up and after a reset the SAS appears on the LCP. Follow the instructions that appear on the successive screens for setting-up the applications listed. SAS can also be found under the Quick Menu. [Info] is used throughout the Smart Set-up to see help information for various selections, settings and messages.

NOTICE

The start conditions are ignored while in the wizard.

NOTICE

If no action is taken after first power-up or reset, the SAS screen will automatically disappear after 10 minutes.

When not using the SAS, enter data in accordance with the following procedure.

1. Press [Main Menu] twice on the LCP.
2. Press the navigation keys to scroll to parameter group *0-** Operation/Display*.
3. Press [OK].

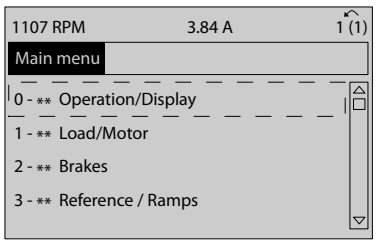

Illustration 4.1 0- Operation/Display**

4. Press the navigation keys to scroll to parameter group *0-0* Basic Settings* and press [OK].

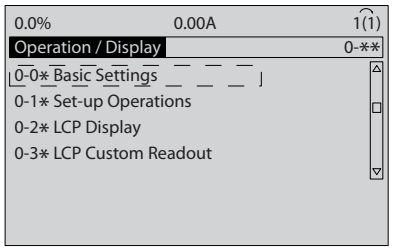

Illustration 4.2 0-0* Basic Settings

5. Press the navigation keys to scroll to *0-03 Regional Settings* and press [OK].

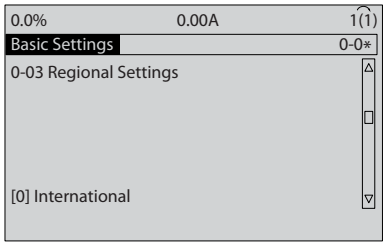

Illustration 4.3 0-03 Regional Settings

4

6. Press the navigation keys to select *International* or *North America* as appropriate and press [OK]. (This changes the default settings for a number of basic parameters. See *chapter 6 Programming* for a complete list.)
7. Press [Quick Menu] on the LCP.
8. Press the navigation keys to scroll to parameter group *Q2 Quick Setup*.
9. Press [OK].

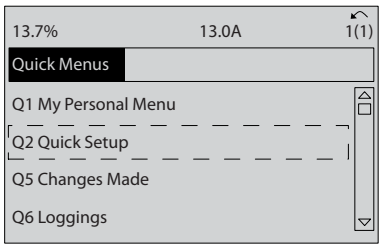

Illustration 4.4 Q2 Quick Setup

10. Select language and press [OK].
11. If a jumper wire is placed between control terminals 12 and 27 leave *5-12 Terminal 27 Digital Input* at factory default. Otherwise select *No Operation*. For frequency converters with an optional bypass, no jumper wire is required.
12. *Parameter 3-02 Minimum Reference*
13. *Parameter 3-03 Maximum Reference*
14. *3-41 Ramp 1 Ramp Up Time*
15. *3-42 Ramp 1 Ramp Down Time*
16. *3-13 Reference Site*. Linked to Hand/Auto* Local Remote.

4.4 Local Control Test

⚠CAUTION

MOTOR START

Ensure that the motor, system and any attached equipment are ready for start. It is the responsibility of the user to ensure safe operation under any condition. Failure to ensure that the motor, system, and any attached equipment is ready for start could result in personal injury or equipment damage.

NOTICE

The [Hand On] key provides a local start command to the frequency converter. The [Off] key provides the stop function.
When operating in local mode, [▲] and [▼] increase and decrease the speed output of the frequency converter. [◄] and [►] move the display cursor in the numeric display.

1. Press [Hand On].
2. Accelerate the frequency converter by pressing [▲] to full speed. Moving the cursor left of the decimal point provides quicker input changes.
3. Note any acceleration problems.
4. Press [Off].
5. Note any deceleration problems.

If acceleration problems were encountered:

- If warnings or alarms occur, see *chapter 9 Warnings and Alarms*.
- Check that motor data is entered correctly.
- Increase the ramp-up time in *3-41 Ramp 1 Ramp Up Time*.
- Increase the current limit in *4-18 Current Limit*.
- Increase the torque limit in *4-16 Torque Limit Motor Mode*.

If deceleration problems were encountered:

- If warnings or alarms occur, see *chapter 9 Warnings and Alarms*.
- Check that motor data is entered correctly.
- Increase the ramp-down time in *3-42 Ramp 1 Ramp Down Time*.
- Enable overvoltage control in *2-17 Over-voltage Control*.

See *chapter 5.1.2 How to Operate Graphical LCP (GLCP)* for resetting the frequency converter after a trip.

 Danfoss A/S © Rev. 2014-07-29 All rights reserved.

NOTICE

***Chapter 4.1 Pre-start* and *chapter 4.3 Basic Operational Programming* conclude the procedures for applying power to the frequency converter, basic programming, set-up, and functional testing.**

4.5 System Start Up

Complete user wiring and application programming before performing the procedure in this section. See *chapter 7 Application Examples* for application set-up information. The following procedure is recommended after application set-up by the user is completed.

⚠CAUTION

MOTOR START!

Ensure that the motor, system, and any attached equipment are ready for start. It is the responsibility of the user to ensure safe operation under any condition. Failure to ensure that the motor, system, and any attached equipment are ready for start could result in personal injury or equipment damage.

1. Press [Auto On].
2. Ensure that external control functions are properly wired to the frequency converter and all programming is completed.
3. Apply an external run command.
4. Adjust the speed reference throughout the speed range.
5. Remove the external run command.
6. Note any problem.

If warnings or alarms occur, see *chapter 9 Warnings and Alarms*.

 Danfoss A/S © Rev. 2014-07-29 All rights reserved.

5 User Interface

5.1 How to Operate

5.1.1 Modes of Operation

There are 2 ways to operate the unit:

- Graphical Local Control Panel (GLCP)
- RS-485 serial communication or USB, both for PC connection

5.1.2 How to Operate Graphical LCP (GLCP)

The Low Harmonic Drive has 2 LCPs, one each on the frequency converter section (right) and active filter section (left). Both LCPs function in the same way. Each LCP controls only the unit it is connected to and there is no communication between the 2 LCPs. How to operate graphical LCP (GLCP)

NOTICE

The active filter should be in auto mode. Press [Auto On] on the filter LCP.

The following instructions are valid for the GLCP (LCP 102).

The GLCP is divided into four functional groups:

- Graphical display with status lines.
- Menu keys and indicator lights (LEDs) - selecting mode, changing parameters, and switching between display functions.
- Navigation keys and indicator lights (LEDs).
- Operation keys and indicator lights (LEDs).

Graphical display:
The LCD display is back-lit with a total of 6 alpha-numeric lines. All data is displayed on the LCP, which can show up to five operating variables while in [Status] mode. *Illustration 5.1* shows an example of the frequency converter LCP. The filter LCP looks identical but displays information related to the filter operation.

1. Display
   - 1a **Status line:** Status messages displaying icons and graphics.
   - 1b **Line 1–2:** Operator data lines displaying data and variables the user defines. By pressing the [Status] key, up to one extra line can be added.
   - 1c **Status line:** Status messages displaying text.
2. Menu soft keys
3. Indicator lights/navigation panel
4. Operational keys

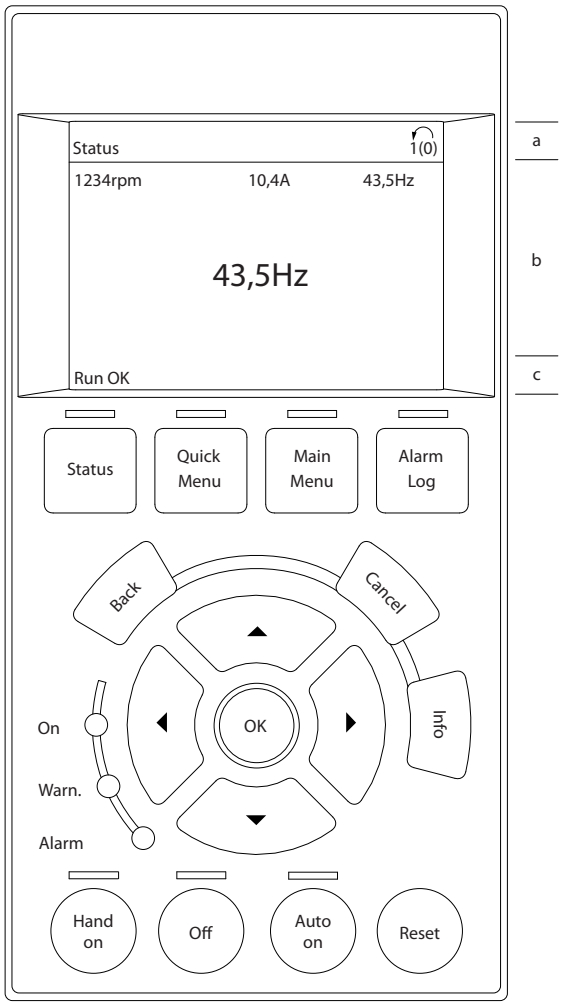

Illustration 5.1 LCP

The display is divided into 3 sections:

Top section (a)
Shows the status when in status mode or up to 2 variables when not in status mode and in the case of alarm/ warning.

The number of the active set-up (selected as the active set-up in *0-10 Active Set-up*) is shown. When programming in another set-up than the active set-up, the number of the set-up being programmed appears to the right in brackets.

Danfoss A/S © Rev. 2014-07-29 All rights reserved.

Middle section (b)
Shows up to 5 variables with related unit, regardless of status. In case of alarm/warning, the warning is shown instead of the variables.

It is possible to toggle between 3 status read-out displays by pressing [Status].
Operating variables with different formatting are shown in each status screen.

Several values or measurements can be linked to each of the displayed operating variables. The values/ measurements to be displayed can be defined via parameters 0–20, 0–21, 0–22, 0–23, and 0–24.

Each value/measurement readout parameter selected in parameters 0–20 to 0–24 has its own scale and number of digits after a possible decimal point. Larger numeric values are displayed with few digits after the decimal point.
Ex.: Current readout
5.25 A; 15.2 A 105 A.

Status display I
This read-out state is standard after start-up or initialisation.
Press [Info] to obtain information about the value/ measurement linked to the displayed operating variables (1.1, 1.2, 1.3, 2, and 3).
See the operating variables shown in the display in *Illustration 5.2*. 1.1, 1.2 and 1.3 are shown in small size. 2 and 3 are shown in medium size.

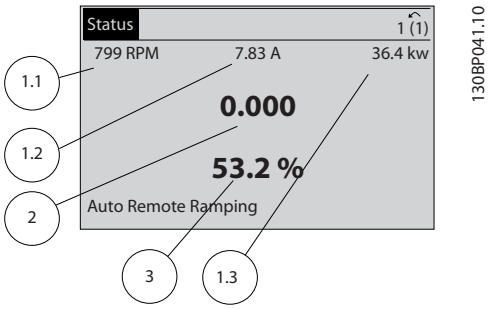

Illustration 5.2 Status Display I - Operating Variables

Status display II
See the operating variables (1.1, 1.2, 1.3, and 2) shown in the display in *Illustration 5.3*.
In the example, speed, motor current, motor power, and frequency are selected as variables in the first and second lines.
1.1, 1.2 and 1.3 are shown in small size. 2 is shown in large size.

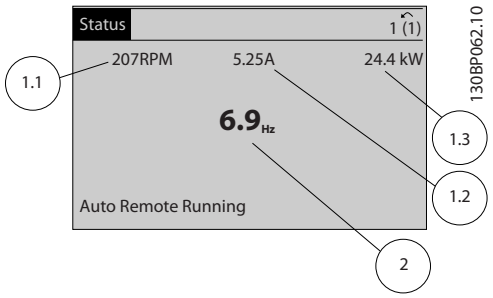

Illustration 5.3 Status Display II - Operating Variables

Status display III
This state displays the event and action of the smart logic control.

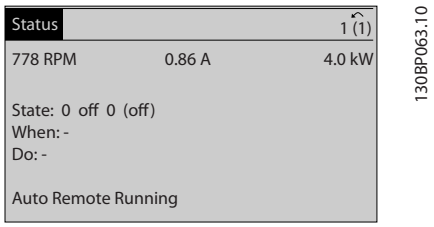

Illustration 5.4 Status Display III - Operating Variables

NOTICE

Status display III is not available on the filter LCP.

Bottom section
always shows the state of the frequency converter in Status mode.

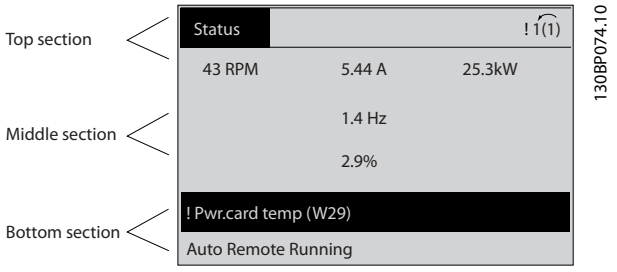

Illustration 5.5 Bottom Section Status Mode

Display contrast adjustment
Press [status] and [▲] for darker display
Press [Status] and [▼] for brighter display

Indicator lights (LEDs):
If certain threshold values are exceeded, the alarm and/or warning LED lights up. A status and alarm text appear on the control panel.
The On LED is activated when the frequency converter receives power from:

- mains voltage
- a DC bus terminal

- an external 24 V supply

At the same time, the back light is on. Indicator lights (LEDs)

- Green LED/On: Control section is working.
- Yellow LED/Warn: Indicates a warning.
- Flashing Red LED/Alarm: Indicates an alarm.

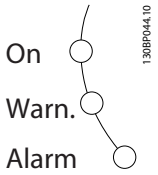

Illustration 5.6 LED Status Lights

5

GLCP keys

Menu keys

The menu keys are divided into functions. The keys below the display and indicator lamps are used for parameter set-up, including choice of display indication during normal operation.



Illustration 5.7 Menu Keys

[Status]

Indicates the status of the frequency converter (and/or the motor) or the filter respectively. On the drive LCP, 3 different readouts can be selected by pressing the [Status] key:

5 line readouts, 4 line readouts, or Smart Logic Control.

Smart Logic Control is not available for the filter.

Use [Status] for selecting display mode or reverting to display mode from:

- quick menu
- main menu
- alarm mode

Use the [Status] key to toggle single or double read-out mode. Status

[Quick Menu]

Allows quick set-up of the frequency converter or the filter and programming of the most common functions. Quick menu

The [Quick Menu] consists of:

- Q1: My Personal Menu
- Q2: Quick Setup
- Q5: Changes Made
- Q6: Loggings

Since the active filter is an integrated part of the Low Harmonic Drive, only a minimum of programming is necessary. The filter LCP displays information about filter operation such as THD of voltage or current, corrected current, injected current or Cos ϕ and true power factor.

The Quick Menu parameters can be accessed immediately unless a password has been created via parameters 0–60, 0–61, 0–65 or 0–66.

It is possible to switch directly between quick menu mode and main menu mode.

[Main Menu]

is used for programming all parameters.

The main menu parameters can be accessed immediately unless a password has been created via parameters 0–60, 0–61, 0–65 or 0–66.

It is possible to switch directly between main menu mode and quick menu mode.

Parameter shortcut can be carried out by pressing down the **[Main Menu]** key for 3 seconds. The parameter shortcut allows direct access to any parameter.

[Alarm Log]

displays an alarm list of the 5 latest alarms (numbered A1-A5). To obtain more details about an alarm, use the arrow keys to navigate to the alarm number and press [OK]. Information is displayed about the condition of the frequency converter or filter before it enters the alarm mode.

[Back]

reverts to the previous step or layer in the navigation structure.



Illustration 5.8 Back Key

[Cancel]

last change or command is cancelled as long as the display has not been changed.



Illustration 5.9 Cancel Key

[Info]

displays information about a command, parameter, or function in any display window. [Info] provides detailed information when needed.

Exit Info mode by pressing either [Info], [Back], or [Cancel].

Danfoss A/S © Rev. 2014-07-29 All rights reserved.



Illustration 5.10 Info Key

Navigation keys
The 4 navigation keys are used to navigate between the choices available in **[Quick Menu]**, **[Main Menu]** and **[Alarm Log]**. Move the cursor with the navigation keys.

[OK]
is used for selecting a parameter marked by the cursor and for enabling the change of a parameter.

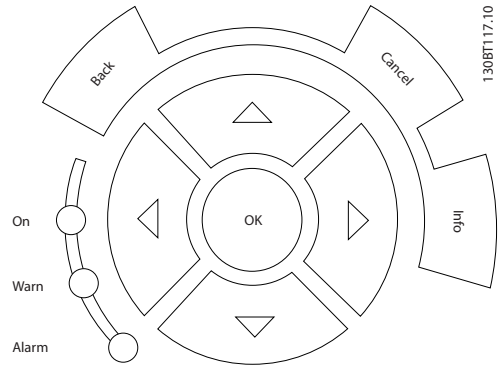

Illustration 5.11 Navigation Keys

Operation keys
For local control. Found at the bottom of the control panel.

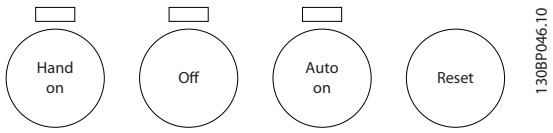

Illustration 5.12 Operation Keys

[Hand On]
enables control of the frequency converter via the GLCP. [Hand On] also starts the motor, and it is now possible to give the motor speed reference with the arrow keys. The key can be *[1] Enabled* or *[0] Disabled* via *0-40 [Hand on] Key on LCP*.

The following control signals are active when [Hand On] is activated:

- [Hand On] - [Off] - [Auto On]
- Reset
- Coasting stop inverse (motor coasting to stop)
- Reversing
- Set-up select lsb - Set-up select msb
- Stop command from serial communication
- Quick stop
- DC brake

NOTICE

External stop signals activated with control signals or a serial bus overrides a "start" command via the LCP.

[Off]
stops the connected motor (when pressed on the frequency converter LCP) or the filter (when pressed on the filter LCP). The key can be *[1] Enabled* or *[0] Disabled* via *0-41 [Off] Key on LCP*. If no external stop function is selected and the [Off] key is inactive, the motor can only be stopped by disconnecting the mains supply.

[Auto On]
enables the frequency converter to be controlled via the control terminals and/or serial communication. When a start signal is applied on the control terminals and/or the bus, the frequency converter starts. The key can be *[1] Enabled* or *[0] Disabled* via *0-42 [Auto on] Key on LCP*.

NOTICE

An active HAND-OFF-AUTO signal via the digital inputs has higher priority than the control keys [Hand On] – [Auto On].

[Reset]
Is used for resetting the frequency converter or filter after an alarm (trip). The key can be *[1] Enabled* or *[0] Disabled* via *0-43 [Reset] Key on LCP* on the LCP. Reset

The parameter shortcut
can be carried out by holding down the [Main Menu] key for 3 seconds. The parameter shortcut allows direct access to any parameter.

5.1.3 Changing Data

1. Press [Quick Menu] or [Main Menu].
2. Use [▲] and [▼] to find parameter group to edit. Changing data
3. Press [OK].
4. Use [▲] and [▼] to find parameter to edit.
5. Press [OK].
6. Use [▲] and [▼] to select correct parameter setting. Or, to move to digits within a number, use [◄] and [►]. Cursor indicates digit selected to change. [▲] key increases the value, [▼] key decreases the value.
7. Press [Cancel] to ignore the change, or press [OK] to accept the change and enter a new setting.

5.1.4 Changing a Text Value

If the selected parameter is a text value, change the text value by using the [▲]/[▼] keys.
[▲] increases the value, and [▼] decreases the value. Place the cursor on the value to be saved and press [OK].

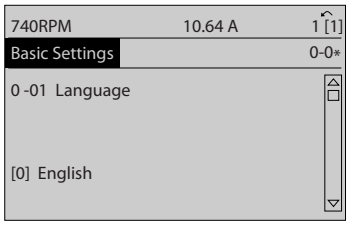

Illustration 5.13 Display Example

5.1.5 Changing a Group of Numeric Data Values

If the selected parameter represents a numeric data value, change the selected data value pressing the [◄] and [►] navigation keys as well as [▲] and [▼] keys. Press [◄] and [►] to move the cursor horizontally.

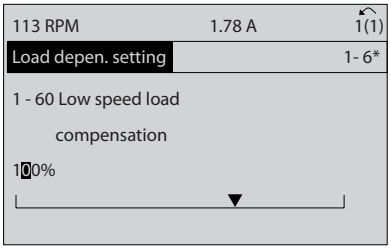

Illustration 5.14 Display Example

Press [▲]/[▼] to change the data value. [▲] enlarges the data value, and [▼] reduces the data value. Place the cursor on the value to be saved and press [OK].

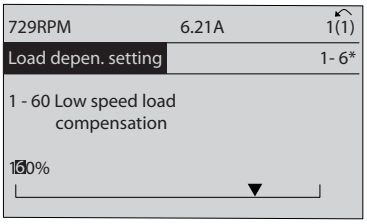

Illustration 5.15 Display Example

5.1.6 Changing of Data Value, Step-by-Step

Certain parameters can be changed step-by-step or infinitely variably. This method applies to *300-10 Active Filter Nominal Voltage*.

The parameters are changed both as a group of numeric data values and as numeric data values infinitely variably.

5.1.7 Read-out and Programming of Indexed Parameters

Parameters are indexed when placed in a rolling stack. *15-30 Alarm Log: Error Code* to *15-32 Alarm Log: Time* contain a fault log which can be read out. Select a parameter, press [OK], and use the up/down navigation keys to scroll through the value log.

Use *3-10 Preset Reference* as another example:
Select the parameter, press [OK], and press [▲]/[▼] to scroll through the indexed values. To change the parameter value, select the indexed value and press [OK]. Change the value by using [▲]/[▼]. Press [OK] to accept the new setting. Press [Cancel] to abort. Press [Back] to leave the parameter.

5.1.8 Quick Transfer of Parameter Settings with the LCP

Once the set-up is complete, store (back up) the parameter settings in the LCP or on a PC via MCT 10 Set-up software tool.

⚠WARNING

Stop operation before performing any of these operations.

Data storage in LCP

1. Go to *0-50 LCP Copy*
2. Press [OK]
3. Select *[1] All to LCP*
4. Press [OK]

All parameter settings are now stored in the GLCP indicated by the progress bar. When 100% is reached, press [OK].

The GLCP can now be connected to another frequency converter and the parameter settings copied to this frequency converter.

Data transfer from LCP to frequency converter

1. Go to *0-50 LCP Copy*
2. Press [OK]
3. Select *[2] All from LCP*
4. Press [OK]

The parameter settings stored in the GLCP are now transferred to the frequency converter indicated by the progress bar. When 100% is reached, press [OK].

 Danfoss A/S © Rev. 2014-07-29 All rights reserved.

5.1.9 Initialisation to Default Settings

There are 2 ways to initialise the unit to default: Recommended initialisation and manual initialisation. Each method has a different impact.

5.1.9.1 Recommended Initialisation Method

Initialisation via *14-22 Operation Mode*)

1. Select *14-22 Operation Mode*
2. Press [OK]
3. Select *Initialisation*
4. Press [OK]
5. Remove power to the unit and wait for the display to turn off.
6. Reconnect power to reset the unit.
7. Press [Reset]

14-22 Operation Mode initialises all except:
Parameter 14-50 RFI Filter
8-31 Address
8-32 Baud Rate
8-35 Minimum Response Delay
8-36 Max Response Delay
8-37 Maximum Inter-Char Delay
15-00 Operating hours to *15-05 Over Volt's*
15-20 Historic Log: Event to *15-22 Historic Log: Time*
15-30 Alarm Log: Error Code to *15-32 Alarm Log: Time*

NOTICE

Parameters selected in *0-25 My Personal Menu*, stays present, with default factory setting.

5.1.9.2 Manual Initialisation Method

NOTICE

When carrying out manual initialisation, serial communication, RFI filter settings, and fault log settings are reset. Removes parameters selected in *0-25 My Personal Menu*.

1. Disconnect from mains and wait until the display turns off.
2. Press [Status] - [Main Menu] - [OK] at the same time while power-up for graphical LCP
3. Release the keys after 5 s
4. The unit is now programmed according to default settings

This parameter initialises all except:
15-00 Operating hours
15-03 Power Up's
15-04 Over Temp's
15-05 Over Volt's

5.1.10 RS-485 Bus Connection

A frequency converter or active filter can be connected to a controller (or master) together with other loads using the RS-485 standard interface. Terminal 68 is connected to the P signal (TX+, RX+), while terminal 69 is connected to the N signal (TX-, RX-).

To avoid potential equalising currents in the screen, ground the cable screen via terminal 61, which is connected to the frame via an RC-link.

Bus termination
Terminate the RS-485 bus by a resistor network at both ends. If the frequency converter or active filter is the first or the last device in the RS-485 loop, set the switch S801 on the control card for ON.

5.1.11 Connection to a PC

To program the unit from a PC, install the PC-based configuration tool MCT 10 Set-up Software.
The PC is connected via a standard (host/device) USB cable to the unit, or via the RS-485 interface.

NOTICE

The USB connection is galvanically isolated from the supply voltage (PELV) and other high-voltage terminals. The USB connection is connected to protection earth on the unit. Use only an isolated laptop as PC connection to the USB connector.

For control cable connections, see *chapter 3.4.20 Electrical Installation, Control Cables*.

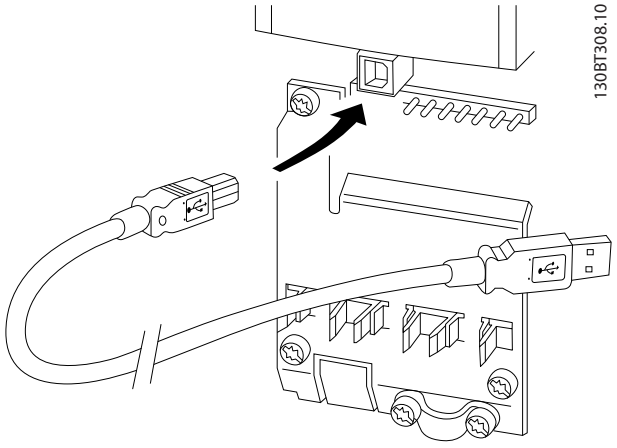

Illustration 5.16 Control Cable Connections

5.1.12 PC Software Tools

PC-based Configuration Tool MCT 10 Set-up Software
The Low Harmonic Drive is equipped with 2 serial communication ports. Danfoss provides a PC tool for communication between PC and frequency converter, MCT 10 Set-up Software. Check *chapter 2.4 Additional Resources* for detailed information on this tool.

MCT 10 set-up software
MCT 10 is an interactive tool for setting parameters in Danfoss frequency converters. The software can be downloaded from the Danfoss Internet site *www.danfoss.com/BusinessAreas/DrivesSolutions/Software-download/DDPC+Software+Program.htm*.
The MCT 10 set-up software is useful for:

- Planning a communication network off-line. MCT 10 contains a complete frequency converter database
- Commissioning frequency converters online
- Saving settings for all frequency converters
- Replacing a frequency converter in a network
- Simple and accurate documentation of frequency converter settings after commissioning.
- Expanding an existing network
- Future developed frequency converters are supported

MCT 10 set-up software supports Profibus DP-V1 via a Master class 2 connection. It enables online read/write parameters in a frequency converter via the Profibus network, eliminating the need for an extra communication network.

Save frequency converter settings

1. Connect a PC to the unit via USB com port.

⚠CAUTION

Use a PC, which is isolated from the mains, with the USB port. Failure to do so can damage equipment.

2. Open MCT 10 Set-up Software
3. Select “Read from drive”
4. Select “Save as”

All parameters are now stored in the PC.

Load frequency converter settings

1. Connect a PC to the frequency converter via USB com port
2. Open MCT 10 Set-up software
3. Select “Open” to show stored files
4. Open the appropriate file
5. Select “Write to drive”

All parameter settings are now transferred to the frequency converter.

 Danfoss A/S © Rev. 2014-07-29 All rights reserved.

6 Programming

6.1 How to Programme the Frequency Converter

6.1.1 Quick Setup Parameters

0-01 Language		
Option:		**Function:**
		Defines the language to be used in the display. The frequency converter can be delivered with 4 different language packages. English and German are included in all packages. English cannot be erased or manipulated.
[0] *	English	Part of Language packages 1 - 4
[1]	Deutsch	Part of Language packages 1 - 4
[2]	Francais	Part of Language package 1
[3]	Dansk	Part of Language package 1
[4]	Spanish	Part of Language package 1
[5]	Italiano	Part of Language package 1
[6]	Svenska	Part of Language package 1
[7]	Nederlands	Part of Language package 1
[10]	Chinese	Part of Language package 2
[20]	Suomi	Part of Language package 1
[22]	English US	Part of Language package 4
[27]	Greek	Part of Language package 4
[28]	Bras.port	Part of Language package 4
[36]	Slovenian	Part of Language package 3
[39]	Korean	Part of Language package 2
[40]	Japanese	Part of Language package 2
[41]	Turkish	Part of Language package 4
[42]	Trad.Chinese	Part of Language package 2
[43]	Bulgarian	Part of Language package 3
[44]	Srpski	Part of Language package 3
[45]	Romanian	Part of Language package 3
[46]	Magyar	Part of Language package 3
[47]	Czech	Part of Language package 3
[48]	Polski	Part of Language package 4
[49]	Russian	Part of Language package 3

0-01 Language		
Option:		**Function:**
[50]	Thai	Part of Language package 2
[51]	Bahasa Indonesia	Part of Language package 2

1-20 Motor Power [kW]		
Range:		**Function:**
4.00 kW*	[0.09 - 3000.00 kW]	Enter the nominal motor power in kW according to the motor nameplate data. The default value corresponds to the nominal rated output of the unit. This parameter cannot be adjusted while the motor is running. This parameter is visible in LCP if *0-03 Regional Settings* is *[0] International* . ***NOTICE*** **Four sizes down, one size up from nominal unit rating.**

1-22 Motor Voltage		
Range:		**Function:**
Size related*	[10 - 1000 V]	Enter the nominal motor voltage according to the motor nameplate data. The default value corresponds to the nominal rated output of the unit. This parameter cannot be adjusted while the motor is running.

1-23 Motor Frequency		
Range:		**Function:**
50. Hz*	[20 - 1000 Hz]	Min - Max motor frequency: 20 - 1000Hz. Select the motor frequency value from the motor nameplate data. If a value different from 50 Hz or 60 Hz is selected, it is necessary to adapt the load independent settings in *1-50 Motor Magnetisation at Zero Speed* to *1-53 Model Shift Frequency*. For 87 Hz operation with 230/400 V motors, set the nameplate data for 230V/50 Hz. Adapt *4-13 Motor Speed High Limit [RPM]* and *parameter 3-03 Maximum Reference* to the 87 Hz application.

1-24 Motor Current		
Range:		**Function:**
Size related*	[0.10 - 10000.00 A]	Enter the nominal motor current value from the motor nameplate data. This data is used for calculating motor torque, motor thermal protection etc.

 Danfoss A/S © Rev. 2014-07-29 All rights reserved.

1-25 Motor Nominal Speed

Range:		Function:
Size related*	[100 - 60000 RPM]	Enter the nominal motor speed value from the motor nameplate data. This data is used for calculating automatic motor compensations.

5-12 Terminal 27 Digital Input

Option:		Function:
		Select the function from the available digital input range.

No operation	[0]
Reset	[1]
Coast inverse	[2]
Coast and reset inverse	[3]
Quick stop inverse	[4]
DC-brake inverse	[5]
Stop inverse	[6]
Start	[8]
Latched start	[9]
Reversing	[10]
Start reversing	[11]
Enable start forward	[12]
Enable start reverse	[13]
Jog	[14]
Preset ref bit 0	[16]
Preset ref bit 1	[17]
Preset ref bit 2	[18]
Freeze reference	[19]
Freeze output	[20]
Speed up	[21]
Speed down	[22]
Set-up select bit 0	[23]
Set-up select bit 1	[24]
Catch up	[28]
Slow down	[29]
Pulse input	[32]
Ramp bit 0	[34]
Ramp bit 1	[35]
Mains failure inverse	[36]
DigiPot Increase	[55]
DigiPot Decrease	[56]
DigiPot Clear	[57]
Reset Counter A	[62]
Reset Counter B	[65]

Table 6.1

1-29 Automatic Motor Adaptation (AMA)

Option:		Function:
		NOTICE **This parameter cannot be adjusted while the motor is running.** The AMA function optimises dynamic motor performance by automatically optimising the advanced motor parameters (parameters 1-30 to 1-35) at motor standstill. Activate the AMA function by pressing [Hand on] after selecting [1] or [2]. See also the section *Automatic Motor Adaptation*. After a normal sequence, the display reads: "Press [OK] to finish AMA". After pressing [OK] the frequency converter is ready for operation.
[0] *	OFF	
[1]	Enable complete AMA	Performs AMA of the stator resistance R_S, the rotor resistance R_r, the stator leakage reactance X_1, the rotor leakage reactance X_2 and the main reactance X_h. **FC 301:** The complete AMA does not include X_h measurement for FC 301. Instead, the X_h value is determined from the motor database. *1-35 Main Reactance (Xh)* may be adjusted to obtain optimal start performance.
[2]	Enable reduced AMA	Performs a reduced AMA of the stator resistance R_s in the system only. Select this option if an LC filter is used between the drive and the motor.

Note:

- For the best adaptation of the frequency converter, run AMA on a cold motor.
- AMA cannot be performed while the motor is running.
- AMA cannot be performed on permanent magnet motors.

NOTICE

It is important to set motor parameters in parameter group *1-2* Motor Data* correctly, since these form part of the AMA algorithm. An AMA must be performed to achieve optimum dynamic motor performance. It may take up to 10 min, depending on the power rating of the motor.

NOTICE

Avoid generating external torque during AMA.

 Danfoss A/S © Rev. 2014-07-29 All rights reserved.

NOTICE

If one of the settings in parameter group *1-2* Motor Data* is changed, parameters 1-30 to 1-39, the advanced motor parameters, return to default setting.

3-02 Minimum Reference		
Range:		**Function:**
0 Reference-FeedbackUnit*	[-999999.999 - par. 3-03 ReferenceFeed-backUnit]	Enter the Minimum Reference. The Minimum Reference is the lowest value obtainable by summing all references. Minimum Reference is active only when *3-00 Reference Range* is set to *Min.- Max.* [0]. The Minimum Reference unit matches: • The choice of configuration in *1-00 Configuration Mode Configuration Mode*: for *Speed closed loop* [1], RPM; for *Torque* [2], Nm. • The unit selected in *3-01 Reference/ Feedback Unit*.

3-03 Maximum Reference		
Range:		**Function:**
1500.000 ReferenceFeed-backUnit*	[par. 3-02 - 999999.999 ReferenceFeed-backUnit]	Enter the Maximum Reference. The Maximum Reference is the highest value obtainable by summing all references. **The Maximum Reference unit matches:** • The choice of configuration in *1-00 Configuration Mode*: for *Speed closed loop* [1], RPM; for *Torque* [2], Nm. • The unit selected in *3-00 Reference Range*.

3-41 Ramp 1 Ramp up Time		
Range:		**Function:**
3.00 s*	[0.01 - 3600.00 s]	Enter the ramp-up time, i.e. the acceleration time from 0RPM to the synchronous motor speed n_S. Choose a ramp-up time such that the output current does not exceed the current limit in *4-18 Current Limit* during ramping. The value 0.00 corresponds to 0.01 sec. in speed mode. See ramp-down time in *parameter 3-42 Ramp 1 Ramp Down Time*. $Par.\ 3-41 = \frac{tacc\,[s] \times ns\,[RPM]}{ref\,[RPM]}$

3-42 Ramp 1 Ramp Down Time		
Range:		**Function:**
3.00 s*	[0.01 - 3600.00 s]	Enter the ramp-down time, i.e. the deceleration time from the synchronous motor speed n_s to 0 RPM. Choose a ramp-down time such that no over-voltage arises in the inverter due to regenerative operation of the motor, and such that the generated current does not exceed the current limit set in *4-18 Current Limit*. The value 0.00 corresponds to 0.01 s in speed mode. See ramp-up time in *parameter 3-41 Ramp 1 Ramp up Time*. $Par.\ 3-42 = \frac{tdec\,[s] \times ns\,[RPM]}{ref\,[RPM]}$

6.1.2 Basic Setup Parameters

0-02 Motor Speed Unit		
Option:		**Function:**
		NOTICE **This parameter cannot be adjusted while the motor is running.** The display showing depends on settings in *parameter 0-02 Motor Speed Unit* and *0-03 Regional Settings*. The default setting of *parameter 0-02 Motor Speed Unit* and *0-03 Regional Settings* depends on which region of the world the frequency converter is supplied to, but can be re-programmed as required. ***NOTICE*** **Changing the *Motor Speed Unit* resets certain parameters to their initial value. It is recommended to select the motor speed unit, before modifying other parameters.**
[0]	RPM	Selects display of motor speed variables and parameters (i.e. references, feedbacks and limits) in terms of motor speed (RPM).
[1]	Hz	Selects display of motor speed variables and parameters (i.e. references, feedbacks and limits) in terms of output frequency to the motor (Hz).

0-50 LCP Copy		
Option:		**Function:**
		NOTICE **This parameter cannot be adjusted while the motor is running.**
[0] *	No copy	
[1]	All to LCP	Copies all parameters in all set-ups from the frequency converter memory to the LCP memory.
[2]	All from LCP	Copies all parameters in all set-ups from the LCP memory to the frequency converter memory.
[3]	Size indep. from LCP	Copy only the parameters that are independent of the motor size. The latter selection can be used to programme several frequency converters with the same function without disturbing motor data.
[4]	File from MCO to LCP	
[5]	File from LCP to MCO	

1-03 Torque Characteristics		
Option:		**Function:**
		NOTICE **This parameter cannot be adjusted while the motor is running.** Select the torque characteristic required. VT and AEO are both energy saving operations.
[0] *	Constant torque	Motor shaft output provides constant torque under variable speed control.
[1]	Variable torque	Motor shaft output provides variable torque under variable speed control. Set the variable torque level in *14-40 VT Level*.
[2]	Auto Energy Optim.	Automatically optimises energy consumption by minimising magnetisation and frequency via *14-41 AEO Minimum Magnetisation* and *14-42 Minimum AEO Frequency*.

1-04 Overload Mode		
Option:		**Function:**
		NOTICE **This parameter cannot be adjusted while the motor is running.** For oversized motor - allows up to 110% over torque.

1-04 Overload Mode		
Option:		**Function:**
[0] *	High torque	Allows up to 160% over torque.
[1]	Normal torque	For oversized motor - allows up to 110% over torque.

1-90 Motor Thermal Protection		
Option:		**Function:**
		Thermal motor protection can be implemented using a range of techniques: • Via a PTC sensor in the motor windings connected to one of the analog or digital inputs (1–93 Thermistor Source). See *chapter 6.1.3.1 PTC Thermistor Connection*. • Via a KTY sensor in the motor winding connected to an analog input (*1-96 KTY Thermistor Resource*). See . • Via calculation (ETR = Electronic Thermal Relay) of the thermal load, based on the actual load and time. The calculated thermal load is compared with the rated motor current $I_{M,N}$ and the rated motor frequency $f_{M,N}$. See *chapter 6.1.3.1* . • Via a mechanical thermal switch (Klixon type). See *chapter 6.1.3.1 ATEX ETR*. For the North American market: The ETR functions provide class 20 motor overload protection in accordance with NEC.
[0] *	No protection	Continuously overloaded motor, when no warning or trip of the frequency converter is required.
[1]	Thermistor warning	Activates a warning when the connected thermistor or KTY-sensor in the motor reacts in the event of motor overtemperature.
[2]	Thermistor trip	Stops (trips) frequency converter when connected thermistor or KTY sensor in the motor reacts in the event of motor overtemperature. The thermistor cut-out value must be > 3 kΩ. Integrate a thermistor (PTC sensor) in the motor for winding protection.
[3]	ETR warning 1	Calculates the load when set up 1 is active and activates a warning on the display when the motor is overloaded. Programme a warning signal via one of the digital outputs.
[4]	ETR trip 1	Calculates the load when set up 1 is active and stops (trips) frequency converter when

1-90 Motor Thermal Protection		
Option:		**Function:**
		the motor is overloaded. Programme a warning signal via one of the digital outputs. The signal appears in the event of a warning and if the frequency converter trips (thermal warning).
[5]	ETR warning 2	
[6]	ETR trip 2	
[7]	ETR warning 3	
[8]	ETR trip 3	
[9]	ETR warning 4	
[10]	ETR trip 4	

NOTICE

If *[20] ATEX ETR* is selected, follow the instructions described in the dedicated chapter of the *VLT® AutomationDriveFC 301/FC 302 Design Guide* and the instructions given by the motor manufacturer.

NOTICE

If *[20] ATEX ETR* is selected, set *4-18 Current Limit* to 150%.

PTC Thermistor Connection

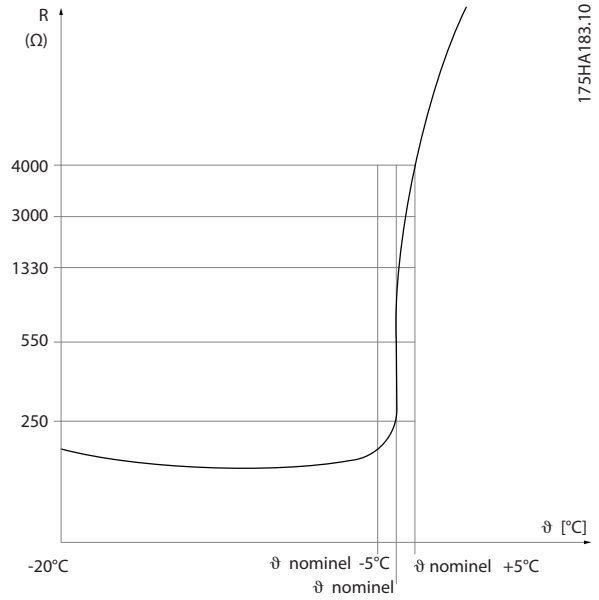

Illustration 6.2 PTC profile

Using a digital input and 10 V as power supply:
Example: The frequency converter trips when the motor temperature is too high.
Parameter set-up:

Set *parameter 1-90 Motor Thermal Protection* to *[2] Thermistor Trip*
Set *parameter 1-93 Thermistor Source* to *[6] Digital Input*

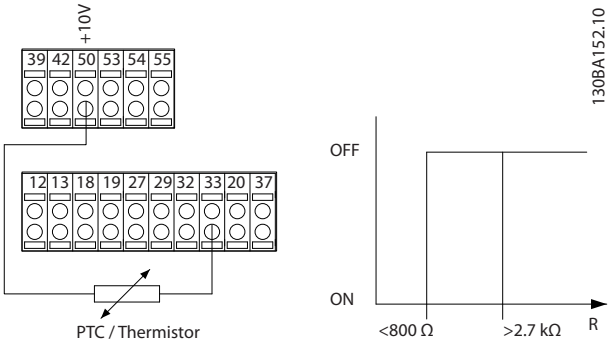

Illustration 6.3 Example with Digital Input and 10 V Power Supply

Using an analog input and 10 V as power supply:
Example: The frequency converter trips when the motor temperature is too high.
Parameter set-up:
Set *parameter 1-90 Motor Thermal Protection* to *[2] Thermistor Trip*
Set *parameter 1-93 Thermistor Source* to *[2] Analog Input 54*

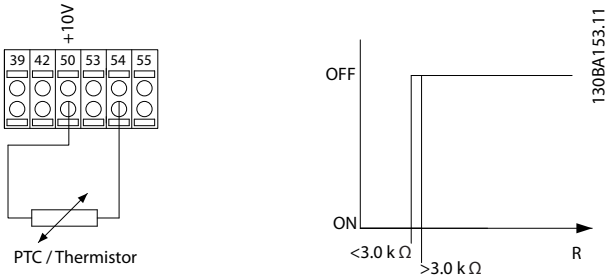

Illustration 6.4 Example with Analog Input and 10 V Power Supply

Input Digital/analog	Supply Voltage [V]	Threshold Cut-out Values
Digital	10	< 800 Ω - > 2.7 kΩ
Analog	10	< 3.0 kΩ - > 3.0 kΩ

Table 6.2 Threshold Cut-out Values for *Illustration 6.3* and *Illustration 6.4*

NOTICE

Check that the selected supply voltage follows the specification of the thermistor element.

ETR
The calculations estimate the need for a lower load at lower speed due to less cooling from the fan incorporated in the motor.

6

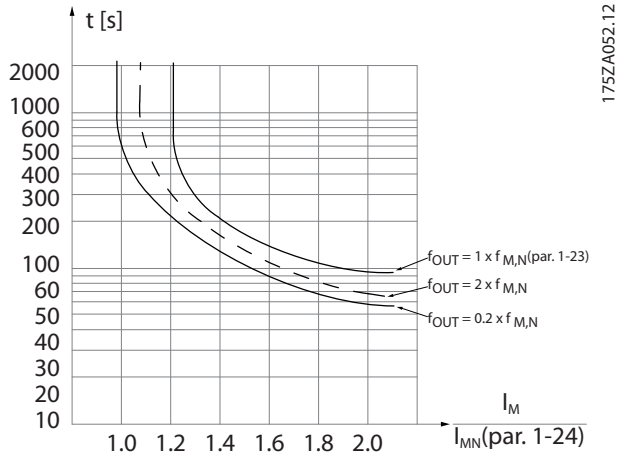

Illustration 6.5 ETR profile

6

ATEX ETR

The B-option PTC Thermistor Card MCB 112 offers ATEX approved monitoring of motor temperature. Alternatively, an external ATEX approved PTC protection device can be used.

NOTICE

Use only ATEX Ex-e approved motors for this function. See motor nameplate, approval certificate, data sheet or contact the motor supplier.

When controlling an Ex-e motor with "Increased Safety," it is important to ensure certain limitations. The parameters that must be programmed are presented in the following application example.

Parameters	
Function	**Setting**
parameter 1-90 Motor Thermal Protection	*[20] ATEX ETR*
1-94 ATEX ETR cur.lim. speed reduction	20%
1-98 ATEX ETR interpol. points freq.	Motor name plate
1-99 ATEX ETR interpol points current	
Parameter 1-23 Motor Frequency	Enter the same value as for *4-19 Max Output Frequency*
4-19 Max Output Frequency	Motor name plate, possibly reduced for: • long motor cables • sinus filter • reduced supply voltage
4-18 Current Limit	Forced to 150% by 1–90 [20]
5-15 Terminal 33 Digital Input	*[80] PTC Card 1*
5-19 Terminal 37 Safe Stop	*[4] PTC 1 Alarm*
14-01 Switching Frequency	Check that the default value fulfils the requirement from the motor name plate. If not, use a sine wave filter.
14-26 Trip Delay at Inverter Fault	0

Table 6.3 ATEX Ex-e Programming Example

⚠CAUTION

It is mandatory to compare the minimum switching frequency requirement stated by the motor manufacturer to the minimum switching frequency of the frequency converter in *14-01 Switching Frequency*. If the frequency converter does not meet this requirement, use a sine wave filter.

Klixon

The Klixon type thermal circuit breaker uses a ® metal dish. At a predetermined overload, the heat caused by the current through the disc causes a trip.

Using a digital input and 24 V as power supply:
Example: The frequency converter trips when the motor temperature is too high
Parameter set-up:
Set *parameter 1-90 Motor Thermal Protection* to *[2] Thermistor Trip*
Set *parameter 1-93 Thermistor Source* to *[6] Digital Input*

 Danfoss A/S © Rev. 2014-07-29 All rights reserved.

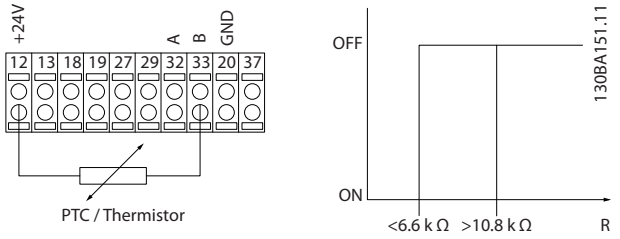

Illustration 6.6 Klixon Example

1-93 Thermistor Source		
Option:		**Function:**
		NOTICE **This parameter cannot be adjusted while the motor is running.** ***NOTICE*** **Set digital input to *[0] PNP - Active at 24 V* in *5-00 Digital I/O Mode*.** Select the input to which the thermistor (PTC sensor) should be connected. An analog input option [1] or [2] cannot be selected if the analog input is already in use as a reference source (selected in *3-15 Reference 1 Source*, *3-16 Reference 2 Source* or *3-17 Reference 3 Source*). When using MCB 112, option *[0] None* must always be selected.
[0]	None	
[1]	Analog Input 53	
[2]	Analog Input 54	
[3]	Digital input 18	
[4]	Digital input 19	
[5]	Digital input 32	
[6]	Digital input 33	

2-10 Brake Function		
Option:		**Function:**
[0] *	Off	No brake resistor is installed.
[1]	Resistor brake	A brake resistor is incorporated in the system, for dissipation of surplus brake energy as heat. Connecting a brake resistor allows a higher DC link voltage during braking (generating operation). The Resistor brake function is only active in frequency converters with an integral dynamic brake.
[2]	AC brake	Is selected to improve braking without using a brake resistor. This parameter controls an overmagnetisation of the motor when running with a generatoric load. This function can improve the OVC-function. Increasing the electrical losses in the motor allows the OVC function to increase the braking torque without exceeding the overvoltage limit. Note that AC brake is not as effective as dynamic braking with a resistor. AC brake is for VVC^{plus} and flux mode in both open and closed loop.

2-11 Brake Resistor (ohm)		
Range:		**Function:**
Size related*	[5.00 - 65535.00 Ohm]	Set the brake resistor value in Ω. This value is used for monitoring the power to the brake resistor in *2-13 Brake Power Monitoring*. This parameter is only active in frequency converters with an integral dynamic brake. Use this parameter for values without decimals. For a selection with 2 decimals, use *30-81 Brake Resistor (ohm)*.

2-12 Brake Power Limit (kW)		
Range:		**Function:**
Size related*	[0.001 - 2000.000 kW]	*Parameter 2-12 Brake Power Limit (kW)* The expected average power dissipated in the brake resistor over a period of 120 s. It is used as the monitoring limit for *16-33 Brake Energy /2 min* and specifies when a warning/alarm is issued. To calculate 2–12 Brake Power Limit (kW), use the following formula: $P_{br,avg}[W] = \frac{U_{br}^2[V] \times t_{br}[s]}{R_{br}[\Omega] \times T_{br}[s]}$ $P_{br,avg}$ is the average power dissipated in the brake resistor R_{br} is the resistance of the brake resistor. t_{br} is the active breaking time within the 120 s period, T_{br}. U_{br} is the DC voltage where the brake resistor is active, depending on the unit as follows: T2 units: 390 V T4 units: 778 V T5 units: 810 V T6 units: 943V/1099V for D – F frames T7 units: 1,099 V

6

2-12 Brake Power Limit (kW)		
Range:		**Function:**
		NOTICE **If R_{br} is not known or if T_{br} is different from 120 s, the practical approach is to run the brake application, readout *16-33 Brake Energy /2 min* and then enter + 20% in *2-12 Brake Power Limit (kW)*.**

2-13 Brake Power Monitoring		
Option:		**Function:**
		This parameter is only active in frequency converters with an integral dynamic brake. This parameter enables monitoring of the power to the brake resistor. The power is calculated based on the resistance (*parameter 2-11 Brake Resistor (ohm)*), the DC link voltage, and the resistor duty time.
[0] *	Off	No brake power monitoring required.
[1]	Warning	Activates a warning on the display when the power transmitted over 120 s exceeds 100% of the monitoring limit (*parameter 2-12 Brake Power Limit (kW)*). The warning disappears when the transmitted power falls below 80% of the monitoring limit.
[2]	Trip	Trips frequency converter and displays an alarm when the calculated power exceeds 100% of the monitoring limit.
[3]	Warning and trip	Activates both of the above, including warning, trip and alarm.

If power monitoring is set to *[0] Off* or *[1] Warning*, the brake function remains active, even if the monitoring limit is exceeded, possibly leading to thermal overload of the resistor. It is also possible to generate a warning via a relay/digital output. The measuring accuracy of the power monitoring depends on the accuracy of the resistance of the resistor (better than ± 20%).

2-15 Brake Check		
Option:		**Function:**
		Select type of test and monitoring function to check the connection to the brake resistor, or whether a brake resistor is present, and then display a warning or alarm in the event of a fault. ***NOTICE*** **The brake resistor disconnection function is tested during power-up. However the brake IGBT test is performed when there is no braking. A warning or trip disconnects the brake function.**

2-15 Brake Check		
Option:		**Function:**
		The testing sequence is as follows: 1. The DC link ripple amplitude is measured for 300 ms without braking. 2. The DC link ripple amplitude is measured for 300 ms with the brake turned on. 3. If the DC-link ripple amplitude while braking is lower than the DC-link ripple amplitude before braking + 1%: *Brake check has failed by returning a warning or alarm.* 4. If the DC-link ripple amplitude while braking is higher than the DC-link ripple amplitude before braking + 1%: *Brake check is OK.*
[0] *	Off	Monitors brake resistor and brake IGBT for a short-circuit during operation. If a short-circuit occurs, warning 25 appears.
[1]	Warning	Monitors brake resistor and brake IGBT for a short-circuit, and runs a test for brake resistor disconnection during power-up.
[2]	Trip	Monitors for a short-circuit or disconnection of the brake resistor, or a short-circuit of the brake IGBT. If a fault occurs, the frequency converter cuts out while displaying an alarm (trip locked).
[3]	Stop and trip	Monitors for a short-circuit or disconnection of the brake resistor, or a short-circuit of the brake IGBT. If a fault occurs, the frequency converter ramps down to coast and then trips. A trip lock alarm is displayed (warning 25, 27 or 28).
[4]	AC brake	Monitors for a short-circuit or disconnection of the brake resistor, or a short-circuit of the brake IGBT. If a fault occurs, the frequency converter performs a controlled ramp-down. This option is available for FC 302 only.

NOTICE

Remove a warning arising with *[0] Off* or *[1] Warning* by cycling the mains supply. The fault must be corrected first. For *[0] Off* or *[1] Warning* , the frequency converter keeps running even if a fault is located.

This parameter is only active in frequency converters with an integral dynamic brake.

Danfoss A/S © Rev. 2014-07-29 All rights reserved.

6.1.3 2-2* Mechanical Brake

Controlling operation of an electro-magnetic (mechanical) brake, typically required in hoisting applications requires special parameters.
To control a mechanical brake, a relay output (relay 01 or relay 02) or a programmed digital output (terminal 27 or 29) is required. Normally, this output must be closed during periods when the frequency converter is unable to 'hold' the motor, due to an excessive load. Select *[32] Mechanical Brake Control* for applications with an electro-magnetic brake in *parameter 5-40 Function Relay*, *5-30 Terminal 27 Digital Output*, or *5-31 Terminal 29 Digital Output*. When selecting *[32] Mechanical brake control*, the mechanical brake is closed from startup until the output current is above the level selected in *parameter 2-20 Release Brake Current*. During stop, the mechanical brake activates when the speed falls below the level specified in *parameter 2-21 Activate Brake Speed [RPM]*. If the frequency converter enters an alarm condition or an over-current or overvoltage situation, the mechanical brake immediately cuts in, as in the Safe Torque Off function.

NOTICE

Protection mode and trip delay features (*14-25 Trip Delay at Torque Limit* and *14-26 Trip Delay at Inverter Fault*) can delay the activation of the mechanical brake in an alarm condition. Disable these features in hoisting applications.

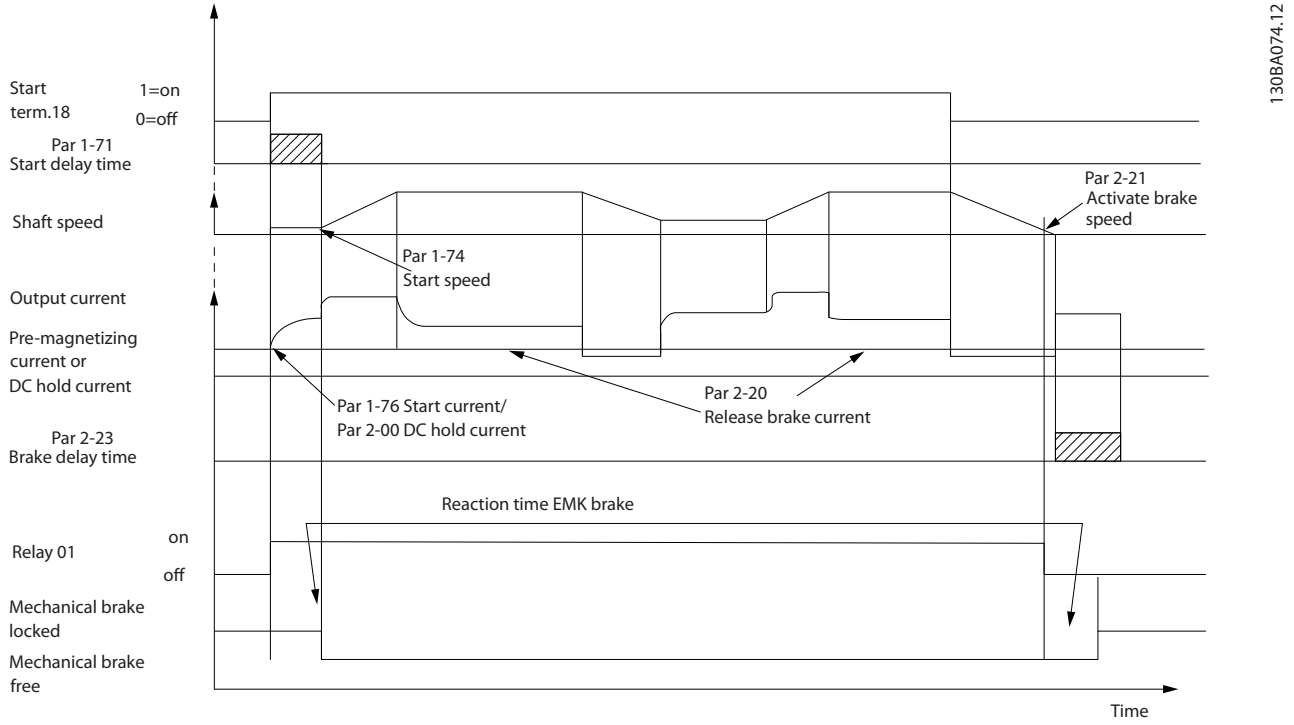

Illustration 6.7 Mechanical Brake Function

6

2-20 Release Brake Current

Range:		Function:
par. 16-37 A*	[0.00 - par. 16-37 A]	Set the motor current for release of the mechanical brake, when a start condition is present. The default value is the maximum current the inverter can provide for the particular power size. The upper limit is specified in *16-37 Inv. Max. Current*.

NOTICE

When Mechanical brake control output is selected but no mechanical brake is connected, the function will not work by default setting due to too low motor current.

2-21 Activate Brake Speed [RPM]

Range:		Function:
0 RPM*	[0 - 30000 RPM]	Set the motor speed for activation of the mechanical brake, when a stop condition is present. The upper speed limit is specified in *4-53 Warning Speed High*.

2-22 Activate Brake Speed [Hz]

Range:		Function:
0 Hz*	[0.0 - 5000.0 Hz]	Set the motor frequency for activation of the mechanical brake, when a stop condition is present.

2-23 Activate Brake Delay

Range:		Function:
0.0 s*	[0.0 - 5.0 s]	Enter the brake delay time of the coast after ramp-down time. The shaft is held at zero speed with full holding torque. Ensure that the mechanical brake has locked the load before the motor enters coast mode.

2-24 Stop Delay

Range:		Function:
0.0 s*	[0.0 - 5.0 s]	Set the time interval from the moment when the motor is stopped until the brake closes. This parameter is a part of the stopping function.

2-25 Brake Release Time

Range:		Function:
0.20 s*	[0.00 - 5.00 s]	This value defines the time it takes for the mechanical brake to open. This parameter must act as a time-out when brake feedback is activated.

2-26 Torque Ref

Range:		Function:
0.00 %*	[0 - 0 %]	The value defines the torque applied against the closed mechanical brake, before release

2-27 Torque Ramp Time

Range:		Function:
0.2 s*	[0.0 - 5.0 s]	The value defines the duration of the torque ramp in clockwise direction.

2-28 Gain Boost Factor

Range:		Function:
1.00 N/A*	[1.00 - 4.00 N/A]	Only active in flux closed loop. The function ensures a smooth transition from torque control mode to speed control mode when the motor takes over the load from the brake.

Danfoss A/S © Rev. 2014-07-29 All rights reserved.

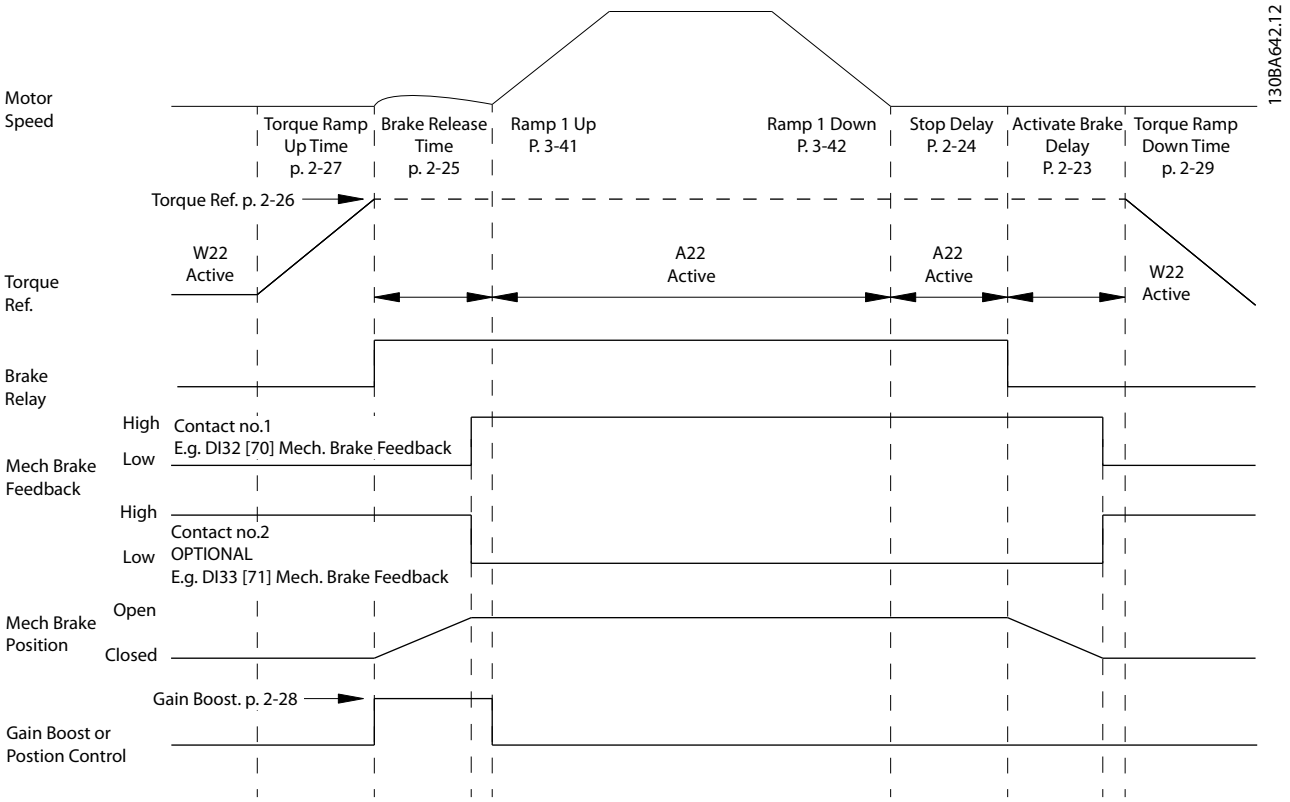

Illustration 6.8 Brake Release Sequence for Hoist Mechanical Brake Control

I) *Activate brake delay*: The frequency converter starts again from the *mechanical brake engaged* position.
II) *Stop delay*: When the time between successive starts is shorter than the setting in *parameter 2-24 Stop Delay*, the frequency converter starts without applying the mechanical brake (reversing).

3-10 Preset Reference		
Array [8] Range: 0–7		
Range:		**Function:**
0.00 %*	[-100.00 - 100.00 %]	Enter up to 8 different preset references (0–7) in this parameter, using array programming. The preset reference is stated as a percentage of the value Ref_{MAX} (*parameter 3-03 Maximum Reference*) If a Ref_{MIN} different from 0 (*parameter 3-02 Minimum Reference*) is programmed, the preset reference is calculated as a percentage of the full reference range, based on the difference between Ref_{MAX} and Ref_{MIN}. Afterwards, the value is added to Ref_{MIN}. When using preset references, select Preset ref. bit 0/1/2 [16], [17] or [18] for the corresponding digital inputs in parameter group *5–1* Digital Inputs*.

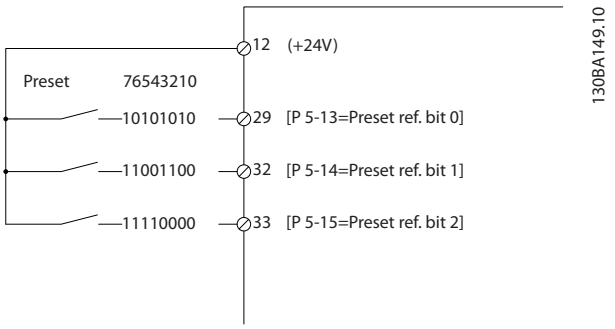

Illustration 6.9 Preset Reference

Preset ref. bit	**2**	**1**	**0**
Preset ref. 0	0	0	0
Preset ref. 1	0	0	1
Preset ref. 2	0	1	0
Preset ref. 3	0	1	1
Preset ref. 4	1	0	0
Preset ref. 5	1	0	1
Preset ref. 6	1	1	0
Preset ref. 7	1	1	1

Table 6.4 Bits per Preset Reference

6

3-11 Jog Speed [Hz]		
Range:		**Function:**
0 Hz*	[0.0 - par. 4-14 Hz]	The jog speed is a fixed output speed at which the frequency converter is running when the jog function is activated. See also *3-80 Jog Ramp Time*.

3-15 Reference Resource 1		
Option:		**Function:**
		Select the reference input to be used for the first reference signal. *parameter 3-15 Reference Resource 1*, *parameter 3-16 Reference Resource 2* and *parameter 3-17 Reference Resource 3* define up to 3 different reference signals. The sum of these reference signals defines the actual reference.
[0]	No function	
[1] *	Analog input 53	
[2]	Analog input 54	
[7]	Frequency input 29	
[8]	Frequency input 33	
[11]	Local bus reference	
[20]	Digital pot.meter	
[21]	Analog input X30-11	(General Purpose I/O Option Module)
[22]	Analog input X30-12	(General Purpose I/O Option Module)

3-16 Reference Resource 2		
Option:		**Function:**
		Select the reference input to be used for the second reference signal. *parameter 3-15 Reference Resource 1*, *parameter 3-16 Reference Resource 2* and *parameter 3-17 Reference Resource 3* define up to 3 different reference signals. The sum of these reference signals defines the actual reference.
[0]	No function	
[1]	Analog input 53	
[2]	Analog input 54	
[7]	Frequency input 29	
[8]	Frequency input 33	
[11]	Local bus reference	
[20] *	Digital pot.meter	
[21]	Analog input X30-11	

3-16 Reference Resource 2		
Option:		**Function:**
[22]	Analog input X30-12	

3-17 Reference Resource 3		
Option:		**Function:**
		Select the reference input to be used for the third reference signal. *parameter 3-15 Reference Resource 1*, *parameter 3-16 Reference Resource 2* and *parameter 3-17 Reference Resource 3* define up to 3 different reference signals. The sum of these reference signals defines the actual reference.
[0]	No function	
[1]	Analog input 53	
[2]	Analog input 54	
[7]	Frequency input 29	
[8]	Frequency input 33	
[11] *	Local bus reference	
[20]	Digital pot.meter	
[21]	Analog input X30-11	
[22]	Analog input X30-12	

5-00 Digital I/O Mode		
Option:		**Function:**
		NOTICE **Once this parameter has been changed, perform a power cycle to activate the parameter.** Digital inputs and programmed digital outputs are pre-programmable for operation either in PNP or NPN systems.
[0] *	PNP	Action on positive directional pulses (↕). PNP systems are pulled down to GND.
[1]	NPN	Action on negative directional pulses (↕). NPN systems are pulled up to +24 V, internally in the frequency converter.

Danfoss A/S © Rev. 2014-07-29 All rights reserved.

5-01 Terminal 27 Mode		
Option:		**Function:**
		NOTICE **This parameter cannot be adjusted while the motor is running.**
[0]	Input	Defines terminal 27 as a digital input.
[1]	Output	Defines terminal 27 as a digital output.

5-02 Terminal 29 Mode		
Option:		**Function:**
		This parameter is available for FC 302 only.
[0] *	Input	Defines terminal 29 as a digital input.
[1]	Output	Defines terminal 29 as a digital output.

6.1.4 Digital Inputs

The digital inputs are used for selecting various functions in the frequency converter. All digital inputs can be set to the following functions:

Digital input function	Select	Terminal
No operation	[0]	All *term 32, 33
Reset	[1]	All
Coast inverse	[2]	All *term 27
Coast and reset inverse	[3]	All
Quick stop inverse	[4]	All
DC-brake inverse	[5]	All
Stop inverse	[6]	All
Start	[8]	All *term 18
Latched start	[9]	All
Reversing	[10]	All *term 19
Start reversing	[11]	All
Enable start forward	[12]	All
Enable start reverse	[13]	All
Jog	[14]	All *term 29
Preset reference on	[15]	All
Preset ref bit 0	[16]	All
Preset ref bit 1	[17]	All
Preset ref bit 2	[18]	All
Freeze reference	[19]	All
Freeze output	[20]	All
Speed up	[21]	All
Speed down	[22]	All
Set-up select bit 0	[23]	All
Set-up select bit 1	[24]	All
Precise stop inverse	[26]	18, 19
Precise start, stop	[27]	18, 19
Catch up	[28]	All
Slow down	[29]	All
Counter input	[30]	29, 33
Pulse input ddge trigged	[31]	29, 33
Pulse input time based	[32]	29, 33
Ramp bit 0	[34]	All
Ramp bit 1	[35]	All
Latched precise start	[40]	18, 19
Latched precise stop inverse	[41]	18, 19
External interlock	[51]	
DigiPot increase	[55]	All
DigiPot decrease	[56]	All
DigiPot clear	[57]	All
Digipot hoist	[58]	All
Counter A (up)	[60]	29, 33
Counter A (down)	[61]	29, 33
Reset Counter A	[62]	All
Counter B (up)	[63]	29, 33
Counter B (down)	[64]	29, 33
Reset counter B	[65]	All
Mech. brake feedb.	[70]	All
Mech. brake feedb. inv.	[71]	All
PID error inv.	[72]	All
PID reset I-part	[73]	All
PID enable	[74]	All
PTC card 1	[80]	All
Profidrive OFF2	[91]	
Profidrive OFF3	[92]	
Start edge triggered	[98]	
Safe option reset	[100]	

Table 6.5 Digital Input Functions

FC 300 standard terminals are 18, 19, 27, 29, 32 and 33.
MCB 101 terminals are X30/2, X30/3 and X30/4.
Terminal 29 functions as an output only in FC 302.

Functions dedicated to only one digital input are stated in the associated parameter.

All digital inputs can be programmed to these functions:

[0]	No operation	No reaction to signals transmitted to the terminal.
[1]	Reset	Resets frequency converter after a TRIP/ ALARM. Not all alarms can be reset.
[2]	Coast inverse	(Default digital input 27): Coasting stop, inverted input (NC). The frequency converter leaves the motor in free mode. Logic '0' ⇒ coasting stop.
[3]	Coast and reset inverse	Reset and coasting stop Inverted input (NC). Leaves motor in free mode and resets frequency converter. Logic '0' ⇒ coasting stop and reset.
[4]	Quick stop inverse	Inverted input (NC). Generates a stop in accordance with quick-stop ramp time set in *3-81 Quick Stop Ramp Time*. When motor stops,

		the shaft is in free mode. Logic '0' ⇒ Quick-stop.
[5]	DC-brake inverse	Inverted input for DC braking (NC). Stops motor by energising it with a DC current for a certain time period. See *2-01 DC Brake Current* to *2-03 DC Brake Cut In Speed [RPM]*. The function is only active when the value in *2-02 DC Braking Time* is different from 0. Logic '0' ⇒ DC braking.
[6]	Stop inverse	Stop inverted function. Generates a stop function when the selected terminal goes from logical level '1' to '0'. The stop is performed according to the selected ramp time (*parameter 3-42 Ramp 1 Ramp Down Time*, *3-52 Ramp 2 Ramp down Time*, *3-62 Ramp 3 Ramp down Time*, *3-72 Ramp 4 Ramp Down Time*). ***NOTICE*** **When the frequency converter is at the torque limit and has received a stop command, it does not always stop by itself. To ensure that the frequency converter stops, configure a digital output to *[27] Torque limit & stop* and connect this digital output to a digital input that is configured as coast.**
[8]	Start	(Default digital input 18): Select start for a start/stop command. Logic '1' = start, logic '0' = stop.
[9]	Latched start	The motor starts if a pulse is applied for min. 2 ms. The motor stops when stop inverse is activated or a reset command (via DI) is given.
[10]	Reversing	(Default digital input 19). Change the direction of motor shaft rotation. Select logic '1' to reverse. The reversing signal only changes the direction of rotation. It does not activate the start function. Select both directions in *4-10 Motor Speed Direction*. The function is not active in process closed loop.
[11]	Start reversing	Used for start/stop and for reversing on the same wire. Signals on start are not allowed at the same time.
[12]	Enable start forward	Disengages the counterclockwise movement and allows for the clockwise direction.
[13]	Enable start reverse	Disengages the clockwise movement and allows for the counterclockwise direction.
[14]	Jog	(Default digital input 29): Use to activate jog speed. See *parameter 3-11 Jog Speed [Hz]*.
[15]	Preset reference on	Shifts between external reference and preset reference. It is assumed that *[1] External/preset* has been selected in *3-04 Reference Function*. Logic '0' = external reference active; logic '1' = one of the 8 preset references is active.
[16]	Preset ref bit 0	Preset ref. bit 0,1, and 2 enables a choice between one of the 8 preset references according to *Table 6.6*.
[17]	Preset ref bit 1	Same as Preset ref bit 0 [16].
[18]	Preset ref bit 2	Same as Preset ref bit 0 [16].

Preset ref. bit	2	1	0
Preset ref. 0	0	0	0
Preset ref. 1	0	0	1
Preset ref. 2	0	1	0
Preset ref. 3	0	1	1
Preset ref. 4	1	0	0
Preset ref. 5	1	0	1
Preset ref. 6	1	1	0
Preset ref. 7	1	1	1

Table 6.6 Preset Ref. Bit

[19]	Freeze ref	Freezes the actual reference, which is now the point of enable/condition for speed up and speed down. If using speed up/down, the speed change always follows ramp 2 (*3-51 Ramp 2 Ramp up Time* and *3-52 Ramp 2 Ramp down Time*) in the range 0 - *parameter 3-03 Maximum Reference*.
[20]	Freeze output	Freezes the actual motor frequency (Hz), which is now the point of enable/condition for speed up and speed down to be used. If using speed up/down, the speed change always follows ramp 2 (*3-51 Ramp 2 Ramp up Time* and *3-52 Ramp 2 Ramp down Time*) in the range 0 - *parameter 1-23 Motor Frequency*. ***NOTICE*** **When Freeze output is active, the frequency converter cannot be stopped via a low *[8] start* signal. Stop the frequency converter via a terminal programmed for *[2] coasting inverse* or *[3] coast and reset, inverse*.**
[21]	Speed up	If digital control of the up/down speed is desired (motor potentiometer), select speed up and speed down. Activate this function by selecting either freeze reference or freeze output. When speed up/down is activated for less than 400 ms the resulting reference is increased/decreased by 0.1 %. If Speed up/down is activated for more than 400 ms the resulting reference follows the setting in ramping up/down parameter 3-x1/3-x2.

	Shut down	Catch up
Unchanged speed	0	0
Reduced by %-value	1	0
Increased by %-value	0	1
Reduced by %-value	1	1

[22]	Speed down	Same as *[21] Speed-up*.

[23]	Set-up select bit 0	Select set-up select bit 0 or select set-up select bit 1 to select one of the 4 set-ups. Set *0-10 Active Set-up* to multi set-up.
[24]	Set-up select bit 1	(Default digital input 32): Same as *[23] Set-up select bit 0*.
[26]	Precise stop inv.	Sends an inverted stop signal when the precise stop function is activated in *1-83 Precise Stop Function*. Precise stop inverse function is available for terminals 18 or 19.
[27]	Precise start, stop	Use when *[0] Precise ramp stop* is selected in *1-83 Precise Stop Function*. Precise start, stop is available for terminals 18 and 19. Precise start ensures that the rotor angle from standing still to reference is the same for each start (for same ramp time, same setpoint). This is the equivalent to the precise stop where the angle that the rotor turns from reference to standstill is the same for each stop. When using for *1-83 Precise Stop Function* [1] or [2]: The frequency converter needs a precise stop signal before the value of *1-84 Precise Stop Counter Value* is reached. If this value is not supplied, the frequency converter does not stop when the value in *1-84 Precise Stop Counter Value* is reached. A digital input triggers precise start, stop and is available for terminals 18 and 19.
[28]	Catch up	Increases reference value by percentage (relative) set in *3-12 Catch up/slow Down Value*.
[29]	Slow down	Reduces reference value by percentage (relative) set in *3-12 Catch up/slow Down Value*.
[30]	Counter input	Precise stop function in *1-83 Precise Stop Function* acts as Counter stop or speed compensated counter stop with or without reset. The counter value must be set in *1-84 Precise Stop Counter Value*.
[31]	Pulse edge triggered	Edge triggered pulse input counts the number of pulse flanks per sample time. This number gives a higher resolution at high frequencies, but is not as precise at lower frequencies. Use this pulse principle for encoders with low resolution (30 ppr, for example).  **Illustration 6.10 Pulse vs. Sample Time**
[32]	Pulse time-based	Time-based pulse input measures the duration between flanks. This number gives a higher resolution at lower frequencies, but is not as precise at higher frequencies. This principle has a cut-off frequency that makes it unsuited for encoders with low resolutions (30 ppr) at low speeds. 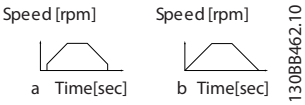 a Low encoder resolution b Standard encoder resolution **Illustration 6.11 Encoder Resolution Comparison** 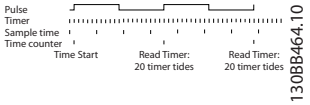 **Illustration 6.12 Time Based Pulse Input**
[34]	Ramp bit 0	Enables a choice between one of the 4 ramps available, according to *Table 6.7*.
[35]	Ramp bit 1	Same as Ramp bit 0.

Preset ramp bit	**1**	**0**
Ramp 1	0	0
Ramp 2	0	1
Ramp 3	1	0
Ramp 4	1	1

Table 6.7

[40]	Latched Precise Start	A latched precise start only requires a pulse of 3 ms on T18 or T19. When using for 1–83 [1] or [2]: When the reference is reached, the frequency converter internally enables the precise stop signal. The frequency converter does the precise stop when the counter value of *1-84 Precise Stop Counter Value* is reached.
[41]	Latched Precise Stop inverse	Sends a latched stop signal when the precise stop function is activated in *1-83 Precise Stop Function*. The latched precise stop inverse function is available for terminals 18 or 19.
[51]	External interlock	This function makes it possible to give an external fault to the drive. This fault is treated in the same way as an internally generated alarm.
[55]	DigiPot Increase	INCREASE signal to the digital potentiometer function described in parameter group *3-9* Digital Pot.Meter*
[56]	DigiPot Decrease	DECREASE signal to the digital potentiometer function described in parameter group *3-9* Digital Pot.Meter*

6

[57]	DigiPot Clear	Clears the digital potentiometer reference described in parameter group *3-9* Digital Pot.Meter*
[60]	Counter A	(Terminal 29 or 33 only) Input for increment counting in the SLC counter.
[61]	Counter A	(Terminal 29 or 33 only) input for decrement counting in the SLC counter.
[62]	Reset Counter A	Input for reset of counter A.
[63]	Counter B	(Terminal 29 or 33 only) Input for increment counting in the SLC counter.
[64]	Counter B	(Terminal 29 or 33 only) Input for decrement counting in the SLC counter.
[65]	Reset Counter B	Input for reset of counter B.
[70]	Mech. Brake Feedback	Brake feedback for hoisting applications: Set *1-01 Motor Control Principle* to *[3] Flux w/ motor feedback*; set *1-72 Start Function* to *[6] Hoist mech brake Ref.*
[71]	Mech. Brake Feedback inv.	Inverted brake feedback for hoisting applications
[72]	PID error inverse	When enabled, it inverts the resulting error from the process PID controller. Available only if configuration mode is set to "Surface Winder", "Extended PID Speed OL" or "Extended PID Speed CL".
[73]	PID reset I-part	When enabled, resets the I-part of the Process PID controller. Equivalent to *7-40 Process PID I-part Reset*. Available only if configuration mode is set to "Surface Winder," "Extended PID Speed OL," or "Extended PID Speed CL".
[74]	PID enable	Enables the extended process PID controller. Equivalent to *7-50 Process PID Extended PID*. Available only if configuration mode is set to "Extended PID Speed OL" or "Extended PID Speed CL."
[80]	PTC Card 1	All digital inputs can be set to *[80] PTC Card 1*. However, only one digital input must be set to this choice.
[91]	Profidrive OFF2	The functionality is the same as the control word bit of the profibus/profinet option.
[92]	Profidrive OFF3	The functionality is the same as the control word bit of the profibus/profinet option.
[98]	Start edge triggered	Edge triggered start command. Keeps the start command alive, even if the input is going back to low. Can be used for a start push button.
[100]	Safe Option Reset	

6.1.5 5–3* Digital Outputs

The 2 solid-state digital outputs are common for terminals 27 and 29. Set the I/O function for terminal 27 in 5–01 Terminal 27 Mode, and set the I/O function for terminal 29 in *parameter 5-02 Terminal 29 Mode*.

NOTICE

These parameters cannot be adjusted while the motor is running.

[0]	No operation	Default for all digital outputs and relay outputs
[1]	Control ready	The control card is ready. For example, the control is supplied by an external 24 V (MCB 107) and the main power to the unit is not detected.
[2]	Drive ready	The frequency converter is ready for operation and applies a supply signal on the control board.
[3]	Drive ready/ remote control	The frequency converter is ready for operation and is in [Auto on] mode.
[4]	Enable/no warning	Ready for operation. No start or stop command given (start/disable). No warnings are active.
[5]	VLT running	Motor is running and shaft torque is present.
[6]	Running/no warning	Output speed is higher than the speed set in *1-81 Min Speed for Function at Stop [RPM]*. The motor is running and there are no warnings.
[7]	Run in range/no warning	Motor is running within the programmed current and speed ranges set in *4-50 Warning Current Low* to *4-53 Warning Speed High*. There are no warnings.
[8]	Run on reference/no warning	Motor runs at reference speed. No warnings.
[9]	Alarm	An alarm activates the output. No warnings.
[10]	Alarm or warning	An alarm or a warning activates the output.
[11]	At torque limit	The torque limit set in *4-16 Torque Limit Motor Mode* or *4-17 Torque Limit Generator Mode* has been exceeded.
[12]	Out of current range	The motor current is outside the range set in *4-18 Current Limit*.
[13]	Below current, low	Motor current is lower than that set in *4-50 Warning Current Low*.
[14]	Above current, high	Motor current is higher than that set in *4-51 Warning Current High*.
[15]	Out of range	Output frequency is outside the frequency range set in *4-52 Warning Speed Low* and *4-53 Warning Speed High*.

Danfoss A/S © Rev. 2014-07-29 All rights reserved.

[16]	Below speed, low	Output speed is lower than the setting in *4-52 Warning Speed Low*.
[17]	Above speed, high	Output speed is higher than the setting in *4-53 Warning Speed High*.
[18]	Out of feedback range	Feedback is outside the range set in *4-56 Warning Feedback Low* and *4-57 Warning Feedback High*.
[19]	Below feedback low	Feedback is below the limit set in *4-56 Warning Feedback Low*.
[20]	Above feedback high	Feedback is above the limit set in *4-57 Warning Feedback High*.
[21]	Thermal warning	The thermal warning turns on when the temperature exceeds the limit in the • motor • frequency converter • brake resistor • thermistor
[22]	Ready, no thermal warning	The frequency converter is ready for operation and there is no overtemperature warning.
[23]	Remote, ready, no thermal warning	The frequency converter is ready for operation and is in [Auto on] mode. There is no overtemperature warning.
[24]	Ready, no over-/ under voltage	The frequency converter is ready for operation and the mains voltage is within the specified voltage range (see *chapter 11 Specifications*).
[25]	Reverse	*Reversing. Logic '1'* when CW rotation of the motor. Logic '0' when CCW rotation of the motor. If the motor is not rotating the output follows the reference.
[26]	Bus OK	Active communication (no time-out) via the serial communication port.
[27]	Torque limit and stop	Use in performing a coasting stop and in torque limit condition. If the frequency converter has received a stop signal and is at the torque limit, the signal is logic '0'.
[28]	Brake, no brake warning	Brake is active and there are no warnings.
[29]	Brake ready, no fault	Brake is ready for operation and there are no faults.
[30]	Brake fault (IGBT)	Output is logic '1' when the brake IGBT is short-circuited. Use this function to protect the frequency converter if there is a fault on the brake modules. Use the output/ relay to cut out the main voltage from the frequency converter.
[31]	Relay 123	Relay is activated when control word [0] is selected in parameter group *8-** Communications and Options*.
[32]	Mechanical brake control	Enables control of an external mechanical brake, see description in *chapter 6.1.3 2-2* Mechanical Brake*.
[33]	Safe stop activated (FC 302 only)	Indicates that the safe stop on terminal 37 has been activated.
[40]	Out of ref range	Active when the actual speed is outside settings in *4-52 Warning Speed Low* to *4-55 Warning Reference High*.
[41]	Below reference low	Active when actual speed is below speed reference setting.
[42]	Above reference high	Active when actual speed is above speed reference setting
[43]	Extended PID Limit	
[45]	Bus Ctrl	Controls output via bus. The state of the output is set in *5-90 Digital & Relay Bus Control*. The output state is retained in the event of bus time-out.
[46]	Bus Ctrl On at timeout	Controls output via bus. The state of the output is set in *5-90 Digital & Relay Bus Control*. If bus time-out the output state is set high (On).
[47]	Bus Ctrl Off at timeout	Controls output via bus. The state of the output is set in *5-90 Digital & Relay Bus Control*. If bus time-out the output state is set low (Off).
[51]	MCO controlled	Active when an MCO 302 or MCO 305 is connected. The output is controlled from option.
[55]	Pulse output	
[60]	Comparator 0	See parameter group *13-1* Comparators*. If comparator 0 is evaluated as TRUE, the output goes high. Otherwise, it is low.
[61]	Comparator 1	See parameter group *13-1* Comparators*. If comparator 1 is evaluated as TRUE, the output goes high. Otherwise, it is low.
[62]	Comparator 2	See parameter group *13-1* Comparators*. If comparator 2 is evaluated as TRUE, the output goes high. Otherwise, it is low.
[63]	Comparator 3	See parameter group *13-1* Comparators*. If comparator 3 is evaluated as TRUE, the output goes high. Otherwise, it is low.
[64]	Comparator 4	See parameter group *13-1* Comparators*. If comparator 4 is evaluated as TRUE, the output goes high. Otherwise, it is low.
[65]	Comparator 5	See parameter group *13-1* Comparators*. If comparator 5 is evaluated as TRUE, the output goes high. Otherwise, it is low.
[70]	Logic Rule 0	See parameter group *13-4* Logic Rules*. If logic rule 0 is evaluated as TRUE, the output goes high. Otherwise, it is low.
[71]	Logic Rule 1	See parameter group *13-4* Logic Rules*. If logic rule 1 is evaluated as TRUE, the output goes high. Otherwise, it is low.
[72]	Logic Rule 2	See parameter group *13-4* Logic Rules*. If logic rule 2 is evaluated as TRUE, the output goes high. Otherwise, it is low.

 Danfoss A/S © Rev. 2014-07-29 All rights reserved.

[73]	Logic Rule 3	See parameter group *13-4* Logic Rules*. If logic rule 3 is evaluated as TRUE, the output goes high. Otherwise, it is low.
[74]	Logic Rule 4	See parameter group *13-4* Logic Rules*. If logic rule 4 is evaluated as TRUE, the output goes high. Otherwise, it is low.
[75]	Logic Rule 5	See parameter group *13-4* Logic Rules*. If logic rule 5 is evaluated as TRUE, the output goes high. Otherwise, it is low.
[80]	SL Digital Output A	See *13-52 SL Controller Action*. The output goes high whenever the smart logic action *[38] Set dig. out. A high* is executed. The output goes low whenever the smart logic action *[32] Set dig. out. A* low is executed.
[81]	SL Digital Output B	See *13-52 SL Controller Action*. The input goes high whenever the smart logic action [39] *Set dig. out. A high* is executed. The input goes low whenever the smart logic action [33] *Set dig. out. A low* is executed.
[82]	SL Digital Output C	See *13-52 SL Controller Action*. The input goes high whenever the smart logic action [40] *Set dig. out. A high* is executed. The input goes low whenever the Smart Logic Action [34] *Set dig. out. A low* is executed.
[83]	SL Digital Output D	See *13-52 SL Controller Action*. The input goes high whenever the smart logic action [41] *Set dig. out. A* high is executed. The input goes low whenever the smart logic action [35] *Set dig. out. A low* is executed.
[84]	SL Digital Output E	See *13-52 SL Controller Action*. The input goes high whenever the smart logic action [42] *Set dig. out. A high* is executed. The input goes low whenever the smart logic action [36] *Set dig. out. A low* is executed.
[85]	SL Digital Output F	See *13-52 SL Controller Action*. The input goes high whenever the smart logic action [43] *Set dig. out. A high* is executed. The input goes low whenever the smart logic action [37] *Set dig. out. A low* is executed.
[120]	Local reference active	Output is high when *3-13 Reference Site* = [2] Local or when *3-13 Reference Site* = [0] *Linked to hand auto* at the same time as the LCP is in [Hand on] mode.

Reference site set in *3-13 Reference Site*	Local reference active [120]	Remote reference active [121]
Reference site: Local *3-13 Reference Site* [2]	1	0
Reference site: Remote *3-13 Reference Site* [1]	0	1
Reference site: Linked to Hand/ Auto		
Hand	1	0
Hand ⇒ off	1	0
Auto ⇒ off	0	0
Auto	0	1

Table 6.8 Local and Remote Reference

[121]	Remote reference active	Output is high when *3-13 Reference Site =[1] Remote* or *[0] Linked to hand/auto* while the LCP is in [Auto on] mode. See *Table 6.8*.
[122]	No alarm	Output is high when no alarm is present.
[123]	Start command active	Output is high when there is an active start command (via digital input bus connection or [Hand on] or [Auto on]), and no stop or start command is active.
[124]	Running reverse	Output is high when the frequency converter is running counter clockwise (the logical product of the status bits 'running' and 'reverse').
[125]	Drive in hand mode	Output is high when the frequency converter is in [Hand on] mode (as indicated by the LED light above [Hand on]).
[126]	Drive in auto mode	Output is high when the frequency converter is in [Hand on] mode (as indicated by the LED light above [Auto on]).
[151]	ATEX ETR cur. alarm	Selectable if *parameter 1-90 Motor Thermal Protection* is set to *[20] Above feedback high* or *[21] Thermal warning*. If the alarm 164 ATEX ETR cur.lim.alarm is active, the output is 1.
[152]	ATEX ETR freq. alarm	Selectable if *parameter 1-90 Motor Thermal Protection* is set to *[20] Above feedback high* or *[21] Thermal warning*. If the alarm 166 ATEX ETR freq.lim.alarm is active, the output is 1.
[153]	ATEX ETR cur. warning	Selectable if*parameter 1-90 Motor Thermal Protection* is set to *[20] Above feedback high* or *[21] Thermal warning*. If the alarm

 Danfoss A/S © Rev. 2014-07-29 All rights reserved.

		163 ATEX ETR cur.lim.warning is active, the output is 1.
[154]	ATEX ETR freq. warning	Selectable if *parameter 1-90 Motor Thermal Protection* is set to *[20] Above feedback high* or *[21] Thermal warning*. If the warning 165 ATEX ETR freq.lim.warning is active, the output is 1.
[188]	AHF Capacitor Connect	The capacitors are turned on at 20% (hysteresis of 50% gives an interval of 10%–30%). The capacitors are disconnected below 10%. The off delay is 10 s and restart if the nominal power goes above 10% during the delay. *5-80 AHF Cap Reconnect Delay* is used to guarantee a minimum off-time for the capacitors.
[189]	External fan control	The internal logic for the internal fan control is transferred to this output to make it possible to control an external fan (relevant for HP duct cooling).

5-40 Function Relay

Array [9]
(Relay 1 [0], Relay 2 [1], Relay 3 [2] (MCB 113), Relay 4 [3] (MCB 113), Relay 5 [4] (MCB 113), Relay 6 [5] (MCB 113), Relay 7 [6] (MCB 105), Relay 8 [7] (MCB 105), Relay 9 [8] (MCB 105))

Option:		Function:
[0] *	No operation	All digital and relay outputs are default set to "No Operation."
[1]	Control ready	The control card is ready. Control is supplied by an external 24 V (MCB 107) and the main power to the frequency converter is not detected.
[2]	Drive ready	Frequency converter is ready to operate. Mains and control supplies are OK.
[3]	Drive rdy/rem ctrl	The frequency converter is ready for operation and is in Auto On mode
[4]	Enable / no warning	Ready for operation. No start or stop commands have been applied (start/ disable). No warnings are active.
[5]	VLT running	Motor is running, and shaft torque present.
[6]	Running / no warning	Output speed is higher than the speed set in *1-81 Min Speed for Function at Stop [RPM]*. The motor is running and no warnings are active.
[7]	Run in range/no warn	Motor is running within the programmed current and speed ranges set in *4-50 Warning Current Low* and *4-53 Warning Speed High*. No warnings are active.
[8]	Run on ref/no warn	Motor runs at reference speed. No warnings are active.

5-40 Function Relay

Array [9]
(Relay 1 [0], Relay 2 [1], Relay 3 [2] (MCB 113), Relay 4 [3] (MCB 113), Relay 5 [4] (MCB 113), Relay 6 [5] (MCB 113), Relay 7 [6] (MCB 105), Relay 8 [7] (MCB 105), Relay 9 [8] (MCB 105))

Option:		Function:
[9]	Alarm	An alarm activates the output. No warnings are active.
[10]	Alarm or warning	An alarm or a warning activates the output.
[11]	At torque limit	The torque limit set in *4-16 Torque Limit Motor Mode* or *4-17 Torque Limit Generator Mode* has been exceeded.
[12]	Out of current range	The motor current is outside the range set in *4-18 Current Limit*.
[13]	Below current, low	Motor current is lower than that set in *4-50 Warning Current Low*.
[14]	Above current, high	Motor current is higher than that set in *4-51 Warning Current High*.
[15]	Out of speed range	Output speed/frequency is outside the frequency range set in *4-52 Warning Speed Low* and *4-53 Warning Speed High*.
[16]	Below speed, low	Output speed is lower than the setting in *4-52 Warning Speed Low*
[17]	Above speed, high	Output speed is higher than the setting in *4-53 Warning Speed High*.
[18]	Out of feedb. range	Feedback is outside the range set in *4-56 Warning Feedback Low* and *4-57 Warning Feedback High*.
[19]	Below feedback, low	Feedback is below the limit set in *4-56 Warning Feedback Low*.
[20]	Above feedback, high	Feedback is above the limit set in *4-57 Warning Feedback High*.
[21]	Thermal warning	Thermal warning turns on when the temperature exceeds the limit either in motor, frequency converter, brake resistor, or connected thermistor.
[22]	Ready,no thermal W	The frequency converter is ready for operation and there is no overtemperature warning.
[23]	Remote,ready,no TW	The frequency converter is ready for operation and is in Auto On mode. There is no overtemperature warning.
[24]	Ready, Voltage OK	The frequency converter is ready for operation and the mains voltage is within the specified voltage range (see *chapter 11 Specifications*).
[25]	Reverse	Logic '1' when CW rotation of the motor. Logic '0' when CCW rotation

6

5-40 Function Relay		
Array [9] (Relay 1 [0], Relay 2 [1], Relay 3 [2] (MCB 113), Relay 4 [3] (MCB 113), Relay 5 [4] (MCB 113), Relay 6 [5] (MCB 113), Relay 7 [6] (MCB 105), Relay 8 [7] (MCB 105), Relay 9 [8] (MCB 105))		
Option:		**Function:**
		of the motor. If the motor is not rotating, the output follows the reference.
[26]	Bus OK	Active communication (no time-out) via the serial communication port.
[27]	Torque limit & stop	Use in performing a coasted stop and frequency converter in torque limit condition. If the frequency converter has received a stop signal and is in torque limit, the signal is Logic '0.'
[28]	Brake, no brake war	Brake is active and there are no warnings.
[29]	Brake ready, no fault	Brake is ready for operation and there are no faults.
[30]	Brake fault (IGBT)	Output is Logic '1' when the brake IGBT is short-circuited. Use this function to protect the frequency converter if there is a fault on the brake module. Use the digital output/ relay to cut out the main voltage from the frequency converter.
[31]	Relay 123	Digital output/relay is activated when Control Word [0] is selected in parameter group *8-** Communication and Options*..
[32]	Mech brake ctrl	Selection of mechanical brake control. When selected parameters in parameter group *2-2* Mechanical Brake* are active. The output must be reinforced to carry the current for the coil in the brake. Solved by connecting an external relay to the selected digital output.
[33]	Safe stop active	(FC 302 only) Indicates that the safe stop on terminal 37 has been activated.
[36]	Control word bit 11	Activate relay 1 via control word from fieldbus. No other functional impact in the frequency converter. Typical application: Controlling auxiliary devices from fieldbus. The function is valid when *[0] FC profile* in *8-10 Control Word Profile* is selected.
[37]	Control word bit 12	Activate relay 2 (FC 302 only) by control word from fieldbus. No other functional impact in the frequency converter. Typical application:

5-40 Function Relay		
Array [9] (Relay 1 [0], Relay 2 [1], Relay 3 [2] (MCB 113), Relay 4 [3] (MCB 113), Relay 5 [4] (MCB 113), Relay 6 [5] (MCB 113), Relay 7 [6] (MCB 105), Relay 8 [7] (MCB 105), Relay 9 [8] (MCB 105))		
Option:		**Function:**
		controlling auxiliary device from fieldbus. The function is valid when *[0] FC profile* in *8-10 Control Word Profile* is selected.
[40]	Out of ref range	Active when the actual speed is outside settings in *4-52 Warning Speed Low* to *4-55 Warning Reference High*.
[41]	Below reference, low	Active when actual speed is below speed reference setting.
[42]	Above ref, high	Active when actual speed is above speed reference setting.
[45]	Bus ctrl.	Controls digital output/relay via bus. The state of the output is set in *5-90 Digital & Relay Bus Control*. The output state is retained in the event of bus time-out.
[46]	Bus ctrl, 1 if timeout	Controls output via bus. The state of the output is set in *5-90 Digital & Relay Bus Control*. If bus time-out, the output state is set high (On).
[47]	Bus ctrl, 0 if timeout	Controls output via bus. The state of the output is set in *5-90 Digital & Relay Bus Control*. If bus time-out the output state is set to low (Off).
[51]	MCO controlled	Active when an MCO 302 or MCO 305 is connected. The output is controlled from an option.
[60]	Comparator 0	See parameter group *13-1* Smart Logic Control*. If Comparator 0 in SLC is true, the output goes high. Otherwise, it is low.
[61]	Comparator 1	See parameter group *13-1* Smart Logic Control*. If Comparator 1 in SLC is true, the output goes high. Otherwise, it is low.
[62]	Comparator 2	See parameter group *13-1* Smart Logic Control*. If Comparator 2 in SLC is true, the output goes high. Otherwise, it is low.
[63]	Comparator 3	See parameter group *13-1* Smart Logic Control*. If Comparator 3 in SLC is true, the output goes high. Otherwise, it is low.
[64]	Comparator 4	See parameter group *13-1* Smart Logic Control*. If Comparator 4 in SLC

Danfoss A/S © Rev. 2014-07-29 All rights reserved.

5-40 Function Relay

Array [9]
(Relay 1 [0], Relay 2 [1], Relay 3 [2] (MCB 113), Relay 4 [3] (MCB 113), Relay 5 [4] (MCB 113), Relay 6 [5] (MCB 113), Relay 7 [6] (MCB 105), Relay 8 [7] (MCB 105), Relay 9 [8] (MCB 105))

Option:		Function:
		is true, the output goes high. Otherwise, it is low.
[65]	Comparator 5	See parameter group *13-1* Smart Logic Control*. If Comparator 5 in SLC is true, the output goes high. Otherwise, it is low.
[70]	Logic rule 0	See parameter group *13-4* Logic Rules*. If Logic Rule 0 in SLC is true, the output goes high. Otherwise, it is low.
[71]	Logic rule 1	See parameter group *13-4* Logic Rules*. If Logic Rule 1 in SLC is true, the output goes high. Otherwise, it is low.
[72]	Logic rule 2	See parameter group *13-4* Logic Rules*. If Logic Rule 2 in SLC is true, the output goes high. Otherwise, it is low.
[73]	Logic rule 3	See parameter group 13-4*(Smart Logic Control). If Logic Rule 3 in SLC is true, the output goes high. Otherwise, it is low.
[74]	Logic rule 4	See parameter group *13-4* Logic Rules*. If Logic Rule 4 in SLC is true, the output goes high. Otherwise, it is low.
[75]	Logic rule 5	See parameter group *13-4* Logic Rules*. If Logic Rule 5 in SLC is true, the output goes high. Otherwise, it is low.
[80]	SL digital output A	See *13-52 SL Controller Action*. Output A is low on smart logic action *[32] Set digital out A low*. Output A is high on smart logic action *[38] Set digital out A high*.
[81]	SL digital output B	See *13-52 SL Controller Action*. Output B is low on smart logic action *[33] Set digital out B low*. Output B is high on smart logic action *[39] Set digital out B high*.
[82]	SL digital output C	See *13-52 SL Controller Action*. Output C is low on smart logic action *[34] Set digital out C low*. Output C is high on smart logic action *[40] Set digital out C high*.

5-40 Function Relay

Array [9]
(Relay 1 [0], Relay 2 [1], Relay 3 [2] (MCB 113), Relay 4 [3] (MCB 113), Relay 5 [4] (MCB 113), Relay 6 [5] (MCB 113), Relay 7 [6] (MCB 105), Relay 8 [7] (MCB 105), Relay 9 [8] (MCB 105))

Option:		Function:
[83]	SL digital output D	See *13-52 SL Controller Action*. Output D is low on smart logic action *[35] Set digital out D low*. Output D is high on smart logic action *[41] Set digital out D high*.
[84]	SL digital output E	See *13-52 SL Controller Action*. Output E is low on smart logic action *[36] Set digital out E low*. Output E is high on smart logic action *[42] Set digital out E high*.
[85]	SL digital output F	See *13-52 SL Controller Action*. Output F is low on smart logic action *[37] Set digital out F low*. Output F is high on smart logic action *[43] Set digital out F high*.
[120]	Local ref active	Output is high when *3-13 Reference Site* = [2] Local or when *3-13 Reference Site = [0] Linked to Hand/Auto* at the same time as the LCP is in [Hand on] mode.
[121]	Remote ref active	Output is high when *3-13 Reference Site = [1] Remote* or *[0] Linked to Hand/Auto* while the LCP is in [Auto on] mode. See *Table 6.9*.

Reference site set in *3-13 Reference Site*	Local reference active [120]	Remote reference active [121]
Reference site: Local *3-13 Reference Site* [2]	1	0
Reference site: Remote *3-13 Reference Site* [1]	0	1
Reference site: Linked to Hand/ Auto		
Hand	1	0
Hand ⇒ off	1	0
Auto ⇒ off	0	0
Auto	0	1

Table 6.9 Local and Remote Reference

5-40 Function Relay		
Array [9] (Relay 1 [0], Relay 2 [1], Relay 3 [2] (MCB 113), Relay 4 [3] (MCB 113), Relay 5 [4] (MCB 113), Relay 6 [5] (MCB 113), Relay 7 [6] (MCB 105), Relay 8 [7] (MCB 105), Relay 9 [8] (MCB 105))		
Option:		**Function:**
[122]	No alarm	Output is high when no alarm is present.
[123]	Start command activ	Output is high when the start command is high (via digital input, bus connection or [Hand on] or [Auto on], and a stop has been the last command.
[124]	Running reverse	Output is high when the frequency converter is running counter clockwise (the logical product of the status bits 'running' and 'reverse').
[125]	Drive in hand mode	Output is high when the frequency converter is in [Hand on] mode (as indicated by the LED light above [Hand on]).
[126]	Drive in auto mode	Output is high when the frequency converter is in 'Auto' mode (as indicated by LED on above [Auto on]).

NOTICE

Set switches S201 (A53) and S202 (A54) as specified in this section when performing a control card test in *parameter 14-22 Operation Mode*. Otherwise, the test fails.

14-22 Operation Mode		
Option:		**Function:**
		Use this parameter to specify normal operation, perform tests, or initialise all parameters except *15-03 Power Up's*, *15-04 Over Temp's* and *15-05 Over Volt's*. This function is active only when the power is cycled to the frequency converter. Select *[0] Normal operation* for normal operation of the frequency converter with the motor in the selected application. Select *[1] Control card test* to test the analog and digital inputs and outputs and the +10 V control voltage. The test requires a test connector with internal connections. To perform the control card test:

14-22 Operation Mode		
Option:		**Function:**
		1. Select *[1] Control card test*. 2. Disconnect the mains supply and wait for the light in the display to go out. 3. Set switches S201 (A53) and S202 (A54) = 'ON'/I. 4. Insert the test plug. 5. Connect to mains supply. 6. Carry out various tests. 7. The results are displayed on the LCP and the frequency converter moves into an infinite loop. 8. *Parameter 14-22 Operation Mode* is automatically set to normal operation. Perform a power cycle to start up in normal operation after a control card test. **If the test is OK** LCP read-out: Control card OK. Disconnect the mains supply and remove the test plug. The green LED on the Control Card lights up. **If the test fails** LCP read-out: Control card I/O failure. Replace the frequency converter or control card. The red LED on the control card is turned on. Test plugs (connect the following terminals to one another): 18 - 27 - 32; 19 - 29 - 33; 42 - 53 - 54 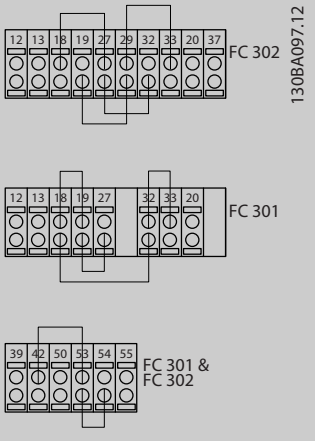 **Illustration 6.13 Control Card Test Connections** Select *[2] Initialisation* to reset all parameter values to default settings, except for *15-03 Power Up's*, *15-04 Over Temp's*, and

14-22 Operation Mode		
Option:		**Function:**
		15-05 Over Volt's. The frequency converter resets during the next power-up. *Parameter 14-22 Operation Mode* also reverts to the default setting *Normal operation* [0].
[0] *	Normal operation	
[1]	Control card test	
[2]	Initialisation	
[3]	Boot mode	

14-50 RFI Filter		
Option:		**Function:**
		NOTICE **This parameter is only available for FC 302. It is not relevant to FC 301 due to different design and shorter motor cables.**
[0]	Off	Select *[0] Off* if the frequency converter is fed by an isolated mains source (IT mains). If a filter is used, select *[0] Off* during charging to prevent a high leakage current making the RCD switch.

14-50 RFI Filter		
Option:		**Function:**
		In this mode, the internal RFI filter capacitors between chassis and the mains RFI filter circuit are cut-out to reduce the ground capacity currents.
[1]	On	Select *[1] On* to ensure that the frequency converter complies with EMC standards.

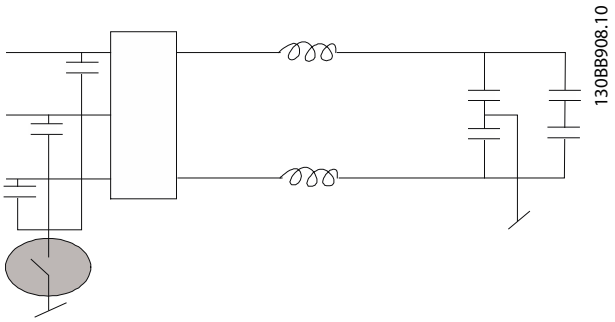

Illustration 6.14 RFI Filter Diagram

15-43 Software Version		
Range:		**Function:**
0 *	[0 - 0]	View the combined SW version (or 'package version') consisting of power SW and control SW.

6.2 How to Programme the Active Filter

The factory settings for the filter part of the Low Harmonic Drive are selected for optimal operation with a minimum of additional programming. All CT-values, as well as frequency, voltage levels and other values directly linked to the frequency converter configuration are pre-set.

Do not change any other parameters influencing the filter operation. However, selection of read-outs and information displayed on the LCP status lines can be customised.

To set up the filter, 2 steps are necessary:

1. Change the nominal voltage in *300-10 Active Filter Nominal Voltage*
2. Make sure the filter is in auto mode (press [Auto On])

Group	Title	Function
0-**	Operation/Display	Parameters related to the fundamental functions of the filter, function of the LCP buttons and configuration of the LCP display.
5-**	Digital In/Out	Parameter group for configuring the digital inputs and outputs.
8-**	Communication and Options	Parameter group for configuring communications and options.
14-**	Special Functions	Parameter group for configuring special functions.
15-**	Unit Information	Parameter group containing active filter information such as operating data, hardware configuration and software versions.
16-**	Data Readouts	Parameter group for data read-outs, e.g. actual references, voltages, control, alarm, warning and status words.
300-**	AF Settings	Parameter group for setting the Active Filter. Apart from par. 300-10, *Active Filter Nominal Voltage*, it is not recommended to change the settings of this parameter group
301-**	AF Readouts	Parameter group for the filter readouts.

Table 6.10 Parameter Groups

A list of all parameters accessible from the filter LCP can be found in the section *Parameter Options - Filter*. A more detailed description of the active filter parameters can be found in *chapter 6.4 Parameter Lists - Active Filter*.

6.2.1 Using the Low Harmonic Drive in NPN Mode

The default setting for *parameter 5-00 Digital I/O Mode* is PNP mode. If NPN mode is desired, it is necessary to change the wiring in the filter part of the Low Harmonic Drive. Before changing the setting in *parameter 5-00 Digital I/O Mode* to NPN mode, the wire connected to 24 V (control terminal 12 or 13) must be changed to terminal 20 (ground).

6.3 Parameter Lists - Frequency Converter

Changes during operation
True means that the parameter can be changed while the frequency converter is in operation and false means that it must be stopped before making a change.

4-Set-up
'All set-up': the parameters can be set individually in each of the 4 set-ups, i.e. one single parameter can have four different data values.
'1 set-up': data value is the same in all set-ups.

Conversion index
This number refers to a conversion figure used when writing or reading to and from the frequency converter.

Conv. index	Conv. factor
100	1
67	1/60
6	1000000
5	100000
4	10000
3	1000
2	100
1	10
0	1
-1	0.1
-2	0.01
-3	0.001
-4	0.0001
-5	0.00001
-6	0.000001

Table 6.11 Conversion Index

Data type	Description	Type
2	Integer 8	Int8
3	Integer 16	Int16
4	Integer 32	Int32
5	Unsigned 8	Uint8
6	Unsigned 16	Uint16
7	Unsigned 32	Uint32
9	Visible String	VisStr
33	Normalized value 2 bytes	N2
35	Bit sequence of 16 boolean variables	V2
54	Time difference w/o date	TimD

Table 6.12 Data Types

See the frequency converter *Design Guide* for further information about data types 33, 35 and 54.

Danfoss A/S © Rev. 2014-07-29 All rights reserved.

6.3.1 Parameter Selection

Parameters for the frequency converter are grouped into various parameter groups for easy selection of the correct parameters for optimised operation of the frequency converter.

0-** Operation and display parameters for basic frequency converter settings

1-** Load and motor parameters, includes all load and motor related parameters

2-** Brake parameters

3-** References and ramping parameters, includes DigiPot function

4-** Limits/Warnings, setting of limits and warning parameters

5-** Digital inputs and outputs, includes relay controls

6-** Analog inputs and outputs

7-** Controllers, setting parameters for speed and process controls

8-** Communication and option parameters, setting of FC RS-485 and FC USB port parameters.

9-** Profibus parameters

10-** DeviceNet and CAN Fieldbus parameters

12-** Ethernet parameters

13-** Smart Logic Control parameters

14-** Special Function parameters

15-** Drive Information parameters

16-** Data Readout parameters

17-** Encoder option parameters

18-** Data Readouts 2

30-** Special Features

32-** MCO 305 basic parameters

33-** MCO 305 advanced parameters

34-** MCO data readout parameters

35-** Sensor Input Option

 Danfoss A/S © Rev. 2014-07-29 All rights reserved.

6.3.2 0-** Operation/Display

Par. No. #	Parameter description	Default value	4-set-up	FC 302 only	Change during operation	Conversion index	Type
0-0* Basic Settings							
0-01	Language	[0] English	1 set-up		TRUE	-	Uint8
0-02	Motor speed unit	[0] RPM	2 set-ups		FALSE	-	Uint8
0-03	Regional settings	[0] International	2 set-ups		FALSE	-	Uint8
0-04	Operating state at power-up (hand)	[1] Forced stop, ref=old	All set-ups		TRUE	-	Uint8
0-09	Performance monitor	0.0 %	All set-ups		TRUE	-1	Uint16
0-1* Set-up Operations							
0-10	Active set-up	[1] Set-up 1	1 set-up		TRUE	-	Uint8
0-11	Edit set-up	[1] Set-up 1	All set-ups		TRUE	-	Uint8
0-12	This set-up linked to	[0] Not linked	All set-ups		FALSE	-	Uint8
0-13	Readout: Linked set-ups	0 N/A	All set-ups		FALSE	0	Uint16
0-14	Readout: Edit set-ups/channel	0 N/A	All set-ups		TRUE	0	Int32
0-15	Readout: actual setup	0 N/A	All set-ups		FALSE	0	Uint8
0-2* LCP Display							
0-20	Display Line 1.1 small	1617	All set-ups		TRUE	-	Uint16
0-21	Display Line 1.2 small	1614	All set-ups		TRUE	-	Uint16
0-22	Display Line 1.3 small	1610	All set-ups		TRUE	-	Uint16
0-23	Display Line 2 large	1613	All set-ups		TRUE	-	Uint16
0-24	Display Line 3 large	1602	All set-ups		TRUE	-	Uint16
0-25	My personal menu	App.Dependent	1 set-up		TRUE	0	Uint16
0-3* LCP Custom Readout							
0-30	Unit for user-defined readout	[0] None	All set-ups		TRUE	-	Uint8
0-31	Min value of user-defined readout	0.00 CustomReadoutUnit	All set-ups		TRUE	-2	Int32
0-32	Max value of user-defined readout	100.00 CustomReadoutUnit	All set-ups		TRUE	-2	Int32
0-37	Display text 1	0 N/A	1 set-up		TRUE	0	VisStr[25]
0-38	Display text 2	0 N/A	1 set-up		TRUE	0	VisStr[25]
0-39	Display text 3	0 N/A	1 set-up		TRUE	0	VisStr[25]
0-4* LCP Keypad							
0-40	[Hand on] key on LCP	null	All set-ups		TRUE	-	Uint8
0-41	[Off] key on LCP	null	All set-ups		TRUE	-	Uint8
0-42	[Auto on] key on LCP	null	All set-ups		TRUE	-	Uint8
0-43	[Reset] key on LCP	null	All set-ups		TRUE	-	Uint8
0-44	[Off/Reset] key on LCP	null	All set-ups		TRUE	-	Uint8
0-45	[Drive Bypass] key on LCP	null	All set-ups		TRUE	-	Uint8
0-5* Copy/Save							
0-50	LCP copy	[0] No copy	All set-ups		FALSE	-	Uint8
0-51	Set-up copy	[0] No copy	All set-ups		FALSE	-	Uint8
0-6* Password							
0-60	Main menu password	100 N/A	1 set-up		TRUE	0	Int16
0-61	Access to main menu w/o password	[0] Full access	1 set-up		TRUE	-	Uint8
0-65	Quick menu password	200 N/A	1 set-up		TRUE	0	Int16
0-66	Access to quick menu w/o password	[0] Full access	1 set-up		TRUE	-	Uint8
0-67	Bus password access	0 N/A	All set-ups		TRUE	0	Uint16

 Danfoss A/S © Rev. 2014-07-29 All rights reserved.

6.3.3 1-** Load/Motor

Par. No. #	Parameter description	Default value	4-set-up	FC 302 only	Change during operation	Conversion index	Type
1-0* General Settings							
1-00	Configuration mode	null	All set-ups		TRUE	-	Uint8
1-01	Motor control principle	null	All set-ups		FALSE	-	Uint8
1-02	Flux motor feedback source	[1] 24V encoder	All set-ups		FALSE	-	Uint8
1-03	Torque characteristics	[0] Constant torque	All set-ups	x	TRUE	-	Uint8
1-04	Overload mode	[0] High torque	All set-ups		FALSE	-	Uint8
1-05	Local mode configuration	[2] As mode par 1-00	All set-ups		TRUE	-	Uint8
1-06	Clockwise direction	[0] Normal	All set-ups		FALSE	-	Uint8
1-1* Motor Selection							
1-10	Motor construction	[0] Asynchron	All set-ups		FALSE	-	Uint8
1-2* Motor Data							
1-20	Motor power [kW]	App.Dependent	All set-ups		FALSE	1	Uint32
1-21	Motor power [HP]	App.Dependent	All set-ups		FALSE	-2	Uint32
1-22	Motor voltage	App.Dependent	All set-ups		FALSE	0	Uint16
1-23	Motor frequency	App.Dependent	All set-ups		FALSE	0	Uint16
1-24	Motor current	App.Dependent	All set-ups		FALSE	-2	Uint32
1-25	Motor nominal speed	App.Dependent	All set-ups		FALSE	67	Uint16
1-26	Motor cont. rated torque	App.Dependent	All set-ups		FALSE	-1	Uint32
1-28	Motor rotation check	[0] Off	All set-ups		FALSE		Uint8
1-29	Automatic motor adaptation (AMA)	[0] Off	All set-ups		FALSE	-	Uint8
1-3* Adv. Motor Data							
1-30	Stator resistance (Rs)	App.Dependent	All set-ups		FALSE	-4	Uint32
1-31	Rotor resistance (Rr)	App.Dependent	All set-ups		FALSE	-4	Uint32
1-33	Stator leakage reactance (X1)	App.Dependent	All set-ups		FALSE	-4	Uint32
1-34	Rotor leakage reactance (X2)	App.Dependent	All set-ups		FALSE	-4	Uint32
1-35	Main reactance (Xh)	App.Dependent	All set-ups		FALSE	-4	Uint32
1-36	Iron loss resistance (Rfe)	App.Dependent	All set-ups		FALSE	-3	Uint32
1-37	d-axis inductance (Ld)	App.Dependent	All set-ups	x	FALSE	-4	Int32
1-39	Motor poles	App.Dependent	All set-ups		FALSE	0	Uint8
1-40	Back EMF at 1000 RPM	App.Dependent	All set-ups	x	FALSE	0	Uint16
1-41	Motor angle offset	0 N/A	All set-ups		FALSE	0	Int16
1-5* Load Indep. Setting							
1-50	Motor magnetisation at zero speed	100 %	All set-ups		TRUE	0	Uint16
1-51	Min speed normal magnetising [RPM]	App.Dependent	All set-ups		TRUE	67	Uint16
1-52	Min speed normal magnetising [Hz]	App.Dependent	All set-ups		TRUE	-1	Uint16
1-53	Model shift frequency	App.Dependent	All set-ups	x	FALSE	-1	Uint16
1-54	Voltage reduction in fieldweakening	0 V	All set-ups		FALSE	0	Uint8
1-55	U/f characteristic - U	App.Dependent	All set-ups		TRUE	-1	Uint16
1-56	U/f characteristic - F	App.Dependent	All set-ups		TRUE	-1	Uint16
1-58	Flystart test pulses current	30 %	All set-ups		FALSE	0	Uint16
1-59	Flystart test pulses frequency	200 %	All set-ups		FALSE	0	Uint16

 Danfoss A/S © Rev. 2014-07-29 All rights reserved.

Par. No. #	Parameter description	Default value	4-set-up	FC 302 only	Change during operation	Conversion index	Type
1-6* Load Depen. Setting							
1-60	Low speed load compensation	100 %	All set-ups		TRUE	0	Int16
1-61	High speed load compensation	100 %	All set-ups		TRUE	0	Int16
1-62	Slip compensation	App.Dependent	All set-ups		TRUE	0	Int16
1-63	Slip compensation time constant	App.Dependent	All set-ups		TRUE	-2	Uint16
1-64	Resonance dampening	100 %	All set-ups		TRUE	0	Uint16
1-65	Resonance dampening time constant	5 ms	All set-ups		TRUE	-3	Uint8
1-66	Min. current at low speed	100 %	All set-ups	x	TRUE	0	Uint8
1-67	Load type	[0] Passive load	All set-ups	x	TRUE	-	Uint8
1-68	Minimum inertia	App.Dependent	All set-ups	x	FALSE	-4	Uint32
1-69	Maximum inertia	App.Dependent	All set-ups	x	FALSE	-4	Uint32
1-7* Start Adjustments							
1-71	Start delay	0.0 s	All set-ups		TRUE	-1	Uint8
1-72	Start function	[2] Coast/delay time	All set-ups		TRUE	-	Uint8
1-73	Flying start	null	All set-ups		FALSE	-	Uint8
1-74	Start speed [RPM]	App.Dependent	All set-ups		TRUE	67	Uint16
1-75	Start speed [Hz]	App.Dependent	All set-ups		TRUE	-1	Uint16
1-76	Start current	0.00 A	All set-ups		TRUE	-2	Uint32
1-8* Stop Adjustments							
1-80	Function at stop	[0] Coast	All set-ups		TRUE	-	Uint8
1-81	Min speed for function at stop [RPM]	App.Dependent	All set-ups		TRUE	67	Uint16
1-82	Min speed for function at stop [Hz]	App.Dependent	All set-ups		TRUE	-1	Uint16
1-83	Precise stop function	[0] Precise ramp stop	All set-ups		FALSE	-	Uint8
1-84	Precise stop counter value	100000 N/A	All set-ups		TRUE	0	Uint32
1-85	Precise stop speed compensation delay	10 ms	All set-ups		TRUE	-3	Uint8
1-9* Motor Temperature							
1-90	Motor thermal protection	[0] No protection	All set-ups		TRUE	-	Uint8
1-91	Motor external fan	[0] No	All set-ups		TRUE	-	Uint16
1-93	Thermistor resource	[0] None	All set-ups		TRUE	-	Uint8
1-94	ATEX ETR cur.lim. speed reduction	0.0%	2 set-ups	x	TRUE	-1	Uint16
1-95	KTY sensor type	[0] KTY Sensor 1	All set-ups	x	TRUE	-	Uint8
1-96	KTY thermistor resource	[0] None	All set-ups	x	TRUE	-	Uint8
1-97	KTY threshold level	80 °C	1 set-up	x	TRUE	100	Int16
1-98	ATEX ETR interpol. points freq.	App.Dependent	1 set-up	x	TRUE	-1	Int16
1-99	ATEX ETR interpol points current	App.Dependent	2 set-ups	x	TRUE	0	Int16

Danfoss A/S © Rev. 2014-07-29 All rights reserved.

6.3.4 2-** Brakes

Par. No. #	Parameter description	Default value	4-set-up	FC 302 only	Change during operation	Conversion index	Type
2-0* DC-Brake							
2-00	DC hold current	50 %	All set-ups		TRUE	0	Uint8
2-01	DC brake current	50 %	All set-ups		TRUE	0	Uint16
2-02	DC braking time	10.0 s	All set-ups		TRUE	-1	Uint16
2-03	DC brake cut In speed [RPM]	App.Dependent	All set-ups		TRUE	67	Uint16
2-04	DC brake cut In speed [Hz]	App.Dependent	All set-ups		TRUE	-1	Uint16
2-05	Maximum reference	MaxReference (P303)	All set-ups		TRUE	-3	Int32
2-1* Brake Energy Funct.							
2-10	Brake function	null	All set-ups		TRUE	-	Uint8
2-11	Brake resistor (ohm)	App.Dependent	All set-ups		TRUE	0	Uint16
2-12	Brake power limit (kW)	App.Dependent	All set-ups		TRUE	0	Uint32
2-13	Brake power monitoring	[0] Off	All set-ups		TRUE	-	Uint8
2-15	Brake check	[0] Off	All set-ups		TRUE	-	Uint8
2-16	AC brake max. current	100.0 %	All set-ups		TRUE	-1	Uint32
2-17	Over-voltage control	[0] Disabled	All set-ups		TRUE	-	Uint8
2-18	Brake check condition	[0] At Power Up	All set-ups		TRUE	-	Uint8
2-19	Over-voltage gain	100 %	All set-ups		TRUE	0	Uint16
2-2* Mechanical Brake							
2-20	Release brake current	ImaxVLT (P1637)	All set-ups		TRUE	-2	Uint32
2-21	Activate brake speed [RPM]	App.Dependent	All set-ups		TRUE	67	Uint16
2-22	Activate brake speed [Hz]	App.Dependent	All set-ups		TRUE	-1	Uint16
2-23	Activate brake delay	0.0 s	All set-ups		TRUE	-1	Uint8
2-24	Stop delay	0.0 s	All set-ups		TRUE	-1	Uint8
2-25	Brake release time	0.20 s	All set-ups		TRUE	-2	Uint16
2-26	Torque ref	0.00 %	All set-ups		TRUE	-2	Int16
2-27	Torque ramp time	0.2 s	All set-ups		TRUE	-1	Uint8
2-28	Gain boost factor	1.00 N/A	All set-ups		TRUE	-2	Uint16

 Danfoss A/S © Rev. 2014-07-29 All rights reserved.

6.3.5 3-** Reference/Ramps

Par. No. #	Parameter description	Default value	4-set-up	FC 302 only	Change during operation	Conversion index	Type
3-0* Reference Limits							
3-00	Reference range	null	All set-ups		TRUE	-	Uint8
3-01	Reference/feedback unit	null	All set-ups		TRUE	-	Uint8
3-02	Minimum reference	App.Dependent	All set-ups		TRUE	-3	Int32
3-03	Maximum reference	App.Dependent	All set-ups		TRUE	-3	Int32
3-04	Reference function	[0] Sum	All set-ups		TRUE	-	Uint8
3-1* References							
3-10	Preset reference	0.00 %	All set-ups		TRUE	-2	Int16
3-11	Jog speed [Hz]	App.Dependent	All set-ups		TRUE	-1	Uint16
3-12	Catch up/slow down value	0.00 %	All set-ups		TRUE	-2	Int16
3-13	Reference site	[0] Linked to hand/auto	All set-ups		TRUE	-	Uint8
3-14	Preset relative reference	0.00 %	All set-ups		TRUE	-2	Int32
3-15	Reference resource 1	null	All set-ups		TRUE	-	Uint8
3-16	Reference resource 2	null	All set-ups		TRUE	-	Uint8
3-17	Reference resource 3	null	All set-ups		TRUE	-	Uint8
3-18	Relative scaling reference resource	[0] No function	All set-ups		TRUE	-	Uint8
3-19	Jog speed [RPM]	App.Dependent	All set-ups		TRUE	67	Uint16
3-4* Ramp 1							
3-40	Ramp 1 type	[0] Linear	All set-ups		TRUE	-	Uint8
3-41	Ramp 1 ramp up time	App.Dependent	All set-ups		TRUE	-2	Uint32
3-42	Ramp 1 ramp down time	App.Dependent	All set-ups		TRUE	-2	Uint32
3-45	Ramp 1 S-ramp ratio at accel. start	50 %	All set-ups		TRUE	0	Uint8
3-46	Ramp 1 S-ramp tatio at accel. end	50 %	All set-ups		TRUE	0	Uint8
3-47	Ramp 1 S-ramp ratio at decel. start	50 %	All set-ups		TRUE	0	Uint8
3-48	Ramp 1 S-ramp ratio at decel. end	50 %	All set-ups		TRUE	0	Uint8
3-5* Ramp 2							
3-50	Ramp 2 type	[0] Linear	All set-ups		TRUE	-	Uint8
3-51	Ramp 2 ramp up time	App.Dependent	All set-ups		TRUE	-2	Uint32
3-52	Ramp 2 Ramp down time	App.Dependent	All set-ups		TRUE	-2	Uint32
3-55	Ramp 2 S-ramp ratio at accel. start	50 %	All set-ups		TRUE	0	Uint8
3-56	Ramp 2 S-ramp ratio at accel. end	50 %	All set-ups		TRUE	0	Uint8
3-57	Ramp 2 S-ramp ratio at decel. start	50 %	All set-ups		TRUE	0	Uint8
3-58	Ramp 2 S-ramp ratio at decel. end	50 %	All set-ups		TRUE	0	Uint8
3-6* Ramp 3							
3-60	Ramp 3 type	[0] Linear	All set-ups		TRUE	-	Uint8
3-61	Ramp 3 ramp up time	App.Dependent	All set-ups		TRUE	-2	Uint32
3-62	Ramp 3 ramp down time	App.Dependent	All set-ups		TRUE	-2	Uint32
3-65	Ramp 3 S-ramp ratio at accel. start	50 %	All set-ups		TRUE	0	Uint8
3-66	Ramp 3 S-ramp ratio at accel. end	50 %	All set-ups		TRUE	0	Uint8
3-67	Ramp 3 S-ramp ratio at decel. start	50 %	All set-ups		TRUE	0	Uint8
3-68	Ramp 3 S-ramp ratio at decel. end	50 %	All set-ups		TRUE	0	Uint8
3-7* Ramp 4							
3-70	Ramp 4 type	[0] Linear	All set-ups		TRUE	-	Uint8
3-71	Ramp 4 ramp up time	App.Dependent	All set-ups		TRUE	-2	Uint32
3-72	Ramp 4 ramp down time	App.Dependent	All set-ups		TRUE	-2	Uint32
3-75	Ramp 4 S-ramp ratio at accel. start	50 %	All set-ups		TRUE	0	Uint8
3-76	Ramp 4 S-ramp ratio at accel. end	50 %	All set-ups		TRUE	0	Uint8
3-77	Ramp 4 S-ramp ratio at decel. start	50 %	All set-ups		TRUE	0	Uint8
3-78	Ramp 4 S-ramp ratio at decel. end	50 %	All set-ups		TRUE	0	Uint8

Danfoss A/S © Rev. 2014-07-29 All rights reserved.

Par. No. #	Parameter description	Default value	4-set-up	FC 302 only	Change during operation	Conversion index	Type
3-8* Other Ramps							
3-80	Jog ramp time	App.Dependent	All set-ups		TRUE	-2	Uint32
3-81	Quick stop ramp time	App.Dependent	2 set-ups		TRUE	-2	Uint32
3-82	Quick stop ramp type	[0] Linear	All set-ups		TRUE	-	Uint8
3-83	Quick stop S-ramp ratio at decel. start	50 %	All set-ups		TRUE	0	Uint8
3-84	Quick stop S-ramp ratio at decel. end	50 %	All set-ups		TRUE	0	Uint8
3-9* Digital Pot.Meter							
3-90	Step size	0.10 %	All set-ups		TRUE	-2	Uint16
3-91	Ramp time	1.00 s	All set-ups		TRUE	-2	Uint32
3-92	Power restore	[0] Off	All set-ups		TRUE	-	Uint8
3-93	Maximum limit	100 %	All set-ups		TRUE	0	Int16
3-94	Minimum limit	-100 %	All set-ups		TRUE	0	Int16
3-95	Ramp delay	App.Dependent	All set-ups		TRUE	-3	TimD

 Danfoss A/S © Rev. 2014-07-29 All rights reserved.

6.3.6 4-** Limits/Warnings

Par. No. #	Parameter description	Default value	4-set-up	FC 302 only	Change during operation	Conversion index	Type
4-1* Motor Limits							
4-10	Motor speed direction	null	All set-ups		FALSE	-	Uint8
4-11	Motor speed low limit [RPM]	App.Dependent	All set-ups		TRUE	67	Uint16
4-12	Motor speed low limit [Hz]	App.Dependent	All set-ups		TRUE	-1	Uint16
4-13	Motor speed high limit [RPM]	App.Dependent	All set-ups		TRUE	67	Uint16
4-14	Motor speed high limit [Hz]	App.Dependent	All set-ups		TRUE	-1	Uint16
4-16	Torque limit motor mode	App.Dependent	All set-ups		TRUE	-1	Uint16
4-17	Torque limit generator mode	100.0 %	All set-ups		TRUE	-1	Uint16
4-18	Current limit	App.Dependent	All set-ups		TRUE	-1	Uint32
4-19	Max output frequency	132.0 Hz	All set-ups		FALSE	-1	Uint16
4-2* Limit Factors							
4-20	Torque limit factor source	[0] No function	All set-ups		TRUE	-	Uint8
4-21	Speed limit factor source	[0] No function	All set-ups		TRUE	-	Uint8
4-3* Motor Speed Mon.							
4-30	Motor feedback loss function	[2] Trip	All set-ups		TRUE	-	Uint8
4-31	Motor feedback speed error	300 RPM	All set-ups		TRUE	67	Uint16
4-32	Motor feedback loss timeout	0.05 s	All set-ups		TRUE	-2	Uint16
4-34	Tracking error function	null	All set-ups		TRUE	-	Uint8
4-35	Tracking error	10 RPM	All set-ups		TRUE	67	Uint16
4-36	Tracking error timeout	1.00 s	All set-ups		TRUE	-2	Uint16
4-37	Tracking error ramping	100 RPM	All set-ups		TRUE	67	Uint16
4-38	Tracking error ramping timeout	1.00 s	All set-ups		TRUE	-2	Uint16
4-39	Tracking error after ramping timeout	5.00 s	All set-ups		TRUE	-2	Uint16
4-5* Adj. Warnings							
4-50	Warning current low	0.00 A	All set-ups		TRUE	-2	Uint32
4-51	Warning current high	ImaxVLT (P1637)	All set-ups		TRUE	-2	Uint32
4-52	Warning speed low	0 RPM	All set-ups		TRUE	67	Uint16
4-53	Warning speed high	outputSpeedHighLimit (P413)	All set-ups		TRUE	67	Uint16
4-54	Warning reference low	-999999.999 N/A	All set-ups		TRUE	-3	Int32
4-55	Warning reference high	999999.999 N/A	All set-ups		TRUE	-3	Int32
4-56	Warning feedback low	-999999.999 Reference-FeedbackUnit	All set-ups		TRUE	-3	Int32
4-57	Warning feedback high	999999.999 Reference-FeedbackUnit	All set-ups		TRUE	-3	Int32
4-58	Missing motor phase function	null	All set-ups		TRUE	-	Uint8
4-6* Speed Bypass							
4-60	Bypass speed from [RPM]	App.Dependent	All set-ups		TRUE	67	Uint16
4-61	Bypass speed from [Hz]	App.Dependent	All set-ups		TRUE	-1	Uint16
4-62	Bypass speed to [RPM]	App.Dependent	All set-ups		TRUE	67	Uint16
4-63	Bypass speed to [Hz]	App.Dependent	All set-ups		TRUE	-1	Uint16

 Danfoss A/S © Rev. 2014-07-29 All rights reserved.

6.3.7 5-** Digital In/Out

Par. No. #	Parameter description	Default value	4-set-up	FC 302 only	Change during operation	Conversion index	Type
5-0* Digital I/O mode							
5-00	Digital I/O mode	[0] PNP	All set-ups		FALSE	-	Uint8
5-01	Terminal 27 mode	[0] Input	All set-ups		TRUE	-	Uint8
5-02	Terminal 29 mode	[0] Input	All set-ups	x	TRUE	-	Uint8
5-1* Digital Inputs							
5-10	Terminal 18 digital input	null	All set-ups		TRUE	-	Uint8
5-11	Terminal 19 digital input	null	All set-ups		TRUE	-	Uint8
5-12	Terminal 27 digital input	null	All set-ups		TRUE	-	Uint8
5-13	Terminal 29 digital input	null	All set-ups	x	TRUE	-	Uint8
5-14	Terminal 32 digital input	null	All set-ups		TRUE	-	Uint8
5-15	Terminal 33 digital input	null	All set-ups		TRUE	-	Uint8
5-16	Terminal X30/2 digital input	null	All set-ups		TRUE	-	Uint8
5-17	Terminal X30/3 digital input	null	All set-ups		TRUE	-	Uint8
5-18	Terminal X30/4 digital input	null	All set-ups		TRUE	-	Uint8
5-19	Terminal 37 safe stop	[1] Safe Stop Alarm	1 set-up		TRUE	-	Uint8
5-20	Terminal X46/1 digital input	[0] No operation	All set-ups		TRUE	-	Uint8
5-21	Terminal X46/3 digital input	[0] No operation	All set-ups		TRUE	-	Uint8
5-22	Terminal X46/5 digital input	[0] No operation	All set-ups		TRUE	-	Uint8
5-23	Terminal X46/7 digital input	[0] No operation	All set-ups		TRUE	-	Uint8
5-24	Terminal X46/9 digital input	[0] No operation	All set-ups		TRUE	-	Uint8
5-25	Terminal X46/11 digital input	[0] No operation	All set-ups		TRUE	-	Uint8
5-26	Terminal X46/13 digital input	[0] No operation	All set-ups		TRUE	-	Uint8
5-3* Digital Outputs							
5-30	Terminal 27 digital output	null	All set-ups		TRUE	-	Uint8
5-31	Terminal 29 digital output	null	All set-ups	x	TRUE	-	Uint8
5-32	Term X30/6 digi out (MCB 101)	null	All set-ups		TRUE	-	Uint8
5-33	Term X30/7 digi out (MCB 101)	null	All set-ups		TRUE	-	Uint8
5-4* Relays							
5-40	Function relay	null	All set-ups		TRUE	-	Uint8
5-41	On delay, relay	0.01 s	All set-ups		TRUE	-2	Uint16
5-42	Off delay, relay	0.01 s	All set-ups		TRUE	-2	Uint16
5-5* Pulse Input							
5-50	Term. 29 low frequency	100 Hz	All set-ups	x	TRUE	0	Uint32
5-51	Term. 29 high frequency	100 Hz	All set-ups	x	TRUE	0	Uint32
5-52	Term. 29 low ref./feedb. value	0.000 ReferenceFeedbackUnit	All set-ups	x	TRUE	-3	Int32
5-53	Term. 29 high ref./feedb. value	App.Dependent	All set-ups	x	TRUE	-3	Int32
5-54	Pulse filter time constant #29	100 ms	All set-ups	x	FALSE	-3	Uint16
5-55	Term. 33 low frequency	100 Hz	All set-ups		TRUE	0	Uint32
5-56	Term. 33 high frequency	100 Hz	All set-ups		TRUE	0	Uint32
5-57	Term. 33 low ref./feedb. value	0.000 ReferenceFeedbackUnit	All set-ups		TRUE	-3	Int32
5-58	Term. 33 high ref./feedb. value	App.Dependent	All set-ups		TRUE	-3	Int32
5-59	Pulse filter time constant #33	100 ms	All set-ups		FALSE	-3	Uint16

 Danfoss A/S © Rev. 2014-07-29 All rights reserved.

Par. No. #	Parameter description	Default value	4-set-up	FC 302 only	Change during operation	Conversion index	Type
5-6* Pulse Output							
5-60	Terminal 27 pulse output variable	null	All set-ups		TRUE	-	Uint8
5-62	Pulse output max freq #27	App.Dependent	All set-ups		TRUE	0	Uint32
5-63	Terminal 29 pulse output variable	null	All set-ups	x	TRUE	-	Uint8
5-65	Pulse output max freq #29	App.Dependent	All set-ups	x	TRUE	0	Uint32
5-66	Terminal X30/6 pulse output variable	null	All set-ups		TRUE	-	Uint8
5-68	Pulse output max freq #X30/6	App.Dependent	All set-ups		TRUE	0	Uint32
5-7* 24V Encoder Input							
5-70	Term 32/33 pulses per revolution	1024 N/A	All set-ups		FALSE	0	Uint16
5-71	Term 32/33 encoder direction	[0] Clockwise	All set-ups		FALSE	-	Uint8
5-8* I/O Options							
5-80	AHF cap reconnect delay	25s	2 set-ups		TRUE	0	Uint16
5-9* Bus Controlled							
5-90	Digital & relay bus control	0 N/A	All set-ups		TRUE	0	Uint32
5-93	Pulse out #27 bus control	0.00 %	All set-ups		TRUE	-2	N2
5-94	Pulse out #27 timeout preset	0.00 %	1 set-up		TRUE	-2	Uint16
5-95	Pulse Out #29 bus control	0.00 %	All set-ups	x	TRUE	-2	N2
5-96	Pulse Out #29 timeout preset	0.00 %	1 set-up	x	TRUE	-2	Uint16
5-97	Pulse Out #X30/6 bus control	0.00 %	All set-ups		TRUE	-2	N2
5-98	Pulse Out #X30/6 timeout preset	0.00 %	1 set-up		TRUE	-2	Uint16

 Danfoss A/S © Rev. 2014-07-29 All rights reserved.

6.3.8 6-** Analog In/Out

Par. No. #	Parameter description	Default value	4-set-up	FC 302 only	Change during operation	Conversion index	Type
6-0* Analog I/O Mode							
6-00	Live zero timeout time	10 s	All set-ups		TRUE	0	Uint8
6-01	Live zero timeout function	[0] Off	All set-ups		TRUE	-	Uint8
6-1* Analog Input 1							
6-10	Terminal 53 low voltage	0.07 V	All set-ups		TRUE	-2	Int16
6-11	Terminal 53 high voltage	10.00 V	All set-ups		TRUE	-2	Int16
6-12	Terminal 53 low current	0.14 mA	All set-ups		TRUE	-5	Int16
6-13	Terminal 53 high current	20.00 mA	All set-ups		TRUE	-5	Int16
6-14	Terminal 53 low ref./feedb. value	0 ReferenceFeedbackUnit	All set-ups		TRUE	-3	Int32
6-15	Terminal 53 high ref./feedb. value	App.Dependent	All set-ups		TRUE	-3	Int32
6-16	Terminal 53 filter time constant	0.001 s	All set-ups		TRUE	-3	Uint16
6-2* Analog Input 2							
6-20	Terminal 54 low voltage	0.07 V	All set-ups		TRUE	-2	Int16
6-21	Terminal 54 high voltage	10.00 V	All set-ups		TRUE	-2	Int16
6-22	Terminal 54 low current	0.14 mA	All set-ups		TRUE	-5	Int16
6-23	Terminal 54 high current	20.00 mA	All set-ups		TRUE	-5	Int16
6-24	Terminal 54 low ref./feedb. value	0 ReferenceFeedbackUnit	All set-ups		TRUE	-3	Int32
6-25	Terminal 54 high ref./feedb. value	App.Dependent	All set-ups		TRUE	-3	Int32
6-26	Terminal 54 filter time constant	0.001 s	All set-ups		TRUE	-3	Uint16
6-3* Analog Input 3							
6-30	Terminal X30/11 low voltage	0.07 V	All set-ups		TRUE	-2	Int16
6-31	Terminal X30/11 high voltage	10.00 V	All set-ups		TRUE	-2	Int16
6-34	Term. X30/11 low ref./feedb. value	0 ReferenceFeedbackUnit	All set-ups		TRUE	-3	Int32
6-35	Term. X30/11 high ref./feedb. value	App.Dependent	All set-ups		TRUE	-3	Int32
6-36	Term. X30/11 filter time constant	0.001 s	All set-ups		TRUE	-3	Uint16
6-4* Analog Input 4							
6-40	Terminal X30/12 low voltage	0.07 V	All set-ups		TRUE	-2	Int16
6-41	Terminal X30/12 high voltage	10.00 V	All set-ups		TRUE	-2	Int16
6-44	Term. X30/12 low ref./feedb. value	0 ReferenceFeedbackUnit	All set-ups		TRUE	-3	Int32
6-45	Term. X30/12 high ref./feedb. value	App.Dependent	All set-ups		TRUE	-3	Int32
6-46	Term. X30/12 filter time constant	0.001 s	All set-ups		TRUE	-3	Uint16
6-5* Analog Output 1							
6-50	Terminal 42 output	null	All set-ups		TRUE	-	Uint8
6-51	Terminal 42 output min scale	0.00 %	All set-ups		TRUE	-2	Int16
6-52	Terminal 42 output max scale	100.00 %	All set-ups		TRUE	-2	Int16
6-53	Term 42 output bus ctrl	0.00 %	All set-ups		TRUE	-2	N2
6-54	Terminal 42 output timeout preset	0.00 %	1 set-up		TRUE	-2	Uint16
6-55	Analog output filter	[0] Off	1 set-up		TRUE	-	Uint8
6-6* Analog Output 2							
6-60	Terminal X30/8 output	null	All set-ups		TRUE	-	Uint8
6-61	Terminal X30/8 min. scale	0.00 %	All set-ups		TRUE	-2	Int16
6-62	Terminal X30/8 max. scale	100.00 %	All set-ups		TRUE	-2	Int16
6-63	Terminal X30/8 bus control	0.00 %	All set-ups		TRUE	-2	N2
6-64	Terminal X30/8 output timeout preset	0.00 %	1 set-up		TRUE	-2	Uint16
6-7* Analog Output 3							

Danfoss A/S © Rev. 2014-07-29 All rights reserved.

Par. No. #	Parameter description	Default value	4-set-up	FC 302 only	Change during operation	Conversion index	Type
6-70	Terminal X45/1 output	null	All set-ups		TRUE	-	Uint8
6-71	Terminal X45/1 min. scale	0.00 %	All set-ups		TRUE	-2	Int16
6-72	Terminal X45/1 max. scale	100.00 %	All set-ups		TRUE	-2	Int16
6-73	Terminal X45/1 bus control	0.00 %	All set-ups		TRUE	-2	N2
6-74	Terminal X45/1 output timeout preset	0.00 %	1 set-up		TRUE	-2	Uint16
6-8* Analog Output 4							
6-80	Terminal X45/3 output	null	All set-ups		TRUE	-	Uint8
6-81	Terminal X45/3 min. scale	0.00 %	All set-ups		TRUE	-2	Int16
6-82	Terminal X45/3 max. scale	100.00 %	All set-ups		TRUE	-2	Int16
6-83	Terminal X45/3 bus control	0.00 %	All set-ups		TRUE	-2	N2
6-84	Terminal X45/3 output timeout preset	0.00 %	1 set-up		TRUE	-2	Uint16

 Danfoss A/S © Rev. 2014-07-29 All rights reserved.

6.3.9 7-** Controllers

Par. No. #	Parameter description	Default value	4-set-up	FC 302 only	Change during operation	Conversion index	Type
7-0* Speed PID Ctrl.							
7-00	Speed PID feedback source	null	All set-ups		FALSE	-	Uint8
7-02	Speed PID proportional gain	App.Dependent	All set-ups		TRUE	-3	Uint16
7-03	Speed PID integral time	App.Dependent	All set-ups		TRUE	-4	Uint32
7-04	Speed PID differentiation time	App.Dependent	All set-ups		TRUE	-4	Uint16
7-05	Speed PID diff. gain limit	5.0 N/A	All set-ups		TRUE	-1	Uint16
7-06	Speed PID lowpass filter time	App.Dependent	All set-ups		TRUE	-4	Uint16
7-07	Speed PID feedback gear ratio	1.0000 N/A	All set-ups		FALSE	-4	Uint32
7-08	Speed PID feed forward factor	0 %	All set-ups		FALSE	0	Uint16
7-09	Speed PID error correction w/ramp	300RPM	All set-ups		TRUE	67	Uint32
7-1* Torque PI Ctrl.							
7-12	Torque PI proportional gain	100 %	All set-ups		TRUE	0	Uint16
7-13	Torque PI integration time	0.020 s	All set-ups		TRUE	-3	Uint16
7-2* Process Ctrl. Feedb							
7-20	Process CL feedback 1 resource	[0] No function	All set-ups		TRUE	-	Uint8
7-22	Process CL feedback 2 resource	[0] No function	All set-ups		TRUE	-	Uint8
7-3* Process PID Ctrl.							
7-30	Process PID normal/ inverse control	[0] Normal	All set-ups		TRUE	-	Uint8
7-31	Process PID anti windup	[1] On	All set-ups		TRUE	-	Uint8
7-32	Process PID start speed	0 RPM	All set-ups		TRUE	67	Uint16
7-33	Process PID proportional gain	0.01 N/A	All set-ups		TRUE	-2	Uint16
7-34	Process PID integral time	10000.00 s	All set-ups		TRUE	-2	Uint32
7-35	Process PID differentiation time	0.00 s	All set-ups		TRUE	-2	Uint16
7-36	Process PID diff. gain limit	5.0 N/A	All set-ups		TRUE	-1	Uint16
7-38	Process PID feed forward factor	0 %	All set-ups		TRUE	0	Uint16
7-39	On reference bandwidth	5 %	All set-ups		TRUE	0	Uint8
7-4* Adv. Process PID I							
7-40	Process PID I-part reset	[0] No	All set-ups		TRUE	-	Uint8
7-41	Process PID output neg. clamp	-100 %	All set-ups		TRUE	0	Int16
7-42	Process PID output pos. clamp	100 %	All set-ups		TRUE	0	Int16
7-43	Process PID gain scale at min. ref.	100 %	All set-ups		TRUE	0	Int16
7-44	Process PID gain scale at max. ref.	100 %	All set-ups		TRUE	0	Int16
7-45	Process PID feed fwd resource	[0] No function	All set-ups		TRUE	-	Uint8
7-46	Process PID feed fwd normal/inv. ctrl.	[0] Normal	All set-ups		TRUE	-	Uint8
7-48	PCD feed forward	0 N/A	All set-ups	x	TRUE	0	Uint16
7-49	Process PID output normal/inv. ctrl.	[0] Normal	All set-ups		TRUE	-	Uint8
7-5* Adv. Process PID II							
7-50	Process PID extended PID	[1] Enabled	All set-ups		TRUE	-	Uint8
7-51	Process PID feed fwd gain	1.00 N/A	All set-ups		TRUE	-2	Uint16
7-52	Process PID feed fwd ramp up	0.01 s	All set-ups		TRUE	-2	Uint32
7-53	Process PID feed fwd ramp down	0.01 s	All set-ups		TRUE	-2	Uint32
7-56	Process PID ref. filter time	0.001 s	All set-ups		TRUE	-3	Uint16
7-57	Process PID Fb. filter time	0.001 s	All set-ups		TRUE	-3	Uint16

 Danfoss A/S © Rev. 2014-07-29 All rights reserved.

6.3.10 8-** Comm. and Options

Par. No. #	Parameter description	Default value	4-set-up	FC 302 only	Change during operation	Conversion index	Type
8-0* General Settings							
8-01	Control site	[0] Digital and ctrl.word	All set-ups		TRUE	-	Uint8
8-02	Control word source	null	All set-ups		TRUE	-	Uint8
8-03	Control word timeout time	1.0 s	1 set-up		TRUE	-1	Uint32
8-04	Control word timeout function	null	1 set-up		TRUE	-	Uint8
8-05	End-of-timeout function	[1] Resume set-up	1 set-up		TRUE	-	Uint8
8-06	Reset control word timeout	[0] Do not reset	All set-ups		TRUE	-	Uint8
8-07	Diagnosis trigger	[0] Disable	2 set-ups		TRUE	-	Uint8
8-08	Readout filtering	null	All set-ups		TRUE	-	Uint8
8-1* Ctrl. Word Settings							
8-10	Control word profile	[0] FC profile	All set-ups		TRUE	-	Uint8
8-13	Configurable status word STW	null	All set-ups		TRUE	-	Uint8
8-14	Configurable control word CTW	[1] Profile default	All set-ups		TRUE	-	Uint8
8-3* FC Port Settings							
8-30	Protocol	[0] FC	1 set-up		TRUE	-	Uint8
8-31	Address	1 N/A	1 set-up		TRUE	0	Uint8
8-32	FC port baud rate	null	1 set-up		TRUE	-	Uint8
8-33	Parity/stop bits	[0] Even Parity, 1 Stop Bit	1 set-up		TRUE	-	Uint8
8-34	Estimated cycle time	0 ms	2 set-ups		TRUE	-3	Uint32
8-35	Minimum response delay	10 ms	All set-ups		TRUE	-3	Uint16
8-36	Max response delay	App.Dependent	1 set-up		TRUE	-3	Uint16
8-37	Max inter-char delay	App.Dependent	1 set-up		TRUE	-5	Uint16
8-4* FC MC protocol set							
8-40	Telegram selection	[1] Standard telegram 1	2 set-ups		TRUE	-	Uint8
8-41	Parameters for signals	0	All set-ups		FALSE	-	Uint16
8-42	PCD write configuration	App.Dependent	All set-ups		TRUE	-	Uint16
8-43	PCD read configuration	App.Dependent	All set-ups		TRUE	-	Uint16
8-5* Digital/Bus							
8-50	Coasting select	[3] Logic OR	All set-ups		TRUE	-	Uint8
8-51	Quick stop select	[3] Logic OR	All set-ups		TRUE	-	Uint8
8-52	DC brake select	[3] Logic OR	All set-ups		TRUE	-	Uint8
8-53	Start select	[3] Logic OR	All set-ups		TRUE	-	Uint8
8-54	Reversing select	[3] Logic OR	All set-ups		TRUE	-	Uint8
8-55	Set-up select	[3] Logic OR	All set-ups		TRUE	-	Uint8
8-56	Preset reference select	[3] Logic OR	All set-ups		TRUE	-	Uint8
8-57	Profidrive OFF2 select	[3] Logic OR	All set-ups		TRUE	-	Uint8
8-58	Profidrive OFF3 select	[3] Logic OR	All set-ups		TRUE	-	Uint8
8-8* FC Port Diagnostics							
8-80	Bus message count	0 N/A	All set-ups		TRUE	0	Uint32
8-81	Bus error count	0 N/A	All set-ups		TRUE	0	Uint32
8-82	Slave messages rcvd	0 N/A	All set-ups		TRUE	0	Uint32
8-83	Slave error count	0 N/A	All set-ups		TRUE	0	Uint32
8-9* Bus Jog							
8-90	Bus jog 1 speed	100 RPM	All set-ups		TRUE	67	Uint16
8-91	Bus jog 2 speed	App.Dependent	All set-ups		TRUE	67	Uint16

Danfoss A/S © Rev. 2014-07-29 All rights reserved.

6.3.11 9-** Profibus

Par. No. #	Parameter description	Default value	4-set-up	FC 302 only	Change during operation	Conversion index	Type
9-00	Setpoint	0 N/A	All set-ups		TRUE	0	Uint16
9-07	Actual value	0 N/A	All set-ups		FALSE	0	Uint16
9-15	PCD write configuration	App.Dependent	1 set-up		TRUE	-	Uint16
9-16	PCD read configuration	App.Dependent	2 set-ups		TRUE	-	Uint16
9-18	Node address	126 N/A	1 set-up		TRUE	0	Uint8
9-22	Telegram selection	[100] none	1 set-up		TRUE	-	Uint8
9-23	Parameters for signals	0	All set-ups		TRUE	-	Uint16
9-27	Parameter edit	[1] enabled	2 set-ups		FALSE	-	Uint16
9-28	Process control	[1] Enable cyclic master	2 set-ups		FALSE	-	Uint8
9-44	Fault message counter	0 N/A	All set-ups		TRUE	0	Uint16
9-45	Fault code	0 N/A	All set-ups		TRUE	0	Uint16
9-47	Fault number	0 N/A	All set-ups		TRUE	0	Uint16
9-52	Fault situation counter	0 N/A	All set-ups		TRUE	0	Uint16
9-53	Profibus warning word	0 N/A	All set-ups		TRUE	0	V2
9-63	Actual baud rate	[255] No baudrate found	All set-ups		TRUE	-	Uint8
9-64	Device identification	0 N/A	All set-ups		TRUE	0	Uint16
9-65	Profile number	0 N/A	All set-ups		TRUE	0	OctStr[2]
9-67	Control word 1	0 N/A	All set-ups		TRUE	0	V2
9-68	Status word 1	0 N/A	All set-ups		TRUE	0	V2
9-71	Profibus save data values	[0] Off	All set-ups		TRUE	-	Uint8
9-72	ProfibusDriveReset	[0] No action	1 set-up		FALSE	-	Uint8
9-75	DO identification	0 N/A	All set-ups		TRUE	0	Uint16
9-80	Defined parameters (1)	0 N/A	All set-ups		FALSE	0	Uint16
9-81	Defined parameters (2)	0 N/A	All set-ups		FALSE	0	Uint16
9-82	Defined parameters (3)	0 N/A	All set-ups		FALSE	0	Uint16
9-83	Defined parameters (4)	0 N/A	All set-ups		FALSE	0	Uint16
9-84	Defined parameters (5)	0 N/A	All set-ups		FALSE	0	Uint16
9-90	Changed parameters (1)	0 N/A	All set-ups		FALSE	0	Uint16
9-91	Changed parameters (2)	0 N/A	All set-ups		FALSE	0	Uint16
9-92	Changed parameters (3)	0 N/A	All set-ups		FALSE	0	Uint16
9-93	Changed parameters (4)	0 N/A	All set-ups		FALSE	0	Uint16
9-94	Changed parameters (5)	0 N/A	All set-ups		FALSE	0	Uint16
9-99	Profibus revision counter	0 N/A	All set-ups		TRUE	0	Uint16

 Danfoss A/S © Rev. 2014-07-29 All rights reserved.

6.3.12 10-** CAN Fieldbus

Par. No. #	Parameter description	Default value	4-set-up	FC 302 only	Change during operation	Conversion index	Type
10-0* Common Settings							
10-00	CAN protocol	null	2 set-ups		FALSE	-	Uint8
10-01	Baud rate select	null	2 set-ups		TRUE	-	Uint8
10-02	MAC ID	App.Dependent	2 set-ups		TRUE	0	Uint8
10-05	Readout transmit error counter	0 N/A	All set-ups		TRUE	0	Uint8
10-06	Readout receive error counter	0 N/A	All set-ups		TRUE	0	Uint8
10-07	Readout bus off counter	0 N/A	All set-ups		TRUE	0	Uint8
10-1* DeviceNet							
10-10	Process data type selection	null	All set-ups		TRUE	-	Uint8
10-11	Process data config write	App.Dependent	All set-ups		TRUE	-	Uint16
10-12	Process data config read	App.Dependent	All set-ups		TRUE	-	Uint16
10-13	Warning parameter	0 N/A	All set-ups		TRUE	0	Uint16
10-14	Net reference	[0] Off	2 set-ups		TRUE	-	Uint8
10-15	Net control	[0] Off	2 set-ups		TRUE	-	Uint8
10-2* COS Filters							
10-20	COS filter 1	0 N/A	All set-ups		FALSE	0	Uint16
10-21	COS filter 2	0 N/A	All set-ups		FALSE	0	Uint16
10-22	COS filter 3	0 N/A	All set-ups		FALSE	0	Uint16
10-23	COS filter 4	0 N/A	All set-ups		FALSE	0	Uint16
10-3* Parameter Access							
10-30	Array index	0 N/A	2 set-ups		TRUE	0	Uint8
10-31	Store data values	[0] Off	All set-ups		TRUE	-	Uint8
10-32	Devicenet revision	App.Dependent	All set-ups		TRUE	0	Uint16
10-33	Store always	[0] Off	1 set-up		TRUE	-	Uint8
10-34	DeviceNet product code	App.Dependent	1 set-up		TRUE	0	Uint16
10-39	Devicenet F parameters	0 N/A	All set-ups		TRUE	0	Uint32
10-5* CANopen							
10-50	Process data config write	App.Dependent	2 set-ups		TRUE	-	Uint16
10-51	Process data config read	App.Dependent	2 set-ups		TRUE	-	Uint16

Danfoss A/S © Rev. 2014-07-29 All rights reserved.

6.3.13 12-** Ethernet

Par. No. #	Parameter description	Default value	4-set-up	FC 302 only	Change during operation	Conversion index	Type
12-0* IP Settings							
12-00	IP Address Assignment	null	2 set-ups		TRUE	-	Uint8
12-01	IP address	0 N/A	1 set-up		TRUE	0	OctStr[4]
12-02	Subnet mask	0 N/A	1 set-up		TRUE	0	OctStr[4]
12-03	Default gateway	0 N/A	1 set-up		TRUE	0	OctStr[4]
12-04	DHCP server	0 N/A	2 set-ups		TRUE	0	OctStr[4]
12-05	Lease expires	App.Dependent	All set-ups		TRUE	0	TimD
12-06	Name servers	0 N/A	1 set-up		TRUE	0	OctStr[4]
12-07	Domain name	0 N/A	1 set-up		TRUE	0	VisStr[48]
12-08	Host name	0 N/A	1 set-up		TRUE	0	VisStr[48]
12-09	Physical address	0 N/A	1 set-up		TRUE	0	VisStr[17]
12-1* Ethernet Link Parameters							
12-10	Link status	[0] No link	1 set-up		TRUE	-	Uint8
12-11	Link duration	App.Dependent	All set-ups		TRUE	0	TimD
12-12	Auto negotiation	[1] On	2 set-ups		TRUE	-	Uint8
12-13	Link speed	[0] None	2 set-ups		TRUE	-	Uint8
12-14	Link duplex	[1] Full duplex	2 set-ups		TRUE	-	Uint8
12-2* Process Data							
12-20	Control instance	App.Dependent	1 set-up		TRUE	0	Uint8
12-21	Process data config write	App.Dependent	All set-ups		TRUE	-	Uint16
12-22	Process data config read	App.Dependent	All set-ups		TRUE	-	Uint16
12-23	Process data config write size	16 N/A	All set-ups		TRUE	0	Uint32
12-24	Process data config read size	16 N/A	All set-ups		TRUE	0	Uint32
12-27	Primary master	0 N/A	1 set-up		FALSE	0	
12-28	Store data values	[0] Off	All set-ups		TRUE	-	Uint8
12-29	store always	[0] Off	1 set-up		TRUE	-	Uint8
12-3* EtherNet/IP							
12-30	Warning parameter	0 N/A	All set-ups		TRUE	0	Uint16
12-31	Net reference	[0] Off	2 set-ups		TRUE	-	Uint8
12-32	Net control	[0] Off	2 set-ups		TRUE	-	Uint8
12-33	CIP revision	App.Dependent	All set-ups		TRUE	0	Uint16
12-34	CIP product code	App.Dependent	1 set-up		TRUE	0	Uint16
12-35	EDS parameter	0 N/A	All set-ups		TRUE	0	Uint32
12-37	COS inhibit timer	0 N/A	All set-ups		TRUE	0	Uint16
12-38	COS filter	0 N/A	All set-ups		TRUE	0	Uint16
12-4* Modbus TCP							
12-40	Status parameter	0 N/A	All set-ups		TRUE	0	Uint16
12-41	Slave message count	0 N/A	All set-ups		TRUE	0	Uint32
12-42	Slave exception message count	0 N/A	All set-ups		TRUE	0	Uint32
12-5* EtherCAT							
12-50	Configured station alias	0 N/A	1 set-up		FALSE	0	Uint16
12-51	Configured station address	0 N/A	All set-ups		TRUE	0	Uint16
12-59	EtherCAT status	0 N/A	All set-ups		TRUE	0	Uint32

 Danfoss A/S © Rev. 2014-07-29 All rights reserved.

Par. No. #	Parameter description	Default value	4-set-up	FC 302 only	Change during operation	Conversion index	Type
12-8* Other Ethernet Services							
12-80	FTP server	[0] Disabled	2 set-ups		TRUE	-	Uint8
12-81	HTTP server	[0] Disabled	2 set-ups		TRUE	-	Uint8
12-82	SMTP service	[0] Disabled	2 set-ups		TRUE	-	Uint8
12-89	Transparent socket channel port	App.Dependent	2 set-ups		TRUE	0	Uint16
12-9* Advanced Ethernet Services							
12-90	Cable diagnostic	[0] Disabled	2 set-ups		TRUE	-	Uint8
12-91	MDI-X	[1] Enabled	2 set-ups		TRUE	-	Uint8
12-92	IGMP snooping	[1] Enabled	2 set-ups		TRUE	-	Uint8
12-93	Cable error length	0 N/A	1 set-up		TRUE	0	Uint16
12-94	Broadcast storm protection	-1 %	2 set-ups		TRUE	0	Int8
12-95	Broadcast storm filter	[0] Broadcast only	2 set-ups		TRUE	-	Uint8
12-96	Port mirroring	null	2 set-ups		TRUE	-	Uint8
12-98	Interface counters	4000 N/A	All set-ups		TRUE	0	Uint32
12-99	Media counters	0 N/A	All set-ups		TRUE	0	Uint32

 Danfoss A/S © Rev. 2014-07-29 All rights reserved.

6.3.14 13-** Smart Logic

Par. No. #	Parameter description	Default value	4-set-up	FC 302 only	Change during operation	Conversion index	Type
13-0* SLC Settings							
13-00	SL controller mode	null	2 set-ups		TRUE	-	Uint8
13-01	Start event	null	2 set-ups		TRUE	-	Uint8
13-02	Stop event	null	2 set-ups		TRUE	-	Uint8
13-03	Reset SLC	[0] Do not reset SLC	All set-ups		TRUE	-	Uint8
13-1* Comparators							
13-10	Comparator operand	null	2 set-ups		TRUE	-	Uint8
13-11	Comparator operator	null	2 set-ups		TRUE	-	Uint8
13-12	Comparator value	App.Dependent	2 set-ups		TRUE	-3	Int32
13-1* RS Flip Flops							
13-15	RS-FF operand S	null	2 set-ups		TRUE	-	Uint8
13-16	RS-FF operand R	null	2 set-ups		TRUE	-	Uint8
13-2* Timers							
13-20	SL controller timer	App.Dependent	1 set-up		TRUE	-3	TimD
13-4* Logic Rules							
13-40	Logic rule boolean 1	null	2 set-ups		TRUE	-	Uint8
13-41	Logic rule operator 1	null	2 set-ups		TRUE	-	Uint8
13-42	Logic rule boolean 2	null	2 set-ups		TRUE	-	Uint8
13-43	Logic rule operator 2	null	2 set-ups		TRUE	-	Uint8
13-44	Logic rule boolean 3	null	2 set-ups		TRUE	-	Uint8
13-5* States							
13-51	SL controller event	null	2 set-ups		TRUE	-	Uint8
13-52	SL controller action	null	2 set-ups		TRUE	-	Uint8

Danfoss A/S © Rev. 2014-07-29 All rights reserved.

6.3.15 14-** Special Functions

Par. No. #	Parameter description	Default value	4-set-up	FC 302 only	Change during operation	Conversion index	Type
14-0* Inverter Switching							
14-00	Switching pattern	null	All set-ups		TRUE	-	Uint8
14-01	Switching frequency	null	All set-ups		TRUE	-	Uint8
14-03	Overmodulation	[1] On	All set-ups		FALSE	-	Uint8
14-04	PWM random	[0] Off	All set-ups		TRUE	-	Uint8
14-06	Dead time compensation	[1] On	All set-ups		TRUE	-	Uint8
14-1* Mains On/Off							
14-10	Mains failure	[0] No function	All set-ups		FALSE	-	Uint8
14-11	Mains voltage at mains fault	App.Dependent	All set-ups		TRUE	0	Uint16
14-12	Function at mains imbalance	[0] Trip	All set-ups		TRUE	-	Uint8
14-13	Mains failure step factor	1.0 N/A	All set-ups		TRUE	-1	Uint8
14-14	Kin. backup time out	60 s	All set-ups		TRUE	0	Uint8
14-2* Trip Reset							
14-20	Reset mode	[0] Manual reset	All set-ups		TRUE	-	Uint8
14-21	Automatic restart time	App.Dependent	All set-ups		TRUE	0	Uint16
14-22	Operation mode	[0] Normal operation	All set-ups		TRUE	-	Uint8
14-23	Typecode setting	null	2 set-ups		FALSE	-	Uint8
14-24	Trip delay at current limit	60 s	All set-ups		TRUE	0	Uint8
14-25	Trip delay at torque limit	60 s	All set-ups		TRUE	0	Uint8
14-26	Trip delay at inverter fault	App.Dependent	All set-ups		TRUE	0	Uint8
14-28	Production settings	[0] No action	All set-ups		TRUE	-	Uint8
14-29	Service code	0 N/A	All set-ups		TRUE	0	Int32
14-3* Current Limit Ctrl.							
14-30	Current lim ctrl, proportional gain	100 %	All set-ups		FALSE	0	Uint16
14-31	Current lim ctrl, integration time	0.020 s	All set-ups		FALSE	-3	Uint16
14-32	Current lim ctrl, filter time	1.0 ms	All set-ups		TRUE	-4	Uint16
14-35	Stall protection	[1] Enabled	All set-ups		FALSE	-	Uint8
14-4* Energy Optimising							
14-40	VT level	66 %	All set-ups		FALSE	0	Uint8
14-41	AEO minimum magnetisation	App.Dependent	All set-ups		TRUE	0	Uint8
14-42	Minimum AEO frequency	10 Hz	All set-ups		TRUE	0	Uint8
14-43	Motor cosphi	App.Dependent	All set-ups		TRUE	-2	Uint16
14-5* Environment							
14-50	RFI filter	[1] On	1 set-up	x	FALSE	-	Uint8
14-51	DC link compensation	[1] On	1 set-up		TRUE	-	Uint8
14-52	Fan control	[0] Auto	All set-ups		TRUE	-	Uint8
14-53	Fan monitor	[1] Warning	All set-ups		TRUE	-	Uint8
14-55	Output filter	[0] No Filter	All set-ups		FALSE	-	Uint8
14-56	Capacitance output filter	App.Dependent	All set-ups		FALSE	-7	Uint16
14-57	Inductance output filter	App.Dependent	All set-ups		FALSE	-6	Uint16
14-59	Actual number of inverter units	App.Dependent	1 set-up	x	FALSE	0	Uint8

Danfoss A/S © Rev. 2014-07-29 All rights reserved.

Par. No. #	Parameter description	Default value	4-set-up	FC 302 only	Change during operation	Conversion index	Type
14-7* Compatibility							
14-72	Legacy alarm word	0 N/A	All set-ups		FALSE	0	Uint32
14-73	Legacy warning word	0 N/A	All set-ups		FALSE	0	Uint32
14-74	Leg. ext. status word	0 N/A	All set-ups		FALSE	0	Uint32
14-8* Options							
14-80	Option supplied by external 24 V DC	[1] Yes	2 set-ups		FALSE	-	Uint8
14-89	Option detection	[0] Protect option config.	1 set-up		TRUE	-	Uint8
14-9* Fault Settings							
14-90	Fault level	null	1 set-up		TRUE	-	Uint8

 Danfoss A/S © Rev. 2014-07-29 All rights reserved.

6.3.16 15-** Drive Information

Par. No. #	Parameter description	Default value	4-set-up	FC 302 only	Change during operation	Conversion index	Type
15-0* Operating Data							
15-00	Operating hours	0 h	All set-ups		FALSE	74	Uint32
15-01	Running hours	0 h	All set-ups		FALSE	74	Uint32
15-02	kWh counter	0 kWh	All set-ups		FALSE	75	Uint32
15-03	Power ups	0 N/A	All set-ups		FALSE	0	Uint32
15-04	Over temps	0 N/A	All set-ups		FALSE	0	Uint16
15-05	Over volts	0 N/A	All set-ups		FALSE	0	Uint16
15-06	Reset kWh counter	[0] Do not reset	All set-ups		TRUE	-	Uint8
15-07	Reset running hours counter	[0] Do not reset	All set-ups		TRUE	-	Uint8
15-1* Data Log Settings							
15-10	Logging source	0	2 set-ups		TRUE	-	Uint16
15-11	Logging interval	App.Dependent	2 set-ups		TRUE	-3	TimD
15-12	Trigger event	[0] False	1 set-up		TRUE	-	Uint8
15-13	Logging mode	[0] Log always	2 set-ups		TRUE	-	Uint8
15-14	Samples before trigger	50 N/A	2 set-ups		TRUE	0	Uint8
15-2* Historic Log							
15-20	Historic log: event	0 N/A	All set-ups		FALSE	0	Uint8
15-21	Historic log: value	0 N/A	All set-ups		FALSE	0	Uint32
15-22	Historic log: time	0 ms	All set-ups		FALSE	-3	Uint32
15-3* Fault Log							
15-30	Fault log: error code	0 N/A	All set-ups		FALSE	0	Uint8
15-31	Fault log: value	0 N/A	All set-ups		FALSE	0	Int16
15-32	Fault log: time	0 s	All set-ups		FALSE	0	Uint32
15-4* Drive Identification							
15-40	FC type	0 N/A	All set-ups		FALSE	0	VisStr[6]
15-41	Power section	0 N/A	All set-ups		FALSE	0	VisStr[20]
15-42	Voltage	0 N/A	All set-ups		FALSE	0	VisStr[20]
15-43	Software version	0 N/A	All set-ups		FALSE	0	VisStr[5]
15-44	Ordered typecode string	0 N/A	All set-ups		FALSE	0	VisStr[40]
15-45	Actual typecode string	0 N/A	All set-ups		FALSE	0	VisStr[40]
15-46	Frequency converter ordering no	0 N/A	All set-ups		FALSE	0	VisStr[8]
15-47	Power card ordering no	0 N/A	All set-ups		FALSE	0	VisStr[8]
15-48	LCP ID no	0 N/A	All set-ups		FALSE	0	VisStr[20]
15-49	SW ID control card	0 N/A	All set-ups		FALSE	0	VisStr[20]
15-50	SW ID power card	0 N/A	All set-ups		FALSE	0	VisStr[20]
15-51	Frequency converter serial number	0 N/A	All set-ups		FALSE	0	VisStr[10]
15-53	Power card serial number	0 N/A	All set-ups		FALSE	0	VisStr[19]
15-59	CSIV filename	App.Dependent	1 set-up		FALSE	0	VisStr[16]

Danfoss A/S © Rev. 2014-07-29 All rights reserved.

Par. No. #	Parameter description	Default value	4-set-up	FC 302 only	Change during operation	Conversion index	Type
15-6* Option Ident							
15-60	Option mounted	0 N/A	All set-ups		FALSE	0	VisStr[30]
15-61	Option SW version	0 N/A	All set-ups		FALSE	0	VisStr[20]
15-62	Option ordering no	0 N/A	All set-ups		FALSE	0	VisStr[8]
15-63	Option serial no	0 N/A	All set-ups		FALSE	0	VisStr[18]
15-70	Option in slot A	0 N/A	All set-ups		FALSE	0	VisStr[30]
15-71	Slot A option SW version	0 N/A	All set-ups		FALSE	0	VisStr[20]
15-72	Option in slot B	0 N/A	All set-ups		FALSE	0	VisStr[30]
15-73	Slot B option SW version	0 N/A	All set-ups		FALSE	0	VisStr[20]
15-74	Option in slot C0	0 N/A	All set-ups		FALSE	0	VisStr[30]
15-75	Slot C0 option SW version	0 N/A	All set-ups		FALSE	0	VisStr[20]
15-76	Option in slot C1	0 N/A	All set-ups		FALSE	0	VisStr[30]
15-77	Slot C1 option SW version	0 N/A	All set-ups		FALSE	0	VisStr[20]
15-9* Parameter Info							
15-92	Defined parameters	0 N/A	All set-ups		FALSE	0	Uint16
15-93	Modified parameters	0 N/A	All set-ups		FALSE	0	Uint16
15-98	Drive identification	0 N/A	All set-ups		FALSE	0	VisStr[40]
15-99	Parameter metadata	0 N/A	All set-ups		FALSE	0	Uint16

Danfoss A/S © Rev. 2014-07-29 All rights reserved.

6.3.17 16-** Data Readouts

Par. No. #	Parameter description	Default value	4-set-up	FC 302 only	Change during operation	Conversion index	Type
16-0* General Status							
16-00	Control word	0 N/A	All set-ups		FALSE	0	V2
16-01	Reference [unit]	0.000 ReferenceFeedbackUnit	All set-ups		FALSE	-3	Int32
16-02	Reference %	0.0 %	All set-ups		FALSE	-1	Int16
16-03	Status word	0 N/A	All set-ups		FALSE	0	V2
16-05	Main actual value [%]	0.00 %	All set-ups		FALSE	-2	N2
16-09	Custom readout	0.00 CustomReadoutUnit	All set-ups		FALSE	-2	Int32
16-1* Motor Status							
16-10	Power [kW]	0.00 kW	All set-ups		FALSE	1	Int32
16-11	Power [hp]	0.00 hp	All set-ups		FALSE	-2	Int32
16-12	Motor voltage	0.0 V	All set-ups		FALSE	-1	Uint16
16-13	Frequency	0.0 Hz	All set-ups		FALSE	-1	Uint16
16-14	Motor current	0.00 A	All set-ups		FALSE	-2	Int32
16-15	Frequency [%]	0.00 %	All set-ups		FALSE	-2	N2
16-16	Torque [Nm]	0.0 Nm	All set-ups		FALSE	-1	Int16
16-17	Speed [RPM]	0 RPM	All set-ups		FALSE	67	Int32
16-18	Motor thermal	0 %	All set-ups		FALSE	0	Uint8
16-19	KTY sensor temperature	0 °C	All set-ups		FALSE	100	Int16
16-20	Motor angle	0 N/A	All set-ups		TRUE	0	Uint16
16-21	Torque [%] high res.	0.0 %	All set-ups		FALSE	-1	Int16
16-22	Torque [%]	0 %	All set-ups		FALSE	0	Int16
16-25	Torque [Nm] high	0.0 Nm	All set-ups		FALSE	-1	Int32
16-3* Drive Status							
16-30	DC link voltage	0 V	All set-ups		FALSE	0	Uint16
16-32	Brake energy/s	0.000 kW	All set-ups		FALSE	0	Uint32
16-33	Brake energy/2 min	0.000 kW	All set-ups		FALSE	0	Uint32
16-34	Heatsink temp.	0 °C	All set-ups		FALSE	100	Uint8
16-35	Inverter thermal	0 %	All set-ups		FALSE	0	Uint8
16-36	Inv. nom. current	App.Dependent	All set-ups		FALSE	-2	Uint32
16-37	Inv. max. current	App.Dependent	All set-ups		FALSE	-2	Uint32
16-38	SL controller state	0 N/A	All set-ups		FALSE	0	Uint8
16-39	Control card temp.	0 °C	All set-ups		FALSE	100	Uint8
16-40	Logging buffer full	[0] No	All set-ups		TRUE	-	Uint8
16-41	LCP bottom statusline	0 N/A	All set-ups		TRUE	0	VisStr[50]
16-49	Current fault source	0 N/A	All set-ups	x	TRUE	0	Uint8
16-5* Ref. & Feedb.							
16-50	External reference	0.0 N/A	All set-ups		FALSE	-1	Int16
16-51	Pulse reference	0.0 N/A	All set-ups		FALSE	-1	Int16
16-52	Feedback [unit]	0.000 ReferenceFeedbackUnit	All set-ups		FALSE	-3	Int32
16-53	Digi pot reference	0.00 N/A	All set-ups		FALSE	-2	Int16
16-57	Feedback [RPM]	0 RPM	All set-ups		FALSE	67	Int32

Danfoss A/S © Rev. 2014-07-29 All rights reserved.

Par. No. #	Parameter description	Default value	4-set-up	FC 302 only	Change during operation	Conversion index	Type
16-6* Inputs & Outputs							
16-60	Digital input	0 N/A	All set-ups		FALSE	0	Uint16
16-61	Terminal 53 switch setting	[0] Current	All set-ups		FALSE	-	Uint8
16-62	Analog input 53	0.000 N/A	All set-ups		FALSE	-3	Int32
16-63	Terminal 54 switch setting	[0] Current	All set-ups		FALSE	-	Uint8
16-64	Analog input 54	0.000 N/A	All set-ups		FALSE	-3	Int32
16-65	Analog output 42 [mA]	0.000 N/A	All set-ups		FALSE	-3	Int16
16-66	Digital output [bin]	0 N/A	All set-ups		FALSE	0	Int16
16-67	Freq. input #29 [Hz]	0 N/A	All set-ups	x	FALSE	0	Int32
16-68	Freq. input #33 [Hz]	0 N/A	All set-ups		FALSE	0	Int32
16-69	Pulse output #27 [Hz]	0 N/A	All set-ups		FALSE	0	Int32
16-70	Pulse output #29 [Hz]	0 N/A	All set-ups	x	FALSE	0	Int32
16-71	Relay output [bin]	0 N/A	All set-ups		FALSE	0	Int16
16-72	Counter A	0 N/A	All set-ups		TRUE	0	Int32
16-73	Counter B	0 N/A	All set-ups		TRUE	0	Int32
16-74	Prec. stop counter	0 N/A	All set-ups		TRUE	0	Uint32
16-75	Analog in X30/11	0.000 N/A	All set-ups		FALSE	-3	Int32
16-76	Analog in X30/12	0.000 N/A	All set-ups		FALSE	-3	Int32
16-77	Analog out X30/8 [mA]	0.000 N/A	All set-ups		FALSE	-3	Int16
16-78	Analog out X45/1 [mA]	0.000 N/A	All set-ups		FALSE	-3	Int16
16-79	Analog out X45/3 [mA]	0.000 N/A	All set-ups		FALSE	-3	Int16
16-8* Fieldbus & FC Port							
16-80	Fieldbus CTW 1	0 N/A	All set-ups		FALSE	0	V2
16-82	Fieldbus REF 1	0 N/A	All set-ups		FALSE	0	N2
16-84	Comm. option STW	0 N/A	All set-ups		FALSE	0	V2
16-85	FC port CTW 1	0 N/A	All set-ups		FALSE	0	V2
16-86	FC port REF 1	0 N/A	All set-ups		FALSE	0	N2
16-9* Diagnosis Readouts							
16-90	Alarm word	0 N/A	All set-ups		FALSE	0	Uint32
16-91	Alarm word 2	0 N/A	All set-ups		FALSE	0	Uint32
16-92	Warning word	0 N/A	All set-ups		FALSE	0	Uint32
16-93	Warning word 2	0 N/A	All set-ups		FALSE	0	Uint32
16-94	Ext. status word	0 N/A	All set-ups		FALSE	0	Uint32

Danfoss A/S © Rev. 2014-07-29 All rights reserved.

6.3.18 17-** Motor Feedb.Option

Par. No. #	Parameter description	Default value	4-set-up	FC 302 only	Change during operation	Conversion index	Type
17-1* Inc. Enc. Interface							
17-10	Signal type	[1] RS422 (5V TTL)	All set-ups		FALSE	-	Uint8
17-11	Resolution (PPR)	1024 N/A	All set-ups		FALSE	0	Uint16
17-2* Abs. Enc. Interface							
17-20	Protocol selection	[0] None	All set-ups		FALSE	-	Uint8
17-21	Resolution (positions/rev)	App.Dependent	All set-ups		FALSE	0	Uint32
17-24	SSI data length	13 N/A	All set-ups		FALSE	0	Uint8
17-25	Clock rate	App.Dependent	All set-ups		FALSE	3	Uint16
17-26	SSI data format	[0] Gray code	All set-ups		FALSE	-	Uint8
17-34	HIPERFACE baudrate	[4] 9600	All set-ups		FALSE	-	Uint8
17-5* Resolver Interface							
17-50	Poles	2 N/A	1 set-up		FALSE	0	Uint8
17-51	Input voltage	7.0 V	1 set-up		FALSE	-1	Uint8
17-52	Input frequency	10.0 kHz	1 set-up		FALSE	2	Uint8
17-53	Transformation ratio	0.5 N/A	1 set-up		FALSE	-1	Uint8
17-56	Encoder sim. resolution	[0] Disabled	1 set-up		FALSE	-	Uint8
17-59	Resolver interface	[0] Disabled	All set-ups		FALSE	-	Uint8
17-6* Monitoring and App.							
17-60	Feedback direction	[0] Clockwise	All set-ups		FALSE	-	Uint8
17-61	Feedback signal monitoring	[1] Warning	All set-ups		TRUE	-	Uint8

Danfoss A/S © Rev. 2014-07-29 All rights reserved.

6.3.19 18-** Data Readouts 2

Par. No. #	Parameter description	Default value	4-set-up	FC 302 only	Change during operation	Conversion index	Type
18-3* Analog Readouts							
18-36	Analog input X48/2 [mA]	0.000 N/A	All set-ups		TRUE	-3	Int32
18-37	Temp. input X48/4	0 N/A	All set-ups		TRUE	0	Int16
18-38	Temp. input X48/7	0 N/A	All set-ups		TRUE	0	Int16
18-39	Temp. input X48/10	0 N/A	All set-ups		TRUE	0	Int16
18-6* Inputs & Outputs 2							
18-60	Digital input 2	0 N/A	All set-ups		FALSE	0	Uint16
18-90 PID Readouts							
18-90	Process PID error	0.0 %	All set-ups		FALSE	-1	Int16
18-91	Process PID output	0.0 %	All set-ups		FALSE	-1	Int16
18-92	Process PID clamped output	0.0 %	All set-ups		FALSE	-1	Int16
18-93	Process PID gain scaled output	0.0 %	All set-ups		FALSE	-1	Int16

 Danfoss A/S © Rev. 2014-07-29 All rights reserved.

6.3.20 30-** Special Features

Par. No. #	Parameter description	Default value	4-set-up	FC 302 only	Change during operation	Conversion index	Type
30-0* Wobbler							
30-00	Wobble mode	[0] Abs. Freq., Abs. Time	All set-ups		FALSE	-	Uint8
30-01	Wobble delta frequency [Hz]	5.0 Hz	All set-ups		TRUE	-1	Uint8
30-02	Wobble delta frequency [%]	25 %	All set-ups		TRUE	0	Uint8
30-03	Wobble delta freq. scaling resource	[0] No function	All set-ups		TRUE	-	Uint8
30-04	Wobble jump frequency [Hz]	0.0 Hz	All set-ups		TRUE	-1	Uint8
30-05	Wobble jump frequency [%]	0 %	All set-ups		TRUE	0	Uint8
30-06	Wobble jump time	App.Dependent	All set-ups		TRUE	-3	Uint16
30-07	Wobble sequence time	10.0 s	All set-ups		TRUE	-1	Uint16
30-08	Wobble up/down time	5.0 s	All set-ups		TRUE	-1	Uint16
30-09	Wobble random function	[0] Off	All set-ups		TRUE	-	Uint8
30-10	Wobble ratio	1.0 N/A	All set-ups		TRUE	-1	Uint8
30-11	Wobble random ratio max.	10.0 N/A	All set-ups		TRUE	-1	Uint8
30-12	Wobble random ratio min.	0.1 N/A	All set-ups		TRUE	-1	Uint8
30-19	Wobble delta freq. scaled	0.0 Hz	All set-ups		FALSE	-1	Uint16
30-2* Adv. Start Adjust							
30-20	High starting torque time [s]	0.00 s	All set-ups	x	TRUE	-2	Uint8
30-21	High starting torque current [%]	100.0 %	All set-ups	x	TRUE	-1	Uint32
30-22	Locked rotor protection	[0] Off	All set-ups	x	TRUE	-	Uint8
30-23	Locked rotor detection time [s]	0.10 s	All set-ups	x	TRUE	-2	Uint8
30-8* Compatibility (I)							
30-80	d-axis inductance (Ld)	App.Dependent	All set-ups	x	FALSE	-6	Int32
30-81	Brake resistor (ohm)	App.Dependent	1 set-up		TRUE	-2	Uint32
30-83	Speed PID proportional gain	App.Dependent	All set-ups		TRUE	-4	Uint32
30-84	Process PID proportional gain	0.100 N/A	All set-ups		TRUE	-3	Uint16

 Danfoss A/S © Rev. 2014-07-29 All rights reserved.

6.3.21 32-** MCO Basic Settings

Par. No. #	Parameter description	Default value	4-set-up	FC 302 only	Change during operation	Conversion index	Type
32-0* Encoder 2							
32-00	Incremental signal type	[1] RS422 (5V TTL)	2 set-ups		TRUE	-	Uint8
32-01	Incremental resolution	1024 N/A	2 set-ups		TRUE	0	Uint32
32-02	Absolute protocol	[0] None	2 set-ups		TRUE	-	Uint8
32-03	Absolute resolution	8192 N/A	2 set-ups		TRUE	0	Uint32
32-04	Absolute encoder baudrate X55	[4] 9600	All set-ups		FALSE	-	Uint8
32-05	Absolute encoder data length	25 N/A	2 set-ups		TRUE	0	Uint8
32-06	Absolute encoder clock frequency	262.000 kHz	2 set-ups		TRUE	0	Uint32
32-07	Absolute encoder clock generation	[1] On	2 set-ups		TRUE	-	Uint8
32-08	Absolute encoder cable length	0 m	2 set-ups		TRUE	0	Uint16
32-09	Encoder monitoring	[0] Off	2 set-ups		TRUE	-	Uint8
32-10	Rotational direction	[1] No action	2 set-ups		TRUE	-	Uint8
32-11	User unit denominator	1 N/A	2 set-ups		TRUE	0	Uint32
32-12	User unit numerator	1 N/A	2 set-ups		TRUE	0	Uint32
32-13	Enc.2 control	[0] No soft changing	2 set-ups		TRUE	-	Uint8
32-14	Enc.2 node ID	127 N/A	2 set-ups		TRUE	0	Uint8
32-15	Enc.2 CAN guard	null	2 set-ups		TRUE	-	Uint8
32-3* Encoder 1							
32-30	Incremental signal type	[1] RS422 (5V TTL)	2 set-ups		TRUE	-	Uint8
32-31	Incremental resolution	1024 N/A	2 set-ups		TRUE	0	Uint32
32-32	Absolute protocol	[0] None	2 set-ups		TRUE	-	Uint8
32-33	Absolute resolution	8192 N/A	2 set-ups		TRUE	0	Uint32
32-35	Absolute encoder data length	25 N/A	2 set-ups		TRUE	0	Uint8
32-36	Absolute encoder clock frequency	262.000 kHz	2 set-ups		TRUE	0	Uint32
32-37	Absolute encoder clock generation	[1] On	2 set-ups		TRUE	-	Uint8
32-38	Absolute encoder cable length	0 m	2 set-ups		TRUE	0	Uint16
32-39	Encoder monitoring	[0] Off	2 set-ups		TRUE	-	Uint8
32-40	Encoder termination	[1] On	2 set-ups		TRUE	-	Uint8
32-43	Enc.1 control	[0] No soft changing	2 set-ups		TRUE	-	Uint8
32-44	Enc.1 node ID	127 N/A	2 set-ups		TRUE	0	Uint8
32-45	Enc.1 CAN guard	null	2 set-ups		TRUE	-	Uint8
32-5* Feedback Source							
32-50	Source slave	[2] Encoder 2	2 set-ups		TRUE	-	Uint8
32-51	MCO 302 last will	[1] Trip	2 set-ups		TRUE	-	Uint8
32-52	Source master	[1] Encoder 1 X56	2 set-ups		TRUE	-	Uint8

 Danfoss A/S © Rev. 2014-07-29 All rights reserved.

Par. No. #	Parameter description	Default value	4-set-up	FC 302 only	Change during operation	Conversion index	Type
32-6* PID Controller							
32-60	Proportional factor	30 N/A	2 set-ups		TRUE	0	Uint32
32-61	Derivative factor	0 N/A	2 set-ups		TRUE	0	Uint32
32-62	Integral factor	0 N/A	2 set-ups		TRUE	0	Uint32
32-63	Limit value for integral sum	1000 N/A	2 set-ups		TRUE	0	Uint16
32-64	PID bandwidth	1000 N/A	2 set-ups		TRUE	0	Uint16
32-65	Velocity feed-forward	0 N/A	2 set-ups		TRUE	0	Uint32
32-66	Acceleration feed-forward	0 N/A	2 set-ups		TRUE	0	Uint32
32-67	Max. tolerated position error	20000 N/A	2 set-ups		TRUE	0	Uint32
32-68	Reverse behaviour for slave	[0] Reversing allowed	2 set-ups		TRUE	-	Uint8
32-69	Sampling time for PID control	1 ms	2 set-ups		TRUE	-3	Uint16
32-70	Scan time for profile generator	1 ms	2 set-ups		TRUE	-3	Uint8
32-71	Size of the control window (activation)	0 N/A	2 set-ups		TRUE	0	Uint32
32-72	Size of the control window (deactiv.)	0 N/A	2 set-ups		TRUE	0	Uint32
32-73	Integral limit filter time	0 ms	2 set-ups		TRUE	-3	Int16
32-74	Position error filter time	0 ms	2 set-ups		TRUE	-3	Int16
32-8* Velocity & Accel.							
32-80	Maximum velocity (encoder)	1500 RPM	2 set-ups		TRUE	67	Uint32
32-81	Shortest ramp	1.000 s	2 set-ups		TRUE	-3	Uint32
32-82	Ramp type	[0] Linear	2 set-ups		TRUE	-	Uint8
32-83	Velocity resolution	100 N/A	2 set-ups		TRUE	0	Uint32
32-84	Default velocity	50 N/A	2 set-ups		TRUE	0	Uint32
32-85	Default acceleration	50 N/A	2 set-ups		TRUE	0	Uint32
32-86	Acc. up for limited jerk	100 ms	2 set-ups		TRUE	-3	Uint32
32-87	Acc. down for limited jerk	0 ms	2 set-ups		TRUE	-3	Uint32
32-88	Dec. up for limited jerk	0 ms	2 set-ups		TRUE	-3	Uint32
32-89	Dec. down for limited jerk	0 ms	2 set-ups		TRUE	-3	Uint32
32-9* Development							
32-90	Debug source	[0] Controlcard	2 set-ups		TRUE	-	Uint8

Danfoss A/S © Rev. 2014-07-29 All rights reserved.

6.3.22 33-** MCO Adv. Settings

Par. No. #	Parameter description	Default value	4-set-up	FC 302 only	Change during operation	Conversion index	Type
33-0* Home Motion							
33-00	Force HOME	[0] Home not forced	2 set-ups		TRUE	-	Uint8
33-01	Zero point offset from home pos.	0 N/A	2 set-ups		TRUE	0	Int32
33-02	Ramp for home motion	10 N/A	2 set-ups		TRUE	0	Uint32
33-03	Velocity of home motion	10 N/A	2 set-ups		TRUE	0	Int32
33-04	Behaviour during home motion	[0] Revers and index	2 set-ups		TRUE	-	Uint8
33-1* Synchronization							
33-10	Sync factor master	1 N/A	2 set-ups		TRUE	0	Int32
33-11	Sync factor slave	1 N/A	2 set-ups		TRUE	0	Int32
33-12	Position offset for synchronization	0 N/A	2 set-ups		TRUE	0	Int32
33-13	Accuracy window for position sync.	1000 N/A	2 set-ups		TRUE	0	Int32
33-14	Relative slave velocity limit	0 %	2 set-ups		TRUE	0	Uint8
33-15	Marker number for master	1 N/A	2 set-ups		TRUE	0	Uint16
33-16	Marker number for slave	1 N/A	2 set-ups		TRUE	0	Uint16
33-17	Master marker distance	4096 N/A	2 set-ups		TRUE	0	Uint32
33-18	Slave marker distance	4096 N/A	2 set-ups		TRUE	0	Uint32
33-19	Master marker type	[0] Encoder Z positive	2 set-ups		TRUE	-	Uint8
33-20	Slave marker type	[0] Encoder Z positive	2 set-ups		TRUE	-	Uint8
33-21	Master marker tolerance window	0 N/A	2 set-ups		TRUE	0	Uint32
33-22	Slave marker tolerance window	0 N/A	2 set-ups		TRUE	0	Uint32
33-23	Start behaviour for marker sync	[0] Start Function 1	2 set-ups		TRUE	-	Uint16
33-24	Marker number for fault	10 N/A	2 set-ups		TRUE	0	Uint16
33-25	Marker number for ready	1 N/A	2 set-ups		TRUE	0	Uint16
33-26	Velocity filter	0 us	2 set-ups		TRUE	-6	Int32
33-27	Offset filter time	0 ms	2 set-ups		TRUE	-3	Uint32
33-28	Marker filter configuration	[0] Marker filter 1	2 set-ups		TRUE	-	Uint8
33-29	Filter time for marker filter	0 ms	2 set-ups		TRUE	-3	Int32
33-30	Maximum marker correction	0 N/A	2 set-ups		TRUE	0	Uint32
33-31	Synchronisation type	[0] Standard	2 set-ups		TRUE	-	Uint8
33-32	Feed forward velocity adaptation	0 N/A	2 set-ups		TRUE	0	Uint32
33-33	Velocity filter window	0 N/A	2 set-ups		TRUE	0	Uint32
33-34	Slave marker filter time	0 ms	2 set-ups		TRUE	-3	Uint32
33-4* Limit Handling							
33-40	Behaviour at end limit switch	[0] Call error handler	2 set-ups		TRUE	-	Uint8
33-41	Negative software end limit	-500000 N/A	2 set-ups		TRUE	0	Int32
33-42	Positive software end limit	500000 N/A	2 set-ups		TRUE	0	Int32
33-43	Negative software end limit active	[0] Inactive	2 set-ups		TRUE	-	Uint8
33-44	Positive software end limit active	[0] Inactive	2 set-ups		TRUE	-	Uint8
33-45	Time in target window	0 ms	2 set-ups		TRUE	-3	Uint8
33-46	Target window limitvalue	1 N/A	2 set-ups		TRUE	0	Uint16
33-47	Size of target window	0 N/A	2 set-ups		TRUE	0	Uint16

Danfoss A/S © Rev. 2014-07-29 All rights reserved.

Par. No. #	Parameter description	Default value	4-set-up	FC 302 only	Change during operation	Conversion index	Type
33-5* I/O Configuration							
33-50	Terminal X57/1 digital input	[0] No function	2 set-ups		TRUE	-	Uint8
33-51	Terminal X57/2 digital input	[0] No function	2 set-ups		TRUE	-	Uint8
33-52	Terminal X57/3 digital input	[0] No function	2 set-ups		TRUE	-	Uint8
33-53	Terminal X57/4 digital input	[0] No function	2 set-ups		TRUE	-	Uint8
33-54	Terminal X57/5 digital input	[0] No function	2 set-ups		TRUE	-	Uint8
33-55	Terminal X57/6 digital input	[0] No function	2 set-ups		TRUE	-	Uint8
33-56	Terminal X57/7 digital input	[0] No function	2 set-ups		TRUE	-	Uint8
33-57	Terminal X57/8 digital input	[0] No function	2 set-ups		TRUE	-	Uint8
33-58	Terminal X57/9 digital input	[0] No function	2 set-ups		TRUE	-	Uint8
33-59	Terminal X57/10 digital input	[0] No function	2 set-ups		TRUE	-	Uint8
33-60	Terminal X59/1 and X59/2 mode	[1] Output	2 set-ups		FALSE	-	Uint8
33-61	Terminal X59/1 digital input	[0] No function	2 set-ups		TRUE	-	Uint8
33-62	Terminal X59/2 digital input	[0] No function	2 set-ups		TRUE	-	Uint8
33-63	Terminal X59/1 digital output	[0] No function	2 set-ups		TRUE	-	Uint8
33-64	Terminal X59/2 digital output	[0] No function	2 set-ups		TRUE	-	Uint8
33-65	Terminal X59/3 digital output	[0] No function	2 set-ups		TRUE	-	Uint8
33-66	Terminal X59/4 digital output	[0] No function	2 set-ups		TRUE	-	Uint8
33-67	Terminal X59/5 digital output	[0] No function	2 set-ups		TRUE	-	Uint8
33-68	Terminal X59/6 digital output	[0] No function	2 set-ups		TRUE	-	Uint8
33-69	Terminal X59/7 digital output	[0] No function	2 set-ups		TRUE	-	Uint8
33-70	Terminal X59/8 digital output	[0] No function	2 set-ups		TRUE	-	Uint8
33-8* Global Parameters							
33-80	Activated program number	-1 N/A	2 set-ups		TRUE	0	Int8
33-81	Power-up state	[1] Motor on	2 set-ups		TRUE	-	Uint8
33-82	Drive status monitoring	[1] On	2 set-ups		TRUE	-	Uint8
33-83	Behaviour after error	[0] Coast	2 set-ups		TRUE	-	Uint8
33-84	Behaviour after esc.	[0] Controlled stop	2 set-ups		TRUE	-	Uint8
33-85	MCO supplied by external 24 V DC	[0] No	2 set-ups		TRUE	-	Uint8
33-86	Terminal at alarm	[0] Relay 1	2 set-ups		TRUE	-	Uint8
33-87	Terminal state at alarm	[0] Do nothing	2 set-ups		TRUE	-	Uint8
33-88	Status word at alarm	0 N/A	2 set-ups		TRUE	0	Uint16
33-9* MCO Port Settings							
33-90	X62 MCO CAN node ID	127 N/A	2 set-ups		TRUE	0	Uint8
33-91	X62 MCO CAN baud rate	[20] 125 Kbps	2 set-ups		TRUE	-	Uint8
33-94	X60 MCO RS485 serial termination	[0] Off	2 set-ups		TRUE	-	Uint8
33-95	X60 MCO RS485 serial baud rate	[2] 9600 Baud	2 set-ups		TRUE	-	Uint8

 Danfoss A/S © Rev. 2014-07-29 All rights reserved.

6.3.23 34-** MCO Data Readouts

Par. No. #	Parameter description	Default value	4-set-up	FC 302 only	Change during operation	Conversion index	Type
34-0* PCD Write Par.							
34-01	PCD 1 write to MCO	0 N/A	All set-ups		TRUE	0	Uint16
34-02	PCD 2 write to MCO	0 N/A	All set-ups		TRUE	0	Uint16
34-03	PCD 3 write to MCO	0 N/A	All set-ups		TRUE	0	Uint16
34-04	PCD 4 write to MCO	0 N/A	All set-ups		TRUE	0	Uint16
34-05	PCD 5 write to MCO	0 N/A	All set-ups		TRUE	0	Uint16
34-06	PCD 6 write to MCO	0 N/A	All set-ups		TRUE	0	Uint16
34-07	PCD 7 write to MCO	0 N/A	All set-ups		TRUE	0	Uint16
34-08	PCD 8 write to MCO	0 N/A	All set-ups		TRUE	0	Uint16
34-09	PCD 9 write to MCO	0 N/A	All set-ups		TRUE	0	Uint16
34-10	PCD 10 write to MCO	0 N/A	All set-ups		TRUE	0	Uint16
34-2* PCD Read Par.							
34-21	PCD 1 read from MCO	0 N/A	All set-ups		TRUE	0	Uint16
34-22	PCD 2 read from MCO	0 N/A	All set-ups		TRUE	0	Uint16
34-23	PCD 3 read from MCO	0 N/A	All set-ups		TRUE	0	Uint16
34-24	PCD 4 read from MCO	0 N/A	All set-ups		TRUE	0	Uint16
34-25	PCD 5 read from MCO	0 N/A	All set-ups		TRUE	0	Uint16
34-26	PCD 6 read from MCO	0 N/A	All set-ups		TRUE	0	Uint16
34-27	PCD 7 read from MCO	0 N/A	All set-ups		TRUE	0	Uint16
34-28	PCD 8 read from MCO	0 N/A	All set-ups		TRUE	0	Uint16
34-29	PCD 9 read from MCO	0 N/A	All set-ups		TRUE	0	Uint16
34-30	PCD 10 read from MCO	0 N/A	All set-ups		TRUE	0	Uint16
34-4* Inputs & Outputs							
34-40	Digital inputs	0 N/A	All set-ups		TRUE	0	Uint16
34-41	Digital outputs	0 N/A	All set-ups		TRUE	0	Uint16
34-5* Process Data							
34-50	Actual position	0 N/A	All set-ups		TRUE	0	Int32
34-51	Commanded position	0 N/A	All set-ups		TRUE	0	Int32
34-52	Actual Master position	0 N/A	All set-ups		TRUE	0	Int32
34-53	Slave Index position	0 N/A	All set-ups		TRUE	0	Int32
34-54	Master index position	0 N/A	All set-ups		TRUE	0	Int32
34-55	Curve position	0 N/A	All set-ups		TRUE	0	Int32
34-56	Track error	0 N/A	All set-ups		TRUE	0	Int32
34-57	Synchronizing error	0 N/A	All set-ups		TRUE	0	Int32
34-58	Actual velocity	0 N/A	All set-ups		TRUE	0	Int32
34-59	Actual master velocity	0 N/A	All set-ups		TRUE	0	Int32
34-60	Synchronizing status	0 N/A	All set-ups		TRUE	0	Int32
34-61	Axis status	0 N/A	All set-ups		TRUE	0	Int32
34-62	Program status	0 N/A	All set-ups		TRUE	0	Int32
34-64	MCO 302 status	0 N/A	All set-ups		TRUE	0	Uint16
34-65	MCO 302 control	0 N/A	All set-ups		TRUE	0	Uint16
34-7* Diagnosis readouts							
34-70	MCO alarm word 1	0 N/A	All set-ups		FALSE	0	Uint32
34-71	MCO alarm word 2	0 N/A	All set-ups		FALSE	0	Uint32

 Danfoss A/S © Rev. 2014-07-29 All rights reserved.

6.3.24 35-** Sensor Input Option

Par. No. #	Parameter description	Default value	4-set-up	FC 302 only	Change during operation	Conversion index	Type
35-0* Temp. Input Mode							
35-00	Term. X48/4 temp. unit	[60] °C	All set-ups		TRUE	-	Uint8
35-01	Term. X48/4 input type	[0] Not Connected	All set-ups		TRUE	-	Uint8
35-02	Term. X48/7 temp. unit	[60] °C	All set-ups		TRUE	-	Uint8
35-03	Term. X48/7 input type	[0] Not Connected	All set-ups		TRUE	-	Uint8
35-04	Term. X48/10 temp. unit	[60] °C	All set-ups		TRUE	-	Uint8
35-05	Term. X48/10 input type	[0] Not Connected	All set-ups		TRUE	-	Uint8
35-06	Temperature sensor alarm function	[5] Stop and trip	All set-ups		TRUE	-	Uint8
35-1* Temp. Input X48/4							
35-14	Term. X48/4 filter time constant	0.001 s	All set-ups		TRUE	-3	Uint16
35-15	Term. X48/4 temp. monitor	[0] Disabled	All set-ups		TRUE	-	Uint8
35-16	Term. X48/4 low temp. limit	App.Dependent	All set-ups		TRUE	0	Int16
35-17	Term. X48/4 high temp. limit	App.Dependent	All set-ups		TRUE	0	Int16
35-2* Temp. Input X48/7							
35-24	Term. X48/7 filter time constant	0.001 s	All set-ups		TRUE	-3	Uint16
35-25	Term. X48/7 temp. monitor	[0] Disabled	All set-ups		TRUE	-	Uint8
35-26	Term. X48/7 low temp. limit	App.Dependent	All set-ups		TRUE	0	Int16
35-27	Term. X48/7 high temp. limit	App.Dependent	All set-ups		TRUE	0	Int16
35-3* Temp. Input X48/10							
35-34	Term. X48/10 filter time constant	0.001 s	All set-ups		TRUE	-3	Uint16
35-35	Term. X48/10 temp. monitor	[0] Disabled	All set-ups		TRUE	-	Uint8
35-36	Term. X48/10 low temp. limit	App.Dependent	All set-ups		TRUE	0	Int16
35-37	Term. X48/10 high temp. limit	App.Dependent	All set-ups		TRUE	0	Int16
35-4* Analog Input X48/2							
35-42	Term. X48/2 low current	4.00 mA	All set-ups		TRUE	-5	Int16
35-43	Term. X48/2 high current	20.00 mA	All set-ups		TRUE	-5	Int16
35-44	Term. X48/2 low ref./feedb. value	0.000 N/A	All set-ups		TRUE	-3	Int32
35-45	Term. X48/2 high ref./feedb. value	100.000 N/A	All set-ups		TRUE	-3	Int32
35-46	Term. X48/2 filter time constant	0.001 s	All set-ups		TRUE	-3	Uint16

6.4 Parameter Lists - Active Filter

6.4.1 Operation/Display 0-**

Par. No. #	Parameter description	Default value	4-set-up	FC 302 only	Change during operation	Conversion index	Type
0-0* Basic Settings							
0-01	Language	[0] English	1 set-up		TRUE	-	Uint8
0-04	Operating state at power-up (hand)	[1] Forced stop	All set-ups		TRUE	-	Uint8
0-1* Set-up Operations							

Danfoss A/S © Rev. 2014-07-29 All rights reserved.

0-10	Active set-up	[1] Set-up 1	1 set-up		TRUE	-	Uint8
0-11	Edit set-up	[1] Set-up 1	All set-ups		TRUE	-	Uint8
0-12	This set-up linked to	[0] Not linked	All set-ups		FALSE	-	Uint8
0-13	Readout: Linked set-ups	0 N/A	All set-ups		FALSE	0	Uint16
0-14	Readout: Edit set-ups/channel	0 N/A	All set-ups		TRUE	0	Int32
0-2* LCP Display							
0-20	Display line 1.1 small	30112	All set-ups		TRUE	-	Uint16
0-21	Display line 1.2 small	30110	All set-ups		TRUE	-	Uint16
0-22	Display line 1.3 small	30120	All set-ups		TRUE	-	Uint16
0-23	Display line 2 large	30100	All set-ups		TRUE	-	Uint16
0-24	Display line 3 large	30121	All set-ups		TRUE	-	Uint16
0-25	My personal menu	ExpressionLimit	1 set-up		TRUE	0	Uint16
0-4* LCP Keypad							
0-40	[Hand on] key on LCP	[1] Enabled	All set-ups		TRUE	-	Uint8
0-41	[Off] key on LCP	[1] Enabled	All set-ups		TRUE	-	Uint8
0-42	[Auto on] key on LCP	[1] Enabled	All set-ups		TRUE	-	Uint8
0-43	[Reset] key on LCP	[1] Enabled	All set-ups		TRUE	-	Uint8
0-5* Copy/Save							
0-50	LCP copy	[0] No copy	All set-ups		FALSE	-	Uint8
0-51	Set-up copy	[0] No copy	All set-ups		FALSE	-	Uint8
0-6* Password							
0-60	Main menu password	100 N/A	1 set-up		TRUE	0	Int16
0-61	Access to main menu w/o password	[0] Full access	1 set-up		TRUE	-	Uint8
0-65	Quick menu password	200 N/A	1 set-up		TRUE	0	Int16
0-66	Access to quick menu w/o password	[0] Full access	1 set-up		TRUE	-	Uint8

6.4.2 Digital In/Out 5-**

Par. No. #	Parameter description	Default value	4-set-up	FC 302 only	Change during operation	Conversion index	Type
5-0* Digital I/O mode							
5-00	Digital I/O mode	[0] PNP	All set-ups		FALSE	-	Uint8
5-01	Terminal 27 mode	[0] Input	All set-ups		TRUE	-	Uint8
5-02	Terminal 29 mode	[0] Input	All set-ups	x	TRUE	-	Uint8
5-1* Digital Inputs							
5-10	Terminal 18 digital input	[8] Start	All set-ups		TRUE	-	Uint8
5-11	Terminal 19 digital input	[0] No operation	All set-ups		TRUE	-	Uint8
5-12	Terminal 27 digital input	[0] No operation	All set-ups		TRUE	-	Uint8
5-13	Terminal 29 digital input	[0] No operation	All set-ups		TRUE	-	Uint8
5-19	Terminal 37 safe stop	[1] Safe Stop Alarm	1 set-up		TRUE	-	Uint8
5-3* Digital Outputs							
5-30	Terminal 27 digital output	[0] No operation	All set-ups		TRUE	-	Uint8
5-31	Terminal 29 digital output	[0] No operation	All set-ups	x	TRUE	-	Uint8
5-4* Relays							
5-40	Function relay	[0] No operation	All set-ups		TRUE	-	Uint8
5-41	On delay, relay	0.30 s	All set-ups		TRUE	-2	Uint16
5-42	Off delay, relay	0.30 s	All set-ups		TRUE	-2	Uint16

Danfoss A/S © Rev. 2014-07-29 All rights reserved.

6.4.3 Comm. and Options 8-**

Par. No. #	Parameter description	Default value	4-set-up	FC 302 only	Change during operation	Conversion index	Type
8-0* General Settings							
8-01	Control site	[0] Digital and ctrl.word	All set-ups		TRUE	-	Uint8
8-02	Control word source	null	All set-ups		TRUE	-	Uint8
8-03	Control word timeout time	1.0 s	1 set-up		TRUE	-1	Uint32
8-04	Control word timeout function	[0] Off	1 set-up		TRUE	-	Uint8
8-05	End-of-timeout function	[1] Resume set-up	1 set-up		TRUE	-	Uint8
8-06	Reset control word timeout	[0] Do not reset	All set-ups		TRUE	-	Uint8
8-3* FC Port Settings							
8-30	Protocol	[1] FC MC	1 set-up		TRUE	-	Uint8
8-31	Address	2 N/A	1 set-up		TRUE	0	Uint8
8-32	FC port baud rate	[2] 9600 Baud	1 set-up		TRUE	-	Uint8
8-33	Parity/stop bits	[0] Even parity, [1] Stop bit	All set-ups		TRUE		Uint8
8-35	Minimum response delay	10 ms	All set-ups		TRUE	-3	Uint16
8-36	Max response delay	5000 ms	1 set-up		TRUE	-3	Uint16
8-37	Max inter-char delay	25 ms	1 set-up		TRUE	-3	Uint16
8-4* FC MC Protocol Set							
8-42	PCD write configuration	[1685] FC port CTW 1	All set-ups		TRUE		Uint16
8-43	PCD read configuration	[1603] Status word	All set-ups		TRUE		Uint16
8-5* Digital/Bus							
8-53	Start select	[3] Logic OR	All set-ups		TRUE	-	Uint8
8-55	Set-up select	[3] Logic OR	All set-ups		TRUE	-	Uint8

6.4.4 Special Functions 14-**

Par. No. #	Parameter description	Default value	4-set-up	FC 302 only	Change during operation	Conversion index	Type
14-2* Trip Reset							
14-20	Reset mode	[0] Manual reset	All set-ups		TRUE	-	Uint8
14-21	Automatic restart time	10 s	All set-ups		TRUE	0	Uint16
14-22	Operation mode	[0] Normal operation	All set-ups		TRUE	-	Uint8
14-23	Typecode setting	null	2 set-ups		FALSE	-	Uint8
14-28	Production settings	[0] No action	All set-ups		TRUE	-	Uint8
14-29	Service code	0 N/A	All set-ups		TRUE	0	Int32
14-5* Environment							
14-50	RFI filter	[1] On	1 set-up		FALSE	-	Uint8
14-53	Fan monitor	[1] Warning	All set-ups		TRUE	-	Uint8
14-54	Bus partner	1 N/A	2 set-ups		TRUE	0	Uint16

 Danfoss A/S © Rev. 2014-07-29 All rights reserved.

6.4.5 Unit Information 15-**

Par. No. #	Parameter description	Default value	4-set-up	FC 302 only	Change during operation	Conversion index	Type
15-0* Operating Data							
15-00	Operating hours	0 h	All set-ups		FALSE	74	Uint32
15-01	Running hours	0 h	All set-ups		FALSE	74	Uint32
15-03	Power ups	0 N/A	All set-ups		FALSE	0	Uint32
15-04	Over temps	0 N/A	All set-ups		FALSE	0	Uint16
15-05	Over volts	0 N/A	All set-ups		FALSE	0	Uint16
15-07	Reset running hours counter	[0] Do not reset	All set-ups		TRUE	-	Uint8
15-1* Data Log Settings							
15-10	Logging source	0	2 set-ups		TRUE	-	Uint16
15-11	Logging interval	ExpressionLimit	2 set-ups		TRUE	-3	TimD
15-12	Trigger event	[0] False	1 set-up		TRUE	-	Uint8
15-13	Logging mode	[0] Log always	2 set-ups		TRUE	-	Uint8
15-14	Samples before trigger	50 N/A	2 set-ups		TRUE	0	Uint8
15-2* Historic Log							
15-20	Historic log: event	0 N/A	All set-ups		FALSE	0	Uint8
15-21	Historic log: value	0 N/A	All set-ups		FALSE	0	Uint32
15-22	Historic log: time	0 ms	All set-ups		FALSE	-3	Uint32
15-3* Fault Log							
15-30	Fault log: error code	0 N/A	All set-ups		FALSE	0	Uint16
15-31	Fault log: value	0 N/A	All set-ups		FALSE	0	Int16
15-32	Fault log: time	0 s	All set-ups		FALSE	0	Uint32
15-4* Unit Identification							
15-40	FC type	0 N/A	All set-ups		FALSE	0	VisStr[6]
15-41	Power section	0 N/A	All set-ups		FALSE	0	VisStr[20]
15-42	Voltage	0 N/A	All set-ups		FALSE	0	VisStr[20]
15-43	Software version	0 N/A	All set-ups		FALSE	0	VisStr[5]
15-44	Ordered typecode string	0 N/A	All set-ups		FALSE	0	VisStr[40]
15-45	Actual typecode string	0 N/A	All set-ups		FALSE	0	VisStr[40]
15-46	Unit ordering no	0 N/A	All set-ups		FALSE	0	VisStr[8]
15-47	Power card ordering no	0 N/A	All set-ups		FALSE	0	VisStr[8]
15-48	LCP ID no	0 N/A	All set-ups		FALSE	0	VisStr[20]
15-49	SW ID control card	0 N/A	All set-ups		FALSE	0	VisStr[20]
15-50	SW ID power card	0 N/A	All set-ups		FALSE	0	VisStr[20]
15-51	Unit serial number	0 N/A	All set-ups		FALSE	0	VisStr[10]
15-53	Power card serial number	0 N/A	All set-ups		FALSE	0	VisStr[19]
15-6* Option Ident							
15-60	Option mounted	0 N/A	All set-ups		FALSE	0	VisStr[30]
15-61	Option SW version	0 N/A	All set-ups		FALSE	0	VisStr[20]
15-62	Option ordering No	0 N/A	All set-ups		FALSE	0	VisStr[8]
15-63	Option serial No	0 N/A	All set-ups		FALSE	0	VisStr[18]
15-70	Option in slot A	0 N/A	All set-ups		FALSE	0	VisStr[30]
15-71	Slot A option SW version	0 N/A	All set-ups		FALSE	0	VisStr[20]
15-72	Option in slot B	0 N/A	All set-ups		FALSE	0	VisStr[30]
15-73	Slot B option SW version	0 N/A	All set-ups		FALSE	0	VisStr[20]
15-74	Option in slot C0/E0	0 N/A	All set-ups		FALSE	0	VisStr[30]
15-75	Slot C0 option SW version	0 N/A	All set-ups		FALSE	0	VisStr[20]
15-76	Option in slot C1/E1	0 N/A	All set-ups		FALSE	0	VisStr[30]
15-77	Slot C1 option SW version	0 N/A	All set-ups		FALSE	0	VisStr[20]

Danfoss A/S © Rev. 2014-07-29 All rights reserved.

Par. No. #	Parameter description	Default value	4-set-up	FC 302 only	Change during operation	Conversion index	Type
15-9* Parameter Info							
15-92	Defined parameters	0 N/A	All set-ups		FALSE	0	Uint16
15-93	Modified parameters	0 N/A	All set-ups		FALSE	0	Uint16
15-98	Unit identification	0 N/A	All set-ups		FALSE	0	VisStr[40]
15-99	Parameter metadata	0 N/A	All set-ups		FALSE	0	Uint16

6.4.6 Data Readouts 16-**

Par. No. #	Parameter description	Default value	4-set-up	FC 302 only	Change during operation	Conversion index	Type
16-0* General Status							
16-00	Control word	0 N/A	All set-ups		FALSE	0	V2
16-03	Status word	0 N/A	All set-ups		FALSE	0	V2
16-3* AF Status							
16-30	DC link voltage	0 V	All set-ups		FALSE	0	Uint16
16-34	Heatsink temp.	0 °C	All set-ups		FALSE	100	Uint8
16-35	Inverter thermal	0 %	All set-ups		FALSE	0	Uint8
16-36	Inv. nom. current	ExpressionLimit	All set-ups		FALSE	-2	Uint32
16-37	Inv. max. current	ExpressionLimit	All set-ups		FALSE	-2	Uint32
16-39	Control card temp.	0 °C	All set-ups		FALSE	100	Uint8
16-40	Logging buffer full	[0] No	All set-ups		TRUE	-	Uint8
16-49	Current fault source	0 N/A	All set-ups		TRUE	0	Uint8
16-6* Inputs & Outputs							
16-60	Digital input	0 N/A	All set-ups		FALSE	0	Uint16
16-66	Digital output [bin]	0 N/A	All set-ups		FALSE	0	Int16
16-71	Relay output [bin]	0 N/A	All set-ups		FALSE	0	Int16
16-8* Fieldbus & FC Port							
16-80	Fieldbus CTW 1	0 N/A	All set-ups		FALSE	0	V2
16-84	Comm. option STW	0 N/A	All set-ups		FALSE	0	V2
16-85	FC port CTW 1	0 N/A	All set-ups		FALSE	0	V2
16-9* Diagnosis Readouts							
16-90	Alarm word	0 N/A	All set-ups		FALSE	0	Uint32
16-91	Alarm word 2	0 N/A	All set-ups		FALSE	0	Uint32
16-92	Warning word	0 N/A	All set-ups		FALSE	0	Uint32
16-93	Warning word 2	0 N/A	All set-ups		FALSE	0	Uint32
16-94	Ext. status word	0 N/A	All set-ups		FALSE	0	Uint32

Danfoss A/S © Rev. 2014-07-29 All rights reserved.

6.4.7 AF Settings 300-**

NOTICE

Except for *300-10 Active Filter Nominal Voltage*, it is not recommended to change the settings in this parameter group for the Low Harmonic Drive

Par. No. #	Parameter description	Default value	4-set-up	FC 302 only	Change during operation	Conversion index	Type
300-0* General Settings							
300-00	Harmonic cancellation mode	[0] Overall	All set-ups		TRUE	-	Uint8
300-01	Compensation priority	[0] Harmonics	All set-ups		TRUE	-	Uint8
300-08	Lagging reactive current	[0] Disabled	All set-ups		FALSE		Uint8
300-1* Network Settings							
300-10	Active filter nominal voltage	ExpressionLimit	2 set-ups		FALSE	0	Uint32
300-2* CT Settings							
300-20	CT primary rating	ExpressionLimit	2 set-ups		FALSE	0	Uint32
300-24	CT Sequence	[0] L1, L2, L3	2 set-ups		FALSE	-	Uint8
300-25	CT Polarity	[0] Normal	2 set-ups		FALSE	-	Uint8
300-26	CT Placement	[1] Load Current	2 set-ups		FALSE	-	Uint8
300-27	Number of CTs per phase	1	All set-ups		FALSE		Uint8
300-29	Start auto CT detection	[0] Off	All set-ups		FALSE	-	Uint8
300-3* Compensation							
300-30	Compensation points	0.0 A	All set-ups		TRUE	-1	Uint32
300-35	Cosphi reference	0.500 N/A	All set-ups		TRUE	-3	Uint16
300-4* Paralleling							
300-40	Master follower selection	[2] Not Paralleled	2 set-ups		FALSE	-	Uint8
300-41	Follower ID	1 N/A	2 set-ups		FALSE	0	Uint32
300-42	Num. of follower AFs	1 N/A	2 set-ups		FALSE	0	Uint32
300-5* Sleep Mode							
300-50	Enable sleep mode	null	2 set-ups		TRUE	-	Uint8
300-51	Sleep mode trig source	[0] Mains current	All set-ups		TRUE	-	Uint8
300-52	Sleep mode wake up trigger	ExpressionLimit	All set-ups		TRUE	0	Uint32
300-53	Sleep mode sleep trigger	80 %	All set-ups		TRUE	0	Uint32

6.4.8 AF Readouts 301-**

Par. No. #	Parameter description	Default value	4-set-up	FC 302 only	Change during operation	Conversion index	Type
301-0* Output Currents							
301-00	Output current [A]	0.00 A	All set-ups		TRUE	-2	Int32
301-01	Output current [%]	0.0 %	All set-ups		TRUE	-1	Int32
301-1* Unit Performance							
301-10	THD of current [%]	0.0 %	All set-ups		TRUE	-1	Uint16
301-12	Power factor	0.00 N/A	All set-ups		TRUE	-2	Uint16
301-13	Cosphi	0.00 N/A	All set-ups		TRUE	-2	Int16
301-14	Leftover currents	0.0 A	All set-ups		TRUE	-1	Uint32
301-2* Mains Status							
301-20	Mains current [A]	0 A	All set-ups		TRUE	0	Int32
301-21	Mains frequency	0 Hz	All set-ups		TRUE	0	Uint8
301-22	Fund. mains current [A]	0 A	All set-ups		TRUE	0	Int32

Danfoss A/S © Rev. 2014-07-29 All rights reserved.

7 Application Examples

7.1 Introduction

The examples in this section are intended as a quick reference for common applications.

- Parameter settings are the regional default values unless otherwise indicated (selected in *0-03 Regional Settings*).
- Parameters associated with the terminals and their settings are shown next to the drawings.
- Where switch settings for analog terminals A53 or A54 are required, these are also shown.

7.2 Application Examples

CAUTION

Thermistors must use reinforced or double insulation to meet PELV insulation requirements.

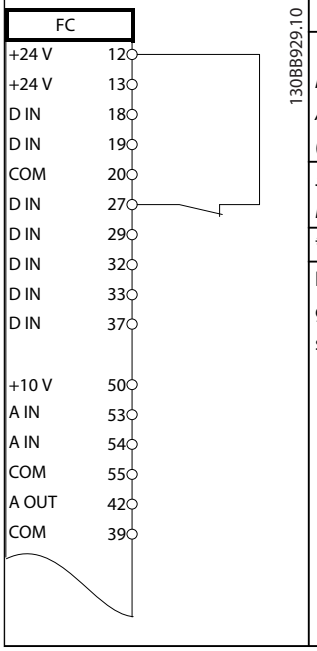

	Parameters	
	Function	**Setting**
	1-29 Automatic Motor Adaptation (AMA)	[1] Enable complete AMA
	5-12 Terminal 27 Digital Input	[2]* Coast inverse
	*=Default Value	
	Notes/comments: Parameter group *1–2* Motor Data* must be set according to motor	

Table 7.1 AMA with T27 Connected

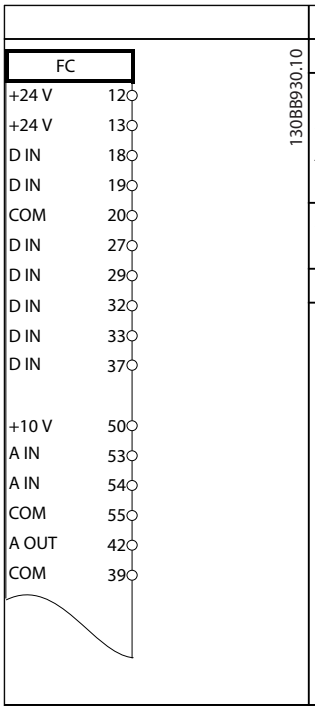

	Parameters	
	Function	**Setting**
	1-29 Automatic Motor Adaptation (AMA)	[1] Enable complete AMA
	5-12 Terminal 27 Digital Input	[0] No operation
	*=Default Value	
	Notes/comments: Parameter group *1–2* Motor Data* must be set according to motor	

Table 7.2 AMA without T27 Connected

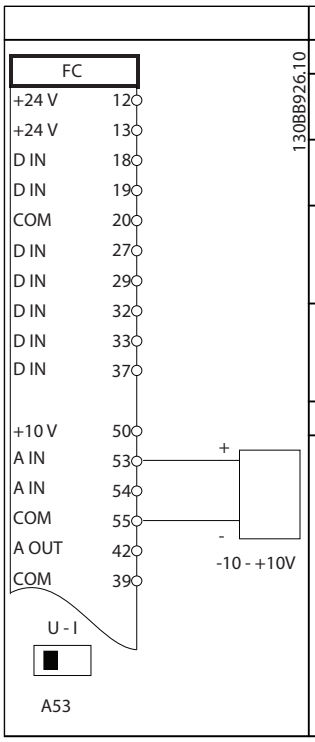

	Parameters	
	Function	**Setting**
	6-10 Terminal 53 Low Voltage	0.07 V*
	6-11 Terminal 53 High Voltage	10 V*
	6-14 Terminal 53 Low Ref./Feedb. Value	0 RPM
	6-15 Terminal 53 High Ref./Feedb. Value	1,500 RPM
	*=Default Value	
	Notes/comments:	

Table 7.3 Analog Speed Reference (Voltage)

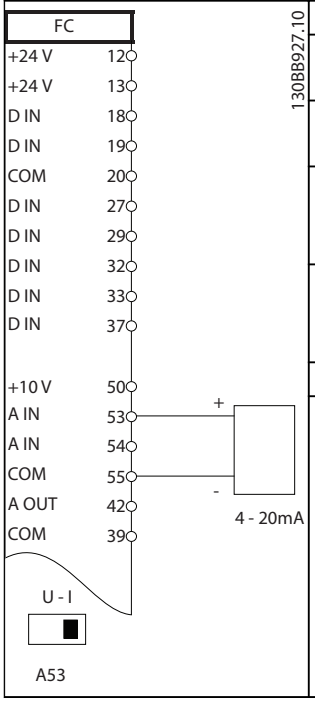

	Parameters	
	Function	**Setting**
	6-12 Terminal 53 Low Current	4 mA*
	6-13 Terminal 53 High Current	20 mA*
	6-14 Terminal 53 Low Ref./Feedb. Value	0 RPM
	6-15 Terminal 53 High Ref./Feedb. Value	1,500 RPM
	*=Default Value	
	Notes/comments:	

Table 7.4 Analog Speed Reference (Current)

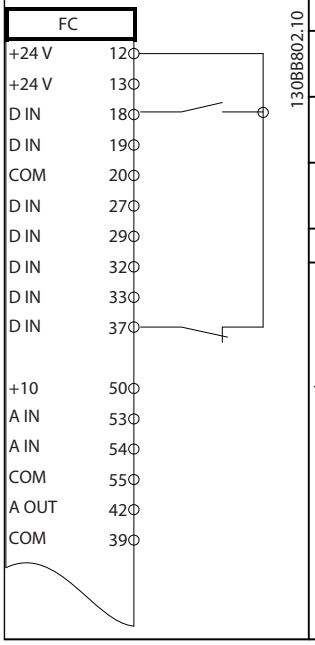

	Parameters	
	Function	**Setting**
	5-10 Terminal 18 Digital Input	[8] Start*
	5-12 Terminal 27 Digital Input	[0] No operation
	5-19 Terminal 37 Safe Stop	[1] Safe Stop Alarm
	*=Default Value	
	Notes/comments: If *5-12 Terminal 27 Digital Input* is set to *[0] No operation*, a jumper wire to terminal 27 is not needed.	

Table 7.5 Start/Stop Command with Safe Torque Off

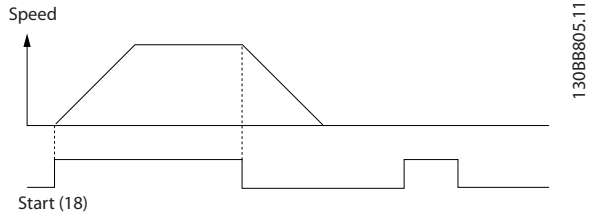

Illustration 7.1 Start/Stop with Safe Torque Off

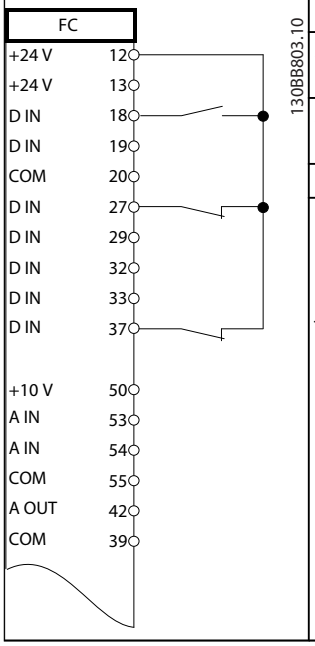

	Parameters	
	Function	**Setting**
	5-10 Terminal 18 Digital Input	[9] Latched Start
	5-12 Terminal 27 Digital Input	[6] Stop Inverse
	*=Default Value	
	Notes/comments: If *5-12 Terminal 27 Digital Input* is set to *[0] No operation*, a jumper wire to terminal 27 is not needed.	

Table 7.6 Pulse Start/Stop

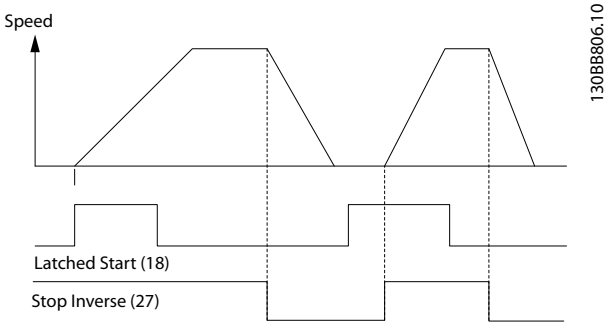

Illustration 7.2 Latched Start/Stop Inverse

7

Danfoss A/S © Rev. 2014-07-29 All rights reserved.

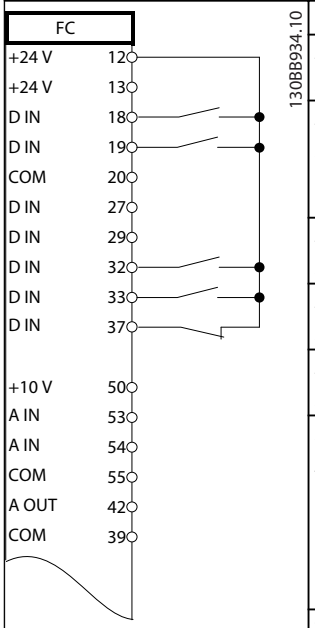

Parameters	
Function	**Setting**
5-10 Terminal 18 Digital Input	[8] Start
5-11 Terminal 19 Digital Input	[10] Reversing*
5-12 Terminal 27 Digital Input	[0] No operation
5-14 Terminal 32 Digital Input	[16] Preset ref bit 0
5-15 Terminal 33 Digital Input	[17] Preset ref bit 1
Parameter 3-10 Pre set Reference	
Preset ref. 0	25%
Preset ref. 1	50%
Preset ref. 2	75%
Preset ref. 3	100%
*=Default Value	
Notes/comments:	

Table 7.7 Start/Stop with Reversing and 4 Preset Speeds

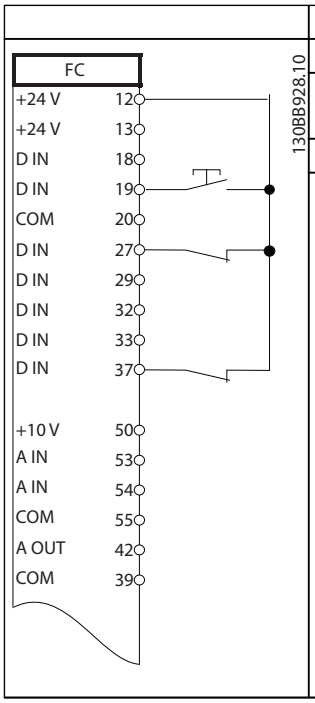

Parameters	
Function	**Setting**
5-11 Terminal 19 Digital Input	[1] Reset
*=Default Value	
Notes/comments:	

Table 7.8 External Alarm Reset

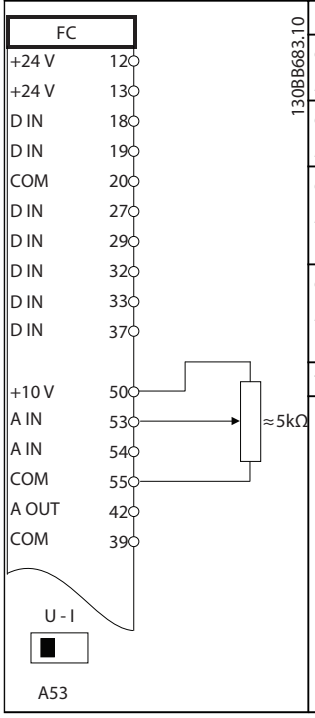

Parameters	
Function	**Setting**
6-10 Terminal 53 Low Voltage	0.07 V*
6-11 Terminal 53 High Voltage	10 V*
6-14 Terminal 53 Low Ref./Feedb. Value	0 RPM
6-15 Terminal 53 High Ref./Feedb. Value	1,500 RPM
*=Default Value	
Notes/comments:	

Table 7.9 Speed Reference (using a Manual Potentiometer)

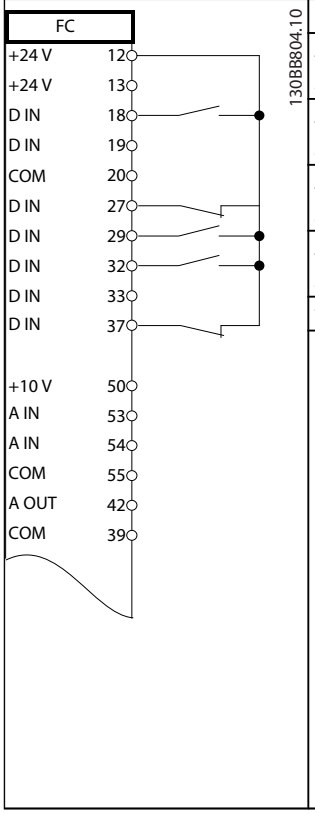

Parameters	
Function	**Setting**
5-10 Terminal 18 Digital Input	[8] Start*
5-12 Terminal 27 Digital Input	[19] Freeze Reference
5-13 Terminal 29 Digital Input	[21] Speed Up
5-14 Terminal 32 Digital Input	[22] Speed Down
*=Default Value	
Notes/comments:	

Table 7.10 Speed Up/Down

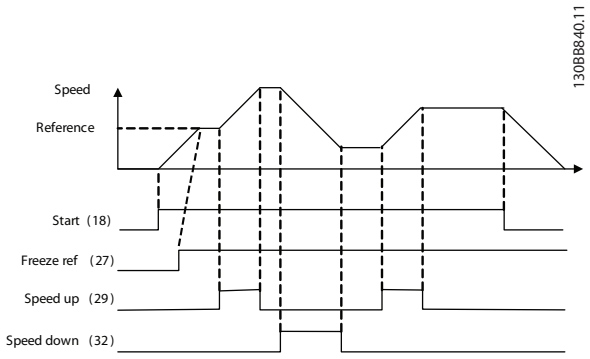

Illustration 7.3 Speed Up/Down

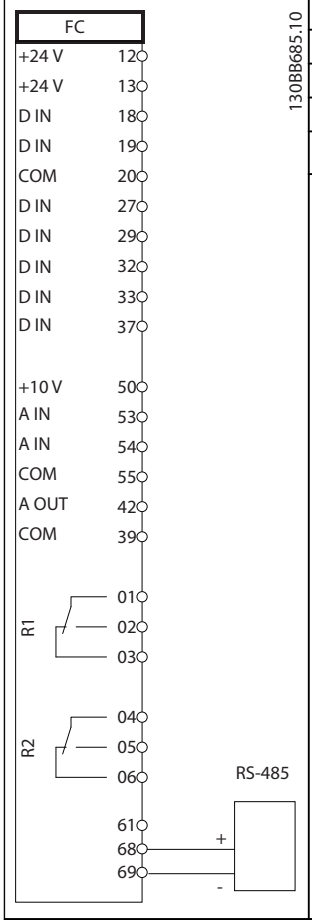

Parameters	
Function	**Setting**
8-30 Protocol	FC*
8-31 Address	1*
8-32 Baud Rate	9,600*
*=Default Value	
Notes/comments: Select protocol, address, and Baud rate in the above mentioned parameters.	

Table 7.11 RS-485 Network Connection

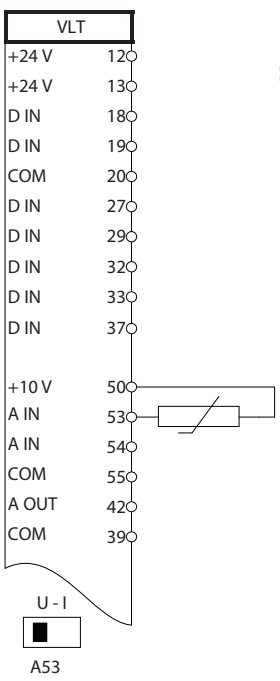

Parameters	
Function	**Setting**
1-90 Motor Thermal Protection	[2] Thermistor trip
Parameter 1-93 Thermistor Source	[1] Analog input 53
*=Default Value	
Notes/comments: If only a warning is desired, set *1-90 Motor Thermal Protection* to *[1] Thermistor warning*.	

Table 7.12 Motor Thermistor

7

Danfoss A/S © Rev. 2014-07-29 All rights reserved.

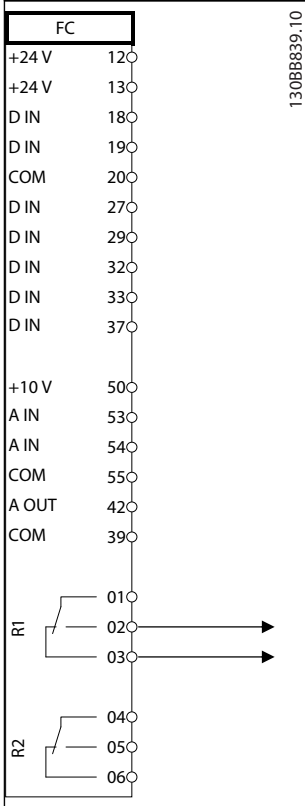

	Parameters	
	Function	**Setting**
	4-30 Motor Feedback Loss Function	[1] Warning
	4-31 Motor Feedback Speed Error	100 RPM
	4-32 Motor Feedback Loss Timeout	5 s
	7-00 Speed PID Feedback Source	[2] MCB 102
	17-11 Resolution (PPR)	1024*
	13-00 SL Controller Mode	[1] On
	13-01 Start Event	[19] Warning
	13-02 Stop Event	[44] Reset key
	13-10 Comparator Operand	[21] Warning no.
	13-11 Comparator Operator	[1] ≈*
	13-12 Comparator Value	90
	13-51 SL Controller Event	[22] Comparator 0
	13-52 SL Controller Action	[32] Set digital out A low
	Parameter 5-40 Function Relay	[80] SL digital output A
	*=Default Value	
	Notes/comments: If the limit in the feedback monitor is exceeded, Warning 90 is issued. The SLC monitors Warning 90 and in the case that Warning 90 becomes TRUE then relay 1 is triggered. External equipment may indicate that service is required. If the feedback error goes below the limit again within 5 s, the frequency converter continues and the warning disappears. But relay 1 is still triggered until [Reset] on the LCP.	

Table 7.13 Using SLC to Set a Relay

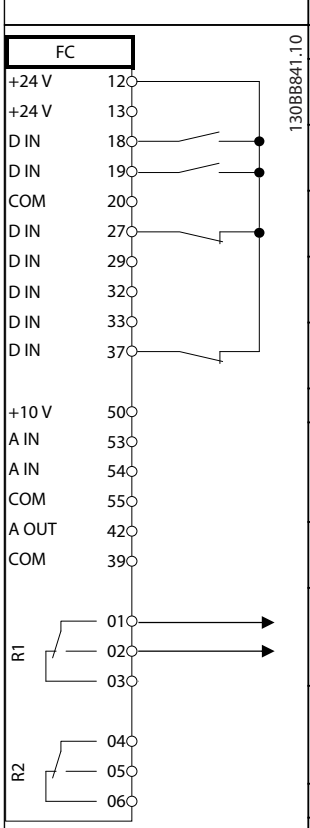

	Parameters	
	Function	**Setting**
	1-00 Configuration Mode	[0] Speed open loop
	1-01 Motor Control Principle	[1] VVC+
	Parameter 5-40 Function Relay	[32] Mech. brake ctrl.
	5-10 Terminal 18 Digital Input	[8] Start*
	5-11 Terminal 19 Digital Input	[11] Start reversing
	1-71 Start Delay	0.2
	1-72 Start Function	[5] VVC+/ FLUX Clockwise
	1-76 Start Current	$I_{m,n}$
	Parameter 2-20 Release Brake Current	App. dependent
	Parameter 2-21 Activate Brake Speed [RPM]	Half of nominal slip of the motor
	*=Default Value	
	Notes/comments:	

Table 7.14 Mechanical Brake Control (Open Loop)

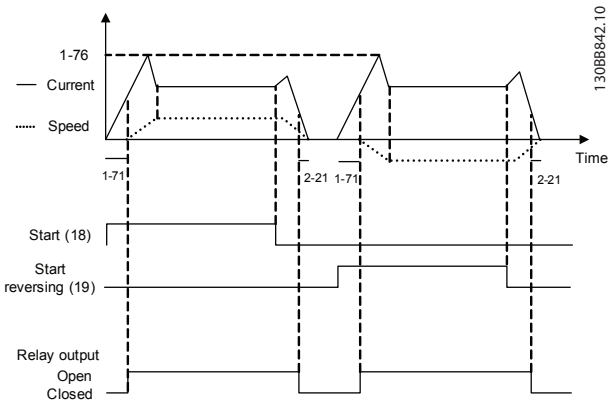

Illustration 7.4 Mechanical Brake Control (Open Loop)

7.3 Connection Examples for Control of Motor with External Signal Provider

NOTICE

The following examples refer only to the frequency converter control card (right LCP), *not* the filter.

7.3.1 Start/Stop

Terminal 18 = *5-10 Terminal 18 Digital Input* [8] *Start*
Terminal 27 = *5-12 Terminal 27 Digital Input* [0] *No operation* (Default *coast inverse*)
Terminal 37 = Safe stop

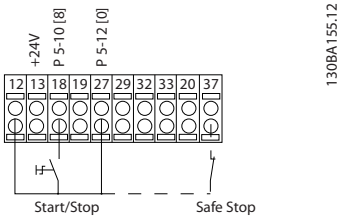

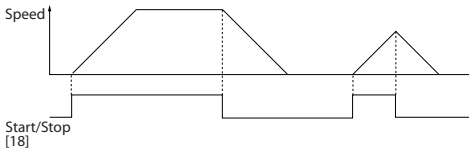

Illustration 7.5 Start/Stop Parameters

7.3.2 Pulse Start/Stop

Terminal 18 = *5-10 Terminal 18 Digital Input* [9] *Latched start*
Terminal 27= *5-12 Terminal 27 Digital Input* [6] *Stop inverse*
Terminal 37 = Safe torque off

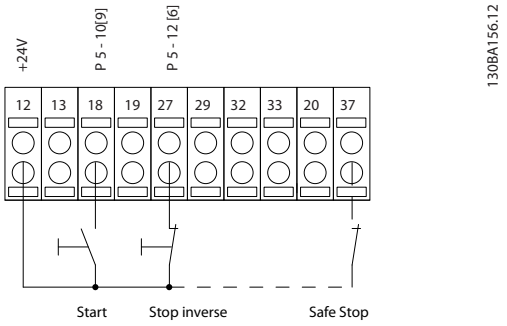

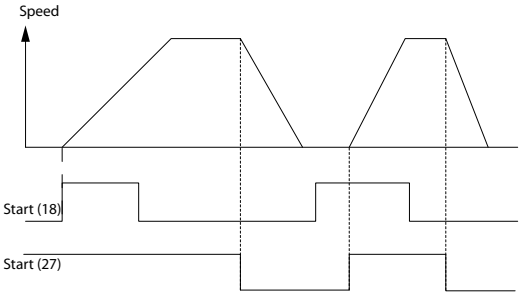

Illustration 7.6 Pulse Start/Stop Parameters

7.3.3 Speed Up/Down

Terminals 29/32 = Speed up/down

Terminal 18 = *5-10 Terminal 18 Digital Input [9] Start* (default)

Terminal 27 = *5-12 Terminal 27 Digital Input [19] Freeze reference*

Terminal 29 = *5-13 Terminal 29 Digital Input [21] Speed up*

Terminal 32 = *5-14 Terminal 32 Digital Input [22] Speed down*

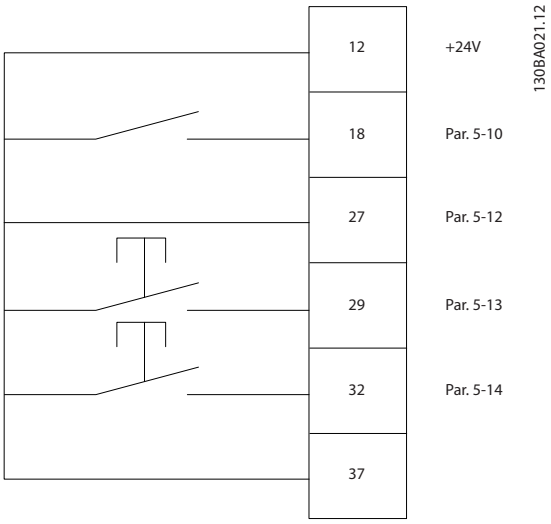

Illustration 7.7 Speed Control Parameters

7

Danfoss A/S © Rev. 2014-07-29 All rights reserved.

7.3.4 Potentiometer Reference

Voltage reference via a potentiometer

Reference Source 1 = *[1] Analog input 53* (default)

Terminal 53, Low Voltage = 0 V

Terminal 53, High Voltage = 10 V

Terminal 53, Low Ref./Feedback = 0 RPM

Terminal 53, High Ref./Feedback = 1500 RPM

Switch S201 = OFF (U)

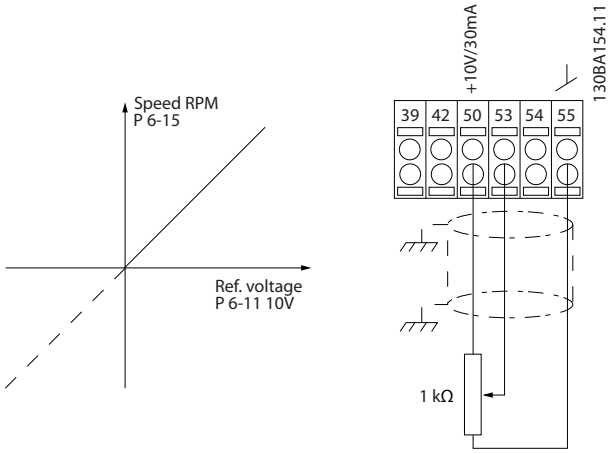

Illustration 7.8 Potentiometer Voltage Reference

Danfoss A/S © Rev. 2014-07-29 All rights reserved.

8 Status Messages

8.1 Status Display

When the frequency converter is in *Status mode*, status messages are generated automatically and appear in the bottom line of the display (see *Illustration 8.1*).

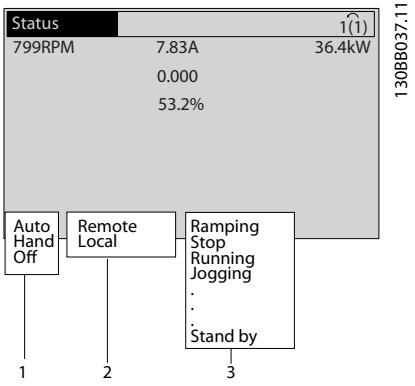

1	Operation mode (see *Table 8.1*)
2	Reference site (see *Table 8.2*)
3	Operation status (see *Table 8.3*)

Illustration 8.1 Status Display

8.2 Status Message Definitions

Table 8.1 to *Table 8.3* describe the displayed status messages.

Off	The frequency converter does not react to any control signal until [Auto On] or [Hand On] is pressed.
Auto On	The frequency converter is controlled from the control terminals and/or the serial communication.
Hand On	Control the unit via the navigation keys on the LCP. Stop commands, reset, reversing, DC brake, and other signals applied to the control terminals can override local control.

Table 8.1 Operation Mode

Remote	The speed reference is given from external signals, serial communication, or internal preset references.
Local	The frequency converter uses [Hand On] control or reference values from the LCP.

Table 8.2 Reference Site

AC Brake	AC Brake was selected in *2-10 Brake Function*. The AC brake over-magnetises the motor to achieve a controlled slow down.
AMA finish OK	Automatic motor adaptation (AMA) was carried out successfully.
AMA ready	AMA is ready to start. Press [Hand On] to start.
AMA running	AMA process is in progress.
Braking	The brake chopper is in operation. The brake resistor absorbs generative energy.
Braking max.	The brake chopper is in operation. The power limit for the brake resistor has been reached.
Coast	• Coast inverse was selected as a function for a digital input (parameter group *5–1* Digital Inputs*). The corresponding terminal is not connected. • Coast activated by serial communication
Ctrl. Ramp-down	Control Ramp-down was selected in *14-10 Mains Failure*. • The mains voltage is below the value set in *14-11 Mains Voltage at Mains Fault* at mains fault • The frequency converter ramps down the motor using a controlled ramp down
Current High	The frequency converter output current is above the limit set in *4-51 Warning Current High*.
Current Low	The frequency converter output current is below the limit set in *4-52 Warning Speed Low*
DC Hold	DC hold is selected in *1-80 Function at Stop* and a stop command is active. The motor is held by a DC current set in *2-00 DC Hold/ Preheat Current*.
DC Stop	The motor is held with a DC current (*2-01 DC Brake Current*) for a specified time (*2-02 DC Braking Time*). • DC brake is activated in *2-03 DC Brake Cut In Speed [RPM]* and a stop command is active. • DC brake (inverse) is selected as a function for a digital input (parameter group *5–1* Digital Inputs*). The corresponding terminal is not active. • The DC brake is activated via serial communication.
Feedback high	The sum of all active feedbacks is above the feedback limit set in *4-57 Warning Feedback High*.
Feedback low	The sum of all active feedbacks is below the feedback limit set in *4-56 Warning Feedback Low*.

8

 Danfoss A/S © Rev. 2014-07-29 All rights reserved.

Freeze output	The remote reference is active, which holds the present speed. • Freeze output was selected as a function for a digital input (parameter group *5–1* Digital Inputs*). The corresponding terminal is active. Speed control is only possible via the terminal functions Speed Up and Speed Down. • Hold ramp is activated via serial communication.
Freeze output request	A freeze output command has been given, but the motor remains stopped until a run permissive signal is received.
Freeze ref.	*Freeze Reference* was selected as a function for a digital input (parameter group *5-1* Digital Inputs*). The corresponding terminal is active. The frequency converter saves the actual reference. Changing the reference is now only possible via terminal functions speed up and speed down.
Jog request	A jog command has been given, but the motor remains stopped until a run permissive signal is received via a digital input.
Jogging	The motor is running as programmed in *3-19 Jog Speed [RPM]*. • *Jog* was selected as function for a digital input (parameter group *5-1* Digital Inputs*). The corresponding terminal is active. • The jog function is activated via the serial communication. • The jog function was selected as a reaction for a monitoring function. The monitoring function is active.
Motor check	In *1-80 Function at Stop*, *Motor Check* was selected. A stop command is active. To ensure that a motor is connected to the frequency converter, a permanent test current is applied to the motor.
OVC control	*Overvoltage* control was activated in *2-17 Overvoltage Control*, *[2] Enabled*. The connected motor supplies the frequency converter with generative energy. The overvoltage control adjusts the V/Hz ratio to run the motor in controlled mode and to prevent the frequency converter from tripping.
Power Unit Off	(Only frequency converters with an 24 V external supply installed). Mains supply to the frequency converter is removed, but the control card is supplied by the external 24 V.
Protection md	Protection mode is active. The unit has detected a critical status (an overcurrent or overvoltage). • To avoid tripping, the switching frequency is reduced to 4 kHz. • If possible, protection mode ends after approximately 10 s. • Protection mode can be restricted in *14-26 Trip Delay at Inverter Fault*.
QStop	The motor is decelerating using *3-81 Quick Stop Ramp Time*. • *Quick stop inverse* was selected as a function for a digital input (parameter group *5–1* Digital Inputs*). The corresponding terminal is not active. • The quick stop function was activated via serial communication.
Ramping	The motor is accelerating/decelerating using the active ramp up/down. The reference, a limit value, or a standstill is not yet reached.
Ref. high	The sum of all active references is above the reference limit set in *4-55 Warning Reference High*.
Ref. low	The sum of all active references is below the reference limit set in *4-54 Warning Reference Low*.
Run on ref.	The frequency converter is running in the reference range. The feedback value matches the setpoint value.
Run request	A start command has been given, but the motor is stopped until a run permissive signal is received via digital input.
Running	The frequency converter drives the motor.
Sleep Mode	The energy saving function is enabled. The motor has stopped, but restarts automatically when required.
Speed high	Motor speed is above the value set in *4-53 Warning Speed High*.
Speed low	Motor speed is below the value set in *4-52 Warning Speed Low*.
Standby	In Auto On mode, the frequency converter starts the motor with a start signal from a digital input or serial communication.
Start delay	In *1-71 Start Delay*, a delay starting time was set. A start command is activated and the motor starts after the start delay time expires.
Start fwd/rev	Start forward and start reverse were selected as functions for 2 different digital inputs (parameter group *5–1* Digital Inputs*). The motor starts in forward or reverse depending on which corresponding terminal is activated.
Stop	The frequency converter has received a stop command from the LCP, digital input, or serial communication.

Trip	An alarm occurred and the motor is stopped. Once the cause of the alarm is cleared, the frequency converter can be reset manually by pressing [Reset] or remotely by control terminals or serial communication.
Trip lock	An alarm occurred and the motor is stopped. Once the cause of the alarm is cleared, power must be cycled to the frequency converter. The frequency converter can then be reset manually by pressing [Reset] or remotely by control terminals or serial communication.

Table 8.3 Operation Status

NOTICE

In auto/remote mode, the frequency converter requires external commands to execute functions.

8

Danfoss A/S © Rev. 2014-07-29 All rights reserved.

9 Warnings and Alarms

9.1 System Monitoring

The frequency converter monitors the condition of its input power, output, and motor factors as well as other system performance indicators. A warning or alarm does not necessarily indicate a problem internal to the frequency converter itself. In many cases, it indicates failure conditions from:

- input voltage
- motor load
- motor temperature
- external signals
- other areas monitored by internal logic

Investigate as indicated in the alarm or warning.

9.2 Warning and Alarm Types

9.2.1 Warnings

A warning is issued when an alarm condition is impending or when an abnormal operating condition is present and may result in the frequency converter issuing an alarm. A warning clears by itself when the abnormal condition is removed.

9.2.2 Alarm Trip

An alarm is issued when the frequency converter is tripped, that is, the frequency converter suspends operation to prevent frequency converter or system damage. The motor coasts to a stop. The frequency converter logic continues to operate and monitors the frequency converter status. After the fault condition is remedied, reset the frequency converter. It is then ready to start operation again.

A trip can be reset in any of 4 ways:

- Press [Reset] on the LCP
- Digital reset input command
- Serial communication reset input command
- Auto reset

9.2.3 Alarm Trip-lock

An alarm that causes the frequency converter to trip-lock requires that input power is cycled. The motor coasts to a stop. The frequency converter logic continues to operate and monitors the frequency converter status. Remove input power to the frequency converter and correct the cause of the fault, then restore power. This action puts the frequency converter into a trip condition as described in *chapter 9.2.2 Alarm Trip* and may be reset in any of the 4 ways.

9.3 Warning and Alarm Displays

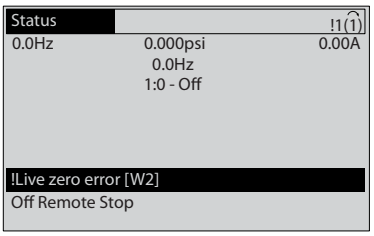

Illustration 9.1 Warning Display

An alarm or trip-lock alarm flashes in the display along with the alarm number.

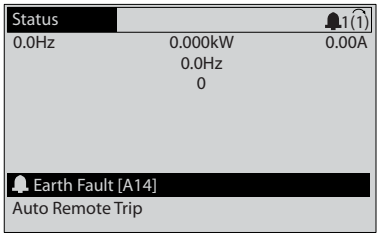

Illustration 9.2 Alarm Display

In addition to the text and alarm code in the display, there are 3 status indicator lights.

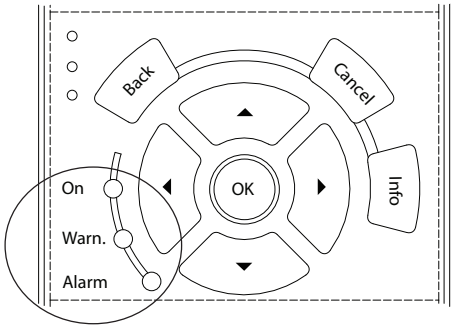

Illustration 9.3 Status Indicator Lights

Danfoss A/S © Rev. 2014-07-29 All rights reserved.

	Warning LED	Alarm LED
Warning	On	Off
Alarm	Off	On (Flashing)
Trip-Lock	On	On (Flashing)

Table 9.1 Status Indicator Lights Explanations

9.4 Warnings and Alarm Definitions - Frequency Converter

The following warning/alarm information defines each warning/alarm condition, provides the probable cause for the condition, and details a remedy or troubleshooting procedure.

WARNING 1, 10 Volts low
The control card voltage is <10 V from terminal 50. Remove some of the load from terminal 50, as the 10 V supply is overloaded. Maximum 15 mA or minimum 590 Ω.

A short-circuit in a connected potentiometer or incorrect wiring of the potentiometer can cause this condition.

Troubleshooting

- Remove the wiring from terminal 50. If the warning clears, the problem is with the wiring. If the warning does not clear, replace the control card.

WARNING/ALARM 2, Live zero error
This warning or alarm only appears if programmed in *6-01 Live Zero Timeout Function*. The signal on one of the analog inputs is less than 50% of the minimum value programmed for that input. Broken wiring or a faulty device sending the signal can cause this condition.

Troubleshooting

- Check the connections on all the analog input terminals.
  - Control card terminals 53 and 54 for signals, terminal 55 common.
  - MCB 101 terminals 11 and 12 for signals, terminal 10 common.
  - MCB 109 terminals 1, 3, 5 for signals, terminals 2, 4, 6 common.
- Check that the frequency converter programming and switch settings match the analog signal type.
- Perform an input terminal signal test.

WARNING/ALARM 3, No motor
No motor has been connected to the output of the frequency converter.

WARNING/ALARM 4, Mains phase loss
A phase is missing on the supply side, or the mains voltage imbalance is too high. This message also appears for a fault in the input rectifier on the frequency converter. Options are programmed in *14-12 Function at Mains Imbalance*.

Troubleshooting

- Check the supply voltage and supply currents to the frequency converter.

WARNING 5, DC link voltage high
The intermediate circuit voltage (DC) is higher than the high-voltage warning limit. The limit is dependent on the frequency converter voltage rating. The unit is still active.

WARNING 6, DC link voltage low
The intermediate circuit voltage (DC) is lower than the low-voltage warning limit. The limit is dependent on the frequency converter voltage rating. The unit is still active.

WARNING/ALARM 7, DC overvoltage
If the intermediate circuit voltage exceeds the limit, the frequency converter trips after a time.

Troubleshooting

- Connect a brake resistor.
- Extend the ramp time.
- Change the ramp type.
- Activate the functions in *2-10 Brake Function*.
- Increase *14-26 Trip Delay at Inverter Fault*.
- If the alarm/warning occurs during a power sag, use kinetic back-up (*14-10 Mains Failure*).

WARNING/ALARM 8, DC under voltage
If the DC link voltage drops below the undervoltage limit, the frequency converter checks if a 24 V DC back-up supply is connected. If no 24 V DC back-up supply is connected, the frequency converter trips after a fixed time delay. The time delay varies with unit size.

Troubleshooting

- Check that the supply voltage matches the frequency converter voltage.
- Perform an input voltage test.
- Perform a soft charge circuit test.

WARNING/ALARM 9, Inverter overload
The frequency converter has run with more than 100% overload for too long and is about to cut out. The counter for electronic thermal inverter protection issues a warning at 98% and trips at 100%, while giving an alarm. The frequency converter cannot be reset until the counter is below 90%.

Troubleshooting

- Compare the output current shown on the LCP with the frequency converter rated current.
- Compare the output current shown on the LCP with the measured motor current.
- Display the thermal drive load on the LCP and monitor the value. When running above the frequency converter continuous current rating, the counter increases. When running below the frequency converter continuous current rating, the counter decreases.

 Danfoss A/S © Rev. 2014-07-29 All rights reserved.

WARNING/ALARM 10, Motor overload temperature
According to the electronic thermal protection (ETR), the motor is too hot. Select whether the frequency converter issues a warning or an alarm when the counter reaches 100% in *1-90 Motor Thermal Protection*. The fault occurs when the motor runs with more than 100% overload for too long.

Troubleshooting

- Check for motor overheating.
- Check if the motor is mechanically overloaded.
- Check that the motor current set in *1-24 Motor Current* is correct.
- Ensure that the motor data in *parameters 1-20* to *1-25* are set correctly.
- If an external fan is in use, check that it is selected in *1-91 Motor External Fan*.
- Running AMA in *1-29 Automatic Motor Adaptation (AMA)* tunes the frequency converter to the motor more accurately and reduces thermal loading.

WARNING/ALARM 11, Motor thermistor overtemp
The thermistor may be disconnected. Select whether the frequency converter issues a warning or an alarm in *1-90 Motor Thermal Protection*.

Troubleshooting

- Check for motor overheating.
- Check if the motor is mechanically overloaded.
- Check that the thermistor is connected correctly between either terminal 53 or 54 (analog voltage input) and terminal 50 (+10 V supply). Also check that the terminal switch for 53 or 54 is set for voltage. Check that *1-93 Thermistor Resource* is set to terminal 53 or 54.
- When using digital inputs 18 or 19, check that the thermistor is connected correctly between either terminal 18 or 19 (digital input PNP only) and terminal 50.
- If a KTY sensor is used, check for correct connection between terminals 54 and 55
- If using a thermal switch or thermistor, check that the programming of *1-93 Thermistor Resource* matches sensor wiring.
- If using a KTY Sensor, check the programming of *1-95 KTY Sensor Type*, *1-96 KTY Thermistor Resource* and *1-97 KTY Threshold level* match sensor wiring.

WARNING/ALARM 12, Torque limit
The torque has exceeded the value in *4-16 Torque Limit Motor Mode* or the value in *4-17 Torque Limit Generator Mode*. *14-25 Trip Delay at Torque Limit* can change this warning from a warning-only condition to a warning followed by an alarm.

Troubleshooting

- If the motor torque limit is exceeded during ramp-up, extend the ramp-up time.
- If the generator torque limit is exceeded during ramp-down, extend the ramp-down time.
- If torque limit occurs while running, increase the torque limit. Make sure that the system can operate safely at a higher torque.
- Check the application for excessive current draw on the motor.

WARNING/ALARM 13, Over current
The inverter peak current limit (approximately 200% of the rated current) is exceeded. The warning lasts approximately 1.5 s, then the frequency converter trips and issues an alarm. Shock loading or quick acceleration with high-inertia loads can cause this fault. If the acceleration during ramp-up is quick, the fault can also appear after kinetic back-up.
If extended mechanical brake control is selected, a trip can be reset externally.

Troubleshooting

- Remove the power and check if the motor shaft can be turned.
- Check that the motor size matches the frequency converter.
- Check that the motor data is correct in *parameters 1-20* to *1-25*.

ALARM 14, Earth (ground) fault
There is current from the output phases to ground, either in the cable between the frequency converter and the motor, or in the motor itself.

Troubleshooting

- Remove the power to the frequency converter and repair the ground fault.
- Check for ground faults in the motor by measuring the resistance to the ground of the motor cables and the motor with a megohmmeter.
- Perform a current sensor test.

ALARM 15, Hardware mismatch
A fitted option is not operational with the present control board hardware or software.

Record the value of the following parameters and contact Danfoss:

- *15-40 FC Type*
- *15-41 Power Section*
- *15-42 Voltage*
- *15-43 Software Version*
- *15-45 Actual Typecode String*
- *15-49 SW ID Control Card*

Danfoss A/S © Rev. 2014-07-29 All rights reserved.

- *15-50 SW ID Power Card*
- *15-60 Option Mounted*
- *15-61 Option SW Version* (for each option slot)

ALARM 16, Short circuit
There is short-circuiting in the motor or motor wiring.

Troubleshooting
- Remove the power to the frequency converter and repair the short-circuit.

WARNING/ALARM 17, Control word timeout
There is no communication with the frequency converter. The warning is only active when *8-04 Control Word Timeout Function* is not set to *[0] Off*.
If *8-04 Control Word Timeout Function* is set to *[2] Stop* and *[26] Trip*, a warning appears and the frequency converter ramps down until it trips and then displays an alarm.

Troubleshooting
- Check the connections on the serial communication cable.
- Increase *8-03 Control Word Timeout Time*
- Check the operation of the communication equipment.
- Verify a proper installation based on EMC requirements.

WARNING/ALARM 22, Hoist mechanical brake
Report value shows what kind it is.
0 = The torque reference was not reached before timeout (*parameter 2-27 Torque Ramp Time*).
1 = Expected brake feedback not received before timeout (*parameter 2-23 Activate Brake Delay*, *parameter 2-25 Brake Release Time*).

WARNING 23, Internal fan fault
The fan warning function is an extra protective function that checks if the fan is running/mounted. The fan warning can be disabled in *14-53 Fan Monitor ([0] Disabled)*.

Troubleshooting
- Check the fan resistance.
- Check the soft charge fuses.

WARNING 24, External fan fault
The fan warning function is an extra protective function that checks if the fan is running/mounted. The fan warning can be disabled in *14-53 Fan Monitor ([0] Disabled)*.

Troubleshooting
- Check the fan resistance.
- Check the soft charge fuses.

WARNING 25, Brake resistor short circuit
The brake resistor is monitored during operation. If a short-circuit occurs, the brake function is disabled and the warning appears. The frequency converter is still operational, but without the brake function.

Troubleshooting
- Remove the power to the frequency converter and replace the brake resistor (see *parameter 2-15 Brake Check*).

WARNING/ALARM 26, Brake resistor power limit
The power transmitted to the brake resistor is calculated as a mean value over the last 120 s of run time. The calculation is based on the intermediate circuit voltage and the brake resistance value set in *2-16 AC brake Max. Current*. The warning is active when the dissipated braking is >90% of the brake resistance power. If *[2] Trip* is selected in *parameter 2-13 Brake Power Monitoring*, the frequency converter trips when the dissipated braking power reaches 100%.

⚠WARNING

If the brake transistor is short-circuited, there is a risk of substantial power being transmitted to the brake resistor.

WARNING/ALARM 27, Brake chopper fault
The brake transistor is monitored during operation. If a short-circuit occurs, the brake function is disabled and a warning is issued. The frequency converter is still operational, but since the brake transistor has short-circuited, substantial power is transmitted to the brake resistor, even if it is inactive.
Remove the power to the frequency converter and remove the brake resistor.

This alarm/warning could also occur if the brake resistor overheats. Terminals 104 and 106 are available as brake resistors Klixon inputs.

WARNING/ALARM 28, Brake check failed
The brake resistor is not connected or not working. Check *parameter 2-15 Brake Check*.

ALARM 29, Heat Sink temp
The maximum temperature of the heat sink has been exceeded. The temperature fault resets when the temperature falls below a defined heat sink temperature. The trip and reset points vary based on the frequency converter power size.

Troubleshooting
Check for the following conditions.
- Ambient temperature too high.
- Motor cables too long.
- Incorrect airflow clearance above and below the frequency converter.
- Blocked airflow around the frequency converter.
- Damaged heat sink fan.
- Dirty heat sink.

 Danfoss A/S © Rev. 2014-07-29 All rights reserved.

For D, E, and F enclosures, this alarm is based on the temperature measured by the heat sink sensor mounted inside the IGBT modules. For the F enclosures, the thermal sensor in the rectifier module can also cause this alarm.

Troubleshooting

- Check the fan resistance.
- Check the soft charge fuses.
- Check the IGBT thermal sensor.

ALARM 30, Motor phase U missing
Motor phase U between the frequency converter and the motor is missing.

Troubleshooting

- Remove the power from the frequency converter and check motor phase U.

ALARM 31, Motor phase V missing
Motor phase V between the frequency converter and the motor is missing.

Troubleshooting

- Remove the power from the frequency converter and check motor phase V.

ALARM 32, Motor phase W missing
Motor phase W between the frequency converter and the motor is missing.

Troubleshooting

- Remove the power from the frequency converter and check motor phase W.

ALARM 33, Inrush fault
Too many power-ups have occurred within a short time period.

Troubleshooting

- Let the unit cool to operating temperature.

WARNING/ALARM 34, Fieldbus communication fault
The fieldbus on the communication option card is not working.

WARNING/ALARM 36, Mains failure
This warning/alarm is only active if the supply voltage to the frequency converter is lost and *14-10 Mains Failure* is not set to option *[0] No Function*. Check the fuses to the frequency converter and mains supply to the unit.

ALARM 38, Internal fault
When an internal fault occurs, a code number defined in *Table 9.2* is displayed.

Troubleshooting

- Cycle the power.
- Check that the option is properly installed.
- Check for loose or missing wiring.

It may be necessary to contact Danfoss Service or the supplier. Note the code number for further trouble-shooting directions.

Number	Text
0	The serial port cannot be initialised. Contact your Danfoss supplier or Danfoss Service.
256–258	The power EEPROM data is defective or too old.
512	The control board EEPROM data is defective or too old.
513	Communication time-out reading EEPROM data
514	Communication time-out reading EEPROM data
515	Application-oriented control cannot recognise the EEPROM data.
516	Cannot write to the EEPROM because a write command is in progress.
517	The write command is under time-out.
518	Failure in the EEPROM.
519	Missing or invalid barcode data in EEPROM.
783	Parameter value outside of minimum/maximum limits.
1024–1279	A CAN telegram could not be sent.
1281	Digital signal processor flash time-out.
1282	Power micro software version mismatch.
1283	Power EEPROM data version mismatch.
1284	Cannot read digital signal processor software version.
1299	The option software in slot A is too old.
1300	The option software in slot B is too old.
1301	The option software in slot C0 is too old.
1302	The option software in slot C1 is too old.
1315	The option software in slot A is not supported (not allowed).
1316	The option software in slot B is not supported (not allowed).
1317	The option software in slot C0 is not supported (not allowed).
1318	The option software in slot C1 is not supported (not allowed).
1379	Option A did not respond when calculating the platform version
1380	Option B did not respond when calculating the platform version.
1381	Option C0 did not respond when calculating the platform version.
1382	Option C1 did not respond when calculating the platform version.
1536	An exception in the application-oriented control is registered. The debug information is written on the LCP.
1792	DSP Watch Dog is active. Debugging of power part data, motor-oriented control data not transferred correctly.
2049	Power data restarted.
2064–2072	H081x: Option in slot x has restarted.
2080–2088	H082x: Option in slot x has issued a power-up wait.
2096–2104	H983x: Option in slot x has issued a legal power-up wait.

 Danfoss A/S © Rev. 2014-07-29 All rights reserved.

Number	Text
2304	Could not read any data from the power EEPROM.
2305	Missing software version from the power unit.
2314	Missing power unit data from the power unit.
2315	Missing software version from the power unit.
2316	Missing lo_statepage from the power unit.
2324	The power card configuration is determined to be incorrect at power-up.
2325	A power card has stopped communicating while mains power is applied.
2326	The power card configuration is determined to be incorrect after the delay for power cards to register.
2327	Too many power card locations have been registered as present.
2330	The power size information between the power cards does not match.
2561	No communication from DSP to ATACD.
2562	No communication from ATACD to DSP (state running).
2816	Stack overflow control board module
2817	Scheduler slow tasks
2818	Fast tasks
2819	Parameter thread
2820	LCP stack overflow
2821	Serial port overflow
2822	USB port overflow
2836	cfListMempool is too small.
3072–5122	The parameter value is outside its limits.
5123	Option in slot A: Hardware incompatible with the control board hardware.
5124	Option in slot B: Hardware incompatible with the control board hardware.
5125	Option in slot C0: Hardware incompatible with the control board hardware.
5126	Option in slot C1: Hardware incompatible with the control board hardware.
5376–6231	Out of memory

Table 9.2 Internal Fault, Code Numbers

ALARM 39, Heat sink sensor
No feedback from the heat sink temperature sensor.

The signal from the IGBT thermal sensor is not available on the power card. The problem could be on the power card, on the gate drive card, or the ribbon cable between the power card and gate drive card.

WARNING 40, Overload of digital output terminal 27
Check the load connected to terminal 27 or remove the short-circuit connection. Check *5-00 Digital I/O Mode* and *5-01 Terminal 27 Mode*.

WARNING 41, Overload of digital output terminal 29
Check the load connected to terminal 29 or remove the short-circuit connection. Check *5-00 Digital I/O Mode* and *5-02 Terminal 29 Mode*.

WARNING 42, Overload of digital output on X30/6 or overload of digital output on X30/7
For X30/6, check the load connected to X30/6 or remove the short-circuit connection. Check *5-32 Term X30/6 Digi Out (MCB 101)*.

For X30/7, check the load connected to X30/7 or remove the short-circuit connection. Check *5-33 Term X30/7 Digi Out (MCB 101)*.

ALARM 45, Earth fault 2
Ground fault.

Troubleshooting

- Check for proper grounding and loose connections.
- Check for proper wire size.
- Check the motor cables for short circuits or leakage currents.

ALARM 46, Power card supply
The supply on the power card is out of range.

There are 3 power supplies generated by the switch mode power supply (SMPS) on the power card: 24 V, 5 V, and±18 V. When powered with 24 V DC with the MCB 107 option, only the 24 V and 5 V supplies are monitored. When powered with 3-phase mains voltage, all 3 supplies are monitored.

WARNING 47, 24 V supply low
The 24 V DC is measured on the control card. This alarm appears when the detected voltage of terminal 12 is <18 V.

Troubleshooting

- Check for a defective control card.

WARNING 48, 1.8 V supply low
The 1.8 V DC supply used on the control card is outside of the allowable limits. The power supply is measured on the control card. Check for a defective control card. If an option card is present, check for overvoltage.

WARNING 49, Speed limit
When the speed is outside of the specified range in *4-11 Motor Speed Low Limit [RPM]* and *4-13 Motor Speed High Limit [RPM]*, the frequency converter shows a warning. When the speed is below the specified limit in *1-86 Trip Speed Low [RPM]* (except when starting or stopping), the frequency converter trips.

ALARM 50, AMA calibration failed
Contact the Danfoss supplier or Danfoss Service.

ALARM 51, AMA check U_{nom} and I_{nom}
The settings for motor voltage, motor current and motor power are wrong. Check the settings in *parameters 1-20* to *1-25*.

ALARM 52, AMA low I_{nom}
The motor current is too low. Check the settings in *4-18 Current Limit*.

 Danfoss A/S © Rev. 2014-07-29 All rights reserved.

ALARM 53, AMA motor too big
The motor is too big for the AMA to operate.

ALARM 54, AMA motor too small
The motor is too small for the AMA to operate.

ALARM 55, AMA parameter out of range
The parameter values of the motor are outside of the acceptable range. AMA cannot run.

ALARM 56, AMA interrupted by user
The user has interrupted AMA.

ALARM 57, AMA internal fault
Continue to restart the AMA, until the AMA is carried out.

NOTICE

Repeated runs may heat the motor to a level where the resistance R_s and R_r are increased. In most cases, however, this behaviour is not critical.

ALARM 58, AMA Internal fault
Contact the Danfoss supplier.

WARNING 59, Current limit
The current is higher than the value in *4-18 Current Limit*. Ensure that motor data in *parameters 1–20* to *1–25* are set correctly. Increase the current limit if necessary. Ensure that the system can operate safely at a higher limit.

WARNING 60, External interlock
External interlock has been activated. To resume normal operation, apply 24 V DC to the terminal programmed for external interlock and reset the frequency converter (via serial communication, digital I/O, or by pressing [Reset]).

WARNING/ALARM 61, Tracking error
An error has occurred between the calculated motor speed and the speed measurement from the feedback device. The function warning/alarm/disable is set in *4-30 Motor Feedback Loss Function*. Accepted error setting in *4-31 Motor Feedback Speed Error* and the allowed time the error occur setting in *4-32 Motor Feedback Loss Timeout*. During a commissioning procedure, the function could be effective.

WARNING 62, Output frequency at maximum limit
The output frequency is higher than the value set in *4-19 Max Output Frequency*.

ALARM 63, Mechanical brake low
The actual motor current has not exceeded the release brake current within the start delay time window.

ALARM 64, Voltage Limit
The load and speed combination demands a motor voltage higher than the actual DC-link voltage.

WARNING/ALARM 65, Control card over temperature
The cut-out temperature of the control card is 80 °C.

Troubleshooting

- Check that the ambient operating temperature is within the limits.
- Check for clogged filters.
- Check the fan operation.
- Check the control card.

WARNING 66, Heat sink temperature low
The frequency converter is too cold to operate. This warning is based on the temperature sensor in the IGBT module.
Increase the ambient temperature of the unit. Also, a trickle amount of current can be supplied to the frequency converter whenever the motor is stopped by setting *2-00 DC Hold/Preheat Current* at 5% and *1-80 Function at Stop*.

Troubleshooting
The heat sink temperature measured as 0 °C could indicate that the temperature sensor is defective, causing the fan speed to increase to the maximum. This warning results if the sensor wire between the IGBT and the gate drive card is disconnected. Also, check the IGBT thermal sensor.

ALARM 67, Option module configuration has changed
One or more options have either been added or removed since the last power-down. Check that the configuration change is intentional and reset the unit.

ALARM 68, Safe Stop activated
STO has been activated. To resume normal operation, apply 24 V DC to terminal 37, then send a reset signal (via bus, digital I/O, or by pressing [Reset].

ALARM 69, Power card temperature
The temperature sensor on the power card is either too hot or too cold.

Troubleshooting

- Check the operation of the door fans.
- Check that the filters for the door fans are not blocked.
- Check that the gland plate is properly installed on IP21/IP54 (NEMA 1/12) frequency converters.

ALARM 70, Illegal FC configuration
The control card and power card are incompatible. To check compatibility, contact the Danfoss supplier with the type code of the unit from the nameplate and the part numbers of the cards.

ALARM 71, PTC 1 Safe Torque Off
STO has been activated from the VLT® PTC Thermistor Card MCB 112 (motor too warm). Normal operation can resume when the VLT® PTC Thermistor Card MCB 112 applies 24 V DC to terminal 37 (when the motor temperature is acceptable) and when the digital input from the VLT® PTC Thermistor Card MCB 112 is deactivated. When that happens, a reset signal is be sent (via Bus, Digital I/O, or by pressing [Reset]).

Danfoss A/S © Rev. 2014-07-29 All rights reserved.

NOTICE

If automatic restart is enabled, the motor could start when the fault is cleared.

ALARM 72, Dangerous failure
STO with trip lock. Unexpected signal levels on safe stop and digital input from the VLT® PTC Thermistor Card MCB 112.

WARNING 73, Safe Stop auto restart
Safe stopped. With automatic restart enabled, the motor can start when the fault is cleared.

WARNING 76, Power unit setup
The required number of power units does not match the detected number of active power units.

WARNING 77, Reduced power mode
The frequency converter is operating in reduced power mode (less than the allowed number of inverter sections). This warning is generated on power cycle when the frequency converter is set to run with fewer inverters and remains on.

ALARM 79, Illegal power section configuration
The scaling card has an incorrect part number or is not installed. The MK102 connector on the power card could not be installed.

ALARM 80, Drive initialised to default value
Parameter settings are initialised to default settings after a manual reset. To clear the alarm, reset the unit.

ALARM 81, CSIV corrupt
CSIV file has syntax errors.

ALARM 82, CSIV parameter error
CSIV failed to initialise a parameter.

ALARM 85, Dang fail PB
PROFIBUS/PROFIsafe error.

WARNING/ALARM 104, Mixing fan fault
The fan is not operating. The fan monitor checks that the fan is spinning at power-up or whenever the mixing fan is turned on. The mixing-fan fault can be configured as a warning or an alarm trip in *14-53 Fan Monitor*.

Troubleshooting

- Cycle power to the frequency converter to determine if the warning/alarm returns.

ALARM 243, Brake IGBT
This alarm is only for enclosure size F frequency converters. It is equivalent to Alarm 27. The report value in the alarm log indicates which power module generated the alarm:

1 = Left most inverter module.

2 = Middle inverter module in enclosure sizes F12 or F3.

2 = Right inverter module in enclosure sizes F10 or F11.

2 = Second frequency converter from the left inverter module in enclosure size F14.

3 = Right inverter module in enclosure sizes F12 or F13.

3 = Third from the left intverter module in enclosure size F14.

4 = Far right inverter module in enclosure size F14.

5 = Rectifier module.

6 = Right rectifier module in enclosure size F14.

ALARM 244, Heat Sink temperature
This alarm is only for enclosure type F frequency converters. It is equivalent to Alarm 29. The report value in the alarm log indicates which power module generated the alarm:

1 = Left most inverter module.

2 = Middle inverter module in enclosure size F12 or F3.

2 = Right inverter module in enclosure size F10 or F11.

2 = Second frequency converter from the left inverter module in enclosure size F14.

3 = Rght inverter module in enclosure sizes F12 or F13.

3 = Tird from the left intverter module in enclosure size F14.

4 = Far right inverter module in enclosure sizes F14.

5 = Rectifier module.

6 = Right rectifier module in enclosure sizes F14.

ALARM 245, Heat Sink sensor
This alarm is only for enclosure size F frequency converters. It is equivalent to Alarm 39. The report value in the alarm log indicates which power module generated the alarm:

1 = Left most inverter module.

2 = Middle inverter module in enclosure sizes F12 or F13.

2 = Right inverter module in enclosure sizes F10 or F11.

2 = Second frequency converter from the left inverter module in enclosure size F14.

3 = Right inverter module in enclosure sizes F12 or F13.

3 = Third from the left inverter module in enclosure size F14.

4 = Far right inverter module in enclosure size F14.

5 = Rectifier module.

 Danfoss A/S © Rev. 2014-07-29 All rights reserved.

6 = Right rectifier module in enclosure size F14.

ALARM 246, Power card supply
This alarm is only for enclosure size F frequency converters. It is equivalent to Alarm 46. The report value in the alarm log indicates which power module generated the alarm:

1 = Left most inverter module.

2 = Middle inverter module in enclosure sizes F12 or F13.

2 = Right inverter module in enclosure sizes F10 or F11.

2 = Second frequency converter from the left inverter module in enclosure size F14.

3 = Right inverter module in enclosure sizes F12 or F13.

3 = Third from the left inverter module in enclosure size F14.

4 = Far right inverter module in enclosure size F14.

5 = Rectifier module.

6 = Right rectifier module in enclosure size F14.

ALARM 247, Power card temperature
This alarm is only for enclosure size F frequency converters. It is equivalent to Alarm 69. The report value in the alarm log indicates which power module generated the alarm:

1 = Left most inverter module.

2 = Middle inverter module in enclosure sizes F12 or F13.

2 = Right inverter module in enclosure sizes F10 or F11.

2 = Second frequency converter from the left inverter module in enclosure size F14.

3 = Right inverter module in enclosure sizes F12 or F13.

3 = Third from the left inverter module in enclosure size F14.

4 = Far right inverter module in enclosure size F14.

5 = Rectifier module.

6 = Right rectifier module in enclosure size F14.

ALARM 248, Illegal power section configuration
This alarm is only for enclosure size F frequency converters. It is equivalent to Alarm 79. The report value in the alarm log indicates which power module generated the alarm:

1 = Left most inverter module.

2 = Middle inverter module in enclosure sizes F12 or F13.

2 = Right inverter module in enclosure sizes F10 or F11.

2 = Second frequency converter from the left inverter module in enclosure size F14.

3 = Right inverter module in enclosure sizes F12 or F13.

3 = Third from the left inverter module in enclosure sizes F14.

4 =Ffar right inverter module in enclosure sizes F14.

5 = Rectifier module.

6 = Right rectifier module in enclosure size F14.

WARNING 250, New spare part
A component in the frequency converter has been replaced.

Troubleshooting

- Reset the frequency converter for normal operation.

WARNING 251, New typecode
The power card or other components have been replaced and the typecode has been changed.

Troubleshooting

- Reset to remove the warning and resume normal operation.

 Danfoss A/S © Rev. 2014-07-29 All rights reserved.

9.5 Active Filter Warning and Alarm Definitions

NOTICE

After a manual reset pressing [Reset], press [Auto On] or [Hand On] to restart the unit.

If an alarm cannot be reset, the reason may be that its cause has not been rectified, or the alarm is trip-locked (see also *Table 9.3*).

Alarms that are trip-locked offer additional protection, meaning that the mains supply must be switched off before the alarm can be reset. After being switched back on, the unit is no longer blocked and may be reset as described above once the cause has been rectified.

Alarms that are not trip-locked can also be reset using the automatic reset function in *14-20 Reset Mode* (Warning: automatic wake-up is possible)

If a warning and alarm is marked against a code in *Table 9.3*, either a warning occurs before an alarm, or it can be specified whether it is a warning or an alarm that is to be displayed for a given fault.

No.	Description	Warning	Alarm/Trip	Alarm/Trip Lock	Parameter Reference
1	10 Volts low	X			
2	Live zero error	(X)	(X)		6-01
4	Mains phase loss	X			
5	DC link voltage high	X			
6	DC link voltage low	X			
7	DC over voltage	X	X		
8	DC under voltage	X	X		
13	Over current	X	X	X	
14	Earth fault	X	X	X	
15	Hardware mismatch		X	X	
16	Short circuit		X	X	
17	Control word timeout	(X)	(X)		8-04
23	Internal fan fault	X			
24	External fan fault	X			14-53
29	Heatsink temp	X	X	X	
33	Inrush fault		X	X	
34	Fieldbus fault	X	X		
35	Option fault	X	X		
38	Internal fault				
39	Heatsink sensor		X	X	
40	Overload of digital output terminal 27	(X)			5-00, 5-01
41	Overload of digital output terminal 29	(X)			5-00, 5-02
46	Pwr. card supply		X	X	
47	24 V supply low	X	X	X	
48	1.8 V supply low		X	X	
65	Control board over-temperature	X	X	X	
66	Heat sink temperature low	X			
67	Option configuration has changed		X		
68	Safe torque off activated		X[1)]		
69	Pwr. card temp		X	X	
70	Illegal FC configuration			X	
72	Dangerous Failure			X[1)]	
73	Safe torque off auto restart				
76	Power unit setup	X			

 Danfoss A/S © Rev. 2014-07-29 All rights reserved.

No.	Description	Warning	Alarm/Trip	Alarm/Trip Lock	Parameter Reference
79	Illegal PS config		X	X	
80	Unit initialised to default value		X		
250	New spare part			X	
251	New type code		X	X	
300	Mains cont. fault	X			
301	SC cont. fault	X			
302	Cap. over current	X	X		
303	Cap. earth fault	X	X		
304	DC over current	X	X		
305	Mains freq. limit		X		
306	Compensation Limit				
308	Resistor temp	X		X	
309	Mains earth fault	X	X		
311	Switch. freq. limit		X		
312	CT range		X		
314	Auto CT interrupt		X		
315	Auto CT error		X		
316	CT location error	X			
317	CT polarity error	X			
318	CT ratio error	X			

Table 9.3 Alarm/Warning Code List

9

A trip is the action when an alarm has appeared. The trip disables the active filter and can be reset by pressing [Reset] or make a reset by a digital input (parameter group *5-1* Digital Inputs [1] Reset*). The origin event that caused an alarm cannot damage the active filteror cause dangerous conditions. A trip lock is an action when an alarm occurs, which may cause damage to active filter or connected parts. A Trip Lock situation can only be reset by a power cycling.

Warning	yellow
Alarm	flashing red
Trip locked	yellow and red

Table 9.4 LED Indicator Lights

Danfoss A/S © Rev. 2014-07-29 All rights reserved.

Alarm Word and Extended Status Word					
Bit	**Hex**	**Dec**	**Alarm Word**	**Warning Word**	**Extended Status Word**
0	00000001	1	Mains cont. fault	Reserved	Reserved
1	00000002	2	Heatsink temp	Heatsink temp	Auto CT running
2	00000004	4	Ground fault	Ground fault	Reserved
3	00000008	8	Ctrl.card temp	Ctrl.card temp	Reserved
4	00000010	16	Ctrl. word TO	Ctrl. word TO	Reserved
5	00000020	32	Over current	Over current	Reserved
6	00000040	64	SC cont. fault	Reserved	Reserved
7	00000080	128	Cap. over current	Cap. over current	Reserved
8	00000100	256	Cap. earth fault	Cap. earth fault	Reserved
9	00000200	512	Inverter overld.	Inverter overld.	Reserved
10	00000400	1024	DC under volt	DC under volt	Reserved
11	00000800	2048	DC over volt	DC over volt	Reserved
12	00001000	4096	Short circuit	DC voltage low	Reserved
13	00002000	8192	Inrush fault	DC voltage high	Reserved
14	00004000	16384	Mains ph. loss	Mains ph. loss	Reserved
15	00008000	32768	Auto CT error	Reserved	Reserved
16	00010000	65536	Reserved	Reserved	Reserved
17	00020000	131072	Internal fault	10V low	Password Time Lock
18	00040000	262144	DC over current	DC over current	Password Protection
19	00080000	524288	Resistor temp	Resistor temp	Reserved
20	00100000	1048576	Mains earth fault	Mains earth fault	Reserved
21	00200000	2097152	Switch. freq. limit	Reserved	Reserved
22	00400000	4194304	Fieldbus fault	Fieldbus fault	Reserved
23	00800000	8388608	24 V supply low	24V supply low	Reserved
24	01000000	16777216	CT range	Reserved	Reserved
25	02000000	33554432	1.8V supply low	Reserved	Reserved
26	04000000	67108864	Reserved	Low temp	Reserved
27	08000000	134217728	Auto CT interrupt	Reserved	Reserved
28	10000000	268435456	Option change	Reserved	Reserved
29	20000000	536870912	Unit initialized	Unit initialized	Reserved
30	40000000	1073741824	Safe torque off	Safe torque off	Reserved
31	80000000	2147483648	Mains freq. limit	Extended status word	Reserved

Table 9.5 Description of Alarm Word, Warning Word and Extended Status Word

The alarm words, warning words and extended status words can be read out via serial bus or optional fieldbus for diagnosis. See also *16-90 Alarm Word*, *16-92 Warning Word* and *16-94 Ext. Status Word*. Reserved means that the bit is not guaranteed to be any particular value. Reserved bits should not be used for any purpose.

 Danfoss A/S © Rev. 2014-07-29 All rights reserved.

9.5.1 Fault Messages for Active Filter

WARNING 1, 10 volts low
The control card voltage is below 10 V from terminal 50. Remove some of the load from terminal 50, as the 10 V supply is overloaded. Max. 15 mA or minimum 590 Ω. Fault messages - active filter

WARNING/ALARM 2, Live zero error
The signal on terminal 53 or 54 is less than 50% of the value set in parameters 6-10, 6-12, 6-20 or 6-22.

WARNING 4, Mains phase loss
A phase is missing on the supply side, or the mains voltage imbalance is too high.

WARNING 5, DC link voltage high
The intermediate circuit voltage (DC) is higher than the high-voltage warning limit. The unit is still active.

WARNING 6, DC link voltage low
The intermediate circuit voltage (DC) is below the low-voltage warning limit. The unit is still active.

WARNING/ALARM 7, DC overvoltage
If the intermediate circuit voltage exceeds the limit, the unit trips.

WARNING/ALARM 8, DC under voltage
If the intermediate circuit voltage (DC) drops below the under voltage limit, the filter checks if a 24 V back-up supply is connected. If not, the filter trips. Check that the mains voltage matches the nameplate specification.

WARNING/ALARM 13, Over Current
the unit current limit has been exceeded.

ALARM 14, Earth (ground) fault
The sum current of the IGBT CTs does not equal zero. Check if the resistance of any phase to ground has a low value. Check both before and after mains contactor. Ensure IGBT current transducers, connection cables, and connectors are ok.

ALARM 15, Incomp. Hardware
A mounted option is incompatible with the present control card SW/HW.

ALARM 16, Short circuit
There is a short-circuit in the output. Turn off the unit and correct the error.

WARNING/ALARM 17, Control word timeout
There is no communication to the unit.
The warning is only active when *8-04 Control Word Timeout Function* is not set to off.
Possible correction: Increase *8-03 Control Word Timeout Time*. Change *8-04 Control Word Timeout Function*

WARNING 23, Internal fan fault
Internal fans have failed due to defect hardware or fans not mounted.

WARNING 24, External fan fault
External fans have failed due to defect hardware or fans not mounted.

ALARM 29, Heat sink temp
The maximum temperature of the heat sink has been exceeded. The temperature fault is not reset until the temperature falls below a defined heat sink temperature.

ALARM 33, Inrush fault
Check whether a 24 V external DC supply has been connected.

WARNING/ALARM 34, Fieldbus communication fault
The fieldbus on the communication option card is not working.

WARNING/ALARM 35, Option Fault:
Contact Danfoss or supplier.

ALARM 38, Internal fault
Contact Danfoss or supplier.

ALARM 39, Heat sink sensor
No feedback from the heat sink temperature sensor.

WARNING 40, Overload of Digital Output Terminal 27
Check the load connected to terminal 27 or remove short-circuit connection.

WARNING 41, Overload of Digital Output Terminal 29
Check the load connected to terminal 29 or remove short-circuit connection.

ALARM 46, Power card supply
The supply on the power card is out of range.

WARNING 47, 24 V supply low
Contact Danfoss or supplier.

WARNING 48, 1.8 V supply low
Contact Danfoss or supplier.

WARNING/ALARM/TRIP 65, Control card over temperature
Control card over temperature: The cut-out temperature of the control card is 80 °C.

WARNING 66, Heat sink temperature low
This warning is based on the temperature sensor in the IGBT module.

Troubleshooting

The heat sink temperature measured as 0 °C could indicate that the temperature sensor is defective, causing the fan speed to increase to the maximum. If the sensor wire between the IGBT and the gate drive card is disconnected, this warning would result. Also, check the IGBT thermal sensor.

ALARM 67, Option module configuration has changed
One or more options have either been added or removed since the last power-down.

ALARM 68, Safe Torque Off activated
Safe Torque Off has been activated. To resume normal operation, apply 24 V DC to terminal 37, then send a reset signal (via bus, digital I/O, or by pressing [Reset]. See *5-19 Terminal 37 Safe Stop*.

ALARM 69, Power card temperature
The temperature sensor on the power card is either too hot or too cold.

ALARM 70, Illegal FC Configuration
Actual combination of control board and power board is illegal.

ALARM 79, Illegal power section configuration
The scaling card is the incorrect part number or not installed. Also MK102 connector on the power card could not be installed.

ALARM 80, Unit initialised to default value
Parameter settings are initialised to default settings after a manual reset.

ALARM 247, Power card temperature
Power card over temperature. Report value indicates source of alarm (from left):
1-4 inverter
5-8 rectifier

ALARM 250, New spare part
The power or switch mode power supply has been exchanged. The filter type code must be restored in the EEPROM. Select the correct type code in *14-23 Typecode Setting* according to the label on the unit. Remember to select 'Save to EEPROM' to complete.

ALARM 251, New type code
The filter has a new type code.

ALARM 300, Mains Cont. Fault
The feedback from the mains contactor did not match the expected value within the allowed time frame. Contact Danfoss or supplier.

ALARM 301, SC Cont. Fault
The feedback from the soft charge contactor did not match the expected value within the allowed time frame. Contact Danfoss or supplier.

ALARM 302, Cap. Over Current
Excessive current was detected through the AC capacitors. Contact Danfoss or supplier.

ALARM 303, Cap. Earth Fault
An earth fault was detected through the AC capacitor currents. Contact Danfoss or supplier.

ALARM 304, DC Over Current
Excessive current through the DC-link capacitor bank was detected. Contact Danfoss or supplier.

ALARM 305, Mains Freq. Limit
The mains frequency was outside the limits. Verify that the mains frequency is within product specification.

ALARM 306, Compensation Limit
The needed compensation current exceeds unit capability. Unit is running at full compensation.

ALARM 308, Resistor temp
Excessive resistor heat sink temperature detected.

ALARM 309, Mains Earth Fault
An earth fault was detected in the mains currents. Check the mains for shorts and leakage current.

ALARM 310, RTDC Buffer Full
Contact Danfoss or supplier.

ALARM 311, Switch. Freq. Limit
The average switching frequency of the unit exceeded the limit. Verify that *300-10 Active Filter Nominal Voltage* and *300-22 CT Nominal Voltage* are set correctly. If so, contact Danfoss or supplier.

ALARM 312, CT Range
Current transformer measurement limitation was detected. Verify that the CTs used are an appropriate ratio.

ALARM 314, Auto CT Interrupt
Auto CT detection has been interrupted.

ALARM 315, Auto CT Error
An error was detected while performing auto CT detection. Contact Danfoss or supplier.

WARNING 316, CT Location Error
The auto CT function could not determine the correct locations of the CTs.

WARNING 317, CT Polarity Error
The auto CT function could not determine the correct polarity of the CTs.

WARNING 318, CT Ratio Error
The auto CT function could not determine the correct primary rating of the CTs.

 Danfoss A/S © Rev. 2014-07-29 All rights reserved.

10 Basic Start-up Troubleshooting

10.1 Start Up and Operation

Symptom	Possible cause	Test	Solution
Display dark/No function	Missing input power	See *Table 4.1*	Check the input power source
	Missing or open fuses or circuit breaker tripped	See *Open fuses* and *Tripped circuit breaker* in this table for possible causes	Follow the recommendations provided
	No power to the LCP	Check the LCP cable for proper connection or damage	Replace the faulty LCP or connection cable
	Shortcut on control voltage (terminal 12 or 50) or at control terminals	Check the 24 V control voltage supply for terminals 12/13 to 20-39 or 10 V supply for terminals 50 to 55	Wire the terminals properly
	Wrong LCP (LCP from VLT® 2800 or 5000/6000/8000/ FCD or FCM)		Use only LCP 101 (P/N 130B1124) or LCP 102 (P/N 130B1107)
	Wrong contrast setting		Press [Status] + [▲]/[▼] to adjust the contrast
	Display (LCP) is defective	Test using a different LCP	Replace the faulty LCP or connection cable
	Internal voltage supply fault or SMPS is defective		Contact supplier
Intermittent display	Overloaded power supply (SMPS) due to improper control wiring or a fault within the frequency converter	To rule out a problem in the control wiring, disconnect all control wiring by removing the terminal blocks.	If the display stays lit, then the problem is in the control wiring. Check the wiring for shorts or incorrect connections. If the display continues to cut out, follow the procedure for display dark.
Motor not running	Service switch open or missing motor connection	Check if the motor is connected and the connection is not interrupted (by a service switch or other device).	Connect the motor and check the service switch
	No mains power with 24 V DC option card	If the display is functioning but no output, check that mains power is applied to the frequency converter.	Apply mains power to run the unit
	LCP Stop	Check if [Off] has been pressed	Press [Auto On] or [Hand On] (depending on operation mode) to run the motor
	Missing start signal (Standby)	Check *5-10 Terminal 18 Digital Input* for correct setting for terminal 18 (use default setting)	Apply a valid start signal to start the motor
	Motor coast signal active (Coasting)	Check *5-12 Coast inv*. for correct setting for terminal 27 (use default setting).	Apply 24 V on terminal 27 or program this terminal to *no operation*
	Wrong reference signal source	Check reference signal: Local, remote or bus reference? Preset reference active? Terminal connection correct? Scaling of terminals correct? Reference signal available?	Program correct settings. Check *3-13 Reference Site*. Set preset reference active in parameter group *3-1* References*. Check for correct wiring. Check scaling of terminals. Check reference signal.

 Danfoss A/S © Rev. 2014-07-29 All rights reserved.

Symptom	Possible cause	Test	Solution
Motor running in wrong direction	Motor rotation limit	Check that *4-10 Motor Speed Direction* is programmed correctly.	Program correct settings
	Active reversing signal	Check if a reversing command is programmed for the terminal in parameter group *5-1* Digital inputs*.	Deactivate reversing signal
	Wrong motor phase connection		See *chapter 3.4.5 Motor Cable* in this manual
Motor is not reaching maximum speed	Frequency limits set wrong	Check output limits in *4-13 Motor Speed High Limit [RPM]*, *4-14 Motor Speed High Limit [Hz]* and *4-19 Max Output Frequency*.	Program correct limits
	Reference input signal not scaled correctly	Check reference input signal scaling in *6-0* Analog I/O Mode* and parameter group *3-1* References.* Reference limits in parameter group *3-0* Reference Limit*.	Program correct settings
Motor speed unstable	Possible incorrect parameter settings	Check the settings of all motor parameters, including all motor compensation settings. For closed loop operation, check PID settings.	Check settings in parameter group *1-6* Load Depen. Setting*. For closed loop operation, check settings in parameter group *20-0* Feedback*.
Motor runs rough	Possible overmagnetisation	Check for incorrect motor settings in all motor parameters	Check motor settings in parameter groups *1-2* Motor Data, 1-3* Adv Motor Data*, and *1-5* Load Indep. Setting*.
Motor will not brake	Possible incorrect settings in the brake parameters. Possible too short ramp down times	Check brake parameters. Check ramp time settings	Check parameter group *2-0* DC Brake* and *3-0* Reference Limits*.
Open power fuses or circuit breaker trip	Phase-to-phase short	Motor or panel has a short phase to phase. Check motor and panel phase for shorts	Eliminate any shorts detected
	Motor overload	Motor is overloaded for the application	Perform startup test and verify motor current is within specifications. If motor current is exceeding nameplate full load current, motor may run only with reduced load. Review the specifications for the application.
	Loose connections	Perform pre-startup check for loose connections	Tighten loose connections
Mains current imbalance greater than 3%	Problem with mains power (See *Alarm 4 Mains phase loss* description)	Rotate input power leads into the frequency converter one position: A to B, B to C, C to A.	If imbalanced leg follows the wire, it is a power problem. Check mains power supply.
	Problem with the frequency converter	Rotate input power leads into the frequency converter one position: A to B, B to C, C to A.	If imbalance leg stays on same input terminal, it is a problem with the unit. Contact the supplier.
Motor current imbalance greater than 3%	Problem with motor or motor wiring	Rotate output motor leads one position: U to V, V to W, W to U.	If imbalanced leg follows the wire, the problem is in the motor or motor wiring. Check motor and motor wiring.
	Problem with the frequency converters	Rotate output motor leads one position: U to V, V to W, W to U.	If imbalance leg stays on same output terminal, it is a problem with the unit. Contact the supplier.

 Danfoss A/S © Rev. 2014-07-29 All rights reserved.

Symptom	Possible cause	Test	Solution
Acoustic noise or vibration (e.g. a fan blade is making noise or vibrations at certain frequencies)	Resonances, e.g. in the motor/fan system	Bypass critical frequencies by using parameters in parameter group *4-6* Speed Bypass*	Check if noise and/or vibration have been reduced to an acceptable limit
		Turn off over-modulation in *14-03 Overmodulation*	
		Change switching pattern and frequency in parameter group 14-0* Inverter Switching	
		Increase Resonance Dampening in *1-64 Resonance Dampening*	

Table 10.1 Troubleshooting

 Danfoss A/S © Rev. 2014-07-29 All rights reserved.

11 Specifications

11.1 Power-Dependent Specifications

11.1.1 Mains Supply 3x380-480 V AC

	P160	P200	P250
Normal Overload =110% current for 60 s	**NO**	**NO**	**NO**
Typical shaft output at 400 V [kW]	160	200	250
Typical shaft output at 460 V [hp]	250	300	350
Typical shaft output at 480 V [kW]	200	250	315
Enclosure IP21/54	D13		
Output current			
Continuous (at 400 V) [A]	315	395	480
Intermittent (60 s overload) (at 400 V) [A]	347	435	528
Continuous (at 460/480 V) [A]	302	361	443
Intermittent (60 s overload) (at 460/480 V) [A]	332	397	487
Continuous kVA (at 400 V) [kVA]	218	274	333
Continuous kVA (at 460 V) [kVA]	241	288	353
Continuous kVA (at 480 V) [kVA]	262	313	384
Max. Input current			
Continuous (at 400 V) [A]	304	381	463
Continuous (at 460/480 V) [A]	291	348	427
Max. pre-fuses[1] [A]	400	500	630
Max. cable size			
Motor (mm^2/AWG[2])	2x185 (2x300 mcm)		
Mains (mm^2/AWG[2])			
Brake (mm^2/AWG[2])			
Total LHD loss 400 V AC [kW]	8868	10527	11751
Total back channel loss 400 V AC [kW]	7318	8903	10033
Total filter loss 400 V AC [kW]	4954	5714	6234
Total LHD loss 460 V AC [kW]	9059	10192	11706
Total back channel loss 460 V AC [kW]	7123	8209	9635
Total filter loss 460 V AC [kW]	5279	5819	6681
Weight, enclosure IP21, IP54 [kg]	380		406
Efficiency[4]	0.96		
Output frequency [Hz]	0-800		
Heatsink overtemp. trip [°C]	105		
Power card ambient trip [°C]	85		
*High overload = 160% torque during 60 s; Normal overload = 110% torque during 60 s			

Table 11.1 Mains Supply 3x380-480 V AC

 Danfoss A/S © Rev. 2014-07-29 All rights reserved.

	P315	P355	P400	P450
Normal Overload =110% current for 60 s	**NO**	**NO**	**NO**	**NO**
Typical shaft output at 400 V [kW]	315	355	400	450
Typical shaft output at 460 V [hp]	450	500	600	600
Typical shaft output at 480 V [kW]	355	400	500	530
Enclosure IP21/54	E9			
Output current				
Continuous (at 400 V) [A]	600	658	745	800
Intermittent (60 s overload) (at 400 V) [A]	660	724	820	880
Continuous (at 460/480 V) [A]	540	590	678	730
Intermittent (60 s overload) (at 460/480 V) [A]	594	649	746	803
Continuous kVA (at 400 V) [kVA]	416	456	516	554
Continuous kVA (at 460 V) [kVA]	430	470	540	582
Continuous kVA (at 480 V) [kVA]	468	511	587	632
Max. Input current				
Continuous (at 400 V) [A]	590	647	733	787
Continuous (at 460/480 V) [A]	531	580	667	718
Max. pre-fuses[1] [A]	700	900		
Max. cable size				
Motor (mm^2/AWG[2])	4x240 (4x500 mcm)			
Mains (mm^2/AWG[2])				
Brake (mm^2/AWG[2])	2x185 (2x350 mcm)			
Total LHD loss 400 V AC [kW]	14051	15320	17180	18447
Total back channel loss 400 V AC [kW]	11301	11648	13396	14570
Total filter loss 400 V AC [kW]	7346	7788	8503	8974
Total LHD loss 460 V AC [kW]	12936	14083	15852	16962
Total back channel loss 460 V AC [kW]	10277	10522	12184	13214
Total filter loss 460 V AC [kW]	7066	7359	8033	8435
Weight, enclosure IP21, IP54 [kg]	596	623	646	
Efficiency[4]	0.96			
Output frequency [Hz]	0-600			
Heatsink overtemp. trip [°C]	105			
Power card ambient trip [°C]	85			
*High overload = 160% torque during 60 s; Normal overload = 110% torque during 60 s				

Table 11.2 Mains Supply 3x380-480 V AC

11

Danfoss A/S © Rev. 2014-07-29 All rights reserved.

	P500	P560	P630	P710
Normal Overload =110% current for 60 s	**NO**	**NO**	**NO**	**NO**
Typical shaft output at 400 V [kW]	500	560	630	710
Typical shaft output at 460 V [hp]	650	750	900	1000
Typical shaft output at 480 V [kW]	560	630	710	800
Enclosure IP21/54	F18			
Output current				
Continuous (at 400 V) [A]	880	990	1120	1260
Intermittent (60 s overload) (at 400 V) [A]	968	1089	1232	1386
Continuous (at 460/480 V) [A]	780	890	1050	1160
Intermittent (60 s overload) (at 460/480 V) [A]	858	979	1155	1276
Continuous kVA (at 400 V) [kVA]	610	686	776	873
Continuous kVA (at 460 V) [kVA]	621	709	837	924
Continuous kVA (at 480 V) [kVA]	675	771	909	1005
Max. Input current				
Continuous (at 400 V) [A]	857	964	1090	1227
Continuous (at 460/480 V) [A]	759	867	1022	1129
Max. pre-fuses[1] [A]	1600		2000	
Max. cable size				
Motor (mm^2/AWG[2])	8 x 150 (8 x 300 mcm)			
Mains (mm^2/AWG[2])	8 x 240 (8 x 500 mcm)			
Brake (mm^2/AWG[2])	4 x 185 (4 x 350 mcm)			
Total LHD loss 400 V AC [kW]	21909	24592	26640	30519
Total back channel loss 400 V AC [kW]	17767	19984	21728	24936
Total filter loss 400 V AC [kW]	11747	12771	14128	15845
Total LHD loss 460 V AC [kW]	19896	22353	25030	27989
Total back channel loss 460 V AC [kW]	16131	18175	20428	22897
Total filter loss 460 V AC [kW]	11020	11929	13435	14776
Weight, enclosure IP21, IP54 [kg]	2009			
Efficiency[4]	0.96			
Output frequency [Hz]	0-600			
Heatsink overtemp. trip [°C]	105			
Power card ambient trip [°C]	85			
*Normal overload = 110% torque during 60 s				

Table 11.3 Mains Supply 3x380-480 V AC

1) For type of fuse, see *chapter 11.5.1 Fuses*.

2) American wire gauge.

3) Measured using 5 m screened motor cables at rated load and rated frequency.

4) The typical power loss is at nominal load conditions and expected to be within ±15% (tolerence relates to variety in voltage and cable conditions). Values are based on a typical motor efficiency (IE2/IE3 border line). Motors with lower efficiency also add to the power loss in the frequency converter and opposite. If the switching frequency is increased to the default setting, the power losses may rise significantly. LCP and typical control card power consumptions are included. Further options and customer load may add up to 30 W to the losses. (Though typical only 4 W extra for a fully loaded control card, or options for slot A or slot B, each).
Although measurements are made with state-of-the-art equipment, some measurement inaccuracy must be allowed for (±5%).

 Danfoss A/S © Rev. 2014-07-29 All rights reserved.

11.1.2 Derating for Temperature

The frequency converter automatically derates the switching frequency, switching type, or output current under certain load or ambient conditions as described below. The derating curves in *Illustration 11.1* and *Illustration 11.2* apply to both SFAVM and 60 AVM switching modes.

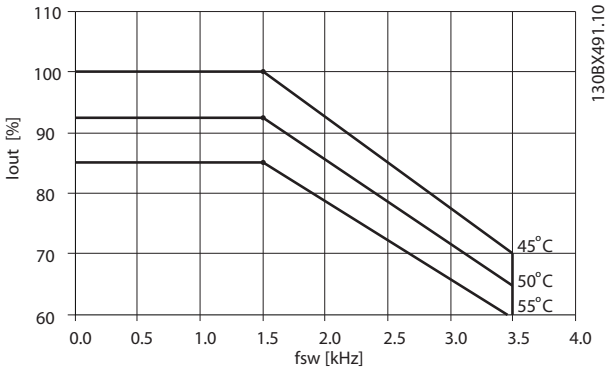

Illustration 11.1 Derating Frame Sizes D, E, and F 380-500 V (T5) High Overload 150%

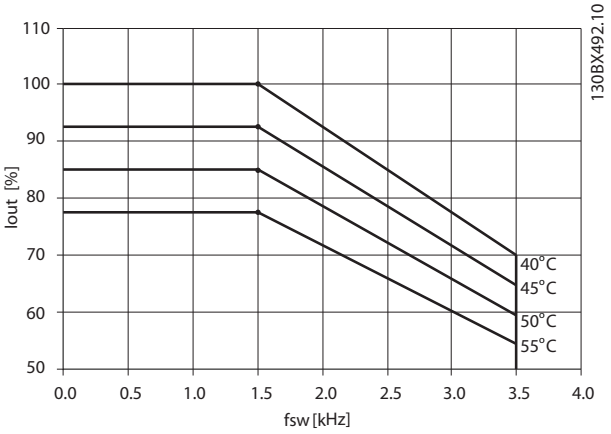

Illustration 11.2 Derating Frame Sizes D, E, and F 380-500 V (T5) Normal Overload 110%

11

Danfoss A/S © Rev. 2014-07-29 All rights reserved.

11.2 Mechanical Dimensions

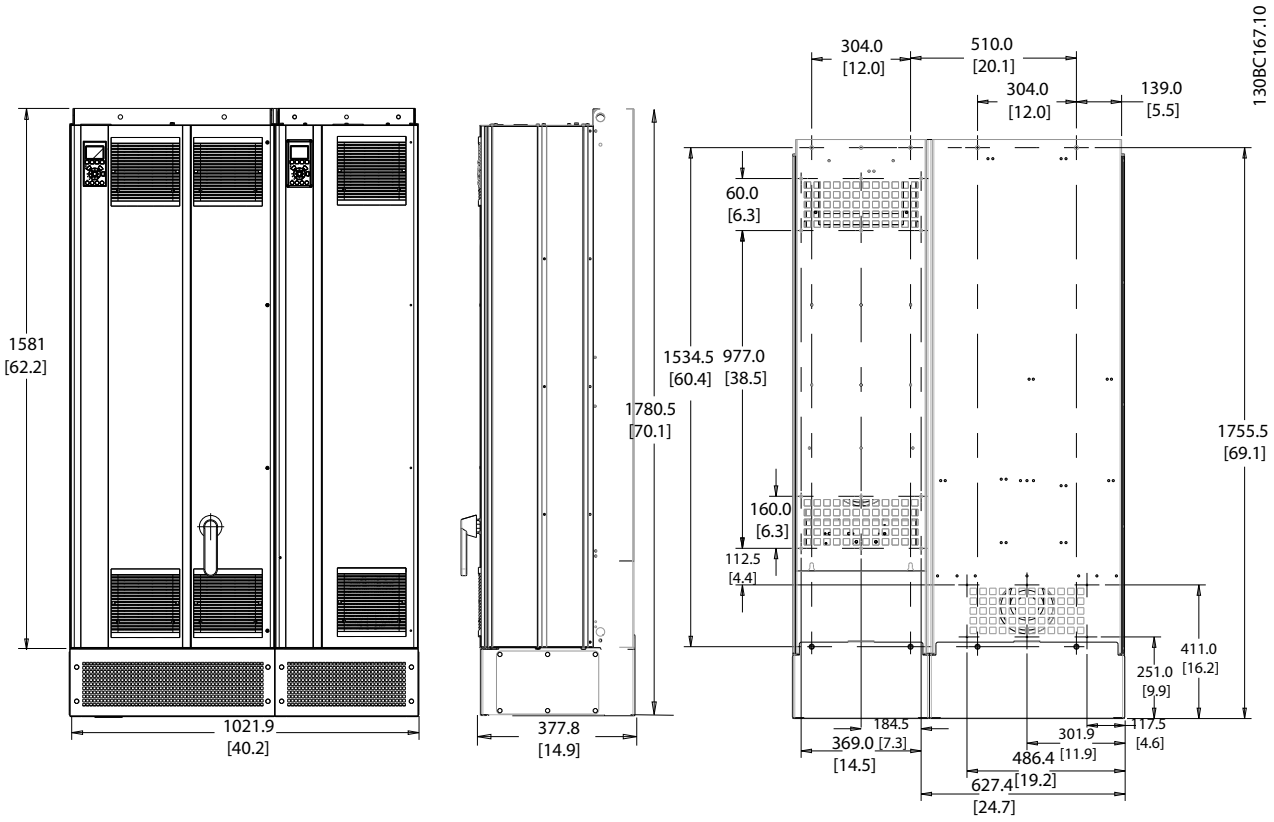

Illustration 11.3 Frame Size D13

11

Danfoss A/S © Rev. 2014-07-29 All rights reserved.

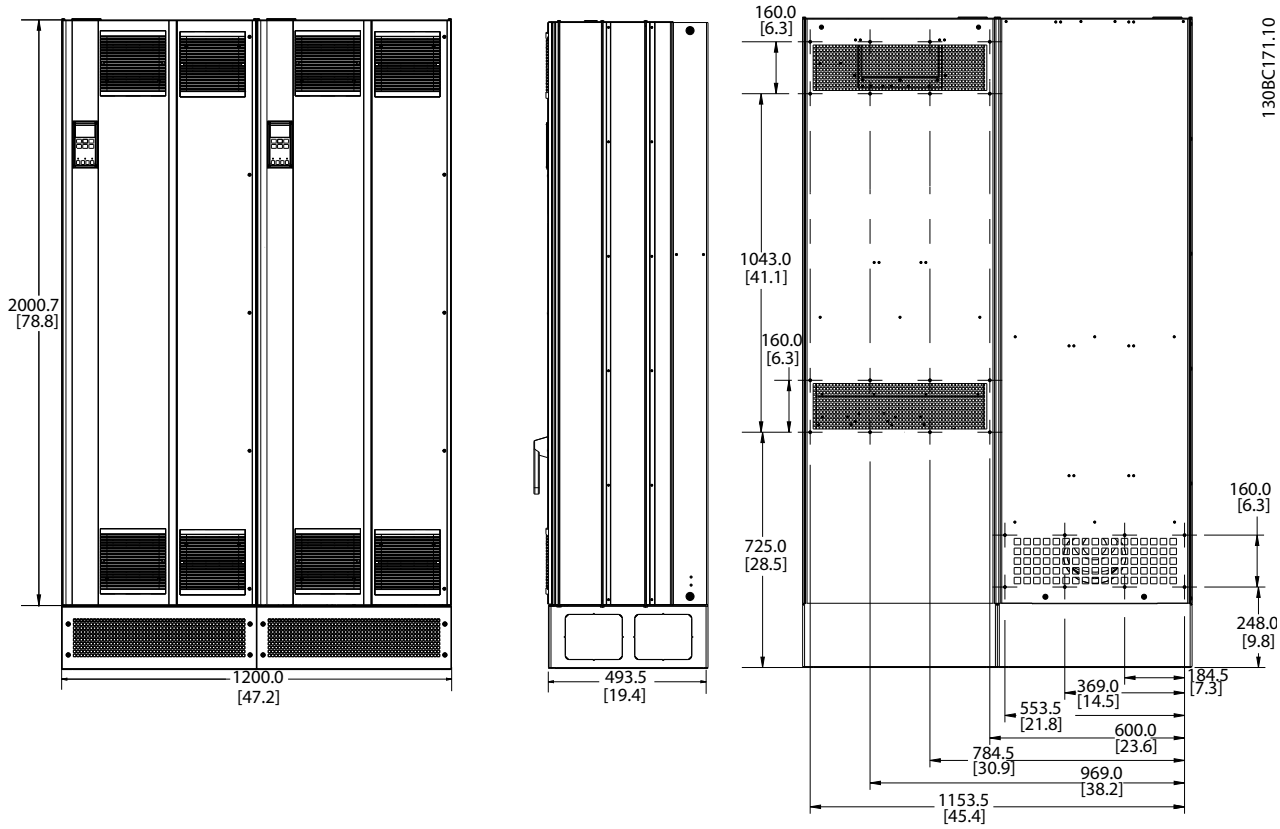

Illustration 11.4 Frame Size E9

11

Danfoss A/S © Rev. 2014-07-29 All rights reserved.

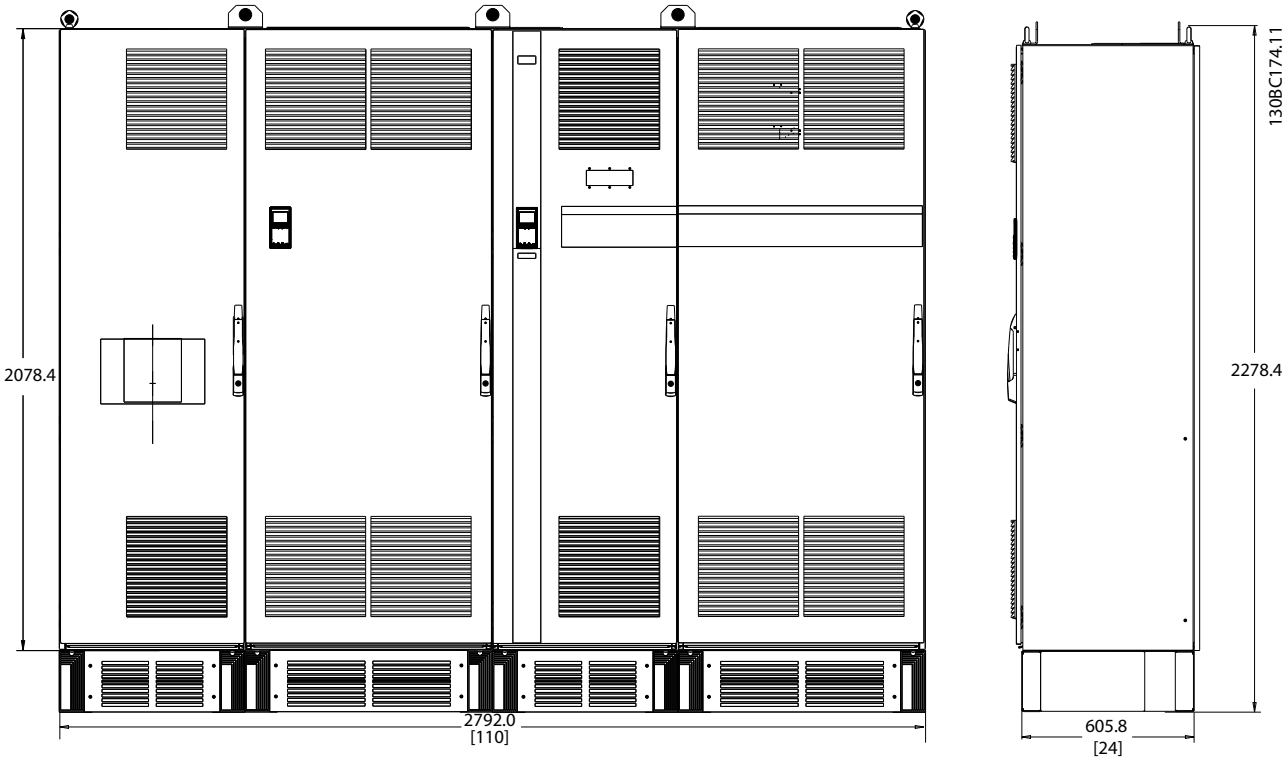

Illustration 11.5 Frame Size F18, Front and Side View

11.3 General Technical Data - Frequency Converter

Mains supply (L1, L2, L3)	
Supply voltage	380–480 V +5%

Mains voltage low/mains drop-out:
During low mains voltage or mains drop-out, the frequency converter continues until the intermediate circuit voltage drops below the minimum stop level, corresponding to 15% below the lowest rated supply voltage. Power up and full torque cannot be expected at mains voltage lower than 10% below the lowest rated supply voltage.

Supply frequency	50/60 Hz ±5%
Max. imbalance temporary between mains phases	3.0% of rated supply voltage
True power factor (λ)	> 0.98 nominal at rated load
Displacement power factor (cosφ) near unity	(> 0.98)
THiD	< 5%
Switching on input supply L1, L2, L3 (power-ups)	maximum once/2 min.
Environment according to EN60664-1	overvoltage category III/pollution degree 2

The unit is suitable for use on a circuit capable of delivering not more than 100.000 RMS symmetrical Amperes, 480/690 V maximum.

Motor output (U, V, W)	
Output voltage	0-100% of supply voltage
Output frequency	0-590 Hz[1)]
Switching on output	Unlimited
Ramp times	0.01-3600 s

1) Voltage and power dependent

Torque characteristics	
Starting torque (constant torque)	maximum 160% for 1 m[1)]
Starting torque	maximum 180% up to 0.5 s[1)]
Overload torque (constant torque)	maximum 160% for 1 m[1)]

1) Percentage relates to nominal torque of the unit.

Cable lengths and cross-sections	
Max. motor cable length, screened/armoured	150 m
Max. motor cable length, unscreened/unarmoured	300 m
Max. cross-section to motor, mains, load sharing, and brake[1)]	
Maximum cross-section to control terminals, rigid wire	1.5 mm^2/16 AWG (2 x 0.75 mm^2)
Maximum cross-section to control terminals, flexible cable	1 mm^2/18 AWG
Maximum cross-section to control terminals, cable with enclosed core	0.5 mm^2/20 AWG
Minimum cross-section to control terminals	0.25 mm^2

1) See chapter 11.1.1 Mains Supply 3x380-480 V AC for more information

Digital inputs	
Programmable digital inputs	4 (6)
Terminal number	18, 19, 27[1)], 29[1)], 32, 33,
Logic	PNP or NPN
Voltage level	0-24 V DC
Voltage level, logic'0' PNP	< 5 V DC
Voltage level, logic'1' PNP	> 10 V DC
Voltage level, logic '0' NPN	> 19 V DC
Voltage level, logic '1' NPN	< 14 V DC
Maximum voltage on input	28 V DC
Input resistance, R_i	approx. 4 kΩ

All digital inputs are galvanically isolated from the supply voltage (PELV) and other high-voltage terminals.
1) Terminals 27 and 29 can also be programmed as output.

11

Analog inputs	
Number of analog inputs	2
Terminal number	53, 54
Modes	Voltage or current
Mode select	Switch S201 and switch S202
Voltage mode	Switch S201/switch S202 = OFF (U)
Voltage level	0 to + 10 V (scaleable)
Input resistance, R_i	approx. 10 kΩ
Max. voltage	± 20 V
Current mode	Switch S201/switch S202 = ON (I)
Current level	0/4 to 20 mA (scaleable)
Input resistance, R_i	approx. 200 Ω
Max. current	30 mA
Resolution for analog inputs	10 bit (+ sign)
Accuracy of analog inputs	Max. error 0.5% of full scale
Bandwidth	200 Hz

The analog inputs are galvanically isolated from the supply voltage (PELV) and other high-voltage terminals.

Danfoss A/S © Rev. 2014-07-29 All rights reserved.

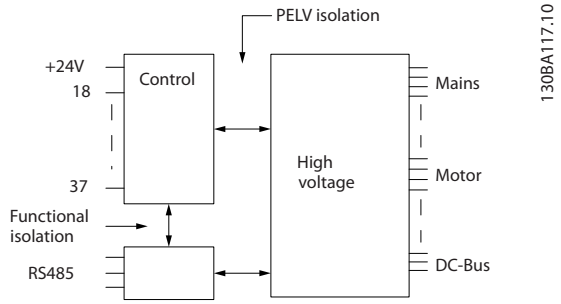

Illustration 11.6 PELV Isolation of Analog Inputs

Pulse inputs	
Programmable pulse inputs	2
Terminal number pulse	29, 33
Max. frequency at terminal, 29, 33	110 kHz (Push-pull driven)
Max. frequency at terminal, 29, 33	5 kHz (open collector)
Min. frequency at terminal 29, 33	4 Hz
Voltage level	see *chapter 11.3.1 Digital inputs*
Maximum voltage on input	28 V DC
Input resistance, R_i	approx. 4 kΩ
Pulse input accuracy (0.1–1 kHz)	Max. error: 0.1% of full scale

Analog output	
Number of programmable analog outputs	1
Terminal number	42
Current range at analog output	0/4-20 mA
Max. resistor load to common at analog output	500 Ω
Accuracy on analog output	Max. error: 0.8% of full scale
Resolution on analog output	8 bit

The analog output is galvanically isolated from the supply voltage (PELV) and other high-voltage terminals.

Control card, RS-485 serial communication	
Terminal number	68 (P,TX+, RX+), 69 (N,TX-, RX-)
Terminal number 61	Common for terminals 68 and 69

The RS-485 serial communication circuit is functionally seated from other central circuits and galvanically isolated from the supply voltage (PELV).

Digital output	
Programmable digital/pulse outputs	2
Terminal number	27, 29[1)]
Voltage level at digital/frequency output	0-24 V
Max. output current (sink or source)	40 mA
Max. load at frequency output	1 kΩ
Max. capacitive load at frequency output	10 nF
Minimum output frequency at frequency output	0 Hz
Maximum output frequency at frequency output	32 kHz
Accuracy of frequency output	Max. error: 0.1% of full scale
Resolution of frequency outputs	12 bit

1) Terminal 27 and 29 can also be programmed as input.

The digital output is galvanically isolated from the supply voltage (PELV) and other high-voltage terminals.

 Danfoss A/S © Rev. 2014-07-29 All rights reserved.

Control card, 24 V DC output	
Terminal number	13
Output voltage	24 V (+1, -3 v)
Max. load	200 mA

The 24 V DC supply is galvanically isolated from the supply voltage (PELV), but has the same potential as the analog and digital inputs and outputs.

Relay outputs	
Programmable relay outputs	2
Relay 01 Terminal number	1-3 (break), 1-2 (make)
Max. terminal load (AC-1)[1] on 1-3 (NC), 1-2 (NO) (resistive load)	240 V AC, 2A
Max. terminal load (AC-15)[1] (inductive load @ cosφ 0.4)	240 V AC, 0.2 A
Max. terminal load (DC-1)[1] on 1-2 (NO), 1-3 (NC) (resistive load)	60 V DC, 1 A
Max. terminal load (DC-13)[1] (inductive load)	24 V DC, 0.1 A
Relay 02 Terminal number	4-6 (break), 4-5 (make)
Max. terminal load (AC-1)[1] on 4-5 (NO) (resistive load)[2][3]	400 V AC, 2 A
Max. terminal load (AC-15)[1] on 4-5 (NO) (inductive load @ cosφ 0.4)	240 V AC, 0.2 A
Max. terminal load (DC-1)[1] on 4-5 (NO) (resistive load)	80 V DC, 2 A
Max. terminal load (DC-13)[1] on 4-5 (NO) (inductive load)	24 V DC, 0.1 A
Max. terminal load (AC-1)[1] on 4-6 (NC) (resistive load)	240 V AC, 2 A
Max. terminal load (AC-15)[1] on 4-6 (NC) (inductive load @ cosφ 0.4)	240 V AC, 0.2 A
Max. terminal load (DC-1)[1] on 4-6 (NC) (resistive load)	50 V DC, 2 A
Max. terminal load (DC-13)[1] on 4-6 (NC) (inductive load)	24 V DC, 0.1 A
Min. terminal load on 1-3 (NC), 1-2 (NO), 4-6 (NC), 4-5 (NO)	24 V DC 10 mA, 24 V AC 20 mA
Environment according to EN 60664-1	overvoltage category III/pollution degree 2

1) IEC 60947 parts 4 and 5
The relay contacts are galvanically isolated from the rest of the circuit by reinforced isolation (PELV).
2) Overvoltage Category II
3) UL applications 300 V AC 2 A

11

Control characteristics	
Resolution of output frequency at 0-1000 Hz	±0.003 Hz
System response time (terminals 18, 19, 27, 29, 32, 33)	≤ 2 ms
Speed control range (open loop)	1:100 of synchronous speed
Speed accuracy (open loop)	30-4000 RPM: Maximum error of ±8 RPM

All control characteristics are based on a 4-pole asynchronous motor

Surroundings	
Enclosure, frame size D and E	IP21, IP54
Enclosure, frame size F	IP21, IP54
Vibration test	0.7 g
Relative humidity	5-95% (IEC 721-3-3; Class 3K3 (non-condensing) during operation
Aggressive environment (IEC 60068-2-43) H_2S test	class kD
Test method according to IEC 60068-2-43 H_2S (10 days)	
Ambient temperature (at 60 AVM switching mode)	
- with derating	max. 55 °C
- with full output power, typical IE2 motors (see *chapter 11.1.2 Derating for Temperature*	max. 50 °C
- at full continuous FC output current	max. 45 °C
Minimum ambient temperature during full-scale operation	0 °C
Minimum ambient temperature at reduced performance	- 10 °C
Temperature during storage/transport	-25 - +65/70 °C
Maximum altitude above sea level without derating	1,000 m
Maximum altitude above sea level with derating	3,000 m

For more information on derating, consult the design guide

EMC standards, emission	EN 61800-3, EN 61000-6-3/4, EN 55011, IEC 61800-3

Danfoss A/S © Rev. 2014-07-29 All rights reserved.

EMC standards, immunity	EN 61800-3, EN 61000-6-1/2, EN 61000-4-2, EN 61000-4-3, EN 61000-4-4, EN 61000-4-5, EN 61000-4-6

Control card performance	
Scan interval	5 ms

Control card, USB serial communication	
USB standard	1.1 (full speed)
USB plug	USB type B device plug

NOTICE

Connection to PC is carried out via a standard host/device USB cable.
The USB connection is galvanically isolated from the supply voltage (PELV) and other high-voltage terminals.
The USB connection is not galvanically isolated from protective earth. Use only isolated laptop/PC as connection to the USB connector on the frequency converter or an isolated USB cable/converter.

Protection and features:

- Electronic thermal motor protection against overload.
- Temperature monitoring of the heat sink ensures that the frequency converter trips if the temperature reaches a predefined level. An overload temperature cannot be reset until the temperature of the heat sink is below the allowed values.
- The frequency converter is protected against short-circuits on motor terminals U, V, W.
- If a mains phase is missing, the frequency converter trips or issues a warning (depending on the load).
- Monitoring of the intermediate circuit voltage ensures that the frequency converter trips if the intermediate circuit voltage is too low or too high.
- The frequency converter is protected against earth faults on motor terminals U, V, W.

11.4 General Technical Data - Filter

Response time [ms]	<0.5
Settling time - reactive current control [ms]	<40
Settling time - harmonic current control (filtering) [ms]	<20
Overshoot - reactive current control [%]	<20
Overshoot - harmonic current control [%]	<10

Table 11.4 Power Ranges (LHD with AF)

11.4.1 Power Rating

Grid conditions	
Supply voltage	380–480 V, +5%/-10%

Mains voltage low/mains drop-out:
During low mains voltage or a mains drop-out, the filter continues until the intermediate circuit voltage drops below the minimum stop level, which corresponds to 15% below the filter lowest rated supply voltage. Full compensation cannot be expected at mains voltage lower than 10% below the filter lowest rated supply voltage. If mains voltage exceed the filter highest rated voltage, the filter continues to work but harmonic mitigation performance is reduced. The filter does not cut out until main voltages exceed 580 V.

Supply frequency	50/60 Hz ±5%
Max. imbalance temporary between mains phases where mitigation performance is kept high.	3.0% of rated supply voltage Filter mitigates at higher mains imbalance but harmonic mitigation performance is reduced
Max THDv pre-distortion	10% with kept mitigation performance Reduced performance for higher pre-distortion levels

Harmonic mitigation performance	
	Best performance <4%
THiD	Depending on filter vs. distortion ratio.
Individual harmonic mitigation ability:	Current maximum RMS [% of rated RMS current]
2nd	10%
4th	10%
5th	70%
7th	50%
8th	10%
10th	5%
11th	32%
13th	28%
14th	4%
16th	4%
17th	20%
19th	18%
20th	3%
22nd	3%
23rd	16%
25th	14%
Total current of harmonics	90%

The filter is performance tested to the 40th order

Reactive current compensation	
Cos phi	Controllable 1.0 to 0.5 lagging
Reactive current, % of filter current rating	100%

Cable lengths and cross-sections	
Max grid cable length (direct internal connection to drive)	Unlimited (determined by voltage drop)
Maximum cross-section to control terminals, rigid wire	1.5 mm^2/16 AWG (2 x 0.75 mm^2
Maximum cross-section to control terminals, flexible cable	1 mm^2/18 AWG
Maximum cross-section to control terminals, cable with enclosed core	0.5 mm^2/20 AWG
Minimum cross-section to control terminals	0.25 mm^2

CT terminals specification	
CT number	3 (one for each phase)
The AAF burden equals	2 mΩ
Secondary current rating	1 A or 5 A (hardware set-up)
Accuracy	Class 0.5 or better

Digital inputs	
Programmable digital inputs	2 (4)
Terminal number	18, 19, 27[1)], 29[1)]
Logic	PNP or NPN
Voltage level	0-24–V DC
Voltage level, logic'0' PNP	< 5 V DC
Voltage level, logic'1' PNP	> 10 V DC
Voltage level, logic '0' NPN	> 19 V DC
Voltage level, logic '1' NPN	< 14 V DC
Maximum voltage on input	28 V DC
Input resistance, R_i	approx. 4 kΩ

All digital inputs are galvanically isolated from the supply voltage (PELV) and other high-voltage terminals.

1) Terminals 27 and 29 can also be programmed as output.

 Danfoss A/S © Rev. 2014-07-29 All rights reserved.

Control card, RS-485 serial communication	
Terminal number	68 (P, TX+, RX+), 69 (N, TX-, RX-)
Terminal number 61	Common for terminals 68 and 69

The RS-485 serial communication circuit is functionally separated from other central circuits and galvanically isolated from the supply voltage (PELV).

Digital output	
Programmable digital/pulse outputs	2
Terminal number	27, 29 [1]
Voltage level at digital/frequency output	0–24 V
Max. output current (sink or source)	40 mA

1) Terminal 27 and 29 can also be programmed as input.

Control card, 24 V DC output	
Terminal number	13
Max. load	200 mA

The 24 V DC supply is galvanically isolated from the supply voltage (PELV), but has the same potential as the analog and digital inputs and outputs.

Surroundings	
Enclosure	IP21, IP54
Vibration test	1.0 g
Relative humidity	5% - 95% (IEC 721-3-3; class 3K3 (non-condensing) during operation
Aggressive environment (IEC 60068-2-43) H_2S test	class kD
Test method according to IEC 60068-2-43 H_2S (10 days)	
Ambient temperature	
- with derating	maximum 50 °C
- at full continuous output current	max. 40 °C
Minimum ambient temperature	-10 °C
Temperature during storage/transport	-25 to +65 °C
Maximum altitude above sea level without derating	1000 m
Maximum altitude above sea level with derating	3000 m
EMC standards, Emission	EN 61800-3, EN 61000-6-3/4, EN 55011, IEC 61800-3
EMC standards, Immunity	EN 61800-3, EN 61000-6-1/2, EN 61000-4-2, EN 61000-4-3, EN 61000-4-4, EN 61000-4-5, EN 61000-4-6

Control card performance	
Scan interval	5 ms

Control card, USB serial communication	
USB standard	1.1 (full speed)
USB plug	USB type B “device” plug

Generic specifications	
Maximum parallel filters	4 on same CT set
Filter efficiency	97%
Typical average switching frequency	3.0–4.5 kHz
Response time (reactive and harmonic)	< 0.5 ms
Settling time - reactive current control	< 20 ms
Settling time - harmonic current control	< 20 ms
Overshoot – reactive current control	<10%
Overshoot – Harmonic current control	<10%

 Danfoss A/S © Rev. 2014-07-29 All rights reserved.

Connection to PC is carried out via a standard host/device USB cable. The USB connection is galvanically isolated from the supply voltage (PELV) and other high-voltage terminals. The USB connection is not galvanically isolated from protective earth. Use only isolated laptop/PC as connection to the USB connector on the unit or an isolated USB cable/converter.

Protection and features

- Temperature monitoring of the heat sink ensures that the active filter trips if the temperature reaches a predefined level. An overload temperature cannot be reset until the temperature of the heat sink is below the acceptable values.
- If a mains phase is missing, the active filter trips.
- The active filter has a short circuit protection current rate of 100 kA if properly fused
- Monitoring of the intermediate circuit voltage ensures that the filter trips if the intermediate circuit voltage is too low or too high.
- The active filter monitors the mains current as well as internal currents to reassure that current levels do not reach critical levels. If current exceeds a critical level, the filter trips.

 Danfoss A/S © Rev. 2014-07-29 All rights reserved.

11.4.2 Derating for Altitude

The cooling capability of air is decreased at lower air pressure.

Below 1000 m altitude no derating is necessary but above 1000 m the ambient temperature (T_{AMB}) or max. output current (I_{out}) should be derated in accordance with *Illustration 11.7*.

An alternative is to lower the ambient temperature at high altitudes and thereby ensure 100% output current at high altitudes. As an example of how to read the graph, the situation at 2,000 m is elaborated. At a temperature of 45 °C ($T_{AMB, MAX}$ - 3.3 K), 91% of the rated output current is available. At a temperature of 41.7 °C, 100% of the rated output current is available.

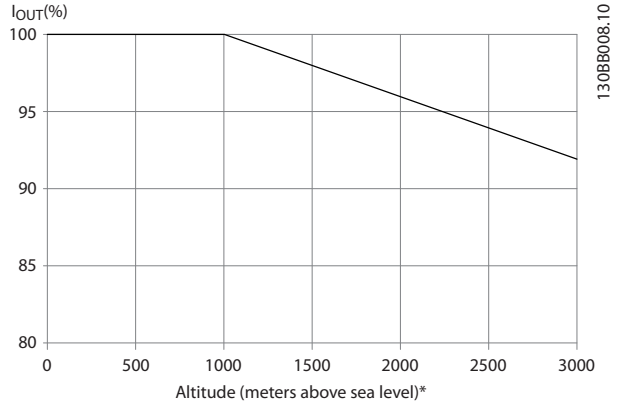

Illustration 11.7 Altitude Derating

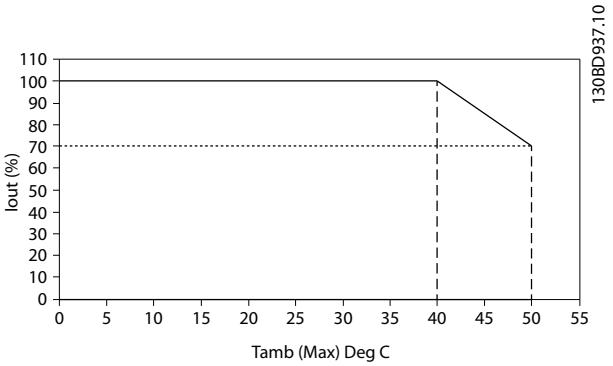

Illustration 11.8 Input/Output vs. Maximum Ambient Temperature

11.5 Fuses

Danfoss recommends using fuses and/or circuit breakers on the supply side as protection in case of component break-down inside the frequency converter (first fault).

NOTICE

Using fuses and/or circuit breakers ensures compliance with IEC 60364 for CE or NEC 2009 for UL.

Branch Circuit Protection
To protect the installation against electrical and fire hazard, all branch circuits in an installation, switch gear, machines etc., must be protected against short-circuit and over-current according to national/international regulations.

NOTICE

The recommendations do not cover branch circuit protection for UL.

Short-circuit protection
Danfoss recommends using the fuses/circuit breakers in *chapter 11.5.2 Fuse Tables* to protect service personnel and property in case of component break-down in the frequency converter.

11.5.1 Non UL compliance

Non UL compliance

If UL/cUL is not to be complied with, Danfoss recommends using the following fuses, which ensures compliance with EN50178:

P132-P200	380-500 V	type gG
P250-P400	380-500 V	type gR

Table 11.5 Recommended Fuses for non-UL Applications

11.5.2 Fuse Tables

UL Compliance Fuse tables

380-480 V, frame sizes D, E and F

The fuses below are suitable for use on a circuit capable of delivering 100,000 Arms (symmetrical), 240 V, or 480 V, or 500 V, or 600 V depending on the frequency converter voltage rating. With the proper fusing the frequency converter Short Circuit Current Rating (SCCR) is 100,000 Arms.

Size/ Type	Bussmann E1958 JFHR2**	Bussmann E4273 T/JDDZ**	SIBA E180276 JFHR2	LittelFuse E71611 JFHR2**	Ferraz-Shawmut E60314 JFHR2**	Bussmann E4274 H/JDDZ**	Bussmann E125085 JFHR2*	Internal Option Bussmann
P132	FWH-400	JJS-400	2061032.40	L50S-400	A50-P400	NOS-400	170M4012	170M4016
P160	FWH-500	JJS-500	2061032.50	L50S-500	A50-P500	NOS-500	170M4014	170M4016
P200	FWH-600	JJS-600	2062032.63	L50S-600	A50-P600	NOS-600	170M4016	170M4016

Table 11.6 Frame size D, Line Fuses, 380-480 V

Size/Type	Bussmann PN*	Rating	Ferraz	Siba
P250	170M4017	700 A, 700 V	6.9URD33D08A0700	20 630 32.700
P315	170M6013	900 A, 700 V	6.9URD33D08A0900	20 630 32.900
P355	170M6013	900 A, 700 V	6.9URD33D08A0900	20 630 32.900
P400	170M6013	900 A, 700 V	6.9URD33D08A0900	20 630 32.900

Table 11.7 Frame size E, Line Fuses, 380-480 V

Size/Type	Bussmann PN*	Rating	Siba	Internal Bussmann Option
P450	170M7081	1600 A, 700 V	20 695 32.1600	170M7082
P500	170M7081	1600 A, 700 V	20 695 32.1600	170M7082
P560	170M7082	2000 A, 700 V	20 695 32.2000	170M7082
P630	170M7082	2000 A, 700 V	20 695 32.2000	170M7082

Table 11.8 Frame size F, Line Fuses, 380-480 V

Size/Type	Bussmann PN*	Rating	Siba
P450	170M8611	1100 A, 1000 V	20 781 32.1000
P500	170M8611	1100 A, 1000 V	20 781 32.1000
P560	170M6467	1400 A, 700 V	20 681 32.1400
P630	170M6467	1400 A, 700 V	20 681 32.1400

Table 11.9 Frame Size F, Inverter Module DC Link Fuses, 380-480 V

**170M fuses from Bussmann shown use the -/80 visual indicator, -TN/80 Type T, -/110 or TN/110 Type T indicator fuses of the same size and amperage may be substituted for external use*

***Any minimum 500 V UL listed fuse with associated current rating may be used to meet UL requirements.*

11.5.3 Supplementary Fuses - High Power

Supplementary fuses

Frame size	Bussmann PN	Rating
D, E and F	KTK-4	4 A, 600 V

Table 11.10 SMPS Fuse

Danfoss A/S © Rev. 2014-07-29 All rights reserved.

Size/Type	Bussmann PN	LittelFuse	Rating
P132-P250, 380-500 V	KTK-4		4 A, 600 V
P315-P630, 380-500 V		KLK-15	15A, 600 V

Table 11.11 Fan Fuses

Size/Type		Bussmann PN	Rating	Alternative Fuses
P450-P630, 380-500 V	2.5-4.0 A	LPJ-6 SP or SPI	6 A, 600 V	Any listed class J dual element, time delay, 6A
P450-P630, 380-500 V	4.0-6.3 A	LPJ-10 SP or SPI	10 A, 600 V	Any listed class J dual element, time delay, 10 A
P450-P630, 380-500 V	6.3 - 10 A	LPJ-15 SP or SPI	15 A, 600 V	Any listed class J dual element, time delay, 15 A
P450-P630, 380-500 V	10 - 16 A	LPJ-25 SP or SPI	25 A, 600 V	Any listed class J dual element, time delay, 25 A

Table 11.12 Manual Motor Controller Fuses

Frame size	Bussmann PN*	Rating	Alternative Fuses
F	LPJ-30 SP or SPI	30 A, 600 V	Any listed Class J dual element, time delay, 30 A

Table 11.13 30 A Fuse Protected Terminal Fuse

Frame size	Bussmann PN*	Rating	Alternative Fuses
F	LPJ-6 SP or SPI	6 A, 600 V	Any listed class J dual element, time delay, 6 A

Table 11.14 Control Transformer Fuse

Frame size	Bussmann PN*	Rating
F	GMC-800MA	800 mA, 250 V

Table 11.15 NAMUR Fuse

Frame size	Bussmann PN*	Rating	Alternative Fuses
F	LP-CC-6	6 A, 600 V	Any listed class CC, 6 A

Table 11.16 Safety Relay Coil Fuse with PILS Relay

Frame size	LittelFuse PN	Rating
D, E, F	KLK-15	15 A, 600 V

Table 11.17 Mains Fuses (Power Card)

Frame size	Bussmann PN	Rating
D, E, F	FNQ-R-3	3 A, 600 V

Table 11.18 Transformer Fuse (Mains Contactor)

Frame size	Bussmann PN	Rating
D, E, F	FNQ-R-1	1 A, 600 V

Table 11.19 Soft Charge Fuses

11.6 General Torque Tightening Values

For fastening hardware described in this manual, use the torque values in *Table 11.20*. These values are not intended for fastening IGBTs. See the instructions included with those replacement parts for correct values.

Shaft Size	Driver Size Torx/Hex [mm]	Torque [Nm]	Torque [in-lbs]
M4	T-20/7	1.0	10
M5	T-25/8	2.3	20
M6	T-30/10	4.0	35
M8	T-40/13	9.6	85
M10	T-50/17	19.2	170
M12	18/19	19	170

Table 11.20 Torque Values

 Danfoss A/S © Rev. 2014-07-29 All rights reserved.

Index

A

AC mains ... 4
Accel time ... 40
Active filter ... 13
Additional Literature ... 13
AF readouts ... 111
AF settings ... 111
Airflow ... 15
Alarm/warning code list ... 131
AMA ... 119, 124, 127
AMA with T27 connected ... 112
AMA without T27 connected ... 112
Analog input ... 83, 123, 146
Analog output ... 83, 147
Analog signal ... 123
Analog speed reference ... 113
Application examples ... 112
Approval ... 13
ATEX ... 54
ATEX ETR ... 54
Auto On ... 119, 120
Auto remote coasting ... 39
Automatic Motor Adaptation (AMA) ... 50

B

Back cooling ... 15
Brake
  control ... 124
  resistor ... 123
Brake cable ... 27
Brake check ... 56
Brake chopper ... 27
Brake function ... 55
Brake parameters ... 77
Brake power limit ... 55
Brake power monitoring ... 56
Brake resistor temperature switch ... 27
Brakes ... 77
Braking ... 119, 125
Branch circuit protection ... 153

C

Cable length, cross-section ... 146, 150
Cable size, maximum ... 139, 140, 141
Cable-length, cross-section ... 24
Cabling ... 23
Catch up ... 63
CE compliance mark ... 13
Changing a group of numeric data values ... 46
Changing a text value ... 46
Changing data ... 45
Changing of data value ... 46
Circuit breaker ... 38
Coasting ... 45
Comm. and options ... 108
Communication option ... 126
Communications parameters ... 86
Compliance mark, CE ... 13
Conduit ... 38
Connecting to a PC ... 47
Control card
  Control card ... 123
Control card performance ... 149
Control card, 24 V DC output ... 148
Control card, RS-485 serial communication ... 147
Control card, USB serial communication ... 149, 151
Control characteristic ... 148
Control signal ... 119
Control system ... 13
Control terminal ... 31, 119, 121
Control terminal, access ... 31
Control terminals ... 39
Control wiring ... 38
Controller parameters ... 85
Cooling ... 15, 53
Cooling clearance ... 38
CT terminal, specification ... 150
Current limit ... 40
Current rating ... 15, 123

D

Data readout parameters ... 96
Data readouts ... 110
Data redouts ... 99
Data storage in LCP ... 46
Data transfer from LCP ... 46
DC current ... 119
DC link ... 123, 134
Default settings ... 47
Default Settings ... 72

 Danfoss A/S © Rev. 2014-07-29 All rights reserved.

Derating, altitude ... 153
Digital In/Out ... 107
Digital input ... 120, 124, 146
Digital input parameters ... 81
Digital output ... 147
Digital output parameters ... 81
Dimension, mechanical ... 143
Discharge time ... 4
Disconnect switch ... 39
Display parameters ... 74
Download manuals ... 13
Drive information parameters ... 94

E

ELCB relay ... 26
Electrical installation ... 31
Electromechanical brake ... 35
EMC ... 38
Enclosure ... 139, 140, 141
Ethernet parameters ... 89
Exploded view ... 5
External alarm reset ... 114
External command ... 121
External fan supply ... 27

F

Factory installed brake chopper option ... 27
Fan ... 27
Fault message, active filter ... 134
Feedback ... 38, 119, 127
F-frame option ... 36
Fieldbus connection ... 30
Fieldbus parameters ... 88
Filter capacitor ... 26
Full load current ... 15
Functional testing ... 40
Fuse ... 38, 126, 136
Fuse tables ... 154
Fuses ... 153
Fusing ... 38

G

Graphical display ... 42
Grid condition ... 149
Ground connection ... 38
Ground wire ... 38
Grounding ... 24, 26, 38

H

Hand ... 40, 119
Hand on ... 40
Hand On ... 119
Harmonic mitigation performance ... 150
Heat sink ... 127
Heater ... 36
How to operate graphical LCP (GLCP) ... 42

I

IEC emergency stop, Pilz safety relay ... 36
Indexed parameters ... 46
Indicator lights (LEDs) ... 44
Initialisation ... 47
Input current, maximum ... 139, 140, 141
Input power ... 4, 38, 122, 136
Input terminal ... 123
Input voltage ... 39, 122
Installation ... 38, 39
Installation site, planning ... 15
Insulation Resistance Monitor (IRM) ... 36
Intermediate circuit ... 123
IT main ... 26

K

Klixon ... 54

L

Language package 1 ... 49
Language package 2 ... 49
Language package 3 ... 49
Language package 4 ... 49
Latched start/stop inverse ... 113
LCP ... 46
LCP 102 ... 42
LEDs ... 42
Lifting ... 17
Limits parameters ... 80
Limits/Warnings ... 80
Load parameters ... 75
Local control ... 119
Local mode ... 40
Local start ... 40
Local-control test ... 40

 Danfoss A/S © Rev. 2014-07-29 All rights reserved.

M

Main menu mode... 44
Main reactance... 50
Mains connection... 27
Mains inputs... 20
Mains supply (L1, L2, L3)... 145
Mains voltage... 119
Manual motor starter... 36
Maximum cable size... 139, 140, 141
Maximum input current... 139, 140, 141
MCB 113... 67
MCO advanced parameters... 103
MCO basic settings parameters... 101
MCO data readout parameters... 105
MCT 10... 46, 48
Mechanical brake... 57
Mechanical brake control... 35, 116
Mechanical dimension... 143
Motor
current... 127
data... 124, 128
power... 127
Motor cable... 26
Motor data... 39, 40
Motor feedback option parameters... 98
Motor insulation... 29
Motor output... 145
Motor parameters... 75
Motor protection... 52, 149
Motor rotation check... 26
Motor speeds... 39
Motor thermal protection... 30
Motor Thermal Protection... 52
Motor thermistor... 115
Motor wiring... 38
Mounting... 38

N

NAMUR... 36
Navigation key... 119
Navigation keys... 39
NDE bearing... 29
Noise isolation... 38
Non UL compliance... 153
Normal overload... 139, 140, 141

O

Operation parameters... 74
Operation/Display... 106
Optional equipment... 13, 39
Options parameters... 86
Output current... 15, 119, 123, 139, 140, 141
Output performance (U, V, W)... 145
Overcurrent... 120
Overload protection... 15
Overvoltage... 40, 120

P

Parallel connection, motor... 35
PC... 47
PC Connection... 47
PC software tools... 48
PELV... 112
Phase loss... 123
Potentiometer... 114
Potentiometer reference... 118
Power connection... 23
Power factor... 38
Power, input... 122
Preset reference... 59
Preset speeds... 114
Profibus DP-V1... 48
Profibus parameters... 87
Programming... 39, 40, 123
Protection, feature... 149
PTC thermistor connection... 53
Pulse input... 147
Pulse start/stop... 113, 117

Q

Quick menu... 44
Quick menu mode... 44
Quick set-up... 39
Quick transfer of parameter settings when using GLCP... 46

R

Ramp parameters... 78
Ramp-down time... 40
Ramp-up time... 40
RCD... 26
RCD (Residual Current Device)... 36

 Danfoss A/S © Rev. 2014-07-29 All rights reserved.

Reactive current compensation... 150
Reference... 112, 119, 120
Reference parameters... 78
Relay output... 148
Relay outputs... 64
Remote reference... 120
Reset... 45, 121, 122, 123, 124, 128, 129
Reversing... 114
RFI capacitor... 26
RFI switch... 26
RS-485... 34, 47, 115
RS-485 bus connection... 47
Run command... 41
Run permissive... 120

S

Safe Torque Off... 30, 34, 113
Screened/armoured... 28
Screened/armoured cable... 28
Screening, cable... 23
Sensor Input Option parameters... 106
Serial communication... 119, 120, 122, 149
Setpoint... 120
Shielded cable... 26, 38
Shipping damage... 15
Short circuit... 125
Sleep mode... 120
Smart Application Set-up (SAS)... 39
Smart Logic parameters... 91
Special features parameters... 100
Special functions... 108
Special functions parameters... 92
Speed reference... 41, 112, 114, 119
Start/stop... 117
Start/stop command... 113
Start-up... 136
Stator leakage reactance... 50
Status... 44
Status display... 119
Status messages... 42
Status mode... 119
Step-by-step... 46
STO... 30, 34
Stop command... 120
Supply voltage... 126
Surrounding... 148
Switches S201, S202, S801... 34
Switching frequency... 24, 120

T

Temperature limit... 38
Terminal function... 27
Terminal location... 18
Terminals, torque... 35
Thermal motor protection... 124
Thermal Protection... 13
Thermistor... 52, 112, 124
Torque... 23, 34, 124
Torque characteristic... 146
Torque limit... 40
Torque, terminal... 23

U

Unit information... 109
USB... 47

V

Voltage imbalance... 123
Voltage level... 146, 150
Voltage reference via potentiometer... 118
Voltage, input... 122

W

Warnings parameters... 80

 Danfoss A/S © Rev. 2014-07-29 All rights reserved.

 Danfoss A/S © Rev. 2014-07-29 All rights reserved.



www.danfoss.com/drives

Danfoss can accept no responsibility for possible errors in catalogues, brochures and other printed material. Danfoss reserves the right to alter its products without notice. This also applies to products already on order provided that such alterations can be made without subsequential changes being necessary in specifications already agreed. All trademarks in this material are property of the respective companies. Danfoss and the Danfoss logotype are trademarks of Danfoss A/S. All rights reserved.

Danfoss A/S
Ulsnaes 1
DK-6300 Graasten
www.danfoss.com/drives

130R0401 MG37A202 Rev. 2014-07-29