Operating Instructions

VLT® 5000 Crane

■ Contents

Introduction 3
Safety 4
General Instructions 5
Abbreviations and Definitions 6
Brief Product Description 9
Function and System Description 9
Key Diagram for VLT 5000 Crane 5042, 5102 400-500 V 14
Key Diagram for VLT 5000 Crane 5122-5202 400-500 V 15

Technical Data 16
General Technical Data 16
Mains Supply 400 - 500 V 20
Mains supply 3 x 400 - 500 V 20
Fuses 22
Mechanical Dimensions 23

Installation 24
General Warning before Installation 24
Mechanical Installation 24
Installation of VLT 5042–5062 400-500 V Compact IP20/IP00 24
Installation of VLT 5072-5202 400-500 V Compact IP20/IP00 25
Electrical Installation 26
RFI switch 33

LCP - Local Control Panel 36
Control Panel 36
Display 37
Parameter programming 39

Programming 42
General Advice on Programming 42
Operation & Display 50
Load and Motor 54
References & Limits 58
Inputs & Outputs 61
Application Functions 68
Service Functions 70
Crane Functions 74

Serial communication 80
Factory Settings 81
Defined Parameters 85

All About VLT 5000 Crane 86
Status Messages 86
List of Warnings and Alarms 87
Warnings 87

Appendix 92
Trouble-shooting 92
Derating for air pressure 94
Efficiency 113
General aspects of EMC emissions 114

175ZA522.12

VLT 5000 Crane

Operating instructions
Software version: 20.3x

These operating instructions can be used for VLT 5000 Crane frequency converters with software version 20.3x. See software version number in parameter 624.

■ Safety

The voltage of the frequency converter is dangerous whenever the equipment is connected to mains. Incorrect installation of the motor or the frequency converter may cause damage to the equipment, serious personal injury or death. Consequently, the instructions in this manual, as well as national and local rules and safety regulations, must be complied with

■ Safety Regulations

1. The frequency converter must be disconnected from mains if repair work is to be carried out. Check that the mains supply has been disconnected and that the necessary time has passed before removing motor and mains plugs.
2. The [STOP/RESET] key on the control panel of the frequency converter does not disconnect the equipment from mains and is thus not to be used as a safety switch.
3. Correct protective earthing of the equipment must be established, the user must be protected against supply voltage, and the motor must be protected against overload in accordance with applicable national and local regulations.
4. The earth leakage currents are higher than 3.5 mA.
5. Protection against motor overload is not included in the factory setting. If this function is desired, set parameter 128 to data value *ETR trip* or data value *ETR warning*.
   Note: The function is initialised at 1.16 x rated motor current and rated motor frequency. For the North American market: The ETR functions provide class 20 motor overload protection in accordance with NEC.
6. Do not remove the plugs for the motor and mains supply while the frequency converter is connected to mains. Check that the mains supply has been disconnected and that the necessary time has passed before removing motor and mains plugs.
7. Please note that the frequency converter has more voltage inputs than L1, L2 and L3, when loadsharing terminals (linking of DC intermediate circuit) and external 24 V DC have been installed. Check that all voltage inputs have been disconnected and that the necessary time has passed before repair work is commenced.

■ Warning Against Unintended Start

1. The motor can be brought to a stop by means of digital commands, bus commands, references or a local stop, while the frequency converter is connected to mains. If personal safety considerations make it necessary to ensure that no unintended start occurs, these stop functions are not sufficient.
2. While parameters are being changed, the motor may start. Consequently, the stop key [STOP/RESET] must always be activated, following which data can be modified.
3. A motor that has been stopped may start if faults occur in the electronics of the frequency converter, or if a temporary overload or a fault in the supply mains or the motor connection ceases.
4. Immediate stop. Direct stop input (term. 37). When contact is open, the drive will stop (coast).

Warning:

Touching the electrical parts may be fatal - even after the equipment has been disconnected from mains.
Also make sure that other voltage inputs have been disconnected, such as external 24 V DC, load-sharing (linkage of DC intermediate circuit), as well as the motor connection for kinetic back-up.

Using VLT 5042-5062: wait at least 15 minutes.
Using VLT 5072-5202: wait at least 20 minutes.

175ZA523.11

General Instructions

These Operating Instructions are intended for persons who are to install, operate and program the VLT 5000 Crane.

They comprise the specific technical publications on the VLT 5000 Crane and are delivered with the product.

When reading these Operating Instructions you come across different symbols that require special attention:

The symbols used are the following:

Indicates a general warning

Indicates a high-voltage warning

NB!:
Indicates something to be noted by the reader

■ Abbreviations and Definitions

■ Frequency converter

Abbreviation/Definition	Description
$I_{VLT,MAX}$	The maximum output current
$I_{VLT,N}$	The rated output current supplied by the frequency converter
$U_{VLT,MAX}$	The maximum output voltage

■ Output

Abbreviation/Definition	Description
I_M	The current transmitted to the motor
U_M	The voltage transmitted to the motor
f_M	The frequency transmitted to the motor
Break-away torque	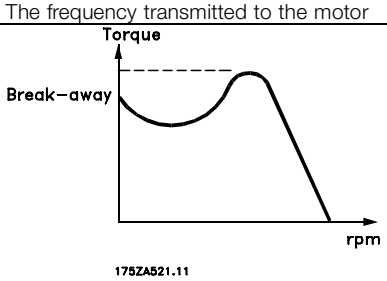
η_{VLT}	The efficiency of the frequency converter is defined as the ratio between the power output and power input

■ NO/NC

Abbreviation/Definition	Description
NO	Normally open
NC	Normally closed

■ Input

Abbreviation/Definition	Description
Control command Immediate stop Stop command	By means of LCP and the digital inputs, it is possible to start and stop the connected motor.

MG.50.N4.02 - VLT is a registered Danfoss trademark

■ Motor

Abbreviation/Definition	Description
$I_{M,N}$	The rated motor current (nameplate data)
$f_{M,N}$	The rated motor frequency (nameplate data)
$U_{M,N}$	The rated motor voltage (nameplate data)
$P_{M,N}$	The rated power delivered by the motor (nameplate data)
$n_{M,N}$	The rated motor speed (nameplate data)
$T_{M,N}$	The rated torque (motor)

■ References

Abbreviation/Definition	Description
Analogue ref.	A signal transmitted to input 53, 54 or 60. Can be voltage or current
Binary ref.	A signal transmitted to the serial communication port
Ref_{MAX}	The maximum value which the reference signal may have. Set in parameter 205

■ Miscellaneous

Abbreviation/Definition	Description
ELCB	Earth Leakage Circuit Breaker
Trip	A state which occurs in different situations, eg. if the frequency converter is subject to a live zero warning. A trip can be cancelled by pressing Reset
Trip locked	A state which occurs in different situations, eg. if the frequency converter is subject to an overtemperature. A locked trip can be cancelled by cutting off mains and restarting the frequency converter and pressing Reset
Initializing	If initializing is carried out (see parameter 620), the frequency converter returns to the factory setting
LCP	The Local Control Panel, which makes up a complete interface for control and programming of VLT 5000 Crane. The control panel is detachable and may, as an alternative, be installed up to 3 metres away from the frequency converter, ie. in a front panel, by means of the installation kit option
Flux Vector	If compared with standard voltage/frequency ratio control, Flux Vector improves the dynamics and the stability, both when the speed reference is changed and in relation to the load torque
Thermistor	A temperature-dependent resistor placed where the temperature is to be monitored (frequency converter or motor)
Analogue inputs	The analogue inputs can be used for controlling various functions of the frequency converter. There are two types of analogue inputs: Current input and voltage input
Analogue outputs	There are two analogue current outputs
Digital inputs	The digital inputs can be used for controlling various functions of the frequency converter
Digital outputs	There are four digital outputs, two of which activate relay switches.
Brake resistor	The brake resistor is a module capable of absorbing the brake power that is generated in regenerative braking. This regenerative braking power increases the intermediate circuit voltage and a brake chopper ensures that the power is transmitted to the brake resistor
Incremental encoder	An external, digital pulse transmitter used for feeding back information on motor speed. The encoder is used in applications where high accuracy in speed control is required
AWG	Means American Wire Gauge, ie. the American measuring unit for cable cross-section

■ Miscellaneous- continued

Abbreviations/Definitions	Description
Manual initialisation	Press the [CHANGE DATA] + [MENU] + [OK] keys at the same time to carry out manual initialisation. See also Parameter 620. Note that manual initialisation is only to be used if the reset function does not work!
SFAVM	Switching pattern called Stator Flux oriented Asynchronous Vector Modulation
On-line/off-line parameters	On-line parameters are activated immediately after the data value is changed. Off-line parameters are not activated until OK has been entered on the control unit
CT characteristics	Constant torque characteristics, used for all applications, such as conveyor belts and cranes.
MCM	Stands for Mille Circular Mil, an American measuring unit for cable cross-section 1 MCM=0.5067mm^2
ETR	Electronic thermal relay is a thermal load calculation based on present load and time. Its purpose is to estimate the motor temperature
CP	Constant power

MG.50.N4.02 - VLT is a registered Danfoss trademark

■ Brief Product Description

The VLT 5000 Crane frequency converter supplies a motor with variable voltage and frequency and thereby enables infinitely variable speed control of three-phased standard AC-motors.

The VLT 5000 Crane features the Flux Vector control system.

The VLT 5000 Crane uses a digital technique making it possible to program the different control inputs and signal outputs.

The user can easily program the desired functions by means of the VLT 5000 Crane control panel or the user interfaces RS485 and RS232.

The VLT 5000 Crane is protected against the transients occurring in the mains supply. Furthermore, a good power factor and low peak current, reducing the load on the mains installation, are ensured through intermediate circuit coils.

Current measurement on all three motor phases perfectly protects VLT 5000 Crane against earthing and short-circuiting faults on the motor connenction.

Efficient monitoring of the mains supply phases ensures that the unit stops in case of phase failure. This eliminates the risk of overloading the inverter and the capacitors in the intermediate circuit and thereby prolongs the service life of the frequency converter.

As standard, VLT 5000 Crane features integral thermal protection. If a situation of thermal overload occurs, this function cuts out the inverter.

The VLT 5000 Crane features reliable galvanic isolation on all control terminals and integrated electronic thermal protection on the motor.

■ Function and System Description

With VLT 5000 Crane the speed is infinitely varied in the whole speed range from standstill (0 RPM) until rated speed (750 RPM for VLT 5052-5072, 1125 RPM for VLT 5102) according to the CT characteristic and rated power up to max. speed (3000 or 4500 RPM). There is full torque in the whole speed range.

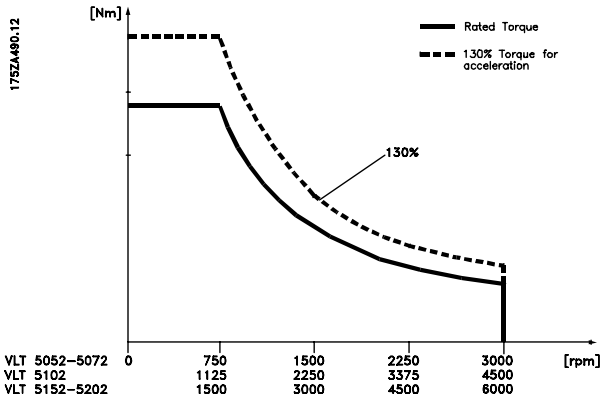

VLT 5000 Crane offers:

- Full utilisation of control range
- 130% torque for acceleration
- Fine adjustment at standstill + full load possible without activating the system brake

■ System Description

The sketch on next page shows how a tower crane works together with VLT Crane Control.

The system consists of the following:

1. VLT 5000 Flux Vector Control
2. Brake resistor
3. Motor
4. Cable drum
5. Angular gear box
6. NC system brake
7. Electric 2-step-gears: Normal load and heavy load
8. Optical encoder: Motor speed information for flux vector control with closed loop
9. Load signals: VLT 5000 Crane checks on the basis of load signals that the working range is not exceeded
10. Control signal: Analogue reference as well as hoist, lowering and position operation
11. Quick stop with brake
12. Digital outputs: For combination of warning and alarm at your operation
13. Crane ready signal
14. Gear step selection signal
15. VLT ready signal
16. RS 485 bus
17. RS 232 bus
18. Local control panel

Installation and mains connection of brake resistor and motor are described in *Electrical installation*

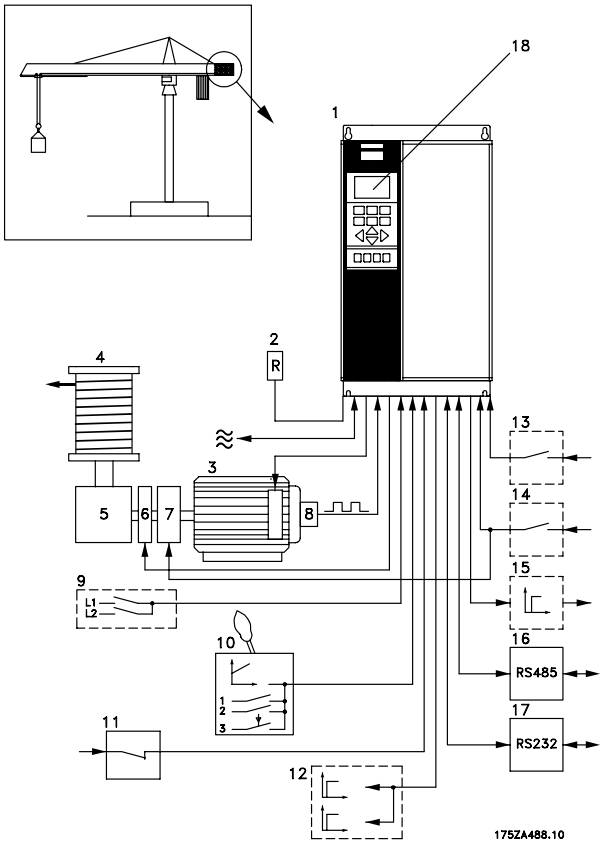

■ Description of Functions

With Danfoss VLT 5000 Crane the hoist/lower function can be infinitely varied in the whole speed range.
Up to 750 RPM for VLT 5052-5072, 1125 RPM for VLT 5102, 1500 RPM for VLT 5152-5202, respectively the max. torque curve applies and above 750 RPM for VLT 5052-5072, 1125 RPM for VLT 5102, 1500 RPM for VLT 5152-5202, respectively the max. power curve. There is up to 130% torque for acceleration in the whole speed range.

Working curve, motor:

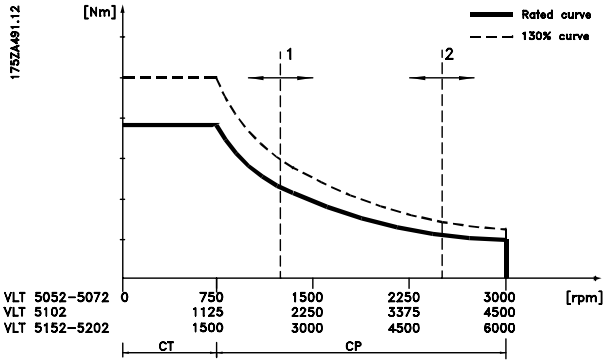

1: Speed limit at heavy load (parameter 702)
2: Speed limit at normal load (parameter 701)

The 2-step gear box (see *System description*) increases the working range, as it is possible to switch between normal load and heavy load.

VLT 5000 will optimise the motor control to the selected gear stage on the basis of the signal on terminal 29, see *System Description*, position 14.

Signal definition
24 V signal: Normal load
0 V signal: Heavy load

■ Operating Status at Remote Control

Control ready
Voltage on VLT 5000 Crane. The frequency converter is ready for use and the control card receives supply voltage.
No faults were found during initialisation.
Inverter section disabled.

Normal operation
The reference signal is higher than minimum. Up to 750 RPM the working range is limited by max. torque. Above 750 RPM it is working in field weakening range. Here the working range is limited by constant power.

VLT 5000 Crane controls the mechanical brake of the crane. It holds the load when speed is below the set minimum value.

VLT 5000 Crane monitors that the system brake holds and releases the load as required. In case of faults, *Brake fault 2* is displayed.

Load determination and speed measuring will ensure that the working range is not exceeded. For each load contact the max. allowed motor speed is set (parameters 701 and 702). VLT 5000 Crane cuts off automatically when motor speed for the activated load contact exceeds the value recorded

Positioning
The reference signal is higher than minimum. The condition for VLT ready is fulfilled. 24V is applied to terminal 17 (parameter 301).

During positioning the speed is limited to 750 RPM for VLT 5052-5072, 1125 RPM for VLT 5102, 1500 RPM for VLT 5152-5202, respectively, and system brake is not activated at 0 RPM.

Quick stop with brake
If control signal to terminal 27(parameter 304) is removed, the motor ramps down according to the alternative ramp (parameter 212) and the brake is activated momentarily.

■ Operating Status at Local Operation

It is only possible to change to local operation from *Control Ready*. Besides, parameter 003 must be set for *Local* and parameter 010 for *Enable*. VLT 5000 Crane can be operated over the control panel or over parameters 004 - 009. This state acts as *Normal operating state*, however there are no load functions and monitoring of system brake. This means that the whole working range from 0 - 3000 RPM can be used and the crane system brake is controlled at approx. 0 RPM.

■ Fault Status at Remote and Local Control

Brake fault 1
VLT 5000 Crane monitors in the state VLT ready that the system brake holds the load as required. If that is not the case, *Brake fault 1* applies and the load is slowly lowered according to the speed set in parameter 704.

Brake fault 2
VLT 5000 Crane monitors in the state normal operation, that the system brake releases the load as required. If that is not the case *Brake fault 2* applies. The unit will cut in the system brake again. This means that the system brake signal is deactivated. This ensures that the load is held. Then the inverter section is disabled.

Brake fault 2 may also occur during commissioning if the encoder connection is not correct.
At reference 0 the unit goes back to the state VLT ready.

Function fault
VLT 5000 Crane monitors several functions. Should severe faults occur, the unit will trip automatically.
For fault types, see *Trouble-shooting*
To reset the fault switch off/switch on the mains supply and press the stop/reset button.

■ System Components

Motor
Select the motor type for the rated output in question in parameters 102-106, 150-155..

Incremental Encoder
The encoder must meet the following requirements:

- Pulses pr. revolution, see parameter 329
- Outputs: A (0º), inv. A, B (90º), inv. B, Z, inv. Z
- Supply: +5 V ±5%
- Max. current (5V supply): 200mA

Note that outputs must be compatible with RS 422!

Brake resistor
See data for calculation in *Control with brake function*.

Control Principle

A frequency converter rectifies AC voltage from mains into DC voltage. This DC voltage is then converted into a AC voltage with a variable amplitude and frequency.

The motor is thus supplied with variable voltage and frequency, which enables infinitely variable speed control of three-phased, standard AC motors.

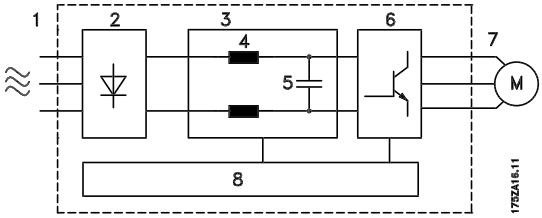

1. Mains voltage
3 x 400 - 500 V AC, 50 / 60 Hz.

2. Rectifier
A three-phase rectifier bridge that rectifies AC voltage into DC voltage.

3. Intermediate circuit

$$\text{DC voltage} = \sqrt{2} \text{ x mains voltage}$$

4. Intermediate circuit coils
Smooth the intermediate circuitcurrent and limit the load on mains and components (mains transformer, wires, fuses and contactors).

5. Intermediate circuit capacitors
Smooth the intermediate circuit voltage.

6. Inverter
Converts DC voltage into variable AC voltage with a variable frequency.

7. Motor voltage
Variable AC voltage, 0-100% of mains supply voltage.
Variable frequency: 0 - 300 Hz.

8. Control circuit
On basis of parameters, reference settings and input signals, pulse patterns are generated for forming the variable motor voltage and frequency.

Flux Vector Control Principle

The aim of developing the Flux Vector control principle has been to obtain a robust motor control that is tolerant to different motor characteristics without motor derating being required.

The current is split into magnetising and torque-generating parts and provides for much better and quicker estimation of the actual motor loads. It is now possible to compensate for rapid load changes. Full torque as well as extremely accurate speed control can now be obtained even at low speeds or even at standstill.

Good torque control properties and smooth transitions to and from current limit operation are ensured.

Advantages of the Flux Vector control system:
- Accurate speed control down to 0 speed
- Quick response from received signal to full motor shaft torque
- Good compensation for step loads
- Controlled transition from normal operation to current limit operation (and vice versa)
- Torque control, comprising control of both the torque-generating and the magnetising component of the current
- Full holding torque

Programmable signal outputs
VLT 5000 Crane uses a digital technique which makes it possible to program the signal outputs.

For the user, it is easy to program the desired functions by means of the control panel on VLT 5000 Crane or the RS 485/RS 232 user interfaces.

Protection against mains interference
VLT 5000 Crane is protected against the transients that occur in the mains supply, eg. when switching power factor correction or when fuses blow.

The rated motor voltage and full torque can be maintained all the way down to 10% undervoltage in the mains supply.

MG.50.N4.02 - VLT is a registered Danfoss trademark

Minor interference on mains
Since as standard the VLT 5000 Crane features intermediate circuit coils, there is only a small amount of harmonic mains supply interference. This ensures a good power factor and lower peak current, which reduces the load on the mains installation.

Advanced VLT protection
Current measurement on all three motor phases provides perfect protection of VLT 5000 Crane against earthing and short-circuiting faults on the motor connection.

Efficient monitoring of the three mains supply phases ensures that the unit stops in the case of phase failure. This avoids overloading the inverter and the capacitors in the intermediate circuit, which would dramatically reduce the service life of the frequency converter.

As standard, VLT 5000 Crane features integral thermal protection. If a situation of thermal overload occurs, this function cuts out the inverter.

Encoder supervisory circuit
The signals from the incremental encoder and hence the cabling are continuously supervised.
The encoder signals are made up of three channels, each of which are supervised, and status is given on LEDs placed near the encoder terminals for each channel as well as for the supply voltage for the encoder. Green LED turned on means channel or voltage OK.

Reliable galvanic isolation
In the VLT 5000 Crane all of the control circuits are separated from mains potential through isolation meeting the PELV requirements.
One set of relay contacts, terminals 01 - 03, is separated from the remaining control circuits through isolation also complying with PELV.
Furthermore, the control circuits are placed in blocks individually separated through functional isolation (< 100 V), see General Technical Data.

Advanced motor protection
VLT 5000 Crane features integrated electronic, thermal motor protection.

The frequency converter calculates the motor temperature on the basis of current, frequency and time.

As opposed to the traditional bimetallic protection, electronic protection takes account of the reduction in cooling at low frequencies that comes from reduced fan speed (motors with internal ventilation).

To obtain maximum protection against overheating of the motor if the motor is covered or blocked, or if the fan fails, a thermistor can be integrated and connected to the thermistor input of the frequency converter (terminals 53), see parameters 128 and 308.

■ **Key Diagram for VLT 5000 Crane 5042, 5102 400-500 V**

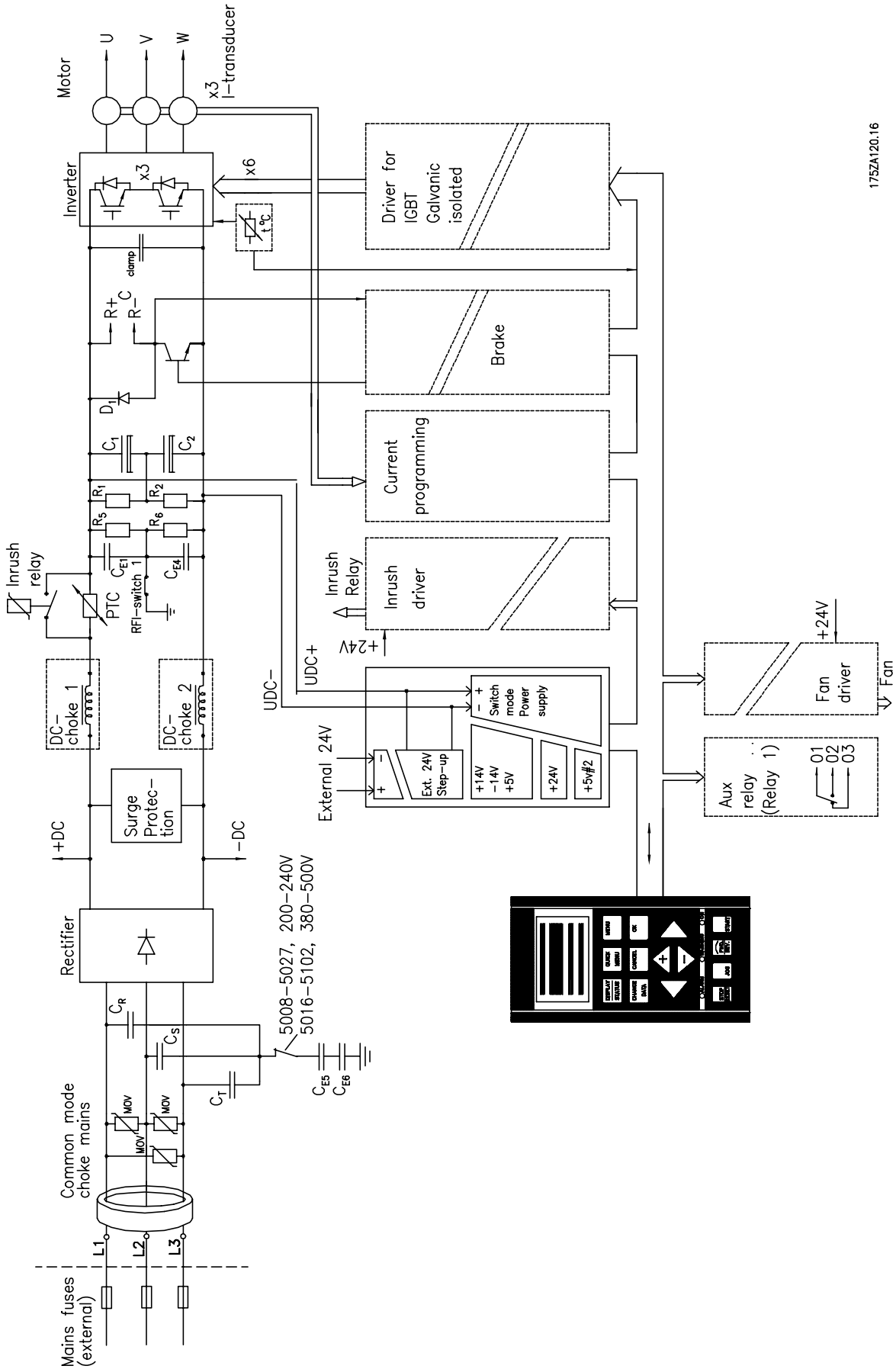

■ **Key Diagram for VLT 5000 Crane 5122-5202 400-500 V**

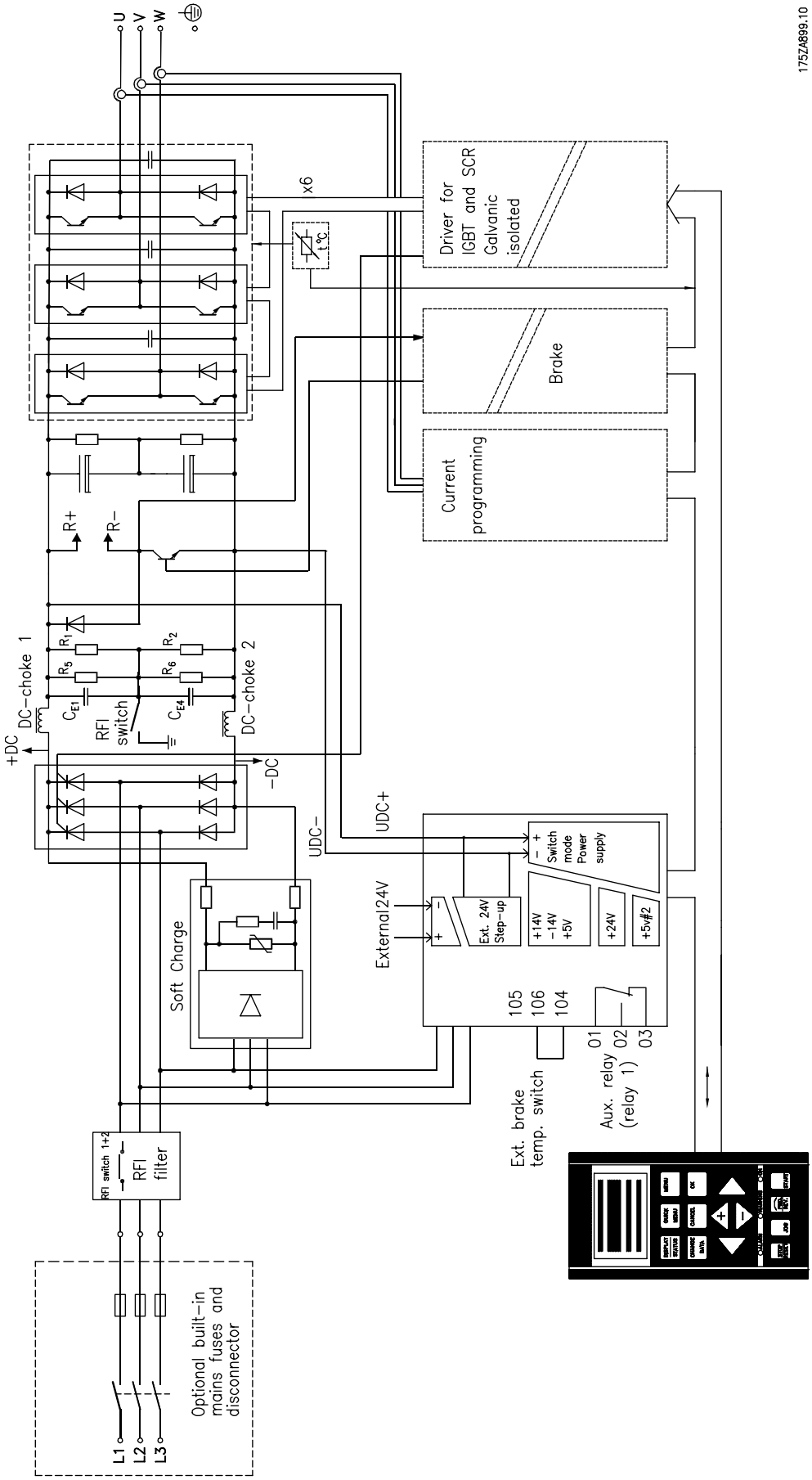

■ General Technical Data

Mains Supply (L1, L2, L3)	
Supply voltage 400 - 500 V units	3 x 400/415/440/460/500 V ± 10%
Supply frequency	50/60 Hz ± 1%
Max. imbalance of supply voltage VLT 5052 - 5062/400 - 500 V VLT 5072 - 5202/400 - 500 V	of rated supply voltage 1.5% 3%
Power factor/cos φ_1	0.90/1 at rated load
No. of switches on supply input L1, L2, L3	Appr. 1 time/minute
Max. short-circuit rating	100.000 A

VLT Data Output (U, V, W)	
Output voltage	0-100% of supply voltage
Output frequency	0-160 Hz
Rated motor voltage 400 - 500 V units	315 V
Rated motor frequency	25/37 Hz
Ramp times	0.05 - 3600 Seconds

Torque Characteristics	
Starting torque, VLT 5042–5202, 400 - 500 V	160% for 1 minute
Acceleration torque, VLT 5042–5302, 400 - 500 V	160% for 1 minute
Overload torque, VLT 5042-5302, 400 - 500 V	160% for 1 minute
Holding torque at 0 rpm (closed loop), VLT 5042–5302, 400 - 500 V	160% for 1 minute

Digital Inputs	
Number of digital inputs	9
Voltage level	0-24 V DC (PNP positive logics)
Voltage level, logical '0'	<5 V DC
Voltage level, logical '1'	>10 V DC
Max. voltage on input	28 V DC
Input resistance, R_i (terminal 29)	Appr. 4 KΩ/2 KΩ (2 KΩ)
Scanning time per input	3 msec
NOTE: All digital inputs are galvanic isolated from the mains voltage (PELV). In addition, the digital inputs can be isolated from the other terminals on the control card by connecting an external 24 V DC supply and opening switch 4, see Electrical installation.	

Analogue Inputs	
Number of programmable analogue voltage inputs/thermistor inputs	1
Voltage level	0- ± 10 V DC (Scalable)
Input resistance, R_i	Appr. 10 KΩ
Number of programmable analogue current inputs	2
Current range	0/4- 20 mA (Scalable)
Input resistance, R_i	200 Ω
Resolution	10 + sign bit
Accuracy on input	Max. error: 1% of full scale
Scanning time per input	3 msec
NOTE: Analogue inputs are galvanic isolated from the mains voltage (PELV) and functionally isolated from all other inputs	

MG.50.N4.02 - VLT is a registered Danfoss trademark

Incremental/Encoder Input	
Number of encoder input terminals	6
Max. frequency	205 kHz
Voltage level	0-5 V (RS422)
Voltage level, logical '0'	< 0.5 V
Voltage level, logical '1'	> 2.5 V
Max. voltage on input	7 V DC
Input resistance, R_i	Appr. 120 Ω
Supply voltage	5 V +/- 5%
Supply current	200 mA
NOTE: Encoder input terminals are galvanic isolated from the supply voltage (PELV) and functionally isolated from all other inputs and outputs.	

Digital/Pulse and Analogue Outputs	
Number of programmable digital outputs	2
Number of programmable analogue outputs	2
Voltage level at digital/pulse output	0-24 V DC
Min. load to ground (terminal 39) at digital/pulse output	600 Ω
Frequency ranges (digital output used as pulse output)	0-50 kHz
Resolution < 5 kHz <50 kHz	 0.1% 1%
Current ranges at analogue output	0/4-20 mA
Max. load to ground (terminal 39) at analogue output	500 Ω
Accuracy of analogue output	Max error: 1.5% of full scale
Resolution on analogue output	8 bit
NOTE: All digital and analogue outputs are galvcanic isolated from the supply voltage (PELV) and functionally isolated from all other inputs *NB: Digital and analogue outputs have one common ground terminal (39)*	

24 V DC Output	
Max. load (short-circuit protection)	200 mA
Terminal numbers, ground (with switch 4 closed)	39 (20)
NOTE: The 24 V DC supply is galvanic isolated from the supply voltage (PELV), but has the same potential as analogue and digital outputs	

RS 485 Serial Communication	
Terminal numbers	68 (TX+, RX+), 69 (TX-,RX-)
NOTE: The signal input is galvanic isolated from the mains voltage (PELV) but not from RS 232	

RS 232 Serial Communication (Peer to Peer)	
Connection	RJ 11
NOTE: The signal input is galvanic isolated from mains supply (PELV) but not from RS 485	

Relay Outputs	
Number of programmable relay outputs	2
Terminal numbers, control cards	4-5 NO
Max. terminal load (AC) on 4-5 control card	50 V AC, 1A, 60 VA
Max. terminal load (DC) on 4-5, control card	75 V DC, 1A, 30W
Max. terminal load (DC) on 4-5, control card UL applications cUL applications	 30 V AC, 1A 1A, 42.5 V DC
Terminal numbers, power card	1-3 NC, 1-2 NO
Max. terminal load (AC) on 1-3, 1-2, power card	240 V AC, 2A, 60 VA
Max. terminal load on 1-3, 1-2, power card	50 V DC, 2 A
Min. terminal load on 1-3, 1-2, power card	24 V AC/24 V DC, 10/100mA

Brake Resistor Terminal	
Terminal numbers	81, 82

Cable Lenghts and Cross-Sections	
Max. motor cable length, screened cable	25m
Max. brake cable length, screened cable	5m
Max. cable cross-section for control cables	0.75mm^2/AWG
Max. cross-section for serial communication	0.75mm^2/AWG
NOTE: Max. cable cross-section for motor and brake, see Installation	

Accuracy of Display Readout (Parameters 009 - 012)	
Motor Current [6] 0 - 140% load	Max error: 2% of rated output current
Torque % [7] -100 - 140% load	Max error: 5% of rated motor size
Output [8], power HP [9] 0 - 90% load	Max error: 5% of rated output

Control Caracteristics	
Frequency range	0-160 Hz
Resolution on output frequency	± 0.003 Hz
System response time*	< 5 msec
Speed, control range	1:1000 of synchro speed
Speed, accuracy <1500 rpm >1500 rpm	Max error: ± 1.5rpm 0.1% of actual speed
Torque control accuracy (Speed feedback)	Max error: ± 5% of rated torque
NOTE: All control caracteristics are based on 4-pole asynchronous motors	

*The system response time is the time passing from the input receives a signal to a reaction occurs on the VLT output.

Externals	
Enclosure	Type IP20/IP 00
Vibration	Test: 0.7 g RMS 18 - 100 Hz random, 3 directions for 2 hrs (IEC 68-2-34/35/36)
Max. relative humidity for storage/transport	93% (IEC 68-2-3)
Max. relative humidity non-condensing for operation	95% (IEC 721-3-3; Class 3K3)
Ambient temperature	55°C
Ambient temperature, 24-hour average Max	50°C
Min. ambient temperature in full operation	0°C
Min. ambient temperature at reduced performance	-10°C
Temperature during storage/transport	-25 - +65/70°C
Max. altitude above sea level, without derating*	1000m
NOTE: EMC standards used: *Emission: EN50081-1/2, EN61800-3, EN55011,* *Immunity: EN50082-2, EN61000-4-2,, EN61000-4-4,ENV50204, EN61000–4–3, EN61000–4–5, EN61000–4–6, VDE0160/1990.12* *Derating for high ambient temperature, see Special Conditions in Appendix*	

*For more information on derating, see Special Conditions in Appendix.

■ VLT 5000 Crane Protection

- Electronic motor thermal protection against overload
- Electronic thermal protection against overload
- Temperature monitoring of heat-sink ensures that the frequency converter cuts out if the temperature reaches 90°C. An overtemperature fault can only be reset when the temperature of the heat-sink has fallen below 60°C
- The frequency converter is protected against short-circuiting on motor terminals U, V, W
- The frequency converter is protected against earth fault on motor terminals U, V, W
- Monitoring of the intermediate circuit voltage ensures that the frequency converter cuts out if the intermediate circuit voltage gets too high or too low
- If a motor phase is missing, the frequency converter cuts out, see parameter 234 *Motor Phase Monitor*
- If a mains phase is missing, the frequency converter will cut out when a load is applied to the motor

■ Mains Supply 400 - 500 V

According to international requirements		VLT type	5042	5052	5062
	Output current	$I_{VLT,N}$ (S3 60%) [A] (400-500 V)	58	69	85
		$I_{VLT, MAX}$ (60 s) [A] (400-500 V)	97.6	116.8	135
	Output	$S_{VLT,N}$ (S3 60%) [kVA] (400-500 V)	39.2	46.6	57.4
	Typical shaft output	$P_{VLT,N}$ [kW]	22	30	37
	Typical shaft output	$P_{VLT,N}$ [HP]	30	41	50
	Max. cable cross-section to motor and brake [mm 2]/[AWG][2)3)]		IP20	50/0	50/0
	Rated input current	$I_{L,N}$ (S3 60%) [A] (400 V)	51	62	76
	Max. cable cross-section power[mm 2]/[AWG][2)3)]		35/2	50/0	50/0
	Max. pre-fuses	[-]/UL [1)] [A]	100/100	125/125	150/50
	Efficiency		0.96	0,96	0.96
	Weight IP 20 SB	[kg]	41	42	43
	Power loss at max. load.		1004	1210	1500
	Enclosure		IP20	IP20	IP20

1. For type of fuse see section *Fuses*.
2. American wire gauge.
3. Connection stud 1 x M8/2 x M8.

■ Mains supply 3 x 400-500 V

According to international requirements		VLT type	5072	5102	5152	5202
	Output current	$I_{VLT,N}$ [A] (S3 60%) (400-500 V)	100	139	201	246
		$I_{VLT,MAX}$ (60 s) [A] (400-500 V)	159	221	301	369
	Output	$S_{VLT,N}$ (S3 60%) [kVA] (400-500 V)	67.5	93.9	135.8	166.2
	Typical shaft output $P_{VLT,N}$ [kW]		45	65	90	110
	Typical shaft output $P_{VLT,N}$ [HP]		61	89	125	150
	Max. cable cross-section to motor (400-500 V) [mm²] 3)		95	120	2x70	2x185
	Max. cable cross-section to brake (400-500 V) [mm²] 4)		95	120	2x35	2x70
	Max. cable cross-section to motor (400-500 V) AWG]2) 3)		3/0	4/0	2x2/0	2x350 MCM
	Max. cable cross-section to brake (400-500 V) AWG]2) 4)		3/0	4/0	2x3	2x2/0
	Max input current	$I_{L,MAX}$ (S3 60%) [A] (400 V)	89	124	186	224
	Max. cable cross-section to power (400-500 V) [mm²] 3)		95	120	2x70	2x185
	Max. cable cross-section to power (400-500V) [AWG]2) 3)		3/0	4/0	2x2/0	2x350 MCM
	Efficiency		0.96-0.97	0.96-0.97	0.97-0.98	0.97-0.98
	Weight IP 20 EB/IP 00	[kg]	109	109	89	134
	Power loss at max. load [W]		1860	2250	2828	3231
	Enclosure		IP20	IP20	IP00	IP00

1. For type of fuse see section *Fuses*.
2. American wire gauge.
3. Connection Dual M10 screws.
4. Connection Dual M8 screws.

Technical Data

■ Fuses

UL compliance

380-500 V

	Bussmann	SIBA	Littel fuse	Ferraz-Shawmut
5042	KTS-R100	2028220-125	KLS-R100	A6K-100R
5052	KTS-R125	2028220-125	KLS-R125	A6K-125R
5062	KTS-R150	2028220-160	KLS-R150	A6K-150R
5072	FWH-220	2028220-200	L50S-225	A50-P225
5102	FWH-250	2028220-250	L50S-250	A50-P250
5122	FWH-300	2028220-315	L50S-300	A50-P300
5152	FWH-350	2028220-315	L50S-350	A50-P350
5202	FWH-400	206xx32-400	L50S-400	A50-P400

KTS-fuses from Bussmann may substitute KTN for 240 V drives.
FWH-fuses from Bussmann may substitute FWX for 240 V drives.

KLSR fuses from LITTEL FUSE may substitute KLNR fuses for 240 V drives.
L50S fuses from LITTEL FUSE may substitute L50S fuses for 240 V drives.

A6KR fuses from FERRAZ SHAWMUT may substitute A2KR for 240 V drives.
A50X fuses from FERRAZ SHAWMUT may substitute A25X for 240 V drives.

Non UL compliance

If UL/cUL is not to be complied with, we recommend the above mentioned fuses or:

VLT 5001-5027	200-240 V	type gG
VLT 5001-5062	380-500 V	type gG
VLT 5032-5052	200-240 V	type gR
VLT 5072-5500	380-500 V	type gR

Not following the recommendation may result in unnecessary damage of the drive in case of malfunction. Fuses must be designed for protection in a circuit capable of supplying a maximum of 100000 A_{rms} (symmetrical), 500/600 V maximum.

Mechanical Dimensions

Compact IP 00 and IP 20

IP 00 enclosure 400-500 V

VLT type	A (mm)	B (mm)	C (mm)	a (mm)	b (mm)	ab/be (mm)	l/r (mm)
5152 - 5202	1400	420	400	1380	350	225	0

IP 20 enclosure 400-500 V

VLT type	A (mm)	B (mm)	C (mm)	a (mm)	b (mm)	ab/be (mm)	l/r (mm)
5042 - 5062	800	308	296	780	270	200	0
5072 - 5102	800	370	335	780	330	225	0

ab: Min. space above enclosure.
be: Min. space below enclosure.

l/r: Min. distance between frequency converter and other plant components, left and right sides.

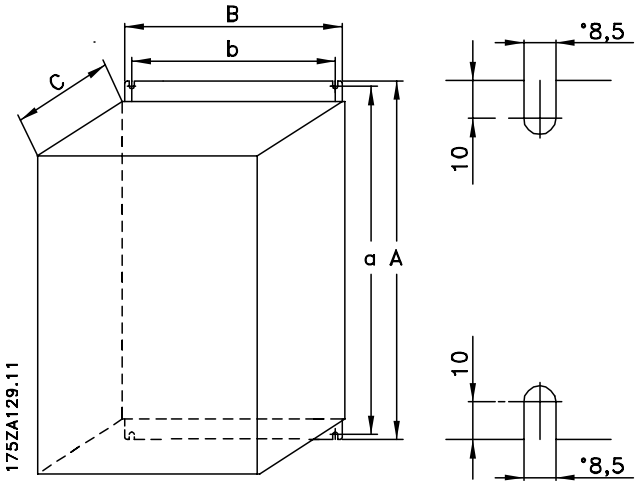

VLT 5042-5102/400-500 V

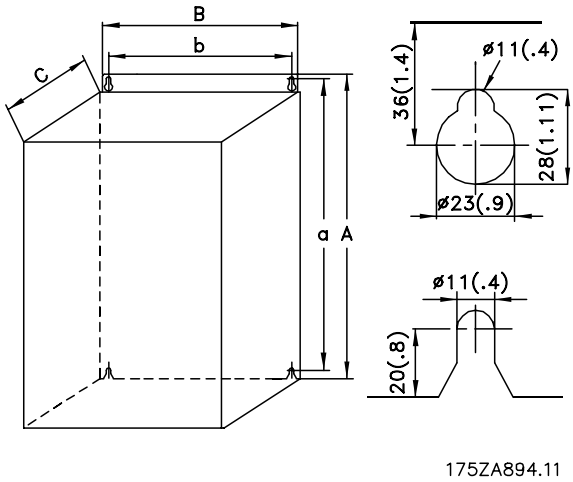

VLT 5152-5202/400-500 V

General Warning before Installation

Before starting the installation, please be aware of heavy weight and sharp edges. Furthermore, make sure that no mains are connected

Mechanical Installation

The frequency converter must be installed vertically.

The frequency converter is cooled by means of air circulation. For the unit to be able to release its cooling air, the *minimum* distance over and below the unit must be as shown in the illustration below. To protect the unit from overheating, it must be ensured that the ambient temperature *does not rise above the max. temperature stated for the frequency converter* and that the 24-hour average temperature *is not exceeded*. The max. temperature and 24-hour average can be seen from the General Technical Data.

Enclosure Protection

Compact	
VLT 5042 - 5102 400-500 V	IP 20
VLT 5152 - 5202 400-500 V	IP 00

Installation of VLT 5042–5062 400-500 V Compact IP20/IP00 Cooling

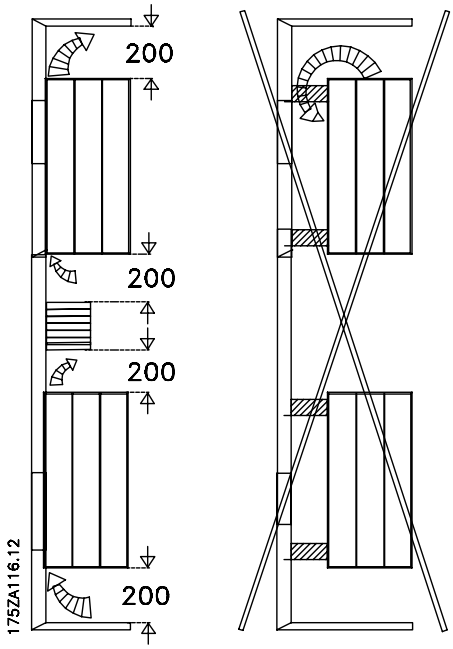

All Compact units in the above-mentioned series require a minimum space of 200 mm above and below the enclosure and must be installed on a plane, vertical surface (no spacers).

Side-by-side

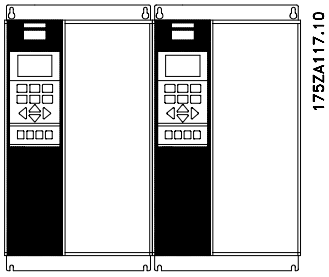

Compact IP 00/IP20

All units in the above-mentioned series can be installed side by side without any space between them, since these units do not require cooling on the sides.

Installation of VLT 5072-5202 400-500 V Compact IP20/IP00 Cooling

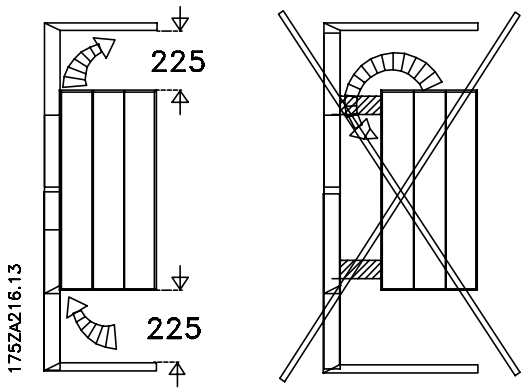

All Compact units in the above-mentioned series require a minimum space of 225 mm above and below the enclosure and must be installed on a plane, vertical surface (no spacers).

Side-by-side

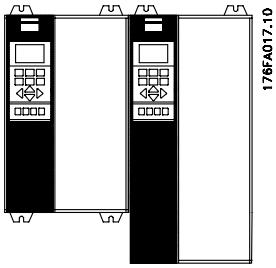

Compact IP 00/IP20

All units in the above-mentioned series can be installed side by side without any space between them.

Ventilation when Panelmounted

The quantity of air needed to cool VLT 5000 Crane can be calculated as follows:

1. Add up the values of P_Φ for all VLT 5000 Crane to be installed at the same panel (ΣP_Φ) [W]
2. Determine the air inlet temperature (t_{IN}) and the air outlet temperature (t_{OUT}) [ºC or K]
3. Calculate the necessary air quantity in m^3/h:

$$Q = \frac{\sum P\phi \times 3.1}{t_{OUT} - t_{IN}}$$

Insert t_{OUT} - t_{IN} in Kelvin

- The output from the fan must be located above the highest mounted frequency converter
- Remember to take pressure drops over filters into account and that the pressure decreases as the filters are choked
- The max. cooling air temperature (t_{IN}) must be lower than 55ºC. The average of day/night temperature may be 5ºC lower than that stated in VDE 160. The cooling outlet temperature (t_{OUT}) may not exceed 60ºC

■ Electrical Installation

The voltage on the frequency converter is dangerous when the unit is connected to mains. Incorrect installation of the motor or frequency converter may lead to material damage or serious injury or it may be fatal. Consequently, the instructions in this manual as well as national and local rules and safety regulations must be complied with. Touching the electrical parts may be fatal, even after the mains supply has been disconnected. Wait at least 15 minutes if using VLT 5052-5102.

NB!:
It is the user's or certified electrician's responsibility to ensure correct earthing and protection in accordance with applicable national and local norms and standards.

All terminals for the control cables are located under the protective cover of the frequency converter. The protective cover (see drawing) can be removed by means of a pointed object - a screwdriver or similar.

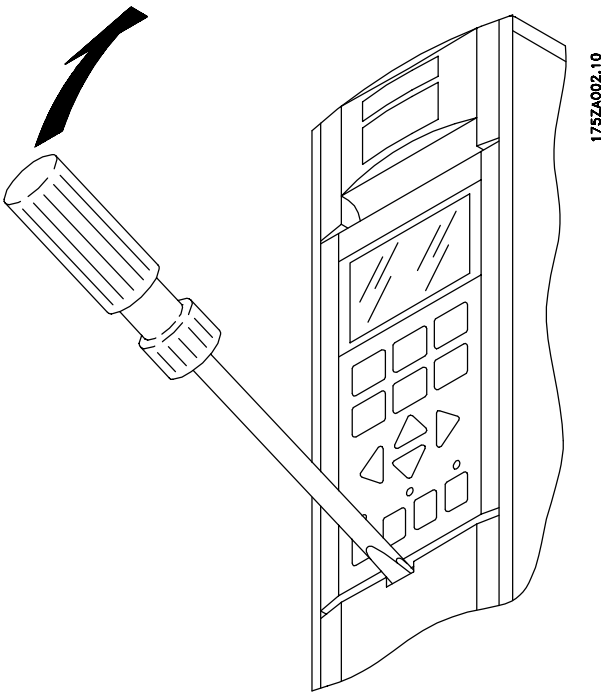

Once the protective cover has been removed, the actual EMC-correct installation can start.

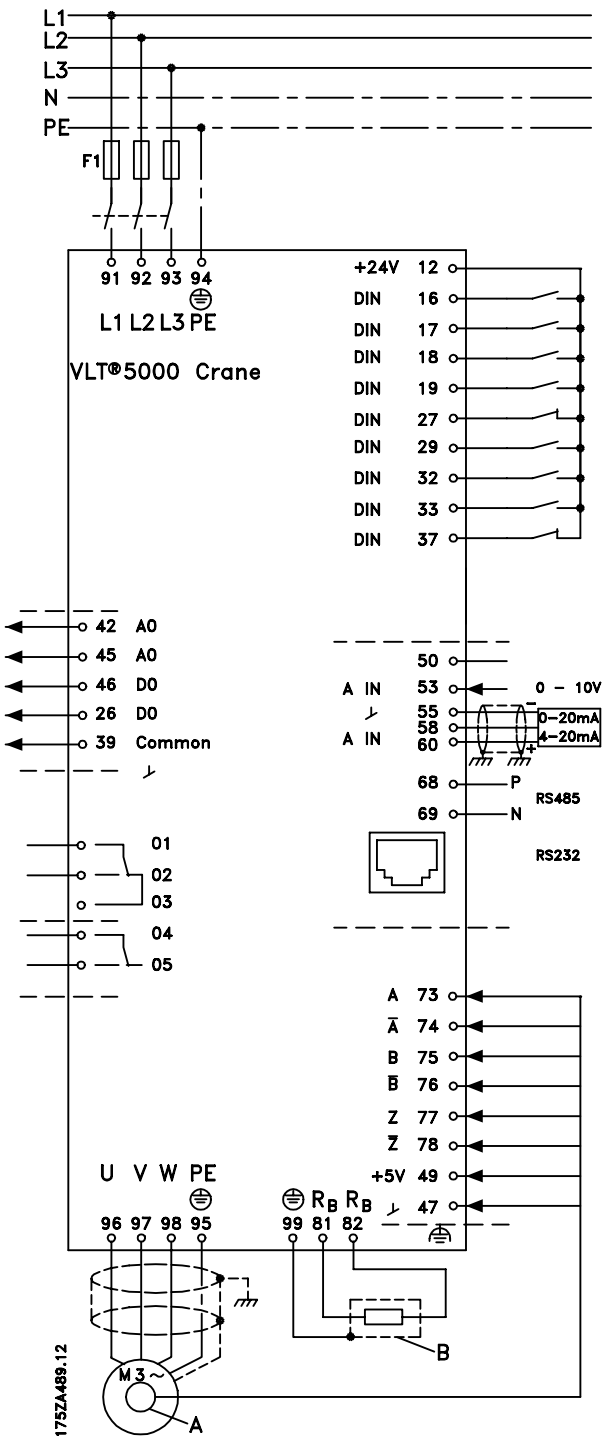

Wiring diagram VLT 5000 Crane

A: Encoder
B: Brake resistor
12: +24 V
16 Crane ready (NO)
17: Positioning (NO)
18: Lower (NO)
19: Hoist (NO)
20: Ground for digital inputs
26: Digital output
27: Quick stop (NC)
29: Gear ratio select (NO)
32: Load low (NO)

33: Load high (NO)
37: Hardware coast (NC)
39: Ground for analogue/digital outputs
42: Analogue output warning/alarm
45: Analogue output warning/alarm
46: Digital output
50: 10 V supply
53: Reference voltage
55: Common for anal. ref.
60: Reference current
68, 69: RS 485
01, 02: System brake signal
04, 05: Ready signal
73: Pulse signal A from encoder (0°)
74: Inverted pulse signal from encoder (0°)
75: Pulse signal B from encoder (90°)
76: Inverted pulse signal B from encoder (90°)
77: Zero pulse signal from encoder
78: Inverted zero pulse signal from encoder
49: 5 V supply to encoder
47: Common for encoder supply

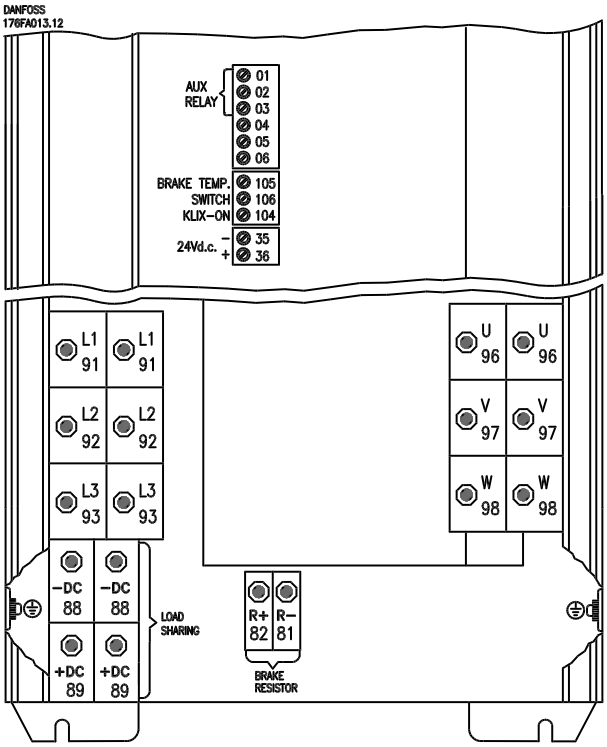

Compact IP 00 VLT 5125-5250 400-500 V

■ Electrical Installation, Power Cables

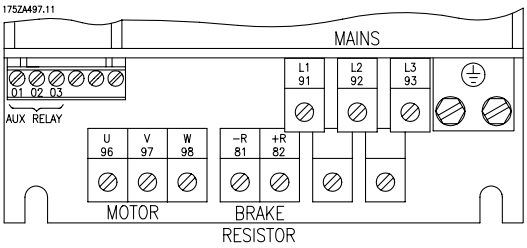

Compact IP 20 VLT Type 5042–5062

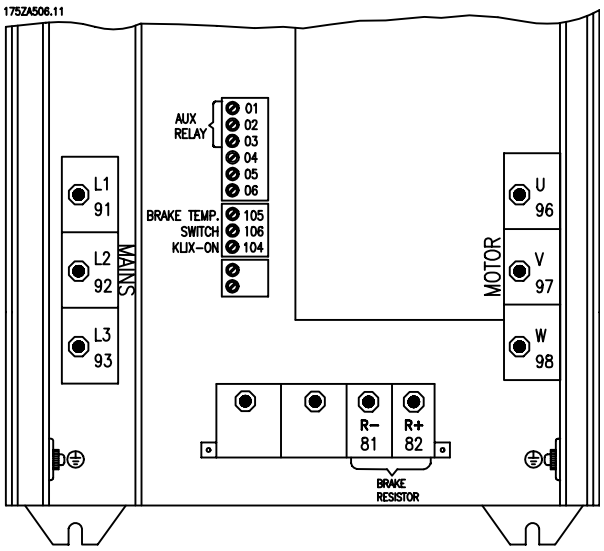

Compact IP 20/IP 00 VLT Types 5072-5102

■ Connection of Mains

Connect the three mains phases to terminals L_1, L_2, L_3.

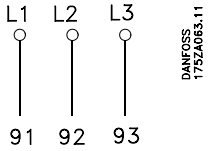

■ Connection of Motor

All types of 3-phased asynchronous standard motors can be used with the VLT 5000 Crane.

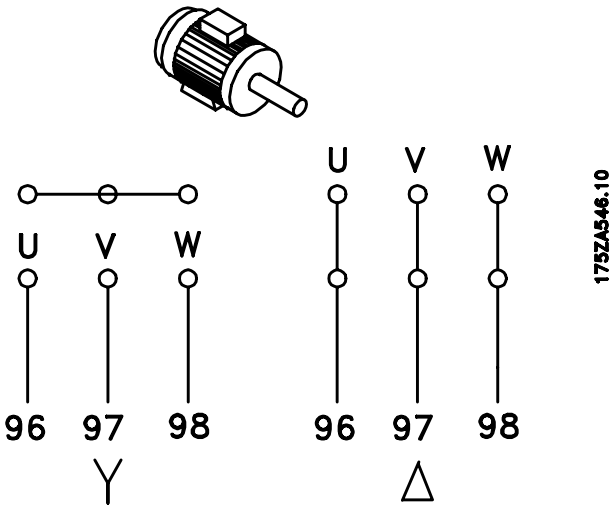

Installation

Normally, small motors are star-connected.
Large motors are delta-connected.
Note the voltage value at the type plate.

■ Installation of Motor Cables

NB!:
If an unscreened cable is used, some EMC requirements are not complied with, see *Special conditions* in *Appendix*. If the EMC specifications regarding emission are to be complied with, the motor cable must be screened, unless otherwise stated for the RFI filter in question. It is important to keep the motor cable as short as possible to reduce the noise level and leakage currents to a minimum. The motor cable screen must be connected to the metal cabinet of the frequency converter and to the metal housing of the motor. The screen connections are to be made with the biggest possible surface (cable clamp). This is enabled by different installation devices in the different frequency converters.

Mounting with twisted screen ends (pigtails) is to be avoided, since these spoil the screening effect at higher frequencies. If it is necessary to break the screen to install a motor isolator or motor contactor, the screen must be continued at the lowest possible HF impedance.

The frequency converter has been tested with a given length of cable and a given cross-section of that cable. If the cross-section is increased, the cable capacitance - and thus the leakage current - increases, and the cable length must be reduced correspondingly.

■ Installation of Control Cables

Tightening-up torque: 0.22 - 0.25 Nm
Screw size: M2
Screw driver type: 0.4 x 2.5 x 80 mm
See *Earthing of Braided Screened/Armoured Control Cables* for correct earthing.

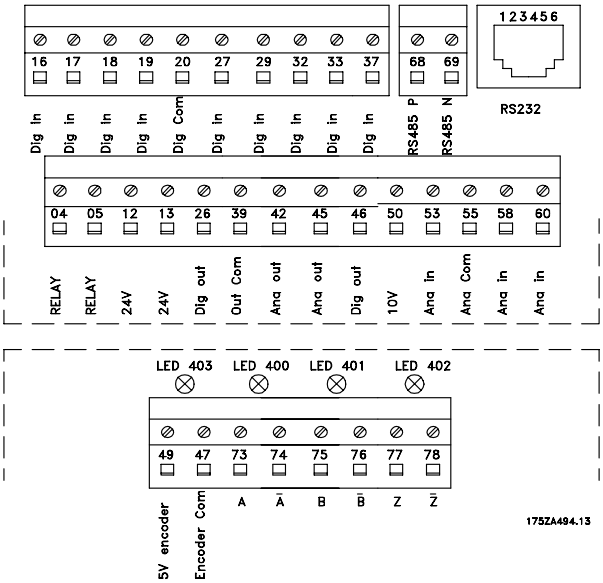

LEDs on encoder board:

When all LEDs are on the connection to encoder and encoder condition are OK.
LED 403 OFF: 5 V supply missing
LED 400 OFF: Channel A or inv. A missing or shortcircuited
LED 401 OFF: Channel B or inv. B missing or shortcircuited
LED 402 OFF: Channel Z or inv. Z missing or shortcircuited.

Connection of shield:

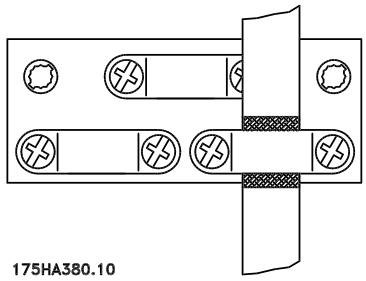

No.	Function
12, 13	Voltage supply to digital inputs. For the 24 V DC to be usable for the digital inputs, switch 4 on the control card must be closed position "ON". Max. current 350 mA
16-33	Digital inputs
37	Digital inputs. Hardware coast
20	Ground for digital inputs
39	Ground for analogue/digital outputs
26, 46	Digital outputs for output functions (messages)
42, 45	Analogue outputs for indicating frequency, reference, current and torque
47, 49	Supply 5 V, 200 mA for incremental encoder
50	Supply voltage to potentiometer and thermistor 10 V DC. Max. current 12 mA
53	Analogue reference input, voltage 0 - ±10 V
55	Ground for analogue reference inputs
58, 60	Analogue reference input, current 0/4-20 mA
68, 69	RS 485 interface, serial communication.
73, 78	Encoder input

■ Brake Connection

No.	81	82	Brake resistor terminals
	R-	R+	

The connection cable to the brake resistor must be screened/armoured. Connect the screen to the metal cabinet of the frequency converter and to the metal cabinet of the brake resistor by means of cable clamps. Dimension the cross-section of the brake cable to match the brake torque.

NB!:
Please note that voltages up to 850 V DC occur on the terminals.

■ Installation of Relay Terminals

Tightening-up torque: 0.22 - 0.25 Nm
Screw size: M3/M2

No.	Function
1-3	Relay output, 1+3 NC, 1+2 NO See parameter 323. See also *General technical data.*
4, 5	Relay output, 4+5 NO See parameter 326. See also *General technical data.*

■ Installation of Brake Resistor Temperature Switch

Torque: 0.5-0.6 Nm
Screw size: M3

No.	Function
106, 104, 105	Brake resistor temperature switch.

NB!:
This function is only available on VLT 5072-5202 400-500 V.

If the temperature of the brake resistor gets too high and the terminal switch drops out, the frequency converter will stop braking. The motor will start coasting.
A terminal switch must be installed that can either be 'normally closed' or 'normally open'. If this function is not used, 106 and 104 must be short-circuited together.

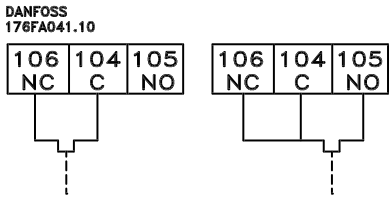

Installation

■ EMC-Correct Electrical Installation

General points to be observed to ensure EMC-correct electrical installation.

- Use only screened/armoured motor cables and screened/armoured control cables.
- Connect the screen to earth at both ends.
- Avoid installation with twisted screen ends (pigtails), since this ruins the screening effect at high frequencies. Use cable clamps instead.
- It is important to ensure good electrical contact from the installation plate through the installation screws to the metal cabinet of the frequency converter.
- Use toothed discs and galvanic conductive installation plates.
- Do not use unscreened/unarmoured motor cables in the installation cabinets.

■ Tightening-up Torques and Screw Sizes

The table shows the torque required when fitting terminals to the frequency converter. For VLT 5042-5302 400-500 V, the cables must be fastened with screws. For VLT 5122-5500 400-500 V, the cables must be fastened with bolts.
These figures apply to the following terminals:

Mains terminals	Nos	91, 92, 93 L1, L2, L3
Motor terminals	Nos	96, 97, 98 U, V, W
Earth terminal	No	94, 95, 99
Brake resistor terminals		81, 82
Loadsharing		88, 89

400-500 V				
5042	IP20	3	M5	4 mm Allen wrench
5042[3)]	IP54	3	M5	4 mm Allen wrench
5052-5062		6	M6	5 mm Allen wrench
5072-5102	IP20	15	M6	6 mm Allen wrench
	IP54[2)]	24	M8	8 mm Allen wrench
5122-5302[4)]		19	M10 bolt	

1) Brake terminals: 3,0 Nm, Nut: M6
2) Brake and loadsharing: 14 Nm, M6 Allen screw
3) IP54 with RFI - Line terminals 6Nm, Screw: M6 - 5 mm Allen wrench
4) Loadshare and brake terminals: 9,5 Nm; Bolt M8
5) Brake terminals: 11,3 Nm; Bolt M8

■ High Voltage Test

A high voltage test can be carried out by short-circuiting terminals U, V, W, L_1, L_2 and L_3 and energizing by max. 2.15 kV DC for one second between this short-circuit and the chassis.

NB!:
The RFI switch must be closed (position ON) when high voltage tests are carried out.

■ Motor Thermal Protection

The electronic thermal protection function in UL-approved frequency converters has received the UL-approval for single motor protection when parameter 128 has been set for *ETR Trip* and parameter 105 has been programmed to the rated motor current (see motor nameplate).

■ Extra Protection (RCD)

ELCB (Earth Leakage Circuit Breaker) relays, multiple protective earthing or earthing can be used as extra protection, provided that local safety regulations are complied with. In case of an earth fault, a DC content may develop in the faulty current. If ELCB relays are used:

- Local regulations must be complied with
- Suitable for protecting equipment with a DC content in the faulty current (3-phase bridge rectifier)
- Suitable for a pulse-shaped, brief discharge on power-up
- Suitable for a high leakage current.

NB!:
Never use an RCD (ELCB relay), type A, as it is not suitable for DC faulty currents.

MG.50.N4.02 - VLT is a registered Danfoss trademark

■ Switches 1-4:

The dipswitch is located on the control card.
It is used for serial communication, terminals 68 and 69.
The switching position shown is the factory setting.

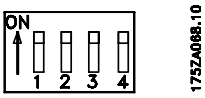

Switch 1 has no function.
Switches 2 and 3 are used for terminating an RS 485 interface, serial communication.
Switch 4 is used for separating the common potential for the internal 24 V DC supply from the common potential of the external 24 V DC supply.

NB!:
Please note that when Switch 4 is in position "OFF", the external 24 V DC supply is galvanic isolated from the frequency converter.

■ Electrical Installation, Enclosures

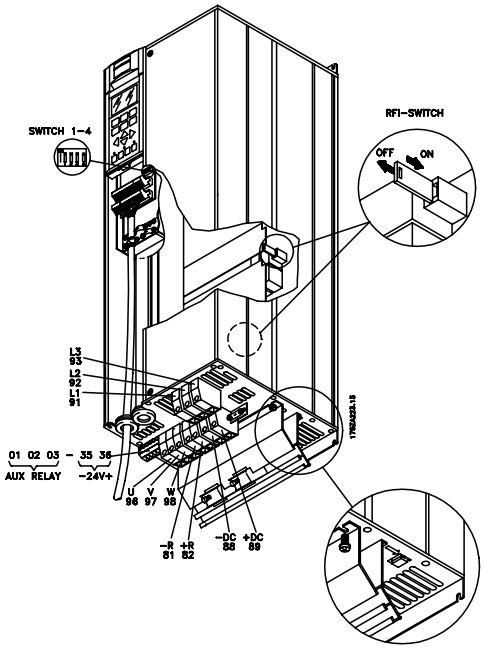

Compact IP 20 VLT 5042-5102, 400-500 V

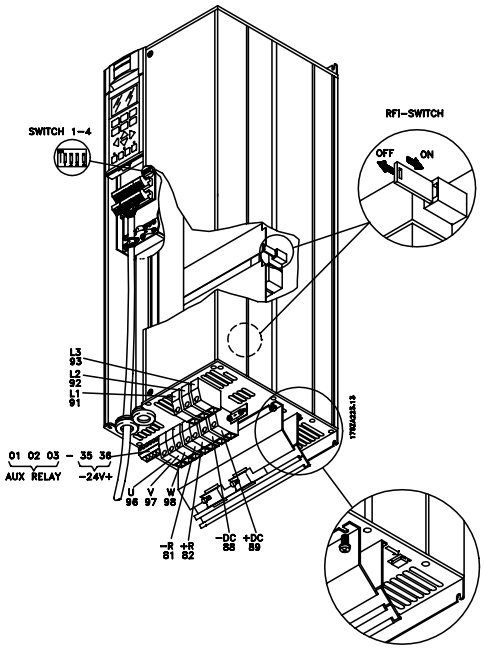

Compact IP 20 VLT 5042-5062, 400-500 V

Installation

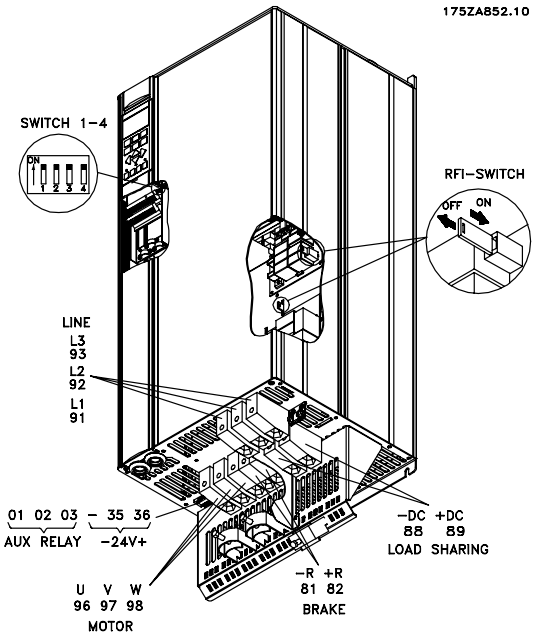

Compact IP 20 VLT 5072-5102, 400-500 V

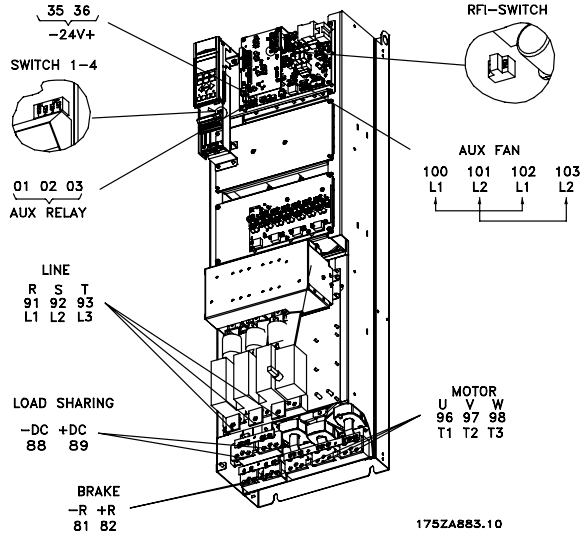

Compact IP 00 without disconnect and fuse VLT 5202-5302 400-500 V

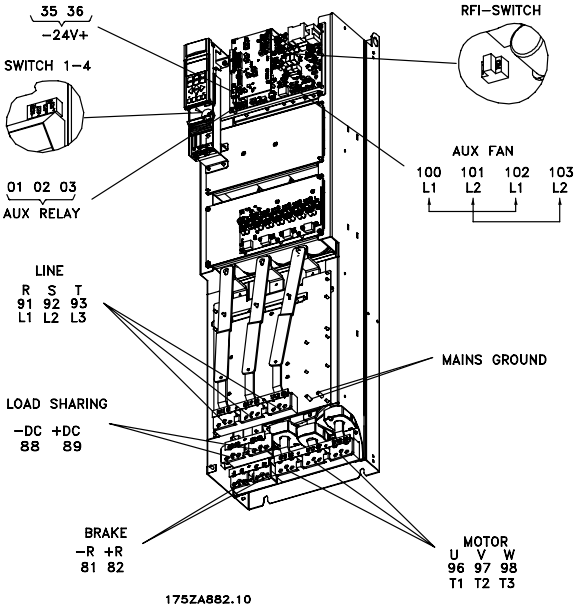

Compact IP 00 without disconnect and fuse VLT 5122-5302 400-500 V

■ RFI switch

Mains supply isolated from earth:
If the frequency converter is supplied from an isolated mains source (IT mains), the RFI switch can be turned off (OFF). In OFF position, the internal RFI capacities (filter capacitors) between the chassis and the intermediate circuit are cut off to avoid damage to the intermediate circuit and to reduce the earth capacity currents (according to IEC 61800-3).

NB!:
The RFI switch is not to be operated with mains connected to the unit. Check that the mains supply has been disconnected before operating the RFI switch.

NB!:
Open RFI switch is only allowed at factory set switching frequencies.

NB!:
The RFI switch disconnects the capacitors galvanically to ground.

The red switches are operated by means of e.g. a screwdriver. They are set in the OFF position when they are pulled out and in ON position when they are pushed in (see drawing below). Factory setting is ON.

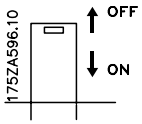

Mains supply connected to earth:
The RFI switch must be in ON position in order for the frequency converter to comply with the EMC-standard.

Position of RFI switches

Compact IP 20/NEMA 1
VLT 5042 - 5062 400 - 500 V

Installation

■ Use of EMC compliant cables

In order to comply with requirements for EMC immunity of the control cables and EMC emissions from the motor cables screened/armoured cables must be used. The ability of a cable to reduce the amount of ingoing and outgoing radiation of electric noise depends on the transfer impedance (Z_T). The screen of a cable is normally designed to reduce the transfer of electric noise, and a screen with a lower Z_T is more effective than a screen with a higher Z_T.
Z_T is rarely stated by cable manufacturers, but it is often possible to estimate Z_T by looking at and assessing the physical design of the cable.

Z_T can be assessed on the basis of the following factors:

- the contact resistance between the individual screen conductors.
- Screen coverage, i.e. the physical area of the cable covered by the screen. Is often stated as a percentage and should be no less than 85%.
- The screen type, i.e. braided or twisted pattern. A braided pattern or closed pipe is recommended.

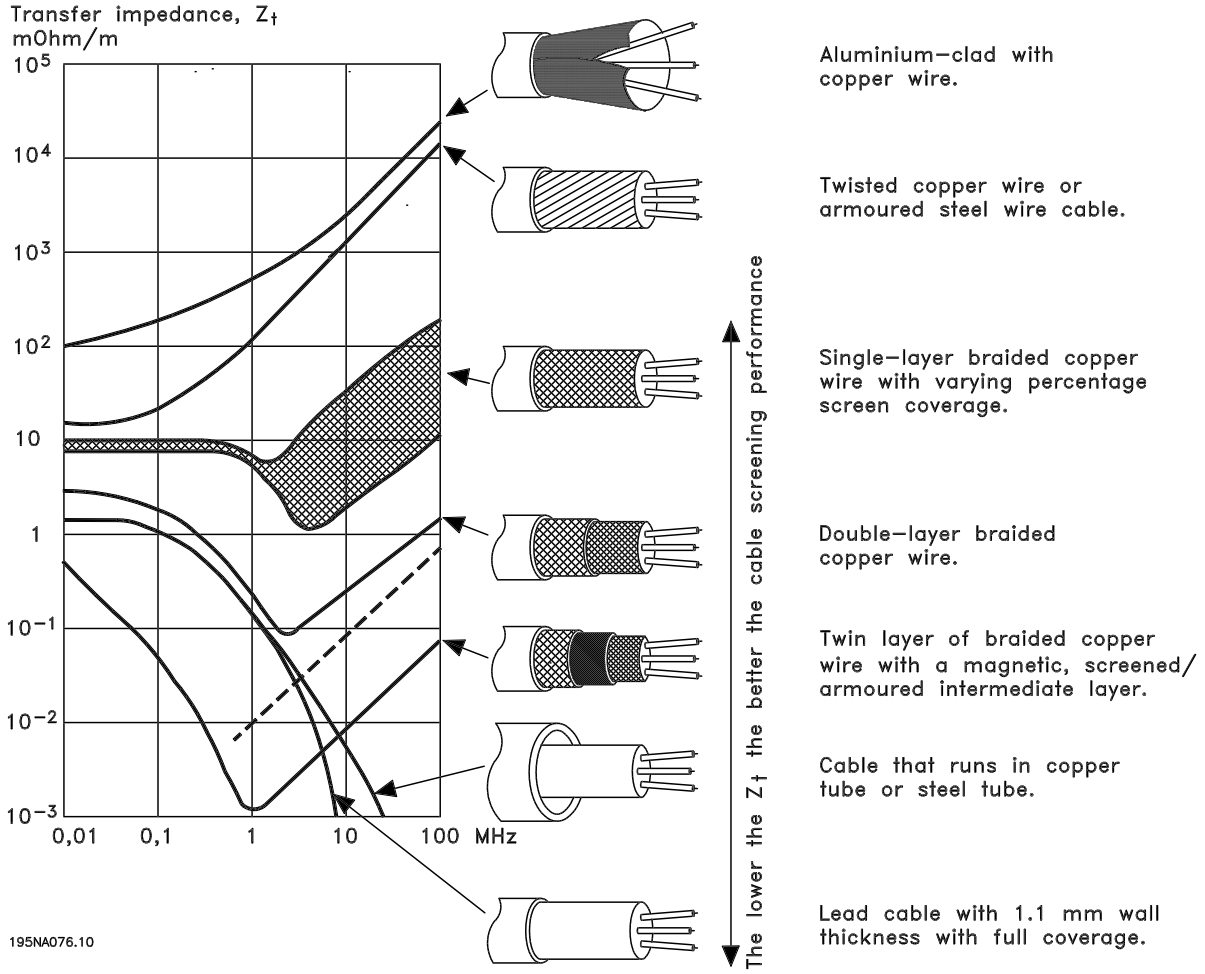

■ Earthing of Braided Screened/armoured Control Cables

Generally speaking, control cables must be braided screened/armoured and the screen must be connected by means of a cable clamp at both ends to the metal cabinet of the unit.
The drawing below indicates how correct earthing is carried out and what to be done if in doubt.

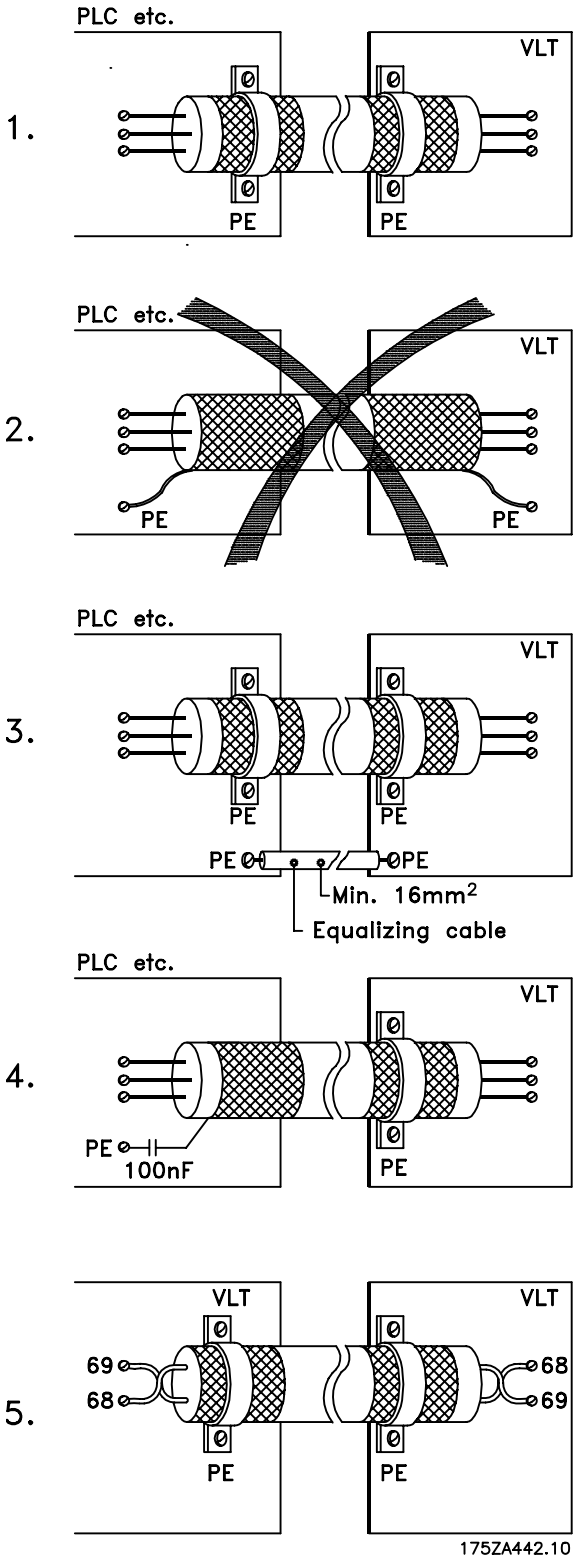

1. **Correct earthing**
   Control cables and cables for serial communication must be fitted with cable clamps at both ends to ensure the best possible electrical contact.
2. **Wrong earthing**
   Do not use twisted cable ends (pig-tails), since these increase the screen impedance at high frequencies.
3. **Protection with respect to earth potential between PLC and frequency converter**
   If the earth potential between the frequency converter and the PLC (etc.) is different, electric noise may occur that will disturb the whole system. This problem can be solved by fitting an equalising cable, to be placed next to the control cable.
   Minimum cable cross-section: 16 mm^2
4. **For 50/60 Hz earth loops**
   If very long control cables are used, 50/60 Hz earth loops may occur. This problem can be solved by connecting one end of the screen to earth via a 100nF capacitor (keeping leads short).
5. **Cables for serial communication**
   It is recommended to use twisted-pair cables to reduce the differential mode interference between the conductors.

■ Safety Earthing

NB!:
The frequency converter has a leakage current and must be earthed appropriately for safety reasons. Use earth terminal, which enables reinforced earthing.

Apply national safety regulations.

Installation

■ Control Panel

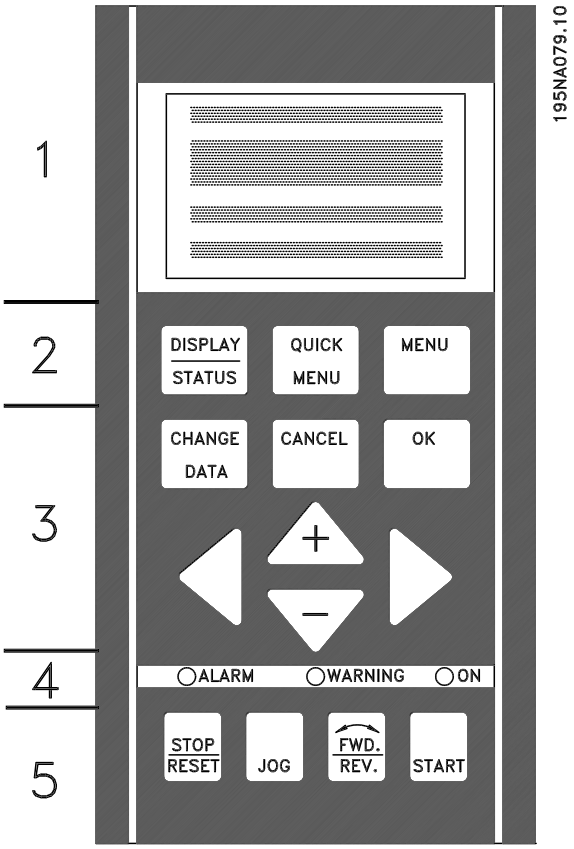

The VLT 5000 Crane can be combined with an LCP control unit (Local Control Panel) which makes up a complete interface for operation and programming of the frequency converter. The LCP control panel can be installed up to 3 metres away from the frequency converter, eg. on a front panel, by means of the additional mounting kit.

The control panel is divided into five functional groups:
1. Display.
2. Keys used to change the display function.
3. Keys used to change the programme parameters.
4. Indicator lamps.
5. Local control keys.

All data is displayed via a 4-line alphanumeric display, which during normal operation will be able to continuously display 4 items of operating data and 3 operating modes. During programming all information needed for quick, effective parameter setup of the frequency converter will be displayed. As a supplement to the display there are three indicator lamps for voltage indication (ON), warning (WARNING) and alarm (ALARM) respectively. All frequency converter parameter Setups can be changed immediately from the control panel, after entering the correct password in parameter 650 and if in parameter 018 *Not Locked* [0] is selected.

★ = factory setting. () = display text [] = value for use in communication via serial communication port

■ Display

The LCD-display has back lighting and a total of 4 alpha-numeric lines including a box showing the direction of rotation (arrow) and the chosen set-up as well as the set-up in which programming is taking place.

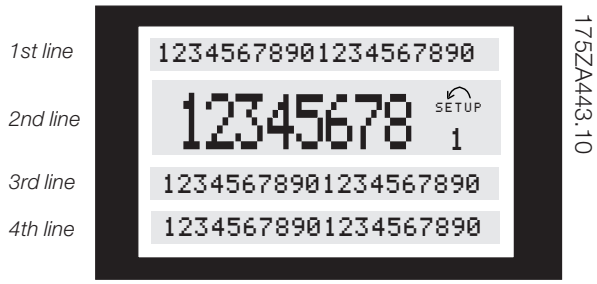

1st line shows up to 3 measurements continuously in normal operating status or a text explaining the 2nd line.

2nd line shows a measurement with related unit continuously, regardless of status (except in case of an alarm/warning).

3rd line is normally blank and is used in the menu mode to show the selected parameter group number and name

4th line is used in operating status for showing a status text or in data change mode for showing the mode or value of the selected parameter.

An arrow indicates the direction of the motor rotation.

■ LEDs

At the bottom of the control panel is a red alarm LED, a yellow LED and a green voltage LED.

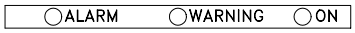

red yellow green

If certain threshold values are exceeded, the alarm and/or warning LED lights up concurrently with a status and alarm text on the control panel.

■ Display Read-Out State

The display read-out state can be varied - see the list below - depending on whether the frequency converter is in normal operation or is being programmed.

■ Display Mode

In normal operation, up to 4 different operating variables can be indicated continuously: 1.1 and 1.2 and 1.3 and 2, and in line 4 the present operating status or alarms and warnings that have arisen.

■ Display Mode - Selection of Read-Out State

There are three options in connection with the choice of read-out state in the Display mode - I, II and III. The choice of read-out state determines the number of operating variables read out.

Read-out state:	I:	II:	III:
Line 1	Description for operating variable in line 2	Data value for 3 operating variables in line 1	Description for 3 operating variables in line 1

The table below gives the units linked to the variables in the first and second line of the display.

★ = factory setting. () = display text [] = value for use in communication via serial communication port

Operating variable:	Unit:
Reference	[%]
Reference	[unit]
Feedback	[unit]
Frequency	[Hz]
Speed RPM	[rpm]
Current	[A]
Torque	[%]
Power	[kW]
Power	[HP]
Output energy	[kWh]
Motor voltage	[V]
DC-link voltage	[V]
Motor ETR value	[%]
Inverter ETR value	[%]
Hours run	[Hours]
Digital input	[Bin]
Input status, analogue terminal 53	[V]
Input status, analogue terminal 58	[mA]
Input status, analogue terminal 60	[mA]
External reference	[%]
Status word	[Hex]
Brake energy/2 min.	[kW]
Brake energy/sec.	[kW]
Heat sink temp.	[ºC]
Alarm word	[Hex]
Control word	[Hex]
Warning word 1	[Hex]
Extended status word	[Hex]

Operating variables 1.1, 1.2 and 1.3 in the first line, and operating variable 2 in the second line are selected via parameter 009, 010, 011 and 012.

- Read-out state I:

This read-out state is standard after starting up or after initialisation.

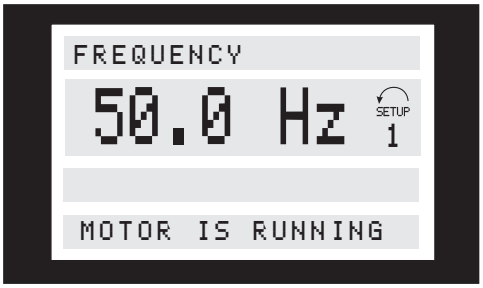

Line 2 gives the data value of an operating variable with related unit, and line 1 provides a text which explains line 2, cf. table. In the example, Frequency has been selected as variable via parameter 009. During normal operation another variable can immediately be read out by using the [+/-] keys.

- Read-out state II:

Switching between read-out states I and II is effected by pressing the [DISPLAY / STATUS] key.

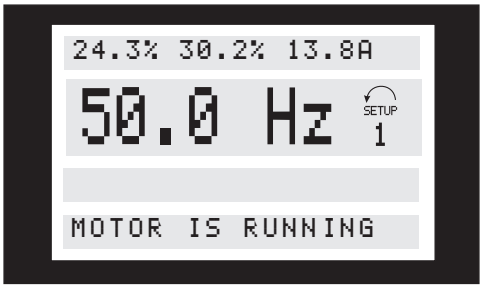

In this state, data values for four operating values are shown at the same time, giving the related unit, cf. table. In the example, Reference, Torque, Current and Frequency are selected as variables in the first and second line.

- Read-out state III:

This read-out state can be held as long as the [DISPLAY/STATUS] key is pressed. When the key is released, the system switches back to Read-out state II, unless the key is pressed for less that approx. 1 sec., in which case the system always reverts to Read-out state I.

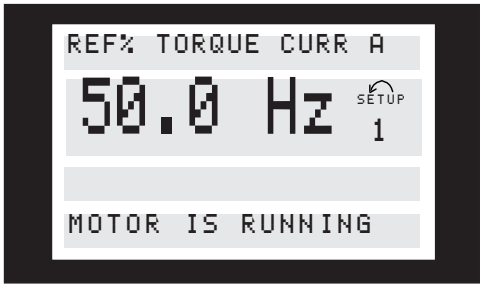

This is where parameter names and units for operating variables in the first and second line are given - operating variable 2 remains unchanged.

★ = factory setting. () = display text [] = value for use in communication via serial communication port

■ Parameter programming

Menu mode is started by pressing the [MENU] key, which produces the following readout on the display:

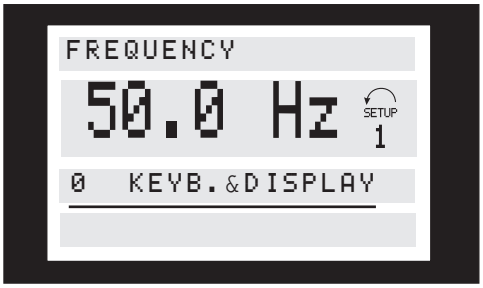

Line 3 on the display shows the parameter group number and name.

In Menu mode, the parameters are divided into groups. Selection of parameter group is effected using the [< >] keys.
The following parameter groups will be accessible:

Group no.	Parameter group
0xx	Operation & Display
1xx	Load & Motor
2xx	References & Limits
3xx	Inputs & Outputs
4xx	Special functions
5xx	Serial communication
6xx	Technical functions
7xx	Crane functions

When the required parameter group has been selected, each parameter can be chosen by means of the [+ / -] keys:

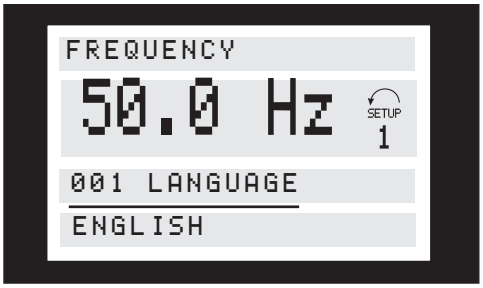

The 3rd line of the display shows the parameter number and name, while the status/value of the selected parameter is shown in line 4.

Changing data

Regardless of whether a parameter has been selected under the Quick menu or the Menu mode, the procedure for changing data will be the same. Pressing the [CHANGE DATA] key gives access to changing the selected parameter, following which the underlining in line 4 will flash on the display. The procedure for changing data depends on whether the selected parameter represents a numerical data value or a text value.

Changing a data value

If the selected parameter is a text value, the text value is changed by means of the [+ / -] keys.

The bottom display line will show the value that will be entered (saved) when acknowledgment is given [OK].

Change of numeric data value

If the selected parameter is represented by a numerical data value, a digit is first chosen using the [< >] keys.

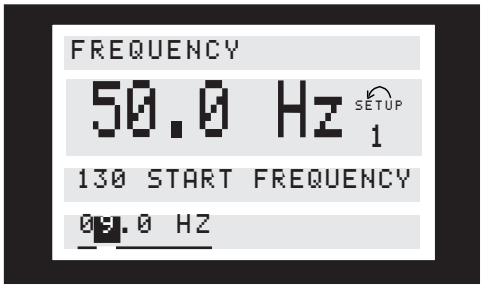

The selected digit can then be changed infinitely variably using the [+ / -] keys:

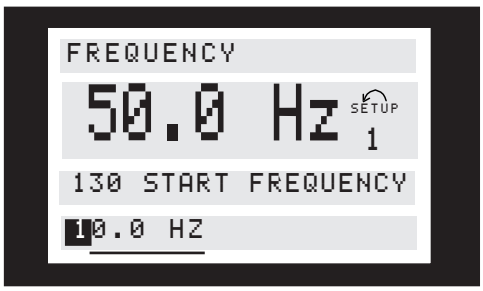

The chosen digit is indicated by the digit flashing. The bottom display line shows the data value that will be entered (saved) when signing off with [OK].

■ Manual initialization

Manual initialization is performed as follows:

Cut mains. Hold the [DISPLAY STATUS] + [CHANGE DATA] + [OK] keys down, and simultaneously reconnect the mains. Release the keys; the frequency converter has now been programmed for the factory setting. The following parameters are not reset during manual initialization:

- par. 600 *Operating hours*
- par. 601 *Hours run*
- par. 602 *kWh counter*
- par. 603 *Number of power-ups*
- par. 604 *Number of overtemperatures*
- par. 605 *Number of overvoltages*

■ Infinitely Variable Change of NumericData Value

If the chosen parameter represents a numeric data value, a digit is first selected by means of the [<>] keys.

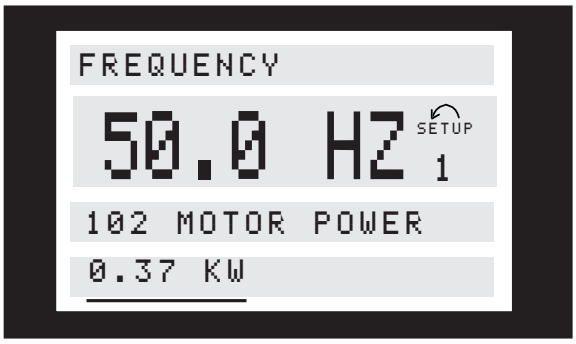

Then the chosen digit is changed infinitely variably by means of the [+/-] keys:

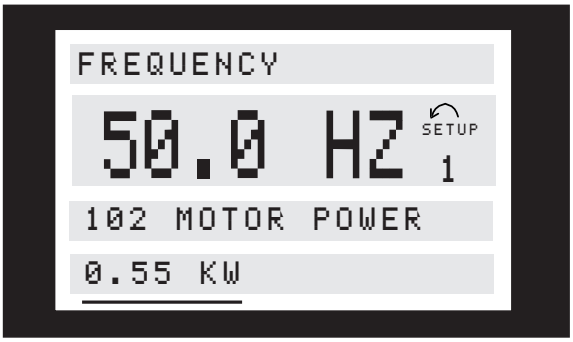

The chosen digit is indicated by the digit flashing. The bottom display line shows the data value that will be entered (saved) when signing off with [OK]

■ Changing of datavalue, step-by-step

Certain parameters can be changed step by step or infinitely variably. This applies to Motor power (parameter 102), Motor voltage (parameter 103) and Motor frequency (parameter 104).
This means that the parameters are changed both as a group of numeric data values and as numeric data values infinitely variably.

■ Menu Structure

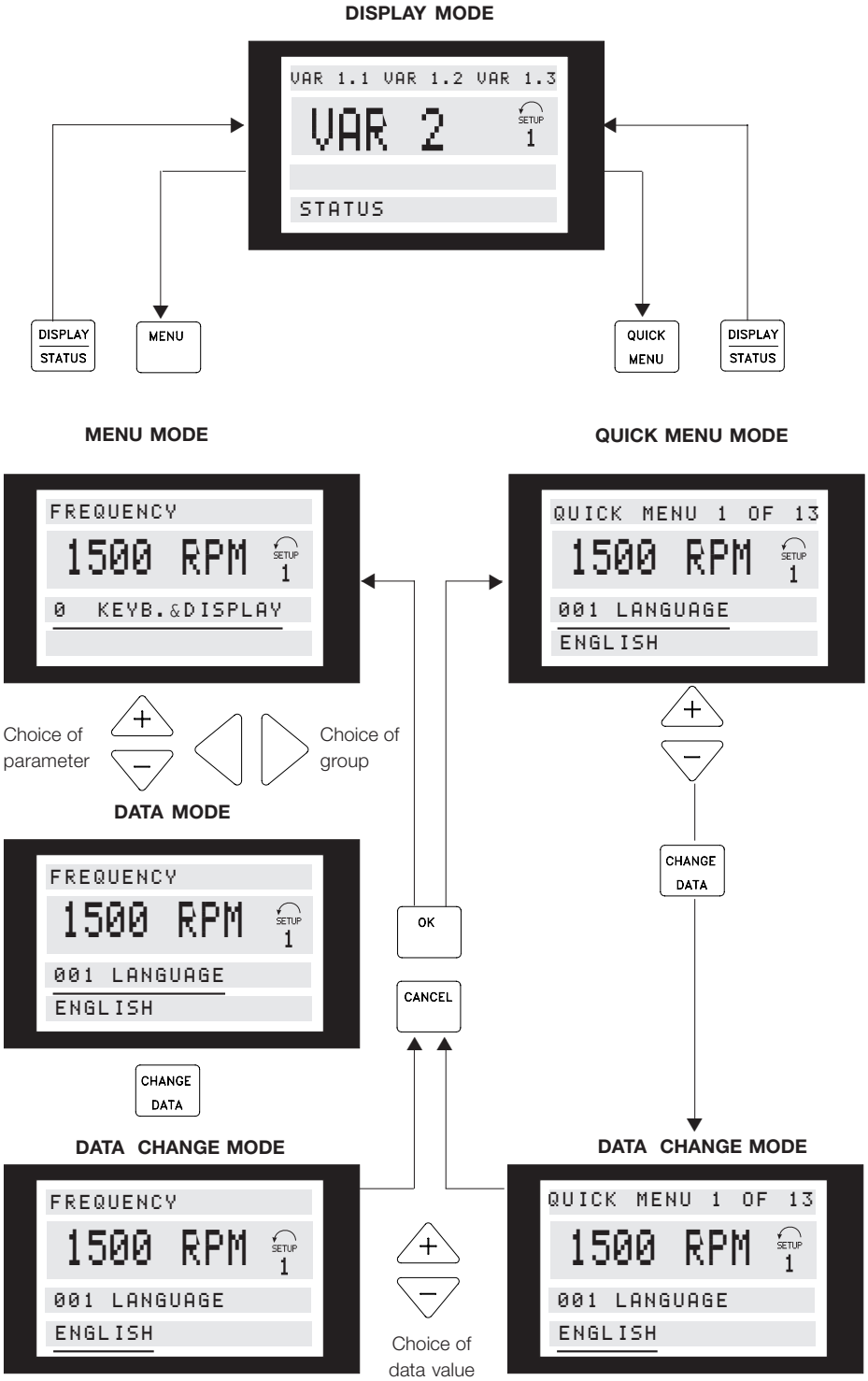

175ZA721.10

LCP - Local Control Panel

★ = factory setting. () = display text [] = value for use in communication via serial communication port

General Advice on Programming

On the following pages the control keys for parameter set-up and the local control keys will be explained.

First, however, please draw attention to the difference between the [+]/[-] keys and the [<]/[>] keys.
The [+]/[-] keys are used for:

- Changing parameter numbers within a parameter group
- Changing parameter values

The [<]/[>] keys are used for:

- Shifting between parameter groups
- Moving the cursor when changing numeric values

For further details on the parameter groups, please refer to the table in *Parameter Programming*.

Example:
The configuration mode in parameter 100 is to be set to SPEED CLOSED LOOP.

1. Press Menu to get access to the parameters
2. Press the [>] key to enter parameter group 100
3. Press [Change Data]
4. Press the [+] key twice to select the data value [1] for SPEED CLOSED LOOP
5. Press [OK]
6. The parameter is now set

Password Protection

To protect against unintended change of sensitive parameters, eg. motor parameters, some of the parameters are protected by a password. There are three levels of protection, for which two of the levels are protected by a password. The password protection is only accessable from the LCP, not from the serial bus communication. This means that all parameters are accessable from the bus eventhough they may be protected from the LCP.
The three levels are the following:

- Level 0: Danfoss service (not accessable)
- Level 1: Commissioning (110775)
- Level 2: Normal operation (000002)

NB!:
NOTE that level 1 and level 2 passwords must be re-entered after each power-up!

For further information on password protection see Parameter 650.

Control keys for parameter Setup

The control keys are divided into functions, in such a way that the keys between the display and the indicator lamps are used for parameter Setup, including selection of the display's view mode during normal operation.

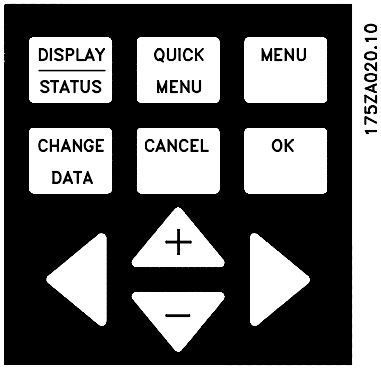

[DISPLAY/STATUS] is used to select the display's view mode or to change back to Display mode from either Quick Menu or Menu mode.

[QUICK MENU] provides access to the parameters used in the Quick Menu. It is possible to switch between Quick Menu and Menu mode.

[MENU] gives access to all parameters. It is possible to switch between Menu mode and Quick Menu.

[CHANGE DATA] is used to change a parameter that has been selected either in Menu mode or Quick Menu.

[CANCEL] is used if a change to the selected parameter is not to be implemented.

[OK] is used to confirm a change to a selected parameter.

[+ / -] are used for selecting parameters and for changing parameter values.
These keys are also used in Display mode to switch between the readouts of operating variables.

[< >] are used for selecting parameter group and to move the cursor when changing a numerical value.

★ = factory setting. () = display text [] = value for use in communication via serial communication port

■ Local control

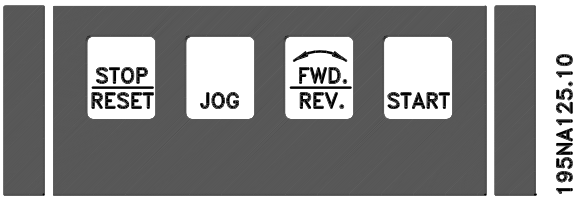

[STOP/RESET] is used for stopping the motor connected or for resetting the frequency converter after a drop-out (trip). Can be set to active or inactive via parameter 014 *Local stop*.
If stop is activated Display line 2 will flash.

NB!:
If an external stop function is not selected and the [STOP/RESET] key is set to inactive, the motor can only be stopped by disconnecting the voltage to the motor or the frequency converter.

[FWD / REV] changes the direction of rotation of the motor, which is indicated by means of the arrow on the display. Can be set to active or inactive via parameter 016 *Local reversing*. The [FWD/REV] key is only active when parameter 002 *Local/remote operation* is set to *Local control*.

NB!:
Note that the fwd/rev function is not active in crane profile. The function only functions if the VLT is programmed to run as a normal VLT 5000 (see parameter 512).

[START] is used to start the frequency converter. Is always active, but cannot override a stop command.

NB!:
If the local control keys are set to inactive, these will both become active when the frequency converter is set to *Local control* and *Remote control* via parameter 002 *Local/remote operation*, with the exception of [FWD/REV], which is only active in Local control.

[JOG] overrides the output frequency to a preset frequency while the key is pressed down.

NB!:
The Jog function is not available in crane profile. If the VLT 5000 Crane is programmed to run as a normal VLT 5000 (see parameter 512), the Jog function will, however, be available.

Programming

★ = factory setting. () = display text [] = value for use in communication via serial communication port

PNU # 0xx	Parameter description Operation and display	Range	Factory setting	Changes during operation	Unit index	Conversion index	Data type	Protection level
001	**Language**		English	Yes	0	0	5	2
002	**Operation site**		Remote control	Yes	0	0	5	2
003	**Local reference**		0	Yes	0	-3	4	2
007	**LCP copy**		No copy	No	0	0	5	0
009	**Display linie 2**		Speed [RPM]	Yes	0	0	5	2
010	**Display line 1.1**		Reference [%]	Yes	0	0	5	2
011	**Display line 1.2**		Motor current [A]	Yes	0	0	5	2
012	**Display line 1.3**		Power [kW]	Yes	0	0	5	2
014	**LCP stop**		Enable	Yes	0	0	5	1
015	**LCP jogging**		Disable	Yes	0	0	5	1
016	**LCP reversing**		Disable	Yes	0	0	5	1
017	**LCP reset of trip**		Enable	Yes	0	0	5	2
018	**Lock for data change**		Not locked	Yes	0	0	5	1

1xx	Motor and Load							
100	**Configuration**		Speed control, closed loop	No	0	0	5	2
102	**Motor power**	0.18 - 500 kW	Depends on unit	No	9	1	6	1
103	**Motor voltage**	200 - 500 V	Depends on unit	No	21	0	6	1
104	**Motor frequency**	24 - 1000Hz	Depends on unit	No	28	0	6	1
105	**Motor current**	0.01 - $1_{VLT,MAX}$	Depends on unit	No	22	-2	7	1
106	**Rated motor speed**	100 - 60000 rpm	Depends on unit	No	11	67	6	1
122	**Function at stop**		Coast	Yes	0	0	5	1
124	**DC-hold current**	0 - 100%	50%	Yes	27	0	6	1
128	**Motor thermal protection**		No protection	Yes	0	0	5	1
150	**Stator resistance**		Depends on unit	No	23	-4	7	1
151	**Rotor resistance**		Depends on unit	No	23	-4	7	1
152	**Stator leakage**		Depends on unit	No	23	-3	7	1
153	**Rotor leakage**		Depends on unit	No	23	-3	7	1
154	**Main reactance**		Depends on unit	No	23	-3	7	1
155	**Rotor inertia**		Depends on unit	No	0	-4	7	1
156	**Pole number**		4	No	0	0	5	1
157	**Field weakening speed**	0 - 6000RPM	Depends on unit	No	11	67	6	1
158	**Ironloss resistance**	1 - 10000Ω	10000Ω	No	23	0	6	1

★ = factory setting. () = display text [] = value for use in communication via serial communication port

PNU # 2xx	Parameter description References & Limits	Range	Factory setting	Changes during operation	Unit index	Conversion index	Data type	Protection level
202	**Output speed high limit**	0-5000 RPM	3000 RPM	Yes	11	67	6	1
205	**Maximum reference**	0.001-100.000	3000	Yes	0	-3	4	1
207	**Ramp-up time 1**	0.05 - 3600	0.85 sec.	Yes	4	-2	7	1
208	**Ramp-down time 1**	0.05 - 3600	0.85 sec.	Yes	4	-2	7	1
211	**Jog ramp time**	0.05 - 3600	0.85 sec.	Yes	4	-2	7	1
212	**Quick stop ramp-down time**	0.05 - 3600	0.85 sec.	Yes	4	-2	7	1
213	**Jog speed**	0 - 4500 RPM	200 RPM	Yes	11	67	6	2
221	**Torque limit motor mode**	0.0% - 170%	160 %	Yes	24	-1	6	1
222	**Torque limit generator operation**	0.0% - 170%	160 %	Yes	24	-1	6	1
234	**Missing motor phase**		Enable	Yes	0	0	5	1
235	**Phase loss monitor**		Enable	No	0	0	5	1
236	**Low speed ref. current**	0 - 160%	50%	Yes	27	0	5	1

Changes during operation:
"Yes" means that the parameter can be changed, while the frequency converter is in operation. "No" means that the frequency converter must be stopped before a change can be made.

Conversion index/unit index:
This number refers to a conversion figure to be used when writing or reading by means of a frequency converter. Please refer to *Serial Communication* in *Appendix*.

Programming

★ = factory setting. () = display text [] = value for use in communication via serial communication port

PNU # 3xx	Parameter description Inputs and outputs	Range	Factory setting	Changes during operation	Unit index	Conversion index	Data type	Protection level
300	**Terminal 16, input**		Master/slave	Yes	0	0	5	1
301	**Terminal 17, input**		Positioning	Yes	0	0	5	1
302	**Terminal 18 Start, input**		Start lowering	Yes	0	0	5	1
303	**Terminal 19, input**		Start hoisting	Yes	0	0	5	1
304	**Terminal 27, input**		Crane Q stop inv.	Yes	0	0	5	1
305	**Terminal 29, input**		Gear choice	Yes	0	0	5	1
306	**Terminal 32, input**		Load contact 1	Yes	0	0	5	1
307	**Terminal 33, input**		Load contact 2	Yes	0	0	5	1
308	**Terminal 53, analogue input voltage**		Reference	Yes	0	0	5	1
309	**Terminal 53, min. scaling**	0.0 - 10.0 V	0.0 V	Yes	21	-1	5	1
310	**Terminal 53, max. scaling**	0.0 - 10.0 V	10.0 V	Yes	21	-1	5	1
314	**Terminal 60, analogue input current**		Reference	Yes	0	0	5	1
315	**Terminal 60, min. scaling**	0.0 - 20.0mA	4.0 mA	Yes	22	-4	5	1
316	**Terminal 60, max. scaling**	0.0 - 20.0mA	20.0 mA	Yes	22	-4	5	1
317	**Time out**	0 sec	0 sec.	Yes	4	0	5	1
318	**Function after time out**		Off	Yes	0	0	5	1
319	**Terminal 42, output**		No operation	Yes	0	0	5	1
321	**Terminal 45, output**		No operation	Yes	0	0	5	1
323	Relay 01, output		Mechanical brake control	Yes	0	0	5	1
324	Relay 01, ON delay	0.00 - 600 sec.	0.00 sec.	Yes	4	-2	6	1
325	Relay 01, OFF delay	0.00 - 600 sec.	0.00 sec.	Yes	4	-2	6	1
326	Relay 04, output		Unit ready	Yes	0	0	5	1
329	Encoder feedback pulse/rev.	1024 pulses/rev.	1024 pulses/rev.	No	0	0	6	1
341	**Terminal 46, digital signal output**		No operation	Yes	0	0	5	1
352	**Terminal 58, analogue input current**		Reference	Yes	0	0	5	1
353	**Terminal 58, min. scaling**	0.0 - 20.0 mA	4 mA	Yes	22	-4	5	1
354	**Terminal 50, max. scaling**	0.0 - 20.0 mA	20 mA	Yes	22	-4	5	1
355	**Terminal 26, digital signal output**		No operation	Yes	0	0	5	1

★ = factory setting. () = display text [] = value for use in communication via serial communication port

PNU # 4xx	Parameter description Application functions	Range	Factory setting	Changes during operation	Unit index	Conversion index	Data type	Protection level
400	**Brake function/over-voltage control**		Resistor	Yes	0	0	5	1
401	**Brake resistor, ohm**	0 - 500Ω	Depends on unit	Yes	23	-1	6	1
402	**Brake power limit, kW**	0 - 1000kW	0 kW	Yes	9	2	6	1
403	**Power monitoring**		Warning	Yes	0	0	5	1
404	**Brake check**		Off	Yes	0	0	5	1
405	**Reset mode**		Manual reset	Yes	0	0	5	1
421	**Speed PID filter time**	1 - 20 ms	3.2 ms	Yes	4	-4	6	1

Parameter group 5xx, see serial communication!

NB!:
In parameter 512 it is possible to shift between crane profile and FC profile!

PNU # 6xx	Parameter description Service functions	Factory setting	Changes during operation	Unit index	Conversion index	Data type	Protection level
600	**Operation data: Operating hours**		No	4	74	7	2
601	**Operation Data: Running hours**		No	4	74	7	2
602	**Operation Data: kWh counter**		No	8	2	7	2
603	**Operation Data: Power ups**		No	0	0	6	2
604	**Operation Data: Over temps**		No	0	0	6	2
605	**Operation Data: Over volts**		No	0	0	6	2
615	**Fault log: Error code**		No	0	0	5	2
616	**Fault log: Time**		No	0	-1	7	2
617	**Fault log: Value**		No	0	0	3	2
618	**Reset of kWh counter**	Do not reset	Yes	0	0	5	1
619	**Reset of hours-run counter**	Do not reset	Yes	0	0	5	1
620	**Operating mode Normal function**	Normal operation	Yes	0	0	5	1
621	**Type plate: VLT type**		No	0	0	9	2
622	**Type plate: Power section**		No	0	0	9	2
623	**Type plate: VLT ordering number**		No	0	0	9	2
624	**Type plate: Software version number**		No	0	0	9	2
625	**Type plate: LCP ID no.**		No	0	0	9	2
626	**Type plate: Parameter database ID no.**		No	0	-2	9	2
627	**Type plate: PU database ID no**		No	0	0	9	2
628	**Type plate: Application option type**		No	0	0	9	2
629	**Type plate: Application ordering number**		No	0	0	9	2
630	**Type plate: Communication type**		No	0	0	9	2
631	**Type plate: Communication ordering number**		No	0	0	9	2
639	**Flash test**	On	Yes	0	0	5	1
650	**Protection level**		Yes	0	0	7	2

★ = factory setting. () = display text [] = value for use in communication via serial communication port

PNU # 7xx	Parameter description Crane functions	Range	Factory setting	Changes during operation	Unit index	Conversion index	Data type	Protection level
701	**Load low**	0 - 5000RPM	2500RPM	No	11	67	6	1
702	**Load high**	0 - 1250RPM	1250RPM	No	11	67	6	1
703	**Load monitoring**		Enable	No	0	0	5	1
704	**Low speed at error**	5 - 200RPM	50 RPM	No	11	67	5	1
705	**Brake on RPM**	0 - 50RPM	20 RPM	No	11	67	5	1
707	**Hoist direction**		Forward	No	0	0	5	1
708	**Start torque**	0 - 170%	100%	No	27	0	5	1
709	**Ramp torque**	0.2 - 2 sec.	0.2 sec.	No	4	-1	5	1
712	**Brake monitoring**		Enable	Yes	0	0	5	1
713	**Derating lowering**	0.6 - 1	0.8	No	0	-2	5	1
714	**Derating hoisting**	0.6 - 1	1	No	0	-2	5	1
715	**Mech. brake on delay**	0,1 - 20 sec.	0,5 sec.	Yes	4	-1	5	1
716	**Mech. brake off delay**	0,1 - 20 sec.	0,5 sec.	Yes	4	-1	5	1
718	**Encoder monitoring**		Enable	No	0	0	5	1
720	**Drum inertia 1**	0 - 1	Depends on unit	No	0	-4	6	1
721	**Gear ratio 1**	0 - 200	Depends on unit	No	0	-2	6	1
722	**Gear inertia 1**	0 - 1	Depends on unit	No	0	-4	6	1
723	**Mean radius 1**	0 - 2	Depends on unit	No	0	-3	6	1
724	**Drum inertia 2**	0 - 1	Depends on unit	No	0	-4	6	1
725	**Gear ratio 2**	0 - 200	Depends on unit	No	0	-2	6	1
726	**Gear inertia 2**	0 - 1	Depends on unit	No	0	-4	6	1
727	**Mean radius 2**	0 - 2	Depends on unit	No	0	-3	6	1
740	**Power limit function**		Constant power	No	0	0	5	1
741	**Mechanical speed N1**		Depends on unit	No	11	0	6	1
742	**Power at N1**		Depends on unit	No	9	1	6	1
743	**Mechanical speed at N2**		Depends on unit	No	11	67	6	1
744	Power at N2		Depends on unit	No	9	1	6	1
745	Mechanical speed at N3		Depends on unit	No	11	67	6	1
746	Power at N3		Depends on unit	No	9	1	6	1
747	Mechanical speed at N4		Depends on unit	No	11	67	6	1
748	Power at N4		Depends on unit	No	9	1	6	1
749	Mechanical speed N5		Depends on unit	No	11	67	6	1
750	Power at N5		Depends on unit	No	9	1	6	1
751	Mechanical speed N6		Depends on unit	No	11	67	6	1
752	Power at N6		Depends on unit	No	9	1	6	1
753	Mechanical speed N7		Depends on unit	No	11	67	6	1
754	Power at N7		Depends on unit	No	9	1	6	1
755	Power Loss N1		Depends on unit	No	9	1	6	1
756	Power Loss N2		Depends on unit	No	9	1	6	1
757	**Power Loss N3**		Depends on unit	No	9	1	6	1
758	**Power Loss N4**		Depends on unit	No	9	1	6	1
759	**Power Loss N5**		Depends on unit	No	9	1	6	1
760	**Power Loss N6**		Depends on unit	No	9	1	6	1
761	**Power Loss N7**		Depends on unit	No	9	1	6	1

★ = factory setting. () = display text [] = value for use in communication via serial communication port

MG.50.N4.02 - VLT is a registered Danfoss trademark

■ Parameter survey

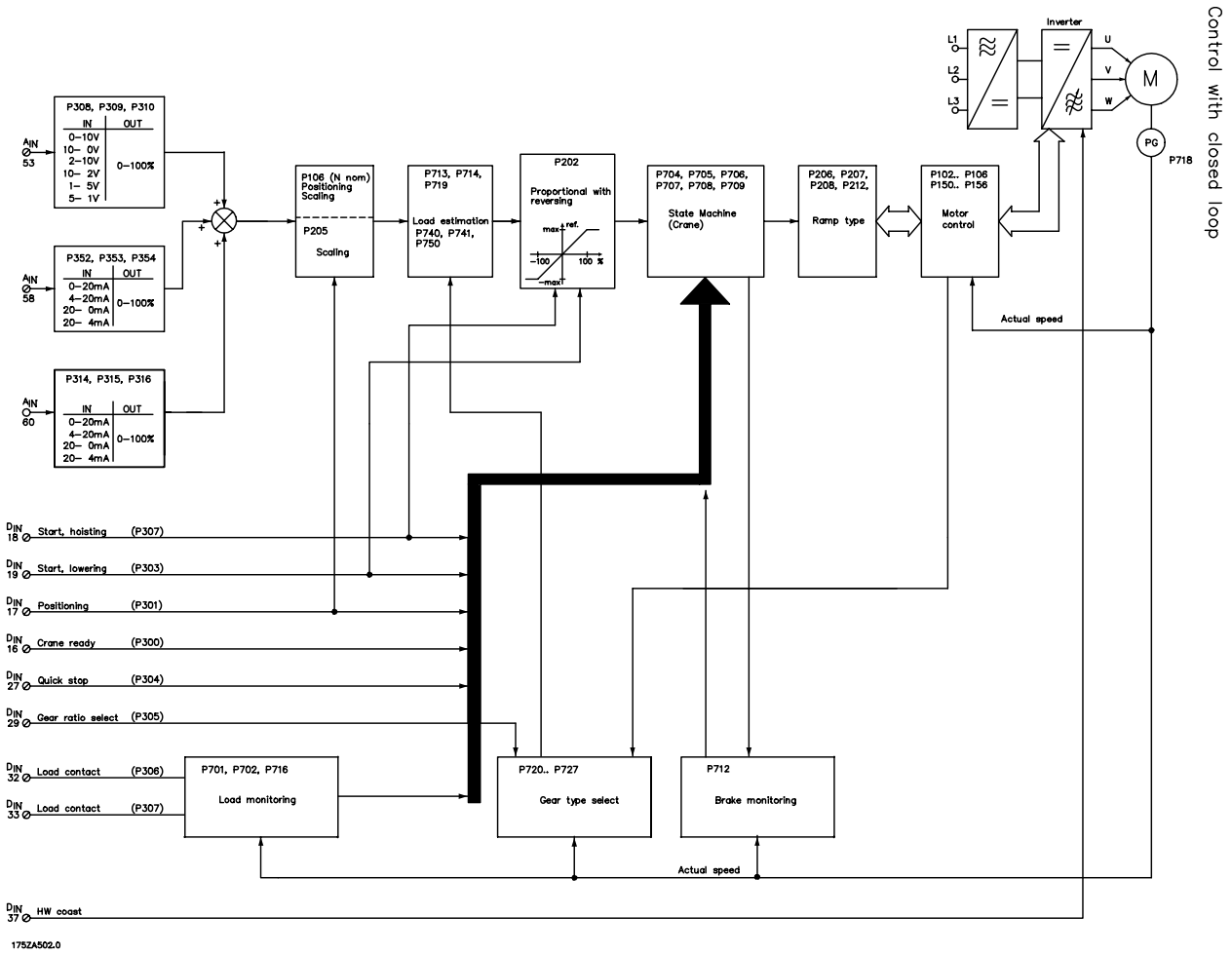

Programming

★ = factory setting. () = display text [] = value for use in communication via serial communication port

■ Operation & Display

001 LANGUAGE

Value:

★English (ENGLISH)	[0]
German (DEUTSCH)	[1]
French (FRANCAIS)	[2]
Spanish (ESPANOL)	[4]
Italian (ITALIANO)	[5]

Function:

The purpose of this parameter is to set the language to be shown in the display whenever the LCP control unit is connected.

002 OPERATION SITE

Value:

★Remote operation (REMOTE)	[0]
Local operation (LOCAL)	[1]

Function:

The purpose of this parameter is to set the control of the frequency converter to either*Remote operation* [0] or *Local operation* [1]. See also parameter 013 *Local control* if *Local operation* [1] is selected.

NB!:
Local control only is available when running in FC profile!

Description of choice:

If *Remote operation* [0] is selected, the frequency converter is controlled via:

1. The control terminals or via serial communication.
2. The [START] key. This cannot, however, override stop commands transmitted via the digital inputs or via serial communication.
3. The [STOP/RESET] key, on the condition that it is active.

If *Local operation* [1], is selected, the frequency converter is controlled via:

1. The [START] key. This cannot, however, override stop commands via the digital inputs.
2. The [STOP/RESET] key, on the condition that it is active.
3. The [FWD/REV] key, on the condition that it has been selected as active in parameter 016 *Local reversing* [3].
4. Parameter 003 *Local reference* where the reference can be set using the [+] and [-] keys.
5. An external control command that can be connected to the digital inputs.

NB!:
The [FWD/REV] key is located on the LCP control unit.

003 LOCAL REFERENCE

Function:

This parameter allows manual setting of the desired reference value (speed or reference for the selected configuration).

Description of choice:

Local [1] must be selected in parameter 002 for this parameter to be used.
In this parameter Data Change Mode is not exited automatically (after time out).
Local reference cannot be set via the serial communication port.

007 LCP COPY

Value:

★No copying (NO COPY)	[0]
Upload all parameters (UPL. ALL PAR.)	[1]
Download all parameters (DWNL. ALL PAR.)	[2]
Download size-independent parameters (DWNL. OUTPIND. PAR.)	[3]

Function:

Parameter 007 *LCP copy* is used for the LCP control panel's integral copy function. The function is used for copying all parameter set-ups from one frequency converter to another by moving the detachable LCP control panel.

Description of choice:

Select *Upload all parameters* [1] for transferring all parameter values to the control panel. Select *Download all parameters* [2] to copy all parameter values transferred to the frequency converter to which the control panel is attached. Select *Download size-independent par.* [3] for downloading the size-independent parameters. This is used when downloading to a frequency converter with a different rated power size than the one from which the parameter setup originates.

★ = factory setting. () = display text [] = value for use in communication via serial communication port

MG.50.N4.02 - VLT is a registered Danfoss trademark

NB!:
Upload/download can only be performed in stop mode. Download can only be performed to a frequency converter with the same software version number, see parameter 626 *Database identification no.*

009 DISPLAY LINE 2

Value:

Reference [%] (REFERENCE [%])	[1]
Reference [unit] (REFERENCE [UNIT])	[2]
★Frequency [Hz] (FREQUENCY [HZ])	[4]
Motor speed [RPM] (MOTOR SPEED)	[5]
Motor current [A] (MOTOR CURRENT [A])	[6]
Torque [%] (TORQUE [%])	[7]
Power [kW] (POWER [KW])	[8]
Power [HP] (POWER [HP] [US])	[9]
Output energy [kWh] (OUTPUT ENERGY [KWH])	[10]
Motor voltage [V] (MOTOR VOLTAGE [V])	[11]
DC link voltage [V] (DC LINK VOLTAGE [V])	[12]
Thermal load, motor [%] (MOTOR THERMAL [%])	[13]
Thermal load, VLT [%] (VLT THERMAL [%])	[14]
Hours run [Hours] (RUNNING HOURS)	[15]
Digital input [Binary code] (DIGITAL INPUT [BIN])	[16]
Analogue input 53 [V] (ANALOG INPUT 53 [V])	[17]
Analogue input 58 [mA] (ANALOG INPUT 58 [MA])	[18]
Analogue input 60 [mA] (ANALOG INPUT 60 [MA])	[19]
Load estimator Max [RPM] (LOAD EST MAX [RPM])	[20]
External reference [%] (EXTERNAL REF [%])	[21]
Status word [Hex] (STATUS WORD [HEX])	[22]
Brake effect/2 min. [KW] (BRAKE ENERGY/2 MIN)	[23]
Brake effect/sec. [kW] (BRAKE ENERGY/S)	[24]
Heat sink temp. [°C] (HEATSINK TEMP [°C])	[25]
Alarm word [Hex] (ALARM WORD [HEX])	[26]
Control word [Hex] (CONTROL WORD [HEX])	[27]
Warning word [Hex] (WARNING WORD [HEX])	[28]

Function:

This parameter allows a choice of the data value to be displayed in line 2 of the display.

Parameters 010-012 enable the use of three additional data values to be displayed in line 1.

Description of choice:

Reference [%] corresponds to the total reference (sum of digital/analogue/bus).
Reference [unit] gives the status value of terminals 53, 58, 60 using the unit stated on the basis of configuration in parameter 100 (Hz, Hz and rpm).
Frequency [Hz] gives the motor frequency, ie. the output frequency from the frequency converter.
Motor speed [RPM] corresponds to the present motor speed.
Motor current [A] states the phase current of the motor measured as effective value.
Torque [%] gives the current motor load in relation to the rated motor torque.
Power [kW] states the actual power consumed by the motor in kW.
Power [HP] states the actual power consumed by the motor in HP.
Output energy [kWh] states the energy consumed by the motor since the latest reset was made in parameter 618.
Motor voltage [V] states the voltage supplied to the motor.
DC link voltage [V] states the intermediate circuit voltage in the frequency converter.
Thermal load, motor [%] states the calculated/estimated thermal load on the motor. 100% is the cut-out limit.
Thermal load, VLT [%] states the calculated/estimated thermal load on the frequency converter. 100% is the cut-out limit.
Hours run [Hours] states the number of hours that the motor has run since the latest reset in parameter 619.
Digital input [Binary code] states the signal states from the 8 digital terminals (16, 17, 18, 19, 27, 29, 32 and 33) Input 16 corresponds to the bit at the far left. '0' = no signal, '1' = connected signal.
Analogue input 53 [V] states the signal value on terminal 53.
Analogue input 58 [mA] states the signal value on terminal 58.
Analogue input 60 [mA] states the signal value on terminal 60.
Load estimator Max [RPM] Displays the calculated maximum speed from the load measurement.
External reference [%] gives the sum of the external reference as a percentage (the sum of analogue/pulse/bus).

★ = factory setting. () = display text [] = value for use in communication via serial communication port

Status word [Hex] gives the status word sent via the serial communication port in Hex code from the frequency converter.
Brake power/2 min. [KW] states the brake power transferred to an external brake resistor. The mean power is calculated continuously for the latest 120 seconds.
It is assumed that a resistor value has been entered in parameter 401.
Brake power/sec. [kW] states the present brake power transferred to an external brake resistor. Stated as an instantaneous value.
It is assumed that a resistor value has been entered in parameter 401.
Heat sink temp. [°C] states the present heat sink temperature of the frequency converter. The cut-out limit is 90 ± 5°C; cutting back in occurs at 60 ± 5°C.
Alarm word [Hex] indicates one or several alarms in a Hex code.
Control word. [Hex] indicates the control word for the frequency converter. See Serial communication in Appendix.
Warning word [Hex] indicates one or more warnings in a Hex code.

010 DISPLAY LINE 1.1

Value:

See parameter 009 for choices. ★ Reference [%]

Function:

This parameter enables a choice of the first of three data values to be shown on the display, line 1, position 1.
For display read-outs, press the [DISPLAY/STATUS] button.

011 DISPLAY LINE 1.2

Value:

See parameter 009 for choices ★ Motor current [A]

Function:

This parameter enables a choice of the second of the three data values to be shown on the display, line 1, position 2.
For Display read-outs, press the [DISPLAY/STATUS] button.

012 DISPLAY LINE 1.3

Value:

See parameter 009 for choices ★ Power [kW]

Function:

This parameter enables a choice of the third of the three data values to be shown on the display, line 1, position 3.
Display read-outs are made by pressing the [DISPLAY/STATUS] button.

014 LCP STOP

Value:

Not possible (DISABLE)	[0]
★Possible (ENABLE)	[1]

Function:

This parameter disables/enables the local stop function in question from the control panel.
This key is used when parameter 002 has been set for *Remote control* [0] or *Local* [1].

Description of choice:

If *Disable* [0] is selected in this parameter, the [STOP] key will be inactive.

NB!:
If *Enable* is selected, the [STOP] key overrules all Start commands.

015 LCP JOGGING

Value:

★Not possible (DISABLE)	[0]
Possible (ENABLE)	[1]

Function:

In this parameter, the jog function can be enabled/disabled on the control panel.
The key can be used when parameter 002 has been set for *Remote control [0]* or *Local [1]*.

NB!:
LCP jogging is only available when running in FC profile!

Description of choice:

If *Disable* [0] is selected in this parameter, the [JOG] key will be inactive.

★ = factory setting. () = display text [] = value for use in communication via serial communication port

016 LCP REVERSING

Value:

★Not possible (DISABLE)	[0]
Possible (ENABLE)	[1]

Function:

In this parameter, the reversing function can be enabled/disabled on the control panel.

NB!:
Local reversing is inactive when operating in crane profile.

Description of choice:

If *Disable* [0] is selected in this parameter, the [FWD/REV] key will be inactive.

017 LCP RESET

Value:

Not possible (DISABLE)	[0]
★Possible (ENABLE)	[1]

Function:

In this parameter, the reset function can be selected/removed from the keyboard.
This key can be used when parameter 002 has been set for *Remote control* [0] or *Local control* [1].

Description of choice:

If *Disable* [0] is selected in this parameter, the [RESET] key will be inactive. However, this is not possible when operating in crane profile.

NB!:
When running in FC profile, do not select *Disable* [0] unless an external reset signal has been connected via the digital inputs.

018 DATA CHANGE LOCK

Value:

★Not locked (NOT LOCKED)	[0]
Locked (LOCKED)	[1]

Function:

In this parameter, it is possible to 'lock' the controls to disable data changes via the control keys.

Description of choice:

If *Locked* [1] is selected, data changes in the parameters cannot be made; however, it will still be possible to make data changes via serial communication. Parameter 009-012 *Display readout* can be changed via the control panel.

★ = factory setting. () = display text [] = value for use in communication via serial communication port

■ Load and Motor

100 CONFIG. MODE

Value:

Speed control, open loop (SPEED OPEN LOOP)	[0]
★Speed control, closed loop (SPEED CLOSED LOOP)	[1]

Function:

This parameter is used for selecting the configuration to which the frequency converter is to be adapted.

Description of choice:

If *Speed control, open loop* [0] is selected, a normal speed control (without feedback signal) is obtained, ensuring a nearly constant speed at varying loads.

If *Speed control, closed loop* [1] is selected, a full holding torque is obtained at 0 rpm in addition to increased speed accuracy. A feedback signal must be provided.

NB!:
Speed control, open loop is only available when running in FC profile.

102 MOTOR POWER

Value:

11 kW (11.00 KW)	[1100]
15 kW (15.00 KW)	[1500]
18.5 kW (18.50 KW)	[1850]
22 kW (22.00 KW)	[2200]
30 kW (30.00 KW)	[3000]
37 kW (37.00 KW)	[3700]
45 kW (45.00 KW)	[4500]
55 kW (55.00 KW)	[5500]
75 kW (75.00 KW)	[7500]
90 kW (90.00 KW)	[9000]
110 kW (110.00 KW)	[11000]

Depends on unit

Function:

This is where to select the kW value that corresponds to the rated power of the motor.
At works, a rated kW value has been selected that depends on the type of unit.

Description of choice:

Select a value that equals the nameplate data on the motor. There are 4 possible undersizes or 1 oversize in comparison with the factory setting.

Also, alternatively it is possible to set the value for motor power as an infinitely variable value

103 MOTOR VOLTAGE

Value:

380 V (380 V)	[380]
400 V (400 V)	[400]
415 V (415 V)	[415]
440 V (440 V)	[440]
460 V (460 V)	[460]
480 V (480 V)	[480]
500 V (500 V)	[500]

Depends on the unit

Function:

Select a value that equals the nameplate data on the motor.

NB!:
The motor will always get the peak voltage from the connected supply voltage. In case of regenerative operation, the voltage can be higher.

Description of choice:

Select a value that equals the nameplate data on the motor, regardless of the mains voltage of the frequency converter. Alternatively, it is possible to set the value of the motor voltage to infinitely variable.

104 MOTOR FREQUENCY

Value:

★25 Hz (25 HZ)	[25]

Max. motor frequency 160 Hz.

Function:

This is where the rated motor frequency $f_{M,N}$ is selected (nameplate data).

Description of choice:

Select a value that equals the nameplate data on the motor.

★ = factory setting. () = display text [] = value for use in communication via serial communication port

105 MOTOR CURRENT

Value:

0.01 - $I_{VLT,MAX}$

★ Depends on the choice of motor

Function:

The rated motor current $I_{M,N}$ forms part of the frequency converter calculations ia. of torque and motor thermal protection.

Description of choice:

Select a value that equals the nameplate data on the motor.
Enter the value in Ampere.

NB!:
It is important to enter the correct value, since this forms part of the Flux Vector control feature.

106 MOTOR NOM. SPEED

Value:

100-5000 rpm

★ Depends on the choice of motor.

Function:

This is where the value corresponding to the rated motor speed $n_{M,N}$ (shown on the nameplate) is selected

Description of choice:

The rated motor speed $n_{M,N}$ is used ia. for calculating the optimal slip compensation.

NB!:
It is important to enter the correct value, since this forms part of the Flux Vector control feature. The max. value equals $f_{M,N}$ x 60. Set $f_{M,N}$ in parameter 104.

122 FUNCTION AT STOP

Value:

★Coasting (COAST)	[0]
DC-hold (DC-HOLD)	[1]
Motor check (MOTOR CHECK)	[2]

Function:

This parameters makes it possible to select the function of the frequency converter after a stop command or when the speed has been ramped down to 0 RPM.

Description of choice:

Select *Coasting* [0] if the frequency converter is to 'let go' of the motor (inverter closed).
Select *DC-hold* [1] when a DC holding current set in parameter 124 is to be activated.

Select *Motor check* [2] if the frequency converter is to check whether or not a motor has been connected.

124 DC-HOLD CURRENT

Value:

$0\ (OFF) - \frac{I_{VLT,N}}{I_{M,N}} x\ 100\ \%$ ★ 50 %

Function:

This parameter is used to maintain the motor function (holding torque) or to pre-heat the motor.

NB!:
The maximum value depends on the rated motor current.

Description of choice:

This parameter can only be used if *DC hold* [1] has been selected in parameter 122. Set it as a percentage value in relation to the rated motor current $I_{M,N}$ set in parameter 105.
100% DC holding current corresponds to $I_{M,N}$.

Warning: 100 % supply for too long may damage the motor.

128 MOT. THERM. PROTEC

Value:

★No protection (NO PROTECTION)	[0]
Thermistor warning (THERMISTOR WARN)	[1]
Thermistor trip (THERMISTOR TRIP)	[2]
ETR Warning 1 (ETR WARNING1)	[3]
ETR Trip 1 (ETR TRIP1)	[4]

Function:

The frequency converter is able to monitor the motor temperature in two different ways:

- Via a thermistor sensor connected to the analogue input, terminal 53 (parameter 308).
- Calculation of the thermal load, based on the current load and the time. This is compared with the rated motor current $I_{M,N}$ and the rated motor frequency $f_{M,N}$. The calculations made take into account the need for a lower load at lower speeds because of less cooling from the fan.

For the North American market: The ETR functions provide class 20 motor overload protection in accordance with NEC.

Programming

★ = factory setting. () = display text [] = value for use in communication via serial communication port

Description of choice:

Select *No protection* if no warning or tripping is required when the motor is overloaded.
Select *Thermistor warning* if a warning is desired when the connected thermistor - and thus the motor overheats.
Select *Thermistor trip* if cutting out (trip) is desired when the connected thermistor - and thus the motor overheats.

Select *ETR Warning 1*, if a warning is to come up on the display when the motor is overloaded according to the calculations.
Select *ETR Trip 1* if tripping is desired when the motor is overloaded according to the calculations.
The frequency converter can also be programmed to give off a warning signal via one of the digital outputs, in which case the signal is given both for warning and for trip (thermal warning).

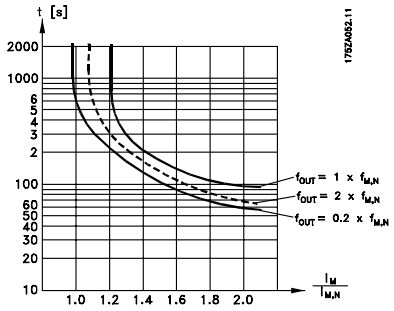

The motor data in parameters 150-158 must be set correspondingly to the specific motor, in order for the motor to run properly. As factory setting, the parameters are set accordingly to the motor name plates.

If these parameters are not set correctly, it may cause a malfunction of the drive.

150 STATOR RESISTANCE

Value:

Ohm ★ Depends on unit

Function:

In this parameter the value of the motor stator resistance for the Flux Vector control is set.

151 ROTOR RESISTANCE

Value:

Ohm ★ Depends on unit

Function:

This parameter is for setting the value of the motor rotor resistance for the Flux Vector control.

152 STATOR LEAKAGE REACTANCE

Value:

Ohm ★ Depends on unit

Function:

Use this parameter for setting the value of the motor stator leakage reactance for the Flux Vector control.

153 ROTOR LEAKAGE REACTANCE

Value:

Ohm ★ Depends on unit

Function:

The value of the motor rotor leakage reactance for the Flux Vector control is set in this parameter-

154 MAIN REACTANCE

Value:

Ohm ★ Depends on unit

Function:

In this parameter the value of the motor main reactance for the Flux Vector control is set-

★ = factory setting. () = display text [] = value for use in communication via serial communication port

155 ROTOR INERTIA

Value:

kgm^2 ★ Depends on unit

Function:

Use this parameter for setting the value of the motor rotor inertia for the Flux Vector control.

156 POLE NUMBER

Value:

★4 (4) [4]

Function:

The number of poles on the motor for the Flux Vector control is set in this parameter.

157 FIELD WEAKENING SPEED

Value:

0-6000 RPM ★ Depends on unit

Function:

In this parameter the field weakening point for the Flux Vector control is set.

158 IRONLOSS RESISTANCE

Value:

1 - 10000Ω ★ 10000Ω

Function:

This parameter is for setting the ironloss resistance value for the Flux Vector control.

Motor equivalent diagram for an asynchronous motor:

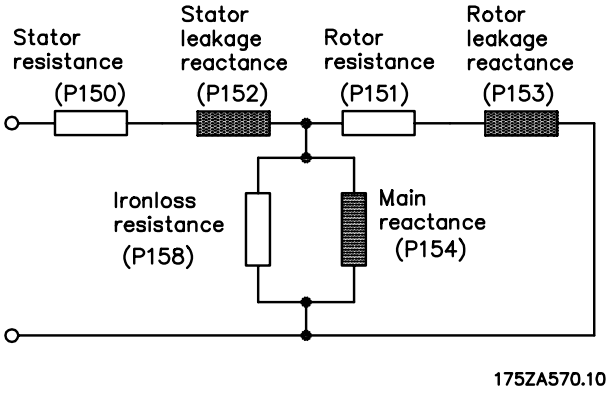

Programming

★ = factory setting. () = display text [] = value for use in communication via serial communication port

■ References & Limits

202 OUT SPEED HI LIM

Value:

0-5000 RPM ★ 3000 RPM

Function:

In this parameter, a maximum motor speed can be selected corresponding to the highest frequency at which the motor is to run.

See also parameter 205.

Description of choice:

A value from 0 - 5000 RPM can be selected.

205 MAX. REFERENCE

Value:

0.001 - 10.000 ★ 3000

Function:

The *Maximum reference* gives the highest value that can be assumed by the sum of all references.

207 RAMP UP TIME 1

Value:

0.05 - 3600 sec. ★ 0.85 sec.

Function:

The ramp-up time is the acceleration time from 0 Hz to the rated motor frequency $f_{M,N}$ (parameter 104) or the rated motor speed $n_{M,N}$ (if *Speed control, closed loop* has been selected in parameter 100). This presupposes that the output current does not reach the torque limit (to be set in parameter 221).

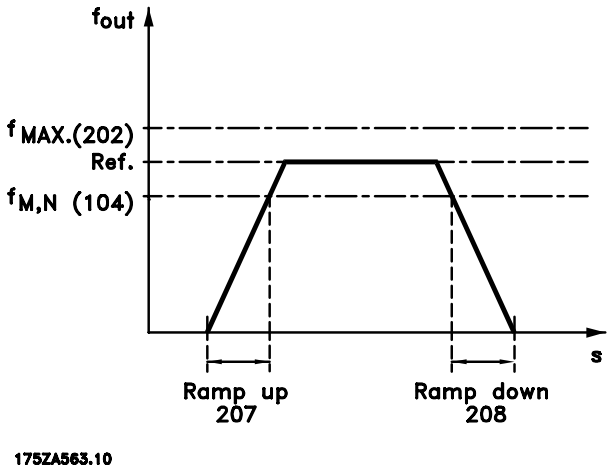

208 RAMP DOWN TIME 1

Value:

0.05 - 3600 sec. ★ 0.85 sec.

Function:

The ramp-down time is the deceleration time from the rated motor frequency $f_{M,N}$ (parameter 104) to 0 Hz or from the rated motor speed $n_{M,N}$, provided there is no over-voltage in the inverter because of regenerative operation of the motor, or if the generated current reaches the torque limit (to be set in parameter 222).

211 JOG RAMP TIME

Value:

0.05 - 3600 sec. ★ 0.85 sec.

Function:

The jog ramp time is the acceleration/deceleration time from 0 Hz to the rated motor frequency $f_{M,N}$ (parameter 104). It is assumed that the output current is not higher than the torque limit (set in parameter 221).

NB!:
Note that the jog function is only available when running in FC profile!

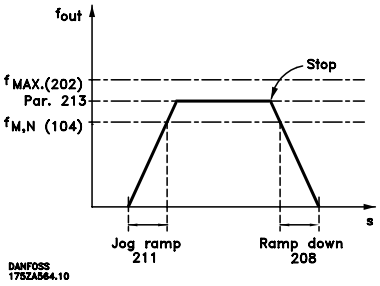

The jog ramp time starts if a jog signal is given via the control panel, the digital inputs or the serial communication port.

Description of choice:

Set the desired ramp time.

212 Q STOP RAMP TIME

Value:

0.05 - 3600 sec. ★ 0.85 sec.

Function:

The ramp-down time is the deceleration time from the rated motor frequency to 0 Hz, provided no over- voltage arises in the inverter because of generating operation of the motor or if the

★ = factory setting. () = display text [] = value for use in communication via serial communication port

MG.50.N4.02 - VLT is a registered Danfoss trademark

generated current becomes higher than the torque limit (set in parameter 222).
Quick-stop is activated by means of a signal on digital input terminal 27, or via the serial communication port.

213 JOG FREQUENCY

Value:

0 - 4500 RPM ★ 200 RPM

Function:

Jog frequency f_{JOG} means a fixed output frequency that the frequency converter supplies to the motor when the Jog function is activated. Jog can be activated via the digital inputs, serial communication or via the LCP control panel, on the condition that this is active in parameter 015 *Local jogging*.

NB!:
Note that this function only is availabel when running in FC profile!

Description of choice:

Set the required frequency.

221 TORQ LIMIT MOTOR

Value:

0.0 % - 170% ★ 160 %

Function:

This is where to set the torque limit for motor operation. The torque limiter is active in the frequency range up to the rated motor frequency (parameter 104). In the oversynchronous range, this function acts as a current limiter, see figures below.

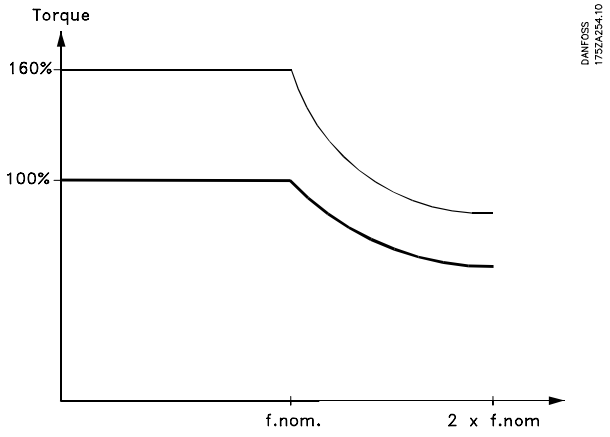

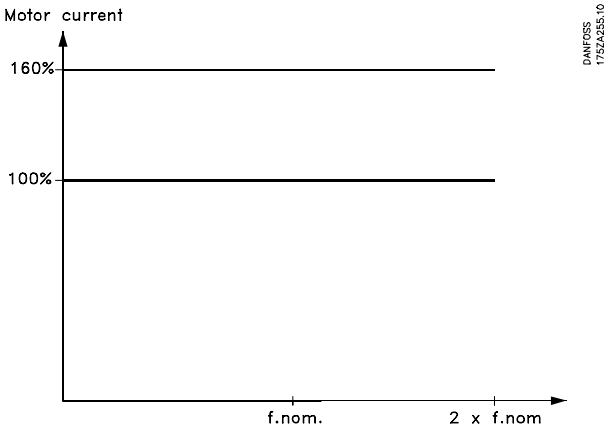

Description of choice:

In order to protect the motor from reaching pull-out torque, the factory setting is 1.6 x the rated motor torque (calculated value).
If a setting in parameters 101-106 is changed, parameters 221/222 are not automatically reversed to the factory setting.

222 TORQ LIMIT GENER

Value:

0.0 % - 170% ★ 160 %

Function:

This is where to set the torque limit for generating operation. The torque limiter is active in the frequency range up to the rated motor frequency (parameter 104). In the oversynchronous range, where the frequency is higher than the rated motor frequency, this function acts as a current limiter. See figures for parameter 221.

Description of choice:

If *Resistor brake* [1] has been selected in parameter 400, the torque limit is changed to 1.6 x the rated motor torque.

234 MISSING MOTOR PHASE

Value:

* Enable (ENABLE)	[0]
Disable (DISABLE)	[1]

Function:

In this parameter it is possible to select monitoring of the motor phases.

Description of choice:

If *Enable* is selected, the frequency converter will react on a missing motor phase which will result in alarm 30, 31 or 32.

Programming

★ = factory setting. () = display text [] = value for use in communication via serial communication port

If *Disable* is selected, **no** alarm is given if a motor phase is missing. The motor can be damaged/overheated if it runs on only two phases. It is therefore recommended to keep the missing motor phase function ENABLED.

---

235 PHASE LOSS MONITOR

Value:

Disable (DISABLE)	[0]
★Enable (ENABLE)	[1]

Function:

In this parameter it is possible to select monitoring of the input phases.

Description of choice:

If *Enable* is selected, the converter will react on a missing input phase which results in alarm 4.

If *Disable* is selected, **no** alarm is given if a motor phase is missing. The converter may be damaged when running with a missing input phase. It is therefore recommended to keep the phase loss monitor function ENABLED.

---

236 Low speed reference current (LOW SPEED CURRENT)

Value:

0 - 160%	★ 50%

Function:

The control mode at low speed in open loop speed control is a rotation of a current vector with fixed amplitude. With this parameter, the value of this fixed current vector is set.

Description of choice:

The reference is set in percentage of the nominal current of the motor.

★ = factory setting. () = display text [] = value for use in communication via serial communication port

■ Inputs & Outputs

When running in Crane profile, the digital inputs are hard coded. This means that there are no functions to choose between, as the settings cannot be changed. The table below shows the inputs in question.

Digital inputs	Terminal no.	16	17	18	19	27	29	32	33
	parameter	300	301	302	303	304	305	306	307
Value:									
Crane ready	(CRANE READY)	[30]							
Positioning	(POSITIONING)		[30]						
Start lowering	(START LOWERING)			[30]					
Start hoisting	(START HOISTING)				[30]				
Quick stop	(QUICK STOP)					[30]			
Gear choice	(GEAR CHOICE)						[30]		
Load contact 1	(LOAD CONTACT 1)							[30]	
Load contact 2	(LOAD CONTACT 2)								[30]

The functions are described further below:
Crane ready input signal for system ready.

Positioning is selected if the frequency converter is to work in positioning mode. Positioning mode is only available when running in remote control. If the signal is removed, the frequency converter is to operate in normal mode.

Start lowering is selected when the frequency converter is to lower a load. This function is only available in remote control.

Start hoisting this function enables hoisting of a load when the frequency converter is in remote control.

Quick stop ramps the motor speed down to zero with the selected quick ramp time.

Gear choice is used whenever the gear is changed in order to perform a load estimation. The function is only available in remote control.

Load contact 1 is the high load contact, which is used for load monitoring when operating in remote control.

Load contact 2 is the low load contact, which is also used for load monitoring when operating in remote control.

Programming

★ = factory setting. () = display text [] = value for use in communication via serial communication port

The table below is only relevant when running in FC profile:

Digital inputs	Terminal no.	16	17	18	19	27	29	32	33
	parameter	300	301	302	303	304	305	306	307
Value:									
No function	(NO OPERATION)	[0]	[0] ★	[0]	[0]		[0]	[0]★	[0]★
Reset	(RESET)	[1]★	[1]				[1]	[1]	[1]
Coasting stop, inverse	(COAST INVERSE)					[0]★			
Quick-stop, inverse	(QSTOP INVERSE)					[2]			
Stop inverse	(STOP INVERSE)	[2]	[2]			[4]	[2]	[2]	[2]
Start	(START)			[1]★					
Reversing	(REVERSING)				[1]★				
Jog	(JOGGING)	[4]	[4]				[5]★	[4]	[4]

Function:

The different possible functions related to the inputs on terminals 16-33 listed in the table above, are only accessable when running in FC profile..
The maximum frequency for terminal 16, 17, 18, 19, 27, 32, 33 and 37 is 5 kHz. The maximum frequency for terminal 29 is 50 kHz.

Description of choice:

No function is selected if the frequency converter is not to react to signals transmitted to the terminal.

Reset zeroes the frequency converter after an alarm; however, not all alarms can be reset.

Coasting stop inverse is used for making the frequency converter let go of the motor to make it coast freely to stop. Logic '0' leads to coasting stop and reset.

Quick-stop inverse is used for stopping the motor in accordance with the quick-stop ramp (set in parameter 212). Logic '0' leads to a quick-stop.

Stop inverse is activated by interrupting the voltage to the terminal. This means that if the terminal has no voltage, the motor cannot run. The stop will be effected in accordance with the selected ramp (parameters 207/208).

None of the above-mentioned stop commands (start-disable) are to be used as disconnection switch in connection with repairs. Cut mains instead.

Start, is selected if a start/stop (operating command, group 2) command is desired. Logic '1' = start, logic '0' = stop.

Reversing is used for changing the direction of rotation of the motor shaft. Logic '1' will lead to reversing. The reversing signal only changes the direction of rotation; it does not activate the start function.

Jog is used for overriding the output frequency to the jog frequency set in parameter 213. The ramp time can be set in parameter 211. Jog is not active if a stop command has been given (start-disable). Jog does not override a start signal.

NB!:
The Jog function is not available in Crane profile. If the VLT 5000 Crane is programmed to run as a normal VLT 5000 (see parameter 512), the Jog function will, however, be available.

Analogue inputs	terminal no.	53(voltage)	58(current)	60(current)
	parameter	308	352	314
Value:				
No operation	(NO OPERATION)	[0]	[0]	[0]
Reference	(REFERENCE)	[1] ★	[1]★	[1] ★
Thermistor	(THERMISTOR INPUT)	[4]		

★ = factory setting. () = display text [] = value for use in communication via serial communication port

Function:

This parameter allows a choice of the desired option on terminal 53.
Scaling of the input signal is effected in parameters 309 and 310.

Description of choice:

No operation. Is selected if the frequency converter is not to react to signals connected to the terminal.
Reference. Is selected to enable change of reference by means of an analogue reference signal.
If other inputs are connected, these are added up, taking account of their signs.
Thermistor. Is selected if a thermistor integrated in the motor is to be able to stop the frequency converter in case of motor overtemperature. The cut-out value is > 3 kohm.

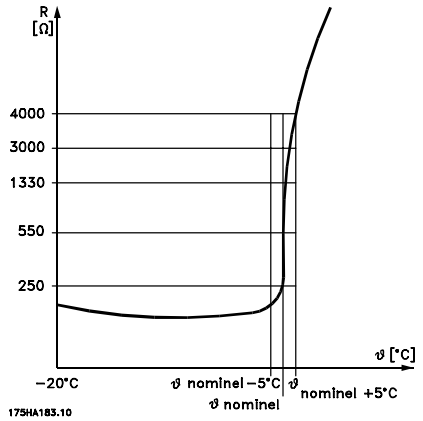

If a motor features a KLIXON thermal switch instead, this can also be connected to the input. If motors run in parallel, the thermistors/thermal switches can be connected in series (total resistance < 3 kohm). A thermistor or a Klixon switch must be set between terminal 50 and terminal 53. Parameter 128 must be programmed for *Thermistor warning* [1] or *Thermistor trip* [2].

309 AI 53 SCALE LOW

Value:

0.0 - 10.0 Volt	★ 0.0 Volt

Function:

This parameter is used for setting the signal value that is to correspond to the minimum reference (0 RPM).

Description of choice:

Set the required voltage value. For reasons of accuracy, compensation should be made for voltage losses in long signal cables. If the Time out function is to be used (parameter 317 *Time out* and 318 *Function after time out*), the value set must be higher than 1 Volt.

310 AI 53 SCALE HIGH

Value:

0 - 10.0 Volt	★ 10.0 Volt

Function:

This parameter is used for setting the signal value that is to correspond to the maximum reference value, parameter 205 *Maximum reference, Ref_{MAX}.*

Description of choice:

Set the required voltage value. For reasons of accuracy, compensation should be made for voltage losses in long signal cables.

314 AI [mA] 60 FUNCT

Value:

★No function (NO OPERATION)	[0]
Reference (REFERENCE)	[1]

Function:

This parameter allows a choice between the different functions available for the input, terminal 60. Scaling of the input signal is effected in parameter 315 *Terminal 60, min. scaling* and parameter 316 *Terminal 60, max. scaling*.

Description of choice:

No function [0]. Is selected if the frequency converter is not to react to signals connected to the terminal.
Reference [1]. If this function is selected, the reference can be changed by means of an analogue reference signal. If reference signals are connected to more than one input, these reference signals must be added up.

315 AI 60 SCALE LOW

Value:

0.0 - 20.0 mA	★ 4.0 mA

Function:

This parameter is for setting the signal value corresponding to the minimum reference (0 RPM).

Description of choice:

Set the required current value. If the Time out function is to be used (parameter 317 *Time out* and 318 *Function after time out*) the value set must be higher than 2 mA.

Programming

★ = factory setting. () = display text [] = value for use in communication via serial communication port

316 AI 60 SCALE HIGH

Value:

0.0 - 20.0 mA ★ 20.0 mA

Function:

This parameter is used for setting the signal value that is to correspond to the maximum reference value, parameter 205 *Maximum reference value, Ref_{MAX}*.

317 LIVE ZERO TIME O

Value:

1 - 99 sec. ★ 10 sec.

Function:

If the signal value of the reference signal connected to one of the input terminals 53 or 60 falls below 50 % of the minimum scaling for a period longer than the time set, the function selected in parameter 318 *Function after time out* will be activated. This function is only active if in parameter 309 *Terminal 53, min. scaling* a value higher than 1 Volt has been selected, or if in parameter 315/353 *Terminal 58, min. scaling* a value higher than 2 mA has been selected.

Description of choice:

Set the required time.

318 LIVE ZERO FUNCT.

Value:

★No operation (NO OPERATION)	[0]
Freeze output frequency (FREEZE OUTPUT FREQ.)	[1]
Stop (STOP)	[2]
Jog (JOG)	[3]
Max. speed (MAX SPEED)	[4]
Stop and trip (STOP AND TRIP)	[5]

Function:

This parameter allows a choice of the function to be activated after the expiration of the Time out (parameter 317 *Time out*).

Description of choice:

The output frequency of the drive can be:

- frozen at the present frequency [1]
- overruled to stop [2]
- overruled to jog frequency [3]
- overruled to max. output frequency [4]
- overruled to stop with subsequent trip [5]

319 AO 42 FUNCTION

Value:

★No operation (NO OPERATION)	[40]
0 - 100 Hz = 0-20mA (0 - 100 HZ = 0-20MA)	[41]
0 - 100 Hz = 4-20 mA (0 - 100 HZ = 4-20 MA)	[42]
Ref min-max = 0-20 mA (REF MIN-MAX = 0-20 MA)	[43]
Ref min.-max. 4-20 mA (REF MIN-MAX = 4-20 MA)	[44]
FB min-max 0-20 mA (FB MIN-MAX = 0-20 MA)	[45]
FB min-max 4-20 mA (FB MIN-MAX = 4-20 MA)	[46]
0 - I_{max} = 0-20 mA (0- I_{MAX} = 0-20 MA)	[47]
0-I_{max} 4-20 mA (0-I_{MAX} = 4-20 MA)	[48]
0-T_{lim} 0-20 mA (0-T_{LIM} = 0-20 MA)	[49]
0-T_{lim} 4-20 mA (0-T_{LIM} = 4-20 MA)	[50]
0 - T_{nom} = 0-20 mA (0 - T_{NOM} = 0-20 MA)	[51]
0 - T_{nom} = 4-20 mA (0 - T_{NOM} = 4-20 MA)	[52]
0 - P_{nom} = 0-20mA (0 - P_{NOM} = 0-20MA)	[53]
0 - P_{nom} = 4-20mA (0 - P_{NOM} = 4-20MA)	[54]
0 - Speedmax = 0-20mA (0 - SPEEDMAX = 0-20MA)	[55]
0 - Speedmax = 4-20mA (0 - SPEEDMAX = 4-20MA)	[56]
± 160% torque = 0-20mA (± 160% TORQUE = 0-20MA)	[57]
± 160% torque = 4-20mA (± 160% TORQUE = 4-20MA)	[58]

Function:

The analogue output can be used for stating a process value. It is possible to choose two types of output signals 0 - 20 mA or 4 - 20 mA.
If used as a voltage output (0 - 10 V), a pull-down resistor of 500 Ω must be fitted to common (terminal 39). If the output is used as a current output the resulting resistance from the equipment connected may not exceed 500 Ω.

Description of choice:

No operation. Is selected if the analogue output is not to be used.

★ = factory setting. () = display text [] = value for use in communication via serial communication port

MG.50.N4.02 - VLT is a registered Danfoss trademark

0 - 100 Hz = 0-20 mA/4-20 mA.
An output signal proportional to the output frequency in the range 0 - 100 Hz is obtained.

Ref min-max = 0-20 mA/4-20 mA.
An output signal is obtained which is proportional to the set reference in the range from 0 - Ref_{MAX} is obtained (parameter 205).

FB_{MIN}-FB_{MAX} = 0-20 mA/ 4-20 mA.
An output signal is obtained, which is proportional to the feedback in the range from 0 - Ref_{MAX} (parameter 205).

0 - I_{MAX} = 0-20 mA/4-20 mA.
An output signal is obtained, which is proportional to the output current in the interval 0 - I_{MAX}.

0 - T_{lim} = 0-20 mA/4-20 mA.
An output signal is obtained which is proportional to the output torque in the range 0 - T_{LIM} (parameter 221).

0 - T_{nom} = 0-20 mA/4-20 mA.
An output signal is obtained, which is proportional to the output torque in the range 0 - T_{NOM} (the rated motor torque).

0 - P_{nom} = 0-20 mA/4-20 mA.
An output signal proportional to the rated motor output is obtained.

0 - Speedmax = 0-20 mA/4-20 mA.
An output signal is obtained which is proportional to the output speed in the range 0 - Speedmax (parameter 202).

± 160% torque = 0-20 mA/4-20 mA.
An output signal is obtained which is proportional to ±160% of the rated motor torque. -160% yields 0/4 mA, 0% yields 10/12 mA and 160% yileds 20 mA.

321 AO 45 FUNCT.

Value:

Function:
On these analogue outputs (data value [40]-[58]) there is a choice of 0-20 mA or 4-20 mA.

Description of choice:
See description of parameter 319

323 RELAY 1-3 FUNCT.

Value:
★Mechanical brake control
(MECHANICAL BRAKE CONTROL) [14]

Function:
This output activates a relay switch.
Relay switch 01 can be used for bringing status and warnings and enables monitoring of the mechanical brake. The relay is activated when the conditions for the relevant data values have been fulfilled.
Activation/deactivation can be delayed in parameter 324/325.

NB!:
This parameter cannot be changed!

Description of choice:
See description of parameter 341.

Connections - see the below drawing.

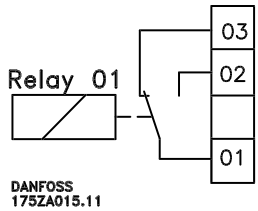

324 RELAY 1-3 ON DL

Value:
0.00 - 10.00 min. ★ 0.00 sec.

Function:
This parameter makes it possible to delay the cut-in time of relay 01 (terminals 01-02).

325 RELAY 1-3 OFF DL

Value:
0.00 - 10.00 min. ★ 0.00 sec.

Function:
This parameter makes it possible to delay the cut-out time of relay 01 (terminals 01-03).

★ = factory setting. () = display text [] = value for use in communication via serial communication port

326 RELAY 4-5 FUNCT.

Value:

See parameter 341

Function:

This output activates a relay switch.
Relay switch 04 can be used for bringing status and warnings. The relay is activated when the conditions for the relevant data values have been fulfilled.

Description of choice:

See description of parameter 341.
Connections - see the below drawing.

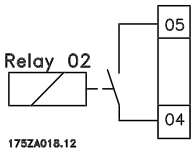

329 ENCODER PULSES

Value:

★1024 pulses /rev. (1024) [1024]

Function:

This is where to set the encoder pulses per revolution. This parameter is only available in *Speed control, closed loop* (parameter 100).

Description of choice:

Read the correct value from the encoder.

Signal level 0 - 5V (RS 422)
Signals necessary: A, Inv. A, B, Inv. B, Z and Inv. Z.

341 SIGNAL OUTPUT 46

Value:

★No operation (NO OPERATION)	[0]
Control ready (CONTROL READY)	[1]
Unit ready (UNIT READY)	[2]
Enabled (ENABLED)	[3]
VLT running (VLT RUNNING)	[4]
VLT running and no warning (RUNNING/NO WARNING)	[5]
VLT running on reference and no warning (RUN ON REF/NO WARN)	[6]
Positioning (POSITIONING)	[7]
Normal run (NORMAL RUN)	[8]
Alarm (ALARM)	[9]
Alarm or warning (ALARM OR WARNING)	[10]
Torque limit motor mode (TORQUE LIMIT MOTOR M)	[11]
Braking, no brake warning (BRAKING, NO BR. WARN.)	[12]
Brake fault (IGBT SHORT-CIRCUIT FAULT)	[13]
Mechanical brake control (MECH. BRAKE CONTROL)	[14]
Mechanical brake ready no fault (MECH. BRAKE RDY/NO F)	[15]
Thermal warning (THERMAL WARNING)	[16]
Unit ready and no thermal warning (READY/NO THERM WARN)	[17]
Unit ready and no over/undervoltage (RDY NO OVER/UNDERVOL)	[18]
Control word bit 11 (CTRL WORD BIT 11)	[19]
Control word bit 12 (CTRL WORD BIT 12)	[20]

Function:

Selects the function for output on the digital terminal 46. If the condition of the selected function is true, the output level is 24 V (active), otherwise it is 0 V (inactive).

Description of choice:

No operation
Selected if the output should not react to any signals. The output is 0 V.

Control ready
The frequency converter is ready for use; the control card receives supply voltage.

Unit ready
The frequency converter control card is receiving a supply signal and the frequency converter is ready for operation.

Enabled
The frequency converter is ready for use; no start or stop command has been given (start/disable). No warning.

Running
This signal is active when a start command has been given or a stop command has been given and the drive has not stopped.

Running and no warning
This signal is active when a start command has been given or a stop command has been given and the drive has not stopped. No warning.

Running on reference and no warning
Speed according to reference. No warning.

Positioning
The output is active during positioning.

Normal run
The output is active during normal run, ie. not during positioning.

★ = factory setting. () = display text [] = value for use in communication via serial communication port

MG.50.N4.02 - VLT is a registered Danfoss trademark

Alarm
The output is activated by alarm.

Alarm or warning
The output is activated by alarm or warning.

Torque limit
The torque limit in parameter 221 has been exceeded.

Braking, no brake warning
The brake is active and there are no warnings.

Brake fault
The output is a logical "1" when the brake IGBT has short-circuited. This function is used to protect the frequency converter if there is a fault on the brake modules. To avoid a potential fire in the brake resistor, the output/relay can be used to cut out the supply voltage from the frequency converter.

Mechanical brake control
Enables control of an external mechanical brake.

Mechanical brake ready, no fault
The external mechanical brake is ready and has no fault detected.

Thermal warning
The temperature limit has been exceeded in either the motor, the frequency converter, the brake resistor or the thermistor.

Unit ready and no thermal warning
The frequency converter is ready for use, the control card receives supply voltage and there are no control signals on the inputs. No over-temperature.

Unit ready and no over/undervoltage
The frequency converter is ready for use, the control card receives supply voltage and there are no control signals on the inputs. The mains voltage is within the permitted voltage range.

Control word bit 11
The output is controlled by bit 11 in serial control word. See *Serial communication* in *Appendix*.

Control word bit 12
The output is controlled by bit 12 in serial control word. See *Serial communication* in *Appendix*.

352 AI [mA] 58 FUNCT.

Value:

No operation (NO OPERATION)	[0]
★Reference (REFERENCE)	[1]

Function:
For information see table in parameter 308

Description of choice:
See parameter 314 for information

353 ANALOGUE IN 58 SCALE LOW

Value:

0-20 mA	★ 4 mA

Function:
This parameter is for setting the signal value corresponding to the minimum reference (0 RPM).

Description of choice:
Set the required value. If the Timeout function is to be used (parameters 317 and 318) the value set must be higher than 2mA.

354 ANALOGUE IN 58 SCALE HIGH

Value:

0-20 mA	★ 20 mA

Function:
This parameter is used for setting the signal value that is to correspond to the maximum reference value, parameter 205 *Maximum reference value, Ref_{MAX}*.

355 SIGNAL OUTPUT 26

Value:
See parameter 341 for choices

Function:
Selects the function for output on the digital output terminal 26. If the condition of the selected function is true, the output level is 24 V (active), otherwise it is 0 V (inactive)

Description of choice:
See parameter 341 for choices

Programming

★ = factory setting. () = display text [] = value for use in communication via serial communication port

■ Application Functions

400 BRAKE FUNCTION

Value:

Off (OFF)	[0]
★Resistor brake (RESISTOR)	[1]

Function:

The factory setting is *On* [1] for VLT 5052-5062 400-500 V.
Resistor brake [1] is used for programming the frequency converter for connection of a brake resistor. The connection of a brake resistor allows a higher intermediate circuit voltage during braking (generating operation).
The Resistor brake [1] function is only active in units with an integral dynamic brake (SB and EB units).

Description of choice:

Select Resistor brake [1] if a brake resistor is part of the system.

401 BRAKE RES. (OHM)

Value:

Depends on the unit ★ Depends on the unit

Function:

This parameter gives the ohmic value of the brake resistor. This value is used for monitoring the power to the brake resistor provided this function has been selected in parameter 403.

402 BR.POWER LIM.KW

Value:

Depends on the unit ★ Depends on the unit

Function:

This parameter gives the monitoring limit of the power transmitted to the brake resistor.

Description of choice:

The monitoring limit is determined as a product of the maximum duty cycle (120 sec.) that will occur and the maximum power of the brake resistor at that duty cycle according to the following formula.

For 400 - 500 V units: $P = \frac{822^2 \times t}{R \times 120}$

403 POWER MONITORING

Value:

Off (OFF)	[0]
★Warning (WARNING)	[1]
Trip (TRIP)	[2]

Function:

This parameter allows monitoring of the power transmitted to the brake resistor. The power is calculated on the basis of the resistor ohm value (parameter 401), the intermediate circuit voltage and the resistor running time. If the power transmitted over 120 sec. exceeds 100% of the monitoring limit (parameter 402) and *Warning* [1] has been selected, a warning will come up on the display. The warning will disappear if the power goes below 80%. If the calculated power exceeds 100% of the monitoring limit and *Trip* [2] has been selected in parameter 403 *Power monitoring* , the VLT frequency converter will cut out while giving an alarm. If power monitoring has been selected as *Off* [0] or *Warning* [1], the brake function will remain active, even if the monitoring limit has been exceeded. This may lead to thermal overload of the resistor. It is also possible to have a warning via the relay/digital outputs. The typical measuring accuracy of the power monitoring depends on the accuracy of the resistor ohmic value (better than ± 20%).

Description of choice:

Select whether this function is to be active (*Warning/Alarm*) or inactive (*Off*).

404 BRAKE TEST

Value:

★Off (OFF)	[0]
Warning (WARNING)	[1]
Trip (TRIP)	[2]

Function:

In this parameter a testing and monitoring function can be integrated which will give a warning or an alarm. On power-up it will be tested whether the brake resistor is disconnected. The test of whether the brake resistor is disconnected is carried out during braking, while the test of whether the IGBT is disconnected is carried out when there is no braking. A warning or trip disconnects the brake function.
The testing sequence is as follows:

1. If the intermediate circuit voltage is higher than the brake starting voltage, discontinue the brake check.
2. If the intermediate circuit voltage is unstable, discontinue the brake check.
3. Carry out a brake test.

★ = factory setting. () = display text [] = value for use in communication via serial communication port

MG.50.N4.02 - VLT is a registered Danfoss trademark

4. If the intermediate circuit voltage is lower than the starting voltage, discontinue the brake check.
5. If the intermediate circuit voltage is unstable, discontinue the brake check.
6. If the braking power is higher than 100%, discontinue the brake check.
7. If the intermediate circuit voltage is higher than the intermediate circuit voltage -2% before the brake test, discontinue the brake check and give off a warning or alarm.
8. Brake check OK.

Description of choice:

If *Off* [0] is selected, this function will still monitor whether the brake resistor and the brake IGBT short-circuit during operation, in which case it will give off a warning. If *Warning* [1] is selected, the brake resistor and brake IGBT will be monitored with respect to short-circuiting. In addition, on power-up it will be checked whether the brake resistor has been disconnected.

NB!:
A warning in connection with *Off* [0] or *Warning* [1] can only be removed by disconnecting the mains supply and turning it back on, provided the fault has been corrected. Please note that in connection with *Off* [0] or *Warning* [1] the frequency converter will continue even if a fault has been found.

In the case of *Trip* [2], the frequency converter will cut out while giving an alarm (trip locked) if the brake resistor has short-circuited or been disconnected or if the brake IGBT has short-circuited.

405 RESET MODE

Value:

★Manual reset (MANUAL RESET)	[0]
Reset at power-up (RESET POWER UP)	[11]

Function:

This parameter makes it possible to select the reset function desired after tripping.
After reset, the frequency converter can be restarted.

Description of choice:

If *Manual reset* [0] is selected, reset must be effected via the [RESET] key.

Warning: The motor may start without warning.

421 SPEED FILT. TIME

Value:

1 - 20 ms ★ 3.2 ms

Function:

Oscillations on the feedback signal are dampened by a lowpass filter and the resolution on speed measurement is increased. This is necessary for the Flux Vector control to function properly. The *Speed Filter Time* is used with *Speed Control, Closed Loop*.

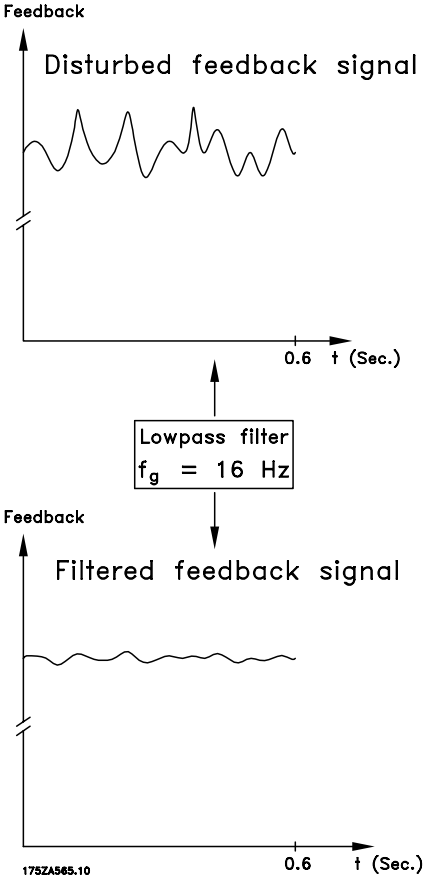

Description of choice:

If a time constant (τ) eg. of 10 ms is programmed, the cut-off frequency for the lowpass filter will be 1/0.01 = 100 RAD/sec., corresponding to (100/2 x π) = 16.0 Hz. This means that the PI regulator will only regulate a feedback signal that varies by a frequency of less than 16.0 Hz. If the feedback signal varies by a higher frequency than 16.0 Hz, the PI regulator will not react.

For parameter group 5xx, please refer to the following chapter, *Serial Communication*.

Programming

★ = factory setting. () = display text [] = value for use in communication via serial communication port

■ Service Functions

600-605 Operating Data				
Value:				
Par. no.	Description	Display text	Unit	Range
600	Operating hours	(OPERATING HOURS)	Hours	0-130,000.0
601	Hours run	(RUNNING HOURS)	Hours	0-130,000.0
602	kWh counter	(KWH COUNTER)	kWh	Depends on unit
603	Number of power-ups	(POWER UPS)	Number of times	0-9999
604	Number of overtemperatures	(OVER TEMPS)	Number of times	0-9999
605	Number of overvoltages	(OVER VOLTS)	Number of times	0-9999

Function:

These parameters can be read out via the serial communication port and the LCP control unit.

Description of choice:

Parameter 600, Operating hours:
Gives the number of hours the frequency converter has been operating. The value is saved every hour and when there is a mains failure. This value cannot be reset.

Parameter 601, Hours run:
Gives the number of hours the motor has been operating since the reset in parameter 619 *Reset of hours-run counter*. The value is saved every hour and when there is a mains failure.

Parameter 602, kWh counter:
Gives the frequency converter's output energy in kWh. The calculation is based on the mean kW value over one hour. This value can be reset using parameter 618 *Reset of kWh counter*.
Range: 0 - depends on unit.

Parameter 603, Number of power-ups:
Gives the number of power-ups of the supply voltage undertaken on the frequency converter.

Parameter 604, Number of overtemperatures:
Gives the number of overtemperature faults that have been registered on the frequency converter's heat sink.

Parameter 605, Number of overvoltages:
Gives the number of overvoltages of the intermediate circuit voltage in the frequency converter. This is only counted when Alarm 7 *Overvoltage* is active.

615 F. LOG: ERROR CODE

Value:

Table with error codes, see *Warnings and Alarms*

Function:

This parameter makes it possible to see the reason why a trip occurs.
10 (0-9) log values are stored.
The lowest log number (0) contains the latest/most recently saved data value; the highest log number (9) contains the oldest data value.

Description of choice:

Given as a number code, in which the trip number refers to an alarm code.
Reset the fault log after manual initialisation.

616 F.LOG: TIME

Function:

This parameter makes it possible to see the total number of operating hours before the trip occurred.
10 (0-9) log values are stored.
The lowest log number (0) contains the latest/most recently saved data value, while the highest log number (9) contains the oldest data value.

Description of choice:

Indication range: 0.0 - 9999.9.
Reset the fault log after manual initialisation.

617 F.LOG:VALUE

Value:

[Index 0.0 - 999.9]

Function:

This parameter makes it possible to see at what current or voltage a given trip occurred.

★ = factory setting. () = display text [] = value for use in communication via serial communication port

MG.50.N4.02 - VLT is a registered Danfoss trademark

Description of choice:

Read out as one value.
Indication range: 0.0 - 999.9.
Reset the fault log after manual initialisation.

618 RESET kWh COUNT

Value:

★No reset (DO NOT RESET)	[0]
Reset (RESET COUNTER)	[1]

Function:

Resetting parameter 602 *kWh counter* to zero.

Description of choice:

If *Reset* [1] is selected and you press the [OK] key, the frequency converter's kWh counter is reset to zero. This parameter cannot be selected via serial communication.

NB!:
When the [OK] key is activated, the counter is reset to zero.

619 RESET RUN. HOUR

Value:

★No reset (DO NOT RESET)	[0]
Reset (RESET COUNTER)	[1]

Function:

Resetting of parameter 601 *Hours run* to zero.

Description of choice:

If *Reset* [1] is selected and you press the [OK] key, the frequency converter's parameter 601 is reset to zero *Hours run*. This parameter cannot be selected via serial communication.

NB!:
When the [OK] key is activated the parameter is reset to zero.

620 OPERATION MODE

Value:

★Normal function (NORMAL OPERATION)	[0]
Control card test (CONTROL CARD TEST)	[2]
Initialisation (INITIALIZE)	[3]

Function:

In addition to its normal function, this parameter can be used for two different tests.
Also, all parameters (except parameters 603-605) can be initialised.

This function will not become active until the mains supply to the frequency converter has been turned off and then turned on again.

Description of choice:

Normal function [0] is selected for normal operation with the motor in the selected application.
Control card test [2] is selected if control of the analogue and digital inputs, as well as the analogue, digital relay outputs and the +10 V control voltage is desired. A test connector with internal connections is required for this test.

Use the following procedure for the control card test:

1. Select *Control card test*.
2. Cut off the mains supply and wait for the light in the display to go out.
3. Insert the test plug (see below).
4. Connect to mains.
5. The frequency converter expects the [OK] key to be pressed (if no LCP, set to *Normal operation*, when the frequency converter will start up as usual).
6. Carry out various tests.
7. Press the [OK] key.
8. Parameter 620 is automatically set to *Normal operation*.

If a test fails, the frequency converter will move into an infinite loop. Replace control card.

Test plugs (connect the following terminals to each other):
4 - 16
5 - 12
17 - 18 - 19 - 26
20 - 39 - 55
27 - 29 - 32 - 33 - 37 - 46
42 - 60
45 - 53 - 58

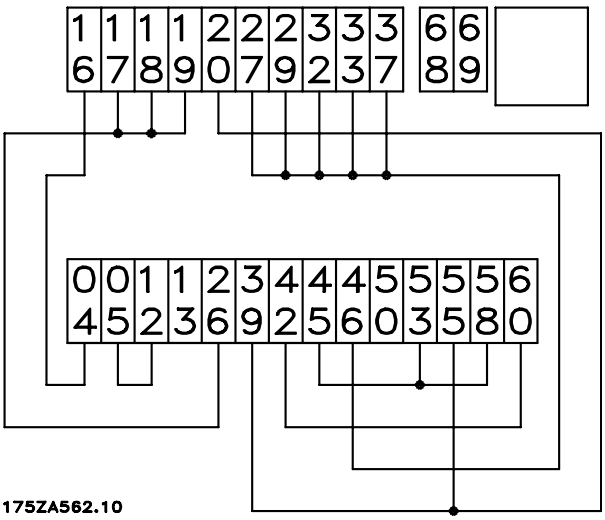

Programming

★ = factory setting. () = display text [] = value for use in communication via serial communication port

Initialisation [3] is selected if the factory setting of the unit is desired without resetting parameters 500, 501 + 600 - 605 + 615 - 617.

NB!:
The motor must be stopped before initialisation can be carried out.

Procedure for initializing:

1. Select Initialisation.
2. Press the [OK] key.
3. Cut off the mains supply and wait for the light in the display to go out.
4. Connect to mains.

Manual initialisation can be carried out by holding down three keys at the same time as the mains voltage is connected. Manual initialisation sets all parameters to the factory setting, except 600-605. The procedure for manual initialisation is as follows:

1. Disconnect the mains voltage and wait for the light in the display to disappear.
2. Hold down [DISPLAY/STATUS]+[MENU]+[OK] while at the same time connecting the mains supply. The display will now read MANUAL INITIALIZE.
3. When the display reads UNIT READY, the frequency converter has been initialized.

621-631 Type plate

Value:

Par. no	Description Nameplate	Display text
621	Unit type	(DRIVE TYPE)
622	Power section	(POWER SECTION)
623	VLT ordering number	(VLT ORDERING NO)
624	Software version	(SOFTWARE VERSION)
625	LCP identification no.	(LCP VERSION)
626	Database identification no.	(DATABASE VER.)
627	Power parts version	(POWER UNIT DB ID)
628	Application option type	(APP. OPTION)
629	Application ordering	(APP. ORDERING)
630	Communication option type	(COM. OPTION)
631	Communication ordering	(COM: ORDERING)

Function:

The unit's main data can be read out from parameters 621 to 635 *Type plate* using the LCP control unit or serial communication. Parameters 640 - 642 can also be seen on the unit's integral display.

Description of choice:

Parameter 621 Type plate: Unit type:
Gives unit size and mains voltage.
Example: VLT 5250 400-500V.

Parameter 622 Type plate: Power section:
The power section states the given power section being used.

Parameter 623 Type plate: VLT ordering number:
Ordering number states the ordering number of the VLT type in question. For example: 175Z3120.

Parameter 624 Type plate: Software version no.
The unit's present software version number appears here.
Example: V 20.00

Parameter 625 Type plate: LCP ID number:
The ID number of the unit's LCP appears here.
Example: ID 1.42 2 kB

Parameter 626 Type plate: Database ID number:
The ID number of the software's database appears here.
Example: ID 1.14.

Parameter 627 Type plate: Power section version:
The ID number of the unit's power section appears here.
Example: ID 1.15.

Parameter 628 Type plate: Application option type:
Here you can see which types of application options are installed in the frequency converter.

Parameter 630 Type plate: Communication option type:
Here you can see which types of communication options are installed in the frequency converter.

★ = factory setting. () = display text [] = value for use in communication via serial communication port

MG.50.N4.02 - VLT is a registered Danfoss trademark

639 FLASH TEST

Value:

Off (OFF)	[0]
★On (ON)	[1]

Function:

Checks the consistency of the program in flash proms during every power-up.

650 PASSWORD

Value:

★Password level 2 (PASSWORD LEVEL 2)	[000002]
Password level 1 (PASSWORD LEVEL 1)	[110775]

Function:

After entering the correct password the new protection level is shown in the LCP. After power up the password is to be re-entered in order to enable changing the protected parameters.

★ = factory setting. () = display text [] = value for use in communication via serial communication port

■ Crane Functions

■ Introduction to Crane Parameters

This parameter group contains all the crane specific parameters making the VLT 5000 Crane stand out from other VLT products.

It is important to notice that these parameters only should be handled by skilled personnel as wrong handling may cause serious accidents!

701 LOAD LOW

Value:

0 - 5000 RPM ★ Depends on unit

Function:

The values for Load Low are set in this parameter in RPM. If the speed set for the load contact is exceeded, the frequency converter will trip.

Description of choice:

The value of parameter 701 may only be higher or equal to the value of parameter 702.

702 LOAD HIGH

Value:

0 - 1250 RPM ★ Depends on unit

Function:

The values for Load High are set in this parameter in RPM.
If the speed set for the load contact is exceeded, the frequency converter will trip.

703 LOAD MONITORING

Value:

Disable (DISABLE) [0]
★Enable (ENABLE) [1]

Function:

Load Monitoring of load contacts 1 and 2 can be either disabled or enabled in this parameter.

704 LOW SPD. AT ERROR

Value:

-200 - 200 RPM ★ 50 RPM

Function:

With this parameter you can choose the lowering speed at *brake fault 1*, which is when the system brake cannot hold the load.

705 BRAKE ON RPM

Value:

5 - 50 RPM ★ 20 RPM

Function:

This parameter allows choosing the min. speed at which the system brake signal of relay 1-3 must be removed (the system brake takes over the load).

707 HOIST DIRECTION

Value:

★0 (FORWARD) [0]
1 (BACKWARD) [1]

Function:

In this parameter the direction, in which the motor is to rotate during hoisting, is set.

708 START TORQUE

Value:

0 - 170% ★ 100%

Function:

This parameter allows choosing the start torque for the motor when taking over the load from the system brake. Set the start torque in % of the rated motor torque set in the software.

709 RAMP TORQUE

Value:

0.0 - 2 SEC ★ 0.2 SEC

Function:

With this parameter the build-up time of the start torque is set.

★ = factory setting. () = display text [] = value for use in communication via serial communication port

MG.50.N4.02 - VLT is a registered Danfoss trademark

712 BRAKE MONITOR

Value:

0 (DISABLE) [0]
★1 (ENABLE) [1]

Function:

This parameter allows disabling the system brake. The parameter is used for testing the unit. For reasons of safety the parameter has been factory set for "ON".

713 DERATE LOWERING

Value:

0.6 - 1N/A ★ 0.8 N/A

Function:

With this parameter the output during lowering is reduced. 1.00 equals rated power output.

714 DERATE HOISTING

Value:

0.6 - 1 N/A ★ 1 N/A

Function:

This parameter is for decreasing the output power determined by the load estimator.

715 MECHANICAL BRAKE ON DELAY

Value:

0,1 - 20 sec. ★ 0,5 sec.

Function:

The value indicates the required time before the mechanical brake cuts in (relay 1-3). After the delay time the system brake takes over the load.

716 MECHANICAL BRAKE OFF DELAY

Value:

0,1 - 20 sec. ★ 0,5 sec.

Function:

The value indicates the required time before the mechanical brake is released. After the delay time, the system brake releases the load.

718 ENCODER MONITOR

Value:

0 (DISABLE) [0]
★1 (ENABLE) [1]

Function:

This parameter makes it possible to choose between disable and enable in order not to monitor or to monitor the encoder hardware.

720 DRUM INERTIA 1

Value:

0 - 1kgm^2 ★ Depends on unit

Function:

This parameter is used in the load estimator to calculate the static load on the motor by setting the inertia of the cable drum in gear 1.

721 GEAR RATIO 1

Value:

0 - 200 ★ Depends on unit

Function:

This parameter is used in the load estimator to calculate the static load on the motor by setting the ratio of the gear in gear 1.

722 GEAR INERTIA 1

Value:

0 - 1 kgm^2 ★ Depends on unit

Function:

This parameter is used in the load estimator to calculate the static load on the motor by setting the inertia of the gear in gear 1.

723 MEAN RADIUS

Value:

0 - 2 m ★ Depends on unit

Function:

This parameter is used in the load estimator to calculate the static load on the motor by setting the mean radius of the cable drum in metres with the gear in gear 1.

★ = factory setting. () = display text [] = value for use in communication via serial communication port

724 DRUM INERTIA 2

Value:

0 - 1 kgm^2 ★ Depends on unit

Function:

This parameter is used in the load estimator to calculate the static load on the motor by setting the inertia of the cable drum in gear 2.

725 GEAR RATIO 2

Value:

0 - 200 ★ Depends on unit

Function:

Set the ratio of the gear in gear 2.
The parameter is used in the load estimator to calculate the static load on the motor.

726 GEAR INERTIA 2

Value:

0 - 1 kgm^2 ★ Depends on unit

Function:

Set the gear inertia in gear 2.
This parameter is used in the load estimator to calculate the static load on the motor.

727 MEAN RADIUS 2

Value:

0 - 2 m ★ Depends on unit

Function:

Set the mean radius in metres of the cable drum with the gear in gear 2.
This parameter is used in the load estimator to calculate the static load on the motor.

740 POWER LIMIT FUNC.

Value:

★0 (CONSTANT POWER)	[0]
1 (USER DEFINED)	[1]
2 (OFF)	[2]

Function:

With this parameter it is possible to choose between a speed limitation based on constant power or a speed limitation based on a user defined profile, see figures below.

Description of choice:

The user defined profile is defined in par. 741 - 750.

NB!:
Note that it is important to set parameter 750 (N5) before setting parameters 741-749 in order to follow the user defined curve shown below.

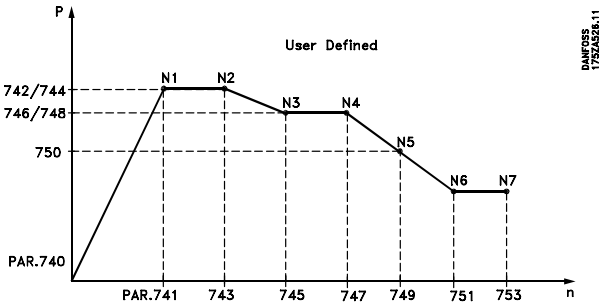

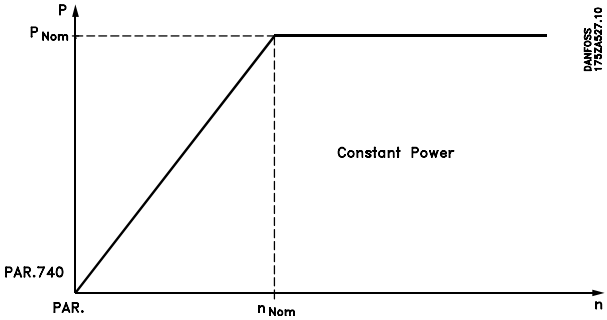

741 MECH. SPEED N1

Value:

RPM ★ Depends on unit

Function:

Set the speed point for power at N1.

Description of choice:

This parameter is limited between nominal motor speed and output speed high limit (par. 202)

742 POWER AT N1

Value:

kW ★ Depends on unit

Function:

Set the output power at N1.

Description of choice:

This parameter is limited to be less than or equal to the nominal power of the drive.

★ = factory setting. () = display text [] = value for use in communication via serial communication port

743 MECH. SPEED N2

Value:

RPM ★ Depends on unit

Function:

Set the speed point for power/speed curve at N2.

Description of choice:

This parameter is limited between N1 (par. 741) speed and output speed high limit (par. 202).

744 POWER AT N2

Value:

kW ★ Depends on unit

Function:

Set the output power at N2.

Description of choice:

This parameter is limited to be less than or equal to the power at N1.

745 MECH. SPEED N3

Value:

RPM ★ Depends on unit

Function:

Set the speed point for power/speed curve at N3.

Description of choice:

This parameter is limited between N2 (par. 743) speed and output speed high limit (par. 202).

746 POWER AT N3

Value:

kW ★ Depends on unit

Function:

Set the output power at N3.

Description of choice:

This parameter is limited to be less than or equal to the power at N2.

747 MECH. SPEED N4

Value:

RPM ★ Depends on unit

Function:

Set the speed point for power/speed curve at N4.

Description of choice:

The parameter is limited between N3 (par. 745) speed and output speed high limit (par. 202).

748 POWER AT N4

Value:

kW ★ Depends on unit

Function:

Set the power at N4.

Description of choice:

This parameter is limited to be less than or equal to the power at N3.

749 MECH. SPEED N5

Value:

RPM ★ Depends on unit

Function:

Set the speed point for power/speed curve at N5.

Description of choice:

This parameter is limited between N4 (par. 747) speed and output speed high limit (par. 202).

750 POWER AT N5

Value:

kW ★ Depends on unit

Function:

Set the output power at N5.

Description of choice:

This parameter is limited to be less than or equal to the power at N4.

751 MECH. SPEED N6

Value:

RPM ★ Depends on unit

Function:

Set the speed point for power/speed curve at N6.

Description of choice:

This parameter is limited between N5 (par. 749) speed and output speed high limit (par. 202).

★ = factory setting. () = display text [] = value for use in communication via serial communication port

752 POWER AT N6

Value:

kW ★ Depends on unit

Function:

Set the output power at N6.

Description of choice:

This parameter is limited to be less than or equal to the power at N5.

753 MECH. SPEED N7

Value:

RPM ★ Depends on unit

Function:

Set the speed point for power/speed curve at N7.

Description of choice:

This parameter is limited between N6 (par. 751) speed and output speed high limit (par. 202).

754 MECH. SPEED N7

Value:

kW ★ Depends on unit

Function:

Set the output power at N7.

Description of choice:

This parameter is limited to be less than or equal to the power at N6.

755 Power Loss N1

Value:

kW ★ Depends on unit

Function:

Set the power loss at N1.

Description of choice:

This parameter is limited to be less than or equal to the nominal power of the drive.

756 Power Loss N2

Value:

kW ★ Depends on unit

Function:

Set the power loss at N2.

Description of choice:

This parameter is limited to be less than or equal to the power at N1.

757 Power Loss N3

Value:

kW ★ Depends on unit

Function:

Set the power loss at N3.

Description of choice:

This parameter is limited to be less than or equal to the power at N2 .

758 Power Loss N4

Value:

kW ★ Depends on unit

Function:

Set the power loss at N4.

Description of choice:

This parameter is limited to be less than or equal to the power at N3.

759 Power Loss N5

Value:

kW ★ Depends on unit

Function:

Set the power loss at N5.

Description of choice:

This parameter is limited to be less than or equal to the power at N4.

760 Power Loss N6

Value:

kW ★ Depends on unit

Function:

Set the power loss at N6.

Description of choice:

This parameter is limited to be less than or equal to the power at N5.

★ = factory setting. () = display text [] = value for use in communication via serial communication port

761 Power Loss N7

Value:

kW ★ Depends on unit

Function:

Set the power loss at N7.

Description of choice:

This parameter is limited to be less than or equal to the power at N6.

★ = factory setting. () = display text [] = value for use in communication via serial communication port

■ Bus connection RS 485

The serial bus connection is connected to terminals 68/69 of the frequency converter (signals P and N) in accordance with the RS 485 (2-wire) norm. Signal P is the positive potential (TX+,RX+), while signal N is the negative potential (TX-,RX-).

If more than one frequency converter is to be connected to a given master, use parallel connections.

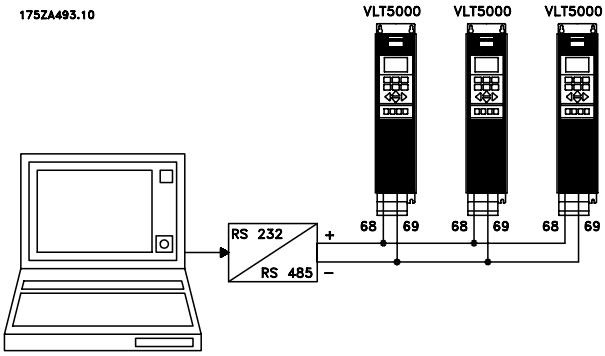

In order to avoid potential equalizing currents the circuit driving terminals 68 and 69 are connected to the VLT chassis ground via a 100Ω resistor.

Bus termination

The bus must be terminated by a resistor network at both ends. For this purpose, set switches 2 and 3 on the control card for "ON", see *Switches 1-4*.

■ Bus Connection RS 232

The purpose of the RS 232 is to enable communication between a PC and one VLT. With this communication it is possible to monitor, programme and control the VLT.

However, it is not possible to use the RS 232 concurrently with the RS 485. When using one of the buses, the other must be disconnected, ie. when using eg. the RS 232, the RS 485 plug must be removed from the board.

Hardware connection of the RS 232:

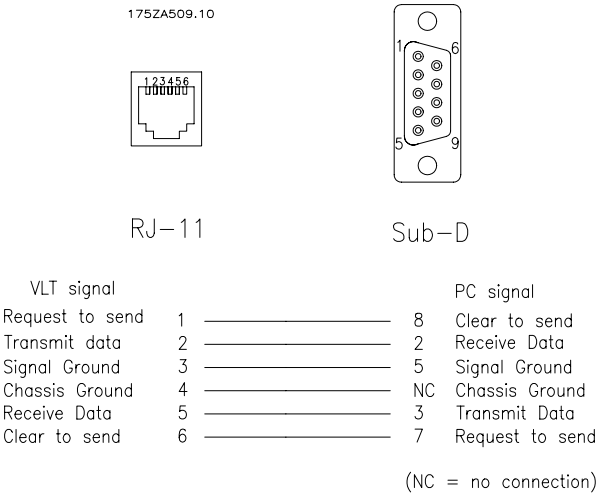

Pin 1 is connected to pin 6 on the control card, which results in the PC receiving a "Clear to Send" when it sends a "Request to Send".

When looking into the RJ-11, pin 1 is the left terminal.

Danfoss offers a cable with an RJ-11 male plug in both ends and an adaptor between RJ-11 and Sub-D 9 Pole (for PC connection).

PNU #	Parameter description Serial communication	Range	Factory setting	Changes during operation	Unit index	Conversion index	Data type	Protection level
500	**Address**	1 - 126	1	Yes	0	0	6	1
501	**Baudrate**	300 - 19200 Baud	9600 Baud	Yes	0	0	5	1
503	**Quick-stop**		Logic or	Yes	0	0	5	1
505	**Start**		Logic or	Yes	0	0	5	1
506	**Reversing**		Digital input	Yes	0	0	5	1
512	**Drive profile**		Crane profile	No	0	0	5	1
515	**Data read-out: Reference %**			No	24	-1	3	2
516	**Data read-out: Reference unit**			No	-1	-3	4	2
517	**Data read-out: Feedback**			No	-1	-3	4	2
518	**Data read-out: Frequency**			No	28	-1	6	2
519	**Data read-out: Motor speed**			No	11	67	3	2
520	**Data read-out: Current**			No	22	-2	7	2
521	**Data read-out: Torque**			No	24	-1	3	2
522	**Data read-out: Power, kW**			No	9	1	7	2
523	**Data read-out: Power, HP**			No	9	-2	7	2
524	**Data read-out: Motor voltage**			No	21	-1	6	2
525	**Data read-out: DC link voltage**			No	21	0	6	2
526	**Data read-out: Motor thermal**			No	24	0	5	2
527	**Data read-out: VLT thermal**			No	24	0	5	2
528	**Data read-out: Digital input**			No	0	0	5	2
529	**Data read-out: Term. 53, analogue input**			No	21	-2	3	2
530	**Data read-out: Term. 58, analogue input**			No	21	-2	3	2
531	**Data read-out: Term. 60, analogue input**			No	22	-5	3	2
533	**Data read-out: External reference %**			No	24	-1	3	2
534	**Data read-out: Status word, binary**			No	0	0	6	2
535	**Data read-out: Brake energy/2 min.**			No	9	2	6	2
536	**Data read-out: Brake energy/sec.**			No	9	2	6	2
537	**Data read-out: Heat sink temperature**			No	17	0	5	2
538	**Data read-out: Alarm word, binary**			No	0	0	7	2
539	**Data read-out: VLT control word, binary**			No	0	0	6	2
540	**Data read-out: Warning word**			No	0	0	7	2
541	**Data read-out: Warning word, 2**			No	0	0	7	2
580	**Defined parameters 1**			No	0	0	6	2
581	**Defined parameters 2**			No	0	0	6	2
582	**Defined parameters 3**			No	0	0	6	2

For information on conversion index and data type, please refer to *Factory Setting* in *Programming* .

★ = factory setting. () = display text [] = value for use in communication via serial communication port

500 BUS ADDRESS

Value:

0 - 126 ★ 1

Function:

This parameter allows the allocation of an address to each frequency converter in a serial communication network.

Description of choice:

The individual frequency converter must be allocated a unique address.
If the number of units connected (frequency converters + master) is higher than 31, a repeater must be used.
Parameter 500 *Address* cannot be selected via the serial communication, but must be preset via the control unit.

501 BAUDRATE

Value:

300 Baud (300 BAUD)	[0]
600 Baud (600 BAUD)	[1]
1200 Baud (1200 BAUD)	[2]
2400 Baud (2400 BAUD)	[3]
4800 Baud (4800 BAUD)	[4]
★9600 Baud (9600 BAUD)	[5]
19200 Baud (19200 BAUD)	[6]

Function:

This parameter is for programming the speed at which data is transmitted via the serial port. Baud rate is defined as the number of bits transmitted per second.

Description of choice:

The frequency converter's transmission speed must be set at a value corresponding to the transmission speed of the master.
Parameter 501 *Baudrate* cannot be selected via the serial port, but must be preset via the operating unit.

503 Q STOP SELECT

Value:

Digital input (DIGITAL INPUT)	[0]
Serial port (SERIAL PORT)	[1]
Logic and (LOGIC AND)	[2]
★Logic or (LOGIC OR)	[3]

Function:

Parameters 503-508 allow a choice between controlling the frequency converter via the digital inputs and/or via the serial port.

Description of choice:

The table below shows when the motor is running and when it is in Quick-stop mode, when each of the following is selected: *Digital input* [0], *Serial port* [1], *Logic and* [2] or *Logic or* [3].

NB!:
Quick-stop inverse and Bit 04 in the control word are active at logic '0'.

Digital input [0]

Dig. input	Serial port	Function
0	0	Quick-stop
0	1	Quick-stop
1	0	Motor running
1	1	Motor running

Serial port [1]

Dig. input	Serial port	Function
0	0	Quick-stop
0	1	Motor running
1	0	Quick-stop
1	1	Motor running

Logic and [2]

Dig. input	Serial port	Function
0	0	Quick-stop
0	1	Motor running
1	0	Motor running
1	1	Motor running

Logic or [3]

Dig. input	Serial port	Function
0	0	Quick-stop
0	1	Quick-stop
1	0	Quick-stop
1	1	Motor running

505 START SELECT

Value:

Digital input (DIGITAL INPUT)	[0]
Serial port (SERIAL PORT)	[1]
Logic and (LOGIC AND)	[2]
★Logic or (LOGIC OR)	[3]

Function:

See function description for parameter 503 *Quick stop.*

Description of choice:

The table below shows when the motor has stopped and when the frequency converter has a start command

★ = factory setting. () = display text [] = value for use in communication via serial communication port

MG.50.N4.02 - VLT is a registered Danfoss trademark

when each of the following is selected: *Digital input* [0], *Serial port* [1], *Logic and* [2] or *Logic or* [3].

NB!:
Note that this parameter only is available when the VLT 5000 Crane runs in FC profile.

Digital input [0]		
Dig. input	Ser. port	Function
0	0	Stop
0	1	Stop
1	0	Start
1	1	Start

Serial port [1]		
Dig. input	Ser. port	Function
0	0	Stop
0	1	Start
1	0	Stop
1	1	Start

Logic and [2]		
Dig. input	Ser. port	Function
0	0	Stop
0	1	Stop
1	0	Stop
1	1	Start

Logic or [3]		
Dig. input	Ser. port	Function
0	0	Stop
0	1	Start
1	0	Start
1	1	Start

506 REVERSING SELECT

Value:

★Digital input (DIGITAL INPUT)	[0]
Serial port (SERIAL PORT)	[1]
Logic and (LOGIC AND)	[2]
Logic or (LOGIC OR)	[3]

Function:

See function description for parameter 503 *Quick stop.*

Description of choice:

The table below shows when the motor is running clockwise and anti-clockwise when each of the following is selected: *Digital input* [0], *Serial port* [1], *Logic and* [2] or *Logic or* [3].

NB!:
Note that this parameter is only available when the VLT 5000 Crane runs in FC profile.

Digital input [0]		
Dig. input	Ser. port	Function
0	0	Clockwise
0	1	Clockwise
1	0	Anti-clockwise
1	1	Anti-clockwise

Serial port [1]		
Dig. input	Ser. port	Function
0	0	Clockwise
0	1	Anti-clockwise
1	0	Clockwise
1	1	Anti-clockwise

Logic and [2]		
Dig. input	Ser. port	Function
0	0	Clockwise
0	1	Clockwise
1	0	Clockwise
1	1	Anti-clockwise

Logic or [3]		
Dig. input	Ser. port	Function
0	0	Clockwise
0	1	Anti-clockwise
1	0	Anti-clockwise
1	1	Anti-clockwise

512 DRIVE PROFILE

Value:

FC profile (FC PROTOCOL)	[1]
★Crane Profile (CRANE PROTOCOL)	[3]

Function:

It is possible to choose between two different control and functionality profiles.

Description of choice:

Select the desired control word profile.
See *Serial communication* in *Appendix* for further details of control word profiles.

NB!:
Note that changes to this parameter do not take effect before after a power up.

★ = factory setting. () = display text [] = value for use in communication via serial communication port

515-541 Data readout				
Value:				
Par. no.	Description	Display text	Unit	Update interval (ms)
515	Res. reference	(REFERENCE)	%	80
516	Res. reference [Unit]	(REFERENCE [UNIT])	Hz, RPM	80
517	Feedback [Unit]	(FEEDBACK [UNIT])	RPM	80
518	Frequency	(FREQUENCY)	Hz	80
519	Motor speed	(MOTOR SPEED)	RPM	80
520	Motor current	(MOTOR CURRENT)	Amp	80
521	Torque	(TORQUE)	%	80
522	Power[kW]	(POWER (KW))	kW	80
523	Power[HP]	(POWER (HP))	HP	80
524	Motor voltage	(MOTOR VOLTAGE)	V	80
525	DC link voltage	(DC LINK VOLTAGE)	V	80
526	Thermal load motor	(MOTOR THERMAL)	%	80
527	Thermal load inverter	(INV. THERMAL)	%	80
528	Digital input	(DIGITAL INPUT)	Bin	2
529	Term.53, analogue input	(ANALOG INPUT 53)	V	20
530	Term. 58, analogue input	(ANALOG INPUT 58)	V	20
531	Term.60, analogue input	(ANALOG INPUT 60)	mA	20
533	External ref.	(EXT. REFERENCE)	%	20
534	Status word, Hex	(STATUS WORD)	Hex	20 ms
537	Inverter temperature	(INVERTER TEMP.)	°C	1.2 sec
538	Alarm word	(ALARM WORD)	Hex	2 ms
539	Control word	(CONTROL WORD)	Hex	20 ms
540	Warning word	(WARN. WORD)	Hex	20ms
541	Extended status word	(STATUS WORD)	Hex	0

Function:

These parameters can be read out via the serial communication port and the LCP display. See also parameters 009-012 *Display readout*.

Description of choice:

Resulting reference %, parameter 515:

Gives the resulting reference as a percentage in the range from 0 to Maximum reference, Ref_{MAX}.

Resulting reference [unit], parameter 516:
Gives the resulting reference in Hz in Open loop (parameter 100). In Closed loop the reference unit is in RPM.

Feedback [unit], parameter 517:
Gives the resulting feedback speed, see also parameter 519.

Frequency [Hz], parameter 518:
Gives the output frequency from the frequency converter.

Motor speed [RPM], parameter 519:
Corresponds to the present output speed.

Motor current [A], parameter 520:
Gives the motor's phase current measured as an effective value.

Torque [%], parameter 521:
Gives the motor's present load in relation to the motor's rated torque.

Power [kW], parameter 522:
Gives the motor's present power in kW which the motor absorbs.

Power [HP], parameter 523:
Gives the motor's present power in HP which the motor absorbs.

Motor voltage, parameter 524:
Gives the voltage supplied to the motor.

DC link voltage, parameter 525:
Gives the intermediate circuit voltage in the frequency converter.

★ = factory setting. () = display text [] = value for use in communication via serial communication port

Thermal load, motor [%], parameter 526:
Gives the calculated/estimated thermal load on the motor. 100% is the cut-out limit. See also parameter 128 *Thermal motor protection*.

Thermal load INV [%], parameter 527:
Gives the calculated/estimated thermal load on the frequency converter. 100% is the cut-out limit.

Digital input, parameter 528:
Gives the signal status from the 8 digital inputs (16, 17, 18, 19, 27, 29, 32 and 33). Input 16 corresponds to the bit on the extreme left. '0' = no signal, '1' = connected signal.

Terminal 53 analogue input [V], parameter 529:
Gives the voltage value for the signal on terminal 53.

Terminal 58 analogue input [V], parameter 530:
Gives the voltage value for the signal on terminal 58.

Terminal 60 analogue input [mA], parameter 531:
Gives the current value for the signal on terminal 60.

External reference, parameter 533:
Gives the sum of external references as a percentage (sum of analogue/pulse/serial communication) in the range from 0 to Maximum reference, Ref_{MAX} .

Status word, parameter 534:
Gives the present status word for the frequency converter in Hex. See *Serial communication* in *Appendix*.

Inverter temperature, parameter 537:
Gives the present inverter temperature on the frequency converter. The cut-out limit is 90-100 °C, with cut back in at 70 ± 5 °C.

Alarm word, parameter 538:
Gives in Hex which alarm is on the frequency converter. See *Warning word, extended status word and alarm word.*

Control word, parameter 539:
Gives the present control word on the frequency converter in Hex. See *Serial communication* in *Appendix*.

Warning word, parameter 540:
States whether there is a warning on the frequency converter in Hex. See *Warning word, extended status word and alarm word.*

Extended status word, parameter 541:
States whether there is a warning on the frequency converter in Hex. See *Warning word, extended status word and alarm word.*

580-582 DEFINED PARAMETERS

Value:
Read only

Function:
The three parameters hold a list of all the parameters defined in the frequency converter. Each of the three parameters can be read as an array by means of the acyclical FMS *read* service with subindex 255. It is also possible to read single elements of the list by DP and cyclical/acyclical FMS by using the corresponding subindex. The subindexes start at 1 and follow the order of the parameter numbers.

Each parameter holds up to 116 elements (parameter numbers). The number of parameters (580, 581 and 582) in use depends on the actual frequency converter configuration.

When a 0 is returned as parameter number, the list ends. Parameter 580-582 can only be read out via the serial communication. No access through the LCP.

★ = factory setting. () = display text [] = value for use in communication via serial communication port

■ Status Messages

Status messages appear in the 4th line of the display, see the example.

The left part of the status line indicates the active type of control of the VLT 500 Crane. The right part states the present status, eg. "Running", "Stop", "Coast", etc.

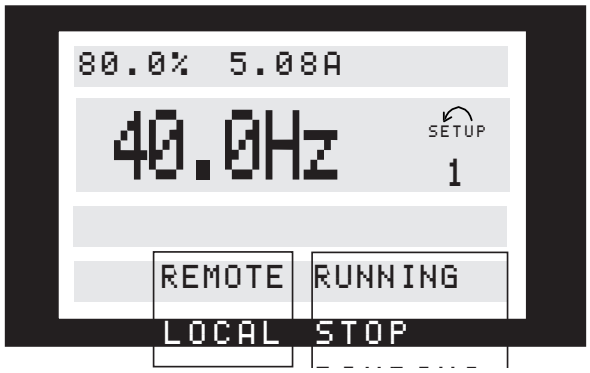

Left part:

Crane: The drive profile for the frequency converter is Crane profile (Parameter 512)
Rem: Remote has been selected in parameter 002, the reference is set via the control terminal or via the serial communication. The drive profile for the frequency converter is FC-profile (parameter 512)
Local: Local has been selected in parameter 002, the reference is set in parameter 003. The drive profile for the frequency converter is FC-profile (parameter 512)

Right part:

Ramping: The output frequency is now changed according to the present ramp
Coast: The motor has been coasted via a coast signal
Qstop: The motor has been stopped via a qstop signal
Stop: The motor has been stopped via a stop signal
Stand by: The frequency converter will start when it receives a start signal via digital input or the serial communication port.
Run jog: Jog has been enabled via LCP digital input or the serial communication port.
Running: The motor speed corresponds to the resulting reference
Br. Error: Stop: A brake release error has been detected and the motor is coasted.
Br. Error: Low: A brake activate error has been detected and the frequency converter is lowering.

MG.50.N4.02 - VLT is a registered Danfoss trademark

■ List of Warnings and Alarms

The table shows the various warnings and alarms and indicates whether the fault locks the frequency converter. After Trip locked, the mains supply must be cut and the fault must be corrected. Reconnect the mains supply and reset the frequency converter before being ready

Whereever a cross is placed under both Warning and Alarm, this indicates either that a warning precedes the alarm or that it is possible to program whether a given fault is to result in a warning or an alarm. This is possible, eg. in parameter 404 *Brake Check*. After a trip, alarm and warning will flash, but if the fault is removed, only alarm will flash. After a reset, the frequency converter will be ready to start operation again.

No.	Description	Warning	Alarm	Locked
1	10 VOLT LOW	X		
2	LIVE ZERO ERROR	X	X	
3	NO MOTOR		X	
4	MAINS PHASE LOSS	X	X	X
5	DC LINK VOLTAGE HIGH	X		
6	DC LINK VOLTAGE LOW	X		
7	DC LINK OVERVOLT	X	X	X
8	DC LINK UNDERVOLT	X	X	X
9	INVERTER TIME	X	X	X
10	MOTOR TIME	X	X	X
11	MOTOR THERMISTOR	X	X	X
12	TORQUE LIMIT	X	X	
13	OVER CURRENT		X	X
14	EARTH FAULT		X	X
15	SWITCH MODE FAULT		X	X
16	CURR. SHORT CIRCUIT		X	X
17	STD_BUS-TIMEOUT	X	X	X
19	EE ERROR POWER CARD	X		
20	EE ERROR CTRL. CARD	X		
23	BRAKE TEST FAILED	X		
25	BRAKE RESISTOR FAULT	X		
26	BRAKE POWER 100%	X	X	
27	BRAKE IGBT FAULT	X		
29	HEAT SINK OVER TEMP.		X	X
30	MISSING MOT.PHASE U		X	
31	MISSING MOT.PHASE V		X	
32	MISSING MOT.PHASE W		X	
35	MOTOR NOT READY	X		
36	MAINS FAILURE	X	X	X
37	INVERTER FAULT		X	X
43	BRAKE FAULT		X	X
44	ENCODER FAULT		X	X
45	LOAD FAULT		X	X
46	WATCHDOG FAULT		X	X
47	FLASH FAULT		X	X
48	TRACKING FAULT		X	
49	BRAKE RELEASE FAULT	X		
50	BRAKE ACTIVATE FAULT	X		

■ Warnings

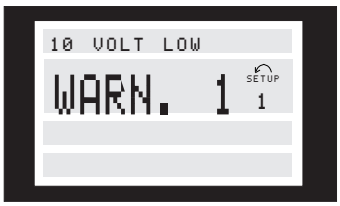

The display flashes between normal state and warning. A warning comes up on the first and second line of the display.

Alarm messages

The alarm comes up in the 2. and 3. line of the display.

Please note that in the tables on the following pages, some numbers are marked with a (w) or an (a). This indicates a warning and an alarm, respectively. Where nothing is indicated, the number is both a warning and an alarm.

Alarm/warning limits:

VLT 5000 Crane	3 x 400-500 VAC
Undervoltage	402 VDC
Voltage warning low	423 VDC
Voltage warning high	801/840 VDC (w/o brake - w/brake)
Overvoltage	855 VDC

■ Warnings and Alarms, 1-6

Warn-ing/Alarm number	Display	Description	How to Handle
1 (w)	10 Volt Low	The 10 Volts voltage from terminal 50 on the control card is below 10 Volts	Remove some of the load from terminal 50, as the 10 Volts supply is overloaded. Max. 17 mA/min. 590Ω
2	Live Zero Error	The current signal on terminal 58 or the voltage signal on terminal 53 is less than 50% of the value set in parameter 353/309	Check the wires to terminals 53 and 58
3 (a)	No Motor	The motor check function (see parameter 122) indicates that no motor has been connected to the output of the frequency converter	Check the motor connection
4	Mains Phase Loss	Phase missing on the supply side or mains imbalance is too high	Check the supply voltage to the frequency converter
5 (w)	DC Link Voltage High	The intermediate circuit voltage (DC) is higher than the overvoltage limit of the control system. The frequency converter is still active	Check brake resistor connection
6 (w)	DC Link Voltage Low	The intermediate circuit voltage is below the undervoltage limit of the control system. The frequency converter is still active	Check the supply voltage to the frequency converter

MG.50.N4.02 - VLT is a registered Danfoss trademark

■ Warnings and Alarms, 7-16

Warn-ing/Alarm number	Display	Description	How to Handle
7	DC Link Overvolt	If the intermediate circuit voltage (DC) exceeds the inverter overvoltage limit, the frequency converter will trip. Furthermore, the voltage will be stated in the display.	The fault can be eliminated by connecting a brake resistor (if the frequency converter has an integral brake chopper, EB or SB)
8	DC Link Undervolt	If the intermediate circuit voltage (DC) drops below the inverter lower voltage limit (see table, previous page), it will be checked whether 24 V power supply is connected. If no 24 V power supply is connected, the frequency converter will trip after a given time depending on the unit. Furthermore, the voltage will be stated in the display.	Check whether the supply voltage matcehs the frequency converter, see Technical Data
9	Inverter Time	The electronic, thermal inverter protection reports that the frequency converter is about to cut out because of an overload (too high current for too long). The counter for electronic, thermal inverter protection gives a waring at 98% and trips at 100%, while giving an alarm. The frequency converter cannot be reset until the counter is below 90%..	The problem is avoided by ensuring that the frequency converter will not be overloaded by more than 100% for too long
10	Motor Time	According to the electronic thermal protection (ETR), the motor is too hot. Parameter 128 allows a choice of whether the frequency converter is to give a warning or an alarm when the counter reaches 100%. The fault is that the motor is overloaded by more than 100% for too long.	Check the load and that motor parameters 102-106 have been set correctly
11	Motor Thermistor	The motor is too hot and the thermistor connection has been disconnected. Parameter 128 allows a choice of whether the frequency converter is to give a warning or an alarm.	Check the load and that the thermistor has been correctly connected between terminal 53 or 54 (analogue voltage input) and terminal 50 (+ 10 Volts supply)
12	Torque Limit	The torque is higher than the value in parameter 221 (in motor operation) or the torque is higher than the value in parameter 222 (in regenerative operation)	Check load, acceleration and decelaration ramps. Furthermore, check that motor parameters 221-222 have been set correctly
13	Overcurrent	The inverter peak current limit (approx. 200% of the rated curent) has been exceeded. The warning will last approx. 1-2 seconds, following which the frequency converter will trip, while giving an alarm	Turn off the frequency converter and check whether the motor shaft can be turned and whether the motor size mathces the frequency converter
14 (a)	Earth Fault	There is a discharge from the output phases to earth, either in a cable between the frequency converter and the motor or in the motor itself	Turn off the frequency converter and remove the earth fault
15 (a)	Switch Mode Fault	Fault in the switch mode power supply (internal +/- 15 V supply)	Contact your Danfoss supplier
16 (a)	Curr. Short circuit	There is a short-circuiting on the motor terminals or in the motor itself	Turn off the frequency converter and remove the short-circuit

■ Warnings and Alarms, 19-27

Warn-ing/Alarm Number	Display	Description	How to Handle
19 (w)	EE Error Power Card	There is a fault on the power card EEPROM. The frequency converter continues to function, but is likely to fail at the next power-up.	Contact your Danfoss supplier
20 (w)	EE Error CTRL Card	There is a fault in the EEPROM on the control card. The frequency converter will continue to function, but is likely to fail at the next power-up	Contact your Danfoss supplier
23	Brake Test Failed	The brake resistor test is only run after power-up. If *Warning* has been selected in parameter 404, the warning appears when the brake test finds a fault. If *Trip* has been selected in parameter 404, the frequency converter will trip when the brake test finds a fault.	The brake test may fail for the following reasons: No brake resistor connected or fault in the connections; defective brake resistor or defective brake transistor. A warning or alarm means that the brake function is still active
25 (w)	Brake Resistor Fault	The brake resistor monitored during operation and if it short-circuits, the brake function is disconnected and the warning appears. The frequency converter is still able to work, although without the brake function.	Turn off the frequency converter and replace the brake resistor
26 (w)	Brake Pwr Warn 100%	The power transmitted to the brake resistor is calculated as a percentage, as a mean value over the last 120 sec., on basis of the resistance value of the brake resistor (parameter 401) and the intermediate circuit voltage. The warning is active when the dissipated braking power is higher than 100%. If *Trip* has been selected in parameter 403, the frequency converter will cut out while giving the alarm.	Check parameter 403 and the regenerative load
27 (w)	Brake IGBT Fault	The brake transistor is monitored during operation and if it short-circuits, the brake function is disconnected and the warning appears. The frequency converter is still able to run, but since the brake transistor has short-circuited, substantial power will be transmitted to the brake resistor, even if it is inactive.	Turn off the frequency converter and remove the brake resistor, see warning below

Warning: There is a risk of substantial power being transmitted to the brake resistor if the brake transistor has short-circuited

■ Warnings and Alarms, 29-49

Warn-ings/Alarm numbers	Display	Description	How to Handle
29 (w)	Heat Sink Over Temp	For IP20/IP 00, the cut-out temperature if the heat sink is 90°C. The tolerance is +/- 5°C.	Decrease ambient temperature and check fans
30 (a)	Missing Mot.Phase U	Motor phase U between frequency converter and motor is missing	Turn off the frequency converter and check motor phase U
31 (a)	Missing Mot.Phase V	Motor phase V between frequency converter and motor is missing	Turn off the frequency converter and check motor phase V
32 (a)	Missing Mot.Phase W	Motor phase W between frequency converter and motor is missing	Turn off the frequency converter and check motor phase W
35 (w)	Motor Not Ready	The drive was unable to finish the starting sequence (pre-magnetisation and start torque) within 5 sec.	Check the motor connection
37 (a)	Inverter Fault	IGBT or the power card is defective	Contact your Danfoss supplier
43 (a)	Brake Fault	A fault has arisen on the brake chopper. The text shown in the display indicates a fault message. The figure in square brackets is the fault code that can be seen in the fault log, parameter 615	[0] The brake resistor check carried out during power-up indicates that the brake has been disconnected. Check whether the brake has been connected correctly and that it has not been dispconnected [1] The brake output has short-circuited. Replace the brake resistor [2] The brake IGBT has short-circuited. This fault means that the unit is not able to stop the brake and that, consequently, the resistor is constantly being energized
44 (a)	Encoder fault	The encoder signal is interrupted from terminal 73, 74, 75, 76, 77 or 78	Check the connections
45 (a)	Load fault	An overload has occurred on one or both of the load contacts and the speed is too high to hold the load. The overload causes a trip	Start up again with reduced speed
46 (a)	Watchdog fault	An internal error has occurred	Contact your Danfoss supplier
47 (a)	Flash fault	An internal error has occurred	Contact your Danfoss supplier
48 (a)	Tracking fault	Load is dropping faster than expected	Check mechanical brake
49 (w)	Brake release fault	Fault when releasing the brake (open).	
50 (w)	Brake activate fault	Fault when activating the brake (close)	Remove the start signal

■ Trouble-shooting

Symptom	How to handle
1. Motor runs unevenly	If the motor runs unevenly, but no fault is given, this may be because the frequency converter has been wrongly set. Adjust the motor data settings. Contact Danfoss if the new setting does not make the motor run evenly
2. Motor does not run	Check if there is a backlight in the display. If there is a backlight, please check if a fault message is displayed. If yes, please consult the Warnings-section, if no, please refer to symptom 5. If there is no backlight, check if the is connected to mains supply. If yes, please refer to symptom 4.
3. Motor does not brake	Please refer to symptom 6.
4. No message or backlight in display	Check if the prefuses for the have blown. If yes, call Danfoss for assistance. If no, check if the control card is overloaded. If so, disconnect all control signal plugs on the control card and check if the fault disappears. If yes, make sure that the 24 V supply is not short-circuited. If no, call Danfoss for assistance.
5. Motor stopped, light in display, but no fault report	Start the by pressing [START] on the control panel. Check if the display is frozen, ie. the display cannot be changed or is indefineable. If yes, check if screened cables have been used and are connected correctly. If no, check that the motor is connected and that all motor phases are OK. The must be set to run using local references: Parameter 002 = Local operation Parameter 003 = desired reference value Parameter 512 = FC Profile Connect 24 V DC to terminal 27. The reference is changed by pressing '+' or '-'. Is the motor running? If yes, check whether control signals to the control card are OK. If no, call Danfoss for assistance.

MG.50.N4.02 - VLT is a registered Danfoss trademark

Symptom	How to handle
6. VLT 5000 Crane trips, "Overvoltage" is displayed and motor does not brake	Check if the green LED "READY" on the control card is ready. If yes, check if the yellow and red LEDs "braking" and "overload" on the control card are active during braking period. If yes, check if the brake resistor and its connection are OK. If yes, call Danfoss for assistance. If the "READY" LED is NOT active check if the connections to the brake control card are OK, then follow the steps from checking the "braking" and "overload" LEDs and forward.
7. Fault at start (Warning "Brake fault 2")	Check if the system brake is correctly connected. If no, correct the system brake connection. If yes, check if the encoder is correctly connected. If this is not the case, correct the encoder connection, otherwise call Danfoss for assistance.

■ Derating for Ambient Temperature

The ambient temperature ($T_{AMB,MAX}$) is the maximum temperature allowed. The average ($T_{AMB,AVG}$) is measured over 24 hours and must be at least 5ºC lower.

NB!:
VLT 5000 Crane is already derated for operational temperature (55° $T_{AMB,MAX}$ and 50° $T_{AMB,AVG}$.

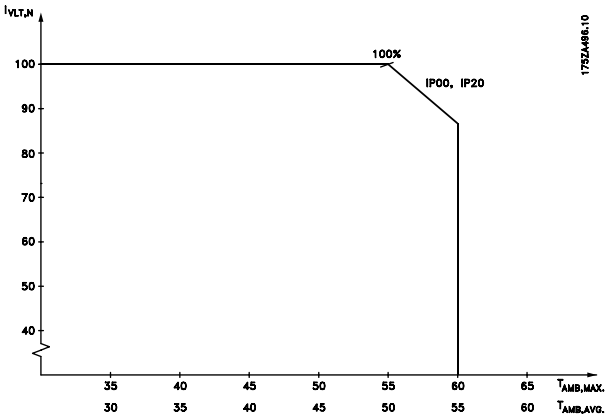

■ Derating for air pressure

Below 1000 m derating is not necessary.
Above 1000 m the ambient temperature (T_{AMB}) or max. output current (I_{MAX}) must be derated in accordance with the diagram below:

1. Derating of output current versus altitude
2. Derating of max. T_{AMB} versus altitude at 100% output current.

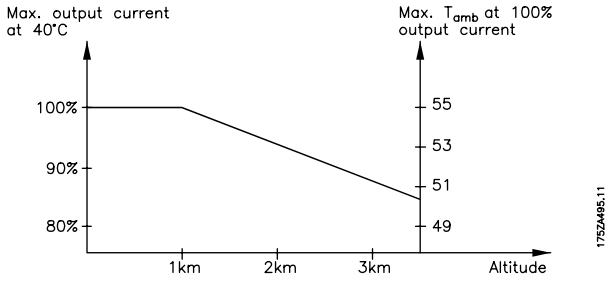

■ Derating for Running at Low Speed

When a motor is connected to a frequency converter, it is necessary to check whether the cooling of the motor is adequate.
At low RPM values, the motor fan is not able to supply the required volume of air for cooling. This problem occurs when the load torque is constant (e.g. a conveyor belt) across the regulating range.
The reduced ventilation available decides the size of the torque that can be permitted under a continuous load. If the motor is to run continuously at an RPM value lower than half the rated value, the motor must be supplied with additional air for cooling.
Instead of such extra cooling, the load level of the motor can be reduced. This can be done by choosing a bigger motor. However, the design of the frequency converter sets limits as to the size of motor that can be connected to it.

MG.50.N4.02 - VLT is a registered Danfoss trademark

■ Serial Communication

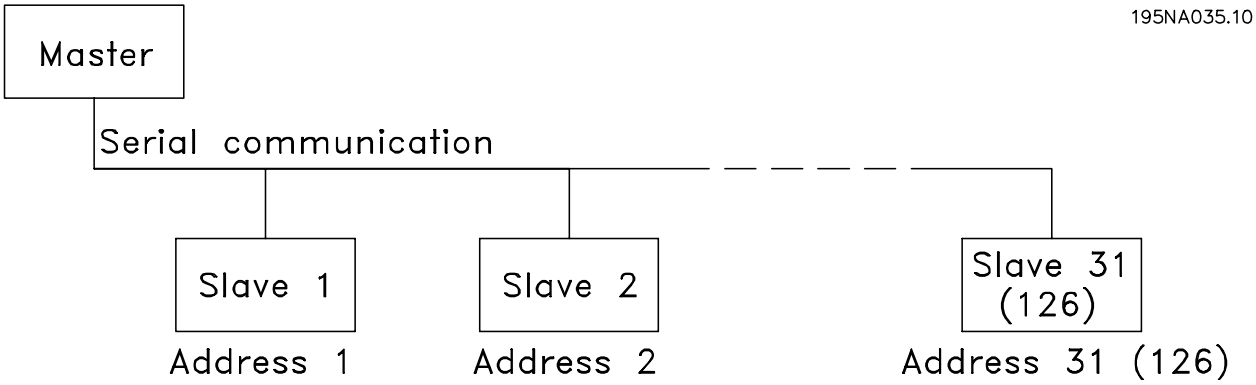

■ Telegram Communication

Control and reply telegrams

Telegram communication in a master-slave system is controlled by the master. A maximum of 31 slaves (VLT 5000 Crane) can be connected to one master, unless a repeater is used. If a repeater is used, a maximum of 126 slaves can be connected to one master.

The master sends control telegrams addressed to the slaves and awaits reply telegrams from these. The response time of the slaves is maximum of 50 ms.

A slave responds by sending a reply telegram when it has received telegram with correct STX, LGE, ADR and BCC..

Broadcast

A master can send the same telegram at the same time to all slaves connected to the bus. In such broadcast communication, the slave does not send a reply telegram to the master, provided the telegram has been correctly received. Boradcast communication is set up in the address format (ADR).

Content of a byte

Each transferred character begins with a start bit. Subsequently, 8 data bits are transferred. Each character is secured via a parity bit, which is set to "1" when there is even parity (i.e. an even number of binary 1's in the 8 data bits and the parity bit combined). A character ends with a stop bit, thus consisting of a total of 11 bitsl.

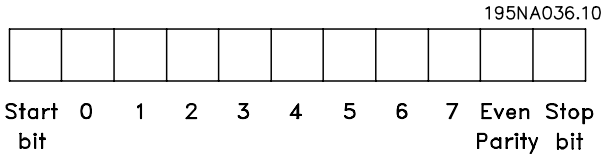

■ Telegram Build-up

Each telegram begins with a start byte (STX) = 02 Hex, followed by a byte that states the telegram length (LGE) and a byte that states the address of the frequency converter (ADR). Then follows a number of data bytes (variable, depending on telegram type). The telegram ends with a data control byte (BCC).

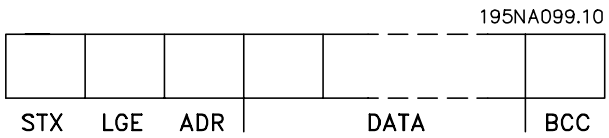

Telegram timing

The speed of communication between a master and a slave depends on the baud rate. The baud rate of the frequency converter must be the same as the baud rate of the master and is selected in parameter 501 *Baud rate*. After a reply telegram from the slave, there must be a minimum pause of 2 characters (22 bits) before the master is able to send another telegram. At a baud rate of 9600 baud, there must be a minimum pause of 2.3 msec. After the master

Appendix

has completed the telegram, the response time of the slave back to the master will be max. 20 msec. and there will be a minimum pause of 2 characters.

Pause time, min. 2 characters
Response time, min. 2 characters
Response time, max. 20 msec.

The time between individual characters in a telegram is not to exceed 2 characters and the telegram must be completed within 1.5 times the rated telegram time.

If the baud rate is 9600 baud and the telegram length is 16 characters, the telegram must be completed within 27.5 msec.

Telegram length (LGE)
The telegram length is the number of data bytes plus the address byte ADR plus the data control byte BCC.

Telegrams with 4 data bytes have a length of:
LGE = 4 + 1 + 1 = 6 bytes
Telegrams with 12 data bytes have a length of:
LGE = 12 + 1 + 1 = 14 bytes

VLT address (ADR)
Two different address formats are used, in which the address range of the frequency converter is either from 1-31 or from 1-126.:

1 Address format 1-31
The byte for this address range has the following profile:

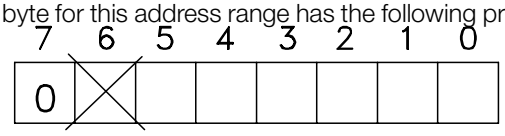

195NA040.10

Bit 7 = 0 (address format 1-31 active)
Bit 6 is not used
Bit 5 = 1: Broadcast, address bits (0-4) are not used
Bit 5 = 0: No Broadcast
Bit 0-4 = Frequency converter address 1-31

2. Address format 1-126:
The byte for the 1-126 address range has the following profile:

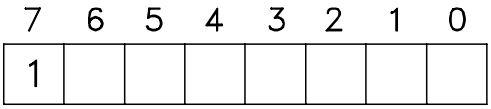

195NA041.10

Bit 7 = 1 (address format 1-126 active)
Bit 0-6 = Frequency converter address 1-126
Bit 0-6 = 0 Broadcast

The slave sends the address byte back to the master in the reply telegram in unchanged form.

Example
A telegram is sent to frequency converter address 22 using address format 1-31:

7	6	5	4	3	2	1	0
0	0	0	1	0	1	1	0

Data control byte (BCC)
The data control byte is the EXOR-sum of the entire telegram. It is best explained by means of an example:
Before the first byte of the telegram is received, BCC is 0.

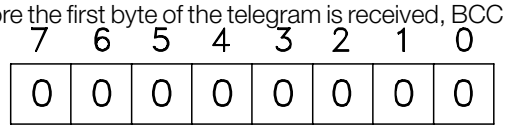

195NA043.10

When the first byte has been received:
$BCC_{NEW} = BCC_{OLD}$ EXOR "first byte"
(EXOR = exclusive-or gate)

BCC_{OLD}	= 0 0 0 0 0 0 0 0
	EXOR
1. byte	= 0 0 0 0 0 0 1 0 (02H)
BCC_{NEW}	= 0 0 0 0 0 0 1 0

Each subsequent byte gates with BCC_{OLD} EXOR and produces a new BCC_{NEW}, e.g.:

BCC_{OLD}	= 0 0 0 0 0 0 1 0
	EXOR
2nd byte	= 1 1 0 1 0 1 1 0 (D6H)
BCC_{NEW}	= 1 1 0 1 0 1 0 0

The result after the latest incoming byte is BCC.

■ Databytes

The build-up of data blocks depends on the type of telegram. There are three types of telegram and the telegram type applies to both control telegram (master→slave) and reply telegram (slave→master). The three types of telegrams are the following:

1. Parameter block, used for transferring parameters between master and slave. The data block has 12 bytes 6 words and also contains the process block.

195NA044.10

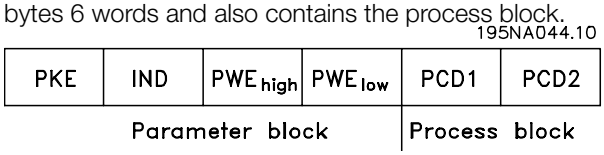

2. Process block, built up as a data block with four bytes (2 words), covering:
- Control word and reference value (from master to slave)
- Status word and present output frequency (from slave to master)

PCD 1	PCD 2
Process block	

3. Text block, used for reading or writing texts via the data block.

PKE	IND	Ch1	Ch2		Ch n	PCD1	PCD2
		Text block				Process block	

1. Parameter bytes

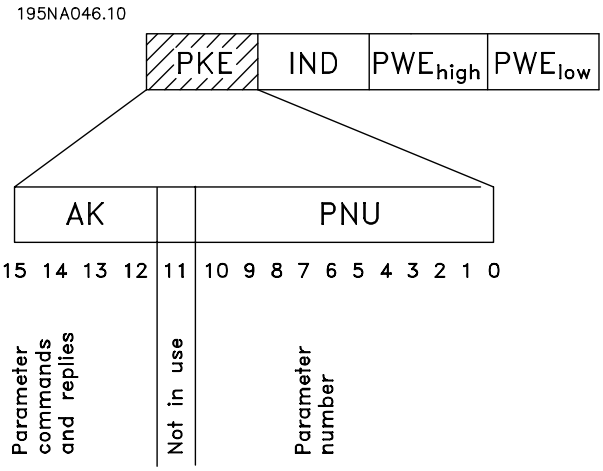

Commands and replies (AK)

Bits no. 12-15 are used for transmitting commands from master to slave and the slave's processed replies back to the master.

Parameter commands master⇒slave				
Bit no.				
15	14	13	12	Parameter command
0	0	0	0	No command
0	0	0	1	Read parameter value
0	0	1	0	Write parameter value in RAM (word)
0	0	1	1	Write parameter value in RAM (double word)
0	1	0	0	Read parameter description element
1	1	0	1	Write parameter value in RAM and EEprom (double word)
1	1	1	0	Write parameter value in RAM and EEprom (word)
1	1	1	1	Read text

Reply slave⇒master				
Bit no.				Response
15	14	13	12	
0	0	0	0	No response
0	0	0	1	Parameter value transferred (word)
0	0	1	0	Parameter value transferred (double word)
0	0	1	1	Parameter description element transferred
0	1	1	1	Command cannot be performed
1	1	1	1	Text transferred

If the command cannot be executed, the slave will send this reply: 0111 and give the following error message in the parameter value (PWE):

Error code (reply 0111)	Error message
0	The parameter number used does not exist
1	There is no write access to the parameter called
2	Data value exceeds the parameter limits
3	The sub index used does not exist
4	The parameter is not the array type
5	The data type does not match the parameter called
17	Data change in the parameter called is not possible in the present mode of the frequency converter. Eg. someparameters can only be changed when the motor has stopped
130	There is no bus access to the parameter called
131	Data change is not possible because factory Setup is selected

Parameter number (PNU)
Bits no. 0-10 are used for transmitting parameter numbers. The function of a given parameter can be seen from the parameter description in the *Programming* section.

Index

Appendix

Index is used together with the parameter number for read/write-access to parameters with an index, such as parameter 615 *Error code*.
Index has 2 bytes - a lowbyte and a highbyte. However, only the lowbyte is used. See example below:

Example - index
The first error code (index [1]) in parameter 615 *Error code* must be read.

PKE = 1267 Hex (read parameter 615 *Error code*).
IND = 0001 Hex - Index no. 1.

1267 H	0001 H	
PKE	IND	PWE

The frequency converter will respond in the parameter value (PWE) block by means of an error code with a value from 1-99.

Parameter value (PWE)

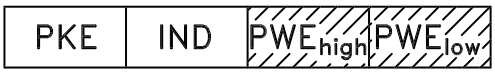

The parameter value block consists of 2 words (4 bytes) and its value depends on the command given (AK). If the master enquires about parameter value, the PWE block contains no value.

If a parameter value is to be changed by the master (write), the new value is entered in the PWE block and sent to the slave.

The transferred text corresponds to the figures given in the parameter descriptions in the manual. Eg. parameter 001 *Language*, where [0] corresponds to *English*, and [2] corresponds to *French*.
However, parameters with data type 9 (text string) are excepted, as this is transferred as an ASCII text string. When a text string is transferred (read), the telegram length is variable, since the texts have different lengths. The telegram length is stated in the 2nd byte of the telegram, called LGE. Parameters 621-631 (nameplate data) have data type 9 (text string).

Data types supported by the frequency transformer:

Data types	Description
3	Signed 16
4	Signed 32
5	Unsigned 8
6	Unsigned 16
7	Unsigned 32
9	Visible string
10	Byte string
13	Time difference
33	Reserved
35	Bit sequence

Unsigned means that there is no sign included in the telegram.

Conversion:
The different attributes for each parameter can be seen in the section on factory settings. Since a parameter value can only be transferred as a whole number, a conversion factor must be used to transfer decimals.

Example:
Parameter 202 *Output speed high limit* has a conversion factor of 0.1. If you wish to preset the minimum frequency to 10 Hz, the value 100 must be transferred, as a conversion factor of 0.1 means that the value transferred is multiplied by 0.1. The value 100 will thus be perceived as 10.0. See also *Conversion and Unit of measurement*.

Process bytes

The process byte block is divided into two blocks each of 16 bits, which always come in the sequence stated.

195NA066.10

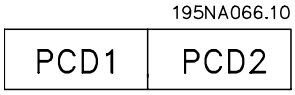

	PCD 1	PCD 2
Control telegram (master⇒slave)	Control word	Reference-value
Control telegram (slave⇒master)	Status word	Present outp. frequency

Control Word in Crane Profile

Control word in Crane profile (parameter 512 = crane profile)

The control word is used for sending commands from a master, eg. a PC, to a slave (frequency converter).

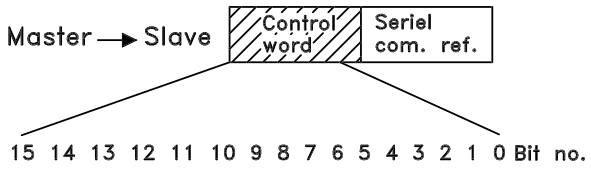

Bit	Bit = 0	Bit = 1
00	Load contact 1 inverse	No function
01	Load contact 2 inverse	No function
02	No function	Positioning
03	Coasting inverse	No function
04	Quick stop inverse	No function
05	Ramp stop	Start lowering
06	Ramp stop	Start hoisting
07	No function	Reset
08	No function	
09	Gear low	Gear high
10	Data not valid	Data valid
11	No function	Relay 01 activated
12	No function	Relay 04 activated
13	No function	
14	No function	
15	No function	

NB!:
In Crane profile bit 04 Q stop is the only choice for logic OR, logic AND and logic BUS.

Bit 00, Load contact 1 inverse/No function
Bit 00 = "1" means no speed reduction.

Bit 01, Load contact 2 inverse/No function
Bit 01 = "0" leads to further descreased speed (parameter 702) if bit 00 = "0". Otherwise it leads to a Trip. Bit 01 = "1" means no speed reduction.

	Bit 00	Bit 01
Load high	0	0
Load low	0	1
Trip	1	0
No function	1	1

Bit 02, No function/Positioning
Makes the motor turn with reduced speed according to parameters 106, Motor Nominal Speed, and 205, Max. reference.

Bit 02 = "0" means no reduced speed. Bit 02 = "1" means reduced speed.

Bit 03, Coasting inverse/No function
Please refer to *Control word in FC profile*.

Bit 04, Quick stop inverse/No function
Please refer to *Control word in FC profile*.

Bit 05, No function/Start lowering
Makes the motor turn to lower the load opposite of the direction set in parameter 707, Hoist direction.
Bit 05 = "0" leads to a stop if bit 06 = "0". Bit 05 = "1" leads to start if bit 06 = "0". Otherwise it leads to a stop.

	Bit 05	Bit 06
Stop	0	0
Stop	1	1
Hoisting	0	1
Lowering	1	0

Bit 06, No function/Start hoisting
Makes the motor turn to hoist the load according to the direction set in parameter 707, Hoist direction.
Bit 06 = "0" leads to a stop if bit 05 = "0". Bit 06 = "1" leads to start if bit 05 = "0". Otherwise it leads to a stop.

Bit 07, No function/Reset
Please refer to *Control word in FC profile*.

Bit 09, Gear low/Gear high
Enables gear low or high. Bit = "0" is low gear. Bit = "1" is high gear.

Bits 10-12
Please refer to *Control word in FC profile*.

Status Word in Crane profile

Bit	Bit = 0	Bit = 1
00	Control not ready	Control ready
01	Unit not ready	Unit ready
02	Not enabled	Enabled
03	Not tripped	Tripped
04	Not NormalRun	NormalRun
05	Not positioning	Positioning
06	-	-
07	No warning	Warning
08	Not on reference	On reference
09	Local control	Remote control
10	No BrakeActivateError	BrakeActivateError
11	No BrakeReleaseError	BrakeReleaseError
12	No brake fault	Brake fault
13	No voltage limit	Voltage limit
14	No torque limit	Torque limit
15	No thermal warning	Thermal warning

Bit 00, Control not ready/ready:
Bit 00 = "0" means that the frequency converter has tripped. Bit 00 = "1" means that the frequency converter has not tripped and that the control card has power supply.

Bit 01, Unit not ready/ready:
Bit 01 = "0" means that the frequency converter has tripped. Bit 01 = "1" means that the frequency converter has not tripped and that the power unit is supplied from mains supply.

Bit 02, Not enabled/enabled:
Bit 02 = "0" means that the that the frequency converter has either coasted or tripped. Bit 02 = "1" means that the freqeuncy converter has not coasted or tripped. If bit 01 = "1" and the frequency converter is neither coasted nor tripped, the frequency converter is enabled.

Bit 03, Not tripped/Tripped
Bit 03 = "0" means that the frequency has not tripped. Bit 03 = "1" means that the frequency converter has tripped due to a fault.

Bit 04, Not NormalRun/NormalRun
Bit 04 = "0" means that the frequency converter either does not run or runs in positioning. Bit 04 ="1" means that the frequency is running and that positioning is not active.

Bit 05, Not positioning/Positioning
Bit 05 = "0" means that positioning is not active. Bit 05 = "1" means that the frequency converter is running and that positioning is active.

Bit 07, No warning/ Warning
Bit 07 = "0" means that there are no warnings. Bit 07 = "1" means that a warning has appeared.

Bit 08, Not on reference/On reference
Bit 08 = "0" means that the frequency converter eg. is stopped or runs with speed and torque below or higher than the reference set. Bit 08 = "1" means that the frequency converter is running and that speed and torque equal the reference.

Bit 09, Local control/Remote control
Bit 09 = "0" means that the frequency converter is locally controlled. Bit 09 = "1" means that the frequency converter is remotely controlled.

Bit 10, No Brake Activat Error/Brake Activate Error
Bit 10 = "0" means that the mechanial brake is able to hold the load. Bit 10 = "1" means that the mechanical brake is not holding the load and a brake error appears.

Bit 11, No Brake Release Error/Brake Release Error
Bit 11 = "0" means that the mecahnical brake is able to bereleased. Bit 1 = "1" means that the mechanical brake is stuck and thus an error appears.

Bit 12, No brake fault/Brake fault
Bit 12 = "0" means that there are no faults on the resistor brake. Bit 12 = "1" means that an error has been detected on the resistor brake. Note that the resistor brake has nothing to do with the mechanical brake.

Bit 13, No voltage limit/Voltage limit
Bit 13 = "0" means that the DC-link is out of voltage limit. Bit 13 = "1" means that the DC-link is in limit, either high or low.

Bit 14, No torque limit/torque limit
Bit 14 = "0" means that no torque limit is present. Bit 14 = "1" means that a torque limit is present.

Bit 15, No thermal warning/Thermal warning
Bit 15 = "0" means that the frequency converter is running OK. Bit 15 = "1" means that a thermal warning has been detected on either the frequency converter or the motor. The motor is monitored as set in parameter 128, Motor Thermal Protection.

MG.50.N4.02 - VLT is a registered Danfoss trademark

Control word in FC profile (parameter 512 = FC profile)
The control word is used for sending commands from a master (eg. a PC) to a slave (VLT 5000 Crane).

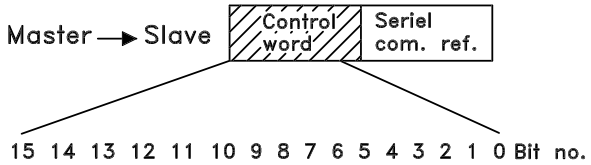

Bit	Bit = 0	Bit =1
00	No function	
01	No function	
02	No function	
03	Coasting	No function
04	Quick stop	No function
05	No function	
06	Ramp stop	Start
07	No function	Reset
08	No function	Jog
09	No function	
10	Data not valid	Data valid
11	No function	Relay 01 activated
12	No function	Relay 04 activated
13	No function	
14	No function	
15	No function	Reversing

Bit 03, Coasting/enable:
Coasting stop. Bit 03 = "0" leads to a stop. Bit 03 = "1" means that the frequency converter is able to start, provided the other conditions for starting are fulfilled.

Bit 04, Quick stop/ramp up:
Quick stop which uses the ramp time in parameter 212. Bit 04 = "0" leads to a quick stop. Bit 04 = "1" means that the frequency converter is able to start, provided the other conditions for starting are fulfilled. Note: In parameter 503 the choice is made as to how bit 04 is to be combined (gated) with the corresponding function on the digital inputs.

Bit 06, Ramp stop/start:
An ordinary ramp stop that uses the ramp time in parameter 207/208; in addition, output relay 01 or 04 will be activated when the output frequency is 0 Hz, provided *Relay 123* has been selected in parameter 323 or 326. Bit 06 = "0" leads to a stop. Bit 06 = "1" means that the frequency converter is able to start, provided the other starting conditions have been fulfilled. Note: In parameter 505 the choice is made as to how Bit 06 is to be combined (gated) with the corresponding function on the digital inputs.

Bit 07, No function/reset:
Reset of trip. Bit 07 = "0" means there is no reset. Bit = "1" means that a trip is reset.

Bit 08, Activation of Jog speed in parameter 213:
Bit 08 = "0" means that Jog speed is not activated. Bit 08 = "1" means that the motor is running at Jog speed.

Bit 10, Data not valid/valid:
Used for telling the frequency converter whether the control word is to be used or ignored. Bit 10 = "0" means that the control word is ignored. Bit 10 = "1" means that the control word is used. This function is relevant because the control word is always contained in the telegram, regardless of the type of telegram used, ie. it is possible to disconnect the control word if it is not to be used in connection with updating or reading of parameters.

Bit 11, Relay 01:
Bit 11 = "0": Relay 01 not activated. Bit 11 = "1": Relay 01 activated, provided *Control word bit* has been chosen in parameter 323.

Bit 12, Relay 04:
Bit 12 = "0": Relay 04 has not been activated. Bit 12 = "1": Relay 04 has been activated, provided *Control word bit* has been selected in parameter 326.

Bit 15, No function/reversing:
Reversing to the direction of rotation of the motor. Bit 15 = "0" leads to no reversing. Bit 15 = "1" leads to reversing.
Please note that in the factory setting, reversing has been chosen as digital in parameter 506, which means that Bit 15 will only lead to reversing if *bus, logic or* or *logic and* (however, *logic and only* together with terminal 19) has been selected.

NB!:
Unless otherwise mentioned, the control word bit is combined (gated) with the corresponding function on the digital inputs as a logic "or" function.

■ Status word in FC profile

Status word in FC profile

The status word is used for informing the master (eg. a PC) about the condition of the slave (VLT 5000 Crane)

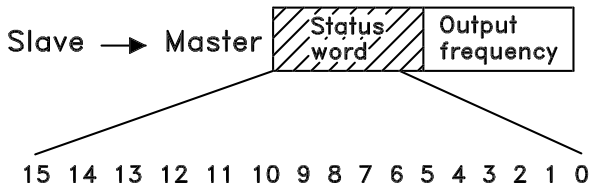

Bit	Bit = 0	Bit =1
00	Control not ready	Ready
01	VLT not ready	Ready
02	Coasting	Enable
03	No fault	Trip
04	Reserved	
05	Reserved	
06	Reserved	
07	No warning	Warning
08	Not on reference	On reference
09	Local control	Remote control
10	Out of range	Frequency OK
11	Not running	Running
12	No brake fault	Brake fault
13	Voltage OK	Out of range
14	Torque OK	Out of range
15	No thermal warning	Thermal warning

Bit 00, Control not ready/ready:
Bit 00 = "0" means that the frequency converter has tripped. Bit 00 = "1" means that the frequency converter has not tripped and the control card has power supply.

Bit 01, Unit not ready/ready:
Bit 01 = "0" means that the frequency converter has tripped. Bit 01 = "1" means that the frequency converter has not tripped and the mains power unit is supplied from mains supply.

Bit 02, Coasting/enable:
Bit 02 = "0" means that the frequency converter has tripped. Bit 02 = "1" means that the frequency converter has not tripped, mains power supply is on and the unit is not coasted by a coast command.

Bit 03, No fault/trip:
Bit 03 = "0" means that the frequency converter has not tripped. Bit 03 = "1" means that the frequency converter controls has tripped due to a fault.

Bit 07, No warning/warning:
Bit 07 = "0" means that there a no warnings. Bit 07 = "1" means that a warning has appeared.

Bit 08, Not on reference/on reference:
Bit 08 = "0" means that the motor is running, but speed/torque do not equal the reference. Bit 08 = "1" means that the motor is running, and speed/torque equal the reference.

Bit 09, Local control/remote control:
Bit 09 = "0" means that the frequency converter is locally controlled. Bit 09 = "1" means that the frequency converter is remotely controlled. Normally, this bit is always "1", but when running local (parameter 002) in FC-profile, the bit is "0".

Bit 10, Out of range/frequency OK:
This value is always "1" as the Crane drive has no definition of frequency limits.

Bit 11, Not running/running:
Bit 11 = "0" the motor is not running. Bit 11 = "1" the motor is running.

Bit 12, No brake fault/brake fault:
Bit 12 = "0" means that no brake fault has been detected. Bit 12 = "1" means that an error has been detected on the resistor brake. This does not, however, have anything to do with the mechanical brake.

Bit 13, Voltage OK/Out of range:
Bit 13 = "0" means that the DC-link voltage is in limit, either high or low. Bit 13 = "1" means that the DC-link voltage has exceeded the limit.

Bit 14, Torque OK/out of range:
Bit 14 = "0" the drive runs below the torque limit. Bit 14 = "1" the drive exceeds torque limit set.

Bit 15, No thermal warning/thermal warning:
Bit 15 = "0" means that no thermal warnings have been detected. Bit 15 = "1" means that a thermal warning has been detected on either the frequency converter, the motor or the brakeresistor. The motor is monitored as set in parameter 128, Motor thermal protection.

Bus reference value

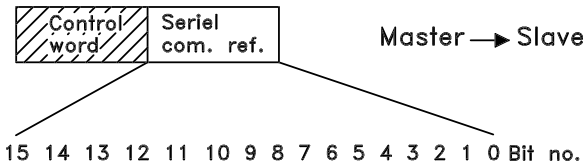

The frequency reference value is transmitted to the frequency converter in the form of a 16-bit word. 16384 (4000 Hex) corresponds to 100%.

"ref_{MIN} - ref_{MAX}"

0-16384 (0-4000 Hex) ~ 0-100% ~ ref_{MIN} - ref_{MAX}

Actual output speed

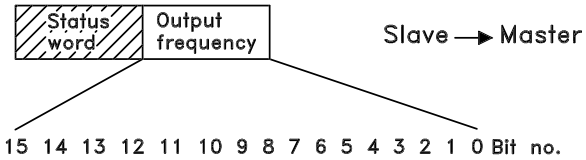

The value of the actual output of the freqruency converter is transmitted in the form of a 16-bit word. 16384 (0-4000 Hex) corresponds to 100%.

■ Example 1: For Controlling the Drive and Reading Parameters.

This telegram reads parameter 520, motor current.

Telegram to the VLT 5000 Crane:

stx	lge	adr	pke		ind		pwe, high		pwe, low		pcd 1		pcd 2		bcc
02	0E	01	12	08	00	00	00	00	00	00	XX	XX	XX	XX	XX

All numbers are in hex format.

The response fro the VLT 5000 Crane will correspond to the command above, but *pwe,high* and *pwe,low* will contain the actual value of parameter 520 multiplied by 100. This means that if the actual output current is 5,24 A then the value coming from the VLT 5000 is 524.

Response from the VLT 5000 Crane

stx	lge	adr	pke		ind		pwe, high		pwe, low		pcd 1		pcd 2		bcc
02	0E	01	22	08	00	00	00	00	02	0C	XX	XX	XX	XX	XX

All numbers are in hex format.

Pcd 1 and *pcd 2* from example 2 can be used and added to the example which means that it will be possible to control the drive and read the current at the same time.

■ Example 2: Only for Controlling the Drive.

This telegram sets the control word to 047C Hex (Start command) with a speed reference of 2000 Hex (50%).

⇒ Parameter 512 is set to FC Drive.

Telegram to the VLT 5000 Crane:

stx	lge	adr	pcd 1		pcd 2		bcc
02	06	04	04	7C	20	00	58

All numbers are in hex format.

The response from the VLT 5000 Crane gives information of the status of the drive when it received the command. By sending the command again, the *pcd1* will change to the new status.

Response from the VLT 5000 Crane

stx	lge	adr	pcd 1		pcd 2		bcc
02	06	04	06	07	00	00	01

All numbers are in hex format.

■ Read parameter description elements

With *Read Parameter Description Elements* it is possible to read the characteristics of a parameter which could be eg. *Name, Default value, conversion*, etc.

The table below shows the available parameter description elements:

Index	Description
1	Basic characteristics
2	No of elements (array types)
4	Unit of measure
6	Name
7	Lower limit
8	Upper limit
20	Default value
21	Additional characteristics

In the following example *Read Parameter Description Elements* is chosen on parameter 001, *Language*, and the requested element is index 1 *Basic characteristics*.

Basis characteristics (index 1):
The Basic characteristics command is split up in two parts representing basic behaviour and datatype. The Basic characteristics return a 16 bit value to the master in PWE_{LOW}.
The basic behaviour indicates whether eg. text is available or the parameter is an array as single bit information in the high byte of PWE_{LOW}.
The datatype part indicates if a parameter is signed 16, unsigned 32 in the low byte of PWE_{LOW}.

PWE high basic behaviour:

Bit	Description
15	Active parameter
14	Array
13	Parameter value can only be reset
12	Parameter value different from factory setting
11	Text available
10	Additional text available
9	Read only
8	Upper and lower limit not relevant
0-7	Data type

Active parameter is only active when communicating through Profibus.
Array means that the parameter is an array.
If bit 13 is true, the parameter can only be reset, not written to.
If bit 12 is true, the parameter value is different from the factory setting.
Bit 11 indicates that text is available.
Bit 10 indicates that additional text is available. Eg. parameter 001, *Language*, contains text for index field 0, *English*, and for index field 1, *German*.
If bit 9 is true, the parameter value is read-only and cannot be changed.
If bit 8 is true, upper and lower limits of the parameter value are not relevant.

PWE_{LOW} datatype

Dec.	Datatype
3	Signed 16
4	Signed 32
5	Unsigned 8
6	Unsigned 16
7	Unsigned 32
9	Visible string
10	Byte string
13	Time difference
33	Reserved
35	Bit sequence

Example
In this example, the master reads the Basic characteristics of parameter 001, *Language*.

The following telegram must be sent to the frequency converter:

STX	LGE	ADR	PKE	IND	PWE_{HIGH}	PWE_{LOW}	PCD1	PCD2	BCC
02	0E	01	40 01	00 01	00 00	00 00	XX XX	XX XX	XX

STX = 02 Start byte
LGE = 0E Length of remaining telegram
ADR = Sends the frequency converter on Address 1, Danfoss format
PKE = 4001; 4 in the PKE field indicates a *Read Parameter Description* and 01 indicates parameter number 001, *Language*
IND = 0001; 1 indicates that *Basic characteristics* are required.

The response from the frequency converter will be:

STX	LGE	ADR	PKE	IND	PWE_{HIGH}	PWE_{LOW}	PCD1	PCD2	BCC
02	0E	01	30 01	00 01	00 00	04 05	XX XX	XX XX	XX

PKE = 02 Start byte IND = 0001; 1 indicates that *Basic characteristics* are sent
PWE_{LOW} = 0405; 04 indicates that Basic behaviour as bit 10 corresponds to *Additional text*. 05 is the datatype which corresponds to *Unsigned 8*.

No of elements (index 2):
This function indicates the Number of elements (array) of a parameter. The answer to the master will be in PWE_{LOW}.

Conversion and Unit of measurement (index 4):
The Conversion and unit of measurement command indicates the conversion of a parameter and the unit of measurement. The answer to the master will be in PWE_{LOW}. The conversion index will be in the high byte of PWE_{LOW} and the unit index will be in the low byte of PWE_{LOW}. Note that conversion index is signed 8 and unit index is unsigned 8, see tables below.

The unit index defines the "Unit of measure". The conversion index defines how the value should be scaled to get the basic representation of the "Unit of measure". Basic representation is where conversion index equals "0".

Example:
A parameter has a "unit index" of 9 and a "conversion index" of 2. The raw (integer) value read is 23. This means that we have a parameter of the unit "Power" and the raw value should be multiplied by 10 to the power of 2 and the unit is W. $23 \times 10^2 = 2300$ W

MG.50.N4.02 - VLT is a registered Danfoss trademark

Table for conversion and unit of measurement

Unit index	Unit of measure	Designation	Conversion index
0	Dimension less		0
4	Time	s	0
		h	74
8	Energy	j	0
		kWh	
9	Power	W	0
		kW	3
11	Speed	1/s	0
		1/min (RPM)	67
16	Torque	Nm	0
17	Temperature	K	0
		°C	100
21	Voltage	V	0
22	Current	A	0
24	Ratio	%	0
27	Relative change	%	0
28	Frequency	Hz	0

Conversion index	Conversion factor
0	1
1	10
2	100
3	1000
-1	0.1
-2	0.01
-3	0.001
67	1/60
74	3600
75	3600000
100	1

Name (index 6):
The Name returns a string value in ASCII format, containing the name of the parameter.

Example:

In this example the master reads the name of parameter 001, *Language*.

The following telegram must be sent to the frequency converter:

STX	LGE	ADR	PKE	IND	PWE_{HIGH}	PWE_{LOW}	PCD1	PCD2	BCC
02	0E	01	40 01	00 06	00 00	00 00	XX XX	XX XX	XX

STX = 02 Start byte
LGE = 0E Length of remaining telegram
ADR = Sends the frequency converter on Address 1, Danfoss format
PKE = 4001; 4 in the PKE field indicates a *Read Parameter Description* and 01 indicates parameter number 001, *Language*
IND = 0006; 6 indicates that *Names* is required.

The response from the frequency converter will be:

STX	LGE	ADR	PKE	IND	PVA	PCD1	PCD2	BCC
02	12	01	30 01	00 06	4C41 4E47 5541 4745	XXXX	XXXX	XX

PKE = 3001; 3 are the response for *Name* and 01 indicates the parameter number 001, *Language*
IND = 00 06; 06 indicates that *Name* is sent.
PVA = 4C 41 4E 47 55 41 47 45
L A N G U A G E

The parameter value channel is now set up to a visible string which returns an ASCII character for each letter in the parameter name.

Lower limit (index 7):
The Lower limit returns the minimum allowed value of a parameter. The data type of Lower limit is the same as for the parameter itself.

Upper limit (index 8):
The Upper limit returns the maximum allowed value of a parameter. The data type of Upper limit is the same is for the parameter itself.

Default value (index 20):
The Default value returns the default value of a parameter, which is the factory setting. The data type of Default value is the same as for the parameter itself.

Additional characteristics (index 21):
The command can be used for getting some additional information on a parameter, eg. *No bus Access, Power Unit dependency, etc.*. The Additional characteristics returns an answer in PWE_{LOW}. If a bit is logic '1', the condition is true according to the table below:

Bit	Description
0	Special Default Value
1	Special Upper Limit
2	Special Lower Limit
7	LCP Access LSB
8	LCP Access MSB
9	NoBusAccess
10	Std Bus Read Only
11	Profibus Read Only
13	ChangeRunning
15	PowerUnitDependency

If one of bit 0 *Special Default Value*, bit 1 *Special Upper Limit* and bit 2 *Special Lower Limit* are true, the parameter has power unit depending values.

Bit 7 and 8 indicates the attributes for the LCP access, see table.

Bit 8	Bit 7	Description
0	0	No access
0	1	Read only
1	0	Read/write
1	1	Write with lock

Bit 9 indicates *No bus Access*.
Bits 10 and 11 indicates that this parameter can only be read over the bus.
If bit 13 is true, the parameter cannot be changed while running.
If bit 15 is true, the parameter is depending on the power unit.

■ Additional Text

With this feature it is possible to read additional text if bit 10, *Additional text available*, is true in Basic characteristics.

To read out additional text, the parameter command (PKE) must be set to F hex, see *Databytes*.

The index-field is used for pointing out which element to be read. Valid indexes are in the range of 1 through 254. The index must be calculated after the following equation:
Index = Parameter value + 1 (see table below).

Value	Index	Text
0	1	English
1	2	Deutsch
2	3	Français
3	4	Dansk
4	5	Espanol
5	6	Italiano

Example:
In this example, the Master reads additional text in parameter 001, *Language*. The telegram is set up to read datavalue [0] which corresponds to *English*. The following telegram must be sent to the VLT frequency converter:

STX	LGE	ADR	PKE	IND	PWE_{HIGH}	PWE_{LOW}	PCD1	PCD2	BCC
02	0E	01	F0 01	00 01	00 00	00 00	XX XX	XX XX	XX

STX = 02 Start byte
LGE = 0E Length of the remaining telegram
ADR = Send the VLT frequency converter on Address 1, Danfoss format
PKE = F001; F in the PKE field indicates a *Read text* and 01 indicates parameter number 001, *Language*.
IND = 0001; 1 indicates that text to parameter value [0] is required

The response from the VLT frequency converter will be:

STX	LGE	ADR	PKE	IND	PVA	PCD1	PCD2	BCC
02	11	01	F0 01	00 01	454E 474C 4953 48	XX XX	XX XX	XX

PKE = F001; F is the response for *Text transfer* and 01 indicates parameter number 001, *Language*.
IND = 0001; 1 indicates that index [1] is sent
PVA = 45 4E 47 4C 49 53 48
E N G L I S H

The parameter value channel is now set up to a visible string, which returns an ASCII character for each letter in the index name.

■ Galvanic Isolation (PELV)

PELV offers protection by way of extra low voltage. Protection against electric shock is considered to be ensured when the electrical supply is of the PELV type and the installation is made as described in local/national regulations on PELV supplies.

In VLT 5000 Crane all control terminals as well as terminals 01-03 (AUX relay) are supplied from or in connection with extra low voltage (PELV).

Galvanic (ensured) isolation is obtained by fulfilling requirements concerning higher isolation and by providing the relevant creapage/clearance distances. These requirements are described in the EN 50178 standard.

The components that make up the electrical isolation, as described below, also comply with the requirements concerning higher isolation and the relevant test as described in EN 50178.
The galvanic isolation can be shown in five locations (see drawing below), namely:

1. Power supply (SMPS) incl. signal isolation of U_{DC}, indicating the intermediate current voltage.
2. Gate drive that runs the IGBTs (trigger transformers/opto-couplers).
3. Current transducers (Hall effect current transducers).
4. Opto-coupler, brake module.

Galvanic isolation

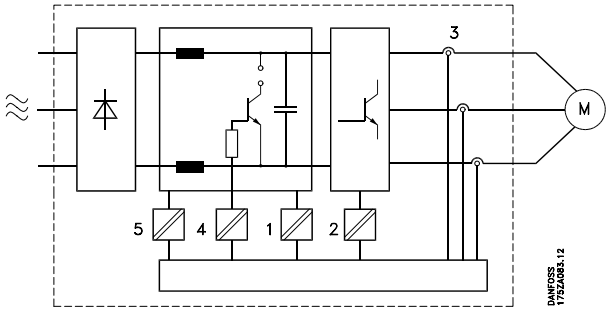

■ Earth leakage current

Earth leakage current is primarily caused by the capacitance between motor phases and the motor cable screen. When an RFI filter is used, this contributes additional leakage current, as the filter circuit is connected to earth through capacitors.
The size of the leakage current to the ground depends on the following factors, in order of priority:

1. Length of motor cable
2. Motor cable with or without screen
3. Switching frequency
4. RFI filter used or not
5. Motor grounded on site or not

The leakage current is of importance to safety during handling/operation of the frequency converter if (by mistake) the frequency converter has not been earthed.

NB!:
Since the leakage current is >3.5 mA, reinforced earthing must be established, which is required if EN 50178 is to be complied with. For 3-phased frequency converters, only fault current relays which are suitable for protection against DC currents (Din VDE 0664) are to be used. RCD fault current relays type B comply with these requirements according to the norm IEC 755-2.

The following requirements must be complied with:
- Suitable for protecting equipment with a direct current content (DC) in the fault current (3-phase rectifier)
- Suitable for power-up with short pulse-shaped charging current to earth
- Suitable for a high leakage current.

Appendix

Extreme Running Conditions

Short circuit

VLT 5000 Crane is protected against short circuits by means of current measurement in each of the three motor phases. A short circuit between two output phases will cause an overcurrent in the inverter. However, each transistor of the inverter will be turned off individually when the short circuit current exceeds the permitted value.

After 5-10 µs the control card turns off the inverter and the frequency converter will display a fault code, although depending on impedance and motor frequency.

Earth fault

The inverter cuts out within 100 µs in case of an earth fault on a motor phase, although depending on impedance and motor frequency.

Switching on the output

Switching on the output between the motor and the frequency converter is **NOT** permitted.

Motor-generated overvoltage

The voltage in the intermediate circuit is increased when the motor acts as a generator. This occurs in two cases:

1. The load drives the motor (at constant output frequency from the frequency converter), ie. the load generates energy.
2. During deceleration ("ramp-down") if the moment of inertia is high and the ramp-down time is too short for the energy to be dissipated as a loss in the frequency converter, the motor and the installation.

The control unit attempts to correct the ramp if possible. The inverter turns off to protect the transistors and the intermediate circuit capacitors when a certain voltage level is reached.

Mains drop-out

During a mains drop-out, VLT 5000 Crane continues until the intermediate circuit voltage drops below the minimum stop level, which is typically 15% below VLT 5000 Crane's lowest rated supply voltage.

The time before the inverter stops depends on the mains voltage before the drop-out and on the motor load.

Static overload

When VLT 5000 is overloaded (the torque limit in parameter 221/222 has been reached), the controls will reduce the speed in an attempt to reduce the load. If the overload is excessive, a current may occur that makes the frequency converter cut out after approx. 1.5 sec.

Switching on the Input

Switching on the input depends on the mains voltage in question. The table below states the waiting time between cut-ins.

Mains voltage	400 V	415 V	460 V	500 V
Waiting time	48 s	65 s	89 s	117s

Vibration and Shock

VLT 5000 Crane has been tested according to a procedure based on the following standards:

IEC 68-2-6:	Vibration (sinusoidal) - 1970
IEC 68-2-34:	Random vibration broad-band - general requirements
IEC 68-2-35:	Random vibration broad-band - high reproducibility
IEC 68-2-36:	Random vibration broad-band - medium reproducibility

VLT 5000 Crane complies with requirements that correspond to conditions when the unit is mounted on the walls and floors of production premises, as well as in panels bolted to walls or floors.

MG.50.N4.02 - VLT is a registered Danfoss trademark

Air Humidity

VLT 5000 Crane has been designed to meet the IEC 68-2-3 standard, EN 50178 pkt. 9.4.2.2/DIN 40040, class E, at 40°C.

Efficiency

Efficiency of VLT 5000 Crane (η_{VLT})

The load on the frequency converter has little effect on its efficiency. In general, the efficiency is the same at the rated motor frequency $f_{M,N}$, regardless of whether the motor supplies 100% of the rated shaft torque or only 75%, i.e. in case of part loads.

Efficiency of the motor (η_{MOTOR})

The efficiency of a motor connected to the frequency converter depends on the Wave shape of the current. In general, the efficiency is just as good as with mains operation. The efficiency of the motor depends on the type of motor.

In the range of 75-100% of the rated torque, the efficiency of the motor is practically constant, both when it is controlled by the frequency converter and when it runs directly on mains.

In general, the switching frequency does not affect the efficiency of small motors. Motors from 11 kW and up have their efficiency improved (1-2%). This is because the sine shape of the motor current is almost perfect at high switching frequency.

Efficiency of the system (η_{SYSTEM})

To calculate the system efficiency, the efficiency of VLT 5000 Crane (η_{VLT}) is multiplied by the efficiency of the motor (η_{MOTOR}):

$(\eta_{SYSTEM}) = \eta_{VLT} \times \eta_{MOTOR}$

■ Mains Supply Interference/Harmonics

A frequency converter takes up a non-sinusoidal current from mains, which increases the input current I_{RMS}. A non-sinusoidal current can be transformed by means of a Fourier analysis and split up into sine wave currents with different frequencies, i.e. different harmonic currents I_N with 50 Hz as the basic frequency:

Harmonic currents	I_1	I_5	I_7
Hz	50 Hz	250 Hz	350 Hz

The harmonics do not affect the power consumption directly, but increase the heat losses in the installation (transformer, cables). Consequently, in plants with a rather high percentage of rectifier load, it is important to maintain harmonic currents at a low level to avoid overload of the transformer and high temperature in the cables.

Some of the harmonic currents might disturb communication equipment connected to the same transformer or cause resonance in connection with power-factor correction batteries.

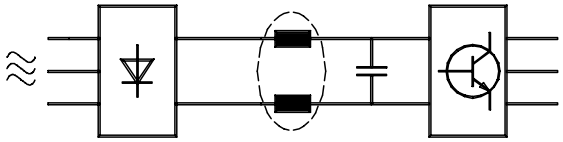

Harmonic currents compared to the RMS input current:

	Input current
I_{RMS}	1.0
I_1	0.9
I_5	0.4
I_7	0.2
I_{11-49}	< 0.1

To ensure low, harmonic currents, VLT 5000 Crane has intermediate circuit coils as standard. This normally reduces the input current I_{RMS} by 40%.

The voltage distortion on the mains supply depends on the size of the harmonic currents multiplied by the mains impedance for the frequency in question. The total voltage distortion THD is calculated on the basis of the individual voltage harmonics using the following formula:

$$THD\% = \sqrt{U_5^2 + U_7^2 + ...U_N^2} \quad \left(U_N\%of\ U\right)$$

■ Power Factor

The power factor is the relation between I_1 and I_{RMS}.

The power factor for 3-phase control:

$$\text{Power factor} = \frac{\sqrt{3} \times U \times I_1 \times \cos\varphi_1}{\sqrt{3} \times U \times I_{RMS}}$$

$$= \frac{I_1 \times \cos\varphi_1}{I_{RMS}} = \frac{I_1}{I_{RMS}} \text{ since } \cos\varphi_1 = 1$$

The power factor indicates the extent to which the frequency converter imposes a load on the mains supply.
The lower the power factor, the higher the I_{RMS} for the same kW performance.

In addition, a high power factor indicates that the different harmonic currents are low.

$$I_{RMS} = \sqrt{I_1^2 + I_5^2 + I_7^2 + .. + I_n^2}$$

■ General aspects of EMC emissions

Electrical interference at frequences in the range 150 kHz to 30 MHz are usually conducted. Airborne interference from the drive system in the range 30 MHz to 50 MHz is generated from the inverter, the motor cable and the motor.

As the sketch below shows, capacitive currents in the motor cable together with a high dV/dt from the motor voltage generate leakage currents.
The use of a screened motor cable increases the leakage current (see figure below). This is because screened cables have higher capacitance to earth

MG.50.N4.02 - VLT is a registered Danfoss trademark

than unscreened cables. If the leakage current is not filtered, it will cause greater interference on the mains in the radio frequency range below approx. 5 MHz. Since the leakage current (I_1) is carried back to the unit through the screen (I_3), there will in principle only be a small electro-magnetic field (I_4) from the screened motor cable according to the below figure.

The screen reduces the radiated interference, but increases the low-frequency interference on the mains. The motor cable screen must be connected to the frequency converter enclosure as well as on the motor enclosure. The best way of doing this is by using integrated screen clamps so as to avoid twisted screen ends (pigtails). These increase the screen impedance at higher frequencies, which reduces the screen effect and increases the leakage current (I_4).

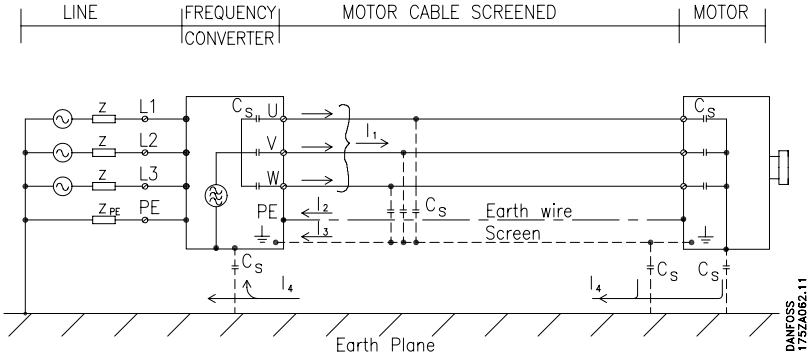

In the cases when the screen is to be placed on a mounting plate for the frequency converter, the mounting plate must be made of metal, because the screen currents are to be conveyed back to the unit. It is also important to ensure good electrical contact from the mounting plate through the mounting screws to the frequency converter chassis.

NB!:
Please note, however, that when unscreened cables are used, some emission requirements are not complied with, although the immunity requirements are complied with.

In order to reduce the interference level from the system overall (unit + installation) as far as possible, it is important to make motor and brake cables as short as possible. Cables with a sensitive signal level must not be alongside motor and brake cables. Radio interference higher than 50 MHz (airborne) will be generated especially by the control electronics.

■ Control with Brake Function

The function of the brake is to limit the voltage in the intermediate circuit when the motor is acting as a generator. This occurs, for example, when the load drives the motor and the power enters the intermediate circuit. The brake is built up in the form of a chopper circuit with the connection of an external brake resistor. Placing the brake resistor externally offers the following advantages:

- The brake resistor can be selected on the basis of the application in question.
- The brake energy is dissipated outside the control panel, ie. where the energy can be utilized.
- The electronics of the frequency converter will not be overheated if the brake resistor is overloaded.

The brake is protected against short-circuiting of the brake resistor, and the brake transistor is monitored to ensure that short-circuiting of the transistor is detected. By using a relay/digital output, the latter can be used for protecting the brake resistor against overloading in connection with a fault in the frequency converter.
In addition, the brake makes it possible to read out the momentary power and the mean power for the latest 120 seconds, as well as to monitor that the power energizing does not exceed a monitoring limit selected via parameter 402. In parameter 403 select the function to be carried out when the power transmitted to the brake resistor exceeds the limit set in parameter 402.

NB!:
Monitoring of the brake power is not a safety function; a thermal switch is required for that purpose. The brake resistor circuit is not earth leakage protected.

■ Selection of Brake Resistor

In order to select the right brake resistor, the application must be known through-and-through, i.e. it must be known how often to brake and by how much power braking is effected.

The resistor ED, which is often used by motor suppliers when stating the permissible load, is an indication of the duty cycle at which the resistor is working.

The resistor ED is calculated as follows:

$$\mathrm{ED\ (duty-cycle)} = \frac{\mathrm{tb}}{(\mathrm{t2} - \mathrm{t1})}$$

in which t2-t1 = cycle time in seconds and tb is the braking time in seconds (of the cycle time).

The maximum permissible load on the brake resistor is stated as a peak power at a given ED. That is why the peak power for the brake resistor and the resistor value must be determined.
The following example and formula apply to VLT 5000 and VLT 5000 Crane. The peak power can be calculated on the basis of the highest brake resistance required for braking:

$P_{PEAK} = P_{MOTOR} \times M_{BR(\%)} \times \eta_{MOTOR} \times \eta_{VLT}$ [W]

where $M_{BR(\%)}$ is expressed as a percentage of the rated torque.
The brake resistance is calculated as follows:

$$\mathrm{R_{REC}} = \frac{U_{DC^2}}{P_{PEAK}} \qquad [\Omega]$$

As can be seen, the brake resistance depends on the intermediate circuit voltage (UDC).
With VLT 5000 Crane frequency converters that have a mains voltage of 3 x400-500 Volts, the brake will be active at 822 Volts (UDC).

NB!:
Remember to check whether the brake resistor used is able to cope with a voltage of 850 Volts - unless Danfoss brake resistors are used.

R_{REC} is the brake resistance recommended by Danfoss, i.e. one that guarantees the user that the frequency converter is able to brake at the highest braking torque (M_{br}) of 160%.
η_{motor} is typically at 0.90, while η_{VLT} is typically at 0.98. For 500 V frequency converters, R_{REC} at 160% braking torque can be written as:

$$\mathrm{R_{REC}} = \frac{478801}{P_{MOTOR}} \qquad [\Omega]$$

NB!:
The max. brake resistance selected should have an ohmic value max. 10% lower than that recommended by Danfoss. If a brake resistor with a higher ohmic value is selected, the 160% braking torque will not be achieved and there is a risk that the VLT 5000 Crane will cut out for safety reasons. For further information, please consult Brake Instructions MI.50.Dx.xx.

MG.50.N4.02 - VLT is a registered Danfoss trademark

NB!:
If a short circuit in the brake transistor occurs, power dissipation in the brake resistor can only be prevented by using a mains switch or contactor to disconnect the mains for the frequency converter. (The contactor can be controlled by the frequency converter).

■ Ordering Numbers, Compact

400 / 415 / 440 / 460 / 500 V

					Ordering No.
VLT	kW	Enclosure	Vers.	RFI	w/LCP
5042	22	IP 20	SB	R3	175Z3233
5052	30	IP 20	SB	R3	175Z3120
5062	37	IP 20	SB	R3	175Z4850
5072	45	IP 20	SB	R3	175Z4831
5102	65	IP 20	SB	R3	175Z4408
5152	90	IP 00	SB	R1	176F2034
5202	110	IP 00	SB	R1	176F2035

LCP: Control unit with display and keypad.
SB: Standard unit with/without control unit and integral brake chopper.
R3: With RFI filter option, compliance of EN 55011-1B with 50 m screened motor cable and EN 55011-1A with 150 screened motor cable.

MG.50.N4.02 - VLT is a registered Danfoss trademark

A

Accuracy of Display Readout 18
Actual Output Speed 103
Additional characteristics 109
Additional Text 110
Address 82
Advanced VLT Protection 13
Advanced Motor Protection 13
AI (mA) 60 Funct. 63
AI 53 Funct. 62
AI 53 Max. scaling 63
AI 53 Min. scaling 63
AI 60 Scale 63
AI 60 Scale Low 63
Air Humidity 113
Analogue Current Input 67
Analogue in 58 scale high 67
Analogue in 58 scale low 67
Analogue Inputs 16
AO 42 64

B

Basic characteristics 105
Baudrate 82
Brake check 68
Brake Connection 29
Brake function/overvoltage control 68
Brake monitoring 74
Brake on RPM 74
Brake power limit, kW 68
Brake resistor, ohm 68
Brake ResistorTerminal 18
Bus Reference Value 103

C

Cable Lengths and Cross-Sections 18
Configuration 54
Connection of Mains 27
Connection of Motor 27
Control Caracteristics 18
Control Principle 12
Control with Brake Function 116
Control Word in FC profile 101
Conversion and unit of measurement 106

D

Data Change Lock 53
Data readout 83
Databytes 96
Default value 109
Defined Parameters 85
Derating for Ambient Temperature 94
Derating for Running at Low Speed 94
Derating hoisting 75
Derating lowering 75
Description of Functions 10
Digital Inputs 16
Digital/Pulse and Analogue Outputs 17
Display line 1.1 52
Display line 1.2 52
Display line 1.3 52
Display line 2 51
Display mode 42
Display Mode - Selection of Read-Out State 37
Display Read-Out State 37
Drum inertia 1 75
Drum inertia 2 75

E

Earth leakage current 111
Earthing of Braided Screened/armoured Control Cables 35
Electrical Installation, Enclosures 31
Electrical Installation, Power Cables 27
EMC compliant cables 34
EMC-Correct Electrical Installation 29
Enclosure Protection 24
Encoder feedback pulse/rev. 66
Encoder monitor 75
Encoder Supervisory Circuit 13
Externals 19
Extra Protection (RCD) 30
Extreme Running Conditions 112

F

Fault log: Error code 70
Fault log: Time 70
Fault log: Value 70
Fault Status at Remote and Local Control 11
Field weakening speed 57
Flash Test 73
Flux Vector 12
Flux Vector Control Principle 12
Frequency converter 6
Function at stop 55
Fuses 22

G

Galvanic Isolation (PELV) 111
Gear inertia 1 75
Gear inertia 2 76
Gear ratio 1 75
Gear ratio 2 76

General aspects of EMC emissions 114

H

High Voltage Test 30
Hoist direction 74

I

IT mains 33
Infinitely Variable Change of NumericData Value 40
Input 6
Installation of Brake Resistor Temperature Switch 29
Installation of Control Cables 28
Installation of Motor Cables 28
Installation of Relay Terminals 29
Intermediate circuit 12
Ironloss resistance 57

J

Jog frequency 59
Jog ramp time 58

L

Lower limit 109
Language 50
LCP copy 50
LCP JOGGING 52
LCP reset of trip 53
LCP reversing 52
LCP stop 52
LEDs 37
Live Zero Funct 64
Load high 74
Load low 74
Load monitoring 74
Local control 43
Local reference 50
Local/Remote Operation 50
Low speed at error 74
Low speed reference current 60

M

Main Reactance 56
Mains supply 16
Mains Supply Interference/Harmonics 114
Manual initialization 40
Maximum reference 58
Mean radius 1 75
Mean radius 2 76
Mechanical brake off delay 75
Mechanical brake on delay 75
Mechanical speed N1 76
Mechanical speed N2 76
Mechanical speed N3 77
Mechanical speed N4 77
Mechanical speed N5 77
Mechanical speed N6 77
Mechanical speed N7 ..... 78, 78
Minor Interference on Mains 13
Miscellaneous 7
Missing motor phase 59
Motor 7
Motor current 54
Motor frequency 54
Motor power 54
Motor Thermal Protection 30, 55
Motor voltage 54

N

Name 108
Nameplate data 72
NO/NC 6
Number of elements 106

O

Operating Data 70
Operating mode 71
Operating Status at Local Operation 11
Operating Status at Remote Control 10
Ordering Numbers, Compact 118
Output 6
Output speed high limit 58

P

Password Protection 42, 73
Phase Loss Monitor 60
Pole number 57
Power at N1 76
Power at N2 77
Power at N3 77
Power at N4 77
Power at N5 77
Power at N6 77
Power Factor 114
Power limit function 76
Power Loss N1 78
Power Loss N2 78
Power Loss N3 78
Power Loss N4 78
Power Loss N5 78
Power Loss N6 78
Power Loss N7 78

MG.50.N4.02 - VLT is a registered Danfoss trademark

Power monitoring 68
Process Bytes 98
Programmable Signal Outputs 12
Protection against Mains Interference 12
Pulse/Encoder Input 17

Q

Quick stop ramp-down time 58
Quick-stop 82

R

Ramp torque 74
Ramp-down time 1 58
Ramp-up time 1 58
Rated motor 55
Read parameter description elements 105
References 7
Relay 01, OFF delay 65
Relay 01, ON delay 65
Relay 01, output 65
Relay 04, output 65
Relay Outputs 18
Reliable Galvanic Isolation 13
Reset kWh Counter 71
Reset function 69
Reset Run Hours 71
Reversing 83
RFI switch 33
Rotor Inertia 57
Rotor Leakage Reactance 56
Rotor Resistance 56
RS 232 Serial Communication 17
RS 485 80
RS 485 Serial Communication 17

S

Safety Earthing 35
Safety Regulations 4
Selection of Brake Resistor 116
Serial Communication 95
Signal output 26 67
Signal output 46 66
Speed PI lowpass filter time 69
Start 82
Start torque 74
Stator Leakage Reactance 56
Stator Resistance 56
Status Word in Crane Profile 100
Status word in FC profile 102
Switches 1-4 30
Switching on the Input 112
System Components 11
System Description 9

T

Telegram Build-up 95
Telegram Communication 95
Telegram Profile 83
Terminal 16 61
Terminal 45, output 65
Tightening-up Torques and Screw Sizes 30
Time out 64
Torque Characteristics 16
Torque limit for generating operation 59
Torque limit for motor mode 59

U

Upper limit 109

V

Ventilation when Panelmounted 25
Vibration and Shock 112
VLT 5000 Crane Protection 19
VLT Output Data 16

W

Warning Against Unintended Start 4
Warnings and Alarms, 1-6 88
Warnings and Alarms, 19-27 90
Warnings and Alarms, 29-49 91
Warnings and Alarms, 7-16 89

2

24 V DC Output 17

www.danfoss.com/drives

Danfoss can accept no responsibility for possible errors in catalogues, brochures and other printed material. Danfoss reserves the right to alter its products without notice. This also applies to products already on order provided that such alterations can be made without subsequential changes being necessary in specifications already agreed.
All trademarks in this material are property of the respective companies. Danfoss and the Danfoss logotype are trademarks of Danfoss A/S. All rights reserved.

175R0259 MG50N402 Rev. 2004-03-29