MAKING MODERN LIVING POSSIBLE

Operating Instructions

VLT® AQUA Drive FC 202

110–1400 kW

www.danfoss.com/drives

VLT® THE REAL DRIVE

ENGINEERING
TOMORROW

Danfoss A/S
6430 Nordborg
Denmark
CVR nr.: 20 16 57 15

Telephone: +45 7488 2222
Fax: +45 7449 0949

EU DECLARATION OF CONFORMITY

Danfoss A/S

Danfoss Drives A/S

declares under our sole responsibility that the

Product category: Frequency Converter
Type designation(s): FC-202XYYYZZ**********

Character X: N or P
Character YYY: K25, K37, K55, K75, 1K1, 1K5, 2K2, 3K0, 3K7, 4K0, 5K5, 7K5, 11K, 15K, 18K, 22K, 30K, 37K, 45K, 55K, 75K, 90K, 110, 132, 150, 160, 200, 250, 315, 355, 400, 450, 500, 560, 630, 710, 800, 900, 1M0, 1M2, 1M4
Character ZZ: S2, S4, T2, T4, T6, T7
* may be any number or letter indicating drive options which do not impact this DoC.
The meaning of the 39 characters in the type code string can be found in appendix 00729776.

Covered by this declaration is in conformity with the following directive(s), standard(s) or other normative document(s), provided that the product is used in accordance with our instructions.

Low Voltage Directive 2014/35/EU

EN61800-5-1:2007 + A1:2017	Adjustable speed electrical power drive systems – Part 5-1: Safety requirements – Electrical, thermal and energy.

EMC Directive 2014/30/EU

EN61800-3:2004 + A1:2012	Adjustable speed electrical power drive systems – Part 3: EMC requirements and specific test methods.

RoHS Directive 2011/65/EU including amendment 2015/863.

EN63000:2018	Technical documentation for the assessment of electrical and electronic products with respect to the restriction of hazardous substances

Date: 2020.09.15 Place of issue:	Issued by	Date: 2020.09.15 Place of issue:	Approved by
Graasten, DK	**Signature:** **Name: Gert Kjær** **Title: Senior Director, GDE**	Graasten, DK	**Signature:** **Name: Michael Termansen** **Title: VP, PD Center Denmark**

Danfoss only vouches for the correctness of the English version of this declaration. In the event of the declaration being translated into any other language, the translator concerned shall be liable for the correctness of the translation

For products including available Safe Torque Off (STO) function according to unit typecode on the nameplate: **T or U at character 18 of the typecode.**

Machine Directive 2006/42/EC

EN/IEC 61800-5-2:2007 (Safe Stop function conforms with STO – Safe Torque Off, SIL 2 Capability)	Adjustable speed electrical power drive systems – Part 5-2: Safety requirements – Functional

Other standards considered:

EN ISO 13849-1:2015 (Safe Stop function, PL d (MTTFd=14000 years, DC=90%, Category 3)	Safety of machinery - Safety-related parts of control systems - Part 1: General principles for design
EN/IEC 61508-1:2011, EN/IEC 61508-2:2011 (Safe Stop function, SIL 2 (PFH = 1E-10/h, 1E-8/h for specific variants, PFD = 1E-10, 1E-4 for specific variants, SFF>99%, HFT=0))	Functional safety of electrical/electronic/ programmable electronic safety-related systems Part 1: General requirements Part 2: Requirements for electrical/ electronic / programmable electronic safety-related systems
EN/IEC 62061:2005 + A1:2013 (Safe Stop function, SILCL 2)	Safety of machinery - Functional safety of safety-related electrical, electronic and programmable electronic control systems
EN/IEC 60204-1:2006 + A1:2009 (Stop Category 0)	Safety of machinery - Electrical equipment of machines - Part 1: General requirements

For products including ATEX option, it requires STO function in the products. The products can have the VLT PTC Thermistor Card MCB112 installed from factory **(2 at character 32 in the typecode)**, or it can be separately installed as an additional part.

2014/34/EU - Equipment for explosive atmospheres (ATEX)

Based on EU harmonized standard:

EN 50495: 2010	Safety devices required for safe functioning of equipment with respect to explosion risks.

Notified Body:
PTB Physikalisch-Technische Bundesanstalt, Bundesallee 100, 38116 Braunschweig,
has assessed the conformity of the "ATEX certified motor thermal protection systems" of Danfoss FC VLT Drives with Safe Torque Off function and has issued the certificate PTB 14 ATEX 3009.

Contents

1

1 How to Read these Operating Instructions

VLT AQUA Drive
FC 200 Series

Software version: 2.1x

This guide can be used with all FC 202 frequency converters with software version 2.1x or later. The actual software version number can be read from *15-43 Software Version*.

1.1.1 Available Literature

- *VLT® AQUA Drive FC 202 Operating Instructions* provide the neccessary information for getting the frequency converter up and running.
- *VLT® AQUA Drive FC 202, 110-1400 kW Operating Instructions* provide the neccessary information for getting the high power frequency converter up and running.
- *VLT® AQUA Drive FC 202 Design Guide* entails all technical information about the frequency converter and customer design and applications.
- *VLT® AQUA Drive FC 202 Programming Guide* provides information on how to programme and includes complete parameter descriptions.
- *VLT® AQUA Drive FC 202 Profibus*
- *VLT® AQUA Drive FC 202 DeviceNet*
- *Output Filters Design Guide*
- *VLT® AQUA Drive FC 202 Cascade Controller*
- Application Note MN20A: *Submersible Pump Application*
- Application Note MN20: *Master/Follower Operation Application*
- Application Note MN20F: *Drive Closed Loop and Sleep Mode*
- *Installation Instruction for Mounting Brackets Enclosure type A5, B1, B2, C1 and C2 IP21, IP55 or IP66*
- *Instruction for Analog I/O Option MCB109*
- *Instruction for Panel through mount kit*
- *VLT® Active Filter Operating Instruction*

Danfoss technical literature is also available online at www.danfoss.com/BusinessAreas/DrivesSolutions/Documentations/Technical+Documentation.htm.

The frequency converter complies with UL508C thermal memory retention requirements. For more information, refer to the section *Motor Thermal Protection* in the *Design Guide*.

NOTICE

Imposed limitations on the output frequency (due to export control regulations):

From software version 6.72 the output frequency of the frequency converter is limited to 590 Hz. Software versions 6x.xx also limit the maximum output frequency to 590 Hz, but these versions cannot be flashed, i.e. neither downgraded nor upgraded.

The following symbols are used in this document:

⚠WARNING

Indicates a potentially hazardous situation which could result in death or serious injury.

⚠CAUTION

Indicates a potentially hazardous situation which could result in minor or moderate injury. It may also be used to alert against unsafe practices.

NOTICE

Indicates important information, including situations that may result in damage to equipment or property.

2 Safety

2

2.1 Safety Note

⚠WARNING

The voltage of the frequency converter is dangerous whenever connected to mains. Incorrect installation of the motor, frequency converter or fieldbus may cause damage to the equipment, serious personal injury or death. Consequently, the instructions in this manual, as well as national and local rules and safety regulations, must be complied with.

Safety Regulations

1. The frequency converter must be disconnected from mains if repair work is to be carried out. Check that the mains supply has been disconnected and that the necessary time has passed before removing motor and mains plugs.
2. The [STOP/RESET] key on the control panel of the frequency converter does not disconnect the equipment from mains and is thus not to be used as a safety switch.
3. Correct protective earthing of the equipment must be established, the user must be protected against supply voltage, and the motor must be protected against overload in accordance with applicable national and local regulations.
4. The earth leakage currents are higher than 3.5 mA.
5. Protection against motor overload is set by par. 1-90 *Motor Thermal Protection*. If this function is desired, set par. 1-90 to data value [ETR trip] (default value) or data value [ETR warning]. Note: The function is initialised at 1.16 x rated motor current and rated motor frequency. For the North American market: The ETR functions provide class 20 motor overload protection in accordance with NEC.
6. Do not remove the plugs for the motor and mains supply while the frequency converter is connected to mains. Check that the mains supply has been disconnected and that the necessary time has passed before removing motor and mains plugs.
7. Note that the frequency converter has voltage inputs other than L1, L2 and L3, when load sharing (linking of DC intermediate circuit) and external 24 V DC have been installed. Check that all voltage inputs have been disconnected and that the necessary time has passed before commencing repair work.

NOTICE

Installation at high altitude:
380 - 480 V: At altitudes above 3,000 m, contact Danfoss regarding PELV.
525 - 690 V: At altitudes above 2,000 m, contact Danfoss regarding PELV.

Warning against Unintended Start

1. The motor can be stopped with digital commands, bus commands, references or a local stop, while the frequency converter is connected to mains. To avoid personal injury, these stop functions are not sufficient to ensure that no unintended start occurs.
2. While parameters are being changed, the motor may start. Consequently, always press [RESET]; following which data can be modified.
3. A motor that has been stopped may start if faults occur in the electronics of the frequency converter, or if a temporary overload or a fault in the supply mains or the motor connection ceases.

⚠WARNING

Warning:
Touching the electrical parts may be fatal - even after the equipment has been disconnected from mains.

Also make sure that other voltage inputs have been disconnected, such as external 24 V DC, load sharing (linkage of DC intermediate circuit), as well as the motor connection for kinetic back-up.

2.1.1 General Warning

⚠WARNING

Warning:
Touching the electrical parts may be fatal - even after the equipment has been disconnected from mains.
Also make sure that other voltage inputs have been disconnected, (linkage of DC intermediate circuit), as well as the motor connection for kinetic back-up.
Before touching any potentially live parts of the frequency converter, wait at least as follows: Be aware that there may be high voltage on the DC link even when the Control Card LEDs are turned off. A red LED is mounted on a circuit board inside the frequency converter to indicate the DC bus voltage. The red LED stays lit until the DC link is 50 V DC or lower.

⚠WARNING

Leakage Current
The earth leakage current from the frequency converter exceeds 3.5 mA. According to IEC 61800-5-1 a reinforced Protective Earth connection must be ensured by means of: a min. 10mm² Cu or 16mm² Al PE-wire or an addtional PE wire - with the same cable cross section as the Mains wiring - must be terminated separately.
Residual Current Device
This product can cause a D.C. current in the protective conductor. Where a residual current device (RCD) is used for extra protection, only an RCD of Type B (time delayed) shall be used on the supply side of this product. See also RCD Application Note MN.90.GX.02. Protective earthing of the frequency converter and the use of RCD's must always follow national and local regulations.

2.1.2 Before Commencing Repair Work

1. Disconnect the frequency converter from mains.
2. Disconnect DC bus terminals 88 and 89.
3. Wait at least the time mentioned in *chapter 2.1.1 General Warning*.

2.1.3 Special Conditions

Electrical ratings
The rating indicated on the nameplate of the frequency converter is based on a typical 3-phase mains power supply, within the specified voltage, current and temperature range, which is expected to be used in most applications.

The frequency converters also support other special applications, which affect the electrical ratings of the frequency converter. Special conditions which affect the electrical ratings might be:

- Single phase applications
- High temperature applications which require derating of the electrical ratings
- Marine applications with more severe environmental conditions.

Consult the relevant clauses in these instructions and in the *Design Guide* for information about the electrical ratings.

Installation requirements
The overall electrical safety of the frequency converter requires special installation considerations regarding:

- Fuses and circuit breakers for over-current and short-circuit protection
- Selection of power cables (mains, motor, brake, loadsharing and relay)
- Grid configuration (IT,TN, grounded leg, etc.)
- Safety of low-voltage ports (PELV conditions)

Consult the relevant clauses in these instructions and in the *Design Guide* for information about the installation requirements.

⚠WARNING

The frequency converter's DC link capacitors remain charged after power has been disconnected. To avoid an electrical shock hazard, disconnect the frequency converter from the mains before carrying out maintenance. Before doing service on the frequency converter, wait at least the amount of time indicated below:

Voltage	Power size	**Min. Waiting Time**
380 - 480 V	110 - 250 kW	20 minutes
	315 - 1000 kW	40 minutes
525 - 690 V	45 - 400 kW	20 minutes
	450- 1400 kW	30 minutes
Be aware that there may be high voltage on the DC link even when the LEDs are turned off.		

Table 2.1 Discharge Time

2.1.4 Avoid Unintended Start

⚠WARNING

While the frequency converter is connected to mains, the motor can be started/stopped using digital commands, bus commands, references or via the Local Control Panel.

- **Disconnect the frequency converter from mains whenever personal safety considerations make it necessary to avoid unintended start.**
- **To avoid unintended start, always activate the [Off] key before changing parameters.**
- **Unless terminal 37 is turned off, an electronic fault, temporary overload, a fault in the mains supply, or lost motor connection may cause a stopped motor to start.**

2.1.5 Safe Torque Off (STO)

To run Safe Torque Off, additional wiring for the frequency converter is required, refer to *Safe Torque Off Operating Instructions for Danfoss VLT® Frequency Converters* for further information.

2.1.6 IT Mains

⚠WARNING

IT mains
Do not connect frequency converters with RFI-filters to mains supplies with a voltage between phase and earth of more than 440 V for 400 V converters and 760 V for 690 V converters.
For 400 V IT mains and delta earth (grounded leg), mains voltage may exceed 440 V between phase and earth.
For 690 V IT mains and delta earth (grounded leg), mains voltage may exceed 760 V between phase and earth.
Failure to follow recommendations could result in death or serious injury.

14-50 RFI Filter can be used to disconnect the internal RFI capacitors from the RFI filter to ground.

2.1.7 Disposal Instruction

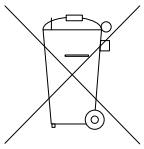

Equipment containing electrical components must not be disposed of together with domestic waste.
It must be separately collected with electrical and electronic waste according to local and currently valid legislation.

3 How to Install

3.1 How to Get Started

This chapter covers mechanical and electrical installations to and from power terminals and control card terminals. Electrical installation of options is described in the relevant *Operating Instructions* and *Design Guide*.

The frequency converter is designed to achieve a quick and EMC-correct installation by following the steps described below.

WARNING

Read the safety instructions before installing the unit. Failure to follow recommendations could result in death or serious injury.

Mechanical Installation

- Mechanical mounting

Electrical Installation

- Connection to Mains and Protecting Earth
- Motor connection and cables
- Fuses and circuit breakers
- Control terminals - cables

Quick Setup

- Local Control Panel, LCP
- Automatic Motor Adaptation, AMA
- Programming

Frame size is depending on enclosure type, power range and mains voltage

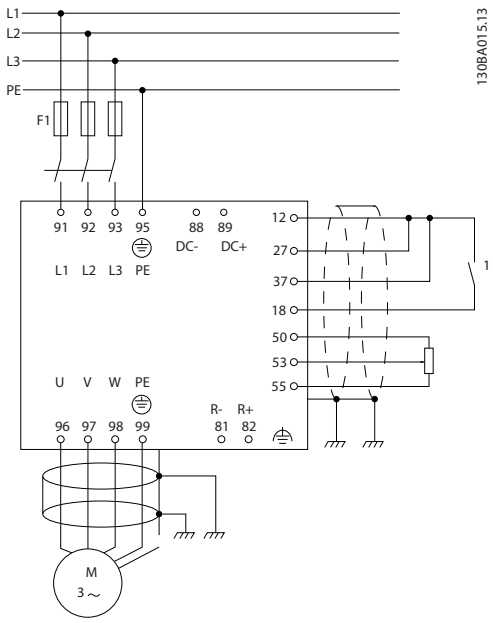

Illustration 3.1 Diagram showing basic installation including mains, motor, start/stop key, and potentiometer for speed adjustment.

3.2 Pre-installation

3.2.1 Planning the Installation Site

CAUTION

Before performing the installation it is important to plan the installation of the frequency converter. Neglecting this may result in extra work during and after installation.

Select the best possible operation site by considering the following (see details on the following pages, and the respective Design Guides)

- Ambient operating temperature
- Installation method
- How to cool the unit
- Position of the frequency converter
- Cable routing
- Ensure the power source supplies the correct voltage and necessary current
- Ensure that the motor current rating is within the maximum current from the frequency converter
- If the frequency converter is without built-in fuses, ensure that the external fuses are rated correctly.

3

3.2.2 Receiving the Frequency Converter

When receiving the frequency converter, make sure that the packaging is intact, and be aware of any damage that might have occurred to the unit during transport. In case damage has occurred, contact immediately the shipping company to claim the damage.

3.2.3 Transportation and Unpacking

Before unpacking the frequency converter it is recommended that it is located as close as possible to the final installation site.
Remove the box and handle the frequency converter on the pallet, as long as possible.

3.2.4 Lifting

Always lift the frequency converter in the dedicated lifting eyes. For all D and E2 (IP00) enclosures, use a bar to avoid bending the lifting holes of the frequency converter.

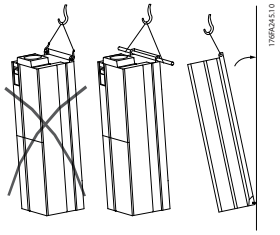

Illustration 3.2 Recommended Lifting Method, Enclosure Types D and E

⚠WARNING

The lifting bar must be able to handle the weight of the frequency converter. See *Mechanical Dimensions* for the weight of the different enclosure type. Maximum diameter for bar is 2.5 cm (1 inch). The angle from the top of the frequency converter to the lifting cable should be 60° or greater.

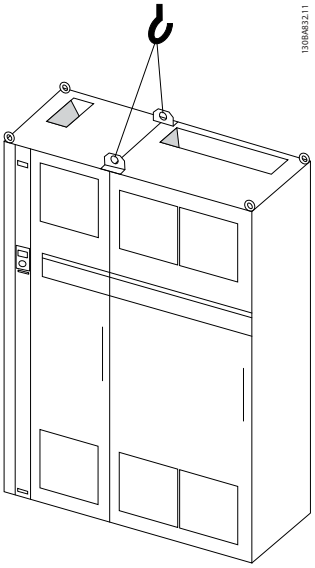

Illustration 3.3 Recommended Lifting Method, Enclsoure Type F1 (460 V, 600 to 900 HP, 575/690 V, 900 to 1150 HP)

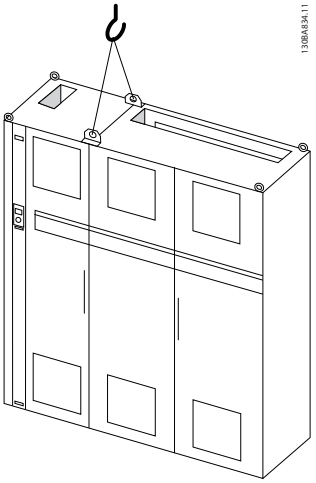

Illustration 3.4 Recommended Lifting Method, Enclosure Type F2 (460 V, 1000 to 1200 HP, 575/690 V, 1250 to 1350 HP)

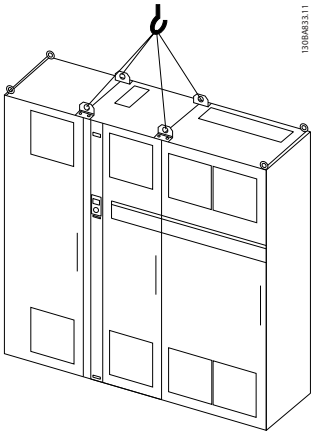

Illustration 3.5 Recommended Lifting Method, Enclosure Type F3 (460 V, 600 to 900 HP, 575/690 V, 900 to 1150 HP)

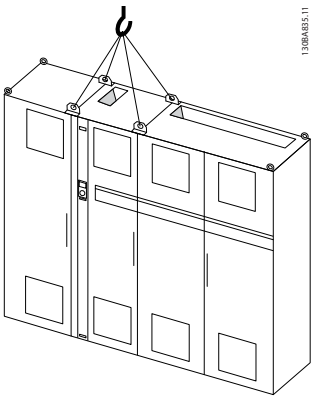

Illustration 3.6 Recommended Lifting Method, Enclosure Type F4 (460 V, 1000 to 1200 HP, 575/690 V, 1250 to 1350 HP)

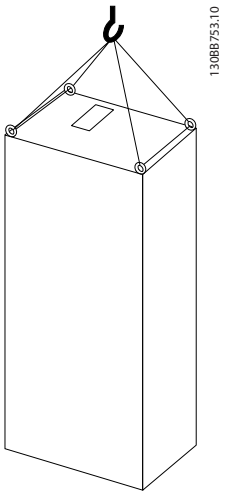

Illustration 3.7 Recommended lifting method, Enclosure Type F8

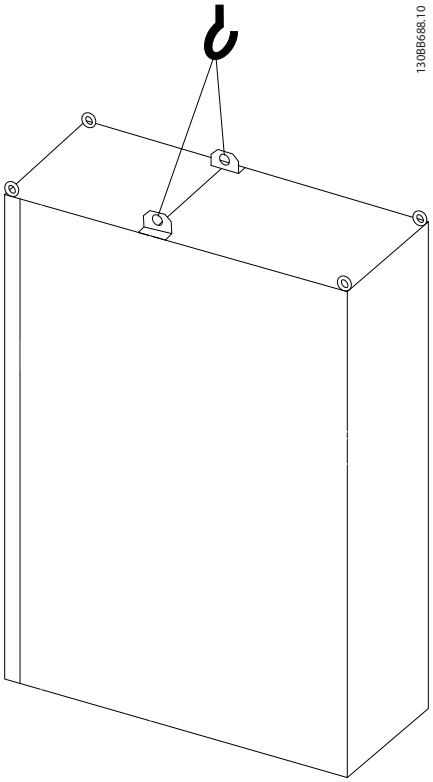

Illustration 3.8 Recommended lifting method, Enclosure Type F9/F10

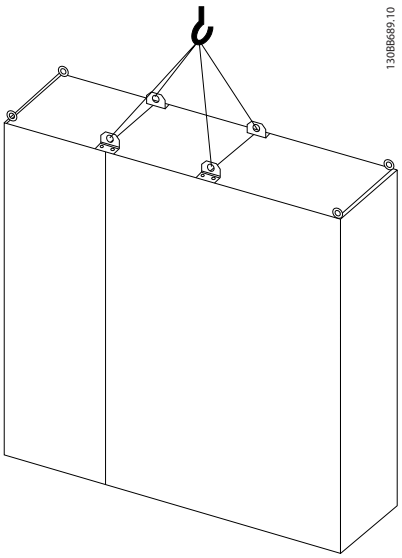

Illustration 3.9 Recommended lifting method, Enclosure Type F11/F12/F13/F14

NOTICE

The plinth is provided in the same packaging as the frequency converter but is not attached to enclosure types F1-F4 during shipment. The plinth is required to allow airflow to the frequency converter to provide proper cooling. The F enclosures should be positioned on top of the plinth in the final installation location. The angle from the top of the frequency converter to the lifting cable should be 60° or greater.
In addition to the drawings above a spreader bar is an acceptable way to lift the F enclosures.

3

3.2.5 Mechanical Dimensions

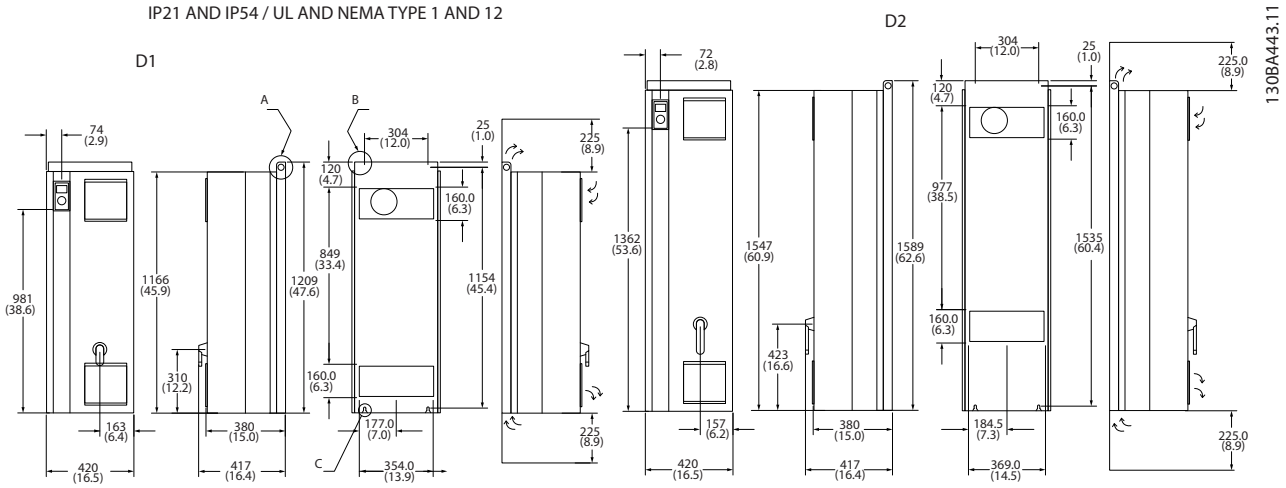

Illustration 3.10

* *Note airflow directions*

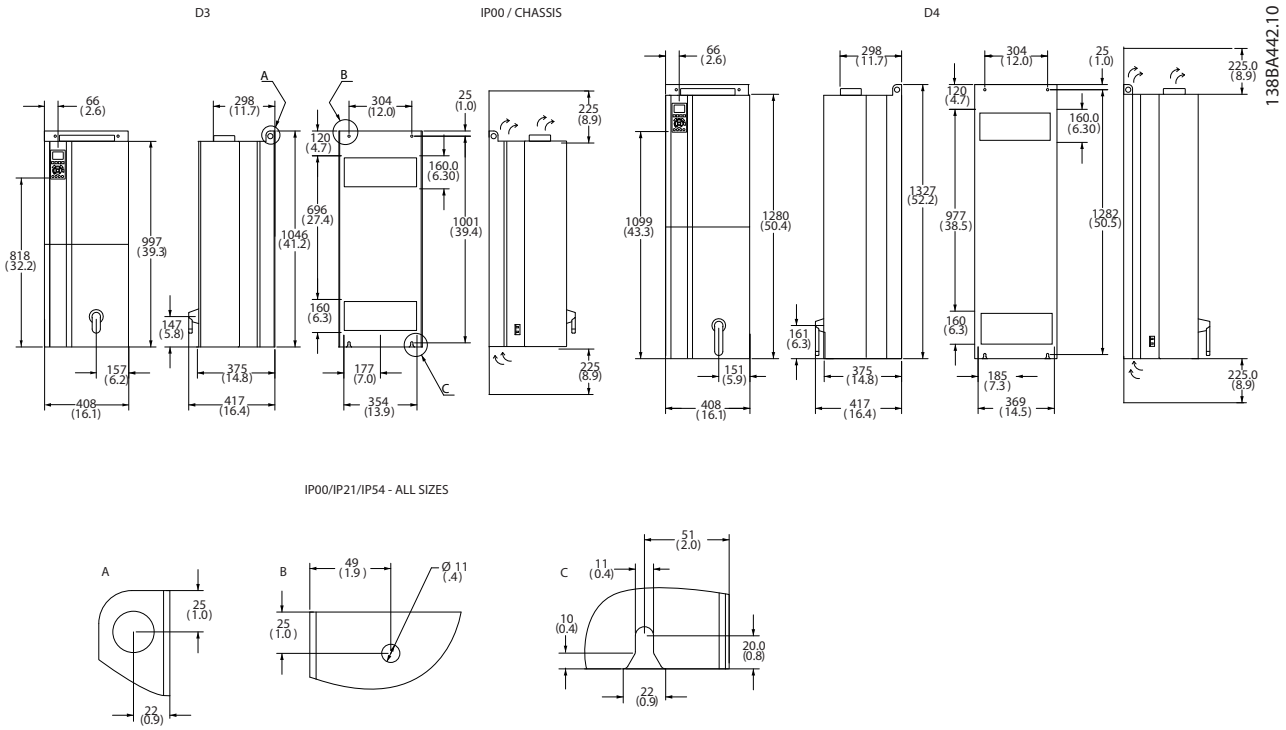

Illustration 3.11

* *Note airflow directions*

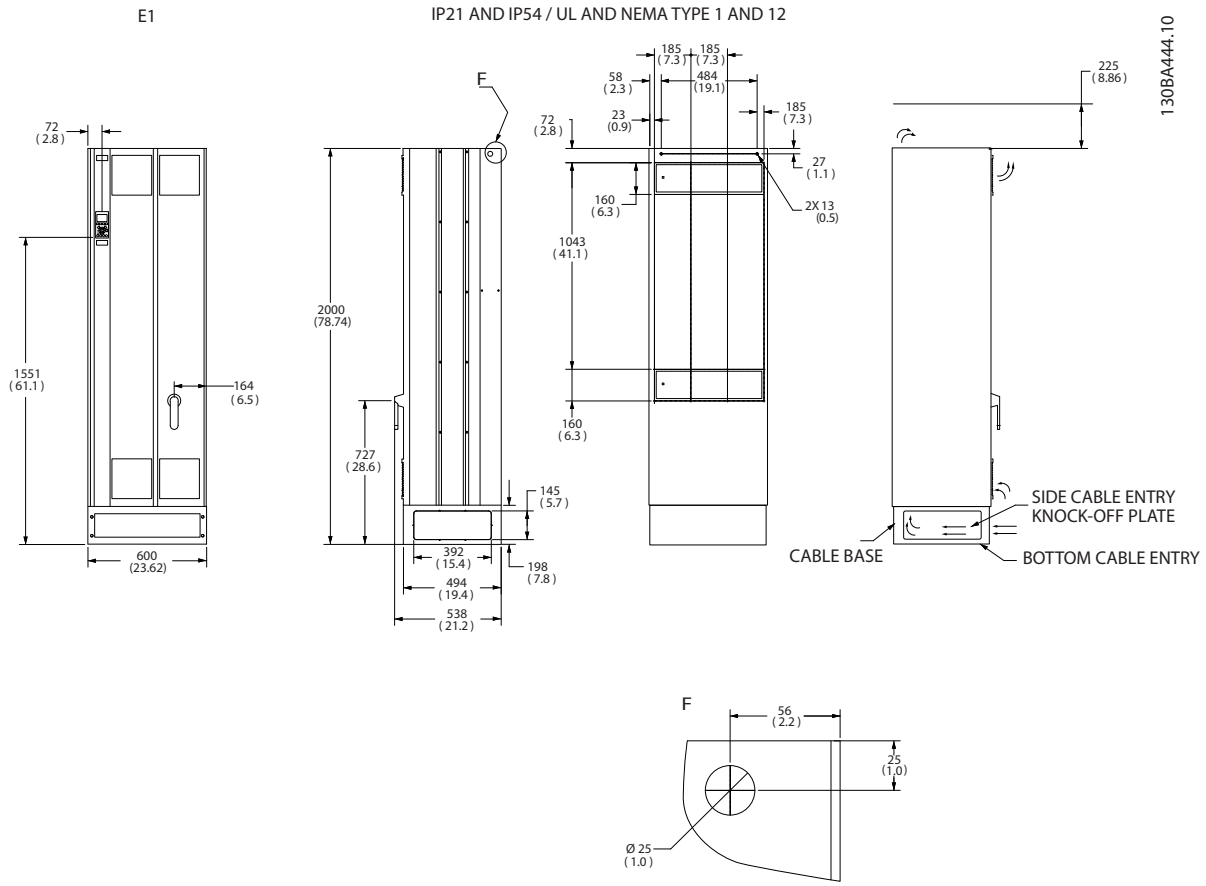

Illustration 3.12

* *Note airflow directions*

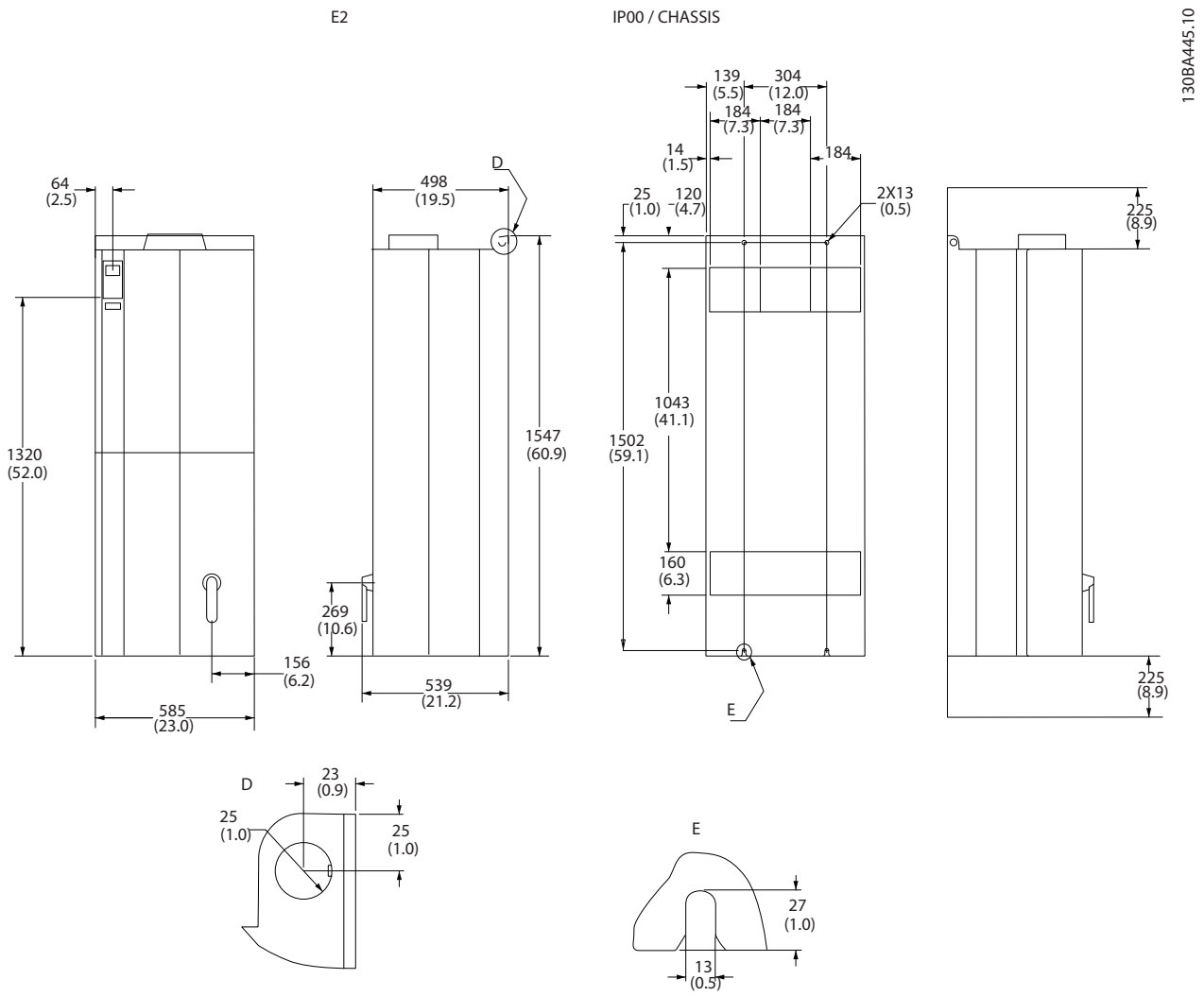

Illustration 3.13

* *Note airflow directions*

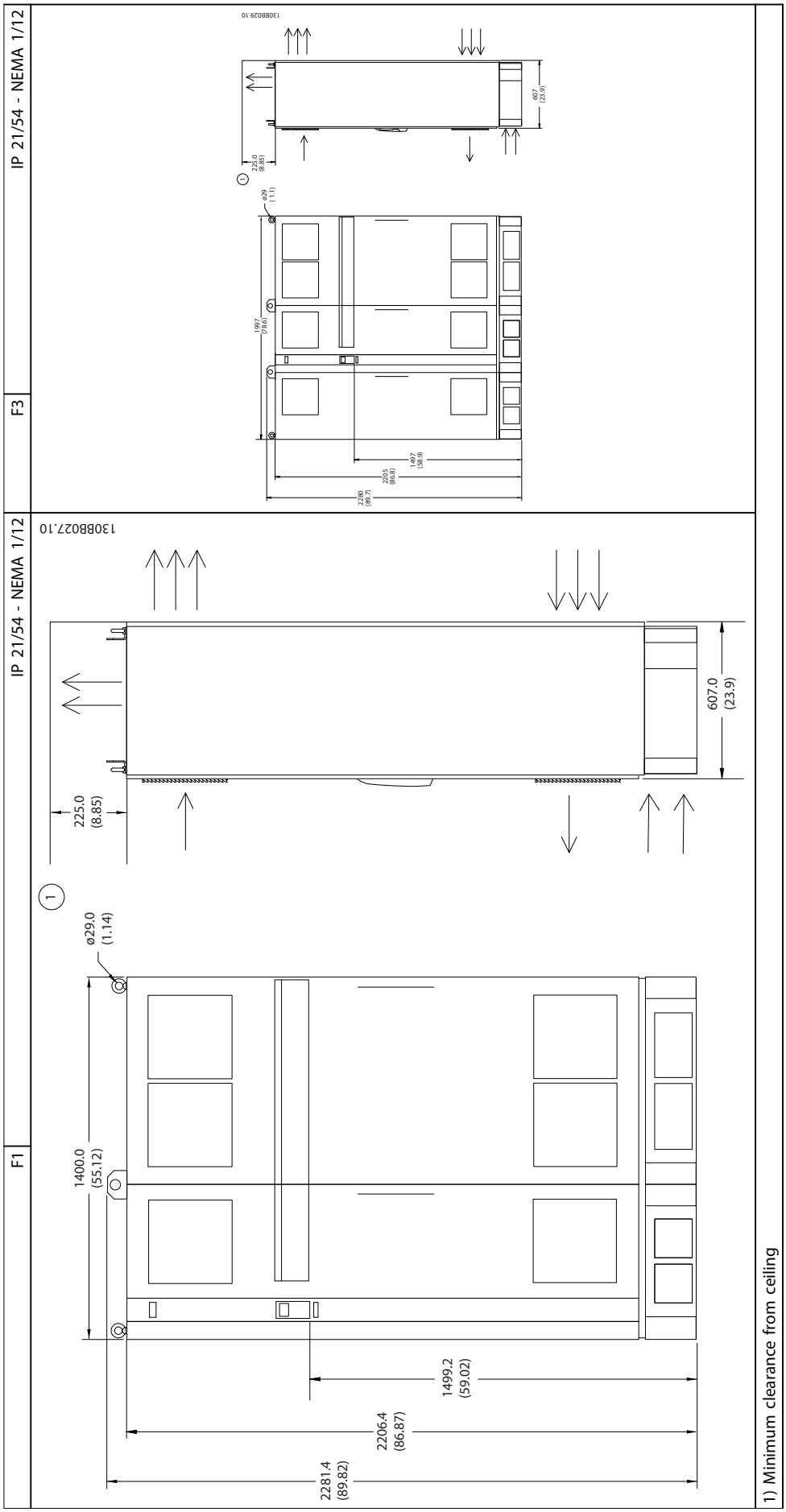
F1
IP 21/54 - NEMA 1/12
130BB027.10
225.0
(8.85)
607.0
(23.9)
1
ø29.0
(1.14)
1400.0
(55.12)
1499.2
(59.02)
2206.4
(86.87)
2281.4
(89.82)
F3
IP 21/54 - NEMA 1/12
130BB029.10
225.0
(8.85)
607
(23.9)
1
ø29
(1.1)
1997
(78.6)
1497
(58.9)
2205
(86.8)
2300
(89.7)
1) Minimum clearance from ceiling

Table 3.1

3

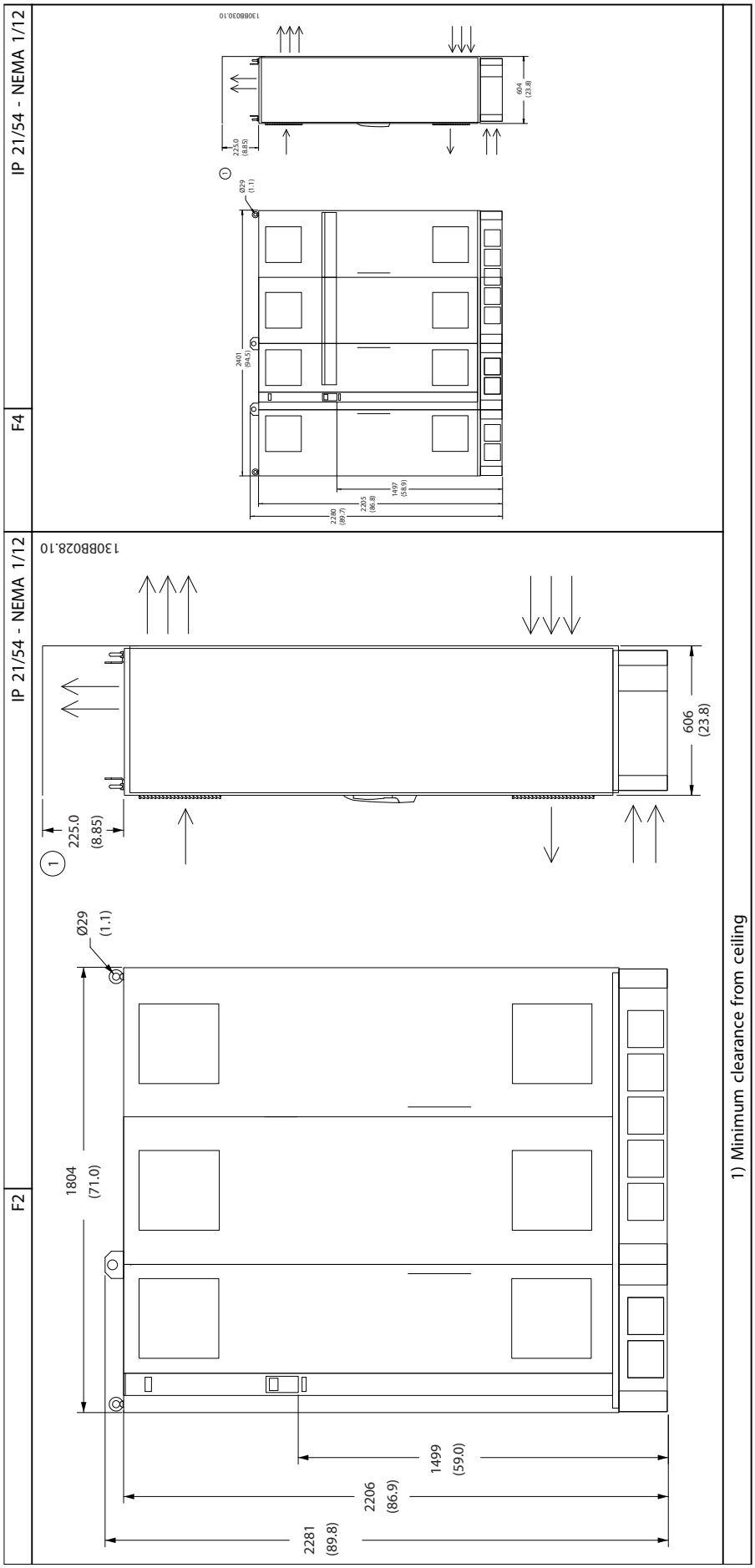
F2
IP 21/54 - NEMA 1/12
130BB028.10
225.0
(8.85)
606
(23.8)
Ø29
(1.1)
1804
(71.0)
1499
(59.0)
2206
(86.9)
2281
(89.8)
F4
IP 21/54 - NEMA 1/12
130BB030.10
225.0
(8.85)
604
(23.8)
Ø29
(1.1)
2401
(94.5)
1497
(58.9)
2205
(86.8)
2280
(89.7)
1) Minimum clearance from ceiling

Table 3.2

Enclosure type Size		D1		D2		D3	D4
		110-132 kW at 400 V (380-480 V) 45-160 kW at 690 V (525-690 V)		160-250 kW at 400 V (380-480 V) 200-400 kW at 690 V (525-690 V)		110-132 kW at 400 V (380-480 V) 45-160 kW at 690 V (525-690 V)	160 - 250 kW at 400 V (380-480 V) 200-400 kW at 690 V (525-690 V)
IP NEMA		21 Type 1	54 Type 12	21 Type 1	54 Type 12	00 Chassis	00 Chassis
Shipping dimensions [mm]	Height	650	650	650	650	650	650
	Width	1730	1730	1730	1730	1220	1490
	Depth	570	570	570	570	570	570
Frequency converter dimensions [mm]	Height	1209	1209	1589	1589	104	1327
	Width	420	420	420	420	408	408
	Depth	380	380	380	380	375	375
	Max weight [kg]	104	104	151	151	91	138

Table 3.3 Mechanical dimensions, Enclosure type D

3

Enclosure Type Size		E1	E2	F1	F2	F3	F4
		315-450 kW at 400 V (380-480 V) 450-630 kW at 690 V (525-690 V)	**315-450 kW at 400 V (380-480 V) 450-630 kW at 690 V (525-690 V)**	**500-710 kW at 400 V (380-480 V) 710-900 kW at 690 V (525-690 V)**	**800-1000 kW at 400 V (380-480 V) 1000-1200 kW at 690 V (525-690 V)**	**500-710 kW at 400 V (380-480 V) 710-900 kW at 690 V (525-690 V)**	**800-1000 kW at 400 V (380-480 V) 1000-1400 kW at 690 V (525-690 V)**
IP NEMA		21, 54 Type 1/ Type 12	00 Chassis	21, 54 Type 1/Type 12	21, 54 Type 1/Type 12	21, 54 Type 1/Type 12	21, 54 Type 1/Type 12
Shipping dimensions [mm]	Height	840	831	2324	2324	2324	2324
	Width	2197	1705	1569	1962	2159	2559
	Depth	736	736	1130	1130	1130	1130
Frequency converter dimensions [mm]	Height	2000	1547	2204	2204	2204	2204
	Width	600	585	1400	1800	2000	2400
	Depth	494	498	606	606	606	606
	Max weight [kg]	313	277	1004	1246	1299	1541

Table 3.4 Mechanical dimensions, Enclosure Types E and F

3.2.6 Rated Power

Enclosure type		D1	D2	D3	D4
		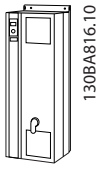 130BA816.10	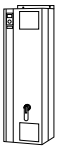 130BA817.10	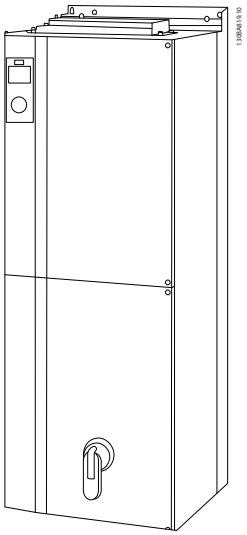 130BA818.10	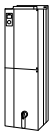 130BA820.10
Enclosure protection	IP	21/54	21/54	00	00
	NEMA	Type 1/Type 12	Type 1/Type 12	Chassis	Chassis
Normal overload rated power - 110% overload torque		110 - 132 kW at 400 V (380 - 480 V) 45 - 160 kW at 690 V (525-690 V)	150 - 250 kW at 400 V (380 - 480 V) 200 - 400 kW at 690 V (525-690 V)	110 - 132 kW at 400 V (380 - 480 V) 45 - 160 kW at 690 V (525-690 V)	150 - 250 kW at 400 V (380 - 480 V) 200 - 400 kW at 690 V (525-690 V)

Table 3.5

Enclosure type		E1	E2	F1/F3	F2/F4
		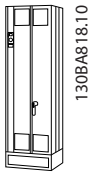 130BA818.10	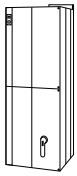 130BA821.10	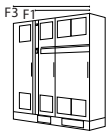 130BA959.10	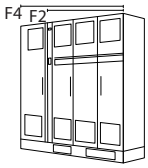 130BB092.11
Enclosure protection	IP	21/54	00	21/54	21/54
	NEMA	Type 1/Type 12	Chassis	Type 1/Type 12	Type 1/Type 12
Normal overload rated power - 110% overload torque		315 - 450 kW at 400 V (380 - 480 V) 450 - 630 kW at 690 V (525-690 V)	315 - 450 kW at 400 V (380 - 480 V) 450 - 630 kW at 690 V (525-690 V)	500 - 710 kW at 400 V (380 - 480 V) 710 - 900 kW at 690 V (525-690 V)	800 - 1000 kW at 400 V (380 - 480 V) 1000 - 1400 kW at 690 V (525-690 V)

Table 3.6

NOTICE

The F enclosures are available in 4 different sizes, F1, F2, F3 and F4 The F1 and F2 consist of an inverter cabinet on the right and rectifier cabinet on the left. The F3 and F4 have an additional options cabinet left of the rectifier cabinet. The F3 is an F1 with an additional options cabinet. The F4 is an F2 with an additional options cabinet.

3

3.3 Mechanical Installation

Preparation of the mechanical installation of the frequency converter must be done carefully to ensure a proper result and to avoid additional work during installation. Start taking a close look at the mechanical drawings at the end of this instruction to become familiar with the space demands.

3.3.1 Tools Needed

To perform the mechanical installation the following tools are needed:

- Drill with 10 or 12 mm drill
- Tape measure
- Wrench with relevant metric sockets (7-17mm)
- Extensions to wrench
- Sheet metal punch for conduits or cable glands in IP21/Nema 1 and IP54 units
- Lifting bar to lift the unit (rod or tube max. Ø 5 mm (1 inch), able to lift minimum 400 kg (880 lbs).
- Crane or other lifting aid to place the frequency converter in position
- A Torx T50 tool is needed to install the E1 in IP21 and IP54 enclosure types.

3.3.2 General Considerations

Wire access
Ensure that proper cable access is present including necessary bending allowance. As the IP00 enclosure is open to the bottom cables must be fixed to the back panel of the enclosure where the frequency converter is mounted, i.e. by using cable clamps.

CAUTION

All cable lugs/shoes must mount within the width of the terminal bus bar.

Space
Ensure proper space above and below the frequency converter to allow airflow and cable access. In addition space in front of the unit must be considered to enable opening of the door of the panel.

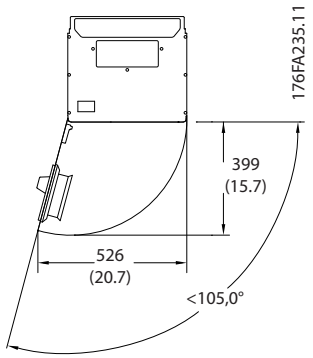

Illustration 3.14 Space in Front of IP21/IP54 Rated Enclosure Types D1 and D2

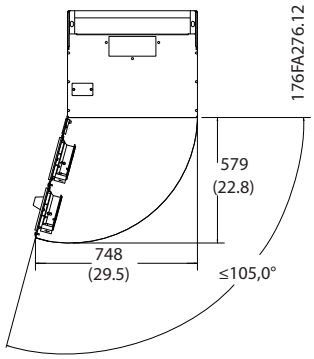

Illustration 3.15 Space in Front of IP21/IP54 Rated Enclosure Type E1

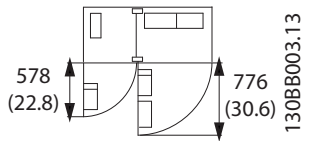

Illustration 3.16 Space in Front of IP21/IP54 Rated Enclosure Type F1

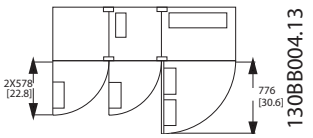

Illustration 3.17 Space in Front of IP21/IP54 Rated Enclosure Type F3

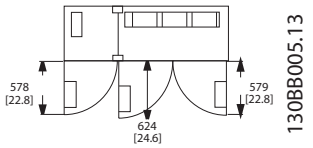

Illustration 3.18 Space in Front of IP21/IP54 Rated Enclosure Type F2

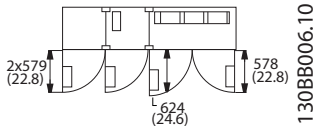

Illustration 3.19 Space in Front of IP21/IP54 Rated Enclosure Type F4

3.3.3 Terminal Locations - Enclosure Type D

Consider the following terminal positions when designing for cables access.

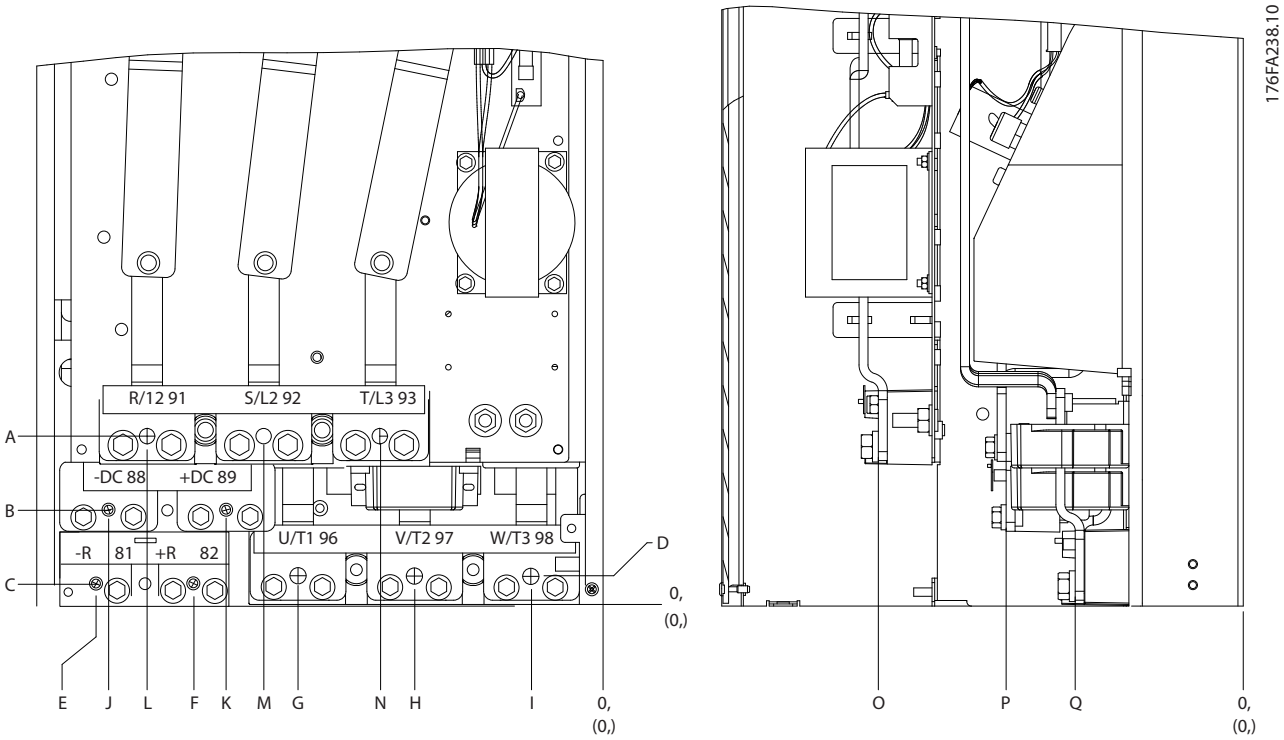

Illustration 3.20 Position of Power Connections, Enclosure Types D3 and D4

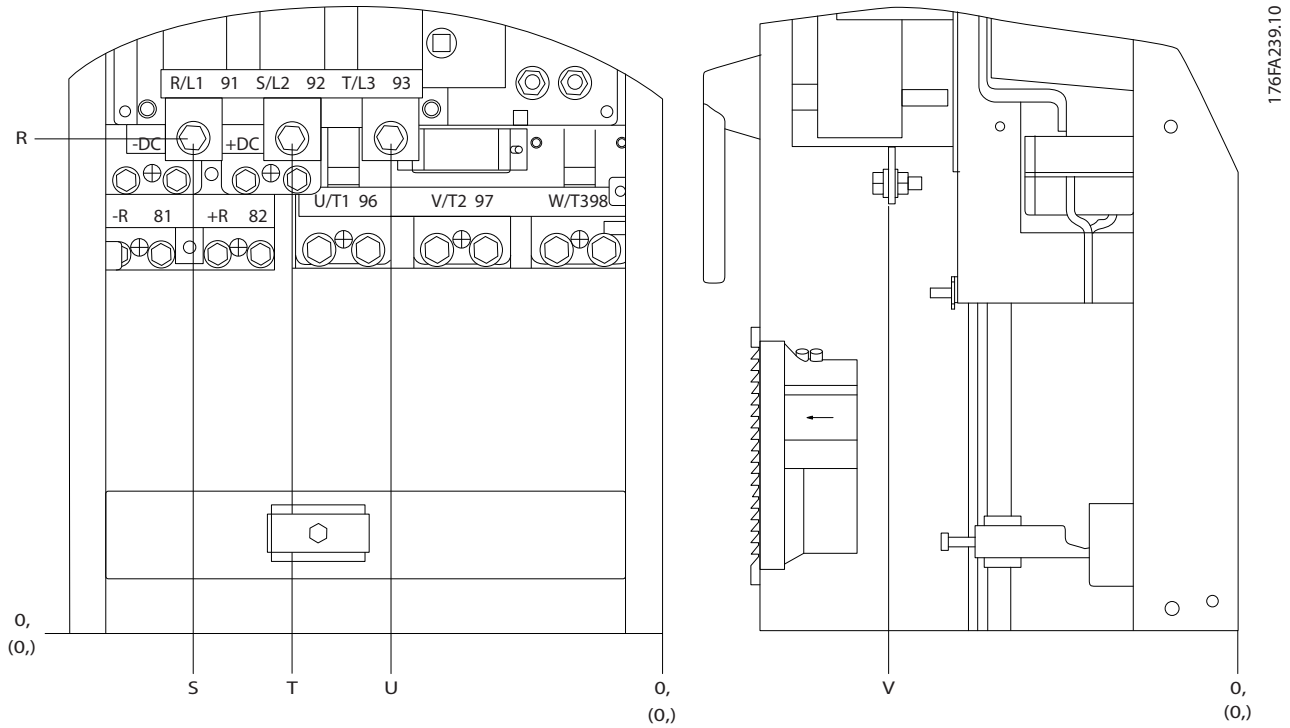

Illustration 3.21 Position of Power Connections with Disconnect Switch, Enclosure Types D1 and D2

Be aware that the power cables are heavy and hard to bend. Consider the optimum position of the frequency converter for ensuring easy installation of the cables.

NOTICE

All D enclosures are available with standard input terminals or disconnect switch. All terminal dimensions can be found in *Table 3.7*.

	IP21 (NEMA 1)/IP54 (NEMA 12)		IP00/Chassis	
	D1	D2	D3	D4
A	277 (10.9)	379 (14.9)	119 (4.7)	122 (4.8)
B	227 (8.9)	326 (12.8)	68 (2.7)	68 (2.7)
C	173 (6.8)	273 (10.8)	15 (0.6)	16 (0.6)
D	179 (7.0)	279 (11.0)	20.7 (0.8)	22 (0.8)
E	370 (14.6)	370 (14.6)	363 (14.3)	363 (14.3)
F	300 (11.8)	300 (11.8)	293 (11.5)	293 (11.5)
G	222 (8.7)	226 (8.9)	215 (8.4)	218 (8.6)
H	139 (5.4)	142 (5.6)	131 (5.2)	135 (5.3)
I	55 (2.2)	59 (2.3)	48 (1.9)	51 (2.0)
J	354 (13.9)	361 (14.2)	347 (13.6)	354 (13.9)
K	284 (11.2)	277 (10.9)	277 (10.9)	270 (10.6)
L	334 (13.1)	334 (13.1)	326 (12.8)	326 (12.8)
M	250 (9.8)	250 (9.8)	243 (9.6)	243 (9.6)
N	167 (6.6)	167 (6.6)	159 (6.3)	159 (6.3)
O	261 (10.3)	260 (10.3)	261 (10.3)	261 (10.3)
P	170 (6.7)	169 (6.7)	170 (6.7)	170 (6.7)
Q	120 (4.7)	120 (4.7)	120 (4.7)	120 (4.7)
R	256 (10.1)	350 (13.8)	98 (3.8)	93 (3.7)
S	308 (12.1)	332 (13.0)	301 (11.8)	324 (12.8)
T	252 (9.9)	262 (10.3)	245 (9.6)	255 (10.0)
U	196 (7.7)	192 (7.6)	189 (7.4)	185 (7.3)
V	260 (10.2)	273 (10.7)	260 (10.2)	273 (10.7)

Table 3.7 Cable Positions Dimensions in mm (inch)

3

3.3.4 Terminal Locations - E Enclosures

Terminal Locations - E1

Take the following position of the terminals into consideration when designing the cable access.

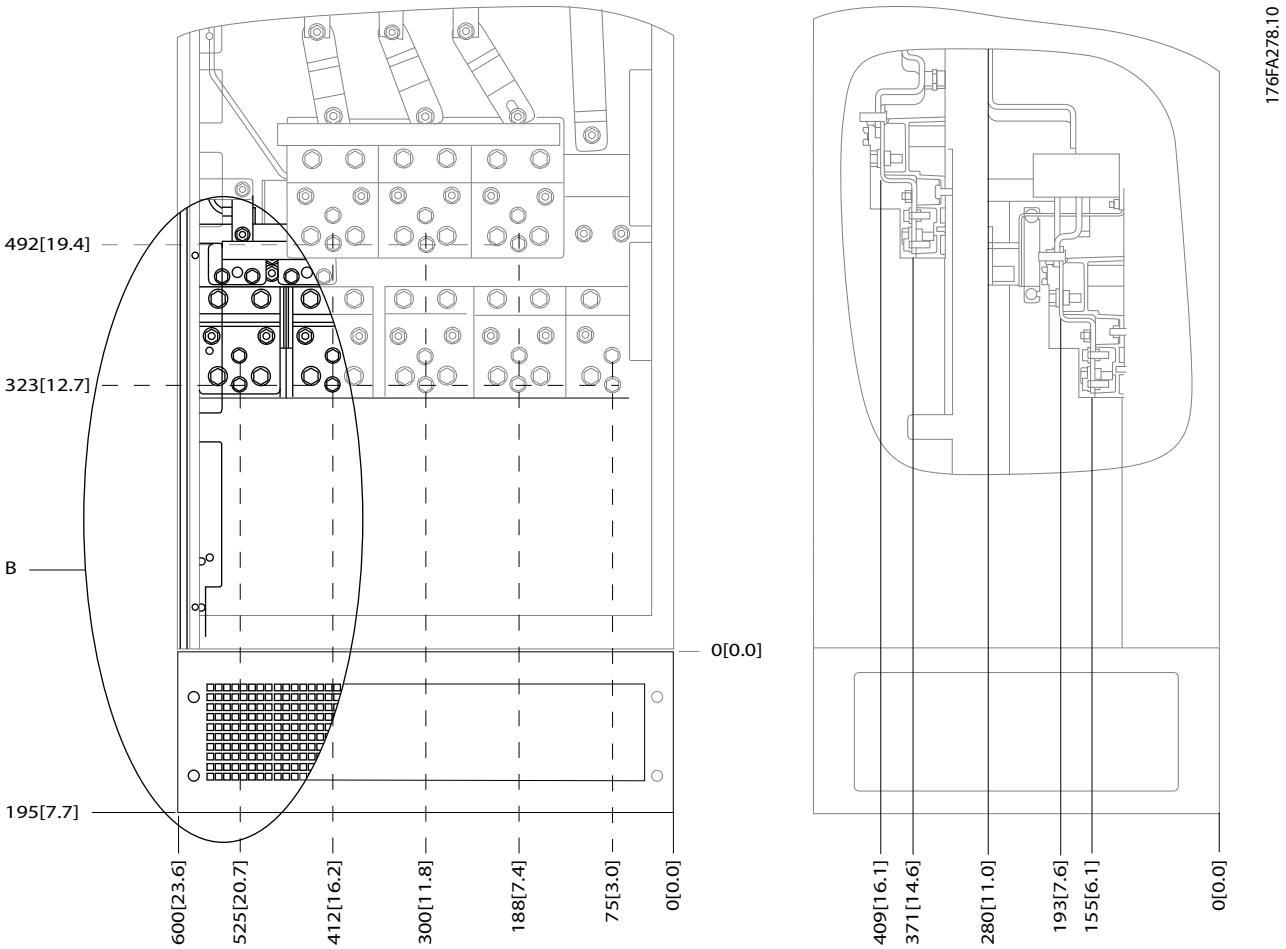

Illustration 3.22 IP21 (NEMA Type 1) and IP54 (NEMA Type 12) Enclosure Power Connection Positions

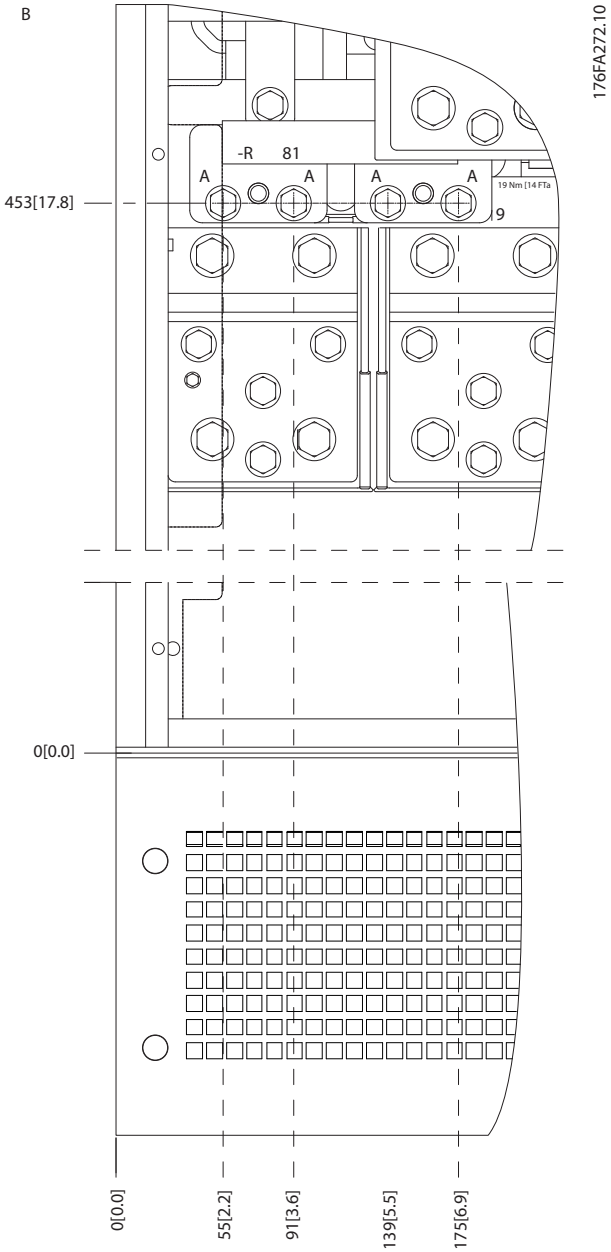

Illustration 3.23 IP21 (NEMA type 1) and IP54 (NEMA type 12) Enclosure Power Connection Positions (Detail B)

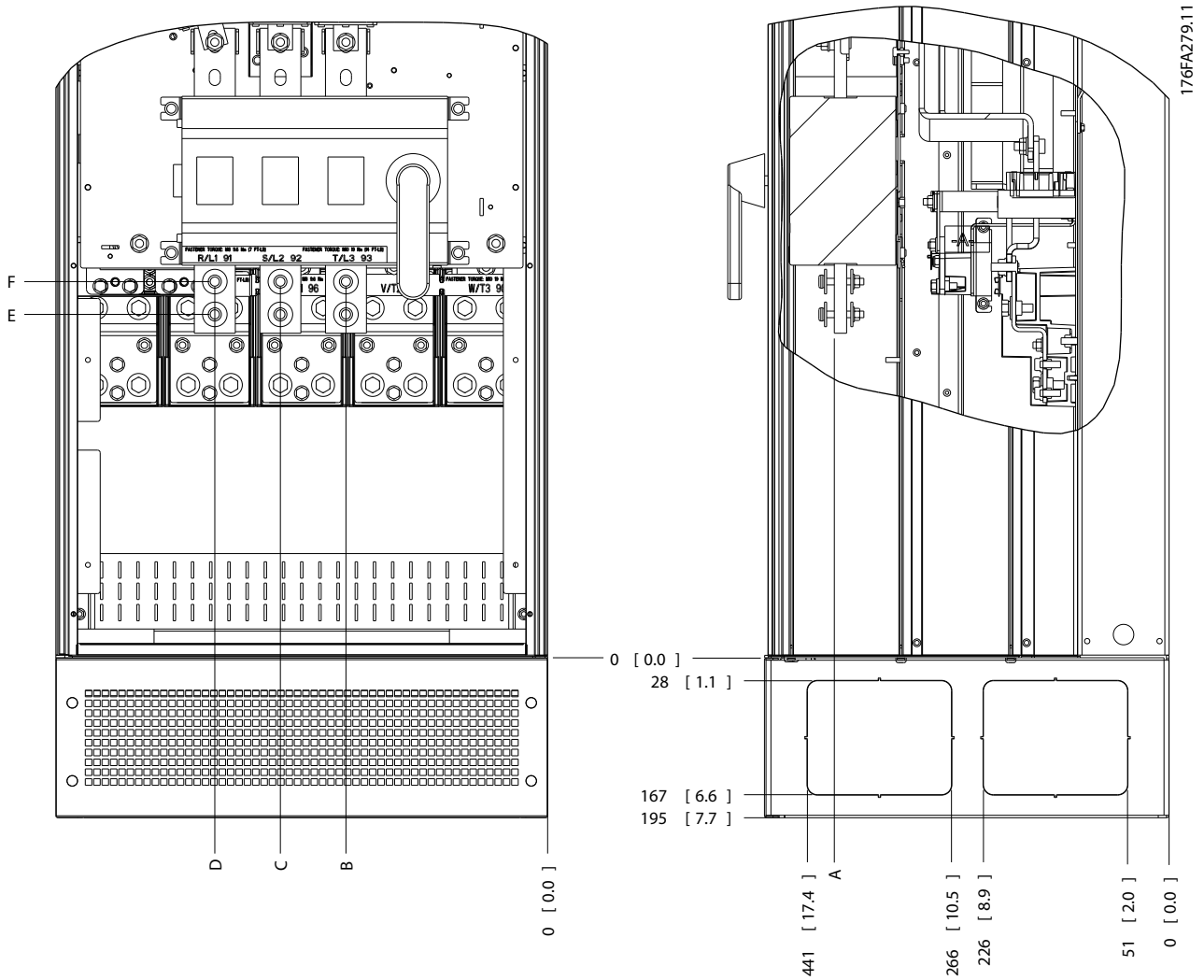

Illustration 3.24 IP21 (NEMA type 1) and IP54 (NEMA type 12) Enclosure Power Connection Position of Disconnect Switch

Enclosure types	Unit type	Dimensions [mm]/(inch)					
E1	IP54/IP21 UL AND NEMA1/NEMA12						
	250/315 kW (400 V) AND 355/450-500/630 KW (690 V)	396 (15.6)	267 (10.5)	332 (13.1)	397 (15.6)	528 (20.8)	N/A
	315/355-400/450 kW (400 V)	408 (16.1)	246 (9.7)	326 (12.8)	406 (16.0)	419 (16.5)	459 (18.1)

Table 3.8 Dimensions for Disconnect Terminal

Terminal locations - enclosure type E2

Take the following position of the terminals into consideration when designing the cable access.

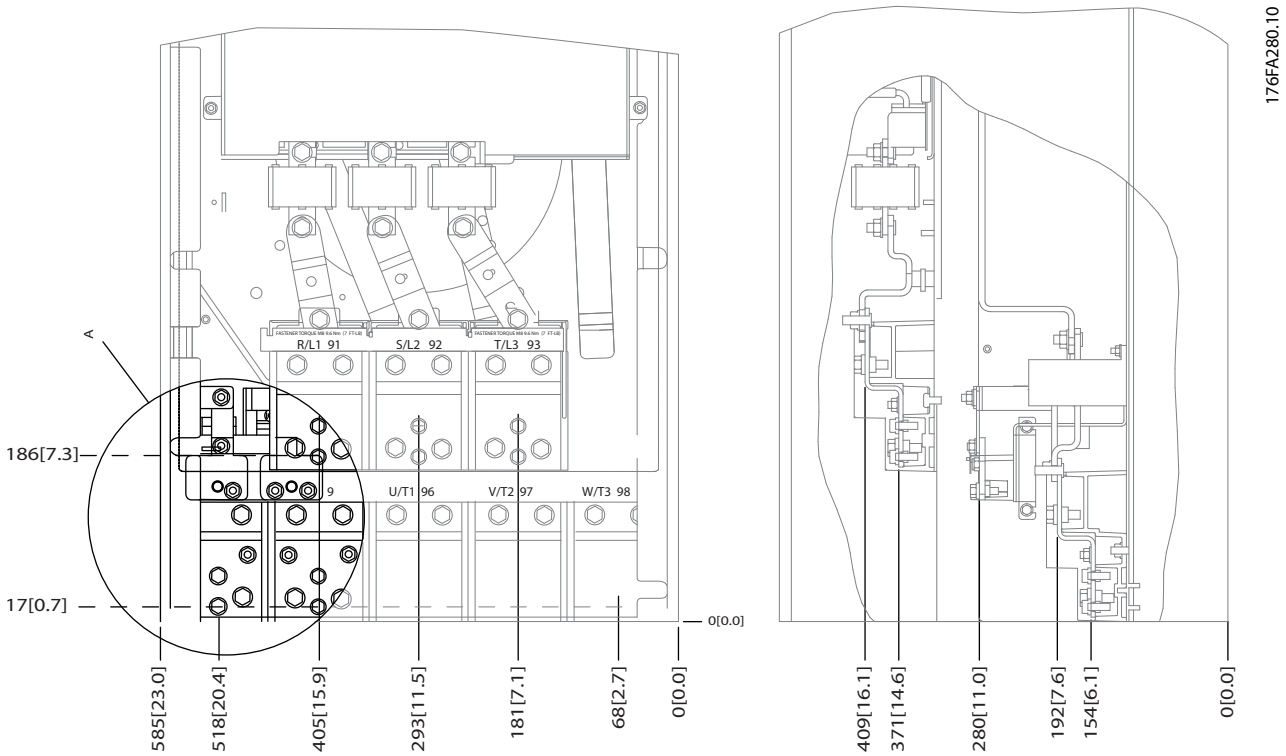

Illustration 3.25 IP00 Enclosure Power Connection Positions

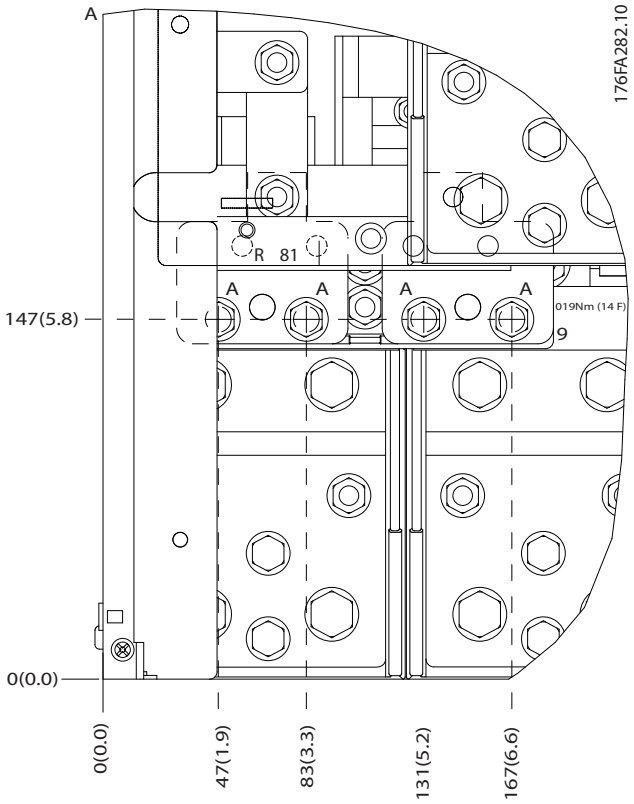

Illustration 3.26 IP00 Enclosure Power Connection Positions

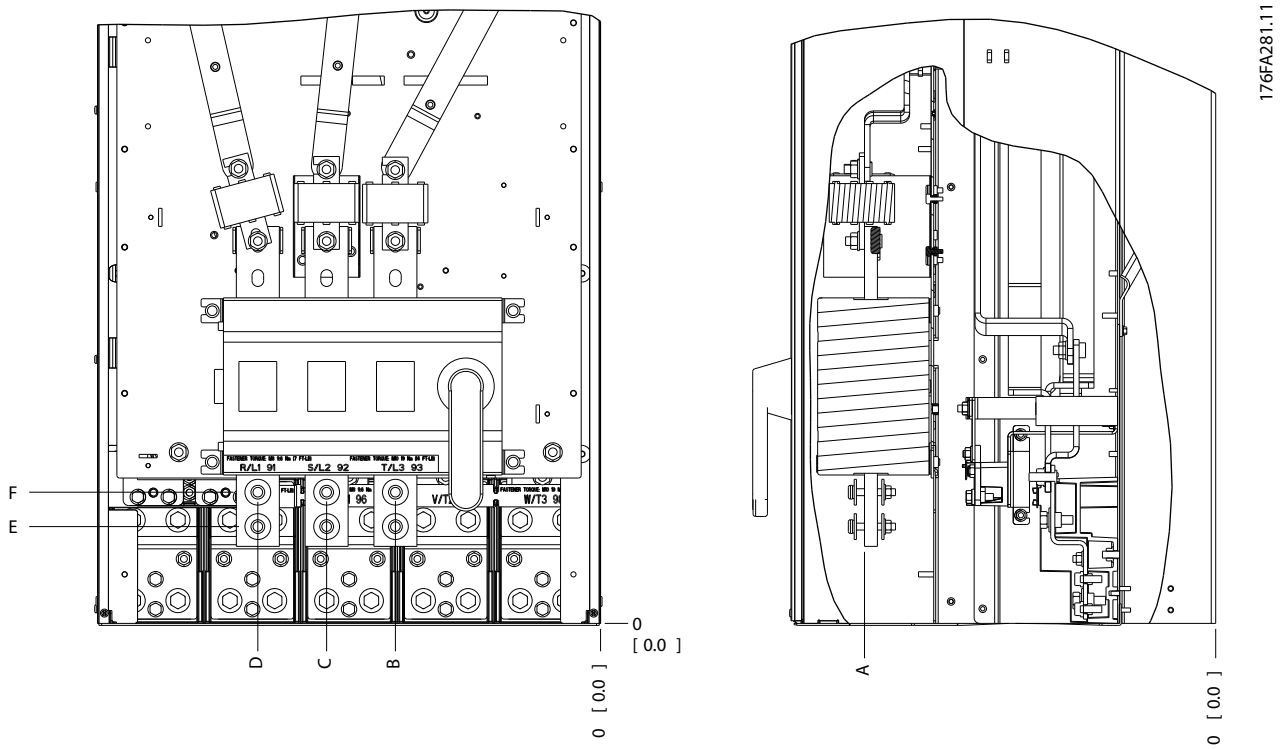

Illustration 3.27 IP00 Enclosure Power Connections Positions of Disconnect Switch

NOTICE

The power cables are heavy and difficult to bend. Consider the optimum position of the frequency converter for ensuring easy installation of the cables.
Each terminal allows use of up to 4 cables with cable lugs or use of standard box lug. Earth is connected to relevant termination point in the frequency converter.
If lugs are wider than 39 mm, install supplied barriers on the mains input side of the disconnect.

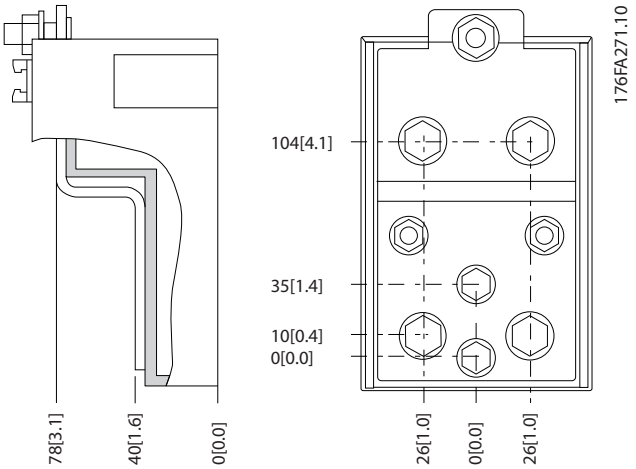

Illustration 3.28 Terminal in Details

NOTICE

Power connections can be made to positions A or B

Enclosure type	Unit type	Dimensions [mm]/(inch)					
	IPOO/CHASSIS	A	B	C	D	E	F
E2	250/315 kW (400 V) AND 355/450-500/630 KW (690 V)	396 (15.6)	268 (10.6)	333 (13.1)	398 (15.7)	221 (8.7)	N/A
	315/355-400/450 kW (400 V)	408 (16.1)	239 (9.4)	319 (12.5)	399 (15.7)	113 (4.4)	153 (6.0)

Table 3.9 Dimensions for Disconnect Terminal

3.3.5 Terminal Locations - Enclosure type F

NOTICE

The F enclosures have 4 different sizes, F1, F2, F3 and F4. The F1 and F2 consist of an inverter cabinet on the right and rectifier cabinet on the left. The F3 and F4 have an additional options cabinet left of the rectifier cabinet. The F3 is an F1 with an additional options cabinet. The F4 is an F2 with an additional options cabinet.

Terminal locations - enclosure types F1 and F3

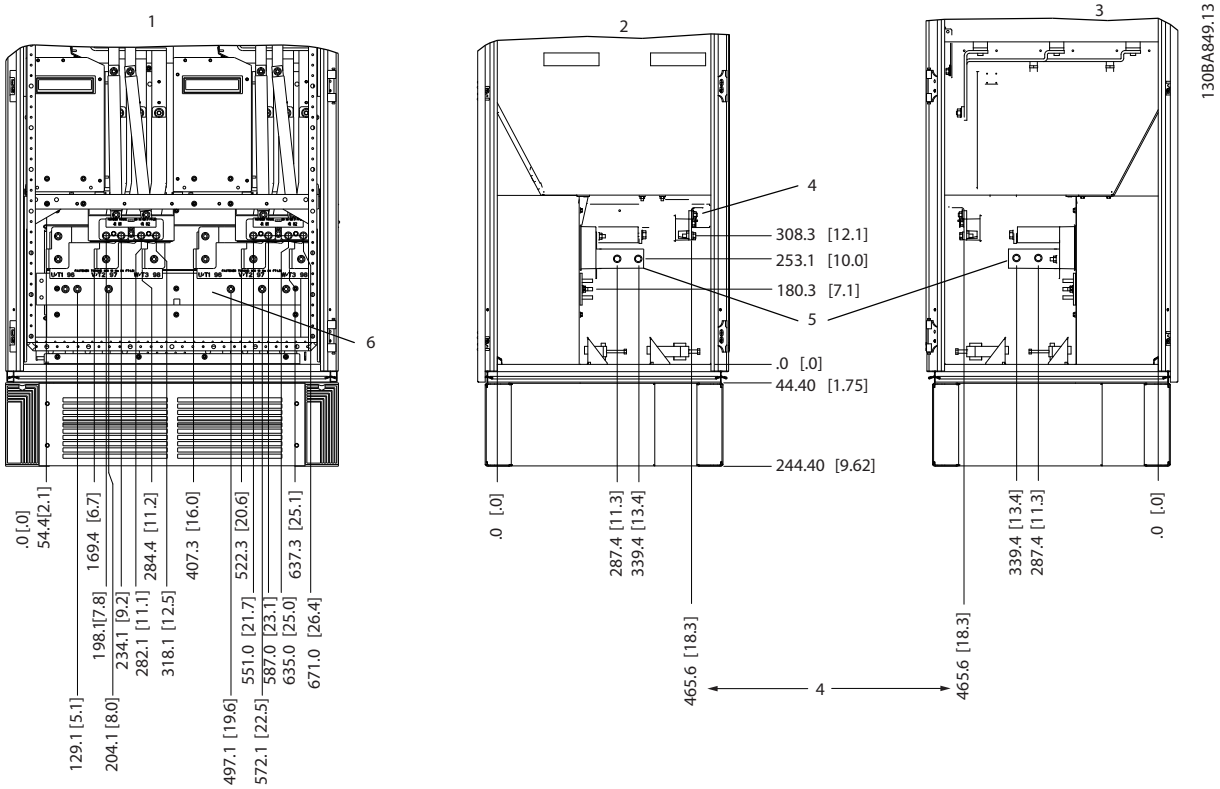

Illustration 3.29 Terminal Locations - Inverter Cabinet - F1 and F3 (Front, Left and Right Side View). The Gland Plate is 42 mm below .0 Level.

1) Earth ground bar

2) Motor terminals

3) Brake terminals

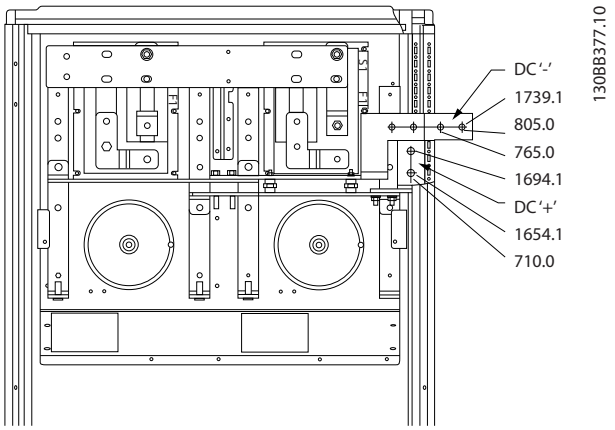

Illustration 3.30 Terminal Locations - Regen Terminals - F1 and F3

Terminal locations - enclosure types F2 and F4

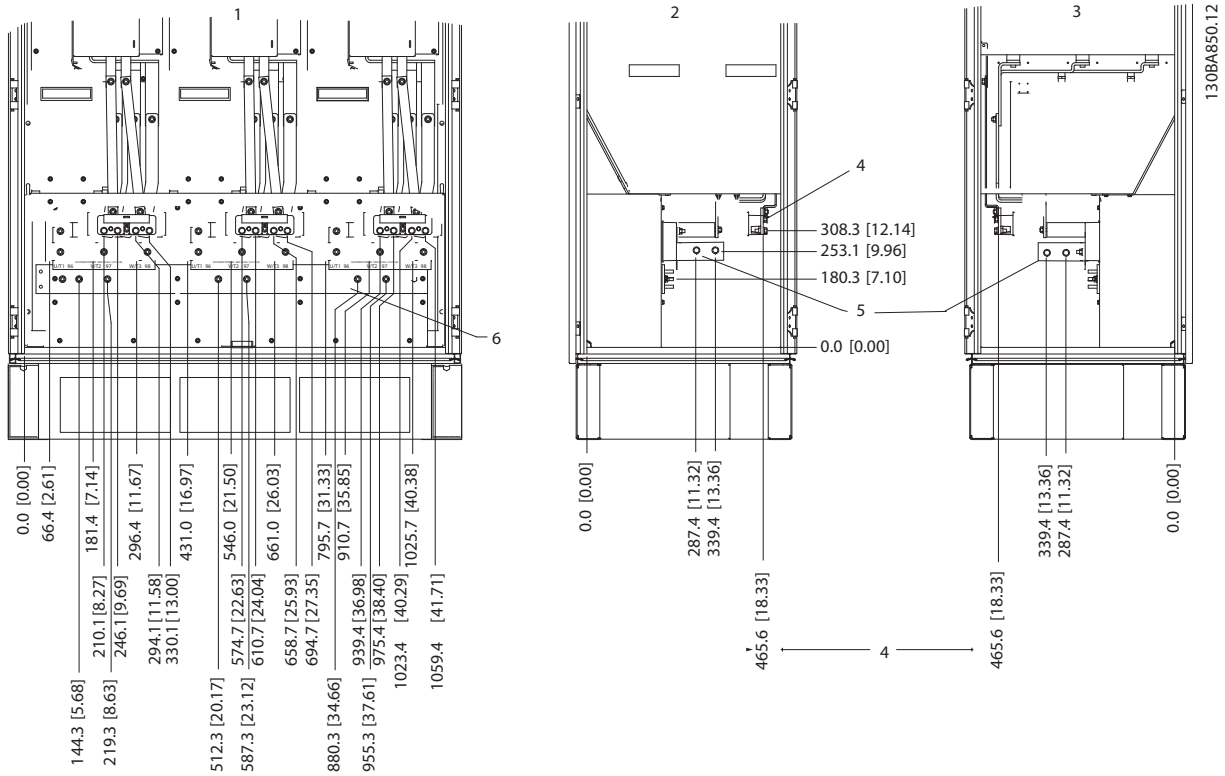

Illustration 3.31 Terminal Locations - Inverter Cabinet - F2 and F4 (Front, Left and Right Side View). The Gland Plate is 42 mm below .0 Level.

1) Earth Ground Bar

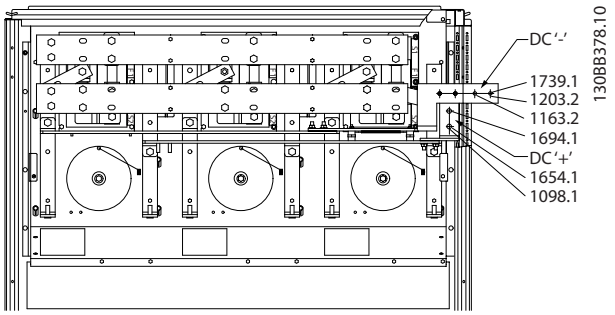

Illustration 3.32 Terminal Locations - Regen Terminals - F2 and F4

Terminal locations - Rectifier (F1, F2, F3 and F4)

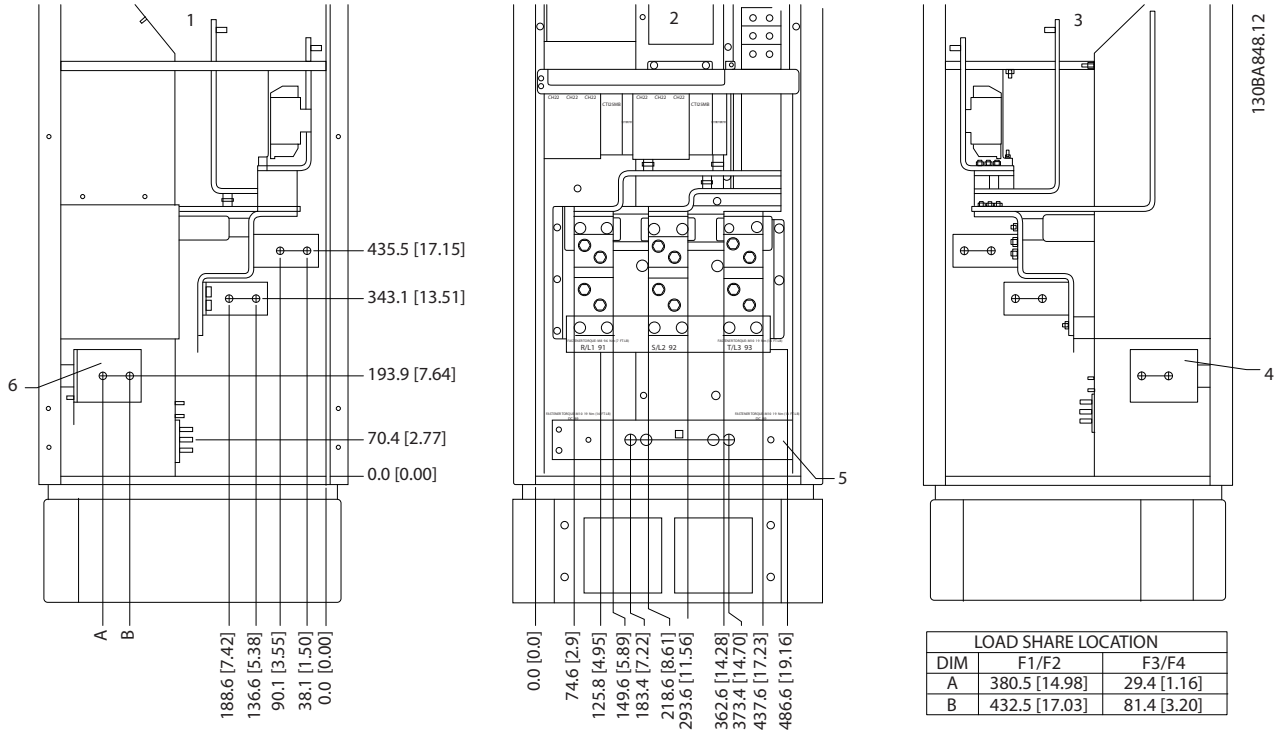

LOAD SHARE LOCATION		
DIM	F1/F2	F3/F4
A	380.5 [14.98]	29.4 [1.16]
B	432.5 [17.03]	81.4 [3.20]

Illustration 3.33 Terminal Locations - Rectifier (Left Side, Front and Right Side View). The Gland Plate is 42 mm below .0 Level.

1) Loadshare Terminal (-)

2) Earth Ground Bar

3) Loadshare Terminal (+)

3

Terminal locations - Options Cabinet (F3 and F4)

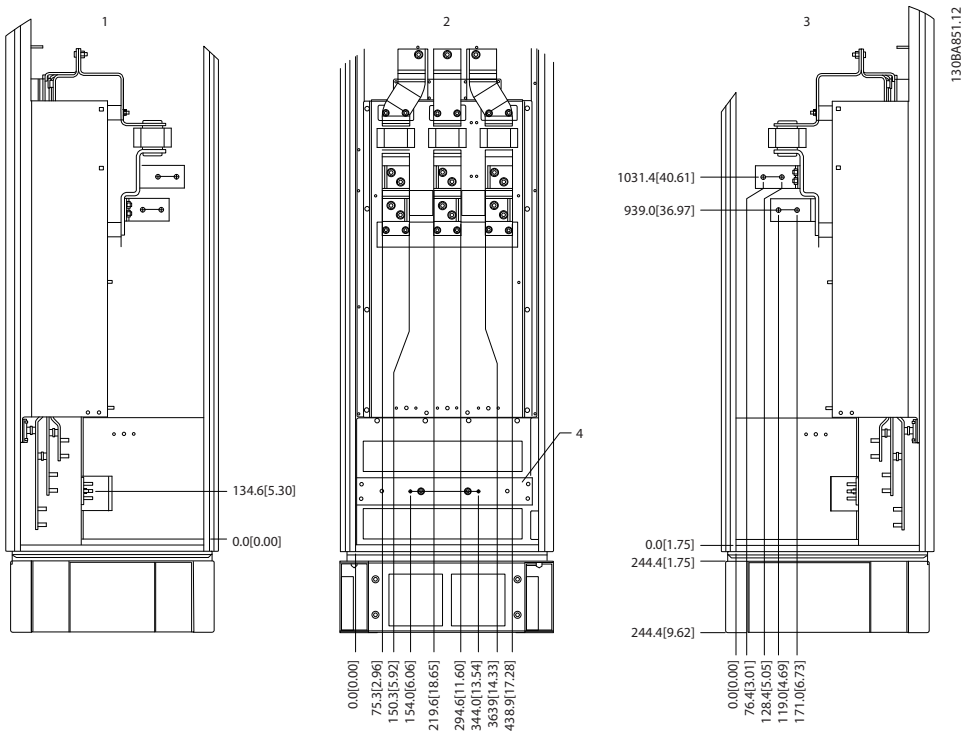

Illustration 3.34 Terminal Locations - Options Cabinet (Left Side, Front and Right Side View). The Gland Plate is 42 mm below .0 Level.

1) Earth Ground Bar

Terminal locations - Options Cabinet with circuit breaker/ molded case switch (F3 and F4)

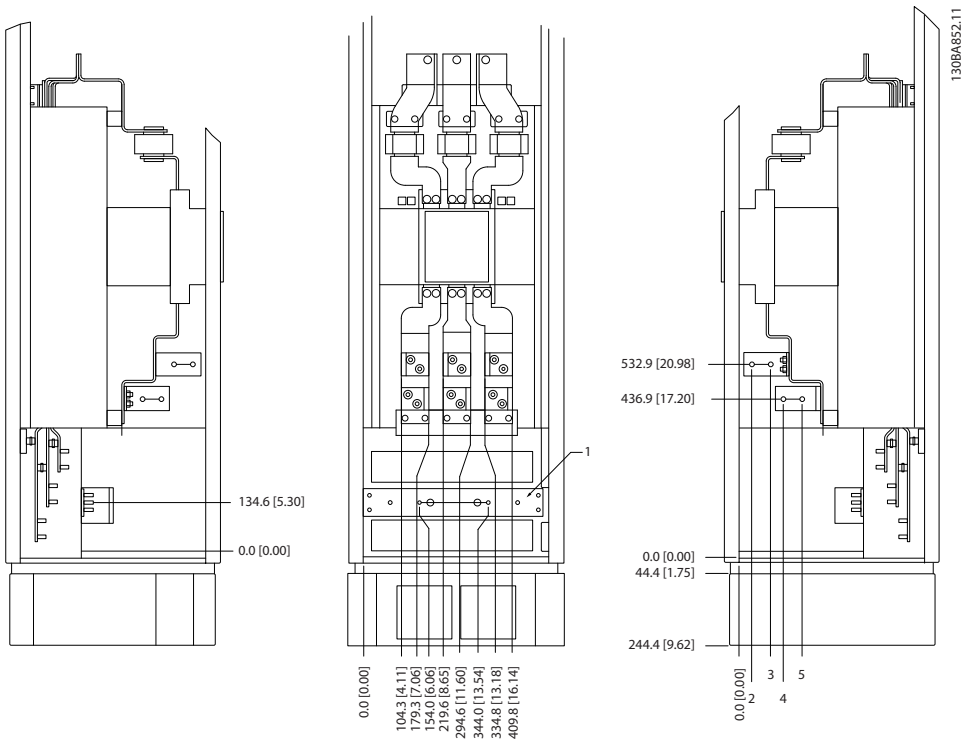

Illustration 3.35 Terminal Locations - Options Cabinet with Circuit Breaker/Molded Case Switch (Left Side, Front and Right Side View). The Gland Plate is 42 mm below .0 Level.
1) Earth Ground Bar

Power size	2	3	4	5
500 kW (480 V), 710-800 kW (690 V)	34.9	86.9	122.2	174.2
560-1000 kW (480 V), 900-1400 kW (690 V)	46.3	98.3	119.0	171.0

Table 3.10 Dimensions for Terminal

3.3.6 Cooling and Airflow

Cooling
Cooling can be obtained in different ways, by using the cooling ducts in the bottom and the top of the unit, by taking air in and out the back of the unit or by combining the cooling possibilities.

Duct cooling
A dedicated option has been developed to optimize installation of IP00/chassis frequency converters in Rittal TS8 enclosures utilizing the fan of the frequency converter for forced air cooling of the backchannel. The air out of the top of the enclosure could but ducted outside a facility so the heat loses from the backchannel are not dissipated within the control room reducing air-conditioning requirements of the facility.
See *chapter 3.4.1 Installation of Duct Cooling Kit in Rittal Enclosures*, for further information.

Back cooling
The backchannel air can also be ventilated in and out the back of a Rittal TS8 enclosure. This offers a solution where the backchannel could take air from outside the facility and return the heat loses outside the facility thus reducing air-conditioning requirements.

3

⚠CAUTION

A door fan(s) is required on the enclosure to remove the heat losses not contained in the backchannel of the frequency converter and any additional losses generated from other components installed inside the enclosure. The total required air flow must be calculated so that the appropriate fans can be selected. Some enclosure manufacturers offer software for performing the calculations (i.e. Rittal Therm software). If the frequency converter is the only heat generating component in the enclosure, the minimum airflow required at an ambient temperature of 45 °C for the D3 and D4 frequency converters is 391 m³/h (230 cfm). The minimum airflow required at an ambient temperature of 45°C for the E2 frequency converter is 782 m³/h (460 cfm).

Airflow

The necessary airflow over the heat sink must be secured. The flow rate is in *Table 3.11*.

Enclosure protection	Enclosure type	Door fan(s)/ Top fan airflow	Heat sink fan(s)
IP21/NEMA 1 IP54/NEMA 12	D1 and D2	170 m³/h (100 cfm)	765 m³/h (450 cfm)
	E1 P315T5, P450T7, P500T7	340 m³/h (200 cfm)	1105 m³/h (650 cfm)
	E1 P355-P450T5, P560-P630T7	340 m³/h (200 cfm)	1445 m³/h (850 cfm)
IP21/NEMA 1	F1, F2, F3 and F4	700 m³/h (412 cfm)*	985 m³/h (580 cfm)*
IP54/NEMA 12	F1, F2, F3 and F4	525 m³/h (309 cfm)*	985 m³/h (580 cfm)*
IP00/Chassis	D3 and D4	255 m³/h (150 cfm)	765 m³/h (450 cfm)
	E2 P315T5, P450T7, P500T7	255 m³/h (150 cfm)	1105 m³/h (650 cfm)
	E2 P355-P450T5, P560-P630T7	255 m³/h (150 cfm)	1445 m³/h (850 cfm)
* Airflow per fan. enclosure type F contain multiple fans.			

Table 3.11 Heat Sink Air Flow

NOTICE

The fan runs for the following reasons:

1. **AMA**
2. **DC Hold**
3. **Pre-Mag**
4. **DC Brake**
5. **60% of nominal current is exceeded**
6. **Specific heat sink temperature exceeded (power size dependent)**
7. **Specific Power Card ambient temperature exceeded (power size dependent)**
8. **Specific Control Card ambient temperature exceeded**

Once the fan is started it will run for minimum 10 minutes.

External ducts

If additional duct work is added externally to the Rittal cabinet the pressure drop in the ducting must be calculated. Use the charts below to derate the frequency converter according to the pressure drop.

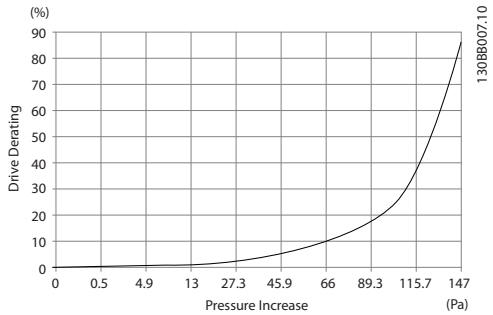

Illustration 3.36 D Enclosure Derating vs. Pressure Change
Frequency converter air flow: 450 cfm (765 m³/h)

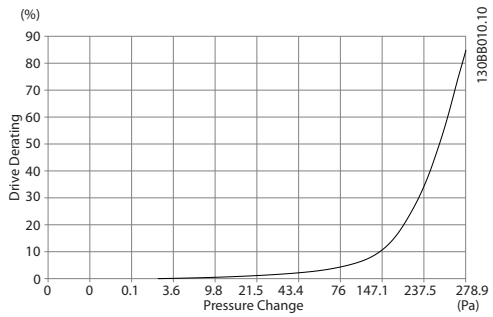

Illustration 3.37 E Enclosure Derating vs. Pressure Change (Small Fan), P315T5 and P450T7-P500T7
Frequency converter air flow: 650 cfm (1105 m³/h)

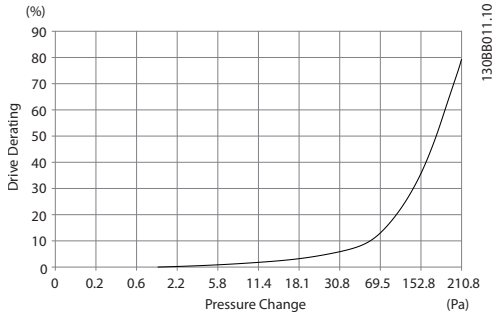

Illustration 3.38 E Enclosure Derating vs. Pressure Change (Large Fan), P355T5-P450T5 and P560T7-P630T7
Frequency converter air flow: 850 cfm (1445 m^3/h)

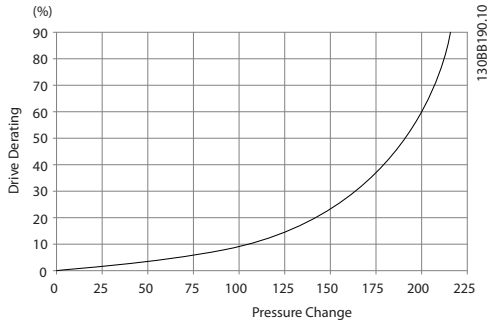

Illustration 3.39 F1, F2, F3, F4 Enclosures Derating vs. Pressure Change
Frequency converter air flow: 580 cfm (985 m^3/h)

3.3.7 Installation on the Wall - IP21 (NEMA 1) and IP54 (NEMA 12) Units

This only applies to enclosure types D1 and D2. It must be considered where to install the unit.

Take the relevant points into consideration before selecting the final installation site:

- Free space for cooling
- Access to open the door
- Cable entry from the bottom

Mark the mounting holes carefully using the mounting template on the wall and drill the holes as indicated. Ensure proper distance to the floor and the ceiling for cooling. A minimum of 225 mm (8.9 inch) below the frequency converter is needed. Mount the bolts at the bottom and lift the frequency converter up on the bolts. Tilt the frequency converter against the wall and mount the upper bolts. Tighten all 4 bolts to secure the frequency converter against the wall.

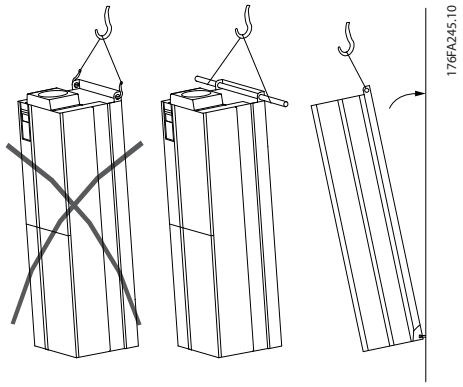

Illustration 3.40 Lifting Method for Mounting Frequency Converter on Wall

3.3.8 Gland/Conduit Entry - IP21 (NEMA 1) and IP54 (NEMA12)

Cables are connected through the gland plate from the bottom. Remove the plate and plan where to place the entry for the glands or conduits. Prepare holes in the marked area on the drawing.

NOTICE

The gland plate must be fitted to the frequency converter to ensure the specified protection degree, as well as ensuring proper cooling of the unit. If the gland plate is not mounted, the frequency converter may trip on Alarm 69, Pwr. Card Temp

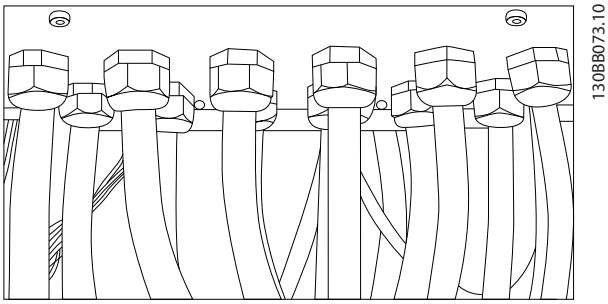

Illustration 3.41 Example of Proper Installation of Gland Plate.

Cable entries viewed from the bottom of the frequency converter - 1) Mains side 2) Motor side

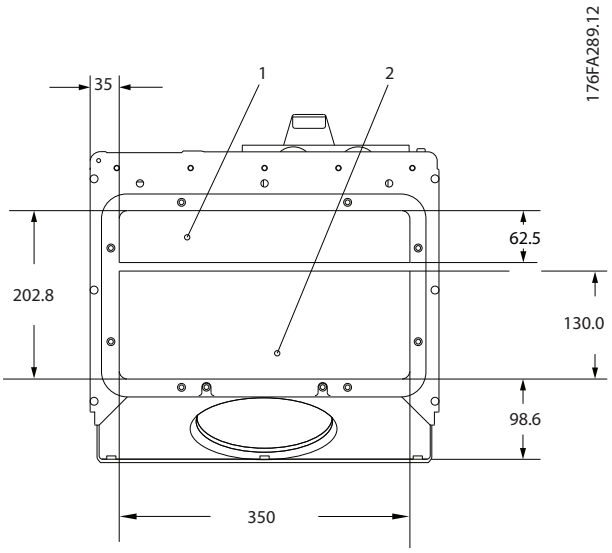

Illustration 3.42 Enclosure Types D1 + D2

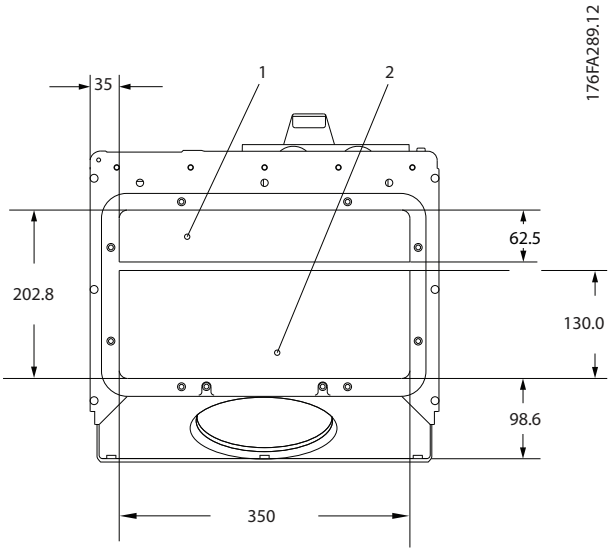

Illustration 3.43 Enclosure Type E1

Enclosure types F1-F4: Cable entries viewed from the bottom of the frequency converter - 1) Place conduits in marked areas

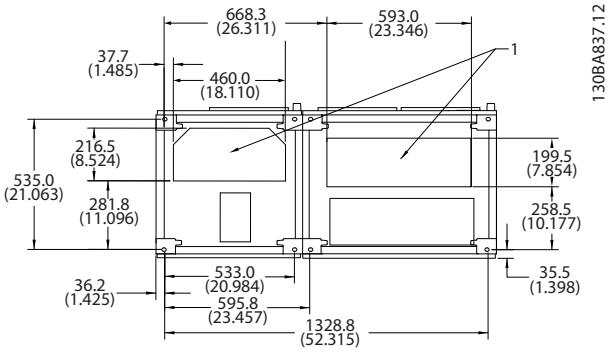

Illustration 3.44 Enclosure Type F1

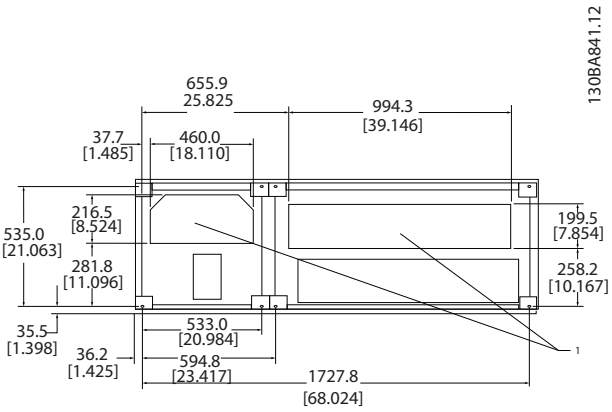

Illustration 3.45 Enclosure Type F2

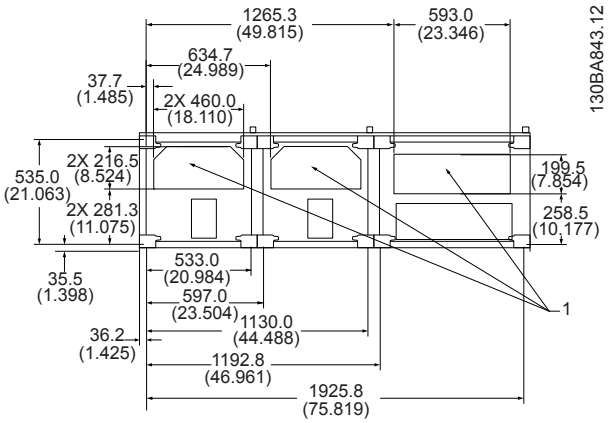

Illustration 3.46 Enclosure Type F3

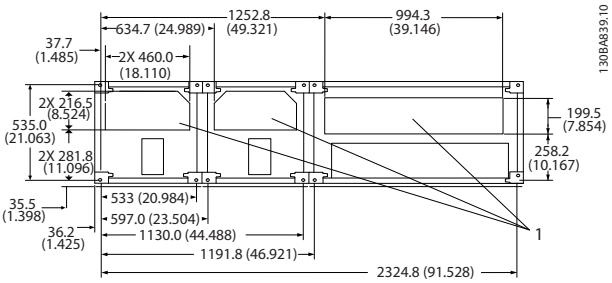

Illustration 3.47 Enclosure Type F4

3.3.9 IP21 Drip Shield Installation (Enclosure Types D1 and D2)

To comply with the IP21 rating, a separate drip shield is to be installed as explained below:

- Remove the 2 front screws
- Insert the drip shield and replace screws
- Tighten the screws to 5.6 Nm (50 in-lbs)

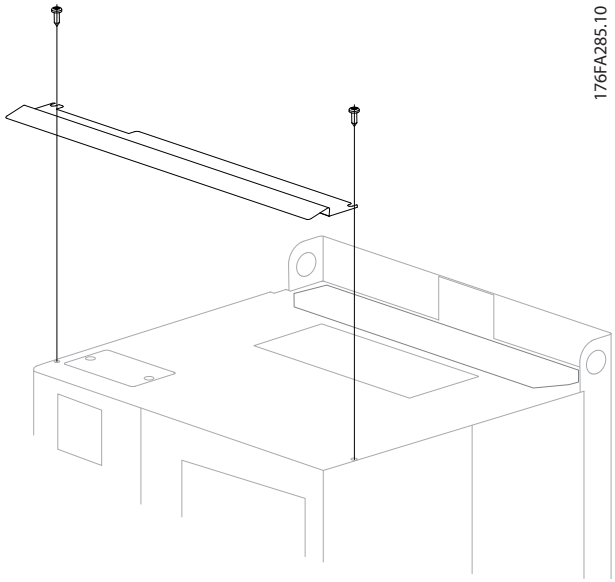

Illustration 3.48 Drip Shield Installation.

3.4 Field Installation of Options

3.4.1 Installation of Duct Cooling Kit in Rittal Enclosures

This section deals with the installation of IP00/chassis enclosed frequency converters with duct work cooling kits in Rittal enclosures. In addition to the enclosure a 200 mm base/plinth is required.

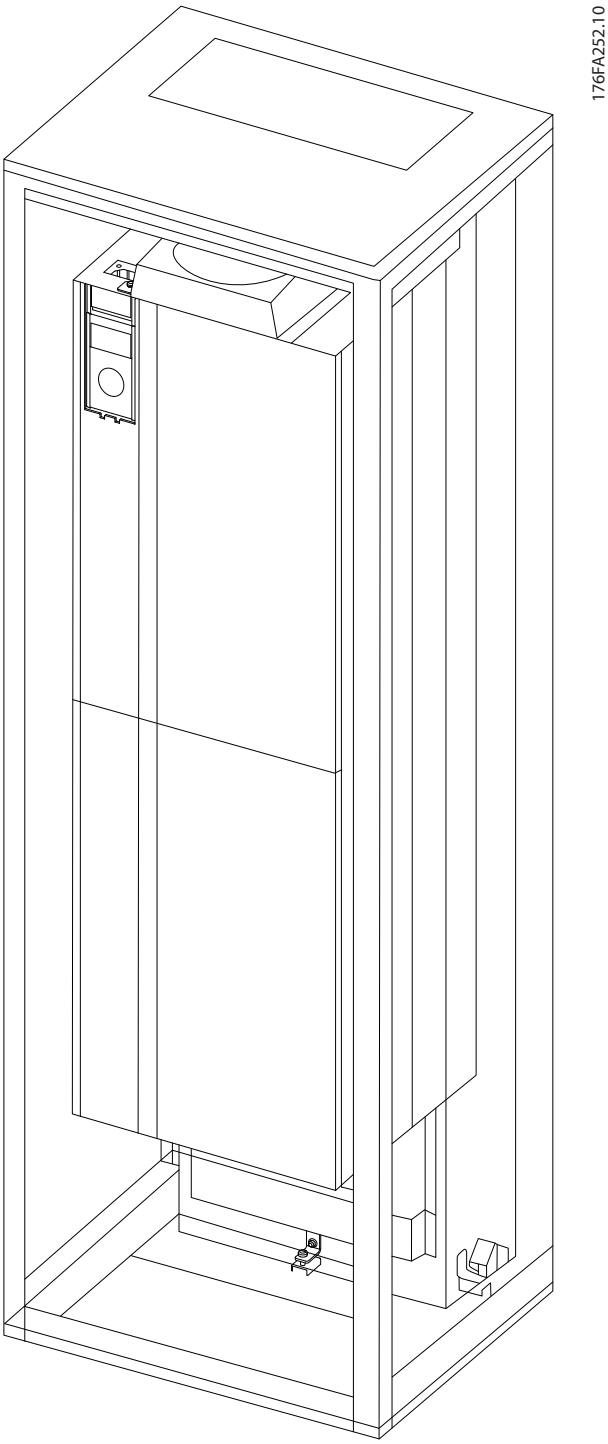

Illustration 3.49 Installation of IP00 in Rittal TS8 Enclosure.

The minimum enclosure dimension is:

- D3 and D4 enclosures: Depth 500 mm and width 600 mm.
- E2 enclosure: Depth 600 mm and width 800 mm.

The maximum depth and width are as required by the installation. When using multiple frequency converters in one enclosure, it is recommended that each frequency converter is mounted on its own back panel and

supported along the mid-section of the panel. These duct work kits do not support the "in frame" mounting of the panel (see Rittal TS8 catalogue for details). The duct work cooling kits listed in *Table 3.12* are suitable for use only with IP00/Chassis frequency converters in Rittal TS8 IP 20 and UL and NEMA 1 and IP 54 and UL and NEMA 12 enclosures.

⚠CAUTION

For the E2 enclosures it is important to mount the plate at the absolute rear of the Rittal enclosure due to the weight of the frequency converter.

⚠CAUTION

A doorfan(s) is required on the enclosure to remove the heat losses not contained in the backchannel of the frequency converter and any additional losses generated from other components installed inside the enclosure. The total required airflow must be calculated so that the appropriate fans can be selected. Some enclosure manufacturers offer software for performing the calculations (i.e. Rittal Therm software). If the frequency converter is the only heat generating component in the enclosure, the minimum airflow required at an ambient temperature of 45 °C for the D3 and D4 frequency converters is 391 m^3/h (230 cfm). The minimum airflow required at an ambient temperature of 45 °C for the E2 frequency converter is 782 m^3/h (460 cfm).

Rittal TS-8 Enclosure	Enclosure type D3 Kit Part No.	Enclosure type D4 Kit Part No.	Enclosure type E2 Part No.
1800 mm	176F1824	176F1823	Not possible
2000 mm	176F1826	176F1825	176F1850
2200 mm			176F0299

Table 3.12 Ordering Information

NOTICE

See the instruction *Duct Work Cooling Kit Instruction for Frames D3, D4 and E2* for further information.

External ducts

If additional duct work is added externally to the Rittal cabinet the pressure drop in the ducting must be calculated. See *chapter 3.3.6 Cooling and Airflow* for further information.

3.4.2 Outside Installation/NEMA 3R Kit for Rittal Enclosures

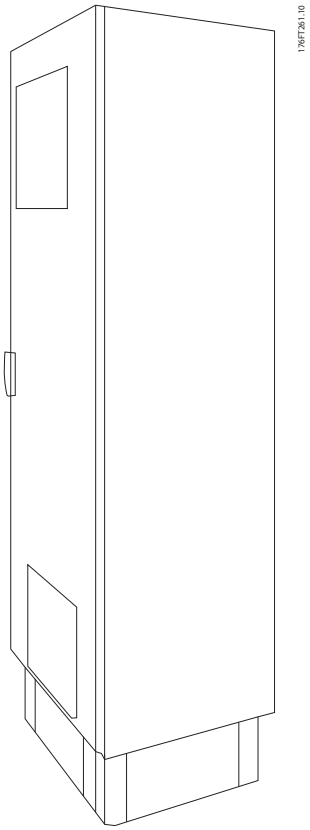

Illustration 3.50

This section is for the installation of NEMA 3R kits available for the frequency converter enclosure types D3, D4 and E2. These kits are designed and tested to be used with IP00/Chassis versions of these enclosure types in Rittal TS8 NEMA 3R or NEMA 4 enclosures. The NEMA-3R enclosure is an outdoor enclosure that provides a degree of protection against rain and ice. The NEMA-4 enclosure is an outdoor enclosure that provides a greater degree of protection against weather and hosed water.

The minimum enclosure depth is 500 mm (600 mm for enclosure type E2) and the kit is designed for a 600 mm (800 mm for enclosure type E2) wide enclosure. Other enclosure widths are possible, however additional Rittal hardware is required. The maximum depth and width are as required by the installation.

NOTICE

The current rating of frequency converters in enclosure types D3 and D4 are de-rated by 3%, when adding the NEMA 3R kit. Frequency converters in enclosure type E2 require no derating.

NOTICE

A doorfan(s) is required on the enclosure to remove the heat losses not contained in the backchannel of the frequency converter and any additional losses generated from other components installed inside the enclosure. The total required airflow must be calculated so that the appropriate fans can be selected. Some enclosure manufacturers offer software for performing the calculations (i.e. Rittal Therm software). If the frequency converter is the only heat generating component in the enclosure, the minimum airflow required at an ambient temperature of 45 °C for the D3 and D4 frequency converters is 391 m^3/h (230 cfm). The minimum airflow required at an ambient temperature of 45 °C for the E2 frequency converter is 782 m^3/h (460 cfm).

Ordering information
Enclosure type D3: 176F4600
Enclosure type D4: 176F4601
Enclosure type E2: 176F1852

NOTICE

See the instructions *Installation of NEMA 3R Kit for IP00 Frames D3, D4 & E2* for further information.

3.4.3 Installation on Pedestal

This section describes the installation of a pedestal unit available for the frequency converters enclosure types D1 and D2. This is a 200 mm high pedestal that allows these enclosure types to be floor mounted. The front of the pedestal has openings for input air to the power components.

The frequency converter gland plate must be installed to provide adequate cooling air to the control components of the frequency converter via the door fan and to maintain the IP21/NEMA 1 or IP54/NEMA 12 degrees of enclosure protections.

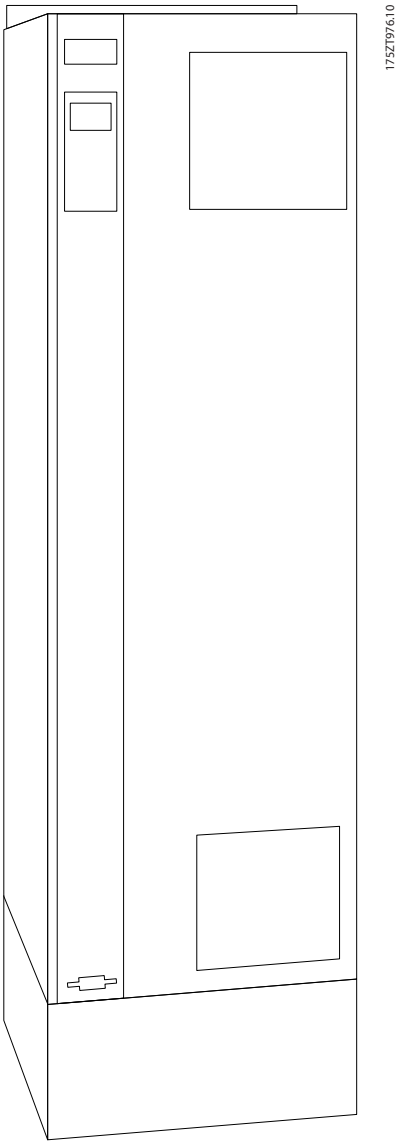

Illustration 3.51 Frequency Converter on Pedestal

There is one pedestal that fits both enclosure types D1 and D2. Its ordering number is 176F1827. The pedestal is standard for enclosure type E1.

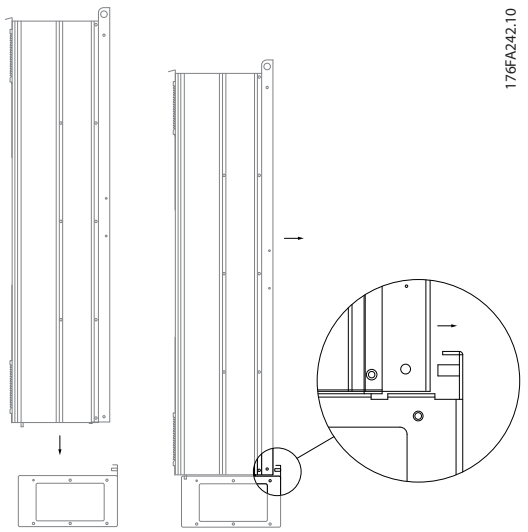

Illustration 3.52 Mounting of Frequency Converter to Pedestal

NOTICE

See the *Pedestal Kit Instruction Manual*, for further information.

3.4.4 Installation of Input Plate Options

This section is for the field installation of input option kits available for frequency converters in all enclosure types D and E.
Do not attempt to remove RFI filters from input plates. Damage may occur to RFI filters if they are removed from the input plate.

NOTICE

Where RFI filters are available, there are 2 different type of RFI filters depending on the input plate combination and the RFI filters interchangeable. Field installable kits in certain cases are the same for all voltages.

	380-480 V 380-500 V	Fuses	Disconnect Fuses	RFI	RFI Fuses	RFI Disconnect Fuses
D1	All D1 power sizes	176F8442	176F8450	176F8444	176F8448	176F8446
D2	All D2 power sizes	176F8443	176F8441	176F8445	176F8449	176F8447
E1	FC 102/ FC 202: 315 kW FC 302: 250 kW	176F0253	176F0255	176F0257	176F0258	176F0260
	FC 102/ FC 202: 355 - 450 kW FC 302: 315 - 400 kW	176F0254	176F0256	176F0257	176F0259	176F0262

Table 3.13 Fuses

	525 - 690 V	Fuses	Disconnect Fuses	RFI	RFI Fuses	RFI Disconnect Fuses
D1	FC 102/ FC 202: 45-90 kW FC 302: 37-75 kW	175L8829	175L8828	175L8777	NA	NA
	FC 102/ FC 202: 110-160 kW FC 302: 90-132 kW	175L8442	175L8445	175L8777	NA	NA
D2	All D2power sizes	175L8827	175L8826	175L8825	NA	NA
E1	FC 102/ FC 202: 450-500 kW FC 302: 355-400 kW	176F0253	176F0255	NA	NA	NA
	FC 102/ FC 202: 560-630 kW FC 302: 500-560 kW	176F0254	176F0258	NA	NA	NA

Table 3.14

NOTICE

For further information, see the Instruction *Installation of Field Installable Kits for VLT Drives*

3.4.5 Installation of Mains Shield for Frequency Converters

This section is for the installation of a mains shield for the frequency converter series with enclosure types D1, D2 and E1. It is not possible to install in the IP00/Chassis versions as these have included as standard a metal cover. These shields satisfy VBG-4 requirements.

Ordering numbers:
Enclosure types D1 and D2: 176F0799
Enclosure type E1: 176F1851

NOTICE

For further information, see the Instruction Sheet, *175R5923*

3.5 Enclsoure Type F Panel Options

3.5.1 Enclsoure Type F Options

Space Heaters and Thermostat
Mounted on the cabinet interior of enclosure type F frequency converters, space heaters controlled via automatic thermostat help control humidity inside the enclosure, extending the lifetime of frequency converter components in damp environments. The thermostat default settings turn on the heaters at 10 °C (50 °F) and turn them off at 15.6 °C (60 °F).

Cabinet Light with Power Outlet
A light mounted on the cabinet interior of enclosure type F frequency converters increase visibility during servicing and maintenance. The housing the light includes a power outlet for temporarily powering tools or other devices, available in two voltages:

- 230 V, 50 Hz, 2.5 A, CE/ENEC
- 120 V, 60 Hz, 5 A, UL/cUL

Transformer Tap Setup
If the cabinet light & outlet and/or the space heaters & thermostat are installed Transformer T1 requires it taps to be set to the proper input voltage. A 380-480/500 V frequency converter is set initially to the 525 V tap and a 525-690 V frequency converter is set to the 690 V tap to insure no overvoltage of secondary equipment occurs if the tap is not changed before power is applied. See *Table 3.15* to set the proper tap at terminal T1 located in the rectifier cabinet. For location in the frequency converter, see *Illustration 3.53*.

Input Voltage Range [V]	Tap to Select
380-440	400 V
441-490	460 V
491-550	525 V
551-625	575 V
626-660	660 V
661-690	690 V

Table 3.15

NAMUR Terminals
NAMUR is an international association of automation technology users in the process industries, primarily chemical and pharmaceutical industries in Germany. Selection of this option provides terminals organized and labeled to the specifications of the NAMUR standard for frequency converter input and output terminals. This requires MCB 112 PTC Thermistor Card and MCB 113 Extended Relay Card.

RCD (Residual Current Device)
Uses the core balance method to monitor ground fault currents in grounded and high-resistance grounded systems (TN and TT systems in IEC terminology). There is a pre-warning (50% of main alarm set-point) and a main alarm set-point. Associated with each set-point is an SPDT alarm relay for external use. Requires an external “window-type” current transformer (supplied and installed by customer).

- Integrated into the frequency converter’s safe-stop circuit
- IEC 60755 Type B device monitors AC, pulsed DC, and pure DC ground fault currents
- LED bar graph indicator of the ground fault current level from 10–100% of the set-point
- Fault memory
- [TEST/RESET]

Insulation Resistance Monitor (IRM)
Monitors the insulation resistance in ungrounded systems (IT systems in IEC terminology) between the system phase conductors and ground. There is an ohmic pre-warning and a main alarm set-point for the insulation level. Associated with each set-point is an SPDT alarm relay for external use. Note: only one insulation resistance monitor can be connected to each ungrounded (IT) system.

- Integrated into the frequency converter’s safe-stop circuit
- LCD display of the ohmic value of the insulation resistance
- Fault Memory
- [INFO], [TEST], and [RESET]

IEC Emergency Stop with Pilz Safety Relay
Includes a redundant 4-wire emergency-stop push-button mounted on the front of the enclosure and a Pilz relay that monitors it in conjunction with the frequency converter's safe-stop circuit and the mains contactor located in the options cabinet.

Safe Stop + Pilz Relay
Provides a solution for the "Emergency Stop" option without the contactor in F-Enclosure frequency converters.

Manual Motor Starters
Provides 3-phase power for electric blowers often required for larger motors. Power for the starters is provided from the load side of any supplied contactor, circuit breaker, or disconnect switch. Power is fused before each motor starter, and is off when the incoming power to the frequency converter is off. Up to 2 starters are allowed (one if a 30 A, fuse-protected circuit is ordered). Integrated into the frequency converter's safe-stop circuit.
Unit features include:

- Operation switch (on/off)
- Short-circuit and overload protection with test function
- Manual reset function

30 A, Fuse-Protected Terminals

- 3-phase power matching incoming mains voltage for powering auxiliary customer equipment
- Not available if 2 manual motor starters are selected
- Terminals are off when the incoming power to the frequency converter is off
- Power for the fused protected terminals will be provided from the load side of any supplied contactor, circuit breaker, or disconnect switch.

24 V DC Power Supply

- 5 A, 120 W, 24 V DC
- Protected against output over-current, overload, short circuits, and over-temperature
- For powering customer-supplied accessory devices such as sensors, PLC I/O, contactors, temperature probes, indicator lights, and/or other electronic hardware
- Diagnostics include a dry DC-ok contact, a green DC-ok LED, and a red overload LED

External Temperature Monitoring
Designed for monitoring temperatures of external system components, such as the motor windings and/or bearings. Includes five universal input modules. The modules are integrated into the frequency converter's safe-stop circuit and can be monitored via a fieldbus network (requires the purchase of a separate module/bus coupler).

Universal inputs (5)
Signal types:

- RTD inputs (including PT100), 3-wire or 4-wire
- Thermocouple
- Analog current or analog voltage

Additional features:

- One universal output, configurable for analog voltage or analog current
- Two output relays (N.O.)
- Dual-line LC display and LED diagnostics
- Sensor lead wire break, short-circuit, and incorrect polarity detection
- Interface setup software

3.6 Electrical Installation

3.6.1 Power Connections

Cabling and Fusing

NOTICE

Cables General
All cabling must comply with national and local regulations on cable cross-sections and ambient temperature. UL applications require 75 °C copper conductors. 75 and 90 °C copper conductors are thermally acceptable for the frequency converter to use in non UL applications.

The power cable connections are situated as shown below. Dimensioning of cable cross section must be done in accordance with the current ratings and local legislation. See the *Specifications section* for details.

For protection of the frequency converter, the recommended fuses must be used or the unit must be with built-in fuses. Recommended fuses can be seen in the tables of the fuse section. Always ensure that proper fusing is made according to local regulation.

The mains connection is fitted to the mains switch if this is included.

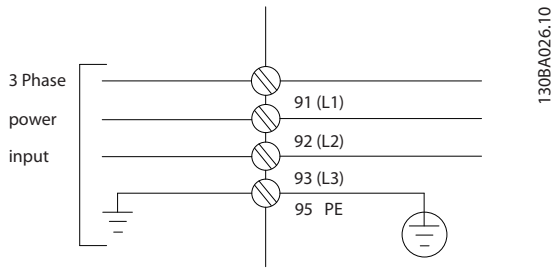

Illustration 3.53 Power Cable Connections

NOTICE

The motor cable must be screened/armoured. If an unscreened/unarmoured cable is used, some EMC requirements are not complied with. Use a screened/armoured motor cable to comply with EMC emission specifications. For more information, see *EMC specifications* in the *Design Guide*.

See section *General Specifications* for correct dimensioning of motor cable cross-section and length.

Screening of cables
Avoid installation with twisted screen ends (pigtails). They spoil the screening effect at higher frequencies. If it is necessary to break the screen to install a motor isolator or motor contactor, the screen must be continued at the lowest possible HF impedance.

Connect the motor cable screen to both the de-coupling plate of the frequency converter and to the metal housing of the motor.

Make the screen connections with the largest possible surface area (cable clamp). This is done by using the supplied installation devices within the frequency converter.

Cable-length and cross-section
The frequency converter has been EMC tested with a given length of cable. Keep the motor cable as short as possible to reduce the noise level and leakage currents.

Switching frequency
When frequency converters are used together with Sine-wave filters to reduce the acoustic noise from a motor, the switching frequency must be set according to the instruction in *14-01 Switching Frequency*.

Term. no.	96	97	98	99	
	U	V	W	PE[1)]	Motor voltage 0-100% of mains voltage. 3 wires out of motor
	U1	V1	W1	PE[1)]	Delta-connected
	W2	U2	V2		6 wires out of motor
	U1	V1	W1	PE[1)]	Star-connected U2, V2, W2 U2, V2 and W2 to be interconnected separately.

Table 3.16

[1)] *Protected Earth Connection*

NOTICE

In motors without phase insulation paper or other insulation reinforcement suitable for operation with voltage supply (such as a frequency converter), fit a Sine-wave filter on the output of the frequency converter.

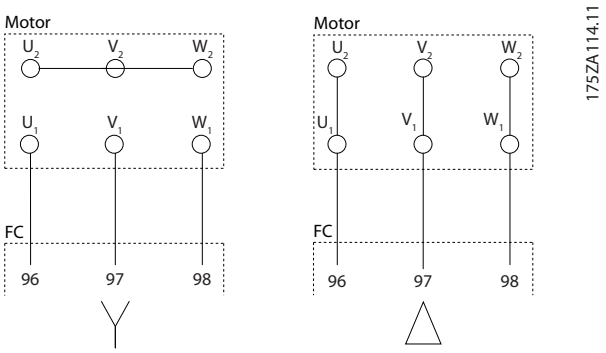

Illustration 3.54 Star/Delta Connections

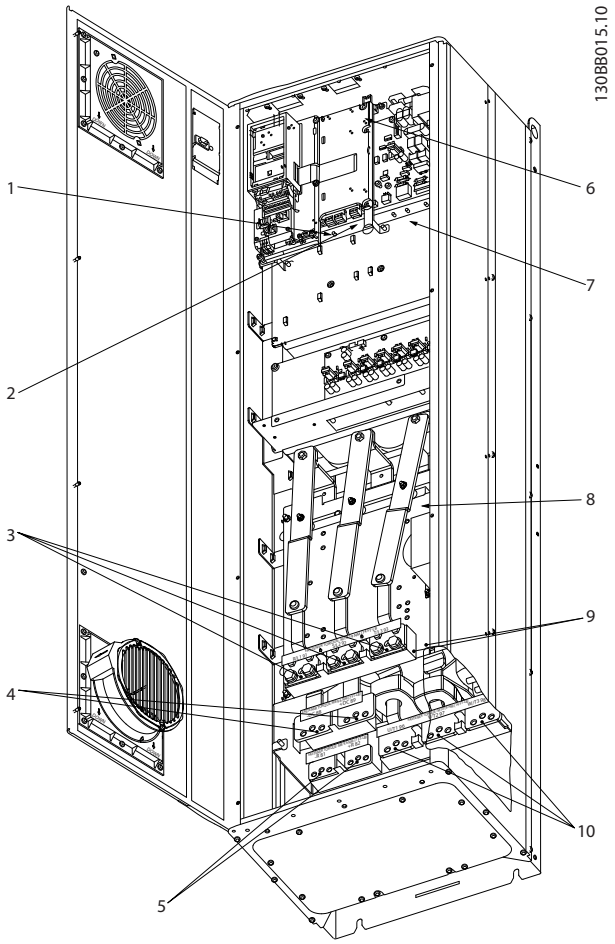

Illustration 3.55 Compact IP21 (NEMA 1) and IP54 (NEMA 12), Enclosure Type D1

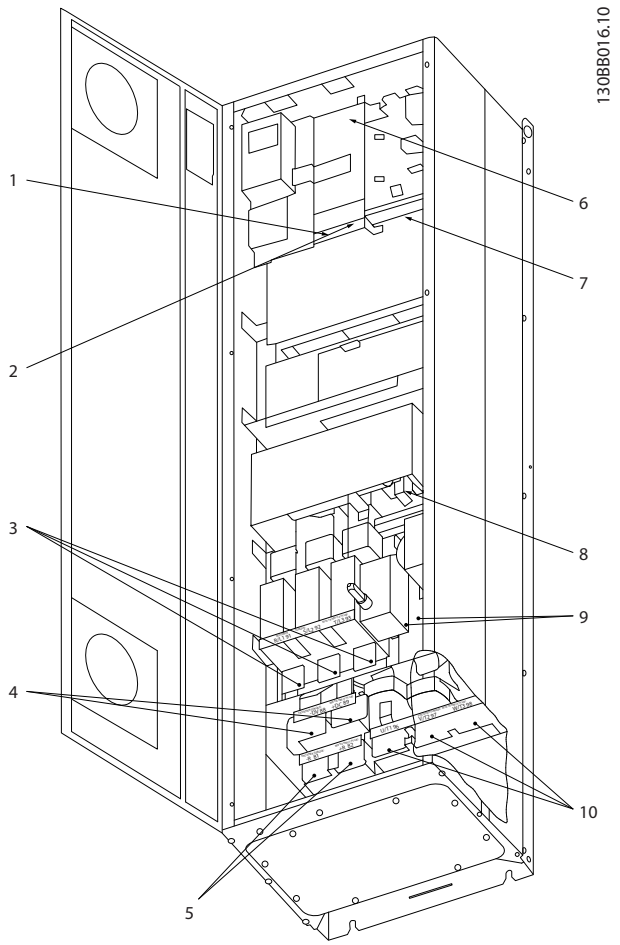

Illustration 3.56 Compact IP21 (NEMA 1) and IP54 (NEMA 12) with Disconnect, Fuse and RFI Filter, Enclosure Type D2

1)	AUX Relay	5)	Brake
	01 02 03		-R +R
	04 05 06		81 82
2)	Temp Switch	6)	SMPS Fuse (see fuse tables for part number)
	106 104 105	7)	AUX Fan
3)	Mains		100 101 102 103
	R S T		L1 L2 L1 L2
	91 92 93	8)	Fan Fuse (see fuse tables for part number)
	L1 L2 L3	9)	Mains ground
4)	Load sharing	10)	Motor
	-DC +DC		U V W
	88 89		96 97 98
			T1 T2 T3

Table 3.17 Legend to *Illustration 3.55* and *Illustration 3.56*

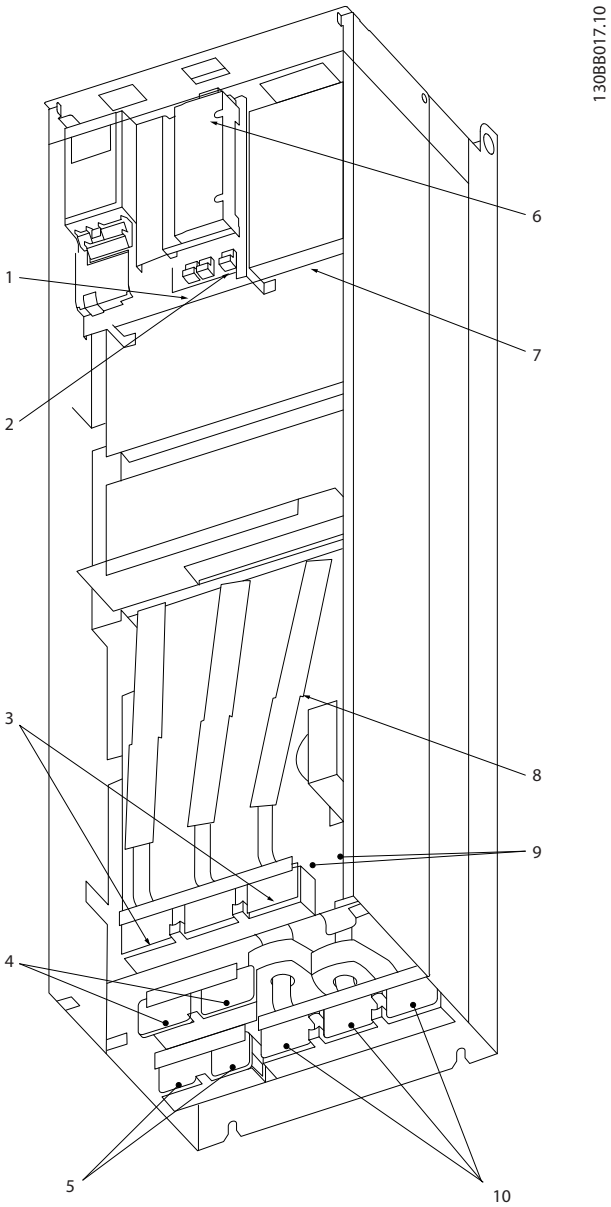

Illustration 3.57 Compact IP00 (Chassis), Enclosure Type D3

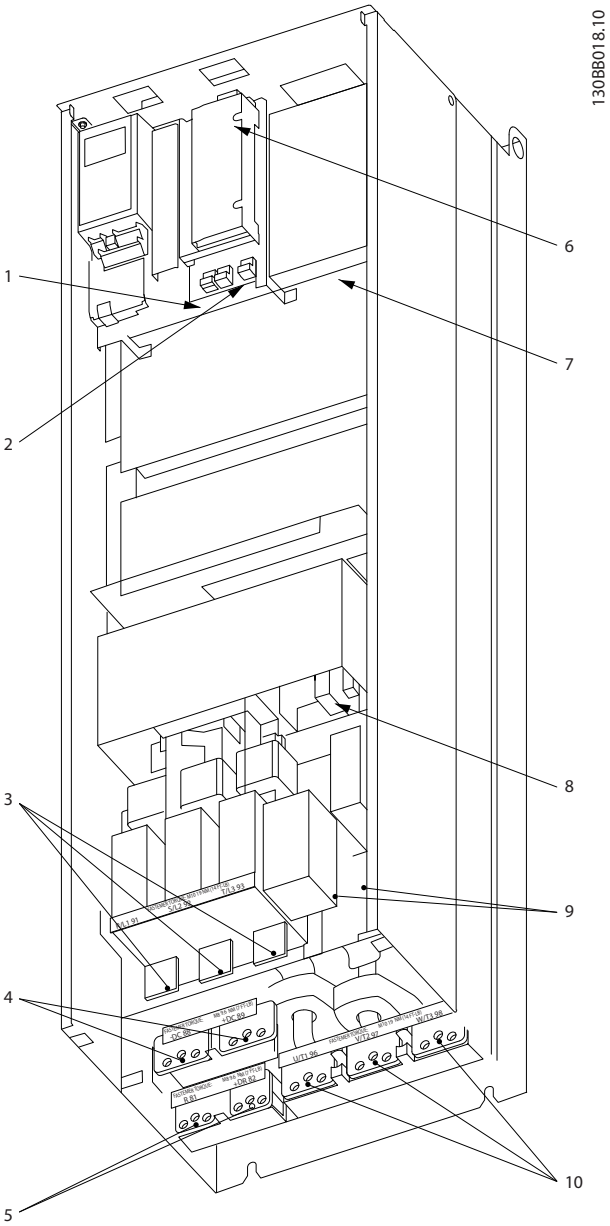

Illustration 3.58 Compact IP00 (Chassis) with Disconnect, Fuse and RFI Filter, Enclosure Type D4

1)	AUX Relay	4)	Load sharing	8)	Fan Fuse (see fuse tables for part number)
	01 02 03		-DC +DC	9)	Mains ground
	04 05 06		88 89	10)	Motor
2)	Temp Switch	5)	Brake		U V W
	106 104 105		-R +R		96 97 98
3)	Mains		81 82		T1 T2 T3
	R S T	6)	SMPS Fuse (see fuse tables for part number)		
	91 92 93	7)	AUX Fan		
	L1 L2 L3		100 101 102 103		
			L1 L2 L1 L2		

Table 3.18 Legend to *Illustration 3.57* and *Illustration 3.58*

3

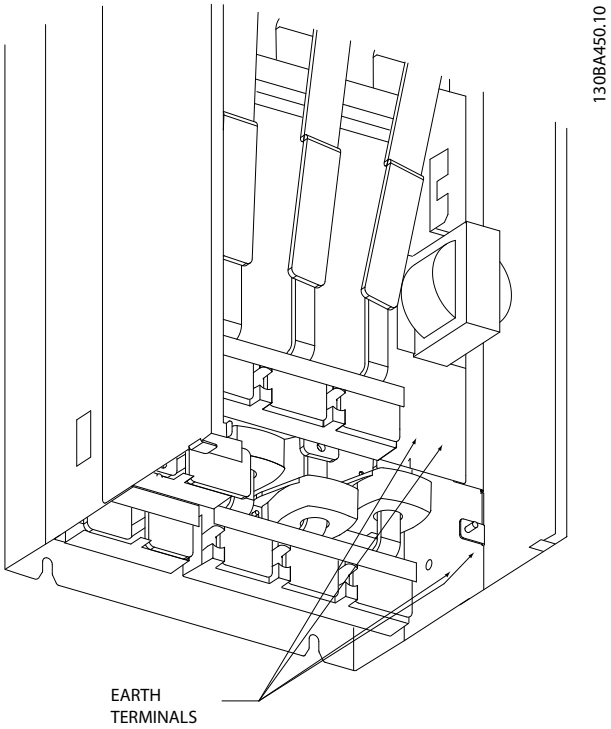

Illustration 3.59 Position of Earth Terminals IP00, Enclosure Type D

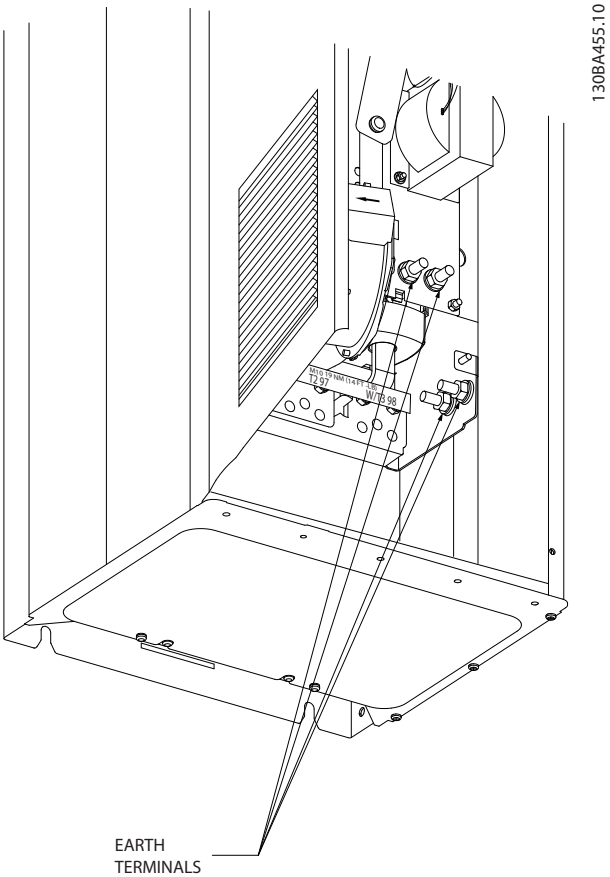

Illustration 3.60 Position of Earth Terminals IP21 (NEMA type 1) and IP54 (NEMA type 12)

NOTICE

D2 and D4 shown as examples. D1 and D3 are equivalent.

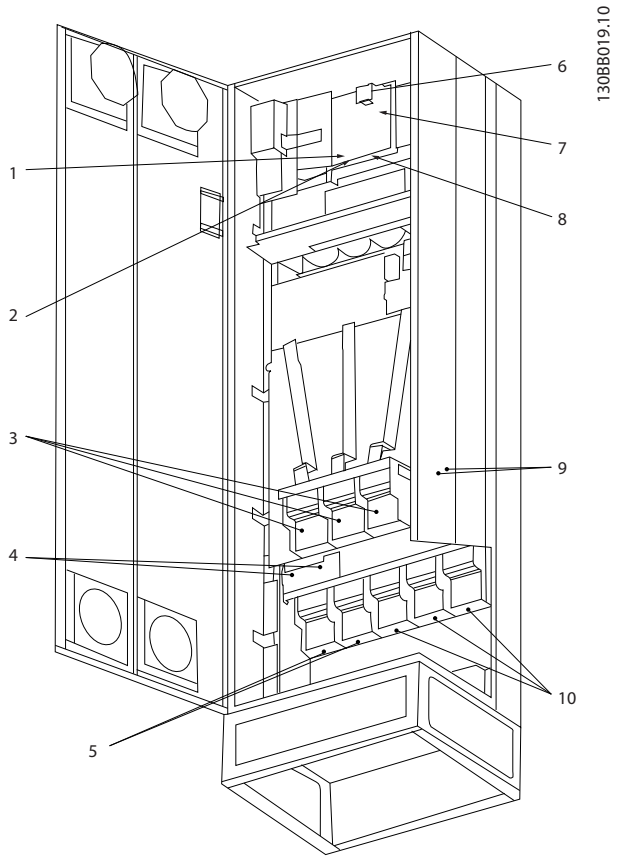

Illustration 3.61 Compact IP21 (NEMA 1) and IP54 (NEMA 12) Enclosure Type E1

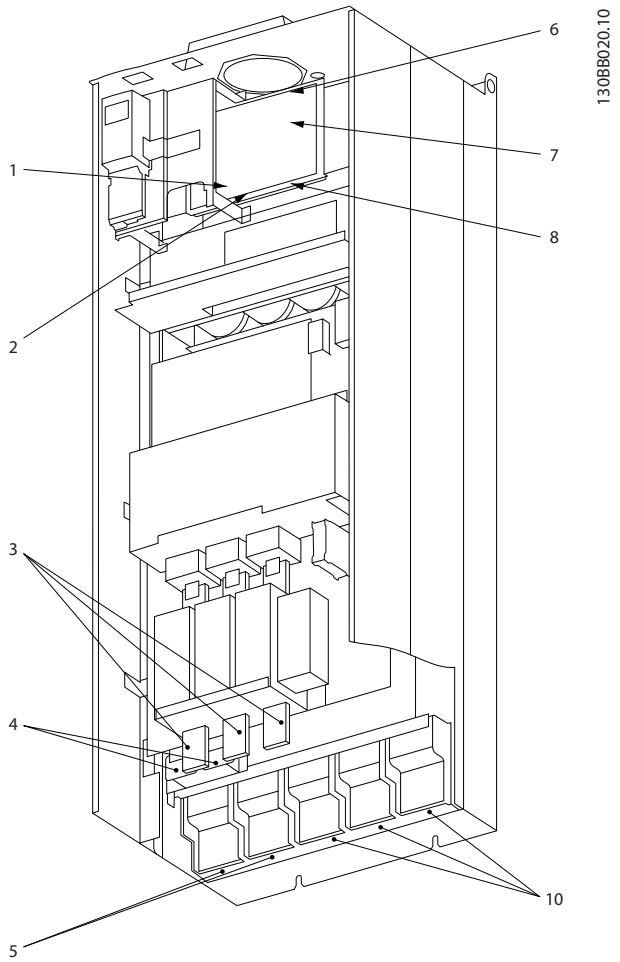

Illustration 3.62 Compact IP00 (Chassis) with Disconnect, Fuse and RFI Filter, Enclosure Type E2

1)	AUX Relay	5)	Load sharing
	01 02 03		-DC +DC
	04 05 06		88 89
2)	Temp Switch	6)	SMPS Fuse (see fuse tables for part number)
	106 104 105	7)	Fan Fuse (see fuse tables for part number)
3)	Mains	8)	AUX Fan
	R S T		100 101 102 103
	91 92 93		L1 L2 L1 L2
	L1 L2 L3	9)	Mains ground
4)	Brake	10)	Motor
	-R +R		U V W
	81 82		96 97 98
			T1 T2 T3

Table 3.19 Legend to *Illustration 3.61* and *Illustration 3.62*

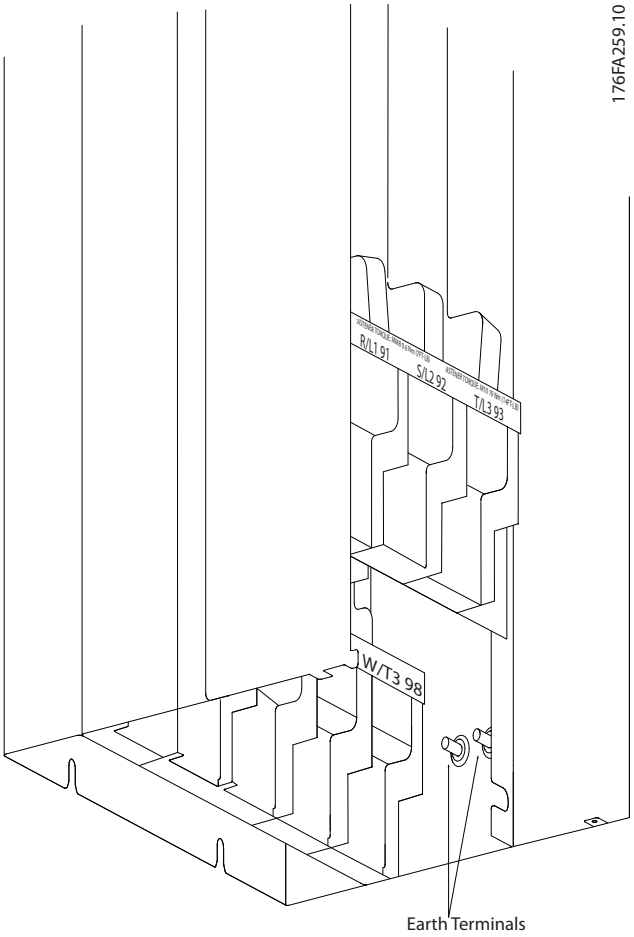

Illustration 3.63 Position of Earth Terminals IP00, Enclosure Type E

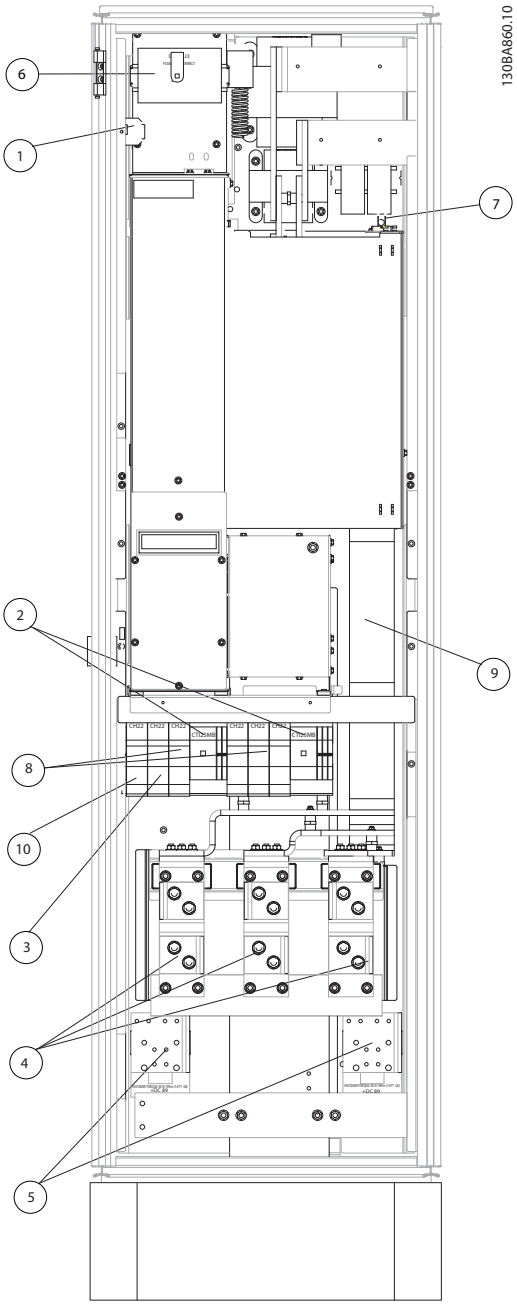

1)	24 V DC, 5 A	5)	Loadsharing
	T1 Output Taps		-DC +DC
	Temp Switch		88 89
	106 104 105	6)	Control Transformer Fuses (2 or 4 pieces). See fuse tables for part numbers
2)	Manual Motor Starters	7)	SMPS Fuse. See fuse tables for part numbers
3)	30 A Fuse Protected Power Terminals	8)	Manual Motor Controller fuses (3 or 6 pieces). See fuse tables for part numbers
4)	Mains	9)	Line Fuses, enclosure types F1 and F2 (3 pieces). See fuse tables for part numbers
	R S T	10)	30 Amp Fuse Protected Power fuses
	L1 L2 L3		

Illustration 3.64 Rectifier Cabinet, Enclosure Types F1, F2, F3 and F4

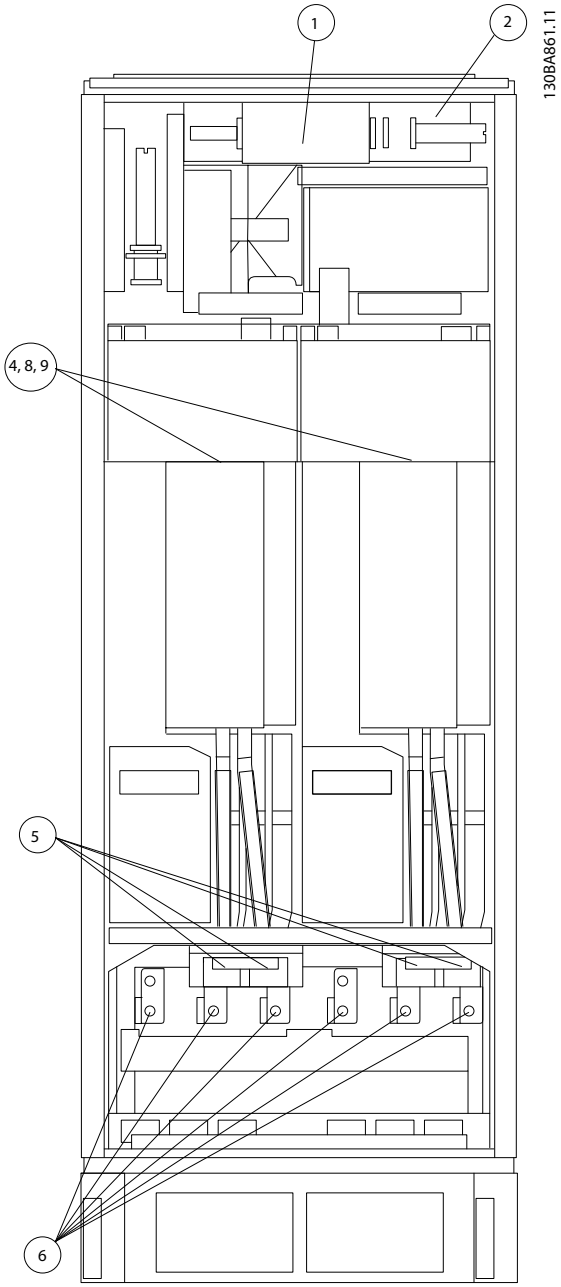

1)	External Temperature Monitoring	6)	Motor
2)	AUX Relay		U V W
	01 02 03		96 97 98
	04 05 06		T1 T2 T3
3)	NAMUR	7)	NAMUR Fuse. See fuse tables for part numbers
4)	AUX Fan	8)	Fan Fuses. See fuse tables for part numbers
	100 101 102 103	9)	SMPS Fuses. See fuse tables for part numbers
	L1 L2 L1 L2		
5)	Brake		
	-R +R		
	81 82		

Illustration 3.65 Inverter Cabinet, Enclosure Types F1 and F3

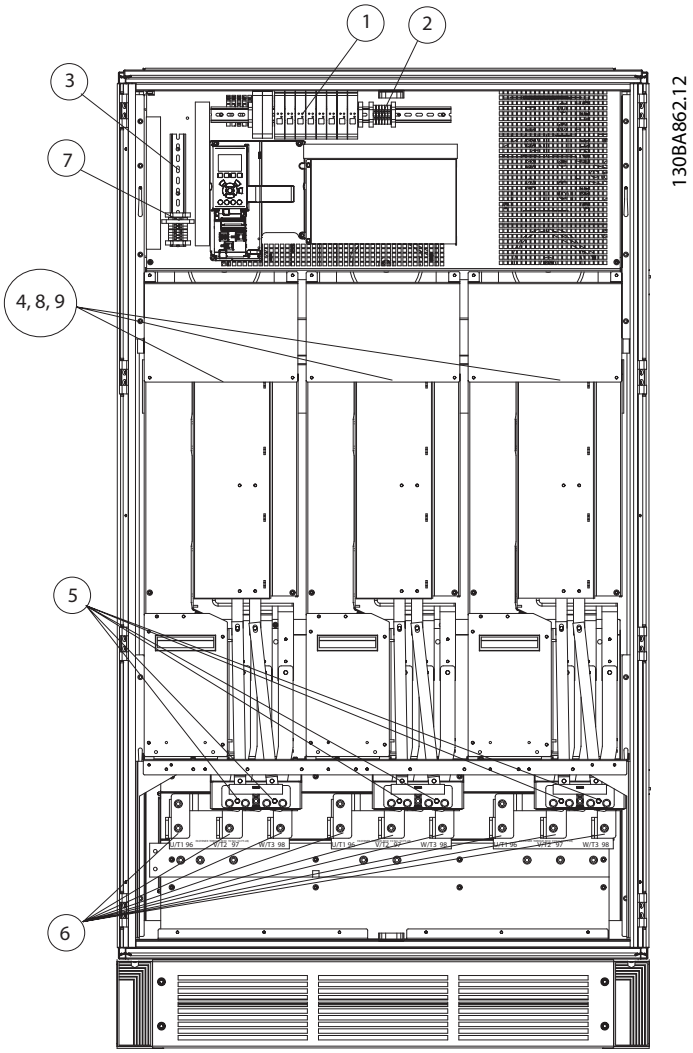

1)	External Temperature Monitoring	6)	Motor
2)	AUX Relay		U V W
	01 02 03		96 97 98
	04 05 06		T1 T2 T3
3)	NAMUR	7)	NAMUR Fuse. See fuse tables for part numbers
4)	AUX Fan	8)	Fan Fuses. See fuse tables for part numbers
	100 101 102 103	9)	SMPS Fuses. See fuse tables for part numbers
	L1 L2 L1 L2		
5)	Brake		
	-R +R		
	81 82		

Illustration 3.66 Inverter Cabinet, Enclosure Types F2 and F4

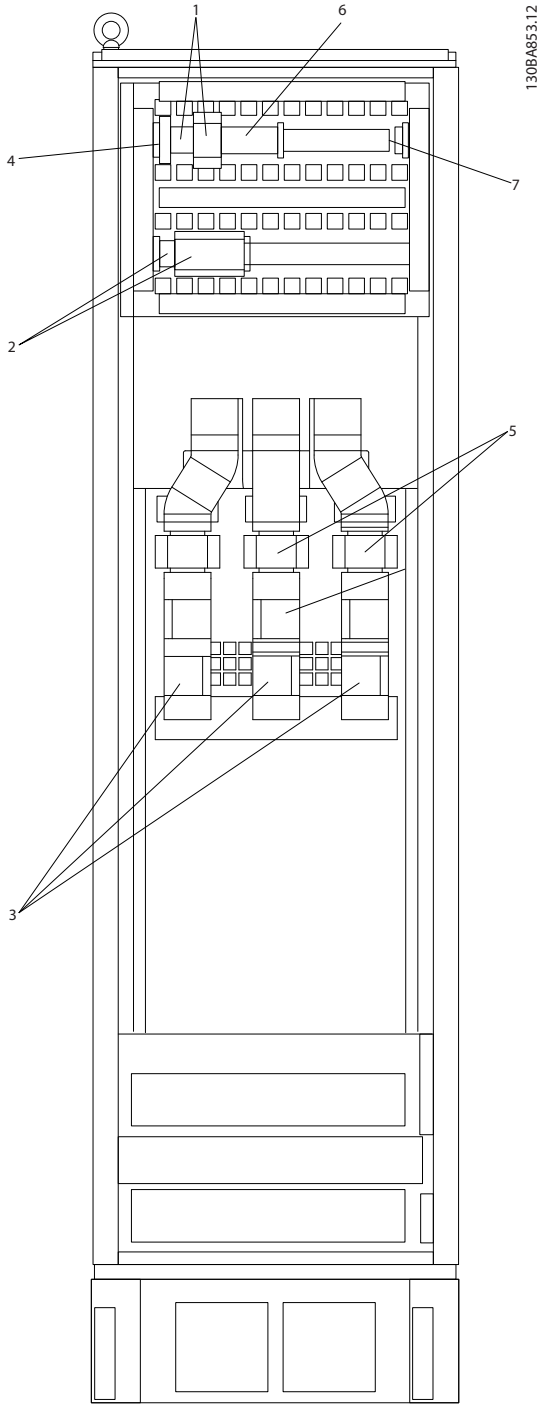

1)	Pilz Relay Terminal	4)	Safety Relay Coil Fuse with PILZ Relay
2)	RCD or IRM Terminal		See fuse tables for part numbers
3)	Mains	5)	Line Fuses, F3 and F4 (3 pieces)
	R S T		See fuse tables for part numbers
	91 92 93	6)	Contactor Relay Coil (230 VAC). N/C and N/O Aux Contacts (customer supplied)
	L1 L2 L3	7)	Circuit Breaker Shunt Trip Control Terminals (230 V AC or 230 V DC)

Illustration 3.67 Options Cabinet, Enclosure Types F3 and F4

3.6.2 Grounding

The following basic issues need to be considered when installing a frequency converter, so as to obtain electro-magnetic compatibility (EMC).

- Safety grounding: The frequency converter has a high leakage current and must be grounded appropriately for safety reasons. Apply local safety regulations.
- High-frequency grounding: Keep the ground wire connections as short as possible.

Connect the different ground systems at the lowest possible conductor impedance. The lowest possible conductor impedance is obtained by keeping the conductor as short as possible and by using the greatest possible surface area.
The metal cabinets of the different devices are mounted on the cabinet rear plate using the lowest possible HF impedance. This avoids having different HF voltages for the individual devices and avoids the risk of radio interference currents running in connection cables that may be used between the devices. The radio interference has been reduced.
To obtain a low HF impedance, use the fastening bolts of the devices as HF connection to the rear plate. It is necessary to remove insulating paint or similar from the fastening points.

3.6.3 Extra Protection (RCD)

ELCB relays, multiple protective earthing or earthing can be used as extra protection, provided that local safety regulations are complied with.

In case of an ground fault, a DC component may develop in the fault current.

If ELCB relays are used, local regulations must be observed. Relays must be suitable for protection of 3-phase equipment with a bridge rectifier and for a brief discharge on power-up.

See also *Special Conditions* in the *Design Guide*.

3.6.4 RFI Switch

Mains supply isolated from earth
If the frequency converter is supplied from an isolated mains source (IT mains, floating delta and grounded delta) or TT/TN-S mains with grounded leg, the RFI switch is recommended to be turned off (OFF) via *14-50 RFI Filter* on the frequency converter and *14-50 RFI Filter* on the filter. For further reference, see IEC 364-3. In case optimum EMC performance is needed, parallel motors are connected or the motor cable length is above 25 m, it is recommended to set *14-50 RFI Filter* to [ON].

In OFF, the internal RFI capacities (filter capacitors) between the chassis and the intermediate circuit are cut off to avoid damage to the intermediate circuit and to reduce the earth capacity currents (according to IEC 61800-3).
Also refer to the application note *VLT on IT Mains* It is important to use isolation monitors that are capable for use together with power electronics (IEC 61557-8).

3.6.5 Torque

When tightening all electrical connections it is very important to tighten with the correct torque. Too low or too high torque results in a bad electrical connection. Use a torque wrench to ensure correct torque.

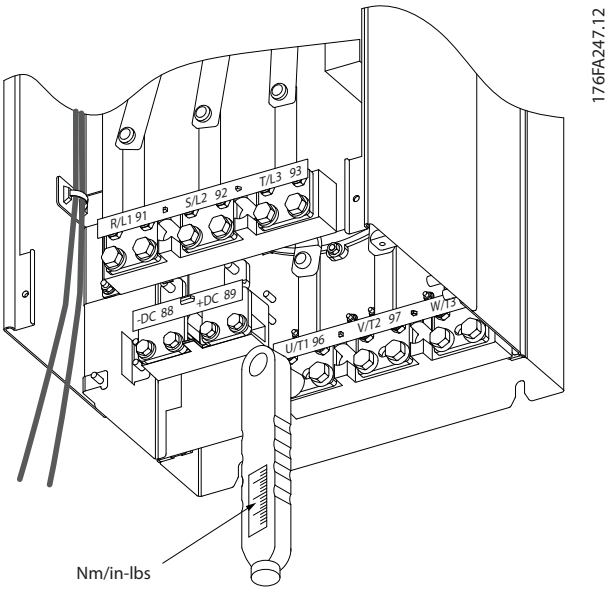

Illustration 3.68 Tightening Bolts with a Torque Wrench

Enclosure types	Terminal	Torque [Nm] (in-lbs)	Bolt size
D	Mains Motor	19-40 (168-354)	M10
	Load sharing Brake	8.5-20.5 (75-181)	M8
E	Mains Motor Load sharing	19-40 (168-354)	M10
	Brake	8.5-20.5 (75-181)	M8

Enclosure types	Terminal	Torque [Nm] (in-lbs)	Bolt size
F	Mains Motor	19-40 (168-354)	M10
	Load sharing Brake Regen	19-40 (168-354) 8.5-20.5 (75-181) 8.5-20.5 (75-181)	M10 M8 M8

Table 3.20 Torque for Terminals

3.6.6 Shielded Cables

⚠WARNING

Danfoss recommends to use shielded cables between the LCL filter and the AFE unit. Unshielded cables can be between transformer and LCL filter input side.

It is important that shielded and armoured cables are connected in a proper way to ensure the high EMC immunity and low emissions.

The connection can be made using either cable glands or clamps

- EMC cable glands: Generally available cable glands can be used to ensure an optimum EMC connection.
- EMC cable clamp: Clamps allowing easy connection are supplied with the frequency converter.

3.6.7 Motor Cable

The motor must be connected to terminals U/T1/96, V/T2/97, W/T3/98. Earth to terminal 99. All types of 3-phase asynchronous standard motors can be used with a frequency converter unit. The factory setting is for clockwise rotation with the frequency converter output connected as follows:

Terminal No.	Function
96, 97, 98, 99	Mains U/T1, V/T2, W/T3 Earth

Table 3.21 Mains Terminals

- Terminal U/T1/96 connected to U-phase
- Terminal V/T2/97 connected to V-phase
- Terminal W/T3/98 connected to W-phase

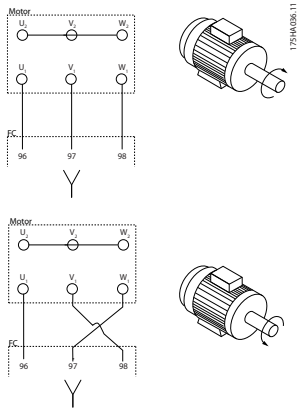

Table 3.22

The direction of rotation can be changed by switching 2 phases in the motor cable or by changing the setting of 4-10 Motor Speed Direction.

Motor rotation check can be performed using *1-28 Motor Rotation Check* and following the steps shown in the display.

F enclosure requirements

F1/F3 requirements: Motor phase cable quantities must be multiples of 2, resulting in 2, 4, 6, or 8 (1 cable is not allowed) to obtain equal amount of wires attached to both inverter module terminals. The cables are required to be equal length within 10% between the inverter module terminals and the first common point of a phase. The recommended common point is the motor terminals.

F2/F4 requirements: Motor phase cable quantities must be multiples of 3, resulting in 3, 6, 9, or 12 (1 or 2 cables are not allowed) to obtain equal amount of wires attached to each inverter module terminal. The wires are required to be equal length within 10% between the inverter module terminals and the first common point of a phase. The recommended common point is the motor terminals.

Output junction box requirements: The length, minimum 2.5 m, and quantity of cables must be equal from each inverter module to the common terminal in the junction box.

NOTICE

If a retrofit application requires unequal amount of wires per phase, consult the factory for requirements and documentation or use the top/bottom entry side cabinet option.

3.6.8 Brake Cable for Frequency Converters with Factory Installed Brake Chopper Option

(Only standard with letter B in position 18 of typecode).

The connection cable to the brake resistor must be screened and the max. length from frequency converter to the DC bar is limited to 25 m (82 ft).

Terminal No.	Function
81, 82	Brake resistor terminals

Table 3.23 Terminals for Brake Resistor

The connection cable to the brake resistor must be screened. Connect the screen with cable clamps to the conductive back plate at the frequency converter and to the metal cabinet of the brake resistor.
Size the brake cable cross-section to match the brake torque. See also the instructions *Brake Resistor* and *Brake Resistors for Horizontal Applications* for further information regarding safe installation.

⚠WARNING

Note that voltages up to 1099 V DC, depending on the supply voltage, may occur on the terminals.

F enclosure requirements
The brake resistor(s) must be connected to the brake terminals in each inverter module.

3.6.9 Brake Resistor Temperature Switch

Torque: 0.5-0.6 Nm (5 in-lbs)
Screw size: M3

This input can be used to monitor the temperature of an externally connected brake resistor. If the input between 104 and 106 is established, the frequency converter trips on warning/alarm 27, *Brake IGBT*. If the connection is closed between 104 and 105, the frequency converter trips on warning/alarm 27, *Brake IGBT*.
Install a KLIXON switch that is normally closed. If this function is not used, short circuit 106 and 104 together.
Normally closed: 104-106 (factory installed jumper)
Normally open: 104-105

Terminal No.	Function
106, 104, 105	Brake resistor temperature switch.

Table 3.24 Terminals for Brake Resister Temperature Switch

NOTICE

If the temperature of the brake resistor gets too high and the thermal switch drops out, the frequency converter stops braking. The motor starts coasting.

3.6.10 Load Sharing

Terminal No.	Function
88, 89	Loadsharing

Table 3.25 Terminals for Load Sharing

The connection cable must be screened and the max. length from the frequency converter to the DC bar is limited to 25 m (82 ft).
Load sharing enables linking of the DC intermediate circuits of several frequency converters.

⚠WARNING

Voltages up to 1099 V DC may occur on the terminals. Load Sharing calls for extra equipment and safety considerations. For further information, see the instuctions *Load Sharing*.

⚠WARNING

Mains disconnect may not isolate the frequency converter due to DC-link connection.

3.6.11 Shielding against Electrical Noise

Before mounting the mains power cable, mount the EMC metal cover to ensure best EMC performance.

NOTICE

The EMC metal cover is only included in units with an RFI filter.

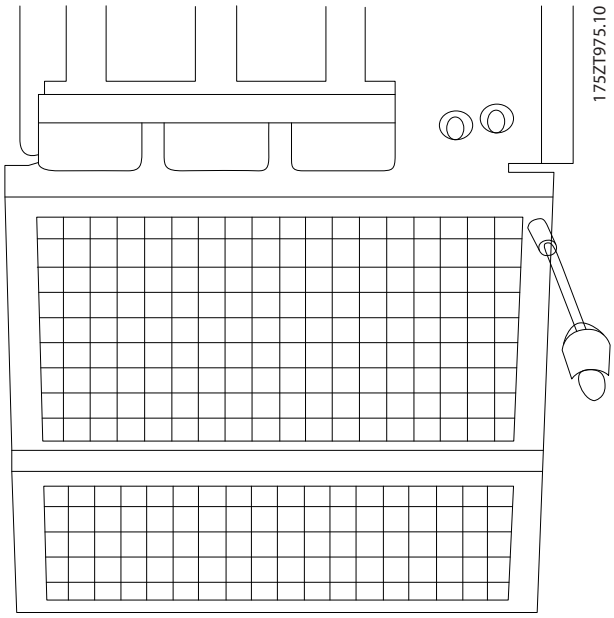

Illustration 3.69 Mounting of EMC Shield.

3.6.12 Mains Connection

Mains must be connected to terminals 91, 92 and 93. Earth is connected to the terminal to the right of terminal 93.

Terminal No.	Function
91, 92, 93	Mains R/L1, S/L2, T/L3
94	Earth

Table 3.26 Mains Terminals Connection

⚠CAUTION

Check the name plate to ensure that the mains voltage of the frequency converter matches the power supply of the plant.

Ensure that the power supply can supply the necessary current to the frequency converter.

If the unit is without built-in fuses, ensure that the appropriate fuses have the correct current rating.

3.6.13 External Fan Supply

In case the frequency converter is supplied by DC or if the fan must run independently of the power supply, an external power supply can be applied. The connection is made on the power card.

Terminal No.	Function
100, 101	Auxiliary supply S, T
102, 103	Internal supply S, T

Table 3.27 External Fan Supply Terminals

The connector located on the power card provides the connection of line voltage for the cooling fans. The fans are connected from factory to be supplied from a common AC line (jumpers between 100-102 and 101-103). If external supply is needed, the jumpers are removed and the supply is connected to terminals 100 and 101. Use a 5 A fuse for protection. In UL applications, use a LittelFuse KLK-5 or equivalent.

3.6.14 Fuses

It is recommended to use fuses and/or circuit breakers on the supply side as protection in case of component break-down inside the frequency converter (first fault).

NOTICE

This is mandatory to ensure compliance with IEC 60364 for CE or NEC 2009 for UL.

⚠WARNING

Personnel and property must be protected against the consequence of component break-down internally in the frequency converter.

Branch circuit protection
To protect the installation against electrical and fire hazard, all branch circuits in an installation, switch gear, machines etc., must be protected against short-circuit and overcurrent according to national/international regulations.

NOTICE

The recommendations given do not cover branch circuit protection for UL.

Short-circuit protection:
Danfoss recommends using the fuses/circuit breakers mentioned below to protect service personnel and property in case of component break-down in the frequency converter.

Non UL compliance

If UL/cUL is not to be complied with, use the following fuses to ensure compliance with EN50178:

P110 - P250	380 - 480 V	type gG
P315 - P450	380 - 480 V	type gR

Table 3.28

UL Compliance

380-480 V, Enclosure types D, E and F

The fuses below are suitable for use on a circuit capable of delivering 100,000 A_{rms} (symmetrical), 240 V, or 480 V, or 500 V, or 600 V depending on the frequency converter voltage rating. With the proper fusing, the frequency converter Short Circuit Current Rating (SCCR) is 100,000 A_{rms}.

Size/ Type	Bussmann E1958 JFHR2**	Bussmann E4273 T/JDDZ**	SIBA E180276 JFHR2	LittelFuse E71611 JFHR2**	Ferraz-Shawmut E60314 JFHR2**	Bussmann E4274 H/JDDZ**	Bussmann E125085 JFHR2*	Internal Option Bussmann
P110	FWH-300	JJS-300	2061032.315	L50S-300	A50-P300	NOS-300	170M3017	170M3018
P132	FWH-350	JJS-350	2061032.35	L50S-350	A50-P350	NOS-350	170M3018	170M3018
P160	FWH-400	JJS-400	2061032.40	L50S-400	A50-P400	NOS-400	170M4012	170M4016
P200	FWH-500	JJS-500	2061032.50	L50S-500	A50-P500	NOS-500	170M4014	170M4016
P250	FWH-600	JJS-600	2062032.63	L50S-600	A50-P600	NOS-600	170M4016	170M4016

Table 3.29 Enclosure Types D, Line Fuses, 380-480 V

Size/ Type	Bussmann PN*	Rating	Ferraz	Siba
P315	170M4017	700 A, 700 V	6.9URD31D08A0700	20 610 32.700
P355	170M6013	900 A, 700 V	6.9URD33D08A0900	20 630 32.900
P400	170M6013	900 A, 700 V	6.9URD33D08A0900	20 630 32.900
P450	170M6013	900 A, 700 V	6.9URD33D08A0900	20 630 32.900

Table 3.30 Enclosure Types E, Line Fuses, 380-480 V

Size/ Type	Bussmann PN*	Rating	Siba	Internal Bussmann Option
P500	170M7081	1600 A, 700 V	20 695 32.1600	170M7082
P560	170M7081	1600 A, 700 V	20 695 32.1600	170M7082
P630	170M7082	2000 A, 700 V	20 695 32.2000	170M7082
P710	170M7082	2000 A, 700 V	20 695 32.2000	170M7082
P800	170M7083	2500 A, 700 V	20 695 32.2500	170M7083
P1M0	170M7083	2500 A, 700 V	20 695 32.2500	170M7083

Table 3.31 Enclosure Types F, Line Fuses, 380-480 V

Size/Type	Bussmann PN*	Rating	Siba
P500	170M8611	1100 A, 1000 V	20 781 32.1000
P560	170M8611	1100 A, 1000 V	20 781 32.1000
P630	170M6467	1400 A, 700 V	20 681 32.1400
P710	170M6467	1400 A, 700 V	20 681 32.1400
P800	170M8611	1100 A, 1000 V	20 781 32.1000
P1M0	170M6467	1400 A, 700 V	20 681 32.1400

Table 3.32 Enclosure Type F, Inverter Module DC Link Fuses, 380-480 V

**170M fuses from Bussmann shown use the -/80 visual indicator, -TN/80 Type T, -/110 or TN/110 Type T indicator fuses of the same size and amperage may be substituted for external use*

***Any minimum 500 V UL listed fuse with associated current rating may be used to meet UL requirements.*

3

525-690 V, Enclosure Types D, E and F

Size/ Type	Buss-mann E1250 85 JFHR2	[A]	SIBA E1802 76 JFHR2	Ferraz-Shawmut E76491 JFHR2	Internal Option Bussmann
P45K	170M 3013	125	20610 32.125	6.6URD30D08 A0125	170M3015
P55K	170M 3014	160	20610 32.16	6.6URD30D08 A0160	170M3015
P75K	170M 3015	200	20610 32.2	6.6URD30D08 A0200	170M3015
P90K	170M 3015	200	20610 32.2	6.6URD30D08 A0200	170M3015
P110	170M 3016	250	20610 32.25	6.6URD30D08 A0250	170M3018
P132	170M 3017	315	20610 32.315	6.6URD30D08 A0315	170M3018
P160	170M 3018	350	20610 32.35	6.6URD30D08 A0350	170M3018
P200	170M 4011	350	20610 32.35	6.6URD30D08 A0350	170M5011
P250	170M 4012	400	20610 32.4	6.6URD30D08 A0400	170M5011
P315	170M 4014	500	20610 32.5	6.6URD30D08 A0500	170M5011
P400	170M 5011	550	20620 32.55	6.6URD32D08 A550	170M5011

Table 3.33 Enclosure Types D, E and F 525-690 V

Size/ Type	Bussmann PN*	Rating	Ferraz	Siba
P450	170M4017	700 A, 700 V	6.9URD31 D08A070 0	20 610 32.700
P500	170M4017	700 A, 700 V	6.9URD31 D08A070 0	20 610 32.700
P560	170M6013	900 A, 700 V	6.9URD33 D08A090 0	20 630 32.900
P630	170M6013	900 A, 700 V	6.9URD33 D08A090 0	20 630 32.900

Table 3.34 Enclosure Type E, 525-690 V

Size/ Type	Bussmann PN*	Rating	Siba	Internal Bussmann Option
P710	170M7081	1600 A, 700 V	20 695 32.1600	170M7082
P800	170M7081	1600 A, 700 V	20 695 32.1600	170M7082
P900	170M7081	1600 A, 700 V	20 695 32.1600	170M7082
P1M0	170M7081	1600 A, 700 V	20 695 32.1600	170M7082
P1M2	170M7082	2000 A, 700 V	20 695 32.2000	170M7082
P1M4	170M7083	2500 A, 700 V	20 695 32.2500	170M7083

Table 3.35 Enclosure Type Size F, Line Fuses, 525-690 V

Size/Type	Bussmann PN*	Rating	Siba
P710	170M8611	1100 A, 1000 V	20 781 32. 1000
P800	170M8611	1100 A, 1000 V	20 781 32. 1000
P900	170M8611	1100 A, 1000 V	20 781 32. 1000
P1M0	170M8611	1100 A, 1000 V	20 781 32. 1000
P1M2	170M8611	1100 A, 1000 V	20 781 32. 1000
P1M4	170M8611	1100 A, 1000 V	20 781 32.1000

Table 3.36 Enclosure Type F, Inverter Module DC Link Fuses, 525-690 V

**170M fuses from Bussmann shown use the -/80 visual indicator, -TN/80 Type T, -/110 or TN/110 Type T indicator fuses of the same size and amperage may be substituted for external use.*

Suitable for use on a circuit capable of delivering not more than 100 000 rms symmetrical A, 500/600/690 V maximum when protected by the above fuses.

Supplementary fuses

Enclosure Type	Bussmann PN*	Rating
D, E and F	KTK-4	4 A, 600 V

Table 3.37 SMPS Fuse

Size/Type	Bussmann PN*	LittelFuse	Rating
P110-P315, 380-480 V	KTK-4		4 A, 600 V
P45K-P500, 525-690 V	KTK-4		4 A, 600 V
P355-P1M0, 380-480 V		KLK-15	15A, 600 V
P560-P1M4, 525-690 V		KLK-15	15A, 600 V

Table 3.38 Fan Fuses

Size/Type	[A]	Bussmann PN*	Rating [V]	Alternative Fuses
P500-P1M0, 380-480 V	2.5-4.0	LPJ-6 SP or SPI	6 A, 600	Any listed Class J Dual Element, Time Delay, 6A
P710-P1M4, 525-690 V		LPJ-10 SP or SPI	10 A, 600	Any listed Class J Dual Element, Time Delay, 10 A
P500-P1M0, 380-480 V	4.0-6.3	LPJ-10 SP or SPI	10 A, 600	Any listed Class J Dual Element, Time Delay, 10 A
P710-P1M4, 525-690 V		LPJ-15 SP or SPI	15 A, 600	Any listed Class J Dual Element, Time Delay, 15 A
P500-P1M0, 380-480 V	6.3 - 10	LPJ-15 SP or SPI	15 A, 600	Any listed Class J Dual Element, Time Delay, 15 A
P710-P1M4, 525-690 V		LPJ-20 SP or SPI	20 A, 600	Any listed Class J Dual Element, Time Delay, 20A
P500-P1M0, 380-480 V	10 - 16	LPJ-25 SP or SPI	25 A, 600	Any listed Class J Dual Element, Time Delay, 25 A
P710-P1M4, 525-690 V		LPJ-20 SP or SPI	20 A, 600	Any listed Class J Dual Element, Time Delay, 20 A

Table 3.39 Manual Motor Controller Fuses

Enclosure Type	Bussmann PN*	Rating	Alternative Fuses
F	LPJ-30 SP or SPI	30 A, 600 V	Any listed Class J Dual Element, Time Delay, 30 A

Table 3.40 30 A Fuse Protected Terminal Fuse

Enclosure Type	Bussmann PN*	Rating	Alternative Fuses
F	LPJ-6 SP or SPI	6 A, 600 V	Any listed Class J Dual Element, Time Delay, 6 A

Table 3.41 Control Transformer Fuse

Enclosure Type	Bussmann PN*	Rating
F	GMC-800MA	800 mA, 250 V

Table 3.42 NAMUR Fuse

Enclosure Type	Bussmann PN*	Rating	Alternative Fuses
F	LP-CC-6	6 A, 600 V	Any listed Class CC, 6 A

Table 3.43 Safety Relay Coil Fuse with PILS Relay

3.6.15 Mains Disconnectors

Enclosure Type	Power & Voltage	Type
D1/D3	P110-P132 380-480 V & P110-P160 525-690 V	ABB OETL-NF200A or OT200U12-91
D2/D4	P160-P250 380-480 V & P200-P400 525-690 V	ABB OETL-NF400A or OT400U12-91
E1/E2	P315 380-480 V & P450-P630 525-690 V	ABB OT600U03
E1/E2	P355-P450 380-480 V	ABB OT800U03
F3	P500 380-480 V & P710-P800 525-690 V	Merlin Gerin NPJF36000S12AAYP
F3	P560-P710 380-480 V & P900 525-690 V	Merlin Gerin NRK36000S20AAYP
F4	P800-P1M0 380-480 V & P1M0-P1M4 525-690 V	Merlin Gerin NRK36000S20AAYP

Table 3.44

3.6.16 F Enclosure Circuit Breakers

Enclosure Type	Power & Voltage	Type
F3	P500 380-480 V & P710-P800 525-690 V	Merlin Gerin NPJF36120U31AABSCYP
F3	P560-P710 380-480 V & P900 525-690 V	Merlin Gerin NRJF36200U31AABSCYP
F4	P800 380-480 V & P1M0-P1M4 525-690 V	Merlin Gerin NRJF36200U31AABSCYP
F4	P1M0 380-480 V	Merlin Gerin NRJF36250U31AABSCYP

Table 3.45

3.6.17 F Enclosure Mains Contactors

Enclosure Type	Power & Voltage	Type
F3	P500-P560 380-480 V & P710-P900 525-690 V	Eaton XTCE650N22A
F3	P 630-P710 380-480 V	Eaton XTCEC14P22B
F4	P800-P1M0 380-480 V & P1M0-P1M4 525-690 V	Eaton XTCEC14P22B

Table 3.46

3.6.18 Motor Insulation

For motor cable lengths ≤ the maximum cable length listed in , the recommended motor insulation ratings are in *Table 3.47*. The peak voltage can be up to twice the DC link voltage, 2.8 times the mains voltage, due to transmission line effects in the motor cable. If a motor has a lower insulation rating, use a dU/dt or sine wave filter.

Nominal Mains Voltage	Motor Insulation
$U_N \leq 420$ V	Standard U_{LL} = 1300 V
420 V < $U_N \leq 500$ V	Reinforced U_{LL} = 1600 V
500 V < $U_N \leq 600$ V	Reinforced U_{LL} = 1800 V
600 V < $U_N \leq 690$ V	Reinforced U_{LL} = 2000 V

Table 3.47 Motor Insulation at Various Nominal Mains Voltages

3.6.19 Motor Bearing Currents

For motors with a rating 110 kW or higher operating via frequency converters use NDE (Non-Drive End) insulated bearings to eliminate circulating bearing currents due to the physical size of the motor. To minimise DE (Drive End) bearing and shaft currents, proper grounding of the frequency converter, motor, driven machine, and motor to the driven machine is required. Although failure due to bearing currents is rare, if it occurs, use the following mitigation strategies.

Standard mitigation strategies

- Use an insulated bearing
- Apply rigorous installation procedures
  - Ensure the motor and load motor are aligned
  - Strictly follow the EMC Installation guideline
  - Reinforce the PE so the high frequency impedance is lower in the PE than the input power leads
  - Provide a good high frequency connection between the motor and the frequency converter by screened cable, which has a 360° connection in the motor and frequency converter
  - Ensure that the impedance from frequency converter to building ground is lower than the grounding impedance of the machine. Make a direct earth connection between the motor and load motor
- Apply conductive lubrication
- Try to ensure that the line voltage is balanced to ground. This can be difficult for IT, TT, TN-CS or Grounded leg systems
- Use an insulated bearing as recommended by the motor manufacturer

NOTICE

Motors from reputable manufacturers typically have these fitted as standard in motors of this size.
If none of these strategies works, consult the factory.
If necessary after consulting Danfoss:

- Lower the IGBT switching frequency
- Modify the inverter waveform, 60° AVM vs. SFAVM
- Install a shaft grounding system or use an isolating coupling between motor and load
- Use minimum speed settings if possible
- Use a dU/dt or sinus filter

3.6.20 Control Cable Routing

Tie down all control wires to the designated control cable routing as shown in the picture. Remember to connect the shields in a proper way to ensure optimum electrical immunity.

Fieldbus connection
Connections are made to the relevant options on the control card. For details, see the relevant fieldbus instruction. The cable must be placed in the provided path inside the frequency converter and tied down with other control wires (see illustrations).

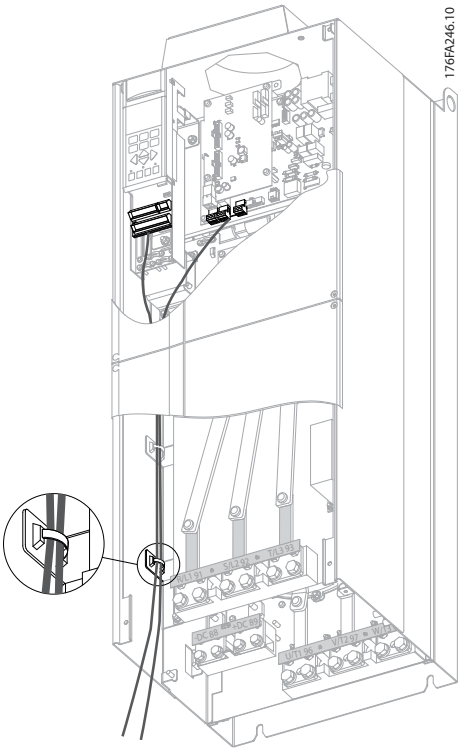

Illustration 3.70 Control Card Wiring Path for the D3. Control Card Wiring for the D1, D2, D4, E1 and E2 use the same Path

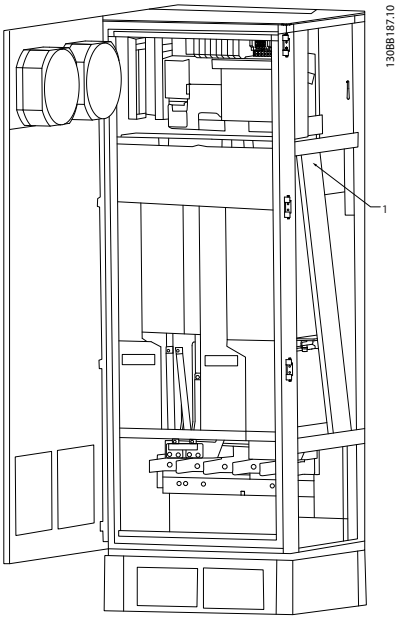

Illustration 3.71 Control Card Wiring Path for the F1/F3. Control Card Wiring for the F2/F4 use the same Path

In the Chassis (IP00) and NEMA 1 units, it is also possible to connect the fieldbus from the top of the unit as shown in the following pictures. On the NEMA 1 unit a cover plate must be removed.
Kit number for fieldbus top connection: 176F1742

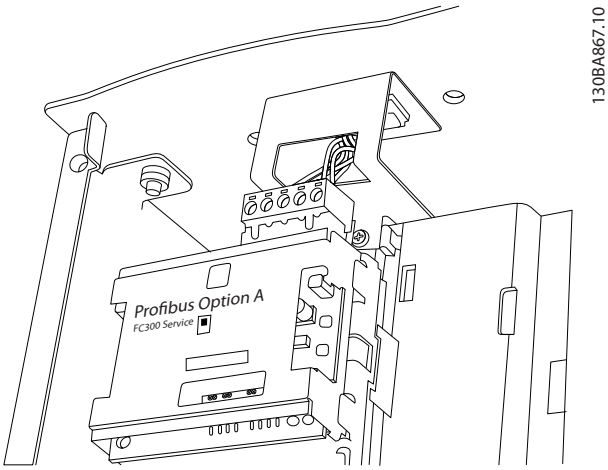

Illustration 3.72 Top Connection for Fieldbus.

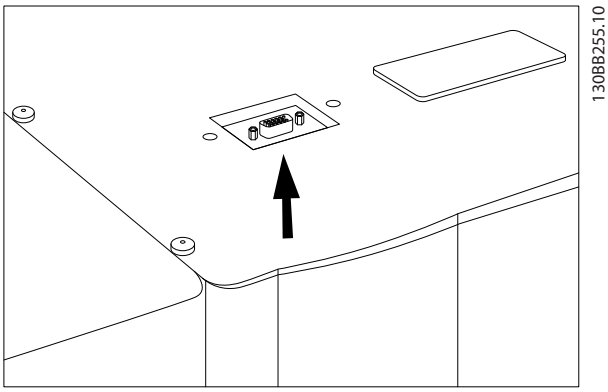

Illustration 3.73

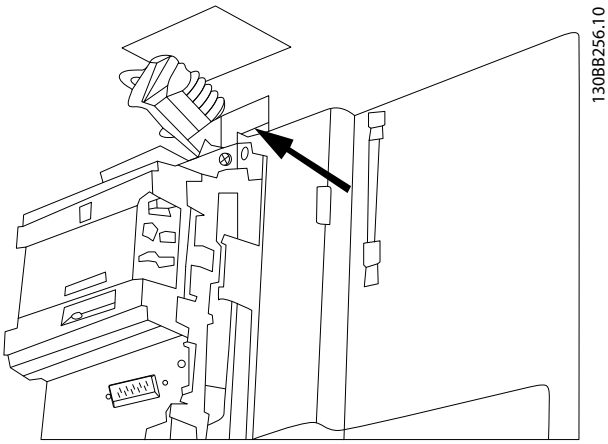

Illustration 3.74

Installation of 24 V external DC Supply
Torque: 0.5 - 0.6 Nm (5 in-lbs)
Screw size: M3

No.	Function
35 (-), 36 (+)	24 V external DC supply

Table 3.48 Terminals for 24 V External DC Supply

24 V DC external supply can be used as low-voltage supply to the control card and any option cards installed. This enables full operation of the LCP (including parameter setting) without connection to mains. Note that a warning of low voltage is given when 24 V DC has been connected; however, there is no tripping.

⚠WARNING

Use 24 V DC supply of type PELV to ensure correct galvanic isolation (type PELV) on the control terminals of the frequency converter.

3.6.21 Access to Control Terminals

All terminals to the control cables are located beneath the LCP. They are accessed by opening the door of the IP21/IP54 version or removing the covers of the IP00 version.

3.6.22 Electrical Installation, Control Terminals

To connect the cable to the terminal

1. Strip insulation by about 9-10 mm

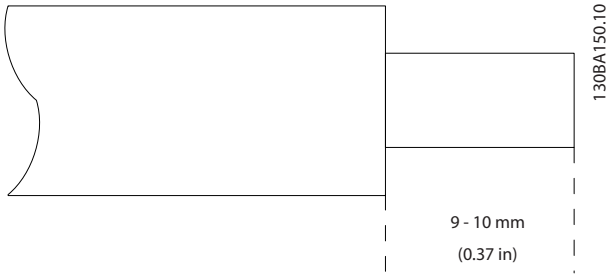

Illustration 3.75 Stripping of Insulation

2. Insert a screwdriver[1)] in the square hole.
3. Insert the cable in the adjacent circular hole.

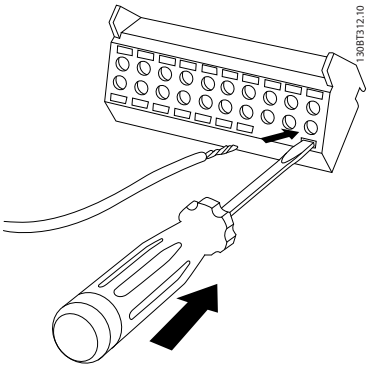

Illustration 3.76

4. Remove the screwdriver. The cable is now mounted in the terminal.

To remove the cable from the terminal

1. Insert a screw driver[1)] in the square hole.
2. Pull out the cable.

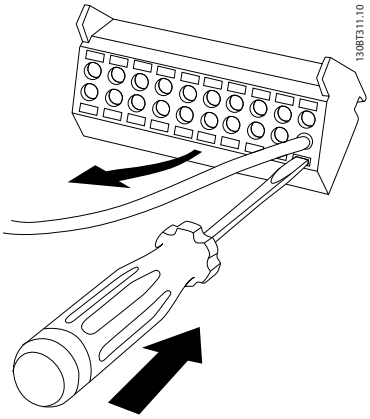

Illustration 3.77

[1)] Max. 0.4 x 2.5 mm

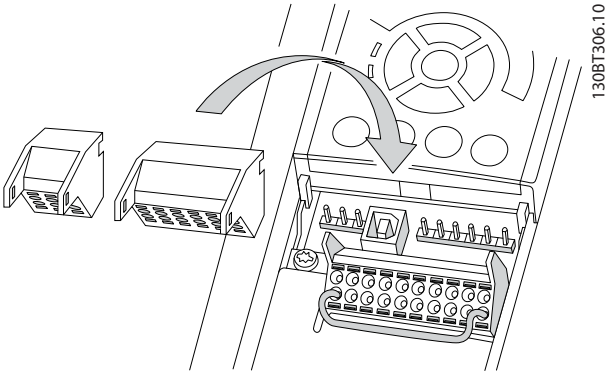

Illustration 3.78

3.6.23 Electrical Installation, Control Cables

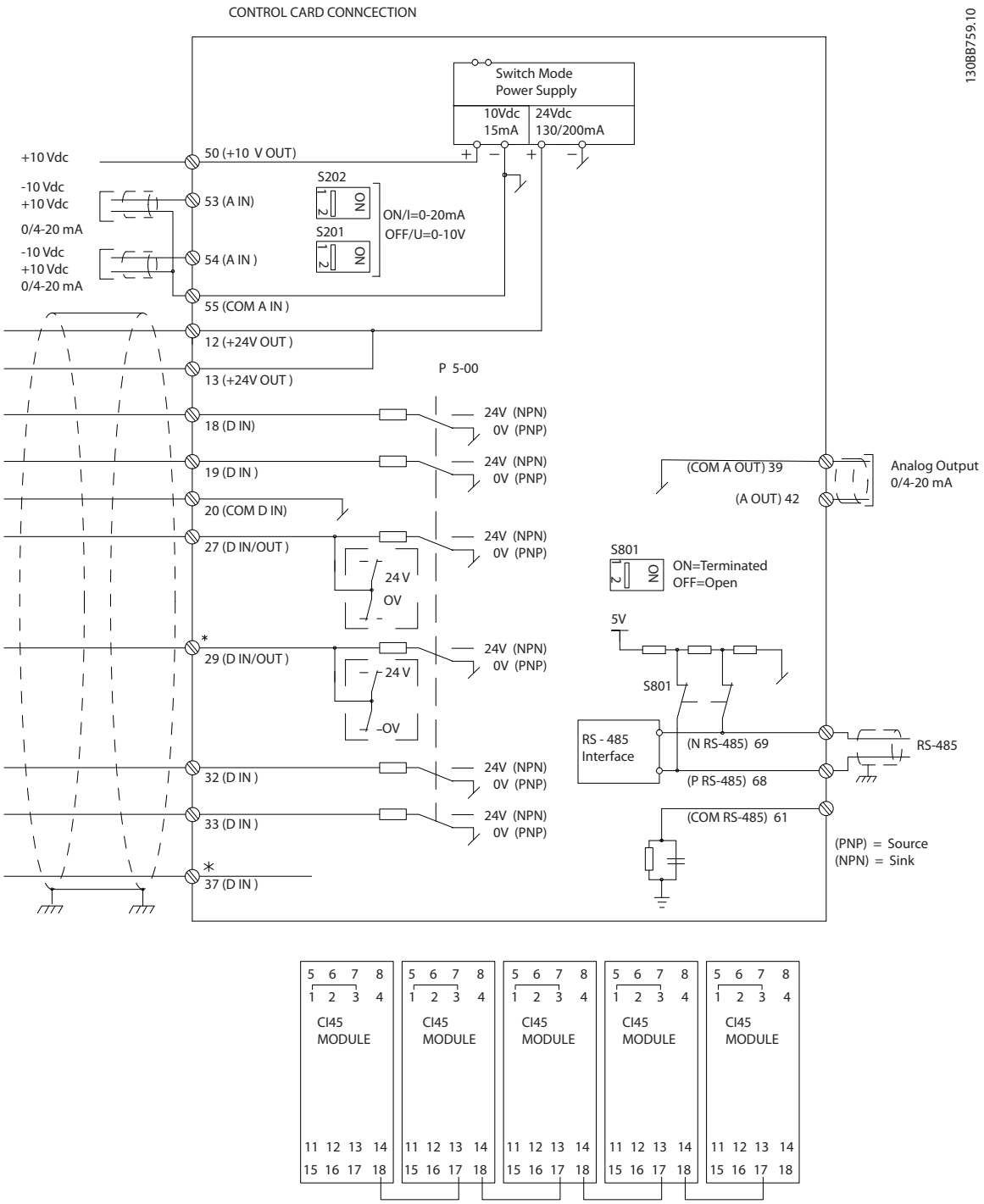

Illustration 3.79

A=Analog, D=Digital

*Terminal 37 (optional) is used for Safe Torque Off. For Safe Torque Off installation instructions, refer to the *Safe Torque Off Operating Instructions for Danfoss VLT® Frequency Converters*.

**Do not connect cable screen.

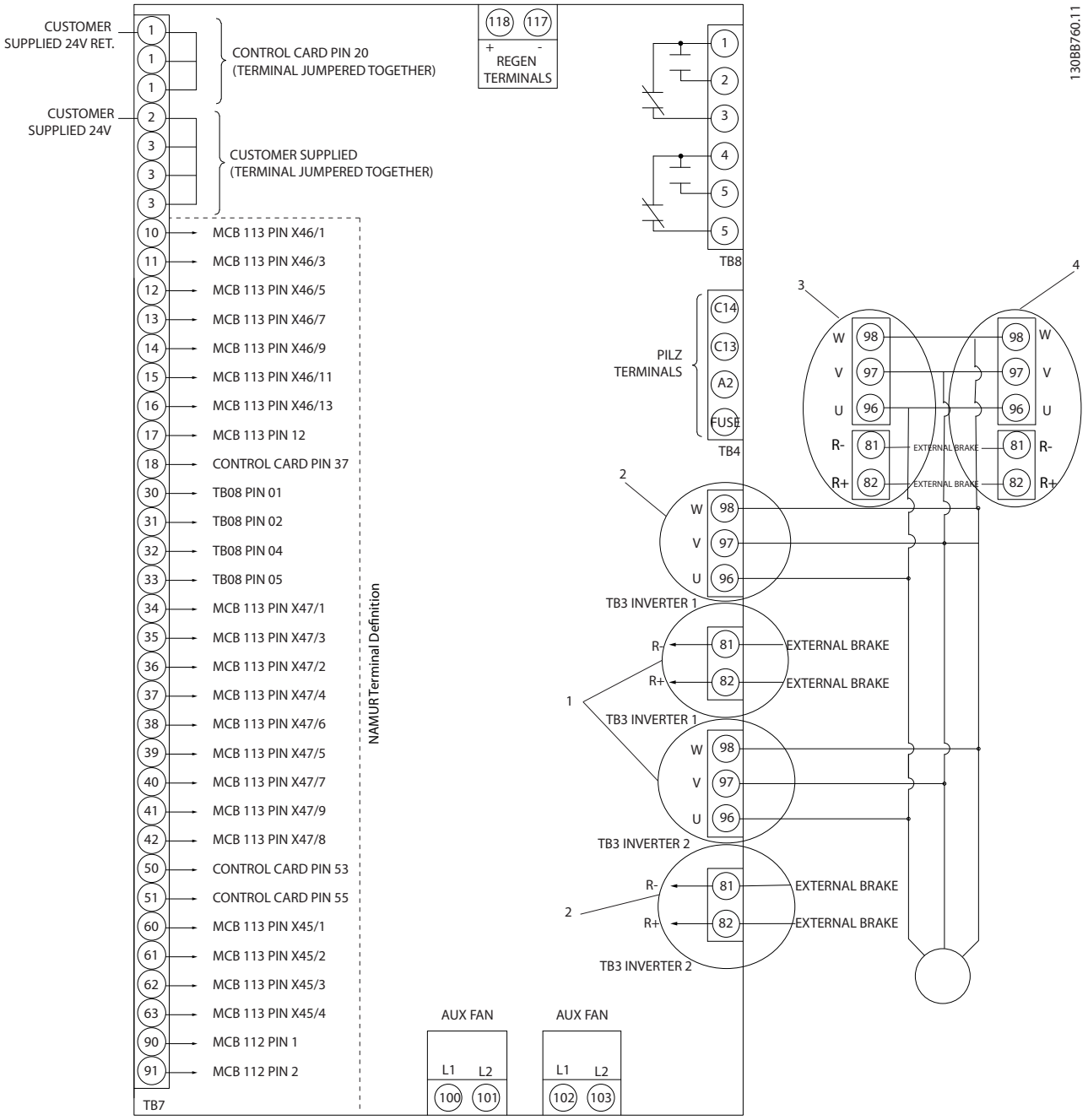

Illustration 3.80 Diagram Showing all Electrical Terminals with NAMUR Option shown in Dotted Line Box

Very long control cables and analogue signals may in rare cases and depending on installation result in 50/60 Hz earth loops due to noise from mains supply cables.

If this occurs, it may be necessary to break the screen or insert a 100 nF capacitor between screen and chassis.

The digital and analog inputs and outputs must be connected separately to the frequency converter common inputs (terminal 20, 55, 39) to avoid earth currents from both groups to affect other groups. For example, switching on the digital input may disturb the analog input signal.

Input polarity of control terminals

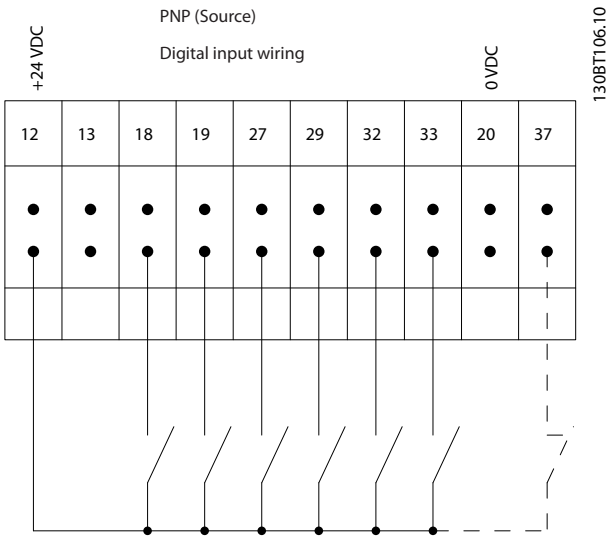

Illustration 3.81

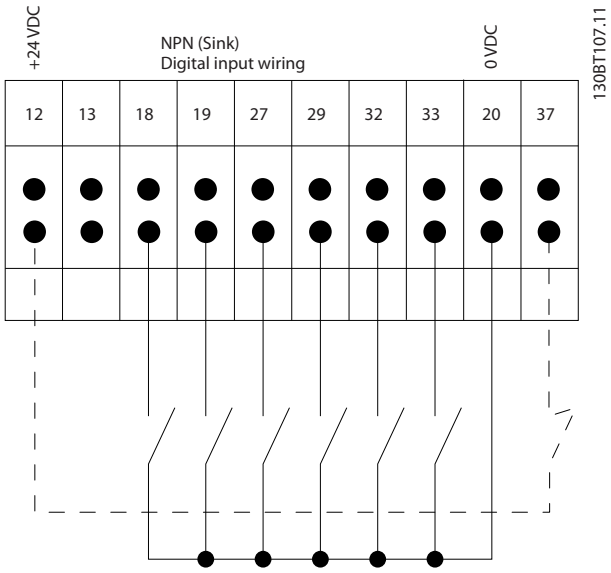

Illustration 3.82

NOTICE

Control cables must be screened/armoured.

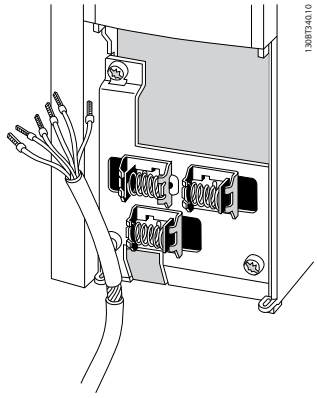

Illustration 3.83

Remember to connect the shields in a proper way to ensure optimum electrical immunity.

3.6.24 Switches S201, S202, and S801

Switches S201 (A53) and S202 (A54) are used to select a current (0-20 mA) or a voltage (-10 to +10 V) configuration of the analog input terminals 53 and 54.

Switch S801 (BUS TER.) can be used to enable termination on the RS-485 port (terminals 68 and 69).

See *Illustration 3.79*.

Default setting:

S201 (A53) = OFF (voltage input)

S202 (A54) = OFF (voltage input)

S801 (Bus termination) = OFF

3

NOTICE

When changing the function of S201, S202 or S801 be careful not to use force for the switch over. It is recommended to remove the LCP fixture (cradle) when operating the switches. The switches must not be operated with power on the frequency converter.

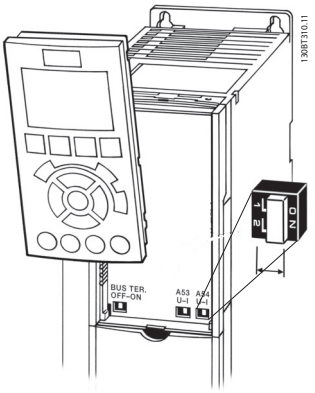

Illustration 3.84

3.7 Connection Examples

3.7.1 Start/Stop

Terminal 18 = *5-10 Terminal 18 Digital Input [8] Start*
Terminal 27 = *5-12 Terminal 27 Digital Input [0] No operation* (Default *coast inverse*)
Terminal 37 = Safe Torque Off

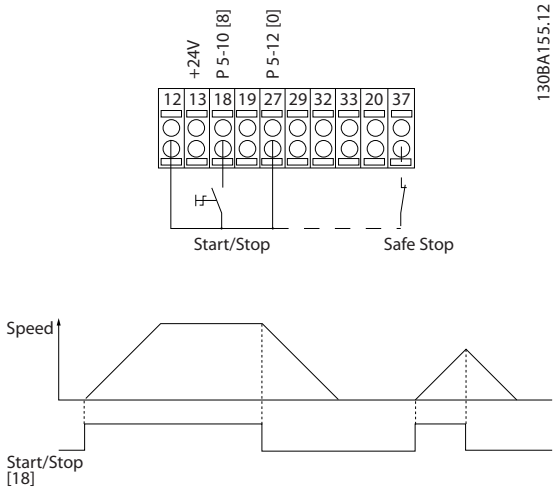

Illustration 3.85

3.7.2 Pulse Start/Stop

Terminal 18 = *5-10 Terminal 18 Digital Input [9] Latched start*
Terminal 27= *5-12 Terminal 27 Digital Input [6] Stop inverse*
Terminal 37 = Safe Torque Off

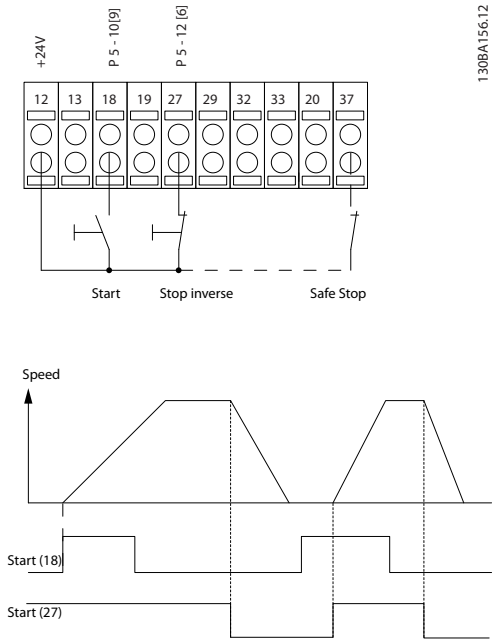

Illustration 3.86

3.7.3 Speed Up/Down

Terminals 29/32 = Speed up/down

Terminal 18 = *5-10 Terminal 18 Digital Input [9] Start* (default)

Terminal 27 = *5-12 Terminal 27 Digital Input [19] Freeze reference*

Terminal 29 = *5-13 Terminal 29 Digital Input [21] Speed up*

Terminal 32 = *5-14 Terminal 32 Digital Input [22] Speed down*

NOTICE

Terminal 29 only in FC x02 (x=series type).

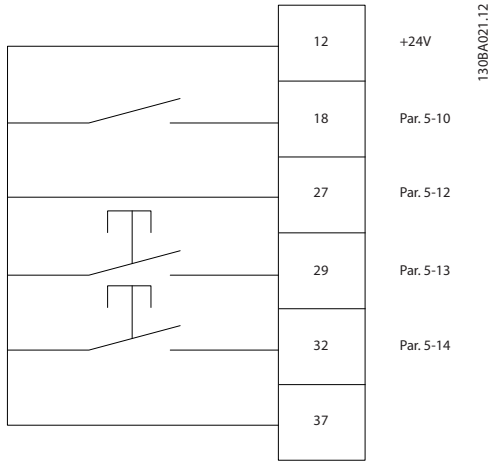

Illustration 3.87 Speed Up/Down

3.7.4 Potentiometer Reference

Voltage reference via a potentiometer

Reference Source 1 = *[1] Analog input 53* (default)

Terminal 53, Low Voltage = 0 V

Terminal 53, High Voltage = 10 V

Terminal 53, Low Ref./Feedback = 0 RPM

Terminal 53, High Ref./Feedback = 1500 RPM

Switch S201 = OFF (U)

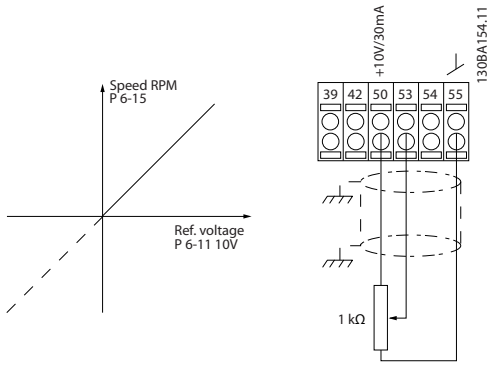

Illustration 3.88 Potentiometer Reference

3.8 Final Set-up and Test

To test the set-up and ensure that the frequency converter is running, follow these steps.

Step 1. Locate the motor name plate

NOTICE

The motor is either star- (Y) or delta- connected (Δ). This information is located on the motor name plate data.

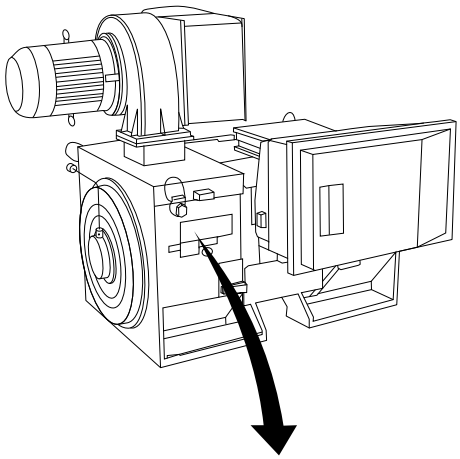

THREE PHASE INDUCTION MOTOR						
MOD MCV 315E	Nr. 135189 12 04				IL/IN 6.5	
kW 400	PRIMARY				SF 1.15	
HP 536	V 690	A 410.6	CONN Y		COS f 0.85	40
mm 1481	V	A	CONN		AMB 40	°C
Hz 50	V	A	CONN		ALT 1000	m
DESIGNN	SECONDARY				RISE 80	°C
DUTY S1	V	A	CONN		ENCLOSURE IP23	
INSUL I	EFFICIENCY %	95.8%	100%	95.8%	75%	WEIGHT 1.83 ton
⚠ CAUTION						

Illustration 3.89

Step 2. Enter the motor name plate data in this parameter list.

To access this list first press [Quick Menu] then select "Q2 Quick Setup".

1.	1-20 Motor Power [kW] 1-21 Motor Power [HP]
2.	1-22 Motor Voltage
3.	1-23 Motor Frequency
4.	1-24 Motor Current
5.	1-25 Motor Nominal Speed

Table 3.49

Step 3. Activate the Automatic Motor Adaptation (AMA)

Performing an AMA ensures optimum performance. The AMA measures the values from the motor model equivalent diagram.

1. Connect terminal 37 to terminal 12 (if terminal 37 is available).
2. Connect terminal 27 to terminal 12 or set *5-12 Terminal 27 Digital Input* to *[0] No function*.
3. Activate the AMA *1-29 Automatic Motor Adaptation (AMA)*.
4. Select between complete or reduced AMA. If a Sine-wave filter is mounted, run only the reduced AMA, or remove the Sine-wave filter during the AMA procedure.

5. Press [OK]. The display shows *Press [Hand On] to start*.
6. Press [Hand On]. A progress bar indicates if the AMA is in progress.

Stop the AMA during operation

1. Press [Off] - the frequency converter enters into alarm mode and the display shows that the AMA was terminated by the user.

Successful AMA

1. The display shows *Press [OK] to finish AMA*.
2. Press [OK] to exit the AMA state.

Unsuccessful AMA

1. The frequency converter enters into alarm mode. A description of the alarm can be found in *chapter 7 Troubleshooting*.
2. "Report Value" in the [Alarm Log] shows the last measuring sequence carried out by the AMA, before the frequency converter entered alarm mode. This number along with the description of the alarm assists in troubleshooting. If contacting Danfoss for service, make sure to mention number and alarm description.

NOTICE

Unsuccessful AMA is often caused by incorrectly registered motor name plate data or a too big difference between the motor power size and the frequency converter power size.

Step 4. Set speed limit and ramp time

3-02 Minimum Reference

3-03 Maximum Reference

Set up the desired limits for speed and ramp time

4-11 Motor Speed Low Limit [RPM] or *4-12 Motor Speed Low Limit [Hz]*

4-13 Motor Speed High Limit [RPM] or *4-14 Motor Speed High Limit [Hz]*

3-41 Ramp 1 Ramp Up Time

3-42 Ramp 1 Ramp Down Time

3.9 Additional Connections

3.9.1 Mechanical Brake Control

In hoisting/lowering applications, it is necessary to be able to control an electro-mechanical brake:

- Control the brake using any relay output or digital output (terminal 27 or 29).
- Keep the output closed (voltage-free) as long as the frequency converter is unable to support the motor, for example due to the load being too heavy.
- Select *[32] Mechanical brake control* in parameter group *5-4* Relays* for applications with an electro-mechanical brake.
- The brake is released when the motor current exceeds the preset value in *2-20 Release Brake Current*.
- The brake is engaged when the output frequency is less than the frequency set in *2-21 Activate Brake Speed [RPM]* or *2-22 Activate Brake Speed [Hz]*, and only if the frequency converter carries out a stop command.

If the frequency converter is in alarm mode or in an over-voltage situation, the mechanical brake immediately cuts in.

3.9.2 Parallel Connection of Motors

The frequency converter can control several parallel-connected motors. The total current consumption of the motors must not exceed the rated output current $I_{M,N}$ for the frequency converter.

NOTICE

Installations with cables connected in a common joint as in *Illustration 3.90*, is only recommended for short cable lengths.

NOTICE

When motors are connected in parallel, *1-29 Automatic Motor Adaptation (AMA)* cannot be used.

NOTICE

The electronic thermal relay (ETR) of the frequency converter cannot be used as motor protection for the individual motor in systems with parallel-connected motors. Provide further motor protection by e.g. thermistors in each motor or individual thermal relays (circuit breakers are not suitable as protection).

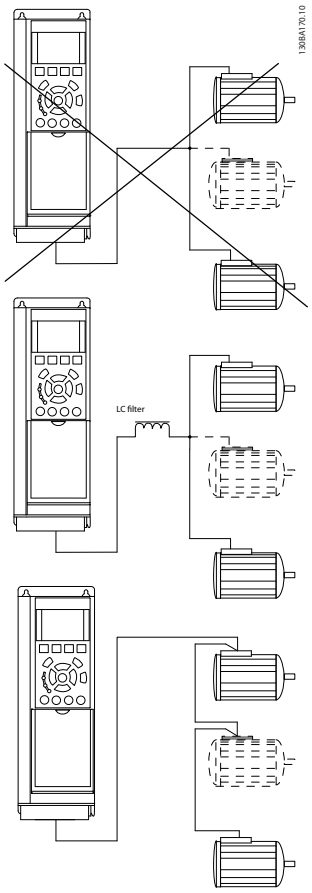

Illustration 3.90

Problems may arise at start and at low RPM values if motor sizes are widely different because small motors' relatively high ohmic resistance in the stator calls for a higher voltage at start and at low RPM values.

3.9.3 Motor Thermal Protection

The electronic thermal relay in the frequency converter has received UL-approval for single motor protection, when *1-90 Motor Thermal Protection*is set for *ETR Trip* and *1-24 Motor Current* is set to the rated motor current (see motor name plate).
For thermal motor protection it is also possible to use the MCB 112 PTC Thermistor Card option. This card provides ATEX certificate to protect motors in explosion hazardous areas, Zone 1/21 and Zone 2/22. When *1-90 Motor Thermal Protection* is set to *[20] ATEX ETR* is combined with the use of MCB 112, it is possible to control an Ex-e motor in explosion hazardous areas. Consult the programming guide for details on how to set up the frequency converter for safe operation of Ex-e motors.

4 How to operate the frequency converter

4.1 Ways of Operation

The frequency converter can be operated in 3 ways:

1. Graphical Local Control Panel (GLCP), see 6.1.2
2. Numeric Local Control Panel (NLCP), see 6.1.3
3. RS-485 serial communication or USB, both for PC connection, see 6.1.4

If the frequency converter is fitted with fieldbus option, refer to relevant documentation.

4.1.1 How to operate graphical LCP (GLCP)

The following instructions are valid for the GLCP (LCP 102).

The GLCP is divided into 4 functional groups:

1. Graphical display with Status lines.
2. Menu keys and indicator lights (LED's) - selecting mode, changing parameters and switching between display functions.
3. Navigation keys and indicator lights (LEDs).
4. Operation keys and indicator lights (LEDs).

Graphical display:
The LCD-display is back-lit with a total of 6 alpha-numeric lines. All data is displayed on the LCP which can show up to five operating variables while in [Status] mode.

Display lines:

a. **Status line:** Status messages displaying icons and graphics.

b. **Line 1-2:** Operator data lines displaying data and variables defined or chosen by the user. By pressing the [Status] key, up to one extra line can be added.

c. **Status line:** Status messages displaying text.

The display is divided into 3 sections:

Top section (a)
shows the status when in status mode or up to 2 variables when not in status mode and in the case of Alarm/ Warning.

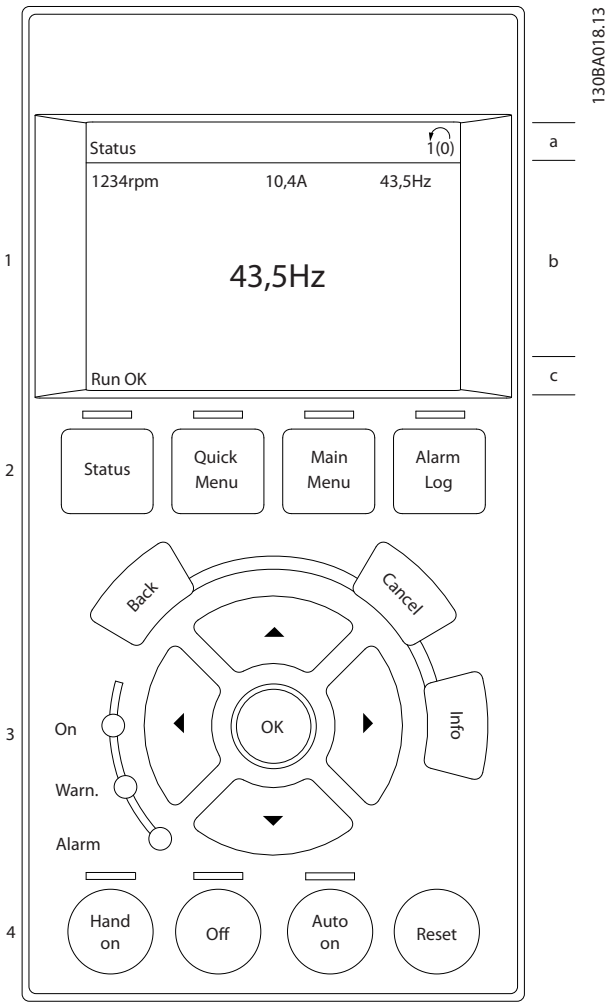

Illustration 4.1 Overview of LCP

The number of the Active Set-up (selected as the Active Set-up in *0-10 Active Set-up*) is shown. When programming in another Set-up than the Active Set-up, the number of the Set-up being programmed appears to the right in brackets.

Middle section (b)
shows up to 5 variables with related unit, regardless of status. In case of alarm/warning, the warning is shown instead of the variables.

It is possible to toggle between three status read-out displays by pressing the [Status] key.
Operating variables with different formatting are shown in each status screen - see below.

Several values or measurements can be linked to each of the displayed operating variables. The values/ measurements to be displayed can be defined via

0-20 Display Line 1.1 Small, *0-21 Display Line 1.2 Small*, *0-22 Display Line 1.3 Small*, *0-23 Display Line 2 Large*, and *0-24 Display Line 3 Large*, which can be accessed via [QUICK MENU], "Q3 Function Setups", "Q3-1 General Settings", "Q3-11 Display Settings".

Each value/measurement readout parameter selected in *0-20 Display Line 1.1 Small* to *0-24 Display Line 3 Large* has its own scale and number of digits after a possible decimal point. Larger numeric values are displayed with few digits after the decimal point.
Ex.: Current readout
5.25 A; 15.2 A 105 A.

Status display I
This read-out state is standard after start-up or initialization.
Use [INFO] to obtain information about the value/measurement linked to the displayed operating variables (1.1, 1.2, 1.3, 2, and 3).
See the operating variables shown in the display in this illustration. 1.1, 1.2 and 1.3 are shown in small size. 2 and 3 are shown in medium size.

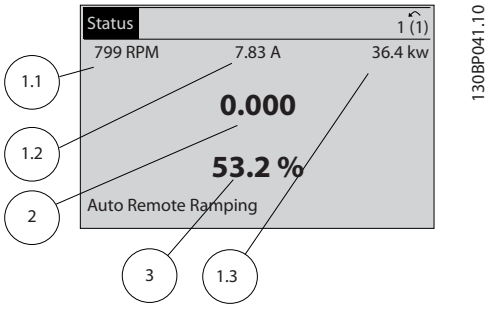

Illustration 4.2 Status Display I - Example

Status display II
See the operating variables (1.1, 1.2, 1.3, and 2) shown in the display in *Illustration 4.3*.
In the example, Speed, Motor current, Motor power and Frequency are selected as variables in the first and second lines.
1.1, 1.2 and 1.3 are shown in small size. 2 is shown in large size.

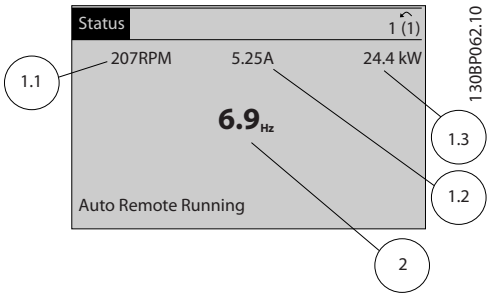

Illustration 4.3 Status Display II - Example

Status display III:
This state displays the event and action of the Smart Logic Control.

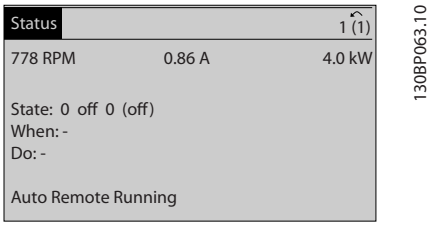

Illustration 4.4 Status Display III - Example

Bottom section
always shows the state of the frequency converter in Status mode.

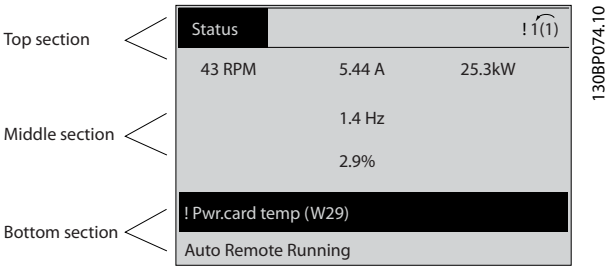

Illustration 4.5 Display Sections

Display contrast adjustment
Press [status] and [▲] for darker display
Press [status] and [▼] for brighter display

Indicator lights (LEDs):
If certain threshold values are exceeded, the alarm and/or warning LED lights up. A status and alarm text appear on the control panel.
The On LED is activated when the frequency converter receives power from mains voltage, a DC bus terminal, or an external 24 V supply. At the same time, the back light is on.

- Green LED/On: Control section is working.
- Yellow LED/Warn.: Indicates a warning.
- Flashing Red LED/Alarm: Indicates an alarm.

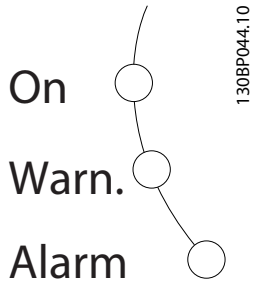

Illustration 4.6 Indicator Lights

4

GLCP keys

Menu keys

The menu keys are divided into functions. The keys below the display and indicator lamps are used for parameter set-up, including choice of display indication during normal operation.

Illustration 4.7 Menu Keys

[Status]

Indicates the status of the frequency converter and/or the motor. 3 different readouts can be chosen by pressing the [Status] key:

5 line readouts, 4 line readouts or Smart Logic Control.

Use **[Status]** for selecting the mode of display or for changing back to Display mode from either the Quick Menu mode, the Main Menu mode or Alarm mode. Also use the [Status] key to toggle single or double read-out mode.

[Quick Menu]

Allows quick set-up of the frequency converter. The most common functions can be programmed here.Quick Menu

The [Quick Menu] consists of:

- Q1: My Personal Menu
- Q2: Quick Setup
- Q3: Function Setups
- Q5: Changes Made
- Q6: Loggings

The Function Set-up provides quick and easy access to all parameters required for the majority of water and wastewater applications including variable torque, constant torque, pumps, dosing pumps, well pumps, booster pumps, mixer pumps, aeration blowers and other pump and fan applications. Amongst other features it also includes parameters for selecting which variables to display on the LCP, digital preset speeds, scaling of analog references, closed loop single zone and multi-zone applications and specific functions related to water and wastewater applications.

The Quick Menu parameters can be accessed immediately unless a password has been created via *0-60 Main Menu Password*, *0-61 Access to Main Menu w/o Password*, *0-65 Personal Menu Password* or *0-66 Access to Personal Menu w/o Password*.

It is possible to switch directly between Quick Menu mode and Main Menu mode.

[Main Menu]

is used for programming all parameters.

The Main Menu parameters can be accessed immediately unless a password has been created via *0-60 Main Menu Password*, *0-61 Access to Main Menu w/o Password*, *0-65 Personal Menu Password* or *0-66 Access to Personal Menu w/o Password*. For the majority of water and wastewater applications it is not necessary to access the Main Menu parameters but instead the Quick Menu, Quick Setup and Function Setups provides the simplest and quickest access to the typical required parameters.

It is possible to switch directly between Main Menu mode and Quick Menu mode.

Parameter shortcut can be carried out by pressing down the [Main Menu] key for 3 seconds. The parameter shortcut allows direct access to any parameter.

[Alarm Log]

displays an Alarm list of the five latest alarms (numbered A1-A5). To obtain additional details about an alarm, use the navigation keys to manoeuvre to the alarm number and press [OK]. Information is displayed about the condition of the frequency converter before it enters the alarm mode.

[Back]

reverts to the previous step or layer in the navigation structure.

Illustration 4.8 Back Key

[Cancel]

last change or command is cancelled as long as the display has not been changed.

Illustration 4.9 Cancel Key

[Info]

displays information about a command, parameter, or function in any display window. [Info] provides detailed information when needed.

Exit Info mode by pressing either [Info], [Back], or [Cancel].

Illustration 4.10 Info Key

Navigation keys

The 4 navigation keys are used to navigate between the different choices available in [Quick Menu], [Main Menu] and [Alarm Log]. Use the keys to move the cursor.

[OK]
is used for selecting a parameter marked by the cursor and for enabling the change of a parameter.

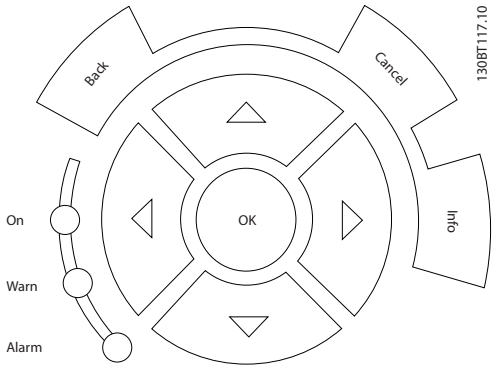

Illustration 4.11 Navigation Keys

Operation keys
for local control are found at the bottom of the control panel.

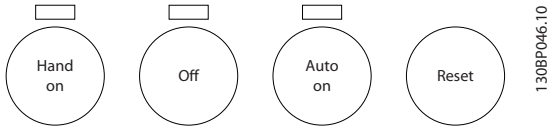

Illustration 4.12 Operation Keys

[Hand on]
enables control of the frequency converter via the GLCP. [Hand on] also starts the motor, and it is now possible to give the motor speed reference with the navigation keys. The key can be *[1] Enabled*or *[0] Disabled* via *0-40 [Hand on] Key on LCP*

The following control signals are still active when [Hand on] is activated:

- [Hand on] - [Off] - [Auto on]
- Reset
- Coasting stop inverse (motor coasting to stop)
- Reversing
- Set-up select lsb - Set-up select msb
- Stop command from serial communication
- Quick stop
- DC brake

NOTICE

External stop signals activated by control signals or a serial bus override a "start" command via the LCP.

[Off]
stops the connected motor. The key can be *[1] Enabled* or *[0] Disabled* via *0-41 [Off] Key on LCP* If no external stop function is selected and the [Off] key is inactive the motor can only be stopped by disconnecting the mains supply.

[Auto on]
enables the frequency converter to be controlled via the control terminals and/or serial communication. When a start signal is applied on the control terminals and/or the bus, the frequency converter starts. The key can be *[1] Enabled* or *[0] Disabled* via *0-42 [Auto on] Key on LCP*

NOTICE

An active HAND-OFF-AUTO signal via the digital inputs has higher priority than the control keys [Hand on] – [Auto on].

[Reset]
is used for resetting the frequency converter after an alarm (trip). The key can be *[1] Enabled* or *[0] Disabled* via *0-43 [Reset] Key on LCP*.

The parameter shortcut
can be carried out by holding down the [Main Menu] key for 3 seconds. The parameter shortcut allows direct access to any parameter.

4.1.2 How to Operate Numeric LCP (NLCP)

The following instructions are valid for the NLCP (LCP 101).

The control panel is divided into 4 functional groups, see *Illustration 4.13*:

1. Numeric display
2. Menu key and indicator lights (LEDs) - changing parameters and switching between display functions
3. Navigation keys and indicator lights (LEDs)
4. Operation keys and indicator lights (LEDs)

NOTICE

Parameter copy is not possible with Numeric Local Control Panel (LCP101).

Select one of the following modes:
Status Mode: Displays the status of the frequency converter or the motor.
If an alarm occurs, the NLCP automatically switches to status mode.
A number of alarms can be displayed.

Quick Setup or **Main Menu Mode**: Display parameters and parameter settings.

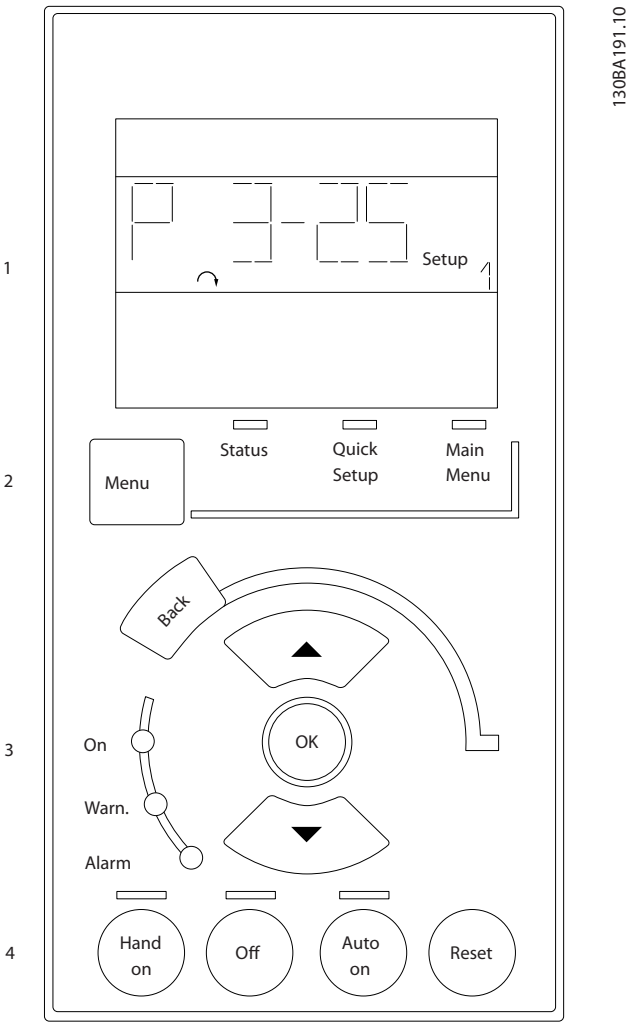

Illustration 4.13 Numerical LCP (NLCP)

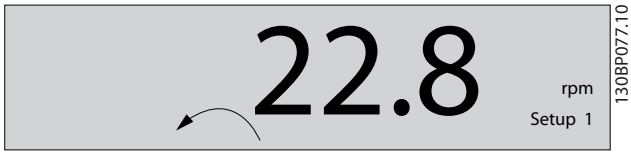

Illustration 4.14 Status display example

Illustration 4.15 Alarm display example

Indicator lights (LEDs):

- Green LED/On: Indicates if control section is on.
- Yellow LED/Wrn.: Indicates a warning.
- Flashing red LED/Alarm: Indicates an alarm.

Menu key

Select one of the following modes:

- Status
- Quick Setup
- Main Menu

Main Menu

is used for programming all parameters.

The parameters can be accessed immediately unless a password has been created via *0-60 Main Menu Password*, *0-61 Access to Main Menu w/o Password*, *0-65 Personal Menu Password* or *0-66 Access to Personal Menu w/o Password*.

Quick Setup is used to set up the frequency converter using only the most essential parameters.

The parameter values can be changed using the up/down arrows when the value is flashing.

Select Main Menu by pressing the [Menu] key a number of times until the Main Menu LED is lit.

Select the parameter group [xx-__] and press [OK]

Select the parameter [__-xx] and press [OK]

If the parameter is an array parameter select the array number and press [OK]

Select the wanted data value and press [OK]

Navigation keys

[Back]

for stepping backwards

[▲] [▼]

keys are used for manoeuvring between parameter groups, parameters and within parameters

[OK]

is used for choosing a parameter marked by the cursor and for enabling the change of a parameter.

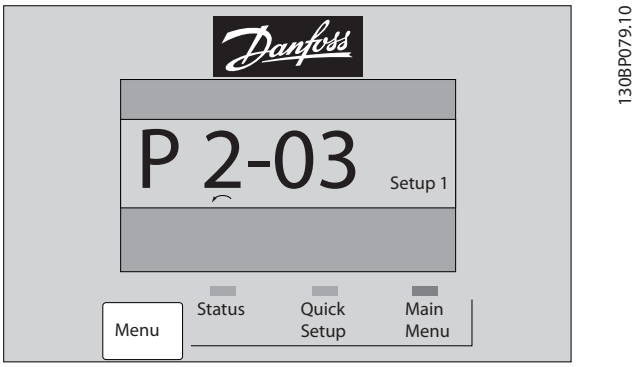

Illustration 4.16 Display example

Operation keys
Keys for local control are found at the bottom of the control panel.

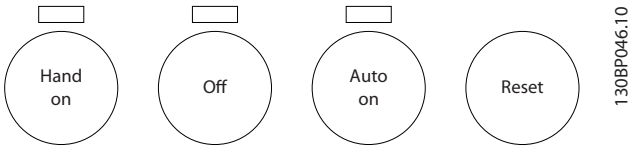

Illustration 4.17 Operation keys of the numerical LCP (NLCP)

[Hand on]
enables control of the frequency converter via the LCP. [Hand on] also starts the motor and it is now possible to enter the motor speed data by means of the navigation keys. The key can be *[1] Enabled* or*[0] Disabled* via *0-40 [Hand on] Key on LCP*.

External stop signals activated by means of control signals or a serial bus will override a 'start' command via the LCP.

The following control signals are still active when [Hand on] is activated:

- [Hand on] - [Off] - [Auto on]
- Reset
- Coasting stop inverse
- Reversing
- Set-up select lsb - Set-up select msb
- Stop command from serial communication
- Quick stop
- DC brake

[Off]
stops the connected motor. The key can be *[1] Enabled* or *[0] Disabled* via *0-41 [Off] Key on LCP*.

If no external stop function is selected and the [Off] key is inactive the motor can be stopped by disconnecting the mains supply.

[Auto on]
enables the frequency converter to be controlled via the control terminals and/or serial communication. When a start signal is applied on the control terminals and/or the bus, the frequency converter starts. The key can be *[1] Enabled* or *[0] Disabled* via *0-42 [Auto on] Key on LCP*.

NOTICE

An active HAND-OFF-AUTO signal via the digital inputs has higher priority than the control keys [Hand on] [Auto on].

[Reset]
is used for resetting the frequency converter after an alarm (trip). The key can be *[1] Enabled* or*[0] Disabled* via *0-43 [Reset] Key on LCP*.

4.1.3 Changing Data

1. Press [Quick Menu] or [Main Menu] key.
2. Press [▲] and [▼] to find parameter group to edit.
3. Press [OK] key.
4. Press [▲] and [▼] to find parameter to edit.
5. Press [OK] key.
6. Press [▲] and [▼] to select correct parameter setting. Or, to move to digits within a number, press keys. Cursor indicates digit selected to change. [▲] increases the value, [▼] decreases the value.
7. Press [Cancel] to disregard change, or press [OK] to accept change and enter new setting.

4.1.4 Changing a Text Value

If the selected parameter is a text value, change the text value with the [▲]/[▼] keys.
[▲] increases the value, and [▼] decreases the value. Place the cursor on the value to be saved and press [OK].

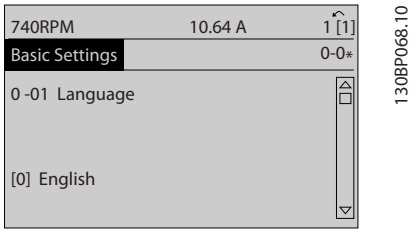

Illustration 4.18 Display Example

4.1.5 Changing a Group of Numeric Data Values

If the selected parameter represents a numeric data value, change the selected data value with the [◄] and [►] keys as well as the up/down [▲] [▼] keys. press [◄] and [►] to move the cursor horizontally.

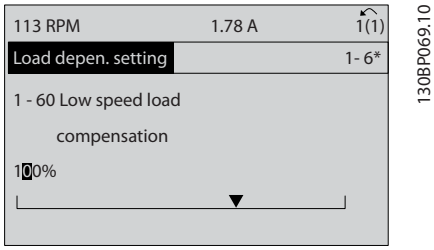

Illustration 4.19 Display Example

Press [▲] and [▼] to change the data value. [▲] increases the data value, and [▼] decreases the data value. Place the cursor on the value to be saved and press [OK].

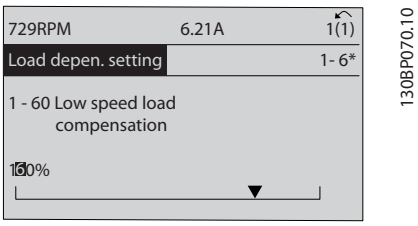

Illustration 4.20 Display Example

4.1.6 Changing of Data Value, Step-by-Step

Certain parameters can be changed step by step or infinitely variably. This applies to *parameter 1-20 Motor Power [kW]*, *parameter 1-22 Motor Voltage* and *parameter 1-23 Motor Frequency*.
The parameters are changed both as a group of numeric data values and as numeric data values infinitely variably.

4.1.7 Read-out and Programming of Indexed Parameters

Parameters are indexed when placed in a rolling stack. *15-30 Alarm Log: Error Code* to *15-32 Alarm Log: Time* contain a fault log which can be read out. Select a parameter, press [OK], and use [▲] and [▼] to scroll through the value log.

Use *parameter 3-10 Preset Reference* as another example: Select the parameter, press [OK], and use [▲] and [▼] to scroll through the indexed values. To change the parameter value, select the indexed value and press [OK]. Change the value by [▲] and [▼]. Press [OK] to accept the new setting. Press [Cancel] to abort. Press [Back] to leave the parameter.

4.1.8 Tips and Tricks

- For the majority of water and wastewater applications the Quick Menu, Quick Set-up and Function Set-up provides the simplest and quickest access to all the typical parameters required.
- Whenever possible, performing an AMA, ensures best shaft performance.
- Contrast of the display can be adjusted by pressing [Status] and [▲] for darker display or by pressing [Status] and [▼] for brighter display.
- Under [Quick Menu] and [Changes Made] all parameters that have been changed from factory settings are displayed.
- Press and hold [Main Menu] key for 3 s for access to any parameter.
- For service purposes it is recommended to copy all parameters to the LCP, see *0-50 LCP Copy* for further information.

4.1.9 Quick Transfer of Parameter Settings when Using GLCP

Once the set-up of a frequency converter is complete, it is recommended to store (back up) the parameter settings in the GLCP or on a PC via MCT 10 Set-up Software Tool.

⚠WARNING

Stop the motor before performing any of these operations.

Data storage in LCP

1. Go to *0-50 LCP Copy*.
2. Press [OK].
3. Select *[1] All to LCP*.
4. Press [OK].

All parameter settings are now stored in the GLCP indicated by the progress bar. When 100% is reached, press [OK].

The GLCP can now be connected to another frequency converter and the parameter settings copied to this frequency converter.

Data transfer from LCP to Frequency converter

1. Go to *0-50 LCP Copy*.
2. Press [OK].
3. Select *[2] All from LCP*.
4. Press [OK]

The parameter settings stored in the GLCP are now transferred to the frequency converter indicated by the progress bar. When 100% is reached, press [OK].

4.1.10 Initialisation to Default Settings

There are 2 ways to initialise the frequency converter to default: Recommended initialisation and manual initialisation.
Be aware that they have different impact according to the below description.

Recommended initialisation (via *14-22 Operation Mode*)

1. Select *14-22 Operation Mode*.
2. Press [OK].
3. Select *[2] Initialisation* (for NLCP select "2").
4. Press [OK].
5. Remove power to unit and wait for display to turn off.
6. Reconnect power and the frequency converter is reset. Note that first start-up takes a few more seconds.
7. Press [Reset]

14-22 Operation Mode initialises all except:
14-50 RFI Filter
8-30 Protocol
8-31 Address
8-32 Baud Rate
8-35 Minimum Response Delay
8-36 Max Response Delay
8-37 Maximum Inter-Char Delay
15-00 Operating hours to *15-05 Over Volt's*
15-20 Historic Log: Event to *15-22 Historic Log: Time*
15-30 Alarm Log: Error Code to *15-32 Alarm Log: Time*

NOTICE

Parameters selected in *0-25 My Personal Menu* stay present with default factory setting.

Manual initialisation

NOTICE

When carrying out manual initialisation, serial communication, RFI filter settings and fault log settings are reset. Removes parameters selected in *0-25 My Personal Menu*.

1. Disconnect from mains and wait until the display turns off.
2. Press
   - 2a [Status] - [Main Menu] - [OK] at the same time while power up for Graphical LCP (GLCP).
   - 2b [Menu] while power up for LCP 101, Numerical Display.
3. Release the keys after 5 s.
4. The frequency converter is now programmed according to default settings.

This parameter initialises all except:
15-00 Operating hours
15-03 Power Up's
15-04 Over Temp's
15-05 Over Volt's

4.1.11 RS-485 Bus Connection

One or more frequency converters can be connected to a controller (or master) using the RS-485 standard interface. Terminal 68 is connected to the P signal (TX+, RX+), while terminal 69 is connected to the N signal (TX-,RX-).

If more than one frequency converter is connected to a master, use parallel connections.

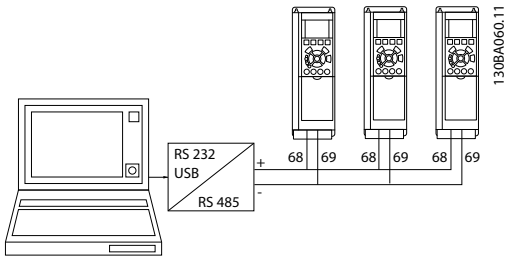

Illustration 4.21 Connection Example.

To avoid potential equalizing currents in the screen, ground the cable screen via terminal 61, which is connected to the frame via an RC-link.

Bus termination
The RS-485 bus must be terminated by a resistor network at both ends. If the frequency converter is the first or the last device in the RS-485 loop, set the switch S801 on the control card for ON.
For more information, see the paragraph *Switches S201, S202, and S801*.

4.1.12 How to Connect a PC to the Frequency Converter

To control or program the frequency converter from a PC, install the PC-based configuration tool MCT 10 Set-up Software.
The PC is connected via a standard (host/device) USB cable, or via the RS-485 interface as shown in *chapter 4.1.11 RS-485 Bus Connection*.

NOTICE

The USB connection is galvanically isolated from the supply voltage (PELV) and other high-voltage terminals. The USB connection is connected to protection earth. Use only an isolated laptop as PC connection to the USB connector on the frequency converter.

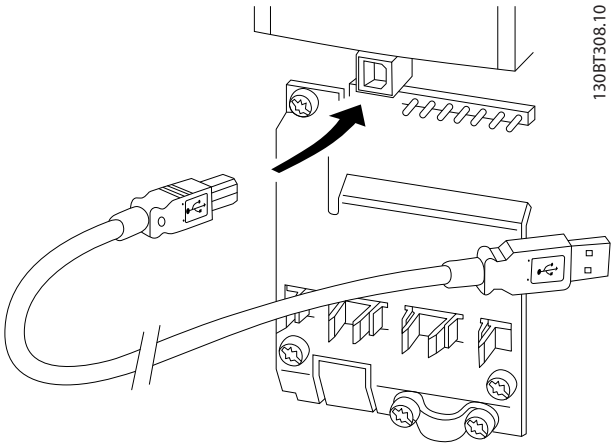

Illustration 4.22 USB Connection to Frequency Converter

4.1.13 PC Software Tools

PC-based MCT 10 Set-up Software
All Frequency converters are equipped with a serial communication port. Danfoss provides a PC tool for communication between PC and frequency converter, PC-based Configuration Tool MCT 10. Check the section on *Available Literature* for detailed information on this tool.

MCT 10 set-up software
MCT 10 has been designed as an easy to use interactive tool for setting parameters in our frequency converters. . The MCT 10 Set-up Software is useful for:

- Planning a communication network off-line. MCT 10 Set-up Software contains a complete frequency converter database.
- Commissioning frequency converters on line.
- Saving settings for all frequency converters.
- Replacing a frequency converter in a network.
- Simple and accurate documentation of frequency converter settings after commissioning.
- Expanding an existing network.
- Future developed frequency converters are supported.

MCT 10 Set-up Software supports Profibus DP-V1 via a Master class 2 connection. It makes it possible to on line read/write parameters in a frequency converter via the Profibus network. This eliminates the need for an extra communication network.

Save frequency converter settings:

1. Connect a PC to the unit via USB com port. (NOTE: Use a PC, which is isolated from the mains, in conjunction with the USB port. Failure to do so may damage equipment.).
2. Open MCT 10 Set-up Software.
3. Select *Read from drive*.
4. Select *Save as*.

All parameters are now stored in the PC.

Load frequency converter settings:

1. Connect a PC to the frequency converter via USB com port.
2. Open MCT 10 Set-up Software.
3. Select *Open* – stored files are shown.
4. Open the appropriate file.
5. Select *Write to drive*.

All parameter settings are now transferred to the frequency converter.

A separate manual for MCT 10 Set-up Software is available from www.Danfoss.com/BusinessAreas/DrivesSolutions/Softwaredownload/DDPC+Software+Program.htm.

The MCT 10 Set-up software modules
The following modules are included in the software package.

	MCT Set-up 10 Software Setting parameters Copy to and from frequency converters Documentation and print out of parameter settings incl. diagrams
	Ext. user interface Preventive Maintenance Schedule Clock settings Timed Action Programming Smart Logic Controller Set-up

Table 4.1

Ordering number:
Order the CD containing MCT 10 Set-up Software using code number 130B1000.

The software can be downloaded from the Danfoss internet site www.Danfoss.com/BusinessAreas/DrivesSolutions/Softwaredownload/DDPC+Software+Program.htm

5 How to programme the frequency converter

5.1 How to programme

The parameters are grouped into various parameter groups for easy selection of the correct parameter for optimized frequency converter operation.

Overview of parameter groups

Group	Title	Function
0-**	Operation/Display	Parameters related to the fundamental functions of the frequency converter, function of the LCP keys and configuration of the LCP display.
1-**	Load/Motor	Parameter group for motor settings.
2-**	Brakes	Parameter group for setting brake features in the frequency converter.
3-**	Reference/Ramps	Parameters for reference handling, definitions of limitations, and configuration of the reaction of the frequency converter to changes.
4-**	Limits/Warnings	Parameter group for configuring limits and warnings.
5-**	Digital In/Out	Parameter group for configuring the digital inputs and outputs.
6-**	Analog In/Out	Parameter group for configuration of the analog inputs and outputs.
8-**	Communication and Options	Parameter group for configuring communications and options.
9-**	Profibus	Parameter group for Profibus-specific parameters (requires profibus option).
10-**	DeviceNet Fieldbus	Parameter group for DeviceNet-specific parameters (requires DeviceNet option).
13-**	Smart Logic	Parameter group for Smart Logic Control
14-**	Special Functions	Parameter group for configuring special frequency converter functions.
15-**	Drive Information	Parameter group containing frequency converter information such as operating data, hardware configuration and software versions.
16-**	Data Readouts	Parameter group for data read-outs, e.g. actual references, voltages, control, alarm, warning and status words.
18-**	Info and Readouts	This parameter group contains the last 10 Preventive Maintenance logs.
20-**	Drive Closed Loop	This parameter group is used for configuring the closed loop PID Controller that controls the output frequency of the unit.
21-**	Extended Closed Loop	Parameters for configuring the three Extended Closed Loop PID Controllers.
22-**	Application Functions	These parameters monitor water applications.
23-**	Time-based Functions	These parameters are for actions needed to be performed on a daily or weekly basis, e.g. different references for working hours/non-working hours.
24-**	Application Functions 2	Parameters for the Drive Bypass.
25-**	Basic Cascade Controller Functions	Parameters for configuring the Basic Cascade Controller for sequence control of multiple pumps.
26-**	Analog I/0 Option MCB 109	Parameters for configuring the Analog I/0 Option MCB 109.
27-**	Extended Cascade Control	Parameters for configuring the Extended Cascade Control (MCO 101/MCO 102).
29-**	Water Application Functions	Parameters for setting water specific functions.
30-**	Special Features	Parameters for configuring the brake resistor value.
31-**	Bypass Option	Parameters for configuring the Bypass Option (MCO 104).
35-**	Sensor Input Option	Parameters for configuring the Sensor Input Option (MCB 114)

Table 5.1 Parameter Groups

Parameter descriptions and selections are displayed on the graphic (GLCP) or numeric (NLCP) in the display area. (See for details.) Access the parameters by pressing the [Quick Menu] or [Main Menu] key on the control panel. The quick menu is used primarily for commissioning the unit at start-up by providing those parameters necessary to start operation. The main menu provides access to all parameters for detailed application programming.

All digital input/output and analog input/output terminals are multifunctional. All terminals have factory default functions suitable for the majority of water applications but if other special functions are required, they must be programmed in parameter group *5-** Digital In/out* or *6-** Analog In/out*.

5.1.1 Quick Menu Mode

The GLCP provides access to all parameters listed under the Quick Menus. To set parameters using the [Quick Menu] key:

Pressing [Quick Menu] the list indicates the different areas contained in the Quick menu.

Efficient parameter set-up for water applications
The parameters can easily be set up for the vast majority of the water and wastewater applications only by using the [Quick Menu].

The optimum way to set parameters through the [Quick Menu] is by following the below steps:

1. Press [Quick Setup] for selecting basic motor settings, ramp times, etc.
2. Press [Function Setups] for setting up the required functionality of the frequency converter - if not already covered by the settings in [Quick Setup].
3. Select between *General Settings*, *Open Loop Settings* and *Closed Loop Settings.*

It is recommended to do the set-up in the order listed.

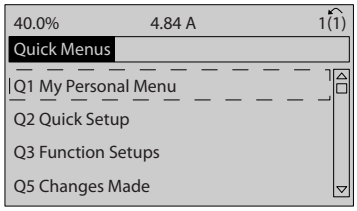

Illustration 5.1 Quick Menu View

Par.	Designation	[Units]
0-01	Language	
1-20	Motor Power	[kW]
1-22	Motor Voltage	[V]
1-23	Motor Frequency	[Hz]
1-24	Motor Current	[A]
1-25	Motor Nominal Speed	[RPM]
3-41	Ramp 1 Ramp up Time	[s]
3-42	Ramp 1 Ramp down Time	[s]
4-11	Motor Speed Low Limit	[RPM]
4-13	Motor Speed High Limit	[RPM]
1-29	Automatic Motor Adaptation (AMA)	

Table 5.2 Quick Setup parameters.
See *Chapter 5.2 Commonly Used Parameters - Explanations*

If *No Operation* is selected in terminal 27 no connection to +24 V on terminal 27 is necessary to enable start.
If *Coast Inverse* (factory default value) is selected in Terminal 27, a connection to +24 V is necessary to enable start.

NOTICE

For detailed parameter descriptions, see *chapter 5.2 Commonly Used Parameters - Explanations*.

5.1.2 Q1 My Personal Menu

Parameters defined by the user can be stored in Q1 My Personal Menu.

Select *My Personal Menu* to display only the parameters, which have been pre-selected and programmed as personal parameters. For example, a pump or equipment OEM may have pre-programmed these to be in My Personal Menu during factory commissioning to make on site commissioning/fine tuning simpler. These parameters are selected in par. 0-25 *My Personal Menu*. Up to 20 different parameters can be defined in this menu.

Parameter 20-21 Setpoint 1
Parameter 20-93 PID Proportional Gain
Parameter 20-94 PID Integral Time

Table 5.3 Q1 My Personal Menu

5.1.3 Q2 Quick Setup

The parameters in Q2 Quick Setup are the basic parameters which are always needed to set-up the frequency converter to operation.

Parameter number and name	Unit
0-01 Language	
Parameter 1-20 Motor Power [kW]	kW
Parameter 1-22 Motor Voltage	V
Parameter 1-23 Motor Frequency	Hz
Parameter 1-24 Motor Current	A
Parameter 1-25 Motor Nominal Speed	RPM
Parameter 3-41 Ramp 1 Ramp Up Time	s
Parameter 3-42 Ramp 1 Ramp Down Time	s
Parameter 4-11 Motor Speed Low Limit [RPM]	RPM
Parameter 4-13 Motor Speed High Limit [RPM]	RPM
Parameter 1-29 Automatic Motor Adaptation (AMA)	

Table 5.4 Q2 Quick Setup

5.1.4 Q3 Function Set-ups

The Function Set-up provides quick and easy access to all parameters required for the majority of water and wastewater applications including variable torque, constant torque, pumps, dosing pumps, well pumps, booster pumps, mixer pumps, aeration blowers and other pump and fan applications. Amongst other features, it also includes parameters for selecting which variables to display on the LCP, digital preset speeds, scaling of analog references, closed loop single zone and multi-zone applications and specific functions related to water and wastewater applications.

How to access Function Set-up - example:

1. Turn on the frequency converter (On LED lights)

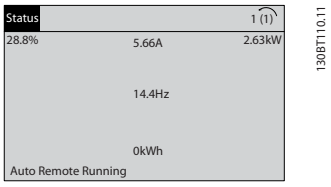

Illustration 5.2

2. Press the [Quick Menus] key (Quick Menus choices appear).

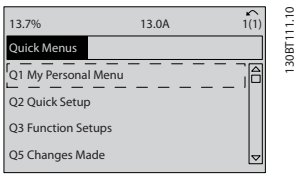

Illustration 5.3

3. Press [▲]/[▼] navigation keys to scroll down to Function Set-ups. Press [OK].

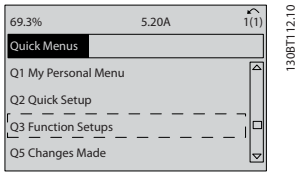

Illustration 5.4

4. Function Set-ups choices appear. Select *Q3-1 General Settings*. Press [OK].

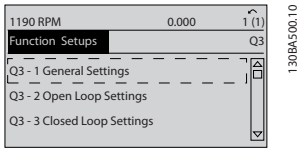

Illustration 5.5

5. Press [▲]/[▼] keys to scroll down to i.e. Q3-12 *Analog Outputs*. Press [OK].

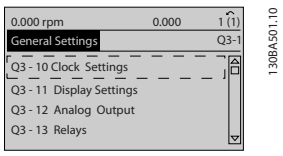

Illustration 5.6

6. Select *parameter 6-50 Terminal 42 Output*. Press [OK].

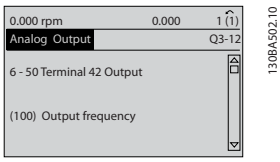

Illustration 5.7

7. Press [▲]/[▼] keys to select between the different choices. Press [OK].

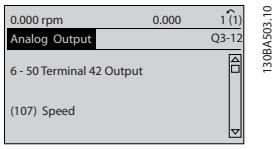

Illustration 5.8

The Function Setup parameters are grouped in the following way:

Q3-10 Clock Settings	Q3-11 Display Settings	Q3-12 Analog Output	Q3-13 Relays
0-70 Date and Time	0-20 Display Line 1.1 Small	Parameter 6-50 Terminal 42 Output	Relay 1 ⇒ 5-40 Function Relay
0-71 Date Format	0-21 Display Line 1.2 Small	Parameter 6-51 Terminal 42 Output Min Scale	Relay 2 ⇒ 5-40 Function Relay
Parameter 0-72 Time Format	0-22 Display Line 1.3 Small	Parameter 6-52 Terminal 42 Output Max Scale	Option relay 7 ⇒ 5-40 Function Relay
Parameter 0-74 DST/Summertime	0-23 Display Line 2 Large		Option relay 8 ⇒ 5-40 Function Relay
Parameter 0-76 DST/Summertime Start	0-24 Display Line 3 Large		Option relay 9 ⇒ 5-40 Function Relay
Parameter 0-77 DST/Summertime End	Parameter 0-37 Display Text 1		
	parameter 0-38 Display Text 2		
	parameter 0-39 Display Text 3		

Table 5.5 Q3-1 General Settings

Q3-20 Digital Reference	Q3-21 Analog Reference
Parameter 3-02 Minimum Reference	Parameter 3-02 Minimum Reference
3-03 Maximum Reference	3-03 Maximum Reference
Parameter 3-10 Preset Reference	Parameter 3-10 Preset Reference
5-13 Terminal 29 Digital Input	Parameter 6-11 Terminal 53 High Voltage
5-14 Terminal 32 Digital Input	Parameter 6-14 Terminal 53 Low Ref./Feedb. Value
5-15 Terminal 33 Digital Input	Parameter 6-15 Terminal 53 High Ref./Feedb. Value

Q3-30 Feedback Settings	Q3-31 PID Settings
Parameter 1-00 Configuration Mode	Parameter 20-81 PID Normal/ Inverse Control
20-12 Reference/Feedback Unit	Parameter 20-82 PID Start Speed [RPM]
Parameter 3-02 Minimum Reference	Parameter 20-21 Setpoint 1
3-03 Maximum Reference	Parameter 20-93 PID Proportional Gain
Parameter 6-20 Terminal 54 Low Voltage	Parameter 20-94 PID Integral Time
Parameter 6-21 Terminal 54 High Voltage	
Parameter 6-24 Terminal 54 Low Ref./Feedb. Value	
Parameter 6-25 Terminal 54 High Ref./Feedb. Value	
Parameter 6-00 Live Zero Timeout Time	
Parameter 6-01 Live Zero Timeout Function	

5.1.5 Q5 Changes Made

Q5 Changes Made can be used for fault finding.

Select *Changes made* to get information about:

- the last 10 changes. Use the up/down navigation keys to scroll between the last 10 changed parameters.
- the changes made since default setting.

Select *Loggings* to get information about the display line read-outs. The information is shown as graphs.
Only display parameters selected in *parameter 0-20 Display Line 1.1 Small* and *0-24 Display Line 3 Large* can be viewed. It is possible to store up to 120 samples in the memory for later reference.

Note that the parameters listed in *Table 5.6* to *Table 5.6* for Q5 only serve as examples as they vary depending on the programming of the particular frequency converter.

Parameter 20-94 PID Integral Time
Parameter 20-93 PID Proportional Gain

Parameter 20-93 PID Proportional Gain
Parameter 20-94 PID Integral Time

Analog Input 53
Analog Input 54

5.1.6 Q6 Loggings

Q6 Loggings can be used for fault finding.

Notice that the parameters listed in *Table 5.6* for Q6 only serve as examples as they vary depending on the programming of the particular frequency converter.

Reference
Analog Input 53
Motor Current
Frequency
Feedback
Energy Log
Trending Cont Bin
Trending Timed Bin
Trending Comparison

5.1.7 Main Menu Mode

Both the GLCP and NLCP provide access to the main menu mode. Select the Main Menu mode by pressing the [Main Menu] key. *Illustration 5.9* shows the resulting read-out, which appears on the display of the GLCP.

Lines 2 through 5 on the display show a list of parameter groups which can be selected by toggling the up and down keys.

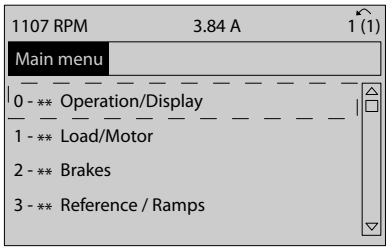

Illustration 5.9 Display Example

Each parameter has a name and number which remain the same regardless of the programming mode. In the Main Menu mode, the parameters are divided into groups. The first digit of the parameter number (from the left) indicates the parameter group number.

All parameters can be changed in the Main Menu. The configuration of the unit (*parameter 1-00 Configuration Mode*) determines other parameters available for programming. For example, selecting closed loop enables additional parameters related to closed loop operation. Option cards added to the unit enable additional parameters associated with the option device.

5.1.8 Parameter Selection

In the Main Menu mode, the parameters are divided into groups. Select a parameter group by means of the navigation keys.
The following parameter groups are accessible:

Group no.	Parameter group
0-**	Operation/Display
1-**	Load/Motor
2-**	Brakes
3-**	References/Ramps
4-**	Limits/Warnings
5-**	Digital In/Out
6-**	Analog In/Out
8-**	Comm. and Options
9-**	Profibus
10-**	CAN Fieldbus
11-**	LonWorks
13-**	Smart Logic
14-**	Special Functions
15-**	FC Information
16-**	Data Readouts
18-**	Data Readouts 2
20-**	FC Closed Loop
21-**	Ext. Closed Loop

Group no.	Parameter group
22-**	Application Functions
23-**	Time Actions
25-**	Cascade Controller
26-**	Analog I/O Option MCB 109
27-**	Cascade CTL Option
29-**	Water Application Functions
31-**	Bypass Option

Table 5.6 Parameter Groups

5

After selecting a parameter group, select a parameter with the navigation keys.
The middle section on the GLCP display shows the parameter number and name as well as the selected parameter value.

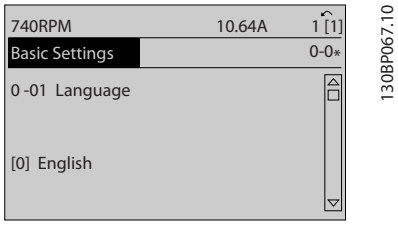

Illustration 5.10 Display Example

5.2 Commonly Used Parameters - Explanations

5.2.1 Main Menu

The Main Menu includes all available parameters in the frequency converter.
All parameters are grouped in a logic way with a group name indicating the function of the parameter group.
All parameters are listed by name and number in *chapter 5.3 Parameter Menu Structure*.

All parameters included in the Quick Menus (Q1, Q2, Q3, Q5 and Q6) can be found in the following.

Some of the most used parameters for VLT® AQUA Drive applications are also explained in the following section.

For a detailed explanation of all parameters, refer to the *VLT® AQUA Drive Programming Guide* which is available at www.danfoss.com/BusinessAreas/DrivesSolutions/Documentations/Technical+Documentation.htm or by ordering at the local Danfoss office.

Parameters related to the fundamental functions of the frequency converter, function of the LCP keys and configuration of the LCP display.

0-01 Language

Option:		Function:
		Defines the language to be used in the display. The frequency converter can be delivered with 4 different language packages. English and German are included in all packages. English cannot be erased or manipulated.
[0] *	English	Part of Language packages 1 - 4
[1]	German	Part of Language packages 1 - 4
[2]	French	Part of Language package 1
[3]	Danish	Part of Language package 1
[4]	Spanish	Part of Language package 1
[5]	Italian	Part of Language package 1
[6]	Swedish	Part of Language package 1
[7]	Dutch	Part of Language package 1
[10]	Chinese	Language package 2
[20]	Finnish	Part of Language package 1
[22]	English US	Part of Language package 4
[27]	Greek	Part of Language package 4
[28]	Portuguese	Part of Language package 4
[36]	Slovenian	Part of Language package 3
[39]	Korean	Part of Language package 2
[40]	Japanese	Part of Language package 2
[41]	Turkish	Part of Language package 4
[42]	Traditional Chinese	Part of Language package 2
[43]	Bulgarian	Part of Language package 3
[44]	Serbian	Part of Language package 3
[45]	Romanian	Part of Language package 3
[46]	Hungarian	Part of Language package 3
[47]	Czech	Part of Language package 3
[48]	Polish	Part of Language package 4
[49]	Russian	Part of Language package 3
[50]	Thai	Part of Language package 2
[51]	Bahasa Indonesian	Part of Language package 2

0-20 Display Line 1.1 Small

Option:		Function:
		Select a variable for display in line 1, left position.
[0]	None	No display value selected
[37]	Display Text 1	Present control word
[38]	Display Text 2	Enables an individual text string to be written, for display in the LCP or to be read via serial communication.
[39]	Display Text 3	Enables an individual text string to be written, for display in the LCP or to be read via serial communication.
[89]	Date and Time Readout	Displays the current date and time.

0-20 Display Line 1.1 Small		
Option:		**Function:**
[953]	Profibus Warning Word	Displays Profibus communication warnings.
[1005]	Readout Transmit Error Counter	View the number of CAN control transmission errors since the last power-up.
[1006]	Readout Receive Error Counter	View the number of CAN control receipt errors since the last power-up.
[1007]	Readout Bus Off Counter	View the number of Bus Off events since the last power-up.
[1013]	Warning Parameter	View a DeviceNet-specific warning word. One separate bit is assigned to every warning.
[1230]	Warning Parameter	
[1500]	Operating hours	View the number of running hours of the frequency converter.
[1501]	Running Hours	View the number of running hours of the motor.
[1502]	kWh Counter	View the mains power consumption in kWh.
[1580]	Fan Running Hours	
[1600]	Control Word	View the Control Word sent from the frequency converter via the serial communication port in hex code.
[1601]	Reference [Unit]	Total reference (sum of digital/analog/ preset/bus/freeze ref./catch up and slow-down) in selected unit.
[1602]	Reference [%]	Total reference (sum of digital/analog/ preset/bus/freeze ref./catch up and slow-down) in percent.
[1603]	Status Word	Present status word
[1605]	Main Actual Value [%]	One or more warnings in a Hex code
[1609]	Custom Readout	View the user-defined readouts as defined in *0-30 Custom Readout Unit*, *0-31 Custom Readout Min Value* and *0-32 Custom Readout Max Value*.
[1610]	Power [kW]	Actual power consumed by the motor in kW.
[1611]	Power [hp]	Actual power consumed by the motor in hp.
[1612]	Motor Voltage	Voltage supplied to the motor.
[1613]	Frequency	Motor frequency, i.e. the output frequency from the frequency converter in Hz.
[1614]	Motor current	Phase current of the motor measured as effective value.

0-20 Display Line 1.1 Small		
Option:		**Function:**
[1615]	Frequency [%]	Motor frequency, i.e. the output frequency from the frequency converter in percent.
[1616]	Torque [Nm]	Present motor load as a percentage of the rated motor torque.
[1617]	Speed [RPM]	Speed in RPM (revolutions per minute) i.e. the motor shaft speed in closed loop based on the entered motor nameplate data, the output frequency and the load on the frequency converter.
[1618]	Motor Thermal	Thermal load on the motor, calculated by the ETR function. See also parameter group *1-9* Motor Temperature*.
[1622]	Torque [%]	Shows the actual torque produced, in percentage.
[1630]	DC Link Voltage	Intermediate circuit voltage in the frequency converter.
[1632]	Brake Energy /s	Present brake power transferred to an external brake resistor. Stated as an instantaneous value.
[1633]	Brake Energy /2 min	Brake power transferred to an external brake resistor. The mean power is calculated continuously for the most recent 120 seconds.
[1634]	Heatsink Temp.	Present heat sink temperature of the frequency converter. The cut-out limit is 95 ±5 °C; cutting back in occurs at 70 ±5 °C.
[1635]	Inverter Thermal	Percentage load of the inverters
[1636]	Inv. Nom. Current	Nominal current of the frequency converter
[1637]	Inv. Max. Current	Maximum current of the frequency converter
[1638]	SL Controller State	State of the event executed by the control
[1639]	Control Card Temp.	Temperature of the control card.
[1650]	External Reference	Sum of the external reference as a percentage, i.e. the sum of analog/ pulse/bus.
[1652]	Feedback[Unit]	Signal value in units from the programmed digital input(s).
[1653]	Digi Pot Reference	View the contribution of the digital potentiometer to the actual reference Feedback.

5

0-20 Display Line 1.1 Small		
Option:		**Function:**
[1654]	Feedback 1 [Unit]	View the value of Feedback 1. See also parameter group *20-0* Feedback*.
[1655]	Feedback 2 [Unit]	View the value of Feedback 2. See also parameter group *20-0* Feedback*.
[1656]	Feedback 3 [Unit]	View the value of Feedback 3. See also parameter group *20-0* Feedback*.
[1658]	PID Output [%]	Returns the Drive Closed Loop PID controller output value in percent.
[1659]	Adjusted Setpoint	Displays the actual operating set-point after it is modified by flow compensation. See parameter group *22-8* Flow Compensation*.
[1660]	Digital Input	Displays the status of the digital inputs. Signal low = 0; Signal high = 1. Regarding order, see *16-60 Digital Input*. Bit 0 is at the extreme right.
[1661]	Terminal 53 Switch Setting	Setting of input terminal 53. Current = 0; Voltage = 1.
[1662]	Analog Input 53	Actual value at input 53 either as a reference or protection value.
[1663]	Terminal 54 Switch Setting	Setting of input terminal 54. Current = 0; Voltage = 1.
[1664]	Analog Input 54	Actual value at input 54 either as reference or protection value.
[1665]	Analog Output 42 [mA]	Actual value at output 42 in mA. Use *parameter 6-50 Terminal 42 Output* to select the variable to be represented by output 42.
[1666]	Digital Output [bin]	Binary value of all digital outputs.
[1667]	Pulse Input #29 [Hz]	Actual value of the frequency applied at terminal 29 as a pulse input.
[1668]	Pulse Input #33 [Hz]	Actual value of the frequency applied at terminal 33 as a pulse input.
[1669]	Pulse Output #27 [Hz]	Actual value of pulses applied to terminal 27 in digital output mode.
[1670]	Pulse Output #29 [Hz]	Actual value of pulses applied to terminal 29 in digital output mode.
[1671]	Relay Output [bin]	View the setting of all relays.
[1672]	Counter A	View the present value of Counter A.
[1673]	Counter B	View the present value of Counter B.
[1675]	Analog In X30/11	Actual value of the signal on input X30/11 (General Purpose I/O Card. Option)

0-20 Display Line 1.1 Small		
Option:		**Function:**
[1676]	Analog In X30/12	Actual value of the signal on input X30/12 (General Purpose I/O Card. Optional)
[1677]	Analog Out X30/8 [mA]	Actual value at output X30/8 (General Purpose I/O Card. Optional) Use *6-60 Terminal X30/8 Output* to select the variable to be shown.
[1678]	Analog Out X45/1 [mA]	
[1679]	Analog Out X45/3 [mA]	
[1680]	Fieldbus CTW 1	Control word (CTW) received from the Bus Master.
[1682]	Fieldbus REF 1	Main reference value sent with control word via the serial communications network e.g. from the BMS, PLC or other master controller.
[1684]	Comm. Option STW	Extended fieldbus communication option status word.
[1685]	FC Port CTW 1	Control word (CTW) received from the Bus Master.
[1686]	FC Port REF 1	Status word (STW) sent to the Bus Master.
[1690]	Alarm Word	One or more alarms in a Hex code (used for serial communications)
[1691]	Alarm Word 2	One or more alarms in a Hex code (used for serial communications)
[1692]	Warning Word	One or more warnings in a Hex code (used for serial communications)
[1693]	Warning Word 2	One or more warnings in a Hex code (used for serial communications)
[1694]	Ext. Status Word	One or more status conditions in a Hex code (used for serial communications)
[1695]	Ext. Status Word 2	One or more status conditions in a Hex code (used for serial communications)
[1696]	Maintenance Word	The bits reflect the status for the programmed Preventive Maintenance Events in parameter group *23-1* Maintenance*.
[1830]	Analog Input X42/1	Shows the value of the signal applied to terminal X42/1 on the Analog I/O card.
[1831]	Analog Input X42/3	Shows the value of the signal applied to terminal X42/3 on the Analog I/O card.

0-20 Display Line 1.1 Small		
Option:		**Function:**
[1832]	Analog Input X42/5	Shows the value of the signal applied to terminal X42/5 on the Analog I/O card.
[1833]	Analog Out X42/7 [V]	Shows the value of the signal applied to terminal X42/7 on the Analog I/O card.
[1834]	Analog Out X42/9 [V]	Shows the value of the signal applied to terminal X42/9 on the Analog I/O card.
[1835]	Analog Out X42/11 [V]	Shows the value of the signal applied to terminal X42/11 on the Analog I/O card.
[1836]	Analog Input X48/2 [mA]	
[1837]	Temp. Input X48/4	
[1838]	Temp. Input X48/7	
[1839]	Temp. Input X48/10	
[1860]	Digital Input 2	
[2117]	Ext. 1 Reference [Unit]	The value of the reference for extended Closed Loop Controller 1
[2118]	Ext. 1 Feedback [Unit]	The value of the feedback signal for extended Closed Loop Controller 1
[2119]	Ext. 1 Output [%]	The value of the output from extended Closed Loop Controller 1
[2137]	Ext. 2 Reference [Unit]	The value of the reference for extended Closed Loop Controller 2
[2138]	Ext. 2 Feedback [Unit]	The value of the feedback signal for extended Closed Loop Controller 2
[2139]	Ext. 2 Output [%]	The value of the output from extended Closed Loop Controller 2
[2157]	Ext. 3 Reference [Unit]	The value of the reference for extended Closed Loop Controller 3
[2158]	Ext. 3 Feedback [Unit]	The value of the feedback signal for extended Closed Loop Controller 3
[2159]	Ext. 3 Output [%]	The value of the output from extended Closed Loop Controller 3
[2230]	No-Flow Power	The calculated No Flow Power for the actual operating speed
[2316]	Maintenance Text	
[2580]	Cascade Status	Status for the operation of the Cascade Controller
[2581]	Pump Status	Status for the operation of each individual pump controlled by the Cascade Controller

0-20 Display Line 1.1 Small		
Option:		**Function:**
[2791]	Cascade Reference	Reference output for use with follower drives.
[2792]	% Of Total Capacity	Readout parameter to show the system operating point as a % capacity of total system capacity.
[2793]	Cascade Option Status	Readout parameter to show the status of the cascade system.
[2794]	Cascade System Status	
[2795]	Advanced Cascade Relay Output [bin]	
[2796]	Extended Cascade Relay Output [bin]	
[2920]	Derag Power[kW]	
[2921]	Derag Power[HP]	
[3110]	Bypass Status Word	
[3111]	Bypass Running Hours	
[9920]	HS Temp. (PC1)	
[9921]	HS Temp. (PC2)	
[9922]	HS Temp. (PC3)	
[9923]	HS Temp. (PC4)	
[9924]	HS Temp. (PC5)	
[9925]	HS Temp. (PC6)	
[9926]	HS Temp. (PC7)	
[9927]	HS Temp. (PC8)	
[9951]	PC Debug 0	
[9952]	PC Debug 1	
[9953]	PC Debug 2	
[9954]	PC Debug 3	
[9955]	PC Debug 4	
[9956]	Fan 1 Feedback	
[9957]	Fan 2 Feedback	
[9958]	PC Auxiliary Temp	
[9959]	Power Card Temp.	

0-21 Display Line 1.2 Small		
Option:		**Function:**
		Select a variable for display in line 1, middle position.
[1662] *	Analog input 53	The options are the same as those listed for par. 0-20 *Display Line 1.1 Small*.

0-22 Display Line 1.3 Small

Option:		Function:
		Select a variable for display in line 1, right position.
[1614] *	Motor Current	The options are the same as those listed for *0-20 Display Line 1.1 Small*.

0-23 Display Line 2 Large

Option:		Function:
		Select a variable for display in line 2.
[1615] *	Frequency	The options are the same as those listed for par. 0-20 *Display Line 1.1 Small*

0-24 Display Line 3 Large

Option:		Function:
[1652] *	Feedback [Unit]	The options are the same as those listed for *0-20 Display Line 1.1 Small*.
		Select a variable for display in line 2.

0-37 Display Text 1

Range:		Function:
0 *	[0 - 25]	In this parameter it is possible to write an individual text string for display in the LCP or to be read via serial communication. If to be displayed permanently select Display Text 1 in *0-20 Display Line 1.1 Small*, *0-21 Display Line 1.2 Small*, *0-22 Display Line 1.3 Small*, *0-23 Display Line 2 Large* or *0-24 Display Line 3 Large*. Press [▲] or [▼] to change a character. Press [◄] and [►] to move the cursor. When a character is highlighted, it can be changed. Press [▲] or [▼] to change a character. A character can be inserted by placing the cursor between 2 characters and pressing [▲] or [▼].

0-38 Display Text 2

Range:		Function:
0 *	[0 - 25]	In this parameter it is possible to write an individual text string for display in the LCP or to be read via serial communication. If to be displayed permanently select Display Text 2 in *0-20 Display Line 1.1 Small*, *0-21 Display Line 1.2 Small*, *0-22 Display Line 1.3 Small*, *0-23 Display Line 2 Large* or *0-24 Display Line 3 Large*. Press [▲] or [▼] to change a character. Press [◄] and [►] to move the cursor. When a character is highlighted by the cursor, this character can be changed. A character can be inserted by placing the cursor between two characters and pressing [▲] or [▼].

0-39 Display Text 3

Range:		Function:
0 *	[0 - 25]	In this parameter it is possible to write an individual text string for display in the LCP or to be read via serial communication. If to be displayed permanently select Display Text 3 in *0-20 Display Line 1.1 Small*, *0-21 Display Line 1.2 Small*, *0-22 Display Line 1.3 Small*, *0-23 Display Line 2 Large* or *0-24 Display Line 3 Large*. Press [▲] or [▼] to change a character. Press [◄] and [►] to move the cursor. When a character is highlighted by the cursor, this character can be changed. A character can be inserted by placing the cursor between 2 characters and pressing [▲] or [▼].

0-39 Display Text 3

Range:		Function:
		Line 1.1 Small, *0-21 Display Line 1.2 Small*, *0-22 Display Line 1.3 Small*, *0-23 Display Line 2 Large* or *0-24 Display Line 3 Large*. Press [▲] or [▼] to change a character. Press [◄] and [►] to move the cursor. When a character is highlighted by the cursor, this character can be changed. A character can be inserted by placing the cursor between 2 characters and pressing [▲] or [▼].

0-70 Date and Time

Range:		Function:
Size related*	[0 - 0]	Sets the date and time of the internal clock. The format to be used is set in *0-71 Date Format* and *parameter 0-72 Time Format*.

0-71 Date Format

Option:		Function:
[0]	YYYY-MM-DD	Sets the date format to be used in the LCP.
[1]	DD-MM-YYYY	Sets the date format to be used in the LCP.
[2]	MM/DD/YYYY	Sets the date format to be used in the LCP.

0-72 Time Format

Option:		Function:
		Sets the time format to be used in the LCP.
[0]	24 h	
[1]	12 h	

0-74 DST/Summertime

Option:		Function:
		Choose how Daylight Saving Time/Summertime should be handled. For manual DST/Summertime enter the start date and end date in *parameter 0-76 DST/Summertime Start* and *parameter 0-77 DST/Summertime End*.
[0]	Off	
[2]	Manual	

0-76 DST/Summertime Start

Range:		Function:
Size related*	[0 - 0]	Sets the date and time when summertime/DST starts. The date is programmed in the format selected in *0-71 Date Format*.

0-77 DST/Summertime End

Range:		Function:
Size related*	[0 - 0]	Sets the date and time when summertime/DST ends. The date is programmed in the format selected in *0-71 Date Format*.

5.2.2 1-0* General Settings

Define whether the frequency converter operates in open loop or closed loop.

1-00 Configuration Mode		
Option:		**Function:**
		NOTICE **This parameter cannot be adjusted while the motor is running.**
[0]	Open Loop	Motor speed is determined by applying a speed reference or by setting desired speed when in Hand Mode. Open Loop is also used if the frequency converter is of a closed loop control system based on an external PID controller providing a speed reference signal as output.
[3]	Closed Loop	Motor Speed will be determined by a reference from the built-in PID controller varying the motor speed as of a closed loop control process (e.g. constant pressure or flow). The PID controller must be configured in parameter group *20-** Feedback* or via the Function Set-ups accessed by pressing [Quick Menus].

NOTICE

When set for Closed Loop, the commands Reversing and Start Reversing do not reverse the direction of the motor.

1-20 Motor Power [kW]		
Range:		**Function:**
Size related*	[0.09 - 2000.00 kW]	Enter the nominal motor power in kW according to the motor nameplate data. The default value corresponds to the nominal rated output of the unit. Depending on the choices made in *0-03 Regional Settings*, either *parameter 1-20 Motor Power [kW]* or *1-21 Motor Power [HP]* is made invisible.

1-22 Motor Voltage		
Range:		**Function:**
Size related*	[10 - 1000 V]	Enter the nominal motor voltage according to the motor nameplate data. The default value corresponds to the nominal rated output of the unit.

1-23 Motor Frequency		
Range:		**Function:**
Size related*	[20 - 1000 Hz]	Select the motor frequency value from the motor nameplate data. For 87 Hz operation with 230/400 V motors, set the nameplate data for 230 V/50 Hz. Adapt *parameter 4-13 Motor Speed High Limit [RPM]* and *3-03 Maximum Reference* to the 87 Hz application.

1-24 Motor Current		
Range:		**Function:**
Size related*	[0.10 - 10000.00 A]	Enter the nominal motor current value from the motor nameplate data. This data is used for calculating motor torque, motor thermal protection etc.

1-25 Motor Nominal Speed		
Range:		**Function:**
Size related*	[100 - 60000 RPM]	Enter the nominal motor speed value from the motor nameplate data. This data is used for calculating automatic motor compensations.

1-29 Automatic Motor Adaptation (AMA)		
Option:		**Function:**
		NOTICE **This parameter cannot be adjusted while the motor is running.**
[0]	Off	No function
[1]	Enable Complete AMA	Performs AMA of the stator resistance R_S, the rotor resistance R_r, the stator leakage reactance X_1, the rotor leakage reactance X_2 and the main reactance X_h.
[2]	Enable Reduced AMA	Performs a reduced AMA of the stator resistance R_s in the system only. Select this option if an LC filter is used between the frequency converter and the motor.

NOTICE

***Parameter 1-29 Automatic Motor Adaptation (AMA)* have no effect when *1-10 Motor Construction* = [1] PM, non salient SPM.**

Activate the AMA function by pressing [Hand on] after selecting [1] or [2]. See also the item *Automatic Motor Adaptation* in the *Design Guide*. After a normal sequence, the display reads: *Press [OK] to finish AMA*. After pressing [OK], the frequency converter is ready for operation.

NOTICE

- **For the best adaptation of the frequency converter, run AMA on a cold motor**
- **AMA cannot be performed while the motor is running**

NOTICE

Avoid generating external torque during AMA.

5

NOTICE

If one of the settings in parameter group *1-2* Motor Data* is changed, *1-30 Stator Resistance (Rs)* to *1-39 Motor Poles* return to default settings.

NOTICE

Full AMA should be run without filter only while reduced AMA should be run with filter.

See section: *Application Examples* > *Automatic Motor Adaptation* in the *Design Guide*.

5.2.3 3-0* Reference Limits

3-02 Minimum Reference		
Range:		**Function:**
Size related*	[-999999.999 - par. 3-03 ReferenceFeed-backUnit]	Enter the Minimum Reference. The Minimum Reference is the lowest value obtainable by summing all references. The Minimum Reference value and unit matches the configuration choice made in *parameter 1-00 Configuration Mode* and *20-12 Reference/Feedback Unit*, respectively. **NOTICE** **This parameter is used in open loop only.**

3-04 Reference Function		
Option:		**Function:**
[0]	Sum	Sums both external and preset reference sources.
[1]	External/ Preset	Use either the preset or the external reference source. Shift between external and preset via a command on a digital input.

3-10 Preset Reference		
Array [8]		
Range:		**Function:**
0 %*	[-100 - 100 %]	Enter up to eight different preset references (0-7) in this parameter, using array programming. The preset reference is stated as a percentage of the value Ref_{MAX} (*3-03 Maximum Reference*, for closed loop see *20-14 Maximum Reference/Feedb.*). When using preset references, select Preset ref. bit 0/1/2 [16], [17] or [18] for the corresponding digital inputs in parameter group *5-1* Digital Inputs*.

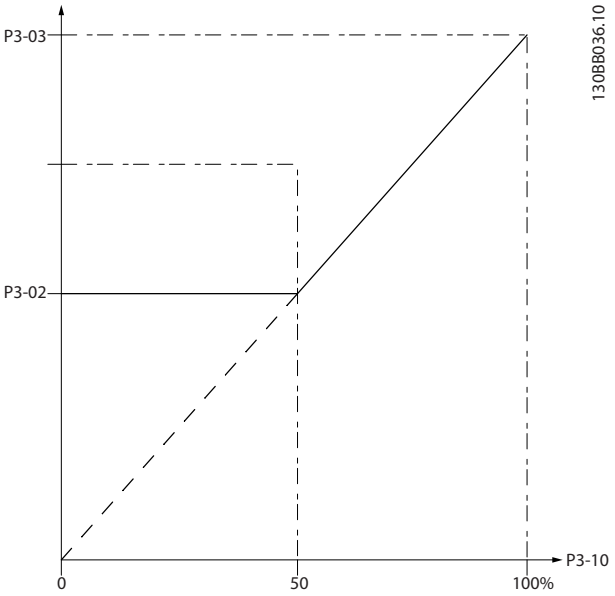

Illustration 5.11

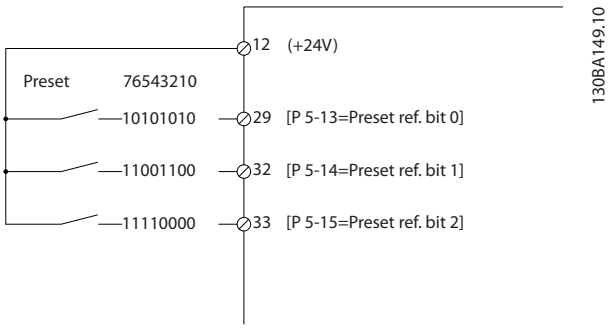

Illustration 5.12

3-41 Ramp 1 Ramp Up Time		
Range:		**Function:**
Size related*	[0.10 - 3600 s]	Enter the ramp-up time, i.e. the acceleration time from 0 RPM to *parameter 1-25 Motor Nominal Speed*. Select a ramp-up time such that the output current does not exceed the current limit in *4-18 Current Limit* during ramping. See ramp-down time in *parameter 3-42 Ramp 1 Ramp Down Time*.

$$par.3-41 = \frac{t_{acc} \times n_{nom}\,[par.1-25]}{ref\,[rpm]}[s]$$

3-42 Ramp 1 Ramp Down Time		
Range:		**Function:**
Size related*	[0.10 - 3600 s]	Enter the ramp-down time, i.e. the deceleration time from *parameter 1-25 Motor Nominal Speed* to 0 RPM. Select a ramp-down time such that no over-voltage arises in the inverter due to regenerative operation of the motor, and such that the generated current does not exceed the current limit set in *4-18 Current Limit*. See ramp-up time in *parameter 3-41 Ramp 1 Ramp Up Time*.

$$par.3-42 = \frac{t_{dec} \times n_{nom}\,[par.1-25]}{ref\,[rpm]}[s]$$

3-84 Initial Ramp Time		
Range:		**Function:**
0 s*	[0 - 60 s]	Enter the initial ramp up time from zero speed to Motor Speed Low Limit, *parameter 4-11 Motor Speed Low Limit [RPM]* or *4-12 Motor Speed Low Limit [Hz]*. Submersible deep well pumps can be damaged by running below minimum speed. A fast ramp time below minimum pump speed is recommended. This parameter may be applied as a fast ramp rate from zero speed to Motor Speed Low Limit. See *Illustration 5.13*.

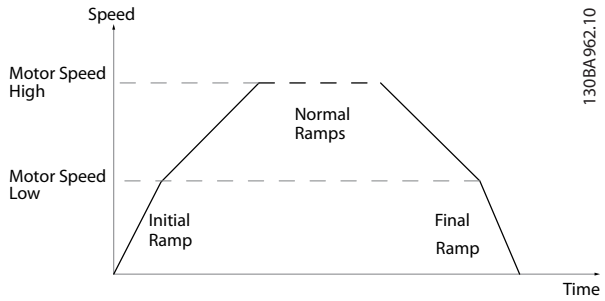

Illustration 5.13 Initial and Final Ramp Time

3-85 Check Valve Ramp Time		
Range:		**Function:**
0 s*	[0 - 60 s]	In order to protect ball check valves in a stop situation, the check valve ramp can be utilized as a slow ramp rate from *parameter 4-11 Motor Speed Low Limit [RPM]* or *4-12 Motor Speed Low Limit [Hz]*, to Check Valve Ramp End Speed, set by the user in *3-86 Check Valve Ramp End Speed [RPM]* or *3-87 Check Valve Ramp End Speed [HZ]*. When *3-85 Check Valve Ramp Time* is different from 0 seconds, the Check Valve Ramp Time is effectuated and will be used to ramp down the speed from Motor Speed Low Limit to the Check Valve End Speed in *3-86 Check Valve Ramp End Speed [RPM]* or *3-87 Check Valve Ramp End Speed [HZ]*. See *Illustration 5.14*.

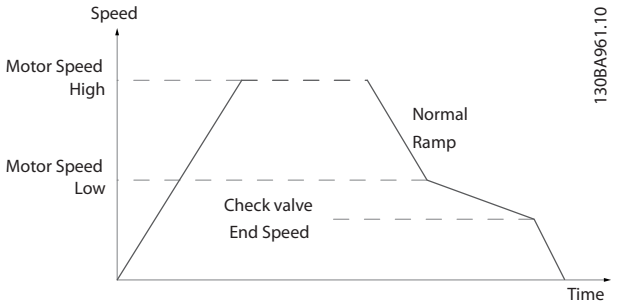

Illustration 5.14 Check Valve Ramp

3-86 Check Valve Ramp End Speed [RPM]		
Range:		**Function:**
Size related*	[0 - par. 4-11 RPM]	Set the speed in [RPM] below Motor Speed Low Limit where the Check Valve is expected to be closed and the Check Valve should no longer be active.

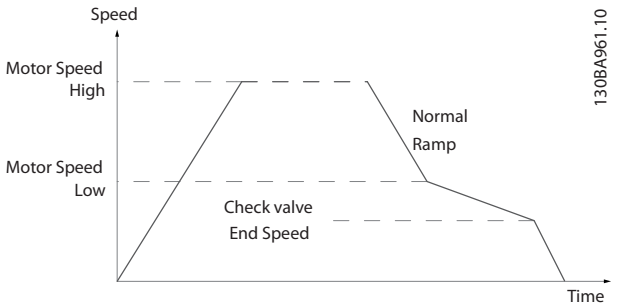

Illustration 5.15

5

3-87 Check Valve Ramp End Speed [HZ]		
Range:		**Function:**
Size related*	[0 - par. 4-12 Hz]	Set the speed in [Hz] below Motor Speed Low Limit where the Check Valve Ramp should no longer be active.

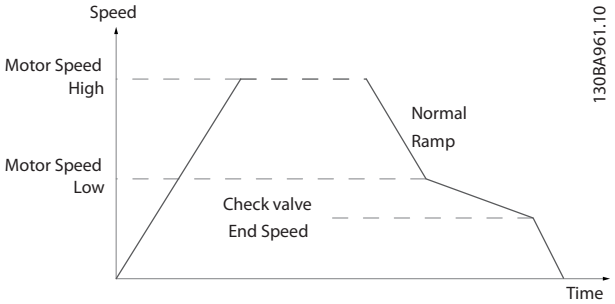

Illustration 5.16

3-88 Final Ramp Time		
Range:		**Function:**
0 s*	[0 - 60 s]	Enter the Final Ramp Time to be used when ramping down from Motor Speed Low Limit, *parameter 4-11 Motor Speed Low Limit [RPM]* or *4-12 Motor Speed Low Limit [Hz]*, to zero speed. Submersible deep well pumps can be damaged by running below minimum speed. A fast ramp time below minimum pump speed is recommended. This parameter may be applied as a fast ramp rate from Motor Speed Low Limit to zero speed.

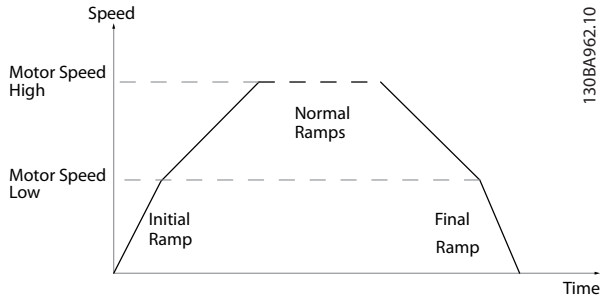

Illustration 5.17

5.2.4 4-** Limits and Warnings

4-11 Motor Speed Low Limit [RPM]		
Range:		**Function:**
Size related*	[0 - par. 4-13 RPM]	Enter the minimum limit for motor speed. The motor speed low limit can be set to correspond to the manufacturer's recommended minimum motor speed. The motor speed low limit must not exceed the setting in *parameter 4-13 Motor Speed High Limit [RPM]*.

4-13 Motor Speed High Limit [RPM]		
Range:		**Function:**
Size related*	[0 - 60000 RPM]	Enter the maximum limit for motor speed. The motor speed high limit can be set to correspond to the manufacturer's maximum rated motor. The motor speed high limit must exceed the setting in *parameter 4-11 Motor Speed Low Limit [RPM]*. Only *parameter 4-11 Motor Speed Low Limit [RPM]* or *4-12 Motor Speed Low Limit [Hz]* is displayed depending on other parameters in the Main Menu and depending on default settings dependant on global location.

NOTICE

Max. output frequency cannot exceed 10% of the inverter switching frequency (*14-01 Switching Frequency*).

NOTICE

Any changes in *parameter 4-13 Motor Speed High Limit [RPM]* reset the value in *4-53 Warning Speed High* to the same value as set in *parameter 4-13 Motor Speed High Limit [RPM]*.

5.2.5 5-** Digital In/Out

Parameter group for configuring the digital input and output.

5-01 Terminal 27 Mode		
Option:		**Function:**
		NOTICE **This parameter cannot be adjusted while the motor is running.**
[0]	Input	Defines terminal 27 as a digital input.
[1]	Output	Defines terminal 27 as a digital output.

5.2.6 5-1* Digital Inputs

Parameters for configuring the input functions for the input terminals.
The digital inputs are used for selecting various functions in the frequency converter. All digital inputs can be set to the following functions:

Options [120] - [138] are related to the Cascade Controller functionality. For more information, see parameter group *25-** Cascade Controller*.

Digital input function	Option	Terminal
No operation	[0]	All *term 32, 33, 29, 19
Reset	[1]	All
Coast inverse	[2]	All * term 27
Coast and reset inverse	[3]	All
DC-brake inverse	[5]	All
Stop inverse	[6]	All
External interlock	[7]	All
Start	[8]	All
Latched start	[9]	All
Reversing	[10]	All
Start reversing	[11]	All
Jog	[14]	All
Preset reference on	[15]	All
Preset ref bit 0	[16]	All
Preset ref bit 1	[17]	All
Preset ref bit 2	[18]	All
Freeze reference	[19]	All
Freeze output	[20]	All
Speed up	[21]	All
Speed down	[22]	All
Set-up select bit 0	[23]	All
Set-up select bit 1	[24]	All
Pulse input	[32]	term 29, 33
Ramp bit 0	[34]	All
Mains failure inverse	[36]	All
Ref source bit 0	[42]	All
Hand/Auto Start	[51]	All
Run Permissive	[52]	All
Hand start	[53]	All
Auto start	[54]	All
DigiPot Increase	[55]	All
DigiPot Decrease	[56]	All
DigiPot Clear	[57]	All
Counter A (up)	[60]	29, 33
Counter A (down)	[61]	29, 33
Reset Counter A	[62]	All
Counter B (up)	[63]	29, 33
Counter B (down)	[64]	29, 33
Reset Counter B	[65]	All
Sleep Mode	[66]	All
Reset Maintenance Word	[78]	All
PTC Card 1	[80]	All
Latched Pump Derag	[85]	All
Lead Pump Start	[120]	All
Lead Pump Alternation	[121]	All
Pump 1 Interlock	[130]	All
Pump 2 Interlock	[131]	All
Pump 3 Interlock	[132]	All

Table 5.7 Functions for Digital Inputs

All = Terminals 18, 19, 27, 29, 32, X30/2, X30/3, X30/4. X30/ are the terminals on MCB 101.

Functions dedicated to only one digital input are stated in the associated parameter.

All digital inputs can be programmed to these functions:

[0]	No operation	No reaction to signals transmitted to terminal.
[1]	Reset	Resets frequency converter after a TRIP/ ALARM. Not all alarms can be reset.
[2]	Coast inverse	Leaves motor in free mode. Logic '0' ⇒ coasting stop. (Default Digital input 27): Coasting stop, inverted input (NC).
[3]	Coast and reset inverse	Reset and coasting stop Inverted input (NC). Leaves motor in free mode and resets the frequency converter. Logic '0' ⇒ coasting stop and reset.
[5]	DC-brake inverse	Inverted input for DC braking (NC). Stops motor by energizing it with a DC current for a certain time period. See *2-01 DC Brake Current* to *2-03 DC Brake Cut In Speed [RPM]*. The function is only active when the value in *2-02 DC Braking Time* is different from 0. Logic '0' ⇒ DC braking. This selection is not possible when *1-10 Motor Construction* is set to [1] PM, non salient SPM
[6]	Stop inverse	Stop Inverted function. Generates a stop function when the selected terminal goes from logical level '1' to '0'. The stop is performed according to the selected ramp time (*parameter 3-42 Ramp 1 Ramp Down Time* and *3-52 Ramp 2 Ramp Down Time*. ***NOTICE*** **When the frequency converter is at the torque limit and has received a stop command, it may not stop by itself. To ensure that the frequency converter stops, configure a digital output to *[27] Torque limit & stop* and connect this digital output to a digital input that is configured as coast.**
[7]	External Interlock	Same function as Coasting stop, inverse, but External Interlock generates the alarm message 'external fault' on the display when the terminal which is programmed for Coast Inverse is logic '0'. The alarm message will also be active via digital outputs and relay outputs, if programmed for External Interlock. The alarm can be reset using a digital input or the [Reset] key if the cause for the External Interlock has been removed. A delay can be programmed in *22-00 External Interlock Delay*. After applying a signal to the input, the reaction described above will be delayed with the time set in *22-00 External Interlock Delay*.
[8]	Start	Select start value for a start/stop command. '1' = start, '0 ' = stop. (Default Digital input 18)
[9]	Latched start	Motor starts, if a pulse is applied for min. 2 ms. Motor stops when Stop inverse is activated
[10]	Reversing	Changes direction of motor shaft rotation. Select Logic '1' to reverse. The reversing signal only changes the direction of rotation. It does not activate the start function. Select both directions in *4-10 Motor Speed Direction*. (Default Digital input 19).
[11]	Start reversing	Used for start/stop and for reversing on the same wire. Signals on start are not allowed at the same time.
[14]	Jog	Used for activating jog speed. See *3-11 Jog Speed [Hz]*. (Default Digital input 29)
[15]	Preset reference on	Used for shifting between external reference and preset reference. It is assumed that *[1] External/preset* has been selected in *parameter 3-04 Reference Function*. Logic '0' = external reference active; logic '1' = one of the eight preset references is active.
[16]	Preset ref bit 0	Enables a choice between one of the eight preset references according to *Table 5.8*.
[17]	Preset ref bit 1	Enables a choice between one of the eight preset references according to *Table 5.8*.
[18]	Preset ref bit 2	Enables a choice between one of the eight preset references according to *Table 5.8*.

Preset ref. bit	2	1	0
Preset ref. 0	0	0	0
Preset ref. 1	0	0	1
Preset ref. 2	0	1	0
Preset ref. 3	0	1	1
Preset ref. 4	1	0	0
Preset ref. 5	1	0	1
Preset ref. 6	1	1	0
Preset ref. 7	1	1	1

Table 5.8 Preset Ref. Bit

[19]	Freeze ref	Freezes actual reference. The frozen reference is now the point of enable/ condition for Speed up and Speed down to be used. If Speed up/down is used, the speed change always follows ramp 2 (*3-51 Ramp 2 Ramp Up Time* and *3-52 Ramp 2 Ramp Down Time*) in the range 0 - *3-03 Maximum Reference Maximum Reference*.
[20]	Freeze output	Freezes actual motor frequency (Hz). The frozen motor frequency is now the point of

		enable/condition for Speed up and Speed down to be used. If Speed up/down is used, the speed change always follows ramp 2 (*3-51 Ramp 2 Ramp Up Time* and *3-52 Ramp 2 Ramp Down Time*) in the range 0 - *parameter 1-23 Motor Frequency*. ***NOTICE*** **When Freeze output is active, the frequency converter cannot be stopped via a low 'start [13]' signal. Stop the frequency converter via a terminal programmed for *[2] Coast inverse* or *[3] Coast and reset, inverse*.**
[21]	Speed up	For digital control of the up/down speed is desired (motor potentiometer). Activate this function by selecting either Freeze reference or Freeze output. When Speed up is activated for less than 400 msec. the resulting reference will be increased by 0.1%. If Speed up is activated for more than 400 msec. the resulting reference will ramp according to Ramp 1 in *parameter 3-41 Ramp 1 Ramp Up Time*.
[22]	Speed down	Same as *[21] Speed up*.
[23]	Set-up select bit 0	Selects one of the four set-ups. Set *0-10 Active Set-up* to Multi Set-up.
[24]	Set-up select bit 1	Same as *[23] Set-up select bit 0*. (Default Digital input 32)
[32]	Pulse input	Select Pulse input when using a pulse sequence as either reference or feedback. Scaling is done in parameter group 5-5*.
[34]	Ramp bit 0	Select which ramp to use. Logic "0" will select ramp 1 while logic "1" will select ramp 2.
[36]	Mains failure inverse	Activates *14-10 Mains Failure*. Mains failure inverse is active in the Logic "0" situation.
[42]	Ref source bit 0	An active input in bit 0 selects AI54 as the reference source (see parameter group *3-1* References*, option *[35] Digital input select*). An inactive input selects AI53.
[51]	Hand/Auto Start	Selects Hand or Auto Start. High = Auto On only, Low = Hand on only.
[52]	Run Permissive	The input terminal, for which the Run permissive has been programmed must be logic "1" before a start command can be accepted. Run permissive has a logic 'AND' function related to the terminal which is programmed for *[8] Start*, *[14] Jog* or *[20] Freeze Output*, which means that in order to start running the motor, both conditions must be fulfilled. If Run Permissive is programmed on multiple terminals, Run permissive needs only be logic '1' on one of the terminals for the function to be carried out. The digital output signal for Run Request (*[8] Start*, *[14] Jog* or *[20] Freeze output*) programmed in parameter group 5-3* Digital outputs, or parameter group 5-4* Relays, will not be affected by Run Permissive.
[53]	Hand start	A signal applied will put the frequency converter into Hand mode as if [*Hand On*] has been pressed and a normal stop command will be overridden. If disconnecting the signal, the motor will stop. To make any other start commands valid, another digital input must be assign to *Auto Start* and a signal applied to this. [*Hand On*] and [*Auto On*] have no impact. [*Off*] will override *Hand Start* and *Auto Start*. Press either [*Hand On*] or [*Auto On*] to make *Hand Start* and *Auto Start* active again. If no signal on neither *Hand Start* nor *Auto Start*, the motor will stop regardless of any normal Start command applied. If signal applied to both *Hand Start* and *Auto Start*, the function will be *Auto Start*. If pressing [*Off*] the motor will stop regardless of signals on *Hand Start* and *Auto Start*.
[54]	Auto start	A signal applied will put the frequency converter into Auto mode as if [*Auto On*] has been pressed. See also *[53] Hand Start*.
[55]	DigiPot Increase	Uses the input as an INCREASE signal to the Digital Potentiometer function described in parameter group 3-9*
[56]	DigiPot Decrease	Uses the input as a DECREASE signal to the Digital Potentiometer function described in parameter group 3-9*
[57]	DigiPot Clear	Uses the input to CLEAR the Digital Potentiometer reference described in parameter group 3-9*
[60]	Counter A (up)	(Terminal 29 or 33 only) Input for increment counting in the SLC counter.
[61]	Counter A (down)	(Terminal 29 or 33 only) Input for decrement counting in the SLC counter.
[62]	Reset Counter A	Input for reset of counter A.
[63]	Counter B (up)	(Terminal 29 and 33 only) Input for increment counting in the SLC counter.
[64]	Counter B (down)	(Terminal 29 and 33 only) Input for decrement counting in the SLC counter.
[65]	Reset Counter B	Input for reset of counter B.
[66]	Sleep Mode	Forces frequency converter into Sleep Mode (see parameter group 22-4*, *Sleep Mode*). Reacts on the rising edge of signal applied!
[78]	Reset Preventive Maintenance Word	Resets all data in *16-96 Maintenance Word* to 0.
[80]	PTC Card1	All Digital Inputs can be set to *[80] PTC Card 1*. However, only one Digital Input must be set to this choice.

5

[85]	Latched Pump Derag	Starts deragging.

Options [120] - [138] are related to the Cascade Controller functionality. For more information, see parameter group *25-** Cascade Controller*.

[120]	Lead Pump Start	Starts/Stops the Lead Pump (controlled by the frequency converter). A start requires that also a System Start signal has been applied e.g. to one of the digital inputs set for *[8] Start*!
[121]	Lead Pump Alternation	Forces alternation of the lead pump in a Cascade Controller. *Lead Pump Alternation*, *25-50 Lead Pump Alternation* must be set to either *[2] At Command* or *[3] At Staging or At Command*. *25-51 Alternation Event* can be set to any of the four options.
[130 - 138]	Pump1 Interlock - Pump9 Interlock	The function depends on the setting in *25-06 Number of Pumps*. If set to *[0] No*, then Pump1 refers to the pump controlled by relay RELAY1 etc. If set to *[1] Yes*, Pump1 refers to the pump controlled by the frequency converter only (without any of the build in relays involved) and Pump2 to the pump controlled by the relay RELAY1. Variable speed pump (lead) cannot be interlocked in the basic Cascade Controller. See *Table 5.9*

Setting in parameter group 5-1*	Setting in *25-06 Number of Pumps*	
	[0] No	[1] Yes
[130] Pump1 Interlock	Controlled by RELAY1 (only if not lead pump)	Frequency Converter controlled (cannot be interlocked)
[131] Pump2 Interlock	Controlled by RELAY2	Controlled by RELAY1
[132] Pump3 Interlock	Controlled by RELAY3	Controlled by RELAY2
[133] Pump4 Interlock	Controlled by RELAY4	Controlled by RELAY3
[134] Pump5 Interlock	Controlled by RELAY5	Controlled by RELAY4
[135] Pump6 Interlock	Controlled by RELAY6	Controlled by RELAY5
[136] Pump7 Interlock	Controlled by RELAY7	Controlled by RELAY6
[137] Pump8 Interlock	Controlled by RELAY8	Controlled by RELAY7
[138] Pump9 Interlock	Controlled by RELAY9	Controlled by RELAY8

Table 5.9

5-13 Terminal 29 Digital Input

Option:		Function:
[0] *	No Operation	Same options and functions as parameter group 5-1* *Digital Inputs*.

5-14 Terminal 32 Digital Input

The parameter contains all options and functions listed in parameter group *chapter 5.2.6 5-1* Digital Inputs* except for option *[32] Pulse input*.

5-15 Terminal 33 Digital Input

The parameter contains all options and functions listed in parameter group *chapter 5.2.6 5-1* Digital Inputs*.

5-30 Terminal 27 Digital Output

Option:		Function:
[0]	No operation	
[1]	Control Ready	
[2]	Drive ready	
[3]	Drive rdy/rem ctrl	
[4]	Stand-by / no warning	
[5]	Running	
[6]	Running / no warning	
[8]	Run on ref/no warn	
[9]	Alarm	
[10]	Alarm or warning	
[11]	At torque limit	
[12]	Out of current range	
[13]	Below current, low	
[14]	Above current, high	
[15]	Out of speed range	
[16]	Below speed, low	
[17]	Above speed, high	
[18]	Out of feedb. range	
[19]	Below feedback, low	
[20]	Above feedback, high	
[21]	Thermal warning	
[25]	Reverse	
[26]	Bus OK	
[27]	Torque limit & stop	
[28]	Brake, no brake war	
[29]	Brake ready, no fault	
[30]	Brake fault (IGBT)	
[33]	Safe stop active	
[35]	External Interlock	
[40]	Out of ref range	
[41]	Below reference, low	
[42]	Above ref, high	
[45]	Bus ctrl.	
[46]	Bus ctrl, 1 if timeout	
[47]	Bus ctrl, 0 if timeout	
[55]	Pulse output	
[60]	Comparator 0	
[61]	Comparator 1	
[62]	Comparator 2	

5-30 Terminal 27 Digital Output		
Option:		**Function:**
[63]	Comparator 3	
[64]	Comparator 4	
[65]	Comparator 5	
[70]	Logic rule 0	
[71]	Logic rule 1	
[72]	Logic rule 2	
[73]	Logic rule 3	
[74]	Logic rule 4	
[75]	Logic rule 5	
[80]	SL digital output A	
[81]	SL digital output B	
[82]	SL digital output C	
[83]	SL digital output D	
[84]	SL digital output E	
[85]	SL digital output F	
[90]	kWh counter pulse	Creates a pulse on the digital output every time when the frequency converter uses 1 kWh.
[155]	Verifying Flow	
[160]	No alarm	
[161]	Running reverse	
[164]	Local ref active, not OFF	
[165]	Local ref active	
[166]	Remote ref active	
[167]	Start command activ	
[168]	Hand mode	
[169]	Auto mode	
[180]	Clock Fault	
[181]	Prev. Maintenance	
[182]	Deragging	
[183]	Pre/Post Lube	
[188]	AHF Capacitor Connect	
[189]	External Fan Control	
[190]	No-Flow	
[191]	Dry Pump	
[192]	End Of Curve	
[193]	Sleep Mode	
[194]	Broken Belt	
[195]	Bypass Valve Control	
[198]	Drive Bypass	
[199]	Pipe Filling	
[200]	Full capacity	
[201]	Pump 1 running	
[202]	Pump 2 running	
[203]	Pump 3 running	
[204]	Pump 4 running	
[205]	Pump 5 running	
[206]	Pump 6 running	
[207]	Pump 7 running	
[208]	Pump 8 running	
[209]	Pump 9 running	

5-40 Function Relay		
Option:		**Function:**
		Select options to define the function of the relays. The selection of each mechanical relay is realized in an array parameter.
[0]	No operation	
[1]	Control Ready	
[2]	Drive ready	
[3]	Drive rdy/rem ctrl	
[4]	Stand-by / no warning	
[5]	Running	
[6]	Running / no warning	
[8]	Run on ref/no warn	
[9]	Alarm	
[10]	Alarm or warning	
[11]	At torque limit	
[12]	Out of current range	
[13]	Below current, low	
[14]	Above current, high	
[15]	Out of speed range	
[16]	Below speed, low	
[17]	Above speed, high	
[18]	Out of feedb. range	
[19]	Below feedback, low	
[20]	Above feedback, high	
[21]	Thermal warning	
[25]	Reverse	
[26]	Bus OK	
[27]	Torque limit & stop	
[28]	Brake, no brake war	
[29]	Brake ready, no fault	
[30]	Brake fault (IGBT)	
[33]	Safe stop active	
[35]	External Interlock	
[36]	Control word bit 11	
[37]	Control word bit 12	
[40]	Out of ref range	
[41]	Below reference, low	
[42]	Above ref, high	
[45]	Bus ctrl.	
[46]	Bus ctrl, 1 if timeout	
[47]	Bus ctrl, 0 if timeout	
[60]	Comparator 0	
[61]	Comparator 1	
[62]	Comparator 2	
[63]	Comparator 3	
[64]	Comparator 4	
[65]	Comparator 5	
[70]	Logic rule 0	
[71]	Logic rule 1	
[72]	Logic rule 2	
[73]	Logic rule 3	

5

5-40 Function Relay		
Option:		**Function:**
[74]	Logic rule 4	
[75]	Logic rule 5	
[80]	SL digital output A	
[81]	SL digital output B	
[82]	SL digital output C	
[83]	SL digital output D	
[84]	SL digital output E	
[85]	SL digital output F	
[155]	Verifying Flow	
[160]	No alarm	
[161]	Running reverse	
[164]	Local ref active, not OFF	
[165]	Local ref active	
[166]	Remote ref active	
[167]	Start command activ	
[168]	Hand mode	
[169]	Auto mode	
[180]	Clock Fault	
[181]	Prev. Maintenance	
[183]	Pre/Post Lube	
[188]	AHF Capacitor Connect	
[189]	External Fan Control	
[190]	No-Flow	
[191]	Dry Pump	
[192]	End Of Curve	
[193]	Sleep Mode	
[194]	Broken Belt	
[195]	Bypass Valve Control	
[198]	Drive Bypass	
[199]	Pipe Filling	
[211]	Cascade Pump 1	
[212]	Cascade Pump 2	
[213]	Cascade Pump 3	
[214]	Cascade Pump 4	
[215]	Cascade Pump 5	
[216]	Cascade Pump 6	
[217]	Cascade Pump 7	
[218]	Cascade Pump 8	
[219]	Cascade Pump 9	
[230]	Ext. Cascade Ctrl	

5-53 Term. 29 High Ref./Feedb. Value		
Range:		**Function:**
100 *	[-999999.999 - 999999.999]	Enter the high reference value [RPM] for the motor shaft speed and the high feedback value, see also *5-58 Term. 33 High Ref./Feedb. Value*.

5.2.7 6-** Analog In/Out

Parameter group for configuration of the analog input and output.

6-00 Live Zero Timeout Time		
Range:		**Function:**
10 s*	[1 - 99 s]	Enter the Live Zero Time-out time period. Live Zero Time-out Time is active for analog inputs, i.e. terminal 53 or terminal 54, used as reference or feedback sources. If the reference signal value associated with the selected current input falls below 50% of the value set in *parameter 6-10 Terminal 53 Low Voltage*, *6-12 Terminal 53 Low Current*, *parameter 6-20 Terminal 54 Low Voltage* or *6-22 Terminal 54 Low Current* for a time period longer than the time set in *parameter 6-00 Live Zero Timeout Time*, the function selected in *parameter 6-01 Live Zero Timeout Function* is activated.

6-01 Live Zero Timeout Function		
Option:		**Function:**
		Select the time-out function. The function set in *parameter 6-01 Live Zero Timeout Function* is activated if the input signal on terminal 53 or 54 is below 50% of the value in *parameter 6-10 Terminal 53 Low Voltage*, *6-12 Terminal 53 Low Current*, *parameter 6-20 Terminal 54 Low Voltage* or *6-22 Terminal 54 Low Current* for a time period defined in *parameter 6-00 Live Zero Timeout Time*. If several time-outs occur simultaneously, the frequency converter prioritises the time-out functions as follows 1. *Parameter 6-01 Live Zero Timeout Function* 2. *8-04 Control Timeout Function* The output frequency of the frequency converter can be: • [1] frozen at the present value • [2] overruled to stop • [3] overruled to jog speed • [4] overruled to max. speed • [5] overruled to stop with subsequent trip
[0]	Off	
[1]	Freeze output	
[2]	Stop	
[3]	Jogging	
[4]	Max. speed	
[5]	Stop and trip	

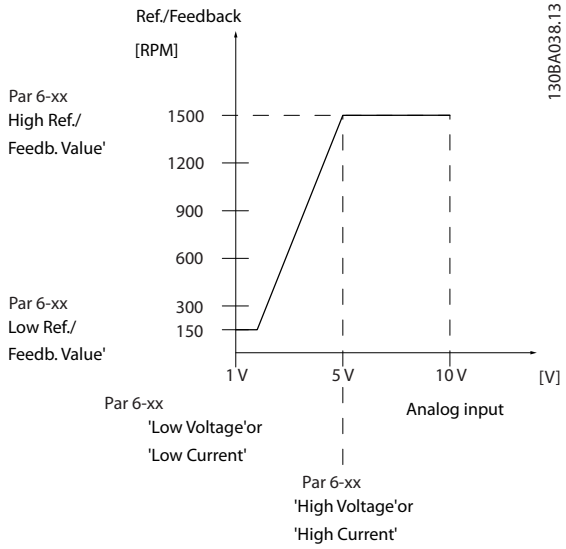

Illustration 5.18

6-10 Terminal 53 Low Voltage		
Range:		**Function:**
0.07 V*	[0 - par. 6-11 V]	Enter the low voltage value. This analog input scaling value should correspond to the low reference/feedback value set in *parameter 6-14 Terminal 53 Low Ref./Feedb. Value*.

6-11 Terminal 53 High Voltage		
Range:		**Function:**
10 V*	[par. 6-10 - 10 V]	Enter the high voltage value. This analog input scaling value should correspond to the high reference/feedback value set in *parameter 6-15 Terminal 53 High Ref./Feedb. Value*.

6-14 Terminal 53 Low Ref./Feedb. Value		
Range:		**Function:**
0 *	[-999999.999 - 999999.999]	Enter the analog input scaling value that corresponds to the low voltage/low current set in *parameter 6-10 Terminal 53 Low Voltage* and *6-12 Terminal 53 Low Current*.

6-15 Terminal 53 High Ref./Feedb. Value		
Range:		**Function:**
Size related*	[-999999.999 - 999999.999]	Enter the analog input scaling value that corresponds to the high voltage/high current value set in *parameter 6-11 Terminal 53 High Voltage* and *6-13 Terminal 53 High Current*.

6-20 Terminal 54 Low Voltage		
Range:		**Function:**
0.07 V*	[0 - par. 6-21 V]	Enter the low voltage value. This analog input scaling value should correspond to the low reference/feedback value, set in *parameter 6-24 Terminal 54 Low Ref./Feedb. Value*.

6-21 Terminal 54 High Voltage		
Range:		**Function:**
10 V*	[par. 6-20 - 10 V]	Enter the high voltage value. This analog input scaling value should correspond to the high reference/feedback value set in *parameter 6-25 Terminal 54 High Ref./Feedb. Value*.

5

6-24 Terminal 54 Low Ref./Feedb. Value		
Range:		**Function:**
0 *	[-999999.999 - 999999.999]	Enter the analog input scaling value that corresponds to the low voltage/low current value set in *parameter 6-20 Terminal 54 Low Voltage* and *6-22 Terminal 54 Low Current*.

6-25 Terminal 54 High Ref./Feedb. Value		
Range:		**Function:**
100 *	[-999999.999 - 999999.999]	Enter the analog input scaling value that corresponds to the high voltage/ high current value set in *parameter 6-21 Terminal 54 High Voltage* and *6-23 Terminal 54 High Current*.

6-50 Terminal 42 Output		
Option:		**Function:**
		Select the function of Terminal 42 as an analog current output. A motor current of 20 mA corresponds to I_{max}.
[0]	No operation	
[100]	Output freq. 0-100	0-100 Hz, (0-20 mA)
[101]	Reference Min-Max	Minimum reference - Maximum reference, (0-20 mA)
[102]	Feedback +-200%	-200% to +200% of *20-14 Maximum Reference/Feedb.*, (0-20 mA)
[103]	Motor cur. 0-Imax	0 - Inverter Max. Current (*16-37 Inv. Max. Current*), (0-20 mA)
[104]	Torque 0-Tlim	0 - Torque limit (*4-16 Torque Limit Motor Mode*), (0-20 mA)
[105]	Torque 0-Tnom	0 - Motor rated torque, (0-20 mA)
[106]	Power 0-Pnom	0 - Motor rated power, (0-20 mA)
[107]	Speed 0-HighLim	0 - Speed High Limit (*parameter 4-13 Motor Speed High Limit [RPM]* and *4-14 Motor Speed High Limit [Hz]*), (0-20 mA)
[108]	Torque +-160%	
[109]	Out frq 0-Fmax	
[113]	Ext. Closed Loop 1	0-100%, (0-20 mA)
[114]	Ext. Closed Loop 2	0-100%, (0-20 mA)
[115]	Ext. Closed Loop 3	0-100%, (0-20 mA)
[116]	Cascade Reference	
[130]	Out frq 0-100 4-20mA	0-100 Hz
[131]	Reference 4-20mA	Minimum Reference - Maximum Reference
[132]	Feedback 4-20mA	-200% to +200% of *20-14 Maximum Reference/Feedb.*

6-50 Terminal 42 Output		
Option:		**Function:**
[133]	Motor cur. 4-20mA	0 - Inverter Max. Current (*16-37 Inv. Max. Current*)
[134]	Torq.0-lim 4-20 mA	0 - Torque limit (*4-16 Torque Limit Motor Mode*)
[135]	Torq.0-nom 4-20mA	0 - Motor rated torque
[136]	Power 4-20mA	0 - Motor rated power
[137]	Speed 4-20mA	0 - Speed High Limit (4-13 and 4-14)
[138]	Torque 4-20mA	
[139]	Bus ctrl.	0-100%, (0-20 mA)
[140]	Bus ctrl. 4-20 mA	0-100%
[141]	Bus ctrl t.o.	0-100%, (0-20 mA)
[142]	Bus ctrl t.o. 4-20mA	0-100%
[143]	Ext. CL 1 4-20mA	0-100%
[144]	Ext. CL 2 4-20mA	0-100%
[145]	Ext. CL 3 4-20mA	0-100%
[146]	Cascade Ref. 4-20mA	
[147]	Main act val 0-20mA	
[148]	Main act val 4-20mA	
[150]	Out frq 0-Fmax 4-20mA	
[254]	DC Link 0-20mA	
[255]	DC Link 4-20mA	

NOTICE

Values for setting the Minimum Reference is found in open loop *parameter 3-02 Minimum Reference* and for closed loop *20-13 Minimum Reference/Feedb.* - values for maximum reference for open loop is found in *3-03 Maximum Reference* and for closed loop *20-14 Maximum Reference/Feedb.*

6-51 Terminal 42 Output Min Scale		
Range:		**Function:**
0 %*	[0 - 200 %]	Scale for the minimum output (0 or 4 mA) of the analog signal at terminal 42. Set the value to be the percentage of the full range of the variable selected in *parameter 6-50 Terminal 42 Output*.

6-52 Terminal 42 Output Max Scale		
Range:		**Function:**
100 %*	[0 - 200 %]	Scale for the maximum output (20mA) of the analog signal at terminal 42. Set the value to be the percentage of the full range of the variable selected in *parameter 6-50 Terminal 42 Output*. 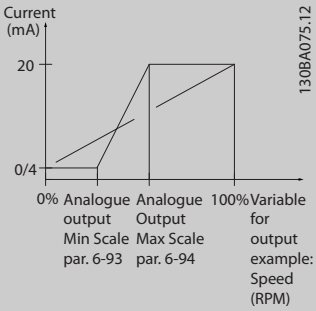 **Illustration 5.19** It is possible to get a value lower than 20mA at full scale by programming values >100% by using a formula as follows:

$$20\ mA / desired\ maximum\ current \times 100\%$$

$$i.e.\ 10mA:\ \frac{20\ mA}{10\ mA} \times 100\% = 200\%$$

Example 1:
Variable value= OUTPUT FREQUENCY, range = 0-100 Hz
Range needed for output = 0-50 Hz
Output signal 0 or 4mA is needed at 0 Hz (0% of range) - set *parameter 6-51 Terminal 42 Output Min Scale* to 0%
Output signal 20 mA is needed at 50 Hz (50% of range) - set *parameter 6-52 Terminal 42 Output Max Scale* to 50%

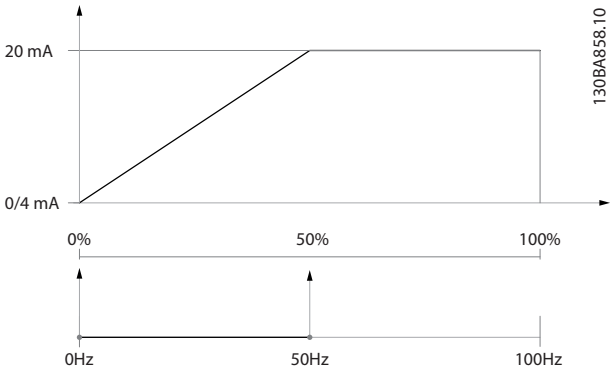

Illustration 5.20

Example 2:
Variable= FEEDBACK, range= -200% to +200%
Range needed for output= 0-100%
Output signal 0 or 4 mA is needed at 0% (50% of range) - set *parameter 6-51 Terminal 42 Output Min Scale* to 50%
Output signal 20 mA is needed at 100% (75% of range) - set *parameter 6-52 Terminal 42 Output Max Scale* to 75%

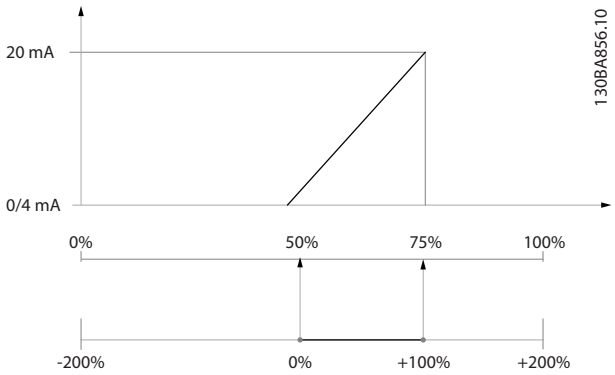

Illustration 5.21

Example 3:
Variable value= REFERENCE, range= Min ref - Max ref
Range needed for output= Min ref (0%) - Max ref (100%), 0-10 mA
Output signal 0 or 4 mA is needed at Min ref - set *parameter 6-51 Terminal 42 Output Min Scale* to 0%
Output signal 10 mA is needed at Max ref (100% of range) - set *parameter 6-52 Terminal 42 Output Max Scale* to 200% (20 mA/10 mA x 100%=200%).

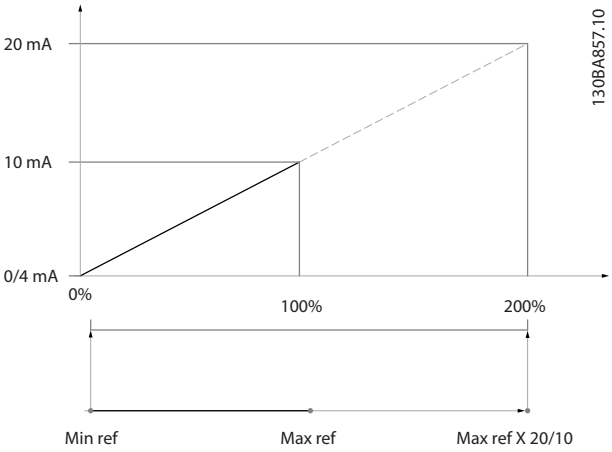

Illustration 5.22

5.2.8 20-** Drive Closed Loop

This parameter group is used for configuring the closed loop PID Controller, that controls the output frequency of the frequency converter.

20-12 Reference/Feedback Unit		
Option:		**Function:**
[0]	-	
[1]	%	
[5]	PPM	
[10]	1/min	
[11]	RPM	
[12]	Pulse/s	
[20]	l/s	

5

20-12 Reference/Feedback Unit		
Option:		**Function:**
[21]	l/min	
[22]	l/h	
[23]	m^3/s	
[24]	m^3/min	
[25]	m^3/h	
[30]	kg/s	
[31]	kg/min	
[32]	kg/h	
[33]	t/min	
[34]	t/h	
[40]	m/s	
[41]	m/min	
[45]	m	
[60]	°C	
[70]	mbar	
[71]	bar	
[72]	Pa	
[73]	kPa	
[74]	m WG	
[75]	mm Hg	
[80]	kW	
[120]	GPM	
[121]	gal/s	
[122]	gal/min	
[123]	gal/h	
[124]	CFM	
[125]	ft^3/s	
[126]	ft^3/min	
[127]	ft^3/h	
[130]	lb/s	
[131]	lb/min	
[132]	lb/h	
[140]	ft/s	
[141]	ft/min	
[145]	ft	
[160]	°F	
[170]	psi	
[171]	lb/in^2	
[172]	in WG	
[173]	ft WG	
[174]	in Hg	
[180]	HP	This parameter determines the unit that is used for the setpoint reference and feedback that the PID Controller will use for controlling the output frequency of the frequency converter.

20-21 Setpoint 1		
Range:		**Function:**
0 ProcessCtrlUnit*	[-999999.999 - 999999.999 ProcessCtrlUnit]	Setpoint 1 is used in Closed Loop Mode to enter a setpoint reference that is used by the frequency converter's PID Controller. See the description of *20-20 Feedback Function*. **NOTICE** **The setpoint reference entered here is added to any other references that are enabled (see parameter group *3-1* References*).**

20-81 PID Normal/ Inverse Control		
Option:		**Function:**
[0]	Normal	The frequency converter's output frequency decreases when the feedback is greater than the setpoint reference. This is common for pressure-controlled supply fan and pump applications.
[1]	Inverse	The frequency converter's output frequency increases when the feedback is greater than the setpoint reference.

20-82 PID Start Speed [RPM]		
Range:		**Function:**
Size related*	[0 - par. 4-13 RPM]	When the frequency converter is first started, it initially ramps up to this output speed in Open Loop Mode, following the active Ramp Up Time. When the output speed programmed is reached, the frequency converter automatically switches to Closed Loop Mode and the PID Controller begins to function. This is useful in applications in which the driven load must first quickly accelerate to a minimum speed when it is started. **NOTICE** **This parameter is only visible if *0-02 Motor Speed Unit* is set to *[0] RPM*.**

20-93 PID Proportional Gain		
Range:		**Function:**
2 *	[0 - 10]	The proportional gain indicates the number of times the error between the set point and the feedback signal is to be applied.

If (Error x Gain) jumps with a value equal to what is set in *20-14 Maximum Reference/Feedb.* the PID controller tries to change the output speed equal to what is set in *parameter 4-13 Motor Speed High Limit [RPM]/4-14 Motor*

Speed High Limit [Hz] but in practice of course limited by this setting.
The proportional band (error causing output to change from 0-100%) can be calculated by means of the formula

$$\left(\frac{1}{Proportional\ Gain}\right) \times (Max\ Reference)$$

NOTICE

Always set the desired for *20-14 Maximum Reference/ Feedb.* before setting the values for the PID controller in parameter group *20-9* PID Controller*.

20-94 PID Integral Time		
Range:		**Function:**
8 s*	[0.01 - 10000 s]	Over time, the integrator accumulates a contribution to the output from the PID controller as long as there is a deviation between the Reference/Setpoint and feedback signals. The contribution is proportional to the size of the deviation. This ensures that the deviation (error) approaches zero. Quick response on any deviation is obtained when the integral time is set to a low value. Setting it too low, however, may cause the control to become unstable. The value set, is the time needed for the integrator to add the same contribution as the proportional for a certain deviation. If the value is set to 10,000, the controller acts as a pure proportional controller with a P-band based on the value set in *parameter 20-93 PID Proportional Gain*. When no deviation is present, the output from the proportional controller is 0.

5.2.9 22-0* Miscellaneous

This group contains parameters used for monitoring water/ wastewater applications.

22-20 Low Power Auto Set-up		
Start of auto set-up of power data for No-Flow Power tuning.		
Option:		**Function:**
[0]	Off	
[1]	Enabled	When set for *Enabled*, an auto set up sequence is activated, automatically setting speed to approx. 50 and 85% of rated motor speed (*parameter 4-13 Motor Speed High Limit [RPM]*, *4-14 Motor Speed High Limit [Hz]*). At those two speeds, the power consumption is automatically measured and stored. Before enabling Auto Set Up:

22-20 Low Power Auto Set-up		
Start of auto set-up of power data for No-Flow Power tuning.		
Option:		**Function:**
		1. Close valve(s) to create a no flow condition 2. The frequency converter must be set for Open Loop (*parameter 1-00 Configuration Mode*). Note that it is important also to set *1-03 Torque Characteristics*.

NOTICE

Auto Set-up must be done when the system has reached normal operating temperature!

NOTICE

It is important that the *parameter 4-13 Motor Speed High Limit [RPM]* or *4-14 Motor Speed High Limit [Hz]* is set to the max. operational speed of the motor!
It is important to do the Auto Set-up before configuring the integrated PI Contoller as settings will be reset when changing from Closed to Open Loop in *parameter 1-00 Configuration Mode*.

NOTICE

Carry out the tuning with the same settings in *1-03 Torque Characteristics*, as for operation after the tuning.

22-21 Low Power Detection		
Option:		**Function:**
[0]	Disabled	
[1]	Enabled	The Low Power Detection commissioning must be carried out to set the parameters in parameter group *22-3* No-Flow Power Tuning* for proper operation.

22-22 Low Speed Detection		
Option:		**Function:**
[0]	Disabled	
[1]	Enabled	Detects when the motor operates with a speed as set in *parameter 4-11 Motor Speed Low Limit [RPM]* or *4-12 Motor Speed Low Limit [Hz]*.

5

22-23 No-Flow Function

Common actions for Low Power Detection and Low Speed Detection (Individual selections not possible).

Option:		Function:
[0]	Off	
[1]	Sleep Mode	The frequency converter enters Sleep Mode and stops when a No Flow condition is detected. See parameter group *22-4* Sleep Mode* for programming options for Sleep Mode.
[2]	Warning	The frequency converter continues to run, but activates a No-Flow Warning [W92]. A digital output or a serial communication bus can communicate a warning to other equipment.
[3]	Alarm	The frequency converter stops running and activates a No-Flow Alarm [A 92]. A frequency converter digital output or a serial communication bus can communicate an alarm to other equipment.

NOTICE

Do not set *14-20 Reset Mode*, to *[13] Infinite auto reset*, when *parameter 22-23 No-Flow Function* is set to *[3] Alarm*. Doing so causes the frequency converter to continuously cycle between running and stopping when a No Flow condition is detected.

NOTICE

If the frequency converter is equipped with a constant speed bypass with an automatic bypass function that starts the bypass if the frequency converter experiences a persistent alarm condition, be sure to disable the bypass's automatic bypass function, if *[3] Alarm* is selected as the No-Flow Function.

22-24 No-Flow Delay

Range:		Function:
10 s*	[1 - 600 s]	Set the time Low Power/Low Speed must stay detected to activate signal for actions. If detection disappears before run out of the timer, the timer is reset.

22-26 Dry Pump Function

Select desired action for dry pump operation.

Option:		Function:
[0]	Off	
[1]	Warning	The frequency converter continues to run, but activates a Dry pump warning [W93]. A frequency converter digital output or a serial communication bus can communicate a warning to other equipment.
[2]	Alarm	The frequency converter stops running and activates a Dry pump alarm [A93]. A frequency converter digital output or a serial communication bus can communicate an alarm to other equipment.
[3]	Manual Reset Alarm	The frequency converter stops running and activates a Dry pump alarm [A93]. A frequency converter digital output or a serial communication bus can communicate an alarm to other equipment.

NOTICE

***Low Power Detection* must be Enabled (*parameter 22-21 Low Power Detection*) and commissioned (using either parameter group *22-3* No-flow Power Tuning No Flow Power Tuning*, or *parameter 22-20 Low Power Auto Set-up*) to use Dry Pump Detection.**

NOTICE

Do not set *14-20 Reset Mode*, to *[13] Infinite auto reset*, when *parameter 22-26 Dry Pump Function* is set to *[2] Alarm*. Doing so causes the frequency converter to continuously cycle between running and stopping when a Dry Pump condition is detected.

NOTICE

If the frequency converter is equipped with a constant speed bypass with an automatic bypass function that starts the bypass if the frequency converter experiences a persistent alarm condition, be sure to disable the bypass's automatic bypass function, if *[2] Alarm* or *[3] Man. Reset Alarm* is selected as the Dry Pump Function.

22-27 Dry Pump Delay

Range:		Function:
10 s*	[0 - 600 s]	Defines for how long the Dry Pump condition must be active before activating Warning or Alarm. The frequency converter waits for the No-Flow Delay time (parameter *22-24 No-Flow Delay*) to expire before the timer for the Dry Pump Delay starts.

22-30 No-Flow Power

Range:		Function:
0 kW*	[0 - 0 kW]	Read out of calculated No Flow power at actual speed. If power drops to the display value, the frequency converter considers the condition as a No Flow situation.

22-31 Power Correction Factor

Range:		Function:
100 %*	[1 - 400 %]	Make corrections to the calculated power at *parameter 22-30 No-Flow Power*. If No Flow is detected, when it should not be detected, decrease the setting. However, if No Flow is not detected, when it should be detected, increase the setting to above 100%.

22-32 Low Speed [RPM]

Range:		Function:
Size related*	[0 - par. 22-36 RPM]	To be used if *0-02 Motor Speed Unit* has been set for RPM (parameter not visible if Hz selected). Set used speed for the 50% level. This function is used for storing values needed to tune No Flow Detection.

22-33 Low Speed [Hz]

Range:		Function:
Size related*	[0 - par. 22-37 Hz]	To be used if *0-02 Motor Speed Unit* has been set for Hz (parameter not visible if RPM selected). Set used speed for the 50% level. The function is used for storing values needed to tune No Flow Detection.

22-34 Low Speed Power [kW]

Range:		Function:
Size related*	[0 - 5.50 kW]	To be used if *0-03 Regional Settings* has been set for International (parameter not visible if North America selected). Set power consumption at 50% speed level. This function is used for storing values needed to tune No Flow Detection.

22-35 Low Speed Power [HP]

Range:		Function:
Size related*	[0 - 7.50 hp]	To be used if *0-03 Regional Settings* has been set for North America (parameter not visible if International selected). Set power consumption at 50% speed level. This function is used for storing values needed to tune No Flow Detection.

22-36 High Speed [RPM]

Range:		Function:
Size related*	[0 - par. 4-13 RPM]	To be used if *0-02 Motor Speed Unit* has been set for RPM (parameter not visible if Hz selected). Set used speed for the 85% level. The function is used for storing values needed to tune No Flow Detection.

22-37 High Speed [Hz]

Range:		Function:
Size related*	[0 - par. 4-14 Hz]	To be used if *0-02 Motor Speed Unit* has been set for Hz (parameter not visible if RPM selected). Set used speed for the 85% level. The function is used for storing values needed to tune No Flow Detection.

22-38 High Speed Power [kW]

Range:		Function:
Size related*	[0 - 5.50 kW]	To be used if *0-03 Regional Settings* has been set for International (parameter not visible if North America selected). Set power consumption at 85% speed level. This function is used for storing values needed to tune No Flow Detection.

22-39 High Speed Power [HP]

Range:		Function:
Size related*	[0 - 7.50 hp]	To be used if *0-03 Regional Settings* has been set for North America (parameter not visible if International selected). Set power consumption at 85% speed level. This function is used for storing values needed to tune No Flow Detection.

22-40 Minimum Run Time

Range:		Function:
60 s*	[0 - 600 s]	Set the desired minimum running time for the motor after a start command (digital input or Bus) before entering Sleep Mode.

22-41 Minimum Sleep Time

Range:		Function:
30 s*	[0 - 600 s]	Set the desired Minimum Time for staying in Sleep Mode. This overrides any wake up conditions.

22-42 Wake-up Speed [RPM]

Range:		Function:
Size related*	[0 - par. 4-13 RPM]	To be used if *0-02 Motor Speed Unit* has been set for RPM (parameter not visible if Hz selected). Only to be used if *parameter 1-00 Configuration Mode* is set for open loop and speed reference is applied by an external controller. Set the reference speed at which the Sleep Mode should be cancelled.

5

22-43 Wake-up Speed [Hz]		
Range:		**Function:**
Size related*	[0 - par. 4-14 Hz]	To be used if *0-02 Motor Speed Unit*, has been set for Hz (parameter not visible if RPM selected). Only to be used if *parameter 1-00 Configuration Mode*, is set for Open Loop and speed reference is applied by an external controller controlling the pressure. Set the reference speed at which the Sleep Mode should be cancelled.

22-44 Wake-up Ref./FB Difference		
Range:		**Function:**
10 %*	[0 - 100 %]	Only to be used if *parameter 1-00 Configuration Mode*, is set for Closed Loop and the integrated PI controller is used for controlling the pressure. Set the pressure drop allowed in percentage of set point for the pressure (P_{set}) before cancelling the Sleep Mode. **NOTICE** **If used in application where the integrated PI controller is set for inverse control in *20-71 PID Performance*, the value set in *22-44 Wake-up Ref./FB Difference* will automatically be added.**

22-45 Setpoint Boost		
Range:		**Function:**
0 %*	[-100 - 100 %]	Only to be used if *parameter 1-00 Configuration Mode*, is set for Closed Loop and the integrated PI controller is used. In systems with e.g. constant pressure control, it is advantageous to increase the system pressure before the motor is stopped. This extends the time in which the motor is stopped and help to avoid frequent start/stop. Set the desired over pressure/temperature in percentage of set point for the pressure (P_{set})/ temperature before entering the Sleep Mode. If setting for 5%, the boost pressure is P_{set}*1.05. The negative values can be used for e.g. cooling tower control where a negative change is needed.

22-46 Maximum Boost Time		
Range:		**Function:**
60 s*	[0 - 600 s]	Only to be used if *parameter 1-00 Configuration Mode* is set for Closed Loop and the integrated PI controller is used for controlling the pressure. Set the maximum time for which boost mode is allowed. If the set time is exceeded, Sleep Mode is entered, not waiting for the set boost pressure to be reached.

22-50 End of Curve Function		
Option:		**Function:**
[0]	Off	End of Curve monitoring not active.
[1]	Warning	The frequency converter continues to run, but activates an End of Curve warning [W94]. A frequency converter digital output or a serial communication bus can communicate a warning to other equipment.
[2]	Alarm	The frequency converter stops running and activates an End of Curve alarm [A 94]. A frequency converter digital output or a serial communication bus can communicate an alarm to other equipment.
[3]	Manual Reset Alarm	The frequency converter stops running and activates an End of Curve alarm [A 94]. A frequency converter digital output or a serial communication bus can communicate an alarm to other equipment.

NOTICE

Automatic restart resets the alarm and restarts the system.

NOTICE

Do not set *14-20 Reset Mode*, to *[13] Infinite auto reset*, when *parameter 22-50 End of Curve Function* is set to *[2] Alarm*. Doing so causes the frequency converter to continuously cycle between running and stopping when a End of Curve condition is detected.

NOTICE

If the frequency converter is equipped with a constant speed bypass with an automatic bypass function that starts the bypass if the frequency converter experiences a persistent alarm condition, be sure to disable the bypass's automatic bypass function, if *[2] Alarm* or *[3] Man. Reset Alarm* is selected as the End of Curve Function.

22-51 End of Curve Delay		
Range:		**Function:**
10 s*	[0 - 600 s]	When an End of Curve condition is detected, a timer is activated. When the time set in this parameter expires, and the End of Curve condition has been steady in the entire period, the function set in *parameter 22-50 End of Curve Function* is activated. If the condition disappears before the timer expires, the timer is reset.

22-80 Flow Compensation		
Option:		**Function:**
[0]	Disabled	Set-Point compensation not active.
[1]	Enabled	Set-Point compensation is active. Enabling this parameter allows the Flow Compensated Setpoint operation.

22-81 Square-linear Curve Approximation		
Range:		**Function:**
100 %*	[0 - 100 %]	**Example 1:** Adjustment of this parameter allows the shape of the control curve to be adjusted. 0 = Linear 100% = Ideal shape (theoretical).

NOTICE

Not visible when running in cascade.

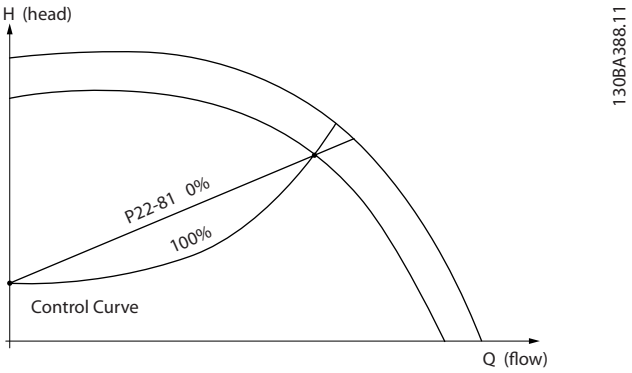

Illustration 5.23

22-82 Work Point Calculation		
Option:		**Function:**
		Example 1: 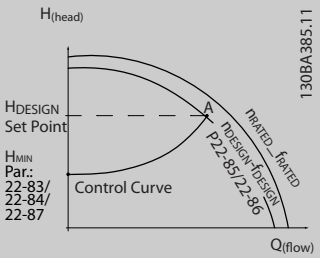 **Illustration 5.24 Speed at System Design Working Point is Known** From the data sheet showing characteristics for the specific equipment at different speeds, simply reading across from the H_{DESIGN} point and the Q_{DESIGN} point allows us to find point A, which is the System Design Working Point. The pump character-

22-82 Work Point Calculation		
Option:		**Function:**
		istics at this point should be identified and the associated speed programmed. Closing the valves and adjusting the speed until H_{MIN} has been achieved allows the speed at the no flow point to be identified. Adjustment of *parameter 22-81 Square-linear Curve Approximation* then allows the shape of the control curve to be adjusted infinitely. **Example 2:** Speed at System Design Working Point is not known: Where the Speed at System Design Working Point is unknown, another reference point on the control curve needs to be determined by means of the data sheet. By looking at the curve for the rated speed and plotting the design pressure (H_{DESIGN}, Point C) the flow at that pressure Q_{RATED} can be determined. Similarly, by plotting the design flow (Q_{DESIGN}, Point D). The pressure H_{DESIGN} at that flow can be determined. Knowing these two points on the pump curve, along with H_{MIN} as described above, allows the frequency converter to calculate the reference point B and thus to plot the control curve which will also include the System design Working Point A. 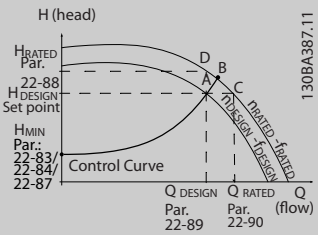 **Illustration 5.25**
[0]	Disabled	Work Point Calculation not active. To be used if speed at design point is known.
[1]	Enabled	Work Point Calculation is active. Enabling this parameter allows the calculation of the unknown System Design Working Point at 50/60 Hz speed, from the input data set in *parameter 22-83 Speed at No-Flow [RPM] parameter 22-84 Speed at No-Flow [Hz], parameter 22-87 Pressure at No-Flow Speed, parameter 22-88 Pressure at Rated Speed, 22-89 Flow at Design Point* and *parameter 22-90 Flow at Rated Speed*.

5

5

22-83 Speed at No-Flow [RPM]		
Range:		**Function:**
Size related*	[0 - par. 22-85 RPM]	Resolution 1 RPM. The speed of the motor at which flow Is zero and minimum pressure H_{MIN} is achieved should be entered here in RPM. Alternatively, the speed in Hz can be entered in *parameter 22-84 Speed at No-Flow [Hz]*. If it has been decided to use RPM in *0-02 Motor Speed Unit* then *parameter 22-85 Speed at Design Point [RPM]* should also be used. Closing the valves and reducing the speed until minimum pressure H_{MIN} is achieved determines this value.

22-84 Speed at No-Flow [Hz]		
Range:		**Function:**
Size related*	[0 - par. 22-86 Hz]	Resolution 0.033 Hz. The speed of the motor at which flow has effectively stopped and minimum pressure H_{MIN} is achieved should be entered here in Hz. Alternatively, the speed in RPM can be entered in *parameter 22-83 Speed at No-Flow [RPM]*. If it has been decided to use Hz in *0-02 Motor Speed Unit* then *parameter 22-86 Speed at Design Point [Hz]* should also be used. Closing the valves and reducing the speed until minimum pressure H_{MIN} is achieved determines this value.

22-85 Speed at Design Point [RPM]		
Range:		**Function:**
Size related*	[0 - 60000 RPM]	Resolution 1 RPM. Only visible when *parameter 22-82 Work Point Calculation* is set to *Disable*. The speed of the motor at which the System Design Working Point is achieved should be entered here in RPM. Alternatively, the speed in Hz can be entered in *parameter 22-86 Speed at Design Point [Hz]*. If it has been decided to use RPM in *0-02 Motor Speed Unit* then *parameter 22-83 Speed at No-Flow [RPM]* should also be used.

22-86 Speed at Design Point [Hz]		
Range:		**Function:**
Size related*	[0.0 - par. 4-19 Hz]	Resolution 0.033 Hz. Only visible when *parameter 22-82 Work Point Calculation* is set to *Disable*. The speed of the motor at which the System Design Working Point is achieved should be entered here in Hz. Alternatively, the speed in RPM can be entered in *parameter 22-85 Speed at Design Point [RPM]*.

22-86 Speed at Design Point [Hz]		
Range:		**Function:**
		If it has been decided to use Hz in *0-02 Motor Speed Unit*, then *parameter 22-83 Speed at No-Flow [RPM]* should also be used.

22-87 Pressure at No-Flow Speed		
Range:		**Function:**
0 *	[0 - par. 22-88]	Enter the pressure H_{MIN} corresponding to Speed at No Flow in Reference/Feedback Units.

Also see *parameter 22-82 Work Point Calculation* point D.

22-88 Pressure at Rated Speed		
Range:		**Function:**
999999.999 *	[par. 22-87 - 999999.999]	Enter the value corresponding to the Pressure at Rated Speed, in Reference/Feedback Units. This value can be defined using the pump datasheet.

Also see *parameter 22-82 Work Point Calculation* point C.

22-90 Flow at Rated Speed		
Range:		**Function:**
0 *	[0 - 999999.999]	Enter the value corresponding to Flow at Rated Speed. This value can be defined using the pump datasheet.

5.2.10 23-0* Timed Actions

Use *Timed Actions* for actions needing to be performed on a daily or weekly basis, e.g. different references for working hours/non-working hours. Up to 10 Timed Actions can be programmed in the frequency converter. The Timed Action number is selected from the list when entering parameter group 23-0* from the LCP. *Parameter 23-00 ON Time – parameter 23-04 Occurrence* then refer to the selected Timed Action number. Each Timed Action is divided into an ON time and an OFF time, in which 2 different actions may be performed.

The clock control (parameter group *0-7* Clock Settings*) of Timed Actions can be overridden from *Timed Actions Auto* (Clock Controlled) to *Timed Actions Disabled*, *Constant OFF Actions* or *Constant ON Actions* either in *23-08 Timed Actions Mode* or with commands applied to the digital inputs (*[68] Timed Actions Disabled, [69] Constant OFF Actions or [70] Constant ON Actions*, in parameter group *5-1* Digital Inputs*.

Display lines 2 and 3 in the LCP show the status for Timed Actions Mode (*0-23 Display Line 2 Large* and *0-24 Display Line 3 Large*, setting *[1643] Timed Actions Status*).

NOTICE

A change in mode via the digital inputs can only take place if *23-08 Timed Actions Mode* is set for *[0] Times Actions Auto*.
If commands are applied simultaneously to the digital inputs for Constant OFF and Constant ON, the Timed Actions mode will change to Timed Actions Auto and the two commands will be disregarded.
If *0-70 Date and Time* is not set or the frequency converter is set to HAND or OFF mode (e.g. via the LCP), the Timed Actions mode will be change to *Timed Actions Disabled*.
The Timed Actions have a higher priority than the same actions/commands activated by the digital inputs or the Smart Logic Controller.

The actions programmed in Timed Actions are merged with corresponding actions from digital inputs, control word via bus and Smart Logic Controller, according to merge rules set up in parameter group *8-5* Digital/Bus*.

NOTICE

The clock (parameter group *0-7) must be correctly programmed for Timed Actions to function correctly.**

NOTICE

When mounting an Analog I/O MCB 109 option card, a battery back up of the date and time is included.

NOTICE

The PC-based Configuration Tool MCT 10 Set-up Software comprises a special guide for easy programming of Timed Actions.

23-00 ON Time

Array [10]

Range:		Function:
Size related*	[0 - 0]	Sets the ON time for the Timed Action. **NOTICE** **The frequency converter has no back up of the clock function and the set date/time will reset to default (2000-01-01 00:00) after a power down unless a Real Time Clock module with back up is installed. In *0-79 Clock Fault* it is possible to program for a Warning in case clock has not been set properly, e.g. after a power down.**

23-01 ON Action

Arra [10]

Option:		Function:
		Select the action during ON Time. See *13-52 SL Controller Action* for descriptions of the options.
[0]	Disabled	
[1]	No action	
[2]	Select set-up 1	
[3]	Select set-up 2	
[4]	Select set-up 3	
[5]	Select set-up 4	
[10]	Select preset ref 0	
[11]	Select preset ref 1	
[12]	Select preset ref 2	
[13]	Select preset ref 3	
[14]	Select preset ref 4	
[15]	Select preset ref 5	
[16]	Select preset ref 6	
[17]	Select preset ref 7	
[18]	Select ramp 1	
[19]	Select ramp 2	
[22]	Run	
[23]	Run reverse	
[24]	Stop	
[26]	DC Brake	
[27]	Coast	
[28]	Freeze output	
[29]	Start timer 0	
[30]	Start timer 1	
[31]	Start timer 2	
[32]	Set digital out A low	
[33]	Set digital out B low	
[34]	Set digital out C low	
[35]	Set digital out D low	
[36]	Set digital out E low	

5

23-01 ON Action		
Arra [10]		
Option:		**Function:**
[37]	Set digital out F low	
[38]	Set digital out A high	
[39]	Set digital out B high	
[40]	Set digital out C high	
[41]	Set digital out D high	
[42]	Set digital out E high	
[43]	Set digital out F high	
[60]	Reset Counter A	
[61]	Reset Counter B	
[70]	Start Timer 3	
[71]	Start Timer 4	
[72]	Start Timer 5	
[73]	Start Timer 6	
[74]	Start Timer 7	
[80]	Sleep Mode	
[81]	Derag	

NOTICE

For choices [32] - [43], see also parameter group *5-3* Digital Outputs and 5-4* Relays*.

23-02 OFF Time		
Array [10]		
Range:		**Function:**
Size related*	[0 - 0]	Sets the OFF time for the Timed Action. ***NOTICE*** **The frequency converter has no back up of the clock function and the set date/time will reset to default (2000-01-01 00:00) after a power down unless a Real Time Clock module with back up is installed. In *0-79 Clock Fault* it is possible to program for a Warning in case clock has not been set properly, e.g. after a power down.**

23-03 OFF Action		
Array [10]		
Option:		**Function:**
		Select the action during OFF Time. See *13-52 SL Controller Action* for descriptions of the options.
[0]	Disabled	
[1]	No action	
[2]	Select set-up 1	
[3]	Select set-up 2	
[4]	Select set-up 3	
[5]	Select set-up 4	

23-03 OFF Action		
Array [10]		
Option:		**Function:**
[10]	Select preset ref 0	
[11]	Select preset ref 1	
[12]	Select preset ref 2	
[13]	Select preset ref 3	
[14]	Select preset ref 4	
[15]	Select preset ref 5	
[16]	Select preset ref 6	
[17]	Select preset ref 7	
[18]	Select ramp 1	
[19]	Select ramp 2	
[22]	Run	
[23]	Run reverse	
[24]	Stop	
[26]	DC Brake	
[27]	Coast	
[28]	Freeze output	
[29]	Start timer 0	
[30]	Start timer 1	
[31]	Start timer 2	
[32]	Set digital out A low	
[33]	Set digital out B low	
[34]	Set digital out C low	
[35]	Set digital out D low	
[36]	Set digital out E low	
[37]	Set digital out F low	
[38]	Set digital out A high	
[39]	Set digital out B high	
[40]	Set digital out C high	
[41]	Set digital out D high	
[42]	Set digital out E high	
[43]	Set digital out F high	
[60]	Reset Counter A	
[61]	Reset Counter B	
[70]	Start Timer 3	
[71]	Start Timer 4	
[72]	Start Timer 5	
[73]	Start Timer 6	
[74]	Start Timer 7	
[80]	Sleep Mode	
[81]	Derag	

23-04 Occurrence		
Array [10]		
Option:		**Function:**
		Select which day(s) the Timed Action applies to. Specify working/non-working days in *0-81 Working Days*, *0-82 Additional Working Days* and *0-83 Additional Non-Working Days*.
[0]	All days	
[1]	Working days	
[2]	Non-working days	
[3]	Monday	
[4]	Tuesday	
[5]	Wednesday	
[6]	Thursday	
[7]	Friday	
[8]	Saturday	
[9]	Sunday	

5.2.11 29-** Water Application FunctionsWater Application Functions

The group contains parameters used for monitoring water/wastewater applications.

29-00 Pipe Fill Enable		
Option:		**Function:**
[0]	Disabled	Select Enabled to fill pipes at a user specified rate.
[1]	Enabled	Select Enabled to fill pipes with a user specified rate.

29-01 Pipe Fill Speed [RPM]		
Range:		**Function:**
Size related*	[par. 4-11 - par. 4-13 RPM]	Set the filling speed for filling horizontal pipe systems. The speed can be selected in Hz or RPM depending on the choices made in *parameter 4-11 Motor Speed Low Limit [RPM]/parameter 4-13 Motor Speed High Limit [RPM]* or in *4-12 Motor Speed Low Limit [Hz]/4-14 Motor Speed High Limit [Hz]*.

29-02 Pipe Fill Speed [Hz]		
Range:		**Function:**
Size related*	[par. 4-12 - par. 4-14 Hz]	Set the filling speed for filling horizontal pipe systems. The speed can be selected in Hz or RPM depending on the choices made in *parameter 4-11 Motor Speed Low Limit [RPM]/parameter 4-13 Motor Speed High Limit [RPM]* or in *4-12 Motor Speed Low Limit [Hz]/4-14 Motor Speed High Limit [Hz]*.

29-03 Pipe Fill Time		
Range:		**Function:**
0 s*	[0 - 3600 s]	Set the specified time for pipe filling of horizontal pipe systems.

29-04 Pipe Fill Rate		
Range:		**Function:**
0.001 ProcessCtrlUnit*	[0.001 - 999999.999 ProcessCtrlUnit]	Specifies the filling rate in units/second using the PI controller. Filling rate units are feedback units/second. This function is used for filling-up vertical pipe systems but will be active when the filling-time has expired, no matter what , until the pipe fill-set-point set in *29-05 Filled Setpoint* is reached.

29-05 Filled Setpoint		
Range:		**Function:**
0 ProcessCtrlUnit*	[-999999.999 - 999999.999 ProcessCtrlUnit]	Specifies the Filled Set-point at which the Pipe Fill Function will be disabled and the PID controller will take control. This function can be used both for horizontal and vertical pipe systems.

5

5.3 Parameter Menu Structure

0-**	**Operation / Display**
0-0*	**Basic Settings**
0-01	Language
0-02	Motor Speed Unit
0-03	Regional Settings
0-04	Operating State at Power-up
0-05	Local Mode Unit
0-1*	**Set-up Operations**
0-10	Active Set-up
0-11	Programming Set-up
0-12	This Set-up Linked to
0-13	Readout: Linked Set-ups
0-14	Readout: Prog. Set-ups / Channel
0-2*	**LCP Display**
0-20	Display Line 1.1 Small
0-21	Display Line 1.2 Small
0-22	Display Line 1.3 Small
0-23	Display Line 2 Large
0-24	Display Line 3 Large
0-25	My Personal Menu
0-3*	**LCP Custom Readout**
0-30	Custom Readout Unit
0-31	Custom Readout Min Value
0-32	Custom Readout Max Value
0-37	Display Text 1
0-38	Display Text 2
0-39	Display Text 3
0-4*	**LCP Keypad**
0-40	[Hand on] Key on LCP
0-41	[Off] Key on LCP
0-42	[Auto on] Key on LCP
0-43	[Reset] Key on LCP
0-44	[Off/Reset] Key on LCP
0-45	[Drive Bypass] Key on LCP
0-5*	**Copy/Save**
0-50	LCP Copy
0-51	Set-up Copy
0-6*	**Password**
0-60	Main Menu Password
0-61	Access to Main Menu w/o Password
0-65	Personal Menu Password
0-66	Access to Personal Menu w/o Password
0-67	Bus Password Access
0-7*	**Clock Settings**
0-70	Date and Time
0-71	Date Format
0-72	Time Format
0-74	DST/Summertime
0-76	DST/Summertime Start
0-77	DST/Summertime End
0-79	Clock Fault
0-81	Working Days
0-82	Additional Working Days
0-83	Additional Non-Working Days
0-89	Date and Time Readout
1-**	**Load and Motor**
1-0*	**General Settings**
1-00	Configuration Mode
1-01	Motor Control Principle
1-03	Torque Characteristics
1-06	Clockwise Direction
1-1*	**Motor Selection**
1-10	Motor Construction
1-1*	**VVC+ PM**
1-14	Damping Gain
1-15	Low Speed Filter Time Const.
1-16	High Speed Filter Time Const.
1-17	Voltage filter time const.
1-2*	**Motor Data**
1-20	Motor Power [kW]
1-21	Motor Power [HP]
1-22	Motor Voltage
1-23	Motor Frequency
1-24	Motor Current
1-25	Motor Nominal Speed
1-26	Motor Cont. Rated Torque
1-28	Motor Rotation Check
1-29	Automatic Motor Adaptation (AMA)
1-3*	**Adv. Motor Data**
1-30	Stator Resistance (Rs)
1-31	Rotor Resistance (Rr)
1-33	Stator Leakage Reactance (X1)
1-34	Rotor Leakage Reactance (X2)
1-35	Main Reactance (Xh)
1-36	Iron Loss Resistance (Rfe)
1-37	d-axis Inductance (Ld)
1-39	Motor Poles
1-40	Back EMF at 1000 RPM
1-46	Position Detection Gain
1-5*	**Load Indep. Setting**
1-50	Motor Magnetisation at Zero Speed
1-51	Min Speed Normal Magnetising [RPM]
1-52	Min Speed Normal Magnetising [Hz]
1-55	V/f Characteristic - V
1-56	V/f Characteristic - f
1-58	Flystart Test Pulses Current
1-59	Flystart Test Pulses Frequency
1-6*	**Load Depen. Setting**
1-60	Low Speed Load Compensation
1-61	High Speed Load Compensation
1-62	Slip Compensation
1-63	Slip Compensation Time Constant
1-64	Resonance Dampening
1-65	Resonance Dampening Time Constant
1-66	Min. Current at Low Speed
1-7*	**Start Adjustments**
1-70	PM Start Mode
1-71	Start Delay
1-72	Start Function
1-73	Flying Start
1-74	Start Speed [RPM]
1-75	Start Speed [Hz]
1-76	Start Current
1-8*	**Stop Adjustments**
1-80	Function at Stop
1-81	Min Speed for Function at Stop [RPM]
1-82	Min Speed for Function at Stop [Hz]
1-86	Trip Speed Low [RPM]
1-87	Trip Speed Low [Hz]
1-9*	**Motor Temperature**
1-90	Motor Thermal Protection
1-91	Motor External Fan
1-93	Thermistor Source
2-**	**Brakes**
2-0*	**DC-Brake**
2-00	DC Hold/Preheat Current
2-01	DC Brake Current
2-02	DC Braking Time
2-03	DC Brake Cut In Speed [RPM]
2-04	DC Brake Cut In Speed [Hz]
2-06	Parking Current
2-07	Parking Time
2-1*	**Brake Energy Funct.**
2-10	Brake Function
2-11	Brake Resistor (ohm)
2-12	Brake Power Limit (kW)
2-13	Brake Power Monitoring
2-15	Brake Check
2-16	AC brake Max. Current
2-17	Over-voltage Control
3-**	**Reference / Ramps**
3-0*	**Reference Limits**
3-02	Minimum Reference
3-03	Maximum Reference
3-04	Reference Function
3-1*	**References**
3-10	Preset Reference
3-11	Jog Speed [Hz]
3-13	Reference Site
3-14	Preset Relative Reference
3-15	Reference 1 Source
3-16	Reference 2 Source
3-17	Reference 3 Source
3-19	Jog Speed [RPM]
3-4*	**Ramp 1**
3-41	Ramp 1 Ramp Up Time
3-42	Ramp 1 Ramp Down Time
3-5*	**Ramp 2**
3-51	Ramp 2 Ramp Up Time
3-52	Ramp 2 Ramp Down Time
3-8*	**Other Ramps**
3-80	Jog Ramp Time
3-81	Quick Stop Ramp Time
3-84	Initial Ramp Time
3-85	Check Valve Ramp Time
3-86	Check Valve Ramp End Speed [RPM]
3-87	Check Valve Ramp End Speed [HZ]
3-88	Final Ramp Time
3-9*	**Digital Pot.Meter**
3-90	Step Size
3-91	Ramp Time
3-92	Power Restore
3-93	Maximum Limit
3-94	Minimum Limit
3-95	Ramp Delay
4-**	**Limits / Warnings**
4-1*	**Motor Limits**
4-10	Motor Speed Direction
4-11	Motor Speed Low Limit [RPM]
4-12	Motor Speed Low Limit [Hz]
4-13	Motor Speed High Limit [RPM]
4-14	Motor Speed High Limit [Hz]
4-16	Torque Limit Motor Mode
4-17	Torque Limit Generator Mode
4-18	Current Limit
4-19	Max Output Frequency
4-5*	**Adj. Warnings**
4-50	Warning Current Low
4-51	Warning Current High
4-52	Warning Speed Low
4-53	Warning Speed High
4-54	Warning Reference Low
4-55	Warning Reference High
4-56	Warning Feedback Low
4-57	Warning Feedback High
4-58	Missing Motor Phase Function
4-6*	**Speed Bypass**
4-60	Bypass Speed From [RPM]
4-61	Bypass Speed From [Hz]
4-62	Bypass Speed To [RPM]
4-63	Bypass Speed To [Hz]
4-64	Semi-Auto Bypass Set-up
5-**	**Digital In/Out**
5-0*	**Digital I/O mode**
5-00	Digital I/O Mode
5-01	Terminal 27 Mode
5-02	Terminal 29 Mode
5-1*	**Digital Inputs**
5-10	Terminal 18 Digital Input
5-11	Terminal 19 Digital Input
5-12	Terminal 27 Digital Input
5-13	Terminal 29 Digital Input
5-14	Terminal 32 Digital Input
5-15	Terminal 33 Digital Input
5-16	Terminal X30/2 Digital Input
5-17	Terminal X30/3 Digital Input
5-18	Terminal X30/4 Digital Input
5-19	Terminal 37 Digital Input
5-3*	**Digital Outputs**
5-30	Terminal 27 Digital Output
5-31	Terminal 29 Digital Output
5-32	Term X30/6 Digi Out (MCB 101)
5-33	Term X30/7 Digi Out (MCB 101)
5-4*	**Relays**
5-40	Function Relay
5-41	On Delay, Relay
5-42	Off Delay, Relay
5-5*	**Pulse Input**
5-50	Term. 29 Low Frequency
5-51	Term. 29 High Frequency
5-52	Term. 29 Low Ref./Feedb. Value
5-53	Term. 29 High Ref./Feedb. Value
5-54	Pulse Filter Time Constant #29
5-55	Term. 33 Low Frequency
5-56	Term. 33 High Frequency
5-57	Term. 33 Low Ref./Feedb. Value
5-58	Term. 33 High Ref./Feedb. Value
5-59	Pulse Filter Time Constant #33
5-6*	**Pulse Output**
5-60	Terminal 27 Pulse Output Variable
5-62	Pulse Output Max Freq #27
5-63	Terminal 29 Pulse Output Variable
5-65	Pulse Output Max Freq #29
5-66	Terminal X30/6 Pulse Output Variable
5-68	Pulse Output Max Freq #X30/6
5-8*	**I/O Options**
5-80	AHF Cap Reconnect Delay
5-9*	**Bus Controlled**
5-90	Digital & Relay Bus Control
5-93	Pulse Out #27 Bus Control
5-94	Pulse Out #27 Timeout Preset
5-95	Pulse Out #29 Bus Control
5-96	Pulse Out #29 Timeout Preset
5-97	Pulse Out #X30/6 Bus Control
5-98	Pulse Out #X30/6 Timeout Preset
6-**	**Analog In/Out**
6-0*	**Analog I/O Mode**
6-00	Live Zero Timeout Time
6-01	Live Zero Timeout Function
6-1*	**Analog Input 53**
6-10	Terminal 53 Low Voltage
6-11	Terminal 53 High Voltage
6-12	Terminal 53 Low Current
6-13	Terminal 53 High Current
6-14	Terminal 53 Low Ref./Feedb. Value
6-15	Terminal 53 High Ref./Feedb. Value
6-16	Terminal 53 Filter Time Constant
6-17	Terminal 53 Live Zero
6-2*	**Analog Input 54**
6-20	Terminal 54 Low Voltage
6-21	Terminal 54 High Voltage
6-22	Terminal 54 Low Current
6-23	Terminal 54 High Current
6-24	Terminal 54 Low Ref./Feedb. Value
6-25	Terminal 54 High Ref./Feedb. Value
6-26	Terminal 54 Filter Time Constant
6-27	Terminal 54 Live Zero
6-3*	**Analog Input X30/11**
6-30	Terminal X30/11 Low Voltage
6-31	Terminal X30/11 High Voltage
6-34	Term. X30/11 Low Ref./Feedb. Value
6-35	Term. X30/11 High Ref./Feedb. Value
6-36	Term. X30/11 Filter Time Constant
6-37	Term. X30/11 Live Zero
6-4*	**Analog Input X30/12**
6-40	Terminal X30/12 Low Voltage
6-41	Terminal X30/12 High Voltage
6-44	Term. X30/12 Low Ref./Feedb. Value
6-45	Term. X30/12 High Ref./Feedb. Value
6-46	Term. X30/12 Filter Time Constant
6-47	Term. X30/12 Live Zero
6-5*	**Analog Output 42**
6-50	Terminal 42 Output
6-51	Terminal 42 Output Min Scale

6-52	Terminal 42 Output Max Scale
6-53	Terminal 42 Output Bus Control
6-54	Terminal 42 Output Timeout Preset
6-55	Terminal 42 Output Filter
6-6*	**Analog Output X30/8**
6-60	Terminal X30/8 Output
6-61	Terminal X30/8 Min. Scale
6-62	Terminal X30/8 Max. Scale
6-63	Terminal X30/8 Output Bus Control
6-64	Terminal X30/8 Output Timeout Preset
8-**	**Comm. and Options**
8-0*	**General Settings**
8-01	Control Site
8-02	Control Source
8-03	Control Timeout Time
8-04	Control Timeout Function
8-05	End-of-Timeout Function
8-06	Reset Control Timeout
8-07	Diagnosis Trigger
8-08	Readout Filtering
8-1*	**Control Settings**
8-10	Control Profile
8-13	Configurable Status Word STW
8-14	Configurable Control Word CTW
8-3*	**FC Port Settings**
8-30	Protocol
8-31	Address
8-32	Baud Rate
8-33	Parity / Stop Bits
8-35	Minimum Response Delay
8-36	Max Response Delay
8-37	Maximum Inter-Char Delay
8-4*	**FC MC protocol set**
8-40	Telegram Selection
8-42	PCD Write Configuration
8-43	PCD Read Configuration
8-5*	**Digital/Bus**
8-50	Coasting Select
8-52	DC Brake Select
8-53	Start Select
8-54	Reversing Select
8-55	Set-up Select
8-56	Preset Reference Select
8-7*	**BACnet**
8-70	BACnet Device Instance
8-72	MS/TP Max Masters
8-73	MS/TP Max Info Frames
8-74	"I-Am" Service
8-75	Initialisation Password
8-8*	**FC Port Diagnostics**
8-80	Bus Message Count
8-81	Bus Error Count
8-82	Slave Message Rcvd
8-83	Slave Error Count
8-9*	**Bus Jog / Feedback**
8-90	Bus Jog 1 Speed
8-91	Bus Jog 2 Speed
8-94	Bus Feedback 1
8-95	Bus Feedback 2
8-96	Bus Feedback 3
9-**	**PROFIdrive**
9-00	Setpoint
9-07	Actual Value
9-15	PCD Write Configuration
9-16	PCD Read Configuration
9-18	Node Address
9-22	Telegram Selection
9-23	Parameters for Signals
9-27	Parameter Edit
9-28	Process Control
9-31	Safe Address
9-44	Fault Message Counter
9-45	Fault Code
9-47	Fault Number
9-52	Fault Situation Counter
9-53	Profibus Warning Word
9-63	Actual Baud Rate
9-64	Device Identification
9-65	Profile Number
9-67	Control Word 1
9-68	Status Word 1
9-71	Profibus Save Data Values
9-72	ProfibusDriveReset
9-75	DO Identification
9-80	Defined Parameters (1)
9-81	Defined Parameters (2)
9-82	Defined Parameters (3)
9-83	Defined Parameters (4)
9-84	Defined Parameters (5)
9-90	Changed Parameters (1)
9-91	Changed Parameters (2)
9-92	Changed Parameters (3)
9-93	Changed Parameters (4)
9-94	Changed Parameters (5)
9-99	Profibus Revision Counter
10-**	**CAN Fieldbus**
10-0*	**Common Settings**
10-00	CAN Protocol
10-01	Baud Rate Select
10-02	MAC ID
10-05	Readout Transmit Error Counter
10-06	Readout Receive Error Counter
10-07	Readout Bus Off Counter
10-1*	**DeviceNet**
10-10	Process Data Type Selection
10-11	Process Data Config Write
10-12	Process Data Config Read
10-13	Warning Parameter
10-14	Net Reference
10-15	Net Control
10-2*	**COS Filters**
10-20	COS Filter 1
10-21	COS Filter 2
10-22	COS Filter 3
10-23	COS Filter 4
10-3*	**Parameter Access**
10-30	Array Index
10-31	Store Data Values
10-32	Devicenet Revision
10-33	Store Always
10-34	DeviceNet Product Code
10-39	Devicenet F Parameters
12-**	**Ethernet**
12-0*	**IP Settings**
12-00	IP Address Assignment
12-01	IP Address
12-02	Subnet Mask
12-03	Default Gateway
12-04	DHCP Server
12-05	Lease Expires
12-06	Name Servers
12-07	Domain Name
12-08	Host Name
12-09	Physical Address
12-1*	**Ethernet Link Parameters**
12-10	Link Status
12-11	Link Duration
12-12	Auto Negotiation
12-13	Link Speed
12-14	Link Duplex
12-2*	**Process Data**
12-20	Control Instance
12-21	Process Data Config Write
12-22	Process Data Config Read
12-27	Primary Master
12-28	Store Data Values
12-29	Store Always
12-3*	**EtherNet/IP**
12-30	Warning Parameter
12-31	Net Reference
12-32	Net Control
12-33	CIP Revision
12-34	CIP Product Code
12-35	EDS Parameter
12-37	COS Inhibit Timer
12-38	COS Filter
12-4*	**Modbus TCP**
12-40	Status Parameter
12-41	Slave Message Count
12-42	Slave Exception Message Count
12-8*	**Other Ethernet Services**
12-80	FTP Server
12-81	HTTP Server
12-82	SMTP Service
12-89	Transparent Socket Channel Port
12-9*	**Advanced Ethernet Services**
12-90	Cable Diagnostic
12-91	MDI-X
12-92	IGMP Snooping
12-93	Cable Error Length
12-94	Broadcast Storm Protection
12-95	Broadcast Storm Filter
12-96	Port Mirroring
12-98	Interface Counters
12-99	Media Counters
13-**	**Smart Logic**
13-0*	**SLC Settings**
13-00	SL Controller Mode
13-01	Start Event
13-02	Stop Event
13-03	Reset SLC
13-1*	**Comparators**
13-10	Comparator Operand
13-11	Comparator Operator
13-12	Comparator Value
13-2*	**Timers**
13-20	SL Controller Timer
13-4*	**Logic Rules**
13-40	Logic Rule Boolean 1
13-41	Logic Rule Operator 1
13-42	Logic Rule Boolean 2
13-43	Logic Rule Operator 2
13-44	Logic Rule Boolean 3
13-5*	**States**
13-51	SL Controller Event
13-52	SL Controller Action
14-**	**Special Functions**
14-0*	**Inverter Switching**
14-00	Switching Pattern
14-01	Switching Frequency
14-03	Overmodulation
14-04	PWM Random
14-1*	**Mains On/Off**
14-10	Mains Failure
14-11	Mains Voltage at Mains Fault
14-12	Function at Mains Imbalance
14-2*	**Reset Functions**
14-20	Reset Mode
14-21	Automatic Restart Time
14-22	Operation Mode
14-23	Typecode Setting
14-25	Trip Delay at Torque Limit
14-26	Trip Delay at Inverter Fault
14-28	Production Settings
14-29	Service Code
14-3*	**Current Limit Ctrl.**
14-30	Current Lim Ctrl, Proportional Gain
14-31	Current Lim Ctrl, Integration Time
14-32	Current Lim Ctrl, Filter Time
14-4*	**Energy Optimising**
14-40	VT Level
14-41	AEO Minimum Magnetisation
14-42	Minimum AEO Frequency
14-43	Motor Cosphi
14-5*	**Environment**
14-50	RFI Filter
14-51	DC Link Compensation
14-52	Fan Control
14-53	Fan Monitor
14-55	Output Filter
14-59	Actual Number of Inverter Units
14-6*	**Auto Derate**
14-60	Function at Over Temperature
14-61	Function at Inverter Overload
14-62	Inv. Overload Derate Current
14-8*	**Options**
14-80	Option Supplied by External 24VDC
14-9*	**Fault Settings**
14-90	Fault Level
15-**	**Drive Information**
15-0*	**Operating Data**
15-00	Operating hours
15-01	Running Hours
15-02	kWh Counter
15-03	Power Up's
15-04	Over Temp's
15-05	Over Volt's
15-06	Reset kWh Counter
15-07	Reset Running Hours Counter
15-08	Number of Starts
15-1*	**Data Log Settings**
15-10	Logging Source
15-11	Logging Interval
15-12	Trigger Event
15-13	Logging Mode
15-14	Samples Before Trigger
15-2*	**Historic Log**
15-20	Historic Log: Event
15-21	Historic Log: Value
15-22	Historic Log: Time
15-23	Historic log: Date and Time
15-3*	**Alarm Log**
15-30	Alarm Log: Error Code
15-31	Alarm Log: Value
15-32	Alarm Log: Time
15-33	Alarm Log: Date and Time
15-34	Alarm Log: Setpoint
15-35	Alarm Log: Feedback
15-36	Alarm Log: Current Demand
15-37	Alarm Log: Process Ctrl Unit
15-4*	**Drive Identification**
15-40	FC Type
15-41	Power Section
15-42	Voltage
15-43	Software Version
15-44	Ordered Typecode String
15-45	Actual Typecode String
15-46	Frequency Converter Ordering No
15-47	Power Card Ordering No
15-48	LCP Id No
15-49	SW ID Control Card
15-50	SW ID Power Card
15-51	Frequency Converter Serial Number
15-53	Power Card Serial Number
15-59	CSIV Filename
15-6*	**Option Ident**
15-60	Option Mounted
15-61	Option SW Version
15-62	Option Ordering No
15-63	Option Serial No
15-70	Option in Slot A
15-71	Slot A Option SW Version
15-72	Option in Slot B
15-73	Slot B Option SW Version
15-74	Option in Slot C0/E0

15-75 Slot C0/E0 Option SW Version
15-76 Option in Slot C1/E1
15-77 Slot C1/E1 Option SW Version
15-9* Parameter Info
15-92 Defined Parameters
15-93 Modified Parameters
15-98 Drive Identification
15-99 Parameter Metadata
16- Data Readouts**
16-0* General Status
16-00 Control Word
16-01 Reference [Unit]
16-02 Reference [%]
16-03 Status Word
16-05 Main Actual Value [%]
16-09 Custom Readout
16-1* Motor Status
16-10 Power [kW]
16-11 Power [hp]
16-12 Motor Voltage
16-13 Frequency
16-14 Motor current
16-15 Frequency [%]
16-16 Torque [Nm]
16-17 Speed [RPM]
16-18 Motor Thermal
16-20 Motor Angle
16-22 Torque [%]
16-3* Drive Status
16-30 DC Link Voltage
16-32 Brake Energy /s
16-33 Brake Energy /2 min
16-34 Heatsink Temp.
16-35 Inverter Thermal
16-36 Inv. Nom. Current
16-37 Inv. Max. Current
16-38 SL Controller State
16-39 Control Card Temp.
16-40 Logging Buffer Full
16-49 Current Fault Source
16-5* Ref. & Feedb.
16-50 External Reference
16-52 Feedback[Unit]
16-53 Digi Pot Reference
16-54 Feedback 1 [Unit]
16-55 Feedback 2 [Unit]
16-56 Feedback 3 [Unit]
16-58 PID Output [%]
16-59 Adjusted Setpoint
16-6* Inputs & Outputs
16-60 Digital Input
16-61 Terminal 53 Switch Setting
16-62 Analog Input 53
16-63 Terminal 54 Switch Setting
16-64 Analog Input 54
16-65 Analog Output 42 [mA]
16-66 Digital Output [bin]
16-67 Pulse Input #29 [Hz]
16-68 Pulse Input #33 [Hz]
16-69 Pulse Output #27 [Hz]
16-70 Pulse Output #29 [Hz]
16-71 Relay Output [bin]
16-72 Counter A
16-73 Counter B
16-75 Analog In X30/11
16-76 Analog In X30/12
16-77 Analog Out X30/8 [mA]
16-8* Fieldbus & FC Port
16-80 Fieldbus CTW 1
16-82 Fieldbus REF 1
16-84 Comm. Option STW
16-85 FC Port CTW 1
16-86 FC Port REF 1
16-9* Diagnosis Readouts
16-90 Alarm Word
16-91 Alarm Word 2
16-92 Warning Word
16-93 Warning Word 2
16-94 Ext. Status Word
16-95 Ext. Status Word 2
16-96 Maintenance Word
18- Info & Readouts**
18-0* Maintenance Log
18-00 Maintenance Log: Item
18-01 Maintenance Log: Action
18-02 Maintenance Log: Time
18-03 Maintenance Log: Date and Time
18-3* Analog Readouts
18-30 Analog Input X42/1
18-31 Analog Input X42/3
18-32 Analog Input X42/5
18-33 Analog Out X42/7 [V]
18-34 Analog Out X42/9 [V]
18-35 Analog Out X42/11 [V]
18-36 Analog Input X48/2 [mA]
18-37 Temp. Input X48/4
18-38 Temp. Input X48/7
18-39 Temp. Input X48/10
18-6* Inputs & Outputs 2
18-60 Digital Input 2
20- Drive Closed Loop**
20-0* Feedback
20-00 Feedback 1 Source
20-01 Feedback 1 Conversion
20-02 Feedback 1 Source Unit
20-03 Feedback 2 Source
20-04 Feedback 2 Conversion
20-05 Feedback 2 Source Unit
20-06 Feedback 3 Source
20-07 Feedback 3 Conversion
20-08 Feedback 3 Source Unit
20-12 Reference/Feedback Unit
20-2* Feedback/Setpoint
20-20 Feedback Function
20-21 Setpoint 1
20-22 Setpoint 2
20-23 Setpoint 3
20-7* PID Autotuning
20-70 Closed Loop Type
20-71 PID Performance
20-72 PID Output Change
20-73 Minimum Feedback Level
20-74 Maximum Feedback Level
20-79 PID Autotuning
20-8* PID Basic Settings
20-81 PID Normal/ Inverse Control
20-82 PID Start Speed [RPM]
20-83 PID Start Speed [Hz]
20-84 On Reference Bandwidth
20-9* PID Controller
20-91 PID Anti Windup
20-93 PID Proportional Gain
20-94 PID Integral Time
20-95 PID Differentiation Time
20-96 PID Diff. Gain Limit
21- Ext. Closed Loop**
21-0* Ext. CL Autotuning
21-00 Closed Loop Type
21-01 PID Performance
21-02 PID Output Change
21-03 Minimum Feedback Level
21-04 Maximum Feedback Level
21-09 PID Auto Tuning
21-1* Ext. CL 1 Ref./Fb.
21-10 Ext. 1 Ref./Feedback Unit
21-11 Ext. 1 Minimum Reference
21-12 Ext. 1 Maximum Reference
21-13 Ext. 1 Reference Source
21-14 Ext. 1 Feedback Source
21-15 Ext. 1 Setpoint
21-17 Ext. 1 Reference [Unit]
21-18 Ext. 1 Feedback [Unit]
21-19 Ext. 1 Output [%]
21-2* Ext. CL 1 PID
21-20 Ext. 1 Normal/Inverse Control
21-21 Ext. 1 Proportional Gain
21-22 Ext. 1 Integral Time
21-23 Ext. 1 Differentation Time
21-24 Ext. 1 Dif. Gain Limit
21-3* Ext. CL 2 Ref./Fb.
21-30 Ext. 2 Ref./Feedback Unit
21-31 Ext. 2 Minimum Reference
21-32 Ext. 2 Maximum Reference
21-33 Ext. 2 Reference Source
21-34 Ext. 2 Feedback Source
21-35 Ext. 2 Setpoint
21-37 Ext. 2 Reference [Unit]
21-38 Ext. 2 Feedback [Unit]
21-39 Ext. 2 Output [%]
21-4* Ext. CL 2 PID
21-40 Ext. 2 Normal/Inverse Control
21-41 Ext. 2 Proportional Gain
21-42 Ext. 2 Integral Time
21-43 Ext. 2 Differentation Time
21-44 Ext. 2 Dif. Gain Limit
21-5* Ext. CL 3 Ref./Fb.
21-50 Ext. 3 Ref./Feedback Unit
21-51 Ext. 3 Minimum Reference
21-52 Ext. 3 Maximum Reference
21-53 Ext. 3 Reference Source
21-54 Ext. 3 Feedback Source
21-55 Ext. 3 Setpoint
21-57 Ext. 3 Reference [Unit]
21-58 Ext. 3 Feedback [Unit]
21-59 Ext. 3 Output [%]
21-6* Ext. CL 3 PID
21-60 Ext. 3 Normal/Inverse Control
21-61 Ext. 3 Proportional Gain
21-62 Ext. 3 Integral Time
21-63 Ext. 3 Differentation Time
21-64 Ext. 3 Dif. Gain Limit
22- Appl. Functions**
22-0* Miscellaneous
22-00 External Interlock Delay
22-2* No-Flow Detection
22-20 Low Power Auto Set-up
22-21 Low Power Detection
22-22 Low Speed Detection
22-23 No-Flow Function
22-24 No-Flow Delay
22-26 Dry Pump Function
22-27 Dry Pump Delay
22-28 No-Flow Low Speed [RPM]
22-29 No-Flow Low Speed [Hz]
22-3* No-Flow Power Tuning
22-30 No-Flow Power
22-31 Power Correction Factor
22-32 Low Speed [RPM]
22-33 Low Speed [Hz]
22-34 Low Speed Power [kW]
22-35 Low Speed Power [HP]
22-36 High Speed [RPM]
22-37 High Speed [Hz]
22-38 High Speed Power [kW]
22-39 High Speed Power [HP]
22-4* Sleep Mode
22-40 Minimum Run Time
22-41 Minimum Sleep Time
22-42 Wake-up Speed [RPM]
22-43 Wake-up Speed [Hz]
22-44 Wake-up Ref./FB Difference
22-45 Setpoint Boost
22-46 Maximum Boost Time
22-5* End of Curve
22-50 End of Curve Function
22-51 End of Curve Delay
22-6* Broken Belt Detection
22-60 Broken Belt Function
22-61 Broken Belt Torque
22-62 Broken Belt Delay
22-7* Short Cycle Protection
22-75 Short Cycle Protection
22-76 Interval between Starts
22-77 Minimum Run Time
22-78 Minimum Run Time Override
22-79 Minimum Run Time Override Value
22-8* Flow Compensation
22-80 Flow Compensation
22-81 Square-linear Curve Approximation
22-82 Work Point Calculation
22-83 Speed at No-Flow [RPM]
22-84 Speed at No-Flow [Hz]
22-85 Speed at Design Point [RPM]
22-86 Speed at Design Point [Hz]
22-87 Pressure at No-Flow Speed
22-88 Pressure at Rated Speed
22-89 Flow at Design Point
22-90 Flow at Rated Speed
23- Time-based Functions**
23-0* Timed Actions
23-00 ON Time
23-01 ON Action
23-02 OFF Time
23-03 OFF Action
23-04 Occurrence
23-1* Maintenance
23-10 Maintenance Item
23-11 Maintenance Action
23-12 Maintenance Time Base
23-13 Maintenance Time Interval
23-14 Maintenance Date and Time
23-1* Maintenance Reset
23-15 Reset Maintenance Word
23-16 Maintenance Text
23-5* Energy Log
23-50 Energy Log Resolution
23-51 Period Start
23-53 Energy Log
23-54 Reset Energy Log
23-6* Trending
23-60 Trend Variable
23-61 Continuous Bin Data
23-62 Timed Bin Data
23-63 Timed Period Start
23-64 Timed Period Stop
23-65 Minimum Bin Value
23-66 Reset Continuous Bin Data
23-67 Reset Timed Bin Data
23-8* Payback Counter
23-80 Power Reference Factor
23-81 Energy Cost
23-82 Investment
23-83 Energy Savings
23-84 Cost Savings
24- Appl. Functions 2**
24-1* Drive Bypass
24-10 Drive Bypass Function
24-11 Drive Bypass Delay Time
25- Cascade Controller**
25-0* System Settings
25-00 Cascade Controller
25-02 Motor Start
25-04 Pump Cycling
25-05 Fixed Lead Pump
25-06 Number of Pumps

25-2*	**Bandwidth Settings**
25-20	Staging Bandwidth
25-21	Override Bandwidth
25-22	Fixed Speed Bandwidth
25-23	SBW Staging Delay
25-24	SBW Destaging Delay
25-25	OBW Time
25-26	Destage At No-Flow
25-27	Stage Function
25-28	Stage Function Time
25-29	Destage Function
25-30	Destage Function Time
25-4*	**Staging Settings**
25-40	Ramp Down Delay
25-41	Ramp Up Delay
25-42	Staging Threshold
25-43	Destaging Threshold
25-44	Staging Speed [RPM]
25-45	Staging Speed [Hz]
25-46	Destaging Speed [RPM]
25-47	Destaging Speed [Hz]
25-5*	**Alternation Settings**
25-50	Lead Pump Alternation
25-51	Alternation Event
25-52	Alternation Time Interval
25-53	Alternation Timer Value
25-54	Alternation Predefined Time
25-55	Alternate if Load < 50%
25-56	Staging Mode at Alternation
25-58	Run Next Pump Delay
25-59	Run on Mains Delay
25-8*	**Status**
25-80	Cascade Status
25-81	Pump Status
25-82	Lead Pump
25-83	Relay Status
25-84	Pump ON Time
25-85	Relay ON Time
25-86	Reset Relay Counters
25-9*	**Service**
25-90	Pump Interlock
25-91	Manual Alternation
26-**	**Analog I/O Option**
26-0*	**Analog I/O Mode**
26-00	Terminal X42/1 Mode
26-01	Terminal X42/3 Mode
26-02	Terminal X42/5 Mode
26-1*	**Analog Input X42/1**
26-10	Terminal X42/1 Low Voltage
26-11	Terminal X42/1 High Voltage
26-14	Term. X42/1 Low Ref./Feedb. Value
26-15	Term. X42/1 High Ref./Feedb. Value
26-16	Term. X42/1 Filter Time Constant
26-17	Term. X42/1 Live Zero
26-2*	**Analog Input X42/3**
26-20	Terminal X42/3 Low Voltage
26-21	Terminal X42/3 High Voltage
26-24	Term. X42/3 Low Ref./Feedb. Value
26-25	Term. X42/3 High Ref./Feedb. Value
26-26	Term. X42/3 Filter Time Constant
26-27	Term. X42/3 Live Zero
26-3*	**Analog Input X42/5**
26-30	Terminal X42/5 Low Voltage
26-31	Terminal X42/5 High Voltage
26-34	Term. X42/5 Low Ref./Feedb. Value
26-35	Term. X42/5 High Ref./Feedb. Value
26-36	Term. X42/5 Filter Time Constant
26-37	Term. X42/5 Live Zero
26-4*	**Analog Out X42/7**
26-40	Terminal X42/7 Output
26-41	Terminal X42/7 Min. Scale
26-42	Terminal X42/7 Max. Scale
26-43	Terminal X42/7 Bus Control
26-44	Terminal X42/7 Timeout Preset
26-5*	**Analog Out X42/9**
26-50	Terminal X42/9 Output
26-51	Terminal X42/9 Min. Scale
26-52	Terminal X42/9 Max. Scale
26-53	Terminal X42/9 Bus Control
26-54	Terminal X42/9 Timeout Preset
26-6*	**Analog Out X42/11**
26-60	Terminal X42/11 Output
26-61	Terminal X42/11 Min. Scale
26-62	Terminal X42/11 Max. Scale
26-63	Terminal X42/11 Bus Control
26-64	Terminal X42/11 Timeout Preset
27-**	**Cascade CTL Option**
27-0*	**Control & Status**
27-01	Pump Status
27-02	Manual Pump Control
27-03	Current Runtime Hours
27-04	Pump Total Lifetime Hours
27-1*	**Configuration**
27-10	Cascade Controller
27-11	Number Of Drives
27-12	Number Of Pumps
27-14	Pump Capacity
27-16	Runtime Balancing
27-17	Motor Starters
27-18	Spin Time for Unused Pumps
27-19	Reset Current Runtime Hours
27-2*	**Bandwidth Settings**
27-20	Normal Operating Range
27-21	Override Limit
27-22	Fixed Speed Only Operating Range
27-23	Staging Delay
27-24	Destaging Delay
27-25	Override Hold Time
27-27	Min Speed Destage Delay
27-3*	**Staging Speed**
27-30	Auto Tune Staging Speeds
27-31	Stage On Speed [RPM]
27-32	Stage On Speed [Hz]
27-33	Stage Off Speed [RPM]
27-34	Stage Off Speed [Hz]
27-4*	**Staging Settings**
27-40	Auto Tune Staging Settings
27-41	Ramp Down Delay
27-42	Ramp Up Delay
27-43	Staging Threshold
27-44	Destaging Threshold
27-45	Staging Speed [RPM]
27-46	Staging Speed [Hz]
27-47	Destaging Speed [RPM]
27-48	Destaging Speed [Hz]
27-5*	**Alternate Settings**
27-50	Automatic Alternation
27-51	Alternation Event
27-52	Alternation Time Interval
27-53	Alternation Timer Value
27-54	Alternation At Time of Day
27-55	Alternation Predefined Time
27-56	Alternate Capacity is <
27-58	Run Next Pump Delay
27-6*	**Digital Inputs**
27-60	Terminal X66/1 Digital Input
27-61	Terminal X66/3 Digital Input
27-62	Terminal X66/5 Digital Input
27-63	Terminal X66/7 Digital Input
27-64	Terminal X66/9 Digital Input
27-65	Terminal X66/11 Digital Input
27-66	Terminal X66/13 Digital Input
27-7*	**Connections**
27-70	Relay
27-9*	**Readouts**
27-91	Cascade Reference
27-92	% Of Total Capacity
27-93	Cascade Option Status
27-94	Cascade System Status
27-95	Advanced Cascade Relay Output [bin]
27-96	Extended Cascade Relay Output [bin]
29-**	**Water Application Functions**
29-0*	**Pipe Fill**
29-00	Pipe Fill Enable
29-01	Pipe Fill Speed [RPM]
29-02	Pipe Fill Speed [Hz]
29-03	Pipe Fill Time
29-04	Pipe Fill Rate
29-05	Filled Setpoint
29-06	No-Flow Disable Timer
29-1*	**Deragging Function**
29-10	Derag Cycles
29-11	Derag at Start/Stop
29-12	Deragging Run Time
29-13	Derag Speed [RPM]
29-14	Derag Speed [Hz]
29-15	Derag Off Delay
29-2*	**Derag Power Tuning**
29-20	Derag Power[kW]
29-21	Derag Power[HP]
29-22	Derag Power Factor
29-23	Derag Power Delay
29-24	Low Speed [RPM]
29-25	Low Speed [Hz]
29-26	Low Speed Power [kW]
29-27	Low Speed Power [HP]
29-28	High Speed [RPM]
29-29	High Speed [Hz]
29-30	High Speed Power [kW]
29-31	High Speed Power [HP]
29-32	Derag On Ref Bandwidth
29-33	Power Derag Limit
29-34	Consecutive Derag Interval
30-**	**Special Features**
30-8*	**Compatibility (I)**
30-81	Brake Resistor (ohm)
31-**	**Bypass Option**
31-00	Bypass Mode
31-01	Bypass Start Time Delay
31-02	Bypass Trip Time Delay
31-03	Test Mode Activation
31-10	Bypass Status Word
31-11	Bypass Running Hours
31-19	Remote Bypass Activation
35-**	**Sensor Input Option**
35-0*	**Temp. Input Mode**
35-00	Term. X48/4 Temperature Unit
35-01	Term. X48/4 Input Type
35-02	Term. X48/7 Temperature Unit
35-03	Term. X48/7 Input Type
35-04	Term. X48/10 Temperature Unit
35-05	Term. X48/10 Input Type
35-06	Temperature Sensor Alarm Function
35-1*	**Temp. Input X48/4**
35-14	Term. X48/4 Filter Time Constant
35-15	Term. X48/4 Temp. Monitor
35-16	Term. X48/4 Low Temp. Limit
35-17	Term. X48/4 High Temp. Limit
35-2*	**Temp. Input X48/7**
35-24	Term. X48/7 Filter Time Constant
35-25	Term. X48/7 Temp. Monitor
35-26	Term. X48/7 Low Temp. Limit
35-27	Term. X48/7 High Temp. Limit
35-3*	**Temp. Input X48/10**
35-34	Term. X48/10 Filter Time Constant
35-35	Term. X48/10 Temp. Monitor
35-36	Term. X48/10 Low Temp. Limit
35-37	Term. X48/10 High Temp. Limit
35-4*	**Analog Input X48/2**
35-42	Term. X48/2 Low Current
35-43	Term. X48/2 High Current
35-44	Term. X48/2 Low Ref./Feedb. Value
35-45	Term. X48/2 High Ref./Feedb. Value
35-46	Term. X48/2 Filter Time Constant
35-47	Term. X48/2 Live Zero

6 General Specifications

Mains supply (L1, L2, L3)	
Supply voltage	380-480 V ±10%
Supply voltage	525-690 V ±10%

Mains voltage low/mains drop-out:
During low mains voltage or a mains drop-out, the FC continues until the intermediate circuit voltage drops below the minimum stop level, which corresponds typically to 15% below the FC's lowest rated supply voltage. Power-up and full torque cannot be expected at mains voltage lower than 10% below the FC's lowest rated supply voltage.

Supply frequency	50/60 Hz ±5%
Max. imbalance temporary between mains phases	3.0 % of rated supply voltage
True Power Factor (λ)	≥ 0.9 nominal at rated load
Displacement Power Factor (cosφ) near unity	(> 0.98)
Switching on input supply L1, L2, L3 (power-ups)	maximum once/2 min.
Environment according to EN60664-1	overvoltage category III/pollution degree 2

The unit is suitable for use on a circuit capable of delivering not more than 100.000 RMS symmetrical Amperes, 480/690 V maximum.

Motor output (U, V, W)	
Output voltage	0-100% of supply voltage
Output frequency	0-800* Hz
Switching on output	Unlimited
Ramp times	1-3600 s

** Voltage and power dependent*

Torque characteristics	
Starting torque (Constant torque)	maximum 110% for 1 min.*
Starting torque	maximum 135% up to 0.5 s*
Overload torque (Constant torque)	maximum 110% for 1 min.*

**Percentage relates to the frequency converter's nominal torque.*

Cable lengths and cross sections	
Max. motor cable length, screened/armoured	150 m
Max. motor cable length, unscreened/unarmoured	300 m
Max. cross section to motor, mains, load sharing and brake *	
Maximum cross section to control terminals, rigid wire	1.5 mm^2/16 AWG (2x0.75 mm^2)
Maximum cross section to control terminals, flexible cable	1 mm^2/18 AWG
Maximum cross section to control terminals, cable with enclosed core	0.5 mm^2/20 AWG
Minimum cross section to control terminals	0.25 mm^2

** See , and for more information!*

Digital inputs	
Programmable digital inputs	4 (6)
Terminal number	18, 19, 27 [1)], 29 [1)], 32, 33,
Logic	PNP or NPN
Voltage level	0-24 V DC
Voltage level, logic'0' PNP	<5 V DC
Voltage level, logic'1' PNP	>10 V DC
Voltage level, logic '0' NPN	>19 V DC
Voltage level, logic '1' NPN	<14 V DC
Maximum voltage on input	28 V DC
Input resistance, R_i	approx. 4 kΩ

All digital inputs are galvanically isolated from the supply voltage (PELV) and other high-voltage terminals.

1) Terminals 27 and 29 can also be programmed as output.

Analog inputs	
Number of analog inputs	2
Terminal number	53, 54
Modes	Voltage or current
Mode select	Switch S201 and switch S202
Voltage mode	Switch S201/switch S202 = OFF (U)
Voltage level	0 to +10 V (scaleable)
Input resistance, R_i	approx. 10 kΩ
Max. voltage	±20 V
Current mode	Switch S201/switch S202 = ON (I)
Current level	0/4 to 20 mA (scaleable)
Input resistance, R_i	approx. 200 Ω
Max. current	30 mA
Resolution for analog inputs	10 bit (+ sign)
Accuracy of analog inputs	Max. error 0.5% of full scale
Bandwidth	200 Hz

The analog inputs are galvanically isolated from the supply voltage (PELV) and other high-voltage terminals.

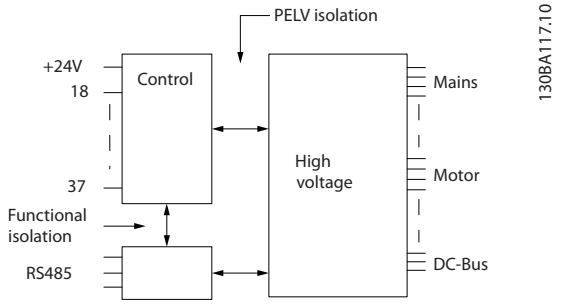

Illustration 6.1 PELV Isolation of Analog Inputs

Pulse inputs	
Programmable pulse inputs	2
Terminal number pulse	29, 33
Max. frequency at terminal, 29, 33	110 kHz (Push-pull driven)
Max. frequency at terminal, 29, 33	5 kHz (open collector)
Min. frequency at terminal 29, 33	4 Hz
Voltage level	see *Digital inputs*
Maximum voltage on input	28 V DC
Input resistance, R_i	approx. 4 kΩ
Pulse input accuracy (0.1-1 kHz)	Max. error: 0.1% of full scale
Analog output	
Number of programmable analog outputs	1
Terminal number	42
Current range at analog output	0/4-20 mA
Max. resistor load to common at analog output	500 Ω
Accuracy on analog output	Max. error: 0.8% of full scale
Resolution on analog output	8 bit

The analog output is galvanically isolated from the supply voltage (PELV) and other high-voltage terminals.

Control card, RS-485 serial communication	
Terminal number	68 (P,TX+, RX+), 69 (N,TX-, RX-)
Terminal number 61	Common for terminals 68 and 69

The RS-485 serial communication circuit is functionally seated from other central circuits and galvanically isolated from the supply voltage (PELV).

Digital output	
Programmable digital/pulse outputs	2
Terminal number	27, 29 [1)]
Voltage level at digital/frequency output	0-24 V
Max. output current (sink or source)	40 mA
Max. load at frequency output	1 kΩ
Max. capacitive load at frequency output	10 nF
Minimum output frequency at frequency output	0 Hz
Maximum output frequency at frequency output	32 kHz
Accuracy of frequency output	Max. error: 0.1% of full scale
Resolution of frequency outputs	12 bit

1) Terminal 27 and 29 can also be programmed as input.

The digital output is galvanically isolated from the supply voltage (PELV) and other high-voltage terminals.

Control card, 24 V DC output	
Terminal number	12, 13
Max. load	200 mA

The 24 V DC supply is galvanically isolated from the supply voltage (PELV), but has the same potential as the analog and digital inputs and outputs.

Relay outputs	
Programmable relay outputs	2
Relay 01 Terminal number	1-3 (break), 1-2 (make)
Max. terminal load (AC-1)[1)] on 1-3 (NC), 1-2 (NO) (Resistive load)	240 V AC, 2 A
Max. terminal load (AC-15)[1)] (Inductive load @ cosφ 0.4)	240 V AC, 0.2 A
Max. terminal load (DC-1)[1)] on 1-2 (NO), 1-3 (NC) (Resistive load)	60 V DC, 1 A
Max. terminal load (DC-13)[1)] (Inductive load)	24 V DC, 0.1 A
Relay 02 Terminal number	4-6 (break), 4-5 (make)
Max. terminal load (AC-1)[1)] on 4-5 (NO) (Resistive load)[2)3)]	400 V AC, 2 A
Max. terminal load (AC-15)[1)] on 4-5 (NO) (Inductive load @ cosφ 0.4)	240 V AC, 0.2 A
Max. terminal load (DC-1)[1)] on 4-5 (NO) (Resistive load)	80 V DC, 2 A
Max. terminal load (DC-13)[1)] on 4-5 (NO) (Inductive load)	24 V DC, 0.1 A
Max. terminal load (AC-1)[1)] on 4-6 (NC) (Resistive load)	240 V AC, 2 A
Max. terminal load (AC-15)[1)] on 4-6 (NC) (Inductive load @ cosφ 0.4)	240 V AC, 0.2 A
Max. terminal load (DC-1)[1)] on 4-6 (NC) (Resistive load)	50 V DC, 2 A
Max. terminal load (DC-13)[1)] on 4-6 (NC) (Inductive load)	24 V DC, 0.1 A
Min. terminal load on 1-3 (NC), 1-2 (NO), 4-6 (NC), 4-5 (NO)	24 V DC 10 mA, 24 V AC 20 mA
Environment according to EN 60664-1	overvoltage category III/pollution degree 2

1) IEC 60947 parts 4 and 5
The relay contacts are galvanically isolated from the rest of the circuit by reinforced isolation (PELV).
2) Overvoltage Category II
3) UL applications 300 V AC 2 A

Control card, 10 V DC output	
Terminal number	50
Output voltage	10.5 V ±0.5 V
Max. load	25 mA

The 10 V DC supply is galvanically isolated from the supply voltage (PELV) and other high-voltage terminals.

Control characteristics	
Resolution of output frequency at 0-590 Hz	±0.003 Hz
System response time (terminals 18, 19, 27, 29, 32, 33)	≤ 2 ms
Speed control range (open loop)	1:100 of synchronous speed
Speed accuracy (open loop)	30-4000 RPM: Maximum error of ±8 RPM

All control characteristics are based on a 4-pole asynchronous motor

Surroundings	
Enclosure, frame size D and E	IP00, IP21, IP54
Enclosure, frame size F	IP21, IP54
Vibration test	0.7 g
Relative humidity	5% - 95% (IEC 721-3-3; Class 3K3 (non-condensing) during operation
Aggressive environment (IEC 60068-2-43) H_2S test	class kD
Test method according to IEC 60068-2-43 H_2S (10 days)	
Ambient temperature (at 60 AVM switching mode)	
- with derating	max. 55 °C[1)]
- with full output power, typical EFF2 motors	max. 50 °C[1)]
- at full continuous FC output current	max. 45 °C[1)]

[1)] For more information on derating see the Design Guide, section on Special Conditions.

Minimum ambient temperature during full-scale operation	0 °C
Minimum ambient temperature at reduced performance	-10 °C
Temperature during storage/transport	-25 to +65/70 °C
Maximum altitude above sea level without derating	1000 m
Maximum altitude above sea level with derating	3000 m

Derating for high altitude, see section on special conditions in the Design Guide

EMC standards, Emission	EN 61800-3, EN 61000-6-3/4, EN 55011, IEC 61800-3
EMC standards, Immunity	EN 61800-3, EN 61000-6-1/2, EN 61000-4-2, EN 61000-4-3, EN 61000-4-4, EN 61000-4-5, EN 61000-4-6

See section on special conditions in the Design Guide!

Control card performance	
Scan interval	5 ms
Control card, USB serial communication	
USB standard	1.1 (Full speed)
USB plug	USB type B "device" plug

⚠CAUTION

Connection to PC is carried out via a standard host/device USB cable.
The USB connection is galvanically isolated from the supply voltage (PELV) and other high-voltage terminals.
The USB connection is not galvanically isolated from protection earth. Use only isolated laptop/PC as connection to the USB connector on the frequency converter or an isolated USB cable/converter.

Protection and Features

- Electronic thermal motor protection against overload.
- Temperature monitoring of the heat sink ensures that the frequency converter trips if the temperature reaches a predefined level. An overload temperature cannot be reset until the temperature of the heat sink is below the values stated in the tables on the following pages (Guideline - these temperatures may vary for different power sizes, frame sizes, enclosure ratings etc.).
- The frequency converter is protected against short-circuits on motor terminals U, V, W.
- If a mains phase is missing, the frequency converter trips or issues a warning (depending on the load).
- Monitoring of the intermediate circuit voltage ensures that the frequency converter trips if the intermediate circuit voltage is too low or too high.
- The frequency converter is protected against earth faults on motor terminals U, V, W.

Mains Supply 3x380-480 V AC					
	P110	**P132**	**P160**	**P200**	**P250**
Typical Shaft output at 400 V [kW]	110	132	160	200	250
Typical Shaft output at 460 V [hp]	150	200	250	300	350
Enclosure IP21	D1	D1	D2	D2	D2
Enclosure IP54	D1	D1	D2	D2	D2
Enclosure IP00	D3	D3	D4	D4	D4
Output current					
Continuous (at 400 V) [A]	212	260	315	395	480
Intermittent (60 s overload) (at 400 V) [A]	233	286	347	435	528
Continuous (at 460/480 V) [A]	190	240	302	361	443
Intermittent (60 s overload) (at 460/480 V) [A]	209	264	332	397	487
Continuous KVA (at 400 V) [KVA]	147	180	218	274	333
Continuous KVA (at 460 V) [KVA]	151	191	241	288	353
Max. input current					
Continuous (at 400 V) [A]	204	251	304	381	463
Continuous (at 460/480 V) [A]	183	231	291	348	427
Max. cable size, mains motor, brake and load share [mm^2 (AWG[2])]	2x70 (2x2/0)	2x70 (2x2/0)	2x150 (2x300 mcm)	2x150 (2x300 mcm)	2x150 (2x300 mcm)
Max. external pre-fuses [A] [1]	300	350	400	500	630
Estimated power loss at rated max. load [W] [4], 400 V	3234	3782	4213	5119	5893
Estimated power loss at rated max. load [W] [4], 460 V	2947	3665	4063	4652	5634
Weight, enclosure IP21, IP54 [kg]	96	104	125	136	151
Weight, enclosure IP00 [kg]	82	91	112	123	138
Efficiency[4]	0.98				
Output frequency	0-800 Hz				
Heat sink overtemp. trip	90 °C	110°C	110°C	110 °C	110°C
Power card ambient trip	60 °C				

Table 6.1

Mains Supply 3x380-480 V AC				
	P315	**P355**	**P400**	**P450**
Typical Shaft output at 400 V [kW]	315	355	400	450
Typical Shaft output at 460 V [HP]	450	500	600	600
Enclosure IP21	E1	E1	E1	E1
EnclosureIP54	E1	E1	E1	E1
Enclosure IP00	E2	E2	E2	E2
Output current				
Continuous (at 400 V) [A]	600	658	745	800
Intermittent (60 sec overload) (at 400 V) [A]	660	724	820	880
Continuous (at 460/ 480 V) [A]	540	590	678	730
Intermittent (60 sec overload) (at 460/ 480 V) [A]	594	649	746	803
Continuous KVA (at 400 V) [KVA]	416	456	516	554
Continuous KVA (at 460 V) [KVA]	430	470	540	582
Max. input current				
Continuous (at 400 V) [A]	590	647	733	787
Continuous (at 460/ 480 V) [A]	531	580	667	718
Max. cable size, mains, motor and load share [mm^2 (AWG[2)])]	4x240 (4x500 mcm)	4x240 (4x500 mcm)	4x240 (4x500 mcm)	4x240 (4x500 mcm)
Max. cable size, brake [mm^2 (AWG[2)])	2 x 185 (2 x 350 mcm)	2 x 185 (2 x 350 mcm)	2 x 185 (2 x 350 mcm)	2 x 185 (2 x 350 mcm)
Max. external pre-fuses [A] [1]	700	900	900	900
Estimated power loss at rated max. load [W] [4)] , 400 V	6790	7701	8879	9670
Estimated power loss at rated max. load [W] [4)] , 460 V	6082	6953	8089	8803
Weight, enclosure IP21, IP 54 [kg]	263	270	272	313
Weight, enclosure IP00 [kg]	221	234	236	277
Efficiency[4)]	0.98			
Output frequency	0 - 600 Hz			
Heat sink overtemp. trip	110°C			
Power card ambient trip	68 °C			

Table 6.2

Mains Supply 3x380-480 V AC						
	P500	**P560**	**P630**	**P710**	**P800**	**P1M0**
Typical Shaft output at 400 V [kW]	500	560	630	710	800	1000
Typical Shaft output at 460 V [HP]	650	750	900	1000	1200	1350
Enclosure IP21, 54 without/ with options cabinet	F1/F3	F1/F3	F1/F3	F1/F3	F2/F4	F2/F4
Output current						
Continuous (at 400 V) [A]	880	990	1120	1260	1460	1720
Intermittent (60 sec overload) (at 400 V) [A]	968	1089	1232	1386	1606	1892
Continuous (at 460/ 480 V) [A]	780	890	1050	1160	1380	1530
Intermittent (60 sec overload) (at 460/ 480 V) [A]	858	979	1155	1276	1518	1683
Continuous KVA (at 400 V) [KVA]	610	686	776	873	1012	1192
Continuous KVA (at 460 V) [KVA]	621	709	837	924	1100	1219
Max. input current						
Continuous (at 400 V) [A]	857	964	1090	1227	1422	1675
Continuous (at 460/ 480 V) [A]	759	867	1022	1129	1344	1490
Max. cable size,motor [mm^2 (AWG[2])]	8x150 (8x300 mcm)				12x150 (12x300 mcm)	
Max. cable size,mains F1/F2 [mm^2 (AWG[2])]	8x240 (8x500 mcm)					
Max. cable size,mains F3/F4 [mm^2 (AWG[2])]	8x456 (8x900 mcm)					
Max. cable size, loadsharing [mm^2 (AWG[2])]	4x120 (4x250 mcm)					
Max. cable size, brake [mm^2 (AWG[2])	4x185 (4x350 mcm)				6x185 (6x350 mcm)	
Max. external pre-fuses [A] [1]	1600		2000		2500	
Est. power loss at rated max. load [W][4] , 400 V, F1 & F2	10647	12338	13201	15436	18084	20358
Est. power loss at rated max. load [W] [4] , 460 V, F1 & F2	9414	11006	12353	14041	17137	17752
Max added losses of A1 RFI, Circuit Breaker or Disconnect, & Contactor, F3 & F4	963	1054	1093	1230	2280	2541
Max Panel Options Losses	400					
Weight, enclosure IP21, IP 54 [kg]	1004/ 1299	1004/ 1299	1004/ 1299	1004/ 1299	1246/ 1541	1246/ 1541
Weight Rectifier Module [kg]	102	102	102	102	136	136
Weight Inverter Module [kg]	102	102	102	136	102	102
Efficiency[4]	0.98					
Output frequency	0-600 Hz					
Heat sink overtemp. trip	95 °C					
Power card ambient trip	68 °C					

Table 6.3

Mains Supply 3x525-690 V AC					
	P45K	**P55K**	**P75K**	**P90K**	**P110**
Typical Shaft output at 550 V [kW]	37	45	55	75	90
Typical Shaft output at 575 V [HP]	50	60	75	100	125
Typical Shaft output at 690 V [kW]	45	55	75	90	110
Enclosure IP21	D1	D1	D1	D1	D1
Enclosure IP54	D1	D1	D1	D1	D1
Enclosure IP00	D2	D2	D2	D2	D2
Output current					
Continuous (at 3 x 525-550 V) [A]	56	76	90	113	137
Intermittent (60 sec overload) (at 550 V) [A]	62	84	99	124	151
Continuous (at 3 x 551-690 V) [A]	54	73	86	108	131
Intermittent (60 sec overload) (at 575/ 690 V) [A]	59	80	95	119	144
Continuous KVA (at 550 V) [KVA]	53	72	86	108	131
Continuous KVA (at 575 V) [KVA]	54	73	86	108	130
Continuous KVA (at 690 V) [KVA]	65	87	103	129	157
Max. input current					
Continuous (at 550 V) [A]	60	77	89	110	130
Continuous (at 575 V) [A]	58	74	85	106	124
Continuous (at 690 V) [A]	58	77	87	109	128
Max. cable size, mains, motor, load share and brake [mm^2 (AWG)]	2x70 (2x2/0)				
Max. external pre-fuses [A] [1)]	125	160	200	200	250
Estimated power loss at rated max. load [W] [4)] , 600 V	1398	1645	1827	2157	2533
Estimated power loss at rated max. load [W] [4)] , 690 V	1458	1717	1913	2262	2662
Weight, enclosure IP21, IP 54 [kg]	96				
Weight, enclosure IP00 [kg]	82				
Efficiency[4)]	0.97	0.97	0.98	0.98	0.98
Output frequency	0 - 600 Hz				
Heat sink overtemp. trip	85 °C				
Power card ambient trip	60 °C				

Table 6.4

Mains Supply 3x525-690 V AC				
	P132	**P160**	**P200**	**P250**
Typical Shaft output at 550 V [kW]	110	132	160	200
Typical Shaft output at 575 V [HP]	150	200	250	300
Typical Shaft output at 690 V [kW]	132	160	200	250
Enclosure IP21	D1	D1	D2	D2
Enclosure IP54	D1	D1	D2	D2
Enclosure IP00	D3	D3	D4	D4
Output current				
Continuous (at 550 V) [A]	162	201	253	303
Intermittent (60 sec overload) (at 550 V) [A]	178	221	278	333
Continuous (at 575/ 690 V) [A]	155	192	242	290
Intermittent (60 sec overload) (at 575/ 690 V) [A]	171	211	266	319
Continuous KVA (at 550 V) [KVA]	154	191	241	289
Continuous KVA (at 575 V) [KVA]	154	191	241	289
Continuous KVA (at 690 V) [KVA]	185	229	289	347
Max. input current				
Continuous (at 550 V) [A]	158	198	245	299
Continuous (at 575 V) [A]	151	189	234	286
Continuous (at 690 V) [A]	155	197	240	296
Max. cable size, mains motor, load share and brake [mm^2 (AWG)]	2 x 70 (2 x 2/0)	2 x 70 (2 x 2/0)	2 x 150 (2 x 300 mcm)	2 x 150 (2 x 300 mcm)
Max. external pre-fuses [A] [1]	315	350	350	400
Estimated power loss at rated max. load [W] [4)] , 600 V	2963	3430	4051	4867
Estimated power loss at rated max. load [W] [4)] , 690 V	3430	3612	4292	5156
Weight, Enclosure IP21, IP 54 [kg]	96	104	125	136
Weight, Enclosure IP00 [kg]	82	91	112	123
Efficiency[4)]	0.98			
Output frequency	0 - 600 Hz			
Heat sink overtemp. trip	90 °C	110°C	110 °C	110 °C
Power card ambient trip	60 °C			

Table 6.5

Mains Supply 3x525-690 V AC			
	P315	**P400**	**P450**
Typical Shaft output at 550 V [kW]	250	315	355
Typical Shaft output at 575 V [HP]	350	400	450
Typical Shaft output at 690 V [kW]	315	400	450
Enclosure IP21	D2	D2	E1
Enclosure IP54	D2	D2	E1
Enclosure IP00	D4	D4	E2
Output current			
Continuous (at 550 V) [A]	360	418	470
Intermittent (60 sec overload) (at 550 V) [A]	396	460	517
Continuous (at 575/ 690 V) [A]	344	400	450
Intermittent (60 sec overload) (at 575/ 690 V) [A]	378	440	495
Continuous KVA (at 550 V) [KVA]	343	398	448
Continuous KVA (at 575 V) [KVA]	343	398	448
Continuous KVA (at 690 V) [KVA]	411	478	538
Max. input current			
Continuous (at 550 V) [A]	355	408	453
Continuous (at 575 V) [A]	339	390	434
Continuous (at 690 V) [A]	352	400	434
Max. cable size, mains, motor and load share [mm^2 (AWG)]	2 x 150 (2 x 300 mcm)	2 x 150 (2 x 300 mcm)	4 x 240 (4 x 500 mcm)
Max. cable size, brake [mm^2 (AWG)]	2 x 150 (2 x 300 mcm)	2 x 150 (2 x 300 mcm)	2 x 185 (2 x 350 mcm)
Max. external pre-fuses [A] [1]	500	550	700
Estimated power loss at rated max. load [W] [4)] , 600 V	5493	5852	6132
Estimated power loss at rated max. load [W] [4)] , 690 V	5821	6149	6440
Weight, enclosure IP21, IP 54 [kg]	151	165	263
Weight, enclosure IP00 [kg]	138	151	221
Efficiency[4)]	0.98		
Output frequency	0 - 600 Hz	0 - 500 Hz	0 - 500 Hz
Heat sink overtemp. trip	110 °C	110 °C	110 °C
Power card ambient trip	60 °C	60 °C	68 °C

Table 6.6

Mains Supply 3x525-690 V AC			
	P500	**P560**	**P630**
Typical Shaft output at 550 V [kW]	400	450	500
Typical Shaft output at 575 V [HP]	500	600	650
Typical Shaft output at 690 V [kW]	500	560	630
Enclosure IP21	E1	E1	E1
Enclosure IP54	E1	E1	E1
Enclosure IP00	E2	E2	E2
Output current			
Continuous (at 550 V) [A]	523	596	630
Intermittent (60 sec overload) (at 550 V) [A]	575	656	693
Continuous (at 575/ 690 V) [A]	500	570	630
Intermittent (60 sec overload) (at 575/ 690 V) [A]	550	627	693
Continuous KVA (at 550 V) [KVA]	498	568	600
Continuous KVA (at 575 V) [KVA]	498	568	627
Continuous KVA (at 690 V) [KVA]	598	681	753
Max. input current			
Continuous (at 550 V) [A]	504	574	607
Continuous (at 575 V) [A]	482	549	607
Continuous (at 690 V) [A]	482	549	607
Max. cable size, mains, motor and load share [mm^2 (AWG)]	4x240 (4x500 mcm)	4x240 (4x500 mcm)	4x240 (4x500 mcm)
Max. cable size, brake [mm^2 (AWG)]	2 x 185 (2 x 350 mcm)	2 x 185 (2 x 350 mcm)	2 x 185 (2 x 350 mcm)
Max. external pre-fuses [A] [1]	700	900	900
Estimated power loss at rated max. load [W] [4)] , 600 V	6903	8343	9244
Estimated power loss at rated max. load [W] [4)] , 690 V	7249	8727	9673
Weight, enclosure IP21, IP 54 [kg]	263	272	313
Weight, enclosure IP00 [kg]	221	236	277
Efficiency[4)]	0.98		
Output frequency	0 - 500 Hz		
Heat sink overtemp. trip	110 °C		
Power card ambient trip	68 °C		

Table 6.7

Mains Supply 3x525-690 V AC						
	P710	**P800**	**P900**	**P1M0**	**P1M2**	**P1M4**
Typical Shaft output at 550 V [kW]	560	670	750	850	1000	1100
Typical Shaft output at 575 V [HP]	750	950	1050	1150	1350	1550
Typical Shaft output at 690 V [kW]	710	800	900	1000	1200	1400
Enclosure IP21, 54 without/with options cabinet	F1/ F3	F1/ F3	F1/ F3	F2/F4	F2/ F4	F2/F4
Output current						
Continuous (at 550 V) [A]	763	889	988	1108	1317	1479
Intermittent (60 s overload, at 550 V) [A]	839	978	1087	1219	1449	1627
Continuous (at 575/ 690 V) [A]	730	850	945	1060	1260	1415
Intermittent (60 s overload, at 575/690 V) [A]	803	935	1040	1166	1386	1557
Continuous KVA (at 550 V) [KVA]	727	847	941	1056	1255	1409
Continuous KVA (at 575 V) [KVA]	727	847	941	1056	1255	1409
Continuous KVA (at 690 V) [KVA]	872	1016	1129	1267	1506	1691
Max. input current						
Continuous (at 550 V) [A]	743	866	962	1079	1282	1440
Continuous (at 575 V) [A]	711	828	920	1032	1227	1378
Continuous (at 690 V) [A]	711	828	920	1032	1227	1378
Max. cable size,motor [mm^2 (AWG[2)])]	8x150 (8x300 mcm)			12x150 (12x300 mcm)		
Max. cable size,mains F1/F2 [mm^2 (AWG[2)])]	8x240 (8x500 mcm)					
Max. cable size,mains F3/F4 [mm^2 (AWG[2)])]	8x456 (8x900 mcm)					
Max. cable size, loadsharing [mm^2 (AWG[2)])]	4x120 (4x250 mcm)					
Max. cable size, brake [mm^2 (AWG[2)])	4x185 (4x350 mcm)			6x185 (6x350 mcm)		
Max. external pre-fuses [A] [1)]	1600				2000	2500
Est. power loss at rated max. load [W] [4)], 600 V, F1 & F2	10771	12272	13835	15592	18281	20825
Est. power loss at rated max. load [W] [4)], 690 V, F1 & F2	11315	12903	14533	16375	19207	21857
Max added losses of Circuit Breaker or Disconnect & Contactor, F3 & F4	427	532	615	665	863	1044
Max Panel Options Losses	400					
Weight,enclosure IP21, IP 54 [kg]	1004/1299	1004/1299	1004/1299	1246/1541	1246/1541	1280/1575
Weight, Rectifier Module [kg]	102	102	102	136	136	136
Weight, Inverter Module [kg]	102	102	136	102	102	136
Efficiency[4)]	0.98					
Output frequency	0-500 Hz					
Heat sink overtemp. trip	95 °C					
Power card amb. trip	68 °C					

Table 6.8

1) For type of fuse see section *Fuses.*

2) American Wire Gauge.

3) Measured using 5 m screened motor cables at rated load and rated frequency.

4) The typical power loss is at nominal load conditions and expected to be within +/-15% (tolerence relates to variety in voltage and cable conditions). Values are based on a typical motor efficiency (eff2/eff3 border line). Motors with lower efficiency will also add to the power loss in the frequency converter and opposite. If the switching frequency is increased comed to the default setting, the power losses may rise significantly. LCP and typical control card power consumptions are included. Further options and customer load may add up to 30 W to the losses. (Though typical only 4 W extra for a fully loaded control card, or options for slot A or slot B, each). Although measurements are made with state of the art equipment, some measurement inaccuracy must be allowed for (+/-5%).

7 Troubleshooting

7.1 Alarms and warnings

A warning or an alarm is signalled by the relevant LED on the front of the frequency converter and indicated by a code on the display.

A warning remains active until its cause is no longer present. Under certain circumstances operation of the motor may still be continued. Warning messages may be critical, but are not necessarily so.

In the event of an alarm, the frequency converter will have tripped. Alarms must be reset to restart operation once their cause has been rectified.

This may be done in 4 ways:

1. By pressing [RESET] on the LCP.
2. Via a digital input with the "Reset" function.
3. Via serial communication/optional fieldbus.
4. By resetting automatically using the [Auto Reset] function. See *14-20 Reset Mode* in*VLT® AQUA Drive FC 202 Programming Guide*

NOTICE

After a manual reset pressing [RESET] on the LCP, press [AUTO ON] or [HAND ON] to restart the motor.

If an alarm cannot be reset, the reason may be that its cause has not been rectified, or the alarm is trip-locked (see also table on following page).

Alarms that are trip-locked offer additional protection, means that the mains supply must be switched off before the alarm can be reset. After being switched back on, the frequency converter is no longer blocked and may be reset as described above once the cause has been rectified.

Alarms that are not trip-locked can also be reset using the automatic reset function in *14-20 Reset Mode* (Warning: automatic wake-up is possible!)

If a warning and alarm is marked against a code in the table on the following page, this means that either a warning occurs before an alarm, or it can be specified whether it is a warning or an alarm that is to be displayed for a given fault.

This is possible, for instance, in *1-90 Motor Thermal Protection*. After an alarm or trip, the motor carries on coasting, and the alarm and warning flash on the frequency converter. Once the problem has been rectified, only the alarm continues flashing.

No.	Description	Warning	Alarm/Trip	Alarm/Trip Lock	Parameter Reference
1	10 Volts low	X			
2	Live zero error	(X)	(X)		6-01
3	No motor	(X)			1-80
4	Mains phase loss	(X)	(X)	(X)	14-12
5	DC link voltage high	X			
6	DC link voltage low	X			
7	DC over voltage	X	X		
8	DC under voltage	X	X		
9	Inverter overloaded	X	X		
10	Motor ETR over temperature	(X)	(X)		1-90
11	Motor thermistor over temperature	(X)	(X)		1-90
12	Torque limit	X	X		
13	Over Current	X	X	X	
14	Earth fault	X	X	X	
15	Hardware mismatch		X	X	
16	Short Circuit		X	X	
17	Control word timeout	(X)	(X)		8-04
23	Internal Fan Fault	X			
24	External Fan Fault	X			14-53
25	Brake resistor short-circuited	X			
26	Brake resistor power limit	(X)	(X)		2-13

No.	Description	Warning	Alarm/Trip	Alarm/Trip Lock	Parameter Reference
27	Brake chopper short-circuited	X	X		
28	Brake check	(X)	(X)		2-15
29	Drive over temperature	X	X	X	
30	Motor phase U missing	(X)	(X)	(X)	4-58
31	Motor phase V missing	(X)	(X)	(X)	4-58
32	Motor phase W missing	(X)	(X)	(X)	4-58
33	Inrush fault		X	X	
34	Fieldbus communication fault	X	X		
35	Out of frequency range	X	X		
36	Mains failure	X	X		
37	Phase Imbalance	X	X		
39	Heatsink sensor		X	X	
40	Overload of Digital Output Terminal 27	(X)			5-00, 5-01
41	Overload of Digital Output Terminal 29	(X)			5-00, 5-02
42	Overload of Digital Output On X30/6	(X)			5-32
42	Overload of Digital Output On X30/7	(X)			5-33
46	Pwr. card supply		X	X	
47	24 V supply low	X	X	X	
48	1.8 V supply low		X	X	
49	Speed limit	X			
50	AMA calibration failed		X		
51	AMA check U_{nom} and I_{nom}		X		
52	AMA low I_{nom}		X		
53	AMA motor too big		X		
54	AMA motor too small		X		
55	AMA parameter out of range		X		
56	AMA interrupted by user		X		
57	AMA timeout		X		
58	AMA internal fault	X	X		
59	Current limit	X			
60	External Interlock	X			
62	Output Frequency at Maximum Limit	X			
64	Voltage Limit	X			
65	Control Board Over-temperature	X	X	X	
66	Heat sink Temperature Low	X			
67	Option Configuration has Changed		X		
68	Safe Stop Activated		X[1)]		
69	Pwr. Card Temp		X	X	
70	Illegal FC configuration			X	
71	PTC 1 Safe Stop	X	X[1)]		
72	Dangerous Failure			X[1)]	
73	Safe Stop Auto Restart				
76	Power Unit Setup	X			
79	Illegal PS config		X	X	
80	Drive Initialised to Default Value		X		
91	Analog input 54 wrong settings			X	
92	NoFlow	X	X		22-2*
93	Dry Pump	X	X		22-2*
94	End of Curve	X	X		22-5*
95	Broken Belt	X	X		22-6*
96	Start Delayed	X			22-7*
97	Stop Delayed	X			22-7*

No.	Description	Warning	Alarm/Trip	Alarm/Trip Lock	Parameter Reference
220	Overload Trip		X		
98	Clock Fault	X			0-7*
243	Brake IGBT	X	X		
244	Heatsink temp	X	X	X	
245	Heatsink sensor		X	X	
246	Pwr.card supply		X	X	
247	Pwr.card temp		X	X	
248	Illegal PS config		X	X	
250	New spare part			X	
251	New Type Code		X	X	

Table 7.1 Alarm/Warning Code List

(X) Dependent on parameter

1) Cannot be Auto reset via 14-20 Reset Mode

7

A trip is the action when an alarm has appeared. The trip coasts the motor and can be reset by pressing [Reset] or making a reset by a digital input (Par. *5-1* Digital Inputs [1] Reset*). The origin event that caused an alarm cannot damage the frequency converter or cause dangerous conditions. A trip lock is an action when an alarm occurs, which may cause damage to frequency converter or connected parts. A Trip Lock situation can only be reset by a power cycling.

LED indication	
Warning	yellow
Alarm	flashing red
Trip locked	yellow and red

Table 7.2

Alarm Word and Extended Status Word					
Bit	**Hex**	**Dec**	**Alarm Word**	**Warning Word**	**Extended Status Word**
0	00000001	1	Brake Check	Brake Check	Ramping
1	00000002	2	Pwr. Card Temp	Pwr. Card Temp	AMA Running
2	00000004	4	Earth Fault	Earth Fault	Start CW/CCW
3	00000008	8	Ctrl.Card Temp	Ctrl.Card Temp	Slow Down
4	00000010	16	Ctrl. Word TO	Ctrl. Word TO	Catch Up
5	00000020	32	Over Current	Over Current	Feedback High
6	00000040	64	Torque Limit	Torque Limit	Feedback Low
7	00000080	128	Motor Th Over	Motor Th Over	Output Current High
8	00000100	256	Motor ETR Over	Motor ETR Over	Output Current Low
9	00000200	512	Inverter Overld.	Inverter Overld.	Output Freq High
10	00000400	1024	DC under Volt	DC under Volt	Output Freq Low
11	00000800	2048	DC over Volt	DC over Volt	Brake Check OK
12	00001000	4096	Short Circuit	DC Voltage Low	Braking Max
13	00002000	8192	Inrush Fault	DC Voltage High	Braking
14	00004000	16384	Mains ph. Loss	Mains ph. Loss	Out of Speed Range
15	00008000	32768	AMA Not OK	No Motor	OVC Active
16	00010000	65536	Live Zero Error	Live Zero Error	
17	00020000	131072	Internal Fault	10V Low	
18	00040000	262144	Brake Overload	Brake Overload	
19	00080000	524288	U phase Loss	Brake Resistor	
20	00100000	1048576	V phase Loss	Brake IGBT	
21	00200000	2097152	W phase Loss	Speed Limit	
22	00400000	4194304	Fieldbus Fault	Fieldbus Fault	
23	00800000	8388608	24 V Supply Low	24V Supply Low	
24	01000000	16777216	Mains Failure	Mains Failure	
25	02000000	33554432	1.8V Supply Low	Current Limit	
26	04000000	67108864	Brake Resistor	Low Temp	
27	08000000	134217728	Brake IGBT	Voltage Limit	
28	10000000	268435456	Option Change	Unused	
29	20000000	536870912	Drive Initialised	Unused	
30	40000000	1073741824	Safe Stop	Unused	

Table 7.3 Description of Alarm Word, Warning Word and Extended Status Word

The alarm words, warning words and extended status words can be read out via serial bus or optional fieldbus for diagnosis. See also *16-90 Alarm Word*, *16-92 Warning Word* and *16-94 Ext. Status Word*.

The warning/alarm information below defines each warning/alarm condition, provides the probable cause for the condition, and details a remedy or troubleshooting procedure.

WARNING 1, 10 Volts low
The control card voltage is below 10 V from terminal 50. Remove some of the load from terminal 50, as the 10 V supply is overloaded. Max. 15 mA or minimum 590 Ω.

This condition can be caused by a short in a connected potentiometer or improper wiring of the potentiometer.

Troubleshooting

- Remove the wiring from terminal 50
- If the warning clears, the problem is with the customer wiring
- If the warning does not clear, replace the control card

7

WARNING/ALARM 2, Live zero error
This warning or alarm only appears if programmed by the user in *parameter 6-01 Live Zero Timeout Function*. The signal on one of the analog inputs is less than 50% of the minimum value programmed for that input. Broken wiring or faulty device sending the signal can cause this condition.

Troubleshooting

- Check connections on all the analog input terminals. Control card terminals 53 and 54 for signals, terminal 55 common. MCB 101 terminals 11 and 12 for signals, terminal 10 common. MCB 109 terminals 1, 3, 5 for signals, terminals 2, 4, 6 common).
- Check that the frequency converter programming and switch settings match the analog signal type
- Perform Input Terminal Signal Test

WARNING 3, No motor
No motor has been connected to the output of the frequency converter.

WARNING/ALARM 4, Mains phase loss
A phase is missing on the supply side, or the mains voltage imbalance is too high. This message also appears for a fault in the input rectifier on the frequency converter. Options are programmed at *14-12 Function at Mains Imbalance*.

Troubleshooting

- Check the supply voltage and supply currents to the frequency converter

WARNING 5, DC link voltage high
The intermediate circuit voltage (DC) is higher than the high voltage warning limit. The limit is dependent on the frequency converter voltage rating. The unit is still active.

WARNING 6, DC link voltage low
The intermediate circuit voltage (DC) is lower than the low voltage warning limit. The limit is dependent on the frequency converter voltage rating. The unit is still active.

WARNING/ALARM 7, DC overvoltage
If the intermediate circuit voltage exceeds the limit, the frequency converter trips after a time.

Troubleshooting

- Connect a brake resistor
- Extend the ramp time
- Change the ramp type
- Activate the functions in *2-10 Brake Function*
- Increase *14-26 Trip Delay at Inverter Fault*

WARNING/ALARM 8, DC under voltage
If the intermediate circuit voltage (DC link) drops below the under voltage limit, the frequency converter checks if a 24 V DC back-up supply is connected. If no 24 V DC back-up supply is connected, the frequency converter trips after a fixed time delay. The time delay varies with unit size.

Troubleshooting

- Check that the supply voltage matches the frequency converter voltage.
- Perform input voltage test.
- Perform soft charge circuit test.

WARNING/ALARM 9, Inverter overload
The frequency converter is about to cut out because of an overload (too high current for too long). The counter for electronic, thermal inverter protection gives a warning at 98% and trips at 100%, while giving an alarm. The frequency converter *cannot* be reset until the counter is below 90%.
The fault is that the frequency converter is overloaded by more than 100% for too long.

Troubleshooting

- Compare the output current shown on the LCP with the frequency converter rated current
- Compare the output current shown on the LCP with measured motor current
- Display the Thermal Drive Load on the LCP and monitor the value. When running above the frequency converter continuous current rating, the counter should increase. When running below the frequency converter continuous current rating, the counter should decrease

WARNING/ALARM 10, Motor overload temperature
According to the electronic thermal protection (ETR), the motor is too hot. Select whether the frequency converter gives a warning or an alarm when the counter reaches 100% in *1-90 Motor Thermal Protection*. The fault occurs when the motor is overloaded by more than 100% for too long.

Troubleshooting

- Check for motor overheating
- Check if the motor is mechanically overloaded
- Check that the motor current set in *parameter 1-24 Motor Current* is correct
- Ensure that Motor data in parameters 1-20 through 1-25 are set correctly
- If an external fan is in use, check in *1-91 Motor External Fan* that it is selected
- Running AMA in *parameter 1-29 Automatic Motor Adaptation (AMA)* tunes the frequency converter to the motor more accurately and reduces thermal loading

WARNING/ALARM 11, Motor thermistor over temp
The thermistor might be disconnected. Select whether the frequency converter gives a warning or an alarm in *1-90 Motor Thermal Protection*.

Troubleshooting

- Check for motor overheating
- Check if the motor is mechanically overloaded
- Check that the thermistor is connected correctly between either terminal 53 or 54 (analog voltage input) and terminal 50 (+10 V supply) and that the terminal switch for 53 or 54 is set for voltage. Check *1-93 Thermistor Source* selects terminal 53 or 54
- When using digital inputs 18 or 19, check that the thermistor is connected correctly between either terminal 18 or 19 (digital input PNP only) and terminal 50
- If a KTY sensor is used, check for correct connection between terminals 54 and 55
- If using a thermal switch or thermistor, check that the programming if *1-93 Thermistor Resource* matches sensor wiring
- If using a KTY sensor, check the programming of *1-95 KTY Sensor Type, 1-96 KTY Thermistor Resource*, and *1-97 KTY Threshold level* match sensor wiring

WARNING/ALARM 12, Torque limit
The torque has exceeded the value in *4-16 Torque Limit Motor Mode* or the value in *4-17 Torque Limit Generator Mode*. *14-25 Trip Delay at Torque Limit* can change this from a warning only condition to a warning followed by an alarm.

Troubleshooting

- If the motor torque limit is exceeded during ramp up, extend the ramp up time
- If the generator torque limit is exceeded during ramp down, extend the ramp down time
- If torque limit occurs while running, possibly increase the torque limit. Be sure the system can operate safely at a higher torque
- Check the application for excessive current draw on the motor

WARNING/ALARM 13, Over current
The inverter peak current limit (approximately 200% of the rated current) is exceeded. The warning lasts about 1.5 s, then the frequency converter trips and issues an alarm. This fault may be caused by shock loading or fast acceleration with high inertia loads. If extended mechanical brake control is selected, trip can be reset externally.

Troubleshooting

- Remove power and check if the motor shaft can be turned
- Check that the motor size matches the frequency converter
- Check parameters 1-20 to 1-25. for correct motor data

ALARM 14, Earth (ground) fault
There is current from the output phases to ground, either in the cable between the frequency converter and the motor or in the motor itself.

Troubleshooting:

- Remove power to the frequency converter and repair the earth fault
- Check for earth faults in the motor by measuring the resistance to ground of the motor leads and the motor with a megohmmeter
- Perform current sensor test

ALARM 15, Hardware mismatch
A fitted option is not operational with the present control board hardware or software.

Record the value of the following parameters and contact the Danfoss supplier:

- *15-40 FC Type*
- *15-41 Power Section*
- *15-42 Voltage*
- *15-43 Software Version*
- *15-45 Actual Typecode String*
- *15-49 SW ID Control Card*
- *15-50 SW ID Power Card*
- *15-60 Option Mounted*
- *15-61 Option SW Version* (for each option slot)

ALARM 16, Short circuit
There is short-circuiting in the motor or motor wiring.

- Remove power to the frequency converter and repair the short circuit

WARNING/ALARM 17, Control word timeout
There is no communication to the frequency converter. The warning is only active when *8-04 Control Timeout Function* is NOT set to OFF.
If *8-04 Control Timeout Function* is set to *Stop* and *Trip*, a warning appears and the frequency converter ramps down until it trips then displays an alarm.

Troubleshooting:

- Check connections on the serial communication cable
- Increase *8-03 Control Timeout Time*
- Check the operation of the communication equipment
- Verify a proper installation based on EMC requirements

WARNING 23, Internal fan fault
The fan warning function is an extra protective function that checks if the fan is running/mounted. The fan warning can be disabled in *14-53 Fan Monitor* (*[0] Disabled*).

For D, E and F enclosures, the regulated voltage to the fan is monitored.

Troubleshooting

- Check fan resistance
- Check soft charge fuses

WARNING 24, External fan fault
The fan warning function is an extra protective function that checks if the fan is running/mounted. The fan warning can be disabled in *14-53 Fan Monitor* (*[0] Disabled*).

For D, E and F enclosures, the regulated voltage to the fan is monitored.

Troubleshooting

- Check fan resistance
- Check soft charge fuses

WARNING 25, Brake resistor short circuit
The brake resistor is monitored during operation. If a short circuit occurs, the brake function is disabled and the warning appears. The frequency converter is still operational but without the brake function. Remove power to the frequency converter and replace the brake resistor (see *2-15 Brake Check*).

WARNING/ALARM 26, Brake resistor power limit
The power transmitted to the brake resistor is calculated as a mean value over the last 120 s of run time. The calculation is based on the intermediate circuit voltage and the brake resistance value set in *2-16 AC brake Max. Current*. The warning is active when the dissipated braking is higher than 90% of the brake resistance power. If *[2] Trip* is selected in *2-13 Brake Power Monitoring*, the frequency converter trips when the dissipated braking power reaches 100%.

⚠WARNING

There is a risk of substantial power being transmitted to the brake resistor if the brake transistor is short-circuited.

WARNING/ALARM 27, Brake chopper fault
The brake transistor is monitored during operation and if a short circuit occurs, the brake function is disabled and a warning is issued. The frequency converter is still operational but, since the brake transistor has short-circuited, substantial power is transmitted to the brake resistor, even if it is inactive.
Remove power to the frequency converter and remove the brake resistor.

This alarm/warning could also occur should the brake resistor overheat. Terminals 104 and 106 are available as brake resistors Klixon inuputs, see *Brake Resistor Temperature Switch* in the *Design Guide*.

WARNING/ALARM 28, Brake check failed
The brake resistor is not connected or not working. Check *2-15 Brake Check*.

ALARM 29, Heat sink temp
The maximum temperature of the heat sink has been exceeded. The temperature fault does not reset until the temperature drops below a defined heat sink temperature. The trip and reset points are different based on the frequency converter power size.

Troubleshooting
Check for the following conditions

- Ambient temperature too high
- Motor cable too long
- Incorrect airflow clearance above and below the frequency converter
- Blocked airflow around the frequency converter
- Damaged heat sink fan
- Dirty heat sink

For the D, E and F enclosures, this alarm is based on the temperature measured by the heat sink sensor mounted inside the IGBT modules. For the F enclosures, this alarm can also be caused by the thermal sensor in the rectifier module.

Troubleshooting

- Check fan resistance
- Check soft charge fuses
- IGBT thermal sensor

ALARM 30, Motor phase U missing
Motor phase U between the frequency converter and the motor is missing.

Troubleshooting

- Remove power from the frequency converter and check motor phase U

ALARM 31, Motor phase V missing
Motor phase V between the frequency converter and the motor is missing.

Remove power from the frequency converter and check motor phase V.

ALARM 32, Motor phase W missing
Motor phase W between the frequency converter and the motor is missing.

Remove power from the frequency converter and check motor phase W.

ALARM 33, Inrush fault
Too many power-ups have occurred within a short time period. Let the unit cool to operating temperature.

WARNING/ALARM 34, communication fault
The fieldbus on the communication option card is not working.

WARNING/ALARM 35, Out of frequency range
This warning is active if the output frequency has reached the high limit (set in *4-53 Warning Speed High*) or low limit (set in *4-52 Warning Speed Low*). In *Process Control, Closed Loop* (*1-00 Configuration Mode*) this warning is displayed.

WARNING/ALARM 36, Mains failure
This warning/alarm is only active if the supply voltage to the frequency converter is lost and *14-10 Mains Failure* is NOT set to *[0] No Function*.

Troubleshooting
- Check the fuses to the frequency converter and mains power supply to the unit

ALARM 38, Internal fault
When an internal fault occurs, a code number defined in the *Table 7.4* is displayed.

Troubleshooting
- Cycle power
- Check that the option is properly installed
- Check for loose or missing wiring

Contact the Danfoss supplier or service department if required. Note the code number for further trouble-shooting directions.

No.	Text
0	Serial port cannot be initialised. Contact the Danfoss supplier or Danfoss Service Department.
256-258	Power EEPROM data is defective or too old.
512	Control board EEPROM data is defective or too old.
513	Communication time out reading EEPROM data.
514	Communication time out reading EEPROM data.
515	Application oriented control cannot recognize the EEPROM data.
516	Cannot write to the EEPROM because a write command is on progress.
517	Write command is under time out.
518	Failure in the EEPROM.
519	Missing or invalid barcode data in EEPROM.
783	Parameter value outside of min/max limits.
1024-1279	A centelegram that has to be sent couldn't be sent.
1281	Digital signal processor flash timeout.
1282	Power micro software version mismatch.
1283	Power EEPROM data version mismatch.
1284	Cannot read digital signal processor software version.
1299	Option SW in slot A is too old.
1300	Option SW in slot B is too old.
1301	Option SW in slot C0 is too old.
1302	Option SW in slot C1 is too old.
1315	Option SW in slot A is not supported (not allowed).
1316	Option SW in slot B is not supported (not allowed).
1317	Option SW in slot C0 is not supported (not allowed).
1318	Option SW in slot C1 is not supported (not allowed).
1379	Option A did not respond when calculating platform version.
1380	Option B did not respond when calculating platform version.
1381	Option C0 did not respond when calculating platform version.
1382	Option C1 did not respond when calculating platform version.
1536	An exception in the application oriented control is registered. Debug information written in LCP.
1792	DSP watchdog is active. Debugging of power part data, motor oriented control data not transferred correctly.
2049	Power data restarted.
2064-2072	H081x: option in slot x has restarted.
2080-2088	H082x: option in slot x has issued a powerup-wait.
2096-2104	H983x: option in slot x has issued a legal powerup-wait.
2304	Could not read any data from power EEPROM.
2305	Missing SW version from power unit.
2314	Missing power unit data from power unit.
2315	Missing SW version from power unit.
2316	Missint lo_statepage from power unit.
2324	Power card configuration is determined to be incorrect at power up.
2325	A power card has stopped communicating while main power is applied.
2326	Power card configuration is determined to be incorrect after the delay for power cards to register.
2327	Too many power card locations have been registered as present.

No.	Text
2330	Power size information between the power cards does not match.
2561	No communication from DSP to ATACD.
2562	No communication from ATACD to DSP (state running).
2816	Stack overflow control board module.
2817	Scheduler slow tasks.
2818	Fast tasks.
2819	Parameter thread.
2820	LCP stack overflow.
2821	Serial port overflow.
2822	USB port overflow.
2836	cfListMempool too small.
3072-5122	Parameter value is outside its limits.
5123	Option in slot A: Hardware incompatible with control board hardware.
5124	Option in slot B: Hardware incompatible with Control board hardware.
5125	Option in slot C0: Hardware incompatible with control board hardware.
5126	Option in slot C1: Hardware incompatible with control board hardware.
5376-6231	Out of memory.

Table 7.4 Code Numbers for Internal Faults

ALARM 39, Heat sink sensor
No feedback from the heat sink temperature sensor.

The signal from the IGBT thermal sensor is not available on the power card. The problem could be on the power card, on the gate drive card, or the ribbon cable between the power card and gate drive card.

WARNING 40, Overload of digital output terminal 27
Check the load connected to terminal 27 or remove short-circuit connection. Check *5-00 Digital I/O Mode* and *parameter 5-01 Terminal 27 Mode*.

WARNING 41, Overload of digital output terminal 29
Check the load connected to terminal 29 or remove short-circuit connection. Check *5-00 Digital I/O Mode* and *5-02 Terminal 29 Mode*.

WARNING 42, Overload of digital output on X30/6 or overload of digital output on X30/7
For X30/6, check the load connected to X30/6 or remove the short-circuit connection. Check *5-32 Term X30/6 Digi Out (MCB 101)*.

For X30/7, check the load connected to X30/7 or remove the short-circuit connection. Check *5-33 Term X30/7 Digi Out (MCB 101)*.

ALARM 46, Power card supply
The supply on the power card is out of range.

There are 3 power supplies generated by the switch mode power supply (SMPS) on the power card: 24 V, 5 V, ±18 V. When powered with 24 V DC with the MCB 107 option, only the 24 V and 5 V supplies are monitored. When powered with 3 phase mains voltage, all 3 supplies are monitored.

WARNING 47, 24V supply low
The 24 V DC is measured on the control card. The external 24 V DC back-up power supply may be overloaded, otherwise contact the Danfoss supplier.

WARNING 48, 1.8V supply low
The 1.8 V DC supply used on the control card is outside of allowable limits. The power supply is measured on the control card. Check for a defective control card. If an option card is present, check for an overvoltage condition.

WARNING 49, Speed limit
When the speed is not within the specified range in *parameter 4-11 Motor Speed Low Limit [RPM]* and *parameter 4-13 Motor Speed High Limit [RPM]*, the frequency converter shows a warning. When the speed is below the specified limit in *1-86 Trip Speed Low [RPM]* (except when starting or stopping) the frequency converter trips.

ALARM 50, AMA calibration failed
Contact the Danfoss supplier or Danfoss Service Department.

ALARM 51, AMA check U_{nom} and I_{nom}
The settings for motor voltage, motor current, and motor power are wrong. Check the settings in parameters 1-20 to 1-25.

ALARM 52, AMA low I_{nom}
The motor current is too low. Check the settings.

ALARM 53, AMA motor too big
The motor is too big for the AMA to operate.

ALARM 54, AMA motor too small
The motor is too small for the AMA to operate.

ALARM 55, AMA parameter out of range
The parameter values of the motor are outside of the acceptable range. AMA does not run.

ALARM 56, AMA interrupted by user
The user has interrupted the AMA.

ALARM 57, AMA internal fault
Try to restart AMA again a number of times, until the AMA is carried out. Note that repeated runs may heat the motor to a level where the resistance R_s and R_r are increased. In most cases, however, this is not critical.

ALARM 58, AMA Internal fault
Contact the Danfoss supplier.

WARNING 59, Current limit
The current is higher than the value in *4-18 Current Limit*. Ensure that motor data in parameters 1-20 to 1-25 are set correctly. Possibly increase the current limit. Be sure that the system can operate safely at a higher limit.

WARNING 60, External interlock
External interlock has been activated. To resume normal operation, apply 24 V DC to the terminal programmed for external interlock and reset the frequency converter (via serial communication, digital I/O, or by pressing [Reset]).

WARNING 61, Tracking error
An error has been detected between the calculated motor speed and the speed measurement from the feedback device. The function for Warning/Alarm/ Disable is set in *4-30 Motor Feedback Loss Function*, error setting in *4-31 Motor Feedback Speed Error*, and the allowed error time in *4-32 Motor Feedback Loss Timeout*. During a commissioning procedure the function may be effective.

WARNING 62, Output frequency at maximum limit
The output frequency is higher than the value set in *4-19 Max Output Frequency*.

ALARM 64, Voltage Limit
The load and speed combination demands a motor voltage higher than the actual DC-link voltage.

WARNING/ALARM 65, Control card over temperature
The control card has reached its trip temperature of 80 °C.

WARNING 66, Heat sink temperature low
The frequency converter is too cold to operate. This warning is based on the temperature sensor in the IGBT module.
Increase the ambient temperature of the unit. Also, a trickle amount of current can be supplied to the frequency converter whenever the motor is stopped by setting *2-00 DC Hold/Preheat Current* at 5% and *1-80 Function at Stop*

Troubleshooting
The heatsink temperature measured as 0 °C could indicate that the temperature sensor is defective, causing the fan speed to increase to the maximum. If the sensor wire between the IGBT and the gate drive card is disconnected, this warning would result. Also, check the IGBT thermal sensor.

ALARM 67, Option module configuration has changed
One or more options have either been added or removed since the last power-down. Check that the configuration change is intentional and reset the unit.

ALARM 68, Safe stop activated
Safe stop has been activated. To resume normal operation, apply 24 V DC to terminal 37, then send a reset signal (via Bus, Digital I/O, or by pressing [Reset]).

ALARM 69, Power card temperaturePower card temperature
The temperature sensor on the power card is either too hot or too cold.

Troubleshooting
- Check the operation of the door fans
- Check that the filters for the door fans are not blocked
- Check that the gland plate is properly installed on IP21/IP54 (NEMA 1/12) frequency converters

ALARM 70, Illegal FC configuration
The control card and power card are incompatible. Contact the supplier with the type code of the unit from the nameplate and the part numbers of the cards to check compatibility.

ALARM 71, PTC 1 safe stop
Safe Stop has been activated from the PTC Thermistor Card (motor too warm). Normal operation can be resumed when the applies 24 V DC to T37 again (when the motor temperature reaches an acceptable level) and when the Digital Input from the is deactivated. When that happens, a reset signal must be is be sent (via Bus, Digital I/O, or by pressing [Reset]).

NOTICE

If automatic restart is enabled, the motor may start when the fault is cleared.

ALARM 72, Dangerous failure
Safe Stop with Trip Lock. Unexpected signal levels on safe stop and digital input from the PTC thermistor card.

WARNING 73, Safe stop auto restart
Safe stopped. With automatic restart enabled, the motor may start when the fault is cleared.

WARNING 76, Power unit setup
The required number of power units does not match the detected number of active power units. When replacing an F-frame module, this occurs if the power specific data in the module power card does not match the rest of the frequency converter.

Troubleshooting
- Confirm the spare part and its power card are the correct part number

WARNING 77, Reduced power mode
This warning indicates that the frequency converter is operating in reduced power mode (i.e. less than the allowed number of inverter sections). This warning is generated on power cycle when the frequency converter is set to run with fewer inverters and remains on.

ALARM 79, Illegal power section configuration
The scaling card is the incorrect part number or not installed. Also MK102 connector on the power card could not be installed.

ALARM 80, Drive initialised to default value
Parameter settings are initialised to default settings after a manual reset. Reset the unit to clear the alarm.

ALARM 91, Analog input 54 wrong settings
Switch S202 has to be set in position OFF (voltage input) when a KTY sensor is connected to analog input terminal 54.

ALARM 92, No flow
A no-flow condition has been detected in the system. *parameter 22-23 No-Flow Function* is set for alarm. Troubleshoot the system and reset the frequency converter after the fault has been cleared.

ALARM 93, Dry pump
A no-flow condition in the system with the frequency converter operating at high speed may indicate a dry pump. *parameter 22-26 Dry Pump Function* is set for alarm. Troubleshoot the system and reset the frequency converter after the fault has been cleared.

ALARM 94, End of curve
Feedback is lower than the set point. This may indicate leakage in the system. *parameter 22-50 End of Curve Function* is set for alarm. Troubleshoot the system and reset the frequency converter after the fault has been cleared.

ALARM 95, Broken belt
Torque is below the torque level set for no load, indicating a broken belt. *22-60 Broken Belt Function* is set for alarm. Troubleshoot the system and reset the frequency converter after the fault has been cleared.

ALARM 96, Start delayed
Motor start has been delayed due to short-cycle protection. *22-76 Interval between Starts* is enabled. Troubleshoot the system and reset the frequency converter after the fault has been cleared.

WARNING 97, Stop delayed
Stopping the motor has been delayed due to short cycle protection. *22-76 Interval between Starts* is enabled. Troubleshoot the system and reset the frequency converter after the fault has been cleared.

WARNING 98, Clock fault
Time is not set or the RTC clock has failed. Reset the clock in *0-70 Date and Time*.

ALARM 243, Brake IGBT
This alarm is only for F Frame frequency converters. It is equivalent to Alarm 27. The report value in the alarm log indicates which power module generated the alarm:

1 = left most inverter module.

2 = middle inverter module in F2 or F4 frequency converter.

2 = right inverter module in F1 or F3 frequency converter.

3 = right inverter module in F2 or F4 frequency converter.

5 = rectifier module.

ALARM 244, Heatsink temperature
This alarm is only for F Frame frequency converters. It is equivalent to Alarm 29. The report value in the alarm log indicates which power module generated the alarm:

1 = left most inverter module.

2 = middle inverter module in F2 or F4 frequency converter.

2 = right inverter module in F1 or F3 frequency converter.

3 = right inverter module in F2 or F4 frequency converter.

5 = rectifier module.

ALARM 245, Heatsink sensor
This alarm is only for F Frame frequency converters. It is equivalent to Alarm 39. The report value in the alarm log indicates which power module generated the alarm:

1 = left most inverter module.

2 = middle inverter module in F2 or F4 frequency converter.

2 = right inverter module in F1 or F3 frequency converter.

3 = right inverter module in F2 or F4 frequency converter.

5 = rectifier module.

ALARM 246, Power card supply
This alarm is only for F Frame frequency converters. It is equivalent to Alarm 46. The report value in the alarm log indicates which power module generated the alarm:

1 = left most inverter module.

2 = middle inverter module in F2 or F4 frequency converter.

2 = right inverter module in F1 or F3 frequency converter.

3 = right inverter module in F2 or F4 frequency converter.

5 = rectifier module.

ALARM 247, Power card temperature
This alarm is only for F Frame frequency converter. It is equivalent to Alarm 69. The report value in the alarm log indicates which power module generated the alarm:

1 = left most inverter module.

2 = middle inverter module in F2 or F4 frequency converter.

2 = right inverter module in F1 or F3 frequency converter.

3 = right inverter module in F2 or F4 frequency converter.

5 = rectifier module.

ALARM 248, Illegal power section configuration
This alarm is only for F Frame frequency converters. It is equivalent to Alarm 79. The report value in the alarm log indicates which power module generated the alarm:

1 = left most inverter module.

2 = middle inverter module in F2 or F4 frequency converter.

2 = right inverter module in F1 or F3 frequency converter.

3 = right inverter module in F2 or F4 frequency converter.

5 = rectifier module.

WARNING 250, New spare part
A component in the frequency converter has been replaced. Reset the frequency converter for normal operation.

WARNING 251, New typecode
The power card or other components have been replaced and the typecode changed. Reset to remove the warning and resume normal operation.

Index

www.danfoss.com/drives

130R0347 MG20P402 Rev. 2013-12-16