ENGINEERING
TOMORROW

Design Guide

# VACON® NXP DCGuard™

drives.danfoss.com | VACON®

# Contents


1 Introduction 5
1.1 Purpose of this Design Guide 5
1.2 Additional Resources 5
1.3 Manual Version 5
1.4 Type Approvals and Certifications 5

2 Safety 6
2.1 Safety Instructions 6

3 Product Overview 7
3.1 DC Grids and Selectivity 7
3.2 Selectivity with Fuses 7
3.3 Application Functionality 8
3.4 Protection Functions 9
3.4.1 Instant Current Cut-Off 9
3.4.2 Rapid Current Cut-Off 10
3.4.3 High Current Cut-Off 10
3.4.4 Overload Detection 10
3.5 Controlled Voltage Ramp-Up 10
3.5.1 Controlled Voltage Ramp-Up of a Loaded System 10
3.5.2 Controlled Voltage Ramp-Up into a Short Circuit 10
3.6 System Control Principle 10
3.7 Application Requirements 11
3.8 System Integrator Responsibilities 11
3.9 System Selectivity 12

4 Component Overview 14
4.1 Fuses 14
4.2 Filters 15
4.2.1 Calculating the Filter Impedance 15
4.3 Mechanical Disconnectors 16
4.3.1 Closing the Mechanical Disconnectors 17
4.3.2 Opening the Mechanical Disconnectors 18

5 Specifications 19
5.1 Technical Data 19
5.2 Nameplate 20
5.3 Voltage and Current Rating Guidelines 20
5.4 Operation Temperature Range 21
5.5 Power Ratings 21

5.5.1 Air-Cooled 500 V Units 21
5.5.2 Air-Cooled 690 V Units 22
5.5.3 Liquid-Cooled 500 V Units 23
5.5.4 Liquid-Cooled 690 V Units 24
5.6 Total Capacitance, Inductance, and Resistance 25

6 Electrical Installation Guidelines 26
6.1 DCGuard Topologies 26
6.1.1 Directional Topology 26
6.1.2 Peer-to-peer Topology 26
6.1.3 Ring Topology 27
6.2 Parallel Installation 28
6.3 Bus-Tie Cables 28
6.4 HF Capacitors 29
6.5 Cabling 29
6.5.1 Wiring Diagrams for Air-Cooled Inverter Units 30
6.5.2 Wiring Diagrams for Liquid-Cooled Inverter Units 32
6.6 Terminal Definitions 36
6.6.1 Terminal Locations in Air-Cooled Inverter Units 36
6.6.2 Terminal Locations in Liquid-Cooled Inverter Units 39
6.7 Control I/O Configuration 42

7 How to Select the VACON® NXP DCGuard™ 44
7.1 VACON® Select Web Tool 44

# 1 Introduction

## 1.1 Purpose of this Design Guide

This design guide is intended for qualified personnel, such as:

- Project and systems engineers.
- Design consultants.
- Application and product specialists.

The design guide provides technical information to understand the capabilities of VACON® NXP DCGuard™ for integration into DC supply systems. Its purpose is to provide design considerations and planning data for integration of the device into a system. It caters for the selection of the drive units and options for the application in a diversity of installations. Reviewing the detailed product information in the design stage enables developing a well-conceived system with optimal functionality and efficiency.

## 1.2 Additional Resources

Other resources are available to understand installation, programming, operation, and options.

- The VACON® NXP DCGuard™ operating guide provides information about the installation and operation of the VACON® NXP DCGuard™ application.
- The VACON® NXP DCGuard™ application guide provides greater detail on how to work with the application software and how to set the parameters of the AC drive modules.
- VACON® NXP Common DC Bus and VACON® NXP Liquid-cooled Common DC Bus user manuals provide detailed information for the installation, commissioning, and operation of the AC drive modules.
- The operating and installation guides for VACON® options give detailed information about specific drive options.

Supplementary publications and manuals are available from Danfoss. See www.danfoss.com for listings.

## 1.3 Manual Version

This manual is regularly reviewed and updated. All suggestions for improvement are welcome.

The original language of this manual is English.

**Table 1: VACON® NXP DCGuard™ Design Guide Version**

| Version | Release date | Remarks |
|---|---|---|
| A | 04.12.2018 | First release |

## 1.4 Type Approvals and Certifications

VACON® NXP DCGuard™ is type approved as a circuit breaker/DC-bus tie breaker. For a list of the approvals and certifications, see the VACON® NXP DCGuard™ product page at www.danfoss.com.

**NOTICE**

VACON® NXP DCGuard™ acts as a protection device in a DC power distribution system. Separate approvals as a DC-bus tie breaker can be required.

# 2 Safety

## 2.1 Safety Instructions

A safety guide is included in the product delivery. Read the safety instructions carefully before starting to work in any way with the system or its components.

The warnings and cautions in the safety guide give important information on how to prevent injury and damage to the equipment or the system. Read the warnings and cautions carefully and obey their instructions.

The product manuals with applicable safety, warning, and caution information can be downloaded from https://www.danfoss.com/en/service-and-support/.

# 3 Product Overview

## 3.1 DC Grids and Selectivity

Utilizing DC grids rather than AC grids enables power distribution with lower power losses. However, there are few or no international standards for building a DC grid, especially in marine applications. Short circuit handling is a challenge in DC grids and it is difficult to ensure the required system functionality by using fuses. Ensuring selectivity and limited short circuit energy requires more sophisticated protection devices.

Ensuring selectivity in a common-DC system is a challenge, and it becomes even more challenging when there are several inverters connected to the same DC bus. In a short circuit in the DC bus, the protection fuses burn, but often so do the fuses feeding other vital equipment in the same system. Even fuses which are not connected directly (nearest) to the short circuit can burn, for example, the fuses feeding inverters in another place in the same DC bus.

During the first 100–200 µs after a short circuit occurs, the capacitors inside each inverter will supply current to the fault. Since capacitors can feed out current extremely fast, selectivity is difficult to achieve by only using fuses. One way to improve the total selectivity in a common-DC-bus system is to split the system in two separate DC grids by using a fast-current cutter/DC-bus tie device.

Danfoss Drives has developed a new fast-current cutter/DC-bus tie device, the VACON® NXP DCGuard™. The semiconductor protection device is based on standard VACON® NXP inverter hardware and new software. During a short circuit, the VACON® NXP DCGuard™ disconnects the healthy side from the faulty side in microseconds, before the short circuit affects the healthy side. The fast isolation ensures that the healthy side can continue to operate as normal, also after the short circuit situation. The DCGuard cannot influence what happens inside the faulty DC grid during a short circuit situation.

## 3.2 Selectivity with Fuses

In some demanding applications (for example, marine applications) there is a requirement that a single fault must not shut down the complete system. Because of this requirement, it is required to build the system so that it can withstand a fault without having a total blackout.

Maintaining the required DC voltage on the healthy side of the DC grid during a fault is one of the main challenges when using fuses to disconnect the healthy part of the DC grid from the faulty part in a short circuit situation. When a short circuit happens, the voltage on the faulty side is close to 0 V. Because of the low resistance inside the fuses, also the voltage on the healthy side decreases. It takes time for the fuses to clear the fault, so there is a significant risk that also the voltage on the healthy side decreases below the undervoltage trip limit for the inverters in the healthy side. The result is a total blackout.

illustration 1 shows the DC voltage in grids 1 and 2, and the DC current through the fuses when there is a fault in DC grid 2.

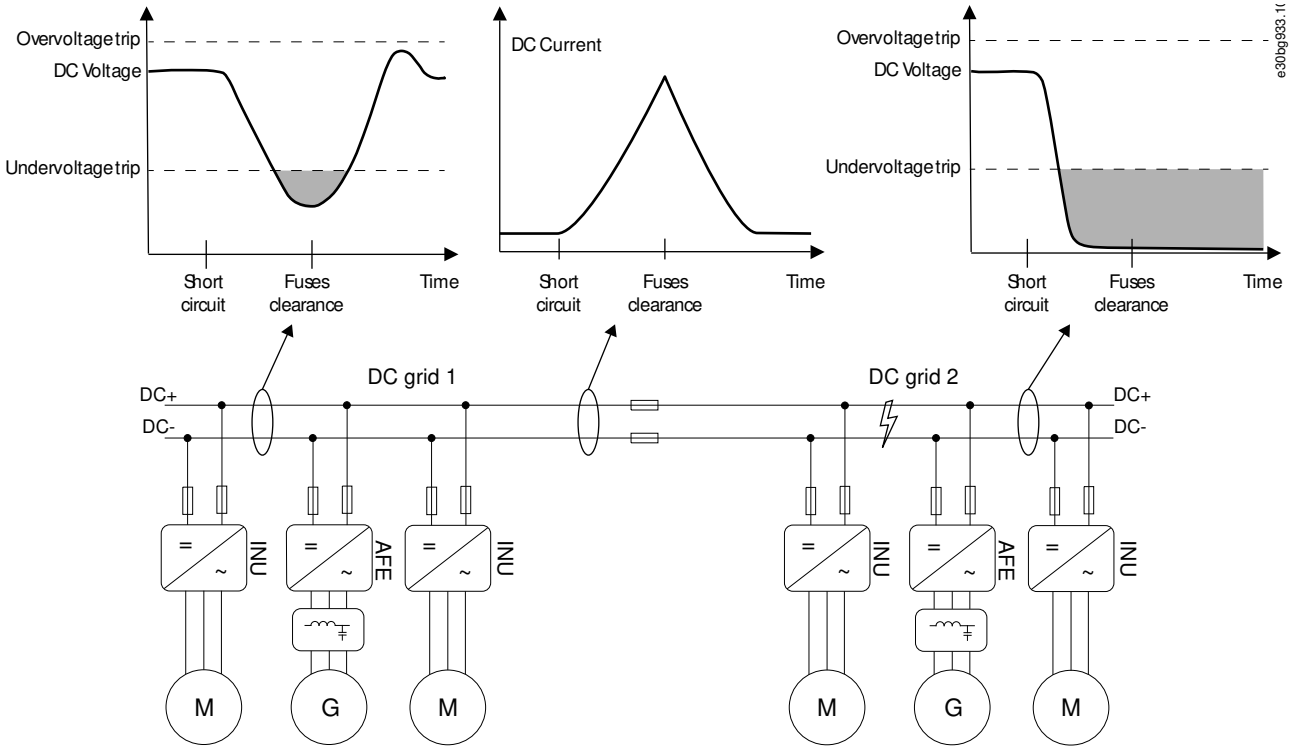


**Illustration 1: Example of Selectivity with Fuses in a Fault Situation**

## 3.3 Application Functionality

VACON® NXP DCGuard™ is a fast DC current cutter device that detects and cuts off an outgoing short-circuit current. The main function is to isolate the faulty DC grid from the healthy DC grid, before that fault affects the healthy DC grid.

Two inverter units in a DCGuard peer-to-peer topology are required to be able to cut off short-circuit current both ways.

VACON® NXP DCGuard™ consist of VACON® NXP inverter units and application software ADFIF102. To ensure the correct functionality and safety level, always use the following components together with the DCGuard in a peer-to-peer system:

- An upstream mechanical disconnector if safe disconnection is required.
- Type aR supply fuses in each DC supply line (see the VACON® NXP DCGuard™ design guide for instructions).
- A dU/dt filter (a standard VACON® dU/dt filter can be used).

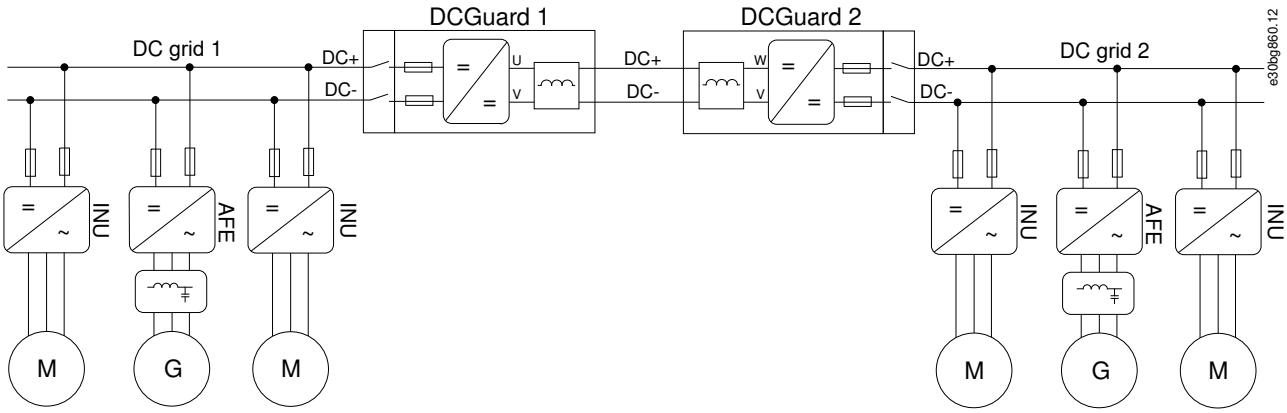


**Illustration 2: VACON® NXP DCGuard™ Peer-to-Peer Topology**

## 3.4 Protection Functions

The VACON® NXP DCGuard™ application has different short-circuit protection levels. The levels can be used to ensure correct system selectivity. The instant current cut-off is non-programmable, but the other functions can be programmed. The protection functions also have separate programmable responses.

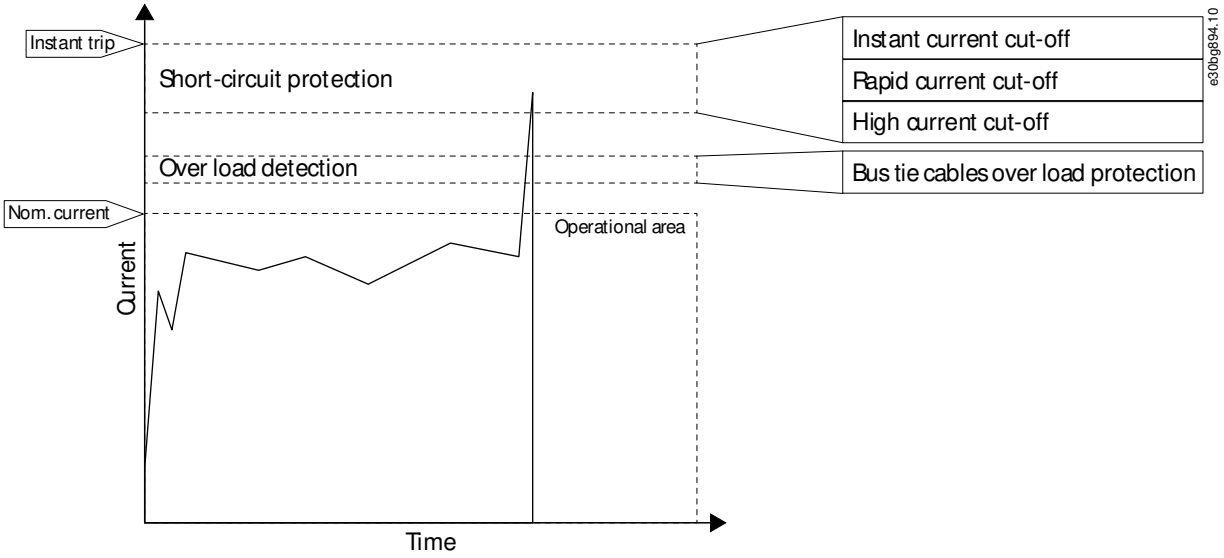


**Illustration 3: VACON® NXP DCGuard™ Safety Layers**

### 3.4.1 Instant Current Cut-Off

- Non-programmable short-circuit current cut-off.
- VACON® NXP DCGuard™ trips within µs to fault F1 in a low impedance short circuit.
- The functionality is handled by the VACON® NXP inverter hardware.

### 3.4.2 Rapid Current Cut-Off

- Programmable short-circuit current cut-off.
- VACON® NXP DCGuard™ trips within 10–100 µs to fault F63, F64, or F65 in a low to medium impedance short circuit.
- This functionality is handled by the system software and requires enough inductance in the output filter. If there is a short circuit in the bus-tie cables, a standard dU/dt filter does not have enough inductance to ensure an exact tripping level.
- For details about programming this function, see the VACON® NXP DCGuard™ Application Guide.

### 3.4.3 High Current Cut-Off

- Programmable high circuit current cut-off.
- VACON® NXP DCGuard™ trips within 100 ms to fault F86, F87, or F88 if the current is too high for a too long time.
- This functionality is handled by the VACON® NXP DCGuard™ application software.
- For details about programming this function, see the VACON® NXP DCGuard™ Application Guide.

### 3.4.4 Overload Detection

- Programmable overload detection.
- VACON® NXP DCGuard™ trips within 100 ms to fault F83, F84, or F85 in an overload situation in the DC cables out from the DCGuard.
- This functionality is handled by the VACON® NXP DCGuard™ application software.
- For details about programming this function, see the VACON® NXP DCGuard™ Application Guide.

## 3.5 Controlled Voltage Ramp-Up

To prevent a high inrush current when a VACON® NXP DCGuard™ is connecting to the bus-tie cables, a controlled voltage ramp up of the bus-tie cable voltage is always performed before closing the DCGuard. The voltage is ramped up from the current level to full DC voltage. Typically, the voltage rise time from 0 V to full DC voltage is 200–400 ms. The voltage rise time and switching frequency are programmable.

### 3.5.1 Controlled Voltage Ramp-Up of a Loaded System

VACON® NXP DCGuard™ can perform a controlled voltage ramp-up of a loaded system, but the voltage rise time must be adjusted case by case. The maximum current must stay below the tripping limit for the VACON® NXP DCGuard™ units during the controlled voltage ramp-up.

### 3.5.2 Controlled Voltage Ramp-Up into a Short Circuit

If a controlled voltage ramp-up is performed to a system where a short circuit is present, the VACON® NXP DCGuard™ detects the short circuit and trips.

## 3.6 System Control Principle

VACON® NXP DCGuard™ is only one component in a complete system, which often includes different layers of controls with different responsibilities.

- The Energy Management System (EMS) optimizes the energy efficiency of the system. The optimization can include selecting and prioritizing the use of different energy sources. Normal time scales are from tens of seconds to hours.
- The Power Management System (PMS) includes controlling the power balance in a system which has multiple energy/power sources. Normal time scales are from grid cycle (20 ms/50 Hz) to seconds.
- The Power Conversion System (PCS) is the system relevant to the VACON® NXP DCGuard™. The PCS includes Power Conversion Control (PCC) and Power Conversion Hardware (PCH), which is the VACON® NXP hardware. The PCS controls the power conversion between the energy storage and the system. Normal time scales are from micro seconds to grid cycles.
- The Storage System (SS) includes the Battery Management System (BMS) and the battery. The BMS monitors the storage system and the storage cell level phenomena.

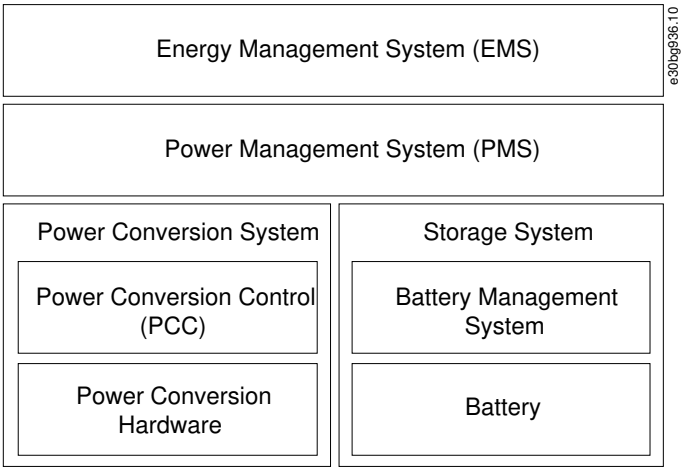


**Illustration 4: Typical Layers in a Control System**

## 3.7 Application Requirements

The VACON® NXP DCGuard™ application requires:

- NXP3 control board VB761 revision D or newer.
- System software version NXP00002V193 or newer.

## 3.8 System Integrator Responsibilities

The VACON® NXP DCGuard™ is developed to be used as a component in a common-DC system. System design and control must be done by the system integrator.

The VACON® NXP DCGuard™ peer-to-peer system is made of two independent DCGuard units, although they operate as a pair. It is the responsibility of the system integrator to implement the two DCGuard units in to the system, to ensure correct functionality, and to ensure correct safety level.

Especially consider the following when designing the system:

- A fault in one of the two DCGuard units must lead to the opening of the other DCGuard unit.
- To ensure safe disconnection of the VACON® NXP DCGuard™ and the bus-tie cables, a mechanical disconnector is required in front of each DCGuard.
- The mechanical disconnector in front of each DCGuard unit must only be closed when the voltage level on both sides of the mechanical disconnector is within the limits of the mechanical disconnectors closing capacity. Meaning that the inrush current is within the mechanical disconnectors closing capacity.
- The mechanical disconnector in front of each DCGuard unit must only be opened when the conducted current is less than the maximum breaking capability of the mechanical disconnector.
- Closing a DCGuard unit must only be possible when the other side of the system is ready to be powered up.
- VACON® NXP liquid-cooled inverters do not control or monitor the cooling liquid flow through their own cooling elements. The system integrator must therefore take responsibility of implementing sufficient control and monitoring of the cooling liquid circuit.
- If the active control place for the DCGuard unit is keypad, make sure that there is a possibility to stop the DCGuard also in case the keypad is removed from the drive. In case the parameter *Keypad/PC fault mode* (ID 1329) is set to 0/*No response* or 1/*Warning*, it must be ensured on system level that there is the possibility for local control. This can be done, for example, by forcing to I/O or fieldbus control by a digital input.

## 3.9 System Selectivity

VACON® NXP DCGuard™ has received several Type approval certificates, but often the approval societies require an approval of the whole system. To get such a system approval, a selectivity study of the faulty side is required.

MATLAB®/Simulink® can be used to simulate what happens inside the faulty side of the DC grid during a short circuit. Contact the nearest Danfoss Drives representative for more information.

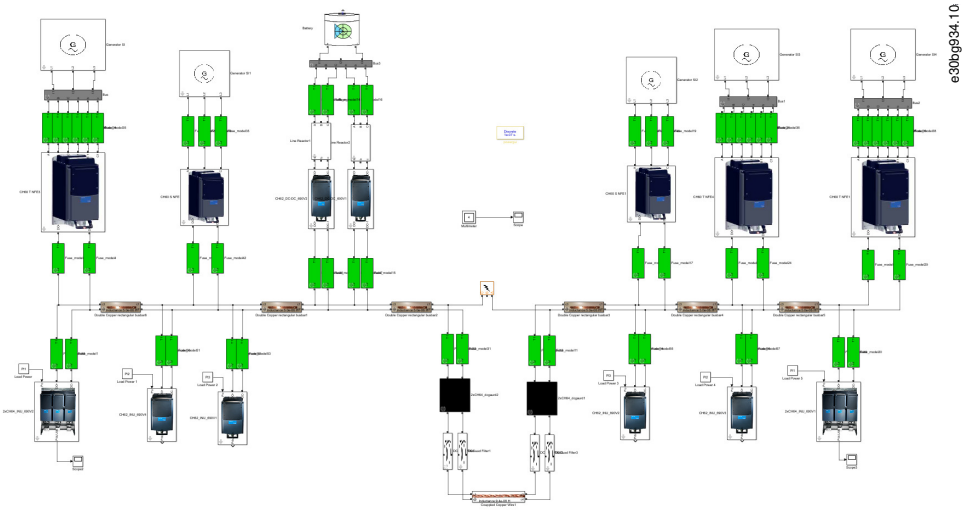


**Illustration 5: Model of a Complete DC-Supply System**

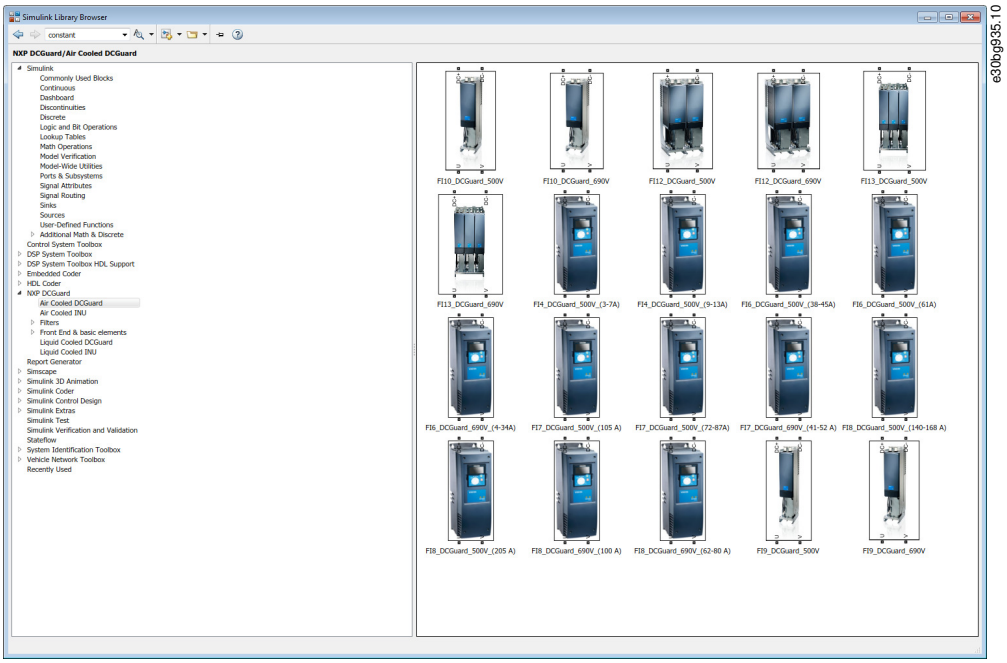


**Illustration 6: VACON® NXP DCGuard™ Library in Simulink®**

# 4 Component Overview

## 4.1 Fuses

Always protect the VACON® NXP DCGuard™ with aR-type fuses in each DC-supply line.

If there is a short circuit inside the VACON® NXP DCGuard™ unit, the aR-type fuses in each DC-supply line disconnect the unit from the feeding DC grid. The fuses are back-up fuses for semiconductor protection and only give protection against the effects of short circuit current. The fuses do not give any overload protection.

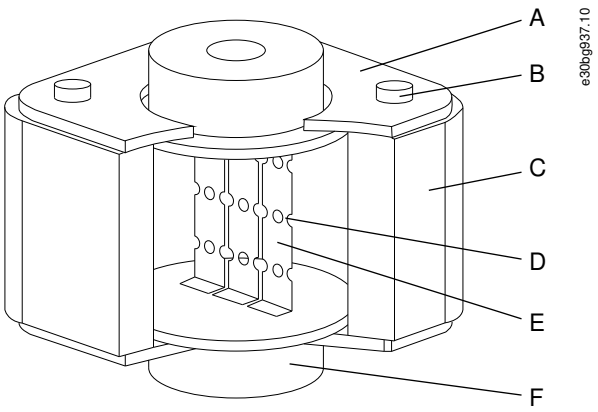


| | |
|---|---|
| **A** End plate | **B** Screw |
| **C** Ceramic body | **D** Reduced sections of element ("weak spots") |
| **E** Element | **F** End fitting |

**Illustration 7: Structure of a Type aR Fuse**

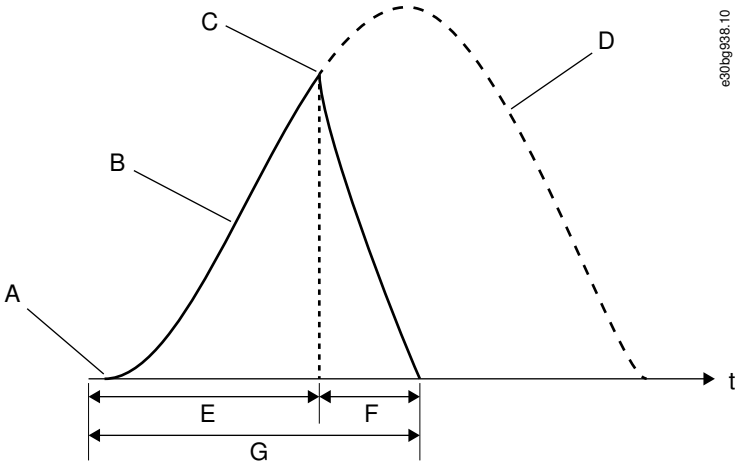


| | |
|---|---|
| **A** Start of fault | **B** Actual current |
| **C** Peak fault current reached at start of arcing | **D** Possible unrestricted fault current |
| **E** Pre-arcing time | **F** Arcing time |

| | |
|---|---|
| **G** Total clearing time | |

**Illustration 8: Fuse Functionality in a Fault Situation**

See the VACON® NXP user manuals for instructions for the fuse selection. The fuses are not included in the VACON® NXP DCGuard™ delivery.

**⚠ CAUTION ⚠**

**INCORRECT FUSE CONFIGURATION**

In certain cases, the correct fuse configuration can differ from the default configuration given in the VACON® NXP user manual!

- To find the correct fuse configuration, do a system calculation.

## 4.2 Filters

VACON® NXP DCGuard™ requires a dI/dt filter in each of the connected output phases (U, V, W).

The purpose for the inductance is to limit the current rise time, so that the programmable protection functionality of the VACON® NXP DCGuard™ can detect the short circuit and cut the current. If there is a short circuit in the terminals, the dI/dt filter has a higher dI/dt, but is protected by the overcurrent protection of the VACON® NXP inverter hardware.

The filters for VACON® NXP DCGuard™ must fulfill these specifications:

- Approximately 2% inductance. See 4.2.1 Calculating the Filter Impedance.
- Full continuous DC current.
- Short time 5 kHz switching frequency.

A standard VACON® dU/dt filter has about 1.5–2% inductance and it can be used as the required dI/dt filter for VACON® NXP DCGuard™. All VACON® dU/dt filters are designed for 0–70 Hz and can therefore conduct the same amount of DC current as the AC current rating. For more information, see the VACON® NX Filters User Manual.

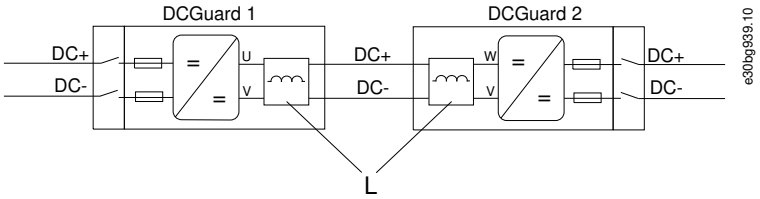


| | |
|---|---|
| **L** Inductor | |

**Illustration 9: VACON® NXP DCGuard™ with Serial-Connected Inductances in Each Output Phase**

### 4.2.1 Calculating the Filter Impedance

If the required inductance (L) value is known, the impedance (Z) in percentage can be calculated from:

$$Z(\%) = 2\pi\sqrt{3} \cdot \frac{I\mathrm{RMS} \cdot f \cdot L}{V\mathrm{LL}}$$

$V_{LL}$ is the line-to-line voltage, $I_{RMS}$ is the RMS current and f is the frequency.

If the impedance percentage is known, the required inductance can be calculated from:

$$L = \frac{V_{\mathrm{LL}} \cdot Z(\%)}{2\pi\sqrt{3} \cdot I_{\mathrm{RMS}} \cdot f}$$

**Example:**

DUT-0420-6-0-P

- $V_{LL}$ = 690 V
- L = 47 µH
- $I_{RMS}$ = 420 A
- f = 50 Hz
- Z(%) = 0.0156 ≈ 2%

The inductor impedance at DC (f = 0 Hz) is basically 0% and is limited only by the inductor DC resistance. In DUT-0420-6-0-P the DC resistance is 0.000411 Ω per phase, which corresponds to a 0.17 V voltage drop at the full current of 420 A.

**Example:**

DUT-1200-6-0-P

- $V_{LL}$ = 690 V
- L = 16 µH
- $I_{RMS}$ = 1200 A
- f = 50 Hz
- Z(%) = 0.0151 ≈ 2%

## 4.3 Mechanical Disconnectors

The main purpose of the mechanical disconnector is to ensure a safe disconnection of the VACON® NXP DCGuard™ from the feeding DC grid. The functionality of the VACON® NXP DCGuard™ is not dependent on a mechanical disconnector to provide overcurrent and short-circuit protection. To ensure safe disconnection of the DCGuard and bus-tie cables, a mechanical disconnector is required on the feeding DC grid side of each DCGuard.

The mechanical disconnector can be manual or electrically operated. Opening and closing of the mechanical disconnector must follow the guidelines given in this manual. Operation that is not according to these guidelines can cause damage on the equipment. VACON® NXP DCGuard™ does not have a functionality to prevent incorrect operation of the mechanical disconnector. The system integrator is therefore responsible for implementing precautions to ensure that the opening and closing of the mechanical disconnector is always according to the given guidelines.

The mechanical disconnectors are not included in the VACON® NXP DCGuard™ delivery.

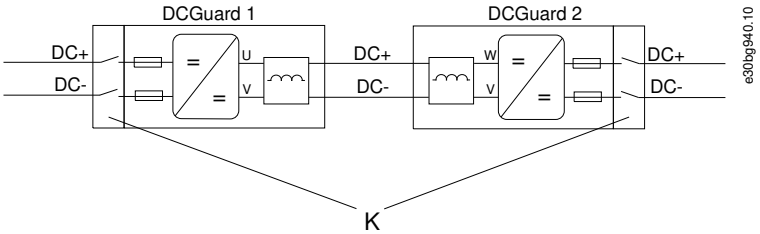


| | |
|---|---|
| **K** | Mechanical disconnector |

**Illustration 10: Mechanical Disconnectors Installation Locations**

## 4.3.1 Closing the Mechanical Disconnectors

The mechanical disconnectors must only be closed when the voltage levels on both sides of the mechanical disconnectors are within the closing capacity limits of the disconnectors. The inrush current must be within the closing capacity of the mechanical disconnectors.

There are two alternative ways to close the mechanical disconnectors:

- The mechanical disconnectors can be closed when both the DC bus and the DCGuard are powered down, so that there is no DC voltage present in the DC bus or the DCGuard.
- The mechanical disconnectors can be closed when the input and output sides of the mechanical disconnectors are charged with the same DC-voltage level.

**⚠ CAUTION ⚠**

**UNSAFE OPERATION OF THE MECHANICAL DISCONNECTORS**

VACON® NXP DCGuard™ has no functionality to prevent unsafe operation of the mechanical disconnectors.

- The system integrator must ensure correct and safe closing and opening of the mechanical disconnectors.

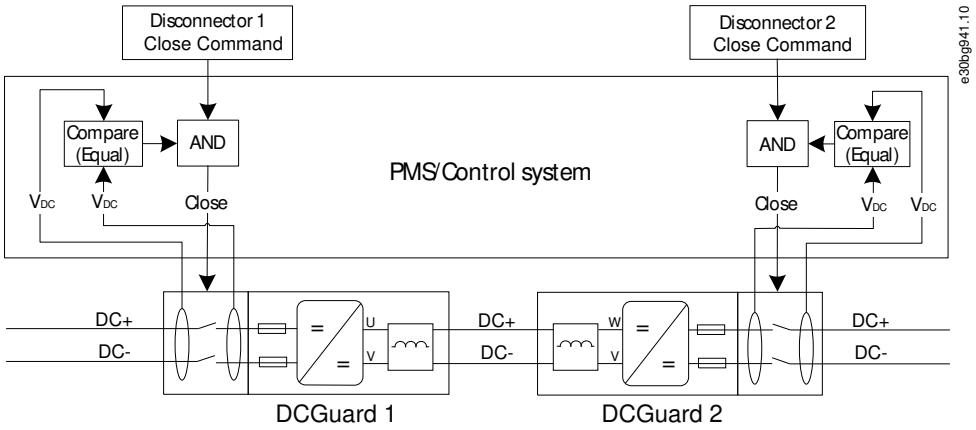


**Illustration 11: Closing Logic of the Mechanical Disconnectors**

### 4.3.2 Opening the Mechanical Disconnectors

The mechanical disconnectors must only be opened when the conducted current is less than the maximum breaking capability of the mechanical disconnectors.

There are two alternative ways to open the mechanical disconnectors:

- The mechanical disconnectors can be opened when both the DC bus and the DCGuard are powered down, so that there is no DC voltage present in the DC bus or the DCGuard.
- The mechanical disconnectors can only be opened when the conducted current is less than the maximum breaking capability of the mechanical disconnectors. VACON® NXP DCGuard™ has an output signal indicating that it is open and the conducted current is less than 5% of the nominal current. This signal can be used as an indication of the current level, but the PMS/system integrator control system must take the final opening decision.

**⚠ CAUTION ⚠**

**UNSAFE OPERATION OF THE MECHANICAL DISCONNECTORS**

VACON® NXP DCGuard™ has no functionality to prevent unsafe operation of the mechanical disconnectors.

- The system integrator must ensure correct and safe closing and opening of the mechanical disconnectors.

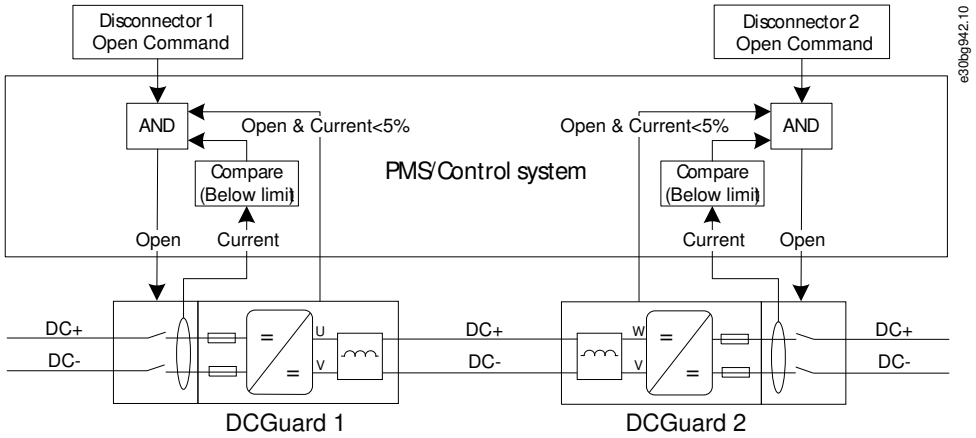


**Illustration 12: Opening Logic of the Mechanical Disconnectors**

# 5 Specifications

## 5.1 Technical Data

**Table 2: Technical Data for VACON® NXP DCGuard™**

| | |
|---|---|
| Input voltage $U_{IN}$ | Voltage class 5: 380–500 V (±10%) / DC-link voltage = 465–800 V DC (±0%)<br><br>Voltage class 6: 525–690 V (±10%) / DC-link voltage = 640–1100 V DC (±0%) |
| Rated current | Rated AC current = Rated DC current<br><br>Examples:<br>• Rating for NXP1500 690 V used as a motor drive: 1500 A, 0–320 Hz<br>• Rating for NXP1500 690 V used as VACON® NXP DCGuard™: 1500 A DC |
| Networks | IT Grid, with appropriate insulation monitoring to PE |
| Output voltage | Normal operation: $U_{IN} \approx U_{OUT}$<br><br>Charging from 0 V to $\approx U_{IN}$ |
| Output frequency | Normal operation: DC voltage (directly connected to DC terminals)<br><br>Charging: DC voltage (Pulse Width Modulation) |
| Output filter | dI/dt filter, recommended 2% inductance |
| Switching frequency | Normal operation: No switching / 0 kHz<br><br>Charging: 1–10 kHz; Factory default 5 kHz |
| Control method | Individual IGBT control |
| AC short-circuit current | Maximum AC short circuit current to be < 100 kA |
| DC short-circuit current | Limited by the aR fuses in each DC supply line<br><br>Use aR fuses according to the VACON® NXP inverter user manual.<br><br>*(1)* |
| Overvoltage protection | 500 V / Voltage class 5: 911 V DC<br><br>690 V / Voltage class 6: 1258 V DC |
| Undervoltage protection | 500 V / Voltage class 5: 333 V DC<br><br>690 V / Voltage class 6: 460 V DC |
| IGBT hardware overcurrent protection current | $\leq I_H \times 3–5$ *(2)* |
| IGBT hardware overcurrent protection delay | Hardware circuit, instant without time delay |

[1] *In certain cases, it can be required to do a system calculation to find a proper fuse configuration, which can differ from the default fuse configuration given in the manuals.*

[2] *Unit dependent. See 5.5 Power Ratings.*

## 5.2 Nameplate

The VACON® NXP inverter units have a nameplate which contains the information listed in table 3.

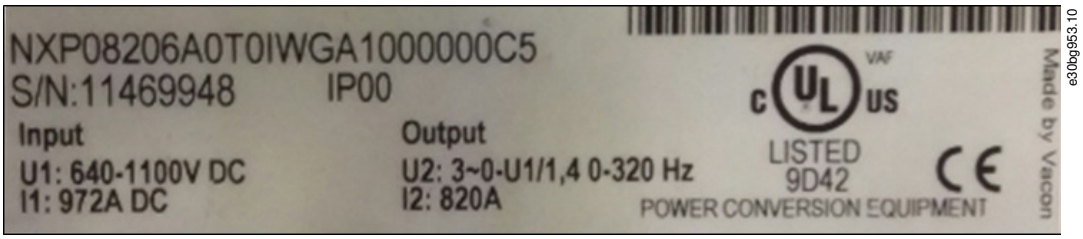


**Illustration 13: The Nameplate of a VACON® NXP Inverter**

**Table 3: Information Listed in a VACON® NXP Inverter Nameplate**

| Marking | Definition | Additional information |
|---|---|---|
| NXP08206… | Type code | See the VACON® NXP inverter user manual for more information |
| S/N | Serial number | Unique serial number |
| IP00 | IP protection | See the VACON® NXP inverter user manual for more information |
| U1 | Input voltage | DC voltage |
| I1 | Input current | DC-link current (I=P/U) |
| U2 | Output voltage | 0–320 Hz |
| I2 | Output current | True RMS current |

## 5.3 Voltage and Current Rating Guidelines

When using the VACON® NXP inverter as a VACON® NXP DCGuard™ unit, the nameplate value U1 is used as the voltage rating. In normal operation, VACON® NXP DCGuard™ has approximately the same output DC voltage as the input DC voltage. After start-up, in normal operation, there is no IGBT switching. The heat losses in a VACON® NXP DCGuard™ unit are therefore lower than in a normal motor inverter.

The rated DC current of the VACON® NXP DCGuard™ is the same as the AC current rating of the VACON® NXP inverter, that is, the I2 value on the nameplate. For example, an NXP1500 inverter is rated for a 1500 A DC current when used as VACON® NXP DCGuard™ and 1500 A AC current when used as a motor inverter.

Required load current is the primary sizing criteria for VACON® NXP DCGuard™. For example, if it is required to have 500 A going from one side of the DC bus to the other, a 500 A DCGuard is required.

illustration 14 explains the difference in voltage and current ratings when using a VACON® NXP inverter as a motor inverter and as a VACON® NXP DCGuard™ unit.

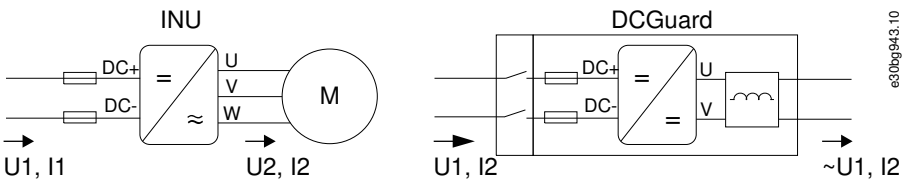


**Illustration 14: Nameplate Voltage and Current Ratings for a VACON® NXP Inverter**

## 5.4 Operation Temperature Range

### Air-Cooled Units

The current ratings for VACON® NXP air-cooled inverters follow these conditions:

- Maximum output current: $I_2 = I_L$. See the VACON® NXP air-cooled user manual.
- Maximum ambient temperature: 40˚C.
- Maximum ambient temperature: 40–50˚C, when derating 1.5%/˚C.

### Liquid-Cooled Units

The current ratings for VACON® NXP liquid-cooled inverters follow these conditions:

- Maximum output current: $I_2 = I_{TH}$. See the VACON® NXP liquid-cooled user manual.
- Maximum cooling liquid temperature: 45˚C.
- Maximum ambient temperature: 50˚C.
- Maximum ambient temperature: 50–55˚C, when derating 2.5%/˚C.

## 5.5 Power Ratings

### 5.5.1 Air-Cooled 500 V Units

**Table 4: VACON® NXP DCGuard™ Power Ratings with Air-Cooled 500 V VACON® NXP Inverter Units**

| Type code | Unit type | Enclosure size | DCGuard current $I_2$ [A] | DC power @800 V $P_{DC}$ [kW] | Over current and short circuit protection, Instant trip ≤ [A] |
|---|---|---|---|---|---|
| NXP00035A2T0SSS | NXP0003 | FR4 | 3 | 2 | 10 |
| NXP00045A2T0SSS | NXP0004 | FR4 | 4 | 3 | 15 |
| NXP00055A2T0SSS | NXP0005 | FR4 | 5 | 4 | 19 |
| NXP00075A2T0SSS | NXP0007 | FR4 | 7 | 6 | 25 |
| NXP00095A2T0SSS | NXP0009 | FR4 | 9 | 7 | 33 |
| NXP00125A2T0SSS | NXP0012 | FR4 | 12 | 10 | 40 |
| NXP00165A2T0SSS | NXP0016 | FR5 | 16 | 13 | 53 |
| NXP00225A2T0SSS | NXP0022 | FR5 | 22 | 18 | 70 |
| NXP00315A2T0SSS | NXP0031 | FR5 | 31 | 25 | 101 |
| NXP00385A2T0SSS | NXP0038 | FR6 | 38 | 30 | 136 |
| NXP00455A2T0SSS | NXP0045 | FR6 | 45 | 36 | 167 |
| NXP00615A2T0SSS | NXP0061 | FR6 | 61 | 49 | 202 |
| NXP00725A2T0SSS | NXP0072 | FR7 | 72 | 58 | 268 |
| NXP00875A2T0SSS | NXP0087 | FR7 | 87 | 70 | 317 |
| NXP01055A2T0SSS | NXP0105 | FR7 | 105 | 84 | 383 |
| NXP01405A2T0SSS | NXP0140 | FR8 | 140 | 112 | 462 |

| Type code | Unit type | Enclosure size | DCGuard current $I_2$ [A] | DC power @800 V $P_{DC}$ [kW] | Over current and short circuit protection, Instant trip ≤ [A] |
|---|---|---|---|---|---|
| NXI01685A0T0ISF | NXI0168 | FI9 | 168 | 134 | 616 |
| NXI02055A0T0ISF | NXI0205 | FI9 | 205 | 164 | 748 |
| NXI02615A0T0ISF | NXI0261 | FI9 | 261 | 209 | 902 |
| NXI03005A0T0ISF | NXI0300 | FI9 | 300 | 240 | 1078 |
| NXI03855A0T0ISF | NXI0385 | FI10 | 385 | 308 | 1320 |
| NXI04605A0T0ISF | NXI0460 | FI10 | 460 | 368 | 1694 |
| NXI05205A0T0ISF | NXI0520 | FI10 | 520 | 416 | 2024 |
| NXI05905A0T0ISF | NXI0590 | FI12(2×FI10) | 590 | 472 | 2288 |
| NXI06505A0T0ISF | NXI0650 | FI12(2×FI10) | 650 | 520 | 2596 |
| NXI07305A0T0ISF | NXI0730 | FI12(2×FI10) | 730 | 584 | 2860 |
| NXI08205A0T0ISF | NXI0820 | FI12(2×FI10) | 820 | 656 | 3212 |
| NXI09205A0T0ISF | NXI0920 | FI12(2×FI10) | 920 | 736 | 3608 |
| NXI10305A0T0ISF | NXI1030 | FI12(2×FI10) | 1030 | 824 | 4048 |
| NXI11505A0T0ISF | NXI1150 | FI13 | 1150 | 920 | 4532 |
| NXI13005A0T0ISF | NXI1300 | FI13 | 1300 | 1040 | 5060 |
| NXI14505A0T0ISF | NXI1450 | FI13 | 1450 | 1160 | 5720 |
| NXI17705A0T0ISF | NXI1770 | FI14 | 1770 | 1416 | 7040 |
| NXI21505A0T0ISF | NXI2150 | FI14 | 2150 | 1720 | 8536 |
| NXI27005A0T0ISF | NXI2700 | FI14 | 2700 | 2160 | 10 120 |

### 5.5.2 Air-Cooled 690 V Units

**Table 5: VACON® NXP DCGuard™ Power Ratings with Air-Cooled 690 V VACON® NXP Inverter Units**

| Type code | Unit type | Enclosure size | DCGuard current $I_2$ [A] | DC power @1100 V $P_{DC}$ [kW] | Over current and short circuit protection, Instant trip ≤ [A] |
|---|---|---|---|---|---|
| NXP00046A2T0SSS | NXP0004 | FR6 | 4.5 | 4 | 14 |
| NXP00056A2T0SSS | NXP0005 | FR6 | 5.5 | 4 | 20 |
| NXP00076A2T0SSS | NXP0007 | FR6 | 8 | 6 | 24 |
| NXP00106A2T0SSS | NXP0010 | FR6 | 10 | 8 | 33 |
| NXP00136A2T0SSS | NXP0013 | FR6 | 13.5 | 11 | 44 |
| NXP00186A2T0SSS | NXP0018 | FR6 | 18 | 14 | 59 |
| NXP00226A2T0SSS | NXP0022 | FR6 | 22 | 18 | 79 |
| NXP00276A2T0SSS | NXP0027 | FR6 | 27 | 22 | 97 |

| Type code | Unit type | Enclosure size | DCGuard current $I_2$ [A] | DC power @1100 V $P_{DC}$ [kW] | Over current and short circuit protection, Instant trip ≤ [A] |
|---|---|---|---|---|---|
| NXP00346A2T0SSS | NXP0034 | FR6 | 34 | 27 | 119 |
| NXP00416A2T0SSS | NXP0041 | FR7 | 41 | 33 | 150 |
| NXP00526A2T0SSS | NXP0052 | FR7 | 52 | 42 | 180 |
| NXP00526A2T0SSS | NXP0062 | FR8 | 62 | 50 | 229 |
| NXP00526A2T0SSS | NXP0080 | FR8 | 80 | 64 | 273 |
| NXP00526A2T0SSS | NXP0100 | FR8 | 100 | 80 | 352 |
| NXI01256A2T0ISF | NXI0125 | FI9 | 125 | 100 | 440 |
| NXI01446A2T0ISF | NXI0144 | FI9 | 144 | 115 | 550 |
| NXI01706A2T0ISF | NXI0170 | FI9 | 170 | 136 | 634 |
| NXI02056A2T0ISF | NXI0208 | FI9 | 208 | 166 | 748 |
| NXI02616A2T0ISF | NXI0261 | FI10 | 261 | 209 | 915 |
| NXI03256A2T0ISF | NXI0325 | FI10 | 325 | 260 | 1148 |
| NXI03856A2T0ISF | NXI0385 | FI10 | 385 | 308 | 1430 |
| NXI04166A2T0ISF | NXI0416 | FI10 | 416 | 333 | 1430 |
| NXI04606A2T0ISF | NXI0460 | FI12(2×FI10) | 460 | 368 | 1694 |
| NXI05026A2T0ISF | NXI0502 | FI12(2×FI10) | 502 | 402 | 2024 |
| NXI05906A2T0ISF | NXI0590 | FI12(2×FI10) | 590 | 472 | 2209 |
| NXI06506A2T0ISF | NXI0650 | FI12(2×FI10) | 650 | 520 | 2596 |
| NXI07506A2T0ISF | NXI0750 | FI12(2×FI10) | 750 | 600 | 2860 |
| NXI08206A2T0ISF | NXI0820 | FI12(2×FI10) | 820 | 656 | 2860 |
| NXI09206A2T0ISF | NXI0920 | FI13 | 920 | 736 | 3608 |
| NXI10306A2T0ISF | NXI1030 | FI13 | 1030 | 824 | 4048 |
| NXI11806A2T0ISF | NXI1180 | FI13 | 1180 | 944 | 4532 |
| NXI15006A2T0ISF | NXI1500 | FI14(2×FI13) | 1500 | 1200 | 5720 |
| NXI19006A2T0ISF | NXI1900 | FI14(2×FI13) | 1900 | 1520 | 6600 |
| NXI22506A2T0ISF | NXI2250 | FI14(2×FI13) | 2250 | 1800 | 8360 |

### 5.5.3 Liquid-Cooled 500 V Units

**Table 6: VACON® NXP DCGuard™ Power Ratings with Liquid-Cooled 500 V VACON® NXP Inverter Units**

| Type code | Unit type | Enclosure size | DCGuard current $I_2$ [A] | DC power @800 V $P_{DC}$ [kW] | Over current and short circuit protection, Instant trip ≤ [A] |
|---|---|---|---|---|---|
| NXP00165A0T0IWF | NXP0016 | CH3 | 16 | 13 | 61 |

| Type code | Unit type | Enclosure size | DCGuard current $I_2$ [A] | DC power @800 V $P_{DC}$ [kW] | Over current and short circuit protection, Instant trip ≤ [A] |
|---|---|---|---|---|---|
| NXP00225A0T0IWF | NXP0022 | CH3 | 22 | 18 | 83 |
| NXP00315A0T0IWF | NXP0031 | CH3 | 31 | 25 | 116 |
| NXP00385A0T0IWF | NXP0038 | CH3 | 38 | 30 | 138 |
| NXP00455A0T0IWF | NXP0045 | CH3 | 45 | 36 | 165 |
| NXP00615A0T0IWF | NXP0061 | CH3 | 61 | 49 | 226 |
| NXP00725A0T0IWF | NXP0072 | CH4 | 72 | 58 | 264 |
| NXP00875A0T0IWF | NXP0087 | CH4 | 87 | 70 | 319 |
| NXP01055A0T0IWF | NXP0105 | CH4 | 105 | 84 | 385 |
| NXP01405A0T0IWF | NXP0140 | CH4 | 140 | 112 | 512 |
| NXP01685A0T0IWF | NXP0168 | CH5 | 168 | 134 | 616 |
| NXP02055A0T0IWF | NXP0205 | CH5 | 205 | 164 | 754 |
| NXP02615A0T0IWF | NXP0261 | CH5 | 261 | 209 | 957 |
| NXP03005A0T0IWF | NXP0300 | CH61 | 300 | 240 | 616 |
| NXP03855A0T0IWF | NXP0385 | CH61 | 385 | 308 | 792 |
| NXP04605A0T0IWF | NXP0460 | CH62 | 460 | 368 | 946 |
| NXP05205A0T0IWF | NXP0520 | CH62 | 520 | 416 | 1069 |
| NXP05905A0T0IWF | NXP0590 | CH62 | 590 | 472 | 1210 |
| NXP06505A0T0IWF | NXP0650 | CH62 | 650 | 520 | 1334 |
| NXP07305A0T0IWF | NXP0730 | CH62 | 730 | 584 | 1500 |
| NXP08205A0T0IWF | NXP0820 | CH63 | 820 | 656 | 1685 |
| NXP09205A0T0IWF | NXP0920 | CH63 | 920 | 736 | 1888 |
| NXP10305A0T0IWF | NXP1030 | CH63 | 1030 | 824 | 2116 |
| NXP11505A0T0IWF | NXP1150 | CH63 | 1150 | 920 | 2359 |
| NXP13705A0T0IWF | NXP1370 | CH64 | 1370 | 1096 | 2812 |
| NXP16405A0T0IWF | NXP1640 | CH64 | 1640 | 1312 | 3366 |
| NXP20605A0T0IWF | NXP2060 | CH64 | 2060 | 1648 | 4229 |
| NXP23005A0T0IWF | NXP2300 | CH64 | 2300 | 1840 | 4722 |
| NXP24705A0T0IWF | NXP2470 | 2×CH64 | 2470 | 1976 | 5073 |
| NXP29505A0T0IWF | NXP2950 | 2×CH64 | 2950 | 2360 | 6058 |
| NXP37105A0T0IWF | NXP3710 | 2×CH64 | 3710 | 2968 | 7617 |
| NXP41405A0T0IWF | NXP4140 | 2×CH64 | 4140 | 3312 | 8501 |

### 5.5.4 Liquid-Cooled 690 V Units

Table 7: VACON® NXP DCGuard™ Power Ratings with Liquid-Cooled 690 V VACON® NXP Inverter Units

| Type code | Unit type | Enclosure size | DCGuard current $I_2$ [A] | DC power @1100 V $P_{DC}$ [kW] | Over current and short circuit protection, Instant trip ≤ [A] |
|---|---|---|---|---|---|
| NXP01706A0T0IWF | NXP0170 | CH61 | 170 | 187 | 524 |
| NXP02086A0T0IWF | NXP0208 | CH61 | 208 | 229 | 641 |
| NXP02616A0T0IWF | NXP0261 | CH61 | 261 | 287 | 804 |
| NXP03256A0T0IWF | NXP0325 | CH62 | 325 | 358 | 1001 |
| NXP03856A0T0IWF | NXP0385 | CH62 | 385 | 424 | 1186 |
| NXP04166A0T0IWF | NXP0416 | CH62 | 416 | 458 | 1281 |
| NXP04606A0T0IWF | NXP0460 | CH62 | 460 | 506 | 1417 |
| NXP05026A0T0IWF | NXP0502 | CH62 | 502 | 552 | 1546 |
| NXP05906A0T0IWF | NXP0590 | CH63 | 590 | 649 | 1817 |
| NXP06506A0T0IWF | NXP0650 | CH63 | 650 | 715 | 2002 |
| NXP07506A0T0IWF | NXP0750 | CH63 | 750 | 825 | 2310 |
| NXP08156A0T0IWF | NXP0815 | CH63 | 815 | 897 | 2510 |
| NXP08206A0T0IWF | NXP0820 | CH64 | 820 | 902 | 2526 |
| NXP09206A0T0IWF | NXP0920 | CH64 | 920 | 1012 | 2834 |
| NXP10306A0T0IWF | NXP1030 | CH64 | 1030 | 1133 | 3172 |
| NXP11806A0T0IWF | NXP1180 | CH64 | 1180 | 1298 | 3634 |
| NXP13006A0T0IWF | NXP1300 | CH64 | 1300 | 1430 | 4004 |
| NXP15006A0T0IWF | NXP1500 | CH64 | 1500 | 1650 | 4620 |
| NXP17006A0T0IWF | NXP1700 | CH64 | 1700 | 1870 | 5236 |
| NXP18506A0T0IWF | NXP1850 | 2×CH64 | 1850 | 2035 | 5698 |
| NXP21206A0T0IWF | NXP2120 | 2×CH64 | 2120 | 2332 | 6530 |
| NXP23406A0T0IWF | NXP2340 | 2×CH64 | 2340 | 2574 | 7207 |
| NXP27006A0T0IWF | NXP2700 | 2×CH64 | 2700 | 2970 | 8316 |
| NXP31006A0T0IWF | NXP3100 | 2×CH64 | 3100 | 3410 | 9548 |

## 5.6 Total Capacitance, Inductance, and Resistance

The total capacitance, inductance, and resistance for all VACON® NXP inverters are available from the nearest Danfoss Drives representative.

The requested data is given case by case and must only be used to make a selectivity study for a system including the VACON® NXP DCGuard™.

# 6 Electrical Installation Guidelines

## 6.1 DCGuard Topologies

VACON® NXP DCGuard™ can be used to give short circuit protection in different DC-grid topologies:

- Directional topology
- Peer-to-peer topology
- Ring topology

### 6.1.1 Directional Topology

VACON® NXP DCGuard™ can be used to give one directional protection. The directional topology only gives short circuit protection for a short circuit current going from the main DC grid to one of the DC subgrids.

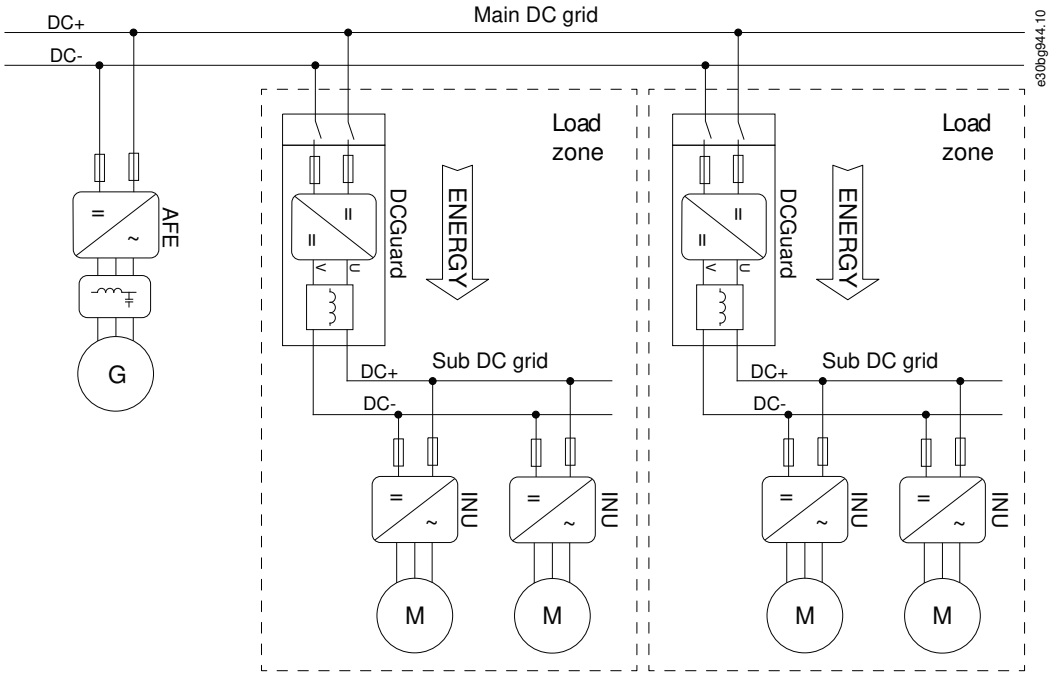


**Illustration 15: VACON® NXP DCGuard™ Directional Topology**

### 6.1.2 Peer-to-peer Topology

To give two-directional short-circuit protection, two VACON® NXP DCGuard™ units can be connected in a peer-to-peer topology. The connection between the two DCGuard units can be done by using two or three bus-tie cables.

The 2-cable connection is the default connection method, but also the 3-cable connection can be used if necessary.

#### 2-Cable Connection

Connect the 2-cable connection according to the following guidelines:

- Connect the DC- bus-tie cable to the V-phase terminal in both units.
- Connect the DC+ bus-tie cable to the U-phase terminal in one unit and to the W-phase terminal in the other unit.

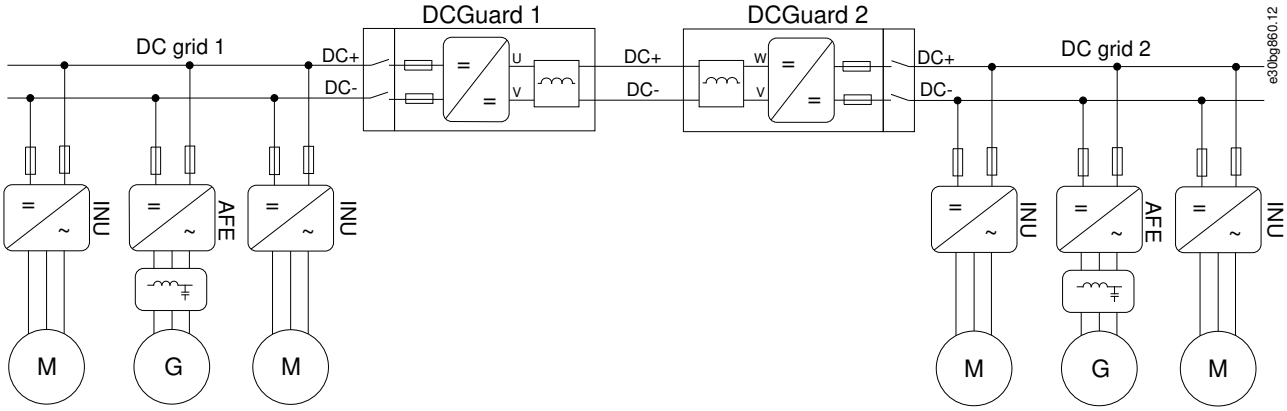


**Illustration 16: VACON® NXP DCGuard™ Peer-to-peer Topology 2-Cable Connection**

#### 3-Cable Connection

Connect the 3-cable connection according to the following guidelines:

- Connect the DC- bus-tie cable to the V-phase terminal in both units.
- Connect the first DC+ bus-tie cable to the U-phase terminal in one unit and to the W-phase terminal in the other unit.
- Connect the second DC+ bus-tie cable to the W-phase terminal in one unit and to the U-phase terminal in the other unit.

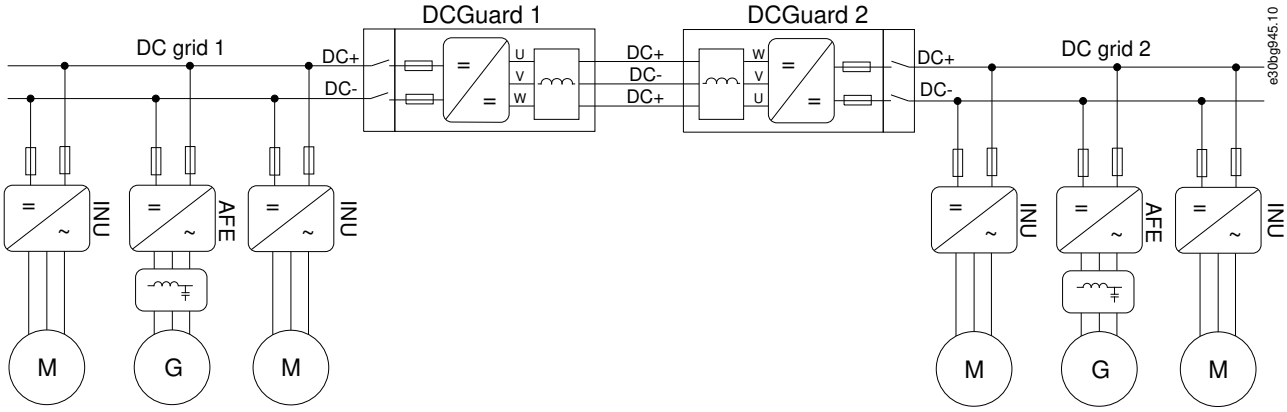


**Illustration 17: VACON® NXP DCGuard™ Peer-to-peer Topology 3-Cable Connection**

## 6.1.3 Ring Topology

Ring shaped topologies are used in some applications to connect two or more DC grids. VACON® NXP DCGuard™ can be used to form a ring topology by using several peer-to-peer connections.

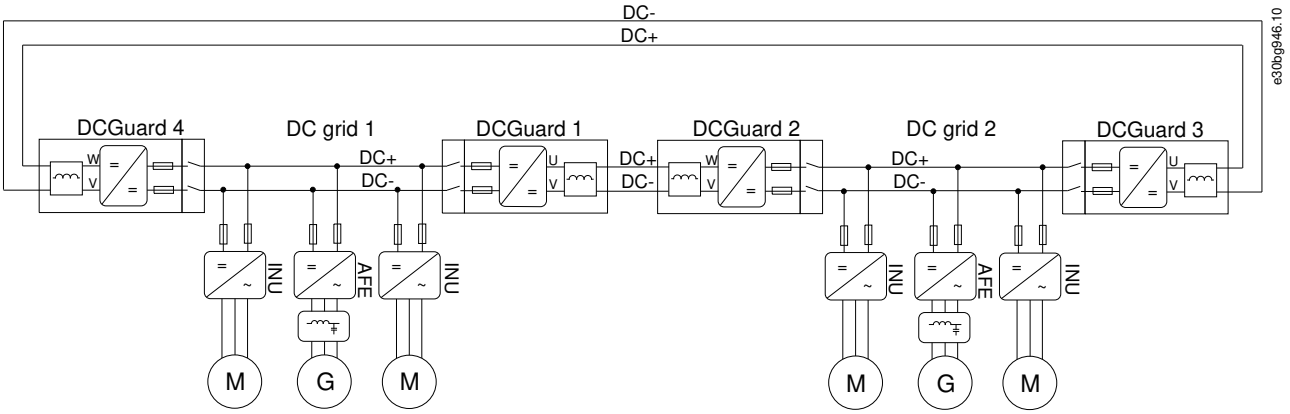


**Illustration 18: VACON® NXP DCGuard™ Ring Topology**

## 6.2 Parallel Installation

Two or more VACON® NXP DCGuard™ units can be installed in parallel to achieve a higher power rating. To have good current sharing between the DCGuard units, it is important that only identical systems are installed in parallel. The parallel systems must have identical:

- DCGuard units
- Filters
- Cable types
- Cable installation
- Fuses

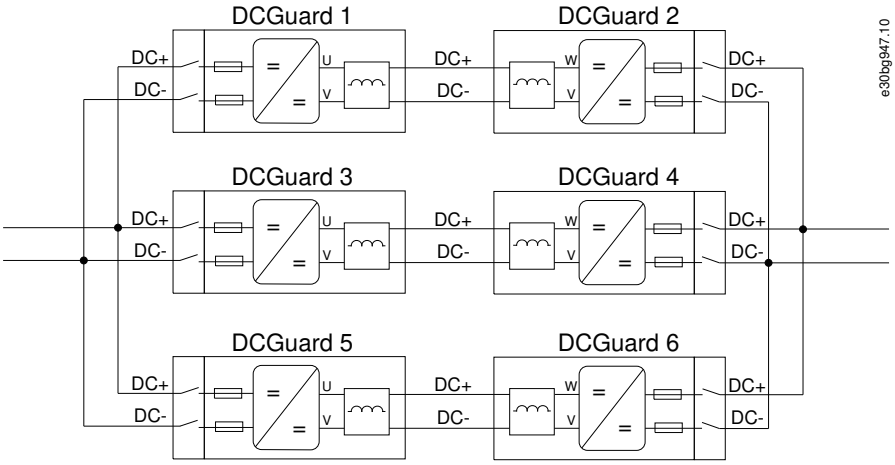


**Illustration 19: Circuit Diagram of a Parallel Installation of Danfoss Units**

## 6.3 Bus-Tie Cables

To connect two or more DCGuard units together, bus-tie cables are required.

Recommended specifications for the bus-tie cables:

- Shielded type cable.
  - The cable shield must be connected to ground at both ends.
- Symmetrical 4-wire cable.
  - Two wires for DC+ and two wires for DC-.
- The cable must withstand minimum 2×DC-link voltage.
  - In the worst case, the common-mode voltage is 2×DC-link voltage potential to ground.

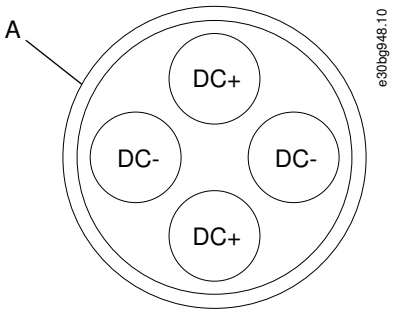


| | |
|---|---|
| **A** | Cable shield |

**Illustration 20: Recommended Bus-Tie Cable Type**

## 6.4 HF Capacitors

It is recommended to connect the DC+ and DC- (clamp) of the DC grids to ground with HF capacitors. Select the size of the HF capacitors according to the system parasitic capacitance to ground.

- 10× system parasitic capacitance ≈ 100 V common-mode voltage to ground.
- 100× system parasitic capacitance ≈ 10 V common-mode voltage to ground.

In other words, system parasitic capacitance is where the common-mode voltage causes current to PE.

The following components have leakage current to ground driven by the common-mode voltage:

- Cables between INU and motor, and the motor itself.
- Cables between grid converter and isolation transformer, and the sine-wave filter itself.

## 6.5 Cabling

The cabling of the VACON® NXP DCGuard™ inverter units is different depending on the unit type and nominal current of the units. See:

- 6.5.1 Wiring Diagrams for Air-Cooled Inverter Units
- 6.5.2 Wiring Diagrams for Liquid-Cooled Inverter Units

Definitions for the wiring diagrams:

| Item | Definition |
|---|---|
| -F | Fuse, type aR. See the VACON® NXP DCGuard™ design guide for instructions on fuse selection. |
| -K | Mechanical disconnector |
| -L | Output di/dt filter |

### 6.5.1 Wiring Diagrams for Air-Cooled Inverter Units

Wiring diagrams for air-cooled inverter units, 500 V (465–800 V DC):

- NXP0003–NXP0520, enclosure sizes FR4 to FI10, see illustration 21.
- NXP0590–NXP0730, enclosure size FI12, see illustration 22.
- NXP0820–NXP1030, enclosure size FI12, see illustration 23.
- NXP1150–NXP1450, enclosure size FI13, see illustration 24.
- NXP1770–NXP2150, enclosure size FI14, see illustration 25.

Wiring diagrams for air-cooled inverter units, 690 V (640–1100 V DC):

- NXP0004–NXP0416, enclosure sizes FR4 to FI10, see illustration 21.
- NXP0460–NXP0590, enclosure size FI12, see illustration 22.
- NXP0650–NXP0820, enclosure size FI12, see illustration 23.
- NXP0920–NXP1180, enclosure size FI13, see illustration 24.
- NXP1500–NXP2250, enclosure size FI14, see illustration 25.

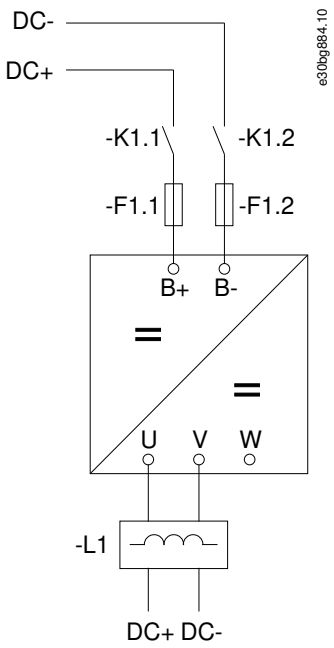


**Illustration 21: Basic Wiring Diagram for Enclosure Sizes FR4–FI10**

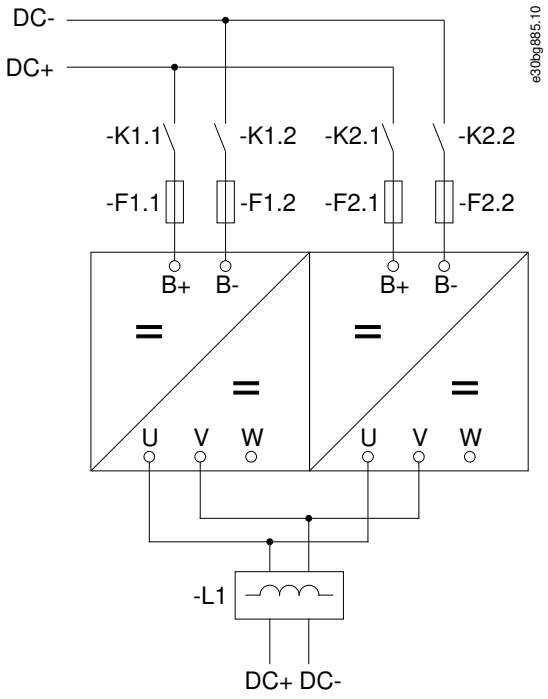


**Illustration 22: Basic Wiring Diagram for Enclosure Size FI12 with 1 Output Filter (only valid for 500 V NXP0590–NXP0730 and 690 V NXP0460–NXP0590)**

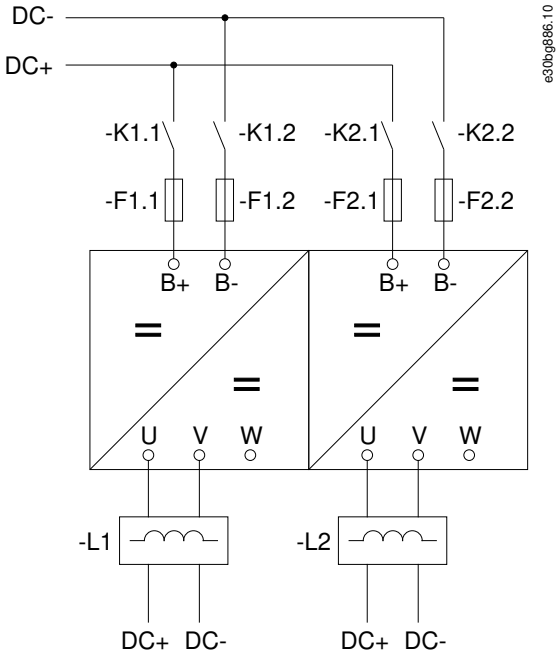


**Illustration 23: Basic Wiring Diagram for Enclosure Size FI12 with 2 Output Filters**

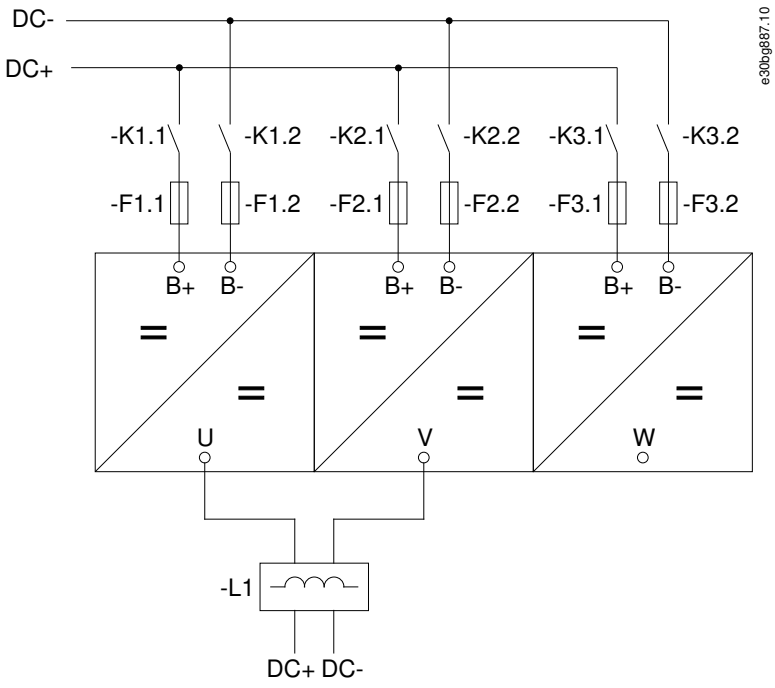


**Illustration 24: Basic Wiring Diagram for Enclosure Size FI13**

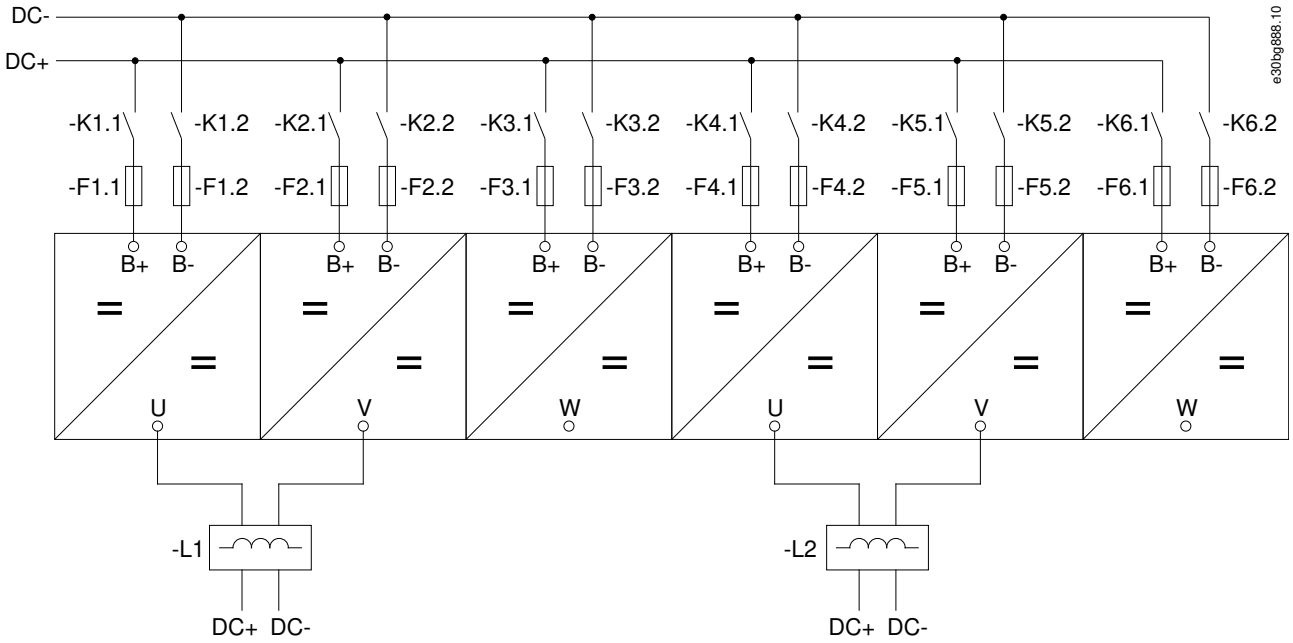


**Illustration 25: Basic Wiring Diagram for Enclosure Size FI14**

## 6.5.2 Wiring Diagrams for Liquid-Cooled Inverter Units

Wiring diagrams for liquid-cooled inverter units, 500 V (465–800 V DC):

- NXP0016–NXP0730, enclosure sizes CH3 to CH62, see illustration 26.
- NXP0820–NXP1150, enclosure size CH63, see illustration 27.
- NXP1370, enclosure size CH64, see illustration 28.
- NXP1640–NXP2300, enclosure size CH64, see illustration 29.
- NXP2470–NXP4140, enclosure size 2 x CH64, see illustration 30.

Wiring diagrams for liquid-cooled inverter units, 690 V (640–1100 V DC):

- NXP0170–NXP0502, enclosure sizes CH61 to CH62, see illustration 26.
- NXP0590–NXP0750, enclosure size CH63, see illustration 27.
- NXP0820–NXP1500, enclosure size CH64, see illustration 28.
- NXP1700, enclosure size CH64, see illustration 29.
- NXP1850–NXP3100, enclosure size 2 x CH64, see illustration 30.

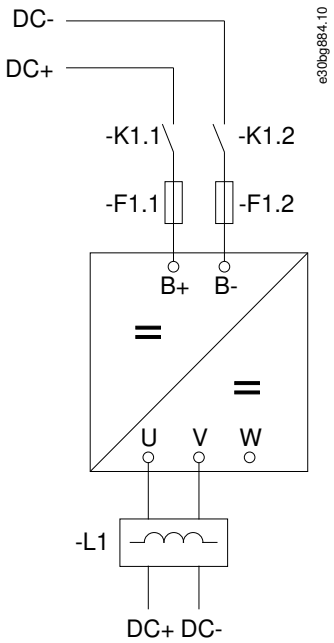


**Illustration 26: Basic Wiring Diagram for Enclosure Sizes CH3–CH62**

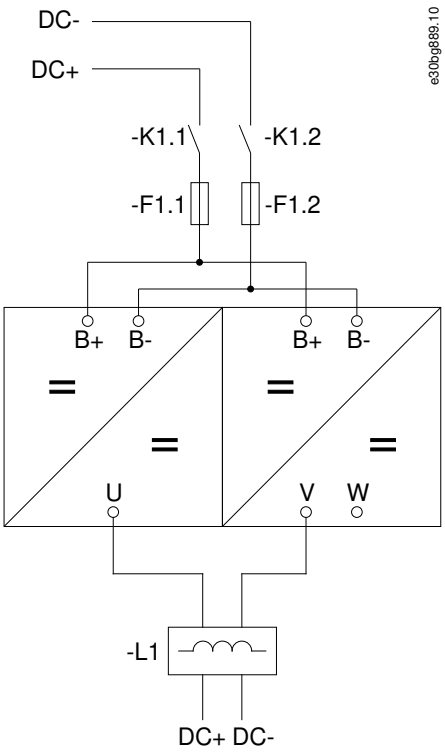


**Illustration 27: Basic Wiring Diagram for Enclosure Size CH63**

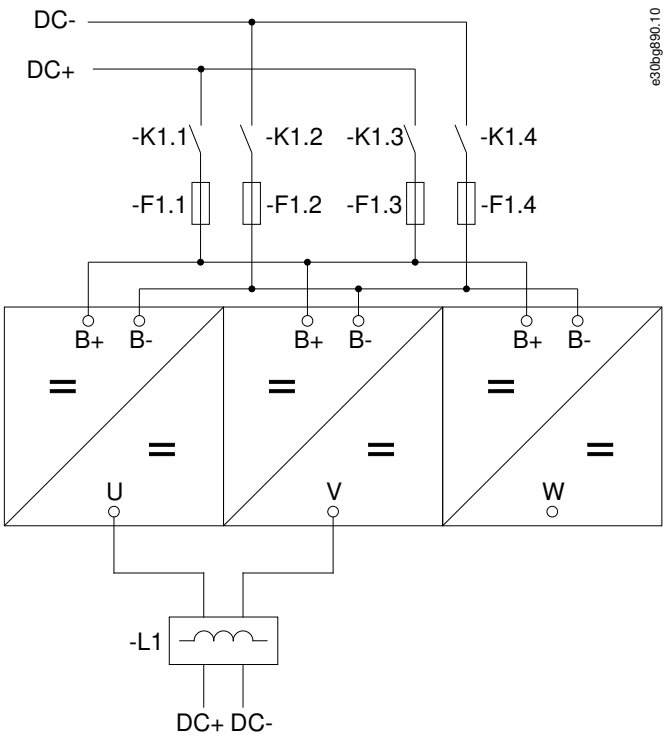


**Illustration 28: Basic Wiring Diagram for Enclosure Size CH64 with 4 Input Fuses**

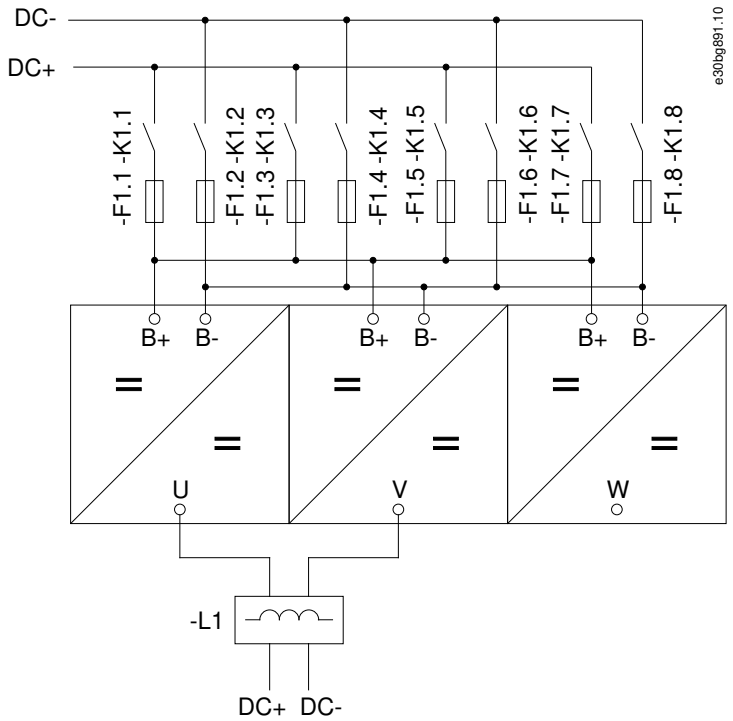


**Illustration 29: Basic Wiring Diagram for Enclosure Size CH64 with 8 Input Fuses**

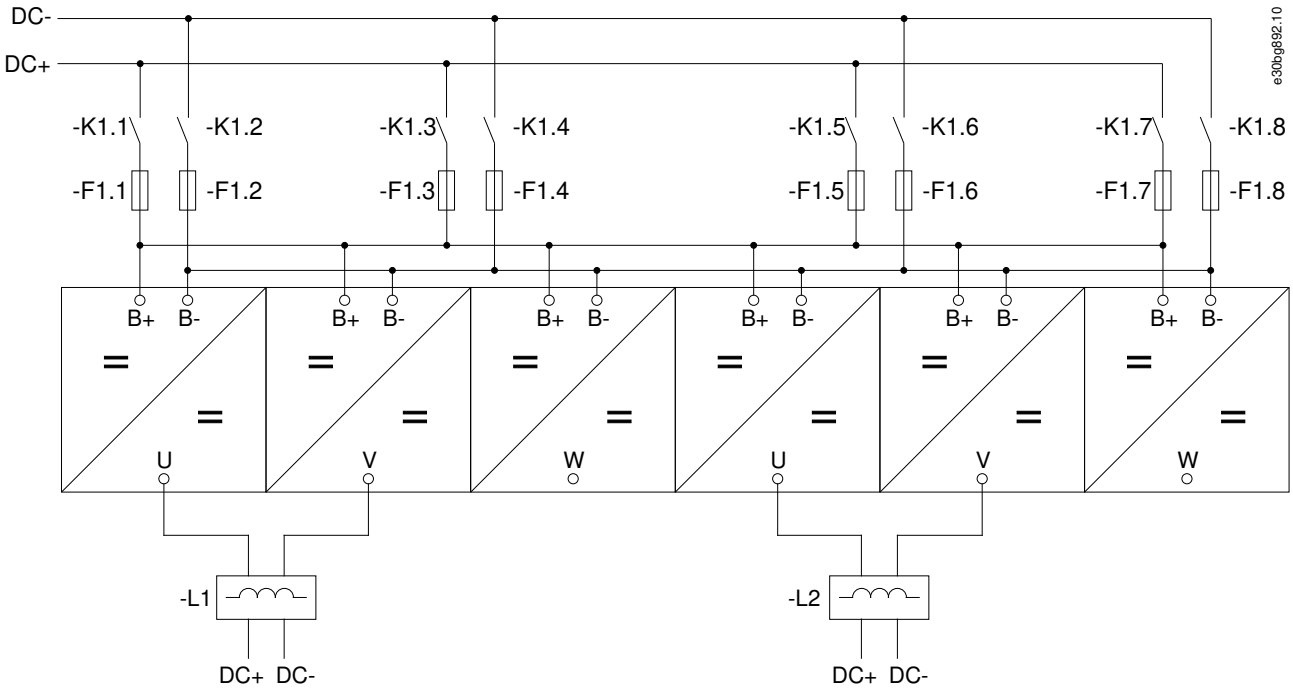


**Illustration 30: Basic Wiring Diagram for Enclosure Size 2 x CH64**

## 6.6 Terminal Definitions

The terminals used in the VACON® NXP DCGuard™ application are:

- DC-bus connections: Terminals B+ and B-
- Peer-to-peer connections: Terminals U, V, and W

The locations of the terminals in the different inverter unit enclosure sizes are shown in the illustrations in:

- 6.6.1 Terminal Locations in Air-Cooled Inverter Units
- 6.6.2 Terminal Locations in Liquid-Cooled Inverter Units

### 6.6.1 Terminal Locations in Air-Cooled Inverter Units

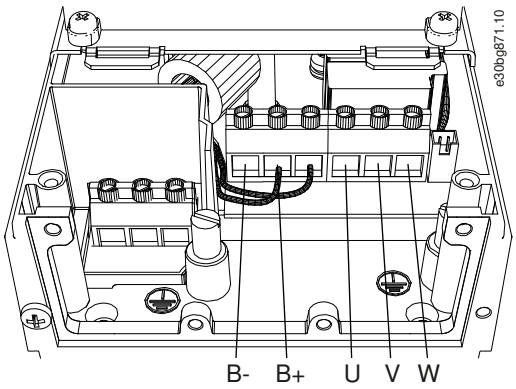


**Illustration 31: Terminal Locations in Enclosure Sizes FR4 and FR5**

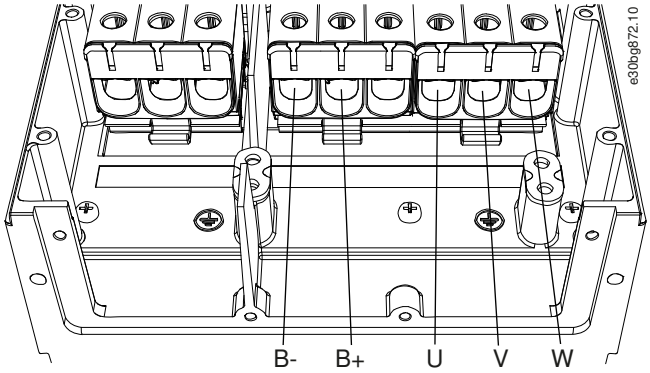


**Illustration 32: Terminal Locations in Enclosure Size FR6**

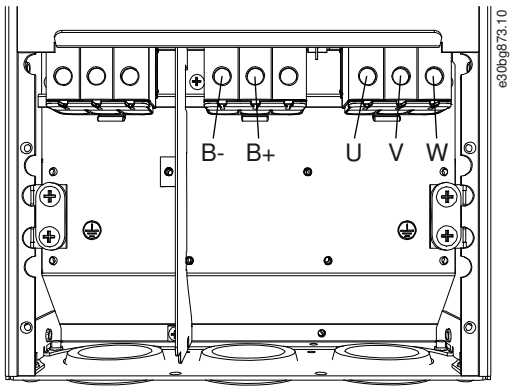


**Illustration 33: Terminal Locations in Enclosure Size FR7**

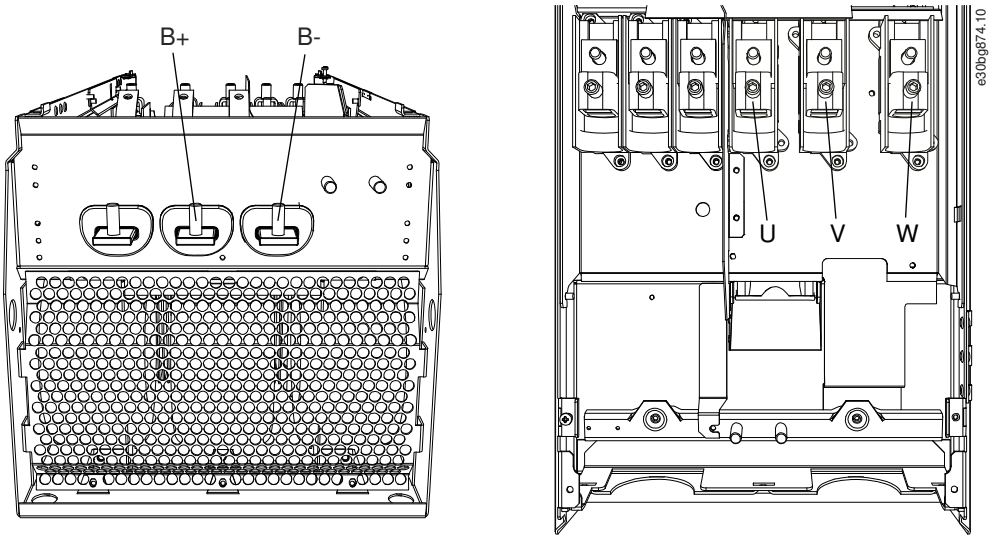


**Illustration 34: Terminal Locations in Enclosure Size FR8**

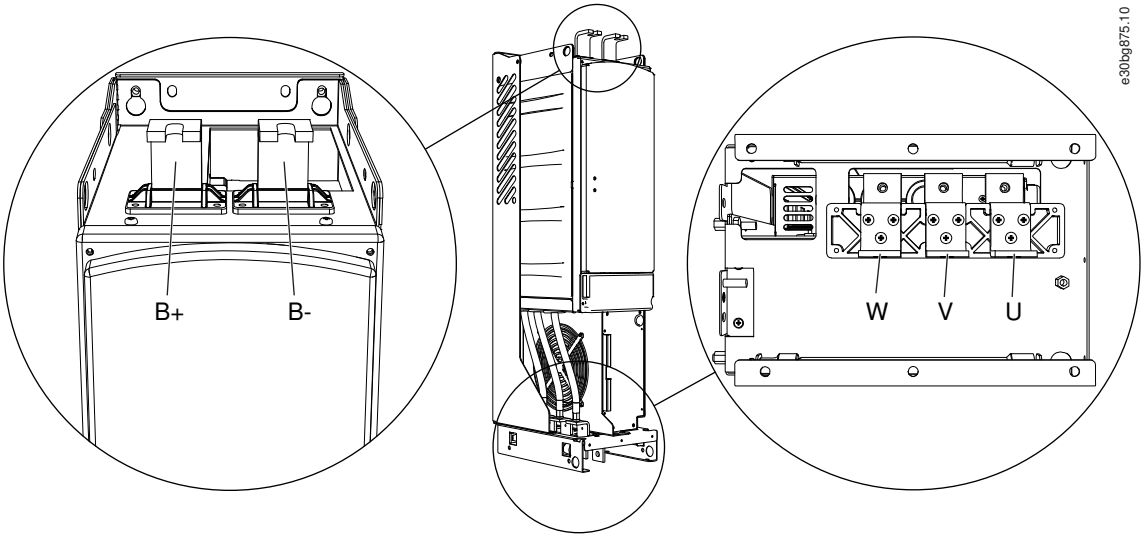


**Illustration 35: Terminal Locations in Enclosure Sizes FI9, FI10, and FI12**

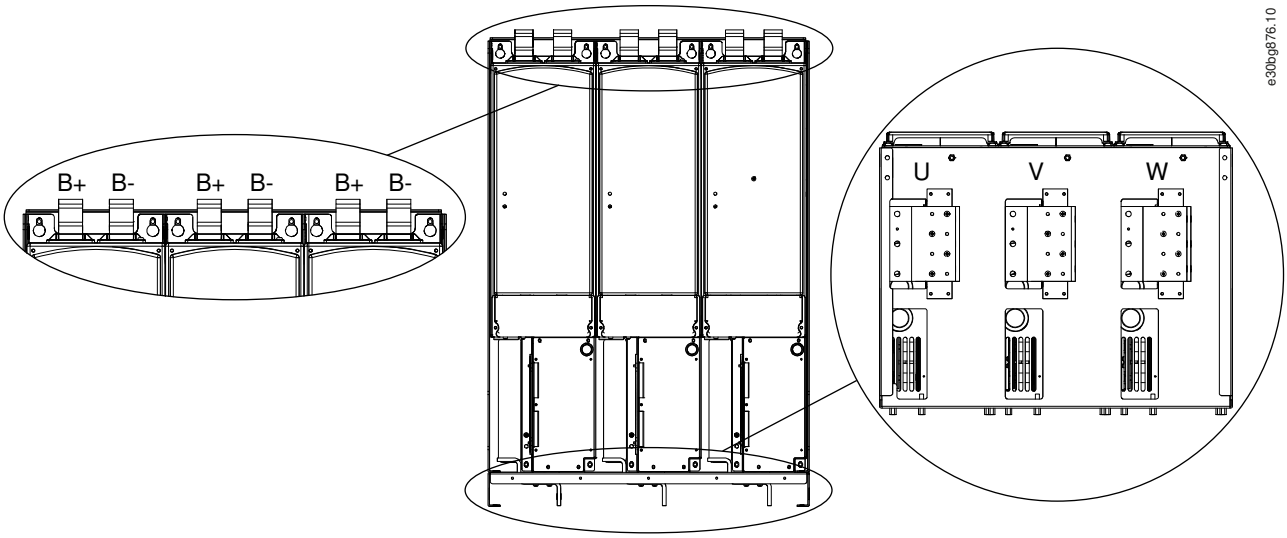


**Illustration 36: Terminal Locations in Enclosure Sizes FI13 and FI14**

### 6.6.2 Terminal Locations in Liquid-Cooled Inverter Units

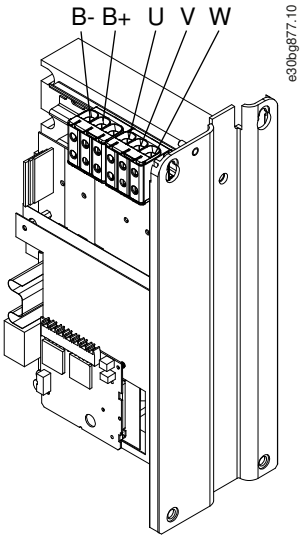


**Illustration 37: Terminal Locations in Enclosure Size CH3**

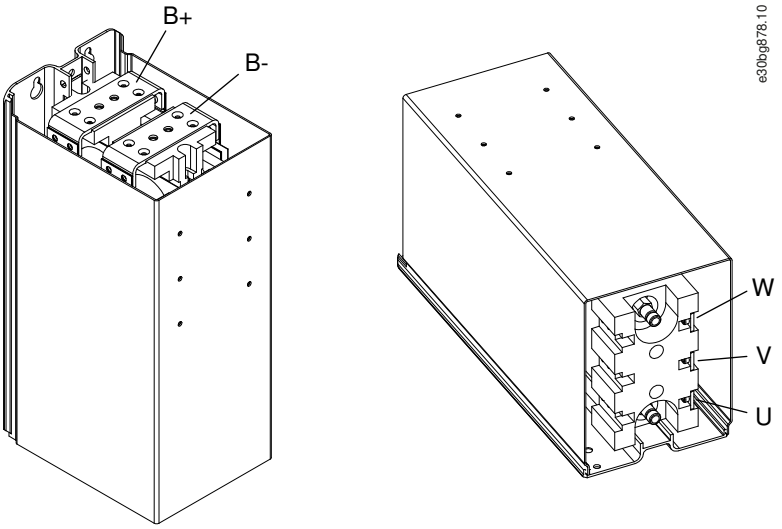


**Illustration 38: Terminal Locations in Enclosure Size CH4**

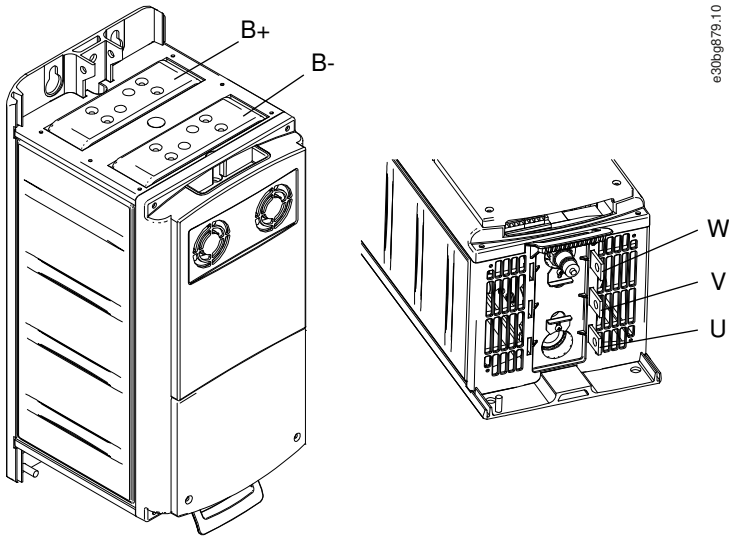


**Illustration 39: Terminal Locations in Enclosure Size CH5**

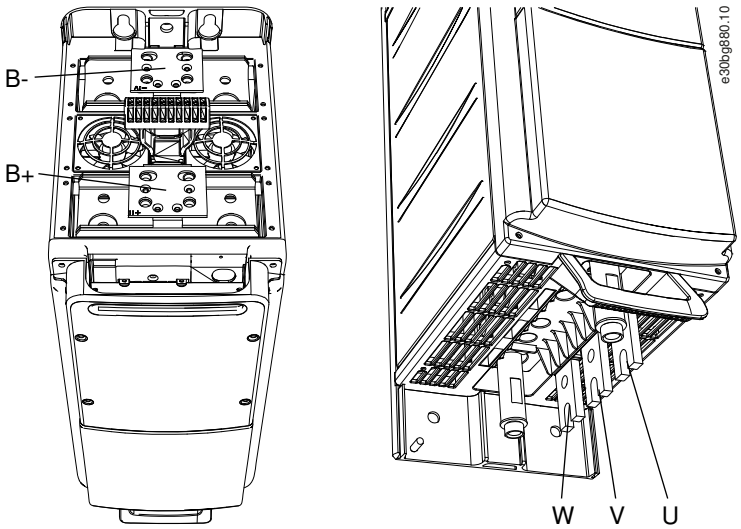


**Illustration 40: Terminal Locations in Enclosure Size CH61**

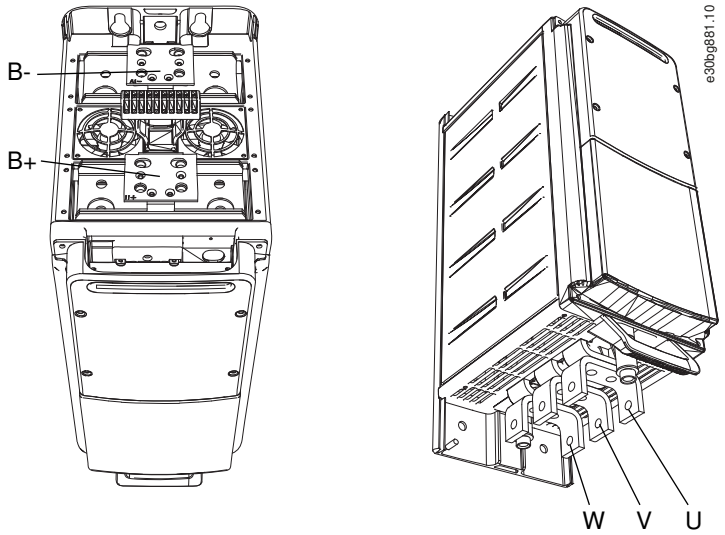


**Illustration 41: Terminal Locations in Enclosure Size CH62**

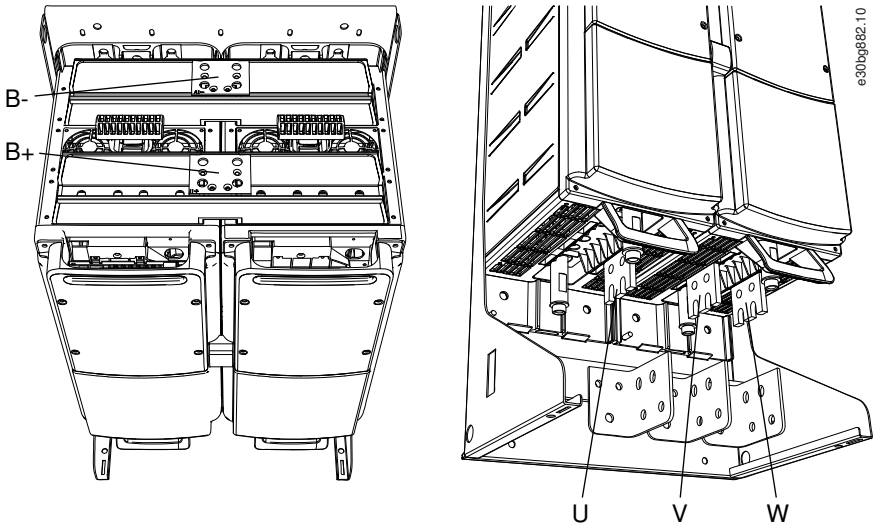


**Illustration 42: Terminal Locations in Enclosure Size CH63**

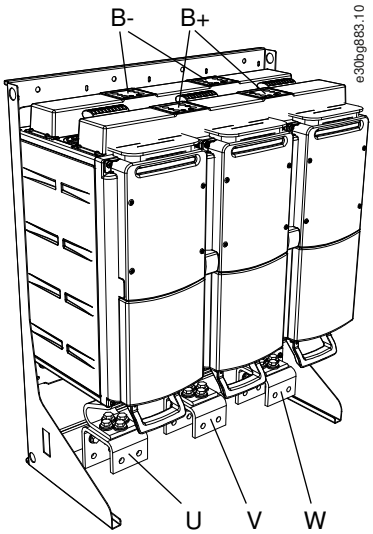


**Illustration 43: Terminal Locations in Enclosure Size CH64**

## 6.7 Control I/O Configuration

The figure shows the default I/O configuration for the VACON® NXP DCGuard™ application and a basic description of the terminals and signals of the I/O board.

For more information on control terminals, see the VACON® NXP DCGuard™ application guide.

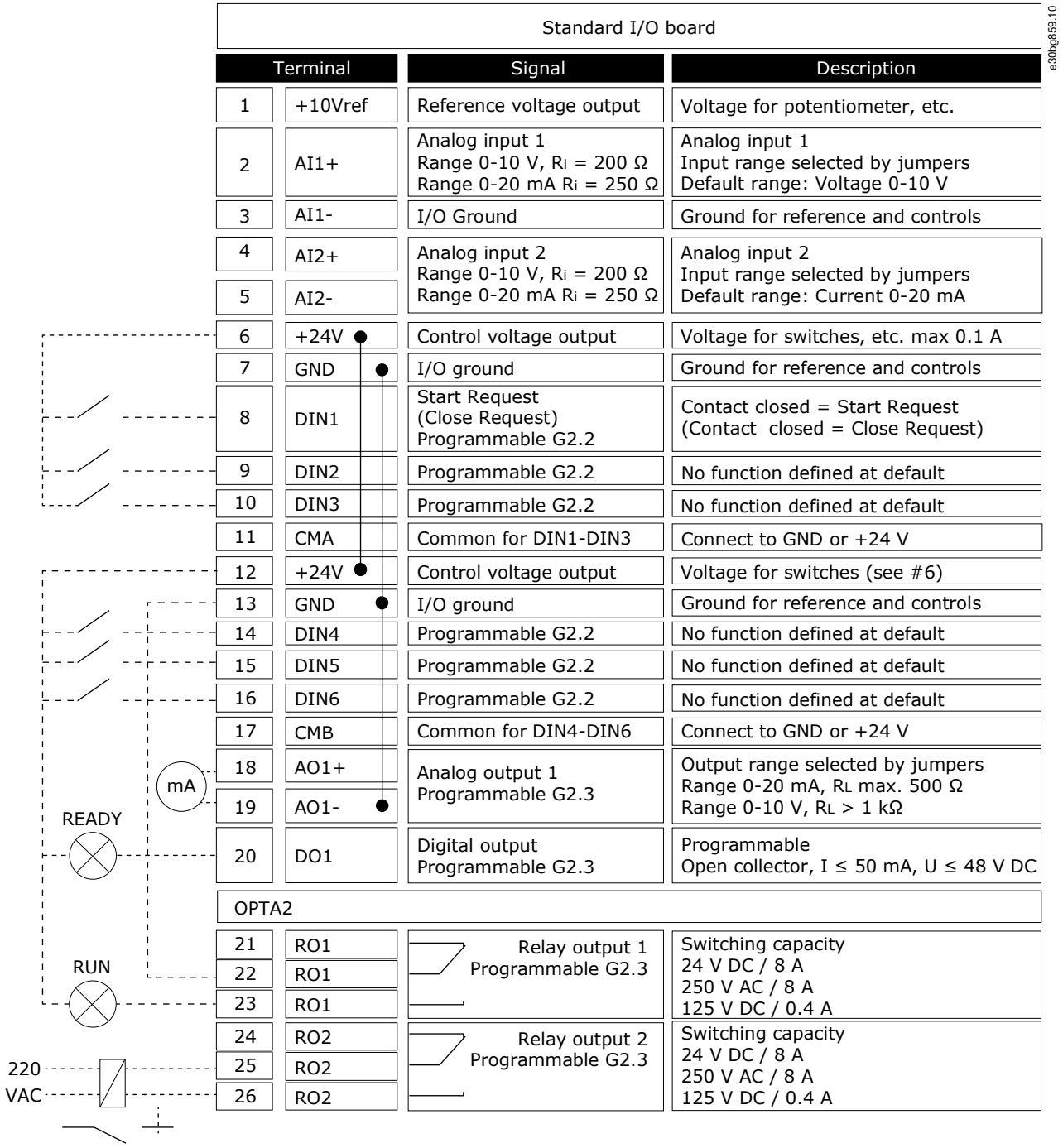


| Standard I/O board | | | |
|---|---|---|---|
| Terminal | | Signal | Description |
| 1 | +10Vref | Reference voltage output | Voltage for potentiometer, etc. |
| 2 | AI1+ | Analog input 1<br>Range 0-10 V, $R_i$ = 200 Ω<br>Range 0-20 mA $R_i$ = 250 Ω | Analog input 1<br>Input range selected by jumpers<br>Default range: Voltage 0-10 V |
| 3 | AI1- | I/O Ground | Ground for reference and controls |
| 4 | AI2+ | Analog input 2<br>Range 0-10 V, $R_i$ = 200 Ω<br>Range 0-20 mA $R_i$ = 250 Ω | Analog input 2<br>Input range selected by jumpers<br>Default range: Current 0-20 mA |
| 5 | AI2- | | |
| 6 | +24V | Control voltage output | Voltage for switches, etc. max 0.1 A |
| 7 | GND | I/O ground | Ground for reference and controls |
| 8 | DIN1 | Start Request<br>(Close Request)<br>Programmable G2.2 | Contact closed = Start Request<br>(Contact closed = Close Request) |
| 9 | DIN2 | Programmable G2.2 | No function defined at default |
| 10 | DIN3 | Programmable G2.2 | No function defined at default |
| 11 | CMA | Common for DIN1-DIN3 | Connect to GND or +24 V |
| 12 | +24V | Control voltage output | Voltage for switches (see #6) |
| 13 | GND | I/O ground | Ground for reference and controls |
| 14 | DIN4 | Programmable G2.2 | No function defined at default |
| 15 | DIN5 | Programmable G2.2 | No function defined at default |
| 16 | DIN6 | Programmable G2.2 | No function defined at default |
| 17 | CMB | Common for DIN4-DIN6 | Connect to GND or +24 V |
| 18 | AO1+ | Analog output 1<br>Programmable G2.3 | Output range selected by jumpers<br>Range 0-20 mA, $R_L$ max. 500 Ω<br>Range 0-10 V, $R_L$ > 1 kΩ |
| 19 | AO1- | | |
| 20 | DO1 | Digital output<br>Programmable G2.3 | Programmable<br>Open collector, I ≤ 50 mA, U ≤ 48 V DC |
| OPTA2 | | | |
| 21 | RO1 | Relay output 1<br>Programmable G2.3 | Switching capacity<br>24 V DC / 8 A<br>250 V AC / 8 A<br>125 V DC / 0.4 A |
| 22 | RO1 | | |
| 23 | RO1 | | |
| 24 | RO2 | Relay output 2<br>Programmable G2.3 | Switching capacity<br>24 V DC / 8 A<br>250 V AC / 8 A<br>125 V DC / 0.4 A |
| 25 | RO2 | | |
| 26 | RO2 | | |

**Illustration 44: The Default I/O Configuration for the VACON® NXP DCGuard™ Application**

# 7 How to Select the VACON® NXP DCGuard™

## 7.1 VACON® Select Web Tool

The VACON® Select Web Tool is a useful and easy-to-use tool for selecting the correct VACON® NXP DCGuard™ for applications. See illustration 45.

The tool gives the following information:

- Recommended VACON® NXP unit
- Recommended filter (dU/dt)
- Recommended aR fuses (from VACON® NXP manuals)
- Efficiency calculation
- Drawings

The web tool is accessible to Danfoss Drives personnel and is available at http://select.corp.intra.vacon.com/sizing/login.jspx. Contact the nearest Danfoss Drives representative for more information.

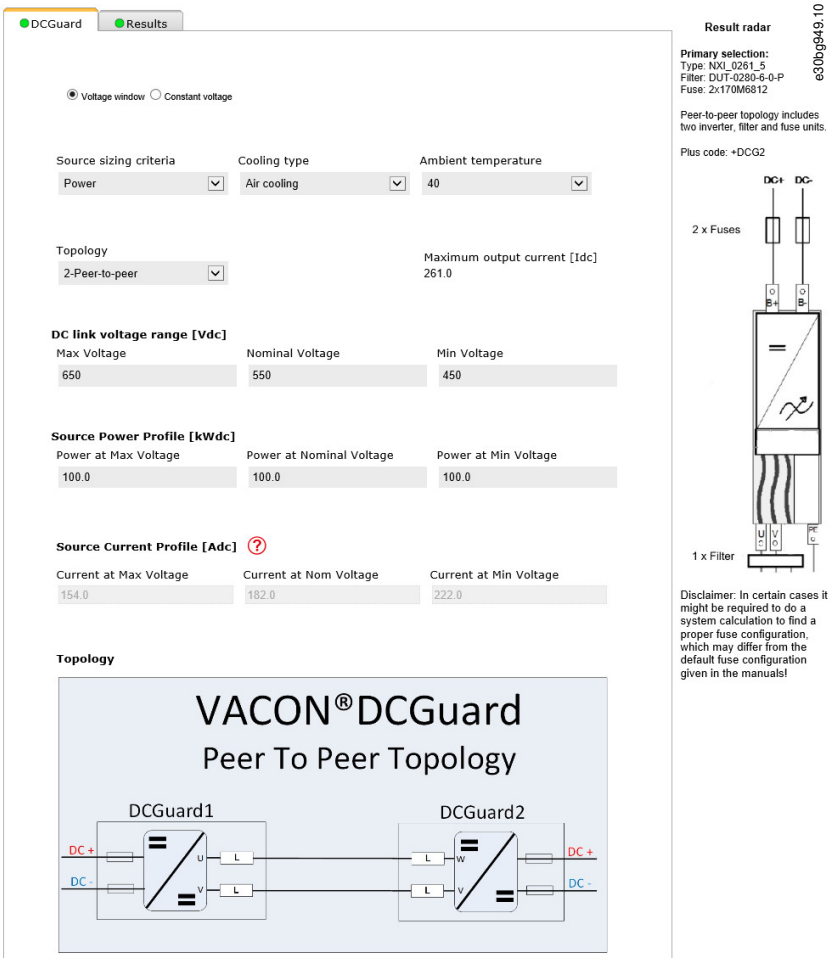


**Illustration 45: Screenshot from the VACON® Select Web Tool**

# Index


## 2

2-cable connection ... 26

## 3

3-cable connection ... 27

## A

Additional resources ... 5
Approvals and certifications ... 5

## B

Bus-tie cables ... 28

## C

Cabling ... 29
Compatibility ... 11
Control I/O ... 42
Controlled voltage ramp-up ... 10
Current rating ... 20

## D

Directional topology ... 26

## F

Filter impedance ... 15
Filters ... 15
Functional description ... 8
Fuses ... 14

## H

HF capacitors ... 29
High current cut-off ... 10

## I

I/O configuration ... 42
Instant current cut-off ... 9

## M

Manual version ... 5
Mechanical disconnectors ... 16

## N

Nameplate ... 20

## O

Operation temperature ... 21
Overload detection ... 10
Overview ... 7

## P

Parallel installation ... 28
Peer-to-peer topology ... 26
Power ratings
- Air-cooled 500 V units ... 21
- Air-cooled 690 V units ... 22
- Liquid-cooled 500 V units ... 23
- Liquid-cooled 690 V units ... 24

Protection functions ... 9
Purpose of the manual ... 5

## R

Rapid current cut-off ... 10
Ratings ... 20
Requirements ... 11
Ring topology ... 27

## S

Safety ... 6
Selectivity ... 7, 7
Simulation ... 12
System control principle ... 10
System integrator responsibilities ... 11
System selectivity ... 12

## T

Technical data ... 19
Temperature range ... 21
Terminals ... 36
Topologies ... 26
Total capacitance ... 25
Total inductance ... 25
Total resistance ... 25

## V

VACON® Select web tool ..... 44
Voltage rating ..... 20

## W

Wiring diagrams
Air-cooled inverter units ..... 30
Liquid-cooled inverter units ..... 32

ENGINEERING
TOMORROW

Danfoss can accept no responsibility for possible errors in catalogues, brochures and other printed material. Danfoss reserves the right to alter its products without notice. This also applies to products already on order provided that such alterations can be made without subsequential changes being necessary in specifications already agreed. All trademarks in this material are property of the respective companies. Danfoss and the Danfoss logotype are trademarks of Danfoss A/S. All rights reserved.

Vacon Ltd
Member of the Danfoss Group
Runsorintie 7
65380 Vaasa
Finland
drives.danfoss.com