Contents

1 How to Read this Design Guide 3

Copyright, Limitation of Liability and Revision Rights 3
Approvals 5
Symbols 5
Abbreviations 6
Definitions 6

2 Introduction to VLT HVAC Drive 11

Safety 11
CE labelling 12
Vibration and shock 14
Safe Stop 15
Control Structures 30
General aspects of EMC 37
Galvanic isolation (PELV) 41
PELV - Protective Extra Low Voltage 41
Earth leakage current 42
Brake function 43
Control with Brake Function 45
Extreme running conditions 45

3 VLT HVAC Drive Selection 49

Options and Accessories 49
Frame size F Panel Options 57

4 How to Order 63

Ordering Numbers 67

5 How to Install 75

Mechanical Dimensions 77
Lifting 82
Electrical Installation 84
Electrical Installation and Control Cables 85
Final Set-Up and Test 100
Additional Connections 102
Motor Insulation 105
Motor Bearing Currents 105
Installation of misc. connections 106
Safety 108
EMC-correct Installation 109
Residual Current Device 112

6 Application Examples 113
Start/Stop 113
Pulse Start/Stop 113
Potentiometer Reference 114
Automatic Motor Adaptation (AMA) 114
Smart Logic Control Programming 114
SLC Application Example 115
BASIC Cascade Controller 117
Pump Staging with Lead Pump Alternation 118
System Status and Operation 118
Fixed Variable Speed Pump Wiring Diagram 119
Lead Pump Alternation Wiring Diagram 119
Cascade Controller Wiring Diagram 120
Start/Stop conditions 120

7 RS-485 Installation and Set-up 123
RS-485 Installation and Set-up 123
FC Protocol Overview 125
Network Configuration 125
FC Protocol Message Framing Structure 126
Examples 131
Modbus RTU Overview 132
Modbus RTU Message Framing Structure 133
How to Access Parameters 137
Examples 138
Danfoss FC Control Profile 144

8 General Specifications and Troubleshooting 149
General Specifications 149
Efficiency 166
Acoustic Noise 167
Peak Voltage on Motor 167
Special Conditions 172
Alarm and Status Messages 174
Alarms and warnings 174
Alarm words 177
Warning words 178
Extended status words 179
Fault messages 180

Index 186

1 How to Read this Design Guide

VLT HVAC Drive
FC 100 Series
Software version: 3.1.x

This guide can be used with all VLT HVAC Drive frequency converters with software version 3.1.x.
The actual software version number can be read from par. 15-43 *Software Version*.

1.1.1 Copyright, Limitation of Liability and Revision Rights

This publication contains information proprietary to Danfoss. By accepting and using this manual the user agrees that the information contained herein will be used solely for operating equipment from Danfoss or equipment from other vendors provided that such equipment is intended for communication with Danfoss equipment over a serial communication link. This publication is protected under the Copyright laws of Denmark and most other countries.

Danfoss does not warrant that a software program produced according to the guidelines provided in this manual will function properly in every physical, hardware or software environment.

Although Danfoss has tested and reviewed the documentation within this manual, Danfoss makes no warranty or representation, neither expressed nor implied, with respect to this documentation, including its quality, performance, or fitness for a particular purpose.

In no event shall Danfoss be liable for direct, indirect, special, incidental, or consequential damages arising out of the use, or the inability to use information contained in this manual, even if advised of the possibility of such damages. In particular, Danfoss is not responsible for any costs, including but not limited to those incurred as a result of lost profits or revenue, loss or damage of equipment, loss of computer programs, loss of data, the costs to substitute these, or any claims by third parties.

Danfoss reserves the right to revise this publication at any time and to make changes to its contents without prior notice or any obligation to notify former or present users of such revisions or changes.

1

1.1.2 Available literature for VLT HVAC Drive

- Operating Instructions MG.11.Ax.yy provide the necessary information for getting the frequency converter up and running.
- Operating Instructions VLT HVAC Drive High Power, MG.11.Fx.yy
- Design Guide MG.11.Bx.yy entails all technical information about the frequency converter and customer design and applications.
- Programming Guide MG.11.Cx.yy provides information on how to programme and includes complete parameter descriptions.
- Mounting Instruction, Analog I/O Option MCB109, MI.38.Bx.yy
- Application Note, Temperature Derating Guide, MN.11.Ax.yy
- PC-based Configuration Tool MCT 10, MG.10.Ax.yy enables the user to configure the frequency converter from a Windows™ based PC environment.
- Danfoss VLT® Energy Box software at *www.danfoss.com/BusinessAreas/DrivesSolutions* then choose PC Software Download
- VLT® VLT HVAC Drive Drive Applications, MG.11.Tx.yy
- Operating Instructions VLT HVAC Drive Profibus, MG.33.Cx.yy.
- Operating Instructions VLT HVAC Drive Device Net, MG.33.Dx.yy
- Operating Instructions VLT HVAC Drive BACnet, MG.11.Dx.yy
- Operating Instructions VLT HVAC Drive LonWorks, MG.11.Ex.yy
- Operating Instructions VLT HVAC Drive Metasys, MG.11.Gx.yy
- Operating Instructions VLT HVAC Drive FLN, MG.11.Zx.yy
- Output Filter Design Guide, MG.90.Nx.yy
- Brake Resistor Design Guide, MG.90.Ox.yy

x = Revision number
yy = Language code

Danfoss technical literature is available in print from your local Danfoss Sales Office or online at:
www.danfoss.com/BusinessAreas/DrivesSolutions/Documentations/Technical+Documentation.htm

1.1.3 Approvals

1.1.4 Symbols

Symbols used in this guide.

NB!
Indicates something to be noted by the reader.

Indicates a general warning.

Indicates a high-voltage warning.

* Indicates default setting

1

1.1.5 Abbreviations

Alternating current	AC
American wire gauge	AWG
Ampere/AMP	A
Automatic Motor Adaptation	AMA
Current limit	I_{LIM}
Degrees Celsius	°C
Direct current	DC
Drive Dependent	D-TYPE
Electro Magnetic Compatibility	EMC
Electronic Thermal Relay	ETR
Drive	FC
Gram	g
Hertz	Hz
Kilohertz	kHz
Local Control Panel	LCP
Meter	m
Millihenry Inductance	mH
Milliampere	mA
Millisecond	ms
Minute	min
Motion Control Tool	MCT
Nanofarad	nF
Newton Meters	Nm
Nominal motor current	$I_{M,N}$
Nominal motor frequency	$f_{M,N}$
Nominal motor power	$P_{M,N}$
Nominal motor voltage	$U_{M,N}$
Parameter	par.
Protective Extra Low Voltage	PELV
Printed Circuit Board	PCB
Rated Inverter Output Current	I_{INV}
Revolutions Per Minute	RPM
Regenerative terminals	Regen
Second	s
Synchronous Motor Speed	n_s
Torque limit	T_{LIM}
Volts	V
The maximum output current	$I_{VLT,MAX}$
The rated output current supplied by the frequency converter	$I_{VLT,N}$

1.1.6 Definitions

Drive:

$I_{VLT,MAX}$

The maximum output current.

$I_{VLT,N}$

The rated output current supplied by the frequency converter.

$U_{VLT,\ MAX}$

The maximum output voltage.

Input:

Control command You can start and stop the connected motor by means of LCP and the digital inputs. Functions are divided into two groups. Functions in group 1 have higher priority than functions in group 2.	Group 1	Reset, Coasting stop, Reset and Coasting stop, Quick-stop, DC braking, Stop and the "Off" key.
	Group 2	Start, Pulse start, Reversing, Start reversing, Jog and Freeze output

Motor:

f_{JOG}

The motor frequency when the jog function is activated (via digital terminals).

f_M
The motor frequency.

f_{MAX}
The maximum motor frequency.

f_{MIN}
The minimum motor frequency.

$f_{M,N}$
The rated motor frequency (nameplate data).

I_M
The motor current.

$I_{M,N}$
The rated motor current (nameplate data).

$n_{M,N}$
The rated motor speed (nameplate data).

$P_{M,N}$
The rated motor power (nameplate data).

$T_{M,N}$
The rated torque (motor).

U_M
The instantaneous motor voltage.

$U_{M,N}$
The rated motor voltage (nameplate data).

Break-away torque

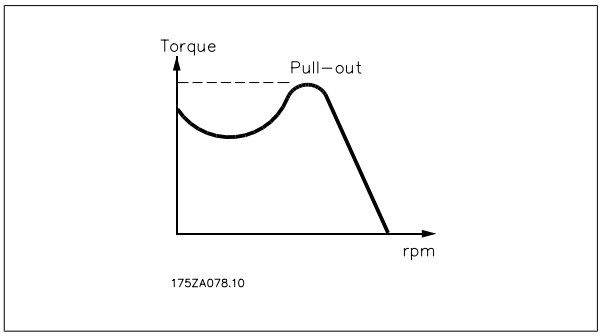

η_{VLT}
The efficiency of the frequency converter is defined as the ratio between the power output and the power input.

Start-disable command
A stop command belonging to the group 1 control commands - see this group.

Stop command
See Control commands.

References:

Analog Reference
A signal transmitted to the analog inputs 53 or 54, can be voltage or current.

Bus Reference
A signal transmitted to the serial communication port (FC port).

Preset Reference
A defined preset reference to be set from -100% to +100% of the reference range. Selection of eight preset references via the digital terminals.

Pulse Reference
A pulse frequency signal transmitted to the digital inputs (terminal 29 or 33).

Ref_{MAX}
Determines the relationship between the reference input at 100% full scale value (typically 10 V, 20mA) and the resulting reference. The maximum reference value set in par. 3-03 *Maximum Reference*.

Ref_{MIN}
Determines the relationship between the reference input at 0% value (typically 0V, 0mA, 4mA) and the resulting reference. The minimum reference value set in par. 3-02 *Minimum Reference*

Miscellaneous:

Analog Inputs
The analog inputs are used for controlling various functions of the frequency converter.
There are two types of analog inputs:
Current input, 0-20 mA and 4-20 mA
Voltage input, 0-10 V DC.

Analog Outputs
The analog outputs can supply a signal of 0-20 mA, 4-20 mA, or a digital signal.

Automatic Motor Adaptation, AMA
AMA algorithm determines the electrical parameters for the connected motor at standstill.

Brake Resistor
The brake resistor is a module capable of absorbing the brake power generated in regenerative braking. This regenerative braking power increases the intermediate circuit voltage and a brake chopper ensures that the power is transmitted to the brake resistor.

CT Characteristics
Constant torque characteristics used for screw and scroll refrigeration compressors.

Digital Inputs
The digital inputs can be used for controlling various functions of the frequency converter.

Digital Outputs
The frequency converter features two Solid State outputs that can supply a 24 V DC (max. 40 mA) signal.

DSP
Digital Signal Processor.

Relay Outputs:
The frequency converter features two programmable Relay Outputs.

ETR
Electronic Thermal Relay is a thermal load calculation based on present load and time. Its purpose is to estimate the motor temperature.

GLCP:
Graphical Local Control Panel (LCP102)

Initialising
If initialising is carried out (par. 14-22 *Operation Mode*), the programmable parameters of the frequency converter return to their default settings.

Intermittent Duty Cycle
An intermittent duty rating refers to a sequence of duty cycles. Each cycle consists of an on-load and an off-load period. The operation can be either periodic duty or none-periodic duty.

LCP
The Local Control Panel (LCP)keypad makes up a complete interface for control and programming of the frequency converter. The control panelkeypad is detachable and can be installed up to 3 metres from the frequency converter, i.e. in a front panel by means of the installation kit option.
The Local Control Panel is available in two versions:

- Numerical LCP101 (NLCP)
- Graphical LCP102 (GLCP)

lsb
Least significant bit.

MCM
Short for Mille Circular Mil, an American measuring unit for cable cross-section. 1 MCM ≡ 0.5067 mm^2.

msb
Most significant bit.

NLCP
Numerical Local Control Panel LCP101

On-line/Off-line Parameters
Changes to on-line parameters are activated immediately after the data value is changed. Changes to off-line parameters are not activated until you enter [OK] on the LCP.

PID Controller
The PID controller maintains the desired speed, pressure, temperature, etc. by adjusting the output frequency to match the varying load.

RCD
Residual Current Device.

Set-up
You can save parameter settings in four Set-ups. Change between the four parameter Set-ups and edit one Set-up, while another Set-up is active.

SFAVM
Switching pattern called Stator Flux oriented Asynchronous Vector Modulation (par. 14-00 *Switching Pattern*).

Slip Compensation
The frequency converter compensates for the motor slip by giving the frequency a supplement that follows the measured motor load keeping the motor speed almost constant.

1

Smart Logic Control (SLC)
The SLC is a sequence of user defined actions executed when the associated user defined events are evaluated as true by the SLC.

Thermistor:
A temperature-dependent resistor placed where the temperature is to be monitored (frequency converter or motor).

Trip
A state entered in fault situations, e.g. if the frequency converter is subject to an over-temperature or when the frequency converter is protecting the motor, process or mechanism. Restart is prevented until the cause of the fault has disappeared and the trip state is cancelled by activating reset or, in some cases, by being programmed to reset automatically. Trip may not be used for personal safety.

Trip Locked
A state entered in fault situations when the frequency converter is protecting itself and requiring physical intervention, e.g. if the frequency converter is subject to a short circuit on the output. A locked trip can only be cancelled by cutting off mains, removing the cause of the fault, and reconnecting the frequency converter. Restart is prevented until the trip state is cancelled by activating reset or, in some cases, by being programmed to reset automatically. Trip locked may not be used for personal safety.

VT Characteristics
Variable torque characteristics used for pumps and fans.

VVC^{plus}
If compared with standard voltage/frequency ratio control, Voltage Vector Control (VVC^{plus}) improves the dynamics and the stability, both when the speed reference is changed and in relation to the load torque.

60° AVM
Switching pattern called 60°Asynchronous Vector Modulation (See par. 14-00 *Switching Pattern*).

1.1.7 Power Factor

The power factor is the relation between I_1 and I_{RMS}.

The power factor for 3-phase control:

$$Power\ factor = \frac{\sqrt{3} \times U \times I_1 \times COS\varphi}{\sqrt{3} \times U \times I_{RMS}}$$

$$= \frac{I_1 \times cos\varphi 1}{I_{RMS}} = \frac{I_1}{I_{RMS}} \quad since\ cos\varphi 1 = 1$$

The power factor indicates to which extent the frequency converter imposes a load on the mains supply.
The lower the power factor, the higher the I_{RMS} for the same kW performance.

$$I_{RMS} = \sqrt{I_1^2 + I_5^2 + I_7^2 + .. + I_n^2}$$

In addition, a high power factor indicates that the different harmonic currents are low.
The frequency converters' built-in DC coils produce a high power factor, which minimizes the imposed load on the mains supply.

2 Introduction to VLT HVAC Drive

2.1 Safety

2.1.1 Safety note

The voltage of the frequency converter is dangerous whenever connected to mains. Incorrect installation of the motor, frequency converter or fieldbus may cause damage to the equipment, serious personal injury or death. Consequently, the instructions in this manual, as well as national and local rules and safety regulations, must be complied with.

Safety Regulations

1. The frequency converter must be disconnected from mains if repair work is to be carried out. Check that the mains supply has been disconnected and that the necessary time has passed before removing motor and mains plugs.
2. The [STOP/RESET] key on the LCP of the frequency converter does not disconnect the equipment from mains and is thus not to be used as a safety switch.
3. Correct protective earthing of the equipment must be established, the user must be protected against supply voltage, and the motor must be protected against overload in accordance with applicable national and local regulations.
4. The earth leakage currents are higher than 3.5 mA.
5. Protection against motor overload is set by par. 1-90 *Motor Thermal Protection*. If this function is desired, set par. 1-90 *Motor Thermal Protection* to data value [ETR trip] (default value) or data value [ETR warning]. Note: The function is initialised at 1.16 x rated motor current and rated motor frequency. For the North American market: The ETR functions provide class 20 motor overload protection in accordance with NEC.
6. Do not remove the plugs for the motor and mains supply while the frequency converter is connected to mains. Check that the mains supply has been disconnected and that the necessary time has passed before removing motor and mains plugs.
7. Please note that the frequency converter has more voltage inputs than L1, L2 and L3, when load sharing (linking of DC intermediate circuit) and external 24 V DC have been installed. Check that all voltage inputs have been disconnected and that the necessary time has passed before commencing repair work.

Installation at High Altitudes

Installation at high altitude:
380 - 500 V, enclosure A, B and C: At altitudes above 2 km, please contact Danfoss regarding PELV.
380 - 500 V, enclosure D, E and F: At altitudes above 3 km, please contact Danfoss regarding PELV.
525 - 690 V: At altitudes above 2 km, please contact Danfoss regarding PELV.

Warning against Unintended Start

1. The motor can be brought to a stop by means of digital commands, bus commands, references or a local stop, while the frequency converter is connected to mains. If personal safety considerations make it necessary to ensure that no unintended start occurs, these stop functions are not sufficient.
2. While parameters are being changed, the motor may start. Consequently, the stop key [STOP/RESET] must always be activated; following which data can be modified.
3. A motor that has been stopped may start if faults occur in the electronics of the frequency converter, or if a temporary overload or a fault in the supply mains or the motor connection ceases.

Warning:
Touching the electrical parts may be fatal - even after the equipment has been disconnected from mains.

Also make sure that other voltage inputs have been disconnected, such as external 24 V DC, load sharing (linkage of DC intermediate circuit), as well as the motor connection for kinetic back up. Refer to the Operating Instructions for further safety guidelines.

2

2.1.2 Caution

The frequency converter DC link capacitors remain charged after power has been disconnected. To avoid an electrical shock hazard, disconnect the frequency converter from the mains before carrying out maintenance. Wait at least as follows before doing service on the frequency converter:

Voltage (V)	Min. Waiting Time (Minutes)				
	4	15	20	30	40
200 - 240	1.1 - 3.7 kW	5.5 - 45 kW			
380 - 480	1.1 - 7.5 kW	11 - 90 kW	110 - 250 kW		315 - 1000 kW
525-600	1.1 - 7.5 kW	11 - 90 kW			
525-690		11 - 90 kW	45 - 400 kW	450 - 1200 kW	

Be aware that there may be high voltage on the DC link even when the LEDs are turned off.

2.1.3 Disposal Instruction

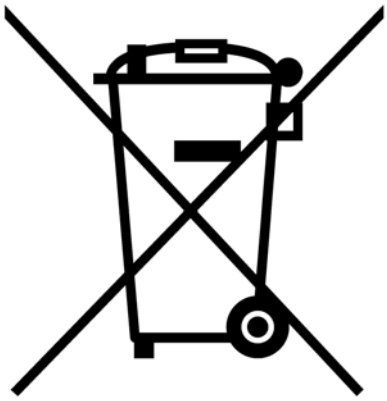

Equipment containing electrical components may not be disposed of together with domestic waste.
It must be separately collected with electrical and electronic waste according to local and currently valid legislation.

2.2 CE labelling

2.2.1 CE Conformity and Labelling

What is CE Conformity and Labelling?

The purpose of CE labelling is to avoid technical trade obstacles within EFTA and the EU. The EU has introduced the CE label as a simple way of showing whether a product complies with the relevant EU directives. The CE label says nothing about the specifications or quality of the product. Frequency converters are regulated by three EU directives:

The machinery directive (98/37/EEC)

All machines with critical moving parts are covered by the machinery directive of January 1, 1995. Since a frequency converter is largely electrical, it does not fall under the machinery directive. However, if a frequency converter is supplied for use in a machine, we provide information on safety aspects relating to the frequency converter. We do this by means of a manufacturer's declaration.

The low-voltage directive (73/23/EEC)

Frequency converters must be CE labelled in accordance with the low-voltage directive of January 1, 1997. The directive applies to all electrical equipment and appliances used in the 50 - 1000 V AC and the 75 - 1500 V DC voltage ranges. Danfoss CE-labels in accordance with the directive and issues a declaration of conformity upon request.

The EMC directive (89/336/EEC)

EMC is short for electromagnetic compatibility. The presence of electromagnetic compatibility means that the mutual interference between different components/appliances does not affect the way the appliances work.

The EMC directive came into effect January 1, 1996. Danfoss CE-labels in accordance with the directive and issues a declaration of conformity upon request. To carry out EMC-correct installation, see the instructions in this Design Guide. In addition, we specify which standards our products comply with. We offer the filters presented in the specifications and provide other types of assistance to ensure the optimum EMC result.

The frequency converter is most often used by professionals of the trade as a complex component forming part of a larger appliance, system or installation. It must be noted that the responsibility for the final EMC properties of the appliance, system or installation rests with the installer.

2.2.2 What Is Covered

The EU "*Guidelines on the Application of Council Directive 89/336/EEC*" outline three typical situations of using a frequency converter. See below for EMC coverage and CE labelling.

1. The frequency converter is sold directly to the end-consumer. The frequency converter is for example sold to a DIY market. The end-consumer is a layman. He installs the frequency converter himself for use with a hobby machine, a kitchen appliance, etc. For such applications, the frequency converter must be CE labelled in accordance with the EMC directive.
2. The frequency converter is sold for installation in a plant. The plant is built up by professionals of the trade. It could be a production plant or a heating/ventilation plant designed and installed by professionals of the trade. Neither the frequency converter nor the finished plant has to be CE labelled under the EMC directive. However, the unit must comply with the basic EMC requirements of the directive. This is ensured by using components, appliances, and systems that are CE labelled under the EMC directive.
3. The frequency converter is sold as part of a complete system. The system is being marketed as complete and could e.g. be an air-conditioning system. The complete system must be CE labelled in accordance with the EMC directive. The manufacturer can ensure CE labelling under the EMC directive either by using CE labelled components or by testing the EMC of the system. If he chooses to use only CE labelled components, he does not have to test the entire system.

2.2.3 Danfoss Frequency Converter and CE Labelling

CE labelling is a positive feature when used for its original purpose, i.e. to facilitate trade within the EU and EFTA.

However, CE labelling may cover many different specifications. Thus, you have to check what a given CE label specifically covers.

The covered specifications can be very different and a CE label may therefore give the installer a false feeling of security when using a frequency converter as a component in a system or an appliance.

Danfoss CE labels the frequency converters in accordance with the low-voltage directive. This means that if the frequency converter is installed correctly, we guarantee compliance with the low-voltage directive. Danfoss issues a declaration of conformity that confirms our CE labelling in accordance with the low-voltage directive.

The CE label also applies to the EMC directive provided that the instructions for EMC-correct installation and filtering are followed. On this basis, a declaration of conformity in accordance with the EMC directive is issued.

The Design Guide offers detailed instructions for installation to ensure EMC-correct installation. Furthermore, Danfoss specifies which our different products comply with.

Danfoss gladly provides other types of assistance that can help you obtain the best EMC result.

2.2.4 Compliance with EMC Directive 89/336/EEC

As mentioned, the frequency converter is mostly used by professionals of the trade as a complex component forming part of a larger appliance, system, or installation. It must be noted that the responsibility for the final EMC properties of the appliance, system or installation rests with the installer. As an aid to the installer, Danfoss has prepared EMC installation guidelines for the Power Drive system. The standards and test levels stated for Power Drive systems are complied with, provided that the EMC-correct instructions for installation are followed, see the section *EMC Immunity*.

The frequency converter has been designed to meet the IEC/EN 60068-2-3 standard, EN 50178 pkt. 9.4.2.2 at 50°C.

A frequency converter contains a large number of mechanical and electronic components. All are to some extent vulnerable to environmental effects.

The frequency converter should not be installed in environments with airborne liquids, particles, or gases capable of affecting and damaging the electronic components. Failure to take the necessary protective measures increases the risk of stoppages, thus reducing the life of the frequency converter.

Liquids can be carried through the air and condense in the frequency converter and may cause corrosion of components and metal parts. Steam, oil, and salt water may cause corrosion of components and metal parts. In such environments, use equipment with enclosure rating IP 54/55. As an extra protection, coated printed circuit boards can be ordered as an option.

Airborne Particles such as dust may cause mechanical, electrical, or thermal failure in the frequency converter. A typical indicator of excessive levels of airborne particles is dust particles around the frequency converter fan. In very dusty environments, use equipment with enclosure rating IP 54/55 or a cabinet for IP 00/IP 20/TYPE 1 equipment.

In environments with high temperatures and humidity, corrosive gases such as sulphur, nitrogen, and chlorine compounds will cause chemical processes on the frequency converter components.

Such chemical reactions will rapidly affect and damage the electronic components. In such environments, mount the equipment in a cabinet with fresh air ventilation, keeping aggressive gases away from the frequency converter.
An extra protection in such areas is a coating of the printed circuit boards, which can be ordered as an option.

NB!
Mounting frequency converters in aggressive environments increases the risk of stoppages and considerably reduces the life of the converter.

Before installing the frequency converter, check the ambient air for liquids, particles, and gases. This is done by observing existing installations in this environment. Typical indicators of harmful airborne liquids are water or oil on metal parts, or corrosion of metal parts.

Excessive dust particle levels are often found on installation cabinets and existing electrical installations. One indicator of aggressive airborne gases is blackening of copper rails and cable ends on existing installations.

NB!
D and E enclosures have a stainless steel back-channel option to provide additional protection in aggressive environments. Proper ventilation is still required for the internal components of the drive. Contact Danfoss for additional information.

2.5 Vibration and shock

The frequency converter has been tested according to the procedure based on the shown standards:

The frequency converter complies with requirements that exist for units mounted on the walls and floors of production premises, as well as in panels bolted to walls or floors.

IEC/EN 60068-2-6:	Vibration (sinusoidal) - 1970
IEC/EN 60068-2-64:	Vibration, broad-band random

2.6 Safe Stop

2.6.1 Electrical terminals

The frequency converter can perform the safety function *Safe Torque Off* (As defined by draft CD IEC 61800-5-2) or *Stop Category 0* (as defined in EN 60204-1).

It is designed and approved suitable for the requirements of Safety Category 3 in EN 954-1. This functionality is called Safe Stop. Prior to integration and use of Safe Stop in an installation, a thorough risk analysis on the installation must be carried out in order to determine whether the Safe Stop functionality and safety category are appropriate and sufficient. In order to install and use the Safe Stop function in accordance with the requirements of Safety Category 3 in EN 954-1, the related information and instructions of the relevant Design Guide must be followed! The information and instructions of the Operating Instructions are not sufficient for a correct and safe use of the Safe Stop functionality!

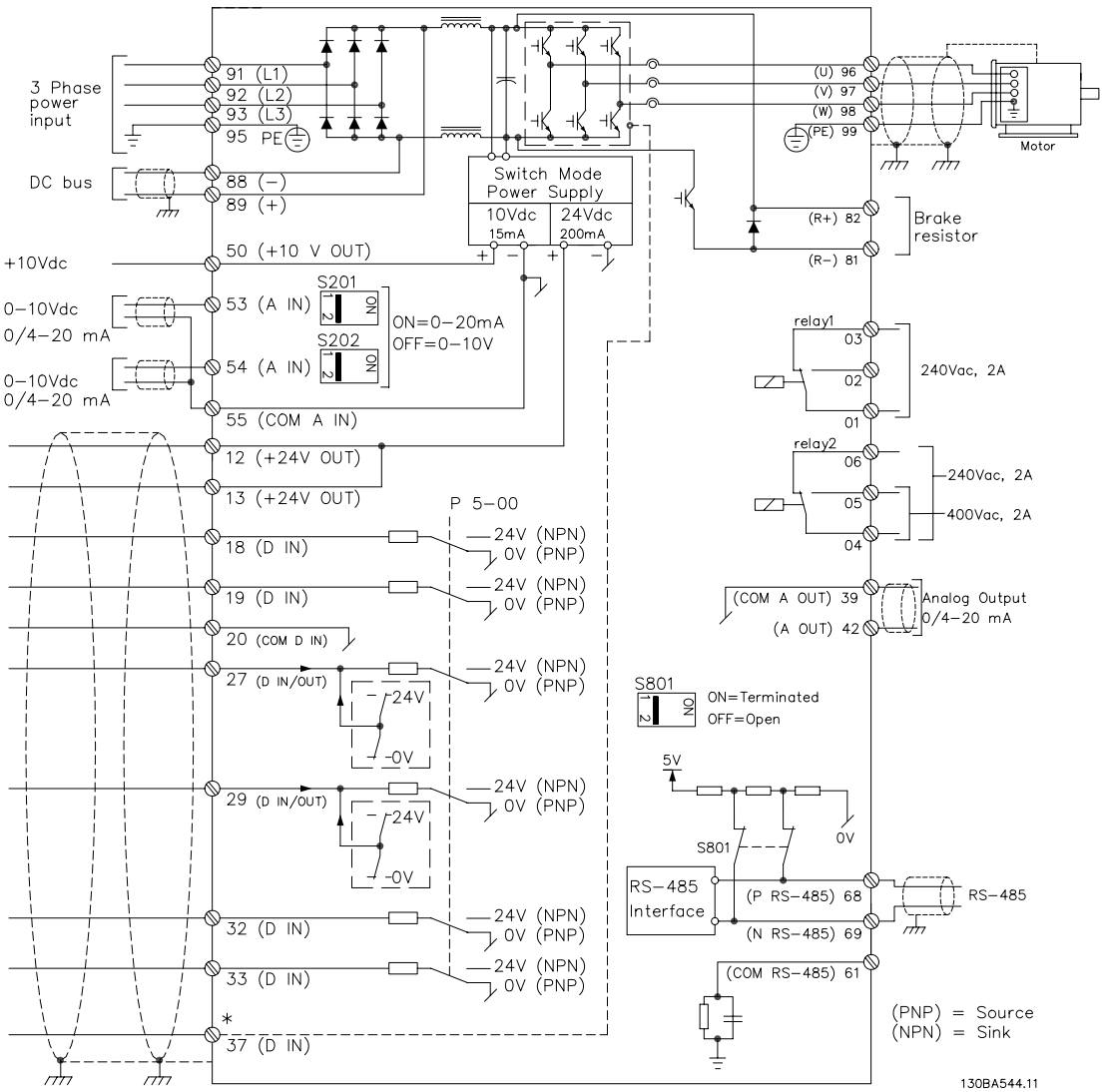

Illustration 2.1: Diagram showing all electrical terminals. (Terminal 37 present for units with Safe Stop Function only.)

2

Prüf- und Zertifizierungsstelle
im BG-PRÜFZERT

BGIA
Berufsgenossenschaftliches Institut für Arbeitsschutz
Hauptverband der gewerblichen Berufsgenossenschaften

130BA373.10

Translation
In any case, the German original shall prevail.

Type Test Certificate

05 06004
No. of certificate

Name and address of the holder of the certificate: (customer)	Danfoss Drives A/S, Ulnaes 1 DK-6300 Graasten, Dänemark
Name and address of the manufacturer:	Danfoss Drives A/S, Ulnaes 1 DK-6300 Graasten, Dänemark
Ref. of customer:	Ref. of Test and Certification Body: Apf/Köh VE-Nr. 2003 23220 — Date of issue: 13.04.2005
Product designation:	Frequency converter with integrated safety functions
Type:	VLT® Automation Drive FC 302
Intended purpose:	Implementation of safety function „Safe Stop"
Testing based on:	EN 954-1, 1997-03, DKE AK 226.03, 1998-06, EN ISO 13849-2; 2003-12, EN 61800-3, 2001-02, EN 61800-5-1, 2003-09,
Test certificate:	No.: 2003 23220 from 13.04.2005
Remarks:	The presented types of the frequency converter FC 302 meet the requirements laid down in the test bases. With correct wiring a category 3 according to DIN EN 954-1 is reached for the safety function.

The type tested complies with the provisions laid down in the directive 98/37/EC (Machinery).

Further conditions are laid down in the Rules of Procedure for Testing and Certification of April 2004.

Head of certification body
(Prof. Dr. rer. nat. Dietmar Reinert)

Certification officer
(Dipl.-Ing. R. Apfeld)

FZ810E 01.05

Postal adress: 53754 Sankt Augustin
Office: Alte Heerstraße 111, 53757 Sankt Augustin
Phone: 0 22 41/2 31-02
Fax: 0 22 41/2 31-22 34

TÜV NORD

130BB178.10

Certificate

TÜV NORD SysTec GmbH & Co. KG hereby certifies

Danfoss Drives A/S
Ulsnæs 1
DK-6300 Graasten
Denmark

for the realisation of the function "Safe Stop - STO"
in the Danfoss drives types
VLT® Automation Drive FC 302, VLT® Automation Drive FC 301 in the A1 housing
VLT® AQUA Drive FC 202, VLT® HVAC Drive FC 102

the compliance with the requirements listed in the following standards

- IEC 61800-5-2:2007; Designated Safety Function "Safe Torque Off - STO; SIL2 capability
- IEC 61508; Part 1:1998 + Corrigendum 1999
- EN 61508; Part 2:2000; SIL 2 capability for STO function
- EN ISO 13849-1:2006; PL d, EN 954-1:1996; Category 3
- IEC 62061:2005; SILCL 2

based on report No. SAS-163/2006C in the valid version.
This certificate entitles the holder to use the mark:

TÜV NORD Certification
Safety Approved
SAS1724/07
Voluntary Certification

FC 102
FC 202
FC 301 A1
FC 302
with STO function

EN ISO 13849-1:2006 PL „d"
IEC 61508-1:1998 and Corrigendum 1999;
IEC 61508-2:2000; SIL2 capability
IEC 62061:2005 SILCL2 capability
EN 954-1:1996 Category 3;

Expiry date: 2013-01-16
Certification No.: SAS1724/07, Vers. 1.0
Reference No.: M.IB5.03.122.01.SLA
86150 Augsburg
Augsburg, 2008-01-16

TÜV NORD SysTec GmbH & Co. KG
Branch South
Haldenstraße 27
86150 Augsburg
Germany

Dr. Immanuel Höfer

08

2.6.2 Safe Stop Installation

To carry out an installation of a Category 0 Stop (EN60204) in conformity with Safety Category 3 (EN954-1), follow these instructions:

1. The bridge (jumper) between Terminal 37 and 24 V DC must be removed. Cutting or breaking the jumper is not sufficient. Remove it entirely to avoid short-circuiting. See jumper on illustration.
2. Connect terminal 37 to 24 V DC by a short-circuit protected cable. The 24 V DC voltage supply must be interruptible by an EN954-1 Category 3 circuit interrupt device. If the interrupt device and the frequency converter are placed in the same installation panel, you can use an unscreened cable instead of a screened one.

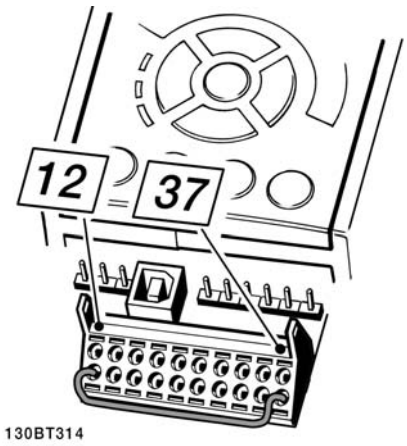

Illustration 2.2: Bridge jumper between terminal 37 and 24 VDC

The illustration below shows a Stopping Category 0 (EN 60204-1) with safety Category 3 (EN 954-1). The circuit interrupt is caused by an opening door contact. The illustration also shows how to connect a non-safety related hardware coast.

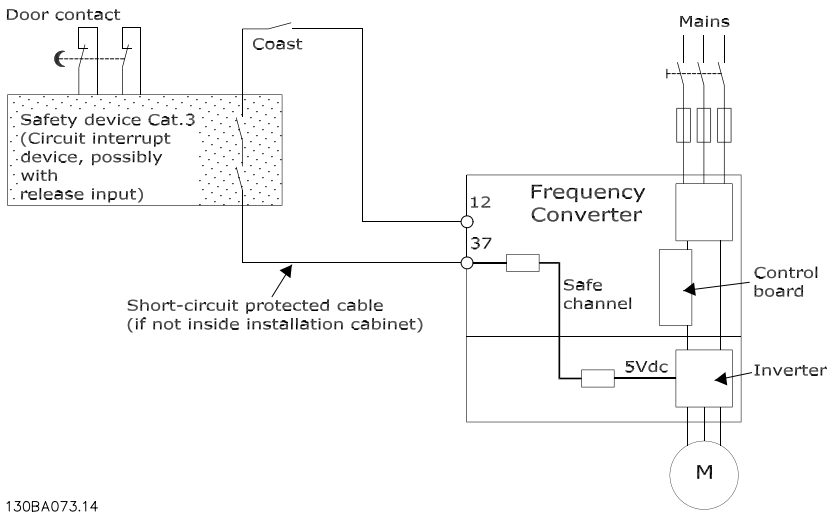

Illustration 2.3: Illustration of the essential aspects of an installation to achieve a Stopping Category 0 (EN 60204-1) with safety Category 3 (EN 954-1).

2

2.7 Advantages

2.7.1 Why use a Frequency Converter for Controlling Fans and Pumps?

A frequency converter takes advantage of the fact that centrifugal fans and pumps follow the laws of proportionality for such fans and pumps. For further information see the text *The Laws of Proportionality*.

2.7.2 The Clear Advantage - Energy Savings

The very clear advantage of using a frequency converter for controlling the speed of fans or pumps lies in the electricity savings.
When comparing with alternative control systems and technologies, a frequency converter is the optimum energy control system for controlling fan and pump systems.

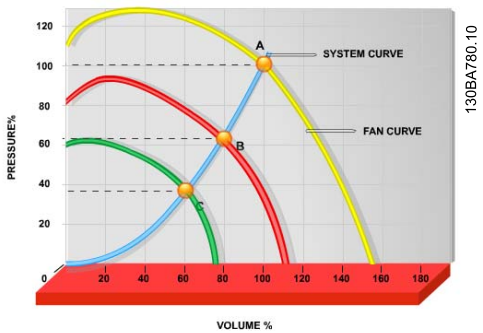

Illustration 2.4: The graph is showing fan curves (A, B and C) for reduced fan volumes.

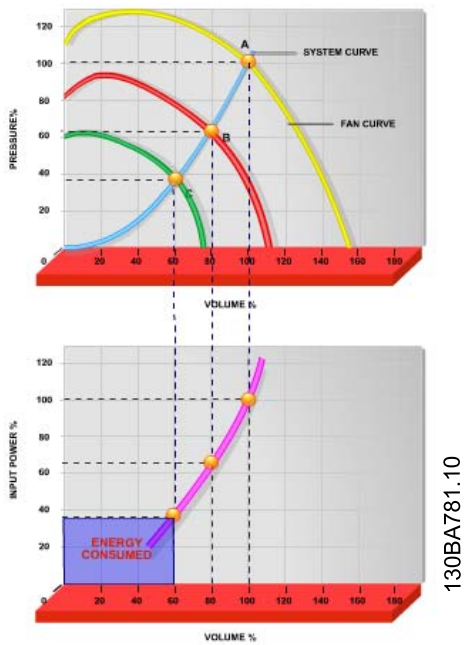

Illustration 2.5: When using a frequency converter to reduce fan capacity to 60% - more than 50% energy savings may be obtained in typical applications.

2.7.3 Example of Energy Savings

As can be seen from the figure (the laws of proportionality), the flow is controlled by changing the RPM. By reducing the speed only 20% from the rated speed, the flow is also reduced by 20%. This is because the flow is directly proportional to the RPM. The consumption of electricity, however, is reduced by 50%.
If the system in question only needs to be able to supply a flow that corresponds to 100% a few days in a year, while the average is below 80% of the rated flow for the remainder of the year, the amount of energy saved is even more than 50%.

The laws of proportionality

The figure below describes the dependence of flow, pressure and power consumption on RPM.

Q = Flow	P = Power
Q_1 = Rated flow	P_1 = Rated power
Q_2 = Reduced flow	P_2 = Reduced power
H = Pressure	n = Speed regulation
H_1 = Rated pressure	n_1 = Rated speed
H_2 = Reduced pressure	n_2 = Reduced speed

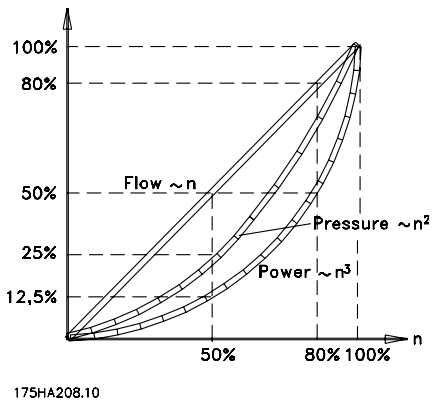

$$Flow: \frac{Q_1}{Q_2} = \frac{n_1}{n_2}$$

$$Pressure: \frac{H_1}{H_2} = \left(\frac{n_1}{n_2}\right)^2$$

$$Power: \frac{P_1}{P_2} = \left(\frac{n_1}{n_2}\right)^3$$

2.7.4 Comparison of energy savings

The Danfoss frequency converter solution offers major savings compared with traditional energy saving solutions. This is because the frequency converter is able to control fan speed according to thermal load on the system and the fact that the frequency converter has a build-in facility that enables the frequency converter to function as a Building Management System, BMS.

The graph below illustrates typical energy savings obtainable with 3 well-known solutions when fan volume is reduced to i.e. 60%.
As the graph shows, more than 50% energy savings can be achieved in typical applications.

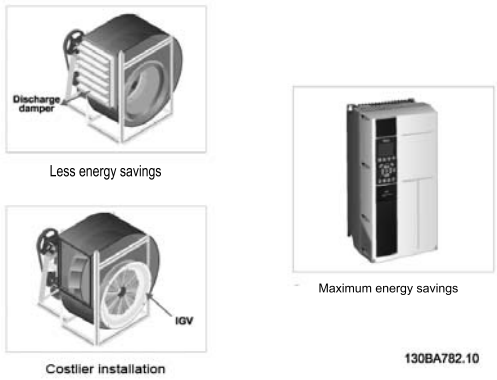

Illustration 2.6: The three common energy saving systems.

2

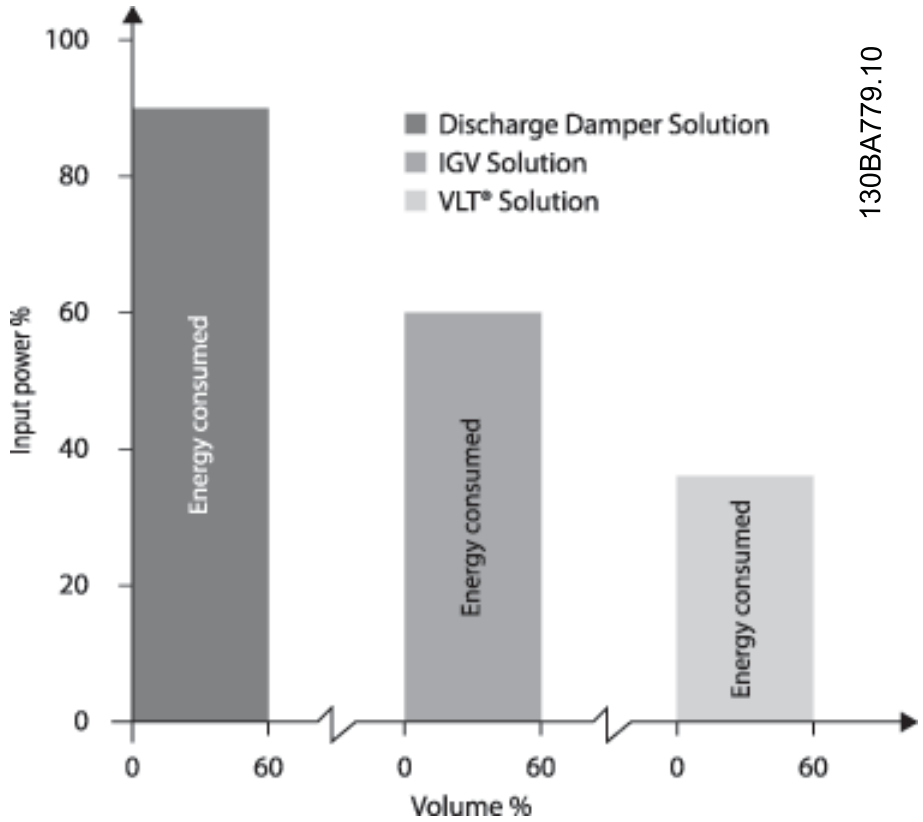

Illustration 2.7: Discharge dampers reduce power consumption somewhat. Inlet Guide Vans offer a 40% reduction but are expensive to install. The Danfossfrequency converter solution reduces energy consumption with more than 50% and is easy to install.

2.7.5 Example with Varying Flow over 1 Year

The example below is calculated on the basis of pump characteristics obtained from a pump datasheet.
The result obtained shows energy savings in excess of 50% at the given flow distribution over a year. The pay back period depends on the price per kwh and price of frequency converter. In this example it is less than a year when compared with valves and constant speed.

Energy savings

$P_{shaft}=P_{shaft\ output}$

Flow distribution over 1 year

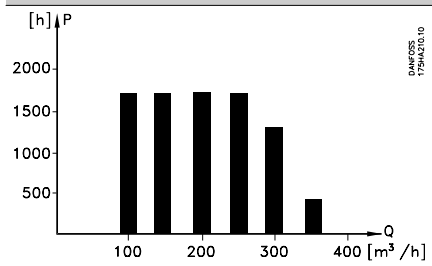

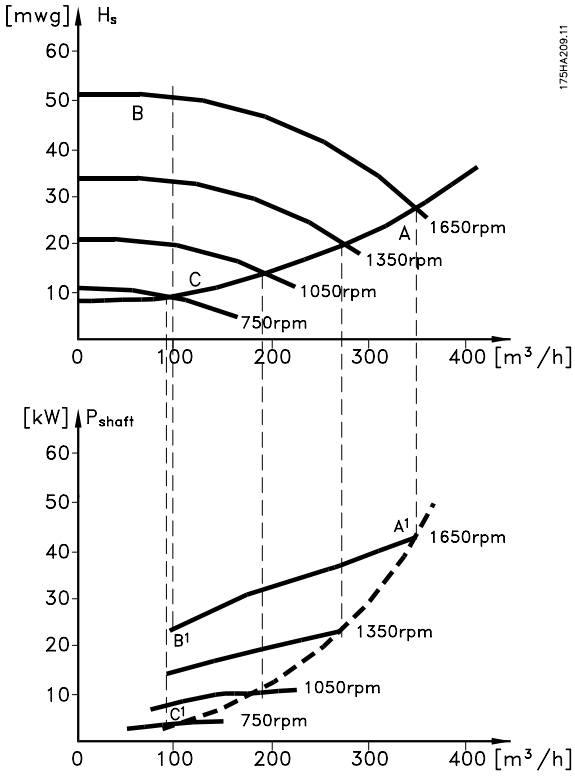

m^3/h	Distribution		Valve regulation		Frequency converter control	
	%	Hours	Power	Consumption	Power	Consumption
			A_1 - B_1	kWh	A_1 - C_1	kWh
350	5	438	42,5	18.615	42,5	18.615
300	15	1314	38,5	50.589	29,0	38.106
250	20	1752	35,0	61.320	18,5	32.412
200	20	1752	31,5	55.188	11,5	20.148
150	20	1752	28,0	49.056	6,5	11.388
100	20	1752	23,0	40.296	3,5	6.132
Σ	100	8760		275.064		26.801

2.7.6 Better Control

If a frequency converter is used for controlling the flow or pressure of a system, improved control is obtained.
A frequency converter can vary the speed of the fan or pump, thereby obtaining variable control of flow and pressure.
Furthermore, a frequency converter can quickly adapt the speed of the fan or pump to new flow or pressure conditions in the system.
Simple control of process (Flow, Level or Pressure) utilizing the built in PID control.

2.7.7 Cos φ Compensation

Generally speaking, a frequency converter with a cos φ of 1 provides power factor correction for the cos φ of the motor, which means that there is no need to make allowance for the cos φ of the motor when sizing the power factor correction unit.

2.7.8 Star/delta starter or soft-starter not required

When larger motors are started, it is necessary in many countries to use equipment that limits the start-up current. In more traditional systems, a star/delta starter or soft-starter is widely used. Such motor starters are not required if a frequency converter is used.

2

As illustrated in the figure below, a frequency converter does not consume more than rated current.

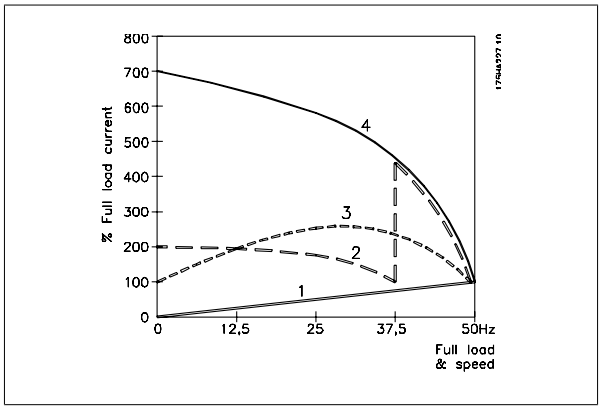

1 = VLT HVAC Drive	
2 = Star/delta starter	
3 = Soft-starter	
4 = Start directly on mains	

2.7.9 Using a frequency converter saves money

The example on the following page shows that a lot of equipment is not required when a frequency converter is used. It is possible to calculate the cost of installing the two different systems. In the example on the following page, the two systems can be established at roughly the same price.

2.7.10 Without a frequency converter

The figure shows a fan system made in the traditional way.

D.D.C.	=	Direct Digital Control	E.M.S.	=	Energy Management system
V.A.V.	=	Variable Air Volume			
Sensor P	=	Pressure	Sensor T	=	Temperature

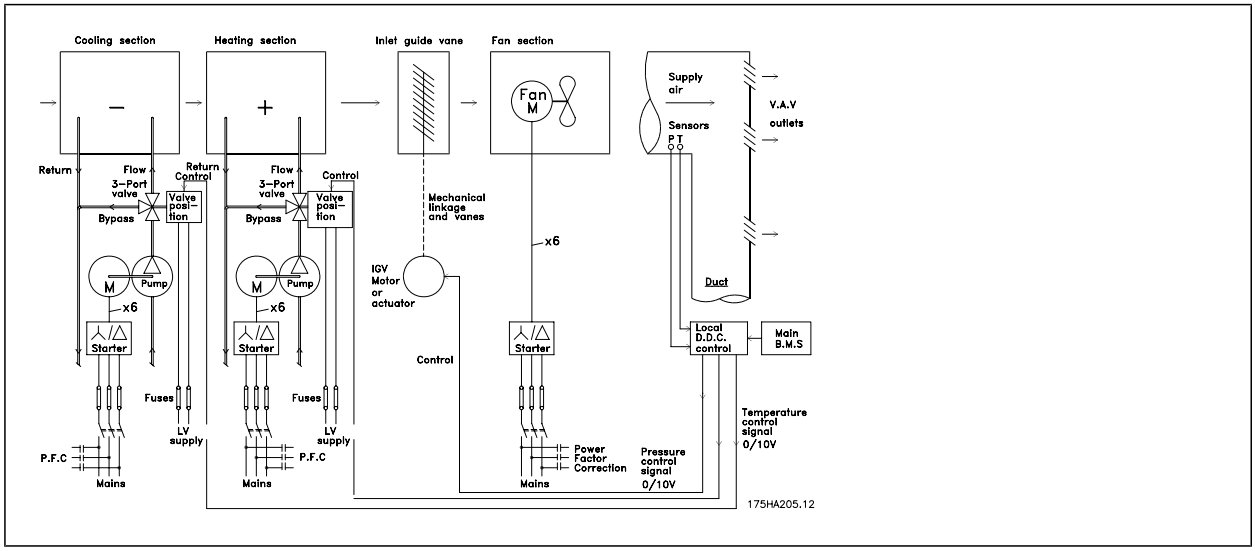

2.7.11 With a frequency converter

The figure shows a fan system controlled by frequency converters.

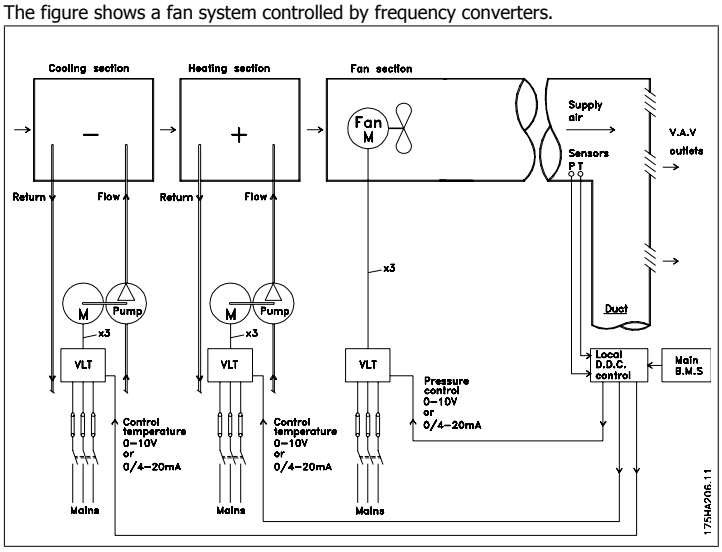

2.7.12 Application examples

The next few pages give typical examples of applications within HVAC.

If you would like to receive further information about a given application, please ask your Danfoss supplier for an information sheet that gives a full description of the application.

Variable Air Volume

Ask for The Drive to...Improving Variable Air Volume Ventilation Systems MN.60.A1.02

Constant Air Volume

Ask for The Drive to...Improving Constant Air Volume Ventilation Systems MN.60.B1.02

Cooling Tower Fan

Ask for The Drive to...Improving fan control on cooling towers MN.60.C1.02

Condenser pumps

Ask for The Drive to...Improving condenser water pumping systems MN.60.F1.02

Primary pumps

Ask for The Drive to...Improve your primary pumping in primay/secondary pumping systems MN.60.D1.02

Secondary pumps

Ask for The Drive to...Improve your secondary pumping in primay/secondary pumping systems MN.60.E1.02

2.7.13 Variable Air Volume

VAV or Variable Air Volume systems, are used to control both the ventilation and temperature to satisfy the requirements of a building. Central VAV systems are considered to be the most energy efficient method to air condition buildings. By designing central systems instead of distributed systems, a greater efficiency can be obtained.

The efficiency comes from utilizing larger fans and larger chillers which have much higher efficiencies than small motors and distributed air-cooled chillers. Savings are also seen from the decreased maintenance requirements.

2.7.14 The VLT solution

While dampers and IGVs work to maintain a constant pressure in the ductwork, a frequency converter solution saves much more energy and reduces the complexity of the installation. Instead of creating an artificial pressure drop or causing a decrease in fan efficiency, the frequency converter decreases the speed of the fan to provide the flow and pressure required by the system.

Centrifugal devices such as fans behave according to the centrifugal laws. This means the fans decrease the pressure and flow they produce as their speed is reduced. Their power consumption is thereby significantly reduced.

The return fan is frequently controlled to maintain a fixed difference in airflow between the supply and return. The advanced PID controller of the HVAC frequency converter can be used to eliminate the need for additional controllers.

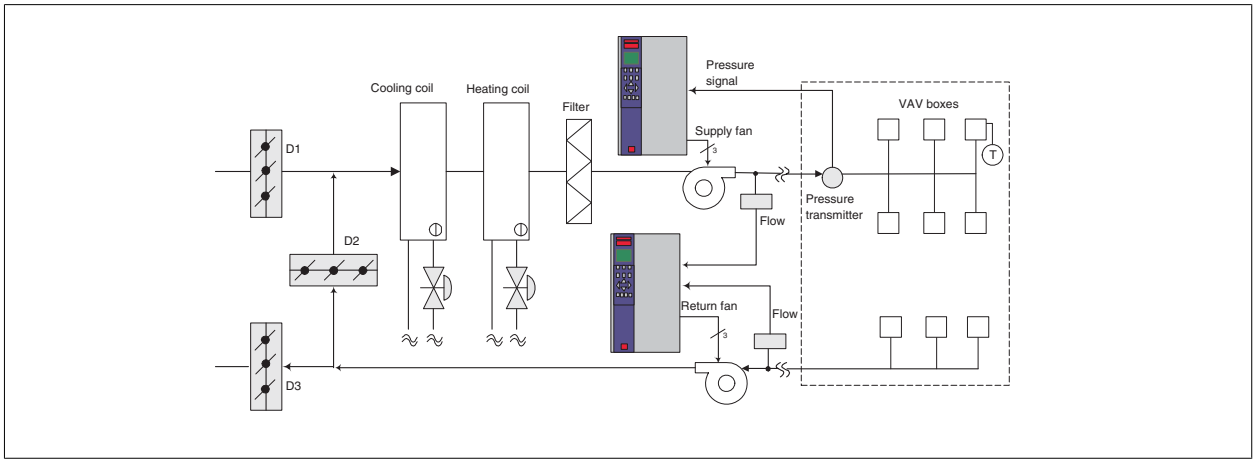

2.7.15 Constant Air Volume

CAV, or Constant Air Volume systems are central ventilation systems usually used to supply large common zones with the minimum amounts of fresh tempered air. They preceded VAV systems and therefore are found in older multi-zoned commercial buildings as well. These systems preheat amounts of fresh air utilizing Air Handling Units (AHUs) with a heating coil, and many are also used to air condition buildings and have a cooling coil. Fan coil units are frequently used to assist in the heating and cooling requirements in the individual zones.

2.7.16 The VLT solution

With a frequency converter, significant energy savings can be obtained while maintaining decent control of the building. Temperature sensors or CO_2 sensors can be used as feedback signals to frequency converters. Whether controlling temperature, air quality, or both, a CAV system can be controlled to operate based on actual building conditions. As the number of people in the controlled area decreases, the need for fresh air decreases. The CO_2 sensor detects lower levels and decreases the supply fans speed. The return fan modulates to maintain a static pressure setpoint or fixed difference between the supply and return air flows.

With temperature control, especially used in air conditioning systems, as the outside temperature varies as well as the number of people in the controlled zone changes, different cooling requirements exist. As the temperature decreases below the set-point, the supply fan can decrease its speed. The return fan modulates to maintain a static pressure set-point. By decreasing the air flow, energy used to heat or cool the fresh air is also reduced, adding further savings.
Several features of the Danfoss HVAC dedicated frequency converter can be utilized to improve the performance of your CAV system. One concern of controlling a ventilation system is poor air quality. The programmable minimum frequency can be set to maintain a minimum amount of supply air regardless of the feedback or reference signal. The frequency converter also includes a 3-zone, 3 setpoint PID controller which allows monitoring both temperature and air quality. Even if the temperature requirement is satisfied, the frequency converter will maintain enough supply air to satisfy the air quality sensor. The controller is capable of monitoring and comparing two feedback signals to control the return fan by maintaining a fixed differential air flow between the supply and return ducts as well.

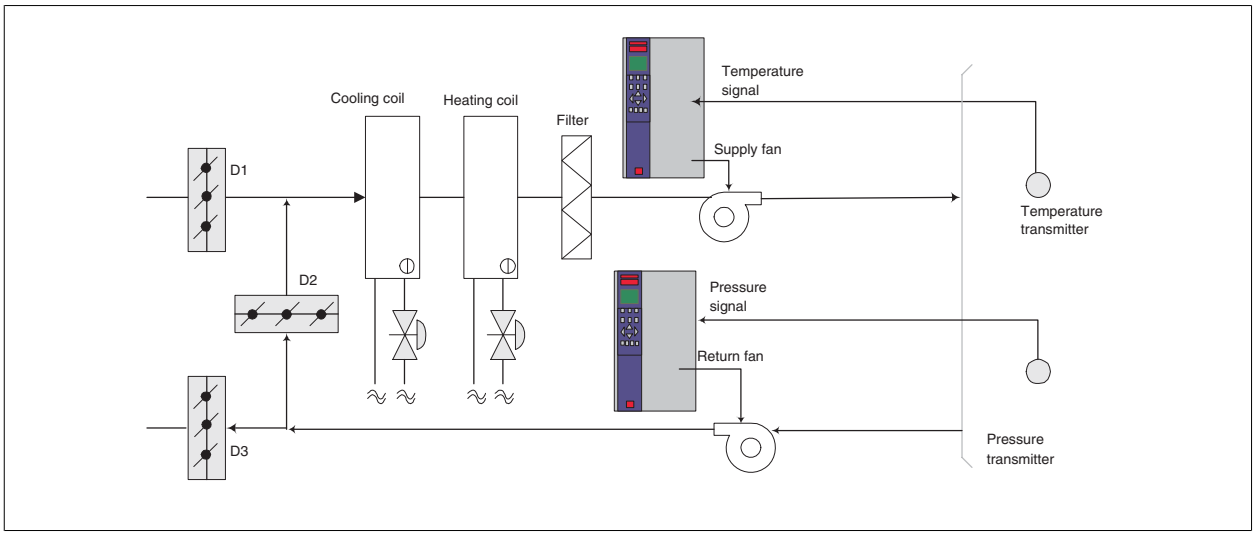

2.7.17 Cooling Tower Fan

Cooling Tower Fans are used to cool condenser water in water cooled chiller systems. Water cooled chillers provide the most efficient means of creating chilled water. They are as much as 20% more efficient than air cooled chillers. Depending on climate, cooling towers are often the most energy efficient method of cooling the condenser water from chillers.
They cool the condenser water by evaporation.
The condenser water is sprayed into the cooling tower onto the cooling towers "fill" to increase its surface area. The tower fan blows air through the fill and sprayed water to aid in the evaporation. Evaporation removes energy from the water dropping its temperature. The cooled water collects in the cooling towers basin where it is pumped back into the chillers condenser and the cycle is repeated.

2.7.18 The VLT solution

With a frequency converter, the cooling towers fans can be controlled to the required speed to maintain the condenser water temperature. The frequency converters can also be used to turn the fan on and off as needed.

Several features of the Danfoss HVAC dedicated frequency converter, the HVAC frequency converter can be utilized to improve the performance of your cooling tower fans application. As the cooling tower fans drop below a certain speed, the effect the fan has on cooling the water becomes small. Also, when utilizing a gear-box to frequency control the tower fan, a minimum speed of 40-50% may be required.
The customer programmable minimum frequency setting is available to maintain this minimum frequency even as the feedback or speed reference calls for lower speeds.

Also as a standard feature, you can program the frequency converter to enter a "sleep" mode and stop the fan until a higher speed is required. Additionally, some cooling tower fans have undesireable frequencies that may cause vibrations. These frequencies can easily be avoided by programming the bypass frequency ranges in the frequency converter.

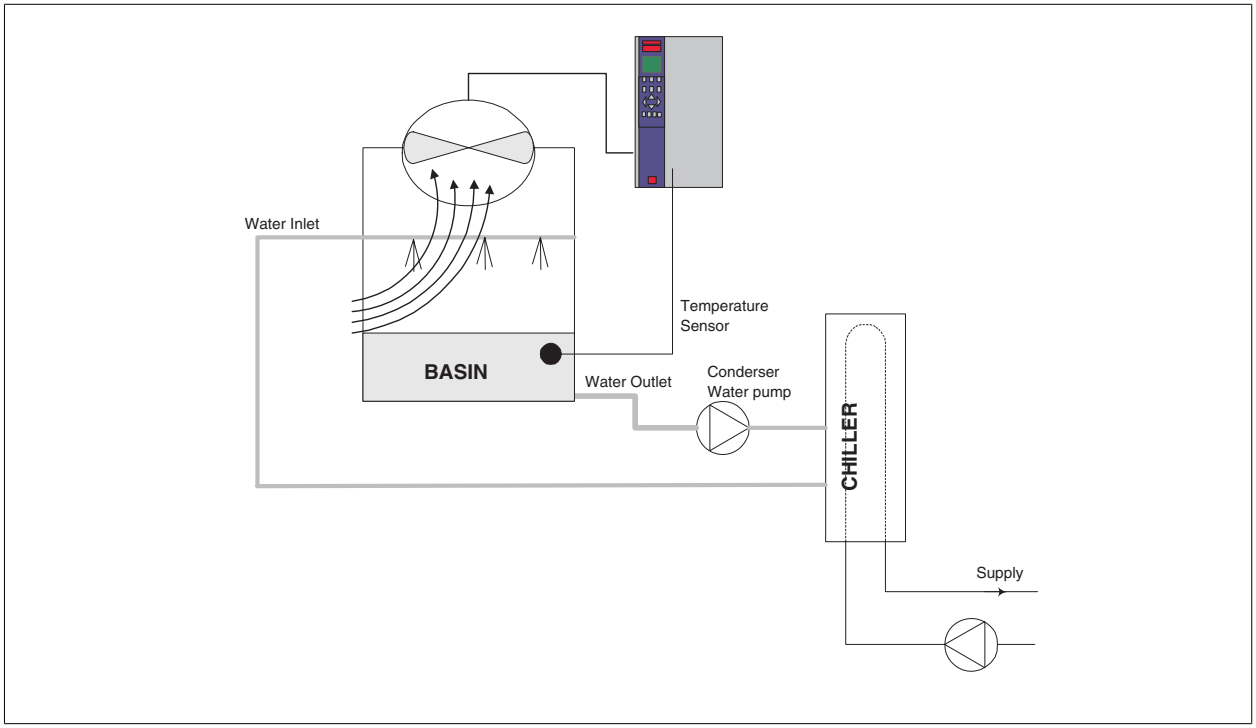

2.7.19 Condenser pumps

Condenser Water pumps are primarily used to circulate water through the condenser section of water cooled chillers and their associated cooling tower. The condenser water absorbs the heat from the chiller's condenser section and releases it into the atmosphere in the cooling tower. These systems are used to provide the most efficient means of creating chilled water, they are as much as 20% more efficient than air cooled chillers.

2.7.20 The VLT solution

Frequency converters can be added to condenser water pumps instead of balancing the pumps with a throttling valve or trimming the pump impeller.

Using a frequency converter instead of a throttling valve simply saves the energy that would have been absorbed by the valve. This can amount to savings of 15-20% or more. Trimming the pump impeller is irreversible, thus if the conditions change and higher flow is required the impeller must be replaced.

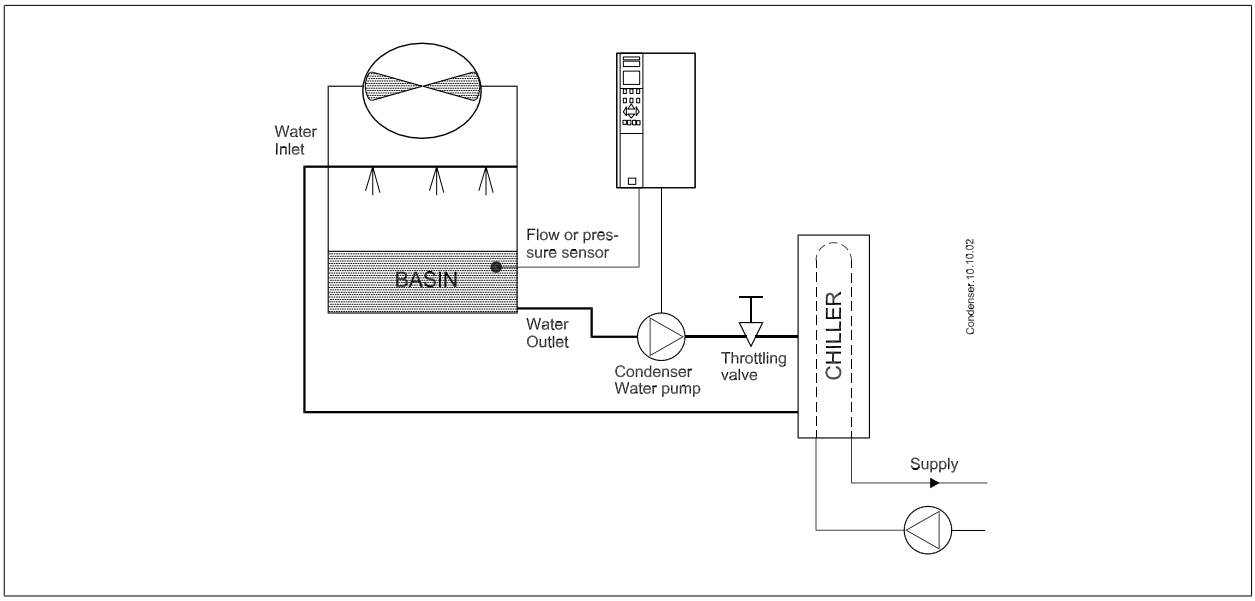

2.7.21 Primary pumps

Primary pumps in a primary/secondary pumping system can be used to maintain a constant flow through devices that encounter operation or control difficulties when exposed to variable flow. The primary/ secondary pumping technique decouples the "primary" production loop from the "secondary" distribution loop. This allows devices such as chillers to obtain constant design flow and operate properly while allowing the rest of the system to vary in flow.

As the evaporator flow rate decreases in a chiller, the chilled water begins to become over-chilled. As this happens, the chiller attempts to decrease its cooling capacity. If the flow rate drops far enough, or too quickly, the chiller cannot shed its load sufficiently and the chiller's low evaporator temperature safety trips the chiller requiring a manual reset. This situation is common in large installations especially when two or more chillers in parallel are installed if primary/ secondary pumping is not utilized.

2.7.22 The VLT solution

Depending on the size of the system and the size of the primary loop, the energy consumption of the primary loop can become substantial.
A frequency converter can be added to the primary system, to replace the throttling valve and/or trimming of the impellers, leading to reduced operating expenses. Two control methods are common:

The first method uses a flow meter. Because the desired flow rate is known and is constant, a flow meter installed at the discharge of each chiller, can be used to control the pump directly. Using the built-in PID controller, the frequency converter will always maintain the appropriate flow rate, even compensating for the changing resistance in the primary piping loop as chillers and their pumps are staged on and off.

The other method is local speed determination. The operator simply decreases the output frequency until the design flow rate is achieved.
Using a frequency converter to decrease the pump speed is very similar to trimming the pump impeller, except it doesn't require any labor and the pump efficiency remains higher. The balancing contractor simply decreases the speed of the pump until the proper flow rate is achieved and leaves the speed fixed. The pump will operate at this speed any time the chiller is staged on. Because the primary loop doesn't have control valves or other devices that can cause the system curve to change and the variance due to staging pumps and chillers on and off is usually small, this fixed speed will remain appropriate. In the event the flow rate needs to be increased later in the systems life, the frequency converter can simply increase the pump speed instead of requiring a new pump impeller.

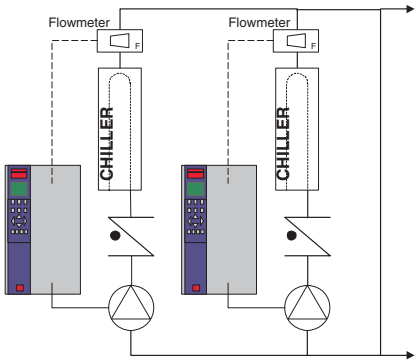

2.7.23 Secondary pumps

Secondary pumps in a primary/secondary chilled water pumping system are used to distribute the chilled water to the loads from the primary production loop. The primary/secondary pumping system is used to hydronically de-couple one piping loop from another. In this case. The primary pump is used to maintain a constant flow through the chillers while allowing the secondary pumps to vary in flow, increase control and save energy.
If the primary/secondary design concept is not used and a variable volume system is designed, when the flow rate drops far enough or too quickly, the chiller cannot shed its load properly. The chiller's low evaporator temperature safety then trips the chiller requiring a manual reset. This situation is common in large installations especially when two or more chillers in parallel are installed.

2.7.24 The VLT solution

While the primary-secondary system with two-way valves improves energy savings and eases system control problems, the true energy savings and control potential is realized by adding frequency converters.
With the proper sensor location, the addition of frequency converters allows the pumps to vary their speed to follow the system curve instead of the pump curve.
This results in the elimination of wasted energy and eliminates most of the over-pressurization, two-way valves can be subjected too.
As the monitored loads are reached, the two-way valves close down. This increases the differential pressure measured across the load and two-way valve. As this differential pressure starts to rise, the pump is slowed to maintain the control head also called setpoint value. This set-point value is calculated by summing the pressure drop of the load and two way valve together under design conditions.

NB!
Please note that when running multiple pumps in parallel, they must run at the same speed to maximize energy savings, either with individual dedicated drives or one frequency converter running multiple pumps in parallel.

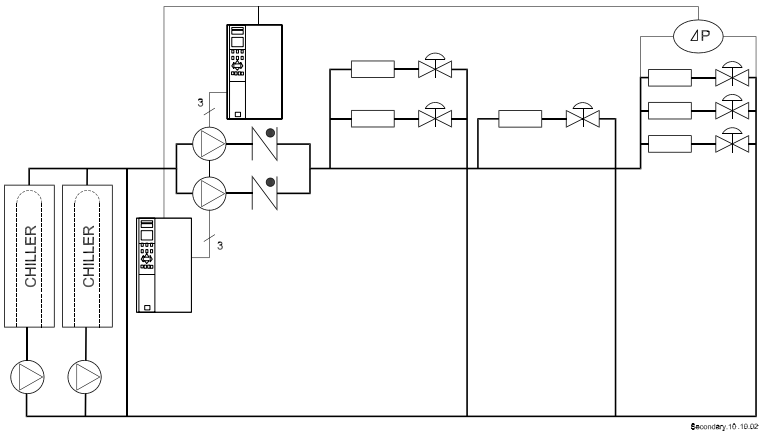

2.8 Control Structures

2.8.1 Control Principle

2

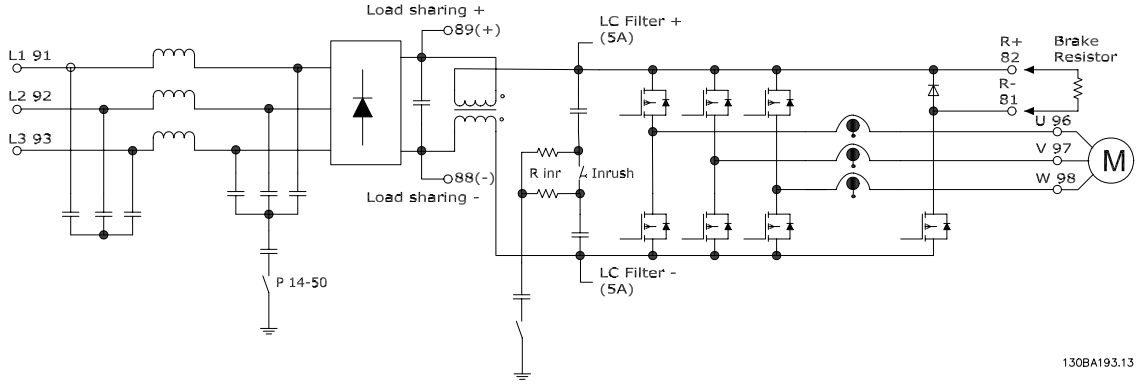

Illustration 2.8: Control structures.

The frequency converter is a high performance unit for demanding applications. It can handle various kinds of motor control principles such as U/f special motor mode and VVC plus and can handle normal squirrel cage asynchronous motors.
Short circuit behavior on this FC depends on the 3 current transducers in the motor phases.

In par. 1-00 *Configuration Mode* it can be selected if open or closed loop is to be used

2.8.2 Control Structure Open Loop

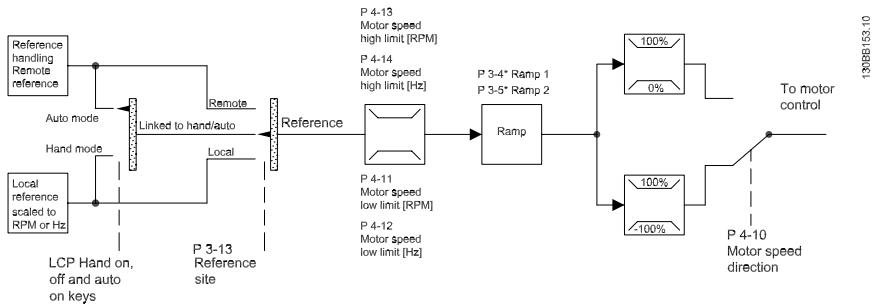

Illustration 2.9: Open Loop structure.

In the configuration shown in the illustration above, par. 1-00 *Configuration Mode* is set to Open loop [0]. The resulting reference from the reference handling system or the local reference is received and fed through the ramp limitation and speed limitation before being sent to the motor control.
The output from the motor control is then limited by the maximum frequency limit.

2.8.3 Local (Hand On) and Remote (Auto On) Control

The frequency converter can be operated manually via the local control panel (LCP) or remotely via analog/digital inputs or serial bus.
If allowed in par. 0-40 *[Hand on] Key on LCP*, par. 0-41 *[Off] Key on LCP*, par. 0-42 *[Auto on] Key on LCP*, and par. 0-43 *[Reset] Key on LCP*, it is possible to start and stop the frequency converter byLCP using the [Hand ON] and [Off] keys. Alarms can be reset via the [RESET] key. After pressing the [Hand ON] key, the frequency converter goes into Hand Mode and follows (as default) the Local reference set by using the LCP arrow keys up [▲] and down [▼].

After pressing the [Auto On] key, the frequency converter goes into Auto mode and follows (as default) the Remote reference. In this mode, it is possible to control the frequency converter via the digital inputs and various serial interfaces (RS-485, USB, or an optional fieldbus). See more about starting, stopping, changing ramps and parameter set-ups etc. in par. group 5-1* (digital inputs) or par. group 8-5* (serial communication).

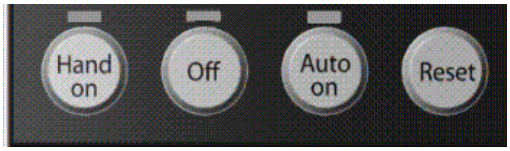

130BP046.1(

Hand Off Auto LCP Keys	**Reference Site par. 3-13 *Reference Site***	**Active Reference**
Hand	Linked to Hand / Auto	Local
Hand -> Off	Linked to Hand / Auto	Local
Auto	Linked to Hand / Auto	Remote
Auto -> Off	Linked to Hand / Auto	Remote
All keys	Local	Local
All keys	Remote	Remote

The table shows under which conditions either the Local Reference or the Remote Reference is active. One of them is always active, but both can not be active at the same time.

Local reference will force the configuration mode to open loop, independent on the setting of par. 1-00 *Configuration Mode*.

NB!
Local Reference will be restored at power-down.

2.8.4 Control Structure Closed Loop

The closed loop controller allows the drive to become an integral part of the controlled system. The drive receives a feedback signal from a sensor in the system. It then compares this feedback to a set-point reference value and determines the error, if any, between these two signals. It then adjusts the speed of the motor to correct this error.

For example, consider a pump application where the speed of a pump is to be controlled so that the static pressure in a pipe is constant. The desired static pressure value is supplied to the drive as the set-point reference. A static pressure sensor measures the actual static pressure in the pipe and supplies this to the drive as a feedback signal. If the feedback signal is greater than the set-point reference, the drive will slow down to reduce the pressure. In a similar way, if the pipe pressure is lower than the set-point reference, the drive will automatically speed up to increase the pressure provided by the pump.

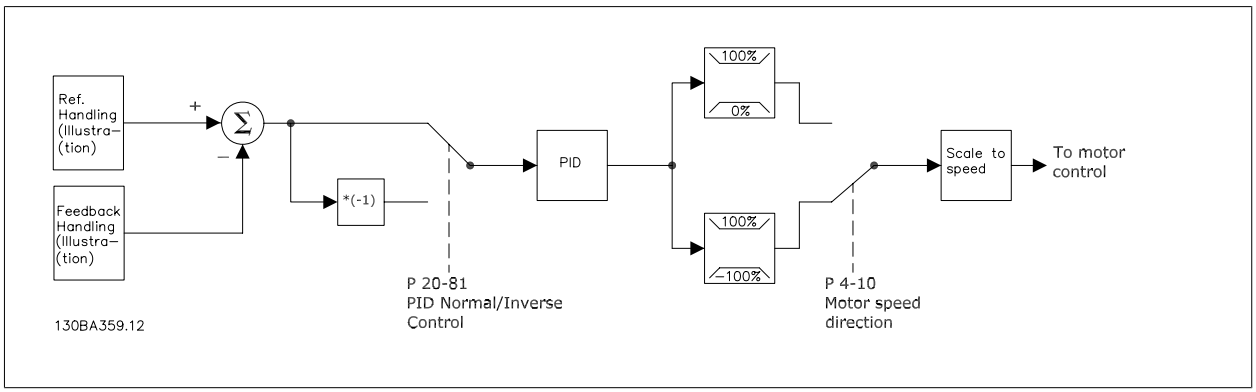

NB!
While the default values for the drive's Closed Loop controller will often provide satisfactory performance, the control of the system can often be optimized by adjusting some of the Closed Loop controller's parameters. It is also possible to autotune the PI constants.

The figure is a block diagram of the drive's Closed Loop controller. The details of the Reference Handling block and Feedback Handling block are described in their respective sections below.

2.8.5 Feedback Handling

A block diagram of how the drive processes the feedback signal is shown below.

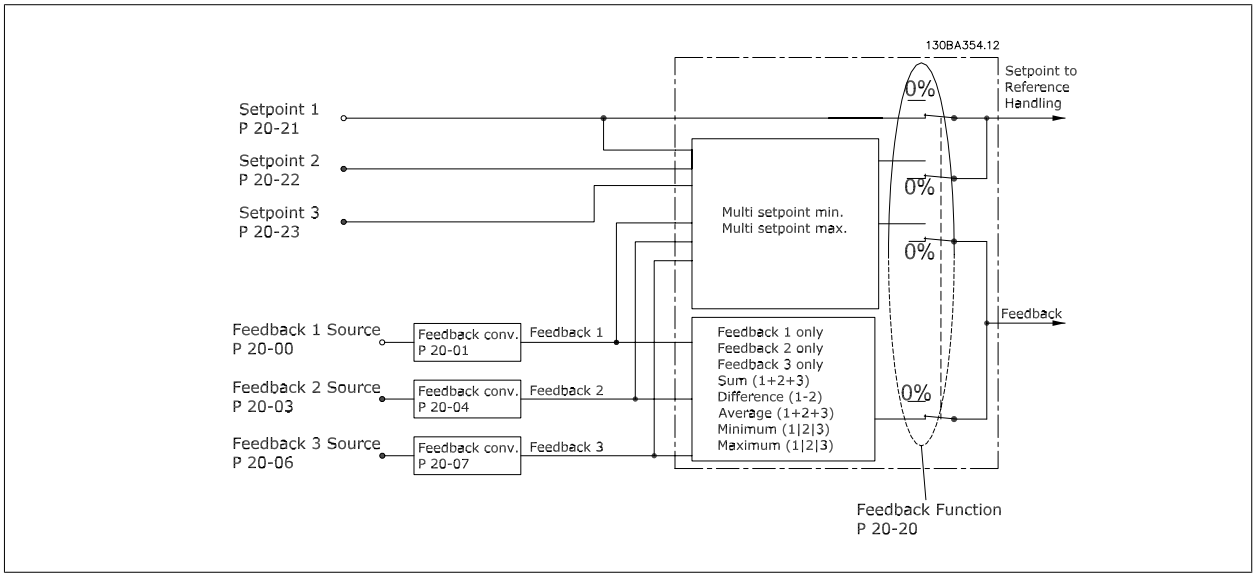

Feedback handling can be configured to work with applications requiring advanced control, such as multiple setpoints and multiple feedbacks. Three types of control are common.

Single Zone, Single Setpoint
Single Zone Single Setpoint is a basic configuration. Setpoint 1 is added to any other reference (if any, see Reference Handling) and the feedback signal is selected using par. 20-20 *Feedback Function*.

Multi Zone, Single Setpoint
Multi Zone Single Setpoint uses two or three feedback sensors but only one setpoint. The feedbacks can be added, subtracted (only feedback 1 and 2) or averaged. In addition, the maximum or minimum value may be used. Setpoint 1 is used exclusively in this configuration.

If *Multi Setpoint Min* [13] is selected, the setpoint/feedback pair with the largest difference controls the speed of the drive. *Multi Setpoint Maximum* [14] attempts to keep all zones at or below their respective setpoints, while *Multi Setpoint Min* [13] attempts to keep all zones at or above their respective setpoints.

Example:
A two zone two setpoint application Zone 1 setpoint is 15 bar and the feedback is 5.5 bar. Zone 2 setpoint is 4.4 bar and the feedback is 4.6 bar. If *Multi Setpoint Max* [14] is selected, Zone 1's setpoint and feedback are sent to the PID controller, since this has the smaller difference (feedback is higher than setpoint, resulting in a negative difference). If *Multi Setpoint Min* [13] is selected, Zone 2's setpoint and feedback is sent to the PID controller, since this has the larger difference (feedback is lower than setpoint, resulting in a positive difference).

2.8.6 Feedback Conversion

In some applications it may be useful to convert the feedback signal. One example of this is using a pressure signal to provide flow feedback. Since the square root of pressure is proportional to flow, the square root of the pressure signal yields a value proportional to the flow. This is shown below.

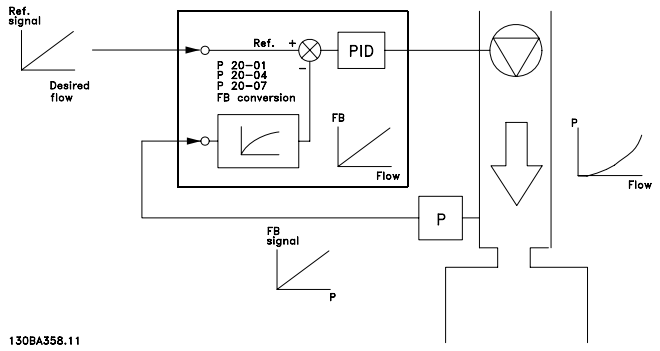

2.8.7 Reference Handling

Details for Open Loop and Closed Loop operation.

A block diagram of how the drive produces the Remote Reference is shown below:.

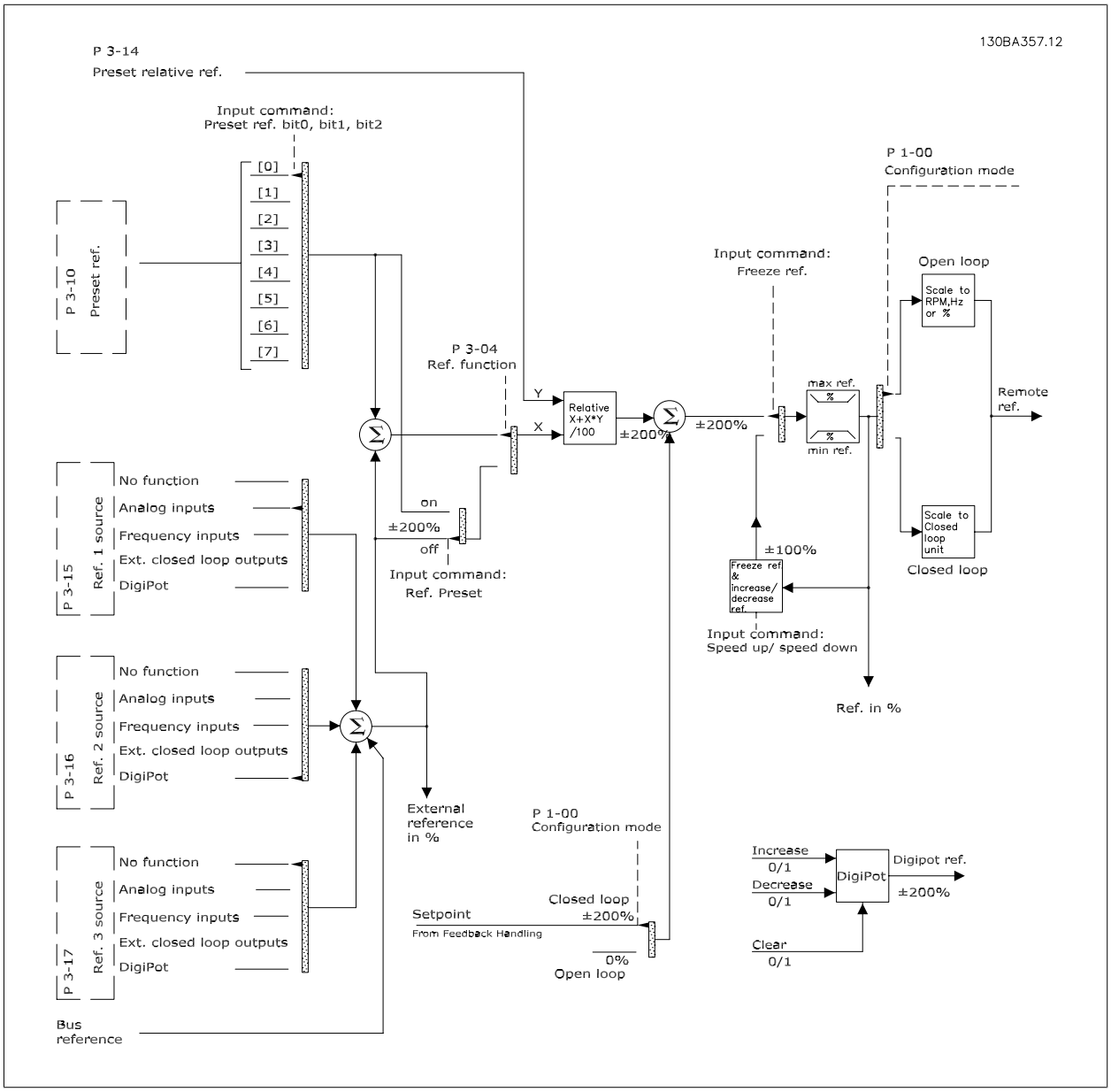

The Remote Reference is comprised of:

- Preset references.
- External references (analog inputs, pulse frequency inputs, digital potentiometer inputs and serial communication bus references).
- The Preset relative reference.
- Feedback controlled setpoint.

Up to 8 preset references can be programmed in the drive. The active preset reference can be selected using digital inputs or the serial communications bus. The reference can also be supplied externally, most commonly from an analog input. This external source is selected by one of the 3 Reference Source parameters (par. 3-15 *Reference 1 Source*, par. 3-16 *Reference 2 Source* and par. 3-17 *Reference 3 Source*). Digipot is a digital potentiometer. This is also commonly called a Speed Up/Speed Down Control or a Floating Point Control. To set it up, one digital input is programmed to increase the reference while another digital input is programmed to decrease the reference. A third digital input can be used to reset the Digipot reference. All reference resources and the bus reference are added to produce the total External Reference. The External Reference, the Preset Reference or the sum of the two can be selected to be the active reference. Finally, this reference can by be scaled using par. 3-14 *Preset Relative Reference*.

The scaled reference is calculated as follows:

$$Reference = X + X \times \left(\frac{Y}{100}\right)$$

Where X is the external reference, the preset reference or the sum of these and Y is par. 3-14 *Preset Relative Reference* in [%].

NB!
If Y, par. 3-14 *Preset Relative Reference* is set to 0%, the reference will not be affected by the scaling

2.8.8 Example of Closed Loop PID Control

The following is an example of a Closed Loop Control for a ventilation system:

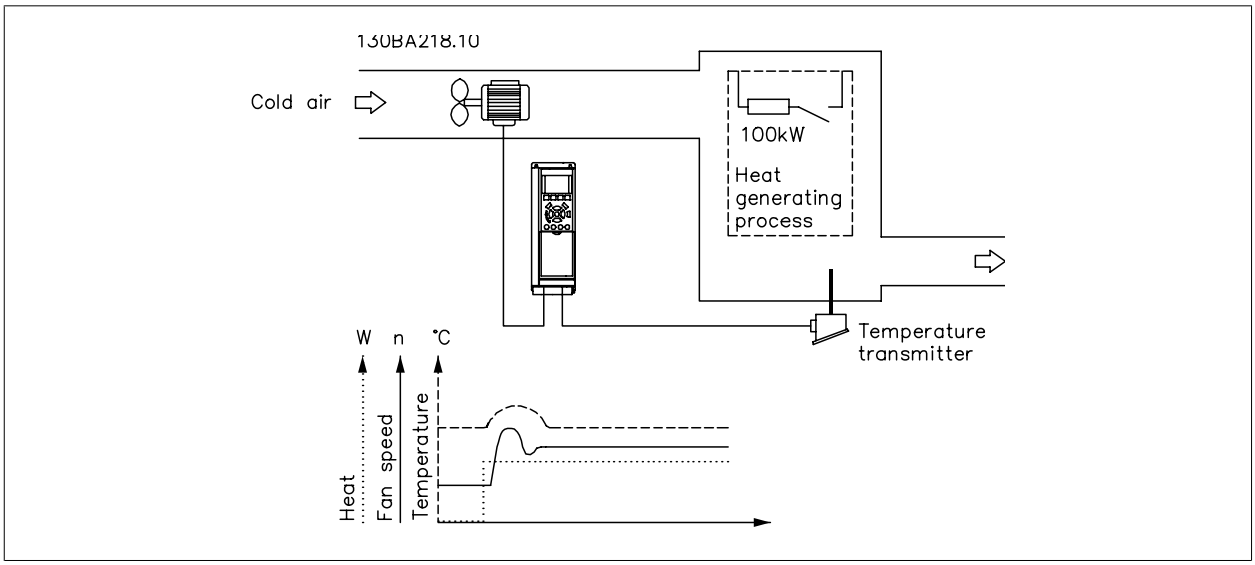

In a ventilation system, the temperature is to be maintained at a constant value. The desired temperature is set between -5 and +35°C using a 0-10 volt potentiometer. Because this is a cooling application, if the temperature is above the set-point value, the speed of the fan must be increased to provide more cooling air flow. The temperature sensor has a range of -10 to +40°C and uses a two-wire transmitter to provide a 4-20 mA signal. The output frequency range of the frequency converter is 10 to 50 Hz.

1. Start/Stop via switch connected between terminals 12 (+24 V) and 18.
2. Temperature reference via a potentiometer (-5 to +35°C, 0 10 V) connected to terminals 50 (+10 V), 53 (input) and 55 (common).
3. Temperature feedback via transmitter (-10-40°C, 4-20 mA) connected to terminal 54. Switch S202 behind the LCP set to ON (current input).

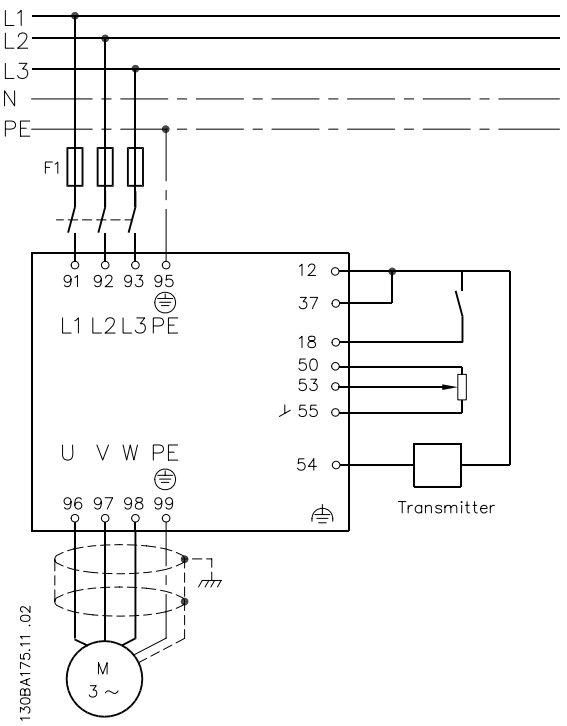

2.8.9 Programming Order

Function	Par. no.	Setting
1) Make sure the motor runs properly. Do the following:		
Set the motor parameters using nameplate data.	1-2*	As specified by motor name plate
Run Automatic Motor Adaptation.	1-29	*Enable complete AMA* [1] and then run the AMA function.
2) Check that the motor is running in the right direction.		
Run Motor Rotation Check.	1-28	If the motor runs in the wrong direction, remove power temporarily and reverse two of the motor phases.
3) Make sure the frequency converter limits are set to safe values		
Check that the ramp settings are within capabilities of the drive and allowed application operating specifications.	3-41 3-42	60 sec. 60 sec. Depends on motor/load size! Also active in Hand mode.
Prohibit the motor from reversing (if necessary)	4-10	*Clockwise* [0]
Set acceptable limits for the motor speed.	4-12 4-14 4-19	10 Hz, *Motor min speed* 50 Hz, *Motor max speed* 50 Hz, *Drive max output frequency*
Switch from open loop to closed loop.	1-00	*Closed Loop* [3]
4) Configure the feedback to the PID controller.		
Select the appropriate reference/feedback unit.	20-12	*Bar* [71]
5) Configure the set-point reference for the PID controller.		
Set acceptable limits for the set-point reference.	20-13 20-14	0 Bar 10 Bar
Choose current or voltage by switches S201 / S202		
6) Scale the analog inputs used for set-point reference and feedback.		
Scale Analog Input 53 for the pressure range of the potentiometer (0 - 10 Bar, 0 - 10 V).	6-10 6-11 6-14 6-15	0 V 10 V (default) 0 Bar 10 Bar
Scale Analog Input 54 for pressure sensor (0 - 10 Bar, 4 - 20 mA)	6-22 6-23 6-24 6-25	4 mA 20 mA (default) 0 Bar 10 Bar
7) Tune the PID controller parameters.		
Adjust the drive's Closed Loop Controller, if needed.	20-93 20-94	See Optimization of the PID Controller, below.
8) Finished!		
Save the parameter setting to the LCP for safe keeping	0-50	*All to LCP* [1]

2.8.10 Tuning the Drive Closed Loop Controller

Once the drive's Closed Loop Controller has been set up, the performance of the controller should be tested. In many cases, its performance may be acceptable using the default values of par. 20-93 *PID Proportional Gain* and par. 20-94 *PID Integral Time*. However, in some cases it may be helpful to optimize these parameter values to provide faster system response while still controlling speed overshoot.

2.8.11 Manual PID Adjustment

1. Start the motor
2. Set par. 20-93 *PID Proportional Gain* to 0.3 and increase it until the feedback signal begins to oscillate. If necessary, start and stop the drive or make step changes in the set-point reference to attempt to cause oscillation. Next reduce the PID Proportional Gain until the feedback signal stabilizes. Then reduce the proportional gain by 40-60%.
3. Set par. 20-94 *PID Integral Time* to 20 sec. and reduce it until the feedback signal begins to oscillate. If necessary, start and stop the drive or make step changes in the set-point reference to attempt to cause oscillation. Next, increase the PID Integral Time until the feedback signal stabilizes. Then increase of the Integral Time by 15-50%.
4. par. 20-95 *PID Differentiation Time* should only be used for very fast-acting systems. The typical value is 25% of par. 20-94 *PID Integral Time*. The differential function should only be used when the setting of the proportional gain and the integral time has been fully optimized. Make sure that oscillations of the feedback signal are sufficiently dampened by the low-pass filter for the feedback signal (par. 6-16, 6-26, 5-54 or 5-59 as required).

2.9 General aspects of EMC

2.9.1 General Aspects of EMC Emissions

Electrical interference is usually conducted at frequences in the range 150 kHz to 30 MHz. Airborne interference from the drive system in the range 30 MHz to 1 GHz is generated from the inverter, motor cable, and the motor.
As shown in the illustration below, capacitive currents in the motor cable coupled with a high dV/dt from the motor voltage generate leakage currents. The use of a screened motor cable increases the leakage current (see illustration below) because screened cables have higher capacitance to earth than unscreened cables. If the leakage current is not filtered, it will cause greater interference on the mains in the radio frequency range below approximately 5 MHz. Since the leakage current (I_1) is carried back to the unit through the screen (I_3), there will in principle only be a small electro-magnetic field (I_4) from the screened motor cable according to the below figure.

The screen reduces the radiated interference but increases the low-frequency interference on the mains. The motor cable screen must be connected to the frequency converter enclosure as well as on the motor enclosure. This is best done by using integrated screen clamps so as to avoid twisted screen ends (pigtails). These increase the screen impedance at higher frequencies, which reduces the screen effect and increases the leakage current (I_4).
If a screened cable is used for fieldbusfieldbus, relay, control cable, signal interface and brake, the screen must be mounted on the enclosure at both ends. In some situations, however, it will be necessary to break the screen to avoid current loops.

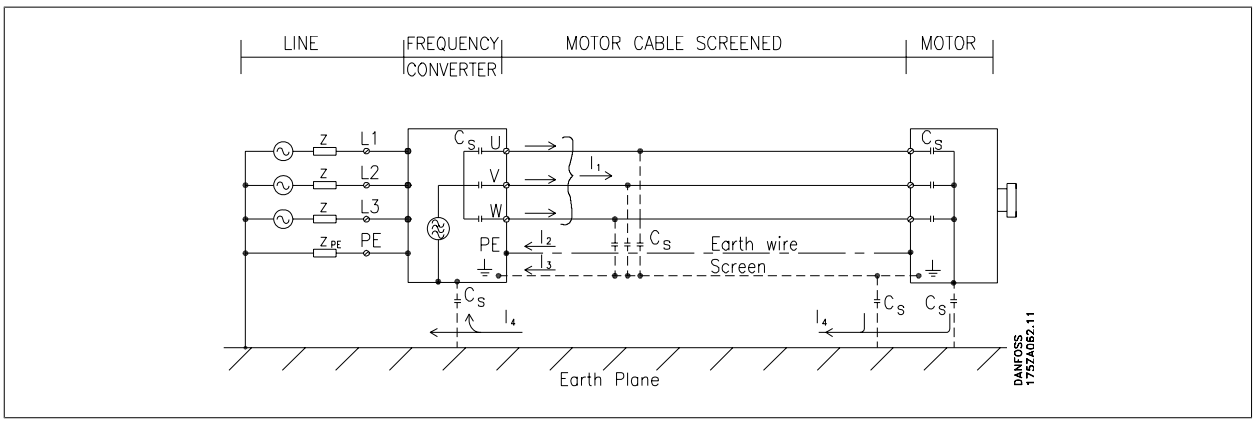

If the screen is to be placed on a mounting plate for the frequency converter, the mounting plate must be made of metal, because the screen currents have to be conveyed back to the unit. Moreover, ensure good electrical contact from the mounting plate through the mounting screws to the frequency converter chassis.

2

NB!
When unscreened cables are used, some emission requirements are not complied with, although the immunity requirements are observed.

In order to reduce the interference level from the entire system (unit + installation), make motor and brake cables as short as possible. Avoid placing cables with a sensitive signal level alongside motor and brake cables. Radio interference higher than 50 MHz (airborne) is especially generated by the control electronics.

2.9.2 Emission Requirements

According to the EMC product standard for adjustable speed frequency converters EN/IEC61800-3:2004 the EMC requirements depend on the intended use of the frequency converter. Four categories are defined in the EMC product standard. The definitions of the four categories together with the requirements for mains supply voltage conducted emissions are given in the table below:

Category	Definition	Conducted emission requirement according to the limits given in EN55011
C1	frequency converters installed in the first environment (home and office) with a supply voltage less than 1000 V.	Class B
C2	frequency converters installed in the first environment (home and office) with a supply voltage less than 1000 V, which are neither plug-in nor movable and are intended to be installed and commissioned by a professional.	Class A Group 1
C3	frequency converters installed in the second environment (industrial) with a supply voltage lower than 1000 V.	Class A Group 2
C4	frequency converters installed in the second environment with a supply voltage above 1000 V and rated current above 400 A or intended for use in complex systems.	No limit line. An EMC plan should be made.

When the generic emission standards are used the frequency converters are required to comply with the following limits:

Environment	Generic standard	Conducted emission requirement according to the limits given in EN55011
First environment (home and office)	EN/IEC61000-6-3 Emission standard for residential, commercial and light industrial environments.	Class B
Second environment (industrial environment)	EN/IEC61000-6-4 Emission standard for industrial environments.	Class A Group 1

2.9.3 EMC Test Results (Emission)

The following test results have been obtained using a system with a frequency converter (with options if relevant), a screened control cable, a control box with potentiometer, as well as a motor and motor screened cable.

RFI filter type	Conducted emission. Maximum shielded cable length.			Radiated emission	
	Industrial environment		Housing, trades and light industries	Industrial environment	Housing, trades and light industries
Setup	EN 55011 Class A2	EN 55011 Class A1	EN 55011 Class B	EN 55011 Class A1	EN 55011 Class B
H1					
1.1-45 kW 200-240 V	150 m	150 m	50 m	Yes	No
1.1-90 kW 380-480 V	150 m	150 m	50 m	Yes	No
H2					
1.1-3.7 kW 200-240 V	5 m	No	No	No	No
5.5-45 kW 200-240 V	25 m	No	No	No	No
1.1-7.5 kW 380-480 V	5 m	No	No	No	No
11-90 kW 380-480 V	25 m	No	No	No	No
110-1000 kW 380-480 V	150 m	No	No	No	No
45-1200 kW 525-690 V	150 m	No	No	No	No
H3					
1.1-45 kW 200-240 V	75 m	50 m	10 m	Yes	No
1.1-90 kW 380-480 V	75 m	50 m	10 m	Yes	No
H4					
110-1000 kW 380-480 V	150 m	150 m	No	Yes	No
45-400 kW 525-690 V	150 m	30 m	No	No	No
Hx					
1.1-90 kW 525-600 V	-	-	-	-	-

Table 2.1: EMC Test Results (Emission)

2.9.4 General Aspects of Harmonics Emission

A frequency converter takes up a non-sinusoidal current from mains, which increases the input current I_{RMS}. A non-sinusoidal current is transformed by means of a Fourier analysis and split up into sine-wave currents with different frequencies, i.e. different harmonic currents I_N with 50 Hz as the basic frequency:

Harmonic currents	I_1	I_5	I_7
Hz	50 Hz	250 Hz	350 Hz

The harmonics do not affect the power consumption directly but increase the heat losses in the installation (transformer, cables). Consequently, in plants with a high percentage of rectifier load, maintain harmonic currents at a low level to avoid overload of the transformer and high temperature in the cables.

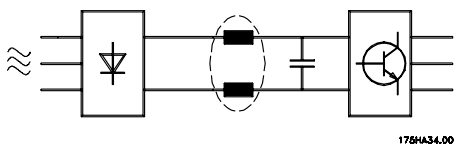

NB!
Some of the harmonic currents might disturb communication equipment connected to the same transformer or cause resonance in connection with power-factor correction batteries.

NB!
To ensure low harmonic currents, the frequency converter is equipped with intermediate circuit coils as standard. This normally reduces the input current I_{RMS} by 40%.

The voltage distortion on the mains supply voltage depends on the size of the harmonic currents multiplied by the mains impedance for the frequency in question. The total voltage distortion THD is calculated on the basis of the individual voltage harmonics using this formula:

$$THD\,\% = \sqrt{U_5^2 + U_7^2 + \ldots + U_N^2}$$

(U_N% of U)

2.9.5 Harmonics Emission Requirements

Equipment connected to the public supply network:

Options:	Definition:
1	IEC/EN 61000-3-2 Class A for 3-phase balanced equipment (for professional equipment only up to 1 kW total power).
2	IEC/EN 61000-3-12 Equipment 16A-75A and professional equipment as from 1 kW up to 16A phase current.

2.9.6 Harmonics Test Results (Emission)

	Individual Harmonic Current I_n/I_1 (%)				Harmonic current distortion factor (%)	
	I_5	I_7	I_{11}	I_{13}	THD	PWHD
Actual (typical)	40	20	10	8	46	45
Limit for R_{sce}≥120	40	25	15	10	48	46

Power sizes up to PK75 in T2 and T4 complies with IEC/EN 61000-3-2 Class A. Power sizes from P1K1 and up to P18K in T2 and up to P90K in T4 complies with IEC/EN 61000-3-12. Power sizes P110 - P450 in T4 also complies with IEC/EN 61000-3-12 even though not required because currents are above 75 A.
Table 4, R_{sce} >= 120, THD <= 48% and PWHD >=46% provided that the short-circuit power of the supply S_{sc} is greater than or equal to:

$$S_{SC} = \sqrt{3} \times R_{SCE} \times U_{mains} \times I_{equ} = \sqrt{3} \times 120 \times 400 \times I_{equ}$$

at the interface point between the user's supply and the public system.

It is the responsibility of the installer or user of the equipment to ensure, by consultation with the distribution network operator if necessary, that the equipment is connected only to a supply with a short-circuit power S_{sc} greater than or equal to specified above.
Other power sizes can be connected to the public supply network by consultation with the distribution network operator.

2.9.7 Immunity Requirements

The immunity requirements for frequency converters depend on the environment where they are installed. The requirements for the industrial environment are higher than the requirements for the home and office environment. All Danfoss frequency converters comply with the requirements for the industrial environment and consequently comply also with the lower requirements for home and office environment with a large safety margin.

In order to document immunity against electrical interference from electrical phenomena, the following immunity tests have been made on a system consisting of a frequency converter (with options if relevant), a screened control cable and a control box with potentiometer, motor cable and motor. The tests were performed in accordance with the following basic standards:

- **EN 61000-4-2 (IEC 61000-4-2):** Electrostatic discharges (ESD): Simulation of electrostatic discharges from human beings.
- **EN 61000-4-3 (IEC 61000-4-3):** Incoming electromagnetic field radiation, amplitude modulated simulation of the effects of radar and radio communication equipment as well as mobile communications equipment.
- **EN 61000-4-4 (IEC 61000-4-4):** Burst transients: Simulation of interference brought about by switching a contactor, relay or similar devices.
- **EN 61000-4-5 (IEC 61000-4-5):** Surge transients: Simulation of transients brought about e.g. by lightning that strikes near installations.
- **EN 61000-4-6 (IEC 61000-4-6):** RF Common mode: Simulation of the effect from radio-transmission equipment joined by connection cables.

See following EMC immunity form.

Voltage range: 200-240 V, 380-480 V

Basic standard	Burst IEC 61000-4-4	Surge IEC 61000-4-5	ESD IEC 61000-4-2	Radiated electromagnetic field IEC 61000-4-3	RF common mode voltage IEC 61000-4-6
Acceptance criterion	B	B	B	A	A
Line	4 kV CM	2 kV/2 Ω DM 4 kV/12 Ω CM	—	—	10 V_{RMS}
Motor	4 kV CM	4 kV/2 Ω[1)]	—	—	10 V_{RMS}
Brake	4 kV CM	4 kV/2 Ω[1)]	—	—	10 V_{RMS}
Load sharing	4 kV CM	4 kV/2 Ω[1)]	—	—	10 V_{RMS}
Control wires	2 kV CM	2 kV/2 Ω[1)]	—	—	10 V_{RMS}
Standard bus	2 kV CM	2 kV/2 Ω[1)]	—	—	10 V_{RMS}
Relay wires	2 kV CM	2 kV/2 Ω[1)]	—	—	10 V_{RMS}
Application and Fieldbus options	2 kV CM	2 kV/2 Ω[1)]	—	—	10 V_{RMS}
LCP cable	2 kV CM	2 kV/2 Ω[1)]	—	—	10 V_{RMS}
External 24 V DC	2 kV CM	0.5 kV/2 Ω DM 1 kV/12 Ω CM	—	—	10 V_{RMS}
Enclosure	—	—	8 kV AD 6 kV CD	10 V/m	—

AD: Air Discharge
CD: Contact Discharge
CM: Common mode
DM: Differential mode
1. Injection on cable shield.

Table 2.2: Immunity

2.10 Galvanic isolation (PELV)

2.10.1 PELV - Protective Extra Low Voltage

PELV offers protection by way of extra low voltage. Protection against electric shock is ensured when the electrical supply is of the PELV type and the installation is made as described in local/national regulations on PELV supplies.

All control terminals and relay terminals 01-03/04-06 comply with PELV (Protective Extra Low Voltage) (Does not apply to grounded Delta leg above 400 V).

Galvanic (ensured) isolation is obtained by fulfilling requirements for higher isolation and by providing the relevant creapage/clearance distances. These requirements are described in the EN 61800-5-1 standard.

The components that make up the electrical isolation, as described below, also comply with the requirements for higher isolation and the relevant test as described in EN 61800-5-1.
The PELV galvanic isolation can be shown in six locations (see illustration):

In order to maintain PELV all connections made to the control terminals must be PELV, e.g. thermistor must be reinforced/double insulated.

1. Power supply (SMPS) incl. signal isolation of U_{DC}, indicating the intermediate current voltage.
2. Gate drive that runs the IGBTs (trigger transformers/opto-couplers).
3. Current transducers.
4. Opto-coupler, brake module.
5. Internal inrush, RFI, and temperature measurement circuits.
6. Custom relays.

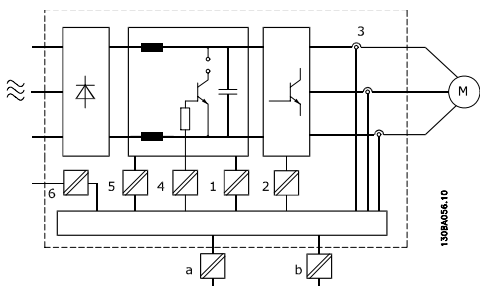

Illustration 2.10: Galvanic isolation

The functional galvanic isolation (a and b on drawing) is for the 24 V back-up option and for the RS 485 standard bus interface.

Installation at high altitude:
380 - 500 V, enclosure A, B and C: At altitudes above 2 km, please contact Danfoss regarding PELV.
380 - 500 V, enclosure D, E and F: At altitudes above 3 km, please contact Danfoss regarding PELV.
525 - 690 V: At altitudes above 2 km, please contact Danfoss regarding PELV.

2

2.11 Earth leakage current

Warning:
Touching the electrical ts may be fatal - even after the equipment has been disconnected from mains.
Also make sure that other voltage inputs have been disconnected, such as load sharing (linkage of DC intermediate circuit), as well as the motor connection for kinetic back-up.
Before touching any electrical parts, wait at least the amount of time indicated in the *Safety Precautions* section.
Shorter time is allowed only if indicated on the nameplate for the specific unit.

Leakage Current
The earth leakage current from the frequency converter exceeds 3.5 mA. To ensure that the earth cable has a good mechanical connection to the earth connection (terminal 95), the cable cross section must be at least 10 mm^2 or 2 rated earth wires terminated seately.
Residual Current Device
This product can cause a d.c. current in the protective conductor. Where a residual current device (RCD) is used for protection in case of direct or indirect contact, only an RCD of Type B is allowed on the supply side of this product. Otherwise, another protective measure shall be applied, such as separation from the environment by double or reinforced insulation, or isolation from the supply system by a transformer. See also RCD Application Note MN.90.GX.02.
Protective earthing of the frequency converter and the use of RCD's must always follow national and local regulations.

2.12 Brake function

2.12.1 Selection of Brake Resistor

In certain applications, for instance in tunnel or underground railway station ventilation systems, it is desirable to bring the motor to a stop more rapidly than can be achieved through controlling via ramp down or by free-wheeling. In such applications, dynamic braking with a braking resistor may be utilized. Using a braking resistor ensures that the energy is absorbed in the resistor and not in the frequency converter.

If the amount of kinetic energy transferred to the resistor in each braking period is not known, the average power can be calculated on the basis of the cycle time and braking time also called intermitted duty cycle. The resistor intermittent duty cycle is an indication of the duty cycle at which the resistor is active. The below figure shows a typical braking cycle.

The intermittent duty cycle for the resistor is calculated as follows:

Duty Cycle = t_b */ T*

T = cycle time in seconds
t_b is the braking time in seconds (as part of the total cycle time)

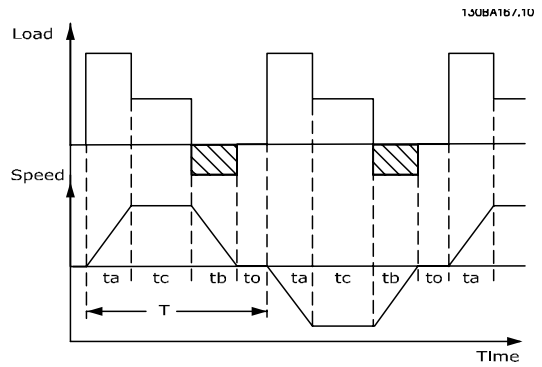

Danfoss offers brake resistors with duty cycle of 5%, 10% and 40% suitable for use with the FC 102 frequency converter series. If a 10% duty cycle resistor is applied, this is able of absorbing braking power upto 10% of the cycle time with the remaining 90% being used to dissipate heat from the resistor.

For further selection advice, please contact Danfoss.

NB!
If a short circuit in the brake transistor occurs, power dissipation in the brake resistor is only prevented by using a mains switch or contactor to disconnect the mains for the frequency converter. (The contactor can be controlled by the frequency converter).

2.12.2 Brake Resistor Calculation

The brake resistance is calculated as shown:

$$R_{br}[\Omega] = \frac{U_{dc}^2}{P_{peak}}$$

where

$P_{peak} = P_{motor} \times M_{br} \times \eta_{motor} \times \eta[W]$

As can be seen, the brake resistance depends on the intermediate circuit voltage (U_{DC}).
The brake function of the frequency converter is settled in 3 areas of mains power supply:

Size	Brake active	Warning before cut out	Cut out (trip)
3 x 200-240 V	390 V (U_{DC})	405 V	410 V
3 x 380-480 V	778 V	810 V	820 V
3 x 525-600 V	943 V	965 V	975 V
3 x 525-690 V	1084 V	1109 V	1130 V

NB!
Check that the brake resistor can cope with a voltage of 410 V, 820 V or 975 V - unless Danfoss brake resistors are used.

Danfoss recommends the brake resistance R_{rec}, i.e. one that guarantees that the frequency converter is able to brake at the highest braking torque ($M_{br(\%)}$) of 110%. The formula can be written as:

$$R_{rec}[\Omega] = \frac{U_{dc}^2 \times 100}{P_{motor} \times M_{br(\%)} \times \eta_{motor}}$$

η_{motor} is typically at 0.90

η is typically at 0.98

For 200 V, 480 V and 600 V frequency converters, R_{rec} at 160% braking torque is written as:

$$200V: \; R_{rec} = \frac{107780}{P_{motor}}[\Omega]$$

$$480V: \; R_{rec} = \frac{375300}{P_{motor}}[\Omega]^{1)}$$

$$480V: \; R_{rec} = \frac{428914}{P_{motor}}[\Omega]^{2)}$$

$$600V: \; R_{rec} = \frac{630137}{P_{motor}}[\Omega]$$

$$690V: \; R_{rec} = \frac{832664}{P_{motor}}[\Omega]$$

1) For frequency converters ≤ 7.5 kW shaft output
2) For frequency converters > 7.5 kW shaft output

NB!
The resistor brake circuit resistance selected should not be higher than that recommended by Danfoss. If a brake resistor with a higher ohmic value is selected, the braking torque may not be achieved because there is a risk that the frequency converter cuts out for safety reasons.

NB!
If a short circuit in the brake transistor occurs, power dissipation in the brake resistor is only prevented by using a mains switch or contactor to disconnect the mains for the frequency converter. (The contactor can be controlled by the frequency converter).

NB!
Do not touch the brake resistor as it can get very hot while/after braking.

2.12.3 Control with Brake Function

The brake is protected against short-circuiting of the brake resistor, and the brake transistor is monitored to ensure that short-circuiting of the transistor is detected. A relay/digital output can be used for protecting the brake resistor against overloading in connection with a fault in the frequency converter. In addition, the brake makes it possible to read out the momentary power and the mean power for the latest 120 seconds. The brake can also monitor the power energizing and make sure it does not exceed a limit selected in par. 2-12 *Brake Power Limit (kW)*. In par. 2-13 *Brake Power Monitoring*, select the function to carry out when the power transmitted to the brake resistor exceeds the limit set in par. 2-12 *Brake Power Limit (kW)*.

NB!
Monitoring the brake power is not a safety function; a thermal switch is required for that purpose. The brake resistor circuit is not earth leakage protected.

Over voltage control (OVC) (exclusive brake resistor) can be selected as an alternative brake function in par. 2-17 *Over-voltage Control*. This function is active for all units. The function ensures that a trip can be avoided if the DC link voltage increases. This is done by increasing the output frequency to limit the voltage from the DC link. It is a very useful function, e.g. if the ramp-down time is too short since tripping of the frequency converter is avoided. In this situation the ramp-down time is extended.

2.12.4 Brake Resistor Cabling

EMC (twisted cables/shielding)
To reduce the electrical noise from the wires between the brake resistor and the frequency converter, the wires must be twisted.

For enhanced EMC performance a metal screen can be used.

2.13 Extreme running conditions

Short Circuit (Motor Phase – Phase)
The frequency converter is protected against short circuits by means of current measurement in each of the three motor phases or in the DC link. A short circuit between two output phases will cause an overcurrent in the inverter. The inverter will be turned off individually when the short circuit current exceeds the permitted value (Alarm 16 Trip Lock).
To protect the frequency converter against a short circuit at the load sharing and brake outputs please see the design guidelines.

Switching on the Output
Switching on the output between the motor and the frequency converter is fully permitted. You cannot damage the frequency converter in any way by switching on the output. However, fault messages may appear.

Motor-generated Over-voltage
The voltage in the intermediate circuit is increased when the motor acts as a generator. This occurs in following cases:

1. The load drives the motor (at constant output frequency from the frequency converter), ie. the load generates energy.
2. During deceleration ("ramp-down") if the moment of inertia is high, the friction is low and the ramp-down time is too short for the energy to be dissipated as a loss in the frequency converter, the motor and the installation.
3. Incorrect slip compensation setting may cause higher DC link voltage.

The control unit may attempt to correct the ramp if possible (par. 2-17 *Over-voltage Control*.
The inverter turns off to protect the transistors and the intermediate circuit capacitors when a certain voltage level is reached.
See par. 2-10 *Brake Function* and par. 2-17 *Over-voltage Control* to select the method used for controlling the intermediate circuit voltage level.

Mains Drop-out

During a mains drop-out, the frequency converter keeps running until the intermediate circuit voltage drops below the minimum stop level, which is typically 15% below the frequency converter's lowest rated supply voltage. The mains voltage before the drop-out and the motor load determines how long it takes for the inverter to coast.

2

Static Overload in VVC^{plus} mode

When the frequency converter is overloaded (the torque limit in par. 4-16 *Torque Limit Motor Mode*/par. 4-17 *Torque Limit Generator Mode* is reached), the controls reduces the output frequency to reduce the load.
If the overload is excessive, a current may occur that makes the frequency converter cut out after approx. 5-10 s.

Operation within the torque limit is limited in time (0-60 s) in par. 14-25 *Trip Delay at Torque Limit*.

2.13.1 Motor Thermal Protection

This is the way Danfoss is protecting the motor from being overheated. It is an electronic feature that simulates a bimetal relay based on internal measurements. The characteristic is shown in the following figure:

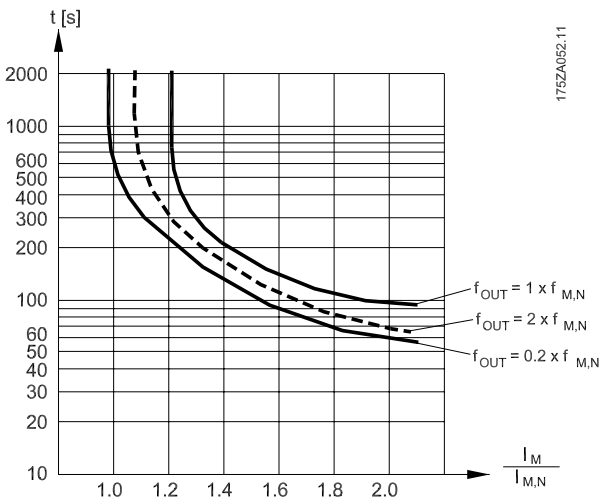

Illustration 2.11: The X-axis is showing the ratio between I_{motor} and I_{motor} nominal. The Y- axis is showing the time in seconds before the ETR cuts off and trips the drive. The curves are showing the characteristic nominal speed at twice the nominal speed and at 0,2x the nominal speed.

It is clear that at lower speed the ETR cuts of at lower heat due to less cooling of the motor. In that way the motor are protected from being over heated even at low speed. The ETR feature is calculating the motor temperature based on actual current and speed. The calculated temperature is visible as a read out parameter in par. 16-18 *Motor Thermal* in the frequency converter.

The thermistor cut-out value is > 3 kΩ.

Integrate a thermistor (PTC sensor) in the motor for winding protection.

Motor protection can be implemented using a range of techniques: PTC sensor in motor windings; mechanical thermal switch (Klixon type); or Electronic Thermal Relay (ETR).

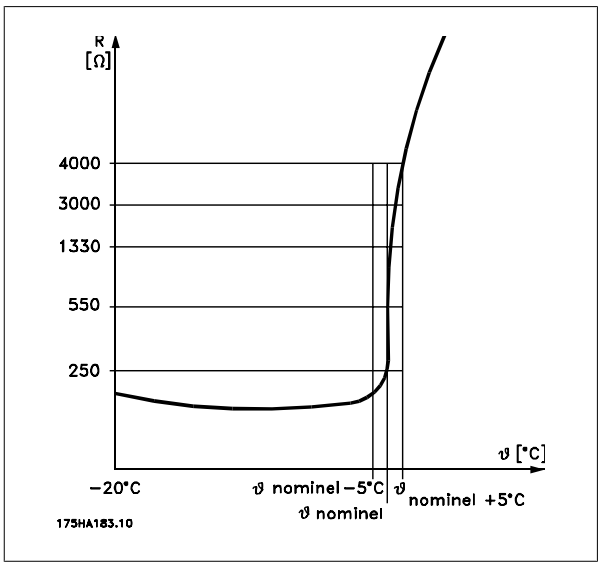

Using a digital input and 24 V as power supply:
Example: The frequency converter trips when the motor temperature is too high.
Parameter set-up:
Set par. 1-90 *Motor Thermal Protection* to *Thermistor Trip* [2]
Set par. 1-93 *Thermistor Source* to *Digital Input 33* [6]

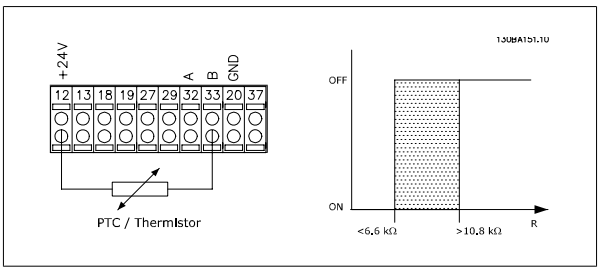

Using a digital input and 10 V as power supply:
Example: The frequency converter trips when the motor temperature is too high.
Parameter set-up:
Set par. 1-90 *Motor Thermal Protection* to *Thermistor Trip* [2]
Set par. 1-93 *Thermistor Source* to *Digital Input 33* [6]

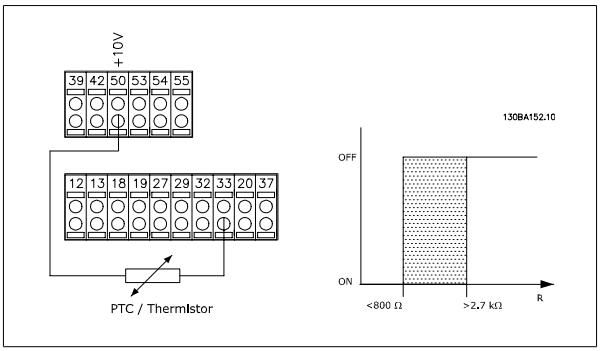

Using an analog input and 10 V as power supply:
Example: The frequency converter trips when the motor temperature is too high.
Parameter set-up:
Set par. 1-90 *Motor Thermal Protection* to *Thermistor Trip* [2]
Set par. 1-93 *Thermistor Source* to *Analog Input 54* [2]
Do not select a reference source.

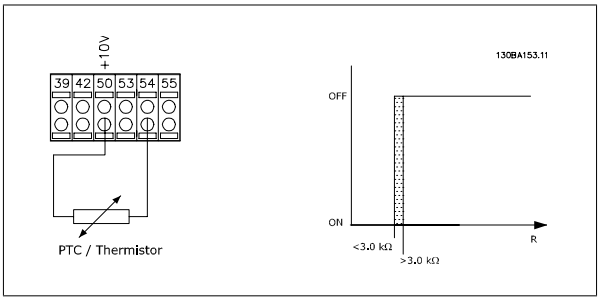

Input Digital/analog	**Supply Voltage** Volt	**Threshold** Cut-out Values
Digital	24 V	< 6.6 kΩ - > 10.8 kΩ
Digital	10 V	< 800Ω - > 2.7 kΩ
Analog	10 V	< 3.0 kΩ - > 3.0 kΩ

NB!
Check that the chosen supply voltage follows the specification of the used thermistor element.

2

Summary
With the Torque limit feature the motor is protected for being overloaded independent of the speed. With the ETR the motor is protected for being over heated and there is no need for any further motor protection. That means when the motor is heated up the ETR timer controls for how long time the motor can be running at the high temperature before it is stopped in order to prevent over heating. If the motor is overloaded without reaching the temperature where the ETR shuts of the motor, the torque limit is protecting the motor and application for being overloaded.

NB!
ETR is activated in par. and is controlled in par. 4-16 *Torque Limit Motor Mode*. The time before the torque limit warning trips the frequency converter is set in par. 14-25 *Trip Delay at Torque Limit*.

3 VLT HVAC Drive Selection

3.1 Options and Accessories

Danfoss offers a wide range of options and accessories for the frequency converters.

3.1.1 Mounting of Option Modules in Slot B

The power to the frequency converter must be disconnected.

For A2 and A3 enclosures:

- Remove the LCP (Local Control Panel), the terminal cover, and the LCP frame from the frequency converter.
- Fit the MCB10x option card into slot B.
- Connect the control cables and relieve the cable by the enclosed cable strips.
  Remove the knock out in the extended LCP frame delivered in the option set, so that the option will fit under the extended LCP frame.
- Fit the extended LCP frame and terminal cover.
- Fit the LCP or blind cover in the extended LCP frame.
- Connect power to the frequency converter.
- Set up the input/output functions in the corresponding parameters, as mentioned in the section *General Technical Data*.

For B1, B2, C1 and C2 enclosures:

- Remove the LCP and the LCP cradle
- Fit the MCB 10x option card into slot B
- Connect the control cables and relieve the cable by the enclosed cable strips
- Fit the cradle
- Fit the LCP

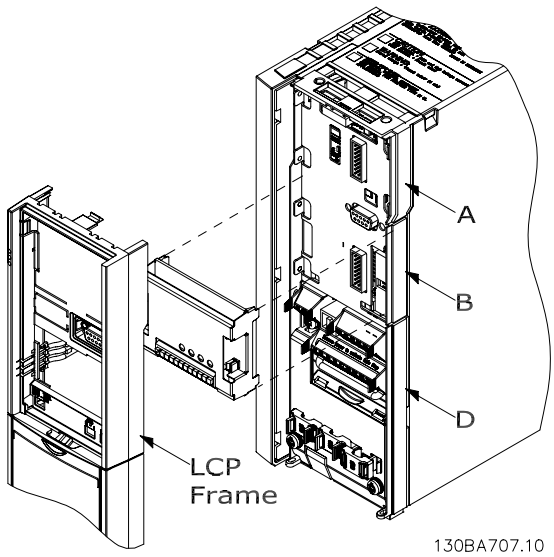

A2, A3 and B3 enclosures

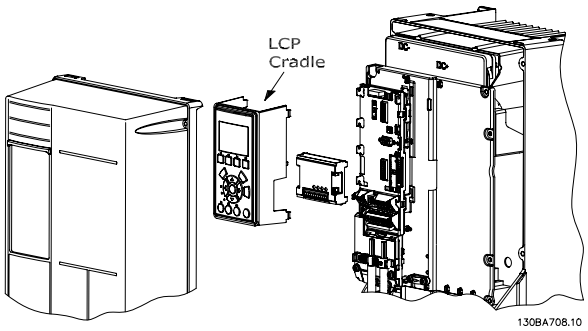

A5, B1, B2, B4, C1, C2, C3 and C4 enclosures

3.1.2 General Purpose Input Output Module MCB 101

MCB 101 is used for extension of the number of digital and analog inputs and outputs of the frequency converter.

Contents: MCB 101 must be fitted into slot B in the frequency converter.

- MCB 101 option module
- Extended LCP frame
- Terminal cover

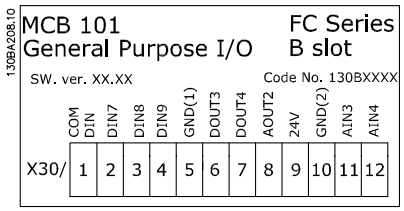

Galvanic Isolation in the MCB 101

Digital/analog inputs are galvanically isolated from other inputs/outputs on the MCB 101 and in the control card of the frequency converter. Digital/analog outputs in the MCB 101 are galvanically isolated from other inputs/outputs on the MCB 101, but not from these on the control card of the frequency converter.

If the digital inputs 7, 8 or 9 are to be switched by use of the internal 24 V power supply (terminal 9) the connection between terminal 1 and 5 which is illustrated in the drawing has to be established.

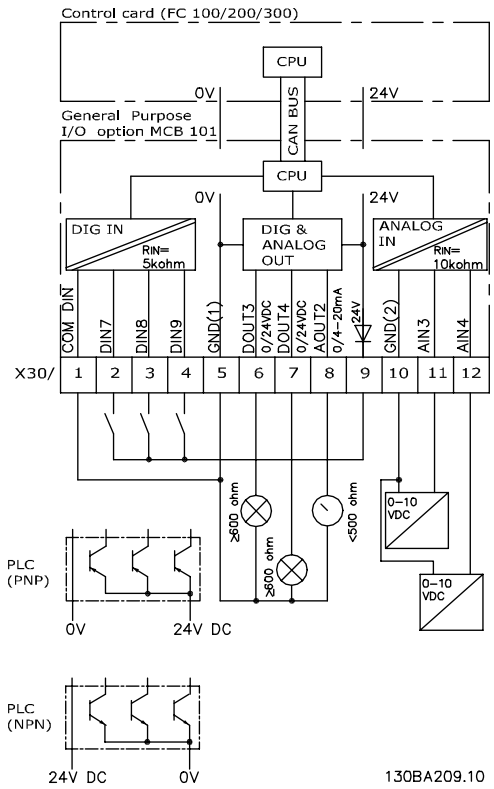

Illustration 3.1: Principle Diagram

3.1.3 Digital inputs - Terminal X30/1-4

Parameters for set-up: 5-16, 5-17 and 5-18

Number of digital inputs	Voltage level	Voltage levels	Tolerance	Max. Input impedance
3	0-24 V DC	PNP type: Common = 0 V Logic "0": Input < 5 V DC Logic "0": Input > 10 V DC NPN type: Common = 24 V Logic "0": Input > 19 V DC Logic "0": Input < 14 V DC	± 28 V continuous ± 37 V in minimum 10 sec.	Approx. 5 k ohm

3.1.4 Analog voltage inputs - Terminal X30/10-12

Parameters for set-up: 6-3*, 6-4* and 16-76

Number of analog voltage inputs	Standardized input signal	Tolerance	Resolution	Max. Input impedance
2	0-10 V DC	± 20 V continuously	10 bits	Approx. 5 K ohm

3.1.5 Digital outputs - Terminal X30/5-7

Parameters for set-up: 5-32 and 5-33

Number of digital outputs	Output level	Tolerance	Max.impedance
2	0 or 24 V DC	± 4 V	≥ 600 ohm

3.1.6 Analog outputs - Terminal X30/5+8

Parameters for set-up: 6-6* and 16-77

Number of analog outputs	Output signal level	Tolerance	Max.impedance
1	0/4 - 20 mA	± 0.1 mA	< 500 ohm

3.1.7 Relay Option MCB 105

The MCB 105 option includes 3 pieces of SPDT contacts and must be fitted into option slot B.

Electrical Data:	
Max terminal load (AC-1) [1] (Resistive load)	240 V AC 2A
Max terminal load (AC-15) [1] (Inductive load @ cosφ 0.4)	240 V AC 0.2 A
Max terminal load (DC-1) [1] (Resistive load)	24 V DC 1 A
Max terminal load (DC-13) [1] (Inductive load)	24 V DC 0.1 A
Min terminal load (DC)	5 V 10 mA
Max switching rate at rated load/min load	6 min^{-1}/20 sec^{-1}

1) IEC 947 part 4 and 5

When the relay option kit is ordered separately the kit includes:

- Relay Module MCB 105
- Extended LCP frame and enlarged terminal cover
- Label for covering access to switches S201, S202 and S801
- Cable strips for fastening cables to relay module

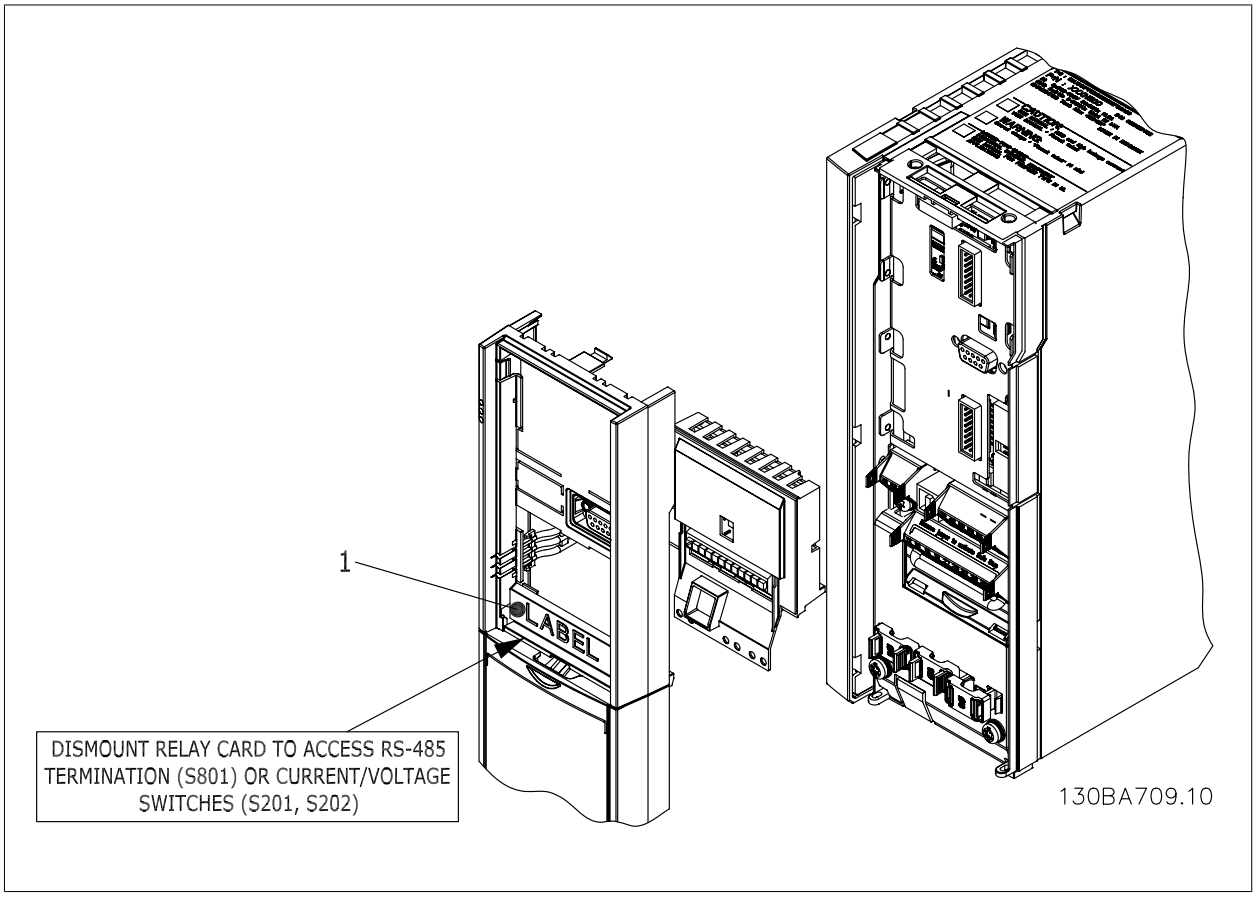

A2-A3-B3	A5-B1-B2-B4-C1-C2-C3-C4

[1] **IMPORTANT**! The label MUST be placed on the LCP frame as shown (UL approved).

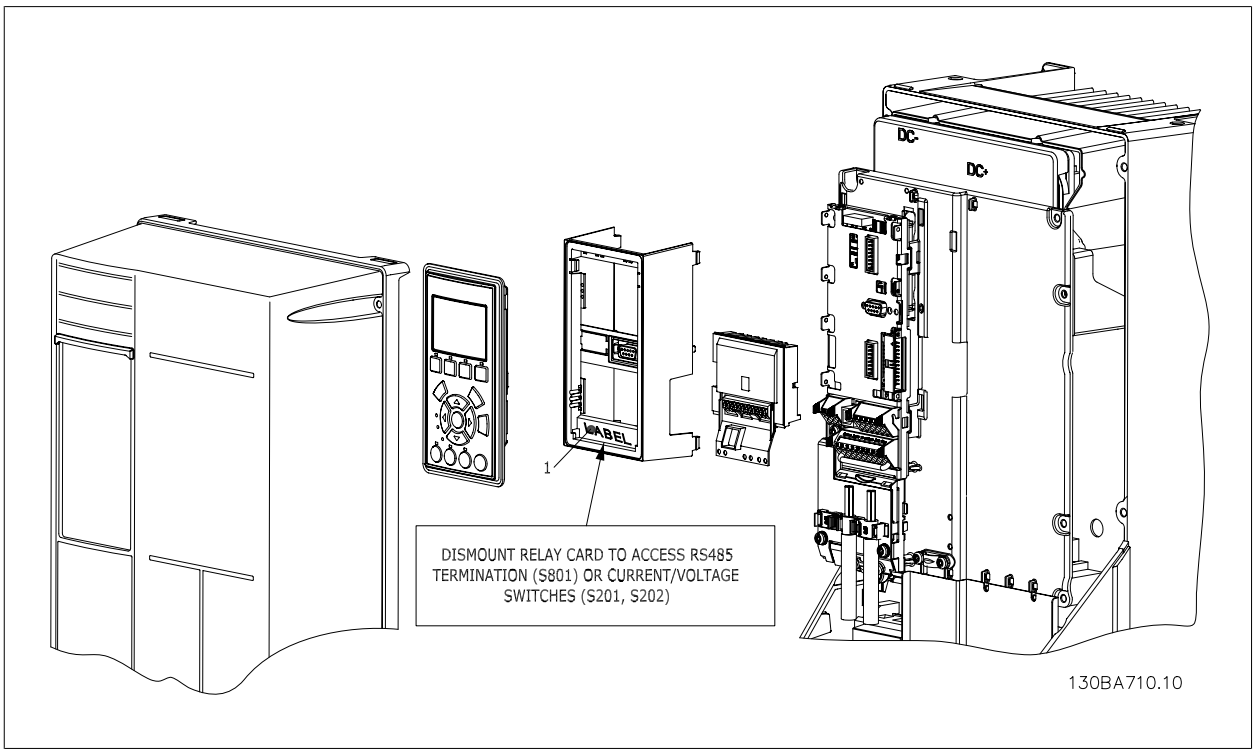

Warning Dual supply

How to add the MCB 105 option:

- See mounting instructions in the beginning of section *Options and Accessories*
- The power to the live part connections on relay terminals must be disconnected.
- Do not mix live parts (high voltage) with control signals (PELV).
- Select the relay functions in par. 5-40 *Function Relay* [6-8], par. 5-41 *On Delay, Relay* [6-8] and par. 5-42 *Off Delay, Relay* [6-8].

NB! (Index [6] is relay 7, index [7] is relay 8, and index [8] is relay 9)

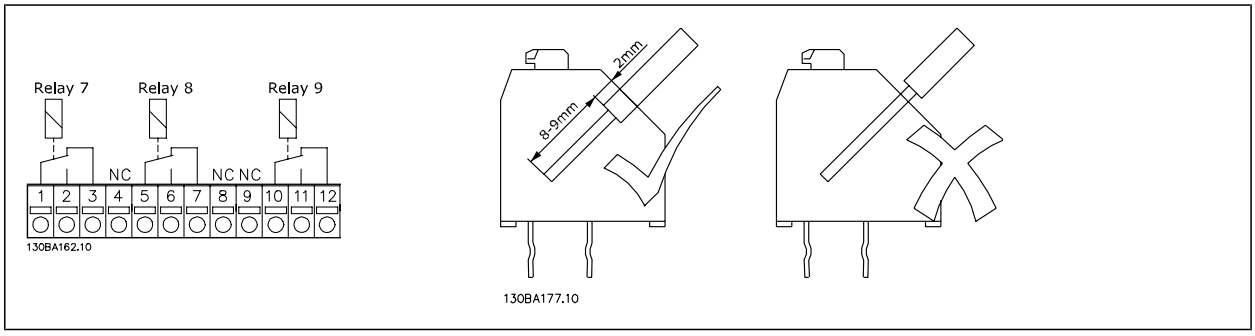

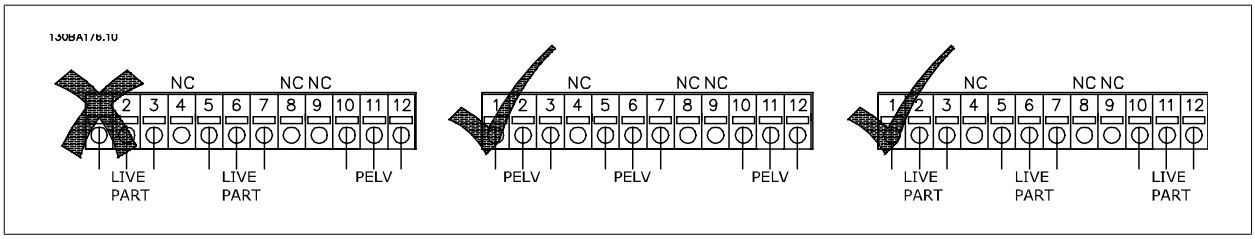

Do not combine low voltage parts and PELV systems.

3

3.1.8 24 V Back-Up Option MCB 107 (Option D)

External 24 V DC Supply

An external 24 V DC supply can be installed for low-voltage supply to the control card and any option card installed. This enables full operation of the LCP (including the parameter setting) and fieldbusses without mains supplied to the power section.

External 24 V DC supply specification:	
Input voltage range	24 V DC ±15 % (max. 37 V in 10 s)
Max. input current	2.2 A
Average input current for the frequency converter	0.9 A
Max cable length	75 m
Input capacitance load	< 10 uF
Power-up delay	< 0.6 s

The inputs are protected.

Terminal numbers:

Terminal 35: - external 24 V DC supply.

Terminal 36: + external 24 V DC supply.

Follow these steps:

1. Remove the LCP or Blind Cover
2. Remove the Terminal Cover
3. Remove the Cable De-coupling Plate and the plastic cover underneath
4. Insert the 24 V DC Backup External Supply Option in the Option Slot
5. Mount the Cable De-coupling Plate
6. Attach the Terminal Cover and the LCP or Blind Cover.

When MCB 107, 24 V backup option is supplying the control circuit, the internal 24 V supply is automatically disconnected.

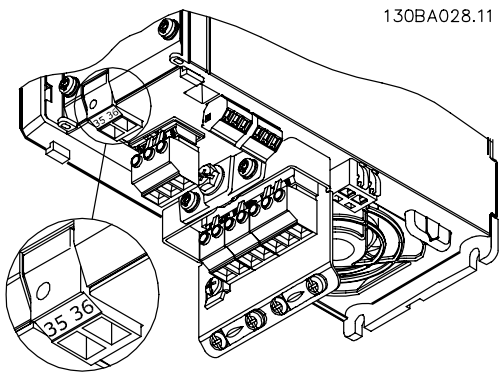

Illustration 3.2: Connection to 24 V backup supplier (A2-A3).

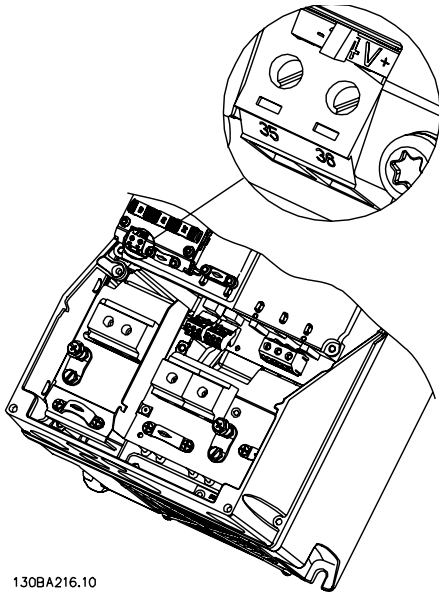

Illustration 3.3: Connection to 24 V backup supplier (A5-C2).

3.1.9 Analog I/O option MCB 109

The Analog I/O card is supposed to be used in e.g. the following cases:

- Providing battery back-up of clock function on control card
- As general extension of analog I/O selection available on control card, e.g. for multi-zone control with three pressure transmitters
- Turning frequency converter into de-central I/O block supporting Building Management System with inputs for sensors and outputs for operating dampers and valve actuators
- Support Extended PID controllers with I/Os for set point inputs, transmitter/sensor inputs and outputs for actuators.

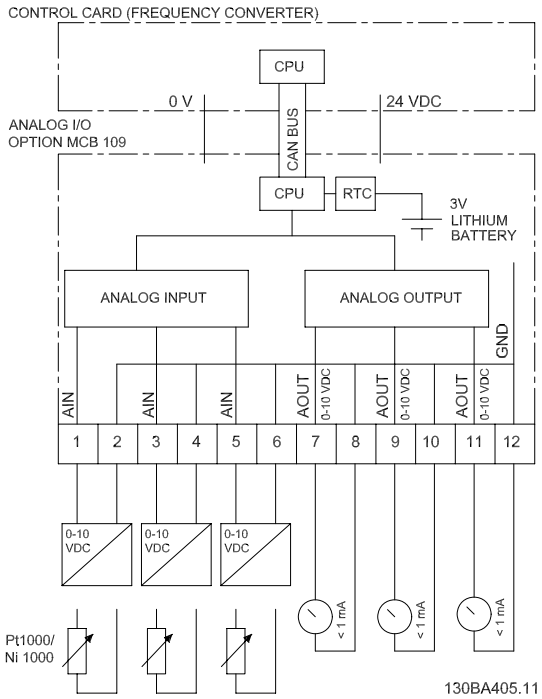

Illustration 3.4: Principle diagram for Analog I/O mounted in frequency converter.

Analog I/O configuration

3 x Analog Inputs, capable of handling following:

- 0 - 10 VDC

OR

- 0-20 mA (voltage input 0-10V) by mounting a 510Ω resistor across terminals (see NB!)
- 4-20 mA (voltage input 2-10V) by mounting a 510Ω resistor across terminals (see NB)
- Ni1000 temperature sensor of 1000 Ω at 0° C. Specifications according to DIN43760
- Pt1000 temperature sensor of 1000 Ω at 0° C. Specifications according to IEC 60751

3 x Analog Outputs supplying 0-10 VDC.

NB!
Please note the values available within the different standard groups of resistors:
E12: Closest standard value is 470Ω, creating an input of 449.9Ω and 8.997V.
E24: Closest standard value is 510Ω, creating an input of 486.4Ω and 9.728V.
E48: Closest standard value is 511Ω, creating an input of 487.3Ω and 9.746V.
E96: Closest standard value is 523Ω, creating an input of 498.2Ω and 9.964V.

Analog inputs - terminal X42/1-6
Parameter group for read out: 18-3*. See also *VLT HVAC Drive Programming Guide.*

Parameter groups for set-up: 26-0*, 26-1*, 26-2* and 26-3*. See also *VLT HVAC Drive Programming Guide.*

3 x Analog inputs	Operating range	Resolution	Accuracy	Sampling	Max load	Impedance
Used as temperature sensor input	-50 to +150 °C	11 bits	-50 °C ±1 Kelvin +150 °C ±2 Kelvin	3 Hz	-	-
Used as voltage input	0 - 10 VDC	10 bits	0.2% of full scale at cal. temperature	2.4 Hz	+/- 20 V continuously	Approximately 5 kΩ

When used for voltage, analog inputs are scalable by parameters for each input.

When used for temperature sensor, analog inputs scaling is preset to necessary signal level for specified temperature span.

When analog inputs are used for temperature sensors, it is possible to read out feedback value in both °C and °F.

When operating with temperature sensors, maximum cable length to connect sensors is 80 m non-screened / non-twisted wires.

Analog outputs - terminal X42/7-12
Parameter group for read out and write: 18-3*. See also *VLT HVAC Drive Programming Guide*
Parameter groups for set-up: 26-4*, 26-5* and 26-6*. See also *VLT HVAC Drive Programming Guide*

3 x Analog outputs	Output signal level	Resolution	Linearity	Max load
Volt	0-10 VDC	11 bits	1% of full scale	1 mA

Analog outputs are scalable by parameters for each output.

The function assigned is selectable via a parameter and have same options as for analog outputs on control card.

For a more detailed description of parameters, please refer to the *VLT HVAC Drive Programming Guide*.

Real-time clock (RTC) with back-up
The data format of RTC includes year, month, date, hour, minutes and weekday.

Accuracy of clock is better than ± 20 ppm at 25 °C.

The built-in lithium back-up battery lasts on average for minimum 0 years, when frequency converter is operating at 40 °C ambient temperature. If battery pack back-up fails, analog I/O option must be exchanged.

3.1.10 Frame size F Panel Options

Space Heaters and Thermostat

Mounted on the cabinet interior of frame size F frequency converters, space heaters controlled via automatic thermostat help control humidity inside the enclosure, extending the lifetime of drive components in damp environments. The thermostat default settings turn on the heaters at 10° C (50° F) and turn them off at 15.6° C (60° F).

Cabinet Light with Power Outlet

A light mounted on the cabinet interior of frame size F frequency converters increase visibility during servicing and maintenance. The housing the light includes a power outlet for temporarily powering tools or other devices, available in two voltages:

- 230V, 50Hz, 2.5A, CE/ENEC
- 120V, 60Hz, 5A, UL/cUL

Transformer Tap Setup

If the Cabinet Light & Outlet and/or the Space Heaters & Thermostat are installed Transformer T1 requires it taps to be set to the proper input voltage. A 380-480/ 500 V380-480 V drive will initially be set to the 525 V tap and a 525-690 V drive will be set to the 690 V tap to insure no over-voltage of secondary equipment occurs if the tap is not changed prior to power being applied. See the table below to set the proper tap at terminal T1 located in the rectifier cabinet. For location in the drive, see illustration of rectifier in the *Power Connections* section.

Input Voltage Range	Tap to Select
380V-440V	400V
441V-490V	460V
491V-550V	525V
551V-625V	575V
626V-660V	660V
661V-690V	690V

NAMUR Terminals

NAMUR is an international association of automation technology users in the process industries, primarily chemical and pharmaceutical industries in Germany. Selection of this option provides terminals organized and labeled to the specifications of the NAMUR standard for drive input and output terminals. This requires MCB 112 PTC Thermistor Card and MCB 113 Extended Relay Card.

RCD (Residual Current Device)

Uses the core balance method to monitor ground fault currents in grounded and high-resistance grounded systems (TN and TT systems in IEC terminology). There is a pre-warning (50% of main alarm set-point) and a main alarm set-point. Associated with each set-point is an SPDT alarm relay for external use. Requires an external "window-type" current transformer (supplied and installed by customer).

- Integrated into the drive's safe-stop circuit
- IEC 60755 Type B device monitors AC, pulsed DC, and pure DC ground fault currents
- LED bar graph indicator of the ground fault current level from 10–100% of the set-point
- Fault memory
- TEST / RESET button

Insulation Resistance Monitor (IRM)

Monitors the insulation resistance in ungrounded systems (IT systems in IEC terminology) between the system phase conductors and ground. There is an ohmic pre-warning and a main alarm set-point for the insulation level. Associated with each set-point is an SPDT alarm relay for external use. Note: only one insulation resistance monitor can be connected to each ungrounded (IT) system.

- Integrated into the drive's safe-stop circuit
- LCD display of the ohmic value of the insulation resistance
- Fault Memory
- INFO, TEST, and RESET buttons

IEC Emergency Stop with Pilz Safety Relay

Includes a redundant 4-wire emergency-stop push-button mounted on the front of the enclosure and a Pilz relay that monitors it in conjunction with the drive's safe-stop circuit and the mains contactor located in the options cabinet.

Manual Motor Starters

Provide 3-phase power for electric blowers often required for larger motors. Power for the starters is provided from the load side of any supplied contactor, circuit breaker, or disconnect switch. Power is fused before each motor starter, and is off when the incoming power to the drive is off. Up to two starters are allowed (one if a 30A, fuse-protected circuit is ordered). Integrated into the drive's safe-stop circuit.

Unit features include:

- Operation switch (on/off)
- Short-circuit and overload protection with test function
- Manual reset function

30 Ampere, Fuse-Protected Terminals

- 3-phase power matching incoming mains voltage for powering auxiliary customer equipment
- Not available if two manual motor starters are selected
- Terminals are off when the incoming power to the drive is off
- Power for the fused protected terminals will be provided from the load side of any supplied contactor, circuit breaker, or disconnect switch.

24 VDC Power Supply

- 5 amp, 120 W, 24 VDC
- Protected against output over-current, overload, short circuits, and over-temperature
- For powering customer-supplied accessory devices such as sensors, PLC I/O, contactors, temperature probes, indicator lights, and/or other electronic hardware
- Diagnostics include a dry DC-ok contact, a green DC-ok LED, and a red overload LED

External Temperature Monitoring

Designed for monitoring temperatures of external system components, such as the motor windings and/or bearings. Includes eight universal input modules plus two dedicated thermistor input modules. All ten modules are integrated into the drive's safe-stop circuit and can be monitored via a fieldbus network (requires the purchase of a separate module/bus coupler).

Universal inputs (8)

Signal types:

- RTD inputs (including Pt100), 3-wire or 4-wire
- Thermocouple
- Analog current or analog voltage

Additional features:

- One universal output, configurable for analog voltage or analog current
- Two output relays (N.O.)
- Dual-line LC display and LED diagnostics
- Sensor lead wire break, short-circuit, and incorrect polarity detection
- Interface setup software

Dedicated thermistor inputs (2)

Features:

- Each module capable of monitoring up to six thermistors in series
- Fault diagnostics for wire breakage or short-circuits of sensor leads
- ATEX/UL/CSA certification
- A third thermistor input can be provided by the PTC Thermistor Option Card MCB 112, if necessary

3.1.11 Brake Resistors

In applications where the motor is used as a brake, energy is generated in the motor and send back into the frequency converter. If the energy can not be transported back to the motor it will increase the voltage in the converter DC-line. In applications with frequent braking and/or high inertia loads this increase may lead to an over voltage trip in the converter and finally a shut down. Brake resistors are used to dissipate the excess energy resulting from the regenerative braking. The resistor is selected in respect to its ohmic value, its power dissipation rate and its physical size. Danfoss offers a wide variety of different resistors that are specially designed to our frequency converters. See the section *Control with brake function* for the dimensioning of brake resistors. Code numbers can be found in the section *How to order*.

3.1.12 Remote Mounting Kit for LCP

The LCP can be moved to the front of a cabinet by using the remote build in kit. The enclosure is the IP65. The fastening screws must be tightened with a torque of max. 1 Nm.

Technical data	
Enclosure:	IP 65 front
Max. cable length between and unit:	3 m
Communication std:	RS 485

Ordering no. 130B1113

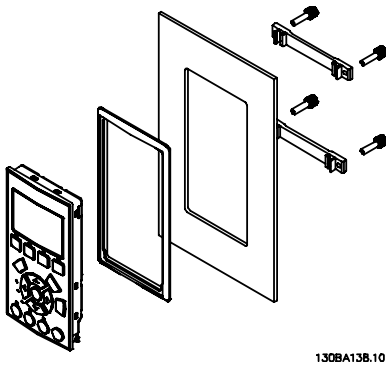

Illustration 3.5: LCP Kit with graphical LCP, fasteners, 3 m cable and gasket.

Ordering no. 130B1114

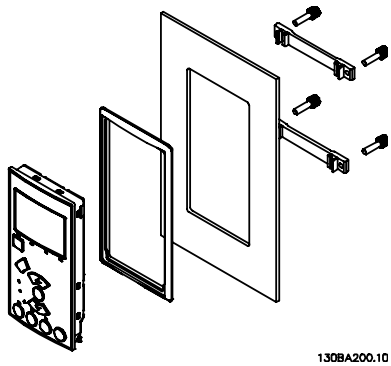

Illustration 3.6: LCP Kit with numerical LCP, fasternes and gasket.

LCP Kit without LCP is also available. Ordering number: 130B1117
For IP55 units the ordering number is 130B1129.

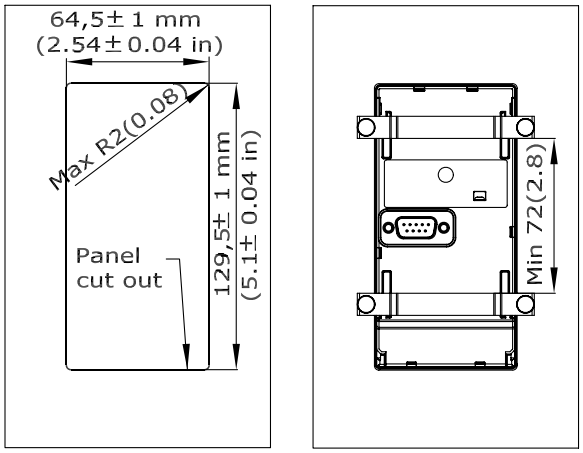

3.1.13 IP 21/IP 4X/ TYPE 1 Enclosure Kit

IP 20/IP 4X top/ TYPE 1 is an optional enclosure element available for IP 20 Compact units, enclosure size A2-A3.
If the enclosure kit is used, an IP 20 unit is upgraded to comply with enclosure IP 21/ 4X top/TYPE 1.

The IP 4X top can be applied to all standard IP 20 VLT HVAC Drive variants.

3

A – Top cover
B – Brim
C – Base part
D – Base cover
E – Screw(s)
Place the top cover as shown. If an A or B option is used the brim must be fitted to cover the top inlet. Place the base part C at the bottom of the drive and use the clamps from the accessory bag to correctly fasten the cables. Holes for cable glands:
Size A2: 2x M25 and 3xM32
Size A3: 3xM25 and 3xM32

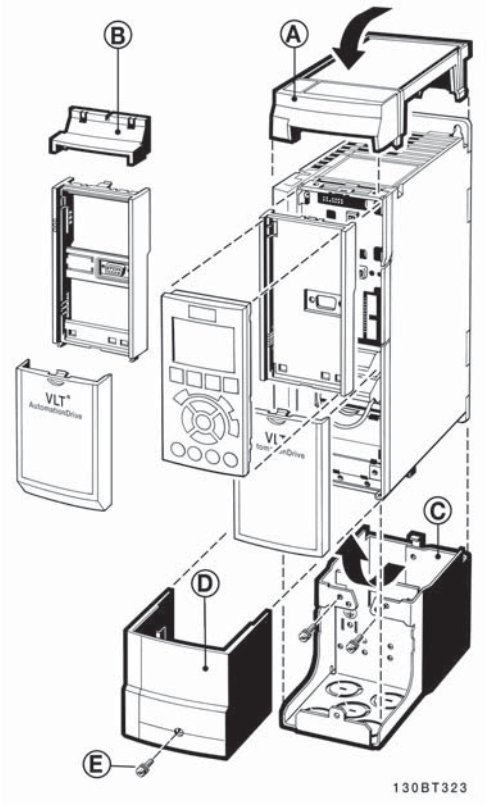

A2 Enclosure

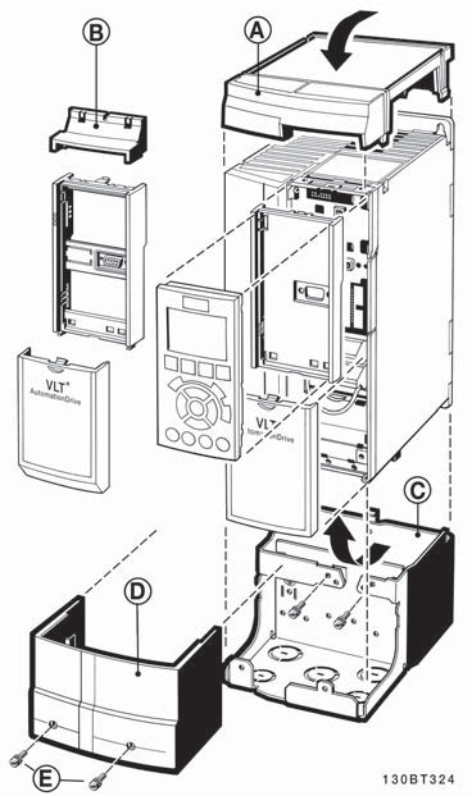

A3 Enclosure

Dimensions

Enclosure type	Height (mm) A	Width (mm) B	Depth (mm) C*
A2	372	90	205
A3	372	130	205
B3	475	165	249
B4	670	255	246
C3	755	329	337
C4	950	391	337

* If option A/B is used, the depth will increase (see section Mechanical Dimensions for details)

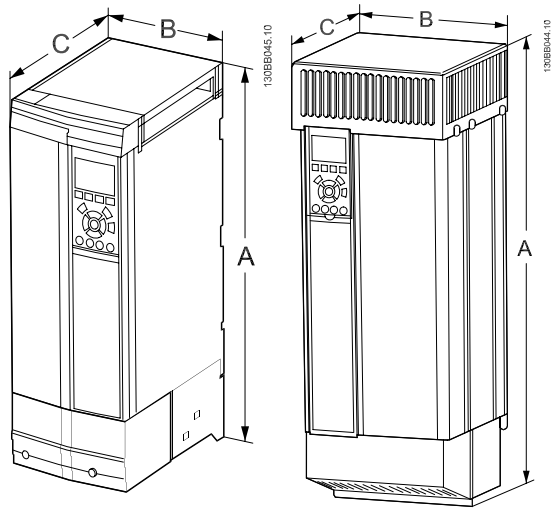

A2, A3, B3

B4, C3, C4

A – Top cover
B – Brim
C – Base part
D – Base cover
E – Screw(s)
F - Fan cover
G - Top clip
When option module A and/ or option module B is/are used, the brim (B) must be fitted to the top cover (A).

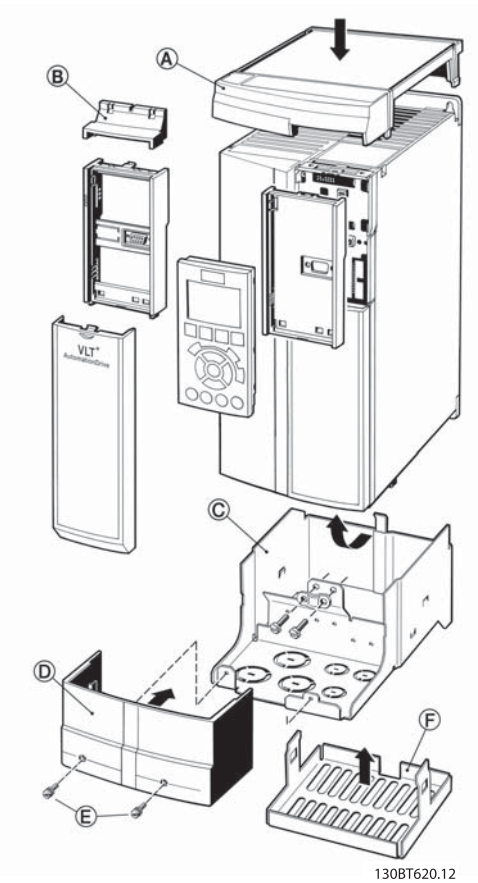

B3 Enclosure

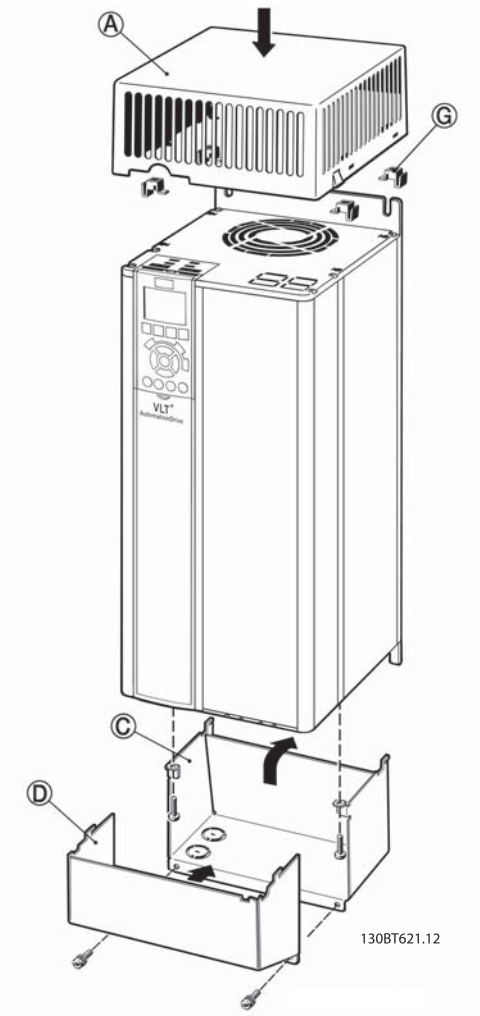

B4 - C3 - C4 Enclosure

3.1.14 Output Filters

The high speed switching of the frequency converter produces some secondary effects, which influence the motor and the enclosed environment. These side effects are addressed by two different filter types, the du/dt and the Sine-wave filter.

du/dt filters

Motor insulation stresses are often caused by the combination of rapid voltage and current increase. The rapid energy changes can also be reflected back to the DC-line in the inverter and cause shut down. The du/dt filter is designed to reduce the voltage rise time/the rapid energy change in the motor and by that intervention avoid premature aging and flashover in the motor insulation. du/dt filters have a positive influence on the radiation of magnetic noise in the cable that connects the drive to the motor. The voltage wave form is still pulse shaped but the du/dt ratio is reduced in comparison with the installation without filter.

Sine-wave filters

Sine-wave filters are designed to let only low frequencies pass. High frequencies are consequently shunted away which results in a sinusoidal phase to phase voltage waveform and sinusoidal current waveforms.

With the sinusoidal waveforms the use of special frequency converter motors with reinforced insulation is no longer needed. The acoustic noise from the motor is also damped as a consequence of the wave condition.

Besides the features of the du/dt filter, the sine-wave filter also reduces insulation stress and bearing currents in the motor thus leading to prolonged motor lifetime and longer periods between services. Sine-wave filters enable use of longer motor cables in applications where the motor is installed far from the drive. The length is unfortunately limited because the filter does not reduce leakage currents in the cables.

4 How to Order

4.1.1 Drive Configurator

It is possible to design a frequency converter according to the application requirements by using the ordering number system.

For the frequency converter, you can order standard drives and drives with integral options by sending a type code string describing the product a to the local Danfoss sales office, i.e.:

FC-102P18KT4E21H1XGCXXXSXXXXAGBKCXXXXDX

The meaning of the characters in the string can be located in the pages containing the ordering numbers in the chapter *How to Select Your VLTAF-600*. In the example above, a Profibus LON works option and a General purpose I/O option is included in the frequency converter.

Ordering numbers for frequency converter standard variants can also be located in the chapter *How to Select Your VLT*.

From the Internet based Drive Configurator, you can configure the right frequency converter for the right application and generate the type code string. The Drive Configurator will automatically generate an eight-digit sales number to be delivered to your local sales office.
Furthermore, you can establish a project list with several products and send it to a Danfoss sales representative.

The Drive Configurator can be found on the global Internet site: *www.danfoss.com/drives*.

Example of Drive Configurator interface set-up:
The numbers shown in the boxes refer to the letter/figure number of the Type Code String - read from left to right. See next page!

Product groups	1-3	
Frequency Converter series	4-6	
Power rating	8-10	
Phases	11	
Mains Voltage	12	
Enclosure	13-15	
Enclosure type		
Enclosure class		
Control supply voltage		
Hardware configuration		
RFI filter	16-17	
Brake	18	
Display (LCP)	19	
Coating PCB	20	
Mains option	21	
Adaptation A	22	
Adaptation B	23	
Software release	24-27	
Software language	28	
A options	29-30	
B options	31-32	
C0 options, MCO	33-34	
C1 options	**35**	
C option software	**36-37**	
D options	**38-39**	

4.1.2 Type Code String Low and Medium Power

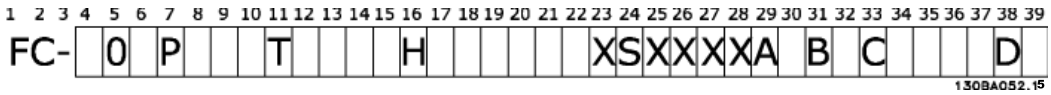

Description	Pos	Possible choice
Product group & FC Series	1-6	FC 102
Power rating	8-10	1.1 - 90 kW (P1K1 - P90K)
Number of phases	11	Three phases (T)
Mains voltage	11-12	T 2: 200-240 VAC T 4: 380-480 VAC T 6: 525-600 VAC
Enclosure	13-15	E20: IP20 E21: IP 21/NEMA Type 1 E55: IP 55/NEMA Type 12 E66: IP66 P21: IP21/NEMA Type 1 w/backplate P55: IP55/NEMA Type 12 w/backplate
RFI filter	16-17	H1: RFI filter class A1/B H2: RFI filter class A2 H3: RFI filter class A1/B (reduced cable length) Hx: No RFI filter
Brake	18	X: No brake chopper included B: Brake chopper included T: Safe Stop U: Safe + brake
Display	19	G: Graphical Local Control Panel (GLCP) N: Numeric Local Control Panel (NLCP) X: No Local Control Panel
Coating PCB	20	X. No coated PCB C: Coated PCB
Mains option	21	X: No Mains disconnect switch and Load Sharing 1: With Mains disconnect switch (IP55 only) 8: Mains disconnect and Load Sharing D: Load Sharing See Chapter 8 for max. cable sizes.
Adaptation	22	X: Standard 0: European metric thread in cable entries.
Adaptation	23	Reserved
Software release	24-27	Actual software
Software language	28	
A options	29-30	AX: No options A0: MCA 101 Profibus DP V1 A4: MCA 104 DeviceNet AG: MCA 108 Lonworks AJ: MCA 109 BACnet gateway
B options	31-32	BX: No option BK: MCB 101 General purpose I/O option BP: MCB 105 Relay option BO: MCB 109 Analog I/O option
C0 options MCO	33-34	CX: No options
C1 options	35	X: No options
C option software	36-37	XX: Standard software
D options	38-39	DX: No option D0: DC back-up

Table 4.1: Type code description.

The various Options and Accessories are described further in the *VLT HVAC Drive Design Guide, MG.11.BX.YY* .

4.1.3 Type Code String High Power

Ordering type code frame sizes D and E

Description	Pos	Possible choice
Product group+series	1-6	FC 102
Power rating	8-10	45-560 kW
Phases	11	Three phases (T)
Mains voltage	11-12	T 4: 380-500 VAC T 7: 525-690 VAC
Enclosure	13-15	E00: IP00/Chassis C00: IP00/Chassis w/ stainless steel back channel E0D: IP00/Chassis, D3 P37K-P75K, T7 C0D: IP00/Chassis w/ stainless steel back channel, D3 P37K-P75K, T7 E21: IP 21/ NEMA Type 1 E54: IP 54/ NEMA Type 12 E2D: IP 21/ NEMA Type 1, D1 P37K-P75K, T7 E5D: IP 54/ NEMA Type 12, D1 P37K-P75K, T7 E2M: IP 21/ NEMA Type 1 with mains shield E5M: IP 54/ NEMA Type 12 with mains shield
RFI filter	16-17	H2: RFI filter, class A2 (standard) H4: RFI filter class A1[1)] H6: RFI filter Maritime use[2)]
Brake	18	B: Brake IGBT mounted X: No brake IGBT R: Regeneration terminals (E frames only)
Display	19	G: Graphical Local Control Panel LCP N: Numerical Local Control Panel (LCP) X: No Local Control Panel (D frames IP00 and IP 21 only)
Coating PCB	20	C: Coated PCB X. No coated PCB (D frames 380-480/500 V only)
Mains option	21	X: No mains option 3: Mains disconnect and Fuse 5: Mains disconnect, Fuse and Load sharing 7: Fuse A: Fuse and Load sharing D: Load sharing
Adaptation	22	Reserved
Adaptation	23	Reserved
Software release	24-27	Actual software
Software language	28	
A options	29-30	AX: No options A0: MCA 101 Profibus DP V1 A4: MCA 104 DeviceNet AN: MCA 121 Ethernet IP
B options	31-32	BX: No option BK: MCB 101 General purpose I/O option BP: MCB 105 Relay option BO:MCB 109 Analog I/O option
C_0 options	33-34	CX: No options
C_1 options	35	X: No options
C option software	36-37	XX: Standard software
D options	38-39	DX: No option D0: DC backup

The various options are described further in this Design Guide.
1): Available for all D frames. E frames 380-480/500 VAC only
2) Consult factory for applications requiring maritime certification

4

Ordering type code frame size F

Description	Pos	Possible choice
Product group	1-3	
Drive series	4-6	
Power rating	8-10	500 - 1200 kW
Phases	11	Three phases (T)
Mains voltage	11-12	T 5: 380-500 VAC T 7: 525-690 VAC
Enclosure	13-15	E21: IP 21/ NEMA Type 1 E54: IP 54/ NEMA Type 12 L2X: IP21/NEMA 1 with cabinet light & IEC 230V power outlet L5X: IP54/NEMA 12 with cabinet light & IEC 230V power outlet L2A: IP21/NEMA 1 with cabinet light & NAM 115V power outlet L5A: IP54/NEMA 12 with cabinet light & NAM 115V power outlet H21: IP21 with space heater and thermostat H54: IP54 with space heater and thermostat R2X: IP21/NEMA1 with space heater, thermostat, light & IEC 230V outlet R5X: IP54/NEMA12 with space heater, thermostat, light & IEC 230V outlet R2A: IP21/NEMA1 with space heater, thermostat, light, & NAM 115V outlet R5A: IP54/NEMA12 with space heater, thermostat, light, & NAM 115V outlet
RFI filter	16-17	H2: RFI filter, class A2 (standard) H4: RFI filter, class A1[2, 3)] HE: RCD with Class A2 RFI filter[2)] HF: RCD with class A1 RFI filter[2, 3)] HG: IRM with Class A2 RFI filter[2)] HH: IRM with class A1 RFI filter[2, 3)] HJ: NAMUR terminals and class A2 RFI filter[1)] HK: NAMUR terminals with class A1 RFI filter[1, 2, 3)] HL: RCD with NAMUR terminals and class A2 RFI filter[1, 2)] HM: RCD with NAMUR terminals and class A1 RFI filter[1, 2, 3)] HN: IRM with NAMUR terminals and class A2 RFI filter[1, 2)] HP: IRM with NAMUR terminals and class A1 RFI filter[1, 2, 3)]
Brake	18	B: Brake IGBT mounted X: No brake IGBT R: Regeneration terminals M: IEC Emergency stop push-button (with Pilz safety relay)[4)] N: IEC Emergency stop push-button with brake IGBT and brake terminals [4)] P: IEC Emergency stop push-button with regeneration terminals[4)]
Display	19	G: Graphical Local Control Panel LCP
Coating PCB	20	C: Coated PCB
Mains option	21	X: No mains option 3[2)]: Mains disconnect and Fuse 5[2)]: Mains disconnect, Fuse and Load sharing 7: Fuse A: Fuse and Load sharing D: Load sharing E: Mains disconnect, contactor & fuses[2)] F: Mains circuit breaker, contactor & fuses [2)] G: Mains disconnect, contactor, loadsharing terminals & fuses[2)] H: Mains circuit breaker, contactor, loadsharing terminals & fuses[2)] J: Mains circuit breaker & fuses [2)] K: Mains circuit breaker, loadsharing terminals & fuses [2)]
A options	29-30	AX: No options A0: MCA 101 Profibus DP V1 A4: MCA 104 DeviceNet AN: MCA 121 Ethernet IP
B options	31-32	BX: No option BK: MCB 101 General purpose I/O option BP: MCB 105 Relay option BO:MCB 109 Analog I/O option BY: MCO 101 Extended Cascade Control
C_0 options	33-34	CX: No options
C_1 options	35	X: No options 5: MCO 102 Advanced Cascade Control
C option software	36-37	XX: Standard software
D options	38-39	DX: No option D0: DC backup
The various options are described further in this Design Guide.		

4.2 Ordering Numbers

4.2.1 Ordering Numbers: Options and Accessories

Type	Description	Ordering no.	Comments
Miscellaneous hardware I			
DC link connector	Terminal block for DC link connnection on frame size A2/A3	130B1064	
IP 21/4X top/TYPE 1 kit	Enclosure, frame size A2: IP21/IP 4X Top/TYPE 1	130B1122	
IP 21/4X top/TYPE 1 kit	Enclosure, frame size A3: IP21/IP 4X Top/TYPE 1	130B1123	
IP 21/4X top/TYPE 1 kit	IP21/NEMA 1 Top + bottom Frame size B3	130B1187	
IP 21/4X top/TYPE 1 kit	IP21/NEMA 1 Top + bottom Frame size B4	130B1189	
IP 21/4X top/TYPE 1 kit	IP21/NEMA 1 Top + bottom Frame size C3	130B1191	
IP 21/4X top/TYPE 1 kit	IP21/NEMA 1 Top + bottom Frame size C4	130B1193	
IP21/4X top TYPE 1 kit	IP21 / NEMA 1 enclosure Top Cover A2	130B1132	
IP21/4X top TYPE 1 kit	IP21 / NEMA 1 enclosure Top Cover A3	130B1133	
IP 21/4X top/TYPE 1 kit	IP21 / NEMA 1 enclosure Top Cover B3	130B1188	
IP 21/4X top/TYPE 1 kit	IP21 / NEMA 1 enclosure Top Cover B4	130B1190	
IP 21/4X top/TYPE 1 kit	IP21 / NEMA 1 enclosure Top Cover C3	130B1192	
IP 21/4X top/TYPE 1 kit	IP21 / NEMA 1 enclosure Top Cover C4	130B1194	
Panel Through Mount Kit	Enclosure, frame size A5	130B1028	
Panel Through Mount Kit	Enclosure, frame size B1	130B1046	
Panel Through Mount Kit	Enclosure, frame size B2	130B1047	
Panel Through Mount Kit	Enclosure, frame size C1	130B1048	
Panel Through Mount Kit	Enclosure, frame size C2	130B1049	
Profibus D-Sub 9	Connector kit for IP20	130B1112	
Profibus top entry kit	Top entry kit for Profibus connection - A enclosures	130B0524	
Profibus top entry kit	Top entry kit for Profibus connection - D + E enclosures	176F1742	
Terminal blocks	Screw terminal blocks for replacing spring loaded terminals 1 pc 10 pin 1 pc 6 pin and 1 pc 3 pin connectors	130B1116	
Backplate	A5 IP55 / NEMA 12	130B1098	
Backplate	B1 IP21 / IP55 / NEMA 12	130B3383	
Backplate	B2 IP21 / IP55 / NEMA 12	130B3397	
Backplate	C1 IP21 / IP55 / NEMA 12	130B3910	
Backplate	C2 IP21 / IP55 / NEMA 12	130B3911	
Backplate	A5 IP66 / NEMA 4x	130B3242	
Backplate	B1 IP66 / NEMA 4x	130B3434	
Backplate	B2 IP66 / NEMA 4x	130B3465	
Backplate	C1 IP66 / NEMA 4x	130B3468	
Backplate	C2 IP66 / NEMA 4x	130B3491	
LCP's and kits			
LCP 101	Numerical Local Control Panel (NLCP)	130B1124	
LCP 102	Graphical Local Control Panel (GLCP)	130B1107	
LCP cable	Separate LCP cable, 3 m	175Z0929	
LCP kit	Panel mounting kit including graphical LCP, fasteners, 3 m cable and gasket	130B1113	
LCP kit	Panel mounting kit including numerical LCP, fasteners and gasket	130B1114	
LCP kit	Panel mounting kit for all LCPs including fasteners, 3 m cable and gasket	130B1117	
LCPkit	Front mounting kit, IP55 enclosures	130B1129	
LCP kit	Panel mounting kit for all LCPs including fasteners and gasket - without cable	130B1170	
Options for Slot A - Uncoated / Coated		**Ordering no. Uncoated**	**Ordering no. Coated**
MCA 101	Profibus option DP V0/V1	130B1100	130B1200
MCA 104	DeviceNet option	130B1102	130B1202
MCA 108	Lonworks	130B1106	130B1206
MCA 109	BACnet gateway for build-in. Not to be used with Relay Option MCB 105 card	130B1144	130B1244
Options for Slot B			
MCB 101	General purpose Input Output option	130B1125	
MCB 105	Relay option	130B1110	
MCB 109	Analog I/O option and battery back-up for real-time clock	130B1143	130B1243
Option for Slot D			
MCB 107	24 V DC back-up	130B1108	130B1208
External Options			
Ethernet IP	Ethernet master	175N2584	

Table 4.2: 1) Only IP21 / > 11 kW

Options can be ordered as factory built-in options, see ordering information.

For information on fieldbus and application option compatibility with older software versions, please contact your Danfoss supplier.

Options can be ordered as factory built-in options, see ordering information.

Type	Description		
Spare Parts		**Ordering no.**	**Comments**
Control board FC	With Safe Stop Function	130B1150	
Control board FC	Without Safe Stop Function	130B1151	
Fan A2	Fan, frame size A2	130B1009	
Fan A3	Fan, frame size A3	130B1010	
Fan A5	Fan, frame size A5	130B1017	
Fan B1	Fan external, frame size B1	130B3407	
Fan B2	Fan external, frame size B2	130B3406	
Fan B3	Fan external, frame size B3	130B3563	
Fan B4	Fan external, 18.5/22 kW	130B3699	
Fan B4	Fan external 22/30 kW	130B3701	
Fan C1	Fan external, frame size C1	130B3865	
Fan C2	Fan external, frame size C2	130B3867	
Fan C3	Fan external, frame size C3	130B4292	
Fan C4	Fan external, frame size C4	130B4294	
Miscellaneous hardware II			
Accessory bag A2	Accessory bag, frame size A2	130B1022	
Accessory bag A3	Accessory bag, frame size A3	130B1022	
Accessory bag A5	Accessory bag, frame size A5	130B1023	
Accessory bag B1	Accessory bag, frame size B1	130B2060	
Accessory bag B2	Accessory bag, frame size B2	130B2061	
Accessory bag B3	Accessory bag, frame size B3	130B0980	
Accessory bag B4	Accessory bag, frame size B4	130B1300	Small
Accessory bag B4	Accessory bag, frame size B4	130B1301	Big
Accessory bag C1	Accessory bag, frame size C1	130B0046	
Accessory bag C2	Accessory bag, frame size C2	130B0047	
Accessory bag C3	Accessory bag, frame size C3	130B0981	
Accessory bag C4	Accessory bag, frame size C4	130B0982	Small
Accessory bag C4	Accessory bag, frame size C4	130B0983	Big

4.2.2 Ordering Numbers: High Power Option Kits

Kit	Description	Ordering Number	Instruction Number
NEMA-3R (Rittal Enclosures)	D3 Frame	176F4600	175R5922
	D4 Frame	176F4601	
	E2 Frame	176F1852	
NEMA-3R (Welded Enclosures)	D3 Frame	176F0296	175R1068
	D4 Frame	176F0295	
	E2 Frame	176F0298	
Pedestal	D Frames	176F1827	175R5642
Back Channel Duct Kit	D3 1800mm	176F1824	175R5640
(Top & Bottom)	D4 1800mm	176F1823	
	D3 2000mm	176F1826	
	D4 2000mm	176F1825	
	E2 2000mm	176F1850	
	E2 2200mm	176F0299	
Back Channel Duct Kit	D3/D4 Frames	176F1775	175R1107
(Top Only)	E2 Frame	176F1776	
IP00 Top & Bottom Covers	D3/D4 Frames	176F1862	175R1106
(Welded Enclosures)	E2 Frame	176F1861	
IP00 Top & Bottom Covers	D3 Frames	176F1781	175R0076
(Rittal Enclosures)	D4 Frames	176F1782	
	E2 Frame	176F1783	
IP00 Motor Cable Clamp	D3 Frame	176F1774	175R1109
	D4 Frame	176F1746	
	E2 Frame	176F1745	
IP00 Terminal Cover	D3/D4 Frame	176F1779	175R1108
Mains Shield	D1/D2 Frames	176F0799	175R5923
	E1 Frame	176F1851	
Input Plates	See Instr		175R5795
Loadshare	D1/D3 Frame	176F8456	175R5637
	D2/D4 Frame	176F8455	
Top Entry Sub D or Shield Termination	D3/D4/E2 Frames	176F1742	175R5964

4

4.2.3 Ordering Numbers: Harmonic Filters

Harmonic filters are used to reduce mains harmonics.

- AHF 010: 10% current distortion
- AHF 005: 5% current distortion

380-415V, 50Hz

$I_{AHF,N}$	Typical Motor Used [kW]	Danfoss ordering number		Frequency converter size
		AHF 005	AHF 010	
10 A	1.1 - 4	175G6600	175G6622	P1K1, P4K0
19 A	5.5 - 7.5	175G6601	175G6623	P5K5 - P7K5
26 A	11	175G6602	175G6624	P11K
35 A	15 - 18.5	175G6603	175G6625	P15K - P18K
43 A	22	175G6604	175G6626	P22K
72 A	30 - 37	175G6605	175G6627	P30K - P37K
101A	45 - 55	175G6606	175G6628	P45K - P55K
144 A	75	175G6607	175G6629	P75K
180 A	90	175G6608	175G6630	P90K
217 A	110	175G6609	175G6631	P110
289 A	132 - 160	175G6610	175G6632	P132 - P160
324 A		175G6611	175G6633	
370 A	200	175G6688	175G6691	P200
506 A	250	175G6609 + 175G6610	175G6631 + 175G6632	P250
578 A	315	2x 175G6610	2x 175G6632	P315
648 A	400	2x175G6611	2x175G6633	P400

380 - 415V, 60Hz

$I_{AHF,N}$	Typical Motor Used [HP]	Danfoss ordering number		Frequency converter size
		AHF 005	AHF 010	
19 A	10 - 15	130B2460	130B2472	P5K5 - P7K5
26 A	20	130B2461	130B2473	P11K
35 A	25 - 30	130B2462	130B2474	P15K, P18K
43 A	40	130B2463	130B2475	P22K
72 A	50 - 60	130B2464	130B2476	P30K - P37K
101A	75	130B2465	130B2477	P45K - P55K
144 A	100 - 125	130B2466	130B2478	P75K
180 A	150	130B2467	130B2479	P90K
217 A	200	130B2468	130B2480	P110
289 A	250	130B2469	130B2481	P132
324 A	300	130B2470	130B2482	P160
370 A	350	130B2471	130B2483	P200
506 A	450	130B2468 + 130B2469	130B2480 + 130B2481	P250
578 A	500	2x 130B2469	2x 130B2481	P315
648 A	500	2x130B2470	2x130B2482	P355

440-480V, 60Hz

$I_{AHF,N}$	Typical Motor Used [HP]	Danfoss ordering number		Frequency converter size
		AHF 005	AHF 010	
19 A	10 - 15	175G6612	175G6634	P11K
26 A	20	175G6613	175G6635	P15K
35 A	25 - 30	175G6614	175G6636	P18K, P22K
43 A	40	175G6615	175G6637	P30K
72 A	50 - 60	175G6616	175G6638	P37K - P45K
101A	75	175G6617	175G6639	P55K
144 A	100 - 125	175G6618	175G6640	P75K
180 A	150	175G6619	175G6641	P90
217 A	200	175G6620	175G6642	P110
289 A	250	175G6621	175G6643	P132 - P160
324 A	300	175G6689	175G6692	
370 A	350	175G6690	175G6693	P200
434 A	350	2x175G6620	2x175G6642	P250
578 A	500	2x 175G6621	2x 175G6643	P315 - P355
659 A	550-600	175G6690 + 175G6621	175G6693 + 175G6643	P400

Matching the frequency converter and filter is pre-calculated based on 400V/480V and on a typical motor load (4 pole) and 110 % torque.

500-525V, 50Hz

$I_{AHF,N}$	Typical Motor Used [kW]	Danfoss ordering number		Frequency converter size
		AHF 005	AHF 010	
10 A	0.75 - 5.5	175G6644	175G6656	PK75 - P5K5
19 A	7.5 - 11	175G6645	175G6657	P7K5 - P11K
26 A	15 18.5	175G6646	175G6658	P15K - P18K
35 A	22	175G6647	175G6659	P22K
43 A	30	175G6648	175G6660	P30K
72 A	37 -45	175G6649	175G6661	P37K - P45K
101 A	55 - 75	175G6650	175G6662	P55K - P75K
144 A	90 - 110	175G6651	175G6663	P90K - P110
180 A	132	175G6652	175G6664	P132
217 A	160	175G6653	175G6665	P160
289 A	200	175G6654	175G6666	P200
324 A	250	175G6655	175G6667	P250
370 A	315	2x175G6653	2x175G6665	P315 - P400
578 A	400	2X 175G6654	2X 175G6666	P500 - P560

690V, 50Hz

$I_{AHF,N}$	Typical Motor Used [kW]	Danfoss ordering number		Frequency converter size
		AHF 005	AHF 010	
43	37 - 45	130B2328	130B2293	
72	55 - 75	130B2330	130B2295	P37K - P45K
101	90	130B2331	130B2296	P55K - P75K
144 A	110 - 132	130B2333	130B2298	P90K - P110
180 A	160	130B2334	130B2299	P132
217 A	200	130B2335	130B2300	P160
289 A	250	130B2331+2333	130B2301	P200
324 A	315	130B2333+2334	130B2302	P250
370 A	400	130B2334+2335	130B2304	P315

4.2.4 Ordering Numbers: Sine Wave Filter Modules, 200-500 VAC

Mains supply 3 x 200 to 500 V

Frequency converter size			Minimum switching frequency	Maximum output frequency	Part No. IP20	Part No. IP00	Rated filter current at 50Hz
200-240V	**380-440V**	**440-500V**					
PK25	PK37	PK37	5 kHz	120 Hz	130B2439	130B2404	2.5 A
PK37	PK55	PK55	5 kHz	120 Hz	130B2439	130B2404	2.5 A
	PK75	PK75	5 kHz	120 Hz	130B2439	130B2404	2.5 A
PK55	P1K1	P1K1	5 kHz	120 Hz	130B2441	130B2406	4.5 A
	P1K5	P1K5	5 kHz	120 Hz	130B2441	130B2406	4.5 A
PK75	P2K2	P2K2	5 kHz	120 Hz	130B2443	130B2408	8 A
P1K1	P3K0	P3K0	5 kHz	120 Hz	130B2443	130B2408	8 A
P1K5			5 kHz	120 Hz	130B2443	130B2408	8 A
	P4K0	P4K0	5 kHz	120 Hz	130B2444	130B2409	10 A
P2K2	P5K5	P5K5	5 kHz	120 Hz	130B2446	130B2411	17 A
P3K0	P7K5	P7K5	5 kHz	120 Hz	130B2446	130B2411	17 A
P4K0			5 kHz	120 Hz	130B2446	130B2411	17 A
P5K5	P11K	P11K	4 kHz	60 Hz	130B2447	130B2412	24 A
P7K5	P15K	P15K	4 kHz	60 Hz	130B2448	130B2413	38 A
	P18K	P18K	4 kHz	60 Hz	130B2448	130B2413	38 A
P11K	P22K	P22K	4 kHz	60 Hz	130B2307	130B2281	48 A
P15K	P30K	P30K	3 kHz	60 Hz	130B2308	130B2282	62 A
P18K	P37K	P37K	3 kHz	60 Hz	130B2309	130B2283	75 A
P22K	P45K	P55K	3 kHz	60 Hz	130B2310	130B2284	115 A
P30K	P55K	P75K	3 kHz	60 Hz	130B2310	130B2284	115 A
P37K	P75K	P90K	3 kHz	60 Hz	130B2311	130B2285	180 A
P45K	P90K	P110	3 kHz	60 Hz	130B2311	130B2285	180 A
	P110	P132	3 kHz	60 Hz	130B2312	130B2286	260 A
	P132	P160	3 kHz	60 Hz	130B2312	130B2286	260 A
	P160	P200	3 kHz	60 Hz	130B2313	130B2287	410 A
	P200	P250	3 kHz	60 Hz	130B2313	130B2287	410 A
	P250	P315	3 kHz	60 Hz	130B2314	130B2288	480 A
	P315	P355	2 kHz	60 Hz	130B2315	130B2289	660 A
	P355	P400	2 kHz	60 Hz	130B2315	130B2289	660 A
	P400	P450	2 kHz	60 Hz	130B2316	130B2290	750 A
	P450	P500	2 kHz	60 Hz	130B2317	130B2291	880 A
	P500	P560	2 kHz	60 Hz	130B2317	130B2291	880 A
	P560	P630	2 kHz	60 Hz	130B2318	130B2292	1200 A
	P630	P710	2 kHz	60 Hz	130B2318	130B2292	1200 A

NB!
When using Sine-wave filters, the switching frequency should comply with filter specifications in par. 14-01 *Switching Frequency*.

NB!
See also Output Filter Design Guide, MG.90.Nx.yy

4

4.2.5 Ordering Numbers: Sine-Wave Filter Modules, 525-600/690 VAC

Mains supply 3 x 525 to 690 V

Frequency converter size		Minimum switching frequency	Maximum output frequency	Part No. IP20	Part No. IP00	Rated filter current at 50Hz
525-600V	**690V**					
PK75		2 kHz	60 Hz	130B2341	130B2321	13 A
P1K1		2 kHz	60 Hz	130B2341	130B2321	13 A
P1K5		2 kHz	60 Hz	130B2341	130B2321	13 A
P2k2		2 kHz	60 Hz	130B2341	130B2321	13 A
P3K0		2 kHz	60 Hz	130B2341	130B2321	13 A
P4K0		2 kHz	60 Hz	130B2341	130B2321	13 A
P5K5		2 kHz	60 Hz	130B2341	130B2321	13 A
P7K5		2 kHz	60 Hz	130B2341	130B2321	13 A
	P11K	2 kHz	60 Hz	130B2342	130B2322	28 A
P11K	P15K	2 kHz	60 Hz	130B2342	130B2322	28 A
P15K	P18K	2 kHz	60 Hz	130B2342	130B2322	28 A
P18K	P22K	2 kHz	60 Hz	130B2342	130B2322	28 A
P22K	P30K	2 kHz	60 Hz	130B2343	130B2323	45 A
P30K	P37K	2 kHz	60 Hz	130B2343	130B2323	45 A
P37K	P45K	2 kHz	60 Hz	130B2344	130B2324	76 A
P45K	P55K	2 kHz	60 Hz	130B2344	130B2324	76 A
P55K	P75K	2 kHz	60 Hz	130B2345	130B2325	115 A
P75K	P90K	2 kHz	60 Hz	130B2345	130B2325	115 A
P90K	P110	2 kHz	60 Hz	130B2346	130B2326	165 A
P110	P132	2 kHz	60 Hz	130B2346	130B2326	165 A
P130	P160	2 kHz	60 Hz	130B2347	130B2327	260 A
P160	P200	2 kHz	60 Hz	130B2347	130B2327	260 A
P200	P250	2 kHz	60 Hz	130B2348	130B2329	303 A
P250	P315	1.5 kHz	60 Hz	130B2270	130B2241	430 A
P315	P355	1.5 kHz	60 Hz	130B2270	130B2241	430 A
P355	P400	1.5 kHz	60 Hz	130B2270	130B2241	430 A
P400	P500	1.5 kHz	60 Hz	130B2271	130B2242	530 A
P450	P560	1.5 kHz	60 Hz	130B2381	130B2337	660 A
P500	P630	1.5 kHz	60 Hz	130B2381	130B2337	660 A
P560	P710	1.5 kHz	60 Hz	130B2382	130B2338	765 A
P630	P800	1.5 kHz	60 Hz	130B2383	130B2339	940 A
P710	P900	1.5 kHz	60 Hz	130B2383	130B2339	940 A
P800	P1M0	1.5 kHz	60 Hz	130B2384	130B2340	1320 A
P900	P1M2	1.5 kHz	60 Hz	130B2384	130B2340	1320 A

NB!
When using Sine-wave filters, the switching frequency should comply with filter specifications in par. 14-01 *Switching Frequency*.

NB!
See also Output Filter Design Guide, MG.90.Nx.yy

4.2.6 Ordering Numbers: du/dt Filters, 380-480 VAC

Mains supply 3x380 to 3x480 V

Frequency converter size		Minimum switching frequency	Maximum output frequency	Part No. IP20	Part No. IP00	Rated filter current at 50 Hz
380-440V	**441-480V**					
11 kW	11 kW	4 kHz	60 Hz	130B2396	130B2385	24 A
15 kW	15 kW	4 kHz	60 Hz	130B2397	130B2386	45 A
18.5 kW	18.5 kW	4 kHz	60 Hz	130B2397	130B2386	45 A
22 kW	22 kW	4 kHz	60 Hz	130B2397	130B2386	45 A
30 kW	30 kW	3 kHz	60 Hz	130B2398	130B2387	75 A
37 kW	37 kW	3 kHz	60 Hz	130B2398	130B2387	75 A
45 kW	55 kW	3 kHz	60 Hz	130B2399	130B2388	110 A
55 kW	75 kW	3 kHz	60 Hz	130B2399	130B2388	110 A
75 kW	90 kW	3 kHz	60 Hz	130B2400	130B2389	182 A
90 kW	110 kW	3 kHz	60 Hz	130B2400	130B2389	182 A
110 kW	132 kW	3 kHz	60 Hz	130B2401	130B2390	280 A
132 kW	160 kW	3 kHz	60 Hz	130B2401	130B2390	280 A
160 kW	200 kW	3 kHz	60 Hz	130B2402	130B2391	400 A
200 kW	250 kW	3 kHz	60 Hz	130B2402	130B2391	400 A
250 kW	315 kW	3 kHz	60 Hz	130B2277	130B2275	500 A
315 kW	355 kW	2 kHz	60 Hz	130B2278	130B2276	750 A
355 kW	400 kW	2 kHz	60 Hz	130B2278	130B2276	750 A
400 kW	450 kW	2 kHz	60 Hz	130B2278	130B2276	750 A
450 kW	500 kW	2 kHz	60 Hz	130B2405	130B2393	910 A
500 kW	560 kW	2 kHz	60 Hz	130B2405	130B2393	910 A
560 kW	630 kW	2 kHz	60 Hz	130B2407	130B2394	1500 A
630 kW	710 kW	2 kHz	60 Hz	130B2407	130B2394	1500 A
710 kW	800 kW	2 kHz	60 Hz	130B2407	130B2394	1500 A
800 kW	1000 kW	2 kHz	60 Hz	130B2407	130B2394	1500 A
1000 kW	1100 kW	2 kHz	60 Hz	130B2410	130B2395	2300 A

NB!
See also Output Filter Design Guide, MG.90.Nx.yy

4.2.7 Ordering Numbers: du/dt Filters, 525-600/690 VAC

Mains supply 3x525 to 3x600 V

Frequency converter size		Minimum switching frequency	Maximum output frequency	Part No. IP20	Part No. IP00	Rated filter current at 50 Hz
525-600V	**-690V**					
	11 kW	4 kHz	60 Hz	130B2423	130B2414	28 A
11 kW	15 kW	4 kHz	60 Hz	130B2423	130B2414	28 A
15 kW	18.5 kW	4 kHz	60 Hz	130B2423	130B2414	28 A
18.5 kW	22 kW	4 kHz	60 Hz	130B2423	130B2414	28 A
22 kW	30 kW	4 kHz	60 Hz	130B2424	130B2415	45 A
30 kW	37 kW	4 kHz	60 Hz	130B2424	130B2415	45 A
37 kW	45 kW	3 kHz	60 Hz	130B2425	130B2416	75 A
45 kW	55 kW	3 kHz	60 Hz	130B2425	130B2416	75 A
55 kW	75 kW	3 kHz	60 Hz	130B2426	130B2417	115 A
75 kW	90 kW	3 kHz	60 Hz	130B2426	130B2417	115 A
90 kW	110 kW	3 kHz	60 Hz	130B2427	130B2418	165 A
110 kW	132 kW	3 kHz	60 Hz	130B2427	130B2418	165 A
150 kW	160 kW	3 kHz	60 Hz	130B2428	130B2419	260 A
180 kW	200 kW	3 kHz	60 Hz	130B2428	130B2419	260 A
220 kW	250 kW	3 kHz	60 Hz	130B2429	130B2420	310 A
260 kW	315 kW	3 kHz	60 Hz	130B2278	130B2235	430 A
300 kW	400 kW	3 kHz	60 Hz	130B2278	130B2235	430 A
375 kW	500 kW	2 kHz	60 Hz	130B2239	130B2236	530 A
450 kW	560 kW	2 kHz	60 Hz	130B2274	130B2280	630 A
480 kW	630 kW	2 kHz	60 Hz	130B2274	130B2280	630 A
560 kW	710 kW	2 kHz	60 Hz	130B2430	130B2421	765 A
670 kW	800 kW	2 kHz	60 Hz	130B2431	130B2422	1350 A
	900 kW	2 kHz	60 Hz	130B2431	130B2422	1350 A
820 kW	1000 kW	2 kHz	60 Hz	130B2431	130B2422	1350 A
970 kW	1200 kW	2 kHz	60 Hz	130B2431	130B2422	1350 A

NB!
See also Output Filter Design Guide, MG.90.Nx.yy

4.2.8 Ordering numbers: Brake resistors

NB!
See Brake Resistor Design Guide, MG.90.Ox.yy

5 How to Install

Page intentionally left blank!

5

5.1.1 Mechanical Front Views

A2	A3	A5	B1	B2	B3	B4	C1	C2	C3	C4
IP20/21*	IP20/21*	IP55/66	IP21/55/66	IP21/55/66	IP20/21*	IP20/21*	IP21/55/66	IP21/55/66	IP20/21*	IP20/21*

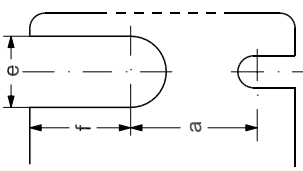

Illustration 5.2: Top and bottom mounting holes. (B4+C3+C4 only)

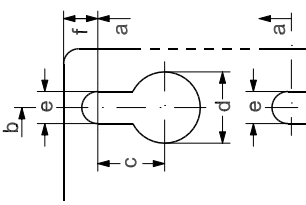

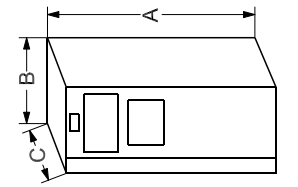

Illustration 5.1: Top and bottom mounting holes.

Accessory bags containing necessary brackets, screws and connectors are included with the drives upon delivery.

All measurements in mm.

* IP21 can be established with a kit as described in the section: IP 21/ IP 4X/ TYPE 1 Enclosure Kit in the Design Guide.

5.1.2 Mechanical Dimensions

Mechanical dimensions														
Frame size (kW):		**A2**		**A3**		**A5**	**B1**	**B2**	**B3**	**B4**	**C1**	**C2**	**C3**	**C4**
200-240 V		**1.1-3.0**		**3.7**		**1.1-3.7**	**5.5-11**	**15**	**5.5-11**	**15-18.5**	**18.5-30**	**37-45**	**22-30**	**37-45**
380-480 V		**1.1-4.0**		**5.5-7.5**		**1.1-7.5**	**11-18.5**	**22-30**	**11-18.5**	**22-37**	**37-55**	**75-90**	**45-55**	**75-90**
525-600 V		**-**		**1.1-7.5**		**1.1-7.5**	**11-18.5**	**22-30**	**11-18.5**	**22-37**	**37-55**	**75-90**	**45-55**	**75-90**
IP NEMA		20 Chassis	21 Type 1	20 Chassis	21 Type 1	55/66 Type 12	21/ 55/66 Type 1/12	21/ 55/66 Type 1/12	20 Chassis	20 Chassis	21/ 55/66 Type 1/12	21/ 55/66 Type 1/12	20 Chassis	20 Chassis
Height (mm)														
Enclosure	A**	246	372	246	372	420	480	650	350	460	680	770	490	600
..with de-coupling plate	A2	374	-	374	-	-	-	-	419	595	-	-	630	800
Back plate	A1	268	375	268	375	420	480	650	399	520	680	770	550	660
Distance between mount. holes	a	257	350	257	350	402	454	624	380	495	648	739	521	631
Width (mm)														
Enclosure	B	90	90	130	130	242	242	242	165	231	308	370	308	370
With one C option	B	130	130	170	170	242	242	242	205	231	308	370	308	370
Back plate	B	90	90	130	130	242	242	242	165	231	308	370	308	370
Distance between mount. holes	b	70	70	110	110	215	210	210	140	200	272	334	270	330
Depth (mm)														
Without option A/B	C	205	205	205	205	200	260	260	248	242	310	335	333	333
With option A/B	C*	220	220	220	220	200	260	260	262	242	310	335	333	333
Screw holes (mm)														
	c	8.0	8.0	8.0	8.0	8.2	12	12	8	-	12	12	-	-
Diameter ø	d	11	11	11	11	12	19	19	12	-	19	19	-	-
Diameter ø	e	5.5	5.5	5.5	5.5	6.5	9	9	6.8	8.5	9.0	9.0	8.5	8.5
	f	9	9	9	9	9	9	9	7.9	15	9.8	9.8	17	17
Max weight (kg)		4.9	5.3	6.6	7.0	14	23	27	12	23.5	45	65	35	50

* Depth of enclosure will vary with different options installed.
** The free space requirements are above and below the bare enclosure height measurement A. See section 3.2.3 for further information.

5

	D1	D2	D3	D4	E1	E2	F1/F3	F2/F4
	IP21/54	IP21/54	IP00	IP00	IP21/54	IP00	IP21/54	IP21/54
	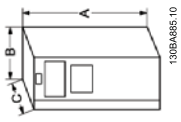					Bottom mounting hole: 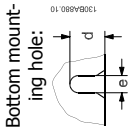	Lifting eye: 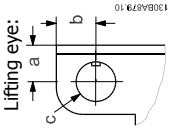	Enclosure F2 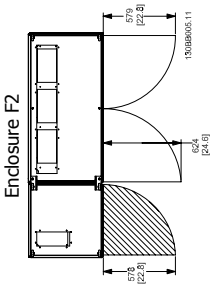
							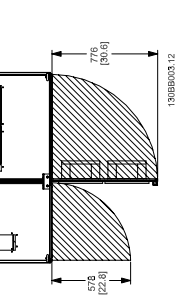	Enclosure F1
							Base plate mount: 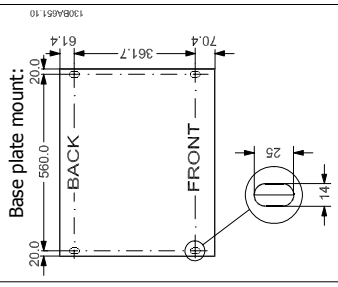	Enclosure F3 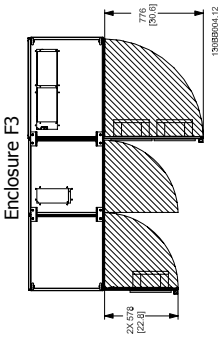
							Lifting eye and mounting holes: 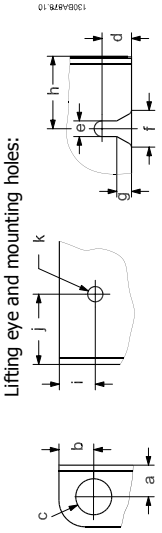	Enclosure F4 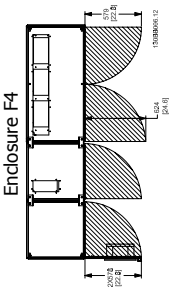
							All measurements in mm	

Mechanical dimensions											
Enclosure size (kW)		**D1**	**D2**	**D3**	**D4**	**E1**	**E2**	**F1**	**F2**	**F3**	**F4**
380-480 VAC **525-690 VAC**		**110-132** **45-160**	**160-250** **200-400**	**110-132** **45-160**	**160-250** **200-400**	**315-450** **450-630**	**315-450** **450-630**	**500-710** **710-900**	**800-1000** **1000-1200**	**500-710** **710-900**	**800-1000** **1000-1200**
IP NEMA		21/54 Type 1/12	21/54 Type 1/12	00 Chassis	00 Chassis	21/54 Type 1/12	00 Chassis	21/54 Type 1/12	21/54 Type 1/12	21/54 Type 1/12	21/54 Type 1/12
Shipping dimensions (mm):											
Width		1730	1730	1220	1490	2197	1705	2324	2324	2324	2324
Height		650	650	650	650	840	831	1569	1962	2159	2559
Depth		570	570	570	570	736	736	927	927	927	927
FCDrive dimensions: (mm)											
Height											
Back plate	A	1209	1589	1046	1327	2000	1547	2281	2281	2281	2281
Width											
Back plate	B	420	420	408	408	600	585	1400	1800	2000	2400
Depth											
	C	380	380	375	375	494	494	607	607	607	607
Dimensions brackets (mm/inch)											
Centre hole to edge	a	22/0.9	22/0.9	22/0.9	22/0.9	56/2.2	23/0.9				
Centre hole to edge	b	25/1.0	25/1.0	25/1.0	25/1.0	25/1.0	25/1.0				
Hole diameter	c	25/1.0	25/1.0	25/1.0	25/1.0	25/1.0	25/1.0				
	d	20/0.8	20/0.8	20/0.8	20/0.8		27/1.1				
	e	11/0.4	11/0.4	11/0.4	11/0.4		13/0.5				
	f	22/0.9	22/0.9	22/0.9	22/0.9						
	g	10/0.4	10/0.4	10/0.4	10/0.4						
	h	51/2.0	51/2.0	51/2.0	51/2.0						
	i	25/1.0	25/1.0	25/1.0	25/1.0						
	j	49/1.9	49/1.9	49/1.9	49/1.9						
Hole diameter	k	11/0.4	11/0.4	11/0.4	11/0.4						
Max weight (kg)		104	151	91	138	313	277	1004	1246	1299	1541
Please contact Danfoss for more detailed information and CAD drawings for your own planning purposes.											

5

5.1.3 Accessory Bags

Accessory Bags: Find the following parts included in the frequency converter accessory bags

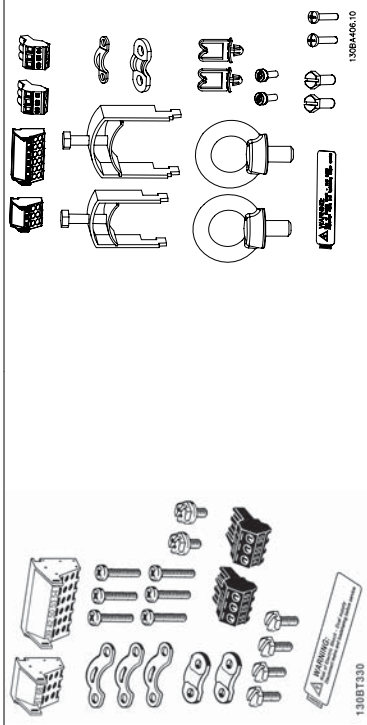

Frame sizes A1, A2 and A3

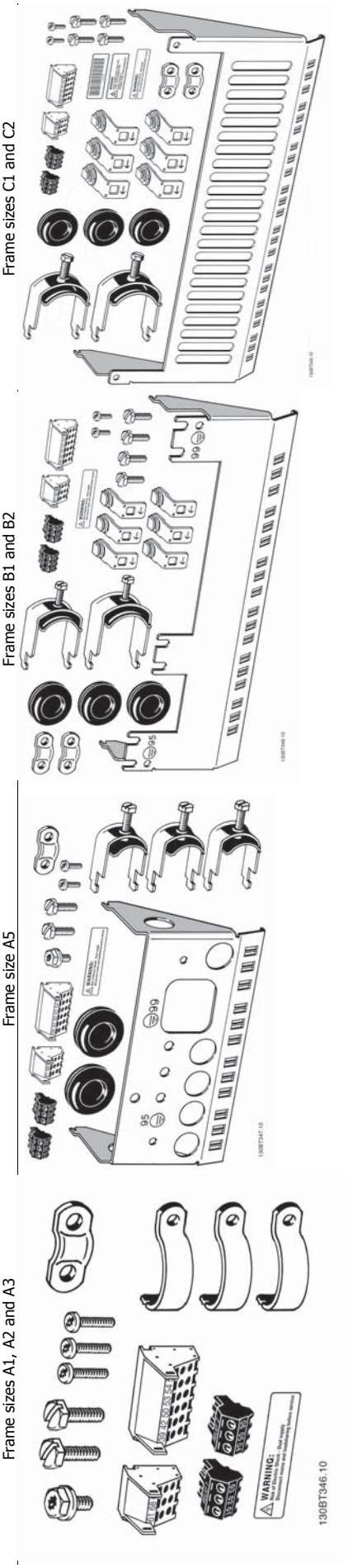

Frame size A5

Frame sizes B1 and B2

Frame sizes C1 and C2

Frame size B3

Frame size B4

Frame size C3

Frame size C4

1 + 2 only available in units with brake chopper. For DC link connection (Load sharing) the connector 1 can be ordered separately (Code no. 130B1064)
An eight pole connector is included in accessory bag for FC 102 without Safe Stop.

5.1.4 Mechanical mounting

All A, B and C enclosures allow side-by-side installation.
Exception: If a IP21 kit is used, there has to be a clearance between the enclosures. For enclosures A2, A3, B3,B4 and C3 the minimum clearance is 50 mm, for C4 it is 75 mm.

For optimal cooling conditions allow a free air passage above and below the frequency converter. See table below.

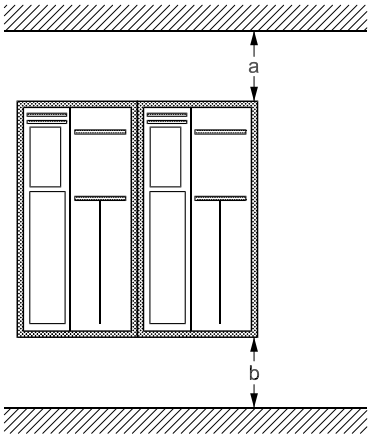

Air passage for different enclosures

Enclo-sure:	A2	A3	A5	B1	B2	B3	B4	C1	C2	C3	C4
a (mm):	100	100	100	200	200	200	200	200	225	200	225
b (mm):	100	100	100	200	200	200	200	200	225	200	225

1. Drill holes in accordance with the measurements given.
2. You must provide screws suitable for the surface on which you want to mount the frequency converter. Retighten all four screws.

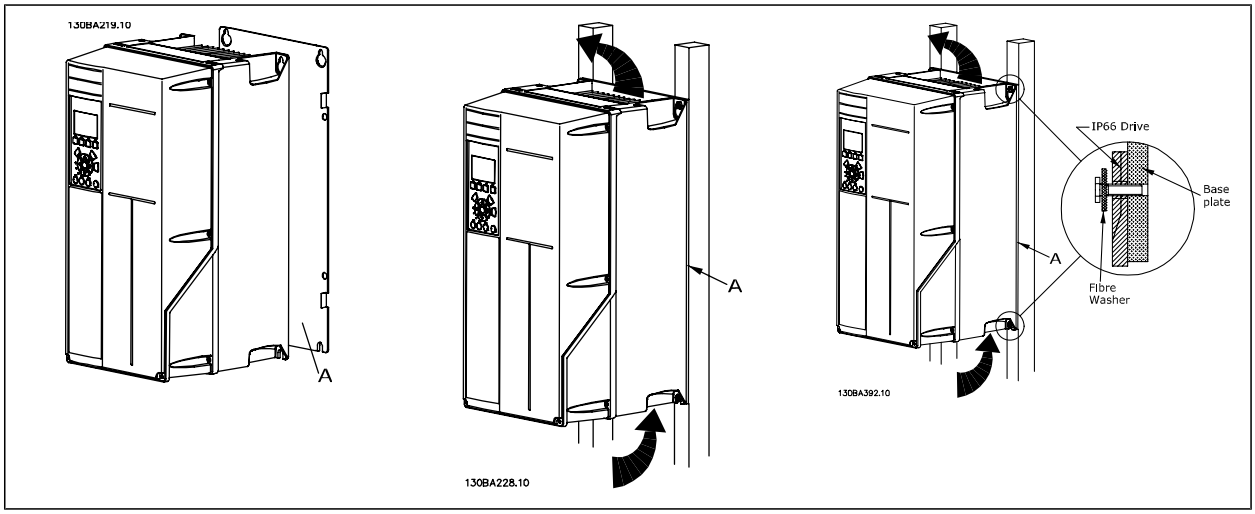

Table 5.1: When mounting enclosure sizes A5, B1, B2, B3, B4, C1, C2, C3 and C4 on a non-solid back wall, the drive must be provided with a back plate A due to insufficient cooling air over the heat sink.

5.1.5 Lifting

Always lift the frequency converter in the dedicated lifting eyes. For all D and E2 (IP00) s, use a bar to avoid bending the lifting holes of the frequency converter.

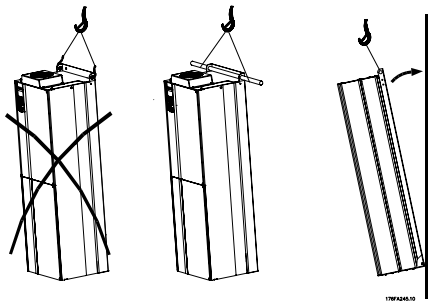

Illustration 5.3: Recommended lifting method, sizes D and E .

NB!
The lifting bar must be able to handle the weight of the frequency converter. See *Mechanical Dimensions* for the weight of the different sizes. Maximum diameter for bar is 25 cm (1 inch). The angle from the top of the drive to the lifting cable should be 60 degrees or greater.

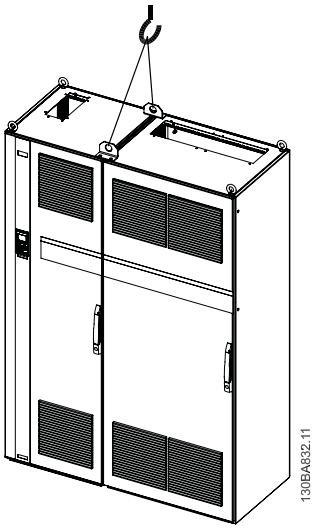

Illustration 5.4: Recommended lifting method, size F1.

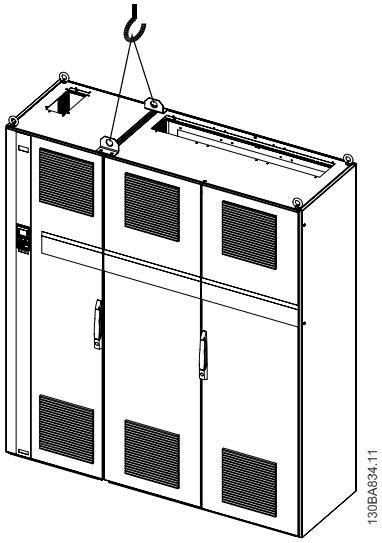

Illustration 5.5: Recommended lifting method, size F2.

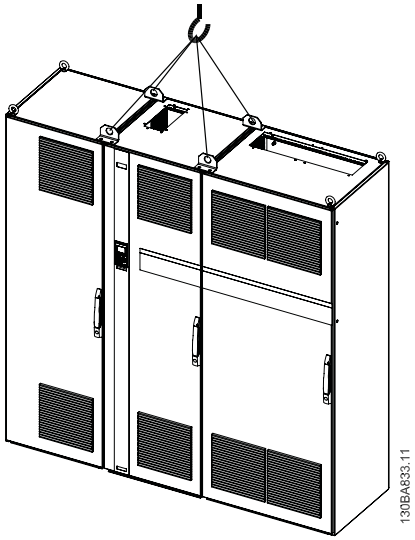

Illustration 5.6: Recommended lifting method, size F3.

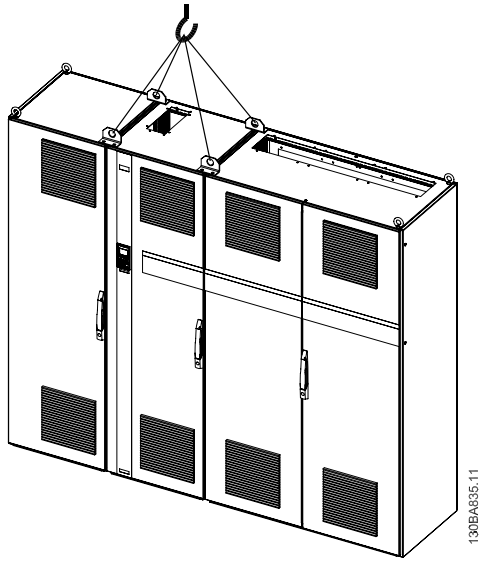

Illustration 5.7: Recommended lifting method, size F4.

NB!
Note the plinth is provided in the same packaging as the frequency converter but is not attached to F1-F4 s during shipment. The plinth is required to allow airflow to the drive to provide proper cooling. The F s should be positioned on top of the plinth in the final installation location. The angle from the top of the drive to the lifting cable should be 60 degrees or greater.

5.1.6 Safety Requirements of Mechanical Installation

Pay attention to the requirements that apply to integration and field mounting kit. Observe the information in the list to avoid serious damage or injury, especially when installing large units.

The frequency converter is cooled by means of air circulation.
To protect the unit from overheating, it must be ensured that the ambient temperature *does not exceed the maximum temperature stated for the frequency converter* and that the 24-hour average temperature *is not exceeded*. Locate the maximum temperature and 24-hour average in the paragraph *Derating for Ambient Temperature*.
If the ambient temperature is in the range of 45 °C - 55 ° C, derating of the frequency converter will become relevant, see *Derating for Ambient Temperature*.
The service life of the frequency converter is reduced if derating for ambient temperature is not taken into account.

5.1.7 Field Mounting

For field mounting the IP 21/IP 4X top/TYPE 1 kits or IP 54/55 units are recommended.

5.2 Electrical Installation

5.2.1 Cables General

NB!
For the VLT HVAC Drive High Power series mains and motor connections, please see VLT HVAC Drive *High Power Operating Instructions MG.11.FX.YY* .

NB!
Cables General
All cabling must comply with national and local regulations on cable cross-sections and ambient temperature. Copper (60/75 °C) conductors are recommended.

5

Details of terminal tightening torques.

	Power (kW)			Torque (Nm)					
Enclosure	**200-240 V**	**380-480 V**	**525-600 V**	**Mains**	**Motor**	**DC connection**	**Brake**	**Earth**	**Relay**
A2	1.1 - 3.0	1.1 - 4.0	1.1 - 4.0	1.8	1.8	1.8	1.8	3	0.6
A3	3.7	5.5 - 7.5	5.5 - 7.5	1.8	1.8	1.8	1.8	3	0.6
A5	1.1 - 3.7	1.1 - 7.5	1.1 - 7.5	1.8	1.8	1.8	1.8	3	0.6
B1	5.5 - 11	11 - 18.5	-	1.8	1.8	1.5	1.5	3	0.6
B2	- 15	22 30	- -	4.5 4.5[2)]	4.5 4.5[2)]	3.7 3.7	3.7 3.7	3 3	0.6 0.6
B3	5.5 - 11	11 - 18.5	11 - 18.5	1.8	1.8	1.8	1.8	3	0.6
B4	11 - 18.5	18.5 - 37	18.5 - 37	4.5	4.5	4.5	4.5	3	0.6
C1	18.5 - 30	37 - 55	-	10	10	10	10	3	0.6
C2	37 - 45	75 - 90	- -	14/24[1)]	14/24[1)]	14	14	3	0.6
C3	18.5 - 30	37 - 55	37 - 55	10	10	10	10	3	0.6
C4	30 - 45	55 - 90	55 - 90	14/24 [1)]	14/24 [1)]	14	14	3	0.6
High Power									
Enclosure		**380-480 V**	**525-690 V**	**Mains**	**Motor**	**DC connection**	**Brake**	**Earth**	**Relay**
D1/D3		110-132	45-160	19	19	9.6	9.6	19	0.6
D2/D4		160-250	200-400	19	19	9.6	9.6	19	0.6
E1/E2		315-450	450-630	19	19	19	9.6	19	0.6
F1-F3[3)]		500-710	710-900	19	19	19	9.6	19	0.6
F2-F4[3)]		800-1000	1000-1200	19	19	19	9.6	19	0.6

Table 5.2: Tightening of terminals

1) For different cable dimensions x/y, where x ≤ 95 mm² and y ≥ 95 mm²

2) Cable dimensions above 18.5 kW ≥ 35 mm² and below 22 kW ≤ 10 mm²

3) For data on the F-series please consult VLT® HVAC Drive High Power Operating Instructions, MG.11.F1.02

5.2.2 Electrical Installation and Control Cables

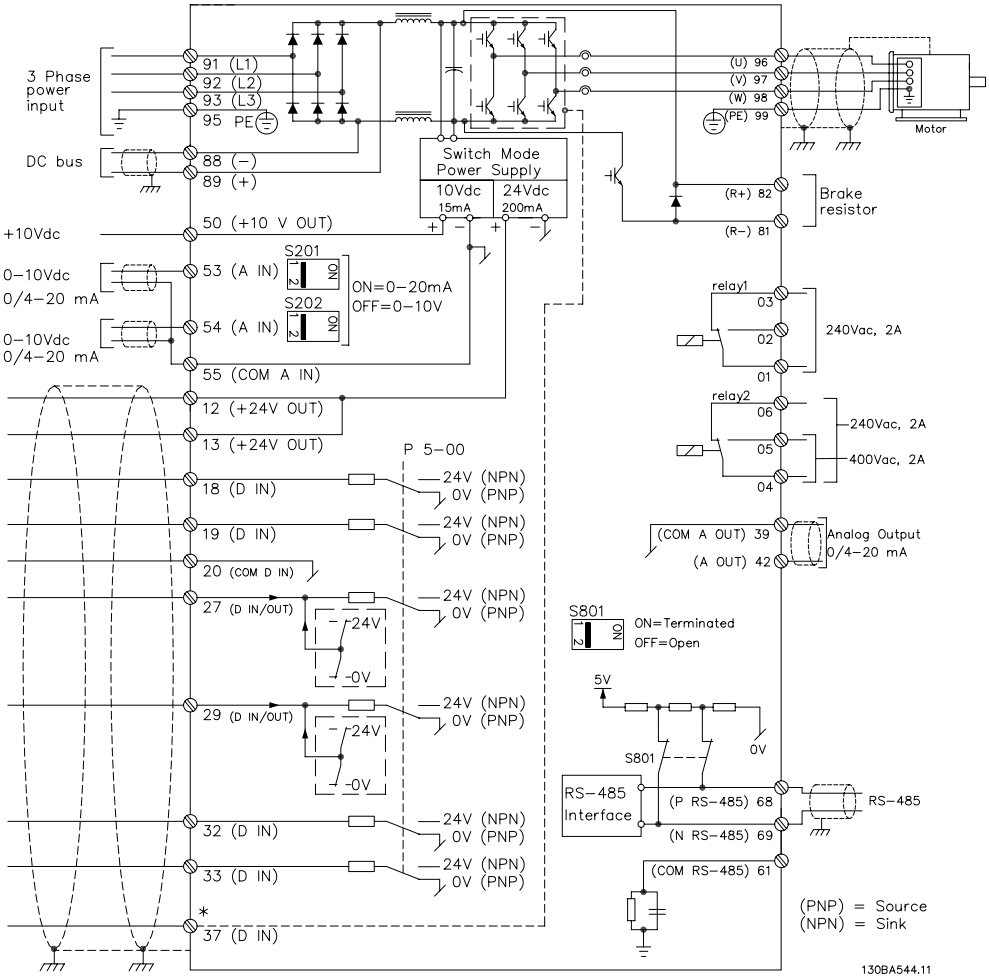

Illustration 5.8: Diagram showing all electrical terminals. (Terminal 37 present for units with Safe Stop Function only.)

Terminal number	Terminal description	Parameter number	Factory default
1+2+3	Terminal 1+2+3-Relay1	5-40	No operation
4+5+6	Terminal 4+5+6-Relay2	5-40	No operation
12	Terminal 12 Supply	-	+24 VDC
13	Terminal 13 Supply	-	+24 VDC
18	Terminal 18 Digital Input	5-10	Start
19	Terminal 19 Digital Input	5-11	No operation
20	Terminal 20	-	Common
27	Terminal 27 Digital Input/Output	5-12/5-30	Coast inverse
29	Terminal 29 Digital Input/Output	5-13/5-31	Jog
32	Terminal 32 Digital Input	5-14	No operation
33	Terminal 33 Digital Input	5-15	No operation
37	Terminal 37 Digital Input	-	Safe Stop
42	Terminal 42 Analog Output	6-50	Speed 0-HighLim
53	Terminal 53 Analog Input	3-15/6-1*/20-0*	Reference
54	Terminal 54 Analog Input	3-15/6-2*/20-0*	Feedback

Table 5.3: Terminal connections

Very long control cables and analog signals may, in rare cases and depending on installation, result in 50/60 Hz earth loops due to noise from mains supply cables.

If this occurs, break the screen or insert a 100 nF capacitor between screen and chassis.

NB!
The common of digital / analog inputs and outputs should be connected to separate common terminals 20, 39, and 55. This will avoid ground current interference among groups. For example, it avoids switching on digital inputs disturbing analog inputs.

NB!
Control cables must be screened/armoured.

5.2.3 Motor Cables

See section *General Specifications* for correct dimensioning of motor cable cross-section and length.

- Use a screened/armoured motor cable to comply with EMC emission specifications.
- Keep the motor cable as short as possible to reduce the noise level and leakage currents.
- Connect the motor cable screen to both the de-coupling plate of the frequency converter and to the metal cabinet of the motor.
- Make the screen connections with the largest possible surface area (cable clamp). This is done by using the supplied installation devices in the frequency converter.
- Avoid mounting with twisted screen ends (pigtails), which will spoil high frequency screening effects.
- If it is necessary to split the screen to install a motor isolator or motor relay, the screen must be continued with the lowest possible HF impedance.

F frame Requirements

F1/F3 requirements: Motor phase cable quantities must be multiples of 2, resulting in 2, 4, 6, or 8 (1 cable is not allowed) to obtain equal amount of wires attached to both inverter module terminals. The cables are required to be equal length within 10% between the inverter module terminals and the first common point of a phase. The recommended common point is the motor terminals.

F2/F4 requirements: Motor phase cable quantities must be multiples of 3, resulting in 3, 6, 9, or 12 (1 or 2 cables are not allowed) to obtain equal amount of wires attached to each inverter module terminal. The wires are required to be equal length within 10% between the inverter module terminals and the first common point of a phase. The recommended common point is the motor terminals.

Output junction box requirements: The length, minimum 2.5 meters, and quantity of cables must be equal from each inverter module to the common terminal in the junction box.

NB!
If a retrofit application requires unequal amount of wires per phase, please consult the factory for requirements and documentation or use the top/bottom entry side cabinet busbar option.

5.2.4 Electrical Installation of Motor Cables

Screening of cables

Avoid installation with twisted screen ends (pigtails). They spoil the screening effect at higher frequencies.
If it is necessary to break the screen to install a motor isolator or motor contactor, the screen must be continued at the lowest possible HF impedance.

Cable length and cross-section

The frequency converter has been tested with a given length of cable and a given cross-section of that cable. If the cross-section is increased, the cable capacitance - and thus the leakage current - may increase, and the cable length must be reduced correspondingly.

Switching frequency

When frequency converters are used together with Sine-wave filters to reduce the acoustic noise from a motor, the switching frequency must be set according to the Sine-wave filter instruction in par. 14-01 *Switching Frequency*.

Aluminium conductors

Aluminium conductors are not recommended. Terminals can accept aluminium conductors but the conductor surface has to be clean and the oxidation must be removed and sealed by neutral acid free Vaseline grease before the conductor is connected.

Furthermore, the terminal screw must be retightened after two days due to the softness of the aluminium. It is crucial to keep the connection a gas tight joint, otherwise the aluminium surface will oxidize again.

5.2.5 Removal of Knockouts for Extra Cables

1. Remove cable entry from the frequency converter (Avoiding foreign parts falling into the frequency converter when removing knockouts)
2. Cable entry has to be supported around the knockout you intend to remove.
3. The knockout can now be removed with a strong mandrel and a hammer.
4. Remove burrs from the hole.
5. Mount Cable entry on frequency converter.

5.2.6 Enclosure Knock-outs

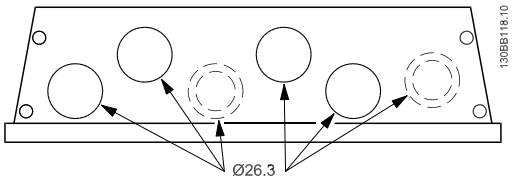

Illustration 5.9: Cable entry holes for enclosure A5. The suggested use of the holes are purely recommendations and other solutions are possible.

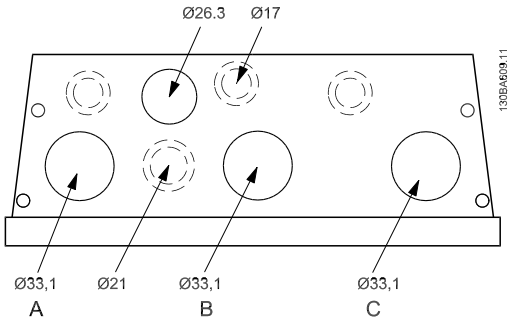

Illustration 5.10: Cable entry holes for enclosure B1. The suggested use of the holes are purely recommendations and other solutions are possible.

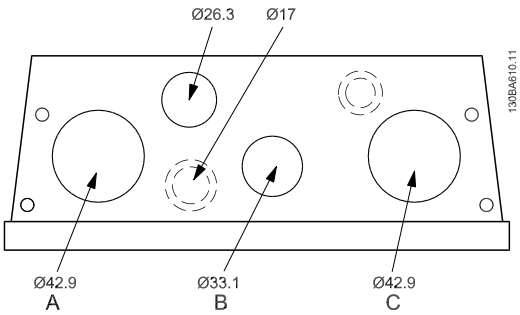

Illustration 5.11: Cable entry holes for enclosure B2. The suggested use of the holes are purely recommendations and other solutions are possible.

5

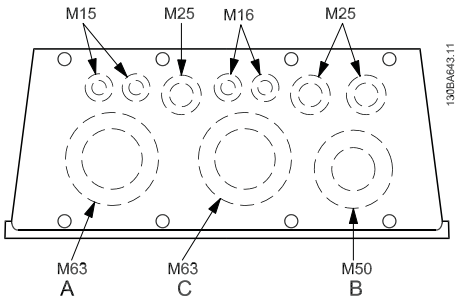

Illustration 5.12: Cable entry holes for enclosure C1. The suggested use of the holes are purely recommendations and other solutions are possible.

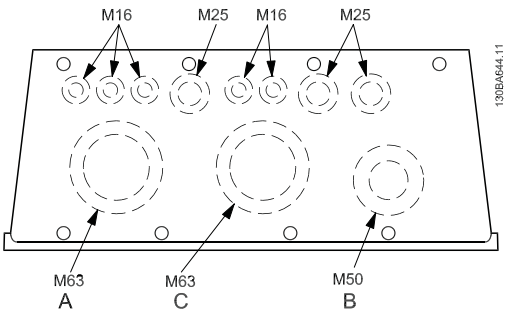

Illustration 5.13: Cable entry holes for enclosure C2. The suggested use of the holes are purely recommendations and other solutions are possible.

5.2.7 Gland/Conduit Entry - IP21 (NEMA 1) and IP54 (NEMA12)

Cables are connected through the gland plate from the bottom. Remove the plate and plan where to place the entry for the glands or conduits. Prepare holes in the marked area on the drawing.

NB!
The gland plate must be fitted to the frequency converter to ensure the specified protection degree, as well as ensuring proper cooling of the unit. If the gland plate is not mounted, the frequency converter may trip on Alarm 69, Pwr. Card Temp

130BB073.10

Illustration 5.14: Example of proper installation of the gland plate.

size D1 + D2

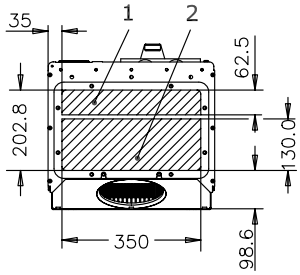

176FA289.11

size E1

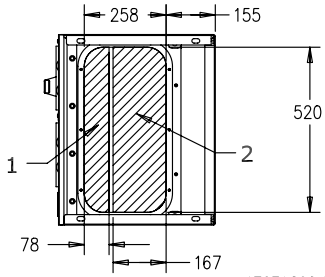

176FA290.11

Cable entries viewed from the bottom of the frequency converter - 1) Mains side 2) Motor side

5

size F1

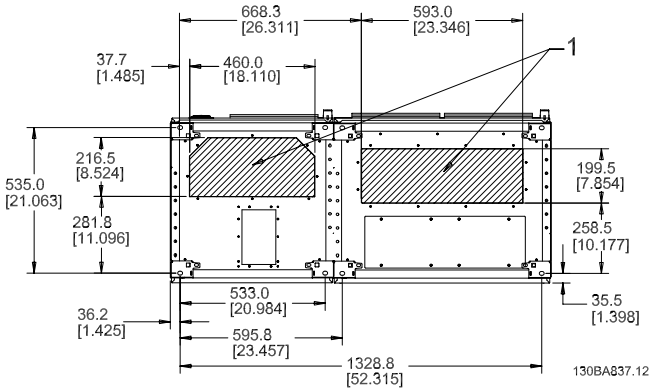

size F2

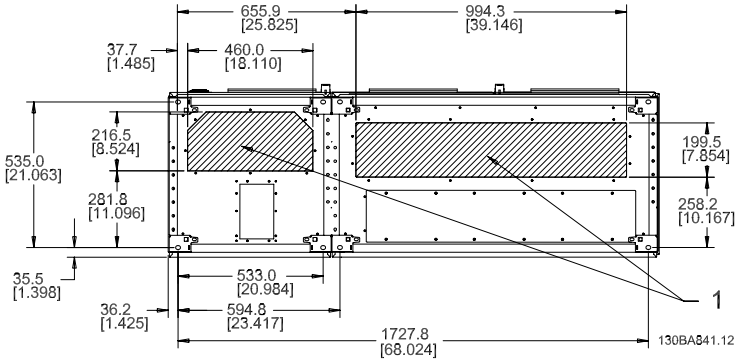

size F3

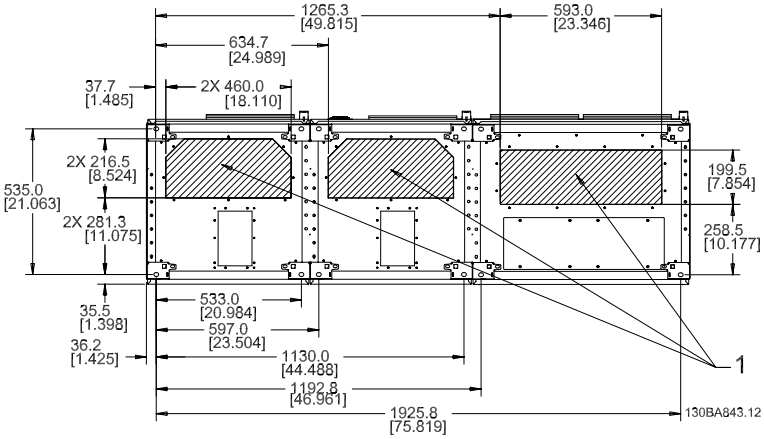

size F4

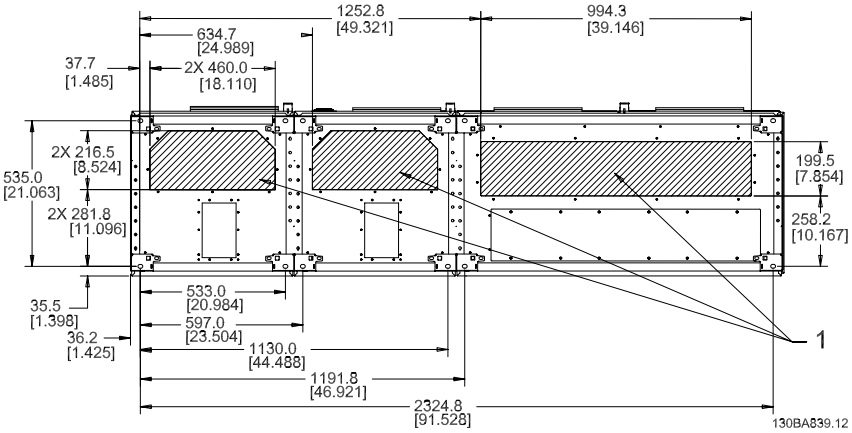

F1-F4: Cable entries viewed from the bottom of the frequency converter - 1) Place conduits in marked areas

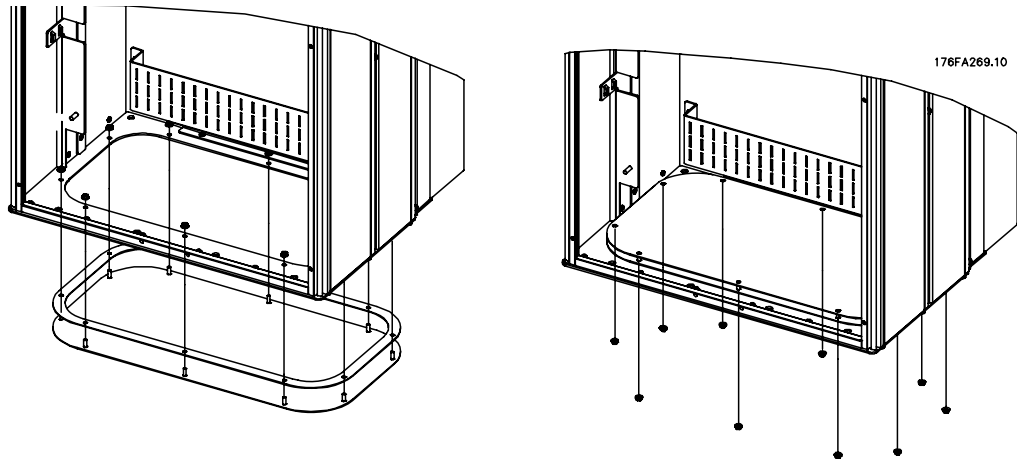

Illustration 5.15: Mounting of bottom plate, size E1.

The bottom plate of the E1 can be mounted from either in- or outside of the enclosure, allowing flexibility in the installation process, i.e. if mounted from the bottom the glands and cables can be mounted before the frequency converter is placed on the pedestal.

5.2.8 Fuses

Branch circuit protection

In order to protect the installation against electrical and fire hazard, all branch circuits in an installation, switch gear, machines etc., must be short-circuit and over-current protected according to the national/international regulations.

Short circuit protection

The frequency converter must be protected against short-circuit to avoid electrical or fire hazard. Danfoss recommends using the fuses mentioned below to protect service personnel or other equipment in case of an internal failure in the unit. The frequency converter provides full short circuit protection in case of a short-circuit on the motor output.

Over-current protection

Provide overload protection to avoid fire hazard due to overheating of the cables in the installation. Over current protection must always be carried out according to national regulations. The frequency converter is equipped with an internal over current protection that can be used for upstream overload protection (UL-applications excluded). See par. 4-18 *Current Limit* in the *VLT HVAC Drive Programming Guide* . Fuses must be designed for protection in a circuit capable of supplying a maximum of 100,000 A_{rms} (symmetrical), 500 V/600 V maximum.

Non UL compliance

If UL/cUL is not to be complied with, Danfoss recommends using the fuses mentioned in the table below, which will ensure compliance with EN50178. In case of malfunction, not following the recommendation may result in unnecessary damage to the frequency converter.

5

Non UL compliance fuses

Frequency converter	Max. fuse size	Voltage	Type
200-240 V - T2			
1K1-1K5	16A[1]	200-240 V	type gG
2K2	25A[1]	200-240 V	type gG
3K0	25A[1]	200-240 V	type gG
3K7	35A[1]	200-240 V	type gG
5K5	50A[1]	200-240 V	type gG
7K5	63A[1]	200-240 V	type gG
11K	63A[1]	200-240 V	type gG
15K	80A[1]	200-240 V	type gG
18K5	125A[1]	200-240 V	type gG
22K	125A[1]	200-240 V	type gG
	160A[1]	200-240 V	type gG
37K	200A[1]	200-240 V	type aR
45K	250A[1]	200-240 V	type aR
380-480 V - T4			
1K1-1K5	10A[1]	380-500 V	type gG
2K2-3K0	16A[1]	380-500 V	type gG
4K0-5K5	25A[1]	380-500 V	type gG
7K5	35A[1]	380-500 V	type gG
11K-15K	63A[1]	380-500 V	type gG
18K	63A[1]	380-500 V	type gG
22K	63A[1]	380-500 V	type gG
30K	80A[1]	380-500 V	type gG
37K	100A[1]	380-500 V	type gG
45K	125A[1]	380-500 V	type gG
55K	160A[1]	380-500 V	type gG
75K	250A[1]	380-500 V	type aR
90K	250A[1]	380-500 V	type aR
1) Max. fuses - see national/international regulations for selecting an applicable fuse size.			

Table 5.4: **Non UL fuses 200 V to 480 V**

If UL/cUL is not to be complied with, we recommend using the following fuses, which will ensure compliance with EN50178:

P110 - P250	380 - 480 V	type gG
P315 - P450	380 - 480 V	type gR

UL compliance fuses

Frequency converter	Bussmann	Bussmann	Bussmann	SIBA	Littel fuse	Ferraz-Shawmut	Ferraz-Shawmut
200-240 V							
kW	Type RK1	Type J	Type T	Type RK1	Type RK1	Type CC	Type RK1
K25-K37	KTN-R05	JKS-05	JJN-05	5017906-005	KLN-R005	ATM-R05	A2K-05R
K55-1K1	KTN-R10	JKS-10	JJN-10	5017906-010	KLN-R10	ATM-R10	A2K-10R
1K5	KTN-R15	JKS-15	JJN-15	5017906-015	KLN-R15	ATM-R15	A2K-15R
2K2	KTN-R20	JKS-20	JJN-20	5012406-020	KLN-R20	ATM-R20	A2K-20R
3K0	KTN-R25	JKS-25	JJN-25	5012406-025	KLN-R25	ATM-R25	A2K-25R
3K7	KTN-R30	JKS-30	JJN-30	5012406-030	KLN-R30	ATM-R30	A2K-30R
5K5	KTN-R50	JKS-50	JJN-50	5012406-050	KLN-R50	-	A2K-50R
7K5	KTN-R50	JKS-60	JJN-60	5012406-050	KLN-R60	-	A2K-50R
11K	KTN-R60	JKS-60	JJN-60	5014006-063	KLN-R60	A2K-60R	A2K-60R
15K	KTN-R80	JKS-80	JJN-80	5014006-080	KLN-R80	A2K-80R	A2K-80R
18K5	KTN-R125	JKS-150	JJN-125	2028220-125	KLN-R125	A2K-125R	A2K-125R
22K	KTN-R125	JKS-150	JJN-125	2028220-125	KLN-R125	A2K-125R	A2K-125R
30K	FWX-150	-	-	2028220-150	L25S-150	A25X-150	A25X-150
37K	FWX-200	-	-	2028220-200	L25S-200	A25X-200	A25X-200
45K	FWX-250	-	-	2028220-250	L25S-250	A25X-250	A25X-250

Table 5.5: **UL fuses, 200 - 240 V**

Frequency converter	Bussmann	Bussmann	Bussmann	SIBA	Littel fuse	Ferraz-Shawmut	Ferraz-Shawmut
380-480 V, 525-600 V							
kW	Type RK1	Type J	Type T	Type RK1	Type RK1	Type CC	Type RK1
K37-1K1	KTS-R6	JKS-6	JJS-6	5017906-006	KLS-R6	ATM-R6	A6K-6R
1K5-2K2	KTS-R10	JKS-10	JJS-10	5017906-010	KLS-R10	ATM-R10	A6K-10R
3K0	KTS-R15	JKS-15	JJS-15	5017906-016	KLS-R16	ATM-R16	A6K-16R
4K0	KTS-R20	JKS-20	JJS-20	5017906-020	KLS-R20	ATM-R20	A6K-20R
5K5	KTS-R25	JKS-25	JJS-25	5017906-025	KLS-R25	ATM-R25	A6K-25R
7K5	KTS-R30	JKS-30	JJS-30	5012406-032	KLS-R30	ATM-R30	A6K-30R
11K	KTS-R40	JKS-40	JJS-40	5014006-040	KLS-R40	-	A6K-40R
15K	KTS-R40	JKS-40	JJS-40	5014006-040	KLS-R40	-	A6K-40R
18K	KTS-R50	JKS-50	JJS-50	5014006-050	KLS-R50	-	A6K-50R
22K	KTS-R60	JKS-60	JJS-60	5014006-063	KLS-R60	-	A6K-60R
30K	KTS-R80	JKS-80	JJS-80	2028220-100	KLS-R80	-	A6K-80R
37K	KTS-R100	JKS-100	JJS-100	2028220-125	KLS-R100		A6K-100R
45K	KTS-R125	JKS-150	JJS-150	2028220-125	KLS-R125		A6K-125R
55K	KTS-R150	JKS-150	JJS-150	2028220-160	KLS-R150		A6K-150R
75K	FWH-220	-	-	2028220-200	L50S-225		A50-P225
90K	FWH-250	-	-	2028220-250	L50S-250		A50-P250

Table 5.6: **UL fuses, 380 - 600 V**

5

KTS-fuses from Bussmann may substitute KTN for 240 V frequency converters.

FWH-fuses from Bussmann may substitute FWX for 240 V frequency converters.

KLSR fuses from LITTEL FUSE may substitute KLNR fuses for 240 V frequency converters.

L50S fuses from LITTEL FUSE may substitute L50S fuses for 240 V frequency converters.

A6KR fuses from FERRAZ SHAWMUT may substitute A2KR for 240 V frequency converters.

A50X fuses from FERRAZ SHAWMUT may substitute A25X for 240 V frequency converters.

380-480 V, frame sizes D, E and F

The fuses below are suitable for use on a circuit capable of delivering 100,000 Arms (symmetrical), 240V, or 480V, or 500V, or 600V depending on the drive voltage rating. With the proper fusing the drive Short Circuit Current Rating (SCCR) is 100,000 Arms.

Size/ Type	Bussmann E1958 JFHR2**	Bussmann E4273 T/JDDZ**	SIBA E180276 JFHR2	LittelFuse E71611 JFHR2**	Ferraz-Shawmut E60314 JFHR2**	Bussmann E4274 H/JDDZ**	Bussmann E125085 JFHR2*	Internal Option Bussmann
P110	FWH-300	JJS-300	2061032.25	L50S-300	A50-P300	NOS-300	170M3017	170M3018
P132	FWH-350	JJS-350	2061032.315	L50S-350	A50-P350	NOS-350	170M3018	170M3018
P160	FWH-400	JJS-400	2061032.35	L50S-400	A50-P400	NOS-400	170M4012	170M4016
P200	FWH-500	JJS-500	2061032.35	L50S-500	A50-P500	NOS-500	170M4014	170M4016
P250	FWH-600	JJS-600	2061032.40	L50S-600	A50-P600	NOS-600	170M4016	170M4016

Table 5.7: Frame size D, Line fuses, 380-480 V

Size/Type	Bussmann PN*	Rating	Ferraz	Siba
P315	170M4017	700 A, 700 V	6.9URD31D08A0700	20 610 32.700
P355	170M6013	900 A, 700 V	6.9URD33D08A0900	20 630 32.900
P400	170M6013	900 A, 700 V	6.9URD33D08A0900	20 630 32.900
P450	170M6013	900 A, 700 V	6.9URD33D08A0900	20 630 32.900

Table 5.8: Frame size E, Line fuses, 380-480 V

Size/Type	Bussmann PN*	Rating	Siba	Internal Bussmann Option
P500	170M7081	1600 A, 700 V	20 695 32.1600	170M7082
P560	170M7081	1600 A, 700 V	20 695 32.1600	170M7082
P630	170M7082	2000 A, 700 V	20 695 32.2000	170M7082
P710	170M7082	2000 A, 700 V	20 695 32.2000	170M7082
P800	170M7083	2500 A, 700 V	20 695 32.2500	170M7083
P1M0	170M7083	2500 A, 700 V	20 695 32.2500	170M7083

Table 5.9: Frame size F, Line fuses, 380-480 V

Size/Type	Bussmann PN*	Rating	Siba
P500	170M8611	1100 A, 1000 V	20 781 32.1000
P560	170M8611	1100 A, 1000 V	20 781 32.1000
P630	170M6467	1400 A, 700 V	20 681 32.1400
P710	170M6467	1400 A, 700 V	20 681 32.1400
P800	170M8611	1100 A, 1000 V	20 781 32.1000
P1M0	170M6467	1400 A, 700 V	20 681 32.1400

Table 5.10: Frame size F, Inverter module DC Link Fuses, 380-480 V

*170M fuses from Bussmann shown use the -/80 visual indicator, -TN/80 Type T, -/110 or TN/110 Type T indicator fuses of the same size and amperage may be substituted for external use

**Any minimum 500 V UL listed fuse with associated current rating may be used to meet UL requirements.

525-690 V, frame sizes D, E and F

Size/Type	Bussmann E125085 JFHR2	Amps	SIBA E180276 JFHR2	Ferraz-Shawmut E76491 JFHR2	Internal Option Bussmann
P45K	170M3013	125	2061032.125	6.6URD30D08A0125	170M3015
P55K	170M3014	160	2061032.16	6.6URD30D08A0160	170M3015
P75K	170M3015	200	2061032.2	6.6URD30D08A0200	170M3015
P90K	170M3015	200	2061032.2	6.6URD30D08A0200	170M3015
P110	170M3016	250	2061032.25	6.6URD30D08A0250	170M3018
P132	170M3017	315	2061032.315	6.6URD30D08A0315	170M3018
P160	170M3018	350	2061032.35	6.6URD30D08A0350	170M3018
P200	170M4011	350	2061032.35	6.6URD30D08A0350	170M5011
P250	170M4012	400	2061032.4	6.6URD30D08A0400	170M5011
P315	170M4014	500	2061032.5	6.6URD30D08A0500	170M5011
P400	170M5011	550	2062032.55	6.6URD32D08A550	170M5011

Table 5.11: Frame size D, 525-690 V

Size/Type	Bussmann PN*	Rating	Ferraz	Siba
P450	170M4017	700 A, 700 V	6.9URD31D08A0700	20 610 32.700
P500	170M4017	700 A, 700 V	6.9URD31D08A0700	20 610 32.700
P560	170M6013	900 A, 700 V	6.9URD33D08A0900	20 630 32.900
P630	170M6013	900 A, 700 V	6.9URD33D08A0900	20 630 32.900

Table 5.12: Frame size E, 525-690 V

Size/Type	Bussmann PN*	Rating	Siba	Internal Bussmann Option
P710	170M7081	1600 A, 700 V	20 695 32.1600	170M7082
P800	170M7081	1600 A, 700 V	20 695 32.1600	170M7082
P900	170M7081	1600 A, 700 V	20 695 32.1600	170M7082
P1M0	170M7081	1600 A, 700 V	20 695 32.1600	170M7082
P1M2	170M7082	2000 A, 700 V	20 695 32.2000	170M7082

Table 5.13: Frame size F, Line fuses, 525-690 V

Size/Type	Bussmann PN*	Rating	Siba
P710	170M8611	1100 A, 1000 V	20 781 32. 1000
P800	170M8611	1100 A, 1000 V	20 781 32. 1000
P900	170M8611	1100 A, 1000 V	20 781 32. 1000
P1M0	170M8611	1100 A, 1000 V	20 781 32. 1000
P1M2	170M8611	1100 A, 1000 V	20 781 32. 1000

Table 5.14: Frame size F, Inverter module DC Link Fuses, 525-690 V

*170M fuses from Bussmann shown use the -/80 visual indicator, -TN/80 Type T, -/110 or TN/110 Type T indicator fuses of the same size and amperage may be substituted for external use.

Suitable for use on a circuit capable of delivering not more than 100 000 rms symmetrical amperes, 500/600/690 Volts maximum when protected by the above fuses.

Supplementary fuses

Frame size	Bussmann PN*	Rating
D, E and F	KTK-4	4 A, 600 V

Table 5.15: SMPS Fuse

Size/Type	Bussmann PN*	LittelFuse	Rating
P110-P315, 380-480 V	KTK-4		4 A, 600 V
P45K-P500, 525-690 V	KTK-4		4 A, 600 V
P355-P1M0, 380-480 V		KLK-15	15A, 600 V
P560-P1M2, 525-690 V		KLK-15	15A, 600 V

Table 5.16: Fan Fuses

Size/Type		Bussmann PN*	Rating	Alternative Fuses
P500-P1M0, 380-480 V	2.5-4.0 A	LPJ-6 SP or SPI	6 A, 600 V	Any listed Class J Dual Element, Time Delay, 6A
P710-P1M2, 525-690 V		LPJ-10 SP or SPI	10 A, 600 V	Any listed Class J Dual Element, Time Delay, 10 A
P500-P1M0, 380-480 V	4.0-6.3 A	LPJ-10 SP or SPI	10 A, 600 V	Any listed Class J Dual Element, Time Delay, 10 A
P710-P1M2, 525-690 V		LPJ-15 SP or SPI	15 A, 600 V	Any listed Class J Dual Element, Time Delay, 15 A
P500-P1M0, 380-480 V	6.3 - 10 A	LPJ-15 SP or SPI	15 A, 600 V	Any listed Class J Dual Element, Time Delay, 15 A
P710-P1M2, 525-690 V		LPJ-20 SP or SPI	20 A, 600 V	Any listed Class J Dual Element, Time Delay, 20A
P500-P1M0, 380-480 V	10 - 16 A	LPJ-25 SP or SPI	25 A, 600 V	Any listed Class J Dual Element, Time Delay, 25 A
P710-P1M2, 525-690 V		LPJ-20 SP or SPI	20 A, 600 V	Any listed Class J Dual Element, Time Delay, 20 A

Table 5.17: Manual Motor Controller Fuses

Frame size	Bussmann PN*	Rating	Alternative Fuses
F	LPJ-30 SP or SPI	30 A, 600 V	Any listed Class J Dual Element, Time Delay, 30 A

Table 5.18: 30 A Fuse Protected Terminal Fuse

Frame size	Bussmann PN*	Rating	Alternative Fuses
F	LPJ-6 SP or SPI	6 A, 600 V	Any listed Class J Dual Element, Time Delay, 6 A

Table 5.19: Control Transformer Fuse

Frame size	Bussmann PN*	Rating
F	GMC-800MA	800 mA, 250 V

Table 5.20: NAMUR Fuse

Frame size	Bussmann PN*	Rating	Alternative Fuses
F	LP-CC-6	6 A, 600 V	Any listed Class CC, 6 A

Table 5.21: Safety Relay Coil Fuse with PILS Relay

5.2.9 Control Terminals

Drawing reference numbers:

1. 10 pole plug digital I/O.
2. 3 pole plug RS485 Bus.
3. 6 pole analog I/O.
4. USB Connection.

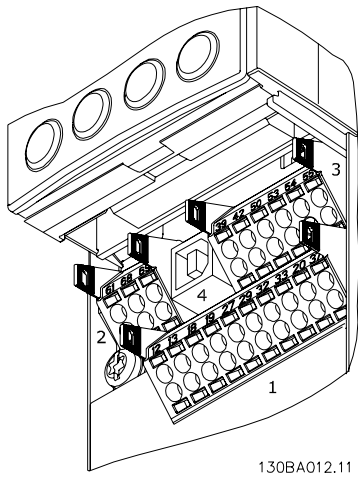

Illustration 5.16: Control terminals (all enclosures)

5.2.10 Control Cable Terminals

To mount the cable to the terminal:

1. Strip isolation of 9-10 mm
2. Insert a screw driver[1)] in the square hole.
3. Insert the cable in the adjacent circular hole.
4. Remove the screw driver. The cable is now mounted to the terminal.

To remove the cable from the terminal:

1. Insert a screw driver[1)] in the square hole.
2. Pull out the cable.

[1)] Max. 0.4 x 2.5 mm

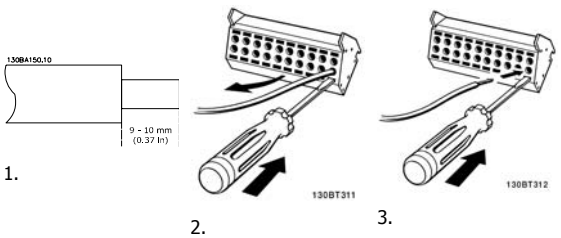

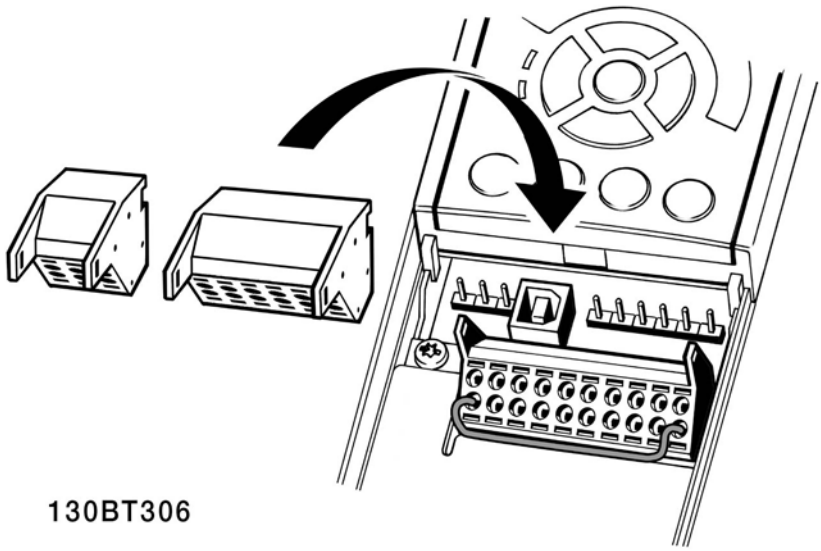

5.2.11 Basic Wiring Example

1. Mount terminals from the accessory bag to the front of the frequency converter.
2. Connect terminals 18 and 27 to +24 V (terminal 12/13)

Default settings:
18 = latched start
27 = stop inverse

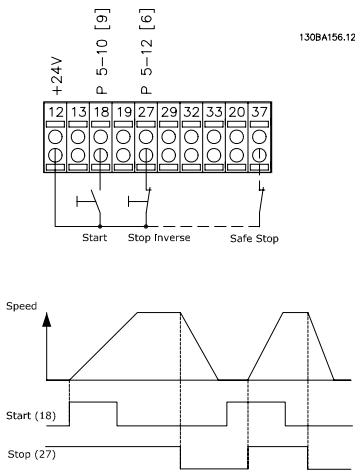

Illustration 5.17: Terminal 37 available with Safe Stop Function only!

5.2.12 Electrical Installation, Control Cables

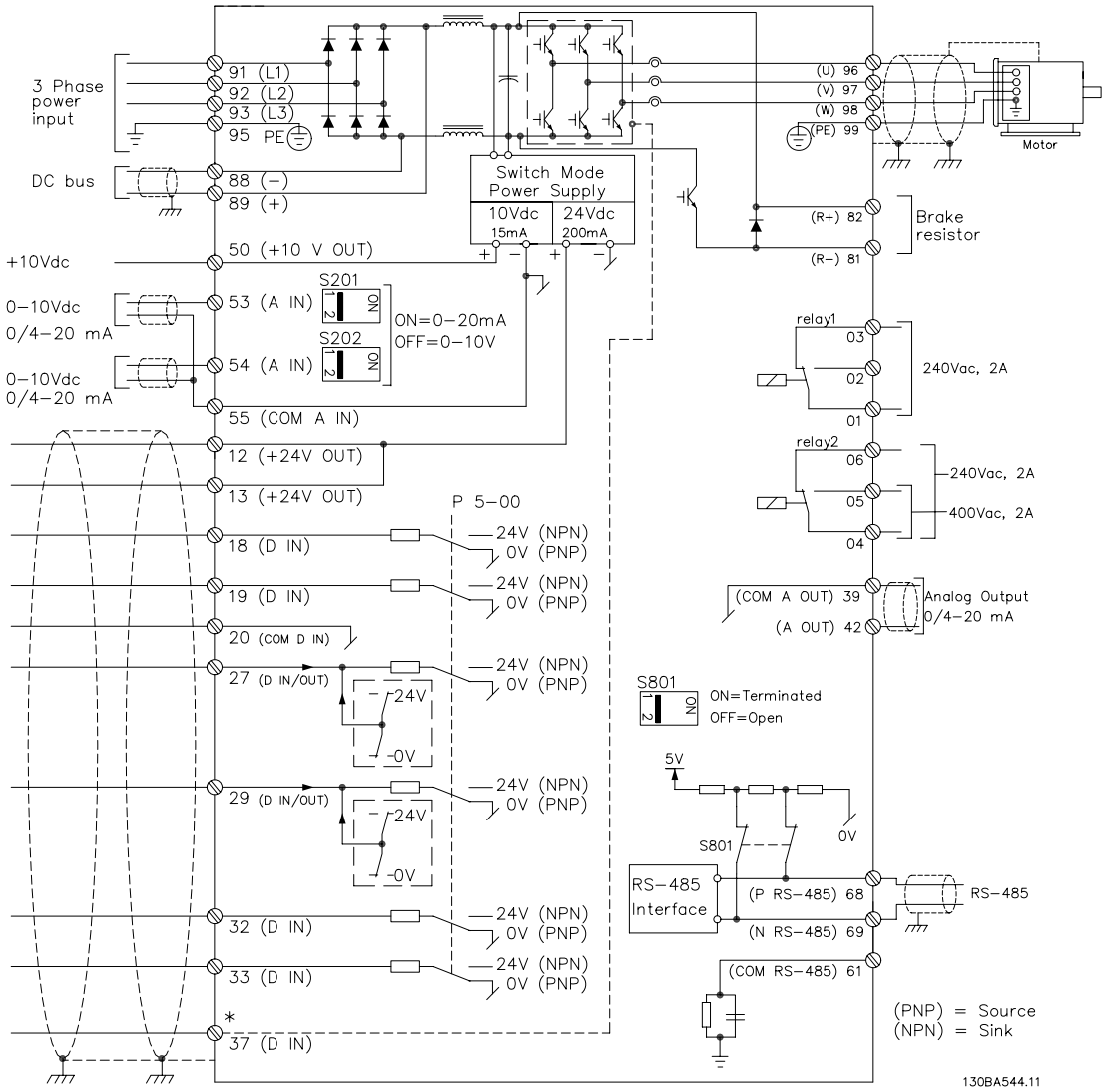

Illustration 5.18: Diagram showing all electrical terminals. (Terminal 37 present for units with Safe Stop Function only.)

Very long control cables and analog signals may in rare cases and depending on installation result in 50/60 Hz earth loops due to noise from mains supply cables.

If this occurs, you may have to break the screen or insert a 100 nF capacitor between screen and chassis.

The digital and analog in- and outputs must be connected separately to the frequency converter common inputs (terminal 20, 55, 39) to avoid ground currents from both groups to affect other groups. For example, switching on the digital input may disturb the analog input signal.

NB!
Control cables must be screened/armoured.

1. Use a clamp from the accessory bag to connect the screen to the frequency converter decoupling plate for control cables.

See section entitled *Earthing of Screened/Armoured Control Cables* for the correct termination of control cables.

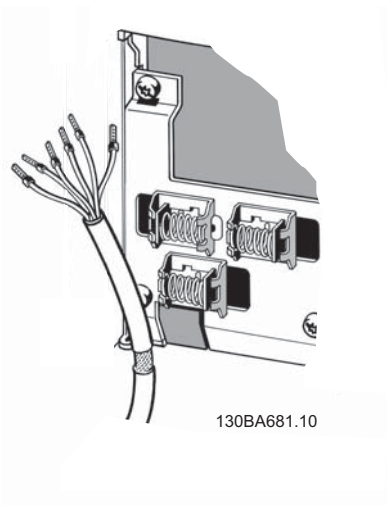

5.2.13 Switches S201, S202, and S801

Switches S201 (A53) and S202 (A54) are used to select a current (0-20 mA) or a voltage (0 to 10 V) configuration of the analog input terminals 53 and 54 respectively.

Switch S801 (BUS TER.) can be used to enable termination on the RS-485 port (terminals 68 and 69).

See drawing *Diagram showing all electrical terminals* in section *Electrical Installation.*

Default setting:

S201 (A53) = OFF (voltage input)

S202 (A54) = OFF (voltage input)

S801 (Bus termination) = OFF

NB!
It is recommended to only change switch position at power off.

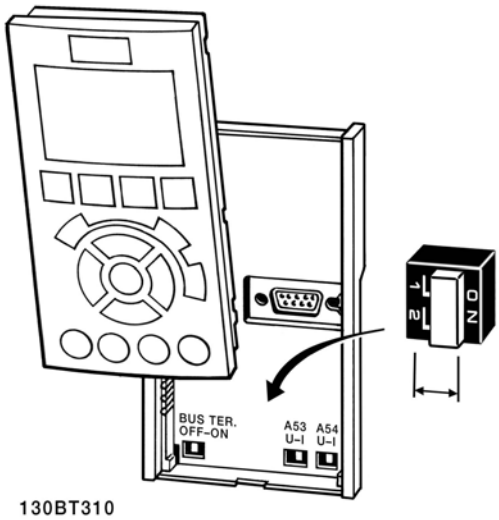

5.3 Final Set-Up and Test

To test the set-up and ensure that the frequency converter is running, follow these steps.

Step 1. Locate the motor name plate

NB!
The motor is either star- (Y) or delta- connected (Δ). This information is located on the motor name plate data.

Step 2. Enter the motor name plate data in this parameter list.
To access this list first press the [QUICK MENU] key then select "Q2 Quick Setup".

5

1.	Motor Power [kW] or Motor Power [HP]	par. 1-20 *Motor Power [kW]* par. 1-21 *Motor Power [HP]*
2.	Motor Voltage	par. 1-22 *Motor Voltage*
3.	Motor Frequency	par. 1-23 *Motor Frequency*
4.	Motor Current	par. 1-24 *Motor Current*
5.	Motor Nominal Speed	par. 1-25 *Motor Nominal Speed*

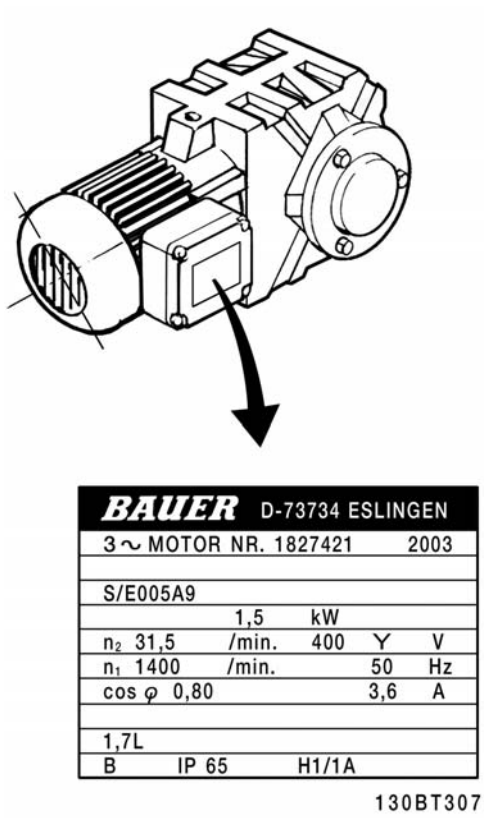

Step 3. Activate the Automatic Motor Adaptation (AMA)
Performing an AMA will ensure optimum performance. The AMA measures the values from the motor model equivalent diagram.

1. Connect terminal 27 to terminal 12 or set par. 5-12 *Terminal 27 Digital Input* to 'No function' (par. 5-12 *Terminal 27 Digital Input* [0])
2. Activate the AMA par. 1-29 *Automatic Motor Adaptation (AMA)*.
3. Choose between complete or reduced AMA. If an LC filter is mounted, run only the reduced AMA, or remove the LC filter during the AMA procedure.
4. Press the [OK] key. The display shows "Press [Hand on] to start".
5. Press the [Hand on] key. A progress bar indicates if the AMA is in progress.

Stop the AMA during operation

1. Press the [OFF] key - the frequency converter enters into alarm mode and the display shows that the AMA was terminated by the user.

Successful AMA

1. The display shows "Press [OK] to finish AMA".
2. Press the [OK] key to exit the AMA state.

Unsuccessful AMA

1. The frequency converter enters into alarm mode. A description of the alarm can be found in the *Troubleshooting* section.
2. "Report Value" in the [Alarm Log] shows the last measuring sequence carried out by the AMA, before the frequency converter entered alarm mode. This number along with the description of the alarm will assist you in troubleshooting. If you contact Danfoss Service, make sure to mention number and alarm description.

NB!
Unsuccessful AMA is often caused by incorrectly registered motor name plate data or too big difference between the motor power size and the frequency converter power size.

Step 4. Set speed limit and ramp time

Set up the desired limits for speed and ramp time.

Minimum Reference	par. 3-02 *Minimum Reference*
Maximum Reference	par. 3-03 *Maximum Reference*

Motor Speed Low Limit	par. 4-11 *Motor Speed Low Limit [RPM]* or par. 4-12 *Motor Speed Low Limit [Hz]*
Motor Speed High Limit	par. 4-13 *Motor Speed High Limit [RPM]* or par. 4-14 *Motor Speed High Limit [Hz]*

Ramp-up Time 1 [s]	par. 3-41 *Ramp 1 Ramp Up Time*
Ramp-down Time 1 [s]	par. 3-42 *Ramp 1 Ramp Down Time*

5

5.4 Additional Connections

5.4.1 Mains Disconnectors

Assembling of IP55 / NEMA Type 12 (A5 housing) with mains disconnector

Mains switch is placed on left side on frame sizes B1, B2, C1 and C2 . Mains switch on A5 frames is placed on right side

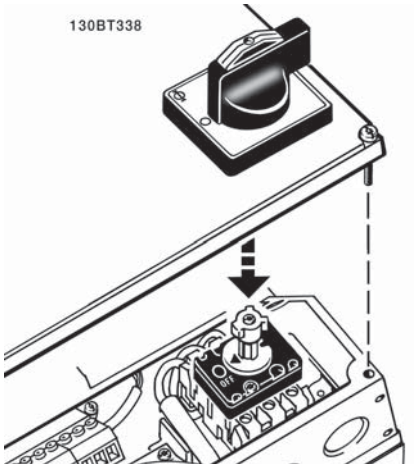

Frame size:	Type:	Terminal connections:
A5	Kraus&Naimer KG20A T303	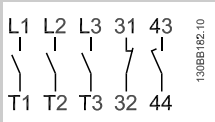
B1	Kraus&Naimer KG64 T303	
B2	Kraus&Naimer KG64 T303	
C1 37 kW	Kraus&Naimer KG100 T303	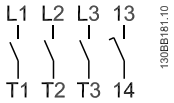
C1 45-55 kW	Kraus&Naimer KG105 T303	
C2 75 kW	Kraus&Naimer KG160 T303	
C2 90 kW	Kraus&Naimer KG250 T303	

5.4.2 Mains disconnectors - frame size D, E and F

Frame size	Power & Voltage	Type
D1/D3	P110-P132 380-480V & P110-P160 525-690V	ABB OETL-NF200A
D2/D4	P160-P250 380-480V & P200-P400 525-690V	ABB OETL-NF400A
E1/E2	P315 380-480V & P450-P630 525-690V	ABB OETL-NF600A
E1/E2	P355-P450 380-480V	ABB OETL-NF800A
F3	P500 380-480V & P710-P800 525-690V	Merlin Gerin NPJF36000S12AAYP
F3	P560-P710 380-480V & P900 525-690V	Merlin Gerin NRK36000S20AAYP
F4	P800-P1M0 380-480V & P1M0-P1M2 525-690V	Merlin Gerin NRK36000S20AAYP

5.4.3 F frame circuit breakers

Frame size	Power & Voltage	Type
F3	P500 380-480V & P710-P800 525-690V	Merlin Gerin NPJF36120U31AABSCYP
F3	P630-P710 380-480V & P900 525-690V	Merlin Gerin NRJF36200U31AABSCYP
F4	P800 380-480V & P1M0-P1M2 525-690V	Merlin Gerin NRJF36200U31AABSCYP
F4	P1M0 380-480V	Merlin Gerin NRJF36250U31AABSCYP

5.4.4 F frame mains contactors

Frame size	Power & Voltage	Type
F3	P500-P560 380-480V & P710-P900 525-690V	Eaton XTCE650N22A
F3	P630 380-480V	Eaton XTCE820N22A
F3	P710 380-480V	Eaton XTCEC14P22B
F4	P1M0 525-690V	Eaton XTCE820N22A
F4	P800-P1M0 380-480V & P1M2 525-690V	Eaton XTCEC14P22B

5.4.5 Brake Resistor Temperature Switch

Frame size D-E-F
Torque: 0.5-0.6 Nm (5 in-lbs)
Screw size: M3

This input can be used to monitor the temperature of an externally connected brake resistor. If the input between 104 and 106 is established, the frequency converter will trip on warning / alarm 27, "Brake IGBT". If the connection is closed between 104 and 105, the frequency converter will trip on warning / alarm 27, "Brake IGBT".
Normally closed: 104-106 (factory installed jumper)
Normally open: 104-105

Terminal No.	Function
106, 104, 105	Brake resistor temperature switch.

If the temperature of the brake resistor gets too high and the thermal switch drops out, the frequency converter will stop braking. The motor will start coasting. A KLIXON switch must be installed that is `normally closed'. If this function is not used, 106 and 104 must be short-circuited together.

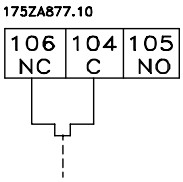

5.4.6 External Fan Supply

Frame size D-E-F
In case the frequency converter is supplied by DC or if the fan must run independently of the power supply, an external power supply can be applied. The connection is made on the power card.

Terminal No.	Function
100, 101	Auxiliary supply S, T
102, 103	Internal supply S, T

The connector located on the power card provides the connection of line voltage for the cooling fans. The fans are connected from factory to be supplied form a common AC line (jumpers between 100-102 and 101-103). If external supply is needed, the jumpers are removed and the supply is connected to terminals 100 and 101. A 5 Amp fuse should be used for protection. In UL applications this should be LittleFuse KLK-5 or equivalent.

5.4.7 Relay Output

Relay 1

- Terminal 01: common
- Terminal 02: normal open 240 V AC
- Terminal 03: normal closed 240 V AC

Relay 2

- Terminal 04: common
- Terminal 05: normal open 400 V AC
- Terminal 06: normal closed 240 V AC

Relay 1 and relay 2 are programmed in par. 5-40 *Function Relay*, par. 5-41 *On Delay, Relay*, and par. 5-42 *Off Delay, Relay*.

Additional relay outputs by using option module MCB 105.

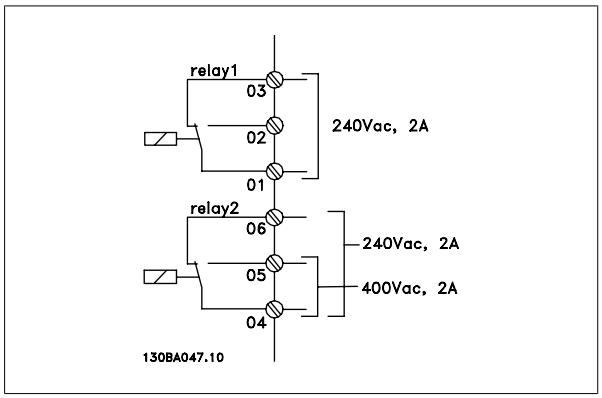

5.4.8 Parallel Connection of Motors

The frequency converter can control several parallel-connected motors. The total current consumption of the motors must not exceed the rated output current I_{INV} for the frequency converter.

NB!
When motors are connected in parallel, par. 1-29 *Automatic Motor Adaptation (AMA)* cannot be used.

Problems may arise at start and at low RPM values if motor sizes are widely different because small motors' relatively high ohmic resistance in the stator calls for a higher voltage at start and at low RPM values.

The electronic thermal relay (ETR) of the frequency converter cannot be used as motor protection for the individual motor of systems with parallel-connected motors. Provide further motor protection by e.g. thermistors in each motor or individual thermal relays. (Circuit breakers are not suitable as protection).

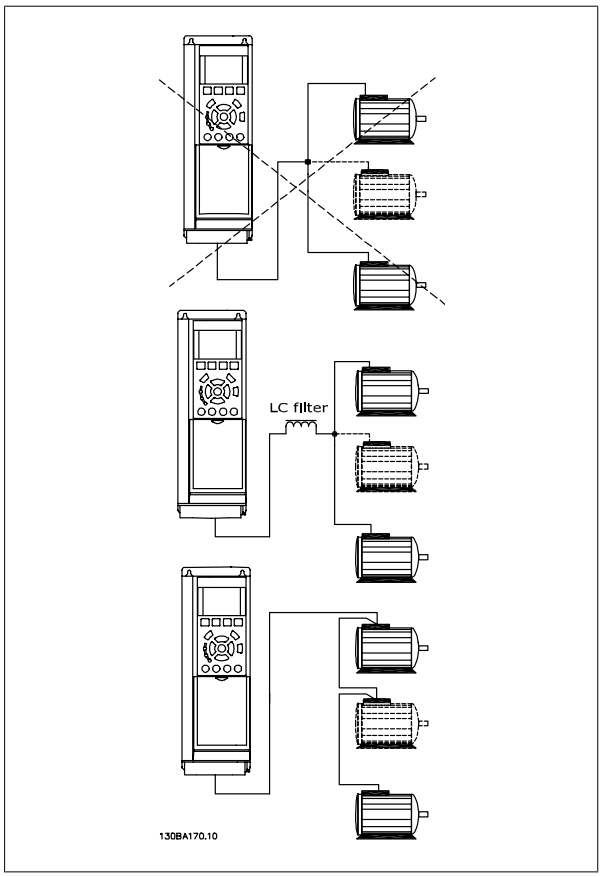

5.4.9 Direction of Motor Rotation

The default setting is clockwise rotation with the frequency converter output connected as follows.

Terminal 96 connected to U-phase
Terminal 97 connected to V-phase
Terminal 98 connected to W-phase

The direction of motor rotation is changed by switching two motor phases.

Motor rotation check can be performed using par. 1-28 *Motor Rotation Check* and following the steps shown in the display.

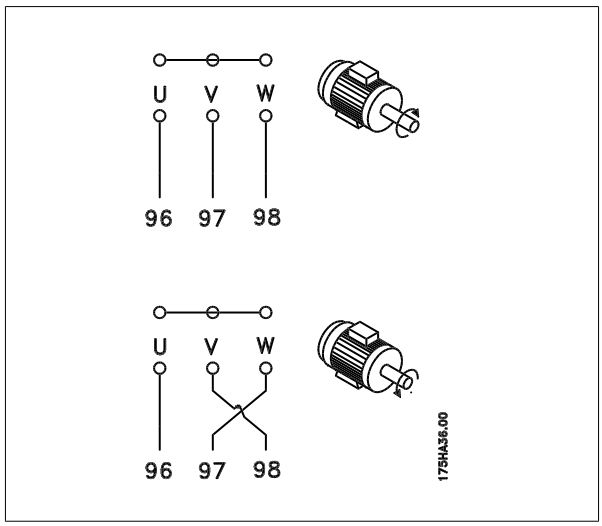

5.4.10 Motor Thermal Protection

The electronic thermal relay in the frequency converter has received the UL-approval for single motor protection, when par. 1-90 *Motor Thermal Protection* is set for *ETR Trip* and par. 1-24 *Motor Current* is set to the rated motor current (see motor name plate).

5.4.11 Motor Insulation

For motor cable lengths ≤ the maximum cable length listed in the General Specifications tables the following motor insulation ratings are recommended because the peak voltage can be up to twice the DC link voltage, 2.8 times the mains voltage, due to transmission line effects in the motor cable. If a motor has lower insulation rating it recommended to use a du/dt or sine wave filter.

Nominal Mains Voltage	Motor Insulation
$U_N \leq 420$ V	Standard U_{LL} = 1300 V
420 V < $U_N \leq 500$ V	Reinforced U_{LL} = 1600 V
500 V < $U_N \leq 600$ V	Reinforced U_{LL} = 1800 V
600 V < $U_N \leq 690$ V	Reinforced U_{LL} = 2000 V

5.4.12 Motor Bearing Currents

All motors installed with 110 kW or higher power drives should have NDE (Non-Drive End) insulated bearings installed to eliminate circulating bearing currents. To minimize DE (Drive End) bearing and shaft currents proper grounding of the drive, motor, driven machine, and motor to the driven machine is required.

Standard Mitigation Strategies:

1. Use an insulated bearing
2. Apply rigorous installation procedures
   - Strictly follow the EMC Installation guideline
   - Provide a good high frequency connection between the motor and the frequency converter for instance by screened cable which has a 360° connection in the motor and the frequency converter
   - Provide a low impedance path from frequency converter to building ground/earth and from the motor to building ground/earth. This can be difficult for pumps
   - Make a direct earth connection between the motor and load machine

- Reinforce the PE so the high frequency impedance is lower in the PE
- Ensure the motor and load motor are aligned

3. Lower the IGBT switching frequency
4. Modify the inverter waveform, 60° AVM vs. SFAVM
5. Install a shaft grounding system or use an isolating coupling between motor and load
6. Apply conductive lubrication
7. If the application allows, avoid running at low motor speeds by using the minimum speed settings of the drive .
8. Try to ensure the line voltage is balanced to ground. This can be difficult for IT, TT, TN-CS or Grounded leg systems
9. Use a dU/dt or sinus filter

5.5 Installation of misc. connections

5.5.1 RS 485 Bus Connection

One or more frequency converters can be connected to a control (or master) using the RS485 standardized interface. Terminal 68 is connected to the P signal (TX+, RX+), while terminal 69 is connected to the N signal (TX-,RX-).

If more than one frequency converter is connected to a master, use parallel connections.

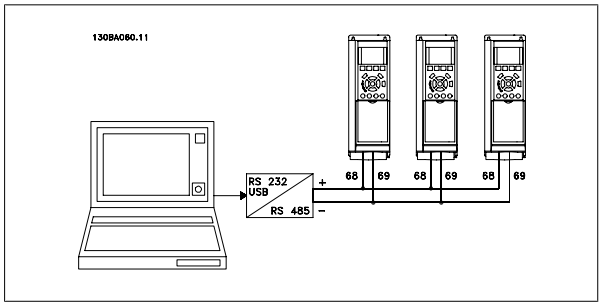

In order to avoid potential equalizing currents in the screen, earth the cable screen via terminal 61, which is connected to the frame via an RC-link.

Bus termination
The RS485 bus must be terminated by a resistor network at both ends. For this purpose, set switch S801 on the control card for "ON".
For more information, see the paragraph *Switches S201, S202, and S801*.

NB!
Communication protocol must be set to par. 8-30 *Protocol*.

5.5.2 How to Connect a PC to the frequency converter

To control or program the frequency converter from a PC, install the PC-based Configuration Tool MCT 10.
The PC is connected via a standard (host/device) USB cable, or via the RS-485 interface as shown in the VLT HVAC Drive *Design Guide, chapter How to Install > Installation of misc. connections*.

NB!
The USB connection is galvanically isolated from the supply voltage (PELV) and other high-voltage terminals. The USB connection is connected to protection earth on the frequency converter. Use only isolated laptop as PC connection to the USB connector on the frequency converter.

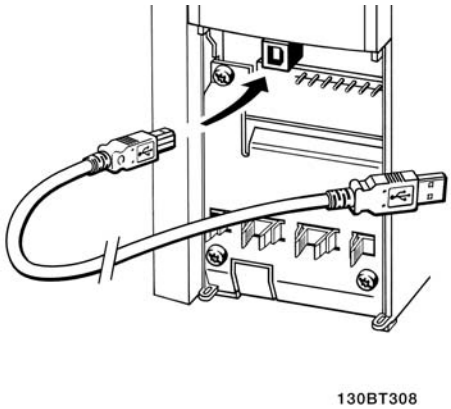

Illustration 5.19: For control cable connections, see section on *Control Terminals*.

PC-based Configuration Tool MCT 10

All drives are equipped with a serial communication port. We provide a PC tool for communication between PC and frequency converter, PC-based Configuration Tool MCT 10.

MCT 10 Set-up Software

MCT 10 has been designed as an easy to use interactive tool for setting parameters in our frequency converters.
The PC-based Configuration Tool MCT 10 will be useful for:

- Planning a communication network off-line. MCT 10 contains a complete frequency converter database
- Commissioning frequency converters on line
- Saving settings for all frequency converters
- Replacing a frequency converter in a network
- Expanding an existing network
- Future developed drives will be supported

The PC-based Configuration Tool MCT 10 supports Profibus DP-V1 via a Master class 2 connection. It makes it possible to on line read/write parameters in a frequency converter via the Profibus network. This will eliminate the need for an extra communication network. See *Operating Instructions, MG.33.Cx.yy and MN.90.Ex.yy* for more information about the features supported by the Profibus DP V1 functions.

Save Drive Settings:

1. Connect a PC to the unit via USB com port
2. Open PC-based Configuration Tool MCT 10
3. Choose "Read from drive"
4. Choose "Save as"

All parameters are now stored in the PC.

Load Drive Settings:

1. Connect a PC to the unit via USB com port
2. Open PC-based Configuration Tool MCT 10
3. Choose "Open"– stored files will be shown
4. Open the appropriate file
5. Choose "Write to drive"

All parameter settings are now transferred to the frequency converter.

A separate manual for PC-based Configuration Tool MCT 10 is available.

The PC-based Configuration Tool MCT 10 modules

The following modules are included in the software package:

	MCT 10 Set-up Software Setting parameters Copy to and from frequency converters Documentation and print out of parameter settings incl. diagrams
	Ext. User Interface Preventive Maintenance Schedule Clock settings Timed Action Programming Smart Logic Controller Set-up

Ordering number:
Please order your CD containing the PC-based Configuration Tool MCT 10 using code number 130B1000.

MCT 10 can also be downloaded from the Danfoss Internet: *http://www.danfoss.com/BusinessAreas/DrivesSolutions/Softwaredownload/DDPC+Software+Program.htm*.

MCT 31
The MCT 31 harmonic calculation PC tool enables easy estimation of the harmonic distortion in a given application. Both the harmonic distortion of Danfoss frequency converters as well as non-Danfoss frequency converters with different additional harmonic reduction devices, such as Danfoss AHF filters and 12-18-pulse rectifiers, can be calculated.

Ordering number:
Please order your CD containing the MCT 31 PC tool using code number 130B1031.

MCT 31 can also be downloaded from the Danfoss Internet: *http://www.danfoss.com/BusinessAreas/DrivesSolutions/Softwaredownload/DDPC+Software+Program.htm*.

5.6 Safety

5.6.1 High Voltage Test

Carry out a high voltage test by short-circuiting terminals U, V, W, L_1, L_2 and L_3. Energize maximum 2.15 kV DC for 380-500V frequency converters and 2.525 kV DC for 525-690V frequency converters for one second between this short-circuit and the chassis.

NB!
When running high voltage tests of the entire installation, interrupt the mains and motor connection if the leakage currents are too high.

5.6.2 Safety Earth Connection

The frequency converter has a high leakage current and must be earthed appropriately for safety reasons acording to EN 50178.

The earth leakage current from the frequency converter exceeds 3.5 mA. To ensure a good mechanical connection from the earth cable to the earth connection (terminal 95), the cable cross-section must be at least 10 mm2 or 2 rated earth wires terminated separately.

5.7 EMC-correct Installation

5.7.1 Electrical Installation - EMC Precautions

The following is a guideline to good engineering practice when installing frequency converters. Follow these guidelines to comply with EN 61800-3 *First environment*. If the installation is in EN 61800-3 *Second environment,* i.e. industrial networks, or in an installation with its own transformer, deviation from these guidelines is allowed but not recommended. See also paragraphs *CE Labelling, General Aspects of EMC Emission* and *EMC Test Results*.

Good engineering practice to ensure EMC-correct electrical installation:

- Use only braided screened/armoured motor cables and braided screened/armoured control cables. The screen should provide a minimum coverage of 80%. The screen material must be metal, not limited to but typically copper, aluminium, steel or lead. There are no special requirements for the mains cable.
- Installations using rigid metal conduits are not required to use screened cable, but the motor cable must be installed in conduit separate from the control and mains cables. Full connection of the conduit from the drive to the motor is required. The EMC performance of flexible conduits varies a lot and information from the manufacturer must be obtained.
- Connect the screen/armour/conduit to earth at both ends for motor cables as well as for control cables. In some cases, it is not possible to connect the screen in both ends. If so, connect the screen at the frequency converter. See also *Earthing of Braided Screened/Armoured Control Cables*.
- Avoid terminating the screen/armour with twisted ends (pigtails). It increases the high frequency impedance of the screen, which reduces its effectiveness at high frequencies. Use low impedance cable clamps or EMC cable glands instead.
- Avoid using unscreened/unarmoured motor or control cables inside cabinets housing the drive(s), whenever this can be avoided.

Leave the screen as close to the connectors as possible.

The illustration shows an example of an EMC-correct electrical installation of an IP 20 frequency converter. The frequency converter is fitted in an installation cabinet with an output contactor and connected to a PLC, which is installed in a separate cabinet. Other ways of doing the installation may have just as good an EMC performance, provided the above guide lines to engineering practice are followed.

If the installation is not carried out according to the guideline and if unscreened cables and control wires are used, some emission requirements are not complied with, although the immunity requirements are fulfilled. See the paragraph *EMC test results*.

5

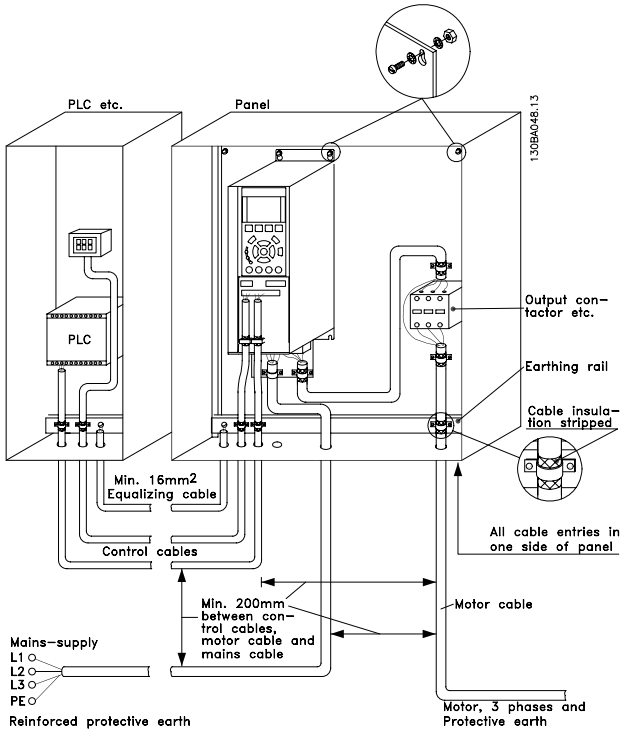

Illustration 5.20: EMC-correct electrical installation of a frequency converter in cabinet.

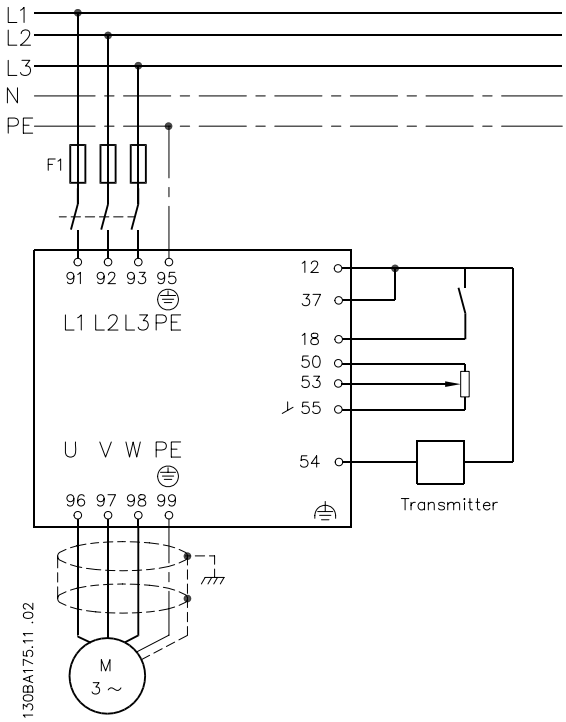

Illustration 5.21: Electrical connection diagram.

5.7.2 Use of EMC-Correct Cables

Danfoss recommends braided screened/armoured cables to optimise EMC immunity of the control cables and the EMC emission from the motor cables.

The ability of a cable to reduce the in- and outgoing radiation of electric noise depends on the transfer impedance (Z_T). The screen of a cable is normally designed to reduce the transfer of electric noise; however, a screen with a lower transfer impedance (Z_T) value is more effective than a screen with a higher transfer impedance (Z_T).

Transfer impedance (Z_T) is rarely stated by cable manufacturers but it is often possible to estimate transfer impedance (Z_T) by assessing the physical design of the cable.

Transfer impedance (Z_T) can be assessed on the basis of the following factors:

- The conductibility of the screen material.
- The contact resistance between the individual screen conductors.
- The screen coverage, i.e. the physical area of the cable covered by the screen - often stated as a percentage value.
- Screen type, i.e. braided or twisted pattern.

a. Aluminium-clad with copper wire.

b. Twisted copper wire or armoured steel wire cable.

c. Single-layer braided copper wire with varying percentage screen coverage.
This is the typical Danfoss reference cable.

d. Double-layer braided copper wire.

e. Twin layer of braided copper wire with a magnetic, screened/ armoured intermediate layer.

f. Cable that runs in copper tube or steel tube.

g. Lead cable with 1.1 mm wall thickness.

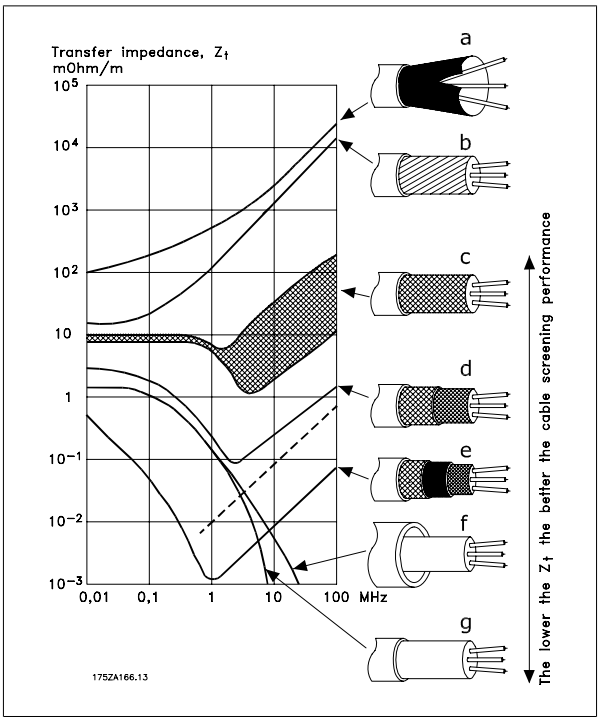

5.7.3 Earthing of Screened/Armoured Control Cables

Generally speaking, control cables must be braided screened/armoured and the screen must be connected by means of a cable clamp at both ends to the metal cabinet of the unit.

The drawing below indicates how correct earthing is carried out and what to do if in doubt.

a. **Correct earthing**
Control cables and cables for serial communication must be fitted with cable clamps at both ends to ensure the best possible electrical contact.

b. **Wrong earthing**
Do not use twisted cable ends (pigtails). They increase the screen impedance at high frequencies.

c. **Protection with respect to earth potential between PLC and**
If the earth potential between the frequency converter and the PLC (etc.) is different, electric noise may occur that will disturb the entire system. Solve this problem by fitting an equalising cable, next to the control cable. Minimum cable cross-section: 16 mm ^{2}.

d. **For 50/60 Hz earth loops**
If very long control cables are used, 50/60 Hz earth loops may occur. Solve this problem by connecting one end of the screen to earth via a 100nF capacitor (keeping leads short).

e. **Cables for serial communication**
Eliminate low-frequency noise currents between two frequency converters by connecting one end of the screen to terminal 61. This terminal is connected to earth via an internal RC link. Use twisted-pair cables to reduce the differential mode interference between the conductors.

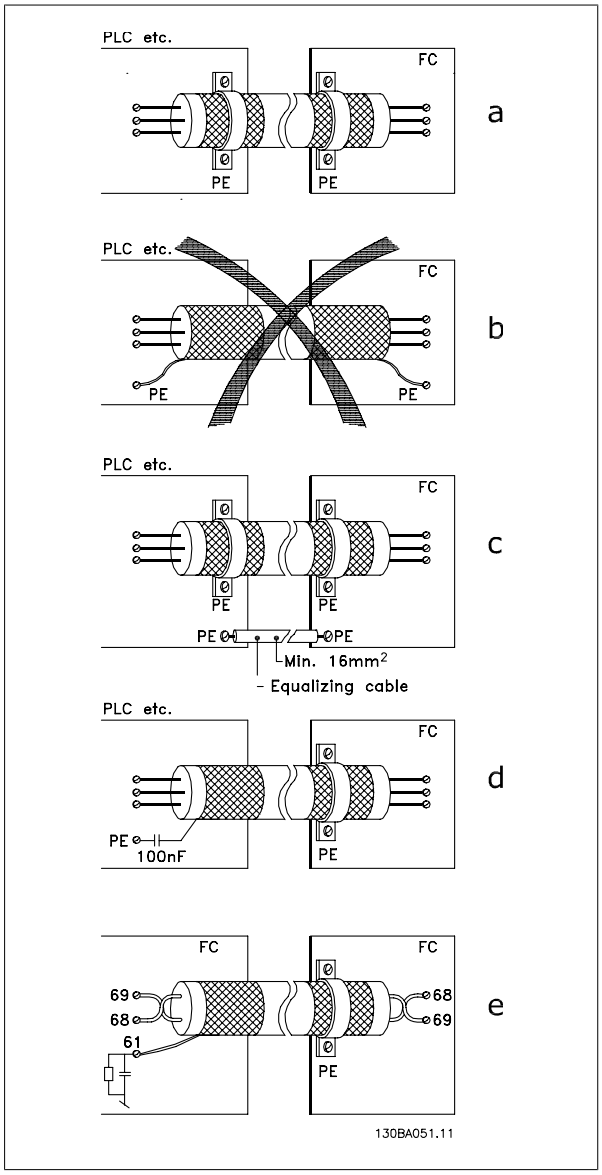

5.8.1 Residual Current Device

You can use RCD relays, multiple protective earthing or earthing as extra protection, provided that local safety regulations are complied with.
If an earth fault appears, a DC content may develop in the faulty current.
If RCD relays are used, you must observe local regulations. Relays must be suitable for protection of 3-phase equipment with a bridge rectifier and for a brief discharge on power-up see section *Earth Leakage Current* for further information.

6 Application Examples

6.1.1 Start/Stop

Terminal 18 = start/stop par. 5-10 *Terminal 18 Digital Input* [8] *Start*
Terminal 27 = No operation par. 5-12 *Terminal 27 Digital Input* [0] *No operation* (Default *coast inverse*

Par. 5-10 *Terminal 18 Digital Input* = *Start* (default)

Par. 5-12 *Terminal 27 Digital Input* = *coast inverse* (default)

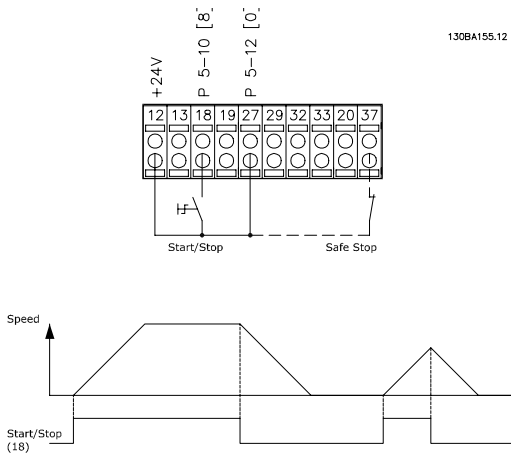

Illustration 6.1: Terminal 37: Available only with Safe Stop Function!

6.1.2 Pulse Start/Stop

Terminal 18 = start/stop par. 5-10 *Terminal 18 Digital Input* [9] *Latched start*
Terminal 27= Stop par. 5-12 *Terminal 27 Digital Input* [6] *Stop inverse*

Par. 5-10 *Terminal 18 Digital Input* = *Latched start*

Par. 5-12 *Terminal 27 Digital Input* = *Stop inverse*

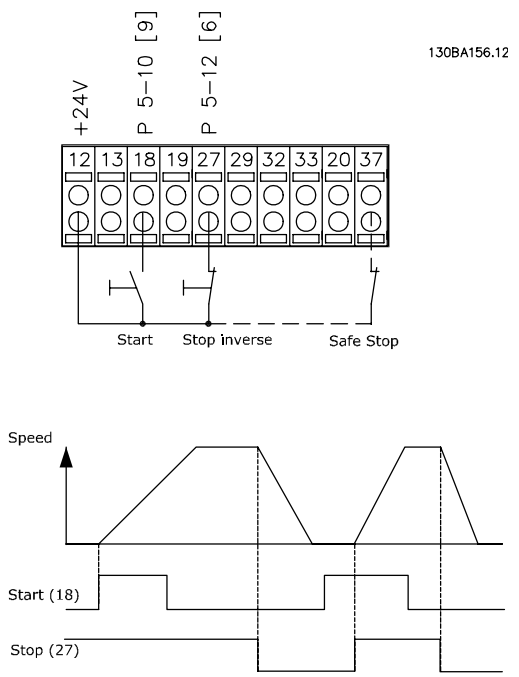

Illustration 6.2: Terminal 37: Available only with Safe Stop Function!

6

6.1.3 Potentiometer Reference

Voltage reference via a potentiometer.

Par. 3-15 *Reference 1 Source* [1] = *Analog Input 53*

Par. 6-10 *Terminal 53 Low Voltage* = 0 Volt

Par. 6-11 *Terminal 53 High Voltage* = 10 Volt

Par. 6-14 *Terminal 53 Low Ref./Feedb. Value* = 0 RPM

Par. 6-15 *Terminal 53 High Ref./Feedb. Value* = 1.500 RPM

Switch S201 = OFF (U)

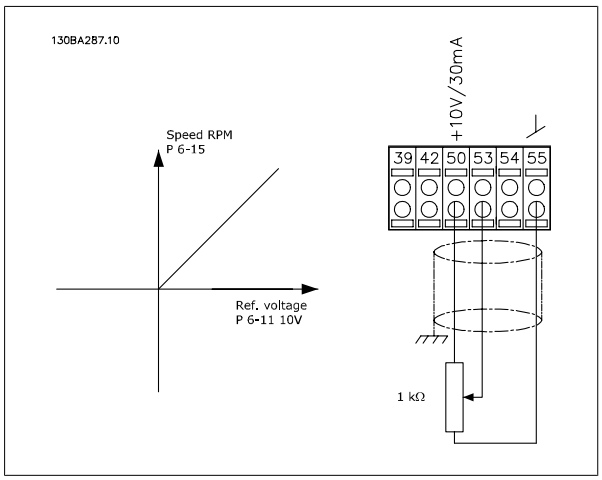

6

6.1.4 Automatic Motor Adaptation (AMA)

AMA is an algorithm to measure the electrical motor parameters on a motor at standstill. This means thatAMA itself does not supply any torque.
AMA is useful when commissioning systems and optimising the adjustment of the frequency converter to the applied motor. This feature is particularly used where the default setting does not apply to the connected motor.
par. 1-29 *Automatic Motor Adaptation (AMA)* allows a choice of complete AMA with determination of all electrical motor parameters or reduced AMA with determination of the stator resistance Rs only.
The duration of a total AMA varies from a few minutes on small motors to more than 15 minutes on large motors.

Limitations and preconditions:

- For the AMA to determine the motor parameters optimally, enter the correct motor nameplate data in par. 1-20 *Motor Power [kW]* to par. 1-28 *Motor Rotation Check*.
- For the best adjustment of the frequency converter, carry out AMA on a cold motor. Repeated AMA runs may lead to a heating of the motor, which results in an increase of the stator resistance, Rs. Normally, this is not critical.
- AMA can only be carried out if the rated motor current is minimum 35% of the rated output current of the frequency converter. AMA can be carried out on up to one oversize motor.
- It is possible to carry out a reduced AMA test with a Sine-wave filter installed. Avoid carrying out a complete AMA with a Sine-wave filter. If an overall setting is required, remove the Sine-wave filter while running a total AMA. After completion of the AMA, reinsert the Sine-wave filter.
- If motors are coupled in parallel, use only reduced AMA if any.
- Avoid running a complete AMA when using synchronous motors. If synchronous motors are applied, run a reduced AMA and manually set the extended motor data. The AMA function does not apply to permanent magnet motors.
- The frequency converter does not produce motor torque during an AMA. During an AMA, it is imperative that the application does not force the motor shaft to run, which is known to happen with e.g. wind milling in ventilation systems. This disturbs the AMA function.

New useful facility in the VLT HVAC Drive frequency converter is the Smart Logic Control (SLC).
In applications where a PLC is generating a simple sequence the SLC may take over elementary tasks from the main control.
SLC is designed to act from event send to or generated in the frequency converter. The frequency converter will then perform the pre-programmed action.

6.1.5 Smart Logic Control Programming

The Smart Logic Control (SLC) is essentially a sequence of user defined actions (see par. 13-52 *SL Controller Action*) executed by the SLC when the associated user defined *event* (see par. 13-51 *SL Controller Event*) is evaluated as TRUE by the SLC.

Events and *actions* are each numbered and are linked in pairs called states. This means that when *event [1]* is fulfilled (attains the value TRUE), *action [1]* is executed. After this, the conditions of *event [2]* will be evaluated and if evaluated TRUE, *action [2]*will be executed and so on. Events and actions are placed in array parameters.

Only one *event* will be evaluated at any time. If an *event* is evaluated as FALSE, nothing happens (in the SLC) during the present scan interval and no other *events* will be evaluated. This means that when the SLC starts, it evaluates *event [1]* (and only *event [1]*) each scan interval. Only when *event [1]* is evaluated TRUE, the SLC executes *action [1]* and starts evaluating *event [2]*.

It is possible to program from 0 to 20 *events* and *actions*. When the last *event / action* has been executed, the sequence starts over again from *event [1] / action [1]*. The illustration shows an example with three *events / actions*:

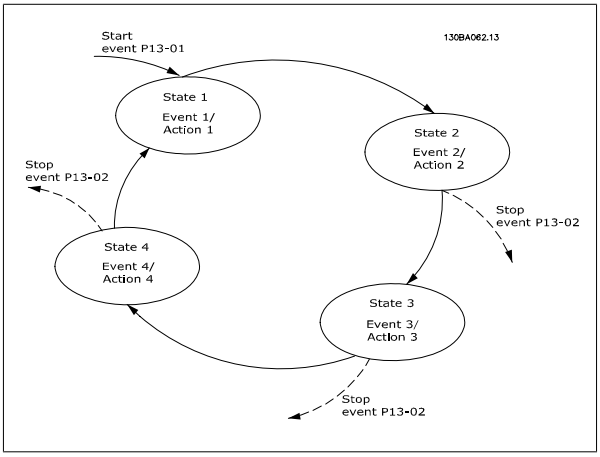

6.1.6 SLC Application Example

<u>One sequence 1</u>:
Start – ramp up – run at reference speed 2 sec – ramp down and hold shaft until stop.

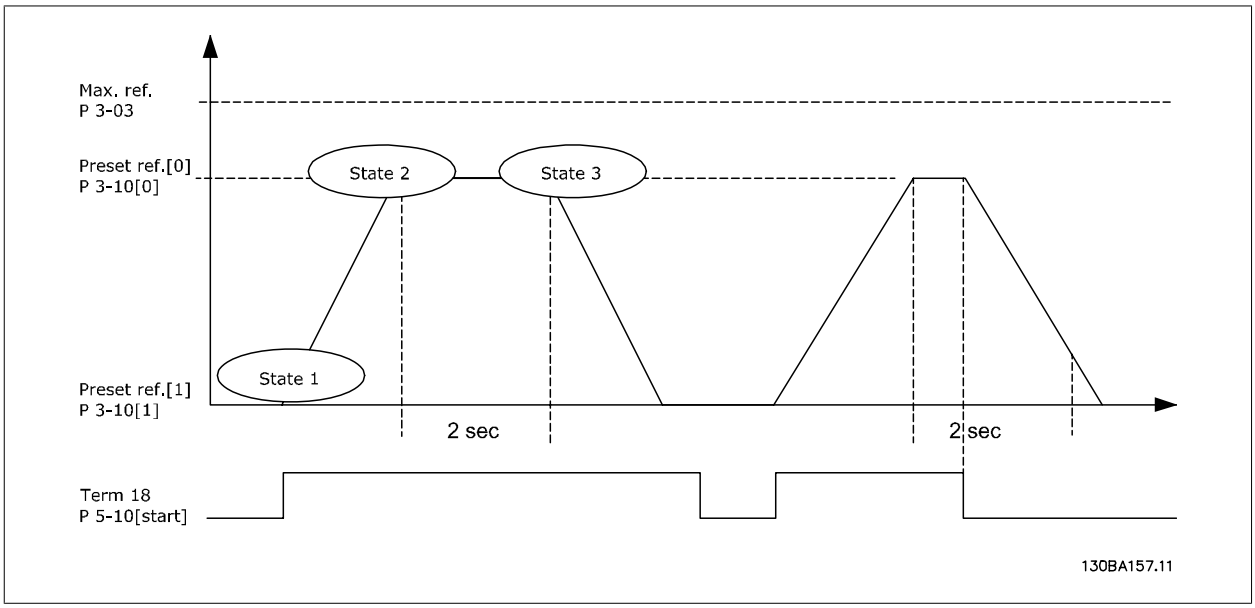

Set the ramping times in par. 3-41 *Ramp 1 Ramp Up Time* and par. 3-42 *Ramp 1 Ramp Down Time* to the wanted times

$$t_{ramp} = \frac{t_{acc} \times n_{norm}(par.\ 1-25)}{ref\,[RPM]}$$

Set term 27 to *No Operation* (par. 5-12 *Terminal 27 Digital Input*)
Set Preset reference 0 to first preset speed (par. 3-10 *Preset Reference* [0]) in percentage of Max reference speed (par. 3-03 *Maximum Reference*). Ex.: 60%

Set preset reference 1 to second preset speed (par. 3-10 *Preset Reference* [1] Ex.: 0 % (zero).
Set the timer 0 for constant running speed in par. 13-20 *SL Controller Timer* [0]. Ex.: 2 sec.

Set Event 1 in par. 13-51 *SL Controller Event* [1] to *True* [1]
Set Event 2 in par. 13-51 *SL Controller Event* [2] to *On Reference* [4]
Set Event 3 in par. 13-51 *SL Controller Event* [3] to *Time Out 0* [30]
Set Event 4 in par. 13-51 *SL Controller Event* [1] to *False* [0]

Set Action 1 in par. 13-52 *SL Controller Action* [1] to *Select preset 0* [10]
Set Action 2 in par. 13-52 *SL Controller Action* [2] to *Start Timer 0* [29]
Set Action 3 in par. 13-52 *SL Controller Action* [3] to *Select preset 1* [11]
Set Action 4 in par. 13-52 *SL Controller Action* [4] to *No Action* [1]

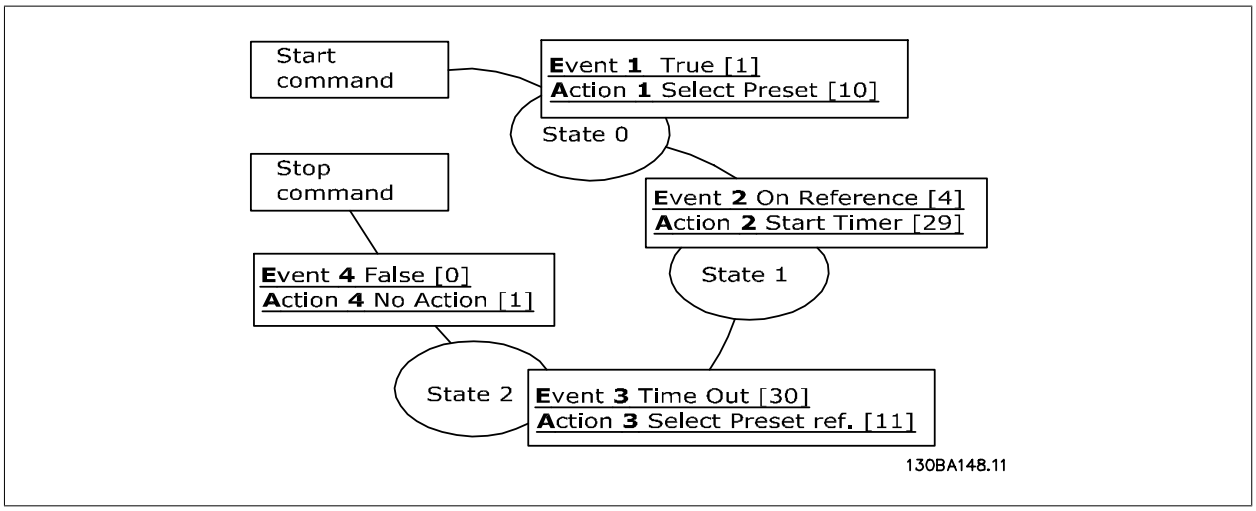

Set the Smart Logic Control in par. 13-00 *SL Controller Mode* to ON.

Start / stop command is applied on terminal 18. If stop signal is applied the frequency converter will ramp down and go into free mode.

6.1.7 BASIC Cascade Controller

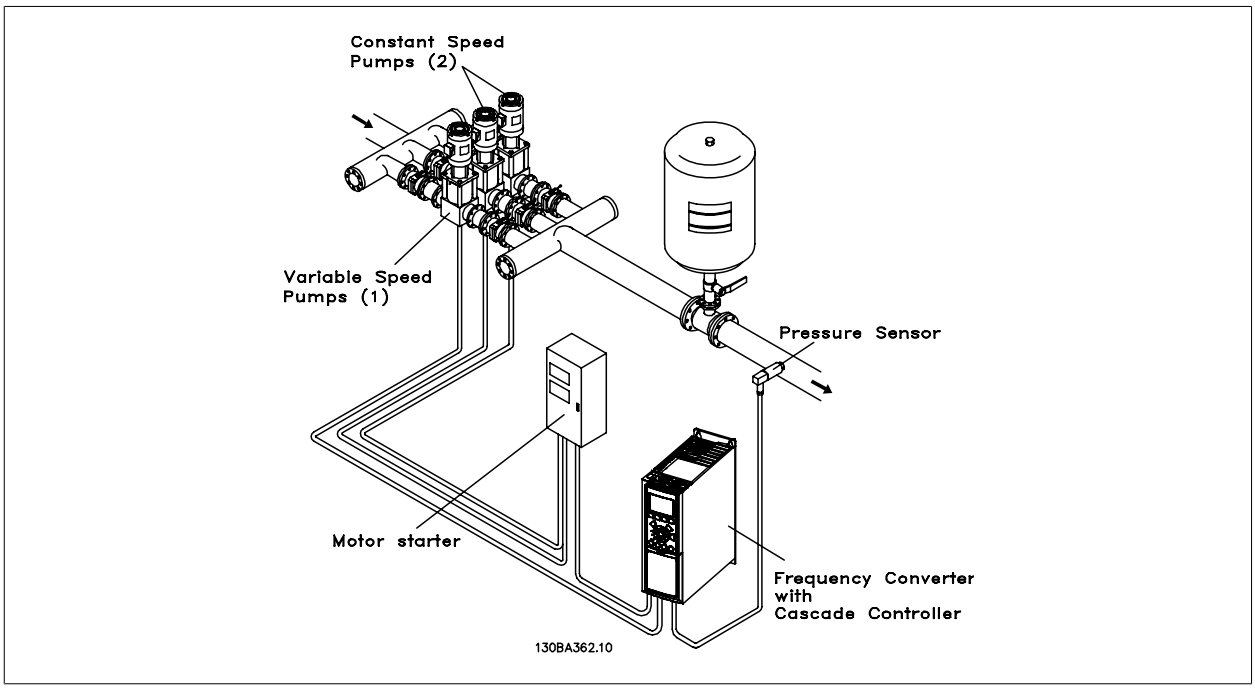

The BASIC Cascade Controller is used for pump applications where a certain pressure ("head") or level needs to be maintained over a wide dynamic range. Running a large pump at variable speed over a wide for range is not an ideal solution because of low pump efficiency and because there is a practical limit of about 25% rated full load speed for running a pump.

In the BASIC Cascade Controller the frequency converter controls a variable speed motor as the variable speed pump (lead) and can stage up to two additional constant speed pumps on and off. By varying the speed of the initial pump, variable speed control of the entire system is provided. This maintains constant pressure while eliminating pressure surges, resulting in reduced system stress and quieter operation in pumping systems.

Fixed Lead Pump

The motors must be of equal size. The BASIC Cascade Controller allows the frequency converter to control up to 3 equal size pumps using the drives two built-in relays. When the variable pump (lead) is connected directly to the frequency converter, the other 2 pumps are controlled by the two built-in relays. When lead pump alternations is enabled, pumps are connected to the built-in relays and the frequency converter is capable of operating 2 pumps.

Lead Pump Alternation

The motors must be of equal size. This function makes it possible to cycle the frequency converter between the pumps in the system (maximum of 2 pumps). In this operation the run time between pumps is equalized reducing the required pump maintenance and increasing reliability and lifetime of the system. The alternation of the lead pump can take place at a command signal or at staging (adding another pump).

The command can be a manual alternation or an alternation event signal. If the alternation event is selected, the lead pump alternation takes place every time the event occurs. Selections include whenever an alternation timer expires, at a predefined time of day or when the lead pump goes into sleep mode. Staging is determined by the actual system load.

A separate parameter limits alternation only to take place if total capacity required is > 50%. Total pump capacity is determined as lead pump plus fixed speed pumps capacities.

Bandwidth Management

In cascade control systems, to avoid frequent switching of fixed speed pumps, the desired system pressure is kept within a bandwidth rather than at a constant level. The Staging Bandwidth provides the required bandwidth for operation. When a large and quick change in system pressure occurs, the Override Bandwidth overrides the Staging Bandwidth to prevent immediate response to a short duration pressure change. An Override Bandwidth Timer can be programmed to prevent staging until the system pressure has stabilized and normal control established.

When the Cascade Controller is enabled and running normally and the frequency converter issues a trip alarm, the system head is maintained by staging and destaging fixed speed pumps. To prevent frequent staging and destaging and minimize pressure fluxuations, a wider Fixed Speed Bandwidth is used instead of the Staging bandwidth.

6.1.8 Pump Staging with Lead Pump Alternation

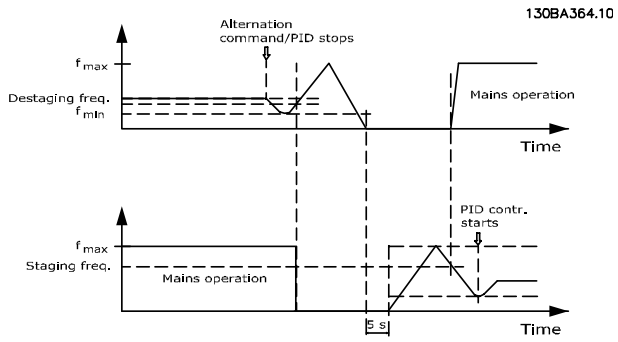

With lead pump alternation enabled, a maximum of two pumps are controlled. At an alternation command, the lead pump will ramp to minimum frequency (fmin) and after a delay will ramp to maximum frequency (fmax). When the speed of the lead pump reaches the destaging frequency, the fixed speed pump will be cut out (destaged). The lead pump continues to ramp up and then ramps down to a stop and the two relays are cut out.

After a time delay, the relay for the fixed speed pump cuts in (staged) and this pump becomes the new lead pump. The new lead pump ramps up to maximum speed and then down to minimum speed when ramping down and reaching the staging frequency, the old lead pump is now cut in (staged) on the mains as the new fixed speed pump.

If the lead pump has been running at minimum frequency (fmin) for a programmed amount of time, with a fixed speed pump running, the lead pump contributes little to the system. When the programmed value of the timer expires, the lead pump is removed, avoiding a deal heat water circulation problem.

6.1.9 System Status and Operation

If the lead pump goes into Sleep Mode, the function is displayed on the LCP. It is possible to alternate the lead pump on a Sleep Mode condition.

When the cascade controller is enabled, the operation status for each pump and the cascade controller is displayed on the LCP. Information displayed includes:

- Pumps Status, is a read out of the status for the relays assigned to each pump. The display shows pumps that are disabled, off, running on the frequency converter or running on the mains/motor starter.
- Cascade Status, is a read out of the status for the Cascade Controller. The display shows the Cascade Controller is disabled, all pumps are off, and emergency has stopped all pumps, all pumps are running, fixed speed pumps are being staged/destaged and lead pump alternation is occurring.
- Destage at No-Flow ensures that all fixed speed pumps are stopped individually until the no-flow status disappears.

6.1.10 Fixed Variable Speed Pump Wiring Diagram

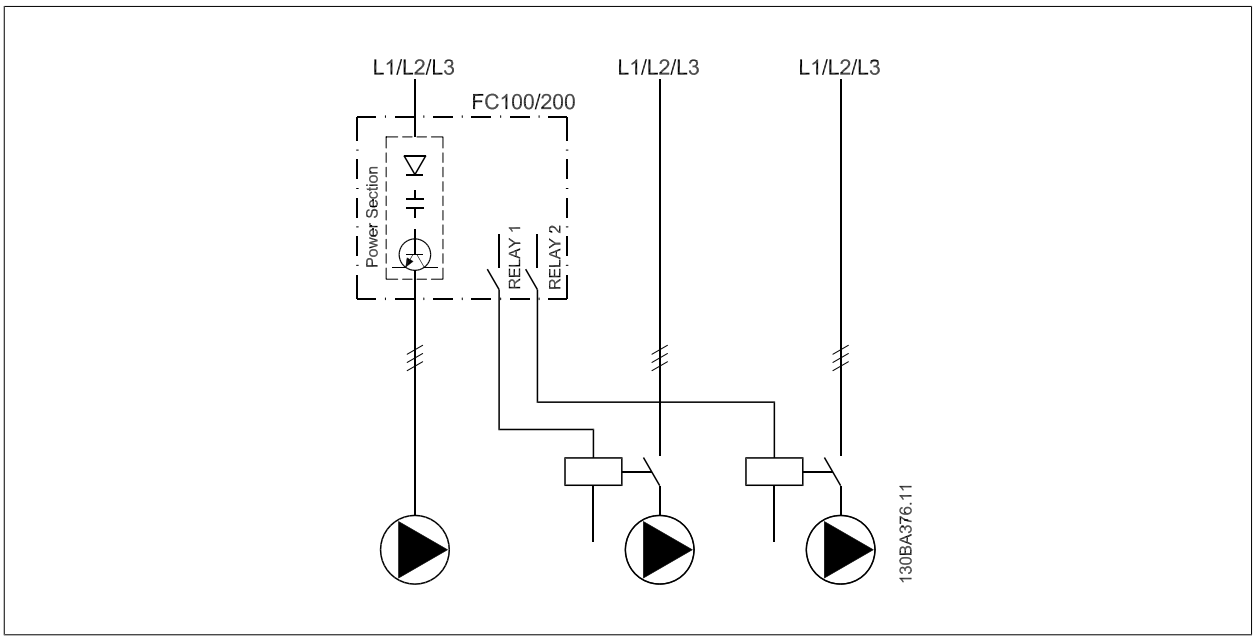

6.1.11 Lead Pump Alternation Wiring Diagram

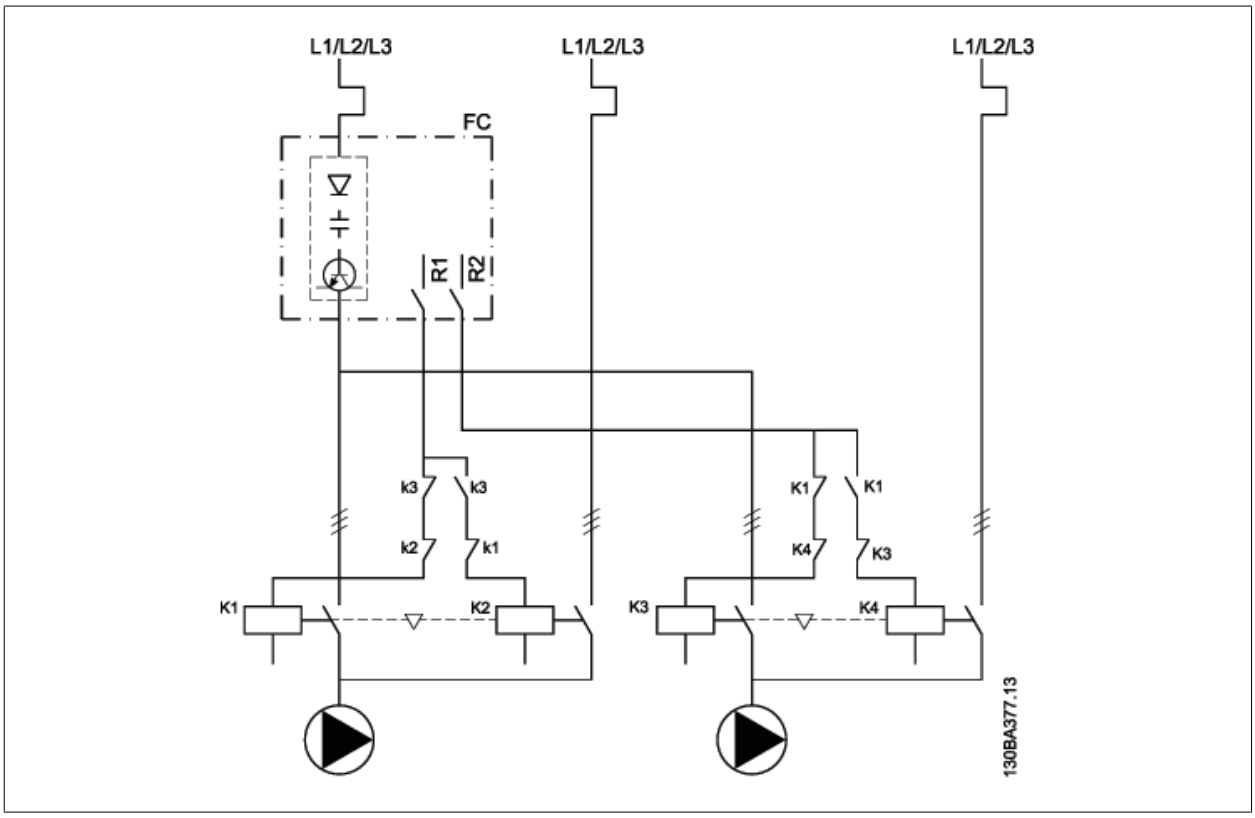

Every pump must be connected to two contactors (K1/K2 and K3/K4) with a mechanical interlock. Thermal relays or other motor protection devices must be applied according to local regulation and/or individual demands.

- RELAY 1 (R1) and RELAY 2 (R2) are the built-in relays in the frequency converter.

- When all relays are de-energized, the first built in relay to be energized will cut in the contactor corresponding to the pump controlled by the relay. E.g. RELAY 1 cuts in contactor K1, which becomes the lead pump.
- K1 blocks for K2 via the mechanical interlock preventing mains to be connected to the output of the frequency converter (via K1).
- Auxiliary break contact on K1 prevents K3 to cut in.
- RELAY 2 controls contactor K4 for on/off control of the fixed speed pump.
- At alternation both relays de-energizes and now RELAY 2 will be energized as the first relay.

6.1.12 Cascade Controller Wiring Diagram

The wiring diagram shows an example with the built in BASIC cascade controller with one variable speed pump (lead) and two fixed speed pumps, a 4-20 mA transmitter and System Safety Interlock.

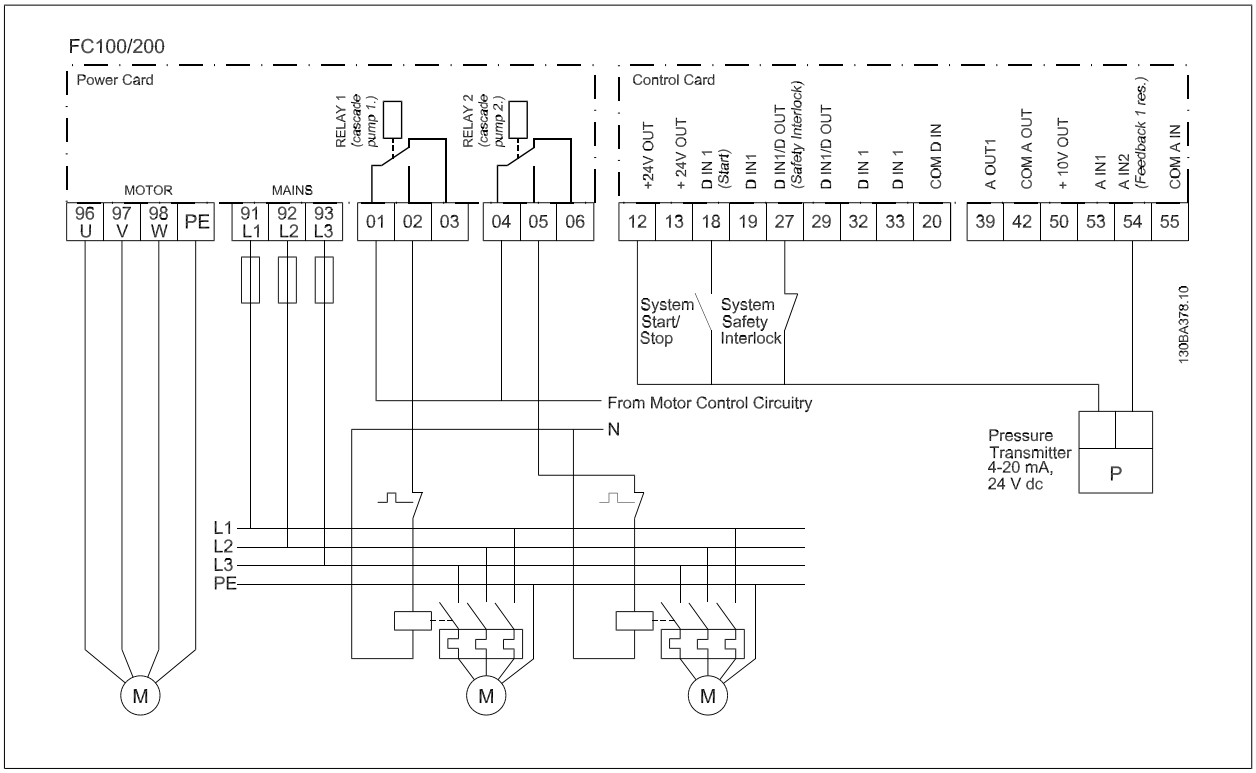

6.1.13 Start/Stop conditions

Commands assigned to digital inputs. See *Digital Inputs*, parameter group 5-1*.

	Variable speed pump (lead)	Fixed speed pumps
Start (SYSTEM START /STOP)	Ramps up (if stopped and there is a demand)	Staging (if stopped and there is a demand)
Lead Pump Start	Ramps up if SYSTEM START is active	Not affected
Coast (EMERGENCY STOP)	Coast to stop	Cut out (built in relays are de-energized)
Safety Interlock	Coast to stop	Cut out (built in relays are de-energized)

Function of buttons on LCP:

	Variable speed pump (lead)	Fixed speed pumps
Hand On	Ramps up (if stopped by a normal stop command) or stays in operation if already running	Destaging (if running)
Off	Ramps down	Ramps down
Auto On	Starts and stops according to commands via terminals or serial bus	Staging/Destaging

7 RS-485 Installation and Set-up

7.1 RS-485 Installation and Set-up

7.1.1 Overview

RS-485 is a two-wire bus interface compatible with multi-drop network topology, i.e. nodes can be connected as a bus, or via drop cables from a common trunk line. A total of 32 nodes can be connected to one network segment.

Network segments are divided up by repeaters. Please note that each repeater functions as a node within the segment in which it is installed. Each node connected within a given network must have a unique node address, across all segments.

Terminate each segment at both ends, using either the termination switch (S801) of the frequency converters or a biased termination resistor network. Always use screened twisted pair (STP) cable for bus cabling, and always follow good common installation practice.

Low-impedance ground connection of the screen at every node is very important, including at high frequencies. This can be achieved by connecting a large surface of the screen to ground, for example by means of a cable clamp or a conductive cable gland. It may be necessary to apply potential-equalizing cables to maintain the same ground potential throughout the network, particularly in installations where there are long lengths of cable.

To prevent impedance mismatch, always use the same type of cable throughout the entire network. When connecting a motor to the frequency converter, always use screened motor cable.

Cable: Screened twisted pair (STP)
Impedance: 120 Ohm
Cable length: Max. 1200 m (including drop lines)
Max. 500 m station-to-station

7

7.1.2 Network Connection

Connect the frequency converter to the RS-485 network as follows (see also diagram):

1. Connect signal wires to terminal 68 (P+) and terminal 69 (N-) on the main control board of the frequency converter.
2. Connect the cable screen to the cable clamps.

NB!
Screened, twisted-pair cables are recommended in order to reduce noise between conductors.

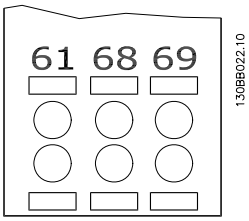

Illustration 7.1: Network Terminal Connection

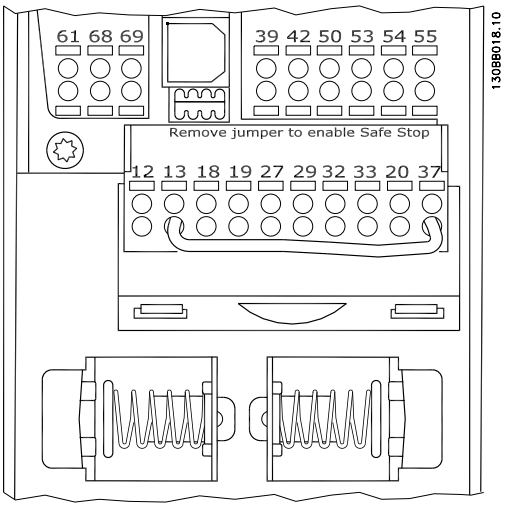

Illustration 7.2: Control card terminals

7.1.3 Frequency Converter Hardware Setup

Use the terminator dip switch on the main control board of the frequency converter to terminate the RS-485 bus.

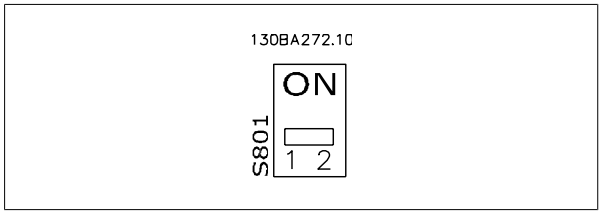

Terminator Switch Factory Setting

NB!
The factory setting for the dip switch is OFF.

7.1.4 Frequency Converter Parameter Settings for Modbus Communication

7

The following parameters apply to the RS-485 interface (FC-port):

Parameter Number	Parameter name	Function
8-30	Protocol	Select the application protocol to run on the RS-485 interface
8-31	Address	Set the node address. Note: The address range depends on the protocol selected in par. 8-30 *Protocol*
8-32	Baud Rate	Set the baud rate. Note: The default baud rate depends on the protocol selected in par. 8-30 *Protocol*
8-33	PC port parity/Stop bits	Set the parity and number of stop bits. Note: The default selection depends on the protocol selected in par. 8-30 *Protocol*
8-35	Min. response delay	Specify a minimum delay time between receiving a request and transmitting a response. This can be used for overcoming modem turnaround delays.
8-36	Max. response delay	Specify a maximum delay time between transmitting a request and receiving a response.
8-37	Max. inter-char delay	Specify a maximum delay time between two received bytes to ensure time-out if transmission is interrupted.

7.1.5 EMC Precautions

The following EMC precautions are recommended in order to achieve interference-free operation of the RS-485 network.

NB!
Relevant national and local regulations, for example regarding protective earth connection, must be observed. The RS-485 communication cable must be kept away from motor and brake resistor cables to avoid coupling of high frequency noise from one cable to another. Normally a distance of 200 mm (8 inches) is sufficient, but keeping the greatest possible distance between the cables is generally recommended, especially where cables run in parallel over long distances. When crossing is unavoidable, the RS-485 cable must cross motor and brake resistor cables at an angle of 90 degrees.

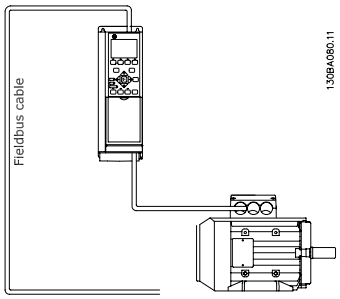

7.2 FC Protocol Overview

The FC protocol, also referred to as FC bus or Standard bus, is the Danfoss standard fieldbus. It defines an access technique according to the master-slave principle for communications via a serial bus.
One master and a maximum of 126 slaves can be connected to the bus. The individual slaves are selected by the master via an address character in the telegram. A slave itself can never transmit without first being requested to do so, and direct message transfer between the individual slaves is not possible. Communications occur in the half-duplex mode.
The master function cannot be transferred to another node (single-master system).

The physical layer is RS-485, thus utilizing the RS-485 port built into the frequency converter. The FC protocol supports different telegram formats; a short format of 8 bytes for process data, and a long format of 16 bytes that also includes a parameter channel. A third telegram format is used for texts.

7.2.1 FC with Modbus RTU

The FC protocol provides access to the Control Word and Bus Reference of the frequency converter.

The Control Word allows the Modbus master to control several important functions of the frequency converter:

- Start
- Stop of the frequency converter in various ways:
  Coast stop
  Quick stop
  DC Brake stop
  Normal (ramp) stop
- Reset after a fault trip
- Run at a variety of preset speeds
- Run in reverse
- Change of the active set-up
- Control of the two relays built into the frequency converter

The Bus Reference is commonly used for speed control. It is also possible to access the parameters, read their values, and where possible, write values to them. This permits a range of control options, including controlling the setpoint of the frequency converter when its internal PID controller is used.

7.3 Network Configuration

7.3.1 Frequency Converter Set-up

Set the following parameters to enable the FC protocol for the frequency converter.

Parameter Number	Parameter Name	Setting
8-30	Protocol	FC
8-31	Address	1 - 126
8-32	Baud Rate	2400 - 115200
8-33	Parity/Stop bits	Even parity, 1 stop bit (default)

7.4 FC Protocol Message Framing Structure

7.4.1 Content of a Character (byte)

Each character transferred begins with a start bit. Then 8 data bits are transferred, corresponding to a byte. Each character is secured via a parity bit, which is set at "1" when it reaches parity (i.e. when there is an equal number of 1's in the 8 data bits and the parity bit in total). A character is completed by a stop bit, thus consisting of 11 bits in all.

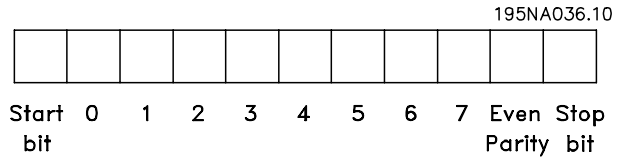

7.4.2 Telegram Structure

Each telegram begins with a start character (STX)=02 Hex, followed by a byte denoting the telegram length (LGE) and a byte denoting the frequency converter address (ADR). A number of data bytes (variable, depending on the type of telegram) follows. The telegram is completed by a data control byte (BCC).

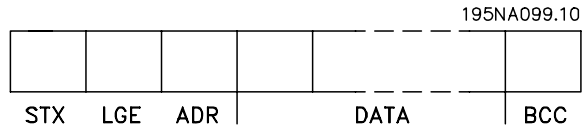

7.4.3 Telegram Length (LGE)

The telegram length is the number of data bytes plus the address byte ADR and the data control byte BCC.

The length of telegrams with 4 data bytes is	LGE = 4 + 1 + 1 = 6 bytes
The length of telegrams with 12 data bytes is	LGE = 12 + 1 + 1 = 14 bytes
The length of telegrams containing texts is	10[1)]+n bytes

[1)] The 10 represents the fixed characters, while the "n"' is variable (depending on the length of the text).

7.4.4 Frequency Converter Address (ADR)

Two different address formats are used.
The address range of the frequency converter is either 1-31 or 1-126.

1. Address format 1-31:
Bit 7 = 0 (address format 1-31 active)
Bit 6 is not used
Bit 5 = 1: Broadcast, address bits (0-4) are not used
Bit 5 = 0: No Broadcast
Bit 0-4 = Frequency converter address 1-31

2. Address format 1-126:
Bit 7 = 1 (address format 1-126 active)
Bit 0-6 = Frequency converter address 1-126
Bit 0-6 = 0 Broadcast

The slave returns the address byte unchanged to the master in the response telegram.

7.4.5 Data Control Byte (BCC)

The checksum is calculated as an XOR-function. Before the first byte in the telegram is received, the Calculated Checksum is 0.

7.4.6 The Data Field

The structure of data blocks depends on the type of telegram. There are three telegram types, and the type applies for both control telegrams (master=>slave) and response telegrams (slave=>master).

The three types of telegram are:

Process block (PCD):
The PCD is made up of a data block of four bytes (2 words) and contains:
- Control word and reference value (from master to slave)
- Status word and present output frequency (from slave to master).

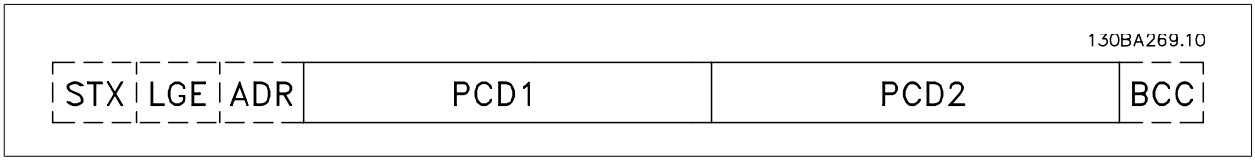

Parameter block:
The parameter block is used to transfer parameters between master and slave. The data block is made up of 12 bytes (6 words) and also contains the process block.

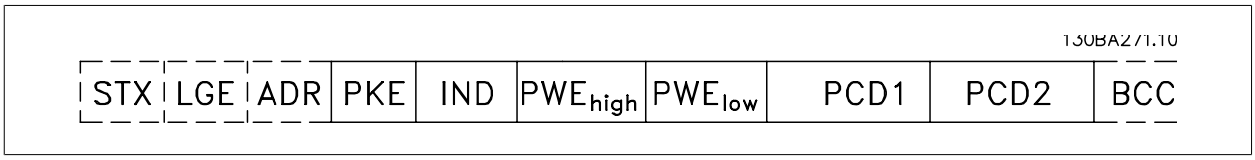

Text block:

The text block is used to read or write texts via the data block.

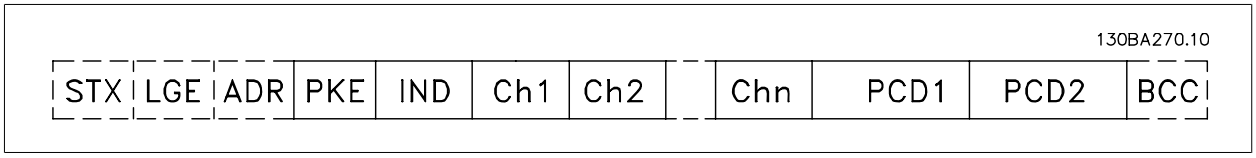

7.4.7 The PKE Field

The PKE field contains two sub-fields: Parameter command and response AK, and Parameter number PNU:

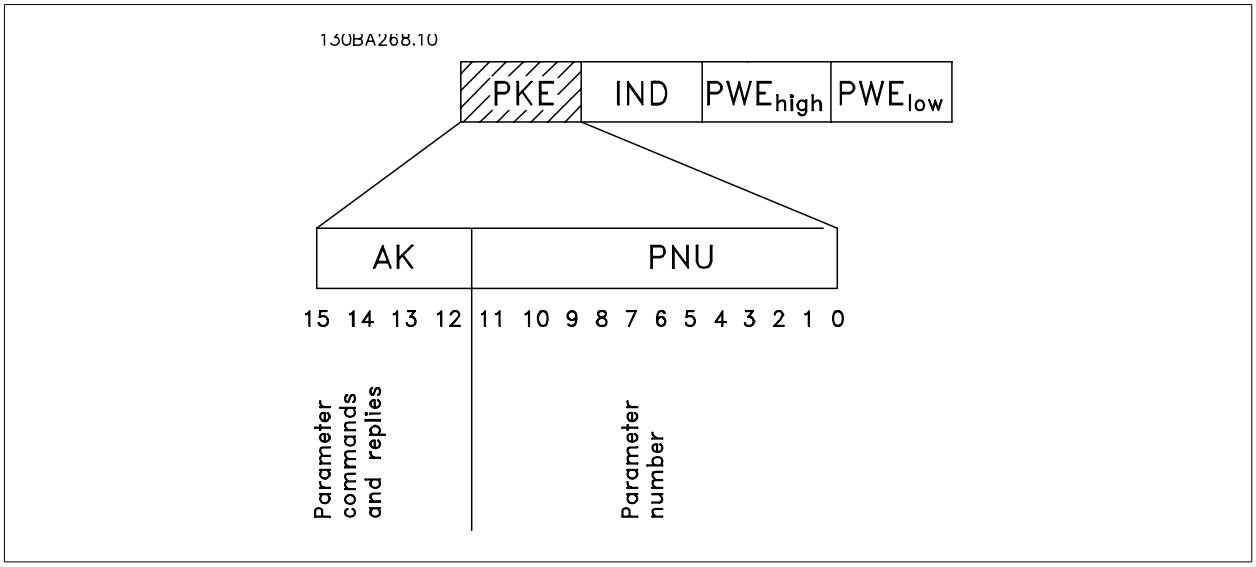

Bits no. 12-15 transfer parameter commands from master to slave and return processed slave responses to the master.

Parameter commands master ⇒ slave

Bit no.				Parameter command
15	14	13	12	
0	0	0	0	No command
0	0	0	1	Read parameter value
0	0	1	0	Write parameter value in RAM (word)
0	0	1	1	Write parameter value in RAM (double word)
1	1	0	1	Write parameter value in RAM and EEprom (double word)
1	1	1	0	Write parameter value in RAM and EEprom (word)
1	1	1	1	Read/write text

Response slave ⇒master

Bit no.				Response
15	14	13	12	
0	0	0	0	No response
0	0	0	1	Parameter value transferred (word)
0	0	1	0	Parameter value transferred (double word)
0	1	1	1	Command cannot be performed
1	1	1	1	text transferred

If the command cannot be performed, the slave sends this response:
0111 Command cannot be performed
- and issues the following fault report in the parameter value (PWE):

PWE low (Hex)	Fault Report
0	The parameter number used does not exit
1	There is no write access to the defined parameter
2	Data value exceeds the parameter's limits
3	The sub index used does not exit
4	The parameter is not the array type
5	The data type does not match the defined parameter
11	Data change in the defined parameter is not possible in the frequency converter's present mode. Certain parameters can only be changed when the motor is turned off
82	There is no bus access to the defined parameter
83	Data change is not possible because factory setup is selected

7.4.8 Parameter Number (PNU)

Bits no. 0-11 transfer parameter numbers. The function of the relevant parameter is defined in the parameter description in the chapter *How to Programme*.

7.4.9 Index (IND)

The index is used together with the parameter number to read/write-access parameters with an index, e.g. par. 15-30 *Alarm Log: Error Code*. The index consists of 2 bytes, a low byte and a high byte.

NB!
Only the low byte is used as an index.

7.4.10 Parameter Value (PWE)

The parameter value block consists of 2 words (4 bytes), and the value depends on the defined command (AK). The master prompts for a parameter value when the PWE block contains no value. To change a parameter value (write), write the new value in the PWE block and send from the master to the slave.

When a slave responds to a parameter request (read command), the present parameter value in the PWE block is transferred and returned to the master. If a parameter contains not a numerical value but several data options, e.g. par. 0-01 *Language* where [0] corresponds to English, and [4] corresponds to Danish, select the data value by entering the value in the PWE block. See Example - Selecting a data value. Serial communication is only capable of reading parameters containing data type 9 (text string).

par. 15-40 *FC Type* to par. 15-53 *Power Card Serial Number* contain data type 9.
For example, read the unit size and mains voltage range in par. 15-40 *FC Type*. When a text string is transferred (read), the length of the telegram is variable, and the texts are of different lengths. The telegram length is defined in the second byte of the telegram, LGE. When using text transfer the index character indicates whether it is a read or a write command.

To read a text via the PWE block, set the parameter command (AK) to 'F' Hex. The index character high-byte must be "4".

Some parameters contain text that can be written to via the serial bus. To write a text via the PWE block, set the parameter command (AK) to 'F' Hex. The index characters high-byte must be "5".

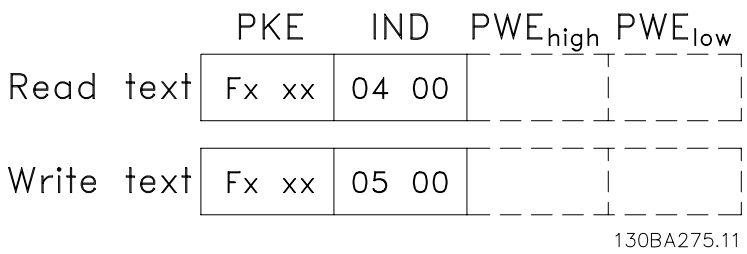

7.4.11 Data Types Supported by the Frequency Converter

Data types	Description
3	Integer 16
4	Integer 32
5	Unsigned 8
6	Unsigned 16
7	Unsigned 32
9	Text string
10	Byte string
13	Time difference
33	Reserved
35	Bit sequence

Unsigned means that there is no operational sign in the telegram.

7.4.12 Conversion

The various attributes of each parameter are displayed in the section Factory Settings. Parameter values are transferred as whole numbers only. Conversion factors are therefore used to transfer decimals.

par. 4-12 *Motor Speed Low Limit [Hz]* has a conversion factor of 0.1. To preset the minimum frequency to 10 Hz, transfer the value 100. A conversion factor of 0.1 means that the value transferred is multiplied by 0.1. The value 100 is thus perceived as 10.0.

Conversion table

Conversion index	Conversion factor
74	0.1
2	100
1	10
0	1
-1	0.1
-2	0.01
-3	0.001
-4	0.0001
-5	0.00001

7.4.13 Process Words (PCD)

The block of process words is divided into two blocks of 16 bits, which always occur in the defined sequence.

PCD 1	PCD 2
Control telegram (master⇒slave Control word)	Reference-value
Control telegram (slave ⇒master) Status word	Present outp. frequency

7.5 Examples

7.5.1 Writing a parameter value

Change par. 4-14 *Motor Speed High Limit [Hz]* to 100 Hz.
Write the data in EEPROM.

PKE = E19E Hex - Write single word in par. 4-14 *Motor Speed High Limit [Hz]*
IND = 0000 Hex
PWEHIGH = 0000 Hex
PWELOW = 03E8 Hex - Data value 1000, corresponding to 100 Hz, see Conversion.

The telegram will look like this:

130BA092.10

PKE	IND	PWE_{high}	PWE_{low}
E19E H	0000 H	0000 H	03E8 H

Note: par. 4-14 *Motor Speed High Limit [Hz]* is a single word, and the parameter command for write in EEPROM is "E". Parameter number 4-14 is 19E in hexadecimal.

The response from the slave to the master will be:

130BA093.10

PKE	IND	PWE_{high}	PWE_{low}
119E H	0000 H	0000 H	03E8 H

7.5.2 Reading a parameter value

Read the value in par. 3-41 *Ramp 1 Ramp Up Time*

PKE = 1155 Hex - Read parameter value in par. 3-41 *Ramp 1 Ramp Up Time*
IND = 0000 Hex
PWEHIGH = 0000 Hex
PWELOW = 0000 Hex

130BA094.10

PKE	IND	PWE_{high}	PWE_{low}
1155 H	0000 H	0000 H	0000 H

If the value in par. 3-41 *Ramp 1 Ramp Up Time* is 10 s, the response from the slave to the master will be:

130BA267.11

PKE	IND	PWE_{high}	PWE_{low}
2155 H	0000 H	0000 H	03E8 H

NB!
3E8 Hex corresponds to 1000 decimal. The conversion index for par. 3-41 *Ramp 1 Ramp Up Time* is -2, i.e. 0.01.
par. 3-41 *Ramp 1 Ramp up Time* is of the type *Unsigned 32*.

7.6 Modbus RTU Overview

7.6.1 Assumptions

These operating instructions assume that the installed controller supports the interfaces in this document and that all the requirements stipulated in the controller, as well as the frequency converter, are strictly observed, along with all limitations therein.

7.6.2 What the User Should Already Know

The Modbus RTU (Remote Terminal Unit) is designed to communicate with any controller that supports the interfaces defined in this document. It is assumed that the user has full knowledge of the capabilities and limitations of the controller.

7.6.3 Modbus RTU Overview

Regardless of the type of physical communication networks, the Modbus RTU Overview describes the process a controller uses to request access to another device. This includes i.a. how it will respond to requests from another device, and how errors will be detected and reported. It also establishes a common format for the layout and contents of message fields.

During communications over a Modbus RTU network, the protocol determines how each controller will learn its device address, recognise a message addressed to it, determine the kind of action to be taken, and extract any data or other information contained in the message. If a reply is required, the controller will construct the reply message and send it.

Controllers communicate using a master-slave technique in which only one device (the master) can initiate transactions (called queries). The other devices (slaves) respond by supplying the requested data to the master, or by taking the action requested in the query.

The master can address individual slaves, or can initiate a broadcast message to all slaves. Slaves return a message (called a response) to queries that are addressed to them individually. No responses are returned to broadcast queries from the master. The Modbus RTU protocol establishes the format for the master's query by placing into it the device (or broadcast) address, a function code defining the requested action, any data to be sent, and an error-checking field. The slave's response message is also constructed using Modbus protocol. It contains fields confirming the action taken, any data to be returned, and an error-checking field. If an error occurs in receipt of the message, or if the slave is unable to perform the requested action, the slave will construct an error message and send it in response, or a time-out will occur.

7.6.4 Frequency Converter with Modbus RTU

The frequency converter communicates in Modbus RTU format over the built-in RS-485 interface. Modbus RTU provides access to the Control Word and Bus Reference of the frequency converter.

The Control Word allows the Modbus master to control several important functions of the frequency converter:

- Start
- Stop of the frequency converter in various ways:
  Coast stop
  Quick stop
  DC Brake stop
  Normal (ramp) stop
- Reset after a fault trip
- Run at a variety of preset speeds
- Run in reverse
- Change the active set-up
- Control the frequency converter's built-in relay

The Bus Reference is commonly used for speed control. It is also possible to access the parameters, read their values, and where possible, write values to them. This permits a range of control options, including controlling the setpoint of the frequency converter when its internal PI controller is used.

7.7 Network Configuration

To enable Modbus RTU on the frequency converter, set the following parameters:

Parameter Number	Parameter name	Setting
8-30	Protocol	Modbus RTU
8-31	Address	1 - 247
8-32	Baud Rate	2400 - 115200
8-33	Parity/Stop bits	Even parity, 1 stop bit (default)

7.8 Modbus RTU Message Framing Structure

7.8.1 Frequency Converter with Modbus RTU

The controllers are set up to communicate on the Modbus network using RTU (Remote Terminal Unit) mode, with each byte in a message containing two 4-bit hexadecimal characters. The format for each byte is shown below.

Start bit	Data byte								Stop/ parity	Stop

Coding System	8-bit binary, hexadecimal 0-9, A-F. Two hexadecimal characters contained in each 8-bit field of the message
Bits Per Byte	1 start bit 8 data bits, least significant bit sent first 1 bit for even/odd parity; no bit for no parity 1 stop bit if parity is used; 2 bits if no parity
Error Check Field	Cyclical Redundancy Check (CRC)

7.8.2 Modbus RTU Message Structure

The transmitting device places a Modbus RTU message into a frame with a known beginning and ending point. This allows receiving devices to begin at the start of the message, read the address portion, determine which device is addressed (or all devices, if the message is broadcast), and to recognise when the message is completed. Partial messages are detected and errors set as a result. Characters for transmission must be in hexadecimal 00 to FF format in each field. The frequency converter continuously monitors the network bus, also during 'silent' intervals. When the first field (the address field) is received, each frequency converter or device decodes it to determine which device is being addressed. Modbus RTU messages addressed to zero are broadcast messages. No response is permitted for broadcast messages. A typical message frame is shown below.

Typical Modbus RTU Message Structure

Start	Address	Function	Data	CRC check	End
T1-T2-T3-T4	8 bits	8 bits	N x 8 bits	16 bits	T1-T2-T3-T4

7.8.3 Start / Stop Field

Messages start with a silent period of at least 3.5 character intervals. This is implemented as a multiple of character intervals at the selected network baud rate (shown as Start T1-T2-T3-T4). The first field to be transmitted is the device address. Following the last transmitted character, a similar period of at least 3.5 character intervals marks the end of the message. A new message can begin after this period. The entire message frame must be transmitted as a continuous stream. If a silent period of more than 1.5 character intervals occurs before completion of the frame, the receiving device flushes the incomplete message and assumes that the next byte will be the address field of a new message. Similarly, if a new message begins prior to 3.5 character intervals after a previous message, the receiving device will consider it a continuation of the previous message. This will cause a time-out (no response from the slave), since the value in the final CRC field will not be valid for the combined messages.

7.8.4 Address Field

The address field of a message frame contains 8 bits. Valid slave device addresses are in the range of 0 – 247 decimal. The individual slave devices are assigned addresses in the range of 1 – 247. (0 is reserved for broadcast mode, which all slaves recognize.) A master addresses a slave by placing the slave address in the address field of the message. When the slave sends its response, it places its own address in this address field to let the master know which slave is responding.

7.8.5 Function Field

The function field of a message frame contains 8 bits. Valid codes are in the range of 1-FF. Function fields are used to send messages between master and slave. When a message is sent from a master to a slave device, the function code field tells the slave what kind of action to perform. When the slave responds to the master, it uses the function code field to indicate either a normal (error-free) response, or that some kind of error occurred (called an exception response). For a normal response, the slave simply echoes the original function code. For an exception response, the slave returns a code that is equivalent to the original function code with its most significant bit set to logic 1. In addition, the slave places a unique code into the data field of the response message. This tells the master what kind of error occurred, or the reason for the exception. Please also refer to the sections *Function Codes Supported by Modbus RTU* and *Exception Codes.*

7.8.6 Data Field

The data field is constructed using sets of two hexadecimal digits, in the range of 00 to FF hexadecimal. These are made up of one RTU character. The data field of messages sent from a master to slave device contains additional information which the slave must use to take the action defined by the function code. This can include items such as coil or register addresses, the quantity of items to be handled, and the count of actual data bytes in the field.

7.8.7 CRC Check Field

Messages include an error-checking field, operating on the basis of a Cyclical Redundancy Check (CRC) method. The CRC field checks the contents of the entire message. It is applied regardless of any parity check method used for the individual characters of the message. The CRC value is calculated by the transmitting device, which appends the CRC as the last field in the message. The receiving device recalculates a CRC during receipt of the message and compares the calculated value to the actual value received in the CRC field. If the two values are unequal, a bus time-out results. The error-checking field contains a 16-bit binary value implemented as two 8-bit bytes. When this is done, the low-order byte of the field is appended first, followed by the high-order byte. The CRC high-order byte is the last byte sent in the message.

7.8.8 Coil Register Addressing

In Modbus, all data are organized in coils and holding registers. Coils hold a single bit, whereas holding registers hold a 2-byte word (i.e. 16 bits). All data addresses in Modbus messages are referenced to zero. The first occurrence of a data item is addressed as item number zero. For example: The coil known as 'coil 1' in a programmable controller is addressed as coil 0000 in the data address field of a Modbus message. Coil 127 decimal is addressed as coil 007EHEX (126 decimal).
Holding register 40001 is addressed as register 0000 in the data address field of the message. The function code field already specifies a 'holding register' operation. Therefore, the '4XXXX' reference is implicit. Holding register 40108 is addressed as register 006BHEX (107 decimal).

Coil Number	Description	Signal Direction
1-16	Frequency converter control word (see table below)	Master to slave
17-32	Frequency converter speed or set-point reference Range 0x0 – 0xFFFF (-200% ... ~200%)	Master to slave
33-48	Frequency converter status word (see table below)	Slave to master
49-64	Open loop mode: Frequency converter output frequency Closed loop mode: Frequency converter feedback signal	Slave to master
65	Parameter write control (master to slave) 0 = Parameter changes are written to the RAM of the frequency converter 1 = Parameter changes are written to the RAM and EEPROM of the frequency converter.	Master to slave
66-65536	Reserved	

Coil	0	1
01	Preset reference LSB	
02	Preset reference MSB	
03	DC brake	No DC brake
04	Coast stop	No coast stop
05	Quick stop	No quick stop
06	Freeze freq.	No freeze freq.
07	Ramp stop	Start
08	No reset	Reset
09	No jog	Jog
10	Ramp 1	Ramp 2
11	Data not valid	Data valid
12	Relay 1 off	Relay 1 on
13	Relay 2 off	Relay 2 on
14	Set up LSB	
15	Set up MSB	
16	No reversing	Reversing
Frequency converter control word (FC profile)		

Coil	0	1
33	Control not ready	Control ready
34	Frequency converter not ready	Frequency converter ready
35	Coasting stop	Safety closed
36	No alarm	Alarm
37	Not used	Not used
38	Not used	Not used
39	Not used	Not used
40	No warning	Warning
41	Not at reference	At reference
42	Hand mode	Auto mode
43	Out of freq. range	In frequency range
44	Stopped	Running
45	Not used	Not used
46	No voltage warning	Voltage warning
47	Not in current limit	Current limit
48	No thermal warning	Thermal warning
Frequency converter status word (FC profile)		

Holding registers

Register Number	Description
00001-00006	Reserved
00007	Last error code from an FC data object interface
00008	Reserved
00009	Parameter index*
00010-00990	000 parameter group (parameters 001 through 099)
01000-01990	100 parameter group (parameters 100 through 199)
02000-02990	200 parameter group (parameters 200 through 299)
03000-03990	300 parameter group (parameters 300 through 399)
04000-04990	400 parameter group (parameters 400 through 499)
...	...
49000-49990	4900 parameter group (parameters 4900 through 4999)
50000	Input data: Frequency converter control word register (CTW).
50010	Input data: Bus reference register (REF).
...	...
50200	Output data: Frequency converter status word register (STW).
50210	Output data: Frequency converter main actual value register (MAV).

* Used to specify the index number to be used when accessing an indexed parameter.

7.8.9 How to Control the Frequency Converter

This section describes codes which can be used in the function and data fields of a Modbus RTU message. For a complete description of all the message fields please refer to the section *Modbus RTU Message Framing Structure.*

7.8.10 Function Codes Supported by Modbus RTU

Modbus RTU supports use of the following function codes in the function field of a message:

Function	Function Code
Read coils	1 hex
Read holding registers	3 hex
Write single coil	5 hex
Write single register	6 hex
Write multiple coils	F hex
Write multiple registers	10 hex
Get comm. event counter	B hex
Report slave ID	11 hex

Function	Function Code	Sub-function code	Sub-function
Diagnostics	8	1	Restart communication
		2	Return diagnostic register
		10	Clear counters and diagnostic register
		11	Return bus message count
		12	Return bus communication error count
		13	Return bus exception error count
		14	Return slave message count

7

7.8.11 Modbus Exception Codes

For a full explanation of the structure of an exception code response, please refer to the section *Modbus RTU Message Framing Structure, Function Field.*

Modbus Exception Codes

Code	Name	Meaning
1	Illegal function	The function code received in the query is not an allowable action for the server (or slave). This may be because the function code is only applicable to newer devices, and was not implemented in the unit selected. It could also indicate that the server (or slave) is in the wrong state to process a request of this type, for example because it is not configured and is being asked to return register values.
2	Illegal data address	The data address received in the query is not an allowable address for the server (or slave). More specifically, the combination of reference number and transfer length is invalid. For a controller with 100 registers, a request with offset 96 and length 4 would succeed, a request with offset 96 and length 5 will generate exception 02.
3	Illegal data value	A value contained in the query data field is not an allowable value for server (or slave). This indicates a fault in the structure of the remainder of a complex request, such as that the implied length is incorrect. It specifically does NOT mean that a data item submitted for storage in a register has a value outside the expectation of the application program, since the Modbus protocol is unaware of the significance of any particular value of any particular register.
4	Slave device failure	An unrecoverable error occurred while the server (or slave) was attempting to perform the requested action.

7.9 How to Access Parameters

7.9.1 Parameter Handling

The PNU (Parameter Number) is translated from the register address contained in the Modbus read or write message. The parameter number is translated to Modbus as (10 x parameter number) DECIMAL.

7.9.2 Storage of Data

The Coil 65 decimal determines whether data written to the frequency converter are stored in EEPROM and RAM (coil 65 = 1) or only in RAM (coil 65 = 0).

7.9.3 IND

The array index is set in Holding Register 9 and used when accessing array parameters.

7.9.4 Text Blocks

Parameters stored as text strings are accessed in the same way as the other parameters. The maximum text block size is 20 characters. If a read request for a parameter is for more characters than the parameter stores, the response is truncated. If the read request for a parameter is for fewer characters than the parameter stores, the response is space filled.

7.9.5 Conversion Factor

The different attributes for each parameter can be seen in the section on factory settings. Since a parameter value can only be transferred as a whole number, a conversion factor must be used to transfer decimals. Please refer to the *Parameters section*.

7.9.6 Parameter Values

Standard Data Types
Standard data types are int16, int32, uint8, uint16 and uint32. They are stored as 4x registers (40001 – 4FFFF). The parameters are read using function 03HEX "Read Holding Registers." Parameters are written using the function 6HEX "Preset Single Register" for 1 register (16 bits), and the function 10HEX "Preset Multiple Registers" for 2 registers (32 bits). Readable sizes range from 1 register (16 bits) up to 10 registers (20 characters).

Non standard Data Types
Non standard data types are text strings and are stored as 4x registers (40001 – 4FFFF). The parameters are read using function 03HEX "Read Holding Registers" and written using function 10HEX "Preset Multiple Registers." Readable sizes range from 1 register (2 characters) up to 10 registers (20 characters).

7.10 Examples

The following examples illustrate various Modbus RTU commands. If an error occurs, please refer to the Exception Codes section.

7.10.1 Read Coil Status (01 HEX)

Description

This function reads the ON/OFF status of discrete outputs (coils) in the frequency converter. Broadcast is never supported for reads.

Query

The query message specifies the starting coil and quantity of coils to be read. Coil addresses start at zero, i.e. coil 33 is addressed as 32.

Example of a request to read coils 33-48 (Status Word) from slave device 01:

Field Name	Example (HEX)
Slave Address	01 (frequency converter address)
Function	01 (read coils)
Starting Address HI	00
Starting Address LO	20 (32 decimals) Coil 33
No. of Points HI	00
No. of Points LO	10 (16 decimals)
Error Check (CRC)	-

Response

The coil status in the response message is packed as one coil per bit of the data field. Status is indicated as: 1 = ON; 0 = OFF. The LSB of the first data byte contains the coil addressed in the query. The other coils follow toward the high order end of this byte, and from 'low order to high order' in subsequent bytes.

If the returned coil quantity is not a multiple of eight, the remaining bits in the final data byte will be padded with zeros (toward the high order end of the byte). The Byte Count field specifies the number of complete bytes of data.

Field Name	Example (HEX)
Slave Address	01 (frequency converter address)
Function	01 (read coils)
Byte Count	02 (2 bytes of data)
Data (Coils 40-33)	07
Data (Coils 48-41)	06 (STW=0607hex)
Error Check (CRC)	-

NB!

Coils and registers are addressed explicit with an off-set of -1 in Modbus.

I.e. Coil 33 is addressed as Coil 32.

7.10.2 Force/Write Single Coil (05 HEX)

Description

This function forces a writes a coil to either ON or OFF. When broadcast the function forces the same coil references in all attached slaves.

Query

The query message specifies the coil 65 (parameter write control) to be forced. Coil addresses start at zero, i.e. coil 65 is addressed as 64. Force Data = 00 00HEX (OFF) or FF 00HEX (ON).

Field Name	Example (HEX)
Slave Address	01 (frequency converter address)
Function	05 (write single coil)
Coil Address HI	00
Coil Address LO	40 (64 decimal) Coil 65
Force Data HI	FF
Force Data LO	00 (FF 00 = ON)
Error Check (CRC)	-

Response

The normal response is an echo of the query, returned after the coil state has been forced.

Field Name	Example (HEX)
Slave Address	01
Function	05
Force Data HI	FF
Force Data LO	00
Quantity of Coils HI	00
Quantity of Coils LO	01
Error Check (CRC)	-

7.10.3 Force/Write Multiple Coils (0F HEX)

This function forces each coil in a sequence of coils to either ON or OFF. When broadcast the function forces the same coil references in all attached slaves. .

The query message specifies the coils 17 to 32 (speed set-point) to be forced.

NB!
Coil addresses start at zero, i.e. coil 17 is addressed as 16.

Field Name	Example (HEX)
Slave Address	01 (frequency converter address)
Function	0F (write multiple coils)
Coil Address HI	00
Coil Address LO	10 (coil address 17)
Quantity of Coils HI	00
Quantity of Coils LO	10 (16 coils)
Byte Count	02
Force Data HI (Coils 8-1)	20
Force Data LO (Coils 10-9)	00 (ref. = 2000hex)
Error Check (CRC)	-

Response
The normal response returns the slave address, function code, starting address, and quantity of coiles forced.

Field Name	Example (HEX)
Slave Address	01 (frequency converter address)
Function	0F (write multiple coils)
Coil Address HI	00
Coil Address LO	10 (coil address 17)
Quantity of Coils HI	00
Quantity of Coils LO	10 (16 coils)
Error Check (CRC)	-

7.10.4 Read Holding Registers (03 HEX)

Description

This function reads the contents of holding registers in the slave.

Query

The query message specifies the starting register and quantity of registers to be read. Register addresses start at zero, i.e. registers 1-4 are addressed as 0-3.

Example: Read par. 3-03, *Maximum Reference*, register 03030.

Field Name	Example (HEX)
Slave Address	01
Function	03 (read holding registers)
Starting Address HI	0B (Register address 3029)
Starting Address LO	05 (Register address 3029)
No. of Points HI	00
No. of Points LO	02 - (Par. 3-03 is 32 bits long, i.e. 2 registers)
Error Check (CRC)	-

Response

The register data in the response message are packed as two bytes per register, with the binary contents right justified within each byte. For each register, the first byte contains the high order bits and the second contains the low order bits.

Example: Hex 0016E360 = 1.500.000 = 1500 RPM.

Field Name	Example (HEX)
Slave Address	01
Function	03
Byte Count	04
Data HI (Register 3030)	00
Data LO (Register 3030)	16
Data HI (Register 3031)	E3
Data LO (Register 3031)	60
Error Check (CRC)	-

7.10.5 Preset Single Register (06 HEX)

Description

This function presets a value into a single holding register.

Query

The query message specifies the register reference to be preset. Register addresses start at zero, i.e. register 1 is addressed as 0.

Example: Write to par. 1-00, register 1000.

Field Name	Example (HEX)
Slave Address	01
Function	06
Register Address HI	03 (Register address 999)
Register Address LO	E7 (Register address 999)
Preset Data HI	00
Preset Data LO	01
Error Check (CRC)	-

Response

Response The normal response is an echo of the query, returned after the register contents have been passed.

Field Name	Example (HEX)
Slave Address	01
Function	06
Register Address HI	03
Register Address LO	E7
Preset Data HI	00
Preset Data LO	01
Error Check (CRC)	-

7.10.6 Preset Multiple Registers (10 HEX)

Description

This function presets values into a sequence of holding registers.

Query

The query message specifies the register references to be preset. Register addresses start at zero, i.e. register 1 is addressed as 0. Example of a request to preset two registers (set parameter 1-05 = 738 (7.38 A)):

Field Name	Example (HEX)
Slave Address	01
Function	10
Starting Address HI	04
Starting Address LO	19
No. of Registers HI	00
No. of registers LO	02
Byte Count	04
Write Data HI (Register 4: 1049)	00
Write Data LO (Register 4: 1049)	00
Write Data HI (Register 4: 1050)	02
Write Data LO (Register 4: 1050)	E2
Error Check (CRC)	-

Response

The normal response returns the slave address, function code, starting address, and quantity of registers preset.

Field Name	Example (HEX)
Slave Address	01
Function	10
Starting Address HI	04
Starting Address LO	19
No. of Registers HI	00
No. of registers LO	02
Error Check (CRC)	-

7.11 Danfoss FC Control Profile

7.11.1 Control Word According to FC Profile(par. 8-10 *Control Profile* = FC profile)

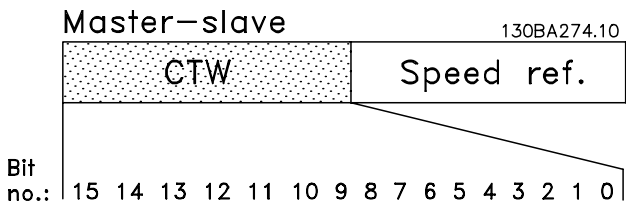

Bit	Bit value = 0	Bit value = 1
00	Reference value	external selection lsb
01	Reference value	external selection msb
02	DC brake	Ramp
03	Coasting	No coasting
04	Quick stop	Ramp
05	Hold output frequency	use ramp
06	Ramp stop	Start
07	No function	Reset
08	No function	Jog
09	Ramp 1	Ramp 2
10	Data invalid	Data valid
11	No function	Relay 01 active
12	No function	Relay 02 active
13	Parameter set-up	selection lsb
14	Parameter set-up	selection msb
15	No function	Reverse

Explanation of the Control Bits

Bits 00/01

Bits 00 and 01 are used to choose between the four reference values, which are pre-programmed in par. 3-10 *Preset Reference* according to the following table:

Programmed ref. value	Par.	Bit 01	Bit 00
1	par. 3-10 *Preset Reference* [0]	0	0
2	par. 3-10 *Preset Reference* [1]	0	1
3	par. 3-10 *Preset Reference* [2]	1	0
4	par. 3-10 *Preset Reference* [3]	1	1

NB!
Make a selection in par. 8-56 *Preset Reference Select* to define how Bit 00/01 gates with the corresponding function on the digital inputs.

Bit 02, DC brake:

Bit 02 = '0' leads to DC braking and stop. Set braking current and duration in par. 2-01 *DC Brake Current* and par. 2-02 *DC Braking Time*. Bit 02 = '1' leads to ramping.

Bit 03, Coasting:

Bit 03 = '0': The frequency converter immediately "lets go" of the motor, (the output transistors are "shut off") and it coasts to a standstill. Bit 03 = '1': The frequency converter starts the motor if the other starting conditions are met.

NB!
Make a selection in par. 8-50 *Coasting Select* to define how Bit 03 gates with the corresponding function on a digital input.

Bit 04, Quick stop:

Bit 04 = '0': Makes the motor speed ramp down to stop (set in par. 3-81 *Quick Stop Ramp Time*.

Bit 05, Hold output frequency

Bit 05 = '0': The present output frequency (in Hz) freezes. Change the frozen output frequency only by means of the digital inputs (par. 5-10 *Terminal 18 Digital Input* to par. 5-15 *Terminal 33 Digital Input*) programmed to *Speed up* and *Slow down*.

NB!
If Freeze output is active, the frequency converter can only be stopped by the following:

- Bit 03 Coasting stop
- Bit 02 DC braking
- Digital input (par. 5-10 *Terminal 18 Digital Input* to par. 5-15 *Terminal 33 Digital Input*) programmed to *DC braking*, *Coasting stop*, or *Reset* and *coasting stop*.

7

Bit 06, Ramp stop/start:

Bit 06 = '0': Causes a stop and makes the motor speed ramp down to stop via the selected ramp down parameter. Bit 06 = '1': Permits the frequency converter to start the motor, if the other starting conditions are met.

NB!
Make a selection in par. 8-53 *Start Select* to define how Bit 06 Ramp stop/start gates with the corresponding function on a digital input.

Bit 07, Reset: Bit 07 = '0': No reset. Bit 07 = '1': Resets a trip. Reset is activated on the signal's leading edge, i.e. when changing from logic '0' to logic '1'.

Bit 08, Jog:

Bit 08 = '1': The output frequency is determined by par. 3-19 *Jog Speed [RPM]*.

Bit 09, Selection of ramp 1/2:

Bit 09 = "0": Ramp 1 is active (par. 3-41 *Ramp 1 Ramp Up Time* to par. 3-42 *Ramp 1 Ramp Down Time*). Bit 09 = "1": Ramp 2 (par. 3-51 *Ramp 2 Ramp Up Time* to par. 3-52 *Ramp 2 Ramp Down Time*) is active.

Bit 10, Data not valid/Data valid:

Tell the frequency converter whether to use or ignore the control word. Bit 10 = '0': The control word is ignored. Bit 10 = '1': The control word is used. This function is relevant because the telegram always contains the control word, regardless of the telegram type. Thus, you can turn off the control word if you do not want to use it when updating or reading parameters.

Bit 11, Relay 01:

Bit 11 = "0": Relay not activated. Bit 11 = "1": Relay 01 activated provided that *Control word bit 11* is chosen in par. 5-40 *Function Relay*.

Bit 12, Relay 04:

Bit 12 = "0": Relay 04 is not activated. Bit 12 = "1": Relay 04 is activated provided that *Control word bit 12* is chosen in par. 5-40 *Function Relay*.

Bit 13/14, Selection of set-up:

Use bits 13 and 14 to choose from the four menu set-ups according to the shown table: .

Set-up	Bit 14	Bit 13
1	0	0
2	0	1
3	1	0
4	1	1

The function is only possible when *Multi Set-Ups* is selected in par. 0-10 *Active Set-up*.

NB!
Make a selection in par. 8-55 *Set-up Select* to define how Bit 13/14 gates with the corresponding function on the digital inputs.

Bit 15 Reverse:

Bit 15 = '0': No reversing. Bit 15 = '1': Reversing. In the default setting, reversing is set to digital in par. 8-54 *Reversing Select*. Bit 15 causes reversing only when Ser. communication, Logic or or Logic and is selected.

7.11.2 Status Word According to FC Profile (STW) (par. 8-10 *Control Profile* = FC profile)

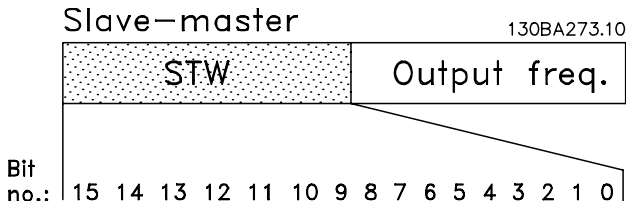

Bit	Bit = 0	Bit = 1
00	Control not ready	Control ready
01	Drive not ready	Drive ready
02	Coasting	Enable
03	No error	Trip
04	No error	Error (no trip)
05	Reserved	-
06	No error	Triplock
07	No warning	Warning
08	Speed ≠ reference	Speed = reference
09	Local operation	Bus control
10	Out of frequency limit	Frequency limit OK
11	No operation	In operation
12	Drive OK	Stopped, auto start
13	Voltage OK	Voltage exceeded
14	Torque OK	Torque exceeded
15	Timer OK	Timer exceeded

Explanation of the Status Bits

Bit 00, Control not ready/ready:

Bit 00 = '0': The frequency converter trips. Bit 00 = '1': The frequency converter controls are ready but the power component does not necessarily receive any power supply (in case of external 24 V supply to controls).

Bit 01, Drive ready:

Bit 01 = '1': The frequency converter is ready for operation but the coasting command is active via the digital inputs or via serial communication.

Bit 02, Coasting stop:

Bit 02 = '0': The frequency converter releases the motor. Bit 02 = '1': The frequency converter starts the motor with a start command.

Bit 03, No error/trip:

Bit 03 = '0' : The frequency converter is not in fault mode. Bit 03 = '1': The frequency converter trips. To re-establish operation, enter [Reset].

Bit 04, No error/error (no trip):

Bit 04 = '0': The frequency converter is not in fault mode. Bit 04 = "1": The frequency converter shows an error but does not trip.

Bit 05, Not used:
Bit 05 is not used in the status word.

Bit 06, No error / triplock:
Bit 06 = '0': The frequency converter is not in fault mode. Bit 06 = "1": The frequency converter is tripped and locked.

Bit 07, No warning/warning:
Bit 07 = '0': There are no warnings. Bit 07 = '1': A warning has occurred.

Bit 08, Speed≠ reference/speed = reference:
Bit 08 = '0': The motor is running but the present speed is different from the preset speed reference. It might e.g. be the case when the speed ramps up/down during start/stop. Bit 08 = '1': The motor speed matches the preset speed reference.

Bit 09, Local operation/bus control:
Bit 09 = '0': [STOP/RESET] is activate on the control unit or *Local control* in par. 3-13 *Reference Site* is selected. You cannot control the frequency converter via serial communication. Bit 09 = '1' It is possible to control the frequency converter via the fieldbus / serial communication.

Bit 10, Out of frequency limit:
Bit 10 = '0': The output frequency has reached the value in par. 4-11 *Motor Speed Low Limit [RPM]* or par. 4-13 *Motor Speed High Limit [RPM]*. Bit 10 = "1": The output frequency is within the defined limits.

Bit 11, No operation/in operation:
Bit 11 = '0': The motor is not running. Bit 11 = '1': The frequency converter has a start signal or the output frequency is greater than 0 Hz.

Bit 12, Drive OK/stopped, autostart:
Bit 12 = '0': There is no temporary over temperature on the inverter. Bit 12 = '1': The inverter stops because of over temperature but the unit does not trip and will resume operation once the over temperature stops.

Bit 13, Voltage OK/limit exceeded:
Bit 13 = '0': There are no voltage warnings. Bit 13 = '1': The DC voltage in the frequency converter's intermediate circuit is too low or too high.

Bit 14, Torque OK/limit exceeded:
Bit 14 = '0': The motor current is lower than the torque limit selected in par. 4-18 *Current Limit*. Bit 14 = '1': The torque limit in par. 4-18 *Current Limit* is exceeded.

Bit 15, Timer OK/limit exceeded:
Bit 15 = '0': The timers for motor thermal protection and thermal protection are not exceeded 100%. Bit 15 = '1': One of the timers exceeds 100%.

NB!
All bits in the STW are set to '0' if the connection between the Interbus option and the frequency converter is lost, or an internal communication problem has occurred.

7.11.3 Bus Speed Reference Value

Speed reference value is transmitted to the frequency converter in a relative value in %. The value is transmitted in the form of a 16-bit word; in integers (0-32767) the value 16384 (4000 Hex) corresponds to 100%. Negative figures are formatted by means of 2's complement. The Actual Output frequency (MAV) is scaled in the same way as the bus reference.

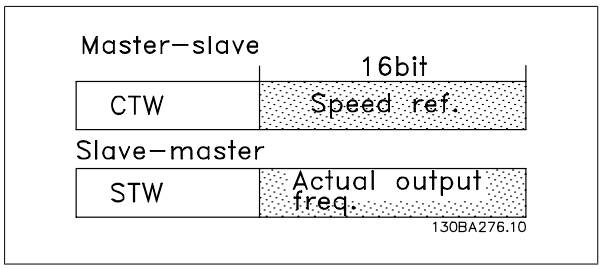

The reference and MAV are scaled as follows:

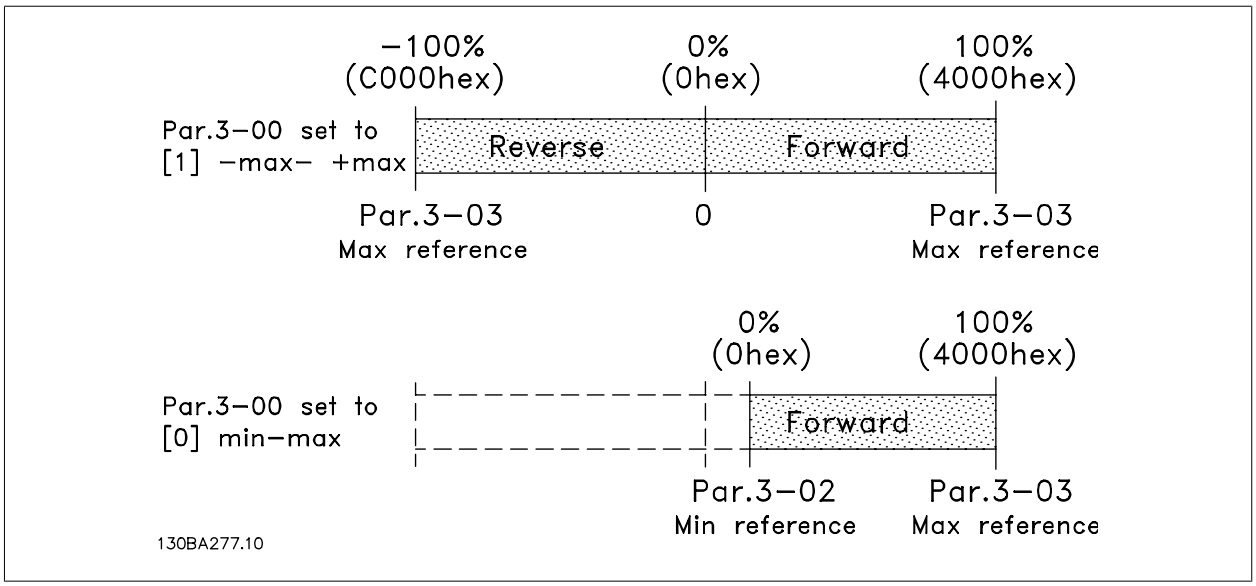

8 General Specifications and Troubleshooting

8.1 General Specifications

Mains supply 200 - 240 VAC - Normal overload 110% for 1 minute						
Frequency converter		P1K1	P1K5	P2K2	P3K0	P3K7
Typical Shaft Output [kW]		1.1	1.5	2.2	3	3.7
IP 20 / Chassis		A2	A2	A2	A3	A3
IP 21 / NEMA 1		A2	A2	A2	A3	A3
IP 55 / NEMA 12		A5	A5	A5	A5	A5
IP 66 / NEMA 12		A5	A5	A5	A5	A5
Typical Shaft Output [HP] at 208 V		1.5	2.0	2.9	4.0	4.9
Output current						
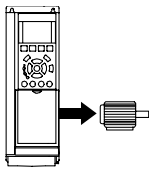	Continuous (3 x 200-240 V) [A]	6.6	7.5	10.6	12.5	16.7
	Intermittent (3 x 200-240 V) [A]	7.3	8.3	11.7	13.8	18.4
	Continuous kVA (208 V AC) [kVA]	2.38	2.70	3.82	4.50	6.00
	Max. cable size:					
	(mains, motor, brake) [mm² /AWG] 2)			4/10		
Max. input current						
	Continuous (3 x 200-240 V) [A]	5.9	6.8	9.5	11.3	15.0
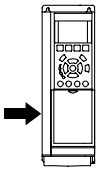	Intermittent (3 x 200-240 V) [A]	6.5	7.5	10.5	12.4	16.5
	Max. pre-fuses1) [A]	20	20	20	32	32
	Environment					
	Estimated power loss at rated max. load [W] 4)	63	82	116	155	185
	Weight enclosure IP20 [kg]	4.9	4.9	4.9	6.6	6.6
	Weight enclosure IP21 [kg]	5.5	5.5	5.5	7.5	7.5
	Weight enclosure IP55 [kg]	13.5	13.5	13.5	13.5	13.5
	Weight enclosure IP 66 [kg]	13.5	13.5	13.5	13.5	13.5
	Efficiency 3)	0.96	0.96	0.96	0.96	0.96

8

Mains supply 3 x 200 - 240 VAC - Normal overload 110% for 1 minute

IP 20 / Chassis (B3+4 and C3+4 may be converted to IP21 using a conversion kit (Please contact Danfoss)	B3	B3	B3	B4	B4	C3	C3	C4	C4
IP 21 / NEMA 1	B1	B1	B1	B2	C1	C1	C1	C2	C2
IP 55 / NEMA 12	B1	B1	B1	B2	C1	C1	C1	C2	C2
IP 66 / NEMA 12	B1	B1	B1	B2	C1	C1	C1	C2	C2
Frequency converter Typical Shaft Output [kW]	P5K5 5.5	P7K5 7.5	P11K 11	P15K 15	P18K 18.5	P22K 22	P30K 30	P37K 37	P45K 45
Typical Shaft Output [HP] at 208 V	7.5	10	15	20	25	30	40	50	60
Output current									
Continuous (3 x 200-240 V) [A]	24.2	30.8	46.2	59.4	74.8	88.0	115	143	170
Intermittent (3 x 200-240 V) [A]	26.6	33.9	50.8	65.3	82.3	96.8	127	157	187
Continuous kVA (208 V AC) [kVA]	8.7	11.1	16.6	21.4	26.9	31.7	41.4	51.5	61.2
Max. cable size:									
(mains, motor, brake) [mm² /AWG] [2]		10/7		35/2		50/1/0 (B4=35/2)		95/4/0	120/250 MCM
With mains disconnect switch included:		16/6		35/2		35/2		70/3/0	185/ kcmil350
Max. input current									
Continuous (3 x 200-240 V) [A]	22.0	28.0	42.0	54.0	68.0	80.0	104.0	130.0	154.0
Intermittent (3 x 200-240 V) [A]	24.2	30.8	46.2	59.4	74.8	88.0	114.0	143.0	169.0
Max. pre-fuses[1] [A]	63	63	63	80	125	125	160	200	250
Environment:									
Estimated power loss at rated max. load [W] [4]	269	310	447	602	737	845	1140	1353	1636
Weight enclosure IP20 [kg]	12	12	12	23.5	23.5	35	35	50	50
Weight enclosure IP21 [kg]	23	23	23	27	45	45	45	65	65
Weight enclosure IP55 [kg]	23	23	23	27	45	45	45	65	65
Weight enclosure IP 66 [kg]	23	23	23	27	45	45	45	65	65
Efficiency [3]	0.96	0.96	0.96	0.96	0.96	0.97	0.97	0.97	0.97

Mains Supply 3 x 380 - 480 VAC - Normal overload 110% for 1 minute

Frequency converter		P1K1	P1K5	P2K2	P3K0	P4K0	P5K5	P7K5
Typical Shaft Output [kW]		1.1	1.5	2.2	3	4	5.5	7.5
Typical Shaft Output [HP] at 460 V		1.5	2.0	2.9	4.0	5.0	7.5	10
IP 20 / Chassis		A2	A2	A2	A2	A2	A3	A3
IP 21 / NEMA 1								
IP 55 / NEMA 12		A5	A5	A5	A5	A5	A5	A5
IP 66 / NEMA 12		A5	A5	A5	A5	A5	A5	A5
Output current								
	Continuous (3 x 380-440 V) [A]	3	4.1	5.6	7.2	10	13	16
	Intermittent (3 x 380-440 V) [A]	3.3	4.5	6.2	7.9	11	14.3	17.6
	Continuous (3 x 441-480 V) [A]	2.7	3.4	4.8	6.3	8.2	11	14.5
	Intermittent (3 x 441-480 V) [A]	3.0	3.7	5.3	6.9	9.0	12.1	15.4
	Continuous kVA (400 V AC) [kVA]	2.1	2.8	3.9	5.0	6.9	9.0	11.0
	Continuous kVA (460 V AC) [kVA]	2.4	2.7	3.8	5.0	6.5	8.8	11.6
	Max. cable size: (mains, motor, brake) [[mm²/ AWG] 2)				4/ 10			
Max. input current								
	Continuous (3 x 380-440 V) [A]	2.7	3.7	5.0	6.5	9.0	11.7	14.4
	Intermittent (3 x 380-440 V) [A]	3.0	4.1	5.5	7.2	9.9	12.9	15.8
	Continuous (3 x 441-480 V) [A]	2.7	3.1	4.3	5.7	7.4	9.9	13.0
	Intermittent (3 x 441-480 V) [A]	3.0	3.4	4.7	6.3	8.1	10.9	14.3
	Max. pre-fuses 1)[A]	10	10	20	20	20	32	32
	Environment							
	Estimated power loss at rated max. load [W] 4)	58	62	88	116	124	187	255
	Weight enclosure IP20 [kg]	4.8	4.9	4.9	4.9	4.9	6.6	6.6
	Weight enclosure IP 21 [kg]							
	Weight enclosure IP 55 [kg]	13.5	13.5	13.5	13.5	13.5	14.2	14.2
	Weight enclosure IP 66 [kg]	13.5	13.5	13.5	13.5	13.5	14.2	14.2
	Efficiency 3)	0.96	0.97	0.97	0.97	0.97	0.97	0.97

Mains Supply 3 x 380 - 480 VAC - Normal overload 110% for 1 minute

Frequency converter Typical Shaft Output [kW]	P11K 11	P15K 15	P18K 18.5	P22K 22	P30K 30	P37K 37	P45K 45	P55K 55	P75K 75	P90K 90
Typical Shaft Output [HP] at 460 V	15	20	25	30	40	50	60	75	100	125
IP 20 / Chassis (B3+4 and C3+4 may be converted to IP21 using a conversion kit (Please contact Danfoss)	B3	B3	B3	B4	B4	B4	C3	C3	C4	C4
IP 21 / NEMA 1	B1	B1	B1	B2	B2	C1	C1	C1	C2	C2
IP 55 / NEMA 12	B1	B1	B1	B2	B2	C1	C1	C1	C2	C2
IP 66 / NEMA 12	B1	B1	B1	B2	B2	C1	C1	C1	C2	C2
Output current										
Continuous (3 x 380-439 V) [A]	24	32	37.5	44	61	73	90	106	147	177
Intermittent (3 x 380-439 V) [A]	26.4	35.2	41.3	48.4	67.1	80.3	99	117	162	195
Continuous (3 x 440-480 V) [A]	21	27	34	40	52	65	80	105	130	160
Intermittent (3 x 440-480 V) [A]	23.1	29.7	37.4	44	61.6	71.5	88	116	143	176
Continuous kVA (400 V AC) [kVA]	16.6	22.2	26	30.5	42.3	50.6	62.4	73.4	102	123
Continuous kVA (460 V AC) [kVA]	16.7	21.5	27.1	31.9	41.4	51.8	63.7	83.7	104	128
Max. cable size: (mains, motor, brake) [[mm²/ AWG] 2)	10/7			35/2		50/1/0 (B4=35/2)			95/ 4/0	120/ MCM250
With mains disconnect switch included:			16/6			35/2	35/2		70/3/0	185/ kcmil350
Max. input current										
Continuous (3 x 380-439 V) [A]	22	29	34	40	55	66	82	96	133	161
Intermittent (3 x 380-439 V) [A]	24.2	31.9	37.4	44	60.5	72.6	90.2	106	146	177
Continuous (3 x 440-480 V) [A]	19	25	31	36	47	59	73	95	118	145
Intermittent (3 x 440-480 V) [A]	20.9	27.5	34.1	39.6	51.7	64.9	80.3	105	130	160
Max. pre-fuses[1)][A]	63	63	63	63	80	100	125	160	250	250
Environment										
Estimated power loss at rated max. load [W] 4)	278	392	465	525	698	739	843	1083	1384	1474
Weight enclosure IP20 [kg]	12	12	12	23.5	23.5	23.5	35	35	50	50
Weight enclosure IP 21 [kg]	23	23	23	27	27	45	45	45	65	65
Weight enclosure IP 55 [kg]	23	23	23	27	27	45	45	45	65	65
Weight enclosure IP 66 [kg]	23	23	23	27	27	45	45	45	65	65
Efficiency 3)	0.98	0.98	0.98	0.98	0.98	0.98	0.98	0.98	0.98	0.99

8.1.1 Mains Supply 3 x 525 - 600 VAC - T6

Normal overload 110% for 1 minute

Size:	P1K1	P1K5	P2K2	P3K0	P3K7	P4K0	P5K5	P7K5	P11K	P15K	P18K	P22K	P30K	P37K	P45K	P55K	P75K	P90K
Typical Shaft Output [kW]	1.1	1.5	2.2	3	3.7	4	5.5	7.5	11	15	18.5	22	30	37	45	55	75	90
IP 20 / Chassis	A3	A3	A3	A3	A2	A3	A3	A3	B3	B3	B3	B4	B4	B4	C3	C3	C4	C4
IP 21 / NEMA 1	A3	A3	A3	A3	A2	A3	A3	A3	B1	B1	B1	B2	B2	C1	C1	C1	C2	C2
IP 55 / NEMA 12	A5	A5	A5	A5	A5	A5	A5	A5	B1	B1	B1	B2	B2	C1	C1	C1	C2	C2
IP 66 / NEMA 12	A5	A5	A5	A5	A5	A5	A5	A5	B1	B1	B1	B2	B2	C1	C1	C1	C2	C2
Output current																		
Continuous (3 x 525-550 V) [A]	2.6	2.9	4.1	5.2	-	6.4	9.5	11.5	19	23	28	36	43	54	65	87	105	137
Intermittent (3 x 525-550 V) [A]	2.9	3.2	4.5	5.7	-	7.0	10.5	12.7	21	25	31	40	47	59	72	96	116	151
Continuous (3 x 525-600 V) [A]	2.4	2.7	3.9	4.9	-	6.1	9.0	11.0	18	22	27	34	41	52	62	83	100	131
Intermittent (3 x 525-600 V) [A]	2.6	3.0	4.3	5.4	-	6.7	9.9	12.1	20	24	30	37	45	57	68	91	110	144
Continuous kVA (525 V AC) [kVA]	2.5	2.8	3.9	5.0	-	6.1	9.0	11.0	18.1	21.9	26.7	34.3	41	51.4	61.9	82.9	100	130.5
Continuous kVA (575 V AC) [kVA]	2.4	2.7	3.9	4.9	-	6.1	9.0	11.0	17.9	21.9	26.9	33.9	40.8	51.8	61.7	82.7	99.6	130.5
Max. cable size, IP 21/55/66 (mains, motor, brake) [mm²]/[AWG] 2)	4/ 10								10/ 7			25/ 4			50/ 1/0		95/ 4/0	120/ MCM250
Max. cable size, IP 20 (mains, motor, brake) [mm²]/[AWG] 2)	4/ 10								16/ 6			35/ 2			50/ 1/0		95/ 4/0	150/ MCM250 5)
With mains disconnect switch included:	4/10								16/6					35/2			70/3/0	185/ kcmil350
Max. input current																		
Continuous (3 x 525-600 V) [A]	2.4	2.7	4.1	5.2	-	5.8	8.6	10.4	17.2	20.9	25.4	32.7	39	49	59	78.9	95.3	124.3
Intermittent (3 x 525-600 V) [A]	2.7	3.0	4.5	5.7	-	6.4	9.5	11.5	19	23	28	36	43	54	65	87	105	137
Max. pre-fuses1) [A]	10	10	20	20	-	20	32	32	63	63	63	63	80	100	125	160	250	250
Environment:																		
Estimated power loss at rated max. load [W] 4)	50	65	92	122	-	145	195	261	300	400	475	525	700	750	850	1100	1400	1500
Weight enclosure IP20 [kg]	6.5	6.5	6.5	6.5	-	6.5	6.6	6.6	12	12	12	23.5	23.5	23.5	35	35	50	50
Weight enclosure IP21/55 [kg]	13.5	13.5	13.5	13.5	13.5	13.5	14.2	14.2	23	23	23	27	27	27	45	45	65	65
Efficiency 4)	0.97	0.97	0.97	0.97	-	0.97	0.97	0.97	0.98	0.98	0.98	0.98	0.98	0.98	0.98	0.98	0.98	0.98

Table 8.1: 5) With brake and load sharing 95/ 4/0

8.1.2 Mains Supply High Power

Mains Supply 3 x 380 - 480 VAC		P110	P132	P160	P200	P250
	Typical Shaft output at 400 V [kW]	110	132	160	200	250
	Typical Shaft output at 460 V [HP]	150	200	250	300	350
	Enclosure IP21	D1	D1	D2	D2	D2
	Enclosure IP54	D1	D1	D2	D2	D2
	Enclosure IP00	D3	D3	D4	D4	D4
	Output current					
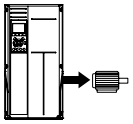	Continuous (at 400 V) [A]	212	260	315	395	480
	Intermittent (60 sec overload) (at 400 V) [A]	233	286	347	435	528
	Continuous (at 460/ 480 V) [A]	190	240	302	361	443
	Intermittent (60 sec overload) (at 460/ 480 V) [A]	209	264	332	397	487
	Continuous KVA (at 400 V) [KVA]	147	180	218	274	333
	Continuous KVA (at 460 V) [KVA]	151	191	241	288	353
Max. input current						
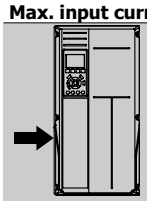	Continuous (at 400 V) [A]	204	251	304	381	463
	Continuous (at 460/ 480 V) [A]	183	231	291	348	427
	Max. cable size, mains motor, brake and load share [mm² (AWG[2])]	2 x 70 (2 x 2/0)	2 x 70 (2 x 2/0)	2 x 150 (2 x 300 mcm)	2 x 150 (2 x 300 mcm)	2 x 150 (2 x 300 mcm)
	Max. external pre-fuses [A] [1]	300	350	400	500	630
	Estimated power loss at rated max. load [W] [4], 400 V	3234	3782	4213	5119	5893
	Estimated power loss at rated max. load [W] [4], 460 V	2947	3665	4063	4652	5634
	Weight, enclosure IP21, IP 54 [kg]	96	104	125	136	151
	Weight, enclosure IP00 [kg]	82	91	112	123	138
	Efficiency[4]	0.98				
	Output frequency	0 - 800 Hz				
	Heatsink overtemp. trip	85 °C	90 °C	105 °C	105 °C	115 °C
	Power card ambient trip	60 °C				

8

Mains Supply 3 x 380 - 480 VAC

		P315	P355	P400	P450
	Typical Shaft output at 400 V [kW]	315	355	400	450
	Typical Shaft output at 460 V [HP]	450	500	600	600
	Enclosure IP21	E1	E1	E1	E1
	EnclosureIP54	E1	E1	E1	E1
	Enclosure IP00	E2	E2	E2	E2
	Output current				
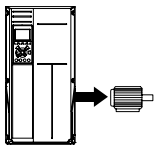	Continuous (at 400 V) [A]	600	658	745	800
	Intermittent (60 sec over-load) (at 400 V) [A]	660	724	820	880
	Continuous (at 460/ 480 V) [A]	540	590	678	730
	Intermittent (60 sec over-load) (at 460/ 480 V) [A]	594	649	746	803
	Continuous KVA (at 400 V) [KVA]	416	456	516	554
	Continuous KVA (at 460 V) [KVA]	430	470	540	582
Max. input current					
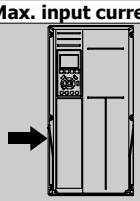	Continuous (at 400 V) [A]	590	647	733	787
	Continuous (at 460/ 480 V) [A]	531	580	667	718
	Max. cable size, mains, motor and load share [mm^2 (AWG[2])]	4x240 (4x500 mcm)	4x240 (4x500 mcm)	4x240 (4x500 mcm)	4x240 (4x500 mcm)
	Max. cable size, brake [mm^2 (AWG[2])]	2 x 185 (2 x 350 mcm)	2 x 185 (2 x 350 mcm)	2 x 185 (2 x 350 mcm)	2 x 185 (2 x 350 mcm)
	Max. external pre-fuses [A] [1]	700	900	900	900
	Estimated power loss at rated max. load [W] [4], 400 V	6790	7701	8879	9670
	Estimated power loss at rated max. load [W] [4], 460 V	6082	6953	8089	8803
	Weight, enclosure IP21, IP 54 [kg]	263	270	272	313
	Weight, enclosure IP00 [kg]	221	234	236	277
	Efficiency[4]	0.98			
	Output frequency	0 - 600 Hz			
	Heatsink overtemp. trip	95 °C			
	Power card ambient trip	68 °C			

8

Mains Supply 3 x 380 - 480 VAC

	P500	P560	P630	P710	P800	P1M0
Typical Shaft output at 400 V [kW]	500	560	630	710	800	1000
Typical Shaft output at 460 V [HP]	650	750	900	1000	1200	1350
Enclosure IP21, 54 without/ with options cabinet	F1/F3	F1/F3	F1/F3	F1/F3	F2/F4	F2/F4
Output current						
Continuous (at 400 V) [A]	880	990	1120	1260	1460	1720
Intermittent (60 sec overload) (at 400 V) [A]	968	1089	1232	1386	1606	1892
Continuous (at 460/ 480 V) [A]	780	890	1050	1160	1380	1530
Intermittent (60 sec overload) (at 460/ 480 V) [A]	858	979	1155	1276	1518	1683
Continuous KVA (at 400 V) [KVA]	610	686	776	873	1012	1192
Continuous KVA (at 460 V) [KVA]	621	709	837	924	1100	1219
Max. input current						
Continuous (at 400 V) [A]	857	964	1090	1227	1422	1675
Continuous (at 460/ 480 V) [A]	759	867	1022	1129	1344	1490
Max. cable size,motor [mm² (AWG[2])]	8x150 (8x300 mcm)				12x150 (12x300 mcm)	
Max. cable size,mains [mm² (AWG[2])]	8x240 (8x500 mcm)					
Max. cable size, loadsharing [mm² (AWG[2])]	4x120 (4x250 mcm)					
Max. cable size, brake [mm² (AWG[2])]	4x185 (4x350 mcm)				6x185 (6x350 mcm)	
Max. external prefuses [A] [1]	1600		2000		2500	
Est. power loss at rated max. load [W][4] , 400 V, F1 & F2	10647	12338	13201	15436	18084	20358
Est. power loss at rated max. load [W] [4] , 460 V, F1 & F2	9414	11006	12353	14041	17137	17752
Max added losses of A1 RFI, Circuit Breaker or Disconnect, & Contactor, F3 & F4	963	1054	1093	1230	2280	2541
Max Panel Options Losses	400					
Weight, enclosure IP21, IP 54 [kg]	1004/ 1299	1004/ 1299	1004/ 1299	1004/ 1299	1246/ 1541	1246/ 1541
Weight Rectifier Module [kg]	102	102	102	102	136	136
Weight Inverter Module [kg]	102	102	102	136	102	102
Efficiency[4]	0.98					
Output frequency	0-600 Hz					
Heatsink overtemp. trip	95 °C					
Power card ambient trip	68 °C					

Mains Supply 3 x 525- 690 VAC						
		P45K	P55K	P75K	P90K	P110
	Typical Shaft output at 550 V [kW]	37	45	55	75	90
	Typical Shaft output at 575 V [HP]	50	60	75	100	125
	Typical Shaft output at 690 V [kW]	45	55	75	90	110
	Enclosure IP21	D1	D1	D1	D1	D1
	Enclosure IP54	D1	D1	D1	D1	D1
	Enclosure IP00	D2	D2	D2	D2	D2
Output current						
	Continuous (at 3 x 525-550 V) [A]	56	76	90	113	137
	Intermittent (60 sec overload) (at 550 V) [A]	62	84	99	124	151
	Continuous (at 3 x 551-690 V) [A]	54	73	86	108	131
	Intermittent (60 sec overload) (at 575/ 690 V) [A]	59	80	95	119	144
	Continuous KVA (at 550 V) [KVA]	53	72	86	108	131
	Continuous KVA (at 575 V) [KVA]	54	73	86	108	130
	Continuous KVA (at 690 V) [KVA]	65	87	103	129	157
Max. input current						
	Continuous (at 550 V) [A]	60	77	89	110	130
	Continuous (at 575 V) [A]	58	74	85	106	124
	Continuous (at 690 V) [A]	58	77	87	109	128
	Max. cable size, mains, motor, load share and brake [mm^2 (AWG)]	2x70 (2x2/0)				
	Max. external pre-fuses [A] [1]	125	160	200	200	250
	Estimated power loss at rated max. load [W] [4)] , 600 V	1398	1645	1827	2157	2533
	Estimated power loss at rated max. load [W] [4)] , 690 V	1458	1717	1913	2262	2662
	Weight, enclosure IP21, IP 54 [kg]	96				
	Weight, enclosure IP00 [kg]	82				
	Efficiency[4)]	0.97	0.97	0.98	0.98	0.98
	Output frequency	0 - 600 Hz				
	Heatsink overtemp. trip	85 °C				
	Power card ambient trip	60 °C				

8

Mains Supply 3 x 525- 690 VAC

	P132	P160	P200	P250
Typical Shaft output at 550 V [kW]	110	132	160	200
Typical Shaft output at 575 V [HP]	150	200	250	300
Typical Shaft output at 690 V [kW]	132	160	200	250
Enclosure IP21	D1	D1	D2	D2
Enclosure IP54	D1	D1	D2	D2
Enclosure IP00	D3	D3	D4	D4
Output current				
Continuous (at 550 V) [A]	162	201	253	303
Intermittent (60 sec overload) (at 550 V) [A]	178	221	278	333
Continuous (at 575/ 690 V) [A]	155	192	242	290
Intermittent (60 sec overload) (at 575/ 690 V) [A]	171	211	266	319
Continuous KVA (at 550 V) [KVA]	154	191	241	289
Continuous KVA (at 575 V) [KVA]	154	191	241	289
Continuous KVA (at 690 V) [KVA]	185	229	289	347
Max. input current				
Continuous (at 550 V) [A]	158	198	245	299
Continuous (at 575 V) [A]	151	189	234	286
Continuous (at 690 V) [A]	155	197	240	296
Max. cable size, mains motor, load share and brake [mm² (AWG)]	2 x 70 (2 x 2/0)	2 x 70 (2 x 2/0)	2 x 150 (2 x 300 mcm)	2 x 150 (2 x 300 mcm)
Max. external pre-fuses [A] [1]	315	350	350	400
Estimated power loss at rated max. load [W] [4], 600 V	2963	3430	4051	4867
Estimated power loss at rated max. load [W] [4], 690 V	3430	3612	4292	5156
Weight, Enclosure IP21, IP 54 [kg]	96	104	125	136
Weight, Enclosure IP00 [kg]	82	91	112	123
Efficiency[4]	0.98			
Output frequency	0 - 600 Hz			
Heatsink overtemp. trip	85 °C	90 °C	110 °C	110 °C
Power card ambient trip	60 °C			

8

Mains Supply 3 x 525- 690 VAC

		P315	P400	P450
	Typical Shaft output at 550 V [kW]	250	315	355
	Typical Shaft output at 575 V [HP]	350	400	450
	Typical Shaft output at 690 V [kW]	315	400	450
	Enclosure IP21	D2	D2	E1
	Enclosure IP54	D2	D2	E1
	Enclosure IP00	D4	D4	E2
	Output current			
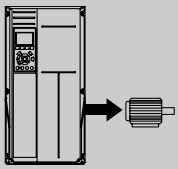	Continuous (at 550 V) [A]	360	418	470
	Intermittent (60 sec overload) (at 550 V) [A]	396	460	517
	Continuous (at 575/ 690 V) [A]	344	400	450
	Intermittent (60 sec overload) (at 575/ 690 V) [A]	378	440	495
	Continuous KVA (at 550 V) [KVA]	343	398	448
	Continuous KVA (at 575 V) [KVA]	343	398	448
	Continuous KVA (at 690 V) [KVA]	411	478	538
Max. input current				
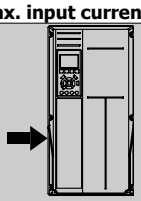	Continuous (at 550 V) [A]	355	408	453
	Continuous (at 575 V) [A]	339	390	434
	Continuous (at 690 V) [A]	352	400	434
	Max. cable size, mains, motor and load share [mm^2 (AWG)]	2 x 150 (2 x 300 mcm)	2 x 150 (2 x 300 mcm)	4 x 240 (4 x 500 mcm)
	Max. cable size, brake [mm^2 (AWG)]	2 x 150 (2 x 300 mcm)	2 x 150 (2 x 300 mcm)	2 x 185 (2 x 350 mcm)
	Max. external pre-fuses [A] [1]	500	550	700
	Estimated power loss at rated max. load [W] [4)] , 600 V	5493	5852	6132
	Estimated power loss at rated max. load [W] [4)] , 690 V	5821	6149	6440
	Weight, enclosure IP21, IP 54 [kg]	151	165	263
	Weight, enclosure IP00 [kg]	138	151	221
	Efficiency[4)]	0.98		
	Output frequency	0 - 600 Hz	0 - 500 Hz	0 - 500 Hz
	Heatsink overtemp. trip	110 °C	110 °C	85 °C
	Power card ambient trip	60 °C	60 °C	68 °C

8

Mains Supply 3 x 525- 690 VAC

		P500	P560	P630
	Typical Shaft output at 550 V [kW]	400	450	500
	Typical Shaft output at 575 V [HP]	500	600	650
	Typical Shaft output at 690 V [kW]	500	560	630
	Enclosure IP21	E1	E1	E1
	Enclosure IP54	E1	E1	E1
	Enclosure IP00	E2	E2	E2
	Output current			
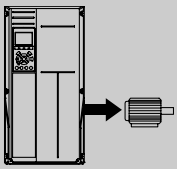	Continuous (at 550 V) [A]	523	596	630
	Intermittent (60 sec overload) (at 550 V) [A]	575	656	693
	Continuous (at 575/ 690 V) [A]	500	570	630
	Intermittent (60 sec overload) (at 575/ 690 V) [A]	550	627	693
	Continuous KVA (at 550 V) [KVA]	498	568	600
	Continuous KVA (at 575 V) [KVA]	498	568	627
	Continuous KVA (at 690 V) [KVA]	598	681	753
Max. input current				
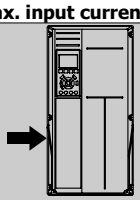	Continuous (at 550 V) [A]	504	574	607
	Continuous (at 575 V) [A]	482	549	607
	Continuous (at 690 V) [A]	482	549	607
	Max. cable size, mains, motor and load share [mm^2 (AWG)]	4x240 (4x500 mcm)	4x240 (4x500 mcm)	4x240 (4x500 mcm)
	Max. cable size, brake [mm^2 (AWG)]	2 x 185 (2 x 350 mcm)	2 x 185 (2 x 350 mcm)	2 x 185 (2 x 350 mcm)
	Max. external pre-fuses [A] [1]	700	900	900
	Estimated power loss at rated max. load [W] [4)] , 600 V	6903	8343	9244
	Estimated power loss at rated max. load [W] [4)] , 690 V	7249	8727	9673
	Weight, enclosure IP21, IP 54 [kg]	263	272	313
	Weight, enclosure IP00 [kg]	221	236	277
	Efficiency[4)]	0.98		
	Output frequency	0 - 500 Hz		
	Heatsink overtemp. trip	85 °C		
	Power card ambient trip	68 °C		

8

Mains Supply 3 x 525- 690 VAC

	P710	P800	P900	P1M0	P1M2
Typical Shaft output at 550 V [kW]	560	670	750	850	1000
Typical Shaft output at 575 V [HP]	750	950	1050	1150	1350
Typical Shaft output at 690 V [kW]	710	800	900	1000	1200
Enclosure IP21, 54 without/ with options cabinet	F1/ F3	F1/ F3	F1/ F3	F2/ F4	F2/ F4
Output current					
Continuous (at 550 V) [A]	763	889	988	1108	1317
Intermittent (60 s overload, at 550 V) [A]	839	978	1087	1219	1449
Continuous (at 575/ 690 V) [A]	730	850	945	1060	1260
Intermittent (60 s overload, at 575/690 V) [A]	803	935	1040	1166	1386
Continuous KVA (at 550 V) [KVA]	727	847	941	1056	1255
Continuous KVA (at 575 V) [KVA]	727	847	941	1056	1255
Continuous KVA (at 690 V) [KVA]	872	1016	1129	1267	1506
Max. input current					
Continuous (at 550 V) [A]	743	866	962	1079	1282
Continuous (at 575 V) [A]	711	828	920	1032	1227
Continuous (at 690 V) [A]	711	828	920	1032	1227
Max. cable size,motor [mm² (AWG[2])]	8x150 (8x300 mcm)			12x150 (12x300 mcm)	
Max. cable size,mains [mm² (AWG[2])]	8x240 (8x500 mcm)				
Max. cable size, load-sharing [mm² (AWG[2])]	4x120 (4x250 mcm)				
Max. cable size, brake [mm² (AWG[2])]	4x185 (4x350 mcm)			6x185 (6x350 mcm)	
Max. external pre-fuses [A] [1]	1600				2000
Est. power loss at rated max. load [W] [4], 600 V, F1 & F2	10771	12272	13835	15592	18281
Est. power loss at rated max. load [W] [4], 690 V, F1 & F2	11315	12903	14533	16375	19207
Max added losses of Circuit Breaker or Disconnect & Contactor, F3 & F4	427	532	615	665	863
Max Panel Options Losses	400				
Weight,enclosure IP21, IP 54 [kg]	1004/ 1299	1004/ 1299	1004/ 1299	1246/ 1541	1246/ 1541
Weight, Rectifier Module [kg]	102	102	102	136	136
Weight, Inverter Module [kg]	102	102	136	102	102
Efficiency[4]	0.98				
Output frequency	0-500 Hz				
Heatsink overtemp. trip	85 °C				
Power card amb. trip	68 °C				

1) For type of fuse see section *Fuses.*

2) American Wire Gauge.

3) Measured using 5 m screened motor cables at rated load and rated frequency.

4) The typical power loss is at nominal load conditions and expected to be within +/-15% (tolerence relates to variety in voltage and cable conditions). Values are based on a typical motor efficiency (eff2/eff3 border line). Motors with lower efficiency will also add to the power loss in the frequency converter and opposite. If the switching frequency is increased comed to the default setting, the power losses may rise significantly.LCP and typical control card power consumptions are included. Further options and customer load may add up to 30W to the losses. (Though typical only 4W extra for a fully loaded control card, or options for slot A or slot B, each).
Although measurements are made with state of the art equipment, some measurement inaccuracy must be allowed for (+/-5%).

8.1.3 General specifications:

Mains supply (L1, L2, L3):	
Supply voltage	200-240 V ±10% 380-480 V ±10% 525-600 V ±10% 525-690 V ±10%

Mains voltage low / mains drop-out:

During low mains voltage or a mains drop-out, the FC continues until the intermediate circuit voltage drops below the minimum stop level, which corresponds typically to 15% below the FC's lowest rated supply voltage. Power-up and full torque cannot be expected at mains voltage lower than 10% below the FC's lowest rated supply voltage.

Supply frequency	50/60 Hz ±5%
Max. imbalance temporary between mains phases	3.0 % of rated supply voltage
True Power Factor ()	≥ 0.9 nominal at rated load
Displacement Power Factor (cos) near unity	(> 0.98)
Switching on input supply L1, L2, L3 (power-ups) ≤ enclosure type A	maximum twice/min.
Switching on input supply L1, L2, L3 (power-ups) ≥ enclosure type B, C	maximum once/min.
Switching on input supply L1, L2, L3 (power-ups) ≥ enclosure type D, E, F	maximum once/2 min.
Environment according to EN60664-1	overvoltage category III / pollution degree 2

The unit is suitable for use on a circuit capable of delivering not more than 100.000 RMS symmetrical Amperes, 480/600 V maximum.

Motor output (U, V, W):	
Output voltage	0 - 100% of supply voltage
Output frequency	0 - 1000 Hz*
Switching on output	Unlimited
Ramp times	1 - 3600 sec.

** Dependent on power size.*

Torque characteristics:	
Starting torque (Constant torque)	maximum 110% for 1 min.*
Starting torque	maximum 135% up to 0.5 sec.*
Overload torque (Constant torque)	maximum 110% for 1 min.*

**Percentage relates to the frequency converter's nominal torque.*

Cable lengths and cross sections:	
Max. motor cable length, screened/armoured	VLT HVAC Drive: 150 m
Max. motor cable length, unscreened/unarmoured	VLT HVAC Drive: 300 m
Max. cross section to motor, mains, load sharing and brake *	
Maximum cross section to control terminals, rigid wire	1.5 mm^2/16 AWG (2 x 0.75 mm^2)
Maximum cross section to control terminals, flexible cable	1 mm^2/18 AWG
Maximum cross section to control terminals, cable with enclosed core	0.5 mm^2/20 AWG
Minimum cross section to control terminals	0.25 mm^2

** See Mains Supply tables for more information!*

Digital inputs:	
Programmable digital inputs	4 (6)
Terminal number	18, 19, 27 [1)], 29 [1)], 32, 33,
Logic	PNP or NPN
Voltage level	0 - 24 V DC
Voltage level, logic'0' PNP	< 5 V DC
Voltage level, logic'1' PNP	> 10 V DC
Voltage level, logic '0' NPN	> 19 V DC
Voltage level, logic '1' NPN	< 14 V DC
Maximum voltage on input	28 V DC
Input resistance, R_i	approx. 4 k

All digital inputs are galvanically isolated from the supply voltage (PELV) and other high-voltage terminals.

1) Terminals 27 and 29 can also be programmed as output.

Analog inputs:	
Number of analog inputs	2
Terminal number	53, 54
Modes	Voltage or current
Mode select	Switch S201 and switch S202
Voltage mode	Switch S201/switch S202 = OFF (U)
Voltage level	: 0 to + 10 V (scaleable)
Input resistance, R_i	approx. 10 kΩ
Max. voltage	± 20 V
Current mode	Switch S201/switch S202 = ON (I)
Current level	0/4 to 20 mA (scaleable)
Input resistance, R_i	approx. 200 Ω
Max. current	30 mA
Resolution for analog inputs	10 bit (+ sign)
Accuracy of analog inputs	Max. error 0.5% of full scale
Bandwidth	: 200 Hz

The analog inputs are galvanically isolated from the supply voltage (PELV) and other high-voltage terminals.

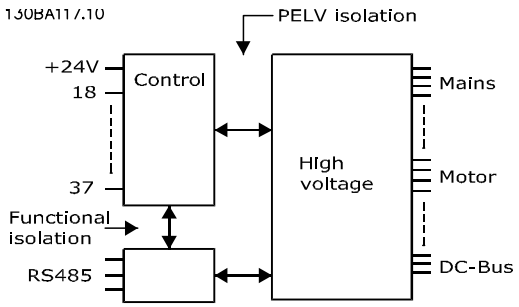

Pulse inputs:	
Programmable pulse inputs	2
Terminal number pulse	29, 33
Max. frequency at terminal, 29, 33	110 kHz (Push-pull driven)
Max. frequency at terminal, 29, 33	5 kHz (open collector)
Min. frequency at terminal 29, 33	4 Hz
Voltage level	see section on Digital input
Maximum voltage on input	28 V DC
Input resistance, R_i	approx. 4 kΩ
Pulse input accuracy (0.1 - 1 kHz)	Max. error: 0.1% of full scale
Analog output:	
Number of programmable analog outputs	1
Terminal number	42
Current range at analog output	0/4 - 20 mA
Max. resistor load to common at analog output	500 Ω
Accuracy on analog output	Max. error: 0.8 % of full scale
Resolution on analog output	8 bit

The analog output is galvanically isolated from the supply voltage (PELV) and other high-voltage terminals.

Control card, RS-485 serial communication:	
Terminal number	68 (P,TX+, RX+), 69 (N,TX-, RX-)
Terminal number 61	Common for terminals 68 and 69

The RS-485 serial communication circuit is functionally seated from other central circuits and galvanically isolated from the supply voltage (PELV).

Digital output:	
Programmable digital/pulse outputs	2
Terminal number	27, 29 [1)]
Voltage level at digital/frequency output	0 - 24 V
Max. output current (sink or source)	40 mA
Max. load at frequency output	1 kΩ
Max. capacitive load at frequency output	10 nF
Minimum output frequency at frequency output	0 Hz
Maximum output frequency at frequency output	32 kHz
Accuracy of frequency output	Max. error: 0.1 % of full scale
Resolution of frequency outputs	12 bit

1) Terminal 27 and 29 can also be programmed as input.

The digital output is galvanically isolated from the supply voltage (PELV) and other high-voltage terminals.

Control card, 24 V DC output:	
Terminal number	12, 13
Max. load	: 200 mA

The 24 V DC supply is galvanically isolated from the supply voltage (PELV), but has the same potential as the analog and digital inputs and outputs.

Relay outputs:	
Programmable relay outputs	2
Relay 01 Terminal number	1-3 (break), 1-2 (make)
Max. terminal load (AC-1)[1)] on 1-3 (NC), 1-2 (NO) (Resistive load)	240 V AC, 2 A
Max. terminal load (AC-15)[1)] (Inductive load @ cosφ 0.4)	240 V AC, 0.2 A
Max. terminal load (DC-1)[1)] on 1-2 (NO), 1-3 (NC) (Resistive load)	60 V DC, 1A
Max. terminal load (DC-13)[1)] (Inductive load)	24 V DC, 0.1A
Relay 02 Terminal number	4-6 (break), 4-5 (make)
Max. terminal load (AC-1)[1)] on 4-5 (NO) (Resistive load)[2)3)]	400 V AC, 2 A
Max. terminal load (AC-15)[1)] on 4-5 (NO) (Inductive load @ cosφ 0.4)	240 V AC, 0.2 A
Max. terminal load (DC-1)[1)] on 4-5 (NO) (Resistive load)	80 V DC, 2 A
Max. terminal load (DC-13)[1)] on 4-5 (NO) (Inductive load)	24 V DC, 0.1A
Max. terminal load (AC-1)[1)] on 4-6 (NC) (Resistive load)	240 V AC, 2 A
Max. terminal load (AC-15)[1)] on 4-6 (NC) (Inductive load @ cosφ 0.4)	240 V AC, 0.2A
Max. terminal load (DC-1)[1)] on 4-6 (NC) (Resistive load)	50 V DC, 2 A
Max. terminal load (DC-13)[1)] on 4-6 (NC) (Inductive load)	24 V DC, 0.1 A
Min. terminal load on 1-3 (NC), 1-2 (NO), 4-6 (NC), 4-5 (NO)	24 V DC 10 mA, 24 V AC 20 mA
Environment according to EN 60664-1	overvoltage category III/pollution degree 2

1) IEC 60947 t 4 and 5

The relay contacts are galvanically isolated from the rest of the circuit by reinforced isolation (PELV).

2) Overvoltage Category II

3) UL applications 300 V AC 2A

Control card, 10 V DC output:	
Terminal number	50
Output voltage	10.5 V ±0.5 V
Max. load	25 mA

The 10 V DC supply is galvanically isolated from the supply voltage (PELV) and other high-voltage terminals.

Control characteristics:	
Resolution of output frequency at 0 - 1000 Hz	: +/- 0.003 Hz
System response time (terminals 18, 19, 27, 29, 32, 33)	: ≤ 2 ms
Speed control range (open loop)	1:100 of synchronous speed
Speed accuracy (open loop)	30 - 4000 rpm: Maximum error of ±8 rpm

All control characteristics are based on a 4-pole asynchronous motor

Surroundings:	
Enclosure type A	IP 20/Chassis, IP 21kit/Type 1, IP55/Type12, IP 66/Type12
Enclosure type B1/B2	IP 21/Type 1, IP55/Type12, IP 66/12
Enclosure type B3/B4	IP20/Chassis

Enclosure type C1/C2	IP 21/Type 1, IP55/Type 12, IP66/12
Enclosure type C3/C4	IP20/Chassis
Enclosure type D1/D2/E1	IP21/Type 1, IP54/Type12
Enclosure type D3/D4/E2	IP00/Chassis
Enclosure type F1/F3	IP21, 54/Type1, 12
Enclosure type F2/F4	IP21, 54/Type1, 12
Enclosure kit available ≤ enclosure type D	IP21/NEMA 1/IP 4_X on top of enclosure
Vibration test enclosure A, B, C	1.0 g
Vibration test enclosure D, E, F	0.7 g
Relative humidity	5% - 95% (IEC 721-3-3; Class 3K3 (non-condensing) during operation
Aggressive environment (IEC 60068-2-43) H_2S test	class Kd
Test method according to IEC 60068-2-43 H2S (10 days)	
Ambient temperature (at 60 AVM switching mode)	
- with derating	max. 55° C[1)]
- with full output power of typical EFF2 motors (up to 90% output current)	max. 50 ° C[1)]
- at full continuous FC output current	max. 45 ° C[1)]

[1)] For more information on derating see the Design Guide, section on Special Conditions.

Minimum ambient temperature during full-scale operation	0 °C
Minimum ambient temperature at reduced performance	- 10 °C
Temperature during storage/transport	-25 - +65/70 °C
Maximum altitude above sea level without derating	1000 m
Maximum altitude above sea level with derating	3000 m

Derating for high altitude, see section on special conditions

EMC standards, Emission	EN 61800-3, EN 61000-6-3/4, EN 55011, IEC 61800-3
EMC standards, Immunity	EN 61800-3, EN 61000-6-1/2, EN 61000-4-2, EN 61000-4-3, EN 61000-4-4, EN 61000-4-5, EN 61000-4-6

See section on special conditions!

Control card performance:

Scan interval	: 5 ms

Control card, USB serial communication:

USB standard	1.1 (Full speed)
USB plug	USB type B "device" plug

Connection to PC is carried out via a standard host/device USB cable.
The USB connection is galvanically isolated from the supply voltage (PELV) and other high-voltage terminals.
The USB connection is not galvanically isolated from protection earth. Use only isolated laptop/PC as connection to the USB connector on frequency converter or an isolated USB cable/converter.

Protection and Features:

- Electronic thermal motor protection against overload.
- Temperature monitoring of the heatsink ensures that the frequency converter trips if the temperature reaches 95 °C ± 5°C. An overload temperature cannot be reset until the temperature of the heatsink is below 70 °C ± 5°C (Guideline - these temperatures may vary for different power sizes, enclosures etc.). The frequency converter has an auto derating function to avoid it's heatsink reaching 95 deg C.
- The frequency converter is protected against short-circuits on motor terminals U, V, W.
- If a mains phase is missing, the frequency converter trips or issues a warning (depending on the load).
- Monitoring of the intermediate circuit voltage ensures that the frequency converter trips if the intermediate circuit voltage is too low or too high.
- The frequency converter is protected against earth faults on motor terminals U, V, W.

8.2 Efficiency

Efficiency of VLT HVAC Drive (η_{VLT})

The load on the frequency converter has little effect on its efficiency. In general, the efficiency is the same at the rated motor frequency $f_{M,N}$, even if the motor supplies 100% of the rated shaft torque or only 75%, i.e. in case of t loads.

This also means that the efficiency of the frequency converter does not change even if other U/f characteristics are chosen.
However, the U/f characteristics influence the efficiency of the motor.

The efficiency declines a little when the switching frequency is set to a value of above 5 kHz. The efficiency will also be slightly reduced if the mains voltage is 480 V, or if the motor cable is longer than 30 m.

Efficiency of the motor (η_{MOTOR})

The efficiency of a motor connected to the frequency converter depends on magnetising level. In general, the efficiency is just as good as with mains operation. The efficiency of the motor depends on the type of motor.

In the range of 75-100% of the rated torque, the efficiency of the motor is practically constant, both when it is controlled by the frequency converter and when it runs directly on mains.

In small motors, the influence from the U/f characteristic on efficiency is marginal. However, in motors from 11 kW and up, the advantages are significant.

8

In general, the switching frequency does not affect the efficiency of small motors. Motors from 11 kW and up have their efficiency improved (1-2%). This is because the sine shape of the motor current is almost perfect at high switching frequency.

Efficiency of the system (η_{SYSTEM})

To calculate the system efficiency, the efficiency of the frequency converter (η_{VLT}) is multiplied by the efficiency of the motor (η_{MOTOR}):
$\eta_{SYSTEM}) = \eta_{VLT} \times \eta_{MOTOR}$

Calculate the efficiency of the system at different loads based on the graph below.

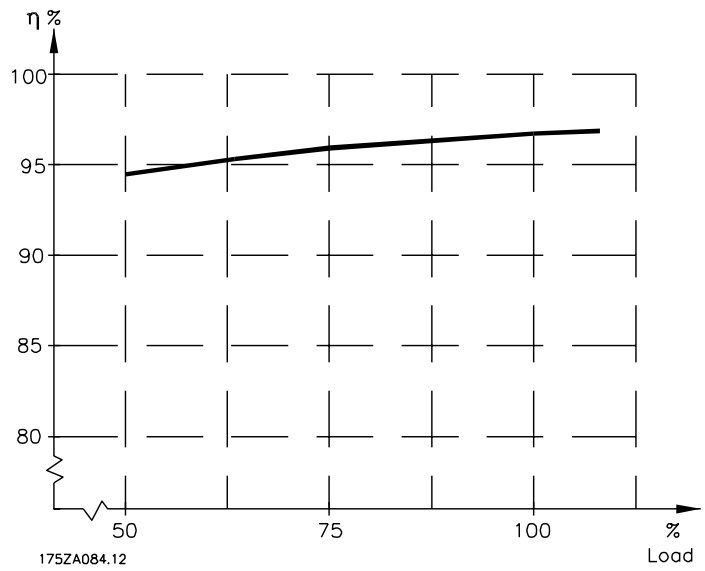

8.3 Acoustic Noise

The acoustic noise from the frequency converter comes from three sources:

1. DC intermediate circuit coils.
2. Integral fan.
3. RFI filter choke.

The typical values measured at a distance of 1 m from the unit:

Enclosure	At reduced fan speed (50%) [dBA] ***	Full fan speed [dBA]
A2	51	60
A3	51	60
A5	54	63
B1	61	67
B2	58	70
B3	59.4	70.5
B4	53	62.8
C1	52	62
C2	55	65
C3	56.4	67.3
C4	-	-
D1/D3	74	76
D2/D4	73	74
E1/E2*	73	74
E1/E2**	82	83
F1/F2/F3/F4	78	80

* 315 kW, 380-480 VAC and 450-500 kW, 525-690 VAC only!
** Remaining E1/E2 power sizes.
*** For D, E and F sizes, reduced fan speed is at 87%, measured at 200 V.

8

8.4 Peak Voltage on Motor

When a transistor in the inverter bridge switches, the voltage across the motor increases by a du/dt ratio depending on:

- the motor cable (type, cross-section, length screened or unscreened)
- inductance

The natural induction causes an overshoot U_{PEAK} in the motor voltage before it stabilizes itself at a level depending on the voltage in the intermediate circuit. The rise time and the peak voltage U_{PEAK} affect the service life of the motor. If the peak voltage is too high, especially motors without phase coil insulation are affected. If the motor cable is short (a few metres), the rise time and peak voltage are lower.
If the motor cable is long (100 m), the rise time and peak voltage increases.

In motors without phase insulation paper or other insulation reinforcement suitable for operation with voltage supply (such as a frequency converter), fit a sine-wave filter on the output of the frequency converter.

To obtain approximate values for cable lengths and voltages not mentioned below, use the following rules of thumb:

1. Rise time increases/decreases proportionally with cable length.
2. U_{PEAK} = DC link voltage x 1.9
   (DC link voltage = Mains voltage x 1.35).
3. $$dU \Big| dt = \frac{0.8 \times U_{PEAK}}{Risetime}$$

Data are measured according to IEC 60034-17.
Cable lengths are in metres.

Frequency Converter, P5K5, T2

Cable length [m]	Mains voltage [V]	Rise time [μsec]	Vpeak [kV]	dU/dt [kV/μsec]
36	240	0.226	0.616	2.142
50	240	0.262	0.626	1.908
100	240	0.650	0.614	0.757
150	240	0.745	0.612	0.655

Frequency Converter, P7K5, T2

Cable length [m]	Mains voltage [V]	Rise time [μsec]	Vpeak [kV]	dU/dt [kV/μsec]
5	230	0.13	0.510	3.090
50	230	0.23	0.590	2.034
100	230	0.54	0.580	0.865
150	230	0.66	0.560	0.674

Frequency Converter, P11K, T2

Cable length [m]	Mains voltage [V]	Rise time [μsec]	Vpeak [kV]	dU/dt [kV/μsec]
36	240	0.264	0.624	1.894
136	240	0.536	0.596	0.896
150	240	0.568	0.568	0.806

8

Frequency Converter, P15K, T2

Cable length [m]	Mains voltage [V]	Rise time [μsec]	Vpeak [kV]	dU/dt [kV/μsec]
30	240	0.556	0.650	0.935
100	240	0.592	0.594	0.807
150	240	0.708	0.575	0.669

Frequency Converter, P18K, T2

Cable length [m]	Mains voltage [V]	Rise time [μsec]	Vpeak [kV]	dU/dt [kV/μsec]
36	240	0.244	0.608	1.993
136	240	0.568	0.580	0.832
150	240	0.720	0.574	0.661

Frequency Converter, P22K, T2

Cable length [m]	Mains voltage [V]	Rise time [μsec]	Vpeak [kV]	dU/dt [kV/μsec]
36	240	0.244	0.608	1.993
136	240	0.560	0.580	0.832
150	240	0.720	0.574	0.661

Frequency Converter, P30K, T2

Cable length [m]	Mains voltage [V]	Rise time [μsec]	Vpeak [kV]	dU/dt [kV/μsec]
15	240	0.194	0.626	2.581
50	240	0.252	0.574	1.929
150	240	0.444	0.538	0.977

Frequency Converter, P37K, T2

Cable length [m]	Mains voltage [V]	Rise time [µsec]	Vpeak [kV]	dU/dt [kV/µsec]
30	240	0.300	0.598	1.593
100	240	0.536	0.566	0.843
150	240	0.776	0.546	0.559

Frequency Converter, P45K, T2

Cable length [m]	Mains voltage [V]	Rise time [µsec]	Vpeak [kV]	dU/dt [kV/µsec]
30	240	0.300	0.598	1.593
100	240	0.536	0.566	0.843
150	240	0.776	0.546	0.559

Frequency Converter, P1K5, T4

Cable length [m]	Mains voltage [V]	Rise time [µsec]	Vpeak [kV]	dU/dt [kV/µsec]
5	690	0.640	0.690	0.862
50	985	0.470		0.985
150	1045	0.760	1.045	0.947

Frequency Converter, P4K0, T4

Cable length [m]	Mains voltage [V]	Rise time [µsec]	Vpeak [kV]	dU/dt [kV/µsec]
5	400	0.172	0.890	4.156
50	400	0.310		2.564
150	400	0.370	1.190	1.770

Frequency Converter, P7K5, T4

Cable length [m]	Mains voltage [V]	Rise time [µsec]	Vpeak [kV]	dU/dt [kV/µsec]
5	500	0.04755	0.739	8.035
50	500	0.207		4.548
150	500	0.6742	1.030	2.828

Frequency Converter, P11K, T4

Cable length [m]	Mains voltage [V]	Rise time [µsec]	Vpeak [kV]	dU/dt [kV/µsec]
15	400	0.408	0.718	1.402
100	400	0.364	1.050	2.376
150	400	0.400	0.980	2.000

Frequency Converter, P15K, T4

Cable length [m]	Mains voltage [V]	Rise time [µsec]	Vpeak [kV]	dU/dt [kV/µsec]
36	400	0.422	1.060	2.014
100	400	0.464	0.900	1.616
150	400	0.896	1.000	0.915

Frequency Converter, P18K, T4

Cable length [m]	Mains voltage [V]	Rise time [μsec]	Vpeak [kV]	dU/dt [kV/μsec]
36	400	0.344	1.040	2.442
100	400	1.000	1.190	0.950
150	400	1.400	1.040	0.596

Frequency Converter, P22K, T4

Cable length [m]	Mains voltage [V]	Rise time [μsec]	Vpeak [kV]	dU/dt [kV/μsec]
36	400	0.232	0.950	3.534
100	400	0.410	0.980	1.927
150	400	0.430	0.970	1.860

Frequency Converter, P30K, T4

Cable length [m]	Mains voltage [V]	Rise time [μsec]	Vpeak [kV]	dU/dt [kV/μsec]
15	400	0.271	1.000	3.100
100	400	0.440	1.000	1.818
150	400	0.520	0.990	1.510

8

Frequency Converter, P37K, T4

Cable length [m]	Mains voltage	Rise time [μsec]	Vpeak [kV]	dU/dt [kV/μsec]
5	480	0.270	1.276	3.781
50	480	0.435	1.184	2.177
100	480	0.840	1.188	1.131
150	480	0.940	1.212	1.031

Frequency Converter, P45K, T4

Cable length [m]	Mains voltage [V]	Rise time [μsec]	Vpeak [kV]	dU/dt [kV/μsec]
36	400	0.254	1.056	3.326
50	400	0.465	1.048	1.803
100	400	0.815	1.032	1.013
150	400	0.890	1.016	0.913

Frequency Converter, P55K, T4

Cable length [m]	Mains voltage [V]	Rise time [μsec]	Vpeak [kV]	dU/dt [kV/μsec]
10	400	0.350	0.932	2.130

Frequency Converter, P75K, T4

Cable length [m]	Mains voltage [V]	Rise time [μsec]	Vpeak [kV]	dU/dt [kV/μsec]
5	480	0.371	1.170	2.466

Frequency Converter, P90K, T4

Cable length [m]	Mains voltage [V]	Rise time [μsec]	Vpeak [kV]	dU/dt [kV/μsec]
5	400	0.364	1.030	2.264

High Power Range:

Frequency Converter, P110 - P250, T4

Cable length [m]	Mains voltage [V]	Rise time [µsec]	Vpeak [kV]	dU/dt [kV/µsec]
30	400	0.34	1.040	2.447

Frequency Converter, P315 - P1M0, T4

Cable length [m]	Mains voltage [V]	Rise time [µsec]	Vpeak [kV]	dU/dt [kV/µsec]
30	500	0.71	1.165	1.389
30	400	0.61	0.942	1.233

Frequency Converter, P110 - P400, T7

Cable length [m]	Mains voltage [V]	Rise time [µsec]	Vpeak [kV]	dU/dt [kV/µsec]
30	690	0.38	1.513	3.304
30	575	0.23	1.313	2.750
30	690 1)	1.72	1.329	0.640

1) With Danfoss dU/dt filter.

Frequency Converter, P450 - P1M2, T7

Cable length [m]	Mains voltage [V]	Rise time [µsec]	Vpeak [kV]	dU/dt [kV/µsec]
30	690	0.57	1.611	2.261
30	575	0.25		2.510
30	690 1)	1.13	1.629	1.150

1) With Danfoss dU/dt filter.

8.5 Special Conditions

8.5.1 Purpose of derating

Derating must be taken into account when using the frequency converter at low air pressure (heights), at low speeds, with long motor cables, cables with a large cross section or at high ambient temperature. The required action is described in this section.

8.5.2 Derating for Ambient Temperature

90% frequency converter output current can be maintained up to max. 50 °C ambient temperature.

With a typical full load current of EFF 2 motors, full output shaft power can be maintained up to 50 °C.
For more specific data and/or derating information for other motors or conditions, please contact Danfoss.

8.5.3 Automatic Adaptations to Ensure Performance

The frequency converter constantly checks for critical levels of internal temperature, load current, high voltage on the intermediate circuit and low motor speeds. As a response to a critical level, the frequency converter can adjust the switching frequency and / or change the switching pattern in order to ensure the performance of the frequency converter. The capability to automatically reduce the output current extends the acceptable operating conditions even further.

8

8.5.4 Derating for Low Air Pressure

The cooling capability of air is decreased at lower air pressure.

Below 1000 m altitude no derating is necessary but above 1000 m the ambient temperature (T_{AMB}) or max. output current (I_{out}) should be derated in accordance with the shown diagram.

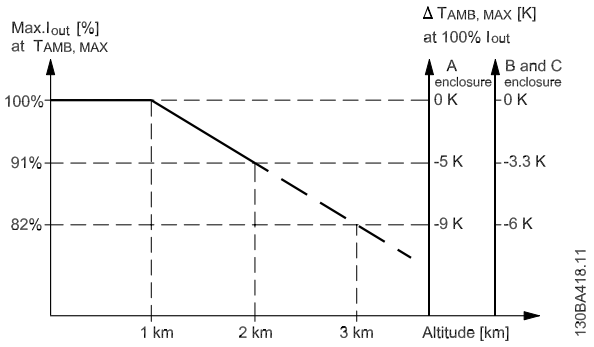

Illustration 8.1: Derating of output current versus altitude at $T_{AMB, MAX}$ for frame sizes A, B and C. At altitudes above 2 km, please contact Danfoss regarding PELV.

An alternative is to lower the ambient temperature at high altitudes and thereby ensure 100% output current at high altitudes. As an example of how to read the graph, the situation at 2 km is elaborated. At a temperature of 45° C ($T_{AMB, MAX}$ - 3.3 K), 91% of the rated output current is available. At a temperature of 41.7° C, 100% of the rated output current is available.

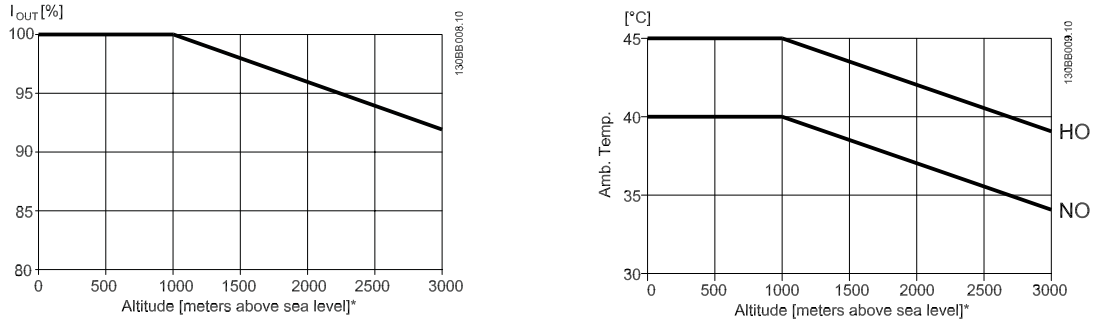

Derating of output current versus altitude at $T_{AMB, MAX}$ for frame sizes D, E and F.

8.5.5 Derating for Running at Low Speed

When a motor is connected to a frequency converter, it is necessary to check that the cooling of the motor is adequate.
The level of heating depends on the load on the motor, as well as the operating speed and time.

Constant torque applications (CT mode)

A problem may occur at low RPM values in constant torque applications. In a constant torque application s a motor may over-heat at low speeds due to less cooling air from the motor integral fan.
Therefore, if the motor is to be run continuously at an RPM value lower than half of the rated value, the motor must be supplied with additional air-cooling (or a motor designed for this type of operation may be used).

An alternative is to reduce the load level of the motor by choosing a larger motor. However, the design of the frequency converter puts a limit to the motor size.

Variable (Quadratic) torque applications (VT)

In VT applications such as centrifugal pumps and fans, where the torque is proportional to the square of the speed and the power is proportional to the cube of the speed, there is no need for additional cooling or de-rating of the motor.

In the graphs shown below, the typical VT curve is below the maximum torque with de-rating and maximum torque with forced cooling at all speeds.

Maximum Load for a Standard Motor at 40 °C driven by a frequency converter type VLT FCxxx

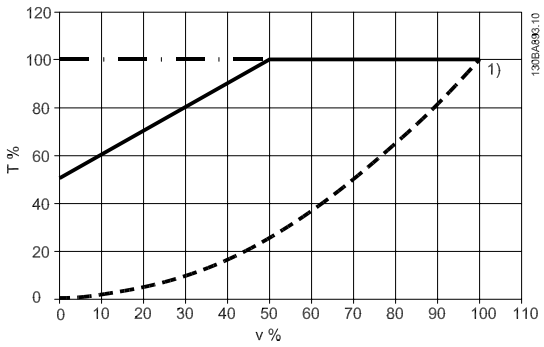

Legend: – – – –Typical torque at VT load –•–•–•–Max torque with forced cooling ———Max torque
Note 1) Over-syncronous speed operation will result in the available motor torque decreasing inversely proportional with the increase in speed. This must be considered during the design phase to avoid over-loading of the motor.

8.6 Alarm and Status Messages

8.6.1 Alarms and warnings

A warning or an alarm is signalled by the relevant LED on the front of the frequency converter and indicated by a code on the display.

A warning remains active until its cause is no longer present. Under certain circumstances operation of the motor may still be continued. Warning messages may be critical, but are not necessarily so.

In the event of an alarm, the frequency converter will have tripped. Alarms must be reset to restart operation once their cause has been rectified.

This may be done in four ways:

1. By using the [RESET] control button on the LCP.
2. Via a digital input with the "Reset" function.
3. Via serial communication/optional fieldbus.
4. By resetting automatically using the [Auto Reset] function, which is a default setting for VLT AQUA Drive. see par. 14-20 *Reset Mode* in **VLT AQUA Drive Programming Guide**

NB!
After a manual reset using the [RESET] button on the LCP, the [AUTO ON] or [HAND ON] button must be pressed to restart the motor.

8

If an alarm cannot be reset, the reason may be that its cause has not been rectified, or the alarm is trip-locked (see also table on following page).

Alarms that are trip-locked offer additional protection, means that the mains supply must be switched off before the alarm can be reset. After being switched back on, the frequency converter is no longer blocked and may be reset as described above once the cause has been rectified.

Alarms that are not trip-locked can also be reset using the automatic reset function in par. 14-20 *Reset Mode* (Warning: automatic wake-up is possible!)

If a warning and alarm is marked against a code in the table on the following page, this means that either a warning occurs before an alarm, or it can be specified whether it is a warning or an alarm that is to be displayed for a given fault.

This is possible, for instance, in par. 1-90 *Motor Thermal Protection*. After an alarm or trip, the motor carries on coasting, and the alarm and warning flash on the frequency converter. Once the problem has been rectified, only the alarm continues flashing.

No.	Description	Warning	Alarm/Trip	Alarm/Trip Lock	Parameter Reference
1	10 Volts low	X			
2	Live zero error	(X)	(X)		6-01
3	No motor	(X)			1-80
4	Mains phase loss	(X)	(X)	(X)	14-12
5	DC link voltage high	X			
6	DC link voltage low	X			
7	DC over voltage	X	X		
8	DC under voltage	X	X		
9	Inverter overloaded	X	X		
10	Motor ETR over temperature	(X)	(X)		1-90
11	Motor thermistor over temperature	(X)	(X)		1-90
12	Torque limit	X	X		
13	Over Current	X	X	X	
14	Earth fault	X	X	X	
15	Hardware mismatch		X	X	
16	Short Circuit		X	X	
17	Control word timeout	(X)	(X)		8-04
23	Internal Fan Fault	X			
24	External Fan Fault	X			14-53
25	Brake resistor short-circuited	X			
26	Brake resistor power limit	(X)	(X)		2-13
27	Brake chopper short-circuited	X	X		
28	Brake check	(X)	(X)		2-15
29	Drive over temperature	X	X	X	
30	Motor phase U missing	(X)	(X)	(X)	4-58
31	Motor phase V missing	(X)	(X)	(X)	4-58
32	Motor phase W missing	(X)	(X)	(X)	4-58
33	Inrush fault		X	X	
34	Fieldbus communication fault	X	X		
35	Out of frequency range	X	X		
36	Mains failure	X	X		
37	Phase Imbalance	X	X		
38	Internal fault		X	X	
39	Heatsink sensor		X	X	
40	Overload of Digital Output Terminal 27	(X)			5-00, 5-01
41	Overload of Digital Output Terminal 29	(X)			5-00, 5-02
42	Overload of Digital Output On X30/6	(X)			5-32
42	Overload of Digital Output On X30/7	(X)			5-33
46	Pwr. card supply		X	X	
47	24 V supply low	X	X	X	
48	1.8 V supply low		X	X	
49	Speed limit	X	(X)		1-86
50	AMA calibration failed		X		
51	AMA check U_{nom} and I_{nom}		X		
52	AMA low I_{nom}		X		
53	AMA motor too big		X		
54	AMA motor too small		X		
55	AMA ameter out of range		X		
56	AMA interrupted by user		X		
57	AMA timeout		X		
58	AMA internal fault	X	X		
59	Current limit	X			
60	External Interlock	X			
62	Output Frequency at Maximum Limit	X			
64	Voltage Limit	X			
65	Control Board Over-temperature	X	X	X	
66	Heat sink Temperature Low	X			
67	Option Configuration has Changed		X		
68	Safe Stop Activated		X[1)]		
69	Pwr. Card Temp		X	X	
70	Illegal FC configuration			X	
71	PTC 1 Safe Stop	X	X[1)]		
72	Dangerous Failure			X[1)]	
73	Safe Stop Auto Restart				
79	Illegal PS config		X	X	
80	Drive Initialised to Default Value		X		
91	Analog input 54 wrong settings			X	
92	NoFlow	X	X		22-2*
93	Dry Pump	X	X		22-2*
94	End of Curve	X	X		22-5*
95	Broken Belt	X	X		22-6*
96	Start Delayed	X			22-7*
97	Stop Delayed	X			22-7*
98	Clock Fault	X			0-7*

Table 8.2: Alarm/Warning code list

No.	Description	Warning	Alarm/Trip	Alarm/Trip Lock	ameter Reference
201	Fire M was Active				
202	Fire M Limits Exceeded				
203	Missing Motor				
204	Locked Rotor				
243	Brake IGBT	X	X		
244	Heatsink temp	X	X	X	
245	Heatsink sensor		X	X	
246	Pwr.card supply		X	X	
247	Pwr.card temp		X	X	
248	Illegal PS config		X	X	
250	New se t			X	
251	New Type Code		X	X	

Table 8.3: Alarm/Warning code list

(X) Dependent on ameter

1) Can not be Auto reset via par. 14-20 *Reset Mode*

A trip is the action when an alarm has appeared. The trip will coast the motor and can be reset by pressing the reset button or make a reset by a digital input (ameter group 5-1* [1]). The origin event that caused an alarm cannot damage the frequency converter or cause dangerous conditions. A trip lock is an action when an alarm occurs, which may cause damage to frequency converter or connected ts. A Trip Lock situation can only be reset by a power cycling.

LED indication

Warning	yellow
Alarm	flashing red
Trip locked	yellow and red

8

Alarm Word and Extended Status Word

Bit	Hex	Dec	Alarm Word	Warning Word	Extended Status Word
0	00000001	1	Brake Check	Brake Check	Ramping
1	00000002	2	Pwr. Card Temp	Pwr. Card Temp	AMA Running
2	00000004	4	Earth Fault	Earth Fault	Start CW/CCW
3	00000008	8	Ctrl.Card Temp	Ctrl.Card Temp	Slow Down
4	00000010	16	Ctrl. Word TO	Ctrl. Word TO	Catch Up
5	00000020	32	Over Current	Over Current	Feedback High
6	00000040	64	Torque Limit	Torque Limit	Feedback Low
7	00000080	128	Motor Th Over	Motor Th Over	Output Current High
8	00000100	256	Motor ETR Over	Motor ETR Over	Output Current Low
9	00000200	512	Inverter Overld.	Inverter Overld.	Output Freq High
10	00000400	1024	DC under Volt	DC under Volt	Output Freq Low
11	00000800	2048	DC over Volt	DC over Volt	Brake Check OK
12	00001000	4096	Short Circuit	DC Voltage Low	Braking Max
13	00002000	8192	Inrush Fault	DC Voltage High	Braking
14	00004000	16384	Mains ph. Loss	Mains ph. Loss	Out of Speed Range
15	00008000	32768	AMA Not OK	No Motor	OVC Active
16	00010000	65536	Live Zero Error	Live Zero Error	
17	00020000	131072	Internal Fault	10V Low	
18	00040000	262144	Brake Overload	Brake Overload	
19	00080000	524288	U phase Loss	Brake Resistor	
20	00100000	1048576	V phase Loss	Brake IGBT	
21	00200000	2097152	W phase Loss	Speed Limit	
22	00400000	4194304	Fieldbus Fault	Fieldbus Fault	
23	00800000	8388608	24 V Supply Low	24V Supply Low	
24	01000000	16777216	Mains Failure	Mains Failure	
25	02000000	33554432	1.8V Supply Low	Current Limit	
26	04000000	67108864	Brake Resistor	Low Temp	
27	08000000	134217728	Brake IGBT	Voltage Limit	
28	10000000	268435456	Option Change	Unused	
29	20000000	536870912	Drive Initialised	Unused	
30	40000000	1073741824	Safe Stop	Unused	

Table 8.4: Description of Alarm Word, Warning Word and Extended Status Word

The alarm words, warning words and extended status words can be read out via serial bus or optional fieldbus for diagnosis. See also par. 16-90 *Alarm Word*, par. 16-92 *Warning Word* and par. 16-94 *Ext. Status Word*.

8.6.2 Alarm words

Alarm word, par. 16-90 *Alarm Word*

Bit (Hex)	Alarm Word (par. 16-90 *Alarm Word*)
00000001	Brake check
00000002	Power card over temperature
00000004	Earth fault
00000008	Ctrl. card over temperature
00000010	Control word timeout
00000020	Over current
00000040	Torque limit
00000080	Motor thermistor over temp.
00000100	Motor ETR over temperature
00000200	Inverter overloaded
00000400	DC link under voltage
00000800	DC link over voltage
00001000	Short circuit
00002000	Inrush fault
00004000	Mains phase loss
00008000	AMA not OK
00010000	Live zero error
00020000	Internal fault
00040000	Brake overload
00080000	Motor phase U is missing
00100000	Motor phase V is missing
00200000	Motor phase W is missing
00400000	Fieldbus fault
00800000	24V supply fault
01000000	Mains failure
02000000	1.8V supply fault
04000000	Brake resistor short circuit
08000000	Brake chopper fault
10000000	Option change
20000000	Drive initialized
40000000	Safe Stop
80000000	Not used

Alarm word 2, par. 16-91 *Alarm Word 2*

Bit (Hex)	Alarm Word 2 (par. 16-91 *Alarm Word 2*)
00000001	Service Trip, read / Write
00000002	Reserved
00000004	Service Trip, Typecode / Sparepart
00000008	Reserved
00000010	Reserved
00000020	No Flow
00000040	Dry Pump
00000080	End of Curve
00000100	Broken Belt
00000200	Not used
00000400	Not used
00000800	Reserved
00001000	Reserved
00002000	Reserved
00004000	Reserved
00008000	Reserved
00010000	Reserved
00020000	Not used
00040000	Fans error
00080000	ECB error
00100000	Reserved
00200000	Reserved
00400000	Reserved
00800000	Reserved
01000000	Reserved
02000000	Reserved
04000000	Reserved
08000000	Reserved
10000000	Reserved
20000000	Reserved
40000000	Reserved
80000000	Reserved

8.6.3 Warning words

Warning word , par. 16-92 *Warning Word*

Bit (Hex)	Warning Word (par. 16-92 *Warning Word*)
00000001	Brake check
00000002	Power card over temperature
00000004	Earth fault
00000008	Ctrl. card over temperature
00000010	Control word timeout
00000020	Over current
00000040	Torque limit
00000080	Motor thermistor over temp.
00000100	Motor ETR over temperature
00000200	Inverter overloaded
00000400	DC link under voltage
00000800	DC link over voltage
00001000	DC link voltage low
00002000	DC link voltage high
00004000	Mains phase loss
00008000	No motor
00010000	Live zero error
00020000	10V low
00040000	Brake resistor power limit
00080000	Brake resistor short circuit
00100000	Brake chopper fault
00200000	Speed limit
00400000	Fieldbus comm. fault
00800000	24V supply fault
01000000	Mains failure
02000000	Current limit
04000000	Low temperature
08000000	Voltage limit
10000000	Encoder loss
20000000	Output frequency limit
40000000	Not used
80000000	Not used

Warning word 2, par. 16-93 *Warning Word 2*

Bit (Hex)	Warning Word 2 (par. 16-93 *Warning Word 2*)
00000001	Start Delayed
00000002	Stop Delayed
00000004	Clock Failure
00000008	Reserved
00000010	Reserved
00000020	No Flow
00000040	Dry Pump
00000080	End of Curve
00000100	Broken Belt
00000200	Not used
00000400	Reserved
00000800	Reserved
00001000	Reserved
00002000	Reserved
00004000	Reserved
00008000	Reserved
00010000	Reserved
00020000	Not used
00040000	Fans warning
00080000	ECB warning
00100000	Reserved
00200000	Reserved
00400000	Reserved
00800000	Reserved
01000000	Reserved
02000000	Reserved
04000000	Reserved
08000000	Reserved
10000000	Reserved
20000000	Reserved
40000000	Reserved
80000000	Reserved

8.6.4 Extended status words

Extended status word, par. 16-94 *Ext. Status Word*

Bit (Hex)	Extended Status Word (par. 16-94 *Ext. Status Word*)
00000001	Ramping
00000002	AMA tuning
00000004	Start CW/CCW
00000008	Not used
00000010	Not used
00000020	Feedback high
00000040	Feedback low
00000080	Output current high
00000100	Output current low
00000200	Output frequency high
00000400	Output frequency low
00000800	Brake check OK
00001000	Braking max
00002000	Braking
00004000	Out of speed range
00008000	OVC active
00010000	AC brake
00020000	Password Timelock
00040000	Password Protection
00080000	Reference high
00100000	Reference low
00200000	Local Ref./Remote Ref.
00400000	Reserved
00800000	Reserved
01000000	Reserved
02000000	Reserved
04000000	Reserved
08000000	Reserved
10000000	Reserved
20000000	Reserved
40000000	Reserved
80000000	Reserved

Extended status word 2, par. 16-95 *Ext. Status Word 2*

Bit (Hex)	Extended Status Word 2 (par. 16-95 *Ext. Status Word 2*)
00000001	Off
00000002	Hand / Auto
00000004	Not used
00000008	Not used
00000010	Not used
00000020	Relay 123 active
00000040	Start Prevented
00000080	Control ready
00000100	Drive ready
00000200	Quick Stop
00000400	DC Brake
00000800	Stop
00001000	Standby
00002000	Freeze Output Request
00004000	Freeze Output
00008000	Jog Request
00010000	Jog
00020000	Start Request
00040000	Start
00080000	Start Applied
00100000	Start Delay
00200000	Sleep
00400000	Sleep Boost
00800000	Running
01000000	Bypass
02000000	Fire Mode
04000000	Reserved
08000000	Reserved
10000000	Reserved
20000000	Reserved
40000000	Reserved
80000000	Reserved

8.6.5 Fault messages

WARNING 1, 10 volts low

The control card voltage is below 10 V from terminal 50.

Remove some of the load from terminal 50, as the 10 V supply is overloaded. Max. 15 mA or minimum 590 Ω.

This condition can be caused by a short in a connected potentiometer or improper wiring of the potentiometer.

Troubleshooting: Remove the wiring from terminal 50. If the warning clears, the problem is with the customer wiring. If the warning does not clear, replace the control card.

WARNING/ALARM 2, Live zero error

This warning or alarm will only appear if programmed by the user in par. 6-01 *Live Zero Timeout Function*. The signal on one of the analog inputs is less than 50% of the minimum value programmed for that input. This condition can be caused by broken wiring or faulty device sending the signal.

Troubleshooting:

Check connections on all the analog input terminals. Control card terminals 53 and 54 for signals, terminal 55 common. MCB 101 terminals 11 and 12 for signals, terminal 10 common. MCB 109 terminals 1, 3, 5 for signals, terminals 2, 4, 6 common).

Check that the drive programming and switch settings match the analog signal type.

Perform Input Terminal Signal Test.

WARNING/ALARM 3, No motor

No motor has been connected to the output of the frequency converter. This warning or alarm will only appear if programmed by the user in par. 1-80 *Function at Stop*.

Troubleshooting: Check the connection between the drive and the motor.

WARNING/ALARM 4, Mains phase loss

A phase is missing on the supply side, or the mains voltage imbalance is too high. This message also appears for a fault in the input rectifier on the frequency converter. Options are programmed at par. 14-12 *Function at Mains Imbalance*.

Troubleshooting: Check the supply voltage and supply currents to the frequency converter.

WARNING 5, DC link voltage high

The intermediate circuit voltage (DC) is higher than the high voltage warning limit. The limit is dependent on the drive voltage rating. The frequency converter is still active.

WARNING 6, DC link voltage low

The intermediate circuit voltage (DC) is lower than the low voltage warning limit. The limit is dependent on the drive voltage rating. The frequency converter is still active.

WARNING/ALARM 7, DC overvoltage

If the intermediate circuit voltage exceeds the limit, the frequency converter trips after a time.

Troubleshooting:

Connect a brake resistor

Extend the ramp time

Change the ramp type

Activate functions in par. 2-10 *Brake Function*

Increase par. 14-26 *Trip Delay at Inverter Fault*

WARNING/ALARM 8, DC under voltage

If the intermediate circuit voltage (DC) drops below the under voltage limit, the frequency converter checks if a 24 V backup supply is connected. If no 24 V backup supply is connected, the frequency converter trips after a fixed time delay. The time delay varies with unit size.

Troubleshooting:

Check that the supply voltage matches the frequency converter voltage.

Perform Input voltage test

Perform soft charge and rectifier circuit test

WARNING/ALARM 9, Inverter overloaded

The frequency converter is about to cut out because of an overload (too high current for too long). The counter for electronic, thermal inverter protection gives a warning at 98% and trips at 100%, while giving an alarm. The frequency converter *cannot* be reset until the counter is below 90%.

The fault is that the frequency converter is overloaded by more than 100% for too long.

Troubleshooting:

Come the output current shown on the LCP keypad with the drive rated current.

Come the output current shown on the LCP keypad with measured motor current.

Display the Thermal Drive Load on the keypad and monitor the value. When running above the drive continuous current rating, the counter should increase. When running below the drive continuous current rating, the counter should decrease.

Note: See the derating section in the Design Guide for more details if a high switching frequency is required.

WARNING/ALARM 10, Motor overload temperature

According to the electronic thermal protection (ETR), the motor is too hot. Select whether the frequency converter gives a warning or an alarm when the counter reaches 100% in par. 1-90 *Motor Thermal Protection*. The fault is that the motor is overloaded by more than 100% for too long.

Troubleshooting:

Check if motor is over heating.

If the motor is mechanically overloaded

That the motor par. 1-24 *Motor Current* is set correctly.

Motor data in ameters 1-20 through 1-25 are set correctly.

The setting in par. 1-91 *Motor External Fan*.

Run AMA in par. 1-29 *Automatic Motor Adaptation (AMA)*.

WARNING/ALARM 11, Motor thermistor over temp

The thermistor or the thermistor connection is disconnected. Select whether the frequency converter gives a warning or an alarm when the counter reaches 100% in par. 1-90 *Motor Thermal Protection*.

Troubleshooting:

Check if motor is over heating.

Check if the motor is mechanically overloaded.

Check that the thermistor is connected correctly between terminal 53 or 54 (analog voltage input) and terminal 50 (+10 V supply), or between terminal 18 or 19 (digital input PNP only) and terminal 50.

If a KTY sensor is used, check for correct connection between terminal 54 and 55.

If using a thermal switch or thermistor, check the programming of par. 1-93 *Thermistor Source* matches sensor wiring.

If using a KTY sensor, check the programming of ameters 1-95, 1-96, and 1-97 match sensor wiring.

WARNING/ALARM 12, Torque limit

The torque is higher than the value in par. 4-16 *Torque Limit Motor Mode* (in motor operation) or the torque is higher than the value in par. 4-17 *Torque Limit Generator Mode* (in regenerative operation). par. 14-25 *Trip Delay at Torque Limit* can be used to change this from a warning only condition to a warning followed by an alarm.

WARNING/ALARM 13, Over Current

The inverter peak current limit (approx. 200% of the rated current) is exceeded. The warning lasts about 1.5 sec., then the frequency converter trips and issues an alarm. If extended mechanical brake control is selected, trip can be reset externally.

Troubleshooting:

This fault may be caused by shock loading or fast acceleration with high inertia loads.

Turn off the frequency converter. Check if the motor shaft can be turned.

Check that the motor size matches the frequency converter.

Incorrect motor data in ameters 1-20 through 1-25.

ALARM 14, Earth (ground) fault

There is a discharge from the output phases to earth, either in the cable between the frequency converter and the motor or in the motor itself.

Troubleshooting:

Turn off the frequency converter and remove the earth fault.

Measure the resistance to ground of the motor leads and the motor with a megohmmeter to check for earth faults in the motor.

Perform current sensor test.

ALARM 15, Hardware mismatch

A fitted option is not operational with the present control board hardware or software.

Record the value of the following ameters and contact your Danfoss supplier:

par. 15-40 *FC Type*

par. 15-41 *Power Section*

par. 15-42 *Voltage*

par. 15-43 *Software Version*

par. 15-45 *Actual Typecode String*

par. 15-49 *SW ID Control Card*

par. 15-50 *SW ID Power Card*

par. 15-60 *Option Mounted*

par. 15-61 *Option SW Version*

ALARM 16, Short circuit

There is short-circuiting in the motor or on the motor terminals.

Turn off the frequency converter and remove the short-circuit.

WARNING/ALARM 17, Control word timeout

There is no communication to the frequency converter.

The warning will only be active when par. 8-04 *Control Word Timeout Function* is NOT set to OFF.

If par. 8-04 *Control Word Timeout Function* is set to *Stop* and *Trip*, a warning appears and the frequency converter ramps down until it trips, while giving an alarm.

Troubleshooting:

Check connections on the serial communication cable.

Increase par. 8-03 *Control Word Timeout Time*

Check operation of the communication equipment.

Verify proper installation based on EMC requirements.

WARNING 23, Internal fan fault

The fan warning function is an extra protection function that checks if the fan is running / mounted. The fan warning can be disabled in par. 14-53 *Fan Monitor* ([0] Disabled).

For the D, E, and F Frame drives, the regulated voltage to the fans is monitored.

Troubleshooting:

Check fan resistance.

Check soft charge fuses.

WARNING 24, External fan fault

The fan warning function is an extra protection function that checks if the fan is running / mounted. The fan warning can be disabled in par. 14-53 *Fan Monitor* ([0] Disabled).

For the D, E, and F Frame drives, the regulated voltage to the fans is monitored.

Troubleshooting:

Check fan resistance.

Check soft charge fuses.

WARNING 25, Brake resistor short circuit

The brake resistor is monitored during operation. If it short circuits, the brake function is disconnected and the warning appears. The frequency converter still works, but without the brake function. Turn off the frequency converter and replace the brake resistor (see par. 2-15 *Brake Check*).

WARNING/ALARM 26, Brake resistor power limit

The power transmitted to the brake resistor is calculated: as a percentage, as a mean value over the last 120 seconds, on the basis of the resistance value of the brake resistor, and the intermediate circuit voltage. The warning is active when the dissipated braking power is higher than 90%. If *Trip* [2] has been selected in par. 2-13 *Brake Power Monitoring*, the frequency converter cuts out and issues this alarm, when the dissipated braking power is higher than 100%.

Warning: There is a risk of substantial power being transmitted to the brake resistor if the brake transistor is short-circuited.

8

WARNING/ALARM 27, Brake chopper fault

The brake transistor is monitored during operation and if it short-circuits, the brake function disconnects and issues a warning. The frequency converter is still able to run, but since the brake transistor has short-circuited, substantial power is transmitted to the brake resistor, even if it is inactive. Turn off the frequency converter and remove the brake resistor.
This alarm/ warning could also occur should the brake resistor overheat. Terminal 104 to 106 are available as brake resistor. Klixon inputs, see section Brake Resistor Temperature Switch.

WARNING/ALARM 28, Brake check failed

Brake resistor fault: the brake resistor is not connected or not working. Check par. 2-15 *Brake Check*.

ALARM 29, Heatsink temp

The maximum temperature of the heatsink has been exceeded. The temperature fault will not be reset until the temperature falls below a defined heatsink temperature. The trip and reset point are different based on the drive power size.

Troubleshooting:

Ambient temperature too high.

Too long motor cable.

Incorrect clearance above and below the drive.

Dirty heatsink.

Blocked air flow around the drive.

Damaged heatsink fan.

For the D, E, and F Frame Drives, this alarm is based on the temperature measured by the heatsink sensor mounted inside the IGBT modules. For the F Frame drives, this alarm can also be caused by the thermal sensor in the Rectifier module.

Troubleshooting:

Check fan resistance.

Check soft charge fuses.

IGBT thermal sensor.

ALARM 30, Motor phase U missing

Motor phase U between the frequency converter and the motor is missing.
Turn off the frequency converter and check motor phase U.

ALARM 31, Motor phase V missing

Motor phase V between the frequency converter and the motor is missing.
Turn off the frequency converter and check motor phase V.

ALARM 32, Motor phase W missing

Motor phase W between the frequency converter and the motor is missing.
Turn off the frequency converter and check motor phase W.

ALARM 33, Inrush fault

Too many power-ups have occurred within a short time period. Let unit cool to operating temperature.

WARNING/ALARM 34, Fieldbus communication fault

The fieldbus on the communication option card is not working.

WARNING/ALARM 35, Out of frequency range:

This warning is active if the output frequency has reached the high limit (set in . 4-53) or low limit (set in . 4-52). In *Process Control, Closed Loop* (. 1-00) this warning is displayed.

WARNING/ALARM 36, Mains failure

This warning/alarm is only active if the supply voltage to the frequency converter is lost and par. 14-10 *Mains Failure* is NOT set to OFF. Check the fuses to the frequency converter

ALARM 38, Internal fault

It may be necessary to contact your Danfoss supplier. Some typical alarm messages:

0	Serial port cannot be initialized. Serious hardware failure
256-258	Power EEPROM data is defect or too old
512	Control board EEPROM data is defect or too old
513	Communication time out reading EEPROM data
514	Communication time out reading EEPROM data
515	Application Orientated Control cannot recognize the EEPROM data
516	Cannot write to the EEPROM because a write command is on progress
517	Write command is under time out
518	Failure in the EEPROM
519	Missing or invalid Barcode data in EEPROM
783	ameter value outside of min/max limits
1024-1279	A can-telegram that has to be sent, couldn't be sent
1281	Digital Signal Processor flash timeout
1282	Power micro software version mismatch
1283	Power EEPROM data version mismatch
1284	Cannot read Digital Signal Processor software version
1299	Option SW in slot A is too old
1300	Option SW in slot B is too old
1301	Option SW in slot C0 is too old
1302	Option SW in slot C1 is too old
1315	Option SW in slot A is not supported (not allowed)
1316	Option SW in slot B is not supported (not allowed)
1317	Option SW in slot C0 is not supported (not allowed)
1318	Option SW in slot C1 is not supported (not allowed)
1379	Option A did not respond when calculating Platform Version.
1380	Option B did not respond when calculating Platform Version.
1381	Option C0 did not respond when calculating Platform Version.
1382	Option C1 did not respond when calculating Platform Version.
1536	An exception in the Application Orientated Control is registered. Debug information written in LCP
1792	DSP watchdog is active. Debugging of power t data Motor Orientated Control data not transferred correctly
2049	Power data restarted
2064-2072	H081x: option in slot x has restarted
2080-2088	H082x: option in slot x has issued a powerup-wait
2096-2104	H083x: option in slot x has issued a legal powerup-wait
2304	Could not read any data from power EEPROM
2305	Missing SW version from power unit
2314	Missing power unit data from power unit
2315	Missing SW version from power unit
2316	Missing io_statepage from power unit
2324	Power card configuration is determined to be incorrect at power up
2325	A power card has stopped communicating while main power is applied
2326	Power card configuration is determined to be incorrect after the delay for power cards to register
2327	Too many power card locations have been registered as present
2330	Power size information between the power cards does not match
2561	No communication from DSP to ATACD
2562	No communication from ATACD to DSP (state running)
2816	Stack overflow Control board module
2817	Scheduler slow tasks
2818	Fast tasks
2819	ameter thread
2820	LCP Stack overflow
2821	Serial port overflow
2822	USB port overflow
2836	cfListMempool to small
3072-5122	ameter value is outside its limits
5123	Option in slot A: Hardware incompatible with Control board hardware
5124	Option in slot B: Hardware incompatible with Control board hardware
5125	Option in slot C0: Hardware incompatible with Control board hardware
5126	Option in slot C1: Hardware incompatible with Control board hardware
5376-6231	Out of memory

ALARM 39, Heatsink sensor

No feedback from the heatsink temperature sensor.

The signal from the IGBT thermal sensor is not available on the power card. The problem could be on the power card, on the gate drive card, or the ribbon cable between the power card and gate drive card.

WARNING 40, Overload of Digital Output Terminal 27

Check the load connected to terminal 27 or remove short-circuit connection. Check par. 5-00 *Digital I/O Mode* and par. 5-01 *Terminal 27 Mode*.

WARNING 41, Overload of Digital Output Terminal 29

Check the load connected to terminal 29 or remove short-circuit connection. Check par. 5-00 *Digital I/O Mode* and par. 5-02 *Terminal 29 Mode*.

WARNING 42, Overload of Digital Output on X30/6 or Overload of Digital Output on X30/7

For X30/6, check the load connected to X30/6 or remove short-circuit connection. Check par. 5-32 *Term X30/6 Digi Out (MCB 101)*.

For X30/7, check the load connected to X30/7 or remove short-circuit connection. Check par. 5-33 *Term X30/7 Digi Out (MCB 101)*.

ALARM 46, Power card supply

The supply on the power card is out of range.

There are three power supplies generated by the switch mode power supply (SMPS) on the power card: 24 V, 5V, +/- 18V. When powered with 24 VDC with the MCB 107 option, only the 24 V and 5 V supplies are monitored. When powered with three phase mains voltage, all three supplied are monitored.

WARNING 47, 24 V supply low

The 24 VDC is measured on the control card. The external 24 VDC backup power supply may be overloaded, otherwise contact your Danfoss supplier.

WARNING 48, 1.8 V supply low

The 1.8 Volt DC supply used on the control card is outside of allowable limits. The power supply is measured on the control card.

WARNING 49, Speed limit

When the speed is not within the specified range in . 4-11 and . 4-13. the drive will show a warning. When the speed is below the specified limit in . 1-86 (except when starting or stopping) the drive will trip.

ALARM 50, AMA calibration failed

Contact your Danfoss supplier.

ALARM 51, AMA check Unom and Inom

The setting of motor voltage, motor current, and motor power is presumably wrong. Check the settings.

ALARM 52, AMA low Inom

The motor current is too low. Check the settings.

ALARM 53, AMA motor too big

The motor is too big for the AMA to be carried out.

ALARM 54, AMA motor too small

The motor is too big for the AMA to be carried out.

ALARM 55, AMA ameter out of range

The ameter values found from the motor are outside acceptable range.

ALARM 56, AMA interrupted by user

The AMA has been interrupted by the user.

ALARM 57, AMA timeout

Try to start the AMA again a number of times, until the AMA is carried out. Please note that repeated runs may heat the motor to a level where the resistance Rs and Rr are increased. In most cases, however, this is not critical.

ALARM 58, AMA internal fault

Contact your Danfoss supplier.

WARNING 59, Current limit

The current is higher than the value in par. 4-18 *Current Limit*.

WARNING 60, External interlock

External interlock has been activated. To resume normal operation, apply 24 VDC to the terminal programmed for external interlock and reset the frequency converter (via serial communication, digital I/O, or by pressing reset button on keypad).

WARNING 61, Tracking error

An error has been detected between calculated motor speed and speed measurement from feedback device. The function for Warning/Alarm/Disable is set in 4-30, *Motor Feedback Loss Function*, error setting in 4-31, *Motor Feedback Speed Error*, and the allowed error time in 4-32, *Motor Feedback Loss Timeout*. During a commissioning procedure the function may be effective.

8

WARNING 62, Output frequency at maximum limit

The output frequency is higher than the value set in par. 4-19 *Max Output Frequency*

WARNING 64, Voltage limit

The load and speed combination demands a motor voltage higher than the actual DC link voltage.

WARNING/ALARM/TRIP 65, Control card over temperature

Control card over temperature: The cutout temperature of the control card is 80° C.

WARNING 66, Heatsink temperature low

This warning is based on the temperature sensor in the IGBT module.

Troubleshooting:

The heatsink temperature measured as 0° C could indicate that the temperature sensor is defective causing the fan speed to increase to the maximum. If the sensor wire between the IGBT and the gate drive card is disconnected, this warning would result. Also, check the IGBT thermal sensor.

ALARM 67, Option module configuration has changed

One or more options have either been added or removed since the last power-down.

ALARM 68, Safe stop activated

Safe stop has been activated. To resume normal operation, apply 24 VDC to terminal 37, then send a reset signal (via Bus, Digital I/O, or by pressing the reset key. See ameter 5-19, Terminal 37 Safe Stop.

ALARM 69, Power card temperature

The temperature sensor on the power card is either too hot or too cold.

Troubleshooting:

Check the operation of the door fans.

Check that the filters for the door fans are not blocked.

Check that the gland plate is properly installed on IP 21 and IP 54 (NEMA 1 and NEMA 12) drives.

ALARM 70, Illegal FC Configuration

Actual combination of control board and power board is illegal.

WARNING/ALARM 71, PTC 1 safe stop

Safe Stop has been activated from the MCB 112 PTC Thermistor Card (motor too warm). Normal operation can be resumed when the MCB 112 applies 24 V DC to T-37 again (when the motor temperature reaches an acceptable level) and when the Digital Input from the MCB 112 is deactivated. When that happens, a reset signal must be is be sent (via serial communication, digital I/O, or by pressing reset button on keypad). Note that if automatic restart is enabled, the motor may start when the fault is cleared.

ALARM 72, Dangerous failure

Safe stop with trip lock. Unexpected signal levels on safe stop and digital input from the MCB 112 PTC thermistor card.

Warning 73, Safe stop auto restart

Safe stopped. Note that with automatic restart enabled, the motor may start when the fault is cleared.

WARNING 77, Reduced power mode:

This warning indicates that the drive is operating in reduced power mode (i.e. less than the allowed number of inverter sections). This warning will be generated on power cycle when the drive is set to run with fewer inverters and will remain on.

ALARM 79, Illegal power section configuration

The scaling card is the incorrect t number or not installed. Also MK102 connector on the power card could not be installed.

ALARM 80, Drive initialized to default value

ameter settings are initialized to default settings after a manual reset.

ALARM 91, Analog input 54 wrong settings

Switch S202 has to be set in position OFF (voltage input) when a KTY sensor is connected to analog input terminal 54.

ALARM 92, No flow

A no-load situation has been detected in the system. See ameter group 22-2.

ALARM 93, Dry pump

A no-flow situation and high speed indicates that the pump has run dry. See ameter group 22-2.

ALARM 94, End of curve

Feedback stays lower than the set point which may indicate leakage in the pipe system. See ameter group 22-5.

ALARM 95, Broken belt

Torque is below the torque level set for no load, indicating a broken belt. See ameter group 22-6.

ALARM 96, Start delayed

Motor start has been delayed due to short-cycle protection active. See ameter group 22-7.

WARNING 97, Stop delayed

Stopping the motor has been delayed due to short cycle protection is active. See ameter group 22-7.

WARNING 98, Clock fault

Clock Fault. Time is not set or RTC clock (if mounted) has failed. See ameter group 0-7.

WARNING 201, Fire M was Active

Fire Mode has been active.

WARNING 202, Fire M Limits Exceeded

Fire Mode has suppressed one or more warranty voiding alarms.

WARNING 203, Missing Motor

A multi-motor under-load situation was detected, this could be due to e.g. a missing motor.

WARNING 204, Locked Rotor

A multi-motor overload situation was detected, this could be due to e.g. a locked rotor.

ALARM 243, Brake IGBT

This alarm is only for F Frame drives. It is equivalent to Alarm 27. The report value in the alarm log indicates which power module generated the alarm:

1 = left most inverter module.

2 = middle inverter module in F2 or F4 drive.

2 = right inverter module in F1 or F3 drive.

3 = right inverter module in F2 or F4 drive.

5 = rectifier module.

ALARM 244, Heatsink temperature

This alarm is only for F Frame drives. It is equivalent to Alarm 29. The report value in the alarm log indicates which power module generated the alarm:

1 = left most inverter module.

2 = middle inverter module in F2 or F4 drive.

2 = right inverter module in F1 or F3 drive.

3 = right inverter module in F2 or F4 drive.

5 = rectifier module.

ALARM 245, Heatsink sensor

This alarm is only for F Frame drives. It is equivalent to Alarm 39. The report value in the alarm log indicates which power module generated the alarm:

1 = left most inverter module.

2 = middle inverter module in F2 or F4 drive.

2 = right inverter module in F1 or F3 drive.

3 = right inverter module in F2 or F4 drive.

5 = rectifier module.

ALARM 246, Power card supply

This alarm is only for F Frame drives. It is equivalent to Alarm 46. The report value in the alarm log indicates which power module generated the alarm:

1 = left most inverter module.

2 = middle inverter module in F2 or F4 drive.

2 = right inverter module in F1 or F3 drive.

3 = right inverter module in F2 or F4 drive.

5 = rectifier module.

ALARM 247, Power card temperature

This alarm is only for F Frame drives. It is equivalent to Alarm 69. The report value in the alarm log indicates which power module generated the alarm:

1 = left most inverter module.

2 = middle inverter module in F2 or F4 drive.

2 = right inverter module in F1 or F3 drive.

3 = right inverter module in F2 or F4 drive.

5 = rectifier module.

ALARM 248, Illegal power section configuration

This alarm is only for F Frame drives. It is equivalent to Alarm 79. The report value in the alarm log indicates which power module generated the alarm:

1 = left most inverter module.

2 = middle inverter module in F2 or F4 drive.

2 = right inverter module in F1 or F3 drive.

3 = right inverter module in F2 or F4 drive.

5 = rectifier module.

ALARM 250, New se t

The power or switch mode power supply has been exchanged. The frequency converter type code must be restored in the EEPROM. Select the correct type code in par. 14-23 *Typecode Setting* according to the label on the unit. Remember to select 'Save to EEPROM' to complete.

ALARM 251, New type code

The frequency converter has a new type code.

Index

0

0 - 10 Vdc 55
0-20 Ma 55

2

24 V Back-up Option Mcb 107 (option D) 54
24 Vdc Power Supply 58

3

3 Setpoint Pid Controller 25
30 Ampere, Fuse-protected Terminals 58

4

4-20 Ma 55

A

Abbreviations 6
Accessory Bags 80
Acoustic Noise 167
Aggressive Environments 14
Air Humidity 13
Alarm And Status Messages 174
Alarm Word 177
Alarm/warning Code List 175
Alarms And Warnings 174
Aluminium Conductors 87
Ama 114
Analog I/o Option Mcb 109 55
Analog I/o Selection 55
Analog Inputs 8
Analog Inputs 163
Analog Inputs 8
Analog Output 163
Analog Outputs - Terminal X30/5+8 51
Analog Voltage Inputs - Terminal X30/10-12 51
Application Examples 23
Automatic Adaptations To Ensure Performance 172
Automatic Motor Adaptation 114
Automatic Motor Adaptation (ama) 100
Awg 149

B

Bacnet 67
Balancing Contractor 28
Basic Wiring Example 97
Battery Back-up Of Clock Function 55
Better Control 21
Brake Control 181
Brake Function 45
Brake Power 8, 45
Brake Resistor 43
Brake Resistor Cabling 45
Brake Resistor Calculation 43
Brake Resistor Temperature Switch 103
Brake Resistors 58, 74
Brake Resistors 58
Branch Circuit Protection 91
Break-away Torque 7
Building Management System 55
Building Management System, Bms 19
Bypass Frequency Ranges 26

C

Cable Clamp 112
Cable Clamps 109
Cable Length And Cross-section 86
Cable Lengths And Cross Sections 162
Caution 12
Cav System 25
Ce Conformity And Labelling 12
Central Vav Systems 24
Clockwise Rotation 105
Closed Loop Control For A Ventilation System 35
Co2 Sensor 25
Coasting 146
Coasting 6, 145
Communication Option 182
Comparison Of Energy Savings 19
Condenser Pumps 27
Conducted Emission. 39
Constant Air Volume 25
Constant Torque Applications (ct Mode) 173
Control Cable Terminals 96
Control Cables 109
Control Cables 86, 98
Control Cables 85, 98
Control Card Performance 165
Control Card, 10 V Dc Output 164
Control Card, 24 V Dc Output 164
Control Card, Rs-485 Serial Communication: 163
Control Card, Usb Serial Communication: 165
Control Characteristics 164
Control Potential 29
Control Structure Closed Loop 31
Control Structure Open Loop 30
Control Terminals 96
Control Word 144
Cooling 173
Cooling Conditions 81
Cooling Tower Fan 26
Copyright, Limitation Of Liability And Revision Rights 3
Cos Φ Compensation 21

D

Dampers 24
Data Types Supported By The Frequency Converter 130
Dc Brake 144
Dc Link 180
Definitions 6
Derating For Ambient Temperature 172
Derating For Low Air Pressure 172
Derating For Running At Low Speed 173
Devicenet 67
Differential Pressure 29
Digital Inputs - Terminal X30/1-4 51
Digital Inputs: 162
Digital Output 164
Digital Outputs - Terminal X30/5-7 51
Direction Of Motor Rotation 105
Disposal Instruction 12
Drive Configurator 63
Du/dt Filters 61

E

Earth Leakage Current 108
Earth Leakage Current 42
Earthing 112

Earthing Of Screened/armoured Control Cables 112
Efficiency 166
Electrical Installation 85, 86, 98
Electrical Installation - Emc Precautions 109
Electrical Terminals 15
Emc Directive 89/336/eec 13
Emc Test Results 39
Emission Requirements 38
Enclosure Knock-outs 87
Energy Savings 20
Energy Savings 18
Equalising Cable, 112
Etr 104
Evaporator Flow Rate 28
Example Of Closed Loop Pid Control 35
Extended Status Word 179
Extended Status Word 2 179
External 24 V Dc Supply 54
External Fan Supply 103
External Temperature Monitoring 58
Extreme Running Conditions 45

F

Fan System Controlled By Frequency Converters 23
Fault Messages 180
Fc Profile 144
Fc With Modbus Rtu 125
Field Mounting 83
Final Set-up And Test 100
Flow Meter 28
Frame Size F Panel Options 1
Freeze Output 6
Frequency Converter Hardware Setup 124
Frequency Converter Set-up 125
Frequency Converter With Modbus Rtu 132
Function Codes Supported By Modbus Rtu 136
Fuse Tables 93
Fuses 91

G

General Aspects Of Emc Emissions 37
General Aspects Of Harmonics Emission 39
General Specifications 162
General Warning 5
Gland/conduit Entry - Ip21 (nema 1) And Ip54 (nema12) 88

H

Harmonic Filters 70
Harmonics Emission Requirements 40
Harmonics Test Results (emission) 40
High Power Series Mains And Motor Connections 84
High Voltage Test 108
Hold Output Frequency 145
How To Connect A Pc To The Frequency Converter 106
How To Control The Frequency Converter 136

I

I/os For Set Point Inputs 55
Iec Emergency Stop With Pilz Safety Relay 57
Igvs 24
Immunity Requirements 40
Index (ind) 129
Installation At High Altitudes 11
Insulation Resistance Monitor (irm) 57
Intermediate Circuit 45, 167

Ip 21/ip 4x/ Type 1 Enclosure Kit 59
Ip 21/type 1 Enclosure Kit 59

J

Jog 7
Jog 145

K

Kty Sensor 181

L

Laws Of Proportionality 19
Lcp 6, 9
Lead Pump Alternation Wiring Diagram 119
Leakage Current 42
Lifting 82
Literature 4
Load Drive Settings 107
Local (hand On) And Remote (auto On) Control 31
Local Speed Determination 28
Low Evaporator Temperature 28

M

Mains Disconnectors 102
Mains Drop-out 46
Mains Supply 10
Mains Supply 149, 153
Mains Supply 3 X 525- 690 Vac 157
Manual Motor Starters 57
Manual Pid Adjustment 37
Mcb 105 Option 52
Mct 10 Set-up Software 107
Mct 31 108
Mechanical Dimensions 79
Mechanical Dimensions 77
Mechanical Dimensions - High Power 78
Mechanical Mounting 81
Modbus Communication 124
Modbus Exception Codes 136
Moment Of Inertia 45
Motor Cables 109
Motor Cables 86
Motor Name Plate 100
Motor Name Plate Data 100
Motor Output 162
Motor Parameters 114
Motor Phases 45
Motor Protection 104, 165
Motor Rotation 105
Motor Thermal Protection 147
Motor Thermal Protection 46, 105
Motor Voltage 167
Motor-generated Over-voltage 45
Multiple Pumps 29
Multi-zone Control 55

N

Name Plate Data 100
Namur 57
Network Connection 123
Ni1000 Temperature Sensor 55
Non Ul Compliance 91
Non Ul Fuses 200 V To 480 V 92

O

Options And Accessories 49
Ordering Numbers 63
Ordering Numbers: Du/dt Filters, 380-480 Vac 73
Ordering Numbers: Du/dt Filters, 525-600/690 Vac 74
Ordering Numbers: Harmonic Filters 70
Ordering Numbers: High Power Option Kits 69
Ordering Numbers: Options And Accessories 67
Ordering Numbers: Sine Wave Filter Modules, 200-500 Vac 71
Ordering Numbers: Sine-wave Filter Modules, 525-600/690 Vac 72
Output Filters 61
Output Performance (u, V, W) 162
Outputs For Actuators 55
Over-current Protection 91

P

Parallel Connection Of Motors 104
Parameter Number (pnu) 129
Parameter Values 137
Pay Back Period 20
Pc Software Tools 107
Pc-based Configuration Tool Mct 10 107
Peak Voltage On Motor 167
Pelv - Protective Extra Low Voltage 41
Plc 112
Potentiometer Reference 114
Power Factor 10
Power Factor Correction 21
Primary Pumps 28
Principle Diagram 55
Profibus 67
Profibus Dp-v1 107
Programmable Minimum Frequency Setting 26
Programming Order 36
Protection 14, 41, 42
Protection And Features 165
Protocol Overview 125
Pt1000 Temperature Sensor 55
Public Supply Network 40
Pulse Inputs 163
Pulse Start/stop 113
Pump Impeller 27

R

Radiated Emission 39
Rated Motor Speed 7
Rcd 9, 42
Rcd (residual Current Device) 57
Read Holding Registers (03 Hex) 141
Real-time Clock (rtc) 56
Reference Handling 34
Relay Option Mcb 105 52
Relay Output 104
Relay Outputs 164
Removal Of Knockouts For Extra Cables 87
Residual Current Device 42, 112
Return Fan 24
Rise Time 167
Rs 485 Bus Connection 106
Rs-485 123

S

Safe Stop 15
Safe Stop Installation 17

Safety Category 3 (en 954-1) 17
Safety Earth Connection 108
Safety Note 11
Safety Regulations 11
Safety Requirements Of Mechanical Installation 83
Save Drive Settings 107
Screened/armoured 98
Screened/armoured. 86
Screening Of Cables 86
Secondary Pumps 29
Serial Communication 112, 165
Serial Communication Port 8
Set Speed Limit And Ramp Time 101
Short Circuit (motor Phase – Phase) 45
Short Circuit Protection 91
Sine-wave Filters 61
Smart Logic Control 114
Smart Logic Control Programming 114
Soft-starter 22
Software Version 3
Software Versions 67
Space Heaters And Thermostat 57
Star/delta Starter 22
Start/stop 113
Start/stop Conditions 120
Static Overload In Vvcplus Mode 46
Status Word 146
Stopping Category 0 (en 60204-1) 17
Successful Amaauto Tune 101
Surroundings: 164
Switches S201, S202, And S801 99
Switching Frequency 87
Switching On The Output 45
System Status And Operation 118

T

Telegram Length (lge) 126
The Clear Advantage - Energy Savings 18
The Emc Directive (89/336/eec) 12
The Low-voltage Directive (73/23/eec) 12
The Machinery Directive (98/37/eec) 12
Thermistor 10
Throttling Valve 27
Tightening Of Terminals 84
Torque Characteristics 162
Transmitter/sensor Inputs 55
Tuning The Drive Closed Loop Controller 37
Type Code String High Power 65
Type Code String Low And Medium Power 64

U

Ul Fuses, 200 - 240 V 92
Unsuccessful Amaauto Tune 101
Usb Connection 96
Use Of Emc-correct Cables 111

V

Variable (quadratic) Torque Applications (vt) 173
Variable Air Volume 24
Variable Control Of Flow And Pressure 21
Varying Flow Over 1 Year 20
Vav 24
Vibration And Shock 14
Vibrations 26
Voltage Level 162
Vvcplus 10

W

Warning Against Unintended Start 11
Warning Word 178
Warning Word 2 178
What Is Ce Conformity And Labelling? 12
What Is Covered 13