ENGINEERING
TOMORROW

Design Guide

VLT® AQUA Drive FC 202

0.25–90 kW

drives.danfoss.com | VLT®

Contents

1 Introduction 11
1.1 Purpose of this Design Guide 11
1.2 Trademarks 11
1.3 Additional Resources 11
1.4 Document Version 11

2 Safety 12
2.1 Safety 12
2.2 Safety Symbols 12
2.3 Qualified Personnel 12

3 Approvals and Certifications 13
3.1 Regulatory/Compliance Approvals 13
3.2 Typical Product Approvals and Certifications for VLT® Drives 13
3.2.1.4 ErP Directive 14
3.2.3 UL Listing 14
3.2.6 EAC 14
3.2.7 UkrSEPRO 15
3.2.8 RCM Mark Compliance 15
3.3 Export Control Regulation 15
3.4 Enclosure Protection Rating 15
3.4.1 UL Type Standard 15
3.4.2 IP Standard 16

4 Product Family Overview 17
4.1 VLT® Drives 17
4.2 Product Overview of the VLT® AQUA Drive FC 202 17
4.3 Advantages of Using AC Drives in Pump and Fan Applications 21
4.3.1 Example of Energy Savings 22
4.3.2 Valve Control versus Speed Control of Centrifugal Pumps 23
4.3.3 Example with Varying Flow over 1 Year 25
4.3.4 Improved Control 26
4.3.5 Star/Delta Starter or Soft Starter not Required 27
4.4 Power Drive Systems 27
4.4.1 Ecodesign for Power Drive Systems 27
4.5 Software Tools 28

5 Product Overview 30
5.1 Overview of Drives Systems 30
5.1.1 Filter Options 30
5.1.1.1 Protection of Motor Insulation 30
5.1.1.2 Reduction of Motor Acoustic Noise 31
5.1.1.3 Reduction of High-frequency Electromagnetic Noise in Motor Cables 31
5.1.1.4 Bearing Currents and Shaft Voltage 31
5.1.2 Supported Motor Types 31
5.1.3 Bearing Currents 32
5.2 Functional Safety 34
5.2.1 Protection of Personnel and Equipment 34
5.2.2 Safety Functions 35
5.3 Maintenance Functions 35

6 Product Features 37
6.1 Automated Operational Features 37
6.1.1 Automatic Energy Optimization 37
6.1.2 Short-circuit Protection 37
6.1.3 Overvoltage Protection 38
6.1.4 Missing Motor Phase Detection 38
6.1.5 Mains Phase Imbalance Detection 38
6.1.6 Service Switch on the Output 38
6.1.7 Overload Protection 39
6.1.8 Locked Rotor Protection 39
6.1.9 Automatic Derating 39
6.1.9.1 Overview of Automatic Derating 39
6.1.9.2 Sine-wave Filter Fixed Mode 40
6.1.9.3 Overview Table 41
6.1.9.4 High Motor Load 42
6.1.9.5 High Voltage on the DC link 42
6.1.9.6 Low Motor Speed 42
6.1.9.7 High Internal Temperature 43
6.1.9.8 Current 44
6.1.10 Automatic Switching Frequency Modulation 44
6.1.11 Automatic Derating for High Switching Frequency 44
6.1.12 Power Fluctuation Performance 44
6.1.13 Resonance Damping 44
6.1.14 Temperature-controlled Fans 44

6.1.15 EMC Compliance 44
6.1.16 Galvanic Isolation of Control Terminals 44
6.1.17 Sleep Mode 45
6.1.18 Run Permissive 45
6.2 Custom Application Features 45
6.2.1 Automatic Motor Adaptation (AMA) 45
6.2.2 Motor Thermal Protection 45
6.2.3 Motor Thermal Protection for Ex-e or Ex-n Motors 46
6.2.4 Mains Dropout 47
6.2.5 Built-in PID Controller 47
6.2.6 Automatic Restart 47
6.2.7 Flying Start 48
6.2.8 Full Torque at Reduced Speed 48
6.2.9 Frequency Bypass 48
6.2.10 Motor Preheat 48
6.2.11 Programmable Set-ups 48
6.2.12 Smart Logic Controller 48
6.2.12.3 SLC Application Example - Setting Up a Ramp-up/Ramp-down Sequence 50
6.2.12.4 RS Flip Flops 51
6.2.12.5 Timers 52
6.2.13 Safe Torque Off 53
6.3 Dynamic Braking 53
6.4 Load Sharing 53
6.4.1 Preconditions and Special Conditions 53
6.4.2 Combinations of Enclosure Sizes 54

7 Options and Accessories Overview 56
7.1 Introduction 56
7.2 VLT® FC Series Options Concept 56
7.3 VLT® Fieldbus Options 57
7.4 VLT® Functional Extensions 57
7.5 VLT® Programmable Controllers 58
7.6 License Features 58
7.7 VLT® Power Options 58
7.7.1 VLT® Harmonic Filters 58
7.7.2 VLT® Sine-wave Filters 59
7.7.3 VLT® dU/dt Filters 59
7.7.4 VLT® Common-mode Filters 59

7.7.5 VLT® Brake Resistors 59
7.7.6 VLT® Line Reactors 60
7.8 Kits and Accessories 60
7.8.1 Panel Through Mounting Kits for VLT® FC Series Enclosure Sizes A, B, and C (IP21) 60
7.8.2 IP21/NEMA Type 1 Enclosure Kits for VLT® FC Series Enclosure Sizes A, B, and C 61
7.8.3 Mounting Brackets for VLT® FC Series Enclosure Sizes A5, B1, B2, C1, and C2 65
7.8.4 Remote Mounting Kits for LCP 66
7.8.4.1 Remote Mounting Kit for LCP 102 and LCP 103 with Cover for Outdoor Mounting 66
7.8.4.2 Panel Mounting Kit for LCP 102, LCP 101, and LCP 103 68
7.8.5 VLT® Wireless Communication Panel LCP 103 69

8 Specifications 71
8.1 Electrical data 71
8.1.1 Mains Supply 1x200–240 V AC 71
8.1.2 Mains Supply 3x200–240 V AC 72
8.1.3 Mains Supply 1x380–480 V AC 76
8.1.4 Mains Supply 3x380–480 V AC 77
8.1.5 Mains Supply 3x525–600 V AC 82
8.1.6 Mains Supply 3x525–690 V AC 86
8.2 Mains Supply 89
8.3 Motor Output and Motor Data 90
8.3.1 Motor Output (U, V, W) 90
8.3.2 Torque Characteristics, Normal Overload 90
8.3.3 Torque Characteristics, High Overload 90
8.4 Ambient Conditions 90
8.4.1 Environment 90
8.5 Cable Specifications 91
8.5.1 Cable Lengths and Cross-sections for Control Cables 91
8.6 Control Input/Output and Control Data 91
8.6.1 Digital Inputs 91
8.6.2 STO Terminal 37 (Terminal 37 is Fixed PNP Logic) 92
8.6.3 Analog Inputs 92
8.6.4 Pulse Inputs 93
8.6.5 Digital Outputs 93
8.6.6 Analog Output 93
8.6.7 Control Card, 24 V DC Output 93
8.6.8 Control Card, +10 V DC Output 93
8.6.9 Control Card, RS485 Serial Communication 94

8.6.10 Control Card, USB Serial Communication 94
8.6.11 Relay Outputs 94
8.6.12 Control Card Performance 94
8.6.13 Control Characteristics 94
8.7 Connection Tightening Torques 95
8.8 Power Ratings, Weight, and Dimensions 95

9 Mechanical Installation Considerations 100
9.1 Storage 100
9.2 Operating Environment 100
9.2.1 Gases 100
9.2.2 Dust 101
9.2.3 Outdoor Installation in freezing Temperature Environments 101
9.2.4 Potentially Explosive Atmospheres 102
9.2.5 Vibration and Shock 103
9.2.6 Maintenance 103
9.3 Derating 103
9.3.1 Derating for Running at Low Speed 103
9.3.2 Derating for Low Air Pressure 103

10 Electrical Installation Considerations 105
10.1 Safety Instructions 105
10.2 Wiring Schematic 107
10.3 Connections 109
10.3.1 Power Connections 109
10.3.2 IT Grid Connection 110
10.3.3 DC Bus Connection 111
10.3.4 Load Sharing Connection 111
10.3.5 Brake Cable Connection 111
10.3.6 Grounding 112
10.3.7 Safety Ground Connection 112
10.4 Cables 112
10.4.1 EMC-correct Cables 112
10.4.2 Preparing Cable Entry Holes 113
10.4.3 Specifications of Entry Holes 113
10.4.3.1 Entry Holes, Enclosure Size A2, IP21 114
10.4.3.2 Entry Holes, Enclosure Size A3, IP21 114
10.4.3.3 Entry Holes, Enclosure Size A4, IP55 115
10.4.3.4 Entry Holes, Enclosure Size A4, IP55 Threaded Gland Holes 115

10.4.3.5 Entry Holes, Enclosure Size A5, IP55 116
10.4.3.6 Entry Holes, Enclosure Size A5, IP55 Threaded Gland Holes 116
10.4.3.7 Entry Holes, Enclosure Size B1, IP21 117
10.4.3.8 Entry Holes, Enclosure Size B1, IP55 117
10.4.3.9 Entry Holes, Enclosure Size B1, IP55 Threaded Gland Holes 118
10.4.3.10 Entry Holes, Enclosure Size B2, IP21 118
10.4.3.11 Entry Holes, Enclosure Size B2, IP55 119
10.4.3.12 Entry Holes, Enclosure Size B2, IP55 Threaded Gland Holes 119
10.4.3.13 Entry Holes, Enclosure Size B3, IP21 120
10.4.3.14 Entry Holes, Enclosure Size C1, IP21 120
10.4.3.15 Entry Holes, Enclosure Size C2, IP21 121
10.4.4 Tightening Torques for Cover 121
10.5 Control Wiring and Terminals 122
10.5.1 Shielded Control Cables 122
10.5.2 Wiring to Control Terminals 123
10.5.3 Control Terminal Types 123
10.5.4 Terminal Descriptions 124
10.6 Fuses and Circuit Breakers 125
10.6.1 Fuse Recommendations 125
10.6.2 CE Compliance 126
10.6.3 UL Compliance 129
10.7 Relays 134
10.8 Motor 135
10.8.1 Motor Thermal Protection 136
10.8.2 Parallel Connection of Motors 136
10.8.3 Motor Insulation 138
10.8.4 Motor Bearing Currents 138
10.9 Braking 138
10.9.1 Selection of Brake Resistor 138
10.9.2 Control with Brake Function 141
10.10 Residual Current Device 141
10.11 Leakage Current 141
10.11.1 Using a Residual Current Device (RCD) 143
10.12 Efficiency 144
10.13 Acoustic Noise and Airflow 144
10.14 dU/dt Conditions 145
10.15 Electromagnetic Compatibility (EMC) Overview 146
10.15.1 EMC Test Results 146

10.15.2 Emission Requirements 148
10.15.3 Immunity Requirements 148
10.15.4 EMC Compatibility 150
10.16 EMC-compliant Installation 151
10.17 Harmonics Overview 153
10.17.1 Harmonics Analysis 153
10.17.2 Effect of Harmonics in a Power Distribution System 154
10.17.3 IEC Harmonic Standards 155
10.17.4 Harmonic Results (Emission) 156
10.17.5 Harmonic Mitigation 157
10.17.6 Harmonic Calculation 157
10.17.7 Line Reactors 157

11 Basic Operating Principles 159
11.1 Introduction 159
11.2 Drive Controls 159
11.2.1 Control Principle 159
11.2.2 Local (Hand On) and Remote (Auto On) Control 159
11.3 Reference Limits 161
11.4 Control Principle 163
11.4.1 Control Structure Open Loop 163
11.4.2 Control Structure Closed Loop 163

12 Basic I/O Configurations 165
12.1 Application Examples 165
12.1.1 Wiring Configuration for Automatic Motor Adaptation (AMA) 165
12.1.2 Wiring Configuration for Automatic Motor Adaptation without T27 166
12.1.3 Wiring Configuration: Speed 166
12.1.4 Wiring Configuration: Feedback 168
12.1.5 Wiring Configuration: Run/Stop 170
12.1.6 Wiring Configuration: Start/Stop 172
12.1.7 Wiring Configuration: External Alarm Reset 174
12.1.8 Wiring Configuration: RS485 175
12.1.9 Wiring Configuration: Motor Thermistor 176
12.1.10 Wiring Configuration for a Relay Setup with Smart Logic Control 177

13 How to Order a Drive 178
13.1 Drive Configurator 178
13.1.1 Type Code 178

13.1.2 Language Packages 180
13.2 Order Numbers for Options and Accessories 181
13.2.1 Order Numbers for Options for Slot A 181
13.2.2 Order Numbers for Options for Slot B 181
13.2.3 Order Numbers for Options for Slot C 181
13.2.4 Order Numbers for Options for Slot D 182
13.2.6 Order Numbers for Miscellaneous Hardware 182
13.2.7 Order Numbers for Local Control Panel Options 184
13.2.8 Order Numbers for PC Software 184
13.2.9 Ordering of VLT® Brake Resistors MCE 101 184
13.2.9.1 Order Numbers for Brake Resistors, T2, Horizontal Braking 10% Duty Cycle 185
13.2.9.2 Order Numbers for Brake Resistors, T2, Vertical Braking 40% Duty Cycle 186
13.2.9.3 Order Numbers for Brake Resistors, T2, Flat-pack for Horizontal Conveyors 187
13.2.9.6 Order Numbers for Brake Resistors, T4, Flat-pack for Horizontal Conveyors 191
13.2.10 Order Numbers for Accessory Bags 197
13.2.11 Ordering of Harmonic Filters 198
13.2.11.1 Order Numbers for Harmonic Filters, 380–415 V, 50 Hz 198
13.2.11.2 Order Numbers for Harmonic Filters, 380–415 V, 60 Hz 200
13.2.11.3 Order Numbers for Harmonic Filters, 440–480 V, 60 Hz 201
13.2.11.4 Order Numbers for Harmonic Filters, 600 V, 60 Hz 203
13.2.11.5 Order Numbers for Harmonic Filters, 500–690 V, 50 Hz 204
13.2.12 Order Numbers for VLT® Sine-wave Filters MCC 101 205
13.2.13 Order Numbers for VLT® dU/dt Filters MCC 102 207
13.2.15 Spare Parts 209

1 Introduction

1.1 Purpose of this Design Guide

This Design Guide is intended for qualified personnel, such as:

- Project and systems engineers.
- Design consultants.
- Application and product specialists.

The Design Guide provides technical information to understand the capabilities of the VLT AQUA DriveFC 202 for integration into motor control and monitoring systems. Its purpose is to provide design considerations and planning data for integration of the drive into a system. It caters for selection of drives and options for a diversity of applications and installations. Reviewing the detailed product information in the design stage enables developing a well-conceived system with optimal functionality and efficiency.

This manual is targeted at a worldwide audience. Therefore, wherever occurring, both SI and imperial units are shown.

1.2 Trademarks

VLT® is a registered trademark for Danfoss A/S.

1.3 Additional Resources

Various resources are available to understand advanced drive operation, programming, and directives compliance.

- The **Operating Guide** provides detailed information for the installation and start-up of the drive.
- The **Programming Guide** provides greater detail on how to work with parameters. It also contains application examples.
- The **VLT® AQUA FC 202 Cascade Controller Installation Guide** provides information about features of the cascade controller and about configuration and programming of the controller.
- The **VLT® Safe Torque Off Operating Guide** describes how to use Danfoss VLT® drives in functional safety applications. This manual is supplied with the drive when the Safe Torque Off option is present.
- The **VLT® Brake Resistor MCE 101 Design Guide** describes how to select the optimal brake resistor.
- The **VLT® Advanced Harmonic Filters AHF 005/AHF 010 Design Guide** describes harmonics, various mitigation methods, and the operation principle of the advanced harmonic filter. This guide also describes how to select the correct advanced harmonics filter for a particular application.
- The **Output Filter Design Guide** explains why it is necessary to use output filters for certain applications and how to select the optimal dU/dt or sine-wave filter.
- The **VLT® Condition-based Monitoring Programming Guide** provides information about the features of the condition-based monitoring and details how to work with the parameters.
- Supplemental publications, drawings, and manuals are available at www.danfoss.com.

Optional equipment is available that may change some of the information described in these publications. Be sure to follow the instructions supplied with the options for specific requirements.

Contact a Danfoss supplier or visit www.danfoss.com for more information.

1.4 Document Version

This manual is regularly reviewed and updated. All suggestions for improvement are welcome.

The original language of this manual is English.

Table 1: Document Version

Version	Remarks
AJ300847815559, version 0101	New document structure. All chapters updated.

2 Safety

2.1 Safety

When designing AC drives, some residual dangers cannot be avoided constructively. One example is the discharge time, which is very important to observe to avoid potential death or serious injury. For the Danfoss VLT® drives, the discharge time is from 4–40 minutes depending on the drive size.

For further information on safety precautions, refer to the product-specific Operating Guide.

2.2 Safety Symbols

The following symbols are used in this manual:

⚠ DANGER ⚠
Indicates a hazardous situation which, if not avoided, will result in death or serious injury.

⚠ WARNING ⚠
Indicates a hazardous situation which, if not avoided, could result in death or serious injury.

⚠ CAUTION ⚠
Indicates a hazardous situation which, if not avoided, could result in minor or moderate injury.

NOTICE
Indicates information considered important, but not hazard-related (for example, messages relating to property damage).

2.3 Qualified Personnel

To allow trouble-free and safe operation of the unit, only qualified personnel with proven skills are allowed to transport, store, assemble, install, program, commission, maintain, and decommission this equipment.

Persons with proven skills:

- Are qualified electrical engineers, or persons who have received training from qualified electrical engineers and are suitably experienced to operate devices, systems, plant, and machinery in accordance with pertinent laws and regulations.
- Are familiar with the basic regulations concerning health and safety/accident prevention.
- Have read and understood the safety guidelines given in all manuals provided with the unit, especially the instructions given in the Operating Guide.
- Have good knowledge of the generic and specialist standards applicable to the specific application.

3 Approvals and Certifications

3.1 Regulatory/Compliance Approvals

This section provides a brief description of the various approvals and certifications that are on Danfoss VLT® drives. Not all approvals are on all drives.

N O T I C E

IMPOSED LIMITATIONS ON THE OUTPUT FREQUENCY

From software version X.XX onwards, the output frequency of the drive is limited to 590 Hz due to export control regulations. Software versions 6.xx also limit the maximum output frequency to 590 Hz, but these versions cannot be flashed, that is, neither downgraded nor upgraded.

3.2 Typical Product Approvals and Certifications for VLT® Drives

The VLT AQUA Drive product series complies with a wide scope of required standards and directives. Information on the specific product certifications can be found on the product nameplate.

3.2.1 CE Mark

The drive complies with relevant directives and their related standards for the extended Single Market in the European Economic Area.

Table 2: EU directives applicable to drives

EU Directive	Version
Low Voltage Directive	2014/35/EU
EMC Directive	2014/30/EU
Machinery Directive[1]	2014/42/EU
ErP Directive	2009/125/EU
ATEX Directive	2014/34/EU
RoHS Directive[2]	2011/65/EU
Radio Equipment Directive[3]	2014/53/EU
REACH Directive	1907/2006/EC

[1] Machinery Directive conformance is only required for drives with an integrated safety function.

[2] For China RoHS, contact Danfoss application support to get the certificate.

[3] Radio Equipment Directive is only required for interfaces supporting wireless communication.

3.2.1.1 Low Voltage Directive

The aim of the Low Voltage Directive is to protect persons, domestic animals and property against dangers caused by the electrical equipment, when operating electrical equipment that is installed and maintained correctly, in its intended application. The directive applies to all electrical equipment in the 50–1000 V AC and the 75–1500 V DC voltage ranges.

3.2.1.2 EMC Directive

The purpose of the EMC (electromagnetic compatibility) Directive is to reduce electromagnetic interference and enhance immunity of electrical equipment and installations. The basic protection requirement of the EMC Directive states that devices that generate electromagnetic interference (EMI), or whose operation could be affected by EMI, must be designed to limit the generation of electromagnetic interference and shall have a suitable degree of immunity to EMI when properly installed, maintained, and used as

intended. Electrical equipment devices used alone or as part of a system must bear the CE mark. Systems do not require the CE mark, but must comply with the basic protection requirements of the EMC Directive.

3.2.1.3 Machinery Directive

The aim of the Machinery Directive is to ensure personal safety and avoid property damage to mechanical equipment used in its intended application. The Machinery Directive applies to a machine consisting of an aggregate of interconnected components or devices of which at least 1 is capable of mechanical movement. Drives with an integrated functional safety function must comply with the Machinery Directive. Drives without a functional safety function do not fall under the Machinery Directive. If a drive is integrated into a machinery system, Danfoss can provide information on safety aspects relating to the drive. When drives are used in machines with at least 1 moving part, the machine manufacturer must provide a declaration stating compliance with all relevant statutes and safety measures.

3.2.1.4 ErP Directive

The ErP Directive is the European Ecodesign Directive for energy-related products. The directive sets ecodesign requirements for energy-related products, including drives, and aims at reducing the energy consumption and environmental impact of products by establishing minimum energy-efficiency standards.

3.2.1.5 ATEX Directive

Illustration 1: ATEX Logo

3.2.1.6 RoHS Directive

The Restriction of Hazardous Substances (RoHS) Directive is an EU directive that restricts the use of hazardous materials in the manufacturing of electronic and electrical products. Read more on www.danfoss.com.

3.2.1.7 Radio Equipment Directive

Devices that emit or receive radio waves as part of radio communication are required to comply with the Radio Equipment Directive. The drive itself does not contain a radio device, and hence compliance to the directive is not relevant. However, user interfaces containing active radio devices, such as the integrated control panel with wireless communication capabilities, comply with the directive.

3.2.2 REACH Directive

Compliance with European REACH regulation on Registration, Evaluation, Authorization, and Restriction of Chemicals. Read more on www.danfoss.com.

3.2.3 UL Listing

3.2.4 CSA/cUL

3.2.5 TÜV

TÜV is a European safety organization which certifies the functional safety of the drive in accordance to EN/IEC 61800-5-2. The TÜV both tests products and monitors their production to ensure that companies stay compliant with their regulations.

3.2.6 EAC

Illustration 2: EAC Mark

The EAC logo must be both on the product label and on the packaging label. All products used within the EAC area must be bought at Danfoss inside the EAC area.

3.2.7 UkrSEPRO

089

Illustration 3: UkrSEPRO Mark

3.2.8 RCM Mark Compliance

Illustration 4: RCM Mark

3.2.9 Marine Type Approvals

VLT AQUA Drive drives have several marine type approvals. For a list of the approvals and certifications, see the FC 202 product page at www.danfoss.com.

3.2.10 Moroccan Conformity Mark

Illustration 5: Morocco CMIM Mark

The drive complies with relevant directives and their related standards for the Morocco market.

3.3 Export Control Regulation

AC drives can be subject to regional and/or national export control regulations. Both the EU and USA have regulations for so-called dual-use products (products for both military and non-military use), which currently includes AC drives with a capacity to operate 600–2000 Hz. These products can still be sold, but it requires a set of measures, for example a license, or an end-user statement.

An ECCN number is used to classify all AC drives that are subject to export control regulations. The ECCN number is provided in the documentation accompanying the AC drive. If the AC drive is re-exported, it is the responsibility of the exporter to ensure compliance with the relevant export control regulations.

For further information, contact Danfoss Drives Global or the local sales office.

3.4 Enclosure Protection Rating

The VLT® drive series are available in various enclosure protection ratings to accommodate the needs of the application. Enclosure protection ratings are provided based on 2 international standards:

- UL type validates that the enclosures meet NEMA (National Electrical Manufacturers Association) standards. The construction and testing requirements for enclosures are provided in NEMA Standards Publication 250-2003 and UL 50, 11th edition.
- IP (Ingress Protection) ratings outlined by the IEC (International Electrotechnical Commission) in the rest of the world.

The standard Danfoss VLT® drive series are available in various enclosure protections to meet the requirements of IP00 (Chassis), IP20 (Protected chassis), IP21 (NEMA Type 1), or IP54 (NEMA Type 12). In this manual, NEMA Type is written as Type, for example, IP21/Type 1.

3.4.1 UL Type Standard

Type 1 – Enclosures constructed for indoor use to provide a degree of protection to personnel against incidental contact with the enclosed units and to provide a degree of protection against falling dirt.

Type 12 – General-purpose enclosures are intended for use indoors to protect the enclosed units against the following:

- Fibers
- Lint
- Dust and dirt
- Light splashing

- Seepage
- Dripping and external condensation of noncorrosive liquids

There can be no holes through the enclosure and no conduit knockouts or conduit openings, except when used with oilresistant gaskets to mount oil-tight or dust-tight mechanisms. Doors are also provided with oil-resistant gaskets. In addition, enclosures for combination controllers have hinged doors, which swing horizontally and require a tool to open.

3.4.2 IP Standard

Table 3.2 provides a cross-reference between the 2 standards. Table 3.3 demonstrates how to read the IP number and then defines the levels of protection. The drives meet the requirements of bot

Table 3: NEMA and IP Number Cross-reference

NEMA and UL	IP
Chassis	IP00
Protected chassis	IP20
Type 1	IP21
Type 12	IP54

Table 4: IP Number Breakdown

1st digit	2nd digit	Level of protection
0	–	No protection.
1	–	Protected to 50 mm (2.0 in). No hands would be able to get into the enclosure.
2	–	Protected to 12.5 mm (0.5 in). No fingers would be able to get into the enclosure.
3	–	Protected to 2.5 mm (0.1 in). No tools would be able to get into the enclosure.
4	–	Protected to 1.0 mm (0.04 in). No wires would be able to get into the enclosure.
5	–	Protected against dust – limited entry.
6	–	Protected totally against dust.
–	0	No protection.
–	1	Protected from vertical dripping water.
–	2	Protected from dripping water at 15° angle.
–	3	Protected from water at 60° angle.
–	4	Protected from splashing water.
–	5	Protected from water jets.
–	6	Protected from strong water jets.
–	7	Protected from temporary immersion.
–	8	Protected from permanent immersion.

4 Product Family Overview

4.1 VLT® Drives

Danfoss offers 3 types of AC drives in different-sized enclosures for a wide range of applications, with power ratings from 0.25–1200 kW (0.34–1350 hp).

Standalone drives (frequency converters)

The Danfoss standalone drives are so robust that they can be mounted outside of cabinets virtually anywhere, even right beside the motor. Equipped for the toughest of environment, they suit any application.

More uncompromising features:

- Enclosure sizes with protection ratings up to IP66/UL Type 4X.
- Full EMC compliance according to international standards.
- Ruggedized and coated PCBs.
- Wide temperature range, operating from -25 to +55 °C (-13 to 131 °F).
- Motor cable lengths up to 150 m (492 ft) for shielded cables and 300 m (984 ft) for unshielded cables.

Enclosed drives

Danfoss enclosed drives are designed with the installer and operator in mind to save time on installation, commissioning, and maintenance. The enclosed drives are designed for full access from the front. After opening the cabinet door, all components can be reached without removing the drive, even when mounted side by side. Several cooling options, including back-channel cooling, provide optimum adaption to the installation location and application.

More time-saving features:

- An intuitive user interface with an award-winning local control panel (LCP) and common control platform that streamlines start-up and operating procedures.
- Robust design and advanced controls make Danfoss drives virtually maintenance free.

System modules

The compact design of the system modules makes them easy to fit even in small spaces. Integrated filters, input fuses, options, and accessories provide extra capabilities and protection without increasing the enclosure size.

More space-saving features:

- Built-in DC-link reactors for harmonic suppression eliminate the need for higher loss external AC line reactors.
- Optional built-in RFI filters are available throughout the power range.
- Regen terminals are available within the standard enclosures (for enclosure sizes D, E, and F).
- In addition to the many valuable features that the Danfoss drives offers as standard, there are several other control, monitoring, and power options available in pre-engineered factory configurations.

For more details on the enclosure types, the modularity, and the applications, see the product-specific Selection Guides on www.danfoss.com.

4.2 Product Overview of the VLT® AQUA Drive FC 202

The VLT AQUA DriveFC 202 is a drive for controlling AC induction motors, permanent magnet synchronous motors, and synchronous reluctance motors (SynRM motors). As other Danfoss AC drives, the VLT AQUA Drive is motor independent, meaning that the drive can be connected to any brand of motor, thus providing great flexibility when designing an installation.

The FC 202 is designed for water and wastewater applications. The integrated SmartStart wizard and the quick menu *Water and Pumps* guide the user through the commissioning process. The range of standard and optional features includes:

- Cascade control
  - Cascade for multi-pump operation with run-time balancing of pump running hours. Basic cascade control built in as standard with a capacity of up to 3 pumps. Systems with multiple variable-speed pumps require the VLT® Extended Cascade Controller MCO 101, the VLT® Advanced Cascade Controller MCO 102, or the license code option for Digital Cascade via built-in MODBUS.
- Multi-master cascade control
  - Redundant cascade system with up to 8 masters per system. If the primary master stops working, a back-up master automatically takes over.
- Dry-run detection
  - This feature prevents damage to the pumps by avoiding dry-running and pump overheat.
- End-of-curve detection

  - This feature detects when the pump is running at maximum speed and the setpoint cannot be reached for a user-defined time.
- Motor alternation
  - The motor alternation functionality is suitable for applications with 2 motors or 2 pumps sharing 1 drive.
- Deragging
  - This preventive or reactive pump cleaning feature is designed for pumps in wastewater applications.
- Initial and final ramp
  - Short ramp times to and from minimum speed protects bearings and ensures sufficient cooling in applications with submersible pumps.
- check valve protection
  - A slow ramp-down rate protects check valves and prevents water hammering.
- Safe Torque Off (STO)
  - STO enables safe stop (coast) when a critical situationsituation arises.
- Low-flow detection
  - This feature detects no-flow or low-flow conditions of the system.
- Pre/post lube
  - This feature supports a signal to an external device for lubricating mechanical parts to prevent damage and reduce wear before and during operation.
- Flow confirmation
  - This feature protects equipment from unexpected flow stoppage via communication to external devices, such as valves or flow switches.
- Pipe fill mode
  - Pipe fill mode comprises functionalities to fill pipes smoothly and avoid water hammering. This feature provides different modes for horizontal and vertical pipes.
- Sleep mode
  - The sleep mode feature saves energy by stopping the pump when there is no demand for the pump to run.
- Real-time clock
  - This option includes back-up battery ensuring synchronization of real-time data.
- Password protection
- Overload protection
- Smart logic control (SLC)
  - SLC comprises programming of a sequence consisting of events and actions. SLC offers a wide range of PLC functions using comparators, logic rules, and timers. 4 SLC sequences can be programmed in parallel.
- Advanced minimum speed monitoring for submersible pumps
  - The advanced minimum speed monitoring feature trips the drive if the speed drops below a certain value, protecting pumps sensitive torwards low speed, for example, submersible pumps.
- Freely programmable texts
  - Use freely programmable texts for information, warnings, and alerts.
- Preventive maintenance
  - This feature enables programming of scheduled service intervals into the AC drive.
- Condition-based monitoring
  - This feature enables warnings and alarms to be triggered when the actual lifetime of the product varies from the expected lifetime reducing downtime, eliminating unexpected production stops and optizing the maintenance planning. All signals are processed within the AC drive without need for cloud connection.

Adding to the flexibility are the different ways of connectivity. The drive can be controlled:

- directly from the LCP.
- via industry-leading fieldbusses.
- local digital I/O or via industrial network connection.
- wireless via the VLT® Wireless Control Panel LCP 103. The LCP 103 connects to the MyDrive® Connect app and enables control from a mobile device, or via VLT® Motion Control Tool MCT 10.

Easy commissioning with SmartStart

With the SmartStart wizard, it is easy and cost-efficient to commission the drive. SmartStart is activated at the first power-up or after a factory reset and guides users through a series of easy steps to ensure the correct and most efficient motor control. The SmartStart can also be started directly via the quick menu.

Power sizes, voltage ranges, and enclosure protection classes

The VLT AQUA DriveFC 202 is available in many power sizes, voltage ranges, and enclosure protection classes, making it easy to find the perfect drive for a given application.

Table 5: Voltage Ranges and Power Ranges

Voltage ranges [V]	Power ranges [kW (hp)]
1 x 200–240	1.1–22 (1.5–30)
1 x 380–480	7.5–37 (10–50)
3 x 200–240	0.25–160 (0.5–250)
3 x 380–480	0.37–1000 (0.5–1350)
3 x 525–600	0.75–90 (1.0–125)
3 x 525–690	11–1400 (15–1875)

Enclosure protection ratings:

- IP00
- IP20/Chassis
- IP21/Type 1
- IP54/Type 12
- IP55/Type 12
- IP66/Type 4X Outdoor

Table 6: Enclosures A1–A5: Power Sizes, Voltage Ranges, and Protection Rating

Enclosure		A2	A3	A4	A5
Power [kW]	200–240 V	0.25–2.2	3.0–3.7	0.25–2.2	0.25–3.7
	380–480 V	0.37–4.0	5.5–7.5	0.37–4.0	0.37–7.5
	525–600 V	–	0.75–7.5	–	0.75–7.5
	525–690 V	–	1.1–7.5	–	–
		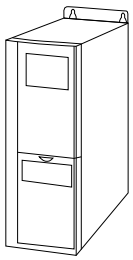 e30ba809.11	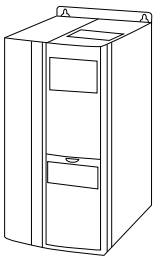 e30ba810.11	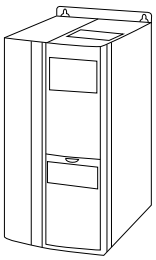 e30ba810.11	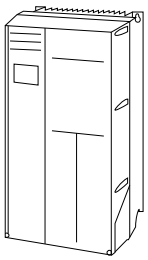 e30ba811.11
IP		20/21	20/21	55/66	55/66

Enclosure	A2	A3	A4	A5
NEMA	Chassis/Type 1	Chassis/Type 1	Type 12/4X	Type 12/4X

Table 7: Enclosures B1–B4: Power Sizes, Voltage Ranges, and Protection Rating

Enclosure		B1	B2	B3	B4
Power [kW]	200–240 V	5.5–11	15	5.5–11	15–18.5
	380–480 V	11–18.5	22–30	11–18.5	22–37
	525–600 V	11–18.5	22–30	11–18.5	22–37
	525–690 V	–	11–30	–	11–37
		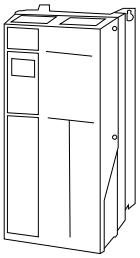 e30ba812.11	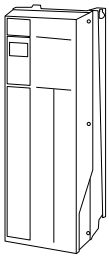 e30ba813.11	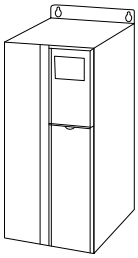 e30ba826.11	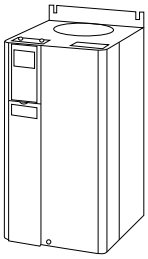 e30ba827.11
IP		21/55/66	21/55/66	20/21	20/21
NEMA		Type 1/12/4X	Type 1/12/4X	Chassis	Chassis

Table 8: Enclosures C1–C4/D3h: Power Sizes, Voltage Ranges, and Protection Rating

Enclosure		C1	C2	C3	C4	D3h[1]
Power [kW]	200–240 V	18.5–30	37–45	22–30	37–45	–
	380–480 V	37–55	75–90	45–55	75–90	–
	525–600 V	37–55	75–90	45–55	75–90	–
	525–690 V	–	37–90	45–55	–	55–75
		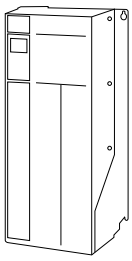 e30ba814.11	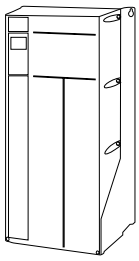 e30ba815.11	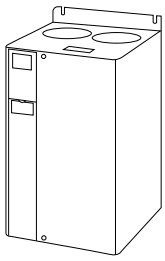 e30ba828.11	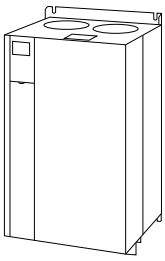 e30ba829.11	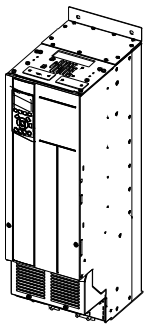 e30bu371.10
IP		21/55/66	21/55/66	20/21	20/21	20
NEMA		Type 1/12/4X	Type 1/12/4X	Chassis	Chassis	Chassis

[1] Details, see separate design guide VLT AQUA Drive FC 202 110–800 kW

Standalone drives and enclosed drives

Based on the selected protection rating, select either a standalone drive or an enclosed drive.

The standalone drives have a protection rating of at least IP21/Type 1. These drives can be mounted both outside and inside in dusty and damp environments without any further protection.

The enclosed drives have a protection rating of IP20/Chassis and must be built into cabinets for protection against dust and moisture. The enclosed drives are not suitable for outdoor installation.

Both standalone drives and enclosed drives come in different enclosure sizes depending on the selected power size, voltage range, and enclosure protection rating.

For low-power applications from 0.25–90 kW (0.5–125 hp), select between enclosure sizes A, B, C, and D3h.

For high-power applications, select between enclosure sizes D, E, and F, see the specific design guides for drives above 90 kW (125 hp).

Functionalities

The VLT AQUA Drive offers various customizable functionalities, such as:

- power hardware with varying voltage ratings, current ratings, protection ratings, and EMC performance ratings.
- control hardware with various control cards with, for example, advanced cascade control card for handling up to 8 pumps in either mixed pump or master/follower.
- added functional extensions, for example fieldbusses, for extending the functionalities of the drive, for example, easy PLC integration.
- license packages, including condition-based monitoring and digital Cascade Controller using built-in Modbus in daisy chain configuration for easy installation.

Troubleshooting and maintenance

Troubleshooting and maintenance of the FC 202 are made easier and more precise with the increased digitalization.

The sensors in the FC 202 record and store real-time information about warnings and alarms. By adding the VLT® Real-time Clock MCB 117 option, it is possible to have the stored events time and date stamped without mains power, for example, due to mains power outage.

Regarding maintenance, the FC 202 features functions for preventive maintenance and condition-based maintenance.

The preventive maintenance functions are programmed in the drive and can be used to schedule maintenance alerts based on running time of the drive.

Using the condition-based monitoring functions turns the drive into a sensor that continuously monitors the condition of the motor and application. Using the DrivePro® services with the drive, the collected data can be shared with maintenance personnel and other service providers.

4.3 Advantages of Using AC Drives in Pump and Fan Applications

When comparing with alternative control systems and technologies, a drive is the optimum energy control system for controlling fan and pump system.

By using an AC drive to control the flow, around 50% of energy savings can be achieved in typical variable-torque-applications, if the pump speed is reduced by 20%. See an example of the achievable energy reduction in Illustration 6.

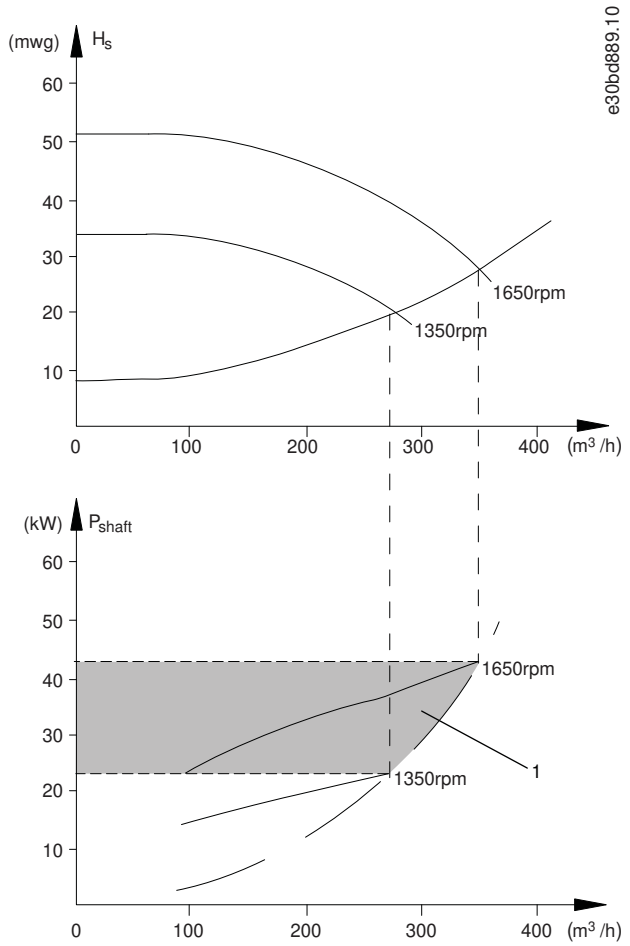

Illustration 6: Example of Energy Savings

1	Energy saving

4.3.1 Example of Energy Savings

As shown in Illustration 7, the flow is controlled by changing the speed of a centrifugal pump, measured in RPM. By reducing the speed only 20% from the rated speed, the flow is also reduced by 20%. This is because the flow is directly proportional to the speed. The consumption of electricity, however, is reduced by up to 50% due to the variable-torque profile of the pump.

If the system only supplies a flow that corresponds to 100% a few days in a year, while the average is below 80% of the rated flow for the remainder of the year, more than 50% of energy is saved.

See the dependence of flow, pressure, and power consumption on pump speed in RPM for centrifugal pumps in Illustration 7.

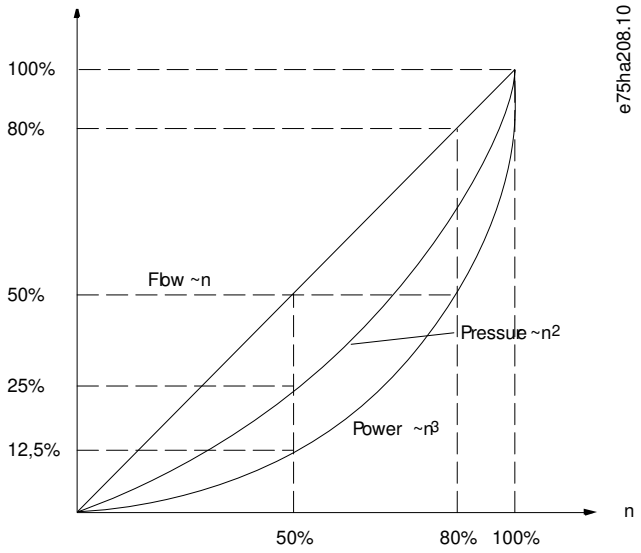

Illustration 7: Affinity Laws for Centrifugal Pumps

Flow: $\frac{Q1}{Q2} = \frac{n1}{n2}$

Pressure: $\frac{H1}{H2} = \left(\frac{n1}{n2}\right)^2$

Power: $\frac{P1}{P2} = \left(\frac{n1}{n2}\right)^3$

Assuming an equal efficiency in the speed range.

Affinity Laws

Q=Flow	P=Power
Q_1=Flow 1	P_1=Power 1
Q_2=Reduced flow (or increased flow)	P_2=Reduced power (or increased power)
H=Pressure	n=Speed regulation
H_1=Pressure 1	n_1=Speed 1
H_2=Reduced pressure (or increased pressure)	n_2=Reduced speed (or reduced speed)

4.3.2 Valve Control versus Speed Control of Centrifugal Pumps

Valve control

As the demand for process requirements in water systems varies, the flow to be adjusted accordingly. Frequently used methods for flow adaptation are throttling or recycling using valves. A recycle valve that is opened too wide can cause the pump to run at the end of the pump curve with a high flow rate at a low pump head. These conditions do not only cause a waste of energy due to the high speed of the pump, but can also lead to pump cavitation resulting in pump damage.

Throttling the flow with a valve adds a pressure drop across the valve (HP-HS). This can be compared with accelerating and pulling the brake at the same time in an attempt to reduce the car speed. As shown in Illustration 8, throttling makes the system curve turn from point (2) on the pump curve to a point with significantly reduced efficiency (1).

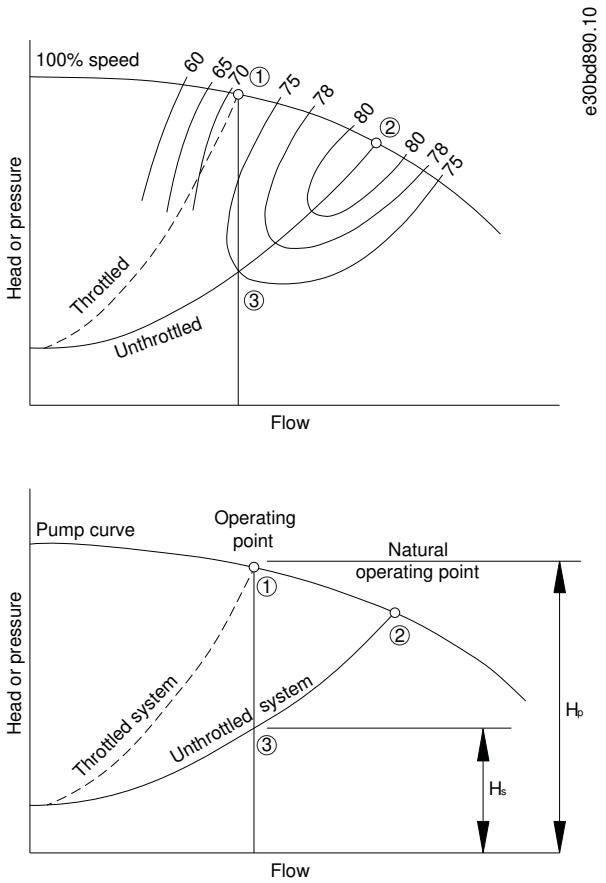

Illustration 8: Flow Reduction by Valve Control (Throttling)

1	Operating point using a throttle valve	3	Operating point using speed control
2	Natural operating point		

Speed control

The same flow can be adjusted by reducing the speed of the pump as shown in Illustration 9. Reducing the speed moved the pump curve down. The point of operation is the new intersection point of the pump curve and the system curve (3). The energy savings can be calculated by applying the affinity laws as described in 4.3.1 Example of Energy Savings.

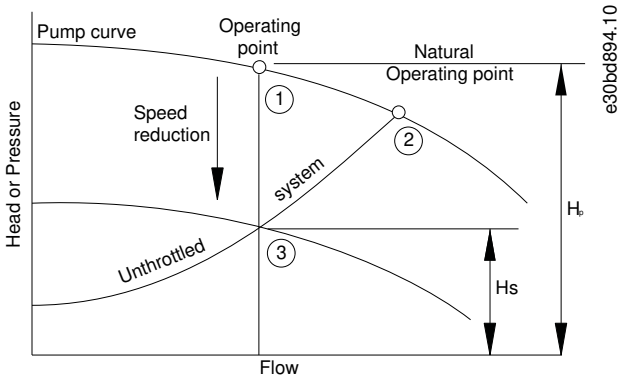

Illustration 9: Flow Reduction by Speed Control

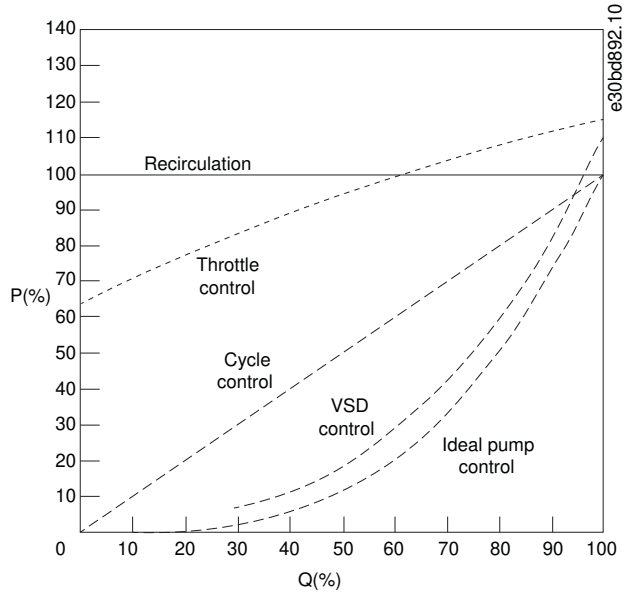

Illustration 10: Comparative Flow Control Curves

4.3.3 Example with Varying Flow over 1 Year

This example is calculated based on pump characteristics obtained from a pump datasheet. The result obtained shows energy savings of more than 50% at the given flow distribution over a year. The payback period depends on the price per kWh and the price of frequency converter. In this example, it is less than a year when compared with valves and constant speed.

Energy savings

$P_{shaft} = P_{shaft\ output}$

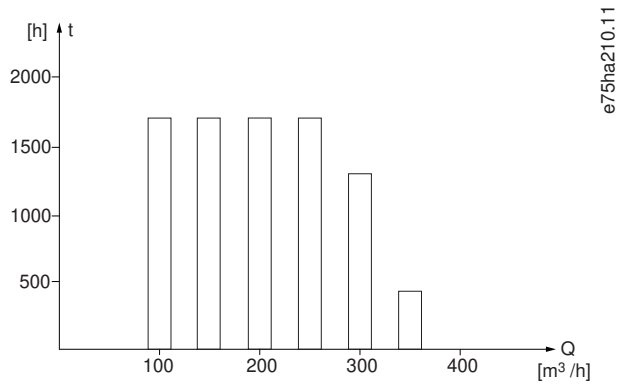

Illustration 11: Flow Distribution over 1 Year

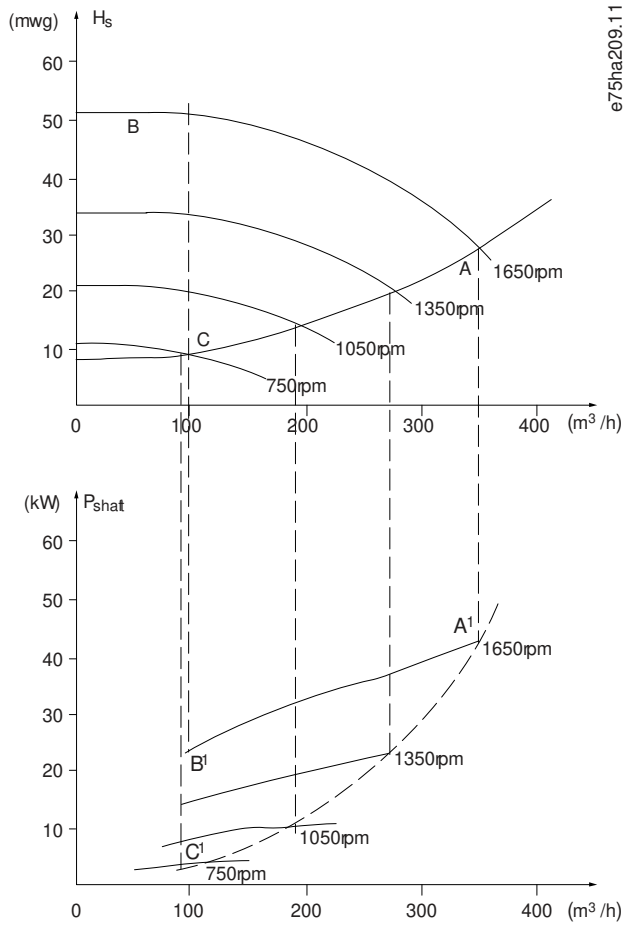

Illustration 12: Energy

Table 9: Result

m^3/h	Distribution		Valve regulation		Drive control	
	%	Hours	Power	Consumption	Power	Consumption
			A_1 - B_1	kWh	A_1 - C_1	kWh
350	5	438	42.5	18.615	42.5	18.615
300	15	1314	38.5	50.589	29.0	38.106
250	20	1752	35.0	61.320	18.5	32.412
200	20	1752	31.5	55.188	11.5	20.148
150	20	1752	28.0	49.056	6.5	11.388
100	20	1752	23.0	40.296	3.5	6.132
Σ	100	8760	–	275.064	–	26.801

4.3.4 Improved Control

Using a drive to control the flow or pressure of a system improves control. A drive can vary the speed of the fan or pump, obtaining variable control of flow and pressure. Furthermore, a drive can quickly adapt the speed of the fan or pump to new flow or pressure conditions in the system.

Obtain simple control of process (flow, level, or pressure) using the built-in PI control.

4.3.5 Star/Delta Starter or Soft Starter not Required

When larger motors are started, it is necessary in many countries to use equipment that limits the start-up current. In more traditional systems, a star/delta starter or soft starter is widely used. Such motor starters are not required if a drive is used.

As shown in the following illustration, a drive does not consume more than rated current.

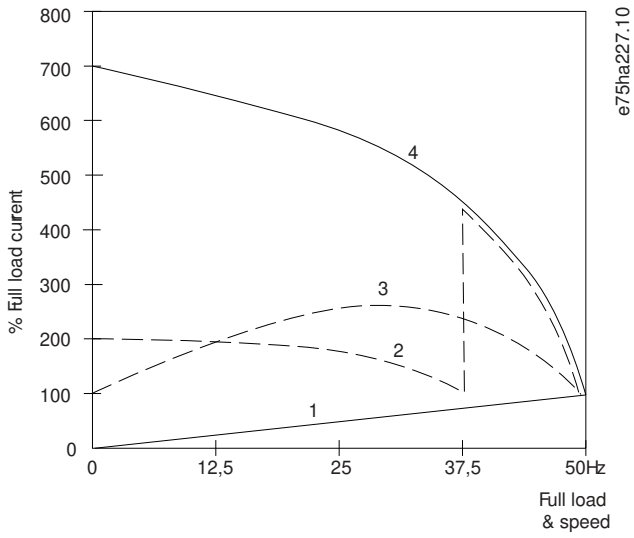

Illustration 13: Start-up Current

1	VLT AQUA DriveFC 202	3	Soft starter
2	Star/delta starter	4	Start directly on mains

4.4 Power Drive Systems

4.4.1 Ecodesign for Power Drive Systems

The Ecodesign Directive is the legislative framework that sets requirements on all energy-related products in the domestic, commercial, and industrial sectors throughout Europe.

The Ecodesign requirements are only mandatory within the European Union. These requirements are like the legislative requirements for energy-related products which apply in North America and Australia.

Terms like Complete Drive Module (CDM) and Power Drive Systems (PDS) are used to define the elements in the design. The objective is to make more efficient and fewer energy consuming designs.

The CDM contains the drive controller as well as auxiliary devices and input components.

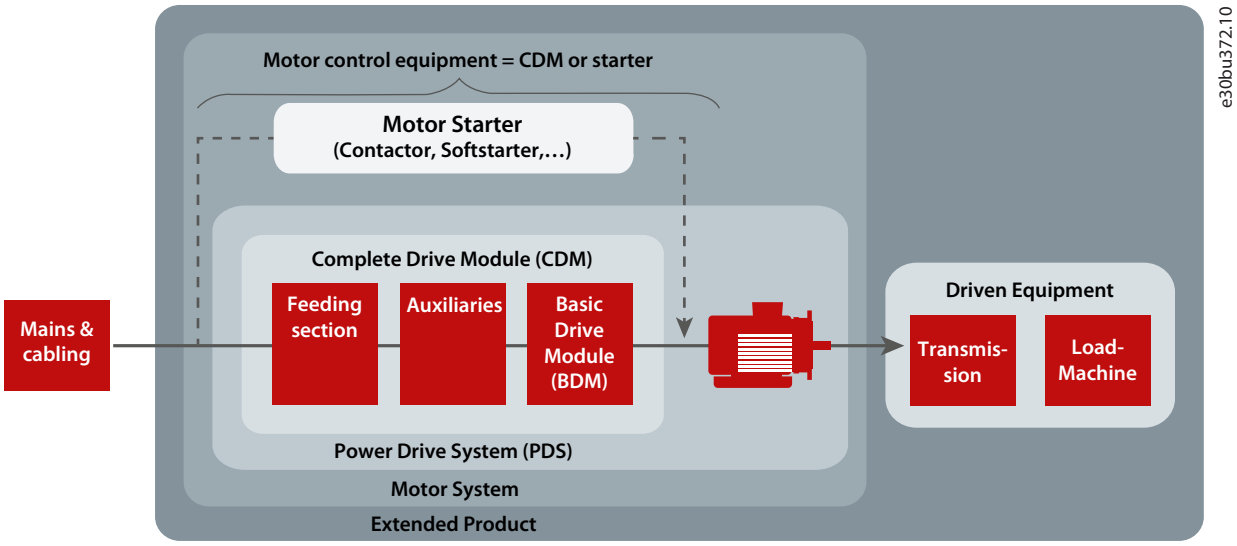

Illustration 14: Drive System Design

The efficiency classes IE0 to IE2 of the drive controller as specified in IEC 61800-9-2 (EN 50598-2) refer to the 90/100 operating point, i.e. 90 % motor stator frequency and 100% torque current (see Illustration 15).

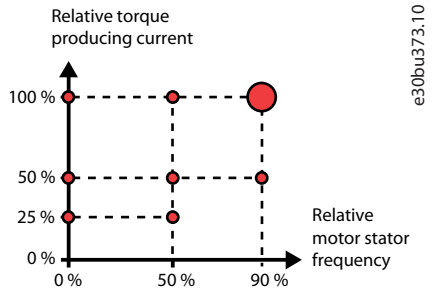

Illustration 15: Operating Point according to IEC 61800-9-2 (EN 50598)

Since in the future all component manufacturers will disclose their loss data according to this new standard, optimized applications can be designed with a wide range of different components. The new Standard allows an accurate preliminary calculation of the power losses, so that the ROI (Return of Investment) can be reliably determined. Up to now the overall efficiency of speed-regulated electric motors was estimated with the aid of approximate energy consumption calculations.

It is now possible to determine the total losses of a system for the 8 operating points defined in the standard, including the part load operation, via a simple addition of power losses. Danfoss helps its customers to avoid having to rely on system solution providers, to ensure that their systems will retain a competitive advantage also in the future.

EC 61800-9-2 (EN 50598-2) shifts the focus from the individual component to the efficiency of the whole drive system. The new efficiency classes (International Efficiency for Systems, IES)

allow a simple determination of the total losses for a whole drive system (PDS).

Danfoss offers the MyDrive® ecoSmart™ tool, which is available online or as a Smartphone app to assist with the efficiency calculation. Use MyDrive® ecoSmart™ to:

- Look up part load data as defined in IEC 61800-9-2, for VLT® and VACON® drives
- Calculate efficiency class and part load efficiency for drives and power drive systems
- Create a report documenting part load loss data and IE or IES efficiency class.

For more information, refer to http://ecosmart.danfoss.com.

Refer to Illustration 16 to see the components in the PDS which contribute to losses in the design. Mains cables and the load machine are not a part of the PDS, even though their losses can be significant and could be a part of the evaluation of the overall energy efficiency of the installation.

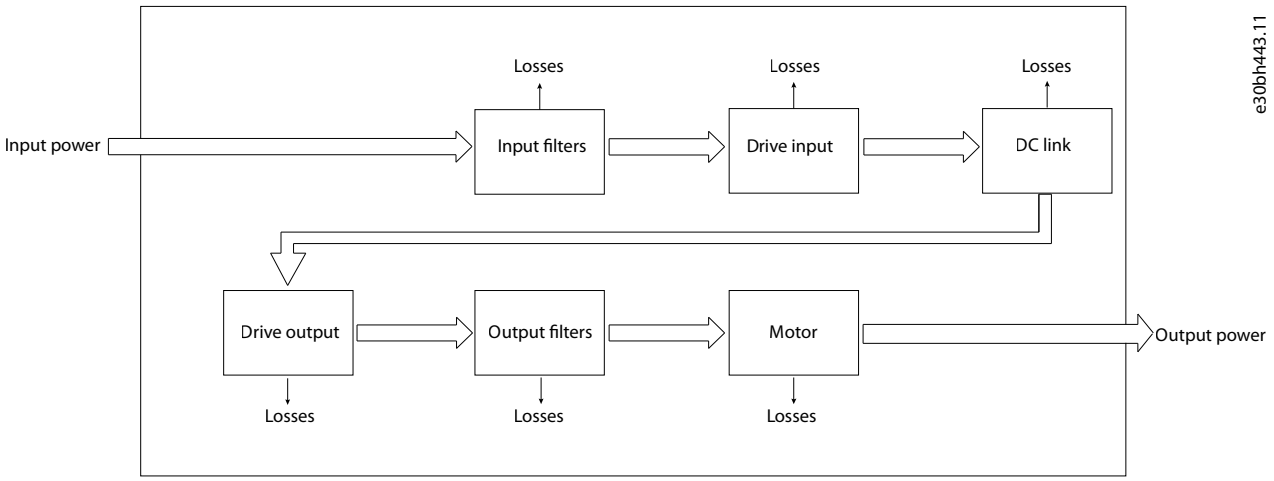

Illustration 16: Losses in a Power Drive System

4.5 Software Tools

Danfoss offers a suite of software tools which have been designed to provide easy operation and the highest level of customization of AC drives.

The tools are available at suite.mydrive.danfoss.com.

MyDrive® Select

MyDrive® Select performs drive sizing and dimensioning based on calculated motor load currents, ambient temperature, and current limitations. Dimensioning results are available in graphical and numerical format and include calculation of efficiency, power losses, and inverter load currents. The resulting documentation is available as either .pdf or .xls format. The files can be imported to MyDrive® Harmonics for evaluation of harmonic distortion or for validation of compliance with most recognized harmonic norms and recommendations.

MyDrive® ecoSmart™

MyDrive® ecoSmart™ determines the energy efficiency of the drive being used and system efficiency class according to IEC 61800-9.

MyDrive® ecoSmart™ uses information about the selected motor, load points, and an AC drive to calculate the efficiency class and part load efficiency for a Danfoss drive, either for a standalone drive (CDM) or for a drive with a motor (PDS).

VLT® Motion Control Tool MCT 10

The MCT 10 software is designed for setup, commissioning and servicing of the AC drive. The tool includes guided programming of smart logic control, cascade control, and condition-based monitoring. A separate manual is available for VLT® Motion Control Tool MCT 10.

5 Product Overview

5.1 Overview of Drives Systems

Danfoss offers drives in different enclosure types for a wide range of applications.

Standalone AC drives

The Danfoss standalone AC drives are so robust that they can be mounted outside of cabinets virtually anywhere, even right beside the motor. Equipped for the toughest of environment, they suit any application.

More uncompromising features:

- Enclosure sizes with protection ratings up to IP66/UL Type 4X.
- Full EMC compliance according to international standards.
- Ruggedized and coated PCBs.
- Wide temperature range, operating from -25 °C to +55 °C (-13 °F to 131 °F).
- Motor cable lengths up to 150 m (492 ft) shielded / 300 m (984 ft) unshielded as standard with uncompromised performance.

Enclosed drives

Danfoss drives are designed with the installer and operator in mind to save time on installation, commissioning, and maintenance.

VLT® enclosed drives are designed for full access from the front. After opening the cabinet door, all components can be reached without removing the drive, even when mounted side by side.

Several cooling options, including back-channel cooling, provide optimum adaption to the installation location and application.

More time-saving features:

- An intuitive user interface with an award-winning local control panel (LCP) and common control platform that streamlines start-up and operating procedures.
- Robust design and advanced controls make Danfoss drives virtually maintenance-free.

Modules

The compact design of the VLT® high-power drive modules makes them easy to fit even in small spaces. Integrated filters, options, and accessories provide extra capabilities and protection without increasing the enclosure size.

More space-saving features:

- Built-in DC-link reactors for harmonic suppression eliminate the need for higher loss external AC line reactors.
- Optional built-in RFI filters are available throughout the power range.
- Optional input fuses and load share terminals are available within the standard enclosures.
- In addition to the many valuable features that the Danfoss drives offer as standard, there are several other control, monitoring, and power options available in pre-engineered factory configurations.

For more details on the enclosure types, the modularity, and the applications, see the product-specific selection guides on www.danfoss.com.

5.1.1 Filter Options

Filters are often extra components that must be planned for when designing the power drive system. It is important to understand why and when to use output filters with Danfoss drives.

For more details on output filters, refer to Output Filters Design Guide.

5.1.1.1 Protection of Motor Insulation

The output voltage of the drive is a series of trapezoidal pulses with a variable width (pulse width modulation) characterized by a pulse rise time, t_r. When a transistor in the inverter switches, the voltage across the motor terminal increases by a dU/dt ratio depending on:

- The motor cable (type, cross-section, length, shielded or unshielded, inductance, and capacitance).
- The high-frequency surge impedance of the motor.

Because of the impedance mismatch between the cable characteristic impedance and the motor surge impedance, a wave reflection occurs, causing a ringing voltage overshoot at the motor terminals. To reduce motor insulation stresses, use either sine-wave filters or dU/dt filters.

5.1.1.2 Reduction of Motor Acoustic Noise

There are 3 main sources for generation of acoustic noise in the motor:

- The magnetic noise produced by the motor core through magnetostriction.
- The noise produced by motor bearings.
- The noise produced by motor ventilation.

When a motor is fed by a drive, the pulse-width-modulated (PWM) voltage applied to the motor causes extra magnetic noise at the switching frequency and harmonics of the switching frequency (mainly the double of the switching frequency). In some applications, this is not acceptable. To eliminate this additional switching noise, use a sine-wave filter. This filter filters the pulse-shaped voltage from the drive and provides a sinusoidal phase-to-phase voltage at the motor terminals.

5.1.1.3 Reduction of High-frequency Electromagnetic Noise in Motor Cables

Using filters reduces noise generated in the motor cables.

When no filters are used, the ringing voltage overshoot that occurs at the motor terminals is the main high-frequency noise source. The noise can be explained by the correlation between the frequency of the voltage ringing at the motor terminals and the spectrum of the high-frequency conducted interference in the motor cable. Besides this noise component, there are also other noise components such as:

- The common-mode voltage between phases and ground at the switching frequency and its harmonics - high amplitude but low frequency.
- High-frequency noise (above 10 MHz) caused by the switching of semiconductors - high frequency but low amplitude.

Installing an output filter gives the following advantages:

- dU/dt filters reduce the frequency of the ringing oscillation to a level below 150 kHz.
- Sine-wave filters eliminate the ringing oscillation and the motor receives a sinusoidal phase-to-phase voltage.

5.1.1.4 Bearing Currents and Shaft Voltage

Fast switching transistors in the drive combined with an inherent common-mode voltage (voltage between phases and ground) generate high-frequency bearing currents and shaft voltages. While bearing currents and shaft voltages can also occur in direct-online motors, these phenomena are accentuated when the motor is fed from a drive.

Most bearing damage in motors fed by drives is caused by vibrations, misalignment, excessive axial or radial loading, improper lubrication, and impurities in the grease. Sometimes, bearing damage is caused by bearing currents and shaft voltages. The mechanism that causes bearing currents and shaft voltages is complicated to explain, but it is important to know that it exists. Two main mechanisms can be identified:

- Capacitive coupling: The voltage across the bearing is generated by parasitic capacitances in the motor.
- Inductive coupling: Caused by circulating currents in the motor.

The grease film of a running bearing behaves like isolation. The voltage across the bearing can cause a breakdown of the grease film and produce a small electric discharge (a spark) between the bearing balls and the running track. This discharge produces a microscopic melting of the bearing ball and running track metal and over time it causes the premature wear-out of the bearing. This mechanism is called electrical discharge machining (EDM).

Reduce bearing limit stress by using common-mode filters. Sine-wave filters reduce circulating currents but not common-mode currents.

5.1.2 Supported Motor Types

Today, the drive-controlled, 3-phase motor is a standard element in all automated applications. High-efficiency induction motors, but also motor designs such as permanent magnet motors, EC motors, and synchronous reluctance motors, need regulation with AC drives. Many motors cannot be operated directly from the 3-phase standard power supply.

The Danfoss VLT® drives can control multiple motor technologies:

- Induction motors (IM).
- Surface permanent magnet motors (SPM).
- Interior permanent magnet motors (IPM).
- Synchronous reluctance motors (SynRM).
- Permanent magnet assisted synchronous reluctance motors (PMaSynRM).

Standard IEC line motors (IEC 60034-30-1)

The standard IEC 60034-30-1 of March 2014 replaces the standard 60034-30:2008, which has defined 3 efficiency levels for 3-phase induction motors. The updated standard IEC 60034-30-1 now includes the 4th efficiency level, IE4. Furthermore, 8-pole motors and an extended power range are now included in the standard.

Efficiency classes:

In the IEC 60034-30-1, the following efficiency classes are defined for induction motors:

- IE1 (Standard efficiency).
- IE2 (High efficiency).
- IE3 (Premium efficiency).
- IE4 (Super premium efficiency).

IE = Internation efficiency.

These motor types can all be operated with Danfoss VLT® drives.

More information on this topic can be found in the publication Motor Technologies for Higher Efficiency in Applications. This document can be downloaded from www.danfoss.com.

5.1.3 Bearing Currents

Protecting the motor insulation and bearings

The drive employs modern IGBT inverter technology. Regardless of the frequency, the drive output comprises pulses of approximately the drive DC bus voltage with a very short rise time. The pulse voltage can almost double at the motor terminals, depending on the attenuation and reflection properties of the motor cable and the terminals. This can cause extra stress on the motor and motor cable insulation. Modern AC drives with their fast-rising voltage pulses and high-switching frequencies can generate current pulses that flow through the motor bearings. Gradually, these current pulses can erode the bearing races and rolling elements. Optional dU/dt filters protect the motor insulation system and reduce bearing currents. Optional common-mode filters mainly reduce bearing currents. Insulated N-end (non-drive end) bearings protect the motor bearings.

Practical tips

Usually, the shielding surface of the motor cable is connected to the frame of the terminal box and not to the motor stator frame. However, the motor terminal box on some motors can be mounted to the stator housing with a considerable change of the high-frequency currents and impedance. Typically, there is a gasket between the terminal box and the stator frame, and the box is attached to the motor frame with 4 small screws. Conducted measurements on these motors showed that screws did not provide a low impedance from the terminal box to the stator and therefore, the common-mode currents were oscillated with a noticeable magnitude.

Applying high-frequency bonding straps between the motor terminal box and the stator frame helps providing low impedance for high-frequency currents and therefore eliminating the common-mode current oscillations in the installation.

Illustration 17: Installation of EMC straps from the Terminal Box to the Motor Frame

Sometimes, so called NYCWY cables are used to connect the motor to the drive inverter. The symmetry of the PE conductor in these cables is achieved by a conductor surrounding all the phase leads. These cables, however, prevent common-mode currents at the fundamental frequency only.

To avoid common-mode currents at fundamental and high frequencies at the same time, use multicore symmetric motor cables with 3 ground conductors with a shield.

Applying common-mode cores

Common-mode cores across motor cable conductors effectively reduce high-frequency motor bearing currents. On motors with a power rating of approximately 100 kW and onwards, the result of reduction of bearing currents is most evident.

High-frequency common-mode cores may have an oval or round shape and they are easy-to-install components.

Install common-mode cores in a way that only unshielded power cores of the motor cable are wired through the core. The PE and shielding wires must be placed outside of the core. It is also important that all 3 motor phase wires are wired through the same core. Otherwise, the cores do not provide the required functionality.

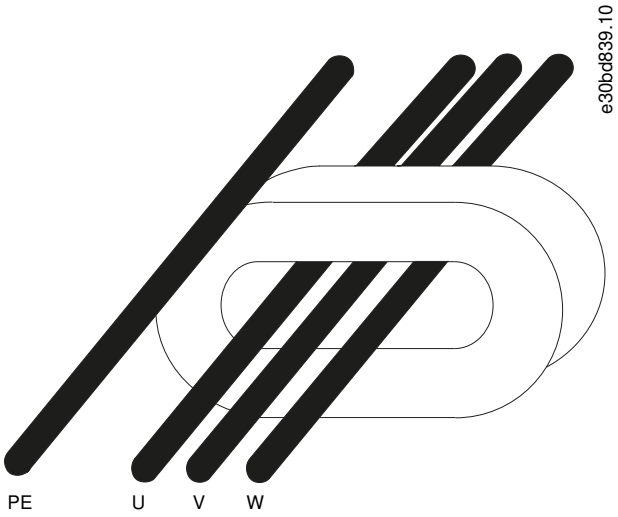

Illustration 18: Installing Common-mode Cores

Depending on the power rating of the drive installation and the quantity of motor cables connected in parallel, several same-size common-mode cores might be used. In dedicated product manuals, preselection tables advise on the required minimal quantity of single common-mode cores to install. The number of cores depend on the power rating, the nominal voltage of the drive installation, and the length of the applied motor cables.

Applying common-mode cores on motor cables connected in parallel

If many motor cables connected in parallel are used and the power wires of all cables cannot be fitted through the common-mode cores, place the required number of cores on each individual motor cable. This ensures the saturation of the core due to likely unequal current sharing between cables. Wire all 3-phase conductors of each cable through 1 set of cores.

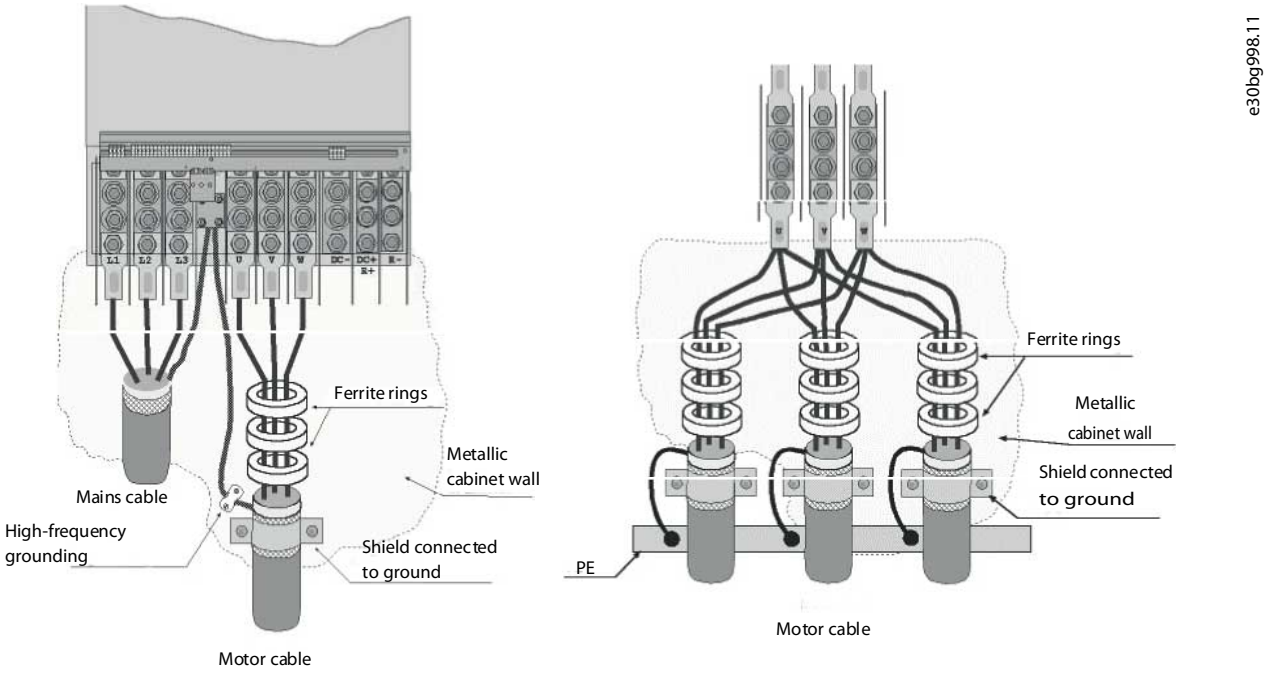

Illustration 19: Installation of CM Cores on Cables Connected in Parallel

As losses of common-mode cores are low, the expected temperature of the core is below 60 °C (140 °F) under normal circumstances. Thus common-mode cores can also be accommodated inside the motor terminal box. If cores cannot be fitted inside the drive housing or the motor terminal box, they can be placed in an external cabinet close to the motor.

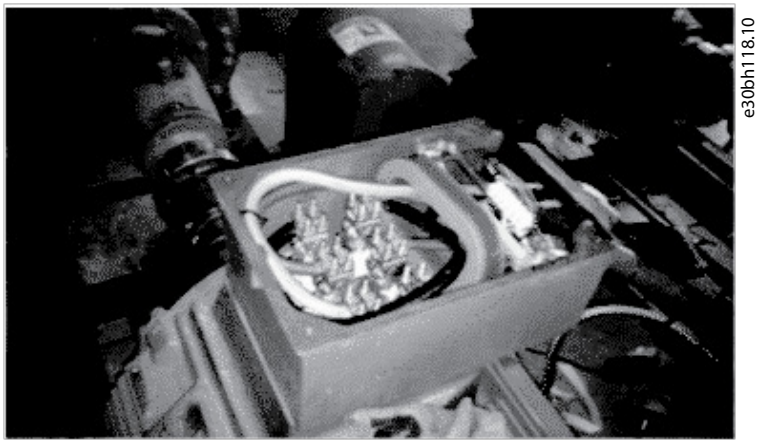

Illustration 20: Mounting of CM Cores Inside the Motor Terminal Box

To ensure minimal bearing currents in the motor, Danfoss recommends ordering the drive with output motor filters as a power option.

5.2 Functional Safety

5.2.1 Protection of Personnel and Equipment

Danfoss AC drives offer functional safety solutions for smart machine design. The VLT AQUA Drive has Safe Torque Off (STO) built-in as an option. Along with other safety functions, STO enhances application safety. The drive-based functional safety offering complies with the requirements of international standards and requirements, including European Union Machinery Directive 2006/42/EC.

The STO function complies with ISO 13849-1-PL d and SIL2 according to IEC 61508/IEC 62061.

5.2.2 Safety Functions

5.2.2.1 Safe Torque Off (STO)

STO is the required base for drive-based functional safety as defined per EN IEC 61800-5-2, as the STO function brings the drive safely to a no-torque state. STO is typically used for preventing an unexpected start-up (EN 1037) of machinery, or for an emergency stop fulfilling stop category 0 (EN 60204-1).

When STO is activated, it immediately switches off the drive output to the motor. Motor speed then coasts to a stop.

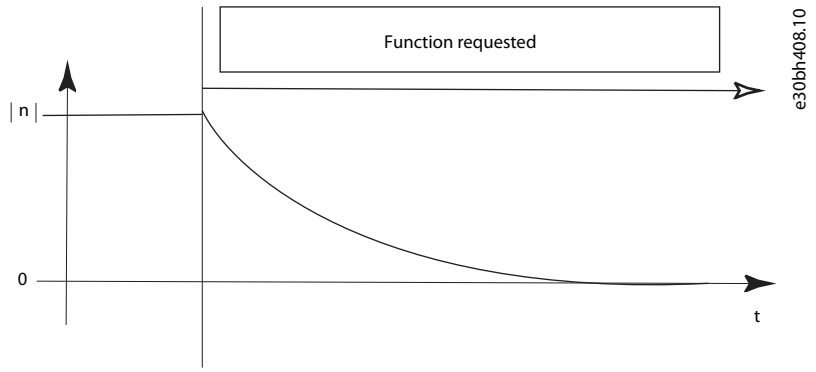

Illustration 21: Motor Speed Coasts to Stop After Activation of STO

5.3 Maintenance Functions

Danfoss VLT® drives feature preventive and condition-based monitoring functions.

5.3.1 Preventive Maintenance

Schedule maintenance based on a running hours counter. When planned maintenance occurs, the drive shows a message. Action flags can be transferred via fieldbus. *Parameter group 18-0* Maintenance Log* contains the last 10 preventive maintenance events. Maintenance log 0 is the latest log and maintenance log 9 is the oldest.

Parameters 18-00 to *18-03* show the maintenance item, the action, and the time of the occurrence.

The alarm log key gives access to both alarm log and maintenance log.

5.3.2 Condition-based Monitoring

The function uses the drive as a smart sensor for monitoring the condition of the motor and application. The VLT AQUA Drive features licensed functions that enforce predictive maintenance actions, such as:

- Motor stator winding monitoring.
- Vibration monitoring.
- Load envelope monitoring.

Set various thresholds and determine the baseline with different methods according to relevant standards and guidelines such as the ISO 13373 standard for Condition Monitoring and Diagnostics of Machines or the VDMA 24582 guideline for condition monitoring.

The condition-based maintenance parameters are in *parameter group 45-** Condition Based Monitoring*.

5.3.2.1 Motor Stator Winding Monitoring

Motor winding failures lead to stop of operation and, thus, unwanted downtime. Motor winding failures start with a short circuit between 2 windings. Over time, the short circuit leads to a motor short circuit fault. By using the motor stator winding monitoring function, motor isolation faults are detected at an early stage, allowing maintenance of the motor before the winding fails entirely due to overheating.

- By analyzing the motor current signature, the drive detects motor winding damage at an early stage.
- The function does not require any external sensors.
- The drive sends a warning/alarm to the LCP or fieldbus.

5.3.2.2 Vibration Monitoring

The VLT AQUA Drive FC 202 can be used with an external vibration transducer (velocity or acceleration type 4–20 mA) to monitor the vibration level in a motor or application. The available functions are baseline measurement, broadband trending, vibration during acceleration and deceleration, and transient vibration trending. The vibration monitoring is performed using standardized methods and threshold levels given in standards such as ISO 13373 for condition monitoring and diagnostics of machines or ISO 10816/20816 for measurement and classification of mechanical vibration. The advantage of performing this monitoring in the drive is the possibility of correlating data with the actual operating conditions such as steady state running/ramping, load condition, or speed.

- The function detects faults as:
  - Imbalance and eccentricity.
  - Looseness.
  - Misalignment.
  - Mechanical resonance.
- The function is not able to identify bearing wear-out in early stages.
- Drive correlates vibration with motor speed.

N O T I C E

EVALUATING VIBRATION

The ISO 10816 standard provides guidance for evaluating vibration severity for machines operating within 10–200 Hz of frequency range. The standard shall be complied with before commissioning of vibration monitoring function.

5.3.2.3 Load Envelope

The VLT AQUA Drive can determine a baseline load curve for the application. When wear-out occurs, the load curve moves and triggers a maintenance warning. The function is useful for fault detection in various applications with passive load:

- Fouling, sanding, broken impeller, or wear-out of pumps.
- Clogged filters and leakages in ventilation systems.
- Friction in machines.

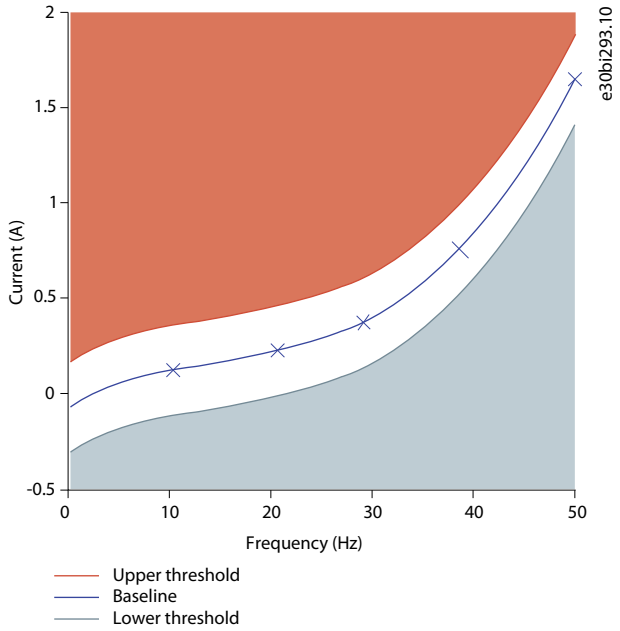

Illustration 22: Load Curve Example for Load Envelope Monitoring

6 Product Features

6.1 Automated Operational Features

6.1.1 Automatic Energy Optimization

Automatic energy optimization (AEO) directs the drive to monitor the load on the motor continuously and adjust the output voltage to maximize efficiency. Under light load, the voltage is reduced and the motor current is minimized. The motor benefits from:

- Increased efficiency.
- Reduced heating.
- Quieter operation.

When using induction motors, the drive can optimize the energy efficiency of the motor in part load conditions by reducing the magnetization of the motor. This leads to reduced losses in the motor.

The updated AEO function features improved dynamics. This means that the AEO function can also be used in applications where a higher starting torque is required (for example, waste water pumps) or there are step load changes (such as conveyors). There is no need to select a V/Hz curve because the drive automatically adjusts motor voltage.

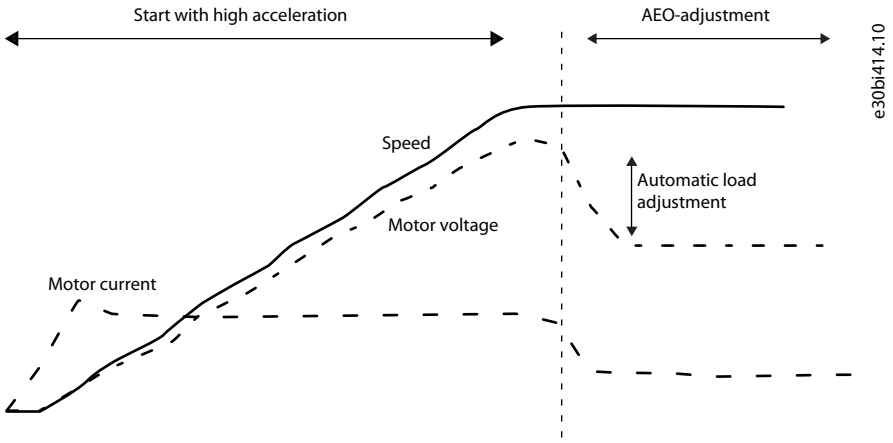

Illustration 23: Automatic Energy Optimization

The AEO requires correct advanced motor data meaning that a complete automatic motor adaptation (AMA) has to be run.

6.1.2 Short-circuit Protection

Motor (phase-to-phase)

The drive is protected against short circuits on the motor side by current measurements in each of the 3 motor phases. A short circuit between 2 output phases causes an overcurrent in the inverter. The inverter is turned off when the short circuit current exceeds the allowed value (*Alarm 16, Trip Lock*).

Mains side

A drive that works correctly limits the current it can draw from the supply. Still, it is recommended to use fuses and/or circuit breakers on the supply side as protection if there is a component breakdown inside the drive (1st fault). Mains side fuses are mandatory for UL compliance.

N O T I C E

To ensure compliance with IEC 60364 for CE or NEC 2017 for UL, it is mandatory to use fuses and/or circuit breakers.

Brake resistor

The drive is protected from a short circuit in the brake resistor.

Load sharing

To protect the DC bus against short circuits and the drives from overload, install DC fuses in series with the load sharing terminals of all connected units.

6.1.3 Overvoltage Protection

Motor-generated overvoltage

The DC-link voltage is increased when the motor acts as a generator. This occurs in the following situations:

- The load drives the motor (at constant output frequency from the drive), that is, the load generates energy.
- During deceleration (ramp-down) if the moment inertia is high, the friction is low, and the ramp-down time is too short for the energy to be dissipated as a loss in the drive, the motor, and the installation.
- Incorrect slip compensation setting may cause higher DC-link voltage.
- Back EMF from PM motor operation. If coasted at high RPM, the PM motor back EMF may potentially exceed the maximum voltage tolerance of the drive and cause damage. To help prevent this, the value of *parameter 4-19 Max Output Frequency* is automatically limited based on an internal calculation. This calculation is based on the value of *parameter 1-40 Back EMF at 1000 RPM*, *parameter 1-25 Motor Nominal Speed*, and *parameter 1-39 Motor Poles*.

NOTICE

To avoid that the motor overspeeds (for example, due to excessive windmilling effects), equip the drive with a brake resistor.

The overvoltage can be handled either via using a brake function (*parameter 2-10 Brake Function*) and/or using overvoltage control (*parameter 2-17 Over-voltage Control*).

Brake functions

Connect a brake resistor to dissipate surplus brake energy. Connecting a brake resistor allows a higher DC-link voltage during braking. AC brake is an alternative to improve breaking without using a brake resistor. This function controls an overmagnetization of the motor when running regenerative, which can improve the OVC. Increasing the electrical losses in the motor allows the OVC function to increase the breaking torque without exceeding the overvoltage limit.

NOTICE

An AC brake is not as efficient as dynamic braking with a resistor and should not be used on frequently repeated braking applications as it may overheat the motor.

Overvoltage control (OVC)

OVC reduces the risk of the drive tripping due to an overvoltage on the DC link. This is managed by automatically extending the ramp-down time.

NOTICE

OVC can be activated for PM motors with control core, PM VVC^{+}, Flux open-loop control, and Flux closed-loop control.

NOTICE

LOSS OF HOIST CONTROL

Do not enable OVC in hoisting applications. If OVC is used with a hoist, the OVC will try to regulate the DC bus by spinning the motor faster, resulting in loss of hoisting control and/or damage to the hoist.

6.1.4 Missing Motor Phase Detection

The missing motor phase function (*parameter 4-58 Missing Motor Phase Function*) is enabled by default to avoid motor damage if a motor phase is missing. The default setting is 1000 ms, but it can be adjusted for a faster detection.

6.1.5 Mains Phase Imbalance Detection

Operation under severe mains imbalance conditions reduces the lifetime of the drive. Conditions are considered severe if the motor is operated continuously near nominal load. The default setting trips the drive if mains imbalance occurs (*parameter 14-12 Function at Mains Imbalance*).

6.1.6 Service Switch on the Output

Adding a service switch to the output between the motor and the drive is allowed. When *parameter 4-58 Missing Motor Phase Function* is set to *[5] Motor Check*, the drive automatically detects when the motor is disconnected. The drive then issues *Warning 3, No Motor* and resumes operation when the motor is connected again. Danfoss recommends not to use this feature for 525–690 V drives connected to an IT mains network.

6.1.7 Overload Protection

Torque limit

The torque limit feature protects the motor against overload, independent of the speed. Torque limit is controlled in *parameter 4-16 Torque Limit Motor Mode* and *parameter 4-17 Torque Limit Generator Mode*. The time before the torque limit warning trips is controlled in *parameter 14-25 Trip Delay at Torque Limit*.

Current limit

The current limit is controlled in *parameter 4-18 Current Limit*, and the time before the drive trips is controlled in *parameter 14-24 Trip Delay at Current Limit*.

Speed limit

Minimum speed limit: *Parameter 4-11 Motor Speed Low Limit [RPM]* or *parameter 4-12 Motor Speed Low Limit [Hz]* limit the minimum operating speed range of the drive. Maximum speed limit: *Parameter 4-13 Motor Speed High Limit [RPM]* or *parameter 4-19 Max Output Frequency* limit the maximum output speed the drive can provide.

Electronic thermal relay (ETR)

ETR is an electronic feature that simulates a bimetal relay based on internal measurements. See 6.2.2 Motor Thermal Protection.

Voltage limit

The inverter turns off to protect the transistors and the DC link capacitors when a certain hard-coded voltage level is reached.

Overtemperature

The drive has built-in temperature sensors and reacts immediately to critical values via hard-coded limits.

6.1.8 Locked Rotor Protection

There can be situations when the rotor is locked due to excessive load or other factors. The locked rotor cannot produce enough cooling, which in turn can overheat the motor winding. The drive is able to detect the locked rotor situation with PM VVC+ control (*parameter 30-22 Locked Rotor Detection*).

6.1.9 Automatic Derating

The drive constantly checks for critical levels:

- Critical high temperature on the control card or heat sink.
- High motor load.
- High DC-link voltage.
- Low motor speed.

As a response to a critical level, the drive adjusts the switching frequency. For critical high internal temperatures and low motor speed, the drive can also force the PWM pattern to SFAVM.

NOTICE

DERATING WITH SINE-WAVE FILTER

The automatic derating is different when *parameter 14-55 Output Filter* is set to *[2] Sine-Wave Filter Fixed*.

– Refer to the programming guide for more information.

6.1.9.1 Overview of Automatic Derating

The automatic derating is made up of contributions from separate functions that evaluate the need. Their interrelationship is shown in Illustration 25.

NOTICE

In sine-wave filter fixed mode, the structure is different.

– See 6.1.9.2 Sine-wave Filter Fixed Mode.

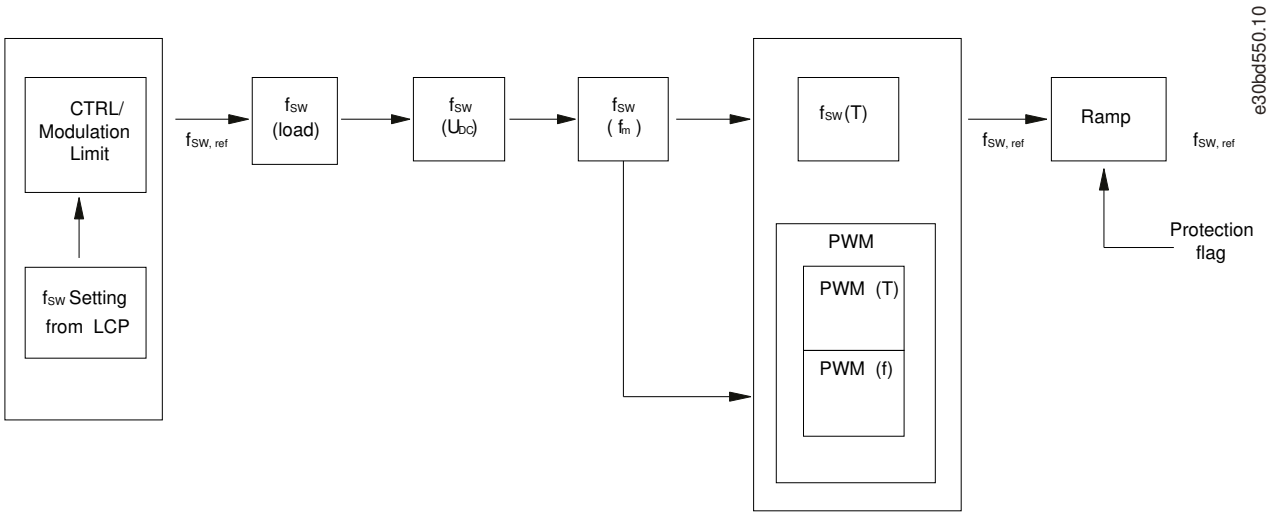

Illustration 24: Automatic Derating Function Block

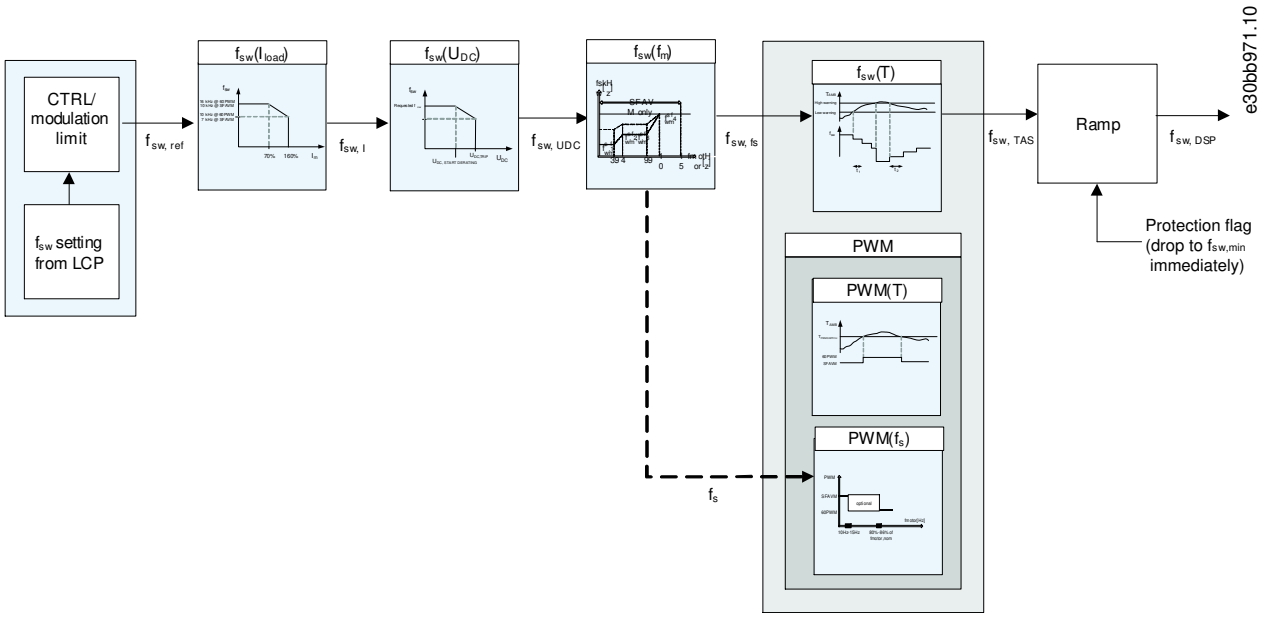

Illustration 25: Interrelationship Between the Automatic Derating Contributions

The switching frequency is first derated due to motor current, followed by DC-link voltage, motor frequency, and then temperature. If multiple deratings occur on the same iteration, the resulting switching frequency would be the same as though only the most significant derating occurred by itself (the deratings are not cumulative). Each of these functions is presented in the following sections.

6.1.9.2 Sine-wave Filter Fixed Mode

When using sine-wave filters, it is important to operate the filters within a safe range of switching frequencies. If the switching frequency is too low, the current through the filter rises, increasing the temperature with risk of damage to the filter.

During programming of the drive, it is possible to select an option for setting a minimum limit for the switching frequency. This fixed-mode function prevents the swithcing frequencies from being too low.

6.1.9.3 Overview Table

Table 10: Overview - Derating

Background for derating	PWM - Functions that adjust the switching pattern	f_{sw} – Functions that derate the switching frequency
I_{load} ↑	No automatic derating	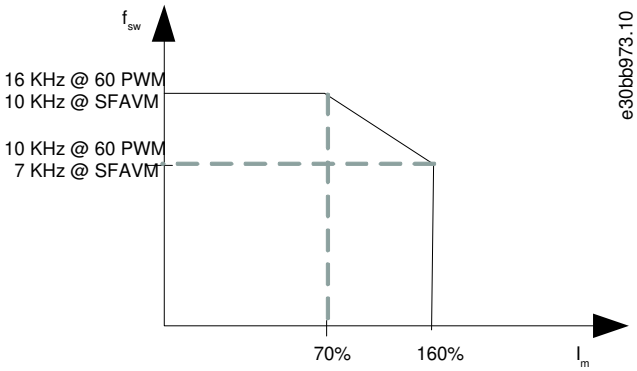
U_{dc} ↑	No automatic derating	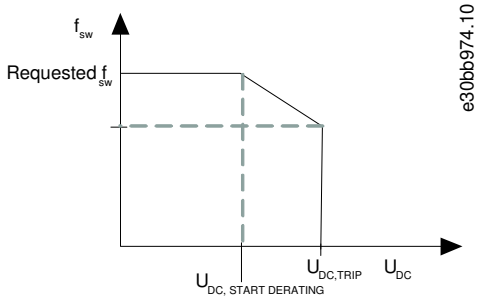
f_s	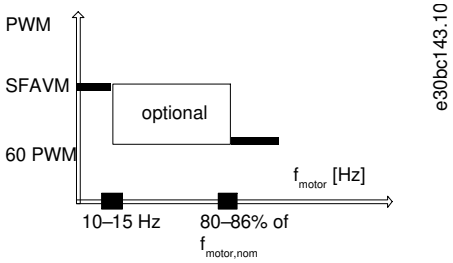	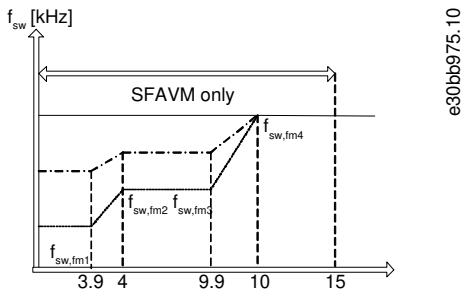
T ↑	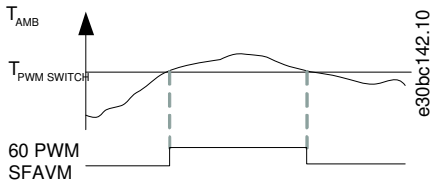	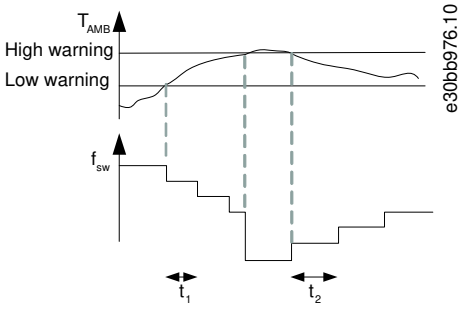

6.1.9.4 High Motor Load

The switching frequency is adjusted automatically according to the motor current. When a certain percentage of the nominal HO motor load is reached, the switching frequency is derated. This percentage is individual for each frame size and a value that is coded in the EEPROM along with the other points that limit the derating.

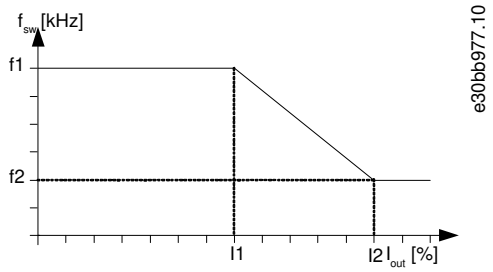

Illustration 26: Derating of switching frequency according to motor load. f1, f2, I1, and I2 are coded in EEPROM.

In EEPROM, the limits depend on the modulation mode. In 60° AVM, f1 and f2 are higher than for SFAVM. I1 and I2 are independent of the modulation mode.

6.1.9.5 High Voltage on the DC link

The switching frequency is adjusted automatically according to the voltage on the DC link. When the DC link reaches a certain magnitude, the switching frequency is derated. The points that limit the derating are individual for each frame size and are coded in the EEPROM.

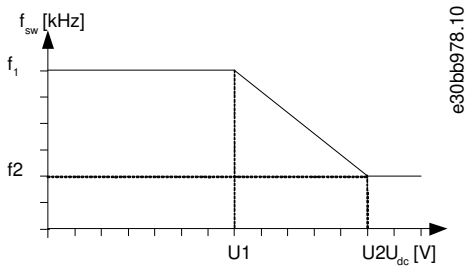

Illustration 27: Derating of switching frequency according to voltage on the DC link. f1, f2, U1, and U2 are coded in EEPROM.

In EEPROM, the limits depend on the modulation mode. In 60° AVM, f1 and f2 are higher than for SFAVM. U1 and U2 are independent of the modulation mode.

6.1.9.6 Low Motor Speed

The selection of PWM strategy depends on the stator frequency. To prevent that the same IGBT is running for too long (thermal consideration), $f_{m,switch1}$ is specified as the minimum stator frequency for 60° PWM. $f_{m,switch2}$ is specified as the maximum stator frequency for SFAVM to protect the drive. 60° PWM helps to reduce the inverter loss above $f_{m,switch1}$ as the switch loss is reduced by 1/3 by changing from SFAVM to 60° AVM.

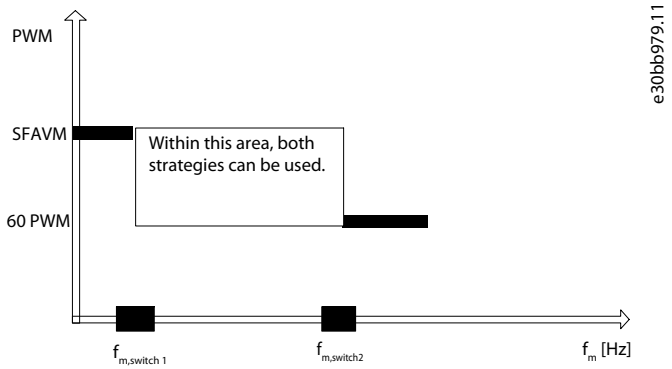

Illustration 28: Selection of PWM Strategy

The shape of the average temperature is constant regardless of the stator frequency. The peak temperature, however, follows the shape of the output power for small stator frequencies and goes towards the average temperature for increasing stator frequency. This results in higher temperature variations for small stator frequencies. This means that the expected lifetime of the component decreases for small stator frequencies if no compensation is used. Therefore, for low values of the stator frequency where the temperature variations are large, the switching frequency can be reduced to lower the peak temperature and thereby the temperature variations.

For VT applications, the load current is relatively small for small stator frequencies and the temperature variations are thus not as large as for the CT applications. For this reason, also the load current is considered.

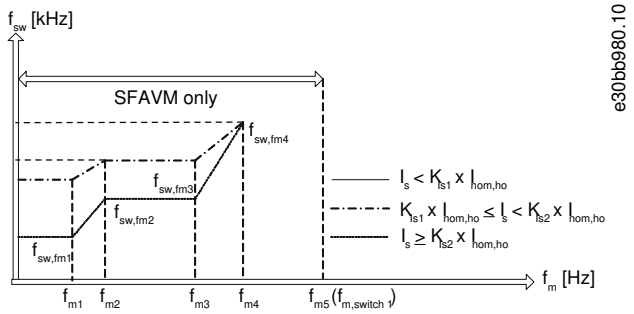

Illustration 29: Switching Frequency (f_{sw}) Variation for Different Stator Frequencies (fm)

The points that limit the derating are individual for each frame size and are coded in the EEPROM.

N O T I C E

The VLT AQUA DriveFC 202 never derates the current automatically. Automatic derating refers to adaptation of the switching frequency and pattern.

For VT applications, the load current is considered before derating the switching frequency at low motor speed.

6.1.9.7 High Internal Temperature

The switching frequency is derated based on both control card- and heat sink temperature. This function may sometimes be referred to as the temperature-adaptive switching frequency function (TAS).

N O T I C E

In the example, 1 temperature affects the derating. In fact there are 2 limiting temperatures: control card temperature and heat sink temperature. Both have their own set of control temperatures.

- See Illustration 30.

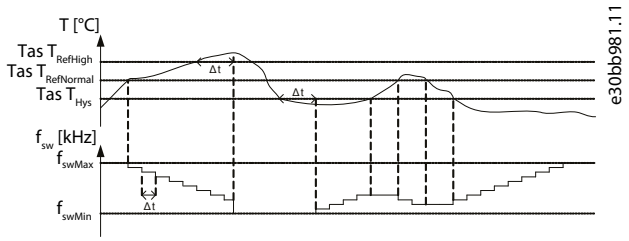

Illustration 30: Switching Frequency Derating due to High Temperature

N O T I C E

dt is 10 s when the control card is too hot but 0 s when the heat sink is too hot (more critical).

The high warning can only be violated for a certain time before the drive trips.

6.1.9.8 Current

Derate the output current at high temperatures. This calculation takes place after the calculations for derating the switching frequency. The result is an attempt to lower the temperatures by first lowering the switching frequency, and then lowering the output current. Current derating only takes place if the user has programmed the unit to derate in overtemperature situations. If the user has selected a trip function for overtemperature situations, the current derate factor is not lowered.

6.1.10 Automatic Switching Frequency Modulation

The drive generates short electrical pulses to form an AC wave pattern. The switching frequency is the rate of these pulses. A low switching frequency (slow pulsing rate) causes audible noise in the motor, making a higher switching frequency preferable. A high switching frequency, however, generates heat in the drive that can limit the amount of current available to the motor.

Automatic switching frequency modulation regulates these conditions automatically to provide the highest switching frequency without overheating the drive. By providing a regulated high switching frequency, it quiets motor operating noise at slow speeds, when audible noise control is critical, and produces full output power to the motor when required.

6.1.11 Automatic Derating for High Switching Frequency

The drive is designed for continuous, full-load operation at switching frequencies between 1.5–2 kHz for 380–480 V, and 1–1.5 kHz for 525–690 V. The frequency range depends on power size and voltage rating. A switching frequency exceeding the maximum allowed range generates increased heat in the drive and requires the output current to be derated.

An automatic feature of the drive is load-dependent switching frequency control. This feature allows the motor to benefit from as high a switching frequency as the load allows.

6.1.12 Power Fluctuation Performance

The drive withstands mains fluctuations such as:

- Transients.
- Momentary dropouts.
- Short voltage drops.
- Surges.

The drive automatically compensates for input voltages ±10% from the nominal to provide full rated motor voltage and torque. With auto restart selected, the drive automatically powers up after a voltage trip. With flying start, the drive synchronizes to motor rotation before start.

6.1.13 Resonance Damping

Resonance damping eliminates the high-frequency motor resonance noise. Automatic or manually selected frequency damping is available.

6.1.14 Temperature-controlled Fans

Sensors in the drive regulate the operation of the internal cooling fans. Often, the cooling fans do not run during low load operation, or when in sleep mode or standby. These sensors reduce noise, increase efficiency, and extend the operating life of the fan.

6.1.15 EMC Compliance

Electromagnetic interference (EMI) and radio frequency interference (RFI) are disturbances that can affect an electrical circuit due to electromagnetic induction or radiation from an external source. The drive is designed to comply with the EMC product standard for drives IEC 61800-3 and the European standard EN 55011. Motor cables must be shielded and properly terminated to comply with the emission levels in EN 55011. For more information regarding EMC performance, see the EMC Test Results section.

6.1.16 Galvanic Isolation of Control Terminals

All control terminals and output relay terminals are galvanically isolated from mains power, which completely protects the controller circuitry from the input current. The output relay terminals require their own grounding. This isolation meets the stringent protective extra-low voltage (PELV) requirements for isolation.

The components that make up the galvanic isolation are:

- Supply, including signal isolation.
- Gate drive for the IGBTs, trigger transformers, and optocouplers.
- The output current Hall effect transducers.

6.1.17 Sleep Mode

Sleep mode automatically stops the motor when demand is low for a specified period. When the system demand increases, the drive restarts the motor. Sleep mode provides energy savings and reduces motor wear. Unlike a setback clock, the drive is always available to run when the preset wake-up demand is reached.

6.1.18 Run Permissive

The drive can wait for a remote *system ready* signal before starting. When this feature is active, the drive remains stopped until receiving permission to start. Run permissive ensures that the system or auxiliary equipment is in the proper state before the drive is allowed to start the motor.

6.2 Custom Application Features

Custom application functions are the most common features programmed in the drive for enhanced system performance. They require minimum programming or set-up. See the programming guide for instructions on activating these functions.

6.2.1 Automatic Motor Adaptation (AMA)

Automatic motor adaptation (AMA) is an automated test procedure used to measure the electrical characteristics of the motor. AMA provides an accurate electronic model of the motor, allowing the drive to calculate optimal performance and efficiency. Running the AMA procedure also maximizes the automatic energy optimization feature of the drive. AMA is performed without the motor rotating and without uncoupling the load from the motor.

6.2.2 Motor Thermal Protection

Motor thermal protection can be provided via:

- Direct temperature sensing using a
  - PTC- or KTY sensor in the motor windings and connected on a standard AI or DI.
  - PT100 or PT1000 in the motor windings and motor bearings, connected on VLT® Sensor Input Card MCB 114 and VLT® Programmable I/O MCB 115.
  - PTC thermistor input on VLT® PTC Thermistor Card MCB 112 (ATEX-approved).
- Mechanical thermal switch (Klixon type) on a DI.
- Built-in electronic relay (ETR).

ETR calculates motor temperature by measuring current, frequency, and operating time. The drive shows the thermal load on the motor in percentage and can issue a warning at a programmable overload setpoint. Programmable options at the overload allow the drive to stop the motor, reduce output, or ignore the condition. Even at low speeds, the drive meets I2t Class 20 electronic motor overload standards.

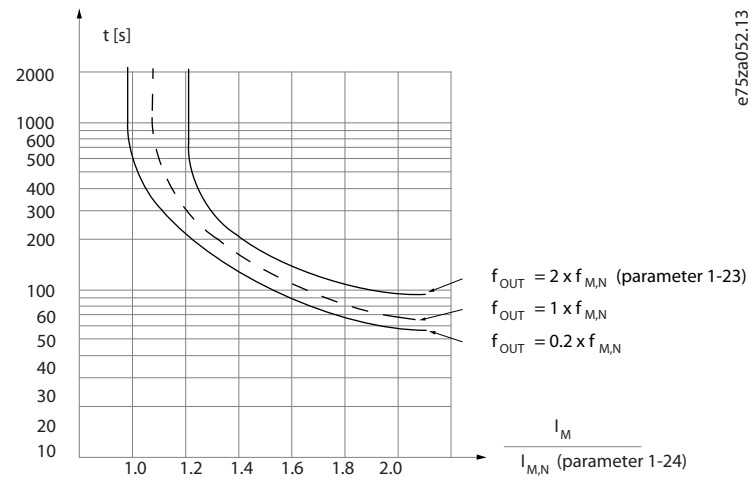

Illustration 31: ETR Characteristics

The X-axis shows the ratio between I_{motor} and I_{motor} nominal. The Y-axis shows the time in seconds before the ETR cuts off and trips the drive. The curves show the characteristic nominal speed at twice the nominal speed and at 0.2 x the nominal speed. At lower speed, the ETR cuts off at lower heat due to less cooling of the motor. In that way, the motor is protected from being overheated even at low speed. The ETR feature calculates the motor temperature based on actual current and speed. The calculated temperature is visible as a readout parameter in *parameter 16-18 Motor Thermal*. A special version of the ETR is also available for EX-e or EX-n

motors in ATEX areas. This function makes it possible to enter a specific curve to protect the Ex-e motor. See the Programming Guide for set-up instructions.

6.2.3 Motor Thermal Protection for Ex-e or Ex-n Motors

The drive is equipped with an ATEX ETR thermal monitoring function for operation of Ex-e or Ex-n motors according to EN 60079-7. When combined with an ATEX-approved PTC monitoring device such as the VLT® PTC Thermistor Card MCB 112 or an external device, the installation does not require an individual approval from an approbated organization.

The ATEX ETR thermal monitoring function enables use of an Ex-e or Ex-n motor instead of a more expensive, larger, and heavier Ex-d motor. The function ensures that the drive limits motor current to prevent overheating.

Requirements related to the Ex-e motor

N O T I C E

Install the drive outside the hazardous zone.

- Ensure that the Ex-e motor is approved for operation in hazardous zones (ATEX zone 1/21, ATEX zone 2/22) with drives. The motor must be certified for the specific hazardous zone.
- Install the Ex-e motor in zone 1/21 or 2/22 of the hazardous zone, according to motor approval.
- Ensure that the Ex-e motor is equipped with an ATEX-approved motor overload protection device. This device monitors the temperature in the motor windings. If there is a critical temperature level or a malfunction, the device switches off the motor.
  - The VLT® PTC Thermistor MCB 112 option provides ATEX-approved monitoring of motor temperature. It is a prerequisite that the drive is equipped with 3–6 PTC thermistors in series according to DIN 44081 or 44082.
  - Alternatively, an external ATEX-approved PTC protection device can be used.
- Sine-wave filter is required when the following apply:
  - Long cables (voltage peaks) or increased mains voltage produce voltages exceeding the maximum allowable voltage at motor terminals.
  - Minimum switching frequency of the drive does not meet the requirement stated by the motor manufacturer. The minimum switching frequency of the drive is shown as the default value in *parameter 14-01 Switching Frequency*.

Compatibility of motor and drive

For motors certified according to EN-60079-7, a data list including limits and rules is supplied by the motor manufacturer as a datasheet, or on the motor nameplate. During planning, installation, commissioning, operation, and service, follow the limits and rules supplied by the manufacturer for:

- Minimum switching frequency.
- Maximum current.
- Minimum motor frequency.
- Maximum motor frequency.

The requirements are indicated on the motor nameplate, see Illustration 32.

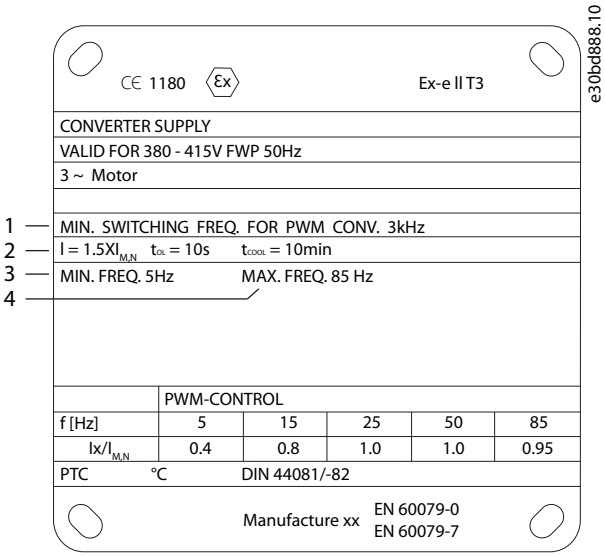

Illustration 32: Motor Nameplate showing Drive Requirements

When matching drive and motor, Danfoss specifies the following extra requirements to ensure adequate motor thermal protection:

- Do not exceed the maximum allowed ratio between drive size and motor size. The typical value is $I_{VLT,n} \leq 2 \times I_{m,n}$.
- Consider all voltage drops from drive to motor. If the motor runs with lower voltage than listed in the U/f characteristics, current can increase, triggering an alarm.

6.2.4 Mains Dropout

During a mains dropout, the drive keeps running until the DC-link voltage drops below the minimum stop level. The minimum stop level is typically 15% below the lowest rated supply voltage. The mains voltage before the dropout and the motor load determines how long it takes for the drive to coast.

Configure the mains dropout function of the drive in *parameter 14-10 Mains Failure*. The options are:

- Trip lock.
- Coast with flying start.
- Kinetic back-up.
- Controlled ramp-down.

Flying start

Flying start enables catching a motor that is spinning freely due to a mains dropout. This option is relevant for high-inertia applications, such as centrifuges and fans.

Kinetic back-up

This selection ensures that the drive runs as long as there is energy in the system. For short mains dropout, the operation is restored after mains return without bringing the application to a stop or losing control at any time. Several variants of kinetic back-up can be selected.

Configure the behavior of the drive at mains dropout in *parameter 14-10 Mains Failure* and *parameter 1-73 Flying Start*.

6.2.5 Built-in PID Controller

The 4 built-in proportional, integral, derivative (PID) controllers eliminate the need for auxiliary control devices.

One of the PID controllers maintains constant control of closed-loop systems where regulated flow, temperature, or other system requirements must be maintained. The drive can provide selfreliant control of the motor speed in response to feedback signals from remote sensors. The drive accommodates 2 feedback signals from 2 different devices. This feature allows regulating a system with different feedback requirements. The drive makes control decisions by comparing the 2 signals to optimize system performance.

Use the 3 extra and independent controllers for controlling other process equipment, such as chemical feed pumps, valve control, or for aeration with different levels.

6.2.6 Automatic Restart

The drive can be programmed to restart the motor automatically after a minor trip, such as momentary power loss or fluctuation.

This feature eliminates the need for manual resetting and enhances automated operation for remotely controlled systems. The number of restart attempts and the duration between attempts can be limited.

6.2.7 Flying Start

Flying start allows the drive to synchronize with an operating motor rotating at up to full speed in either direction. This prevents trips due to overcurrent draw. It minimizes mechanical stress to the system since the motor receives no abrupt change in speed when the drive starts.

6.2.8 Full Torque at Reduced Speed

The drive follows a variable V/Hz curve to provide full motor torque even at reduced speeds. Full output torque can coincide with the maximum designed operating speed of the motor. This drive differs from variable torque drives and constant torque drives. Variable torque drives provide reduced motor torque at low speed. Constant torque drives provide excess voltage, heat, and motor noise at less than full speed.

6.2.9 Frequency Bypass

In some applications, the system can have operational speeds that create a mechanical resonance. This mechanical resonance can generate excessive noise and possibly damage mechanical components in the system. The drive has 4 programmable bypass-frequency bandwidths (*parameters 4-60* to *4-63*). The bandwidths allow the motor to step over speeds that induce system resonance.

6.2.10 Motor Preheat

To preheat a motor in a cold or damp environment, a small amount of DC current can be trickled continuously into the motor to protect it from condensation and cold starts.

See *parameter 2-00 DC Hold Current in the programming guide*) for more detail.

The motor preheat function can eliminate the need for a space heater.

6.2.11 Programmable Set-ups

The drive has 4 set-ups that can be independently programmed. Using multi-setup, it is possible to switch between independently programmed functions activated by digital inputs or a serial command. Independent set-ups are used, for example, to change references, or for day/ night or summer/winter operation, or to control multiple motors. The LCP shows the active set-up.

Set-up data can be copied from drive to drive by downloading the information from the removable LCP, by using MCT 10, or by using a smart device if a VLT® Wireless Control Panel LCP 103 is installed.

6.2.12 Smart Logic Controller

Smart logic control (SLC) is a sequence of user-defined actions (see *parameter 13-52 SL Controller Action* [x]) executed by the SLC when the associated user-defined event (see *parameter 13-51 SL Controller Event* [x]) is evaluated as true by the SLC.

It is possible to create up to 4 independent sequences. Linking between sequences can be done by using logic rules. Use the SLC settings to activate, deactivate, and reset the smart logic control sequence. The logic functions and comparators are always running in the background, which opens for separate control of digital inputs and outputs. In MCT 10, it is possible to program the SLC sequences via the graphics plug-in.

The condition for an event can be a particular status or that the output from a logic rule or a comparator operand becomes true. That leads to an associated action as shown in the Illustration 33.

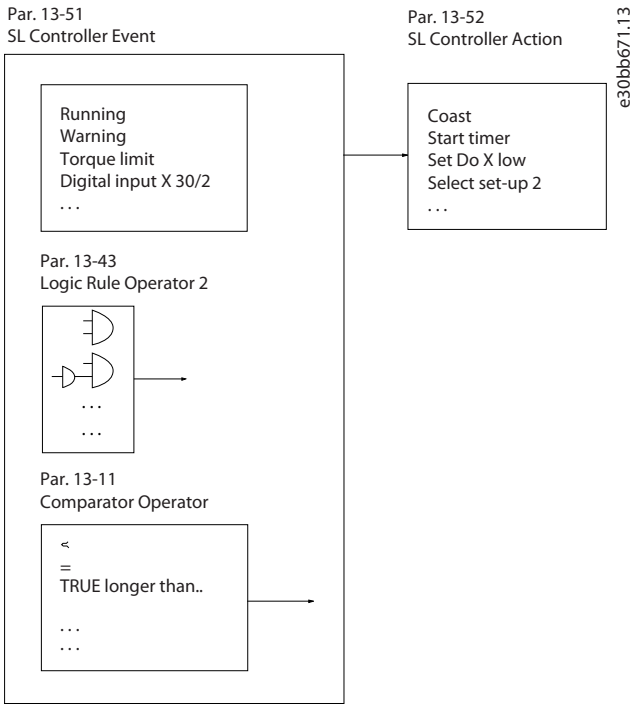

Illustration 33: Associated Action

Events and actions are each numbered and linked in pairs (states). This means that when event [0] is fulfilled (attains the value true), action [0] is executed. After this, the conditions of event [1] are evaluated and if evaluated true, action [1] is executed, and so on. Only 1 event is evaluated at any time. If an event is evaluated as false, nothing happens (in the SLC) during the current scan interval, and no other events are evaluated. When the SLC starts, it evaluates event [0] (and only event [0]) each scan interval. Only when event [0] is evaluated true, the SLC executes action [0] and starts evaluating event [1]. It is possible to program 1–20 events and actions per sequence.

When the last event/action has been executed, the sequence starts over again from event [0]/action [0]. See Illustration 34 for an example with 3 events/actions:

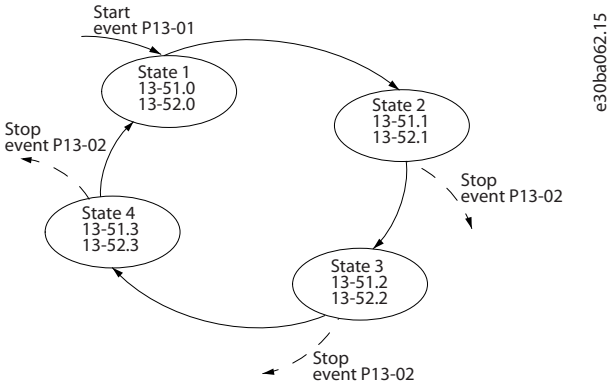

Illustration 34: Sequence with 4 Events/Actions

6.2.12.1 Comparators

Comparators are used for comparing continuous variables (for example, output frequency, output current, and analog input) to fixed preset values.

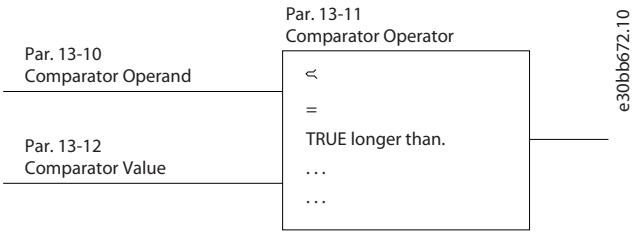

Illustration 35: Comparators

6.2.12.2 Logic Rules

Combine up to 3 boolean inputs (true/false inputs) from timers, comparators, digital inputs, status bits, and events using the logical operators and, or, and not.

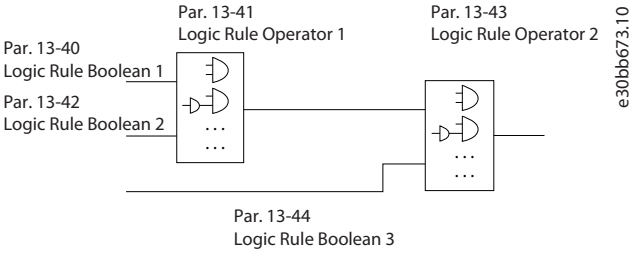

Illustration 36: Logic Rules

6.2.12.3 SLC Application Example - Setting Up a Ramp-up/Ramp-down Sequence

This example shows how to set up a ramp-up/ramp-down sequence with the SLC. The sequence has the following states:

- start.
- ramp up.
- run at reference speed for 2 s.
- ramp down.
- Hold shaft until stop.

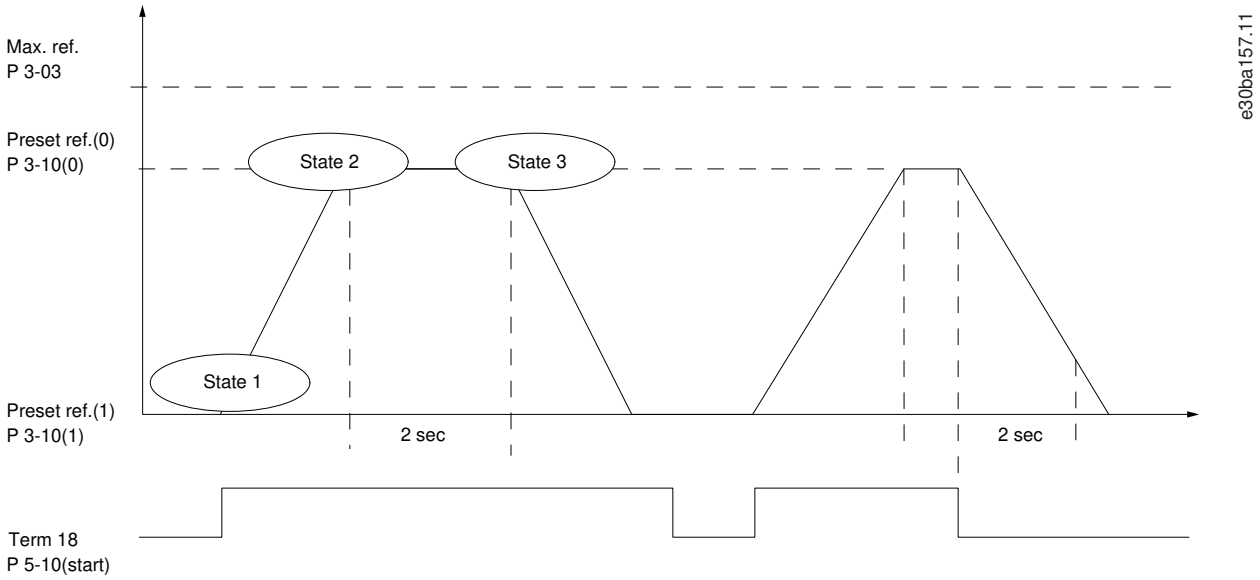

Illustration 37: Application Example, Ramp Up/Ramp Down

Procedure

1. Set the ramping times in *parameter 3-41 Ramp 1 Ramp Up Time* and *parameter 3-42 Ramp 1 Ramp Down Time* to the required values.

$$tramp = \frac{tacc \times nnorm\ (par.\ 1-25)}{ref\ (RPM)}$$

2. In *parameter 5-12 Terminal 27 Digital Input*, set terminal 27 to *[0] No Operation*.
3. Set preset reference 0 to 1st preset speed (*parameter 3-10 Preset Reference* [0] in percentage of maximum reference speed (*parameter 3-03 Maximum Reference*). Example: 60%.
4. Set preset reference 1 to 2nd preset speed (*parameter 3-10 Preset Reference* [1]. Example: 0%.
5. Set the timer 0 for constant running speed in *parameter 13-20 SL Controller Timer* [0]. Example: 2 s.
6. Set Event 1 in *parameter 13-51 SL Controller Event* [1] to *[1] True*.
7. Set Event 2 in *parameter 13-51 SL Controller Event* [2] to *[4] On Reference*.
8. Set Event 3 in *parameter 13-51 SL Controller Event* [3] to *[30] Time Out 0*.
9. Set Event 4 in *parameter 13-51 SL Controller Event* [4] to *[0] False*.
10. Set Action 1 in *parameter 13-52 SL Controller Action* [1] to *[10] Select preset 0*.
11. Set Action 2 in *parameter 13-52 SL Controller Action* [2] to *[29] Start Timer 0*.
12. Set Action 3 in *parameter 13-52 SL Controller Action* [3] to *[11] Select preset 1*.
13. Set Action 4 in *parameter 13-52 SL Controller Action* [4] to *[1] No Action*.
14. Set the SLC in *parameter 13-00 SL Controller Mode* to *[1] On*.

A start/stop command is applied on terminal 18. If the stop signal is applied, the drive ramps down and goes into free mode.

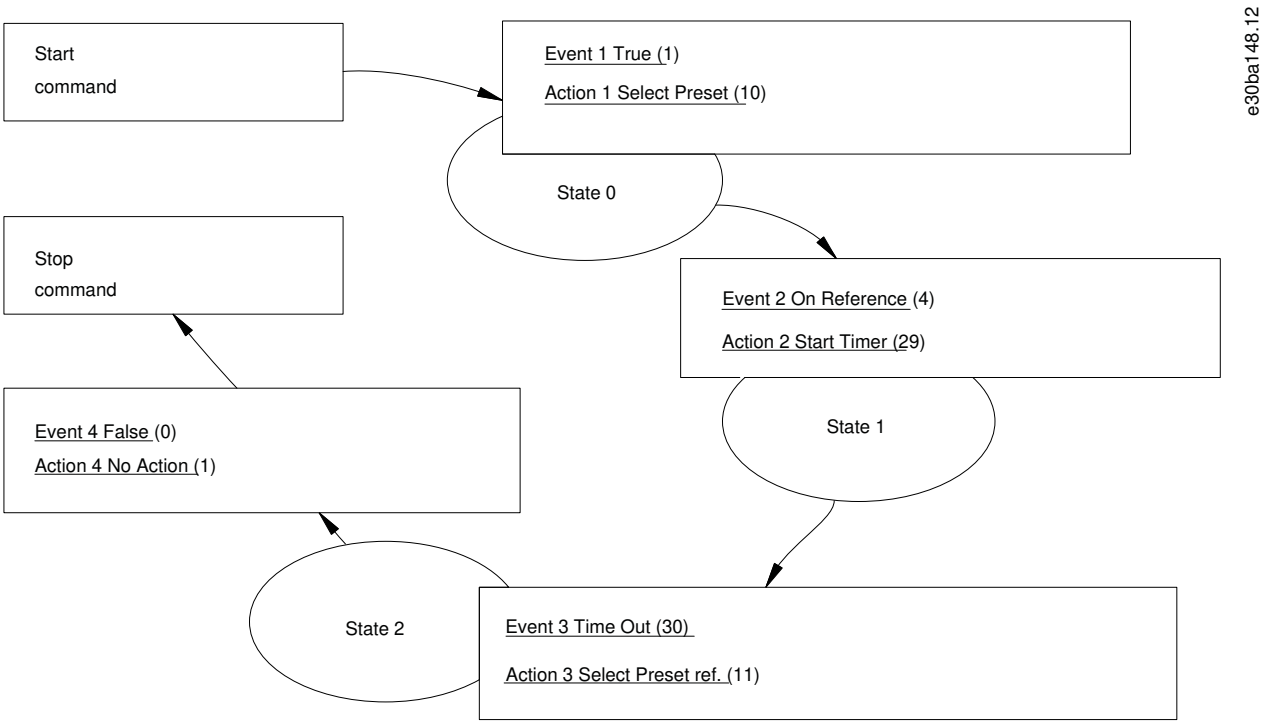

Illustration 38: SLC Application Example

6.2.12.4 RS Flip Flops

The reset/set flip flops hold the signal until set/reset.

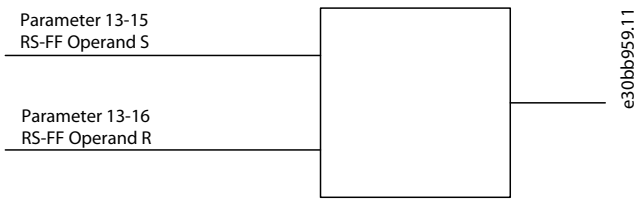

Illustration 39: Reset/set Flip Flops

2 parameters are used, and the output can be used in the logic rules and as events.

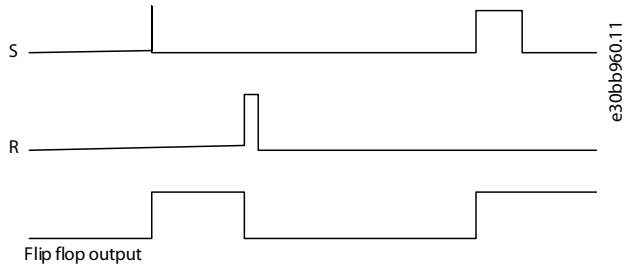

Illustration 40: Flip Flop Outputs

The 2 operators can be selected from a long list. As a special case, the same digital input can be used as both set and reset, making it possible to use the same digital input as start/stop. The following settings can be used to set up the same digital input (for example, DI32) as start/ stop.

Table 11: Operators

Parameter	Setting	Notes
Parameter 13-00 SL Controller Mode	On	–
Parameter 13-01 Start Event	True	–
Parameter 13-02 Stop Event	False	–
Parameter 13-40 Logic Rule Boolean 1 [0]	*[37] Digital Input DI32*	–
Parameter 13-42 Logic Rule Boolean 2 [0]	*[2] Running*	–
Parameter 13-41 Logic Rule Operator 1 [0]	*[3] AND NOT*	–
Parameter 13-40 Logic Rule Boolean 1 [1]	*[37] Digital Input DI32*	–
Parameter 13-42 Logic Rule Boolean 2 [1]	*[2] Running*	–
Parameter 13-41 Logic Rule Operator 1 [1]	*[1] AND*	–
Parameter 13-15 RS-FF Operand S [0]	*[26] Logic rule 0*	Output from *parameter 13-41 Log ic Rule Operator 1* [0].
Parameter 13-16 RS-FF Operand R [0]	*[27] Logic rule 1*	Output from *parameter 13-41 Log ic Rule Operator 1* [1].
Parameter 13-51 SL Controller Event [0]	*[94] RS Flipflop 0*	Output from *parameter 13-15 RSFF Operand S* and *parameter 13-16 RSFF Operand R*.
Parameter 13-52 SL Controller Action [0]	*[22] Run*	–
Parameter 13-51 SL Controller Event [1]	*[27] Logic rule 1*	–
Parameter 13-52 SL Controller Action [1]	*[24] Stop*	–

6.2.12.5 Timers

Use the result (true or false) from timers directly to define an event (see *parameter 13-51 SL Controller Event*), or as boolean input in a logic rule (see *parameter 13-40 Logic Rule Boolean 1*, *parameter 13-42 Logic Rule Boolean 2*, or *parameter 13-44 Logic Rule Boolean 3*). A timer is only false when started by an action (for example *[29] Start timer 1*) until the timer value entered in this parameter has elapsed. Then it becomes true again. All parameters in this parameter group are array parameters with index 0–2. Select index 0 to program timer 0, select index 1 to program timer 1, and so on.

6.2.13 Safe Torque Off

To run STO, extra wiring for the drive is required. Refer to the VLT® Safe Torque Off Operating Guide for further information.

Liability conditions

The customer is responsible for ensuring that personnel know how to install and operate the Safe Torque Off function by:

- Reading and understanding the safety regulations concerning health, safety, and accident prevention.
- Understanding the generic and safety guidelines provided in the VLT® Safe Torque Off Operating Guide.
- Having a good knowledge of the generic and safety standards for the specific application.

6.3 Dynamic Braking

Dynamic braking slows the motor using 1 of the following methods:

- AC brake:
  - The brake energy is distributed in the motor by changing the loss conditions in the motor (*parameter 2-10 Brake Function = [2] AC Brake*). The AC brake function cannot be used in applications with high cycling frequency since this situation overheats the motor.
- DC brake:
  - An overmodulated DC current added to the AC current works as an eddy current brake (*parameter 2-02 DC Braking Time ≠ 0 s*).
- Resistor brake:
  - A brake IGBT keeps the overvoltage under a certain threshold by directing the brake energy from the motor to the connected brake resistor (*parameter 2-10 Brake Function = [1] Resistor Brake*). For more information on selecting a brake resistor, see 10.9.1 Selection of Brake Resistor or the VLT® Brake Resistor MCE 101 Design Guide.

For drives equipped with the brake option, a brake IGBT along with terminals 81(R-) and 82(R+) are included for connecting an external brake resistor. The function of the brake IGBT is to limit the voltage in the DC link whenever the maximum voltage limit is exceeded. It limits the voltage by switching the externally mounted resistor across the DC bus to remove excess DC voltage present on the bus capacitors.

External brake resistor placement has the advantages of selecting the resistor based on application need, dissipating the energy outside of the control panel, and protecting the drive from overheating if the brake resistor is overloaded. The brake IGBT gate signal originates on the control card and is delivered to the brake IGBT via the power card and gatedrive card. Also, the power and control cards monitor the brake IGBT for a short circuit. The power card also monitors the brake resistor for overloads.

External brake resistor placement has the advantages of selecting the resistor based on application need, dissipating the energy outside of the control panel, and protecting the drive from overheating if the brake resistor is overloaded.

6.4 Load Sharing

Load sharing enables connection of multiple Danfoss VLT® drives over the same DC link with the following benefits:

- Energy savings:
  - A motor running in regenerative mode can supply drives that are running in motoring mode. Alternatively, the motor running in regenerative mode can supply any brake resistors used with the drives.
- Reduced need for spare parts:
  - Usually, only 1 brake resistor is required for the installation instead of a brake resistor for each drive.
- Power back-up:
  - If there was mains failure, all Danfoss VLT® drives can be supplied through the DC link from a back-up. The application can thus continue running or go through a controlled shutdown process.

6.4.1 Preconditions and Special Conditions

Before considering load sharing, ensure that the following preconditions are met:

- Equip the drives with load sharing terminals. Enclosure sizes A1–A5 and B3 have load sharing terminals by default.
- Enclosure sizes B, C, and F must be configured for load sharing when ordering. The standard load share selection in character 21 or the type code is D, but other selections are available. For more configuration options, see Drivecat. It is not possible to retrofit load sharing terminals on enclosure sizes B, C, and F.
- Enclosure sizes D and E must be configured for load sharing either when ordering or by using a retrofit kit. The standard load share selection in character 21 of the type code is D, but other options are available. For more configuration options, see the Drivecat.

- The drives considered for load sharing must be of the same product series.
- The drives must all have the same voltage rating, for example, use T5 with T5 only.
- Place the drives physically close to each other to allow the wiring between to be as short as possible (maximum 25 m (82 ft)). Build the wiring symmetrically around the drives with the highest power. Moreover, run the 2 wires closely together and, if possible, twisted.
- When adding a brake resistor in a load sharing configuration, equip all drives with a brake chopper.
- A brake chopper is specified in the type code when ordering and cannot be retrofitted. The standard selection in character 18 of the type code is B. For enclosure size A1, selection U, brake chopper + STO, is also a possibility.
- The fan in enclosure sizes D, E, and F must be supplied from an external power supply.

NOTICE

Continuously monitor the *Drive ready* signal of the drives. The *Drive ready* signal impacts the overall application control.

NOTICE

MISSING PHASE AND OVERCURRENT PROTECTION REQURIED

Drives can have their rectifier overloaded even though the DC link does not show a high level of voltage ripple. Therefore, the mains supply must be equipped with missing phase and overcurrent protection.

NOTICE

UNINTEDED WARNINGS OR REDUCED PERFORMANCE

In a load sharing application, the AC-brake function does not work as expected. The function checks for regenerative power, but in a load sharing application, the regenerative power can come from another drive.

- Turn off the AC-brake function in load sharing applications (*parameter 2-10 Brake Function*). Example: A drive without a brake is combined with a drive with brake. When the drive with a brake is braked, the other drive receives an overcurrent warning. Performance is not affected.

NOTICE

The start-up time of the drive may be slightly longer than normal.

NOTICE

According to the EMC Directive, a system is defined as a combination of several types of equipment, finished products, and/or components combined, designed and/or put together by the same person (system manufacturer) intended to be placed on the market for distribution as a single functional unit for an end user and intended to be installed and operated together to perform a specific task. The EMC directive applies to products/systems and installations, but in case the installation is built up of CE marked products/systems the installation can also be considered compliant with the EMC directive. Installations shall not be CE marked. According to the EMC Directive, Danfoss Drives as a manufacturer of product/systems is responsible for obtaining the essential requirements of the EMC directive and attaching the CE mark. For systems involving load sharing and other DC terminals, Danfoss Drives can only ensure compliance to EMC Directive when end users connect combinations of Danfoss Drives products as described in our technical documentation.
If any third-party products are connected to the load share or other DC terminals on the AC drives, Danfoss Drives cannot guarantee that the EMC requirements are fulfilled.

6.4.2 Combinations of Enclosure Sizes

The concept for limiting inrush current in the DC-link capacitors is not the same for all enclosure sizes. Therefore, options for combining different enclosure sizes in load sharing applications are limited.

NOTICE

RISK OF DRIVE FAILURE

Combining enclosure sizes that have different inrush control principles may lead to drive failure.

– Ensure that the applied inrush control principles are compatible before combining drives in a load sharing application.

Table 12: Inrush Control Principles for Individual Enclosure Sizes

Enclosure size	Principle
A	DC inrush self-limited
B	
C	AC inrush thyristor limited
D	AC inrush resistor limited
E	
F	

The following enclosure size combinations are possible in load sharing applications:

- A and B enclosures can be combined with other A or B enclosures.
- C, D, E, and F enclosures can be combined with other C, D, E, or F enclosures. However, C enclosures can only be combined with F enclosures under the following circumstances:
  - All drives are connected to mains or
  - only the F enclosure is connected to mains.
- It is not possible to combine F and C enclosures if only the C enclosure is connected to mains.
- If the A/B enclosure drive is not connected to mains, A and B enclosures can be combined with C, D, E, or F enclosures.

NOTICE

RISK OF DRIVE FAILURE

Combining A or B enclosures connected to mains with C, D, E, or F enclosures causes overload of the rectifier in the A and B enclosures during inrush and normal load conditions.

– Ensure that A and B enclosures are not connected to mains when combining them with C, D, E, or F enclosures.

To have the correct design of load sharing circuit, consult the application note Load Sharing for more details.

7 Options and Accessories Overview

7.1 Introduction

Danfoss offers an extensive range of options and accessories.

This chapter provides an overview of the different hardware options and accessories for the VLT® FC drive series:

- Fieldbus options
- Functional extensions
- Programmable controllers
- Power options
- Kits and accessories

7.2 VLT® FC Series Options Concept

Options are used to add extra features to the drive. That allows tailoring the drive to the specific need and application.

The drives have 4 option slots (A, B, C, and D).

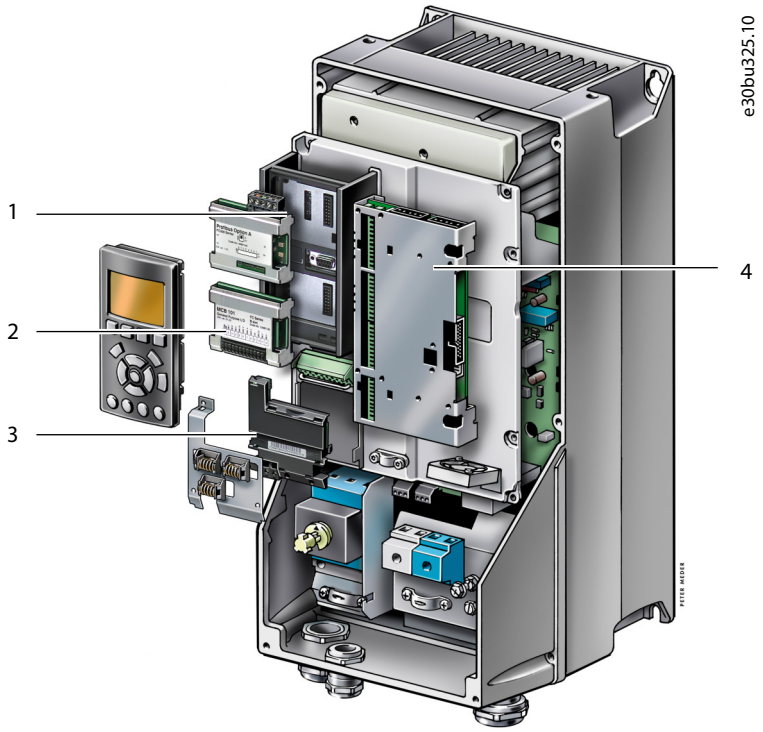

Illustration 41: Option Slots on a VLT® FC Series Drive (Example Compact Enclosure)

1	A option	3	D option
2	B option	4	C option

The A-slot options are typically communication options, for example, for adding fieldbus functionality.

The B-slot options typically host functional extension options.

The C-slot options host special function options, for example for advanced cascade control.

The D-slot option is used for an external power supply and for the real-time clock.

The options are slot-specific. So an A-option does only fit in an A-option slot.

Some options are drive-specific, as they require an application-specific operating system in the drive.

Some additional functionalities are not implemented via hardware options, but via specific software options, for example Digital Cascade Controller.

For a more detailed overview of available options, download the VLT® Drives FC Series Options Portfolio from www.danfoss.com.

7.3 VLT® Fieldbus Options

This topic gives an overview of currently available option cards related to fieldbus communication for the VLT® FC AC drive series. The fieldbus solutions brochure can be downloaded from www.danfoss.com in the Options and Accessories section.

Table 13: Fieldbus Options

Option name	Slot	FC 102	FC 103	FC 202	FC 301	FC 302
VLT® PROFIBUS DP MCA 101	A	x	x	x	x	x
VLT® DeviceNet MCA 104	A	x	–	x	x	x
VLT® CANopen MCA 105	A	–	–	–	x	x
VLT® AK-LonWorks MCA 107 for ADAP-Kool®	A	–	x	–	–	–
VLT® LonWorks MCA 108	A	x	–	–	–	–
VLT® BACNet MCA 109	A	x	x	–	–	–
VLT® PROFIBUS Converter MCA 113 (VLT® 3000 to VLT® FC 302)	A	–	–	–	–	x
VLT® PROFIBUS Converter MCA 114 (VLT® 5000 to VLT® FC 302)	A	–	–	–	–	x
VLT® PROFINET MCA 120	A	x	x	x	x	x
VLT® EtherNet/IP MCA 121	A	x	–	x	x	x
VLT® Modbus TCP MCA 122	A	x	x	x	x	x
VLT® POWERLINK MCA 123	A	–	–	–	x	x
VLT® EtherCAT MCA 124	A	–	–	–	x	x
VLT® BACNet/IP MCA 125	A	x	–	x	–	–
VLT® DeviceNet Converter MCA 194	A	–	–	–	–	x

7.4 VLT® Functional Extensions

This topic gives an overview of currently available option cards for functional extension.

More detailed descriptions of the functional extension option cards can be found in the Installation Guides, Programming Guides, and Operating Guides for the individual options. These manuals can be downloaded from www.danfoss.com in the VLT AQUA DriveFC 202 section.

Table 14: Functional Extensions

Option name	Slot	FC 102	FC 103	FC 202	FC 301	FC 302
VLT® General Purpose I/O Option MCB 101	B	x	x	x	x	x
VLT® Encoder Option MCB 102	B	–	–	–	x	x
VLT® Resolver Input MCB 103	B	–	–	–	x	x
VLT® Relay Card MCB 105	B	x	x	x	x	x
VLT® 24 V DC Supply Option MCB 107	D	x	x	x	–	x
VLT® Safe PLC Interface Option MCB 108	B	–	–	–	–	x
VLT® Analog I/O MCB 109 (incl. RTC backup)	B	x	x	x	–	–
VLT® PTC Thermistor Card MCB 112	B	x	–	x	x	x

Option name	Slot	FC 102	FC 103	FC 202	FC 301	FC 302
VLT® Extended Relay Card MCB 113	C	–	–	–	–	x
VLT® Sensor Input MCB 114	B	x	–	x	x	x
VLT® Programmable I/O MCB 115	B	x	x	x	x	x
VLT® Real-time Clock MCB 117	D	x	x	x	x	x
VLT® Safety Option MCB 150 (TTL)	B	–	–	–	–	x
VLT® Safety Option MCB 151 (HTL)	B	–	–	–	–	x
VLT® Safety Option MCB 152 (PROFIsafe)	B	–	–	–	–	x
VLT® Sensorless Safety MCB 159[1]	–	–	–	–	–	x

[1] MCB 159 is factory-mounted and must be ordered with VLT® Safety Option MCB 151.

7.5 VLT® Programmable Controllers

Table 15: VLT® Programmable Controllers

Option name		FC 102	FC 103	FC 202	FC 301	FC 302
VLT® Extended Cascade Controller MCO 101	B	–	–	x	–	–
VLT®Advanced Cascade Controller MCO 102	C	–	–	x	–	–
VLT®Motion Control Option MCO 305	C	–	–	–	x	x
VLT®Synchronizing Controller MCO 350	C	–	–	–	–	x
VLT®Position Controller MCO 351	C	–	–	–	–	x
Integrated Motion Controller IMC S067 (software option)	–	–	–	–	–	x

7.6 License Features

This topic gives an overview of currently available license features.

Table 16: License Features

Option name	FC 102	FC 103	FC 202	FC 301	FC 302
Condition-based Monitoring (LX1X software option)	x	x	x	–	x
VLT® Digital Cascade Controller (LXX1 software option)	–	–	x	–	–

7.7 VLT® Power Options

7.7.1 VLT® Harmonic Filters

Table 17: VLT® Harmonic Filters

Option name	FC 102	FC 103	FC 202	FC 301	FC 302
VLT® Advanced Harmonic Filter AHF 005	x	x	x	x	x
VLT® Advanced Harmonic Filter AHF 010	x	x	x	x	x

The VLT® Advanced Harmonic Filters AHF 005 & AHF 010 are not comparable with traditional harmonic trap filters. The Danfoss VLT® harmonic filters have been specially designed to match the Danfoss VLT® drives.

By connecting the AHF 005 or AHF 010 in front of a Danfoss VLT® drive, the total harmonic current distortion generated back to the mains is reduced to 5% (AHF 005) and 10% (AHF 010).

For order numbers and more information on harmonic mitigation, refer to 10.17 Harmonics Overview, 13.2.11 Ordering of Harmonic Filters, and for more detailed information the VLT® Advanced Harmonic Filters AHF 005/AHF 010 Design Guide.

7.7.2 VLT® Sine-wave Filters

Table 18: VLT® Sine-wave Filters

Option name	FC 102	FC 103	FC 202	FC 301	FC 302
VLT® Sine-wave Filter MCC 101	x	x	x	x	x

When a drive controls a motor, resonance noise is heard from the motor. This noise, which is the result of the motor design, occurs every time an inverter switch in the drive is activated. The frequency of the resonance noise thus corresponds to the switching frequency of the drive.

Danfoss supplies a sine-wave filter to dampen the acoustic motor noise. The filter reduces the ramp-up time of the voltage, the peak load voltage (U_{PEAK}), and the ripple current (ΔI) to the motor, which means that current and voltage become almost sinusoidal. The acoustic motor noise is reduced to a minimum.

The ripple current in the sine-wave filter coils also causes some noise. Solve the problem by integrating the filter in a cabinet or enclosure.

For order numbers and more information on how to dimension sine-wave filters, refer to 13.2.12 Order Numbers for VLT® Sine-wave Filters MCC 101, and for more detailed information the VLT® FC Series Output Filter Design Guide.

7.7.3 VLT® dU/dt Filters

Table 19: VLT® dU/dt Filters

Option name	FC 102	FC 103	FC 202	FC 301	FC 302
VLT® Sine-wave Filter MCC 102	x	x	x	x	x

Danfoss supplies dU/dt filters. dU/dt filters are differential mode, low-pass filters that reduce motor terminal phase-to-phase peak voltages and reduce the rise time to a level that lowers the stress on the insulation at the motor windings. This is especially an issue with short motor cables.

Compared to the sine-wave filters, the dU/dt filters have a cut-off frequency above the switching frequency.

For order numbers and more information on how to dimension dU/dt filters, refer to 10.14 dU/dt Conditions, 13.2.13 Order Numbers for VLT® dU/dt Filters MCC 102, and for more detailed information the VLT® FC Series Output Filter Design Guide.

7.7.4 VLT® Common-mode Filters

Table 20: VLT® Common Mode Filters

Option name	FC 102	FC 103	FC 202	FC 301	FC 302
VLT® Common Mode Filter MCC 105	x	x	x	x	x

High-frequency common-mode cores (HF-CM cores) reduce electromagnetic interference and eliminate bearing damage by electrical discharge. They are special nanocrystalline magnetic cores that have superior filtering performance compared to regular ferrite cores. The HF-CM core acts like a common-mode inductor between phases and ground.

Installed around the 3 motor phases (U, V, W), the common-mode filters reduce high-frequency common-mode currents. As a result, high-frequency electromagnetic interference from the motor cable is reduced.

For ordering numbers, refer to the VLT® FC Series Output Filter Design Guide.

7.7.5 VLT® Brake Resistors

Table 21: VLT® Brake Resistors

Option name	FC 102	FC 103	FC 202	FC 301	FC 302
VLT® Brake Resistor MCE 101	x	–	x	x	x

In applications where the motor is used as a brake, energy is generated in the motor and sent back into the drive. If the energy cannot be transported back to the motor, it increases the voltage in the drive DC line. In applications with frequent braking and/or high inertia loads, this increase can lead to an overvoltage trip in the drive and, finally, a shutdown.

Brake resistors are used to dissipate the excess energy resulting from the regenerative braking.

The resistor is released based on its ohmic value, its power dissipation rate, and its physical size. Danfoss offers a wide variety of different resistors that are specially designed for Danfoss drives.

For order numbers and more information on how to dimension brake resistors, refer to 13.2.9 Ordering of VLT® Brake Resistors MCE 101, and for more detailed information the VLT® Brake Resistor MCE 101 Design Guide.

7.7.6 VLT® Line Reactors

Table 22: VLT® Line Reactors

Option name	FC 102	FC 103	FC 202	FC 301	FC 302
VLT® Line Reactor MCC 103	x	–	x	x	x

See 10.17.7 Line Reactors for details on using line reactors in load sharing applications.

7.8 Kits and Accessories

7.8.1 Panel Through Mounting Kits for VLT® FC Series Enclosure Sizes A, B, and C (IP21)

The panel through mounting kit are designed for IP21 enclosures and can be used for cooling the heat sink via an external air stream, or where there is a wish to use a separate air duct. The electronics are sealed from the external air by use of the mounting flange and sealing gasket. This way the electronics are hosued within the control panel, while the heat sink protrudes through the panel.

There are specific kits available for enclosure sizes A5, B1, B2, C1, C2. See 13.2.6 Order Numbers for Miscellaneous Hardware.

The backplate (must be purchased separately) is used if an air duct is not available. Mounted in a duct construction, the built-in fan can be removed and the cooling air provided by an external fan.

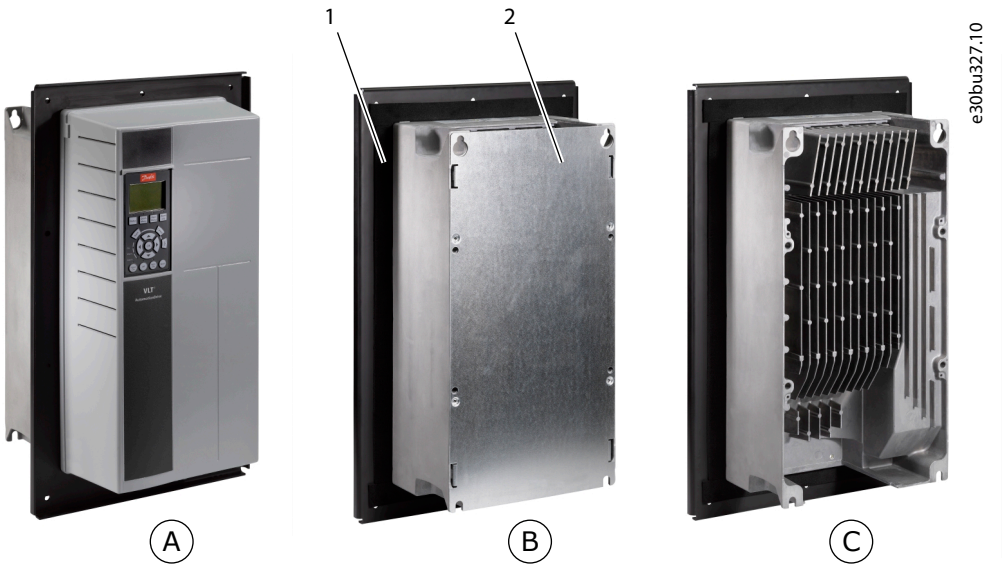

Illustration 42: Panel Though Mounting Kit on VLT® AutomationDrive FC 302

A	Drive mounted with a panel through mounting kit.	1	Mounting flange with sealing gasket.
B	Panel through kit with backplate for use with internal fan.	2	Backplate.
C	Panel through kit without backplate for installation in air duct.		

7.8.2 IP21/NEMA Type 1 Enclosure Kits for VLT® FC Series Enclosure Sizes A, B, and C

IP20/IP4X top/Nema Type 1 is an optional enclosure element available for IP20 compact units. If the enclosure kit is used, an IP20 unit is upgraded to comply with enclosure IP21/4X top/Nema Type 1. The IP4X top can be applied to all standard IP20 enclosure variants.

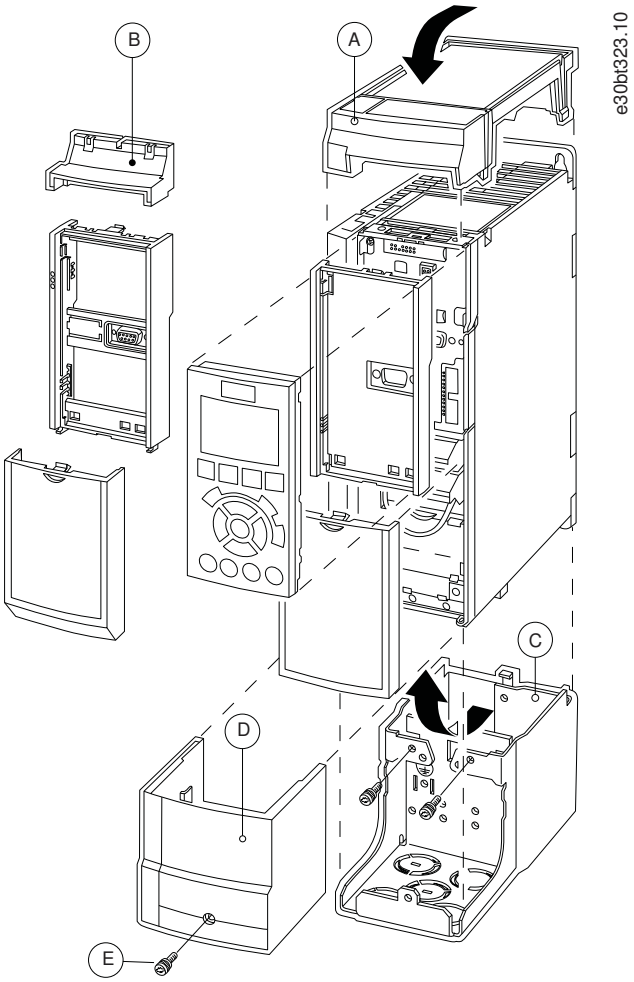

Illustration 43: IP21/Nema Type 1 Kit on A2 Enclosure

A	Top cover	D	Base cover
B	Brim	E	Screw(s)
C	Base part		

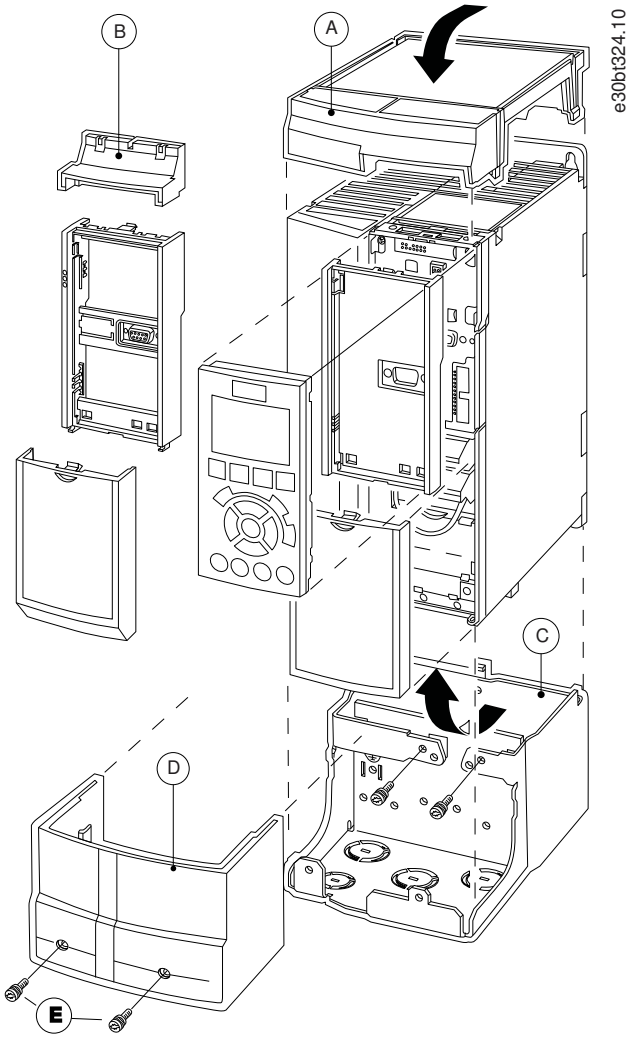

Illustration 44: IP21/Nema Type 1 Kit on A3 Enclosure

A	Top cover	D	Base cover
B	Brim	E	Screw(s)
C	Base part		

Place the top cover as shown. If an A or B option is used, fit the brim to cover the top inlet. Place the base part C at the bottom of the drive and use the clamps from the accessory bag to correctly fasten the cables.

Holes for cable glands:

- Enclosure size A2: 2x M25 and 3xM32.
- Enclosure size A3: 3xM25 and 3xM32.

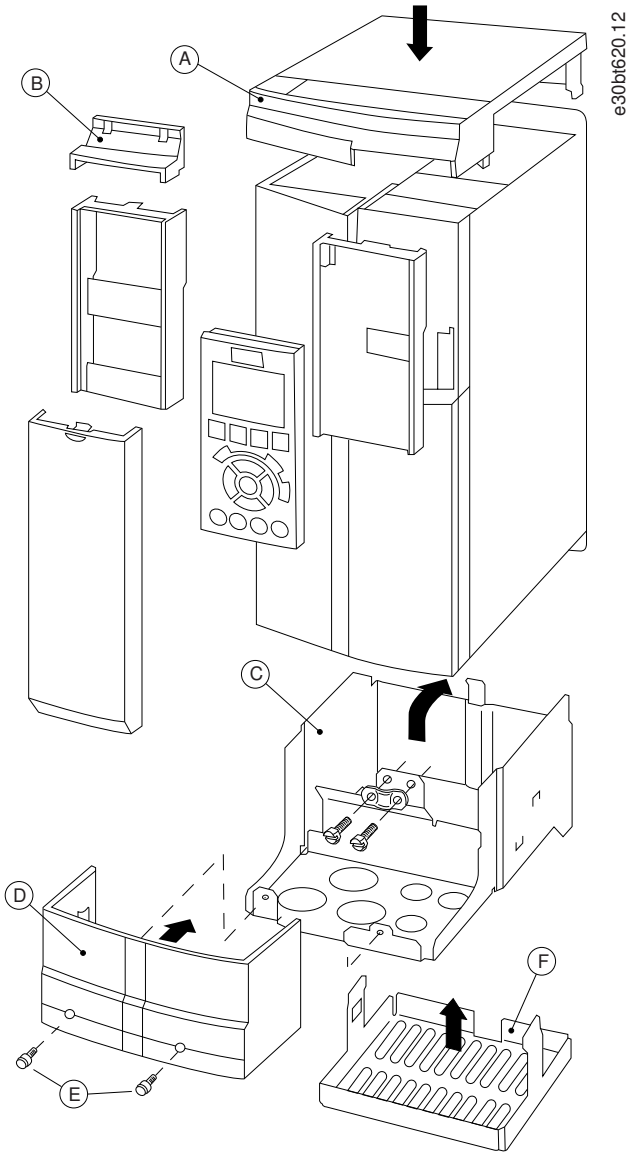

Illustration 45: IP21/Nema Type 1 Kit on B3 Enclosure

A	Top cover	D	Base cover
B	Brim	E	Screw(s)
C	Base part	F	Fan cover

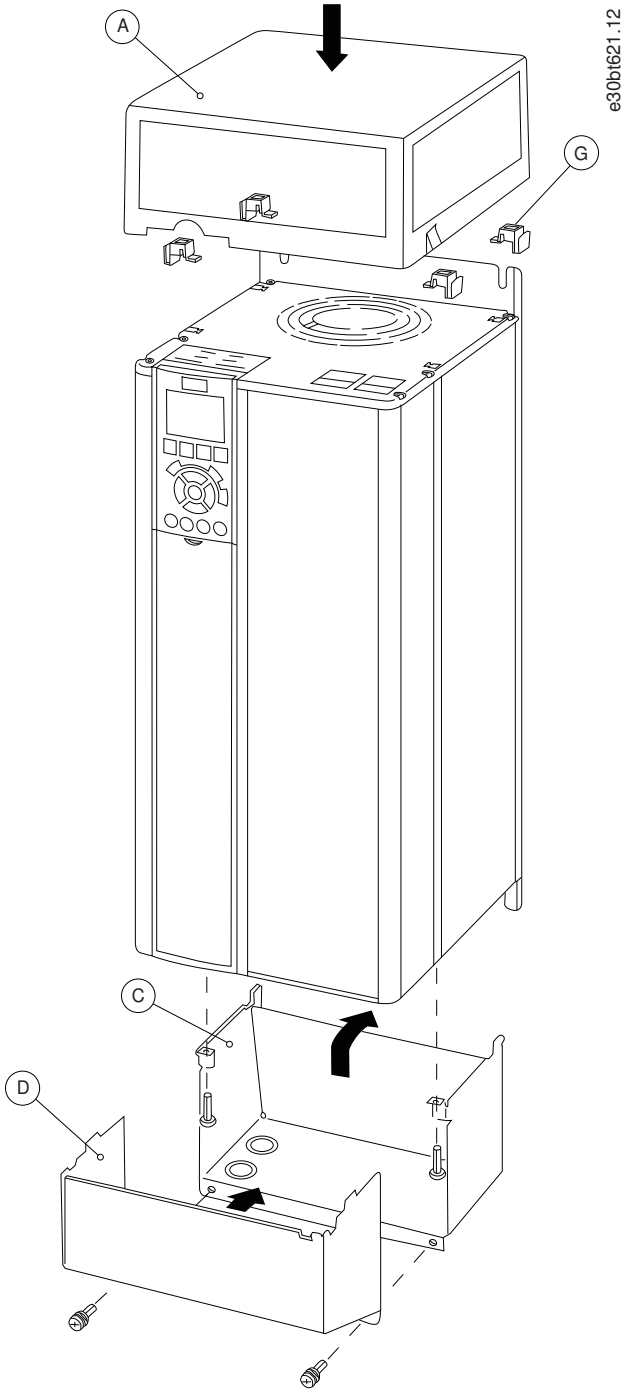

Illustration 46: IP21/Nema Type 1 Kit on B4/C3/C4 Enclosure

A	Top cover	D	Base cover
C	Base part	G	Top clip

When option module A and/or option module B is/are used, fit the brim (B) to the top cover (A).

N O T I C E

Side-by-side installation is not possible when using the IP21/IP4X/Nema Type 1 Enclosure Kit.

Table 23: Enclosure Dimensions with installed IP21/Nema Type 1 Kit

Enclosure size	Height A [mm (in)]	Width B [mm (in)]	Depth C[1] [mm (in)]
A2	372 (14.6)	90 (3.5)	205 (8.1)
A3	372 (14.6)	130 (5.1)	205 (8.1)
B3	475 (18.7)	165 (6.5)	249 (9.8)
B4	670 (26.4)	255 (10.1)	246 (9.7)
C3	755 (29.7)	329 (13.0)	337 (13.3)
C4	950 (37.4)	391 (15.4)	337 (13.3)

[1] If an A and/or B option is used, the depth increases.

7.8.3 Mounting Brackets for VLT® FC Series Enclosure Sizes A5, B1, B2, C1, and C2

The kits contain an upper and a lower bracket for the respective enclosure size.

Table 24: Mounting Brackets, Dimensions

Enclosure size	Protection Rating	A [mm (in)]	B [mm (in)]
A5	IP55/66	480 (18.9)	495 (19.5)
B1	IP21/55/66	535 (21.1)	550 (21.7)
B2	IP21/55/66	705 (27.8)	720 (28.4)
C1	IP21/55/66	730 (28.7)	745 (29.3)
C2	IP21/55/66	820 (32.3)	835 (32.9)

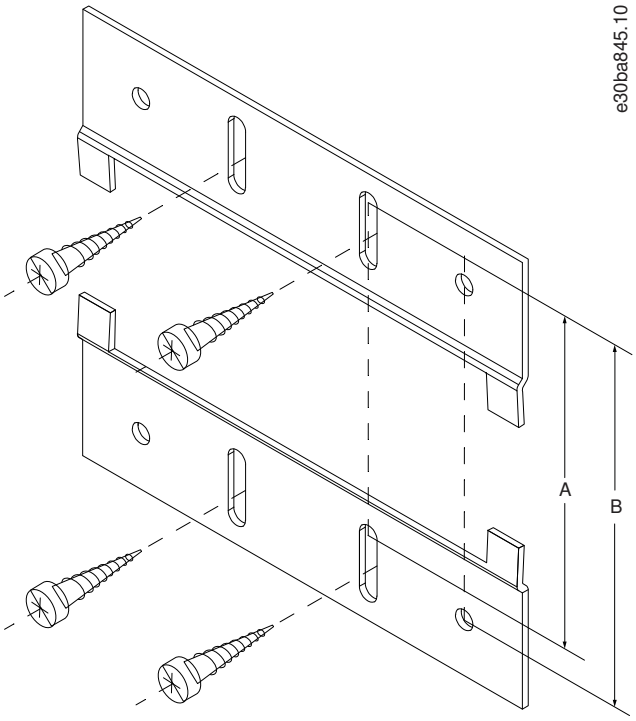

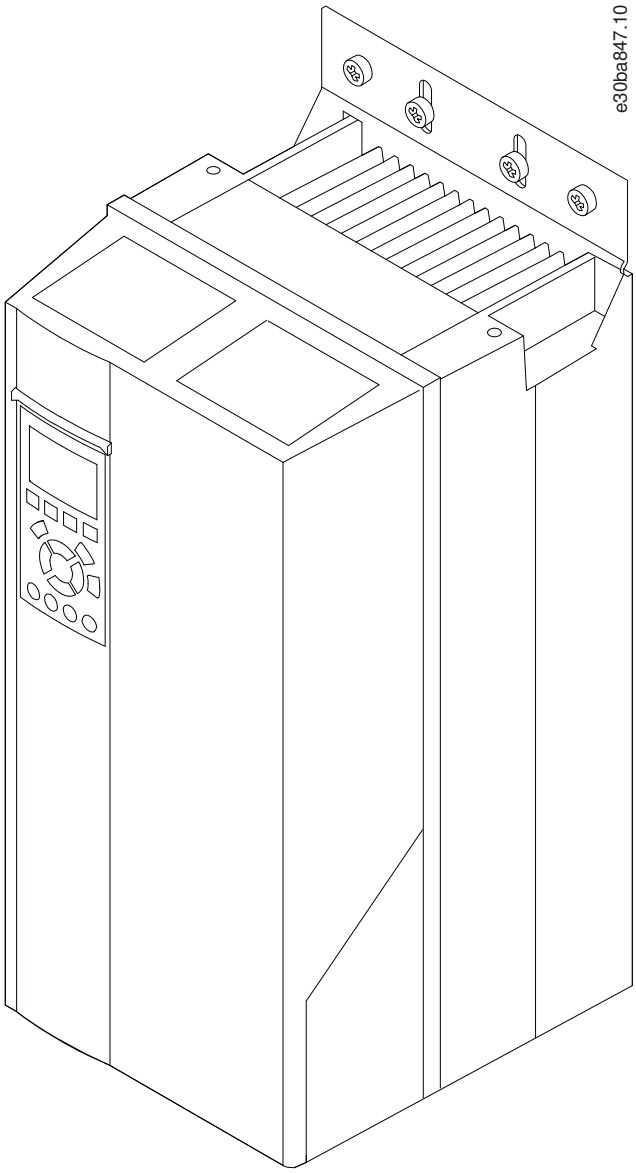

Illustration 47: Mounting Brackets for VLT® FC Series Enclosure Sizes A5, B1, B2, C2 and C2

7.8.4 Remote Mounting Kits for LCP

3 different remote mounting kits are available for the VLT® FC Series:

- Remote mounting kit for LCP with cover for outdoor mounting.
- Remote mounting kit with graphical LCP.
- Remote mounting kit with numerical LCP.

7.8.4.1 Remote Mounting Kit for LCP 102 and LCP 103 with Cover for Outdoor Mounting

The kit allows the LCP to be mounted apart from the drive, for example, in a wall or panel. The LCP mounting kit provides the following features:

- Simple mounting, only one 24 mm bore required for mounting.
- IP54 protection rating of the LCP mounting.
- Protecting LCP from direct sunlight.
- Possibility to lock the LCP cover to prevent unauthorized access.
- LCP cover locking in an open position, for example, for commissioning.

- Indicators for alarms and warnings are visible through the cover.
- Can be mounted on a wall from 0.1–90 mm thickness.

The kit contains the following parts (see 13.2.7 Order Numbers for Local Control Panel Options):

- LCP cables with 2 M12 connectors (90° male connector and straight female connector).
- Cable to the LCP.
- Blind cover with M12 female connector.
- Base plate with D-sub connector and M12 male connector.
- Two gaskets and 1 nut for the D-sub connector.
- Intermediate cover with the front cover.
- Disassembly tool.

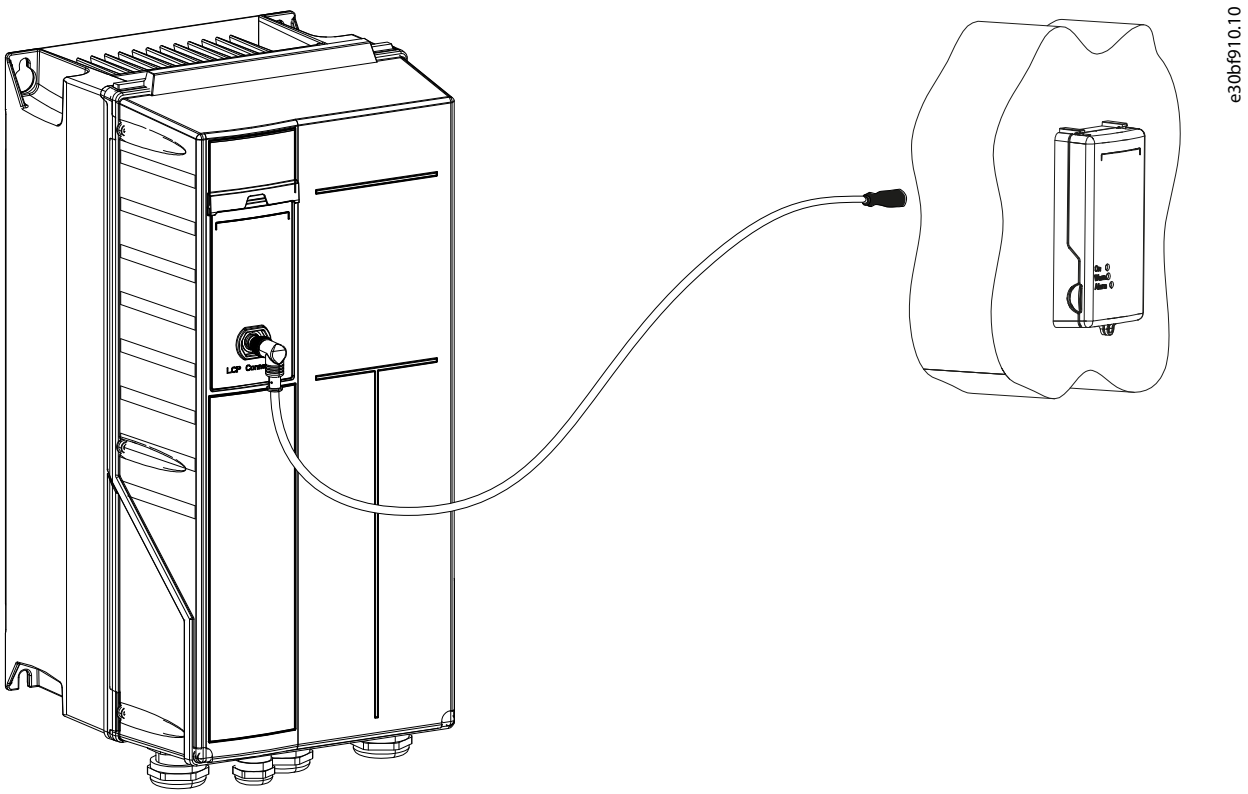

Illustration 48: Remote Connection of the LCP

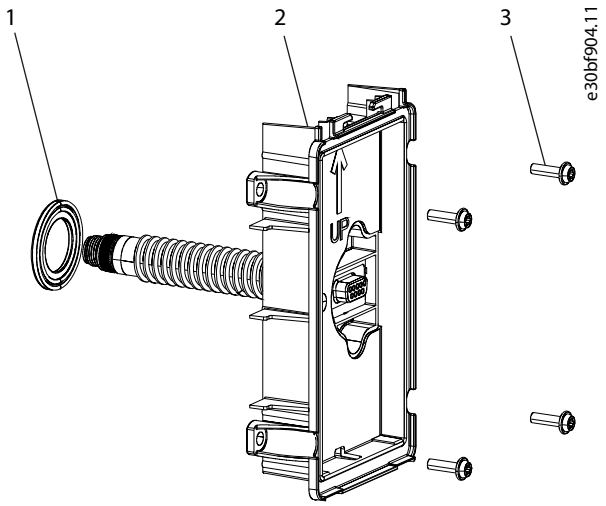

Illustration 49: Base Plate with Sub-D Connector

1	Gasket	3	Screws
2	Base plate		

7.8.4.2 Panel Mounting Kit for LCP 102, LCP 101, and LCP 103

The kit allows the LCP to move the LCP to the front of a cabinet.

The kit contains the following parts:

- Optional: Graphical LCP 102, numerical LCP 101, or Wireless Control Panel LCP 103.
- 3 m (10 ft) cable to the LCP.
- Gasket.
- Fasteners.

For order number, see: 13.2.7 Order Numbers for Local Control Panel Options.

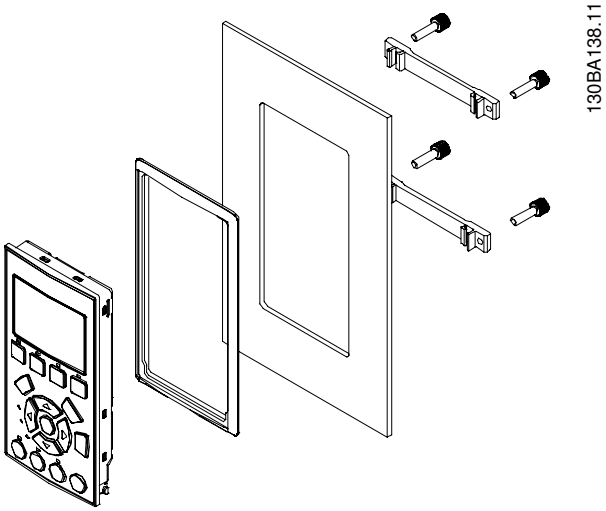

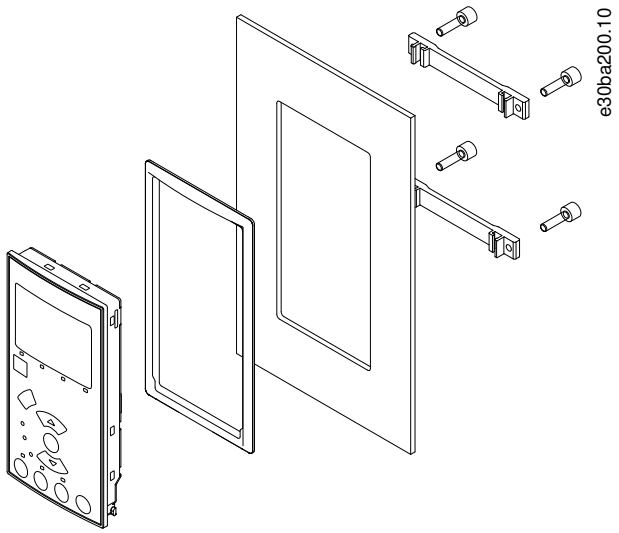

Illustration 50: Panel Mounting Kit for LCP 102, LCP 101, and LCP 103

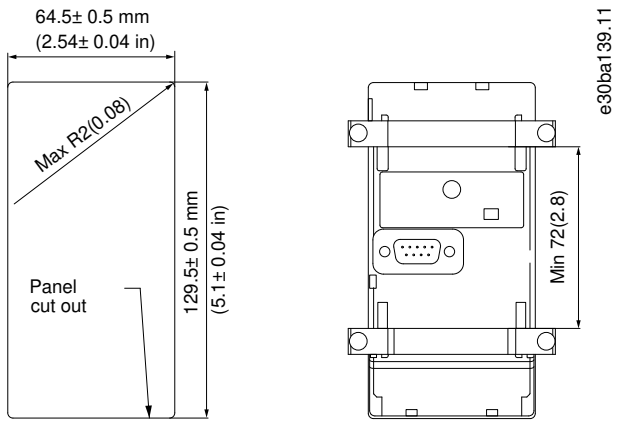

Illustration 51: Panel Mounting Kit Dimensions

7.8.5 VLT® Wireless Communication Panel LCP 103

The VLT® Wireless Communication Panel LCP 103 communicates with VLT® Motion Control Tool MCT 10 or MyDrive® Connect – an app which can be downloaded to iOS- and Android-based smart devices.

MyDrive® Connect offers full access to the drive making it easier to perform commissioning, operation, monitoring, and maintenance tasks. Utilizing the active point-to-point wireless connection, maintenance personnel can receive real-time error messages via the app to ensure a quick response to potential issues and reduce downtime.

The VLT® Wireless Communication Panel LCP 103 supports client mode, enabling multiple drives to connect with a common Wi-Fi point. This allows remote access to different AC drives (but only 1 at a time) via VLT® Motion Control Tool MCT 10 or via the MyDrive® Connect App when the smart device is connected on the same network.

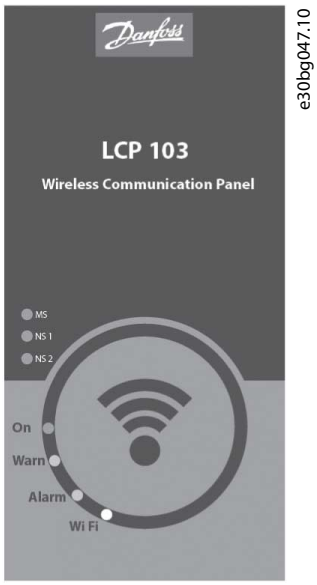

Illustration 52: VLT® Wireless Communication Panel LCP 103

8 Specifications

8.1 Electrical data

8.1.1 Mains Supply 1x200–240 V AC

Table 25: Mains Supply 1x200–240 V AC, Normal Overload 110% for 1 Minute, P1K1–P22K

Type designation	P1K1	P1K5	P2K2	P3K0	P3K7	P5K5	P7K5	P15K	P22K
Typical shaft output [kW]	1.1	1.5	2.2	3.0	3.7	5.5	7.5	15	22
Typical shaft output at 240 V [hp]	1.5	2.0	3.0	4.0	5.0	7.5	10	20	30
Protection rating IP20/Chassis	A3	–	–	–	–	–	–	–	–
Protection rating IP21/Type 1	–	B1	B1	B1	B1	B1	B2	C1	C2
Protection rating IP55/Type 12	A5	B1	B1	B1	B1	B1	B2	C1	C2
Protection rating IP66/NEMA 4X	A5	B1	B1	B1	B1	B1	B2	C1	C2
Output current									
Continuous (3x200–240 V) [A]	6.6	7.5	10.6	12.5	16.7	24.2	30.8	59.4	88
Intermittent (3x200–240 V) [A]	7.3	8.3	11.7	13.8	18.4	26.6	33.4	65.3	96.8
Continuous kVA at 208 V [kVA]	2.4	2.7	3.8	4.5	6.0	8.7	11.1	21.4	31.7
Maximum input current									
Continuous (1x200–240 V) [A]	12.5	15	20.5	24	32	46	59	111	172
Intermittent (1x200–240 V) [A]	13.8	16.5	22.6	26.4	35.2	50.6	64.9	122.1	189.2
Maximum pre-fuses [A]	20	30	40	40	60	80	100	150	200
Additional specifications									
Maximum cable cross-section (mains, motor, brake) [mm^2 (AWG)]	0.2–4 (4–10)					10 (7)	35 (2)	50 (1/0)	95 (4/0)
Maximum cable cross-section for mains with disconnect switch [mm^2 (AWG)]	16 (6)	16 (6)	16 (6)	16 (6)	16 (6)	16 (6)	25 (3)	50 (1/0)	2 x 50 (2 x 1/0)[(1)(2)]
Maximum cable cross-section for mains without disconnect switch [mm^2 (AWG)]	16 (6)	16 (6)	16 (6)	16 (6)	16 (6)	16 (6)	25 (3)	50 (1/0)	95 (4/0)
Cable insulation temperature rating [°C (°F)]	75 (167)	75 (167)	75 (167)	75 (167)	75 (167)	75 (167)	75 (167)	75 (167)	75 (167)
Estimated power loss[(3)] at rated maximum load [W][(4)]	44	30	44	60	74	110	150	300	400

Type designation	P1K1	P1K5	P2K2	P3K0	P3K7	P5K5	P7K5	P15K	P22K
Efficiency[5]	0.98								

[1] Two wires are required.

[2] Variant not available in IP21.

[3] Applies for dimensioning of drive cooling. If the switching frequency is higher than the default setting, the power losses may increase. LCP and typical control card power consumptions are included. For more detailed efficiency values and part load losses according IEC/EN 61800-9-2 refer to mydrive ecosmart on www. danfoss.com. For efficiency class see 8.4.1 Environment.

[4] Efficiency measured at nominal current. For more detailed efficiency values and part load losses according IEC/EN 61800-9-2 refer to mydrive ecosmart on www. danfoss.com. For efficiency class see 8.4.1 Environment.

[5] Measured using 5 m (16 ft) shielded motor cables at rated load and rated frequency. For more detailed efficiency values and part load losses according IEC/EN 61800-9-2 refer to mydrive ecosmart on www. danfoss.com. For efficiency class see 8.4.1 Environment.

8.1.2 Mains Supply 3x200–240 V AC

Table 26: Mains Supply 3x200–240 V AC, PK25–PK75

Type designation	PK25		PK37		PK55		PK75	
High/normal overload[1]	HO	NO	HO	NO	HO	NO	HO	NO
Typical shaft output [kW]	0.25		0.37		0.55		0.75	
Typical shaft output at 208 V [hp]	0.34		0.50		0.75		1.0	
Protection rating IP20/Chassis[2]	A2		A2		A2		A2	
Protection rating IP21/Type 1	A2		A2		A2		A2	
Protection rating IP55/Type 12 Protection rating IP66/NEMA 4X	A4/A5		A4/A5		A4/A5		A4/A5	
Output current								
Continuous (3x200–240 V) [A]	1.8		2.4		3.5		4.6	
Intermittent (3x200–240 V) [A]	2.7	2.0	3.6	2.6	5.3	3.9	6.9	5.1
Continuous kVA at 208 V [kVA]	0.65		0.86		1.26		1.66	
Maximum input current								
Continuous (3x200–240 V) [A]	1.6		2.2		3.2		4.1	
Intermittent (3x200–240 V) [A]	2.4	1.8	3.3	2.4	4.8	3.5	6.2	4.5
Maximum pre-fuses [A]	10		10		10		10	
Additional specifications								
Maximum cable cross-section[3] for mains, motor, brake, and load sharing [mm^2 (AWG)]	4, 4, 4 (12, 12, 12) (minimum 0.2 (24))							
Maximum cable cross-section[3] for mains disconnect [mm^2 (AWG)]	6, 4, 4 (10, 12, 12)							
Estimated power loss[4] at rated maximum load [W][5]	21		29		42		54	

Type designation	PK25	PK37	PK55	PK75
Efficiency[6]	0.94		0.95	

[1] High overload=150% or 160% torque for a duration of 60 s. Normal overload=110% torque for a duration of 60 s.

[2] Enclosure sizes A2+A3 can be converted to IP21 using a conversion kit. See also chapters Mechanical mounting and IP21/Type 1 Enclosure kit in the design guide.

[3] The 3 values for the maximum cable cross-section are for single core, flexible wire, and flexible wire with sleeve, respectively.

[4] Applies for dimensioning of drive cooling. If the switching frequency is higher than the default setting, the power losses may increase. LCP and typical control card power consumptions are included. For more detailed efficiency values and part load losses according IEC/EN 61800-9-2 refer to mydrive ecosmart on www. danfoss.com. For efficiency class see 8.4.1 Environment.

[5] Efficiency measured at nominal current. For more detailed efficiency values and part load losses according IEC/EN 61800-9-2 refer to mydrive ecosmart on www. danfoss.com. For efficiency class see 8.4.1 Environment.

[6] Measured using 5 m (16 ft) shielded motor c6ables at rated load and rated frequency. For more detailed efficiency values and part load losses according IEC/EN 61800-9-2 refer to mydrive ecosmart on www. danfoss.com. For efficiency class see 8.4.1 Environment.

Table 27: Mains Supply 3x200–240 V AC, P1K1–P3K7

Type designation	P1K1		P1K5		P2K2		P3K0		P3K7	
High/normal overload[1]	HO	NO	HO	NO	HO	NO	HO	NO	HO	NO
Typical shaft output [kW]	1.1		1.5		2.2		3.0		3.7	
Typical shaft output at 208 V [hp]	1.5		2.0		3.0		4.0		5.0	
Protection rating IP20/Chassis[2]	A2		A2		A2		A3		A3	
Protection rating IP21/Type 1	A2		A2		A2		A3		A3	
Protection rating IP55/Type 12	A4/A5		A4/A5		A4/A5		A5		A5	
Protection rating IP66/NEMA 4X	A4/A5		A4/A5		A4/A5		A5		A5	
Output current										
Continuous (3x200–240 V) [A]	6.6		7.5		10.6		12.5		16.7	
Intermittent (3x200–240 V) [A]	9.9	7.3	11.3	8.3	15.9	11.7	18.8	13.8	25	18.4
Continuous kVA at 208 V [kVA]	2.38		2.70		3.82		4.50		6.00	
Maximum input current										
Continuous (3x200–240 V) [A]	5.9		6.8		9.5		11.3		15	
Intermittent (3x200–240 V) [A]	8.9	6.5	10.2	7.5	14.3	10.5	17	12.4	22.5	16.5
Maximum pre-fuses [A]	20		20		20		32		32	
Additional specifications										
Maximum cable cross-section[3] for mains, motor, brake, and load sharing [mm^2 (AWG)]	4, 4, 4 (12, 12, 12) minimum 0.2 (24))									
Maximum cable cross-section[3] for mains disconnect [mm^2 (AWG)]	6, 4, 4 (10, 12, 12)									
Estimated power loss[4] at rated maximum load [W][5]	63		82		116		155		185	

Type designation	P1K1	P1K5	P2K2	P3K0	P3K7
Efficiency[6]	0.96				

[1] High overload=150% or 160% torque for a duration of 60 s. Normal overload=110% torque for a duration of 60 s.

[2] Enclosure sizes A2+A3 can be converted to IP21 using a conversion kit. See also chapters Mechanical mounting and IP21/Type 1 Enclosure kit in the design guide.

[3] The 3 values for the maximum cable cross-section are for single core, flexible wire, and flexible wire with sleeve, respectively.

[4] Applies for dimensioning of drive cooling. If the switching frequency is higher than the default setting, the power losses may increase. LCP and typical control card power consumptions are included. For more detailed efficiency values and part load losses according IEC/EN 61800-9-2 refer to mydrive ecosmart on www. danfoss.com. For efficiency class see 8.4.1 Environment.

[5] Efficiency measured at nominal current. For more detailed efficiency values and part load losses according IEC/EN 61800-9-2 refer to mydrive ecosmart on www. danfoss.com. For efficiency class see 8.4.1 Environment.

[6] Measured using 5 m (16 ft) shielded motor cables at rated load and rated frequency. For more detailed efficiency values and part load losses according IEC/EN 61800-9-2 refer to mydrive ecosmart on www. danfoss.com. For efficiency class see 8.4.1 Environment.

Table 28: Mains Supply 3x200–240 V AC, P5K5–P15K

Type designation	P5K5		P7K5		P11K		P15K	
High/normal overload[1]	HO	NO	HO	NO	HO	NO	HO	NO
Typical shaft output [kW]	3.7	5.5	5.5	7.5	7.5	11	11	15
Typical shaft output at 208 V [hp]	5.0	7.5	7.5	10	10	15	15	20
IP20/Chassis[2]	B3		B3		B3		B4	
Protection rating IP21/Type 1 Protection rating IP55/Type 12 Protection rating IP66/NEMA 4X	B1		B1		B1		B2	
Output current								
Continuous (3x200–240 V) [A]	16.7	24.2	24.2	30.8	30.8	46.2	46.2	59.4
Intermittent (3x200–240 V) [A]	26.7	26.6	38.7	33.9	49.3	50.8	73.9	65.3
Continuous kVA at 208 V [kVA]	6.0	8.7	8.7	11.1	11.1	16.6	16.6	21.4
Maximum input current								
Continuous (3x200–240 V) [A]	15	22	22	28	28	42	42	54
Intermittent (3x200–240 V) [A]	24	24.2	35.2	30.8	44.8	46.2	67.2	59.4
Maximum pre-fuses [A]	63		63		63		80	
Additional specifications								
IP20 maximum cable cross-section[3] for mains, brake, motor, and load sharing [mm^2 (AWG)]	10, 10, – (8, 8, –)		10, 10, – (8, 8, –)		10, 10, – (8, 8, –)		35, –, – (2, –, –)	
Protection rating IP21 maximum cable cross-section[3] for mains, brake, and load sharing [mm^2 (AWG)]	16, 10, 16 (6, 8, 6)		16, 10, 16 (6, 8, 6)		16, 10, 16 (6, 8, 6)		35, –, – (2, –, –)	
Protection rating IP21 maximum cable cross-section[3] for motor [mm^2 (AWG)]	10, 10, – (8, 8, –)		10, 10, – (8, 8, –)		10, 10, – (8, 8, –)		35, 25, 25 (2, 4, 4)	
Maximum cable cross-section[3] for mains disconnect [mm^2 (AWG)]	16, 10, 10 (6, 8, 8)						35 (2)	

Type designation	P5K5		P7K5		P11K		P15K	
Estimated power loss[4] at rated maximum load [W][5]	239	310	239	310	371	514	463	602
Efficiency[6]	0.96							

[1] High overload=150% or 160% torque for a duration of 60 s. Normal overload=110% torque for a duration of 60 s.

[2] Enclosure sizes B3+B4 and C3+C4 can be converted to IP21 using a conversion kit. See also chapters Mechanical mounting and IP21/Type 1 Enclosure kit in the design guide.

[3] The 3 values for the maximum cable cross-section are for single core, flexible wire, and flexible wire with sleeve, respectively.

[4] Applies for dimensioning of drive cooling. If the switching frequency is higher than the default setting, the power losses may increase. LCP and typical control card power consumptions are included. For more detailed efficiency values and part load losses according IEC/EN 61800-9-2 refer to mydrive ecosmart on www. danfoss.com. For efficiency class see 8.4.1 Environment.

[5] Efficiency measured at nominal current. For more detailed efficiency values and part load losses according IEC/EN 61800-9-2 refer to mydrive ecosmart on www. danfoss.com. For efficiency class see 8.4.1 Environment.

[6] Measured using 5 m (16 ft) shielded motor cables at rated load and rated frequency. For more detailed efficiency values and part load losses according IEC/EN 61800-9-2 refer to mydrive ecosmart on www. danfoss.com. For efficiency class see 8.4.1 Environment.

Table 29: Mains Supply 3x200–240 V AC, P18K–P45K

Type designation	P18K		P22K		P30K		P37K		P45K	
High/normal overload[1]	HO	NO	HO	NO	HO	NO	HO	NO	HO	NO
Typical shaft output [kW]	15	18.5	18.5	22	22	30	30	37	37	45
Typical shaft output at 208 V [hp]	20	25	25	30	30	40	40	50	50	60
Protection rating IP20/Chassis[2]	B4		C3		C3		C4		C4	
Protection rating IP21/Type 1 Protection rating IP55/Type 12 Protection rating IP66/NEMA 4X	C1		C1		C1		C2		C2	
Output current										
Continuous (3x200–240 V) [A]	59.4	74.8	74.8	88	88	115	115	143	143	170
Intermittent (3x200–240 V) [A]	89.1	82.3	112	96.8	132	127	173	157	215	187
Continuous kVA at 208 V [kVA]	21.4	26.9	26.9	31.7	31.7	41.4	41.4	51.5	51.5	61.2
Maximum input current										
Continuous (3x200–240 V) [A]	54	68	68	80	80	104	104	130	130	154
Intermittent (3x200–240 V) [A]	81	74.8	102	88	120	114	156	143	195	169
Maximum pre-fuses [A]	125		125		160		200		250	
Additional specifications										
Protection rating IP20 maximum cable cross-section for mains, brake, motor, and load sharing [mm^2 (AWG)]	35 (2)		50 (1)		50 (1)		150 (300 MCM)		150 (300 MCM)	
Protection ratings IP21, IP55, IP66 maximum cable cross-section for mains and motor [mm^2 (AWG)]	50 (1)		50 (1)		50 (1)		150 (300 MCM)		150 (300 MCM)	

Type designation	P18K		P22K		P30K		P37K		P45K	
Protection ratings IP21, IP55, IP66 maximum cable cross-section for brake, and load sharing [mm2 (AWG)]	50 (1)		50 (1)		50 (1)		95 (3/0)		95 (3/0)	
Maximum cable cross-section[3] for disconnect [mm^2 (AWG)]	50, 35, 35 (1, 2, 2)						95, 70, 70 (3/0, 2/0, 2/0)		185, 150, 120 (350 MCM, 300 MCM, 4/0)	
Estimated power loss[4] at rated maximum load [W][5]	625	737	740	845	874	1140	1143	1353	1400	1636
Efficiency[6]	0.96		0.97		0.97		0.97		0.97	

[1] High overload=150% or 160% torque for a duration of 60 s. Normal overload=110% torque for a duration of 60 s.

[2] Enclosure sizes B3+B4 and C3+C4 can be converted to IP21 using a conversion kit. See also chapters Mechanical mounting and IP21/Type 1 Enclosure kit in the design guide.

[3] The 3 values for the maximum cable cross-section are for single core, flexible wire, and flexible wire with sleeve, respectively.

[4] Applies for dimensioning of drive cooling. If the switching frequency is higher than the default setting, the power losses may increase. LCP and typical control card power consumptions are included. For more detailed efficiency values and part load losses according IEC/EN 61800-9-2 refer to mydrive ecosmart on www. danfoss.com. For efficiency class see 8.4.1 Environment.

[5] Efficiency measured at nominal current. For more detailed efficiency values and part load losses according IEC/EN 61800-9-2 refer to mydrive ecosmart on www. danfoss.com. For efficiency class see 8.4.1 Environment.

[6] Measured using 5 m (16 ft) shielded motor cables at rated load and rated frequency. For more detailed efficiency values and part load losses according IEC/EN 61800-9-2 refer to mydrive ecosmart on www. danfoss.com. For efficiency class see 8.4.1 Environment.

8.1.3 Mains Supply 1x380–480 V AC

Table 30: Mains Supply 1x380–480 V AC, Normal Overload 110% for 1 Minute, P7K5–P37K

Type desig nation	P7K5	P11K	P18K	P37K
Typical shaft output [kW]	7.5	11	18.5	37
Typical shaft output at 240 V [hp]	10	15	25	50
Protection rating IP21/Type 1	B1	B2	C1	C2
Protection rating IP55/Type 12	B1	B2	C1	C2
Protection rating IP66/NEMA 4X	B1	B2	C1	C2
Output current				
Continuous (3x380–440 V) [A]	16	24	37.5	73
Intermittent (3x380–440 V) [A]	17.6	26.4	41.2	80.3
Continuous (3x441–480 V) [A]	14.5	21	34	65
Intermittent (3x441–480 V) [A]	15.4	23.1	37.4	71.5
Continuous kVA at 400 V [kVA]	11	16.6	26	50.6
Continuous kVA at 460 V [kVA]	11.6	16.7	27.1	51.8
Maximum input current				
Continuous (1x380–440 V) [A]	33	48	78	151
Intermittent (1x380–440 V) [A]	36	53	85.5	166

Type desig nation	P7K5	P11K	P18K	P37K
Continuous (1x441–480 V) [A]	30	41	72	135
Intermittent (1x441–480 V) [A]	33	46	79.2	148
Maximum pre-fuses [A]	63	80	160	250
Additional specifications				
Maximum cable cross-section for mains, motor, and brake [mm^2] (AWG)]	10 (7)	35 (2)	50 (1/0)	120 (4/0)
Estimated power loss[1] at rated maximum load [W][2]	300	440	740	1480
Efficiency[3]	0.96			

[1] Applies for dimensioning of drive cooling. If the switching frequency is higher than the default setting, the power losses may increase. LCP and typical control card power consumptions are included. For more detailed efficiency values and part load losses according IEC/EN 61800-9-2 refer to mydrive ecosmart on www. danfoss.com. For efficiency class see 8.4.1 Environment.

[2] Efficiency measured at nominal current. For more detailed efficiency values and part load losses according IEC/EN 61800-9-2 refer to mydrive ecosmart on www. danfoss.com. For efficiency class see 8.4.1 Environment.

[3] Measured using 5 m (16 ft) shielded motor cables at rated load and rated frequency. For more detailed efficiency values and part load losses according IEC/EN 61800-9-2 refer to mydrive ecosmart on www. danfoss.com. For efficiency class see 8.4.1 Environment.

8.1.4 Mains Supply 3x380–480 V AC

Table 31: Mains Supply 3x380–480 V AC, PK37–P1K5

Type designation	PK37		PK55		PK75		P1K1		P1K5	
High/normal overload[1]	HO	NO	HO	NO	HO	NO	HO	NO	HO	NO
Typical shaft output [kW]	0.37		0.55		0.75		1.1		1.5	
Typical shaft output at 460 V [hp]	0.5		0.75		1.0		1.5		2.0	
Protection rating IP20/Chassis[2]	A2		A2		A2		A2		A2	
Protection rating IP55/Type 12 Protection rating IP66/NEMA 4X	A4/A5		A4/A5		A4/A5		A4/A5		A4/A5	
Output current										
Continuous (3x380–440 V) [A]	1.3		1.8		2.4		3.0		4.1	
Intermittent (3x380–440 V) [A]	2.0	1.4	2.7	2.0	3.6	2.6	4.5	3.3	6.2	4.5
Continuous (3x441–480 V) [A]	1.2		1.6		2.1		2.7		3.4	
Intermittent (3x441–480 V) [A]	1.8	1.3	2.4	1.8	3.2	2.3	4.1	3.0	5.1	3.7
Continuous kVA at 400 V [kVA]	0.9		1.3		1.7		2.1		2.8	
Continuous kVA at 460 V [kVA]	0.9		1.3		1.7		2.4		2.7	
Maximum input current										
Continuous (3x380–440 V) [A]	1.2		1.6		2.2		2.7		3.7	
Intermittent (3x380–440 V) [A]	1.8	1.3	2.4	1.8	3.3	2.4	4.1	3.0	5.6	4.1
Continuous (3x441–480 V) [A]	1.0		1.4		1.9		2.7		3.1	
Intermittent (3x441–480 V) [A]	1.5	1.1	2.1	1.5	2.9	2.1	4.1	3.0	4.7	3.4

Type designation	PK37	PK55	PK75	P1K1	P1K5
Maximum pre-fuses [A]	10	10	10	10	10
Additional specifications					
Protection ratings IP20, IP21 maximum cable cross-section[3] for mains, motor, brake, and load sharing [mm^2 (AWG)]	4, 4, 4 (12, 12, 12) (minimum 0.2 (24))				
Protection ratings IP55, IP66 maximum cable cross-section[3] for mains, motor, brake, and load sharing [mm^2 (AWG)]	4, 4, 4 (12, 12, 12)				
Maximum cable cross-section[3] for disconnect [mm2 (AWG)]	6, 4, 4 (10, 12, 12)				
Estimated power loss[4] at rated maximum load [W][5]	35	42	46	58	62
Efficiency[6]	0.93	0.95	0.96	0.96	0.97

[1] High overload=150% or 160% torque for a duration of 60 s. Normal overload=110% torque for a duration of 60 s.

[2] Enclosure sizes A2+A3 can be converted to IP21 using a conversion kit. See also chapters Mechanical mounting and IP21/Type 1 Enclosure kit in the design guide.

[3] The 3 values for the maximum cable cross-section are for single core, flexible wire, and flexible wire with sleeve, respectively.

[4] Applies for dimensioning of drive cooling. If the switching frequency is higher than the default setting, the power losses may increase. LCP and typical control card power consumptions are included. For more detailed efficiency values and part load losses according IEC/EN 61800-9-2 refer to mydrive ecosmart on www. danfoss.com. For efficiency class see 8.4.1 Environment.

[5] Efficiency measured at nominal current. For more detailed efficiency values and part load losses according IEC/EN 61800-9-2 refer to mydrive ecosmart on www. danfoss.com. For efficiency class see 8.4.1 Environment.

[6] Measured using 5 m (16 ft) shielded motor cables at rated load and rated frequency. For more detailed efficiency values and part load losses according IEC/EN 61800-9-2 refer to mydrive ecosmart on www. danfoss.com. For efficiency class see 8.4.1 Environment.

Table 32: Mains Supply 3x380–480 V AC, P2K2–P7K5

Type designation	P2K2		P3K0		P4K0		P5K5		P7K5	
High/normal overload[1]	HO	NO	HO	NO	HO	NO	HO	NO	HO	NO
Typical shaft output [kW]	2.2		3.0		4.0		5.5		7.5	
Typical shaft output at 460 V [hp]	2.9		4.0		5.3		7.5		10	
Protection rating IP20/Chassis[2]	A2		A2		A2		A3		A3	
Protection rating IP55/Type 12 Protection rating IP66/NEMA 4X	A4/A5		A4/A5		A4/A5		A5		A5	
Output current										
Continuous (3x380–440 V) [A]	5.6		7.2		10		13		16	
Intermittent (3x380–440 V) [A]	8.4	6.2	10.8	7.9	15	11	19.5	14.3	24	17.6
Continuous (3x441–480 V) [A]	4.8		6.3		8.2		11		14.5	
Intermittent (3x441–480 V) [A]	7.2	5.3	9.5	6.9	12.3	9.0	16.5	12.1	21.8	16
Continuous kVA at 400 V [kVA]	3.9		5.0		6.9		9.0		11	
Continuous kVA at 460 V [kVA]	3.8		5.0		6.5		8.8		11.6	
Maximum input current										
Continuous (3x380–440 V) [A]	5.0		6.5		9.0		11.7		14.4	

Type designation	P2K2		P3K0		P4K0		P5K5		P7K5	
Intermittent (3x380–440 V) [A]	7.5	5.5	9.8	7.2	13.5	9.9	17.6	12.9	21.6	15.8
Continuous(3x441–480 V) [A]	4.3		5.7		7.4		9.9		13	
Intermittent (3x441–480 V) [A]	6.5	4.7	8.6	6.3	11.1	8.1	14.9	10.9	19.5	14.3
Maximum pre-fuses [A]	20		20		20		30		30	
Additional specifications										
Protection ratings IP20, IP21 maximum cable cross-section[3] for mains, motor, brake, and load sharing [mm^2 (AWG)]	4, 4, 4 (12, 12, 12) (minimum 0.2 (24))									
Protection ratings IP55, IP66 maximum cable cross-section[3] for mains, motor, brake, and load sharing [mm^2 (AWG)]	4, 4, 4 (12, 12, 12)									
Maximum cable cross-section[3] for disconnect [mm^2 (AWG)]	6, 4, 4 (10, 12 ,12)									
Estimated power loss[4] at rated maximum load [W][5]	88		116		124		187		225	
Efficiency[6]	0.97									

[1] High overload=150% or 160% torque for a duration of 60 s. Normal overload=110% torque for a duration of 60 s.

[2] Enclosure sizes A2+A3 can be converted to IP21 using a conversion kit. See also chapters Mechanical mounting and IP21/Type 1 Enclosure kit in the design guide.

[3] The 3 values for the maximum cable cross-section are for single core, flexible wire, and flexible wire with sleeve, respectively.

[4] Applies for dimensioning of drive cooling. If the switching frequency is higher than the default setting, the power losses may increase. LCP and typical control card power consumptions are included. For more detailed efficiency values and part load losses according IEC/EN 61800-9-2 refer to mydrive ecosmart on www. danfoss.com. For efficiency class see 8.4.1 Environment.

[5] Efficiency measured at nominal current. For more detailed efficiency values and part load losses according IEC/EN 61800-9-2 refer to mydrive ecosmart on www. danfoss.com. For efficiency class see 8.4.1 Environment.

[6] Measured using 5 m (16 ft) shielded motor cables at rated load and rated frequency. For more detailed efficiency values and part load losses according IEC/EN 61800-9-2 refer to mydrive ecosmart on www. danfoss.com. For efficiency class see 8.4.1 Environment.

Table 33: Mains Supply 3x380–480 V AC, P11K–P30K

Type designation	P11K		P15K		P18K		P22K		P30K	
High/normal overload[1]	HO	NO	HO	NO	HO	NO	HO	NO	HO	NO
Typical shaft output [kW]	7.5	11	11	15	15	18.5	18.5	22	22	30
Typical shaft output at 460 V [hp]	10	15	15	20	20	25	25	30	30	40
Protection rating IP20/Chassis[2]	B3		B3		B3		B4		B4	
Protection rating IP21/Type 1	B1		B1		B1		B2		B2	
Protection rating IP55/Type 12 Protection rating IP66/NEMA 4X	B1		B1		B1		B2		B2	
Output current										
Continuous (3x380–440 V) [A]	16	24	24	32	32	37.5	37.5	44	44	61
Intermittent (60 s overload) (3x380–440 V) [A]	25.6	26.4	38.4	35.2	51.2	41.3	60	48.4	70.4	67.1
Continuous (3x441–480 V) [A]	14.5	21	21	27	27	34	34	40	40	52
Intermittent (60 s overload) (3x441–480 V) [A]	23.2	23.1	33.6	29.7	43.2	37.4	54.4	44	64	61.6

Type designation	P11K		P15K		P18K		P22K		P30K	
Continuous kVA at 400 V [kVA]	11	16.6	16.6	22.2	22.2	26	26	30.5	30.5	42.3
Continuous kVA at 460 V [kVA]	11.6	16.7	16.7	21.5	21.5	27.1	27.1	31.9	31.9	41.4
Maximum input current										
Continuous (3x380–440 V) [A]	14.4	22	22	29	29	34	34	40	40	55
Intermittent (60 s overload) (3x380–440 V) [A]	23	24.2	35.2	31.9	46.4	37.4	54.4	44	64	60.5
Continuous (3x441–480 V) [A]	13	19	19	25	25	31	31	36	36	47
Intermittent (60 s overload) (3x441–480 V) [A]	20.8	20.9	30.4	27.5	40	34.1	49.6	39.6	57.6	51.7
Maximum pre-fuses [A]	63		63		63		63		80	
Additional specifications										
Protection ratings IP21, IP55, IP66 maximum cable cross-section[3] for mains, brake, and load sharing [mm^2 (AWG)]	16, 10, 16 (6, 8, 6)						35, -, - (2, -, -)			
Protection ratings IP21, IP55, IP66 maximum cable cross-section[3] for motor [mm^2 (AWG)]	10, 10, – (8, 8, –)						35, 25, 25 (2, 4, 4)			
Protection rating IP20 maximum cable cross-section[3] for mains, brake, motor, and load sharing [mm^2 (AWG)]	10, 10, – (8, 8, –)						35, –, – (2, –, –)			
Maximum cable cross-section[3] for disconnect [mm^2 (AWG)]	16, 10, 10 (6, 8, 8)									
Estimated power loss[4] at rated maximum load [W][5]	225	278	291	392	379	465	444	525	547	698
Efficiency[6]	0.98									

[1] High overload=150% or 160% torque for a duration of 60 s. Normal overload=110% torque for a duration of 60 s.

[2] Enclosure sizes B3+B4 and C3+C4 can be converted to IP21 using a conversion kit. See also chapters Mechanical mounting and IP21/Type 1 Enclosure kit in the design guide.

[3] The 3 values for the maximum cable cross-section are for single core, flexible wire, and flexible wire with sleeve, respectively.

[4] Applies for dimensioning of drive cooling. If the switching frequency is higher than the default setting, the power losses may increase. LCP and typical control card power consumptions are included. For more detailed efficiency values and part load losses according IEC/EN 61800-9-2 refer to mydrive ecosmart on www. danfoss.com. For efficiency class see 8.4.1 Environment.

[5] Efficiency measure at nominal current. For more detailed efficiency values and part load losses according IEC/EN 61800-9-2 refer to mydrive ecosmart on www. danfoss.com. For efficiency class see 8.4.1 Environment.

[6] Measured using 5 m (16 ft) shielded motor cables at rated load and rated frequency. For more detailed efficiency values and part load losses according IEC/EN 61800-9-2 refer to mydrive ecosmart on www. danfoss.com. For efficiency class see 8.4.1 Environment.

Table 34: Mains Supply 3x380–480 V AC, P37K–P90K

Type designation	P37K		P45K		P55K		P75K		P90K	
High/normal overload[1]	HO	NO	HO	NO	HO	NO	HO	NO	HO	NO
Typical shaft output [kW]	30	37	37	45	45	55	55	75	75	90
Typical shaft output at 460 V [hp]	40	50	50	60	60	75	75	100	100	125
Protection rating IP20/Chassis[2]	B4		C3		C3		C4		C4	
Protection rating IP21/Type 1	C1		C1		C1		C2		C2	
Protection rating IP55/Type 12 Protection rating IP66/NEMA 4X	C1		C1		C1		C2		C2	

Type designation	P37K		P45K		P55K		P75K		P90K	
Output current										
Continuous (3x380–440 V) [A]	61	73	73	90	90	106	106	147	147	177
Intermittent (60 s overload) (3x380–440 V) [A]	91.5	80.3	110	99	135	117	159	162	221	195
Continuous (3x441–480 V) [A]	52	65	65	80	80	105	105	130	130	160
Intermittent (60 s overload) (3x441–480 V) [A]	78	71.5	97.5	88	120	116	158	143	195	176
Continuous kVA at 400 V [kVA]	42.3	50.6	50.6	62.4	62.4	73.4	73.4	102	102	123
Continuous kVA at 460 V [kVA]	41.4	51.8	51.8	63.7	63.7	83.7	83.7	104	103.6	128
Maximum input current										
Continuous (3x380–440 V) [A]	55	66	66	82	82	96	96	133	133	161
Intermittent (60 s overload) (3x380–440 V) [A]	82.5	72.6	99	90.2	123	106	144	146	200	177
Continuous (3x441–480 V) [A]	47	59	59	73	73	95	95	118	118	145
Intermittent (60 s overload) (3x441–480 V) [A]	70.5	64.9	88.5	80.3	110	105	143	130	177	160
Maximum pre-fuses [A]	100		125		160		250		250	
Additional specifications										
Protection rating IP20 maximum cable cross-section for mains and motor [mm^2 (AWG)]	35 (2)		50 (1)		50 (1)		150 (300 MCM)		150 (300 MCM)	
Protection rating IP20 maximum cable cross-section for brake and load sharing [mm^2 (AWG)]	35 (2)		50 (1)		50 (1)		95 (4/0)		95 (4/0)	
Protection ratings IP21, IP55, IP66 maximum cable cross-section for mains and motor [mm^2 (AWG)]	50 (1)		50 (1)		50 (1)		150 (300 MCM)		150 (300 MCM)	
Protection ratings IP21, IP55, IP66 maximum cable cross-section for brake and load sharing [mm^2 (AWG)]	50 (1)		50 (1)		50 (1)		95 (4/0)		95 (4/0)	
Maximum cable cross-section[3] for mains disconnect [mm^2 (AWG)]	50, 35, 35 (1, 2, 2)						95, 70, 70 (3/2, 2/0, 2/0)		185, 150, 120 (350 MCM, 300 MCM, 4/0)	
Estimated power loss[4] at rated maximum load [W]	570	739	697	843	891	1083	1022	1384	1232	1474

Type designation	P37K	P45K	P55K	P75K	P90K
Efficiency[5]	0.98				0.99

[1] High overload=150% or 160% torque for a duration of 60 s. Normal overload=110% torque for a duration of 60 s.

[2] Enclosure sizes A2+A3 can be converted to IP21 using a conversion kit. See also chapters Mechanical mounting and IP21/Type 1 Enclosure kit in the design guide.

[3] The 3 values for the maximum cable cross-section are for single core, flexible wire, and flexible wire with sleeve, respectively.

[4] Applies for dimensioning of drive cooling. If the switching frequency is higher than the default setting, the power losses may increase. LCP and typical control card power consumptions are included. For more detailed efficiency values and part load losses according IEC/EN 61800-9-2 refer to mydrive ecosmart on www. danfoss.com. For efficiency class see 8.4.1 Environment.

[5] Measured using 5 m (16 ft) shielded motor cables at rated load and rated frequency

8.1.5 Mains Supply 3x525–600 V AC

Table 35: Mains Supply 3x525–600 V AC, PK75–P2K2

Type designation	PK75		P1K1		P1K5		P2K2	
High/normal overload[1]	HO	NO	HO	NO	HO	NO	HO	NO
Typical shaft output [kW]	0.75		1.1		1.5		2.2	
Typical shaft output [hp]	1		1.5		2		3	
Protection rating IP20/Chassis Protection rating IP21/Type 1	A3		A3		A3		A3	
Protection rating IP55/Type 12	A5		A5		A5		A5	
Output current								
Continuous (3x525–550 V) [A]	1.8		2.6		2.9		4.1	
Intermittent (3x525–550 V) [A]	2.7	2.0	3.9	2.9	4.4	3.2	6.2	4.5
Continuous (3x551–600 V) [A]	1.7		2.4		2.7		4.1	
Intermittent (3x551–600 V) [A]	2.6	1.9	3.6	2.6	4.1	3.0	5.9	4.3
Continuous kVA at 550 V [kVA]	1.7		2.5		2.8		3.9	
Continuous kVA at 550 V [kVA]	1.7		2.4		2.7		3.9	
Maximum input current								
Continuous (3x525–600 V) [A]	1.7		2.4		2.7		4.1	
Intermittent (3x525–600 V) [A]	2.6	1.9	3.6	2.6	4.1	3.0	6.2	4.5
Maximum pre-fuses [A]	10		10		10		20	
Additional specifications								
Maximum cable cross-section[2] for mains, motor, brake, and load sharing [mm^2 (AWG)]	4, 4, 4 (12, 12, 12) (minimum 0.2 (24))							
Maximum cable cross-section[2] for mains disconnect [mm^2 (AWG)]	6, 4, 4 (10, 12, 12)							
Estimated power loss[3] at rated maximum load [W][4]	35		50		65		92	

Type designation	PK75	P1K1	P1K5	P2K2
Efficiency[5]	0.97			

[1] High overload=150% or 160% torque for a duration of 60 s. Normal overload=110% torque for a duration of 60 s.

[2] The 3 values for the maximum cable cross-section are for single core, flexible wire, and flexible wire with sleeve, respectively.

[3] Applies for dimensioning of drive cooling. If the switching frequency is higher than the default setting, the power losses may increase. LCP and typical control card power consumptions are included. For more detailed efficiency values and part load losses according IEC/EN 61800-9-2 refer to mydrive ecosmart on www. danfoss.com. For efficiency class see 8.4.1 Environment.

[4] Efficiency measured at nominal current. For more detailed efficiency values and part load losses according IEC/EN 61800-9-2 refer to mydrive ecosmart on www. danfoss.com. For efficiency class see 8.4.1 Environment.

[5] Measured using 5 m (16 ft) shielded motor cables at rated load and rated frequency. For more detailed efficiency values and part load losses according IEC/EN 61800-9-2 refer to mydrive ecosmart on www. danfoss.com. For efficiency class see 8.4.1 Environment.

Table 36: Mains Supply 3x525–600 V AC, P3K0–P7K5

Type designation	P3K0		P4K0		P5K5		P7K5	
High/normal overload[1]	HO	NO	HO	NO	HO	NO	HO	NO
Typical shaft output [kW]	3.0		4.0		5.5		7.5	
Typical shaft output [hp]	4.0		5.0		7.5		10	
Protection rating IP20/Chassis Protection rating IP21/Type 1	A2		A2		A3		A3	
IP55/Type 12	A5		A5		A5		A5	
Output current								
Continuous (3x525–550 V) [A]	5.2		6.4		9.5		11.5	
Intermittent (3x525–550 V) [A]	7.8	5.7	9.6	7.0	14.3	10.5	17.3	12.7
Continuous (3x551–600 V) [A]	4.9		6.1		9.0		11	
Intermittent (3x551–600 V) [A]	7.4	5.4	9.2	6.7	13.5	9.9	16.5	12.1
Continuous kVA at 550 V [kVA]	5.0		6.1		9.0		11	
Continuous kVA at 550 V [kVA]	4.9		6.1		9.0		11	
Maximum input current								
Continuous (3x525–600 V) [A]	5.2		5.8		8.6		10.4	
Intermittent (3x525–600 V) [A]	7.8	5.7	8.7	6.4	12.9	9.5	15.6	11.4
Maximum pre-fuses [A]	20		20		32		32	
Additional specifications								
Maximum cable cross-section[2] for mains, motor, brake, and load sharing [mm^2 (AWG)]	4, 4, 4 (12, 12, 12) (minimum 0.2 (24))							
Maximum cable cross-section[2] for mains disconnect [mm^2 (AWG)]	6, 4, 4 (10, 12, 12)							
Estimated power loss[3] at rated maximum load [W][4]	122		145		195		261	

Type designation	P3K0	P4K0	P5K5	P7K5
Efficiency[5]	0.97			

[1] High overload=150% or 160% torque for a duration of 60 s. Normal overload=110% torque for a duration of 60 s.

[2] The 3 values for the maximum cable cross-section are for single core, flexible wire, and flexible wire with sleeve, respectively.

[3] Applies for dimensioning of drive cooling. If the switching frequency is higher than the default setting, the power losses may increase. LCP and typical control card power consumptions are included. For more detailed efficiency values and part load losses according IEC/EN 61800-9-2 refer to mydrive ecosmart on www. danfoss.com. For efficiency class see 8.4.1 Environment.

[4] Efficiency measured at nominal current. For more detailed efficiency values and part load losses according IEC/EN 61800-9-2 refer to mydrive ecosmart on www. danfoss.com. For efficiency class see 8.4.1 Environment.

[5] Measured using 5 m (16 ft) shielded motor cables at rated load and rated frequency. For more detailed efficiency values and part load losses according IEC/EN 61800-9-2 refer to mydrive ecosmart on www. danfoss.com. For efficiency class see 8.4.1 Environment.

Table 37: Mains supply 3x525–600 V AC, P11K–P37K

Type designation	P11K		P15K		P18K		P22K		P30K		P37K	
High/normal overload[1]	HO	NO	HO	NO	HO	NO	HO	NO	HO	NO	HO	NO
Typical shaft output [kW]	7.5	11	11	15	15	18.5	18.5	22	22	30	30	37
Typical shaft output [hp]	10	15	15	20	20	25	25	30	30	40	40	50
Protection rating IP20/Chassis	B3		B3		B3		B4		B4		B4	
Protection rating IP21/Type 1 Protection rating IP55/Type 12 Protection rating IP66/NEMA 4X	B1		B1		B1		B2		B2		C1	
Output current												
Continuous (3x525–550 V) [A]	11.5	19	19	23	23	28	28	36	36	43	43	54
Intermittent (3x525– 550 V) [A]	18.4	21	30	25	37	31	45	40	58	47	65	59
Continuous (3x551–600 V) [A]	11	18	18	22	22	27	27	34	34	41	41	52
Intermittent (3x551– 600 V) [A]	17.6	20	29	24	35	30	43	37	54	45	62	57
Continuous kVA at 550 V [kVA]	11	18.1	18.1	21.9	21.9	26.7	26.7	34.3	34.3	41	41	51.4
Continuous kVA at 575 V [kVA]	11	17.9	17.9	21.9	21.9	26.9	26.9	33.9	33.9	40.8	40.8	51.8
Maximum input current												
Continuous at 550 V [A]	10.4	17.2	17.2	20.9	20.9	25.4	25.4	32.7	32.7	39	39	49
Intermittent at 550 V [A]	16.6	19	28	23	33	28	41	36	52	43	59	54
Continuous at 575 V [A]	9.8	16	16	20	20	24	24	31	31	37	37	47
Intermittent at 575 V [A]	15.5	17.6	26	22	32	27	39	34	50	41	53	52
Maximum pre-fuses [A]	40		40		50		60		80		100	
Additional specifications												
Protection rating IP20, maximum cable crosssection[2] for mains, brake, motor, and load sharing [mm^2 (AWG)]	10, 10, – (8, 8, –)						35, –, –					

Type designation	P11K		P15K		P18K		P22K		P30K		P37K	
Protection ratings IP21, IP55, IP66 maximum cable cross-section[2] for mains, brake, and load sharing [mm^2 (AWG)]	16, 10, 10 (6, 8, 8)						38, –, – (2, –, –)					
Protection ratings IP21, IP55, IP66 maximum cable cross-section[2] for motor [mm^2 (AWG)]	10, 10, – (8, 8, –)						35, 25, 25 (2, 4, 4)					
Maximum cable crosssection[2] for mains disconnect [mm^2 (AWG)]	16, 10, 10 (6, 8, 8)										50, 35, 35 (1, 2, 2)	
Estimated power loss[3] at rated maximum load [W][4]	220	300	220	300	300	370	370	440	440	600	600	740
Efficiency[5]	0.98											

[1] High overload=150% or 160% torque for a duration of 60 s. Normal overload=110% torque for a duration of 60 s.

[2] The 3 values for the maximum cable cross-section are for single core, flexible wire, and flexible wire with sleeve, respectively.

[3] Applies for dimensioning of drive cooling. If the switching frequency is higher than the default setting, the power losses may increase. LCP and typical control card power consumptions are included. For more detailed efficiency values and part load losses according IEC/EN 61800-9-2 refer to mydrive ecosmart on www. danfoss.com. For efficiency class see 8.4.1 Environment.

[4] Efficiency measured at nominal current. For more detailed efficiency values and part load losses according IEC/EN 61800-9-2 refer to mydrive ecosmart on www. danfoss.com. For efficiency class see 8.4.1 Environment.

[5] Measured using 5 m (16 ft) shielded motor cables at rated load and rated frequency. For more detailed efficiency values and part load losses according IEC/EN 61800-9-2 refer to mydrive ecosmart on www. danfoss.com. For efficiency class see 8.4.1 Environment.

Table 38: Mains supply 3x525–600 V AC, P45K–P90K

Type designation	P45K		P55K		P75K		P90K	
High/normal overload[1]	HO	NO	HO	NO	HO	NO	HO	NO
Typical shaft output [kW]	37	45	45	55	55	75	75	90
Typical shaft output [hp]	50	60	60	75	75	100	100	125
Protection rating IP20/Chassis	C3		C3		C4		C4	
Protection rating IP21/Type 1 Protection rating IP55/Type 12 Protection rating IP66/NEMA 4X	C1		C1		C2		C2	
Output current								
Continuous (3x525–550 V) [A]	54	65	65	87	87	105	105	137
Intermittent (3x525–550 V) [A]	81	72	98	96	131	116	158	151
Continuous (3x525–600 V) [A]	52	62	62	83	83	100	100	131
Intermittent (3x525–600 V) [A]	78	68	93	91	125	110	150	144
Continuous kVA at 525 V [kVA]	51.4	61.9	61.9	82.9	82.9	100	100	130.5
Continuous kVA at 575 V [kVA]	51.8	61.7	61.7	82.7	82.7	99.6	99.6	130.5
Maximum input current								
Continuous at 550 V [A]	49	59	59	78.9	78.9	95.3	95.3	124.3
Intermittent at 550 V [A]	74	65	89	87	118	105	143	137

Type designation	P45K		P55K		P75K		P90K	
Continuous at 575 V [A]	47	56	56	75	75	91	91	119
Intermittent at 575 V [A]	70	62	85	83	113	100	137	131
Maximum pre-fuses [A]	150		160		225		250	
Additional specifications								
Protection rating IP20 maximum cable cross-section for mains and motor [mm^2 (AWG)]	50 (1)				150 (300 MCM)			
Protection rating IP20 maximum cable cross-section for brake and load sharing [mm^2 (AWG)]	50 (1)				95 (4/0)			
Protection ratings IP21, IP55, IP66 maximum cable cross-section for mains and motor [mm^2 (AWG)]	50 (1)				150 (300 MCM)			
Protection ratings IP21, IP55, IP66 maximum cable cross-section for brake and load sharing [mm^2 (AWG)]	50 (1)				95 (4/0)			
Maximum cable cross-section[2] for mains disconnect [mm^2 (AWG)]	50, 35, 35 (1, 2, 2)				95, 70, 70 (3/0, 2/0, 2/0)		185, 150, 120 (350 MCM, 300 MCM, 4/0)	
Estimated power loss[3] at rated maximum load [W][4]	740	900	900	1100	1100	1500	1500	1800
Efficiency[5]	0.98							

[1] High overload=150% or 160% torque for a duration of 60 s. Normal overload=110% torque for a duration of 60 s.

[2] The 3 values for the maximum cable cross-section are for single core, flexible wire, and flexible wire with sleeve, respectively.

[3] Applies for dimensioning of drive cooling. If the switching frequency is higher than the default setting, the power losses may increase. LCP and typical control card power consumptions are included. For more detailed efficiency values and part load losses according IEC/EN 61800-9-2 refer to mydrive ecosmart on www. danfoss.com. For efficiency class see 8.4.1 Environment.

[4] Efficiency measured at nominal current. For more detailed efficiency values and part load losses according IEC/EN 61800-9-2 refer to mydrive ecosmart on www. danfoss.com. For efficiency class see 8.4.1 Environment.

[5] Measured using 5 m (16 ft) shielded motor cables at rated load and rated frequency. For more detailed efficiency values and part load losses according IEC/EN 61800-9-2 refer to mydrive ecosmart on www. danfoss.com. For efficiency class see 8.4.1 Environment.

8.1.6 Mains Supply 3x525–690 V AC

Table 39: Enclosure, Mains Supply 3x525–690 V AC IP20/Protected Chassis, P1K1–P7K5

Type designation	P1K1		P1K5		P2K2		P3K0		P4K0		P5K5		P7K5	
High/normal overload[1]	HO	NO	HO	NO	HO	NO	HO	NO	HO	NO	HO	NO	HO	NO
Typical shaft output [kW]	1.1		1.5		2.2		3.0		4.0		5.5		7.5	
Typical shaft output [hp]	1.5		2.0		3.0		4.0		5.0		7.5		10	
IP20/Chassis	A3		A3		A3		A3		A3		A3		A3	
Output current														
Continuous (3x525–550 V) [A]	2.1		2.7		3.9		4.9		6.1		9.0		11	
Intermittent (3x525–550 V) [A]	3.2	2.3	4.1	3.0	5.9	4.3	7.4	5.4	9.2	6.7	13.5	9.9	16.5	12.1
Continuous (3x551–690 V) [A]	1.6		2.2		3.2		4.5		5.5		7.5		10	

Type designation	P1K1		P1K5		P2K2		P3K0		P4K0		P5K5		P7K5	
Intermittent (3x551–690 V) [A]	2.4	1.8	3.3	2.4	4.8	3.5	6.8	5.0	8.3	6.1	11.3	8.3	15	11
Continuous kVA at 525 V [kVA]	1.9		2.5		3.5		4.5		5.5		8.2		10	
Continuous kVA at 690 V [kVA]	1.9		2.6		3.8		5.4		6.6		9.0		12	
Maximum input current														
Continuous (3x525–550 V) [A]	1.9		2.4		3.5		4.4		5.5		8.1		9.9	
Intermittent (3x525–550 V) [A]	2.9	2.1	3.6	2.6	5.3	3.9	6.6	4.8	8.3	6.1	12.2	8.9	14.9	10.9
Continuous (3x551–690 V) [A]	1.4		2.0		2.9		4.0		4.9		6.7		9.0	
Intermittent (3x551–690 V) [A]	2.1	1.5	3.0	2.2	4.4	3.2	6.0	4.4	7.4	5.4	10.1	7.4	13.5	9.9
Additional specifications														
Maximum cable cross–section[2] for mains, motor, brake, and load sharing [mm^2 (AWG)]	4, 4, 4 (12, 12, 12) (minimum (24))													
Maximum cable cross–section[2] for mains disconnect [mm^2 (AWG)]	6, 4, 4 (10, 12, 12)													
Estimated power loss[3] at rated maximum load [W][4]	44		60		88		120		160		220		300	
Efficiency[5]	0.96													

[1] High overload=150% or 160% torque for a duration of 60 s. Normal overload=110% torque for a duration of 60 s.

[2] The 3 values for the maximum cable cross-section are for single core, flexible wire, and flexible wire with sleeve, respectively.

[3] Applies for dimensioning of drive cooling. If the switching frequency is higher than the default setting, the power losses may increase. LCP and typical control card power consumptions are included. For more detailed efficiency values and part load losses according IEC/EN 61800-9-2 refer to mydrive ecosmart on www. danfoss.com. For efficiency class see 8.4.1 Environment.

[4] Efficiency measured at nominal current. For more detailed efficiency values and part load losses according IEC/EN 61800-9-2 refer to mydrive ecosmart on www. danfoss.com. For efficiency class see 8.4.1 Environment.

[5] Measured using 5 m (16 ft) shielded motor cables at rated load and rated frequency. For more detailed efficiency values and part load losses according IEC/EN 61800-9-2 refer to mydrive ecosmart on www. danfoss.com. For efficiency class see 8.4.1 Environment.

Table 40: Enclosure, Mains Supply 3x525–690 V AC IP20/IP21/IP55 – Chassis/Type 1/Type 12, P11K–P30K Specifications VLT® AQUA Drive FC 202

Type designation	P11K		P15K		P18K		P22K		P30K	
High/normal overload[1]	HO	NO	HO	NO	HO	NO	HO	NO	HO	NO
Typical shaft output at 550 V [kW]	5.9	7.5	7.5	11	11	15	15	18.5	18.5	22
Typical shaft output at 550 V [hp]	7.5	10	10	15	15	20	20	25	25	30
Typical shaft output at 690 V [kW]	7.5	11	11	15	15	18.5	18.5	22	22	30
Typical shaft output at 690 V [hp]	10	15	15	20	20	25	25	30	30	40
IP20/Chassis	B4		B4		B4		B4		B4	
IP21/IP55, Type 1/Type 12	B2		B2		B2		B2		B2	
Output current										
Continuous (3x525–550 V) [A]	11	14	14	19	19	23	23	28	28	36
Intermittent (60 s overload) (3x525–550 V) [A]	17.6	15.4	22.4	20.9	30.4	25.3	36.8	30.8	44.8	39.6

Type designation	P11K		P15K		P18K		P22K		P30K	
Continuous (3x551–690 V) [A]	10	13	13	18	18	22	22	27	27	34
Intermittent (60 s) (3x551–690 V) [A]	16	14.3	20.8	19.8	28.8	24.2	35.2	29.7	43.2	37.4
Continuous kVA at 550 V [kVA]	10	13.3	13.3	18.1	18.1	21.9	21.9	26.7	26.7	34.3
Continuous kVA at 690 V [kVA]	12	15.5	15.5	21.5	21.5	26.3	26.3	32.3	32.3	40.6
Maximum input current										
Continuous 550 V [A]	9.9	15	15	19.5	19.5	24	24	29	29	36
Intermittent (60 s overload) (3x525–550 V) [A]	15.8	16.5	23.2	21.5	31.2	26.4	38.4	31.9	46.4	39.6
Continuous (3x551–690 V) [A]	9.0	14.5	14.5	19.5	19.5	24	24	29	29	36
Intermittent (3x551–690 V) [A]	14.4	16	23.2	21.5	31.2	26.4	38.4	31.9	46.4	39.6
Additional specifications										
Maximum cable cross–section[2] for mains, motor, brake, and load sharing [mm^2 (AWG)]	35, 25, 25 (2, 4, 4)									
Maximum cable cross–section[1] for mains disconnect [mm^2 (AWG)]	6, 10, 10 (6, 8, 8)									
Estimated power loss[3] at rated maximum load [W][4]	150	220	150	220	220	300	300	370	370	440
Efficiency[5]	0.98									

[1] High overload=150% or 160% torque for a duration of 60 s. Normal overload=110% torque for a duration of 60 s.

[2] The 3 values for the maximum cable cross-section are for single core, flexible wire, and flexible wire with sleeve, respectively.

[3] Applies for dimensioning of drive cooling. If the switching frequency is higher than the default setting, the power losses may increase. LCP and typical control card power consumptions are included. For more detailed efficiency values and part load losses according IEC/EN 61800-9-2 refer to mydrive ecosmart on www. danfoss.com. For efficiency class see 8.4.1 Environment.

[4] Efficiency measured at nominal current. For more detailed efficiency values and part load losses according IEC/EN 61800-9-2 refer to mydrive ecosmart on www. danfoss.com. For efficiency class see 8.4.1 Environment.

[5] Measured using 5 m (16 ft) shielded motor cables at rated load and rated frequency. For more detailed efficiency values and part load losses according IEC/EN 61800-9-2 refer to mydrive ecosmart on www. danfoss.com. For efficiency class see 8.4.1 Environment.

Table 41: Enclosure, Mains Supply 3x525–690 V AC IP20/IP21/IP55 – Chassis/NEMA1/NEMA 12, P37K–P75K

Type designation	P37K		P45K		P55K		P75K[1]		P90K/N90K[1]	
High/normal overload[2]	HO	NO	HO	NO	HO	NO	HO	NO	HO	NO
Typical shaft output at 550 V [kW]	22	30	30	37	37	45	45	55	55	75
Typical shaft output at 550 V [hp]	30	40	40	50	50	60	60	75	75	100
Typical shaft output at 690 V [kW]	30	37	37	45	45	55	55	75	75	90
Typical shaft output at 690 V [hp]	40	50	50	60	60	75	75	100	100	125
IP20/Chassis	B4		C3		C3		D3h		D3h	
IP21/Type 1 IP55/Type 12	C2		C2		C2		C2		C2	
Output current										
Continuous (3x525–550 V) [A]	36	43	43	54	54	65	65	87	87	105

Type designation	P37K		P45K		P55K		P75K[1]		P90K/N90K[1]	
Intermittent (60 s overload) (3x525–550 V) [A]	54	47.3	64.5	59.4	81	71.5	97.5	95.7	130.5	115.5
Continuous (3x551–690 V) [A]	34	41	41	52	52	62	62	83	83	100
Intermittent (60 s) (3x551–690 V) [A]	51	45.1	61.5	57.2	78	68.2	93	91.3	124.5	110
Continuous kVA at 550 V [kVA]	34.3	41	41	51.4	51.4	61.9	61.9	82.9	82.9	100
Continuous kVA at 690 V [kVA]	40.6	49	49	62.1	62.1	74.1	74.1	99.2	99.2	119.5
Maximum input current										
Continuous 550 V [A]	36	49	49	59	59	71	71	87	87	99
Intermittent (60 s overload) (3x525–550 V) [A]	54	53.9	72	64.9	87	78.1	105	95.7	129	108.9
Continuous (3x551–690 V) [A]	36	48	48	58	58	70	70	86	–	–
Intermittent (3x551–690 V) [A]	54	52.8	72	63.8	87	77	105	94.6	–	–
Additional specifications										
Maximum cable cross–section for mains and motor [mm^2 (AWG)]	150 (300 MCM)									
Maximum cable cross–section for brake and load sharing [mm^2 (AWG)]	95 (3/0)									
Maximum cable cross–section[3] for mains disconnect [mm^2 (AWG)]	95 (3/0)						185, 150, 120 (350 MCM, 300 MCM, 4/0)		–	
Estimated power loss[4] at rated maximum load [W][5]	600	740	740	900	900	1100	1100	1500	1500	1800
Efficiency[6]	0.98									

[1] Enclosure sizes for N75K, N90K are D3h for IP20/Chassis, and D5h for IP54/Type 12.

[2] High overload=150% or 160% torque for a duration of 60 s. Normal overload=110% torque for a duration of 60 s.

[3] The 3 values for the maximum cable cross-section are for single core, flexible wire, and flexible wire with sleeve, respectively.

[4] Applies for dimensioning of drive cooling. If the switching frequency is higher than the default setting, the power losses may increase. LCP and typical control card power consumptions are included. For more detailed efficiency values and part load losses according IEC/EN 61800-9-2 refer to mydrive ecosmart on www. danfoss.com. For efficiency class see 8.4.1 Environment.

[5] Efficiency measured at nominal current. For more detailed efficiency values and part load losses according IEC/EN 61800-9-2 refer to mydrive ecosmart on www. danfoss.com. For efficiency class see 8.4.1 Environment.

[6] Measured using 5 m (16 ft) shielded motor cables at rated load and rated frequency. For more detailed efficiency values and part load losses according IEC/EN 61800-9-2 refer to mydrive ecosmart on www. danfoss.com. For efficiency class see 8.4.1 Environment.

8.2 Mains Supply

Supply terminals	L1, L2, L3
Supply voltage[1][2]	200–240 V ±10%
Supply voltage[1][2]	380–480 V/500–600 V ±10%
Supply voltage[1][2]	525–600 V ±10%
Supply frequency[3]	47.5–63 Hz
Maximum imbalance temporary between mains phases	3.0% of rated supply voltage
True power factor (λ)	≥0.9 nominal at rated load

Displacement power factor (cos Φ)	Near unity (>0.98)
Switching on the input supply L1, L2, L3 (power-ups) ≤7.5 kW	Maximum 2 times per minute
Switching on input supply L1, L2, L3 (power-ups) 11–90 kW	Maximum 1 time per minute
Environment according to EN60664-1	Overvoltage category III/pollution degree 2

[1] Mains voltage low/mains drop-out: During low mains voltage or a mains drop-out, the drive continues until the DC-link voltage drops below the minimum stop level, which corresponds typically to 15% below the drive's lowest rated supply voltage. Power-up and full torque cannot be exptected at mains voltage lower than 10% below the drive's lowest rated supply voltage.

[2] The unit is suitable for use on a circuit capable of delivering not more than 100000 RMS symmetrical Amperes, 240/500/600/690 V maximum.

[3] The drive power supply is tested in accordance with IEC 61000-4-28, 50 Hz +4/-6%.

8.3 Motor Output and Motor Data

8.3.1 Motor Output (U, V, W)

Output voltage	0–100% of supply voltage
Output frequency	0–590 Hz[1]
Switching on output	Unlimited
Ramp times	1–3600 s

[1] Dependent on power size.

8.3.2 Torque Characteristics, Normal Overload

Starting torque (constant torque)	Maximum 110% for 60 s, once in 10 minutes[1]
Overload torque (constant torque)	Maximum 110% for 60 s, once in 10 minutes[1]

[1] Percentage relates to the nominal torque of the drive, dependent on power size.

8.3.3 Torque Characteristics, High Overload

Starting torque (constant torque)	Maximum 150/160% for 60 s, once in 10 minutes[1]
Overload torque (constant torque)	Maximum 150/160% for 60 s, once in 10 minutes[1]

[1] Percentage relates to the nominal torque of the drive, dependent on power size.

8.4 Ambient Conditions

8.4.1 Environment

Enclosure size A	IP20/Chassis, IP21/Type 1, IP55/Type 12, IP66/Type 4X
Enclosure sizes B1/B2	IP21/Type 1, IP55/Type 12, IP66/Type 4X
Enclosure sizes B3/B4	IP20/Chassis
Enclosure sizes C1/C2	IP21/Type 1, IP55/Type 12, IP66/Type 4X
Enclosure sizes C3/C4	IP20/Chassis
Enclosure kit available ≤ enclosure size A	IP21/TYPE 1/IP4X top
Vibration test enclosure A/B/C	1.0 g
Maximum relative humidty	5–95% (IEC 721-3-3); Class 3K3 (non-condensing) during operation
Aggressive environment (IEC 60068-2-43), uncoated	Class 3C2
Aggressive environment (IEC 60068-2-43), coated	Class 3C3
Test method according to IEC 60068-2-43	H2S (10 days)
Ambient temperature (at SFAVM switching mode)	
- with derating	Maximum 55° C (131° F)[1]

- with full output power of typical EFF2 motors (up to 90% output current)	Maximum 50° C (122° F)[1]
- at full continuous FC output current	Maximum 50° C (122° F)[1]
Minimum ambient temperature during full-scale operation	0 °C (32 °F)
Minimum ambient temperature at reduced speed performance	-10 °C (14 °F)
Temperature during storage/transport	-25 to +65/70 °C (-13 to +149/158 °F)
Maximum altitude above sea level without derating	1000 m (3280 ft)
Maximum altitude above sea level with derating	3000 m (9843 ft)
EMC standards, Emission	EN 61800-3
EMC standards, Immunity	EN 61800-3
Energy efficiency class[2]	IE2

[1] For more information, see the Derating section in the design guide.

[2] Determined according to 61800-9-2 at:

- Rated load.
- 90% rated frequency.
- Switching frequency factory setting.
- Switching pattern factory setting.
- MyDrive® ecoSmart™ provides efficiency and part loss data for the drive according to 61800-3.

8.5 Cable Specifications

8.5.1 Cable Lengths and Cross-sections for Control Cables

Maximum motor cable length, shielded/armored	150 m (492 ft)
Maximum motor cable length, unshielded/unarmored	300 m (984 ft)
Maximum cross-section to motor, mains, load sharing, and brake[1]	
Maximum cross-section to control terminals, rigid wire	1.5 mm^2/16 AWG
Maximum cross-section to control terminals, flexible wire	1 mm^2/18 AWG
Maximum cross-section to control terminals, cable with enclosed core	0.5 mm^2/20 AWG
Minimum cross-section to control terminals	0.25 mm^2/24 AWG

[1] See electrical data tables in 8.1.1 Mains Supply 1x200–240 V AC to 8.1.6 Mains Supply 3x525–690 V AC for more information.

It is mandatory to ground the mains connection properly using T95 (PE) of the frequency converter. The ground connection cable cross-section must be at least 10 mm^2 (8 AWG) or 2 rated mains wires terminated separately according to EN 50178. Use unshielded cable.

8.6 Control Input/Output and Control Data

8.6.1 Digital Inputs

Programmable digital inputs	4 (6)
Terminal number	18, 19, 27[1], 29[1], 32, 33
Logic	PNP or NPN
Voltage level	0–24 V
Voltage level, logic 0 PNP	<5 V DC
Voltage level, logic 1 PNP	>10 V DC
Voltage level, logic 0 NPN	>19 V DC
Voltage level, logic 1 NPN	<14 V DC

Maximum voltage on input	28 V DC
Input resistance, R_i	Approximately 4 kΩ

[1] Terminals 27 and 29 can also be programmed as output.

The digital input is galvanically isolated from the supply voltage (PELV) and other high-voltage terminals.

8.6.2 STO Terminal 37 (Terminal 37 is Fixed PNP Logic)

Voltage level	0–24 V DC
Voltage level, logic 0 PNP	<4 V DC
Voltage level, logic 1 PNP	>20 V DC
Maximum voltage on input	28 V DC
Typical input current at 24 V	50 mA rms
Typical input current at 20 V	60 mA rms
Input capacitance	400 nF

All digital inputs are galvanically isolated from the supply voltage (PELV) and other high-voltage terminals.

When using a contactor with a DC coil inside in combination with STO, it is important to make a return way for the current from the coil when turning it off. This can be done by using a freewheel diode (or, alternatively, a 30 V or 50 V MOV for quicker response time) across the coil. Typical contactors can be bought with this diode.

8.6.3 Analog Inputs

Number of analog inputs	2
Terminal number	53, 54
Modes	Voltage or current
Mode select	Switch S201 and switch S202
Voltage mode	Switch S201/switch S202 = OFF (U)
Voltage level	0–10 V (scaleable)
Input resistance, R_i	Approximately 10 kΩ
Maximum voltage	±20 V
Current mode	Switch S201/S202 = ON (I)
Current level	0/4–20 mA (scaleable)
Input resistance, R_i	Approximately 200 Ω
Maximum current	30 mA
Resolution for analog inputs	10 bit (+ sign)
Accuracy of analog inputs	Maximum error 0.5% of full scale
Bandwidth	200 Hz

The analog inputs are galvanically isolated from the supply voltage (PELV) and other high-voltage terminals.

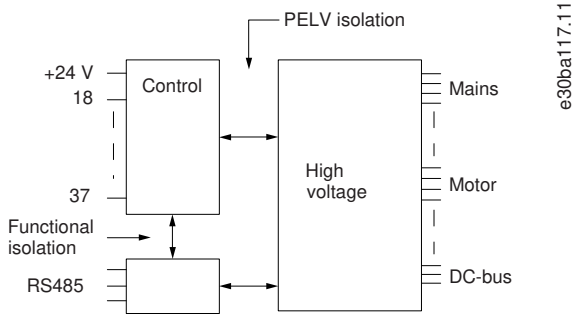

Illustration 53: PELV Isolation

8.6.4 Pulse Inputs

Programmable pulse	2
Terminal number pulse	29, 33
Maximum frequency at terminals 29, 33	110 kHz (Push-pull driven)
Maximum frequency at terminals 29, 33	5 kHz (Open collector)
Maximum frequency at terminals 29, 33	4 Hz
Voltage level	See 8.6.1 Digital Inputs.
Maximum voltage on input	28 V DC
Input resistance, R_i	Approximately 4 kΩ
Pulse input accuracy (0.1–1 kHz)	Maximum error: 0.1% of full scale

8.6.5 Digital Outputs

Programmable digital/pulse outputs	2
Terminal number	27, 29[1]
Voltage level at digital/frequency output	0–24 V
Maximum output current (sink or source)	40 mA
Maximum load at frequency output	1 kΩ
Maximum capacitive load at frequency output	10 nF
Minimum output frequency at frequency output	0 Hz
Maximum output frequency at frequency output	32 kHz
Accuracy of frequency output	Maximum error: 0.1% of full scale
Resolution of frequency outputs	12 bit

[1] Terminals 27 and 29 can also be programmed as input.

The digital output is galvanically isolated from the supply voltage (PELV) and other high-voltage terminals.

8.6.6 Analog Output

Number of programmable outputs	1
Terminal number	42
Current range at analog output	0/4–20 mA
Maximum resistor load to common analog output	500 Ω
Accuracy on analog output	Maximum error: 0.8% of full scale
Resolution of analog output	8 bit

The analog output is galvanically isolated from the supply voltage (PELV) and other high-voltage terminals.

8.6.7 Control Card, 24 V DC Output

Terminal number	12, 13
Output voltage 24 V	+1, -3 V
Maximum load	200 mA

The 24 V DC supply is galvanically isolated from the supply voltage (PELV), but has the same potential as the analog and digital inputs and outputs.

8.6.8 Control Card, +10 V DC Output

Terminal number	50
Output voltage	10.5 V ±0.5 V
Maximum load	25 mA

The 10 V DC supply is galvanically isolated from the supply voltage (PELV) and other high-voltage terminals.

8.6.9 Control Card, RS485 Serial Communication

Terminal number	68 (P,TX+, RX+), 69 (N,TX-, RX-)
Terminal number 61	Common for terminals 68 and 69

The RS485 serial communication circuit is galvanically isolated from the supply voltage (PELV).

8.6.10 Control Card, USB Serial Communication

USB standard	1.1 (full speed)
USB plug	USB type B plug

Connection to the PC is carried out via a standard host/device USB cable.

The USB connection is galvanically isolated from the supply voltage (PELV) and other high-voltage terminals.

The USB ground connection is not galvanically isolated from protective earth. Use only an isolated laptop as PC connection to the USB connector on the drive.

8.6.11 Relay Outputs

Programmable relay outputs	2
Relay 01 terminal number	1–3 (break), 1–2 (make)
Maximum terminal load (AC-1)[1] on 1–3 (NC), 1–2 (NO) (resistive load)	240 V AC, 2 A
Maximum terminal load (AC-15)[1] (inductive load @ cosφ 0.4)	240 V AC, 0.2 A
Maximum terminal load (DC-1)[1] on 1–2 (NO), 1–3 (NC) (resistive load)	60 V DC, 1 A
Maximum terminal load (DC-13)[1] (inductive load)	24 V DC, 0.1 A
Relay 02 terminal number	4–6 (break), 4–5 (make)
Maximum terminal load (AC-1)[1] on 4–5 (NO) (resistive load)[2][3]	400 V AC, 2 A
Maximum terminal load (AC-15) on 4–5 (NO) (inductive load @ cosφ 0.4)	240 V AC, 0.2 A
Maximum terminal load (DC-1)[1] on 4–5 (NO) (resistive load)	80 V DC, 2 A
Maximum terminal load (DC-13)[1] on 4–5 (NO) (inductive load)	24 V DC, 0.1 A
Maximum terminal load (AC-1)[1] on 4–6 (NC) (resistive load)	240 V AC, 2 A
Maximum terminal load (AC-15)[1] on 4–6 (NC) (inductive load @ cosφ 0.4)	240 V AC, 0.2 A
Maximum terminal load (DC-1)[1] on 4–6 (NC) (resistive load)	50 V DC, 2 A
Maximum terminal load (DC-13)[1] on 4–6 (NC) (inductive load)	24 V DC, 0.1 A
Minimum terminal load on 1–3 (NC), 1–2 (NO), 4–6 (NC), 4–5 (NO)	24 V DC 1 mA, 24 V AC 20 mA
Environment according to EN 60664-1	Overvoltage category III/pollution degree 2

[1] IEC 60947 parts 4 and 5. The relay contacts are galvanically isolated from the rest of the circuit by reinforced isolation (PELV)

[2] Overvoltage Category II

[3] UL applications 300 V AC 2 A.

8.6.12 Control Card Performance

Scan interval	5 ms

8.6.13 Control Characteristics

Resolution of output frequency at 0–590 Hz	±0.003 Hz
System response time (terminals 18, 19, 27, 29, 32, 33)	≤2 ms
Speed control range (open loop)	1:100 of synchronous speed

Speed accuracy (open loop)	30–4000 RPM: Error ±8 RPM

All control characteristics are based on a 4-pole asynchroneous motor.

8.7 Connection Tightening Torques

Table 42: Terminal Tightening Torques

Enclosure size	Mains [Nm (in-lb)]	Motor [Nm (in-lb)]	DC Connection [Nm (in-lb)]	Brake [Nm (in-lb)]	Ground [Nm (in-lb)]	Relay [Nm (in-lb)]
A2	1.8 (16)	1.8 (16)	1.8 (16)	1.8 (16)	3 (27)	0.6 (5)
A3	1.8 (16)	1.8 (16)	1.8 (16)	1.8 (16)	3 (27)	0.6 (5)
A4	1.8 (16)	1.8 (16)	1.8 (16)	1.8 (16)	3 (27)	0.6 (5)
A5	1.8 (16)	1.8 (16)	1.8 (16)	1.8 (16)	3 (27)	0.6 (5)
B1	1.8 (16)	1.8 (16)	1.5 (13)	1.5 (13)	3 (27)	0.6 (5)
B2	4.5 (40)	4.5 (40)	3.7 (33)	3.7 (33)	3 (27)	0.6 (5)
B3	1.8 (16)	1.8 (16)	1.8 (16)	1.8 (16)	3 (27)	0.6 (5)
B4	4.5 (40)	4.5 (40)	4.5 (40)	4.5 (40)	3 (27)	0.6 (5)
C1	10 (89)	10 (89)	10 (89)	10 (89)	3 (27)	0.6 (5)
C2	14/24 (124/221)[1]	14/24 (124/221)[1]	14 (124)	14 (124)	3 (27)	0.6 (5)
C3	10 (89)	10 (89)	10 (89)	10 (89)	3 (27)	0.6 (5)
C4	14/24 (124/221)[1]	14/24 (124/221)[1]	14 (124)	14 (124)	3 (27)	0.6 (5)

[1] For different cable dimensions x/y, where x≤95 mm^2 (3 AWG) and y≥95 mm^2 (3 AWG).

8.8 Power Ratings, Weight, and Dimensions

Table 43: Power Ratings, Weight, and Dimensions, Enclosure Size A

Enclosure size		A2		A3		A4	A5
3x525–690 V	T7	–		**1.1–7.5 (1–10)**		–	–
3x525–600 V	T6	–		**0.75–7.5 (1.0–10)**		–	**0.75–7.5 (1.0–10)**
3x380–480 V	T4	**0.37–4.0 (0.5–5.0)**		**5.5–7.5 (7.5–10)**		**0.37–4.0 (0.5–5)**	**0.37–7.5 (0.5–10)**
1x380–480 V	S4	–		–		–	–
3x200–240 V	T2	**0.25–2.2 (0.34–3.0)**		**3.0–3.7 (4.0–5.0)**		**0.25–2.2 (0.34–3.0)**	**0.25–3.7 (0.34–5)**
1x200–240 V	S2	–		**1.1 (1.5)**			**1.1 (1.5)**
IPNEMA		**20Chassis**	**21Type 1**	**20Chassis**	**21Type 1**	**55/66Type 12/4X**	**55/66Type 12/4X**
Height [mm (in)]							
Height of backplate	A[1]	268 (10.6)	375 (14.8)	268 (10.6)	375 (14.8)	390 (15.4)	420 (16.5)

Enclosure size		A2		A3		A4	A5
Height with de-coupling plate for fieldbus cables	A	374 (14.7)	–	374 (14.7)	–	–	–
Distance between mounting holes	a	257 (10.1)	350 (13.8)	257 (10.1)	350 (13.8)	401 (15.8)	402 (15.8)
Width [mm (in)]							
Width of backplate	B	90 (3.5)	90 (3.5)	130 (5.1)	130 (5.1)	200 (7.9)	242 (9.5)
Width of backplate with 1 C option	B	130 (5.1)	130 (5.1)	170 (6.7)	170 (6.7)	–	242 (9.5)
Width of backplate with 2 C options	B	150 (5.9)	150 (5.9)	190 (7.5)	190 (7.5)	–	242 (9.5)
Distance between mounting holes	b	70 (2.8)	70 (2.8)	110 (4.3)	110 (4.3)	171 (6.7)	215 (8.5)
Depth [mm (in)][(2)]							
Depth without option A/B	C	205 (8.1)	205 (8.1)	205 (8.1)	205 (8.1)	175 (6.9)	200 (7.9)
With option A/B	C	220 (8.7)	220 (8.7)	220 (8.7)	220 (8.7)	175 (6.9)	200 (7.9)
Screw holes [mm (in)]							
	c	8.0 (0.31)	8.0 (0.31)	8.0 (0.31)	8.0 (0.31)	8.25 (0.32)	8.25 (0.32)
	d	ø11 (ø0.43)	ø11 (ø0.43)	ø11 (ø0.43)	ø11 (ø0.43)	ø12 (ø0.47)	ø12 (ø0.47)
	e	ø5.5 (ø0.22)	ø5.5 (ø0.22)	ø5.5 (ø0.22)	ø5.5 (ø0.22)	ø6.5 (ø0.26)	ø6.5 (ø0.26)
	f	9 (0.35)	9 (0.35)	9 (0.35)	9 (0.35)	6 (0.24)	9 (0.35)
Maximum weight [kg (lb)]		4.9 (10.8)	5.3 (11.7)	6.6 (14.6)	7 (15.4)	9.7 (21.4)	14 (31)

[1] See Illustration 54 and Illustration 55.

[2] Depth of enclosure varies with different options installed.

Table 44: Power Ratings, Weight, and Dimensions, Enclosure Size B

Enclosure size		B1	B2	B3	B4
3x525–690 V	T7	–	**11–30 (15–40)**	–	**11–37 (15–50)**
3x525–600 V	T6	**11–18.5 (15–25)**	**22–30 (30–40)**	**11–18.5 (15–25)**	**22–37 (30–50)**
3x380–480 V	T4	**11–18.5 (15–25)**	**22–30 (30–40)**	**11–18.5 (15–25)**	**22–37 (30–50)**
1x380–480 V	S4	**7.5 (10)**	**11 (15)**	–	–
3x200–240 V	T2	**5.5–11 (7.5–15)**	**15 (20)**	**5.5–11 (7.5–15)**	**15–18.5 (20–25)**
1x200–240 V	S2	**1.5–5.5 (2–7.5)**	**7.5 (10)**	–	–
IPNEMA		**21/55/66Type 1/12/4X**	**21/55/66Type 1/12/4X**	**20Chassis**	**20Chassis**
Height [mm (in)]					

Enclosure size		B1	B2	B3	B4
Height of backplate	A[1]	480 (18.9)	650 (25.6)	399 (15.7)	520 (20.5)
Height with de-coupling plate for fieldbus cables	A	–	–	419 (16.5)	595 (23.4)
Distance between mounting holes	a	454 (17.9)	624 (24.6)	380 (15)	495 (19.5)
Width [mm (in)]					
Width of backplate	B	242 (9.5)	242 (9.5)	165 (6.5)	231 (9.1)
Width of backplate with 1 C option	B	242 (9.5)	242 (9.5)	205 (8.1)	231 (9.1)
Width of backplate with 2 C options	B	242 (9.5)	242 (9.5)	225 (8.9)	231 (9.1)
Distance between mounting holes	b	70 (2.8)	210 (8.3)	140 (5.5)	200 (7.9)
Depth [mm (in)][2]					
Depth without option A/B	C	260 (10.2)	260 (10.2)	249 (9.8)	242 (9.5)
With option A/B	C	260 (10.2)	260 (10.2)	262 (10.3)	242 (9.5)
Screw holes [mm (in)]					
	c	12 (0.47)	12 (0.47)	8.25 (0.32)	–
	d	ø19 (0.75)	ø19 (0.75)	ø12 (ø0.47)	–
	e	ø9 (0.35)	ø9 (0.35)	6.8 (0.27)	8.5 (0.33)
	f	9 (0.35)	9 (0.35)	7.9 (0.31)	15 (0.59)
Maximum weight [kg (lb)]		23 (51)	27 (60)	12 (26.5)	23.5 (52)

[1] See Illustration 54 and Illustration 55.

[2] Depth of enclosure varies with different options installed.

Table 45: Power Ratings, Weight, and Dimensions, Enclosure Size C

Enclosure size		C1	C2	C3	C4
3x525–690 V	T7	–	**37–90 (50–125)**	**45–55 (60–75)**	–
3x525–600 V	T6	**37–55 (50–75)**	**75–90 (100–125)**	**45–55 (60–75)**	**75–90 (100–125)**
3x380–480 V	T4	**37–55 (50–75)**	**75–90 (100–125)**	**45–55 (60–75)**	**75–90 (100–125)**
1x380–480 V	S4	**18 (24)**	**37 (50)**	–	–
3x200–240 V	T2	**18.5–30 (25–40)**	**37–45 (50–60)**	**22–30 (30–40)**	**37–45 (50–60)**
1x200–240 V	S2	**15 (20)**	**22 (30)**	–	–
IPNEMA		**21/55/66Type 1/12/4X**	**21/55/66Type 1/12/4X**	**20Chassis**	**20Chassis**
Height [mm (in)]					
Height of backplate	A[1]	680 (26.8)	770 (30.3)	550 (21.7)	660 (26)

Enclosure size		C1	C2	C3	C4
Height with de-coupling plate for fieldbus cables	A	–	–	630 (24.8)	800 (31.5)
Distance between mounting holes	a	648 (25.5)	739 (29.1)	521 (20.5)	631 (24.8)
Width [mm (in)]					
Width of backplate	B	308 (12.1)	370 (14.6)	308 (12.1)	370 (14.6)
Width of backplate with 1 C option	B	308 (12.1)	370 (14.6)	308 (12.1)	370 (14.6)
Width of backplate with 2 C options	B	308 (12.1)	370 (14.6)	308 (12.1)	370 (14.6)
Distance between mounting holes	b	272 (10.7)	334 (13.1)	270 (10.6)	330 (13)
Depth [mm (in)][2]					
Depth without option A/B	C	310 (12.2)	335 (13.2)	333 (13.1)	333 (13.1)
With option A/B	C	310 (12.2)	335 (13.2)	333 (13.1)	333 (13.1)
Screw holes [mm (in)]					
	c	12 (0.47)	12 (0.47)	–	–
	d	ø19 (0.75)	ø19 (0.75)	–	–
	e	ø9 (0.35)	ø9 (0.35)	8.5 (0.33)	8.5 (0.33)
	f	9.8 (0.39)	9.8 (0.39)	17 (0.67)	17 (0.67)
Maximum weight [kg (lb)]		45 (99)	65 (143)	35 (77)	50 (110)

[1] See Illustration 54 and Illustration 55.

[2] Depth of enclosure varies with different options installed.

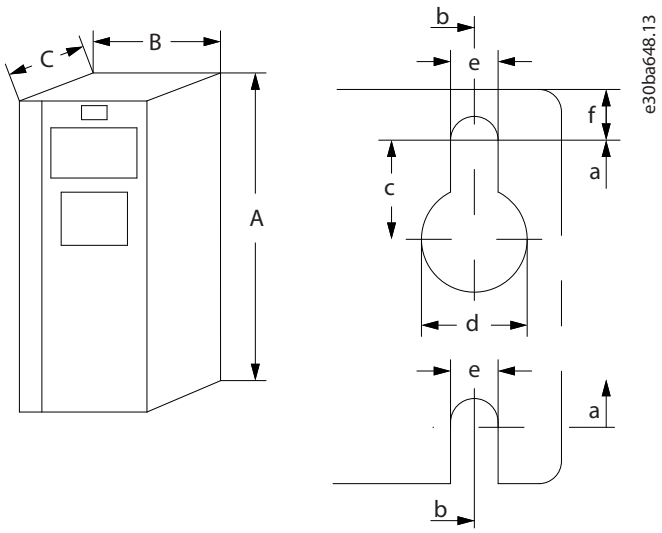

Illustration 54: Top and Bottom Mounting Holes

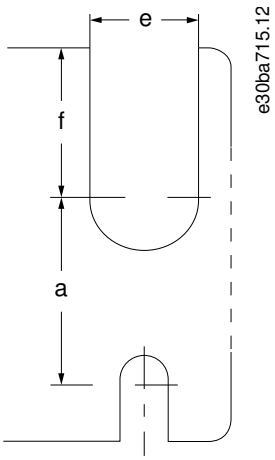

Illustration 55: Top and Bottom Mounting Holes, Enclosure Sizes B4, C3, and C4

9 Mechanical Installation Considerations

9.1 Storage

Store the drive in a dry location and keep the equipment sealed in its packaging until installation. Periodic forming (capacitor charging) is not necessary during storage unless storage exceeds 12 months.

If shelf life is longer than 4 years, a simple method, under no load conditions, can be used to check the condition of the capacitors.

If the stable DC-link voltage is approximately equal to 1.41 x U_{mains}, the capacitors are OK. To check the DC-link voltage in the drive, either measure it or check the corresponding parameters in the display.

If the DC-link voltage is significantly smaller than 1.41 x U_{mains}, it takes time for the capacitors to recover. If the DC-link voltage stays at a low level and does not reach approximately 1.41 x U_{mains} , contact the local service agent.

9.2 Operating Environment

In environments with airborne liquids, particles, or corrosive gases, ensure that the IP/Type rating of the equipment matches the installation environment. For specifications regarding ambient conditions, see the Ambient Conditions section.

NOTICE

CONDENSATION

Moisture can condense on the electronic components and cause short circuits. Avoid installation in areas subject to frost. Install an optional space heater when the drive is colder than the ambient air. Operating in standby mode reduces the risk of condensation as long as the power dissipation keeps the circuitry free of moisture.

NOTICE

EXTREME AMBIENT CONDITIONS

Hot or cold temperatures compromise unit performance and longevity.

- Do not operate in environments where the ambient temperature exceeds 55 °C (131 °F).
- The drive can operate at temperatures down to -10 °C (14 °F). However, proper operation at rated load is only guaranteed at 0 °C (32 °F) or higher.
- If the temperature exceeds ambient temperature limits, extra air conditioning of the cabinet or installation site is required.

9.2.1 Gases

Aggressive gases, such as hydrogen sulfide, chlorine, or ammonia can damage electrical and mechanical components of a drive. Contamination of the cooling air can also cause the gradual decomposition of PCB tracks and door seals. Aggressive contaminants are often present in sewage treatment plants or swimming pools. A clear sign of an aggressive atmosphere is corroded copper.

In aggressive atmospheres, restricted IP enclosures are recommended along with conformal-coated circuit boards.

NOTICE

The drive comes standard with class 3C2 coating. On request, class 3C3 coating is available.

Table 46: Conformal Coating Class Ratings

Gas type	Unit	Class				
		3C1	3C2		3C3	
		–	Average value	Maximum value[1]	Average value	Maximum value[1]
Sea salt	n/a	None	Salt mist		Salt mist	
Sulfur oxide	mg/m^3	0.1	0.3	1.0	5.0	10
Hydrogen sulfide	mg/m^3	0.01	0.1	0.5	3.0	10
Chlorine	mg/m^3	0.0.1	0.1	0.03	0.3	1.0

Gas type	Unit	Class				
Hydrogen chloride	mg/m^3	0.01	0.1	0.5	1.0	5.0
Hydrogen fluoride	mg/m^3	0.003	0.001	0.03	0.1	3.0
Ammonia	mg/m^3	0.3	1.0	3.0	10	35
Ozone	mg/m^3	0.01	0.05	0.1	0.1	0.3
Nitrogen	mg/m^3	0.1	0.5	1.0	3.0	9.0

[1] Maximum values are transient peak values and are not to exceed 30 minutes per day.

9.2.2 Dust

Installation of drives in environments with high dust exposure is often unavoidable. Dust affects wall or frame-mounted units with IP55 or IP66 protection rating and cabinet-mounted units with IP21 or IP20 protection rating. Consider the following when installing drives in such environments:

- Reduced cooling.
- Cooling fans.
- Filters.
- Periodic maintenance.

Reduced cooling

Dust forms deposits on the surface of the device and inside on the circuit boards and the electronic components. These deposits act as insulation layers and hamper heat transfer to the ambient air, reducing the cooling capacity. The components become warmer. This causes accelerated aging of the electronic components and the service life of the unit decreases. Dust deposits on the heat sink in the back of the unit also decrease the service life of the unit.

Cooling fans

The airflow for cooling the unit is produced by cooling fans, usually on the back of the unit. The fan rotors have small bearings into which dust can penetrate and act as an abrasive. This leads to bearing damage and fan failure.

Filters

High-power drives are equipped with cooling fans that expel hot air from the interior of the unit. Above a certain size, these fans are fitted with filter mats. These filters can quickly become clogged when used in dusty environments. Preventive measures are necessary under these conditions.

Periodic maintenance

Under the conditions described above, it is recommended to clean the drive during periodic maintenance. Remove dust from the heat sink and fans, and clean the filter mats.

9.2.3 Outdoor Installation in freezing Temperature Environments

N O T I C E

LIMITATIONS

If the drive is used daily at low temperatures, lifetime of the mains disconnect switch can be reduced. If advice in this section is not followed, lifetime of the drive can be reduced.

- For cold starts at temperatures between -10°C and -25°C, it is recommended to let the drive run in idle for 30 minutes before loading it.
- LCP @-20°C: After cold start, reasonable readability is typically reached after 5–10 s. Change of readout also takes 5–10 s.
- LCP @-25°C: The LCP may have a weak readout at start-up. Normal readout is normally reached within 5 minutes. Change of readout takes 5–10 s
- ATEX: Approved down to -20°C
- Usage of option VLT® 24 V DC Supply Option MCB 107: Instability issues can be expected outside normal operating range for the drive (-10°C to +45/50°C), despite the option is the drive.
- For harsh environments, for example salt mist, using IP66/Type 4X drive configuration is recommended.

Under certain circumstances VLT® FC-series drives in IP55/66 and Type3R/4X configuration can be used for outdoor installation down to -25°C. This applies to the following drives:

- VLT® AutomationDrive FC 301/302
- VLT® AQUA Drive FC 202
- VLT® Refrigeration Drive FC 103
- VLT® HVAC Drive FC 102

To facilitate outdoor installation, condensing liquid inside the drive has to be prevented. This section outlines the conditions under which outdoor usage of the drive is permitted:

- Ensure drive temperature, through:
  - Keeping the drive always powered on for temperatures below 0°C.
  - Keeping the drive running at maximum 50% load for minimum 10 minutes before increasing to full load for temperatures below -10°C/14°F.
- Shield the drive against direct sunlight, preferably by using the weather shield provided by Danfoss. The weather shield is designed to provide more protection of outdoor rated drives, when there is a risk of snow collecting on the top of the drive or excessive rain, which could subcool the drive, leading to internal condensation. The weather shield is made of corrosion resistant stainless steel AISI316 and is also suitable for installation in coastal areas and marine environments.
- Using DC hold keeps the temperature at a level where condensation does not form. This function can be activated in parameter 1–80. This selection makes sure that no condensation takes place in the drive as long as the drive is powered on. Furthermore, it keeps condensation out of the motor.
- **For temperatures from 0°C to –10°C:** Set the fan control to low-temperature environment setting in parameter 14–52 to switch off the heat sink fan and therefore the external fan. This adjusts the fan control to the cold environment to prevent the negative effect from further cooling and triggering a false alarm.
- **For temperatures below –20°C:** Set the fan control to low-temperature environment setting in parameter 14–52 to switch off the heat sink fan and therefore the external fan. This adjusts the fan control to the cold environment to prevent the negative effect from further cooling and triggering a false alarm. Disable parameter 14–53. This prevents warnings to be issued falsely due to cold temperatures.

9.2.4 Potentially Explosive Atmospheres

⚠ W A R N I N G ⚠

EXPLOSIVE ATMOSPHERE

Installing the drive in a potentially explosive atmosphere can lead to death, personal injury, or property damage.

- Install the unit in a cabinet outside of the potentially explosive area.
- Use a motor with an appropriate ATEX protection class.
- Install a PTC temperature sensor to monitor the motor temperature.
- Install short motor cables.
- Use sine-wave output filters when shielded motor cables are not used.

As required by the EU Directive 2014/34/EU, any electrical or electronic device intended for use in an environment with a potentially explosive mixture of air, flammable gas, or dust must be ATEX-certified. Systems operated in this environment must fulfill the following special conditions to comply with the ATEX protection class:

Motors with class d protection

Does not require approval. Special wiring and containment are required.

Motors with class e or class n protection

When combined with an ATEX-approved PTC monitoring device like the VLT® PTC Thermistor Card MCB 112, installation does not need an individual approval from an approbated organization.

Motors with class d/e protection

The motor itself has an e ignition protection class, while the motor cabling and connection environment is in compliance with the d classification. To attenuate the high peak voltage, use a sine-wave filter at the drive output.

NOTICE

MOTOR THERMISTOR SENSOR MONITORING

VLT® AutomationDrive units with the VLT® PTC Thermistor Card MCB 112 option are PTB-certified for potentially explosive atmospheres.

9.2.5 Vibration and Shock

The drive has been tested according to the procedure based on the following standards:

- EN/IEC 60068-2-6.
- EN/IEC 60068-2-34.
- EN/IEC 60068-2-35.
- EN/IEC 60068-2-36.

These tests subject the unit to 0.7 g forces over the range of 18–1000 Hz random in 3 directions for 2 hours. All Danfoss VLT® drives comply with requirements that correspond to these conditions when the unit is wall or floor mounted and when the unit is mounted within panels bolted to walls or to floors.

9.2.6 Maintenance

Danfoss drive models up to 90 kW are maintenancefree. High-power drives (rated at 110 kW or higher) have built-in filter mats, which require periodic cleaning depending on the exposure to dust and contaminants. Maintenance intervals for the cooling fans (approximately 3 years) and capacitors (approximately 5 years) are recommended in most environments.

9.3 Derating

9.3.1 Derating for Running at Low Speed

When a motor is connected to a drive, it is necessary to ensure that the cooling of the motor is adequate.

The level of heating depends on the load on the motor, the operating speed, and time.

Constant torque applications (CT mode)

A problem may occur at low RPM values in constant torque applications. In a constant torque application, a motor may overheat at low speeds due to less cooling air from the motor integral fan.

Therefore, if the motor is to be run continuously at an RPM value lower than half of the rated value, the motor must be supplied with extra air cooling (or a motor designed for this type of operation may be used).

Alternatively, reduce the load level of the motor by selecting a larger motor. However, the design of the drive limits the motor size.

Variable (quadratic) torque applications (VT)

In VT applications such as centrifugal pumps and fans, where the torque is proportional to the square of the speed and the power is proportional to the cube of the speed, there is no need for extra cooling or derating of the motor.

9.3.2 Derating for Low Air Pressure

The cooling capability of air is decreased at lower air pressure.

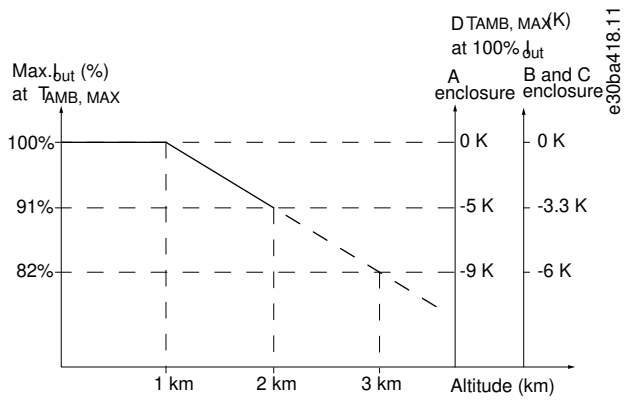

Illustration 56: Derating of Output Current Versus Altitude at $T_{AMB, MAX}$ for Enclosure Sizes A, B, and C

Below 1000 m (3280 ft) altitude, no derating is necessary. Above 1000 m (3280 ft), the ambient temperature (T_{AMB}) or maximum output current (I_{out}) should be derated in accordance with the diagram in Illustration 57.

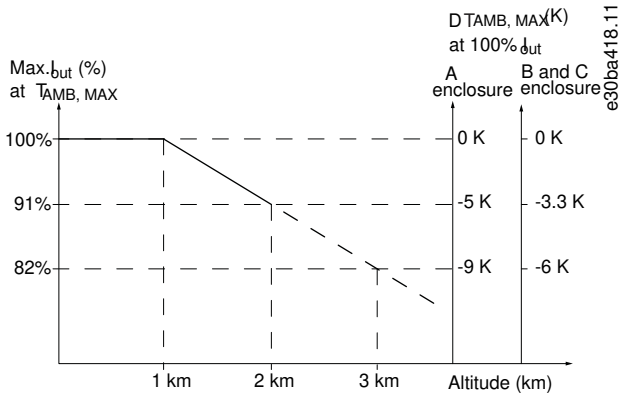

Illustration 57: Derating of Output Current versus Altitude at $T_{AMB,MAX}$ for Enclosure Sizes A, B, and C

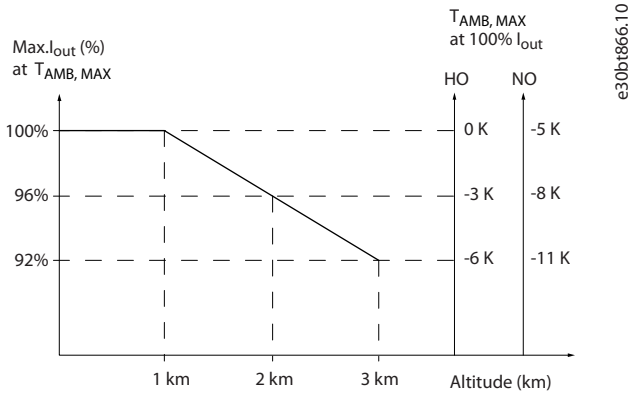

Illustration 58: Derating of Output Current Based on Altitude at $T_{AMB,MAX}$

At altitudes above 2000 m (6561 ft), contact Danfoss regarding PELV.

Alternatively, lower the ambient temperature at high altitudes and thereby ensure 100% output current at high altitudes. As an example of how to read the graph, the situation at 2000 m (6561 ft) is elaborated for an enclosure size B with $T_{AMB,MAX}$ = 50 °C (122 °F). Either the output current has to be reduces to 91% at $T_{AMB,MAX}$, or the maximum temperature has to be reduced by 3.3 K at 100% I_{out}. This means that 100% of the rated output current is available at 41.7 °C (107 °F) continuous and 46.7 °C (116 °F) intermittent.

10 Electrical Installation Considerations

10.1 Safety Instructions

⚠ WARNING ⚠

INDUCED VOLTAGE

Induced voltage from output motor cables that run together can charge equipment capacitors, even with the equipment turned off and locked out. Failure to run output motor cables separately or to use shielded cables could result in death or serious injury.

- Run output motor cables separately or use shielded cables.
- Simultaneously lock out all the drives.

⚠ WARNING ⚠

SHOCK HAZARD

The unit can cause a DC current in the PE conductor. Failure to use a Type B residual current-operated protective device (RCD) may lead to the RCD not providing the intended protection and therefore may result in death or serious injury.

- When an RCD is used for protection against electrical shock, only a Type B device is allowed on the supply side.

⚠ WARNING ⚠

LEAKAGE CURRENT HAZARD

Leakage currents exceed 3.5 mA. Failure to ground the drive properly can result in death or serious injury.

- Ensure the correct grounding of the equipment by a certified electrical installer.

For electrical safety

According to the standard EN 61800-5-1, 1 or more of these conditions for the protective circuit must be true. The connection must be fixed.

- The protective earthing conductor must have a cross-sectional area of minimum 10 mm^2 (8 AWG) Cu or 16 mm^2 (6 AWG), OR
- There must be an automatic disconnection of the mains if the protective earthing conductor breaks, OR
- There must be a terminal for a 2nd protective earthing conductor in the same cross-sectional are as the 1st protective earthing conductor.

Cross-sectional area of the phase conductors (S) [mm^s (AWG)]	The minimum cross-sectional area of the protective earthing conductor in question [mm^2 (AWG)]
S≤16 (6)	S
16 (6)<S≤35 (2)	16 (6)
35 (2)<S	S/2

The values of the table are only valid if the protective earthing conductor is made of the same metal as the phase conductors. If this is not the case, the cross-sectional area of the protective earthing conductor must be determined in a manner that produces a conductance equivalent to that which results from the calculations in the table.

The cross-sectional area of each protective earthing conductor that is not a part of the mains cable or the cable enclosure must be a minimum of:

- 25 mm^2 (14 AWG) if there is mechanical protection, AND
- 4 mm^2 (12 AWG) if there is no mechanical protection. With cord-connected equipment, ensure that the protective earthing conductor in the cord is the last conductor to be interrupted if the strain relilef mechanism breaks.

Adhere to the local regulations on the minimum size of the protective earthing conductor.

Further instructions for electrical safety:

- Ground the drive in accordance with applicable standards and directives.
- Use a dedicated ground wire for input power, motor power, and control wiring.
- Do not ground 1 drive to another in a daisy-chain fashion.
- Keep the ground wire connections as short as possible.
- Follow the wiring requirements from the motor manufacturer.

For EMC-compliant installation

- Establish electrical contact between cable shield and drive enclosure by using metal grommets or by using the clamps provided on the equipment.
- Use high-strand wire to reduce burst transient.
- Do not use pigtails.

Overcurrent protection:

- Extra protection equipment such as short-circuit protection or motor thermal protection between drive and motor are required for applications with multiple motors.
- Input fusing is required to provide short circuit and overcurrent protection. If fuses are not factory-supplied, the installer must provide them. See maximum fuse ratings in and .

Wire type and ratings:

- All wiring must comply with local and national regulations regarding cross-section and ambient temperature requirements.
- Power connection wire recommendation: Minimum 75 °C (167 °F) rated copper wire.

10.2 Wiring Schematic

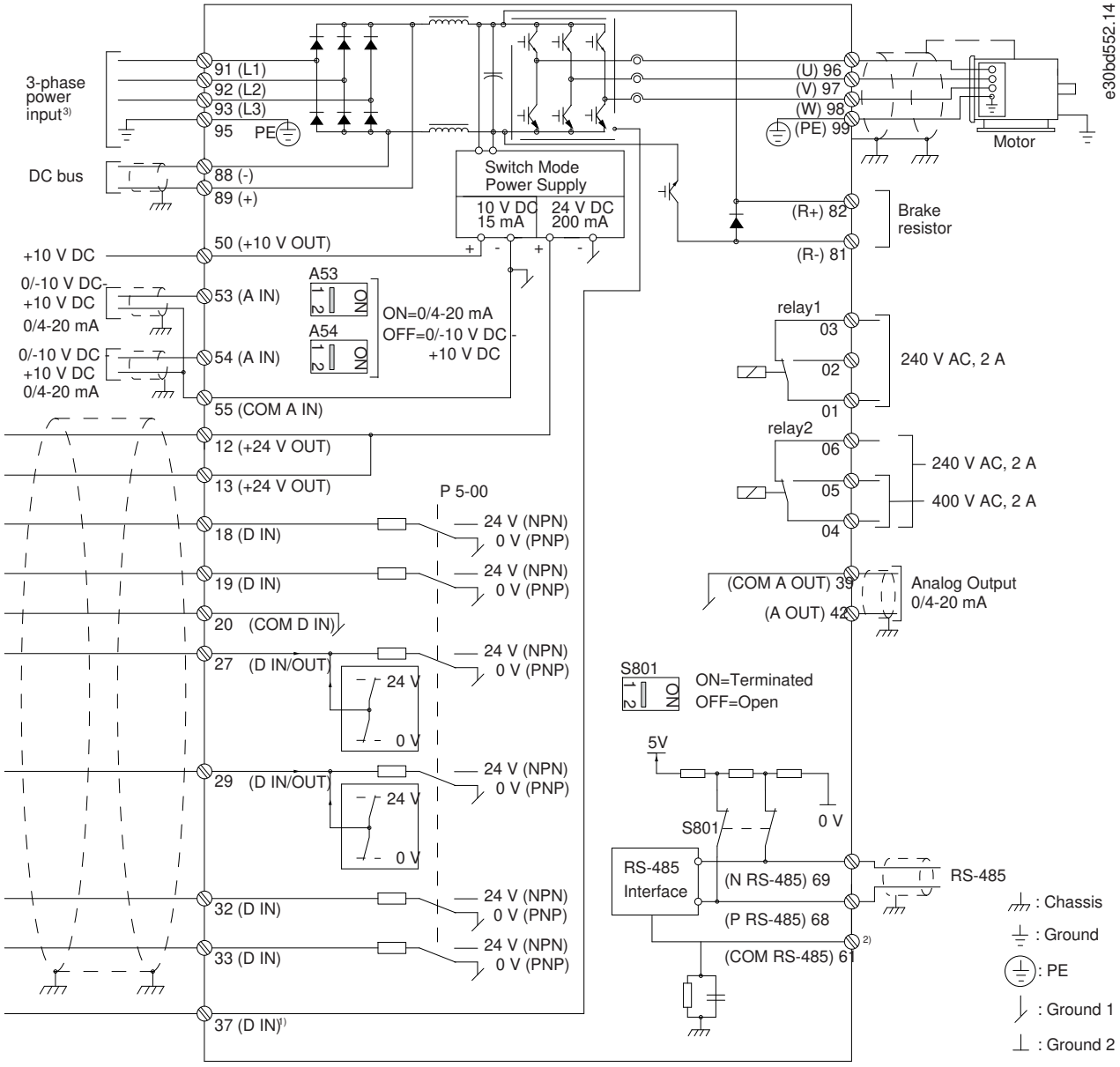

Illustration 59: Basic Wiring Schematic

A	Analog.	2	Do not connect cable shield.
D	Digital.	3	For 1-phase power input, wire to L1 and L2.
1	Terminal 37 (optional) is used for Safe Torque Off. For Safe Torque Off installation instructions, refer to the Safe Torque Off Operating Guide for Danfoss VLT® Frequency Converters.		

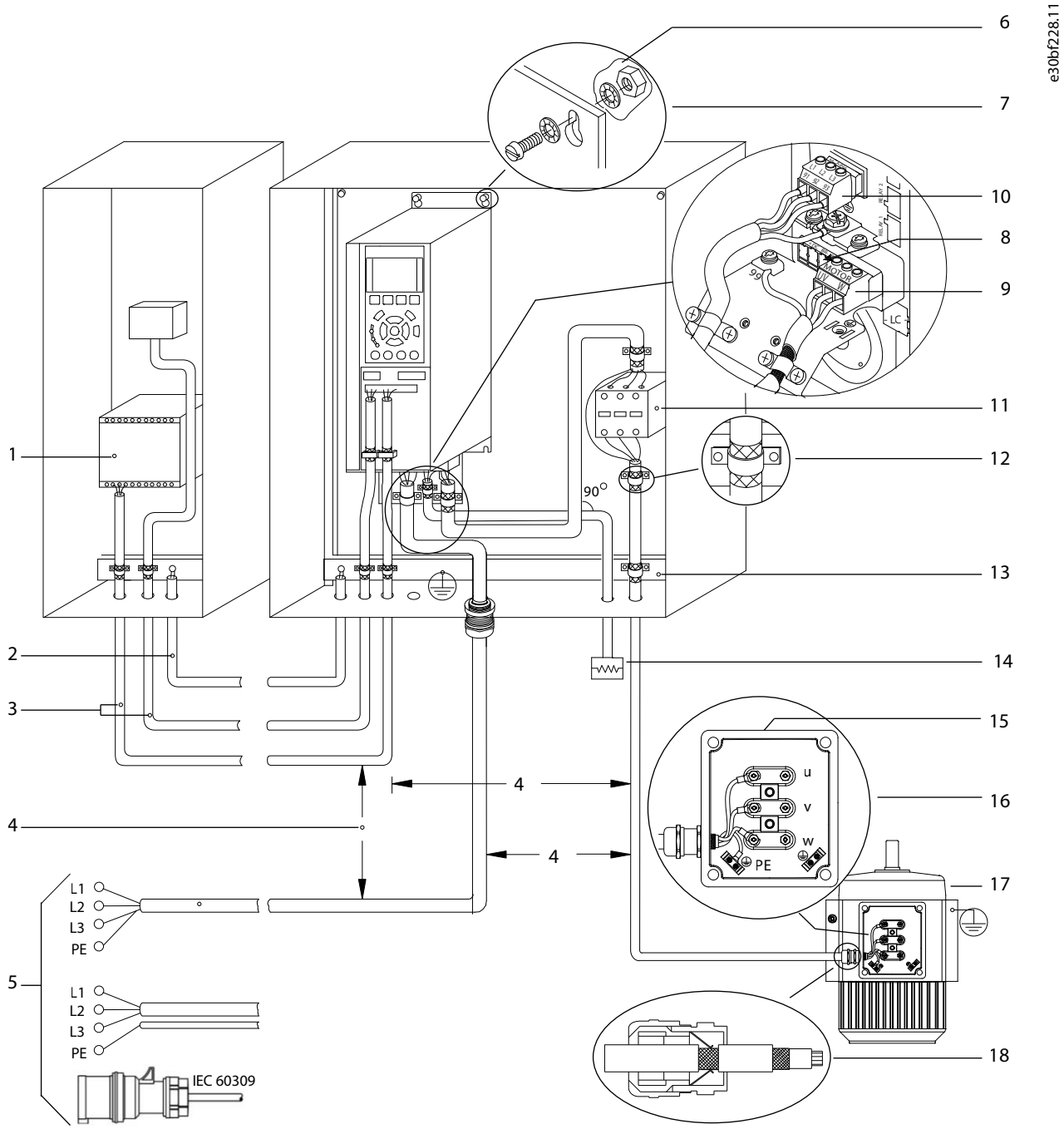

Illustration 60: EMC-compliant Electrical Connection

1	PLC.	10	Mains cable (unshielded).
2	Equalizing minimum 16 mm^2 (6 AWG).	11	Output contactor, and more.
3	Control cables.	12	Cable insulation stripped.
4	Minimum 200 mm (7.9 in) between control cables, motor cables, and mains cables.	13	Common ground busbar. Follow local and national requirements for cabinet grounding.
5	Mains supply.	14	Brake resistor.
6	Bare (unpainted) surface.	15	Metal box.
7	Star washers.	16	Connection to motor.
8	Brake cable (shielded).	17	Motor.
9	Motor cable (shielded).	18	EMC cable gland.

NOTICE

EMC INTERFERENCE

Use shielded cables for motor and control wiring, and separate cables for input power, motor wiring, and control wiring. Failure to isolate power, motor, and control cables can result in unintended behavior or reduced performance. Minimum 200 mm (7.9 in) clearance is required between power, motor, and control cables.

10.3 Connections

10.3.1 Power Connections

NOTICE

All cabling must comply with national and local regulations on cable cross-sections and ambient temperature. UL applications require 75 °C (167 °F) copper conductors. Non-UL applications can use 75 °C (167 °F) and 90 °C (194 °F) copper conductors.

NOTICE

The plug connector for power is pluggable on drives up to 7.5 kW (10 hp).

The power cable connections are located as shown in Illustration 61. See for correct dimensioning or motor cable cross-section and length.

For protection of the drive, use the recommended fuses unless the unit has built-in fuses. Recommended fuses are listed in and . Ensure that proper fusing complies with local regulations. The connection of mains is fitted to the mains switch, if included.

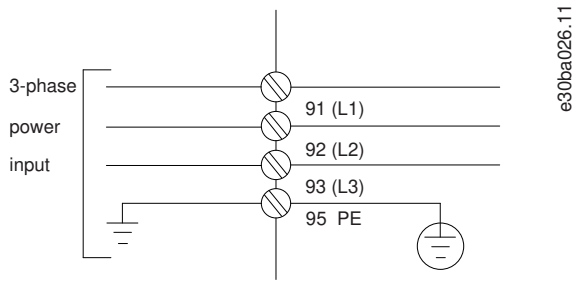

Illustration 61: Connection of Mains

Aluminum conductors

Terminals can accept aluminum conductors, but the conductor surface must be clean, and the oxidation must be removed and sealed by neutral, acid-free Vaseline grease before the conductor is connected. Furthermore, the terminal screw must be retightened after 2 days due to softness of the aluminum. It is crucial to keep the connection a gas tight joint, otherwise the aluminum surface oxidizes again.

NOTICE

The motor cable must be shielded/armored. If an unshielded/unarmored cable is used, some EMC requirements are not complied with. Use a shielded/armored motor cable to comply with EMC emission specifications.

For more information on EMC, see 10.16 EMC-compliant Installation.

Shielding of cables

Avoid installation with twisted shield ends (pigtails). They spoil the shielding effect at higher frequencies. If it is necessary to break the shield to install a motor isolator or contactor, continue the shield at the lowest possible HF impedance. Connect the motor cable shield to both the decoupling plate of the drive and the metal housing of the motor. Make the shield connections with the largest possible surface area (cable clamp) by using the installation devices within the drive.

Cable length and cross-section

The drive has been EMC-tested with a given length of cable. Keep the motor cable as short as possible to reduce noise level and leakage currents.

Switching frequency

When drives are used together with sine-wave filters to reduce the acoustic noise from a motor, the switching frequency must be set according to the instructions in *parameter 14-01 Switching Frequency*.

NOTICE

In motors without phase insulation, paper, or other insulation reinforcement suitable for operation with voltage supply, use a sine-wave filter on the output of the drive.

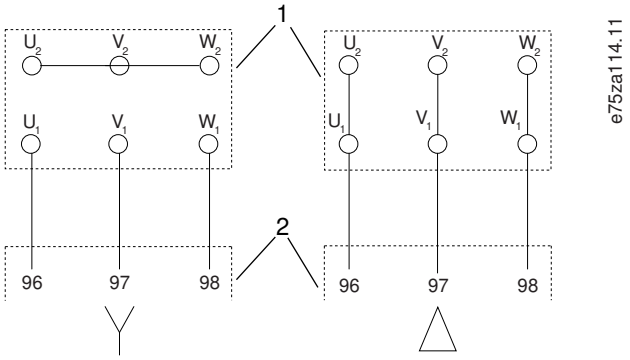

Illustration 62: Motor Cable Connection

1	Motor
2	Drive

10.3.2 IT Grid Connection

Mains supply isolated from ground

If the drive is supplied from an isolated mains source (IT mains, floating delta, or grounded delta) or TT/TN-S mains with grounded leg, the RFI switch is recommended to be turned off via *parameter 14-50 RFI Filter* on the drive and *parameter 14-50 RFI Filter* on the filter. For more detail, see IEC 364-3. In the off position, the filter capacitors between the chassis and the DC link are cut off to avoid damage to the DC link and to reduce the ground capacity currents, according to IEC 61800-3. If optimum EMC performance is needed, or parallel motors are connected, or the motor cable length is above 25 m (82 ft), Danfoss recommends setting *parameter 14-50 RFI Filter* to *[1] On*. Refer also to the Application Note, VLT on IT grid. It is important to use isolation monitors that are rated for use together with power electronics (IEC 61557-8).

Danfoss does not recommend using an output contactor for 525–690 V drives connected to an IT mains network.

10.3.3 DC Bus Connection

NOTICE

EMC REQUIREMENTS

According to the EMC Directive, a system is defined as a combination of several types of equipment, finished products, and/or components combined, designed and/or put together by the same person (system manufacturer) intended to be placed on the market for distribution as a single functional unit for an end user and intended to be installed and operated together to perform a specific task.

The EMC directive applies to products/systems and installations, but in case the installation is built up of CE-marked products/systems, the installation can also be considered compliant with the EMC directive. Installations shall not be CE marked.

According to the EMC Directive, Danfoss Drives as a manufacturer of product/systems is responsible for obtaining the essential requirements of the EMC directive and attaching the CE mark. For systems involving load sharing and other DC terminals, Danfoss Drives can only ensure compliance to EMC Directive when the end user connects combinations of Danfoss Drives products as described in our technical documentation.

If any third-party products are connected to the load share or other DC terminals on the AC drives, Danfoss Drives cannot guarantee that the EMC requirements are fulfilled.

The DC bus terminal is used for DC back-up, with the DC link being supplied from an external source.

Terminals	Function
88, 89	DC bus

10.3.4 Load Sharing Connection

NOTICE

EMC REQUIREMENTS

According to the EMC Directive, a system is defined as a combination of several types of equipment, finished products, and/or components combined, designed and/or put together by the same person (system manufacturer) intended to be placed on the market for distribution as a single functional unit for an end user and intended to be installed and operated together to perform a specific task.

The EMC directive applies to products/systems and installations, but in case the installation is built up of CE-marked products/systems, the installation can also be considered compliant with the EMC directive. Installations shall not be CE marked.

According to the EMC Directive, Danfoss Drives as a manufacturer of product/systems is responsible for obtaining the essential requirements of the EMC directive and attaching the CE mark. For systems involving load sharing and other DC terminals, Danfoss Drives can only ensure compliance to EMC Directive when the end user connects combinations of Danfoss Drives products as described in our technical documentation.

If any third-party products are connected to the load share or other DC terminals on the AC drives, Danfoss Drives cannot guarantee that the EMC requirements are fulfilled.

Load sharing links together the DC links of several drives. For an overview, see 6.4 Load Sharing.

The load sharing feature requires extra equipment and safety considerations. Consult Danfoss for ordering and installation recommendations.

Terminals	Function
88, 89	Load sharing

10.3.5 Brake Cable Connection

The connection cable to the brake resistor must be shielded and the maximum length from the drive to the DC bar is limited to 25 m (82 ft).

- Use cable clamps to connect the shield to the conductive backplate on the drive and to the metal cabinet of the brake resistor.
- Size the brake cable cross-section to match the brake torque.

Terminals	Function
81, 82	Brake resistor terminals

See the VLT® Brake Resistor MCE 101 Design Guide for more details.

NOTICE

If a short circuit in the brake module occurs, prevent excessive power dissipation in the brake resistor by using a mains switch or contactor to disconnect the mains from the drive.

10.3.6 Grounding

To obtain electromagnetic compatibility (EMC), consider the following basic issues when installing a drive.

- Safety grounding: Note that the drive has a high leakage current and must be grounded appropriately for safety reasons. Apply local safety regulations.
- High-frequency grounding: Keep the ground wire connections as short as possible.

Connect the different ground systems at the lowest possible conductor impedance. The lowest possible conductor impedance is obtained by keeping the conductor as short as possible and by using the greatest possible surface area. The metal cabinets of the different devices are mounted on the cabinet rear plate using the lowest possible HF impedance. This avoids having different HF voltages for the individual devices and avoids the risk of radio interference currents running in connection cables that may be used between the devices. The radio interference has been reduced. To obtain a low HF impedance, use the fastening bolts of the devices as HF connection to the rear plate. It is necessary to remove insulating paint or similar from the fastening points.

10.3.7 Safety Ground Connection

⚠ WARNING ⚠

LEAKAGE CURRENT HAZARD

Leakage currents exceed 3.5 mA. Failure to ground the drive properly can result in death or serious injury.

– Ensure the correct grounding of the equipment by a certified electrical installer.

The drive has a high leakage current and must be grounded appropriately for safety reasons according to IEC 61800-5-1.

10.4 Cables

10.4.1 EMC-correct Cables

To optimize EMC immunity of the control cables and emission from the motor cables, use braided shielded/armored cables.

The ability of a cable to reduce the in- and outgoing radiation of electric noise depends on the transfer impedance (Z_T). The shield of a cable is normally designed to reduce the transfer of electric noise. However, a shield with a lower transfer impedance (Z_T) value is more effective than a shield with a higher transfer impedance (Z_T).

Cable manufacturers rarely state the transfer impedance (Z_T), but it is often possible to estimate transfer impedance (Z_T) by assessing the physical design of the cable.

Transfer impedance (Z_T) can be assessed based on the following factors:

- The conductibility of the shield material.
- The contact resistance between the individual shield conductors.
- The shield coverage, that is, the physical area of the cable covered by the shield - often stated as a percentage value.
- Shield type (braided or twisted).

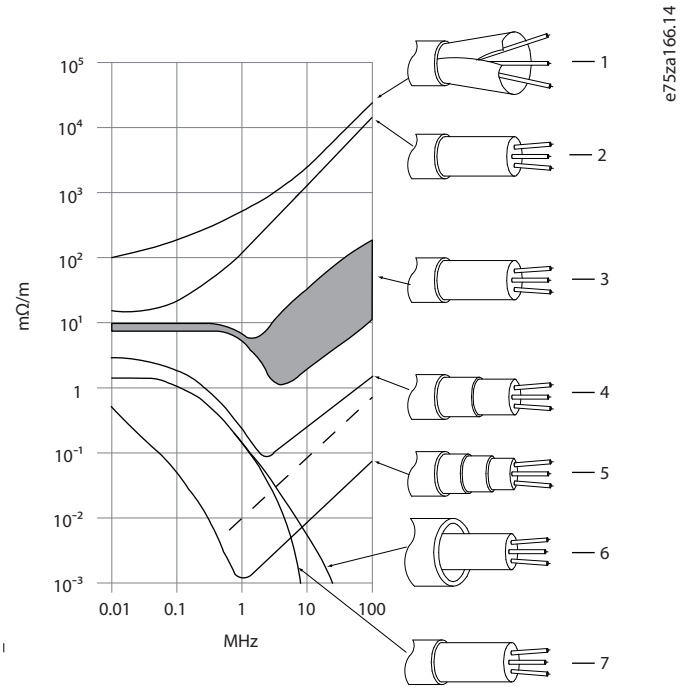

Illustration 63: Transfer Impedance (Z_T)

1	Aluminum-clad with copper wire.	5	Twin layer of braided copper wire with a magnetic, shielded/armored intermediate layer.
2	Twisted copper wire or armored steel wire cable.	6	Cable that runs in copper tube or steel tube.
3	Single-layer braided copper wire with varying percentage shield coverage. This is the typical reference cable.	7	Lead cable with 1.1 mm (0.04 in) wall thickness.
4	Double-layer braided copper wire.		

10.4.2 Preparing Cable Entry Holes

Procedure

1. Remove cable entry from the drive. Avoid that foreign parts fall into the drive when removing the knockouts.
2. Support the cable entry where the knockout is to be removed.
3. Remove the knockout with a strong mandrel and a hammer.
4. Remove burrs from the hole.
5. Mount the cable entry on the drive.

10.4.3 Specifications of Entry Holes

The suggested uses of the holes are recommendations, but other solutions are possible. Unused cable entry holes can be sealed with rubber grommets (for IP21).

10.4.3.1 Entry Holes, Enclosure Size A2, IP21

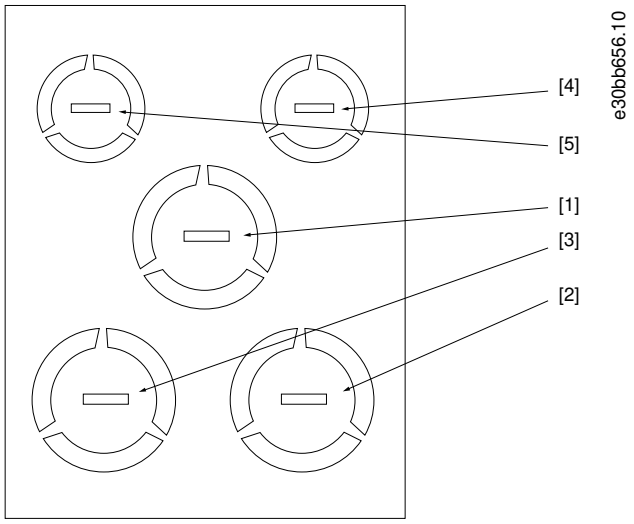

Table 47: Dimensions of Entry Holes for Enclosure Size A2, IP21

Hole number and recommended use	Dimensions[1]		Nearest metric
	UL [in]	[mm]	
1) Mains	3/4	28.4	M25
2) Motor	3/4	28.4	M25
3) Brake/loadsharing	3/4	28.4	M25
4) Control cable	1/2	22.5	M20
5) Control cable	1/2	22.5	M20

[1] Tolerance ±0.2 mm.

10.4.3.2 Entry Holes, Enclosure Size A3, IP21

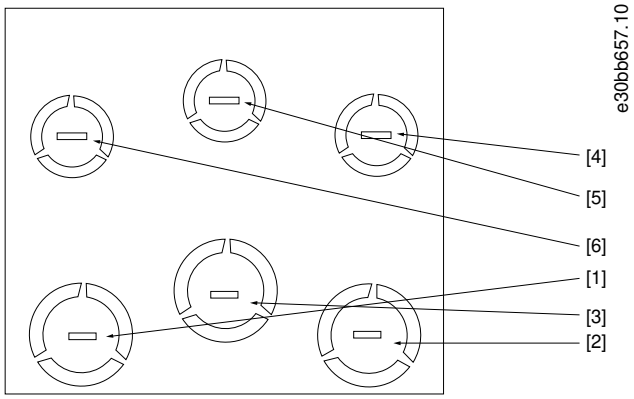

Table 48: Dimensions of Entry Holes for Enclosure Size A3, IP21

Hole number and recommended use	Dimensions[1]		Nearest metric
	UL [in]	[mm]	
1) Mains	3/4	28.4	M25
2) Motor	3/4	28.4	M25

Hole number and recommended use	Dimensions[1]		Nearest metric
3) Brake/loadsharing	3/4	28.4	M25
4) Control cable	1/2	22.5	M20
5) Control cable	1/2	22.5	M20
6) Control cable	1/2	22.5	M20

[1] Tolerance ±0.2 mm.

10.4.3.3 Entry Holes, Enclosure Size A4, IP55

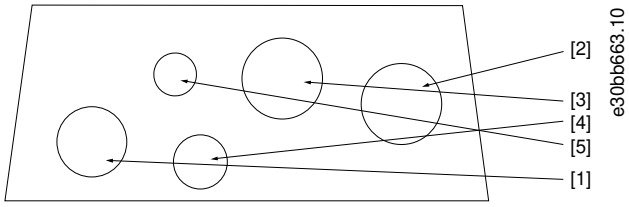

Table 49: Dimensions of Entry Holes for Enclosure Size A4, IP55

Hole number and recommended use	Dimensions[1]		Nearest metric
	UL [in]	[mm]	
1) Mains	3/4	28.4	M25
2) Motor	3/4	28.4	M25
3) Brake/loadsharing	3/4	28.4	M25
4) Control cable	1/2	22.5	M20
5) Removed	–	–	–

[1] Tolerance ±0.2 mm.

10.4.3.4 Entry Holes, Enclosure Size A4, IP55 Threaded Gland Holes

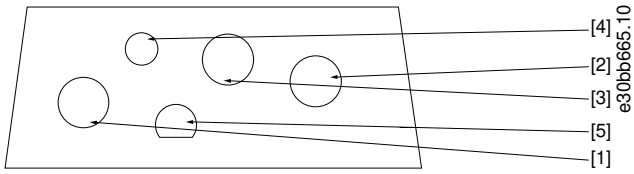

Table 50: Dimensions of Entry Holes for Enclosure Size A4, IP55 Threaded Gland Holes

Hole number and recommended use	Metric thread size
1) Mains	M25
2) Motor	M25
3) Brake/loadsharing	M25
4) Control cable	M16
5) Control cable	M20

10.4.3.5 Entry Holes, Enclosure Size A5, IP55

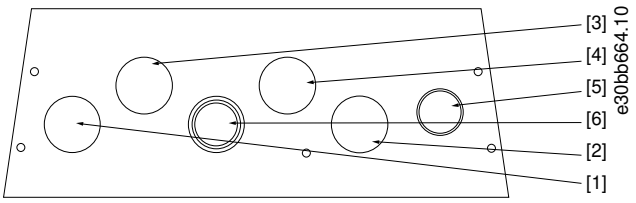

Table 51: Dimensions of Entry Holes for Enclosure Size A5, IP55

Hole number and recommended use	Dimensions[1]		Nearest metric
	UL [in]	[mm]	
1) Mains	3/4	28.4	M25
2) Motor	3/4	28.4	M25
3) Brake/loadsharing	3/4	28.4	M25
4) Control cable	3/4	28.4	M25
5) Control cable[2]	3/4	28.4	M25
6) Control cable[2]	3/4	28.4	M25

[1] Tolerance ±0.2 mm.

[2] Knockout hole.

10.4.3.6 Entry Holes, Enclosure Size A5, IP55 Threaded Gland Holes

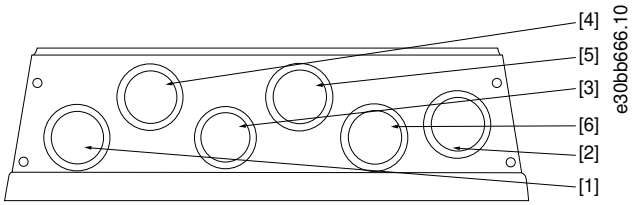

Table 52: Dimensions of Entry Holes for Enclosure Size A5, IP55 Threaded Gland Holes

Hole number and recommended use	Metric thread size
1) Mains	M25
2) Motor	M25
3) Brake/loadsharing	28.4 mm[1]
4) Control cable	M25
5) Control cable	M25
6) Control cable	M25

[1] Knockout hole

10.4.3.7 Entry Holes, Enclosure Size B1, IP21

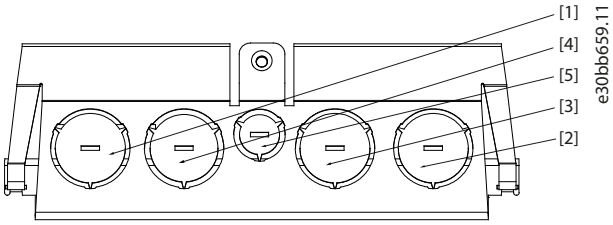

Table 53: Dimensions of Entry Holes for Enclosure Size B1, IP21

Hole number and recommended use	Dimensions[1]		Nearest metric
	UL [in]	[mm]	
1) Mains	1	34.7	M32
2) Motor	1	34.7	M32
3) Brake/loadsharing	1	34.7	M32
4) Control cable	1	34.7	M32
5) Control cable	1/2	22.5	M20

[1] Tolerance ±0.2 mm.

10.4.3.8 Entry Holes, Enclosure Size B1, IP55

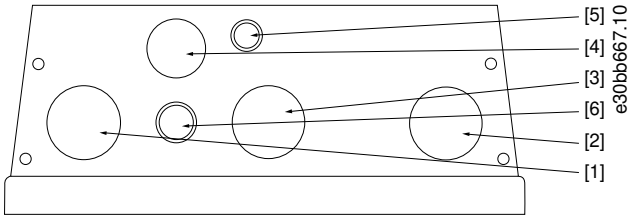

Table 54: Dimensions of Entry Holes for Enclosure Size B1, IP55

Hole number and recommended use	Dimensions[1]		Nearest metric
	UL [in]	[mm]	
1) Mains	1	34.7	M32
2) Motor	1	34.7	M32
3) Brake/loadsharing	1	34.7	M32
4) Control cable	3/4	28.4	M25
5) Control cable	1/2	22.5	M20
6) Control cable[2]	1/2	22.5	M20

[1] Tolerance ±0.2 mm.

[2] Knockout hole.

10.4.3.9 Entry Holes, Enclosure Size B1, IP55 Threaded Gland Holes

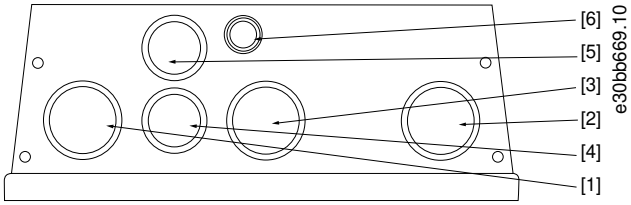

Table 55: Dimensions of Entry Holes for Enclosure Size B1, IP55 Threaded Gland Holes

Hole number and recommended use	Metric thread size
1) Mains	M32
2) Motor	M32
3) Brake/loadsharing	M32
4) Control cable	M25
5) Control cable	M25
6) Control cable	22.5 mm[1]

[1] Knockout hole

10.4.3.10 Entry Holes, Enclosure Size B2, IP21

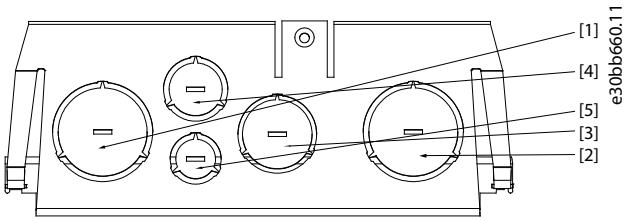

Table 56: Dimensions of Entry Holes for Enclosure Size B2, IP21

Hole number and recommended use	Dimensions[1]		Nearest metric
	UL [in]	[mm]	
1) Mains	1 1/4	44.2	M40
2) Motor	1 1/4	44.2	M40
3) Brake/loadsharing	1	34.7	M32
4) Control cable	3/4	28.4	M25
5) Control cable	1/2	22.5	M20

[1] Tolerance ±0.2 mm.

10.4.3.11 Entry Holes, Enclosure Size B2, IP55

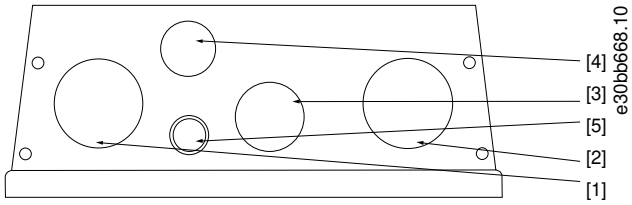

Table 57: Dimensions of Entry Holes for Enclosure Size B2, IP55

Hole number and recommended use	Dimensions[1]		Nearest metric
	UL [in]	[mm]	
1) Mains	1 1/4	44.2	M40
2) Motor	1 1/4	44.2	M40
3) Brake/loadsharing	1	34.7	M32
4) Control cable	3/4	28.4	M25
5) Control cable[2]	1/2	22.5	M20

[1] Tolerance ±0.2 mm.

[2] Knockout hole.

10.4.3.12 Entry Holes, Enclosure Size B2, IP55 Threaded Gland Holes

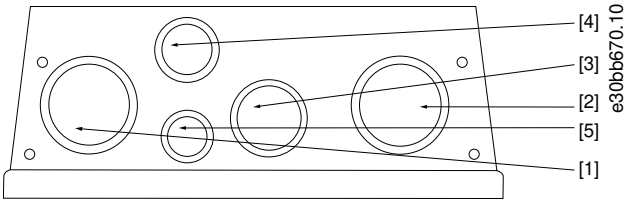

Table 58: Dimensions of Entry Holes for Enclosure Size B2, IP55 Threaded Gland Holes

Hole number and recommended use	Metric thread size
1) Mains	M40
2) Motor	M40
3) Brake/loadsharing	M32
4) Control cable	M25
5) Control cable	M20

10.4.3.13 Entry Holes, Enclosure Size B3, IP21

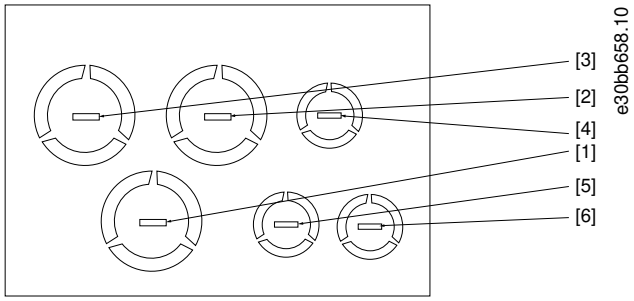

Table 59: Dimensions of Entry Holes for Enclosure Size B3, IP21

Hole number and recommended use	Dimensions[1]		Nearest metric
	UL [in]	[mm]	
1) Mains	1	34.7	M32
2) Motor	1	34.7	M32
3) Brake/loadsharing	1	34.7	M32
4) Control cable	1/2	22.5	M20
5) Control cable	1/2	22.5	M20
6) Control cable	1/2	22.5	M20

[1] Tolerance ±0.2 mm.

10.4.3.14 Entry Holes, Enclosure Size C1, IP21

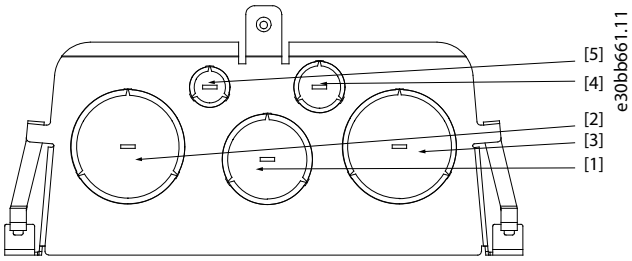

Table 60: Dimensions of Entry Holes for Enclosure Size C1, IP21

Hole number and recommended use	Dimensions[1]		Nearest metric
	UL [in]	[mm]	
1) Mains	2	63.3	M63
2) Motor	2	63.3	M63
3) Brake/loadsharing	1 1/2	50.2	M50
4) Control cable	3/4	28.4	M25
5) Control cable	1/2	22.5	M20

[1] Tolerance ±0.2 mm.

10.4.3.15 Entry Holes, Enclosure Size C2, IP21

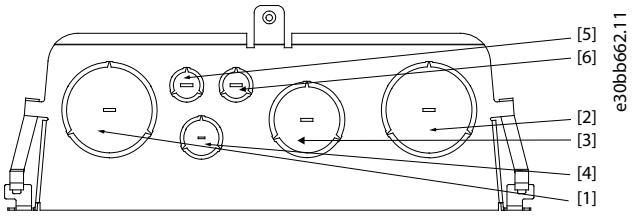

Table 61: Dimensions of Entry Holes for Enclosure Size C2, IP21

Hole number and recommended use	Dimensions[1]		Nearest metric
	UL [in]	[mm]	
1) Mains	2	63.3	M63
2) Motor	2	63.3	M63
3) Brake/loadsharing	1 1/2	50.2	M50
4) Control cable	3/4	28.4	M25
5) Control cable	1/2	22.5	M20
6) Control cable	1/2	22.5	M20

[1] Tolerance ±0.2 mm.

10.4.4 Tightening Torques for Cover

Table 62: Tightening Torque Values [Nm]

Enclosure size	IP20	IP21	IP55	IP66
A1	(1)	(2)	(2)	(2)
A2	(1)	(1)	(2)	(2)
A3	(1)	(1)	(2)	(2)
A4/A5	(2)	(2)	2	2
B1	(2)	(1)	2.2	2.2
B2	(1)	(2)	2.2	2.2
B3	(1)	(2)	(2)	(2)
B4	(1)	(2)	(2)	(2)
C1	(2)	(1)	2.2	2.2
C2	(2)	(1)	2.2	2.2
C3	2	(2)	(2)	(2)
C4	2	(2)	(2)	(2)

[1] No screws to tighten.

[2] Does not exist.

10.5 Control Wiring and Terminals

10.5.1 Shielded Control Cables

Usually, the preferred method is to secure control and serial communication cables with shielding clamps provided at both ends to ensure the best possible high frequency cable contact.

If the ground potential between the drive and the PLC is different, electric noise could disturb the entire system. Solve this problem by fitting an equalizing cable as close as possible to the control cable. Minimum cable cross-section: 16 mm^2 (6 AWG).

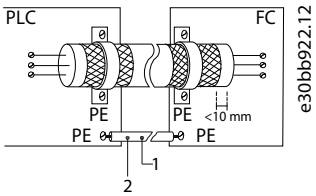

Illustration 64: Shielding Clamps at Both Ends

1	Minimum 16 mm^2 (6 AWG)
2	Equalizing cable

10.5.1.1 50/60 Hz Ground Loops

With long control cables, ground loops may occur. To eliminate ground loops, connect 1 end of the shield to the ground with a 100 nF capacitor (keeping leads short).

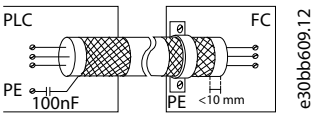

Illustration 65: Connection with a 100 nF Capacitor

10.5.1.2 Avoid EMC Noise on Serial Communication

This terminal is connected to ground via an internal RC link. Use twisted-pair cables to reduce interference between conductors. The recommended method is shown in the following illustration.

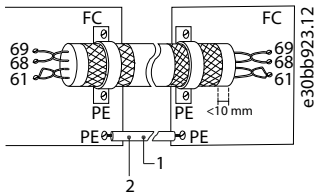

Illustration 66: Twisted-pair Cables

1	Minimum 16 mm^2 (6 AWG)
2	Equalizing cable

Alternatively, the connection to terminal 61 can be omitted.

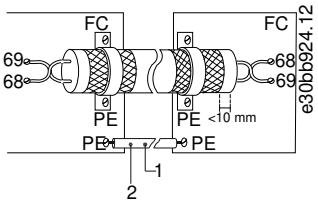

Illustration 67: Twisted-pair Cables without Terminal 61

1	Minimum 16 mm^2 (6 AWG)
2	Equalizing cable

10.5.2 Wiring to Control Terminals

N O T I C E

KEEP CONTROL CABLES AS SHORT AS POSSIBLE AND SEPARATE THEM FROM HIGH-POWER CABLES TO MINIMIZE INTERFERENCE.

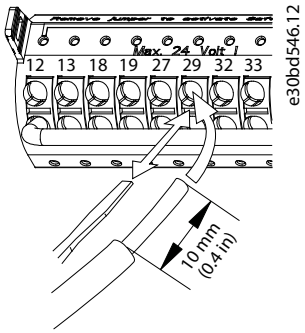

Illustration 68: Connecting Control Wires

10.5.3 Control Terminal Types

Find the location of the removable drive connectors in Illustration 69 and Illustration 70. Terminal functions and default settings are summarized in 10.5.4 Terminal Descriptions.

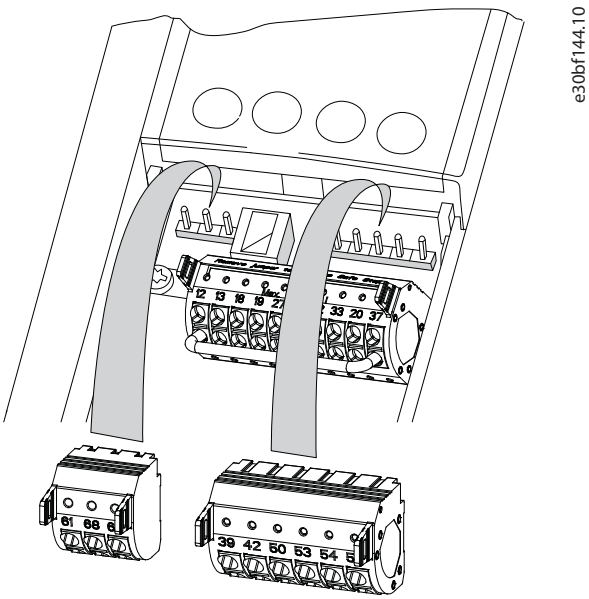

Illustration 69: Control Terminal Locations

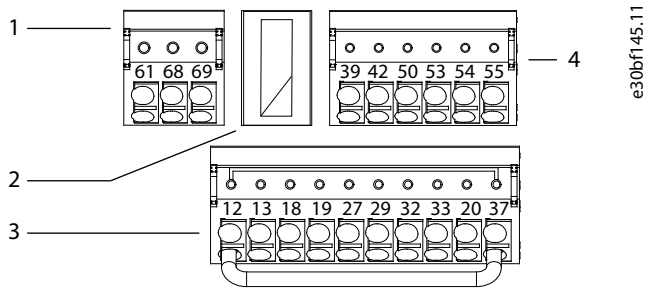

Illustration 70: Terminal Numbers on the Connectors

1	Serial communication connector	3	Digital input/output connector
2	USB port	4	Analog input/output connector

- Serial communication connector provides 2 terminals (+)68 and (-) 69 for an RS485 serial communication.
- USB port available for use with the MCT 10 Set-up Software.
- Digital input/output connector provides:
  - 4 programmable digital input terminals.
  - 2 additional digital terminals programmable as either input or output.
  - A 24 V DC terminal supply voltage.
  - A common for optional customer-supplied 24 V DC voltage.
- Analog input/output connector provides:
  - 2 analog inputs.
  - 1 analog output.
  - 10 V DC supply voltage.
  - Commons for the inputs and output.

10.5.4 Terminal Descriptions

Table 63: Digital Inputs/Outputs

Terminal	Parameter	Default setting	Description
12, 13	–	+24 V DC	+24 V DC supply voltage for digital inputs and external transducers. Maximum output current 200 mA for all 24 V loads.
18	*Parameter 5-10 Terminal 18 Digital Inputs*	*[8] Start*	Digital inputs
19	*Parameter 5-11 Terminal 19 Digital Inputs*	*[0] No operation*	
32	*Parameter 5-14 Terminal 32 Digital Input*	*[0] No operation*	
33	*Parameter 5-15 Terminal 33 Digital Input*	*[0] No operation*	
27	*Parameter 5-12 Terminal 27 Digital Input*	*[2] Coast inverse*	For digital input or output. Default setting is input.
29	*Parameter Terminal 29 Digital Input*	*[14] Jog*	
20	–	–	Common for digital inputs and 0 V potential for 24 V supply.
37	–	Safe Torque Off (STO)	Safe input (optional). Used for STO.

Table 64: Analog Inputs/Outputs

Terminal	Parameter	Default setting	Description
39	–	–	Common for analog output.
42	*Parameter 6-50 Terminal 42 Output*	Speed 0–high limit	Programmable analog output. 0–20 mA or 4–20 mA at a maximum of 500 Ω.
50	–	+10 V DC	10 V DC analog supply voltage potentiometer or thermistor. 15 mA maximum.
53	*Parameter group 6-1* Analog Input 1*	Reference	Analog input. For voltage or current. Switches A53 and A54 select mA or V.
54	*Parameter group 6-1* Analog Input 2*	Feedback	
55	–	–	Common for analog input.

Table 65: Serial Communication

Terminal	Parameter	Default setting	Description
61	–	–	Integrated RC-filter for cable shield. ONLY for connecting the shield if EMC problems occur.
68 (+)	*Parameter group 8-3* FC Port Settings*	–	RS485 interface. A control card switch is provided for termination resistance.
69 (-)	*Parameter group 8-3* FC Port Settings*	–	

Table 66: Relays

Terminal	Parameter	Default setting	Description
01, 02, 03	*Parameter 5-40 Function Relay [0]*	*[9] Alarm*	Form C relay output. For AC or DC voltage and resistive or inductive loads.
04, 05, 06	*Parameter 5-40 Function Relay [1]*	*[5] Running*	

Table 67: Additional Terminals

Terminal	Location
1 form C relay outputs	The location of the outputs depend on the drive configuration.
Terminals on built-in optional equipment	See the manual provided with the equipment option.

10.6 Fuses and Circuit Breakers

10.6.1 Fuse Recommendations

Fuses ensure that possible damage to the drive is limited to damages inside the unit. Danfoss recommends fuses and/or circuit breakers on the supply side as protection. For further information, see *Application Note Fuses and Circuit Breakers*.

NOTICE

Use of fuses on the supply side is mandatory for IEC 60364 (CE) and NEC 2009 (UL) compliant installations.

Recommendations

- gG type fuses.
- Moeller type circuit breakers. For other circuit breaker types, ensure that the energy into the drive is equal to or lower than the energy provided by Moeller types.

For further information, see *Application Note Fuses and Circuit Breakers*.

The recommended fuses in and are suitable for use on a circuit capable of 100000 A_{rms} (symmetrical), depending on the drive voltage rating. With the proper fusing, the drive short circuit current rating (SCCR) is 10000 A_{rms}.

10.6.2 CE Compliance

Table 68: 200–240 V, Enclosure Sizes A, B, and C

Enclosure	Power [kW (hp)]	Recommended fuse size	Recommended maximum fuse	Recommended circuit breaker Moeller	Maximum trip level [A]
A2	0.25–1.5 (0.34–2.0)	gG-10	gG-25	PKZM0-25	25
	2.2 (3.0)	gG-16			
A3	3.0 (4.0)	gG-16	gG-32	PKZM0-25	25
	3.7 (5.0)	gG-20			
A4	0.25–1.5 (0.34–2.0)	gG-10	gG-32	PKZM0-25	25
	2.2 (3.0)	gG-16			
A5	0.25–1.5 (0.34–2.0)	gG-10	gG-32	PKZM0-25	25
	2.2–3.0 (3.0–4.0)	gG-16			
	3.7 (5.0)	gG-20			
B1	5.5 (7.5)	gG-25	gG-80	PKZM4-63	63
	7.5–11 (10–15)	gG-32			
B2	15 (20)	gG-50	gG-100	NZMB1-A100	100
B3	5.5–7.5 (7.5–10)	gG-25	gG-63	PKZM4-50	50
	11 (15)	gG-32			
B4	15 (20)	gG-50	gG-125	NZMB1-A100	100
	18 (24)	gG-63			
C1	18 (24)	gG-63	gG-160	NZMB2-A200	160
	22 (30)	gG-80			
	30 (40)	gG-100	aR-160		
C2	37 (50)	aR-160	aR-200	NZMB2-A250	250
	45 (60)	aR-200	aR-250		
C3	22 (30)	gG-80	gG-150	NZMB2-A200	150
	30 (40)	aR-125	aR-160		
C4	37 (50)	aR-160	aR-200	NZMB2-A250	250
	45 (60)	aR-200	aR-250		

Table 69: 380–480 V, Enclosure Sizes A, B, and C

Enclosure	Power [kW (hp)]	Recommended fuse size	Recommended maximum fuse	Recommended circuit breaker Moeller	Maximum trip level [A]
A2	1.1–3.0 (1.5–4.0)	gG-10	gG-25	PKZM0-25	25
	4.0 (5.0)	gG-16			
A3	5.5–7.5 (7.5–10.0)	gG-16	gG-32	PKZM0-25	25
A4	1.1–3.0 (1.5–4.0)	gG-10	gG-32	PKZM0-25	25
	4.0 (5.0)	gG-16			
A5	1.1–3.0 (1.5–4.0)	gG-10	gG-32	PKZM0-25	25
	4.0–7.5 (5.0–10.0)	gG-16			
B1	11–18 (15–24)	gG-40	gG-80	PKZM4-63	63
B2	22 (30)	gG-50	gG-100	NZMB1-A100	100
	30 (40)	gG-63			
B3	11–18 (15–24)	gG-40	gG-63	PKZM4-50	50
B4	22 (30)	gG-50	gG-125	NZMB1-A100	100
	30 (40)	gG-63			
	37 (50)	gG-80			
C1	37 (50)	gG-80	gG-160	NZMB2-A200	160
	45 (60)	gG-100			
	55 (75)	gG-160			
C2	75 (100)	aR-200	aR-250	NZMB2-A250	250
	90 (125)	aR-250			
C3	45 (60)	gG-100	gG-150	NZMB2-A200	150
	55 (75)	gG-160	gG-160		
C4	75 (100)	aR-200	aR-250	NZMB2-A250	250
	90 (125)	aR-250			

Table 70: 525–600 V, Enclosure Sizes A, B, and C

Enclosure	Power [kW (hp)]	Recommended fuse size	Recommended maximum fuse	Recommended circuit breaker Moeller	Maximum trip level [A]
A2	1.1–4.0 (1.5–5.0)	gG-10	gG-25	PKZM0-25	25
A3	5.5 (7.5)	gG-10	gG-32	PKZM0-25	25
	7.5 (10)	gG-16			
A5	1.1–5.5 (1.5–7.5)	gG-10	gG-32	PKZM0-25	25
	7.5 (10)	gG-16			
B1	11 (15)	gG-25	gG-80	PKZM4-63	63

Enclosure	Power [kW (hp)]	Recommended fuse size	Recommended maximum fuse	Recommended circuit breaker Moeller	Maximum trip level [A]
	15 (20)	gG-32			
	18.5 (25)	gG-40			
B2	22 (30)	gG-50	gG-100	NZMB1-A100	100
	30 (40)	gG-63			
B3	11 (15)	gG-25	gG-63	PKZM4-50	50
	15–18.5 (20–25)	gG-32			
B4	22 (30)	gG-40	gG-125	NZMB1-A100	100
	30 (40)	gG-50			
	37 (50)	gG-63			
C1	37 (50)	gG-63	gG-160	NZMB2-A200	160
	45 (60)	gG-100			
	55 (60)	aR-160	aR-250		
C2	75–90 (100–125)	aR-200	aR-250	NZMB2-A250	250
C3	45 (60)	gG-63	gG-150	NZMB2-A200	150
	55 (75)	gG-100			
C4	75 (100)	aR-160	aR-250	NZMB2-A250	250
	90 (125)	aR-200			

Table 71: 525–690 V, Enclosure Sizes A, B, and C

Enclosure	Power [kW (hp)]	Recommended fuse size	Recommended maximum fuse	Recommended circuit breaker Moeller	Maximum trip level [A]
A3	1.1 (1.5)	gG-6	gG-25	PKZM0-16	16
	1.5 (2.0)	gG-6	gG-25		
	2.2 (3.0)	gG-6	gG-25		
	3.0 (4.0)	gG-10	gG-25		
	4.0 (5.0)	gG-10	gG-25		
	5.5 (7.5)	gG-16	gG-25		
	7.5 (10)	gG-16	gG-25		
B2	11 (15)	gG-25	gG-63	–	–
	15 (20)	gG-25			
	18 (24)	gG-32			
	22 (30)	gG-32			
C2	30 (40)	gG-40	gG-80	–	–

Enclosure	Power [kW (hp)]	Recommended fuse size	Recommended maximum fuse	Recommended circuit breaker Moeller	Maximum trip level [A]
	37 (50)	gG-63	gG-100	–	–
	45 (60)	gG-63	gG-125		
	55 (75)	gG-80	gG-160	–	–
	75 (100)	gG-100			
C3	37 (50)	gG-100	gG-125	–	–
	45 (60)	gG-125	gG-160	–	–

10.6.3 UL Compliance

Table 72: Recommended Maximum Fuse, 1x200–240 V, Enclosure Sizes A, B, and C

Power [kW (hp)]	Miximum prefuse size [A]	Bussmann JFHR2	Bussmann RK1	Bussmann Type J	Bussmann Type T	Bussmann Type CC	Bussmann Type CC	Bussmann Type CC
1.1 (1.5)	15	FWX-15	KTN-R15	JKS-15	JJN-15	FNQ-R-15	KTK-R-15	LP-CC-15
1.5 (2.0)	20	FWX-20	KTN-R20	JKS-20	JJN-20	FNQ-R-20	KTK-R-20	LP-CC-20
2.2 (3.0)	30	FWX-30	KTN-R30	JKS-30	JJN-30	FNQ-R-30	KTK-R-30	LP-CC-30
3.0 (4.0)	35	FWX-35	KTN-R35	JKS-35	JJN-35	–	–	–
3.7 (5.0)	50	FWX-50	KTN-R50	JKS-50	JJN-50	–	–	–
5.5 (7.5)	60	FWX-60	KTN-R60	JKS-60	JJN-60	–	–	–
7.5 (10)	80	FWX-80	KTN-R80	JKS-80	JJN-80	–	–	–
15 (20)	150	FWX-150	KTN-R150	JKS-150	JJN-150	–	–	–
22 (30)	200	FWX-200	KTN-R200	JKS-200	JJN-200	–	–	–

Table 73: Recommended Maximum Fuse, 1x200–240 V, Enclosure Sizes A, B, and C

Power [kW (hp)]	Maximum Prefuse size [A]	SIBA Type RK1	Littelfuse Type RK1	Ferraz Shawmut Type CC	Ferraz Shawmut Type RK1[(1)]	Ferraz Shawmut J
1.1 (1.5)	15	5017906-016	KLN-R15	ATM-R15	A2K-15R	HSJ15
1.5 (2.0)	20	5017906-020	KLN-R20	ATM-R20	A2K-20R	HSJ20
2.2 (3.0)	30[(1)]	5017906-032	KLN-R30	ATM-R30	A2K-30R	HSJ30
3.0 (4.0)	35	–	KLN-R35	–	A2K-35R	HSJ35
3.7 (5.0)	50	5012406-050	KLN-R50	–	A2K-50R	HSJ50
5.5 (7.5)	60[(2)]	5014006-063	KLN-R60	–	A2K-60R	HSJ60
7.5 (10)	80	5014006-080	KLN-R80	–	A2K-80R	HSJ80
15 (20)	150	5014006-150	KLN-R150	–	A2K-150R	HSJ150

Power [kW (hp)]	Maximum Prefuse size [A]	SIBA Type RK1	Littelfuse Type RK1	Ferraz Shawmut Type CC	Ferraz Shawmut Type RK1[1]	Ferraz Shawmut J
22 (30)	200	2028220-200	KLN-200	–	A2K-200R	HSJ200

[1] A6KR-fuses from Ferraz Shawmut may substitue A2KR for 240 V drives.

[2] Siba allowed up to 63 A.

Table 74: Recommended Maximum Fuse, 1x380–500 V, Enclosure Sizes B and C

Power [kW (hp)]	Maximum prefuse size[A]	Bussmann JFHR2[1]	Bussmann Type RK1[2]	Bussmann Type J	Bussmann Type T[3]	Bussmann Type CC	Bussmann Type CC	Bussmann Type CC
7.5 (10)	60	FWH-60	KTS-R60	JKS-60	JJS-60	–	–	–
11 (15)	80	FWH-80	KTS-R80	JKS-80	JJS-80	–	–	–
22 (30)	150	FWH-150	KTS-R150	JKS-150	JJS-150	–	–	–
37 (50)	200	FWH-200	KTS-R200	JKS-200	JJS-200	–	–	–

[1] FWH-fuses from Bussmann may substitute FWX for 240 V drives.

[2] KTS-fuses from Bussmann may substitute KTN for 240 V drives.

[3] JJS-fuses from Bussmann may substitute JJN for 240 V drives.

Table 75: Recommended Maximum Fuse, 1x380–500 V, Enclosure Sizes B and C

Power [kW (hp)]	Maximum prefuse size[A]	SIBA RK1	Littelfuse RK1[1]	Ferraz-Shawmut CC	Ferraz-Shawmut RK1[2]	Ferraz-Shawmut J
7.5 (10)	60	5014006063	KLS-R60	–	A6K-60R	HSJ60
11 (15)	80	2028220100	KLS-R80	–	A6K-80R	HSJ80
22 (30)	150	2028220160	KLS-R150	–	A6K-150R	HSJ150
37 (50)	200	2028220200	KLS-200	–	A6K-200R	HSJ200

[1] KLSR fuses from Littelfuse may substitute KLNR fuses for 240 V drives.

[2] A6KR fuses from Ferraz-Shawmut may substitute A2KR for 240 V drives.

Table 76: Recommended Maximum Fuse, 3x220–240 V, Enclosure Sizes A, B, and C

Power [kW (hp)]	Bussmann Type RK1[1]	Bussmann Type J	Bussmann Type T	Bussmann Type CC	Bussmann Type CC	Bussmann Type CC
0.25–0.37 (0.34–0.5)	KTN-R05	JKS-05	JJN-05	FNQ-R-5	KTK-R-5	LP-CC-5
0.55–1.1 (0.75–1.5)	KTN-R10	JKS-10	JJN-10	FNQ-R-10	KTK-R-10	LP-CC-10
1.5 (2.0)	KTN-R15	JKS-15	JJN-15	FNQ-R-15	KTK-R-15	LP-CC-15
2.2 (3.0)	KTN-R20	JKS-20	JJN-20	FNQ-R-20	KTK-R-20	LP-CC-20
3.0 (4.0)	KTN-R25	JKS-25	JJN-25	FNQ-R-25	KTK-R-25	LP-CC-25
3.7 (4.0)	KTN-R30	JKS-30	JJN-30	FNQ-R-30	KTK-R-30	LP-CC-30
5.5–7.5 (7.5–10)	KTN-R50	JKS-50	JJN-50	–	–	–
11 (15)	KTN-R60	JKS-60	JJN-60	–	–	–

Power [kW (hp)]	Bussmann Type RK1[1]	Bussmann Type J	Bussmann Type T	Bussmann Type CC	Bussmann Type CC	Bussmann Type CC
15 (20)	KTN-R80	JKS-80	JJN-80	–	–	–
18.5–22 (25–30)	KTN-R125	JKS-125	JJN-125	–	–	–
30 (40)	KTN-R150	JKS-150	JJN-150	–	–	–
37 (50)	KTN-R200	JKS-200	JJN-200	–	–	–
45 (60)	KTN-R250	JKS-250	JJN-250	–	–	–

[1] KTS-fuses from Bussmann may substitute KTN for 240 V drives.

Table 77: Recommended Maximum Fuse, 3x220–240 V, Enclosure Sizes A, B, and C

Power [kW (hp)]	SIBA Type RK1	Littelfuse Type RK1	Ferraz-Shawmut Type CC	Ferraz- Shawmut Type RK1[1]	Bussmann Type JFHR2[2]	Littelfuse JFHR2	Ferraz-Shawmut JFHR2[3]	Ferraz-Shawmut J
0.25–0.37 (0.34–0.5)	5017906-005	KLN-R-05	ATM-R-05	A2K-05-R	FWX-5	–	–	HSJ-6
0.55–1.1 (0.75–1.5)	5017906-010	KLN-R-10	ATM-R-10	A2K-10-R	FWX-10	–	–	HSJ-10
1.5 (2.0)	5017906-016	KLN-R-15	ATM-R-15	A2K-15-R	FWX-15	–	–	HSJ-15
2.2 (3.0)	5017906-020	KLN-R-20	ATM-R-20	A2K-20-R	FWX-20	–	–	HSJ-20
3.0 (4.0)	5017906-025	KLN-R-25	ATM-R-25	A2K-25-R	FWX-25	–	–	HSJ-25
3.7 (4.0)	5012406-032	KLN-R-30	ATM-R-30	A2K-30-R	FWX-30	–	–	HSJ-30
5.5–7.5 (7.5–10)	5014006-050	KLN-R-50	–	A2K-50-R	FWX-50	–	–	HSJ-50
11 (15)	5014006-063	KLN-R-60	–	A2K-60-R	FWX-60	–	–	HSJ-60
15 (20)	5014006-080	KLN-R-80	–	A2K-80-R	FWX-80	–	–	HSJ-80
18.5–22 (25–30)	2028220-125	KLN-R-125	–	A2K-125-R	FWX-125	–	–	HSJ-125
30 (40)	2028220-150	KLN-R-150	–	A2K-150-R	FWX-150	L25S-150	A25X-150	HSJ-150
37 (50)	2028220-200	KLN-R-200	–	A2K-200-R	FWX-200	L25S-200	A25X-200	HSJ-200
45 (60)	2028220-250	KLN-R-250	–	A2K-250-R	FWX-250	L25S-250	A25X-250	HSJ-250

[1] A6KR fuses from Ferraz-Shawmut may substitute A2KR for 240 V drives.

[2] FWH-fuses from Bussmann may substitute FWX for 240 V drives.

[3] A50X fuses from Ferraz-Shawmut may substitute A25X for 240 V drives.

Table 78: Recommended Maximum Fuse, 3x380–480 V, Enclosure Sizes A, B, and C

Power [kW (hp)]	Bussmann Type RK1	Bussmann Type J	Bussmann Type T	Bussmann Type CC	Bussmann Type CC	Bussmann Type CC
–	KTS-R-6	JKS-6	JJS-6	FNQ-R-6	KTK-R-5	LP-CC-5

Power [kW (hp)]	Bussmann Type RK1	Bussmann Type J	Bussmann Type T	Bussmann Type CC	Bussmann Type CC	Bussmann Type CC
1.1–2.2 (1.5–3.0)	KTS-R-10	JKS-10	JJS-10	FNQ-R-10	KTK-R-10	LP-CC-10
3.0 (4.0)	KTS-R-15	JKS-15	JJS-15	FNQ-R-15	KTK-R-15	LP-CC-15
4.0 (5.0)	KTS-R-20	JKS-20	JJS-20	FNQ-R-20	KTK-R-20	LP-CC-20
5.5 (7.5)	KTS-R-25	JKS-25	JJS-25	FNQ-R-25	KTK-R-25	LP-CC-25
7.5 (10)	KTS-R-30	JKS-30	JJS-30	FNQ-R-30	KTK-R-30	LP-CC-30
11 (15)	KTS-R-40	JKS-40	JJS-40	–	–	–
15 (20)	KTS-R-50	JKS-50	JJS-50	–	–	–
22 (30)	KTS-R-60	JKS-60	JJS-60	–	–	–
30 (40)	KTS-R-80	JKS-80	JJS-80	–	–	–
37 (50)	KTS-R-100	JKS-100	JJS-100	–	–	–
45 (60)	KTS-R-125	JKS-125	JJS-125	–	–	–
55 (75)	KTS-R-150	JKS-150	JJS-150	–	–	–
75 (100)	KTS-R-200	JKS-200	JJS-200	–	–	–
90 (125)	KTS-R-250	JKS-250	JJS-250	–	–	–

Table 79: Recommended Maximum Fuse, 3x380–380 V, Enclosure Sizes A, B, and C

Power [kW (hp)]	SIBA Type RK1	Littelfuse Type RK1	Ferraz-Shawmut Type CC	Ferraz- Shawmut Type RK1	Bussmann Type JFHR2	Littel-fuse JFHR2	Ferraz-Shawmut JFHR2[1]	Ferraz-Shawmut J
–	5017906-006	KLS-R-6	ATM-R-6	A6K-6-R	FWH-6	–	–	HSJ-6
1.1–2.2 (0.75–3.0)	5017906-010	KLN-R-10	ATM-R-10	A6K-10-R	FWH-10	–	–	HSJ-10
3.0 (4.0)	5017906-016	KLN-R-15	ATM-R-15	A6K-15-R	FWH-15	–	–	HSJ-15
4.0 (5.0)	5017906-020	KLN-R-20	ATM-R-20	A6K-20-R	FWH-20	–	–	HSJ-20
5.5 (7.5)	5017906-025	KLN-R-25	ATM-R-25	A6K-25-R	FWH-25	–	–	HSJ-25
7.5 (10)	5012406-032	KLN-R-30	ATM-R-30	A6K-30-R	FWH-30	–	–	HSJ-30
11 (15)	5014006-040	KLS-R-40	–	A6K-40-R	FWH-40			HSJ-40
15 (20)	5014006-050	KLN-R-50	–	A6K-50-R	FWH-50	–	–	HSJ-50
22 (30)	5014006-063	KLN-R-60	–	A6K-60-R	FWH-60	–	–	HSJ-60
30 (40)	2028220-120	KLN-R-80	–	A6K-80-R	FWH-80	–	–	HSJ-80
37 (50)	2028220-125	KLN-R-100	–	A6K-100-R	FWH-100	–	–	HSJ-100
45 (60)	2028220-125	KLN-R-125	–	A6K-125-R	FWH-125	–	–	HSJ-125
55 (75)	2028220-160	KLN-R-150	–	A6K-150-R	FWH-150	–	–	HSJ-150
75 (100)	2028220-200	KLN-R-200	–	A6K-200-R	FWH-200	L50-S-225	A50-P-225	HSJ-200

Power [kW (hp)]	SIBA Type RK1	Littelfuse Type RK1	Ferraz-Shawmut Type CC	Ferraz- Shawmut Type RK1	Bussmann Type JFHR2	Littelfuse JFHR2	Ferraz-Shawmut JFHR2[1]	Ferraz-Shawmut J
90 (125)	2028220-250	KLN-R-250	–	A6K-250-R	FWH-250	L50-S-250	A50-P-250	HSJ-250

[1] Ferraz-Shawmut A50QS fuses may substitute A50P fuses.

Table 80: Recommended Maximum Fuse, 525–600 V, Enclosure Sizes A, B, and C

Power [kW (hp)	Bussmann Type RK1	Bussmann Type J	Bussmann Type T	Bussmann Type CC	Bussmann Type CC	Bussmann Type CC
0.75–1.1 (1–1.5)	KTS-R-5	JKS-5	JJS-6	FNQ-R-5	KTK-R-5	LP-CC-5
1.5–2.2 (2.0– 3.0)	KTS-R-10	JKS-10	JJS-10	FNQ-R-10	KTK-R-10	LP-CC-10
3.0 (4.0)	KTS-R15	JKS-15	JJS-15	FNQ-R-15	KTK-R-15	LP-CC-15
4.0 (5.0)	KTS-R20	JKS-20	JJS-20	FNQ-R-20	KTK-R-20	LP-CC-20
5.5 (7.5)	KTS-R-25	JKS-25	JJS-25	FNQ-R-25	KTK-R-25	LP-CC-25
7.5 (10.0)	KTS-R-30	JKS-30	JJS-30	FNQ-R-30	KTK-R-30	LP-CC-30
11–15 (15–20)	KTS-R-35	JKS-35	JJS-35	–	–	–
18 (24)	KTS-R-45	JKS-45	JJS-45	–	–	–
22 (30)	KTS-R-50	JKS-50	JJS-50	–	–	–
30 (40)	KTS-R-60	JKS-60	JJS-60	–	–	–
37 (50)	KTS-R-80	JKS-80	JJS-80	–	–	–
45 (60)	KTS-R-100	JKS-100	JJS-100	–	–	–
55 (75)	KTS-R-125	JKS-125	JJS-125	–	–	–
75 (100)	KTS-R-150	JKS-150	JJS-150	–	–	–
90 (125)	KTS-R-175	JKS-175	JJS-175	–	–	–

Table 81: Recommended Maximum Fuse, 525–600 V, Enclosure Sizes A, B, and C

Power [kW (hp)	SIBA Type RK1	Littelfuse Type RK1	Ferraz Shawmut Type RK1	Ferraz Shawmut J
0.75–1.1 (1–1.5)	5017906-005	KLS-R-005	A6K-5-R	HSJ-6
1.5–2.2 (2.0– 3.0)	5017906-010	KLS-R-010	A6K-10-R	HSJ-10
3.0 (4.0)	5017906-016	KLS-R-015	A6K-15-R	HSJ-15
4.0 (5.0)	5017906-020	KLS-R-020	A6K-20-R	HSJ-20
5.5 (7.5)	5017906-025	KLS-R-025	A6K-25-R	HSJ-25
7.5 (10.0)	5017906-030	KLS-R-030	A6K-30-R	HSJ-30
11–15 (15–20)	5014006-040	KLS-R-035	A6K-35-R	HSJ-35
18 (24)	5014006-050	KLS-R-045	A6K-45-R	HSJ-45
22 (30)	5014006-050	KLS-R-050	A6K-50-R	HSJ-50

Power [kW (hp)	SIBA Type RK1	Littelfuse Type RK1	Ferraz Shawmut Type RK1	Ferraz Shawmut J
30 (40)	5014006-063	KLS-R-060	A6K-60-R	HSJ-60
37 (50)	5014006-080	KLS-R-075	A6K-80-R	HSJ-80
45 (60)	5014006-100	KLS-R-100	A6K-100-R	HSJ-100
55 (75)	2028220-125	KLS-R-125	A6K-125-R	HSJ-125
75 (100)	2028220-150	KLS-R-150	A6K-150-R	HSJ-150
90 (125)	2028220-200	KLS-R-175	A6K-175-R	HSJ-175

Table 82: Recommended Maximum Fuse, 525–690 V, Enclosure Sizes A, B, and C

Power [kW (hp)]	Maxi-mum Prefuse size [A]	Bussmann E52273 RK1/JDDZ	Bussmann E4273 J/ JDDZ	Buss-mann E4273 T/ JDDZ	SIBA E180276 RK1/JDDZ	Littelfuse E81895 RK1/JDDZ	Ferraz- Shaw-mut E163267/ E2137 RK1/ JDDZ	Ferraz-Shawmut E2137 J/HSJ
11–15 (15–20)	30	KTS-R-30	JKS-30	JJS-30	5017906-030	KLS-R-030	A6K-30-R	HST-30
22 (30)	45	KTS-R-45	JKS-45	JJS-45	5014006-050	KLS-R-045	A6K-45-R	HST-45
30 (40)	60	KTS-R-60	JKS-60	JJS-60	5014006-063	KLS-R-060	A6K-60-R	HST-60
37 (50)	80	KTS-R-80	JKS-80	JJS-80	5014006-080	KLS-R-075	A6K-80-R	HST-80
45 (60)	90	KTS-R-90	JKS-90	JJS-90	5014006-100	KLS-R-090	A6K-90-R	HST-90
55 (75)	100	KTS-R-100	JKS-100	JJS-100	5014006-100	KLS-R-100	A6K-100-R	HST-100
75 (100)	125	KTS-R-125	JKS-125	JJS-125	2028220-125	KLS-150	A6K-125-R	HST-125
90 (125)	150	KTS-R-150	JKS-150	JJS-150	2028220-150	KLS-175	A6K-150-R	HST-150

Table 83: Recommended Maximum Fuse, 525–690 V, Enclosure Sizes B, and C

Power [kW (hp)]	Maxi-mu m prefuse [A]	Bussmann E52273 RK1/JDDZ	Bussmann E4273 J/ JDDZ	Buss-mann E4273 T/ JDDZ	SIBA E180276 RK1/JDDZ	Littelfuse E81895 RK1/JDDZ	Ferraz Shaw-mut E163267/ E2137 RK1/ JDDZ	Ferraz Shawmut E2137 J/HSJ
11–15 (15–20)	30	KTS-R-30	JKS-30	JKJS-30	5017906-030	KLS-R-030	A6K-30-R	HST-30
18.5 (25.0)	45	KTS-R-45	JKS-45	JJS-45	5014006-050	KLS-R-045	A6K-45-R	HST-45
30 (40)	60	KTS-R-60	JKS-60	JJS-60	5014006-063	KLS-R-060	A6K-60-R	HST-60
37 (50)	80	KTS-R-80	JKS-80	JJS-80	5014006-080	KLS-R-075	A6K-80-R	HST-80
45 (60)	90	KTS-R-90	JKS-90	JJS-90	5014006-100	KLS-R-090	A6K-90-R	HST-90
55 (75)	100	KTS-R-100	JKS-100	JJS-100	5014006-100	KLS-R-100	A6K-100-R	HST-100
75 (100)	125	KTS-R-125	JKS-125	JJS-125	2028220-125	KLS-150	A6K-125-R	HST-125
90 (125)	150	KTS-R-150	JKS-150	JJS-150	2028220-150	KLS-175	A6K-150-R	HST-150

10.7 Relays

Relay 1

- Terminal 01: Common.
- Terminal 02: Normally open 240 V.
- Terminal 03: Normally closed 240 V.

Relay 2

- Terminal 04: Common.
- Terminal 05: Normally open 400 V.
- Terminal 06: Normally closed 240 V.

More relay outputs are available by using the VLT® Relay Option Module MCB 105.

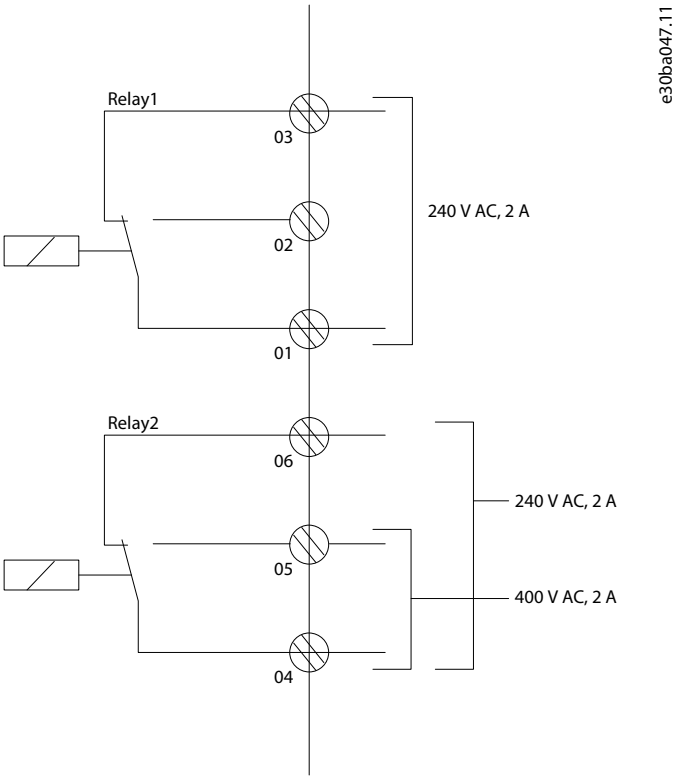

Illustration 71: Relay Outputs 1 and 2

To set the relay output, see *parameter group 5-4* Relays*.

Table 84: Description of Relays

Terminal numbers	Function
01-02	Make (normally open)
01-03	Break (normally closed)
04-05	Make (normally open)
04-06	Break (normally closed)

10.8 Motor

All types of 3-phase asynchronous standard motors can be used with a drive. The factory setting is for clockwise rotation with the drive output connected as follows:

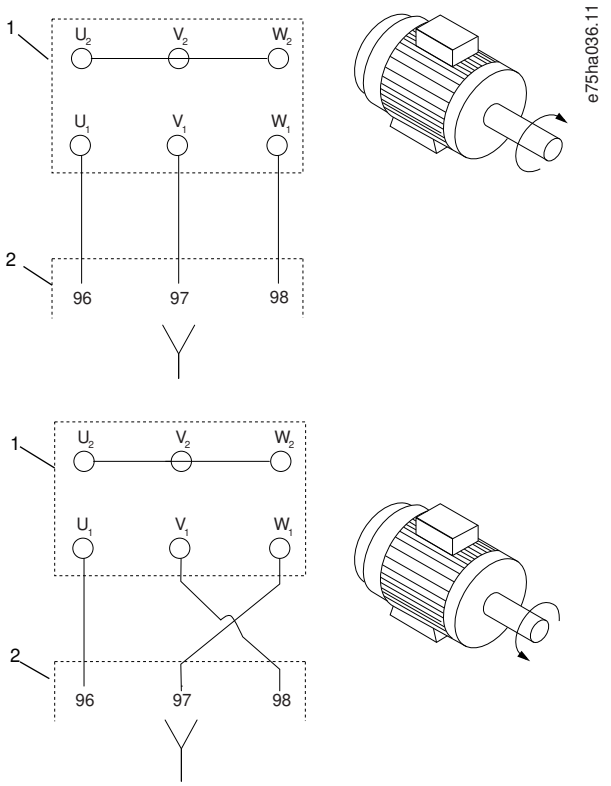

Illustration 72: Terminal Connection for Clockwise and Counterclockwise Rotation

Change direction of rotation by switching 2 phases in the motor cable or by changing the setting of *parameter 4-10 Motor Speed Direction*. Check the motor rotation in *parameter 1-28 Motor Rotation Check* and follow the steps in the display.

10.8.1 Motor Thermal Protection

The electronic thermal relay in the drive has received UL approval for single motor overload protection.

For motor thermal protection, it is also possible to use the VLT® PTC Thermistor Card MCB 112 option card. This card provides ATEX certification to protect motors in explosion hazardous areas Zone 1/21 and Zone 2/22. Combining ATEX ETR with the use of MCB 112 enables control of an Ex-e or EX-n motor in explosion hazardous ares.

Consult the Programming Guide for details on how to set up the drive for safe operation of Ex-e or Ex-n motors.

10.8.2 Parallel Connection of Motors

The drive can control several parallel-connected motors. When using parallel motor connection, observe the following:

- Recommended to run applications with parallel motors in U/F mode *parameter 1-01 Motor Control Principle* [0]. Set the U/F graph in *parameter 1-55 U/f Characteristic - U* and *parameter 1-56 U/f Characteristic - F*.
- VCC^+ mode may be used in some applications.
- The total current consumption of the motors must not exceed the rated output current I_{INV} for the drive.
- If motor sizes are widely different in winding resistance, starting problems may occur due to too low motor voltage at low speed.
- The electronic thermal relay (ETR) of the drive cannot be used as motor overload protection for the individual motor. Provide further motor overload protection by including thermistors in each motor winding or individual thermal relays.

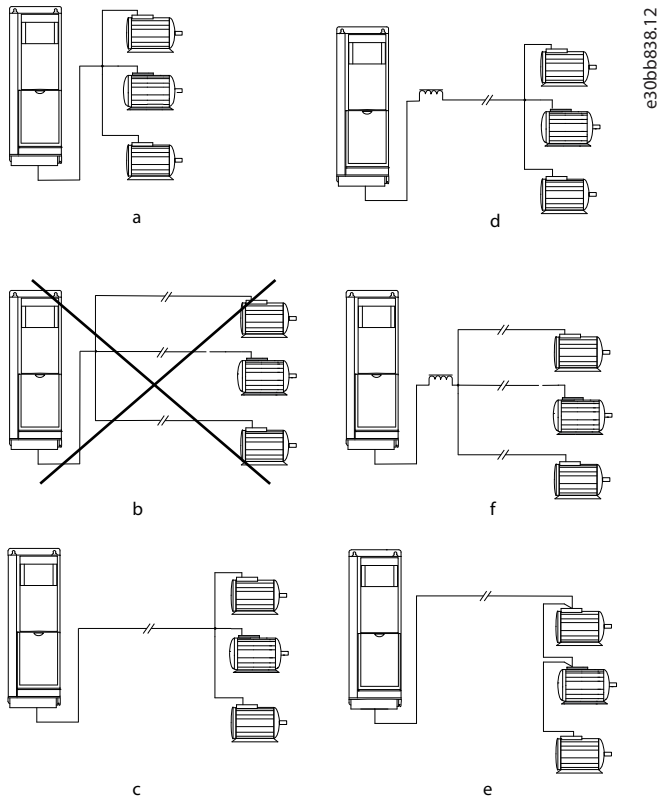

Illustration 73: Different Parallel Connections of Motors

A	Installations with cables connected in a common joint as shown in A and B are only recommended for short cable lengths.	D	Consider voltage drop across the motor cables.
B	Be aware of the maximum motor cable length specified in .	E	Consider voltage drop across the motor cables.
C	The total motor cable length specified in is valid as long as the parallel cables are kept short, less than 10 m (32 ft) each.	F	The total motor cable length specified in is valid as long as the parallel cables are kept short, less than 10 m (32 ft) each.

Table 85: Maximum Cable Lengths

Enclosure sizes	Power size [kW (hp)]	Voltage [V]	1 cable [m (ft)]	2 cables [m (ft)]	3 cables [m (ft)]	4 cables [m (ft)]
A1, A2, A4, A5	0.37–0.75 (0.5–1.0)	400	150 (492)	45 (147.6)	8.0 (26)	6.0 (19.7)
		500	150 (492)	7.0 (23)	4.0 (13)	3.0 (9.8)
A2, A4, A5	1.1–1.5 (1.5–2.0)	400	150 (492)	45 (147.6)	20 (65.6)	8.0 (26)
		500	150 (492)	45 (147.6)	5.0 (16.4)	4.0 (13)
A2, A4, A5	2.2–4.0 (3.0–5.0)	400	150 (492)	45 (147.6)	20 (65.6)	11 (36)
		500	150 (492)	45 (147.6)	20 (65.6)	6.0 (19.7)
A3, A4, A5	5.5–7.5 (7.5–10)	400	150 (492)	45 (147.6)	20 (65.6)	11 (36)
		500	150 (492)	45 (147.6)	20 (65.6)	11 (36)
B1, B2, B3, B4, C1, C2, C3, C4	11–90 (15–110)	400	150 (492)	75 (246)	50 (164)	37 (121.4)

Enclosure sizes	Power size [kW (hp)]	Voltage [V]	1 cable [m (ft)]	2 cables [m (ft)]	3 cables [m (ft)]	4 cables [m (ft)]
		500	150 (492)	75 (246)	50 (164)	37 (121.4)
A3	1.1–7.5 (1.5–10)	525–690	100 (382)	50 (164)	33 (108)	25 (82)
B4	11–30 (15–40)	525–690	150 (492)	75 (246)	50 (164)	37 (121.4)
C3	37–45 (50–60)	525–690	150 (492)	75 (246)	50 (164)	37 (121.4)

10.8.3 Motor Insulation

Modern motors for use with drives have a high degree of insulation to account for new generation high-efficiency IGBTs with high dU/dt. For retrofit in old motors, confirm the motor insulation or mitigate with dU/dt filter or, if necessary, a sine-wave filter.

For motor cable lengths ≤ the maximum cable length listed in , the motor insulation ratings listed in Table 86 are recommended. If a motor has lower insulation rating, use a dU/dt or sine-wave filter.

Table 86: Motor Insulation Ratings

Nominal mains voltage [V]	Motor insulation [V]
$U_N \leq 420$	Standard U_{LL}=1300
420 V < $U_N \leq 500$	Reinforced U_{LL}=1600
500 V < $U_N \leq 600$	Reinforced U_{LL}=1800
600 V < $U_N \leq 690$	Reinforced U_{LL}=2000

10.8.4 Motor Bearing Currents

To minimize DE (Drive End) bearing and shaft currents, ground the drive, motor, driven machine, and motor to the driven machine properly. For more information, refer to the *Minimizing Bearing Failures in AC Drive Systems User Guide*.

Standard mitigation strategies

- Use an insulated bearing.
- Apply rigorous installation procedures:
  - Ensure that the motor and load motor are aligned.
  - Strictly follow the EMC Installation guideline.
  - Reinforce the PE so the high-frequency impedance is lower in the PE than the input power leads.
  - Provide a good high-frequency connection between the motor and the drive for instance by shielded cable which has a 360° connection in the motor and the drive.
  - Make sure that the impedance from the drive to the building ground is lower than the grounding impedance of the machine. This can be difficult for pumps.
  - Make a direct ground connection between the motor and load motor.
- Lower the IGBT switching frequency.
- Modify the inverter waveform, 60° AVM vs. SFAVM.
- Install a shaft grounding system or use an isolating coupling.
- Apply conductive lubrication.
- Use minimum speed settings if possible.
- Try to ensure that the line voltage is balanced to ground. This can be difficult for IT, TT, TN-CS, or Grounded leg systems.

10.9 Braking

10.9.1 Selection of Brake Resistor

To handle higher demands by regenerative braking, a brake resistor is necessary. Using a brake resistor ensures that the energy is absorbed in the brake resistor and not in the drive. For more information, see the VLT® Brake Resistor MCE 101 Design Guide.

If the amount of kinetic energy transferred to the resistor in each braking period is not known, the average power can be calculated based on the cycle time and braking time, also called intermittent duty cycle. The resistor intermittent duty cycle is an indication of the duty cycle at which the resistor is active. See Illustration 74 for a typical braking cycle.

N O T I C E

Motor suppliers often use S5 when stating the allowed load, which is an expression of intermittent duty cycle.

The intermittent duty cycle for the resistor is calculated as follows:

Duty cycle=t_b/T

T=cycle time in s.

t_b is the braking time in s (of the cycle time).

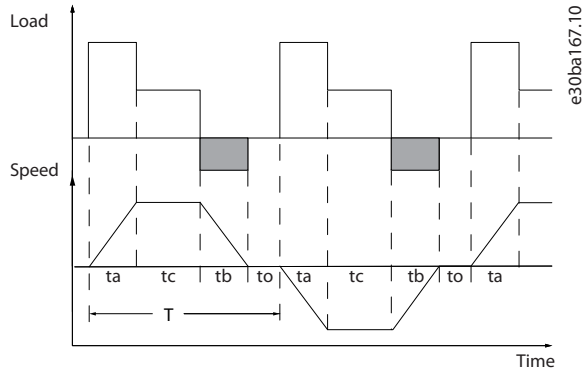

Illustration 74: Dynamic Braking Cycle Time

Brake resistors have a duty cycle of 5%, 10%, and 40%. If a 10% duty cycle is applied, the brake resistors are able to absorb brake power for 10% of the cycle time. The remaining 90% of the cycle time is spent on dissipating excess heat.

Table 87: Braking at High Overload Torque Level

	Cycle time (s)	Braking duty cycle at 100% torque	Braking duty cycle at overtorque (150/160%)
200–240 V			
PK25–P11K	120	Continuous	40%
P15K–P37K	300	10%	10%
380–500 V			
PK37–P75K	120	Continuous	40%
P90K–P160	600	Continuous	10%
P200–P800	600	40%	10%
525–600 V			
PK75–P75K	120	Continuous	40%
525–690 V			
P37K–400	600	40%	10%
P500–P560	600	40%(1)	10%(2)

	Cycle time (s)	Braking duty cycle at 100% torque	Braking duty cycle at overtorque (150/160%)
P630–P1M0	600	40%	10%

[1] 500 kW at 86% braking torque/560 kW at 76% brake power.

[2] 500 kW at 130% braking torque/560 kW at 115% brake power.

NOTICE

Ensure that the resistor is designed to handle the required braking time.

The maximum allowed load on the brake resistor is stated as a peak power at a given intermittent duty cycle and can be calculated as:

$$R_{\mathrm{br}}\,(\Omega) = \frac{U_{\mathrm{dc}}^2}{P_{\mathrm{peak}}}$$

where

$P_{peak} = P_{motor} \times M_{br}\,[\%] \times \eta_{motor} \times \eta_{VLT}[W]$

The brake resistance depends on the DC-link voltage (U_{dc}).

Table 88: DC-link Voltage (UDC), FC 202

Size [V]	Brake active [V DC]	High-voltage warning [V DC]	Overvoltage alarm [V DC]
FC 202, 3x200–240 V	390	405	410
FC 202, 3x380–480 V	778	810	820
FC 202, 3x525–600 V	943	965	975
FC 202, 3x525–690 V	1099	1109	1130

NOTICE

For use of 3rd party brake resistors, make sure to comply with the table above. The VLT® Brake Resistor MCE 101 series is optimized for Danfoss VLT® series drives.

Danfoss recommends a brake resistance R_{rec} that can guarantee that the drive can brake at the highest brake power ($M_{br(\%)}$) of 150%. The formula can be written as:

$$200\,V:\ Rrec = \frac{107780}{P\mathrm{motor}}(\Omega)$$

$$500\,V:\ Rrec = \frac{464923}{P\mathrm{motor}}(\Omega)$$

$$600\,V:\ Rrec = \frac{630137}{P\mathrm{motor}}(\Omega)$$

$$690\,V:\ Rrec = \frac{832664}{P\mathrm{motor}}(\Omega)$$

NOTICE

The brake resistor circuit resistance selected should not be lower than what Danfoss recommends respecting the current limits.

NOTICE

If a higher value is selected, the brake energy is reduced accordingly to a value below 150%.

NOTICE

If a short circuit occurs in the brake transistor, power dissipation in the brake resistor is only prevented by using a mains switch or contactor to disconnect the mains from the drive. Alternatively, use a switch in the brake circuit. Uninterrupted power dissipation in the brake resistor can cause overheating, damage, or fire.

⚠ WARNING ⚠

RISK OF FIRE

The brake resistors become hot during braking. Failure to place the brake resistor in a secure area can result in property damage and/or serious injury.

- Ensure that the brake resistor is placed in a secure environment to avoid fire risk.
- Do no touch the brake resistor during or after braking to avoid serious burns.

10.9.2 Control with Brake Function

A relay/digital output can be used to protect the brake resistor against overloading or overheating by generating a fault in the drive. If the brake IGBT is overloaded or overheated, the relay/digital output signal from the drive to the brake turns off the brake IGBT. The relay/digital output signal does not protect against a short circuit in the brake IGBT or a ground fault in the brake module or wiring. If a short circuit occurs in the brake IGBT, Danfoss recommends a means to disconnect the brake.

Furthermore, the brake enables reading out the momentary power and the average power of the latest 120 s. The brake can monitor the power energizing and make sure that it does not exceed the limit selected in the brake monitor function. Consult the Operating Guide for more details.

NOTICE

Monitoring the brake power is not a safety function. A thermal switch connected to an external contactor is required for that purpose. The brake resistor circuit is not ground-leakage protected.

Overvoltage control (OVC) can be selected as an alternative brake function in parameters for overvoltage control. This function is active for all units and ensures that if the DC-link voltage increases, the output frequency also increases to limit the voltage from the DC link, which avoids a trip.

NOTICE

OVC cannot be activated when running a PM motor, while parameters for motor construction is set to PM non-salient SPM.

NOTICE

MORE REQUIREMENTS FOR BRAKING APPLICATIONS

When the motor brakes the machinery, the DC-link voltage of the drive increases. The effect of the increase equals an increase of the motor supply voltage of up to 20%. Consider this voltage increase when specifying the motor insulation requirements if the motor will be braking a large part of its operational time. **Example:** Motor insulation requirement for a 400 V AC mains voltage application must be selected as if the drive were supplied with 480 V.

10.10 Residual Current Device

Use RCD relays, multiple protective earthing, or grounding as extra protection to comply with local safety regulations. If a ground fault appears, a DC content may develop in the faulty current. If RCD relays are used, local regulations must be observed. Relays must be suitable for protection of 3-phase equipment with a bridge rectifier and for a brief discharge on power-up using RCDs.

10.11 Leakage Current

Follow national and local codes regarding protective earthing of equipment where leakage current exceeds 3.5 mA.

Drive technology implies high frequency switching at high power. This generates a leakage current in the ground connection.

The ground leakage current is made up of several contributions and depends on various system configurations, including:

- RFI filtering.
- Motor cable length.
- Motor cable shielding.
- Drive power.

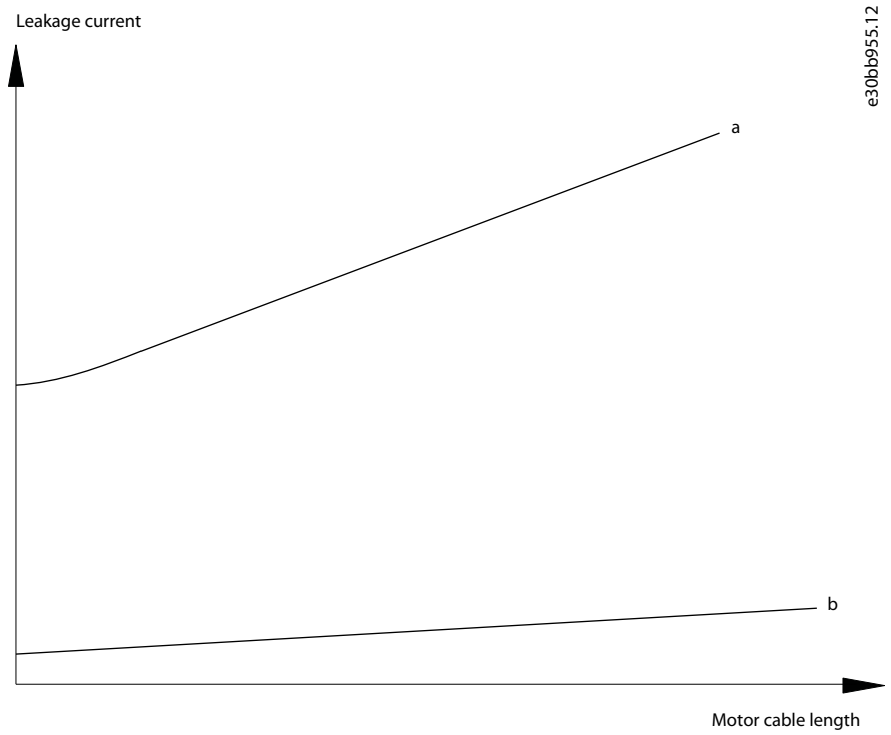

Illustration 75: Influence of the Cable Length and Power Size on Leakage Current, Power Size a > Power Size B

The leakage current also depends on the line distortion.

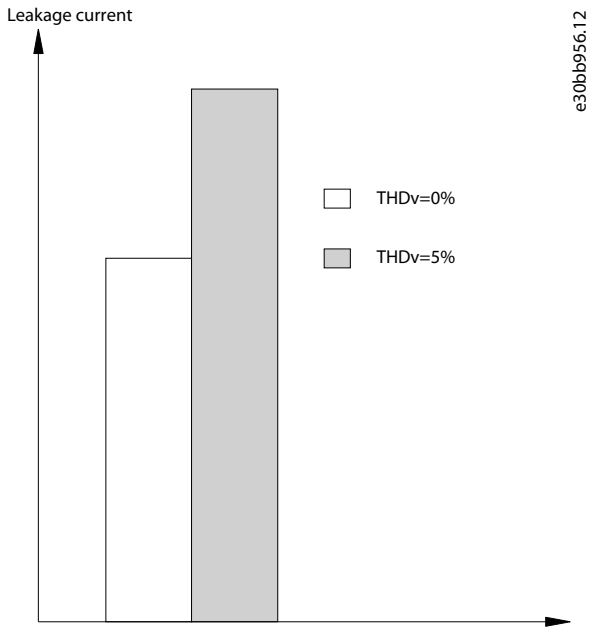

Illustration 76: Influence of Line Distortion on Leakage Current

If the leakage current exceeds 3.5 mA, compliance with EN/IEC 61800-5-1 (power drive system product standard) requires special care.

Reinforce grounding with the following protective earth connection requirements:

- Ground wire (terminal 95) of at least 10 mm^2 (8 AWG) cross-section.
- 2 separate ground wires both complying with the dimensioning rules.

See EN/IEC 61800-5-1 and IEC EN 62477-1 for further information.

10.11.1 Using a Residual Current Device (RCD)

Where residual current devices (RCDs), also known as earth leakage circuit breakers (ELCBs), are used, comply with the following:

- Use RCDs of type B only, which are capable of detecting AC and DC currents.
- Use RCDs with an inrush delay to prevent faults caused by transient ground currents.
- Dimension RCDs according to the system configuration and environmental considerations.

The leakage current includes several frequencies originating from both the mains frequency and the switching frequency. Whether the switching frequency is detected depends on the type of RCD used.

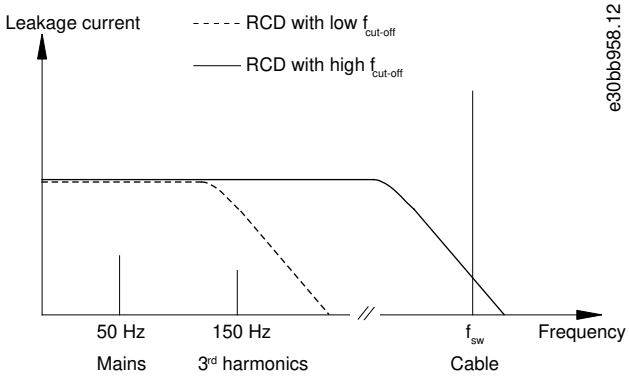

Illustration 77: Mains Contributions to Leakage Current

The amount of leakage current detected by the RCD depends on the cut-off frequency of the RCD.

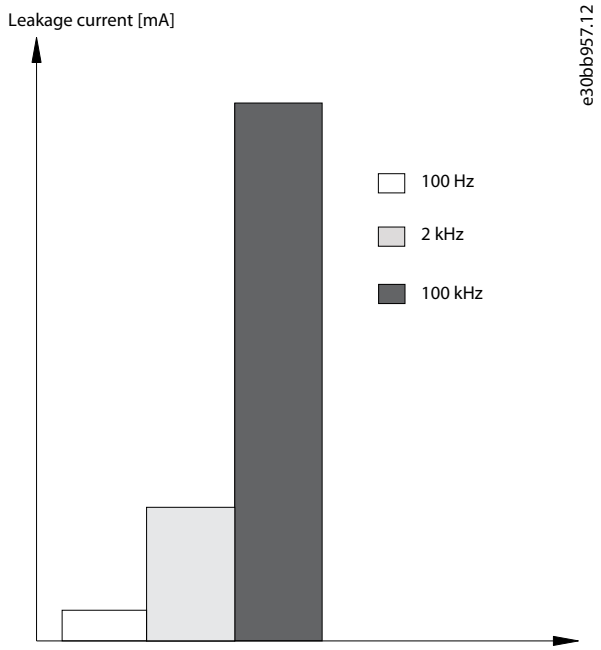

Illustration 78: Influence of Cut-off Frequency of the RCD on what is Responded to/Measured

For more details, refer to the RCD Application Note.

10.12 Efficiency

Efficiency of the drive (η_{VLT})

The load on the drive has little effect on its efficiency. In general, the efficiency is the same at the rated motor frequency $f_{M,N,}$ even if the motor supplies 100% of the rated shaft torque or only 75%, for example if there are part loads. This also means that the efficiency of the drive does not change even if other U/f characteristics are selected. However, the U/f characteristics influence the efficiency of the motor. The efficiency declines a little when the switching frequency is set to a value of above 5 kHz. The efficiency is also slightly reduced if the mains voltage is 480 V, or if the motor cable is longer than 30 m (98 ft).

Drive efficiency calculation

Calculate the efficiency of the drive at different speeds and loads based on the graph in Illustration 79. Multiply the factor in this graph by the specific efficiency factor listed in the specification tables in :

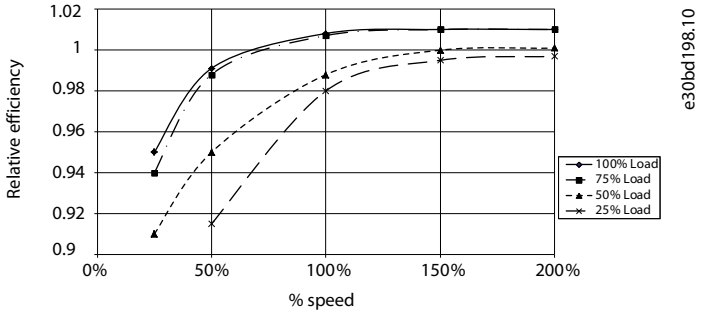

Illustration 79: Typical Efficiency Curves

Example: Assume a 160 kW, 380–480/500 V AC drive at 25% load at 50% speed. The graph shows 0.97 - the rated efficiency for a 160 kW drive is 0.98. The actual efficiency is then: 0.97x0.98=0.95.

The MyDrive® ecoSmart™ tool helps to calculate the efficiency, refer to www.ecosmart.danfoss.com.

Efficiency of the motor (η_{MOTOR})

The efficiency of a motor connected to the drive depends on the magnetizing level. In general, the efficiency is as good as with mains operation. The efficiency of the motor depends on the type of motor. In the range of 75–100% of the rated torque, the efficiency of the motor is practically constant, both when the drive runs the motor and when it runs directly on mains. In small motors, the influence from the U/f characteristic on efficiency is marginal. However, in motors from 11 kW (15 hp) and up, the advantages are significant. Typically, the switching frequency does not affect the efficiency of small motors. Motors from 11 kW (15 hp) and up have their efficiency improved (1–2%) because the shape of the motor current sine-wave is almost perfect at high switching frequency.

Efficiency of the system (η_{SYSTEM})

To calculate the system efficiency, the efficiency of the drive (η_{VLT}) is multiplied by the efficiency of the motor (η_{MOTOR}):

$\eta_{SYSTEM} = \eta_{VLT} \times \eta_{MOTOR}$

10.13 Acoustic Noise and Airflow

Table 89: Acoustic Noise Ratings

Enclosure size	50% fan speed [dBA](1)	Full fan speed [dBA](1)
A1	51	60
A2	51	60
A3	51	60
A4	51	60
A5	54	63
B1	61	67
B2	58	70
B4	52	62
C1	52	62

Enclosure size	50% fan speed [dBA][1]	Full fan speed [dBA][1]
C2	55	65
C4	56	71
D3h[2]	58	71

[1] Values are measured 1 m (3.28 ft) from the unit.

[2] Details, see separate design guide VLT AQUA DriveFC 202 90–710 kW

Drives are equipped with fans, which contribute to the airflow in enclosures and surroundings.

Table 90: Air Flow Through the Drive

Enclosure size	IP protection rating	Size [mm (in)]	Air flow [m^3/hr]	Effect [W]
A2	20/21	70x70 (2.75x2.75)	30.6	3.6
A3	20/21	80x80 (3.15x3.15)	37/59	4.0
A4	55/66	70x70 (2.75x2.75)	23	2.9
A5	55/66	92x92 (3.6x3.6)	96	4.2
B1	21/55/66	127x127 (5x5)	310	18
B2	21/55/66	140x140 (5.5x5.5)	370	22
B3	20/21	120x120 (4.7x4.7)	244	12
B4	20/21	127x127 (5x5)	310	18
C1	21/55/66	172x150 (6.8x5.9)	420	22
C2	21/55/66	172x150 (6.8x5.9)	420	22
C3	20	120x120 (4.7x4.7)	244	12
C4	20	127x127 (5x5)	310	18

10.14 dU/dt Conditions

To avoid damage to motors without phase insulation paper or other insulation reinforcement designed for operation of the drive, install a VLT® dU/dt filter MCC 102 or a VLT® Sine-wave Filter MCC 101 on the output of the drive.

When a transistor in the inverter bridge switches, the voltage across the motor increases by a dU/dt ratio depending on:

- Motor inductance.
- Motor cable (type, cross-section, length, shielded, unshielded).

The natural induction causes an overshoot voltage peak in the motor voltage before it stabilizes. The level depends on the voltage in the DC link. Switching on the IGBTs causes peak voltage on the motor terminals. The rise time and the peak voltage affect the service life of the motor. If the peak voltage is too high, motors without phase coil insulation can be adversely affected over time.

With short motor cables (a few meters), the rise time and peak voltage are lower. The rise time and peak voltage increase with cable length.

The drive complies with IEC 60034-25 and IEC 60034-17 for motor design.

NOTICE

The measurements in the following tables are carried out with a single power size and motor, but with several motor cable lengths, are for information only. Depending on the combination of drive, motor cable type, motor cable length, and motor, the values for Upeak and dU/dt can be higher at the motor terminal. Sometimes, the values exceed the limits given by the motor manufacturer.

- To avoid problems with too high dU/dt, use motor cables longer than 30–40 m (98–131 ft).
- If in doubt, use a dU/dt filter between the drive and the motor, or do a measurement in the actual installation.

10.15 Electromagnetic Compatibility (EMC) Overview

10.15.1 EMC Test Results

The following test results have been obtained by using a system with a drive, a shielded control cable, a control box with potentiometer, a single motor, and shielded motor cable (Ölflex Classic 100 CY) at nominal switching frequency. See Table 91 for the maximum motor cable lengths for compliance.

NOTICE

Conditions may change significantly for other setups.

NOTICE

- Consult Illustration 73 for parallel motor cables.

Table 91: EMC Test Results (Emission) Maximum Motor Cable Length

RFI filter type			Conducted emission			Radiated emission		
			Cable length [m (ft)]					
Standards and requirements	EN 55011/CISPR 11		Class B	Class A, Group 1	Class A, Group 2	Class B	Class A, Group 1	Class A, Group 2
	EN/IEC 61800-3		Category C1	Category C2	Category C3	Category C1	Category C2	Category C3
H1								
FC 202	0.25–45 kW, 200–240 V	T2	50 (164)	150 (492)	150 (492)	No	Yes	Yes
	1.1–7.5 kW, 200–240 V	S2	50 (164)	100/150 (164/492)(1)	100/150 (164/492)(1)	No	Yes	Yes
	0.37–90 kW, 380–480 V	T4	50 (164)	150 (492)	150 (492)	No	Yes	Yes
	7.5 kW, 380–480 V	S4	50 (164)	100/150 (164/492)(1)	100/150 (164/492)(1)	No	Yes	Yes
H2								
FC 202	0.25–3.7 kW, 200–240 V	T2	No	No	5 (16.4)	No	No	Yes
	5.5–45 kW, 200–240 V	T2	No	No	25 (82)	No	No	Yes
	1.1–7.5 kW, 200–240 V	S2	No	No	25 (82)	No	No	Yes

RFI filter type			Conducted emission			Radiated emission		
	0.37–7.5 kW, 380–480 V	T4	No	No	5 (16.4)	No	No	Yes
	11–90 kW, 380–480 V[2]	T4	No	No	25 (82)	No	No	Yes
	7.5 kW, 380–480 V	S4	No	No	25 (82)	No	No	Yes
	11–30 kW, 525–690 V[2][3]	T7	No	No	25 (82)	No	No	Yes
	37–90 kW, 525–690 V[2][4]	T7	No	No	25 (82)	No	No	Yes
H3								
FC 202	0.25–45 kW, 200–240 V	T2	10 (32.8)	50 (164)	50 (164)	No	Yes	Yes
	0.37–90 kW, 380–480 V	T4	10 (32.8)	50 (164)	50 (164)	No	Yes	Yes
H4								
FC 202	1.1–30 kW, 525–690 V[3]	T7	No	100 (328)	100 (328)	No	Yes	Yes
	37–90 kW, 525–690 V[4]		No	150 (492)	150 (492)	No	Yes	Yes
Hx[5]								
FC 202	1.1–90 kW, 525–600 V	T6	No	No	No	No	No	No
	15–22 kW, 200–240 V	S2	No	No	No	No	No	No
	11–37 kW, 380–480 V	S4	No	No	No	No	No	No

[1] 100 m (328 ft) for phase-neutral, 150 m (492 ft) for phase-to-phase (but not from TT or TN). Single-phase drives are not intended for 2-phase supply from a TT or TN network.

[2] T7, 37–90 kW complies with class A group 1 with 25 m (82 ft) motor cable. Some restrictions for the installation apply (contact Danfoss for details).

[3] Enclosure size B2.

[4] Enclosure size C2.

[5] Hx versions can be used according to EN/IEC 61800-3 category C4.

- Hx, H1, H2, H3, H4, or H5 is defined in the type code positions 16–17 for EMC filters.
- H1: Integrated EMC filter. Fulfills EN 55011 Class A1/B and EN/IEC 61800-3 Category 1/2.
- H2: A limited RFI filter only containing capacitors and without a common-mode coil. Fulfills EN 55011 Class A2 and EN/IEC 61800-3 Category 3.
- H3: Integrated EMC filter. Fulfills EN 55011 Class A1/B and EN/IEC 61800-3 Category 1/2.
- H4: Integrated EMC filter. Fulfills EN 55011 Class A1 and EN/IEC 61800-3 Category 2.
- H5: Marine versions. Ruggedized version, fulfills the same emission levels as H2 versions.

10.15.2 Emission Requirements

According to the EMC product standard for AC drives, EN/IEC 61800-3:2004, the EMC requirements depend on the intended use of the drive. Four categories are defined in the EMC product standard. The definitions of the 4 categories together with the requirements for mains supply voltage conducted emissions are given in Table 92.

Table 92: Emission Requirements

Category	Definition	Conducted emission requirement according to the limits given in EN 61800-3
C1	Drives installed in the 1st environment (home and office) with a supply voltage less than 1000 V.	Class B
C2	Drives installed in the 1st environment (home and office) with a supply voltage less than 1000 V, which are neither plug-in nor movable and are intended for installation and commissioning by a professional.	Class A Group 1
C3	Drives installed in the 2nd environment (industrial) with a supply voltage lower than 1000 V.	Class A Group 2
C4	Drives installed in the 2nd environment (industrial) with a supply voltage equal to or above 1000 V or rated current equal to or above 400 A or intended for use in complex systems.	No limit line. Make an EMC plan.

When the generic emission standards are used, the drives are required to comply with the limits in Table 93.

Table 93: Emission Limit Classes

Environment	Generic standard	Conducted emission requirement according to the limits given in EN 55011
1st environment (home and office)	EN/IEC 61000-6-3 Emission standard for residential, commercial, and light industrial environments.	Class B
2nd environment (industrial environment)	EN/IEC 61000-6-4 Emission standard for industrial environments.	Class A Group 1

NOTICE

According to the EMC Directive, a system is defined as a combination of several types of equipment, finished products, and/or components combined, designed and/or put together by the same person (system manufacturer) intended to be placed on the market for distribution as a single functional unit for an end user and intended to be installed and operated together to perform a specific task. The EMC directive applies to products/systems and installations, but in case the installation is built up of CE marked products/systems the installation can also be considered compliant with the EMC directive. Installations shall not be CE marked.
According to the EMC Directive, Danfoss Drives as a manufacturer of product/systems is responsible for obtaining the essential requirements of the EMC directive and attaching the CE mark. For systems involving load sharing and other DC terminals, Danfoss Drives can only ensure compliance to EMC Directive when end users connect combinations of Danfoss Drives products as described in our technical documentation.
If any third-party products are connected to the load share or other DC terminals on the AC drives, Danfoss Drives cannot guarantee that the EMC requirements are fulfilled.

10.15.3 Immunity Requirements

The immunity requirements for drives depend on the environment in which they are installed. The requirements for the industrial environment are higher than the requirements for the home and office environment. All Danfoss VLT® drives comply with the requirements for the industrial environment and therefore also comply with the lower requirements for home and office environment with a large safety margin.

To document immunity against burst transient from electrical phenomena, the following immunity tests have been carried out on a system consisting of:

- A drive (with options if relevant).
- A shielded control cable.
- A control box with potentiometer, motor cable, and motor.

The tests were performed in accordance with the following basic standards:

- **EN 61000-4-2 (IEC 61000-4-2) Electrostatic discharges (ESD):** Simulation of electrostatic discharges from human beings.
- **EN 61000-4-3 (IEC 61000-4-3) Radiated immunity:** Amplitude modulated simulation of the effects of radar and radio communication equipment and mobile communications equipment.
- **EN 61000-4-4 (IEC 61000-4-4) Burst transients:** Simulation of interference brought about by switching a contactor, relay, or similar devices.
- **EN 61000-4-5 (IEC 61000-4-5) Surge transients:** Simulation of transients brought about by, for example, lightning that strikes near installations.
- **EN 61000-4-6 (IEC 61000-4-6) RF Common mode:** Simulation of the effect from radio-transmission equipment joined by connection cables.

The immunity requirements should follow product standard IEC 61800-3. See Table 94.

Table 94: EMC Immunity, Voltage range: 200–240 V, 380–480 V

Basic standard	Burst IEC 61000-4-4	Surge IEC 61000-4-5	ESD IEC 61000-4-2	Radiated electromagnetic field IEC 61000-4-3	RF common mode voltage IEC 61000-4-6
Acceptance criterion	**B**	**B**	**B**	**A**	**A**
Line	4 kV CM	2 kV/2 Ω DM 4 kV/12 Ω CM	–	–	10 V_{RMS}
Motor	4 kV CM	4 kV/2 Ω[1]	–	–	10 V_{RMS}
Brake	4 kV CM	4 kV/2 Ω[1]	–	–	10 V_{RMS}
Load sharing	4 kV CM	4 kV/2 Ω[1]	–	–	10 V_{RMS}
Control wires	2 kV CM	2 kV/2 Ω[1]	–	–	10 V_{RMS}
Standard bus	2 kV CM	2 kV/2 Ω[1]	–	–	10 V_{RMS}
Relay wires	2 kV CM	2 kV/2 Ω[1]	–	–	10 V_{RMS}
Application and Fieldbus options	2 kV CM	2 kV/2 Ω[1]	–	–	10 V_{RMS}
LCP cable	2 kV CM	2 kV/2 Ω[1]	–	–	10 V_{RMS}
External 24 V DC	2 kV CM	0.5 kV/2 Ω DM 1 kV/12 Ω CM	–	–	10 V_{RMS}
Enclosure	–	–	8 kV AD 6 kV CD	10 V/m	–

[1] Injection on cable shield.

AD: Air Discharge
CD: Contact Discharge
CM: Common Mode
DM: Differential Mode

10.15.4 EMC Compatibility

NOTICE

OPERATOR RESPONSIBILITY

According to the EN 61800-3 standard for variable-speed drive systems, the operator is responsible for ensuring EMC compliance. Manufacturers can offer solutions for operation conforming to the standard. Operators are responsible for applying these solutions and for paying the associated costs.

There are 2 options for ensuring electromagnetic compatibility:

- Eliminate or minimize interference at the source of emitted interference.
- Increase the immunity to interference in devices affected by its reception.

RFI filters

The goal is to obtain systems that operate stably without radio frequency interference between components. To achieve a high level of immunity, use drives with high-quality RFI filters.

NOTICE

In a residential environment, this product can cause radio interference, in which case supplementary mitigation measures may be required.

PELV and galvanic isolation compliance

All control and relay terminals comply with PELV (excluding grounded Delta leg above 400 V). To obtain galvanic (ensured) isolation, fulfill requirements for higher isolation and provide the relevant creepage/clearance distances. These requirements are described in EN 61800-5.1.

Electrical isolation is provided as shown in Illustration 80. The components described comply with both PELV and the galvanic isolation requirements.

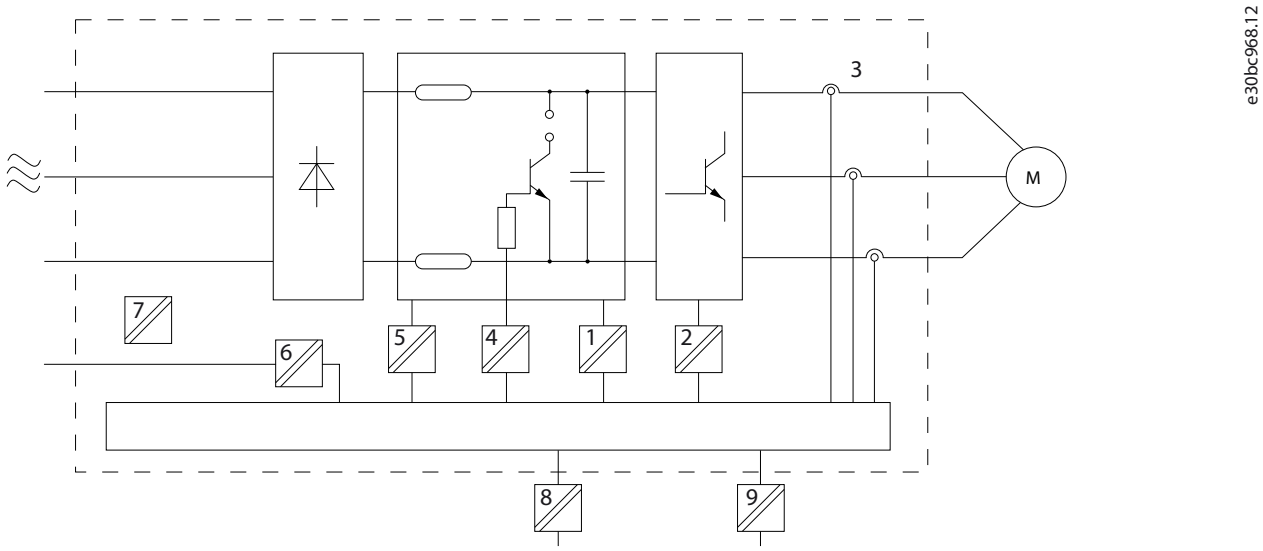

Illustration 80: Galvanic Isolation

1	Power supply (SMPS) including signal isolation of DC link	6	Custom relays
2	Gate drive for the IGBTs	7	Mechanical brake
3	Current transducers	8	Functional galvanic isolation for the 24 V back-up option and for the RS485 standard bus interface.
4	Opto-coupler, brake module (optional)	9	Functional galvanic isolation for the 24 V back-up option and for the RS485 standard bus interface.
5	Internal inrush, RFI, and temperature measurement circuits		

10.16 EMC-compliant Installation

To obtain an EMC-compliant installation, be sure to follow all electrical installation instructions.

Also, remember to practice the following:

- When using relays, control cables, a signal interface, fieldbus, or brake, connect the shield to the enclosure at both ends. If the ground path has high impedance, is noisy, or is carrying current, break the shield connection on 1 end to avoid ground current loops.
- Convey the currents back to the unit using a metal mounting plate. Ensure good electrical contact from the mounting plate by securely fastening the mounting screws to the drive chassis.
- Use shielded cables for motor output cables. An alternative is unshielded motor cables within metal conduit.
- Ensure that motor and brake cables are as short as possible to reduce the interference level from the entire system.
- Avoid placing cables with a sensitive signal level alongside motor and brake cables.
- For communication and command/control lines, follow the particular communication protocol standards. For example, USB must use shielded cables, but RS485/ethernet can use shielded UTP or unshielded UTP cables.
- Ensure that all control terminal connections are rated protective extra low voltage (PELV).

NOTICE

TWISTED SHIELD ENDS (PIGTAILS)

Twisted shield ends increase the shield impedance at higher frequencies, which reduces the shield effect and increases the leakage current.

- Use integrated shield clamps instead of twisted shield ends.

NOTICE

SHIELDED CABLES

If shielded cables or metal conduits are not used, the unit and the installation do not meet regulatory limits on radio frequency (RF) emission levels.

NOTICE

EMC INTERFERENCE

Failure to isolate power, motor, and control cables can result in unintended behavior or reduced performance.

- Use shielded cables for motor and control wiring.
- Provide a minimum 200 mm (7.9 in) separation between mains input, motor cables, and control cables.

N O T I C E

INSTALLATION AT HIGH ALTITUDE

There is a risk for overvoltage. Isolation between components and critical parts could be insufficient and may not comply with PELV requirements.

– Use external protective devices or galvanic isolation. For installations above 2000 m (6500 ft) altitude, contact Danfoss regarding protective extra low voltage (PELV) compliance.

N O T I C E

PROTECTIVE EXTRA LOW VOLTAGE (PELV) COMPLIANCE

Prevent electric shock by using PELV electrical supply and complying with local and national PELV regulations.

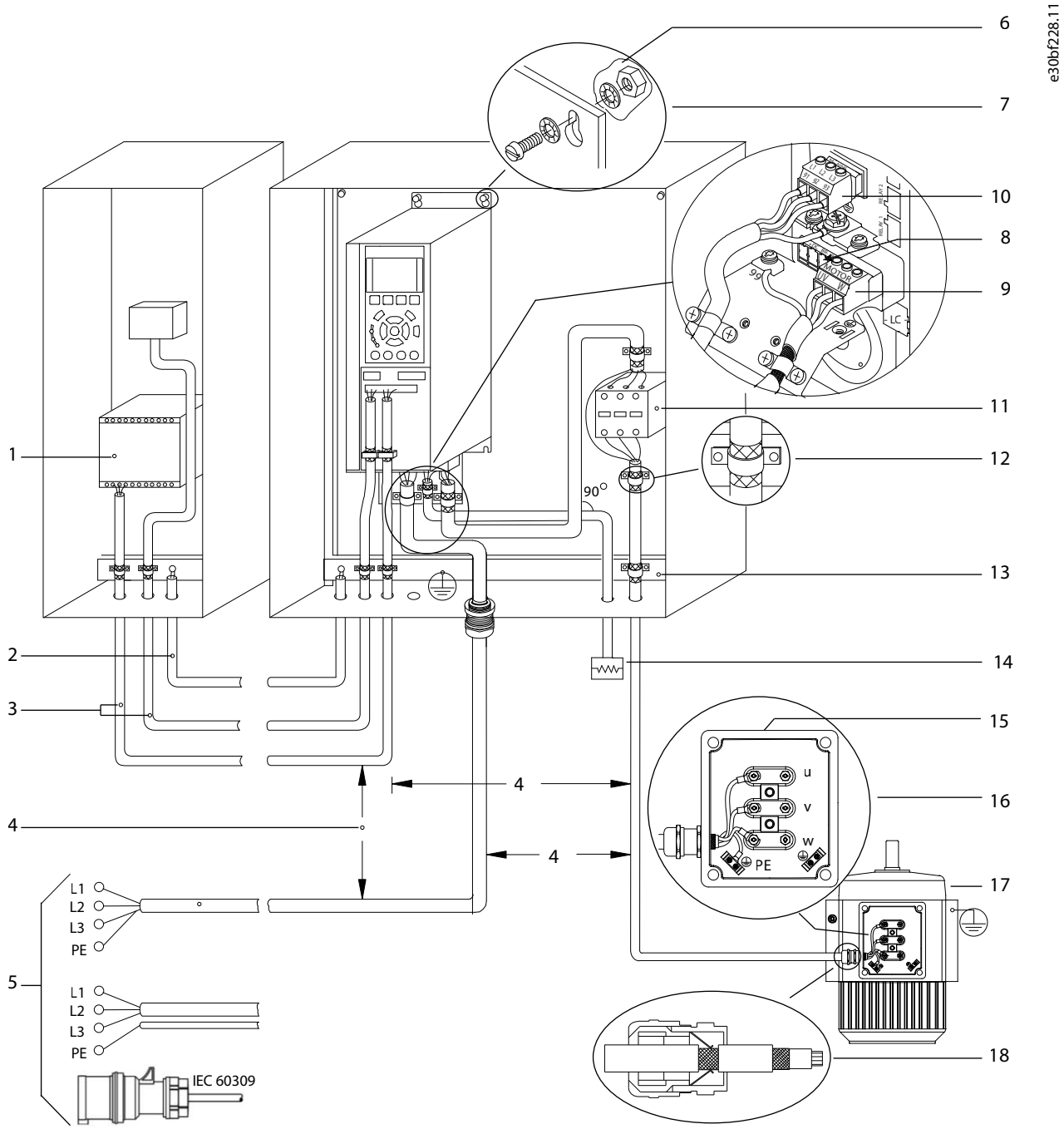

Illustration 81: Example of Proper EMC Installation

1	Programmable logic controller (PLC)	10	Mains cable (unshielded)
2	Minimum 16 mm^2 (6 AWG) equalizing cable	11	Output contactor, and so on.
3	Control cables	12	Cable insulation stripped
4	Minimum 200 mm (7.9 in) between control cables, motor cables, and mains cables	13	Common ground busbar. Follow local and national requirements for cabinet grounding.
5	Mains supply options, see IEC/EN 61800-5-1	14	Brake resistor
6	Bare (unpainted) surface	15	Terminal box
7	Star washers	16	Connection to motor
8	Brake cable (shielded) – not shown, but same gounding principle applies as for motor cable	17	Motor
9	Motor cable (shielded)	18	EMC cable gland

NOTICE

EMC INTERFERENCE

Use shielded cables for motor and control wiring, and separate cables for input power, motor wiring, and control wiring. Failure to isolate power, motor, and control cables can result in unintended behavior or reduced performance. Minimum 200 mm (7.9 in) clearance is required between power, motor, and control cables.

10.17 Harmonics Overview

Non-linear loads, such as found in drives, do not draw current uniformly from the power line. This non-sinusoidal current has components which are multiples of the basic current frequency. These components are referred to as harmonics. It is important to control the total harmonic distortion on the mains supply. Although the harmonic currents do not directly affect electrical energy consumption, they generate heat in the wiring and transformers that can affect other devices on the same power line.

10.17.1 Harmonics Analysis

Since harmonics increase heat losses, it is important to consider harmonics when designing systems to prevent overloading the transformer, the inductors, and the wiring. When necessary, perform an analysis of the system harmonics to determine equipment effects.

A non-sinusoidal current is transformed with a Fourier series analysis into sine-ware currents at different frequencies, that is, different harmonic currents I_N with 50 Hz or 60 Hz as the basic frequency.

Table 95: Harmonics-related Abbreviations

Abbreviation	Description
f_1	Basic frequency (50 Hz or 60 Hz)
I_1	Current at the basic frequency
U_1	Voltage at the basic frequency
I_n	Current at the nth harmonic frequency
U_n	Voltage at the nth harmonic frequency
n	Harmonic order

Table 96: Basic Currents and Harmonic Currents

	Basic current (I_1)	Harmonic current (I_n)		
Current	I_1	I_5	I_7	I_{11}

	Basic current ($I_{1)}$)	Harmonic current ($I_{n)}$)		
Frequency [Hz]	50	250	350	550

Table 97: Harmonic Currents versus RMS Input Current

Current	Harmonic current				
	I_{RMS}	I_1	I_5	I_7	I_{11-49}
Input current	1.0	0.9	0.5	0.2	<0.1

The voltage distortion on the mains supply voltage depends on the size of the harmonic currents multiplied by the mains impedance for the frequency in question. The total voltage distortion (THDi) is calculated based on the individual voltage harmonics using this formula:

$$\text{THDi} = \frac{\sqrt{I_5^2 + I_7^2 + \ldots\ldots I_n^2}}{I}$$

10.17.2 Effect of Harmonics in a Power Distribution System

In Illustration 82, a transformer is connected on the primary side to a point of common coupling PCC1 on the medium voltage supply. The transformer has an impedance Z_{xfr} and feeds several loads. The point of common coupling where all loads are connected together is PCC2. Each load is connected through cables that have an impedance Z_1, Z_2, Z_3.

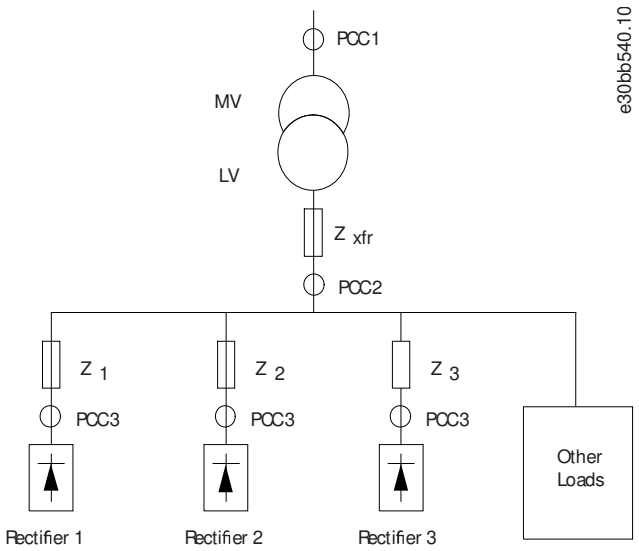

Illustration 82: Small Distribution System

Harmonic currents drawn by non-linear loads cause distortion of the voltage because of the voltage drop on the impedances of the distribution system. Higher impedances result in higher levels of voltage distortion.

Current distortion relates to apparatus performance and it relates to the individual load. Voltage distortion relates to system performance. It is not possible to determine the voltage distortion in the PCC knowing only the load's harmonic performance. To predict the distortion in the PCC, the configuration of the distribution system and relevant impedances must be known.

A commonly used term for describing the impedance of a grid is the short circuit ratio R_{sce}. R_{sce} is defined as the ratio between the short circuit apparent power of the supply at the PCC (S_{sc}) and the rated apparent power of the load (S_{equ}).

$$R_{\text{sce}} = \frac{S_{\text{ce}}}{S_{\text{equ}}}$$

where

$$S_{\text{sc}} = \frac{U^2}{Z_{\text{supply}}} \text{ and } S_{\text{equ}} = U * I_{\text{equ}}$$

The negative effect of harmonics is twofold

- Harmonic currents contribute to system losses (in cabling, transformer).
- Harmonic voltage distortion causes disturbance to other loads and increase losses in other loads.

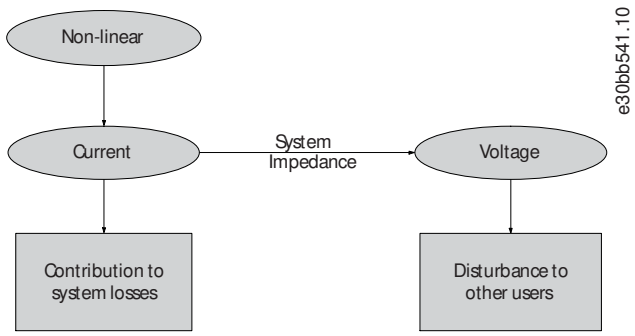

Illustration 83: Negative Effects of Harmonics

10.17.3 IEC Harmonic Standards

In most of Europe, the basis for the objective assessment of the quality of mains power is the Electromagnetic Compatibility fo Devices Act (EMVG). Compliance with these regulations ensures that all devices and networks connected to electrical distribution systems fulfill their intended purpose without generating problems.

Table 98: EN Design Standards for Mains Power Quality

Standard	Definition
EN 61000-2-2, EN 61000-2-4, EN 50160	Define the mains voltage limits required for public and industrial power grids.
EN 61000-3-2, 61000-3-12	Regulate mains interference generated by connected devices in lower current products.
EN 61800-3	Monitors electronic equipment for use in power installations.

There are 2 European standards that address harmonics in the frequency range from 0 Hz to 9 kHz:

- EN 61000-2-2 Compatibility Levels for Low-Frequency Conducted Disturbances and Signaling in Public Low-Voltage Power Supply Systems.
- EN 61000-2-4 Compatibility Levels for Low-Frequency Conducted Disturbances and Signaling in Industrial Plants.

The EN 61000-2-2 standard states the requirements for compatibility levels for PCC (point of common coupling) of low voltage AC systems on a public supply network. Limits are specified only for harmonic voltage and total harmonic distortion of the voltage. EN 61000-2-2 does not define limits for harmonic currents. In situations where the total harmonic distortion THDv=8%, PCC limits are identical to those limits specified in the EN 61000-2-4 Class 2.

The EN 61000-2-4 standard states the requirements for compatibility levels in industrial and private networks. The standard further defines the following 3 classes of electromagnetic environments:

- Class 1 relates to compatibility levels that are less than the public supply network, which affects equipment sensitive to disturbances (lab equipment, some automation equipment, and certain protection devices).
- Class 2 relates to compatibility levels that are equal to the public supply network. The class applies to PCCs on the public supply network and to IPCs (internal points of coupling) on industrial or other private supply networks. Any equipment designed for operation on a public supply network allowed in this class.
- Class 3 relates to compatibility levels greater than the public supply network. This class applies only to IPCs in industrial environments. Use this class where the following equipment is found:
  - Large drives.
  - Welding machines.
  - Large motors starting frequently.
  - Loads that change quickly.

Typically, a class cannot be defined ahead of time without considering the intended equipment and processes to be used in the environment.

Table 99: Compatibility Levels for Harmonics

Harmonic order (h)	Class 1 (V_h%)	Class 2 (V_h%)	Class 3 (V_h%)
5	3	6	8
7	3	5	7
11	3	3.5	5
13	3	3	4.5
17	2	2	4
17<h≤49	2.27 x (17/h) - 0.27	2.27 x (17/h) - 0.27	4.5 x (17/h) - 0.5

Table 100: Compatibility Levels for the Total Harmonic Voltage Distortion THDv

	Class 1	Class 2	Class 3
THDv	5%	8%	10%

10.17.4 Harmonic Results (Emission)

Power sizes from P1K1 (1.1 kW) up to P18K (18.5 kW) in T2 (200–240 V) and up to P90K (90 kW) in T4 (380–480 V) fulfill the limits within IEC/EN 61000-3-12:2011, table 4.

Power sizes P110-P450 (110 kW–450 kW) in T4 (380–480 V) also comply with IEC/EN 61000-3-12:2011 even though not required because currents are above 75 A. Typical harmonic line current emission values for R_{SCE} above 120 are shown in Table 101 for power sizes below 90 kW and in Table 102 for power sizes above 90 kW.

Table 101: Typical Harmonic Emission Values for VLT® Drives FC 102, FC 103, FC 202, FC 302 below 90 kW

	Individual harmonic current Ih/Iref (%)			
	I5	I7	I11	I13
Typical value	38	20	10	8
Limit for R_{SCE} ≥ 120[1]	40	25	15	10
	Harmonic current distortion factor (%)			
	THC/Iref		PWHC/Iref	
Typical value[2]	42		41	
Limit for R_{SCE} ≥ 120[1]	48		46	

[1] According to IEC 61000-3-12:2011

[2] The value depends on voltage range, power size and other factors. Please contact Danfoss to get information on specific values.

Table 102: Typical Harmonic Emission Values for VLT® Drives FC 102, FC 103, FC 202, FC 302 above 90 kW

	Individual harmonic current Ih/Iref (%)			
	I5	I7	I11	I13
Typical value	38	20	10	8
Limit for R_{SCE} ≥ 120[1]	(no limit applies because currents are above 75A)			
	Harmonic current distortion factor (%)			
	THC/Iref		PWHC/Iref	

Typical value[2]	40	39
Limit for $R_{SCE} \geq 120$[1]	(no limit applies because currents are above 75A)	

[1] According to IEC 61000-3-12:2011

[2] The value depends on voltage range, power size and other factors. Please contact Danfoss to get information on specific values.

NOTICE

It is the responsibility of the installer or user of the equipment to ensure that the equipment is connected only to a supply with a short-circuit power S_{SC} which is greater than or equal to what is specified below at the interface point between the users supply and the public system (R_{SCE}). If necessary, consult the distribution network operator.

$$S_{SC} = \sqrt{3} \times R_{SCE} \times U_{mains} \times I_{equ} = \sqrt{3} \times 120 \times 400 \times I_{equ}$$

Other power sizes can be connected to the public supply network by consultation with the distribution network operator.

10.17.5 Harmonic Mitigation

In cases where extra harmonic suppression is required, Danfoss offers a wide range of mitigation equipment. These are:

- VLT® 12-pulse drives.
- VLT® AHF filters.
- VLT® Low Harmonic Drives.
- VLT® Active Filters.

The choice of the right solution depends on several factors:

- The grid (background distortion, mains unbalance, resonance, and type of supply (transformer/generator)).
- Application (load profile, number of loads, and load size).
- Local/national requirements/regulations (IEEE 519, IEC, G5/4, and so on).
- Total cost of ownership (initial cost, efficiency, maintenance, and so on).

10.17.6 Harmonic Calculation

To determine the degree of voltage pollution on the grid and needed precaution, use the Danfoss MyDrive® Harmonics calculation software. The free tool can be downloaded from harmonics.mydrive.danfoss.com/.

10.17.7 Line Reactors

A line reactor is an inductor which is wired in series between a power source and a load. Line reactors, also called input AC reactors, are used in motor drive applications.

The main function of the line reactor is to limit the current. Line reactors also reduce the main harmonics, limit the inrush currents, and protect drives and motors. Line reactors help achieving an overall improvement of the true power factor and the quality of the input current waveform.

Line reactors are classified by their percent impedance (denoted as percent IZ or %IZ), which is the voltage drop due to impedance at the rated current expressed as a percent of rated voltage. The most common line reactors have either 3% or 5% impedance.

When to use line reactors

It is important to consider where to install the drives. In some situations, disturbances from the grid can damage the drive and precautions must be taken to avoid this. To prevent disturbances, ensure that there is only a minimum of impedance in front of the drive. Refer to 10.17.5 Harmonic Mitigation for advice on mitigation.

When calculating the impedance, also include the contribution from the supply transformer and the supply cables. In the following situations, add impedance (line reactor or transformer) in front of the drive:

- The installation site has switched power factor correction capacitors.
- The installation site has lightning strikes or voltage spikes.
- The installation site has power interruptions or voltage dips.
- The transformer is too large compared to the drive.

Also, when planning load sharing applications, pay special attention to different enclosure size combinations and inrush concepts. For technical advice on load sharing applications, contact Danfoss application support.

Danfoss offers the line reactor series VLT® Line Reactor MCC 103. For more information, go to www.danfoss.com.

11 Basic Operating Principles

11.1 Introduction

This chapter provides an overview of the primary assemblies and circuitry of a Danfoss VLT® drive. It describes the internal electrical and signal processing functions. A description of the internal control structure is also included.

11.2 Drive Controls

A drive is an electronic controller that supplies a regulated amount of AC power to a 3-phase inductive motor. By supplying variable frequency and voltage to the motor, the drive varies the motor speed or maintains a constant speed as the load on the motor changes. Also, the drive can stop and start a motor without the mechanical stress associated with a line start.

In its basic form, the drive can be divided into 4 main areas:

- A rectifier consisting of SCRs or diodes that convert 3-phase AC voltage to pulsating DC voltage.
- A DC link consisting of inductors and their capacitor banks that stabilize the pulsating DC voltage.
- An inverter using IGBTs to convert the DC voltage to variable voltage and variable frequency AC.
- A control area consisting of software that runs the hardware to produce the variable voltage that controls and regulates the AC motor.

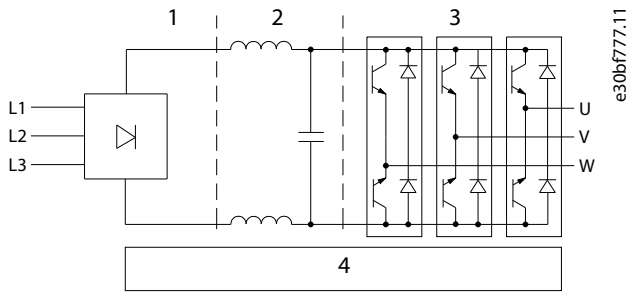

Illustration 84: Internal Processing

1	Rectifier (SCR/diodes)	3	Inverter (IGBTs)
2	DC link (DC bus)	4	Control area

11.2.1 Control Principle

The control structure is a software process that controls the motor based on user-defined references, for example RPM, and whether feedback is used or not (closed loop/open loop). The operator defines the control by selecting the configuration mode.

The control structures are as follows:

- Open-loop control structure:
  - Speed (RPM).
  - Torque (Nm).
- Closed-loop control structure:
  - Speed (RPM).
  - Torque (Nm).
  - Process (user-defined units, for example, ft, lpm, psi, %, and bar).

User inputs/references

The drive uses an input source (also called reference) to control and regulate the motor. The drive receives this input either:

- Manually via the LCP. This method is referred to as local (hand on).
- Remotely via analog/digital inputs and various serial interfaces (RS485, USB, or an optional fieldbus). This method is referred to as remote (auto on) and is the default input setting. See more details in 11.2.2 Local (Hand On) and Remote (Auto On) Control.

11.2.2 Local (Hand On) and Remote (Auto On) Control

Active reference refers to the active input source. The active reference is configured via parameters. For more information, refer to the product-specific Programming Guide.

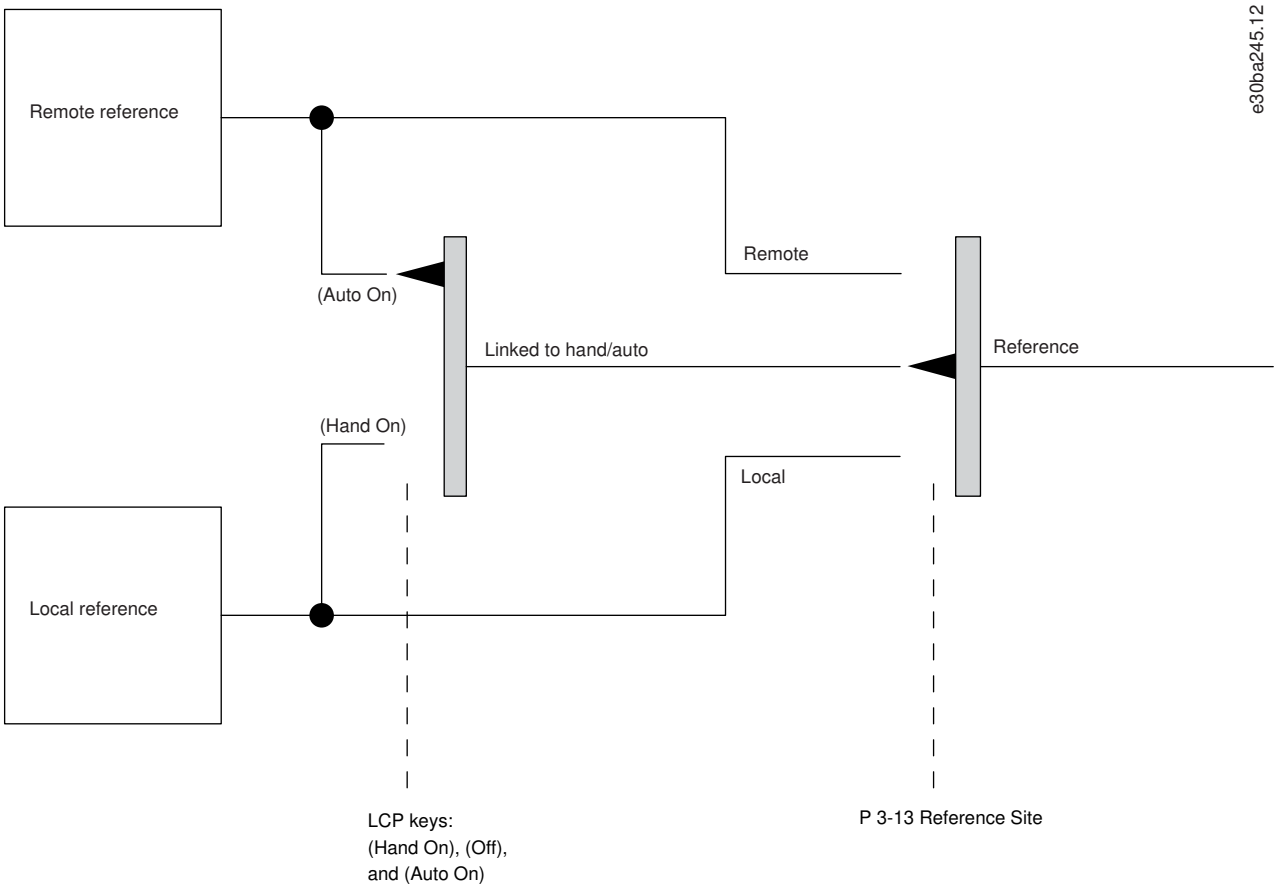

Illustration 85: Selecting Active Reference

Remote handling of references applies to both open-loop and closed-loop operation. Up to 8 internal preset references can be programmed into the drive. The active internal preset reference can be selected externally through digital control inputs or through the serial communication bus.

External references can also be supplied to the drive, most commonly through an analog control input. All reference sources and the bus references are added to produce the total external reference. The active reference can be selected from the following:

- External reference.
- Preset reference.
- Setpoint.
- Sum of the external reference, preset reference, and setpoint.

The active reference can be scaled. The scaled reference is calculated as follows:

$$\text{Reference} = X + X \times \left(\frac{Y}{100}\right)$$

X is the external reference, the preset reference, or the sum of these references, and Y is the internal preset relative reference I %. If Y, *parameter 3-14 Preset Relative Reference* is set to 0%, the scaling does not affect the reference.

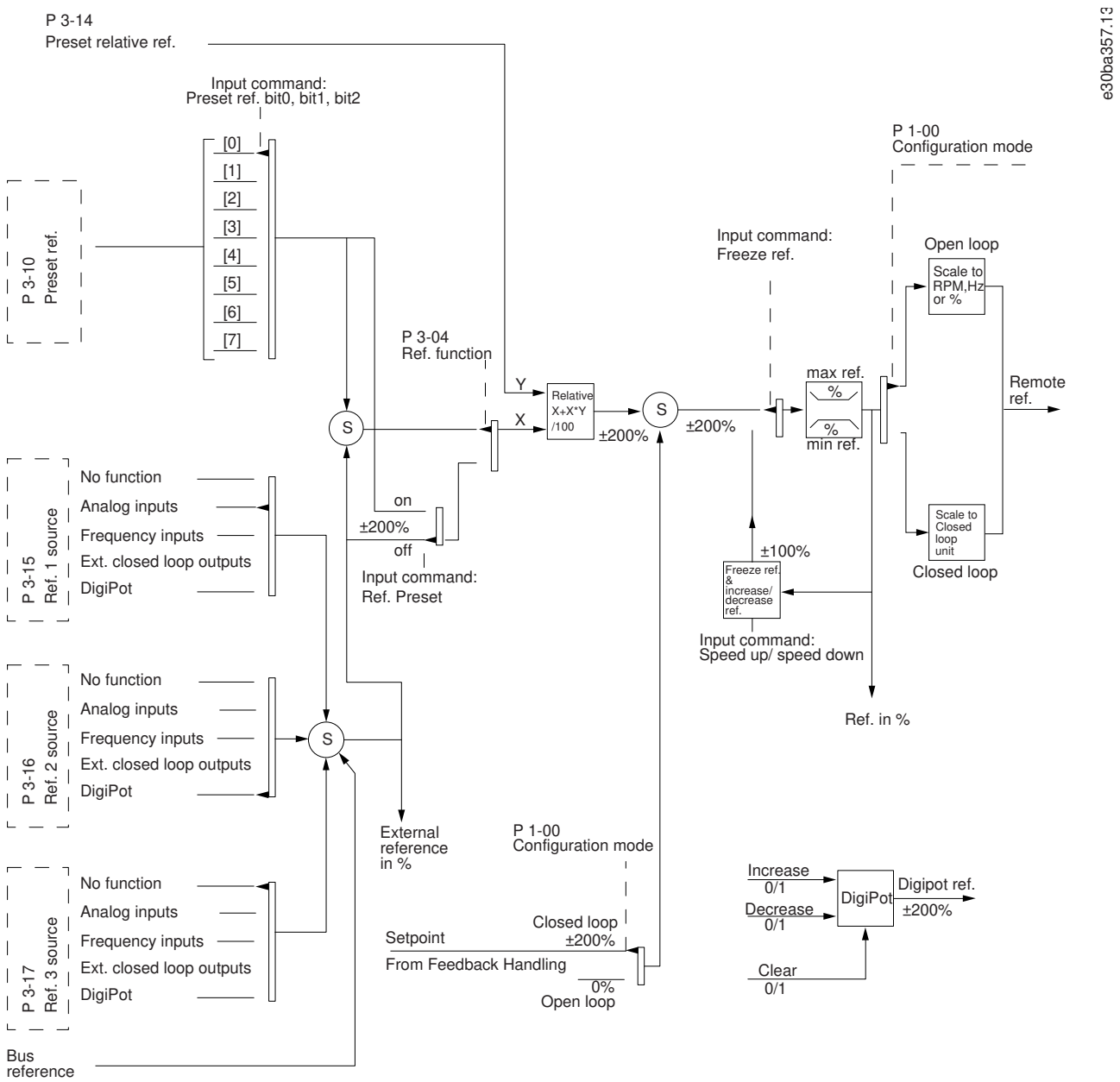

Illustration 86: Remote Handling of Reference

11.3 Reference Limits

The reference range, minimum reference, and maximum reference define the allowed range of the sum of all references. The sum of all references is clamped when necessary. The relation between the resulting reference (after clamping) and the sum of all references are shown in Illustration 87 and Illustration 88.

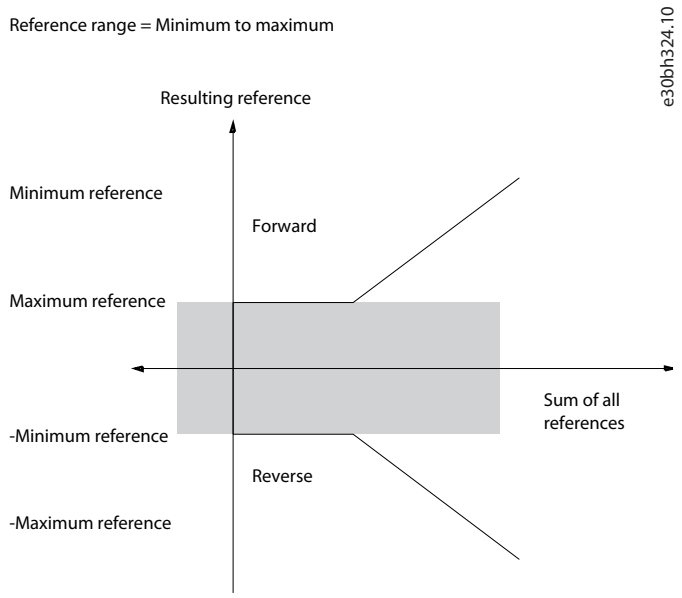

Illustration 87: Sum of All References When Reference Range is Set to 0

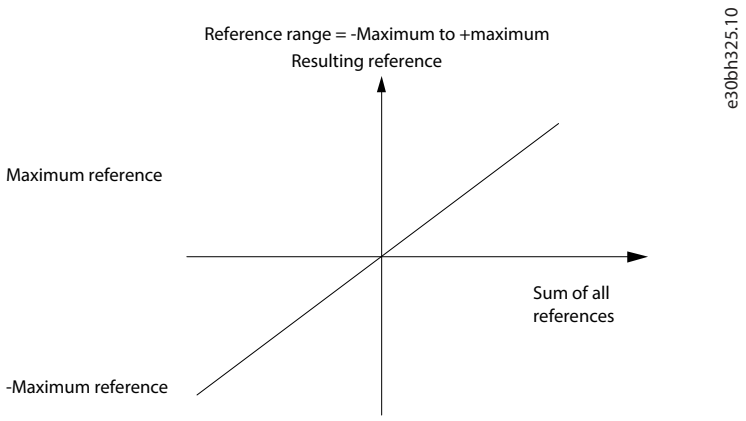

Illustration 88: Sum of All References When Reference Range is Set to 1

The minimum reference cannot be set to less than 0, unless the configuration mode is set to Process. In that case, the following relations between the resulting reference (after clamping) and the sum of all references are as shown in Illustration 89.

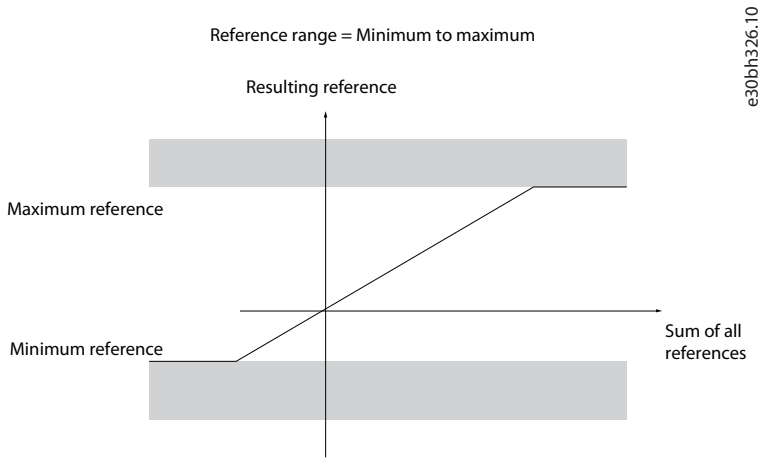

Illustration 89: Sum of all References when Configuration Mode is set to Process

11.4 Control Principle

The drive rectifies AC voltage from mains into DC voltage, after which the DC voltage is converted into an AC current with a variable amplitude and frequency.

The drive supplies the motor with variable voltage/current and frequency, standard induction motors, and non-salient PM motors.

The drive manages various motor control principles such as U/f special motor mode and VVC+. Short-circuit behavior of the drive depends on the 3 current transducers in the motor phases.

The VLT® drives can run in open-loop and closed-loop application. Select the configuration mode when programming the drive.

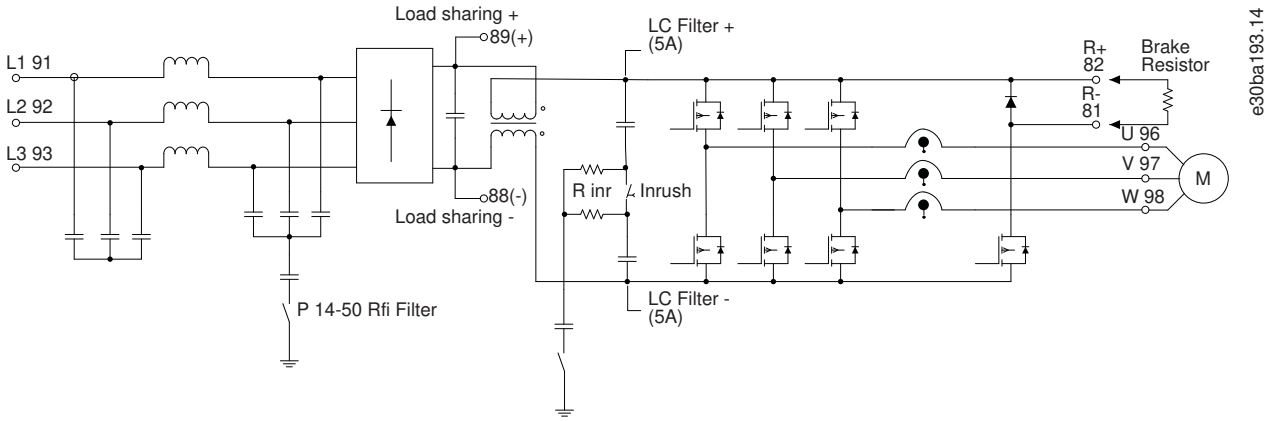

Illustration 90: Control Structure Diagram

11.4.1 Control Structure Open Loop

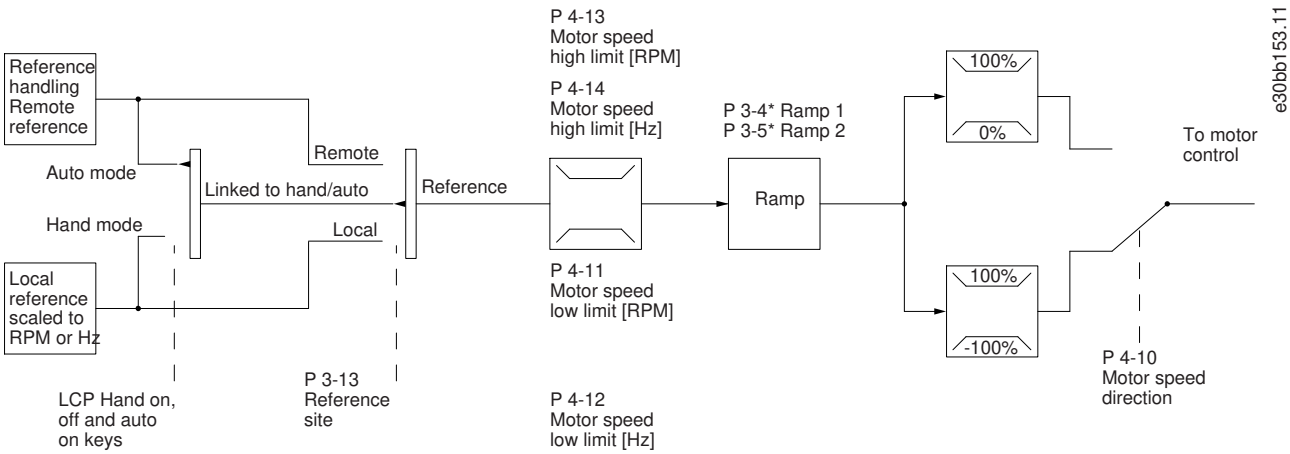

Illustration 91: Open-loop Structure

In open-loop configurations, the resulting reference from the reference handling system or the local reference is received and fed through the ramp limitation and speed limitation before being sent to the motor control.

The output from the motor control is then limited by the maximum frequency limit.

11.4.2 Control Structure Closed Loop

The internal controller allows the drive to become a part of the controlled system. The drive receives a feedback signal from a sensor in the system. It then compares this feedback to a setpoint reference value and determines the error, if any, between these 2 signals. It then adjusts the speed of the motor to correct this error.

For example, consider a pump application where the speed of a pump is to be controlled to ensure a constant static pressure in a pipe. The static pressure value is supplied to the drive as the setpoint reference. A static pressure sensor measures the actual static pressure in the pipe and supplies this data to the drive as a feedback signal. If the feedback signal is greater than the setpoint reference, the drive slows the pump down to reduce the pressure. In a similar way, if the pipe pressure is lower than the setpoint reference, the drive automatically speeds the pump up to increase the pressure provided by the pump.

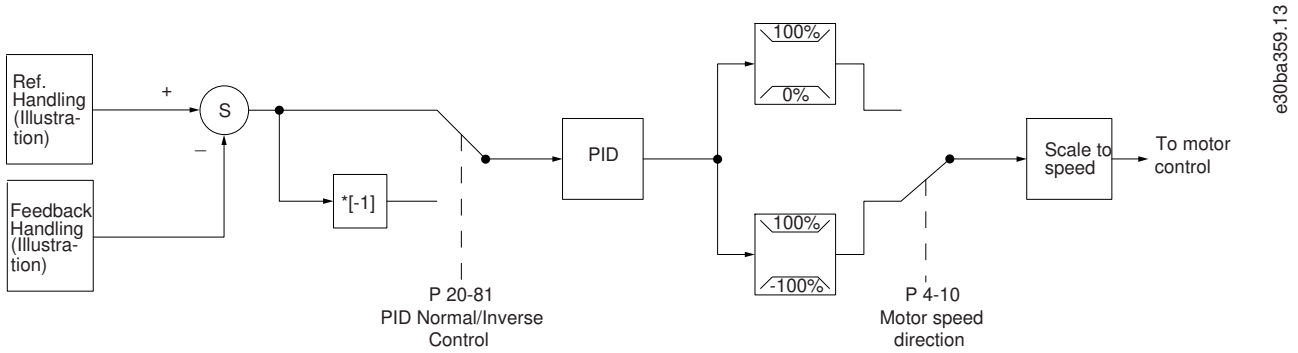

Illustration 92: Control Structure Closed-loop

While the default values for the closed-loop controller of the drive often provide satisfactory performance, the control of the system can often be optimized by adjusting parameters. It is also possible to autotune the PI constants.

12 Basic I/O Configurations

12.1 Application Examples

The examples in this section are intended as a quick reference for common applications.

- Parameter settings are the regional default values unless otherwise indicated (selected in *parameter 0-03 Regional Settings*).
- Parameters associated with the terminals and their settings are shown next to the drawings.
- Required switch settings for analog terminals A53 or A54 are also shown.

12.1.1 Wiring Configuration for Automatic Motor Adaptation (AMA)

Table 103: Wiring Configuration for AMA with T27 Connected

	Parameters	
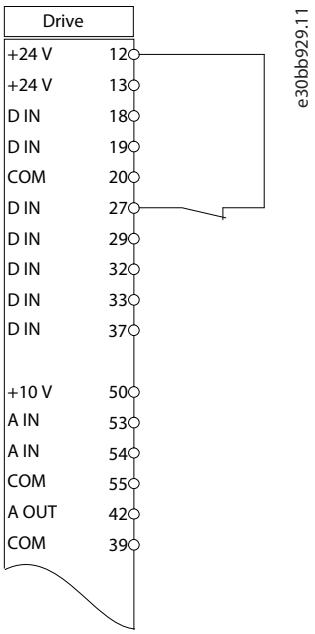	**Function**	**Setting**
	Parameter 1-29 Automatic Motor Adaptation (AMA)	*[1] Enable complete AMA*
	Parameter 5-12 Terminal 27 Digital Input	*[2]* Coast inverse*
	*=Default value	
	Notes/comments: Set *parameter group 1-2* Motor Data* according to motor nameplate.	

12.1.2 Wiring Configuration for Automatic Motor Adaptation without T27

Table 104: AMA without T27 Connected

	Parameters	
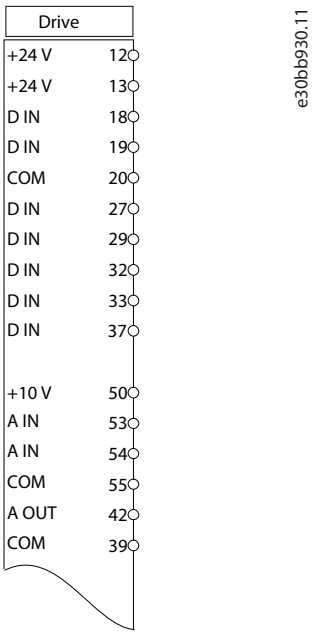	**Function**	**Setting**
	Parameter 1-29 Automatic Motor Adaptation (AMA)	*[1] Enable complete AMA*
	Parameter 5-12 Terminal 27 Digital Input	*[0] No operation*
	*=Default value	
	Notes/comments:*Parameter group 1-2* Motor Data* must be set according to motor.	

12.1.3 Wiring Configuration: Speed

Table 105: Analog Speed Reference (Voltage)

	Parameters	
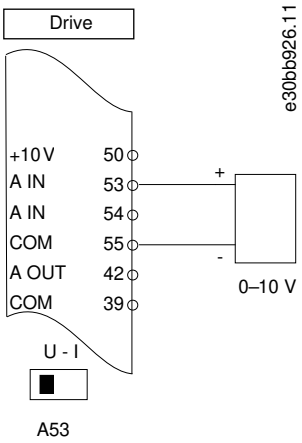	**Function**	**Setting**
	Parameter 6-10 Terminal 53 Low Voltage	0.07 V*
	Parameter 6-11 Terminal 53 High Voltage	10 V*
	Parameter 6-14 Terminal 53 Low Ref./Feedb. value	0 Hz
	Parameter 6-15 Terminal 53 High Ref./Feedb. Value	50 Hz
	*=Default value	
	Notes/comments: D IN 37 is an option.	

Table 106: Analog Speed Reference (Current)

	Parameters	
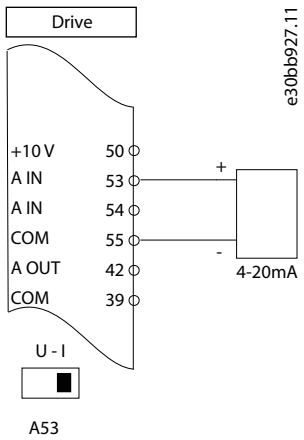	**Function**	**Setting**
	Parameter 6-12 Terminal 53 Low Current	4 mA*
	Parameter 6-13 Terminal 53 High Current	20 mA*
	Parameter 6-14 Terminal 53 Low Ref./Feedb. value	0 Hz
	Parameter 6-15 Terminal 53 High Ref./Feedb. Value	50 Hz
	*=Default value	
	Notes/comments: D IN 37 is an option.	

Table 107: Speed Reference (Using a Manual Potentiometer)

	Parameters	
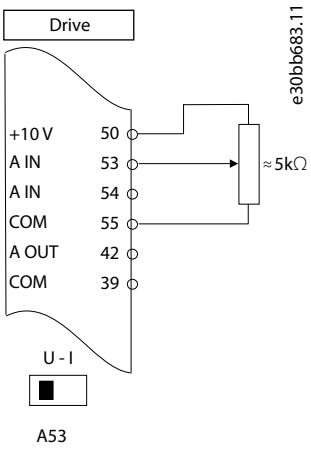	**Function**	**Setting**
	Parameter 6-10 Terminal 53 Low Voltage	0.07 V*
	Parameter 6-11 Terminal 53 High Voltage	10 V*
	Parameter 6-14 Terminal 53 Low Ref./Feedb. value	0 Hz
	Parameter 6-15 Terminal 53 High Ref./Feedb. Value	50 Hz
	*=Default value	
	Notes/comments: D IN 37 is an option.	

Table 108: Speed Up/Down

	Parameter	
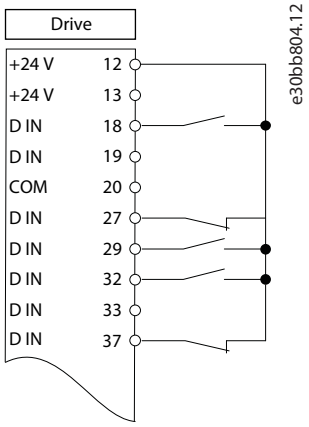	**Function**	**Setting**
	Parameter 5-10 Terminal 18 Digital Input	*[8] Start**
	Parameter 5-12 Terminal 27 Digital Input	*[19] Freeze Reference*
	Parameter 5-13 Terminal 29 Digital Input	*[21] Speed Up*
	Parameter 5-14 Terminal 32 Digital Input	*[22] Speed Down*
	*=Default value	
	Notes/comments: D IN 37 is an option.	

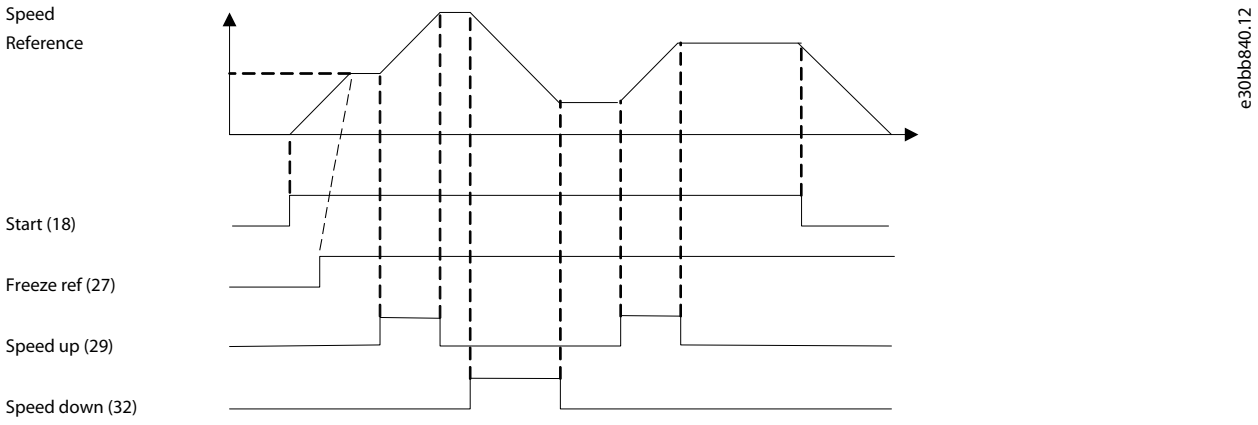

Illustration 93: Speed Up/Down

12.1.4 Wiring Configuration: Feedback

Table 109: Analog Current Feedback Transducer (2-wire)

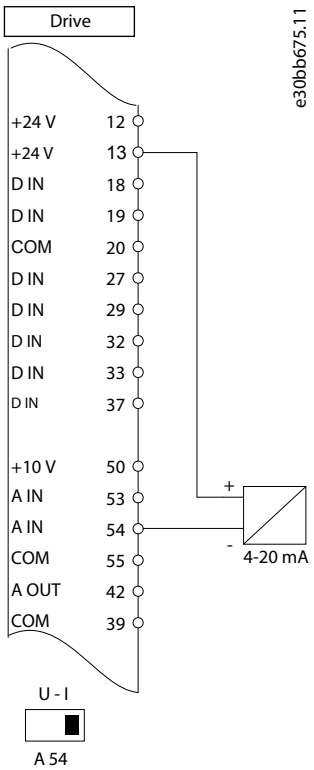

Parameters	
Function	**Setting**
Parameter 6-22 Terminal 54 Low Current	4 mA*
Parameter 6-23 Terminal 54 High Current	20 mA*
Parameter 6-24 Terminal 54 Low Ref./Feedb. value	0*
Parameter 6-25 Terminal 54 High Ref./Feedb. Value	50*
*=Default value	
Notes/comments: D IN 37 is an option.	

Table 110: Analog Voltage Feedback Transducer (3-wire)

	Parameters	
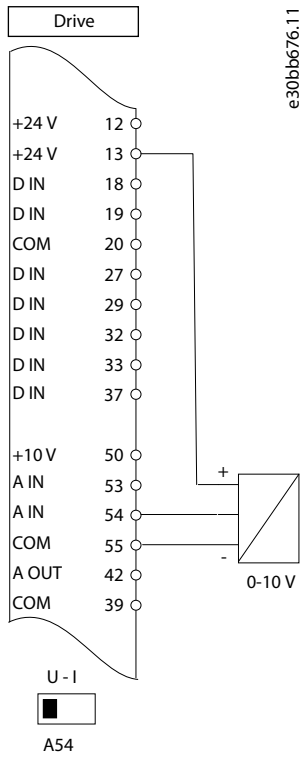	**Function**	**Setting**
	Parameter 6-20 Terminal 54 Low Voltage	0.07 V*
	Parameter 6-21 Terminal 54 High Voltage	10 V*
	Parameter 6-24 Terminal 54 Low Ref./Feedb. value	0*
	Parameter 6-25 Terminal 54 High Ref./Feedb. Value	50*
	*=Default value	
	Notes/comments: D IN 37 is an option.	

Table 111: Analog Voltage Feedback Transducer (4-wire)

	Parameters	
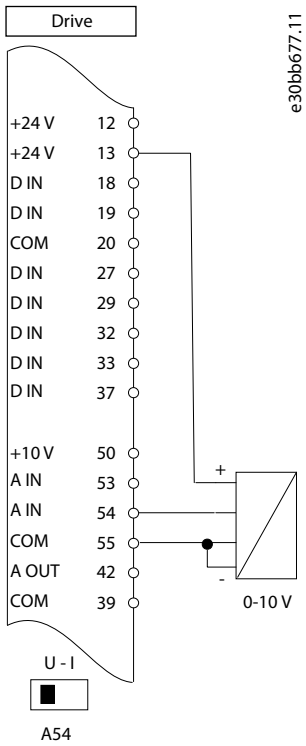	**Function**	**Setting**
	Parameter 6-20 Terminal 54 Low Voltage	0.07 V*
	Parameter 6-21 Terminal 54 High Voltage	10 V*
	Parameter 6-24 Terminal 54 Low Ref./Feedb. value	0*
	Parameter 6-25 Terminal 54 High Ref./Feedb. Value	50*
	*=Default value	
	Notes/comments: D IN 37 is an option.	

12.1.5 Wiring Configuration: Run/Stop

Table 112: Run/Stop Command with External Interlock

	Parameter	
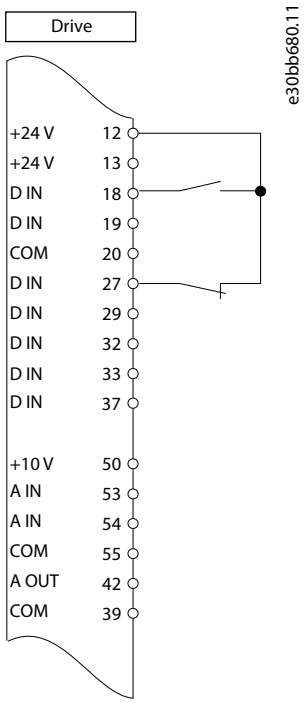	**Function**	**Setting**
	Parameter 5-10 Terminal 18 Digital Input	*[8] Start**
	Parameter 5-12 Terminal 27 Digital Input	*[7] External interlock*
	*=Default value	
	Notes/comments: D IN 37 is an option.	

Table 113: Run/Stop Command without External Interlock

	Parameter	
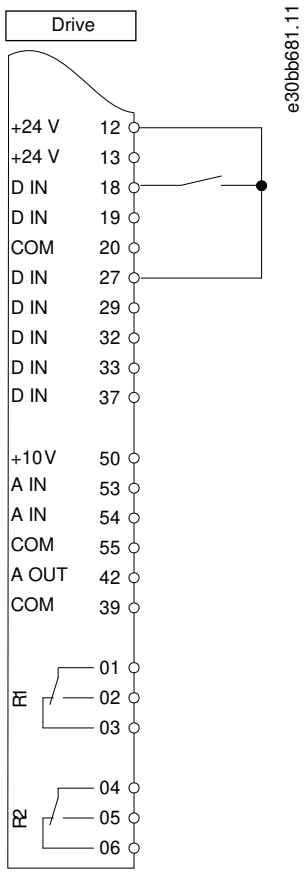	**Function**	**Setting**
	Parameter 5-10 Terminal 18 Digital Input	*[8] Start**
	Parameter 5-12 Terminal 27 Digital Input	*[7] External interlock*
	*=Default value	
	Notes/comments: If *parameter 5-12 Terminal 27 Digital Inputs* is set to *[0] No operation*, a jumper wire to terminal 27 is not needed. D IN 37 is an option.	

Table 114: Run Permissive

	Parameter	
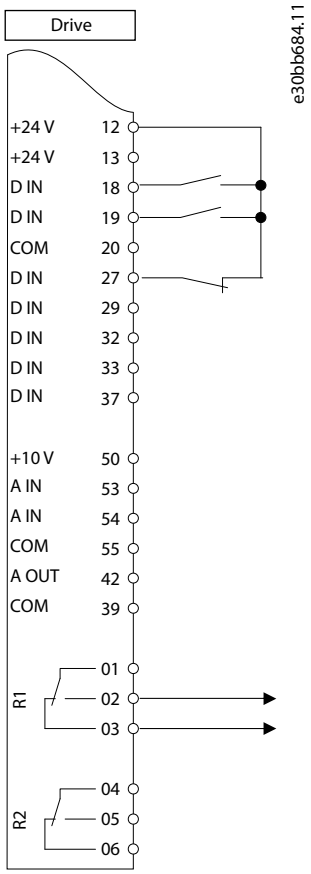	**Function**	**Setting**
	Parameter 5-10 Terminal 18 Digital Input	*[8] Start**
	Parameter 5-11 Terminal 19 Digital Input	*[52] Run permissive*
	Parameter 5-12 Terminal 27 Digital Input	*[7] External interlock*
	Parameter 5-40 Function Relay	*[167] Start command act.*
	*=Default value	
	Notes/comments: D IN 37 is an option.	

12.1.6 Wiring Configuration: Start/Stop

Table 115: Start/Stop Command with Safe Torque Off Option

	Parameter	
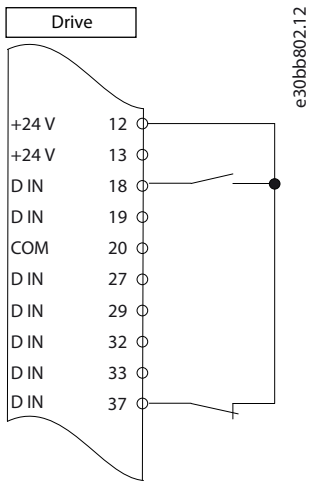	**Function**	**Setting**
	Parameter 5-10 Terminal 18 Digital Input	*[Start]**
	Parameter 5-12 Terminal 27 Digital Input	*[0] No operation*
	Parameter 5-19 Terminal 37 Safe Stop	*[1] Safe Stop Alarm*
	*=Default value	
	Notes/comments: If *parameter 5-12 Terminal 27 Digital Input* is set *[0] No operation*, a jumper wire to terminal 27 is not needed. D IN 37 is an option.	

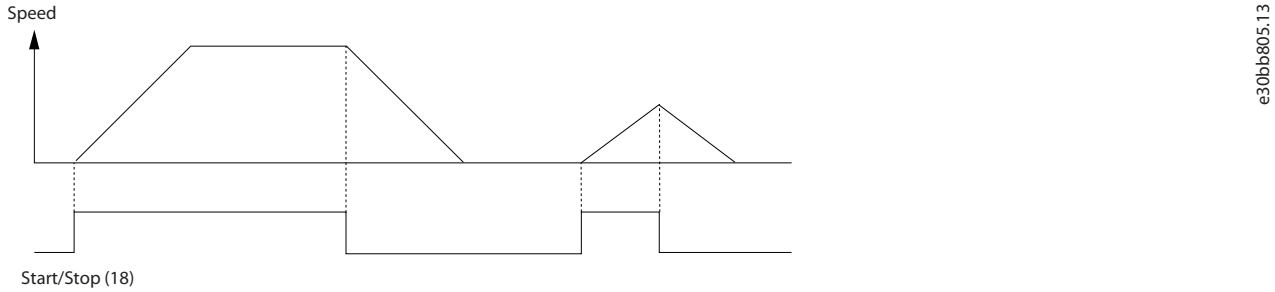

Illustration 94: Start/Stop Command with Safe Torque Off

Table 116: Pulse Start/Stop

	Parameter	
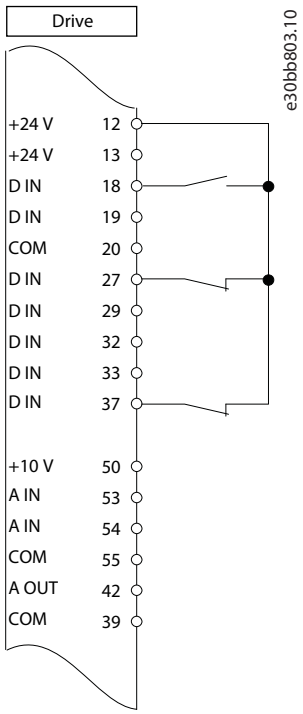	**Function**	**Setting**
	Parameter 5-10 Terminal 18 Digital Input	*[9] Latched Start*
	Parameter 5-12 Terminal 27 Digital Input	*[6] Stop Inverse*
	*=Default value	
	Notes/comments: If *parameter 5-12 Terminal 27 Digital Input* is set *[0] No operation*, a jumper wire to terminal 27 is not needed. D IN 37 is an option.	

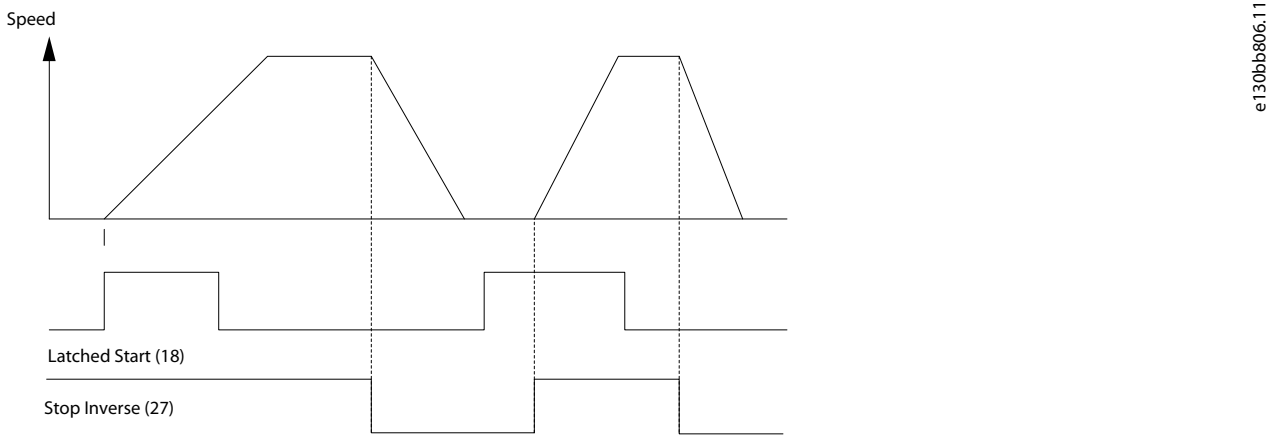

Illustration 95: Latched Start/Stop Inverse

Table 117: Start/Stop with Reversing and 4 Preset Speeds

	Parameters	
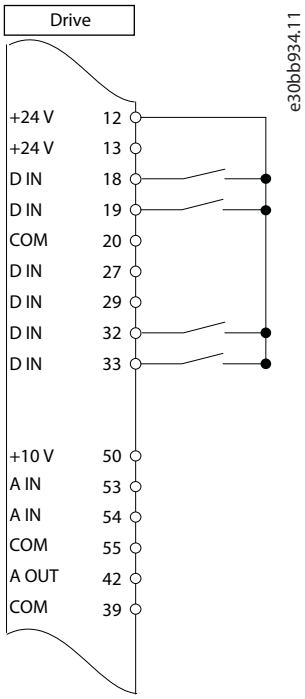	**Function**	**Setting**
	Parameter 5-10 Terminal 18 Digital Input	*[8] Start*
	Parameter 5-11 Terminal 19 Digital Input	*[10] Reversing**
	Parameter 5-12 Terminal 27 Digital Input	*[0] No operation*
	Parameter 5-14 Terminal 32 Digital Input	*[16] Preset ref bit 0*
	Parameter 5-15 Terminal 33 Digital Input	*[17] Preset ref bit 1*
	Parameter 3-10 Preset Reference Preset ref. 0 Preset ref. 1 Preset ref. 2 Preset ref. 3	25% 50% 75% 100%
	*=Default value	
	Notes/comments: D IN 37 is an option.	

12.1.7 Wiring Configuration: External Alarm Reset

Table 118: External Alarm Reset

	Parameter	
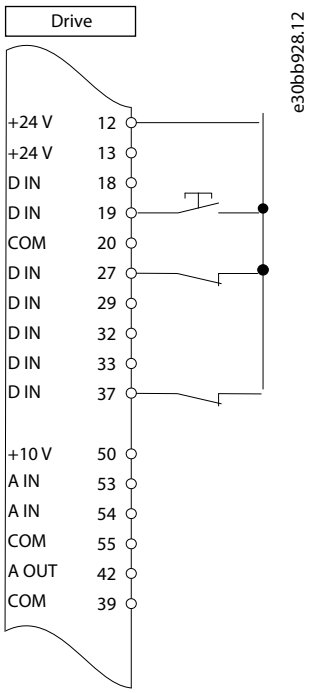	**Function**	**Setting**
	Parameter 5-11 Terminal 19 Digital Input	*[1] Reset*
	*=Default value	
	Notes/comments: D IN 37 is an option.	

12.1.8 Wiring Configuration: RS485

Table 119: RS485 Network Connection

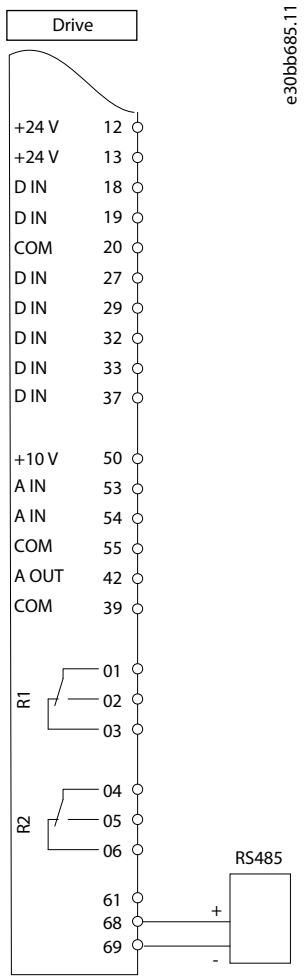

Parameter	
Function	**Setting**
Parameter 8-30 Protocol	FC*
Parameter 8-31 Address	1*
Parameter 8-32 Baud Rate	9600*
*=Default value	
Notes/comments: Select protocol, address, and baud rate in the above-mentioned parameters. D IN 37 is an option.	

12.1.9 Wiring Configuration: Motor Thermistor

Table 120: Motor Thermistor

	Parameters	
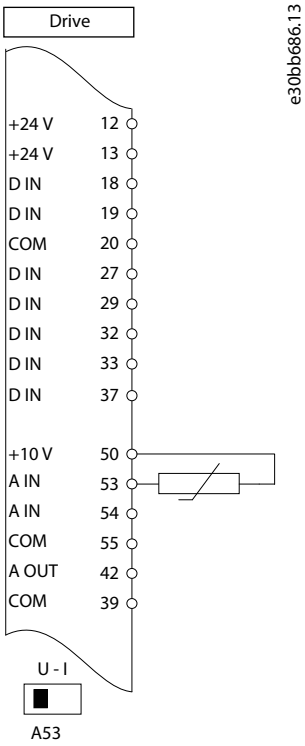	**Function**	**Setting**
	Parameter 1-90 Motor Thermal Protection	*[2] Thermistor trip*
	Parameter 1-93 Thermistor Source	*[1] Analog input 53*
	* = Default value	
	If only a warning is required, set *parameter 1-90 Motor Thermal Protection* to *[1] Thermistor warning*. D IN 37 is an option.	

12.1.10 Wiring Configuration for a Relay Setup with Smart Logic Control

Table 121: Wiring Configuration for a Relay Setup with Smart Logic Control

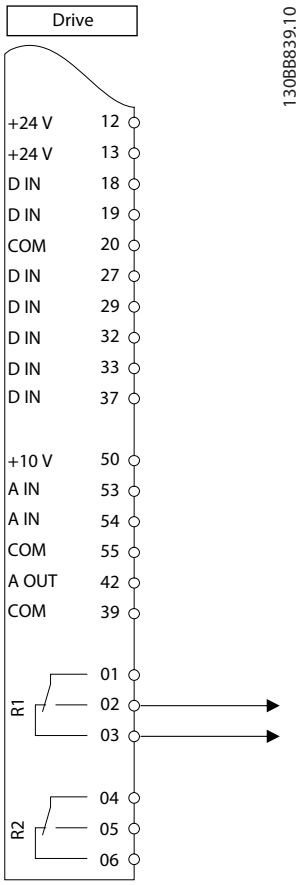

Parameters	
Function	**Setting**
Parameter 4-30 Motor Feedback Loss Function	*[1] Warning*
Parameter 4-31 Motor Feedback Speed Error	100 RPM
Parameter 4-32 Motor Feedback Loss Timeout	5 s
Parameter 7-00 Speed PID Feedback Source	*[2] MCB 102*
Parameter 17-11 Resolution (PPR)	1024*
Parameter 13-00 SL Controller Mode	*[1] On*
Parameter 13-01 Start Event	*[19] Warning*
Parameter 13-02 Stop Event	*[44] Reset key*
Parameter 13-10 Comparator Operand	*[21] Warning no.*
Parameter 13-11 Comparator Operator	*[1] ≈ (equal)**
Parameter 13-12 Comparator Value	90
Parameter 13-51 SL Controller Event	*[22] Comparator 0*
Parameter 13-52 SL Controller Action	*[32] Set digital out A low*
Parameter 5-40 Function Relay	*[80] SL digital output A*
*=Default value	
Notes/comments: If the limit in the feedback monitor is exceeded, *warning 90, Feedback Mon.* is issued. The SLC monitors *warning 90, Feedback Mon.* and if the warning becomes true, relay 1 is triggered. External equipment may require service. If the feedback error goes below the limit again within 5 s, the drive continues and the warning disappears. Reset relay 1 by pressing [Reset] on the LCP.	

13 How to Order a Drive

13.1 Drive Configurator

1	2	3	4	5	6	7	8	9	10	11	12	13	14	15	16	17	18	19	20	21	22	23	24	25	26	27	28	29	30	31	32	33	34	35	36	37	38	39
F	C	-				P				T											X	X	S	X	X	X	X	A		B		C					D	

e30bb836.10

Illustration 96: Type Code Example

Configure the right drive for the right application from the internet-based Drive Configurator and generate the type code string. The Drive Configurator automatically generates an 8-digit sales number to be delivered to the local sales office. Furthermore, it is possible to establish a project list with several products and send it to a Danfoss sales representative.

The Drive Configurator can be found on the global website: www.danfoss.com/drives.

13.1.1 Type Code

An example of the type code is:

FC-202PK75T4E20H1BGCXXXSXXXXA0BXCXXXXD0

The meaning of the characters in the string is described in Table 122 and Table 123. In the example above, a PROFIBUS V1 and a 24 V back-up option is built in.

Table 122: Ordering Type Code, Enclosure Sizes A, B, and C

Description	Position	Possible options
Product group	1–2	FC
Drive series	4–6	202
Power rating	8–10	0.25–90 kW (0.34–110 hp)
Phases	11	S: Single phase T: Three phases
Mains voltage	12	S2: 200–240 V T2: 200–240 V T4: 380–480 V T6: 525–600 V T7: 525–690 V
Enclosure	13–15	E20: IP20
		E55: IP55/NEMA Type 12
		P20: IP20 (with backplate)
		P21: IP21/NEMA Type 12 (with backplate)
		P55: IP55/NEMA Type 12 (with backplate)
		Z20: IP21
		E66: IP66
RFI filter	16–17	Hx: No EMC filters built in the drive (600 V units only)
		H1: Integrated EMC filter. Fulfil EN 55011 Class A1/B and EN/IEC 61800-3 Category 1/2
		H2: No extra EMC filter. Fulfil EN 55011 Class A2 and EN/IEC 61800-3 Category 3

Description	Position	Possible options
		H3: Integrated EMC filter. Fulfil EN 55011 class A1/B and EN/IEC 61800-3 Category 1/2 (enclosure size A1 only)
		H4: Integrated EMC filter. Fulfil EN 55011 Class A1 and EN/IEC 61800-3 Category 2
		H5: Marine versions. Fulfill same emission levels as H2 versions, but is ruggedized for improved vibration resistance.
Brake	18	B: Brake chopper included
		X: No brake chopper included
		T: Safe torque off no brake
		U: Safe torque off brake chopper
Display	19	G: Graphical local control panel (LCP 102) N: Numerical local control panel (LCP 101) W: Wireless control panel (LCP 103) X: No local control panel
Coating PCB	20	C: Coated PCB R: Ruggedized X. No coated PCB
Mains option	21	X. No mains option
		1: Mains disconnect
		3: Mains disconnect and fuse[(1)]
		5: Mains disconnect, fuse, and load sharing[(1)], [(2)]
		7: Fuse[(1)]
		8: Mains disconnect and load sharing[(2)]
		A: Fuse and load sharing[(1)],[(2)]
		D: Load sharing[(3)]
Adaptation	22	X: Standard cable entries O: European metric thread in cable entries (A4, A5, B1, and B2) S. Imperial cable entries (A5, B1, B2, C1, and C2 only)
Adaptation	23	X: No adaptation
Software release	24–27	SXXX: Latest release, standard software LXX1: Cascade Controller LX11: Cascade Controller + Condition-based Monitoring
Software language	28	X: Not used

[1] US market only.

[2] A and B3 enclosures have load sharing built-in by default.

[3] A and B3 enclosures have load sharing built in by default.

Table 123: Ordering Type Code, Options

Description	Position	Possible options
A options	29–30	AX: No A option A0: VLT® PROFIBUS DP-V1 MCA 101 (standard) A4: VLT® DeviceNet MCA 104 (standard) AK: VLT® BACnet IP MCA 125 AL: VLT® PROFINET MCA 120 AN: VLT® EtherNet/IP MCA 121 AQ: VLT® Modbus TCP MCA 122
B options	31–32	BX: No option BK: VLT® General Purpose I/O Option MCB 101 BY: VLT® Extended Cascade Control MCO 101 BP: VLT® Relay Option MCB 105 B0: VLT® I/O Option with RTC Back-up MCB 109 B2: VLT® PTC Thermistor Card MCB 112 B4: VLT® Sensor Input MCB 114 B5: VLT® Programmable I/O MCB 115
C0 options	33–34	CX: No option
C1 options	35	X: No options R: VLT® Extended Relay Card MCB 113 5: VLT® Advanced Cascade Control MCO 102
C option software	36–37	XX: Standard controller
D options	38–39	DX: No option D0: VLT® Extended 24 V DC Back-up MCB 107 D1: VLT®Real-time Clock MCB 117

N O T I C E

For power sizes over 90 kW, see the VLT® AQUA Drive 110–1400 kW Design Guide.

13.1.2 Language Packages

Drives are automatically delivered with a language package relevant to the region from which it is ordered. 4 regional language packages cover the following languages:

Table 124: Regional Language Packages

Language package 1	Language package 2	Language package 3	Language package 4
English	English	English	English
German	German	German	German
French	Chinese	Slovenian	Spanish
Danish	Korean	Bulgarian	English US
Spanish	Thai	Romanian	Brazilian Portuguese
Swedish	Traditional Chinese	Hungarian	Turkish
Italian	Bahasa Indonesian	Czech	Polish

Language package 1	Language package 2	Language package 3	Language package 4
Finnish		Russian	

To order drives with a different language package, contact the local sales office.

13.2 Order Numbers for Options and Accessories

13.2.1 Order Numbers for Options for Slot A

Table 125: Ordering Numbers for A Options

Description	Ordering number	
	Uncoated	Coated
VLT® PROFIBUS DP MCA 101	130B1100	130B1200
VLT® DeviceNet MCA 104	130B1102	130B1202
VLT® PROFINET MCA 120	130B1135	130B1235
VLT® EtherNet/IP MCA 121	130B1119	130B1219
VLT® Modbus TCP MCA 122	130B1196	130B1296
VLT® BACnet/IP MCA 125	–	134B1586

13.2.2 Order Numbers for Options for Slot B

Table 126: Ordering Numbers for B Options

Descriptions	Ordering number	
	Uncoated	Coated
VLT® General Purpose I/O MCB 101	130B1125	130B1212
VLT® Relay Option MCB 105	130B1110	130B1210
VLT® Analog I/O Option with RTC MCB 109	130B1143	130B1243
VLT® PTC Thermistor Card MCB 112	–	130B1137
VLT® Sensor Input Option MCB 114	130B1172	130B1272
VLT® Programmable I/O MCB 115	–	130B1266
VLT® Extended Cascade Controller MCO 101	130B1118	130B1218

13.2.3 Order Numbers for Options for Slot C

Table 127: Ordering Numbers for C Options

Description	Ordering number	
	Uncoated	Coated
VLT® Advanced Cascade Controller MCO 102	130B1154	130B1254
VLT® Extended Relay Card MCB 113	130B1164	130B1264
VLT® Mounting Kit for C Option, 40 mm, enclosure sizes A2/A3	130B7530	
VLT® Mounting Kit for C Option, 60 mm, enclosure sizes A2/A3	130B7531	

Description	Ordering number
VLT® Mounting Kit for C Option, enclosure size A5	130B7532
VLT® Mounting Kit for C Option, enclosure sizes B/C/D/E/F (except B3)	130B7533
VLT® Mounting Kit for C Option, 40 mm, enclosure size B3	130B1413
VLT® Mounting Kit for C Option, 60 mm, enclosure size B3	130B1414

13.2.4 Order Numbers for Options for Slot D

Table 128: Order Numbers for D Options

Description	Order number	
	Uncoated	**Coated**
VLT® 24 V DC Supply MCB 107	130B1108	130B1208
VLT® Real-time Clock MCB 117	–	130B6544

13.2.5 Order Numbers for VLT® Leakage Current Monitor Kits

Table 129: Order Numbers for Leakage Current Monitor Kits

Description	Order number
VLT® Leakage Current Monitor Kit, enclosure sizes A2/A3	130B5645
VLT® Leakage Current Monitor Kit, enclosure size B3	130B5764
VLT® Leakage Current Monitor Kit, enclosure size B4	130B5765
VLT® Leakage Current Monitor Kit, enclosure size C3	130B6226
VLT® Leakage Current Monitor Kit, enclosure size C4	130B5647

13.2.6 Order Numbers for Miscellaneous Hardware

Table 130: Ordering Numbers for Hardware Options

Description	Ordering number
	Uncoated
VLT® Panel through kit enclosure size A5	130B1028
VLT® Panel through kit enclosure size B1	130B1046
VLT® Panel through kit enclosure size B2	130B1047
VLT® Panel through kit enclosure size C1	130B1048
VLT® Panel through kit enclosure size C2	130B1049
VLT® Mounting brackets for enclosure size A5	130B1080
VLT® Mounting brackets for enclosure size B1	130B1081
VLT® Mounting brackets for enclosure size B2	130B1082
VLT® Mounting brackets for enclosure size C1	130B1083
VLT® Mounting brackets for enclosure size C2	130B1084

Description	Ordering number
VLT® IP 21/Type 1 Kit, enclosure size A2	130B1122
VLT® IP 21/Type 1 Kit, enclosure size A3	130B1123
VLT® IP 21/Type 1 Top Kit, enclosure size A2	130B1132
VLT® IP 21/Type 1 Top Kit, enclosure size A3	130B1133
VLT® Back plate IP55/Type 12, enclosure size A5	130B1098
VLT® Back plate IP21/Type 1, IP55/Type 12, enclosure size B1	130B3383
VLT® Back plate IP21/Type 1, IP55/Type 12, enclosure size B2	130B3397
VLT® Back plate IP20/Type 1, enclosure size B4	130B4172
VLT® Back plate IP21/Type 1, IP55/Type 12, enclosure size C1	130B3910
VLT® Back plate IP21/Type 1, IP55/Type 12, enclosure size C2	130B3911
VLT® Back plate IP20/Type 1, enclosure size C3	130B4170
VLT® Back plate IP20/Type 1, enclosure size C4	130B4171
VLT® Back plate IP66/Type 4X, enclosure size A5	130B3242
VLT® Back plate in stainless steel IP66/Type 4X, enclosure size B1	130B3434
VLT® Back plate in stainless steel IP66/Type 4X, enclosure size B2	130B3465
VLT® Back plate in stainless steel IP66/Type 4X, enclosure size C1	130B3468
VLT® Back plate in stainless steel IP66/Type 4X, enclosure size C2	130B3491
VLT® PROFIBUS Adapter Sub-D9 Connector	130B1112
PROFIBUS shield plate kit for IP20, enclosure sizes A2, and A3	130B0524
Terminal block for DC link connection on enclosure sizes A2/A3	130B1064
VLT® Screw terminals	130B1116
VLT® USB extension, 350 mm (13.8 in) cable	130B1155
VLT® USB extension, 650 mm (25.6 in) cable	130B1156
VLT® Back frame A2 for 1 brake resistor	175U0085
VLT® Back frame A3 for 1 brake resistor	175U0088
VLT® Back frame A2 for 2 brake resistors	175U0087
VLT® Back frame A3 for 2 brake resistors	175U0086
VLT® weather shield for enclosure sizes A4, A5, B1, B2	130B4598
VLT® weather shield for enclosure sizes C1, C2	130B4597

13.2.7 Order Numbers for Local Control Panel Options

Table 131: Order Numbers for Local Control Panels

Description	Order number
VLT® LCP 101 Numeric Local Control Pad	130B1124
VLT® LCP 102 Graphical Local Control Pad	130B1107
VLT® Wireless Control Panel LCP 103	134B0460
VLT® Cable for LCP 2, 3 m (9.8 ft)	175Z0929
VLT® Panel Mounting Kit for all LCP types	130B1170
VLT® Panel Mounting Kit with graphical LCP	130B1113
VLT® Panel Mounting Kit with numerical LCP	130B1114
VLT® LCP Mounting Kit, without LCP	130B1117
VLT® LCP Mounting Kit Blind Cover IP55/66, 8 m (26.2 ft)	130B1129
VLT® Control Panel LCP 102, graphical	130B1078
VLT® Blind cover, with Danfoss logo, IP55/66	130B1077
Remote mounting kit for LCP with cover for outdoor mounting with 3 m (10 ft) cable	134B5223
Remote mounting kit for LCP with cover for outdoor mounting with 5 m (16 ft) cable	134B5224
Remote mounting kit for LCP with cover for outdoor mounting with 10 m (33 ft) cable	134B5225

13.2.8 Order Numbers for PC Software

Table 132: Order Numbers for VLT® Motion Control Tool MCT 10

Description	Order number
VLT® Motion Control Tool MCT 10, 1 license	130B1000
VLT® Motion Control Tool MCT 10, 5 licenses	130B1001
VLT® Motion Control Tool MCT 10, 10 licenses	130B1002
VLT® Motion Control Tool MCT 10, 25 licenses	130B1003
VLT® Motion Control Tool MCT 10, 50 licenses	130B1004
VLT® Motion Control Tool MCT 10, 100 licenses	130B1005
VLT® Motion Control Tool MCT 10, >100 licenses	130B1006

13.2.9 Ordering of VLT® Brake Resistors MCE 101

Explanation of terms used in the tables for ordering brake resistors

Horizontal braking: Duty cycle 10% and maximum 120 s repetition rates according to the reference brake profile. Average power corresponds to 6%.

Vertical braking: Duty cycle 40% and maximum 120 s repetition rates according to the reference brake profile. Average power corresponds to 27%.

Cable cross-section: Recommended minimum value based on PVC-insulated copper cable, 30 °C (86 °F) ambient temperature with normal heat dissipation. All cabling must comply with national and local regulations on cable cross-sections and ambient temperature.

Thermal relay: Brake current setting of external thermal relay. All resistors have a built-in thermal relay switch N.C.

The IP54 is with 1000 mm (39.4 in) fixed, unshielded cable. Can be used for vertical and horizontal mounting. For horizontal mounting, derating is required.

IP21 and IP65 are with screw terminal for cable termination and can be used for horizontal and vertical mounting. For horizontal mounting, derating is required.

IP20 is with bolt connection for cable termination. Used for floor mounting.

IP65 is a flat-pack type brake resistor with fixed cable.

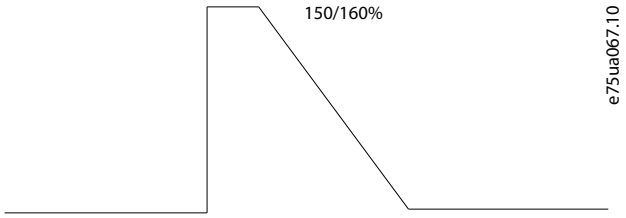

Illustration 97: Horizontal Loads

Illustration 98: Vertical Loads

13.2.9.1 Order Numbers for Brake Resistors, T2, Horizontal Braking 10% Duty Cycle

Table 133: Ordering Numbers for Brake Resistors, T2, Horizontal Braking 10% Duty Cycle

FC 202				Horizontal braking 10% duty cycle							
Drive data				Brake resistor data						Installation	
						Danfoss part numbers					
Mains type	P_m [kW]	R_{min} [Ω]	$R_{br.nom}$ [Ω]	R_{rec} [Ω]	$P_{br.cont}$ [kW]	Wire IP54	Screw terminal IP65	Screw terminal IP20	Bolt connection IP20	Cable cross-section [mm^2 (AWG)]	Thermo relay [A]
T2	0.25 (0.34)	380	691.3	630	0.100	175U3002	–	–	–	1.5 (16)	0.4
T2	0.37 (0.50)	380	466.7	410	0.100	175U3004	–	–	–	1.5 (16)	0.5
T2	0.55 (0.75)	275	313.7	300	0.100	175U3006	–	–	–	1.5 (16)	0.6
T2	0.75 (1.0)	188	230	200	0.100	175U3011	–	–	–	1.5 (16)	0.7
T2	1.1 (1.5)	130	152.9	145	0.100	175U3016	–	–	–	1.5 (16)	0.8
T2	1.5 (2.0)	81	110.5	100	0.100	175U3021	–	–	–	1.5 (16)	0.9
T2	2.2 (3.0)	58.5	74.1	70	0.200	175U3026	–	–	–	1.5 (16)	1.6

FC 202				Horizontal braking 10% duty cycle							
T2	3.0 (4.0)	45	53.7	48	0.200	175U3031	–	–	–	1.5 (16)	1.9
T2	3.7 (5.0)	31.5	39.9	35	0.300	175U3325	–	–	–	1.5 (16)	2.7
T2	5.5 (7.5)	22.5	28.7	27	0.360	175U3326	175U3477	175U3478	–	1.5 (16)	3.5
T2	7.5 (10)	17.7	20.8	18	0.570	175U3327	175U3442	175U3441	–	1.5 (16)	5.3
T2	11 (15)	12.6	14	13	0.680	175U3328	175U3059	175U3060	–	1.5 (16)	6.8
T2	15 (20)	8.7	10.2	9.0	1.130	175U3329	175U3068	175U3069	–	2.5 (14)	10.5
T2	18.5 (25)	5.3	8.2	5.7	1.400	175U3330	175U3073	175U3074	–	4 (12)	15
T2	22 (30)	5.1	6.9	5.7	1.700	175U3331	175U3483	175U3484	–	4 (12)	16
T2	30 (40)	3.2	5.0	3.5	2.200	175U3332	175U3080	175U3081	–	6 (10)	24
T2	37 (50)	3.0	4.1	3.5	2.800	175U3333	175U3448	175U3447	–	10 (8)	27
T2	45 (60)	2.4	3.3	2.8	3.200	175U3334	175U3086	175U3087	–	16 (6)	32

13.2.9.2 Order Numbers for Brake Resistors, T2, Vertical Braking 40% Duty Cycle

Table 134: Order Numbers for Brake Resistors, T2, Vertical Braking 40% Duty Cycle

FC 202				Vertical braking 40% duty cycle							
Drive data				Brake resistor data						Installation	
						Danfoss part numbers					
Mains type	P_m [kW]	R_{min} [Ω]	$R_{br.nom}$ [Ω]	R_{rec} [Ω]	$P_{br.cont}$ [kW]	Wire IP54	Screw terminal IP65	Screw terminal IP20	Bolt connection IP20	Cable cross-section [mm² (AWG)]	Thermo relay [A]
T2	0.25 (0.34)	380	691.3	630	0.100	175U3002	–	–	–	1.5 (16)	0.4
T2	0.37 (0.50)	380	466.7	410	0.100	175U3004	–	–	–	1.5 (16)	0.5
T2	0.55 (0.75)	275	313.7	300	0.200	175U3096	–	–	–	1.5 (16)	0.8
T2	0.75 (1.0)	188	230	200	0.200	175U3008	–	–	–	1.5 (16)	0.9
T2	1.1 (1.5)	130	152.9	145	0.300	175U3300	–	–	–	1.5 (16)	1.3
T2	1.5 (2.0)	81	110.5	100	0.450	175U3301	175U3402	175U3401	–	1.5 (16)	2.0
T2	2.2 (3.0)	58.5	74.1	70	0.570	175U3302	175U3404	175U3403	–	1.5 (16)	2.7

FC 202				Vertical braking 40% duty cycle							
T2	3.0 (4.0)	45	53.7	48	0.960	175U3303	175R3406	175U3405	–	1.5 (16)	4.2
T2	3.7 (5.0)	31.5	39.9	35	1.130	175U3304	175U3408	175U3407	–	1.5 (16)	5.4
T2	5.5 (7.5)	22.5	28.7	27	1.400	175U3305	175U3410	175U3409	–	1.5 (16)	6.8
T2	7.5 (10)	17.7	20.8	18	2.200	175U3306	175U3412	175U3411	–	1.5 (16)	10.4
T2	11 (15)	12.6	14	13	3.200	175U3307	175U3414	175U3413	–	2.5 (14)	14.7
T2	15 (20)	8.7	10.2	9.0	5.500	–	175U3176	175U3177	–	4 (12)	23
T2	18.5 (25)	5.3	8.2	5.7	6.000	–	–	–	175U3233	10 (8)	33
T2	22 (30)	5.1	6.9	5.7	8.000	–	–	–	175U3234	10 (8)	38
T2	30 (40)	3.2	5.0	3.5	9.000	–	–	–	175U3235	16 (6)	51
T2	37 (50)	3.0	4.1	3.5	14.000	–	–	–	175U3224	25 (4)	63
T2	45 (60)	2.4	3.3	2.8	17.000				175U3227	35 (2)	78

13.2.9.3 Order Numbers for Brake Resistors, T2, Flat-pack for Horizontal Conveyors

Table 135: Flat-pack IP65 Brake Resistors for Horizontal Conveyors, FC 202 T2, 200–240 V

			Flat-pack IP65 for horizontal conveyors			
FC 202 T2	**P_m [kW]**	**R_{min} [Ω]**	**$R_{br,nom}$ [Ω]**	**R_{rec} per item [Ω/W]**	**Duty cycle [%]**	**Ordering number**
PK25	0.25 (0.34)	380	691.3	430/100	40	175U1002
PK37	0.37 (0.50)	380	466.7	430/100	27	175U1002
PK55	0.55 (0.75)	275	313.7	330/100	18	175U1003
PK55	0.55 (0.75)	275	313.7	310/200	36	175U0984
PK75	0.75 (1.0)	188	230	220/100	13	175U1004
PK75	0.75 (1.0)	188	230	210/200	26	175U0987
P1K1	1.1 (1.5)	130	152.9	150/100	9	175U1005
P1K1	1.1 (1.5)	130	152.9	150/200	18	175U0989
P1K5	1.5 (2.0)	81	110.5	100/100	7	175U1006
P1K5	1.5 (2.0)	81	110.5	100/200	14	175U0991
P2K2	2.2 (3.)	58.5	74.1	72/200	9	175U0992
P3K0	3.0 (4.0)	45	53.7	50/200	7	175U0993
P3K7	3.7 (5.0)	31.5	39.9	35/200	6	175U0994
P3K7	3.7 (5.0)	31.5	39.9	72/200	11	2 x 175U0992

			Flat-pack IP65 for horizontal conveyors			
P5K5	5.5 (7.5)	22.5	28.7	40/200	7	2 x 175U0996

13.2.9.4 Order Numbers for Brake Resistors, T4, Horizontal Braking 10% Duty Cycle

Table 136: Order Numbers for Brake Resistors, T4, Horizontal Braking 10% Duty Cycle

FC 202				Horizontal braking 10% duty cycle							
Drive data				Brake resistor data						Installation	
						Danfoss part numbers					
Mains type	P_m [kW]	R_{min} [Ω]	$R_{br.nom}$ [Ω]	R_{rec} [Ω]	$P_{br.cont}$ [kW]	Wire IP54	Screw terminal IP65	Screw terminal IP20	Bolt connection IP20	Cable cross-section [mm^2 (AWG)]	Thermo relay [A]
T4	0.37 (0.50)	1000	1864.2	1200	0.100	175U3000	–	–	–	1.5 (16)	0.3
T4	0.55 (0.75)	1000	1246.3	1200	0.100	175U3000	–	–	–	1.5 (16)	0.3
T4	0.75 (1.0)	620	910.2	850	0.100	175U3001	–	–	–	1.5 (16)	0.4
T4	1.1 (1.5)	546	607.3	630	0.100	175U3002	–	–	–	1.5 (16)	0.4
T4	1.5 (2.0)	382	437.3	410	0.100	175U3004	–	–	–	1.5 (16)	0.5
T4	2.2 (3.0)	260	293.3	270	0.200	175U3007	–	–	–	1.5 (16)	0.8
T4	3.0 (4.0)	189	212.7	200	0.200	175U3008	–	–	–	1.5 (16)	0.9
T4	4.0 (5.0)	135	157.3	145	0.300	175U3300	–	–	–	1.5 (16)	1.3
T4	5.5 (7.5)	99	113.3	110	0.450	175U3335	175U3450	175U3449	–	1.5 (16)	1.9
T4	7.5 (10)	72	82.4	80	0.570	175U3336	175U3452	175U3451	–	1.5 (16)	2.5
T4	11 (15)	50	55.3	56	0.680	175U3337	175U3027	175U3028	–	1.5 (16)	3.3
T4	15 (20)	36	40.3	38	1.130	175U3338	175U3034	175U3035	–	1.5 (16)	5.2
T4	18.5 (25)	27	32.5	28	1.400	175U3339	175U3039	175U3040	–	1.5 (16)	6.7
T4	22 (30)	20.3	27.2	22	1.700	175U3340	175U3047	175U3048	–	1.5 (16)	8.3
T4	30 (40)	18	19.8	19	2.200	175U3357	175U3049	175U3050	–	1.5 (16)	10.1
T4	37 (50)	13.4	16	14	2.800	175U3341	175U3055	175U3056	–	2.5 (14)	13.3
T4	45 (60)	10.8	13.1	12	3.200	175U3359	175U3061	175U3062	–	2.5 (14)	15.3
T4	55 (75)	8.8	10.7	9.5	4.200	–	175U3065	175U3066	–	4 (12)	20

FC 202				Horizontal braking 10% duty cycle							
T4	75 (100)	6.5	7.8	7.0	5.500	–	175U3070	175U3071	–	6 (10)	26
T4	90 (125)	4.2	6.5	5.5	7.000	–	–	–	175U3231	10 (8)	36
T4	110 (150)	3.6	5.3	4.7	9.000	–	–	–	175U3079	16 (6)	44
T4	132 (175)	3.0	4.4	3.7	11.000	–	–	–	175U3083	25 (4)	55
T4	160 (250)	2.5	3.6	3.3	13.000	–	–	–	175U3084	35 (2)	63
T4	200 (300)	2.0	2.9	2.7	16.000	–	–	–	175U3088	50 (1-1/0)	77
T4	250 (350)	1.6	2.3	2.1	20.000	–	–	–	175U3091	70 (2/0)	98
T4	315 (450)	1.2	1.8	1.7	26.000	–	–	–	175U3093	2 x 35 (2 x 2)	124
T4	355 (475)	1.2	1.6	1.3	32.000	–	–	–	175U3097	2 x 35 (2 x 2)	157
T4	400 (550)	1.2	1.4	1.2	36.000	–	–	–	175U3098	2 x 50 (2 x 1-1/0)	173
T4	450 (600)	1.1	1.3	1.1	42.000	–	–	–	175U3099	2 x 50 (2 x 1-1/0)	196
T4	500 (650)	0.9	1.1	2 x 1.9	–	–	–	–	–	–	–
T4	560 (750)	0.9	1.0	2 x 1.7	–	–	–	–	–	–	–
T4	630 (850)	0.8	0.9	2 x 1.5	–	–	–	–	–	–	–
T4	710 (950)	0.7	0.8	2 x 1.3	–	–	–	–	–	–	–
T4	800 (1075)	0.6	0.7	3 x 1.8	–	–	–	–	–	–	–
T4	1000 (1350)	0.5	0.6	3 x 1.6	–	–	–	–	–	–	–

13.2.9.5 Order Numbers for Brake Resistors, T4, Vertical Braking 40% Duty Cycle

Table 137: Order Numbers for Brake Resistors, T4, Vertical Braking 40% Duty Cycle

FC 202				Vertical braking 40% duty cycle				
Drive data				Brake resistor data			Installation	
						Danfoss part numbers		

FC 202				Vertical braking 40% duty cycle							
Mains type	P_m [kW]	R_{min} [Ω]	$R_{br.nom}$ [Ω]	R_{rec} [Ω]	$P_{br.cont}$ [kW]	Wire IP54	Screw terminal IP65	Screw terminal IP20	Bolt connection IP20	Cable cross-section [mm^2 (AWG)]	Thermo relay [A]
T4	0.37 (0.50)	1000	1864.2	1200	0.200	175U3101				1.5 (16)	0.4
T4	0.50 (0.75)	1000	1246.3	1200	0.200	175U31021				1.5 (16)	0.4
T4	0.75 (1.0)	620	910.2	850	0.200	175U3308				1.5 (16)	0.5
T4	1.1 (1.5)	546	607.3	630	0.300	175U3309	–	–	–	1.5 (16)	0.7
T4	1.5 (2.0)	382	437.3	410	0.450	175U3310	175U3416	175U3415	–	1.5 (16)	1.0
T4	2.2 (3.0)	260	293.3	270	0.570	175U3311	175U3418	175U3417	–	1.5 (16)	1.4
T4	3.0 (4.0)	189	212.7	200	0.960	175U3312	175U3420	175U3419	–	1.5 (16)	2.1
T4	4.0 (5.0)	135	157.3	145	1.130	175U3313	175U3422	175U3421	–	1.5 (16)	2.7
T4	5.5 (7.5)	99	113.3	110	1.700	175U3314	175U3424	175U3423	–	1.5 (16)	3.7
T4	7.5 (10)	72	82.4	80	2.200	175U3315	175U3138	175U3139	–	1.5 (16)	5.0
T4	11 (15)	50	55.3	56	3.200	175U3316	175U3428	175U3427	–	1.5 (16)	7.1
T4	15 (20)	36	40.3	38	5.000	–	–	–	175U3236	1.5 (16)	11.5
T4	18.5 (25)	27	32.5	28	6.000	–	–	–	175U3237	2.5 (14)	14.7
T4	22 (30)	20.3	27.2	22	8.000	–	–	–	175U3238	4 (12)	19
T4	30 (40)	18	19.8	19	10.000	–	–	–	175U3203	4 (12)	23
T4	37 (50)	13.4	16	14	14.000	–	–	–	175U3206	10 (8)	32
T4	45 (60)	10.8	13.1	12	17.000	–	–	–	175U3210	10 (8)	38
T4	55 (75)	8.8	10.7	9.5	21.000	–	–	–	175U3213	16 (6)	47
T4	75 (100)	6.5	7.8	7.0	26.000	–	–	–	175U3216	25 (4)	61
T4	90 (125)	4.2	6.5	5.5	36.000	–	–	–	175U3219	35 (2)	81
T4	110 (150)	3.6	5.3	4.7	42.000	–	–	–	175U3221	50 (1-1/0)	95
T4	132 (175)	3.0	4.4	3.7	52.000	–	–	–	175U3223	70 (2/0)	119

FC 202				Vertical braking 40% duty cycle							
T4	160 (250)	2.5	3.6	3.3	60.000	–	–	–	175U3225	2 x 35 (2 x 2)	135
T4	200 (300)	2.0	2.9	2.7	78.000	–	–	–	175U3228	2 x 50 (2 x 1-1/0)	170
T4	250 (350)	1.6	2.3	2.1	90.000	–	–	–	175U3230	2 x 70 (2 x 2/0)	207
T4	315 (450)	1.2	1.8	1.7	–	–	–	–	–	–	–
T4	355 (475)	1.2	1.6	1.3	–	–	–	–	–	–	–
T4	400 (550)	1.2	1.4	1.2	–	–	–	–	–	–	–
T4	450 (600)	1.1	1.3	1.1	–	–	–	–	–	–	–
T4	500 (650)	0.9	1.1	2 x 1.9	–	–	–	–	–	–	–
T4	560 (750)	0.9	1.0	2 x 1.7	–	–	–	–	–	–	–
T4	630 (850)	0.8	0.9	2 x 1.5	–	–	–	–	–	–	–
T4	710 (950)	0.7	0.8	2 x 1.3	–	–	–	–	–	–	–
T4	800 (1075)	0.6	0.7	3 x 1.8	–	–	–	–	–	–	–
T4	1000 (1350)	0.5	0.6	3 x 1.6	–	–	–	–	–	–	–

13.2.9.6 Order Numbers for Brake Resistors, T4, Flat-pack for Horizontal Conveyors

Table 138: Flat-pack IP65 Brake Resistors for Horizontal Conveyors, FC 202 T4, 380–480 V

			Flat-pack IP65 for horizontal conveyors			
FC 202 T4	**P_m [kW]**	**R_{min} [Ω]**	**$R_{br,nom}$ [Ω]**	**R_{rec} per item [Ω/W]**	**Duty cycle [%]**	**Ordering number**
PK75	0.75 (1.0)	620	910.2	830/100	13	175U1000
P1K1	1.1 (1.5)	546	607.3	620/100	9	175U1001
P1K1	1.1 (1.5)	546	607.3	620/100	18	175U0982
P1K5	1.5 (2.0)	382	437.3	430/100	7	175U1002
P1K5	1.5 (2.0)	382	437.3	430/200	14	175U0983
P2K2	2.2 (3.0)	260	293.3	310/200	9	175U0984
P3K0	3.0 (4.0)	189	212.7	210/200	7	175U0987
P4K0	4.0 (5.0)	135	157.3	150/200	5	175U0989

			Flat-pack IP65 for horizontal conveyors			
P4K0	4.0 (5.0)	135	157.3	300/200	10	2 x 175U0985
P5K5	5.5 (7.5)	99	113.3	130/200	7	2 x175U0990
P7K5	7.5 (10)	72	82.4	80/240	6	2 x 175U0990

13.2.9.7 Order Numbers for Brake Resistors, T6, Horizontal Braking 10% Duty Cycle

Table 139: Order Numbers for Brake Resistors, T6, Horizontal Braking 10% Duty Cycle

FC 202				Horizontal braking 10% duty cycle							
Drive data				Brake resistor data						Installation	
						Danfoss part numbers					
Mains type	P_m [kW]	R_{min} [Ω]	$R_{br.nom}$ [Ω]	R_{rec} [Ω]	$P_{br.cont}$ [kW]	Wire IP54	Screw terminal IP65	Screw terminal IP20	Bolt connection IP20	Cable cross-section [mm^2 (AWG)]	Thermo relay [A]
T6	0.75 (1.0)	620	1329.7	1200	0.100	175U3000	–	–	–	1.5 (16)	0.3
T6	1.1 (1.5)	620	889.1	850	0.100	175U3001	–	–	–	1.5 (16)	0.4
T6	1.5 (2.0)	550	642.7	570	0.100	175U3003	–	–	–	1.5 (16)	0.4
T6	2.2 (3.0)	380	431.1	415	0.200	175U3005	–	–	–	1.5 (16)	0.7
T6	3.0 (4.0)	260	312.5	270	0.200	175U3007	–	–	–	1.5 (16)	0.8
T6	4.0 (5.0)	189	231.6	200	0.300	175U3342	–	–	–	1.5 (16)	1.1
T6	5.5 (7.5)	135	166.6	145	0.450	175U3343	175U3012	175U3013	–	1.5 (16)	1.7
T6	7.5 (10)	99	121.1	100	0.570	175U3344	175U3136	175U3137	–	1.5 (16)	2.3
T6	11 (15)	69	81.6	72	0.680	175U3345	175U3456	175U3455	–	1.5 (16)	2.9
T6	15 (20)	48.6	59.4	52	1.130	175U3346	175U3458	175U3457	–	1.5 (16)	4.4
T6	18.5 (25)	35.1	47.9	38	1.400	175U3347	175U3460	175U3459	–	1.5 (16)	5.7
T6	22 (30)	27	40.1	31	1.700	175U3348	175U3037	175U3038	–	1.5 (16)	7.0
T6	30 (40)	22.5	29.2	27	2.200	175U3349	175U3043	175U3044	–	1.5 (16)	8.5
T6	37 (50)	17.1	23.6	19	2.800	175U3350	175U3462	175U3461	–	2.5 (14)	11.4

FC 202				Horizontal braking 10% duty cycle							
T6	45 (60)	13.5	19.4	14	3.200	175U3358	175U3464	175U3463	–	2.5 (14)	14.2
T6	55 (75)	11.7	15.8	13.5	4.200	–	175U3057	175U3058	–	4 (12)	17
T6	75 (100)	9.9	11.5	11	5.500	–	175U3063	175U3064	–	6 (10)	21
T6	90 (125)	8.6	9.6	7.0	7.000	–	–	–	175U3245	10 (8)	32

13.2.9.8 Order Numbers for Brake Resistors, T6, Vertical Braking 40% Duty Cycle

Table 140: Order Numbers for Brake Resistors, T6, Vertical Braking 40% Duty Cycle

FC 202				Horizontal braking 10% duty cycle							
Drive data				Brake resistor data						Installation	
						Danfoss part numbers					
Mains type	P_m [kW]	R_{min} [Ω]	$R_{br.nom}$ [Ω]	R_{rec} [Ω]	$P_{br.cont}$ [kW]	Wire IP54	Screw terminal IP65	Screw terminal IP20	Bolt connection IP20	Cable cross-section [mm² (AWG)]	Thermo relay [A]
T6	0.75 (1.0)	620	1329.7	1200	0.360	–	175U3102	175U3103	–	1.5 (16)	0.6
T6	1.1 (1.5)	620	889.1	850	0.280	175U3317	175U3104	175U3105	–	1.5 (16)	0.6
T6	1.5 (2.0)	550	642.7	570	0.450	175U3318	175U3430	175U3429	–	1.5 (16)	0.9
T6	2.2 (3.0)	380	431.1	415	0.570	175U3319	175U3432	175U3431	–	1.5 (16)	1.1
T6	3.0 (4.0)	260	312.5	270	0.960	175U3320	175U3434	175U3433	–	1.5 (16)	1.8
T6	4.0 (5.0)	189	231.6	200	1.130	175U3321	175U3436	175U3435	–	1.5 (16)	2.3
T6	5.5 (7.5)	135	166.6	145	1.700	175U3322	175U3126	175U3127	–	1.5 (16)	3.3
T6	7.5 (10)	99	121.1	100	2.200	175U3323	175U3138	175U3437	–	1.5 (16)	4.4
T6	11 (15)	69	81.6	72	3.200	175U3324	175U3440	175U3439	–	1.5 (16)	6.3
T6	15 (20)	48.6	59.4	52	5.500	–	175U3148	175U3149	–	1.5 (16)	9.7
T6	18.5 (25)	35.1	47.9	38	6.000	–	–	–	175U3239	2.5 (14)	12.6
T6	22 (30)	27	40.1	31	8.000	–	–	–	175U3240	4 (12)	16

FC 202				Horizontal braking 10% duty cycle							
T6	30 (40)	22.5	29.2	27	10.000	–	–	–	175U3200	4 (12)	19
T6	37 (50)	17.1	23.6	19	14.000	–	–	–	175U3204	10 (8)	27
T6	45 (60)	13.5	19.4	14	17.000	–	–	–	175U3207	10 (8)	35
T6	55 (75)	11.7	15.8	13.5	21.000	–	–	–	175U3208	16 (6)	40
T6	75 (100)	9.9	11.5	11	26.000	–	–	–	175U3211	25 (4)	49
T6	90 (125)	8.6	9.6	7.0	30.000	–	–	–	175U3241	35 (2)	66

13.2.9.9 Order Numbers for Brake Resistors, T7, Horizontal Braking 10% Duty Cycle

Table 141: Order Numbers for Brake Resistors, T7, Horizontal Braking 10% Duty Cycle

FC 202				Horizontal braking 10% duty cycle							
Drive data				Brake resistor data						Installation	
						Danfoss part numbers					
Mains type	P_m [kW]	R_{min} [Ω]	$R_{br.nom}$ [Ω]	R_{rec} [Ω]	$P_{br.cont}$ [kW]	Wire IP54	Screw terminal IP65	Screw terminal IP20	Bolt connection IP20	Cable cross-section [mm^2 (AWG)]	Thermo relay [A]
T7	1.1 (1.5)	620	830	630	0.100	175U3002	–	–	–	1.5 (16)	0.4
T7	1.5 (2.0)	513	600	570	0.100	175U3003	–	–	–	1.5 (16)	0.4
T7	2.2 (3.0)	340	403	415	0.200	175U3005	–	–	–	1.5 (16)	0.7
T7	3.0 (4.0)	243	292	270	0.300	175U3361	–	–	–	1.5 (16)	1.0
T7	4.0 (5.0)	180	216	200	0.360	–	175U3009	175U3010	–	1.5 (16)	1.3
T7	5.5 (7.5)	130	156	145	0.450	–	175U3012	175U3013	–	1.5 (16)	1.7
T7	7.5 (10)	94	113	105	0.790	–	175U3481	175U3482	–	1.5 (16)	2.6
T7	11 (15)	94.5	110.9	105	0.790	175U3360	175U3481	175U3482	–	1.5 (16)	2.7
T7	15 (20)	69.7	80.7	72	1.130	175U3351	175U3466	175U3465	–	1.5 (16)	3.8
T7	18.5 (25)	46.8	65.1	52	1.400	175U3352	175U3468	175U3467	–	1.5 (16)	4.9
T7	22 (30)	36	54.5	42	1.700	175U3353	175U3032	175U3033	–	1.5 (16)	6.0

FC 202				Horizontal braking 10% duty cycle							
T7	30 (40)	29	39.7	31	2.200	175U3354	175U3470	175U3469	–	1.5 (16)	7.9
T7	37 (50)	22.5	32.1	27	2.800	175U3355	175U3472	175U3471	–	2.5 (14)	9.6
T7	45 (60)	18	26.3	22	3.200	175U3356	175U3479	175U3480	–	2.5 (14)	11.3
T7	55 (75)	13.5	21.4	15.5	4.200	–	175U3474	175U3473	–	4 (12)	15.4
T7	75 (100)	13.5	15.6	13.5	5.500	–	175U3476	175U3475	–	6 (10)	19
T7	90 (125)	8.8	13	11	7.000	–	–	–	175U3232	10 (8)	25
T7	110 (150)	8.8	10.6	9.1	9.000	–	–	–	175U3067	16 (6)	32
T7	132 (175)	6.6	8.8	7.4	11.000	–	–	–	175U3072	16 (6)	39
T7	160 (250)	4.2	7.2	6.1	13.000	–	–	–	175U3075	16 (6)	46
T7	200 (300)	4.2	5.8	5.0	16.000	–	–	–	175U3078	25 (4)	57
T7	250 (350)	3.4	4.6	4.0	20.000	–	–	–	175U3082	35 (2)	71
T7	315 (450)	2.3	3.7	3.2	26.000	–	–	–	175U3085	50 (1-1/0)	90
T7	400 (550)	2.3	2.9	2.5	32.000	–	–	–	175U3089	70 (2/0)	113
T7	450 (600)	2.0	2.6	2.3	36.000	–	–	–	175U3090	2 x 35 (2 x 2)	125
T7	500 (650)	1.9	2.3	2.0	42.000	–	–	–	175U3092	2 x 35 (2 x 2)	145
T7	560 (750)	1.5	2.1	1.6	52.000	–	–	–	175U3094	2 x 50 (2 x 1-1/0)	180
T7	630 (850)	1.4	1.8	1.4	60.000	–	–	–	175U3095	2 x 50 (2 x 1-1/0)	207
T7	710 (950)	1.2	1.6	2 x 2.6	–	–	–	–	–	–	–
T7	800 (1075)	1.1	1.4	2 x 2.2	–	–	–	–	–	–	–
T7	900 (1200)	1.0	1.3	3 x 2.0	–	–	–	–	–	–	–
T7	1000 (1350)	0.9	1.1	3 x 2.6	–						–
T7	1200 (1600)	0.8	1.0	3 x 2.4	–	–	–	–	–	–	–

FC 202				Horizontal braking 10% duty cycle							
T7	1400 (1875)	0.6	0.8	3 x 2.0	–	–	–	–	–	–	–

13.2.9.10 Order Numbers for Brake Resistors, T7, Vertical Braking 40% Duty Cycle

Table 142: Order Numbers for Brake Resistors, T7, Vertical Braking 40% Duty Cycle

FC 202				Vertical braking 40% duty cycle							
Drive data				Brake resistor data						Installation	
						Danfoss part numbers					
Mains type	P_m [kW]	R_{min} [Ω]	$R_{br.nom}$ [Ω]	R_{rec} [Ω]	$P_{br.cont}$ [kW]	Wire IP54	Screw terminal IP65	Screw terminal IP20	Bolt connection IP20	Cable cross-section [mm^2 (AWG)]	Thermo relay [A]
T7	1.1 (1.5)	620	830	630	0.360	–	175U3108	175U3109	–	1.5 (16)	0.8
T7	1.5 (2.0)	513	600	570	0.570	–	175U3110	175U3111	–	1.5 (16)	1.0
T7	2.2 (3.0)	340	403	415	0.790	–	175U3112	175U3113	–	1.5 (16)	1.3
T7	3.0 (4.0)	243	292	270	1.130	–	175U3118	175U3119	–	1.5 (16)	2.0
T7	4.0 (5.0)	180	216	200	1.700	–	175U3122	175U3123	–	1.5 (16)	2.8
T7	5.5 (7.5)	130	156	145	2.200	–	175U3106	175U3107	–	1.5 (16)	3.7
T7	7.5 (10)	94	113	105	3.200	–	175U3132	175U3133	–	1.5 (16)	5.2
T7	11 (15)	94.5	110.9	105	4.200	–	175U3134	175U3135	–	1.5 (16)	6.0
T7	15 (20)	69.7	80.7	72	4.200	–	175U3142	175U3143	–	1.5 (16)	7.2
T7	18.5 (25)	46.8	65.1	52	6.000	–	–	–	175U3242	2.5 (14)	10.8
T7	22 (30)	36	54.5	42	8.000	–	–	–	175U3243	2.5 (14)	13.9
T7	30 (40)	29	39.7	31	10.000	–	–	–	175U3244	4 (12)	18
T7	37 (50)	22.5	32.1	27	14.000	–	–	–	175U3201	10 (8)	23
T7	45 (60)	18	26.3	22	17.000	–	–	–	175U3202	10 (8)	28
T7	55 (75)	13.5	21.4	15.5	21.000	–	–	–	175U3205	16 (6)	37
T7	75 (100)	13.5	15.6	13.5	26.000	–	–	–	175U3209	16 (6)	44
T7	90 (125)	8.8	13	11	36.000	–	–	–	175U3212	25 (4)	57
T7	110 (150)	8.8	10.6	9.1	42.000	–	–	–	175U3214	35 (2)	68
T7	132 (175)	6.6	8.8	7.4	52.000	–	–	–	175U3215	50 (1-1/0)	84
T7	160 (250)	4.2	7.2	6.1	60.000	–	–	–	175U3218	70 (2/0)	99

FC 202				Vertical braking 40% duty cycle							
T7	200 (300)	4.2	5.8	5.0	78.000	–	–	–	175U3220	2 x 35 (2 x 2)	125
T7	250 (350)	3.4	4.6	4.0	90.000	–	–	–	175U3222	2 x 35 (2 x 2)	150
T7	315 (450)	2.3	3.7	3.2	–	–	–	–	–	–	–
T7	400 (550)	2.3	2.9	2.5	–	–	–	–	–	–	–
T7	450 (600)	2.0	2.6	2.3	–	–	–	–	–	–	–
T7	500 (650)	1.9	2.3	2.0	–	–	–	–	–	–	–
T7	560 (750)	1.5	2.1	1.6	–	–	–	–	–	–	–
T7	630 (850)	1.4	1.8	1.4	–	–	–	–	–	–	–
T7	710 (950)	1.2	1.6	2 x 2.6	–	–	–	–	–	–	–
T7	800 (1075)	1.1	1.4	2 x 2.2	–	–	–	–	–	–	–
T7	900 (1200)	1.0	1.3	2 x 2.0	–	–	–	–			
T7	1000 (1350)	0.9	1.1	3 x 2.6	–	–	–	–	–	–	–
T7	1200 (1600)	0.8	1.0	3 x 2.4	–	–	–	–	–	–	–
T7	1400 (1875)	0.6	0.8	3 x 2.0	–	–	–	–	–	–	–

13.2.10 Order Numbers for Accessory Bags

Table 143: Ordering Numbers for Accessory Bags

Accessory bag type	Description	Ordering number
Accessory bag A2/A3	Accessory bag, enclosure sizes A2/A3	130B1022
Accessory bag A5	Accessory bag, enclosure type A5	130B1023
Accessory bag A1–A5	Accessory bag, enclosure sizes A1-A5, brake and load sharing connector	130B0633
Accessory bag B1	Accessory bag, enclosure size B1	130B2060
Accessory bag B2	Accessory bag, enclosure size B2	130B2061
Accessory bag B3	Accessory bag, enclosure size B3	130B0980
Accessory bag B4	Accessory bag, enclosure size B4, 18.5–22 kW	130B1300
Accessory bag B4	Accessory bag, enclosure size B4, 30 kW	130B1301

Accessory bag type	Description	Ordering number
Accessory bag C1	Accessory bag, enclosure size C1	130B0046
Accessory bag C2	Accessory bag, enclosure size C2	130B0047
Accessory bag C3	Accessory bag, enclosure size C3	130B0981
Accessory bag C4	Accessory bag, enclosure type C4, 55 kW	130B0982
Accessory bag C4	Accessory bag, enclosure type C4, 75 kW	130B0983

Example of an accessory bag content (130B0046)

- Loadsahre warning label
- Eye bolt M10
- 2 relay plugs
- 3-pole spring cage connector
- 6-pole spring cage connector
- Label
- Terminal strap
- 3 cable clamps
- 4 metric screws M4 and M6
- 1 thread froming screw
- 3 cable bearers

13.2.11 Ordering of Harmonic Filters

Harmonic filters are used to reduce mains harmonics. Danfoss offers 2 different harmonic filters:

- VLT® Advanced Harmonic Filter AHF 005 with 5% current distortion.
- VLT® Advanced Harmonic Filter AHF 010 with 10% current distortion.

The filters are cooled by natural convection or with built-in fans. Secure sufficient airflow through the filter during installation to prevent overheating the filter. An airflow of minimum 2 m/s is required through the filter.

13.2.11.1 Order Numbers for Harmonic Filters, 380–415 V, 50 Hz

Table 144: Ordering Numbers for Harmonic Filters, 380–415 V, 50 Hz

Drive values		AHF values				
Power rating [kW][1]	Input current 380–440 V [A]	Current rating [A]	Ordering numbers[2]		Enclosure type	
			AHF 005 IP20	AHF 010 IP20	AHF 005 IP20	AHF 010 IP20
0.37	1.2	10	130B1229	130B1027	X1-V3 IP20 if	X1-V3 IP20 if
0.55	1.6					
0.75	2.2					
1.1	2.7					
1.5	3.7					
2.2	5.0					
3.0	6.5					

Drive values		AHF values				
4.0	9.0					
5.5	11.7	14	130B1231	130B1058	X1-V3 IP20 ef	X1-V3 IP20 ef
7.5	14.4					
11	22	22	130B1232	130B1059	X2-V3 IP20 ef	X2-V3 IP20 if
15	29	29	130B1233	130B1089	X2-V3 IP20 ef	X2-V3 IP20 if
18.5	34	34	130B1238	130B1094	X3-V3 IP20 if	X3-V3 IP20 if
22	40	40	130B1239	130B1111	X3-V3 IP20 if	X3-V3 IP20 if
30	55	55	130B1240	130B1176	X3-V3 IP20 if	X3-V3 IP20 if
37	66	66	130B1241	130B1180	X4-V3 IP20 if	X4-V3 IP20 if
45	82	82	130B1247	130B1201	X4-V3 IP20 ef	X4-V3 IP20 ef
55	96	96	130B1248	130B1204	X5-V3 IP20 ef	X5-V3 IP20 ef
75	133	133	130B1249	130B1207	X5-V3 IP20 ef	X5-V3 IP20 ef
90	171	171	130B1250	130B1213	X6-V3 IP20 ef	X6-V3 IP20 if
110	204	204	130B1251	130B1214	X6-V3 IP20 ef	X6-V3 IP20 if
132	251	251	130B1258	130B1215	X7-V3 IP20 if	X7-V3 IP20 if
160	304	304	130B1259	130B1216	X7-V3 IP20 if	X7-V3 IP20 if
–	–	325	130B3152(3)	130B3136(3)	X8-V3 IP20 if	X7-V3 IP20 if
200	381	381	130B1260	130B1217	X8-V3 IP20 ef	X7-V3 IP20 if
250	463	480	130B1261	130B1228	X8-V3 IP20 ef	X8-V3 IP20 ef
315	590	608	2 x 130B1259	2 x 130B1216	See individual filters	
355	647	650	2 x 130B3152	2 x 130B3136		
400	684	685	130B1259 + 130B1260	130B1216 + 130B1217		
450	779	762	2 x 130B1260	2 x 130B1217		
500	857	861	130B1260 + 130B1261	130B1217 + 130B1228		
560	964	960	2 x 130B1261	2 x 130B1228		
630	1090	1140	3 x 130B1260	3 x 130B1217		
710	1227	1240	2 x 130B1260 + 130B1261	2 x 130B1217 + 130B1228		
800	1422	1440	3 x 130B1261	3 x 130B1228		

Drive values		AHF values			
1000	1675	1720	2 x 130B1260 + 2 x 130B1261	2 x 130B1217 + 2 x 130B1228	

[1] The power ratings in the selection table are the actual operating power and not necessarily the type code power rating. Changing operating conditions between HO and NO changes the actual operating conditions and the filter selection must reflect actual operating conditions.

[2] The fan control system allows extended input voltage range as 200–415 V. The AHFs for 380–415 V/50 Hz mains operation can be operated with 200–240 V mains supply.

[3] Filters are used as paralleling for 355 kW drive.

13.2.11.2 Order Numbers for Harmonic Filters, 380–415 V, 60 Hz

Table 145: Ordering Numbers for Harmonic Filters, 380–415 V, 60 Hz

Drive values		AHF values				
Power rating [kW][1]	Input current 380-440V [A]	Current rating [A]	Ordering numbers[2]		Enclosure type	
			AHF 005 IP20	AHF 010 IP20	AHF 005 IP20	AHF 010 IP20
0.37	1.2	10	130B2857	130B2262	X1-V3 IP20 if	X1-V3 IP20 if
0.55	1.6					
0.75	2.2					
1.1	2.7					
1.5	3.7					
2.2	5.0					
3.0	6.5					
4.0	9.0					
5.5	11.7	14	130B2858	130B2265	X1-V3 IP20 ef	X1-V3 IP20 ef
7.5	14.4					
11	22	22	130B2859	130B2268	X2-V3 IP20 ef	X2-V3 IP20 if
15	29	29	130B2860	130B2294	X2-V3 IP20 ef	X2-V3 IP20 if
18.5	34	34	130B2861	130B2297	X3-V3 IP20 if	X3-V3 IP20 if
22	40	40	130B2862	130B2303	X3-V3 IP20 if	X3-V3 IP20 if
30	55	55	130B2863	130B2445	X3-V3 IP20 if	X3-V3 IP20 if
37	66	66	130B2864	130B2459	X4-V3 IP20 if	X4-V3 IP20 if
45	82	82	130B2865	130B2488	X4-V3 IP20 ef	X4-V3 IP20 ef
55	96	96	130B2866	130B2489	X5-V3 IP20 ef	X5-V3 IP20 ef
75	133	133	130B2867	130B2498	X5-V3 IP20 ef	X5-V3 IP20 ef
90	171	171	130B2868	130B2499	X6-V3 IP20 ef	X6-V3 IP20 if
110	204	204	130B2869	130B2500	X6-V3 IP20 ef	X6-V3 IP20 if
132	251	251	130B2870	130B2700	X7-V3 IP20 if	X7-V3 IP20 if

Drive values		AHF values				
160	304	304	130B2871	130B2819	X8-V3 IP20 if	X7-V3 IP20 if
–	–	325	130B3156[3]	130B3154[3]	X8-V3 IP20 ef	X7-V3 IP20 ef
200	381	381	130B2872	130B2855	X8-V3 IP20 ef	X7-V3 IP20 ef
250	463	480	130B2873	130B2856	X8-V3 IP20 ef	X8-V3 IP20 ef
315	590	608	2 x 130B2871	2 x 130B2819	See individual filters	
355	647	650	2 x 130B3156	2 x 130B3154		
400	684	685	130B2871 + 130B2872	130B2819 + 130B2855		
450	779	762	2 x 130B2872	2 x 130B2855		
500	857	861	130B2872 + 130B2873	130B2855 + 130B2856		
560	964	960	2 x 130B2873	2 x 130B2856		
630	1090	1140	3 x 130B2872	3 x 130B2855		
710	1227	1240	2 x 130B2872 + 130B2873	2 x 130B2855 + 130B2856		
800	1422	1440	3 x 130B2873	3 x 130B2856		
1000	1675	1720	2 x 130B2872 + 2 x 130B2873	2 x 130B2855 + 2 x 130B2856		

[1] The power ratings in selection table are the actual operating power and not necessarily the type code power rating. Changing operating conditions between HO and NO changes the actual operating conditions and the filter selection must reflect actual operating conditions.

[2] The fan control system allows extended input voltage range as 200–415 V. The AHFs for 380–415 V/60 Hz mains operation can be operated with 200–240 V mains supply.

[3] Filters are used as paralleling for 355 kW drive.

13.2.11.3 Order Numbers for Harmonic Filters, 440–480 V, 60 Hz

Table 146: Ordering Numbers for Harmonic Filters, 440–480 V, 60 Hz

Drive values			AHF values					
Power rating		Input current 441-500V [A]	Current rating [A]		Ordering numbers		Enclosure type	
[kW][1]	[HP][2]		AHF 005	AHF 010	AHF 005 IP20	AHF 010 IP20	AHF 005 IP20	AHF 010 IP20
0.37	0.50	1.0	10	10	130B1752	130B1482	X1-V3 IP20 if	X1-V3 IP20 if
0.55	0.75	1.4						
0.75	1.0	1.9						
1.1	1.5	2.7						
1.5	2.0	3.1						
2.2	3.0	4.3						
3.0	4.0	5.7						
4.0	5.5	7.4						

Drive values			AHF values					
5.5	7.5	9.9	14	14	130B1753	130B1483	X1-V3 IP20 ef	X1-V3 IP20 ef
7.5	10	13						
11	15	19	19	19	130B1754	130B1484	X2-V3 IP20 ef	X2-V3 IP20 if
15	20	25	25	25	130B1755	130B1485	X2-V3 IP20 ef	X2-V3 IP20 if
18.5	25	31	31	31	130B1756	130B1486	X3-V3 IP20 if	X3-V3 IP20 if
22	30	36	36	36	130B1757	130B1487	X3-V3 IP20 if	X3-V3 IP20 if
30	40	47	48	48	130B1758	130B1488	X3-V3 IP20 if	X3-V3 IP20 if
37	50	59	60	60	130B1759	130B1491	X4-V3 IP20 if	X4-V3 IP20 if
45	60	73	73	73	130B1760	130B1492	X4-V3 IP20 ef	X4-V3 IP20 ef
55	75	95	95	95	130B1761	130B1493	X5-V3 IP20 ef	X5-V3 IP20 ef
75	100	118	118	118	130B1762	130B1494	X5-V3 IP20 ef	X5-V3 IP20 ef
90	125	154	154	154	130B1763	130B1495	X6-V3 IP20 ef	X6-V3 IP20 if
110	150	183	183	183	130B1764	130B1496	X6-V3 IP20 ef	X6-V3 IP20 if
132	200	231	231	231	130B1765	130B1497	X7-V3 IP20 if	X7-V3 IP20 if
160	250	291	291	291	130B1766	130B1498	X8-V3 IP20 if	X7-V3 IP20 if
200	300	348	355	355	130B1768	130B1499	X8-V3 IP20 ef	X7-V3 IP20 ef
–	–	–	380	380	130B3167(3)	130B3165(3)	X8-V3 IP20 ef	X7-V3 IP20 ef
250	350	427	436	436	130B1769	130B1751	X8-V3 IP20 ef	X8-V3 IP20 ef
315	450	531	522	522	130B1765 + 130B1766	130B1497 + 130B1498	See individual filters	
355	500	580	582	582	2 x 130B1766	2 x 130B1498		
400	550	667	671	671	130B1766 + 130B3167	130B1498 + 130B3165		
450	600	771	710	710	2 x 130B1768	2 x 130B1499		
500	650	759	760	760	2 x 130B3167	2 x 130B3165		
560	750	867	872	872	2 x 130B1769	2 x 130B1751		
630	900	1022	1065	1065	3 x 130B1768	3 x 130B1499		
710	1000	1129	1140	1140	3 x 130B3167	3 x 130B3165		
800	1200	1344	1308	1308	3 x 130B1769	3 x 130B1751		

Drive values			AHF values				
1000	1350	1490	1582	1582	2 x 130B1768 + 2 x 130B1769	2 x 130B1499 + 2 x 130B1751	

[1] The power ratings in selection table are the actual operating power and not necessarily the type code power rating. Changing operating conditions between HO and NO changes the actual operating conditions and the filter selection must reflect actual operating conditions.

[2] Typical HP shaft output at 460 V.

[3] Filters are used as paralleling for 500 kW and 710 kW.

13.2.11.4 Order Numbers for Harmonic Filters, 600 V, 60 Hz

Table 147: Ordering Numbers for Harmonic Filters, 600 V, 60 Hz

Drive values					AHF values					
Power rating			Input current [A]		Current rating at 600 V		Ordering numbers		Enclosure type	
[kW][1]	T6 [HP][2]	T7 [HP][2]	T6 551–600 V	T7 551–600 V	AHF 005 [A]	AHF 010 [A]	AHF 005 IP20	AHF 010 IP20	AHF 005 IP20	AHF 010 IP20
11	15	10	16	15	15	15	130B5246	130B5212	X3-V3 IP20 if	X3-V3 IP20 if
15	20	15	20	19,5	20	20	130B5247	130B5213	X3-V3 IP20 if	X3-V3 IP20 if
18,5	25	20	24	24	24	24	130B5248	130B5214	X3-V3 IP20 ef	X3-V3 IP20 ef
22	30	25	31	29	29	29	130B5249	130B5215	X4-V3 IP20 ef	X4-V3 IP20 ef
30	40	30	37	36	36	36	130B5250	130B5216	X4-V3 IP20 ef	X4-V3 IP20 ef
37	50	40	47	49	50	50	130B5251	130B5217	X5-V3 IP20 ef	X5-V3 IP20 ef
45	60	50	56	59	58	58	130B5252	130B5218	X5-V3 IP20 ef	X5-V3 IP20 ef
55	75	60	75	74	77	77	130B5253	130B5219	X6-V3 IP20 ef	X6-V3 IP20 ef
75	100	75	91	85	87	87	130B5254	130B5220	X6-V3 IP20 ef	X6-V3 IP20 ef
90	125	100	119	106	109	109	130B5255	130B5221	X6-V3 IP20 ef	X6-V3 IP20 ef
110	–	125	–	124	128	128	130B5256	130B5222	X6-V3 IP20 ef	X6-V3 IP20 ef
132	–	150	–	151	155	155	130B5257	130B5223	X7-V3 IP20 ef	X7-V3 IP20 ef
160	–	200	–	189	197	197	130B5258	130B5224	X7-V3 IP20 ef	X7-V3 IP20 ef
200	–	250	–	234	240	240	130B5259	130B5225	X8-V3 IP20 ef	X7-V3 IP20 ef

Drive values					AHF values					
250	–	300	–	286	296	296	130B5260	130B5226	X8-V3 IP20 ef	X8-V3 IP20 ef
315	–	350	–	339	394	366	2 x 130B5258	130B5227		X8-V3 IP20 ef
355	–	400	–	366	394	366	2 x 130B5258	130B5227		X8-V3 IP20 ef
400	–	400	–	395	394	395	2 x 130B5258	130B5228		X8-V3 IP20 ef
500	–	500	–	482	480	480	2 x 130B5259	2 x 130B5225	See individual filters	
560	–	550	–	549	592	592	2 x 130B5260	2 x 130B5226		
630	–	650	–	613	720	732	3 x 130B5259	2 x 130B5227		
710	–	750	–	711	720	732	3 x 130B5259	2 x 130B5227		
800	–	950	–	828	888	888	3 x 130B5260	3 x 139B5226		
900	–	1050	–	920	960	960	4 x 130B5259	3 x 130B5227		
1000	–	1150	–	1032	1184	1098	4 x 130B5260	3 x 130B5227		

[1] The power ratings in selection table are the actual operating power and not necessarily the type code power rating. Changing operating conditions between HO and NO changes the actual operating conditions and the filter selection must reflect actual operating conditions.

[2] Typical HP shaft output at 575 V.

13.2.11.5 Order Numbers for Harmonic Filters, 500–690 V, 50 Hz

Table 148: Ordering Numbers for Harmonic Filters, 500–690 V, 50 Hz

Drive values				AHF values					
Power rating [kW][1]	Input current [A]			Current rating at 690 V		Ordering numbers		Enclosure type	
	T6 525–550 V	T7 525–550 V	T7 690 V	AHF 005 [A]	AHF 010 [A]	AHF 005 IP20	AHF 010 IP20	AHF 005 IP20	AHF 010 IP20
11	17.2	15.0	14.5	15	15	130B5088	130B5280	X3-V3 IP20 if	X3-V3 IP20 if
15	20.9	19.5	19.5	20	20	130B5089	130B5281	X3-V3 IP20 if	X3-V3 IP20 if
18.5	25.4	24	24	24	24	130B5090	130B5282	X3-V3 IP20 ef	X3-V3 IP20 ef
22	32.7	29	29	29	29	130B5092	130B5283	X4-V3 IP20 ef	X4-V3 IP20 ef
30	39	36	36	36	36	130B5125	130B5284	X4-V3 IP20 ef	X4-V3 IP20 ef
37	49	49	48	50	50	130B5144	130B5285	X5-V3 IP20 ef	X5-V3 IP20 ef
45	59	59	58	58	58	130B5168	130B5286	X5-V3 IP20 ef	X5-V3 IP20 ef

Drive values				AHF values					
55	78.9	77	77	77	77	130B5169	130B5287	X6-V3 IP20 ef	X6-V3 IP20 ef
75	95.3	89	87	87	87	130B5170	130B5288	X6-V3 IP20 ef	X6-V3 IP20 ef
90	124.3	110	109	109	109	130B5172	130B5289	X6-V3 IP20 ef	X6-V3 IP20 ef
110	–	130	128	128	128	130B5195	130B5290	X6-V3 IP20 ef	X6-V3 IP20 ef
132	–	158	155	155	155	130B5196	130B5291	X7-V3 IP20 ef	X7-V3 IP20 ef
160	–	198	197	197	197	130B5197	130B5292	X7-V3 IP20 ef	X7-V3 IP20 ef
200	–	245	240	240	240	130B5198	130B5293	X8-V3 IP20 ef	X7-V3 IP20 ef
250	–	299	296	296	296	130B5199	130B5294	X8-V3 IP20 ef	X8-V3 IP20 ef
315	–	355	352	394	366	2 x 130B5197	130B5295		X8-V3 IP20 ef
355	–	381	366	394	395	2 x 130B5197	130B5296		X8-V3 IP20 ef
400	–	413	400	437	437	130B5197 + 130B5198	130B5292 + 130B5293	See individual filters	
500	–	504	482	536	536	130B5198 + 130B5199	130B5293 + 130B5294		
560	–	574	549	592	592	2 x 130B5199	2 x 130B5294		
630	–	642	613	662	662	130B5199 + 2 x 130B5197	130B5294 + 130B5295		
710	–	743	711	788	732	4 x 130B5197	2 x 130B5295		
800	–	866	828	888	888	3 x 130B5199	3 x 130B5294		
900	–	962	920	986	958	2 x 130B5199 + 2 x 130B5197	2 x 130B5294 + 130B5295		

[1] The power ratings in selection table are the actual operating power and not necessarily the type code power rating. Changing operating conditions between HO and NO changes the actual operating conditions and the filter selection must reflect actual operating conditions.

13.2.12 Order Numbers for VLT® Sine-wave Filters MCC 101

Table 149: Ordering Numbers for Sine-wave Filters for 200–500 V Drives

Drive power and current ratings						Filter current rating			Switching frequency	Ordering numbers	
200–240 V		380–400 V		441–500 V		50 Hz	60 Hz	100 Hz		IP00	IP20/23[(1)]
[kW]	[A]	[kW]	[A]	[kW]	[A]	[A]	[A]	[A]	[kHz]		
–	–	0.37	1.3	0.37	1.1	2.5	2.5	2.0	5.0	130B2404	130B2439
0.25	1.8	0.55	1.8	0.55	1.6						
0.37	2.4	0.75	2.4	0.75	2.1						
–	–	1.1	3.0	1.1	3.0	4.5	4.0	3.5	5.0	130B2406	130B2441
0.55	3.5	1.5	4.1	1.5	3.4						
0.75	4.6	2.2	5.6	2.2	4.8	8.0	7.5	5.5	5.0	130B2408	130B2443

Drive power and current ratings						Filter current rating			Switching frequency	Ordering numbers	
1.1	6.6	3.0	7.2	3.0	6.3						
1.5	7.5	–	–	–	–						
–	–	4.0	10	4.0	8.2	10	9.5	7.5	5.0	130B2409	130B2444
2.2	10.6	5.5	13	5.5	11	17	16	13	5.0	130B2411	130B2446
3.0	12.5	7.5	16	7.5	14.5						
3.7	16.7	–	–	–	–						
5.5	24.2	11	24	11	21	24	23	18	4.0	130B2412	130B2447
7.5	30.8	15	32	15	27	38	36	28.5	4.0	130B2413	130B2448
		18.5	37.5	18.5	34						
11	46.2	22	44	22	40	48	45.5	36	4.0	130B2281	130B2307
15	59.4	30	61	30	52	62	59	46.5	3.0	130B2282	130B2308
18.5	74.8	37	73	37	65	75	71	56	3.0	130B2283	130B2309
22	88	45	90	55	80	115	109	86	3.0	130B3179	130B3181*
30	115	55	106	75	105						
37	143	75	147	90	130	180	170	135	3.0	130B3182	130B3183*
45	170	90	177								

[1] Ordering numbers marked with * are IP23.

Table 150: Ordering Numbers for Sine-wave Filters for 525–690 V Drives

Drive Power and Current Ratings						Filter current rating			Switching frequency	Ordering numbers	
525–600 V		**690 V**		**525–550 V**		**50 Hz**	**60 Hz**	**100 Hz**		**IP00**	**IP20/23**[1]
[kW]	**[A]**	**[kW]**	**[A]**	**[kW]**	**[A]**	**[A]**	**[A]**	**[A]**	**[kHz]**		
0.75	1.7	1.1	1.6	–	–	4.5	4.0	3.0	4.0	130B7335	130B7356
1.1	2.4	1.5	2.2								
1.5	2.7	2.2	3.2								
2.2	3.9	3.0	4.5								
3.0	4.9	4.0	5.5	–	–	10	9.0	7.0	4.0	130B7289	130B7324
4.0	6.1	5.5	7.5								
5.5	9.0	7.5	10								
7.5	11	11	13	7.5	14	13	12	9.0	3.0	130B3195	130B3196
11	18	15	18	11	19	28	26	21	3.0	130B4112	130B4113
15	22	18.5	22	15	23						
18.5	27	22	27	18	28						

Drive Power and Current Ratings						Filter current rating			Switching frequency	Ordering numbers	
22	34	30	34	22	36	45	42	33	3.0	130B4114	130B34115
30	41	37	41	30	48						
37	52	45	52	37	54	76	72	57	3.0	130B4116	130B4117*
45	62	55	62	45	65						
55	83	75	83	55	87	115	109	86	3.0	130B4118	130B4119*
75	100	90	100	75	105						
90	131	–	–	90	137	165	156	124	2.0	130B4121	130B4124*

[1] Ordering numbers marked with * are IP23.

13.2.13 Order Numbers for VLT® dU/dt Filters MCC 102

Table 151: Ordering Numbers for dU/dt Filters for 200–500 V Drives

Drive ratings [V]						Filter current rating [V]		Order number		
200–240		380–440		441–500		380@60 Hz, 200–400/440@50 Hz	460/480@60 Hz, 500/525@50 Hz	IP00	IP20	IP54
[kW]	[A]	[kW]	[A]	[kW]	[A]	[A]	[A]			
3.0	12.5	5.5	13	5.5	11	17	15	N/A	130B7367[1]	N/A
3.7	16	7.5	16	7.5	14.5					
–	–	–	–	–	–					
5.5	24.2	11	24	11	21	44	40	130B2835	130B2836	130B2837
7.5	30.8	15	32	15	27					
–	–	18.5	37.5	18.5	34					
–	–	22	44	22	40					
11	46.2	30	61	30	52	90	80	130B2838	130B2839	130B2840
15	59.4	37	73	37	65					
18.5	74.8	45	90	55	80					
22	88	–	–	–	–					
–	–	55	106	75	105	106	105	130B2841	130B2842	130B2843
–	–	55	106	75	105					
30	115	75	147	90	130	177	160	130B2844	130B2845	130B2846
37	143	90	177	–	–					
45	170	–	–	–	–					

[1] Dedicated A3 enclosures supporting footprint mounting and book style mounting. Fixed shielded cable connection to the drive.

Table 152: Ordering Numbers for dU/dt Filters for 525–690 V Drives

Drive ratings [V]				Filter current rating [V]			Order number		
525–550		551–690		460/480@60 Hz, 500/525@50 Hz	575/600@60 Hz	690@50 Hz	IP00	IP20	IP54
[kW]	[A]	[kW]	[A]	[A]	[A]	[A]			
5.5	9.5	1.1	1.6	15	13	10	N/A	130B7367[1]	N/A
7.5	11.5	1.5	2.2						
–	–	2.2	3.2						
		3.0	4.5						
		4.0	5.5						
		5.5	7.5						
		7.5	10						
7.5	14	11	13	40	32	27	130B2835	130B2836	130B2837
11	19	15	18						
15	23	18.5	22						
18.5	28	22	27						
30	43	30	34	80	58	54	130B2838	130B2839	130B2840
37	54	37	41						
45	65	45	52						
–	–	–	–						
55	87	55	62	105	94	86	130B2841	130B2842	130B2843
55	87	75	83						
75	113	90	108	160	131	108	130B2844	130B2845	130B2846
90	137	–	–						
–	–	–	–						

[1] Dedicated A3 enclosures supporting footprint mounting and book style mounting. Fixed shielded cable connection to the drive.

13.2.14 Order Numbers for VLT® Common-mode Filters MCC 105

Table 153: Order Numbers and Dimensions for Common-mode Filters

Enclosure size	Order number	Core dimensions (mm [in])					Weight [kg (lbs)]
		W	w	H	h	d	
A and B	130B3257	60 (2.36)	43 (1.7)	40 (1.57)	25 (0.98)	22.3 (0.88)	0.25 (0.55)
C1	130B7679	82.8 (3.25)	57.5 (2.26)	45.5 (1.79)	20.6 (0.81)	33 (0.30)	
C2, C3, C4	130B3258	102 (4.0)	69 (2.71)	61 (2.4)	28 (1.1)	37 (1.46)	1.6 (3.52)
D	130B3259	189 (7.44)	143 (5.63)	126 (4.96)	80 (3.15)	37 (1.46)	2.45 (5.4)

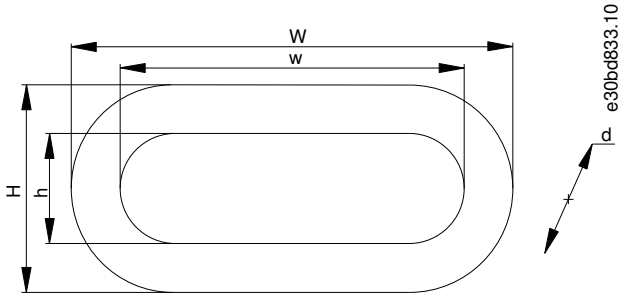

Illustration 99: HF-CM Core, Dimensions

13.2.15 Spare Parts

Visit the VLT® Shop or the configurator for ordering spare parts available for a specific application on VLTshop.danfoss.com.

Index

+

+10 V DC output....93

2

24 V back-up supply....182
24 V DC output....93

A

AC brake....53
Acoustic noise in motor....31
Ambient conditions....90
Analog input....92, 124, 125
Analog output....93, 124, 125
Approvals....13
Approvals and certifications....15
ATEX....46, 136
Automatic energy optimization (AEO)....37
Automatic motor adaptation
    Wiring example....165
Automatic motor adaptation (AMA)
    Overview....45
Automatic switching frequency modulation....44

B

Bearing current....31
Brake
    Dynamic braking overview....53
    Brake resistor overview....53
    Control with brake function....141
    Overvoltage control (OVC)....141
Brake Resistor....59

C

Cable length, control cables....91
Cable specifications....91
Cables
    Shielded control cables....122
    Twisted-pair cables....122
    Leakage current....142
Calculations
    THDi....154
    Short-circuit ratio....154
    Harmonic software....157
Capacitor storage....100
CDM....27
    See Complete Drive Module
CE mark....13
Certifications....13
Circuit breaker....125, 143
    See Residual current device
Commercial environment....148
Common mode filter filter....59
Comparators....49
Complete Drive Module....27
Compliance
    Functional safety....34
Conformal coating....100
Control
    Terminals....44
Control card....93, 93, 94, 94
Control card performance....94
Control characteristics....94
Control structure closed loop....163
Cross-section, control cable....91
Current
    Minimizing bearing and shaft currents....138
    Leakage current....141
    Transient ground....143
    Fundamental current....153
    Harmonic current....153
    Distortion....154

D

DC
    Brake....53
Derating for low air pressure....103
Design guide....91
Digital input....91, 124
Digital output....93, 124
Dimensions, enclosure size A....95, 96, 97
Directives....13, 15
dU/dt filter....59, 59

E

Earth leakage circuit breaker....143
    See Residual current device
Efficiency
    Using AMA....45
Efficiency class....32
Electromagnetic interference....44
Electronic thermal overvoltage....45
EMC
    Directive....14
Emission requirements....148, 148
EN 60664-1....94
EN 61800-3....91
EN/IEC 61800-5-2....14
EN60664-1....90
Enclosure protection....15
Energy saving....25
Environment....90
ErP directive....14
EX-d motor....46
Ex-e motor....46
EX-n motor....46
Export control regulation....15
External alarm reset....174
External interlock....170

F

Fans
    Temperature-controlled fans....44
Fieldbus options....57
Fourier series analysis....153
Frequency
    Bypass....48
Fuse....125

G

Galvanic isolation....44
Gases....100
Ground
Installation considerations....112
Leakage current hazard....112
Loops....122
Leakage current....142

H

Harmonic filter....58
Harmonics
IEC standards....155
EN standards....155
Calculation....157

I

IEC 60068-2-43....90, 90
IEC 60364....126
IEC 721-3-3....90
IES....28
See International Efficiency for Systems
Immunity requirements....148
Installation
Qualified personnel....12
International Efficiency for Systems....28
IP rating....15
IP21/Nema 1 Kit....61

L

Language packages....180
Leakage current....141
Line reactor....157
Line Reactors....60
Load envelope monitoring....36
Logic rules....50
Low voltage directive....13

M

Mains
Fluctuations....44
Drop-out....47
Maintenance....35, 103
Modulation....44
Monitoring....35
Moroccan conformity mark....15
Motor
Missing phase detection....38
Thermal protection....45,136
Full torque....48
Motor output....90
Minimizing bearing and shaft currents....138
Leakage current....142
Wiring thermistor....176
Motor cable....59
Motor insulation, protection of....30
Mounting brackets....65

N

NEC 2009....126
NEMA protection rating....15
Noise in motor cables....31

O

Open-loop speed control configurations....166
Options
Fieldbus....57
Functional extensions....57
License features....58
Order numbers for option D....182
Ordering
24 V back-up suppy....182
Overload
Electronic thermal overvoltage....45
Issues with harmonics....153
Overvoltage
Limits....39
Alternative brake function....141

P

Panel mounting kit for LCP....68
Panel through mounting kit....60
Payback period....25
PDS....27
See Power Drive Systems
PELV....44, 176
Periodic forming....100
PID
Controller....47
Point of common coupling....154, 154
Power Drive Systems....27
Power ratings, enclosure size A....95, 96, 97
Programmable Controllers....58
Protection
Rating....15
Short circuit....37
Brake function....38
Overload....38,39
Motor thermal....45
Protection of motor insulation....30
Pulse
Automatic switching frequency modulation....44
Pulse input....93
Pulse start/stop wiring configuration....173
Purpose of the manual....11

Q

Qualified personnel....12

R

Radio equipment directive....14
Radio frequency interference....44
REACH directive....14
Reduce acoustic noise in motor....31
Reduce noise in motor cables....31
Reference
Limits....161
Relay
Terminals....44
Relay output....94
Remote mounting kits for LCP....66

Residential environment....148
Residual current device.... 141, 143, 143
Resistor brake.... 53
    See Brake resistor
Resonance damping.... 44
Restart.... 47
RoHS directive.... 14
Rotor....39
RS485....175
RS485 serial communication....94
Run/stop command.... 171
Run/stop wiring configuration....170

S

Safe torque off
    Machinery directive compliance.... 14
    Overview.... 35,53
    Wiring of....172
Safety
    Options.... 34
Serial communication.... 122, 124, 125
Shaft voltage....31
Shielded control cable.... 122
Short circuit
    Protection....37
    Ratio....154
    Ratio calculation....154
Sine-wave....59
Sine-wave filter....59
Smart logic control.... 48
Soft starter.... 27
Speed reference....166
Standards
    IEC 60034-30-1.... 32
    IEC 60364....
    NEC 2017....
    EN 60079-7....46
Star/delta starter....27
Start/stop command.... 172
STO....92
Storage....100
Supply voltage....89, 124, 124
Switching frequency....59, 143
Symbols....12

T

Thermal protection.... 136
Thermal Protection for Ex-e or Ex-n Motors....46
Thermistor
    Wiring configuration.... 176,176
Tightening torque.... 95
Torque
    Torque characteristics....90,90
Transformer....154
TÜV.... 14

U

UL
    Enclosure protection rating....15
USB serial communication....94
Use of EMC-correct cables.... 112

V

Varying flow (1 year)....25
Vibration
    Monitoring....36
Voltage distortion.... 154

W

Weight, enclosure size A.... 95, 96, 97
Winding condition monitoring.... 35
Wireless LCP....69
Wiring configurations
    Open loop....166
    Start/stop.... 172
    External alarm reset.... 174
    Thermistor.... 176
Wiring schematic.... 107

VLT Drives Glossary

A

Actual position

The actual position from an encoder, or a value that the motor control calculates in open loop. The drive uses the actual position as feedback for position PI.

Analog reference

A signal transmitted to the analog inputs 53 or 54 (voltage or current).

Analog inputs

The analog inputs are used for controlling various functions of the drive.

There are 2 types of analog inputs:

Current input, 0–20 mA, and 4–20 mA

Voltage input, -10 V DC to +10 V DC.

Analog outputs

The analog outputs can supply a signal of 0–20 mA, 4–20 mA.

B

BDM

A BDM is a drive module, which consists of a power converter module and a control and regulating device for speed, torque, current, or voltage.

Binary reference

A signal transmitted to the serial communication port.

Break-away torque

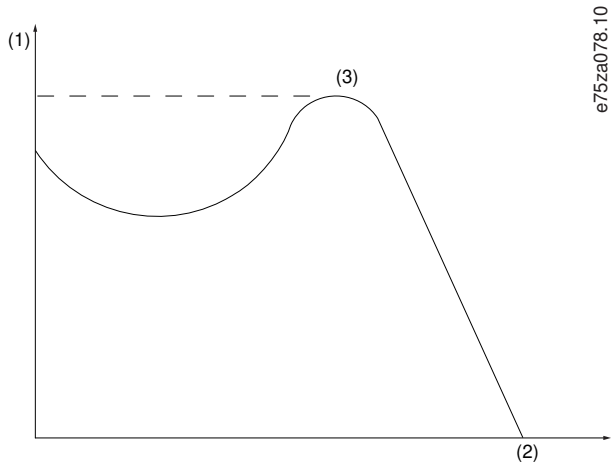

C

CBM

Condition Based Monitoring monitors the machine condition and performance when the drive is in service and detects mechanical, motor, or application failures in advance. Corrective actions can be performed before the process or application is impacted.

CDM

A CDM is a drive system without the motor and without the measuring sensors, which are mechanically connected to the motor shaft. The drive system consists of, but is not restricted to, the BDM and extensions, such as the feed module and auxiliary equipment.

CT characteristics

Constant-torque characteristics used for all applications such as conveyor belts, displacement pumps, and cranes.

Commanded position

The actual position reference calculated by the profile generator. The drive uses the commanded position as setpoint for position PI.

Control command

Functions are divided into 2 groups.

Functions in group 1 have higher priority than functions in group 2.

Table 1: Function Groups

Group 1	Group 2
Reset, coast stop, reset and coast stop, quick stop, DC brake, stop, the LCP [OFF] key.	Start, pulse start, reversing, start reversing, jog, freeze output.

D

DSP Digital signal processor.

Digital inputs The digital inputs can be used for controlling various functions of the drive.

Digital outputs The drive features 2 solid-state outputs that can supply a 24 V DC (maximum 40 mA) signal.

F

f_M Motor frequency.

$f_{M,N}$ Rated motor frequency (nameplate data).

f_{MAX} Maximum motor frequency.

f_{MIN} Minimum motor frequency.

f_{jog} Motor frequency when the jog function is activated (via digital terminals).

I

I_M Motor current (actual).

$I_{M,N}$ Rated motor current (nameplate data).

IMC Integrated Motion Controller (IMC) is a functionality that enables an AC drive to perform high-precision positioning and synchronization operations without the need for additional modules or hardware.

Intermittent duty cycle An intermittent duty rating refers to a sequence of duty cycles. Each cycle consists of an on-load and an off-load period. The operation can be either periodic duty or non-periodic duty.

L

LCP The local control panel is the keypad for controlling the drive.

lsb Least significant bit.

M

MCM Short for "mille circular mil", an American measuring unit for cable cross-section. 1 MCM=0.5067 mm^2

Motor running Torque generated on output shaft and speed from 0 RPM to maximum speed on motor.

msb Most significant bit.

N

$n_{M,N}$ Nominal motor speed (nameplate data).

n_s Synchronous motor speed.

$$ns = \frac{2 \times \text{par. } 1-23 \times 60\,s}{\text{par. } 1-39}$$

n_{slip}	Motor slip.

O

Online/offline parameters	Changes to online parameters are activated immediately after the data value is changed. Press [OK] to activate changes to off-line parameters.

P

PCD	Process-control data.
PDS	The PDS is a speed control system for an electric motor, including the CDM and motor, but without the equipment which it powers.
$P_{M,N}$	Rated motor power (nameplate data in kW or hp).
Position error	Position error is the difference between the actual position and the commanded position. The position error is the input for the position PI controller.
Position unit	The physical unit for position values.
Power factor	The power factor is the relation between I_1 and I_{RMS}. $$\text{Power factor} = \frac{\sqrt{3 \times U \times I_{1\cos\phi}}}{\sqrt{3 \times U \times I_{\text{RMS}}}}$$ The power factor for 3-phase control: $$\text{Power factor} = \frac{I_1 \times \cos\phi 1}{I_{\text{RMS}}} = \frac{I_1}{I_{\text{RMS}}} \text{ since } \cos\phi 1 = 1$$ The power factor indicates to which extent the drive imposes a load on the mains supply. The lower the power factor, the higher the I_{RMS} for the same kW performance. $$I_{\text{RMS}} = \sqrt{I_1^2 + I_5^2 + I_7^2} + .. + I_n^2$$ In addition, a high-power factor indicates that the different harmonic currents are low. The DC coils in the drive produce a high-power factor, which minimizes the imposed load on the mains supply.
Preset reference	A defined preset reference to be set from -100% to +100% of the reference range. Selection of 8 preset references via the digital terminals.
Process PID	The PID control maintains the required speed, pressure, temperature, and so on, by adjusting the output frequency to match the varying load.
Pulse reference	A pulse frequency signal transmitted to the digital inputs (terminal 29 or 33).

R

RCD	Residual-current device.

S

STW	Status word.
Safe Torque Off (STO)	The STO function brings the drive safely to a no-torque state.
Set-up	Save parameter settings in 4 set-ups. Change between the 4 parameter set-ups and edit 1 set-up, while another set-up is active.

Slip compensation	The drive compensates for the motor slip by giving the frequency a supplement that follows the measured motor load keeping the motor speed almost constant.
Start-disable command	A start command belonging to Group 2 control commands, see the *table Function Groups* under *Control Command*.
Stop command	A stop command belonging to Group 1 control commands, see the *table Function Groups* under *Control Command*.

T

$T_{M,N}$	Rated torque (motor).
Target position	The final target position specified by positioning commands. The profile generator uses this position to calculate the speed profile.
Thermistor	A temperature-dependent resistor placed on the drive or the motor.
Trip	A state entered in fault situations, for example, if the drive is subject to an overtemperature or when the drive is protecting the motor, process, or mechanism. The drive prevents a restart until the cause of the fault has disappeared. To cancel the trip state, restart the drive. Do not use the trip state for personal safety.
Trip lock	The drive enters this state in fault situations to protect itself. The drive requires physical intervention, for example when there is a short circuit on the output. A trip lock can only be canceled by disconnecting mains, removing the cause of the fault, and reconnecting the drive. Restart is prevented until the trip state is canceled by activating reset or, sometimes, by being programmed to reset automatically. Do not use the trip lock state for personal safety.

U

U_M	Motor voltage.
$U_{M,N}$	Rated motor voltage (nameplate data).

V

VT characteristics	Variable torque characteristics typical for many pumps and fans.

ENGINEERING
TOMORROW

Danfoss A/S
Ulsnaes 1
DK-6300 Graasten
vlt-drives.danfoss.com

Danfoss can accept no responsibility for possible errors in catalogs, brochures and other printed material. Danfoss reserves the right to alter its products without notice. This also applies to products already on order provided that such alterations can be made without subsequential changes being necessary in specifications already agreed. All trademarks in this material are property of the respective companies. Danfoss and the Danfoss logotype are trademarks of Danfoss A/S. All rights reserved.

130R0337