ENGINEERING
TOMORROW

Operating Guide

VACON® NXC Enclosed Drives

drives.danfoss.com | VACON®

Contents

1 Introduction 10
1.1 Purpose of this Operating Guide 10
1.2 Additional Resources 10
1.3 Version History 10
1.4 Disposal 10
1.5 Type Approvals and Certifications 10
1.6 Start-up Quick Guide 11

2 Safety 12
2.1 Safety Symbols 12
2.2 Danger and Warnings 12
2.3 Cautions and Notices 13

3 Product Overview 16
3.1 Intended Use 16
3.2 Package Label 16
3.3 Description of the Type Code 16
3.4 Enclosure Sizes 18
3.5 Enclosure Sizes, Low Harmonic Drives 19
3.6 Available Protection Ratings 21
3.7 Available EMC Classes 21
3.8 Available Options 21
3.9 Control Panel 26
3.9.1 Introduction to Control Panel 26
3.9.2 Keypad 26
3.9.3 Display 26
3.9.4 Basic Menu Structure 27

4 Receiving the Delivery 29
4.1 Checking the Delivery 29
4.2 Storing the Product 29
4.3 Lifting the Product 29
4.4 Using the Product Modified Label 31

5 Mounting the Unit 32
5.1 Environmental Requirements 32
5.2 Cooling Requirements 32
5.2.1 Power Losses 33

5.3 Installation Sequence 34
5.3.1 Installation Sequence for Fixing to the Floor and to the Wall 34
5.3.2 Installation Sequence for Fixing only to the Floor 35

6 Electrical Installation 36
6.1 Cable Connections 36
6.1.1 General Cable Requirements 36
6.1.2 UL Standards on Cabling 37
6.1.3 Cable Selection and Dimensioning 37
6.1.4 Fuse Selection 37
6.1.5 Principle of the Power Unit Topology 37
6.1.6 DC Supply and Brake Resistor Cables 40
6.2 EMC-compliant Installation 40
6.3 Grounding 40
6.4 AC Choke Connections 42
6.5 Auxiliary Voltage Transformer Tappings 43
6.6 LCL-filter 43
6.6.1 Removing HF Capacitors in AF9, AF10, and AF12 43
6.6.2 Removing HF Capacitors in AF13, and AF14 44
6.7 The dU/dT-filter Option +ODU 45
6.8 Common-mode Chokes on Motor Cables (Option +OCM) 45
6.9 Control Devices on Low-harmonic Cabinet Drive 46
6.9.1 Control Place Selection for DC Pre-charging and Circuit Breakers 46
6.9.1.1 Remote Operation (REM) 46
6.9.1.2 Manual Operation (MAN) 47
6.9.1.3 Automatic Operation (AUTO) 48
6.9.2 Circuit Breaker Fault Indicator and Reset Button 48
6.10 Get Access and Locate the Terminals 49
6.10.1 Get Access and Locate the Terminals for FR9 49
6.10.2 Get Access and Locate the Terminals for FR10 50
6.10.3 Get Access and Locate the Terminals for FR11 51
6.10.4 Get Access and Locate the Terminals for FR12 53
6.10.5 Get Access and Locate the Terminals for FR13 55
6.10.6 Get Access and Locate the Terminals for FR14 56
6.10.7 Get Access and Locate the Terminals for AF9/AF10 58
6.10.8 Get Access and Locate the Terminals for AF12 59
6.10.9 Get Access and Locate the Terminals for AF13 59
6.10.10 Get Access and Locate the Terminals for AF14 60

6.11 Installing the Cables 61
6.11.1 Additional Instructions for Cable Installation 61
6.11.2 Installing the Cables, FR9–12 62
6.11.3 Installing the Cables, FR13 63
6.11.4 Installing the Cables, FR14 66
6.11.5 Installing the Cables, AF9/AF10 69
6.11.6 Installing the Cables, AF12 71
6.11.7 Installing the Cables, AF13 73
6.11.8 Installing the Cables, AF14 76

7 Control Unit 80
7.1 Control Unit Components 80
7.2 Control Voltage (+24 V/EXT +24 V) 80
7.3 Control Unit Cabling 81
7.3.1 Selection of the Control Cables 81
7.3.2 Control Terminals on OPTA1 81
7.3.2.1 Digital Input Signal Inversions 83
7.3.2.2 Jumper Selections on the OPTA1 Basic Board 84
7.3.3 Control Terminals on OPTA2 and OPTA3 85
7.4 Fiber Cable Connections 86
7.4.1 Connecting the Optic Fiber Cables 88
7.5 Installation of Option Boards 89
7.6 Galvanic Isolation Barriers 89

8 Using the Control Panel 91
8.1 Navigating on the Control Panel 91
8.2 Using the Monitoring Menu (M1) 91
8.2.1 Monitored Values 91
8.3 Using the Parameter Menu (M2) 93
8.3.1 Finding the Parameter 93
8.3.2 Selecting Values 94
8.3.3 Editing the Values Digit by Digit 94
8.4 Using the Keypad Control Menu 96
8.4.1 Finding the Keypad Control Menu 96
8.4.2 Keypad Control Parameters M3 96
8.4.3 Changing the Control Mode 97
8.4.4 Keypad Reference 97
8.4.4.1 Editing the Frequency Reference 97
8.4.5 Changing the Rotation Direction 97

8.4.6 Disabling the Stop Motor Function 98
8.4.7 Special Functions in Keypad Control Menu 98
8.4.7.1 Selecting the Keypad as the Control Mode 98
8.4.7.2 Copying the Frequency Reference Set to the Control Panel 98
8.5 Using the Active Faults Menu (M4) 99
8.5.1 Finding the Active Faults Menu 99
8.5.2 Examining the Fault Time Data Record 99
8.5.3 Fault Time Data Record 99
8.6 Using the Fault History Menu (M5) 100
8.6.1 Fault History Menu (M5) 100
8.6.2 Resetting the Fault History 100
8.7 Using the System Menu (M6) 101
8.7.1 Finding the System Menu 101
8.7.2 System Menu Functions 101
8.7.3 Changing the Language 104
8.7.4 Changing the Application 104
8.7.5 Copy Parameters (S6.3) 104
8.7.5.1 Saving Parameter Sets (Parameter Sets S6.3.1) 105
8.7.5.2 Uploading Parameters to Control Panel (Up To Keypad, S6.3.2) 105
8.7.5.3 Downloading Parameters to Drive (Down From Keypad, S6.3.3) 105
8.7.5.4 Activating or Deactivating the Automatic Parameter Back-up (P6.3.4) 105
8.7.5.5 Comparing the Parameters 106
8.7.6 Security 106
8.7.6.1 Finding the Security Menu 106
8.7.6.2 Passwords 107
8.7.6.3 Setting a Password 107
8.7.6.4 Entering a Password 107
8.7.6.5 Deactivating the Password Function 107
8.7.6.6 Locking a Parameter 107
8.7.6.7 Start-up Wizard (P6.5.3) 108
8.7.6.8 Activating/Deactivating the Start-up Wizard 108
8.7.6.9 Enabling/Disabling the Change of Multimonitoring Items 108
8.7.7 Keypad Settings 109
8.7.7.1 Finding the Keypad Settings Menu 109
8.7.7.2 Changing the Default Page 109
8.7.7.3 Default Page in the Operating Menu (P6.6.2) 109
8.7.7.4 Setting the Timeout Time 109
8.7.7.5 Contrast Adjustment (P6.6.4) 109

8.7.7.6 Backlight Time (P6.6.5) 110
8.7.8 Hardware Settings 110
8.7.8.1 Finding the Hardware Setting Menu 110
8.7.8.2 Setting the Internal Brake Resistor Connection 110
8.7.8.3 Fan Control 110
8.7.8.4 Changing the Fan Control Settings 111
8.7.8.5 HMI Acknowledge Timeout (P6.7.3) 111
8.7.8.6 Changing the HMI Acknowledge Timeout 111
8.7.8.7 Changing the Number of Retries to Receive HMI Acknowledgement (P6.7.4) 111
8.7.8.8 Sine Filter (P6.7.5) 111
8.7.8.9 Pre-charge Mode (P6.7.6) 112
8.7.9 System Info 112
8.7.9.1 Finding the System Info Menu 112
8.7.9.2 Total Counters (S6.8.1) 112
8.7.9.3 Trip Counters (S6.8.2) 112
8.7.9.4 Resetting the Trip Counters 112
8.7.9.5 Software (S6.8.3) 113
8.7.9.6 Applications (S6.8.4) 113
8.7.9.7 Examining the Application Page 113
8.7.9.8 Hardware (S6.8.5) 113
8.7.9.9 Checking the Status of an Option Board 114
8.7.9.10 Debug Menu (S6.8.7) 114
8.8 Using the Expander Board Menu 114
8.8.1 Expander Board Menu 114
8.8.2 Examining the Connected Option Boards 114
8.8.3 Finding the Option Board Parameters 115
8.9 Further Control Panel Functions 115

9 Commissioning 116
9.1 Safety Checks before Starting the Commissioning 116
9.2 Commissioning the AC Drive 116
9.3 Measuring the Cable and Motor Insulation 117
9.3.1 Insulation Checks of the Motor Cable 117
9.3.2 Insulation Checks of the Mains Cable 117
9.3.3 Insulation Checks of the Motor 118
9.4 Checks after Commissioning 118
9.4.1 Testing the AC Drive after Commissioning 118
9.4.2 RUN Test without Load 118

9.4.2.1 Test A: Controls from the Control Terminals 118
9.4.2.2 Test B: Control from the Keypad 119
9.4.3 Start-up Test 119
9.4.4 Identification Run 119
9.5 Motor Run Checklist 119

10 Maintenance 120
10.1 Preventive Maintenance Recommendations 120
10.2 Reforming the Capacitors 122

11 Fault Tracing 124
11.1 General Information on Fault Tracing 124
11.2 Resetting a Fault 124
11.3 Creating Service Info File 124

12 Specifications 126
12.1 Weights of the AC Drive 126
12.2 Dimensions 129
12.2.1 Dimensions 129
12.2.2 Bottom Dimensions, FR9, FR10, FR11, FR12 132
12.2.3 Bottom Dimensions, FR13 133
12.2.4 Bottom Dimensions, FR14 134
12.2.5 Bottom Dimensions, AF9, AF10, AF12 135
12.2.6 Bottom Dimensions, AF13 136
12.2.7 Bottom Dimensions, AF14 137
12.2.8 Dimensions for the +OCM and +OCH Options 137
12.3 Cable and Fuse Sizes 138
12.3.1 6-pulse Drives, 380–500 V Units 138
12.3.2 12-pulse Drives, 380–500 V Units 139
12.3.3 Low-harmonic Drives, 380–500 V Units 140
12.3.4 6-pulse Drives, 525–690 V Units 142
12.3.5 12-pulse Drives, 525–690 V Units 143
12.3.6 Low-harmonic Drives, 525–690 V Units 144
12.4 Main Circuit Diagrams 145
12.4.1 Main Circuit Diagram of FR9 145
12.4.2 Main Circuit Diagram of FR10 147
12.4.3 Main Circuit Diagram of FR11 148
12.4.4 Main Circuit Diagram of FR12 149
12.4.5 Main Circuit Diagram of FR13 150

12.4.6 Main Circuit Diagram of FR14, Excluding Drive Type 1500 6 151
12.4.7 Main Circuit Diagram of FR14, Drive Type 1500 6 152
12.4.8 Main Circuit Diagram of AF9-10 152
12.4.9 Main Circuit Diagram of AF12 154
12.4.10 Main Circuit Diagram of AF13 155
12.4.11 Main Circuit Diagram of AF14 156
12.5 Tightening Torques of the Terminals 156
12.6 Tightening Torques of the Busbar Connections 157
12.7 Power Ratings 157
12.7.1 Overload Capability 157
12.7.2 Power Ratings for Mains Voltage 380–500 V 158
12.7.3 Power Ratings for Low Harmonics, Mains Voltage 380–500 V 159
12.7.4 Power Ratings for Mains Voltage 525–690 V 160
12.7.5 Power Ratings for Low Harmonics, Mains Voltage 525–690 V 161
12.8 VACON® NXC Technical Data 162
12.9 Faults and Alarms 165

1 Introduction

1.1 Purpose of this Operating Guide

This operating guide provides information for safe installation and commissioning of the product. It is intended for use by qualified personnel. Read and follow the instructions to use the drive safely and professionally. Pay particular attention to the safety instructions and general warnings. Always keep this operating guide available with the drive.

1.2 Additional Resources

Other resources are available to understand advanced AC drive functions and programming.

- Extra information on installation of the drive available in manuals VACON® NXP NSP Wall-mounted and Standalone Operating Guide, VACON® NXI Inverters Operating Guides, VACON® IP00 Module Installation Manual and VACON® Active Front End manuals (especially on low-harmonics drives).
- The VACON® NX application manuals provide greater detail on working with parameters and show many application examples.
- The VACON® NX I/O Boards User Manual gives more information on the I/O boards and their installation.
- Instructions for operation with option boards and other optional equipment.
- The drawings of the product in this manual are examples. For detailed configuration-specific drawings, see attachments in the quote or contact your local Danfoss distributor.

Supplementary publications and manuals are available from Danfoss.

NOTE! Download the English and French product manuals with applicable safety, warning and caution information from https://www.danfoss.com/en/service-and-support/.
REMARQUE Vous pouvez télécharger les versions anglaise et française des manuels produit contenant l'ensemble des informations de sécurité, avertissements et mises en garde applicables sur le site https://www.danfoss.com/en/service-and-support/.

1.3 Version History

This guide is regularly reviewed and updated. All suggestions for improvement are welcome.

The original language of this guide is English.

Table 1: Version History

Version	Remarks
DPD00890D	New structure throughout the guide.
DPD00890E	Added notes related to options +PES, +PED, +DEP, and +OCH.

1.4 Disposal

Do not dispose of equipment containing electrical components together with domestic waste. Collect it separately in accordance with local and currently valid legislation.

1.5 Type Approvals and Certifications

For list of approvals and certificates specific for VACON® NXC Enclosed Drives, see 12.8 VACON® NXC Technical Data.

NOTICE
The specific approvals and certification for the drive are on the nameplate of the drive. For more information, contact the local Danfoss office or partner.

1.6 Start-up Quick Guide

Do at minimum these procedures during the installation and commissioning.

If there are problems, speak to the local distributor.

Vacon Ltd is not responsible for the use of the AC drives against the instructions.

Procedure

1. Check that the delivery agrees to the order, see 4.1 Checking the Delivery.
2. Before starting the commissioning, read carefully the safety instructions in 2.2 Danger and Warnings and 2.3 Cautions and Notices.
3. Before the mechanical installation, check the minimum clearances around the AC drive (5.2 Cooling Requirements) and check the ambient conditions in 12.8 VACON® NXC Technical Data.
4. Check the dimensions of the motor cable, mains cable, mains fuses and check the cable connections. Read 6.1 Cable Connections, 6.2 EMC-compliant Installation, and 6.3 Grounding.
5. Obey the installation instructions, see 6.11 Installing the Cables.
6. Find information on the control connections in 7.3.2 Control Terminals on OPTA1.
7. If the start-up wizard is active, select the language of the control panel and the application. Accept the selections with the [enter] button. If the start-up wizard is not active, obey the instructions a and b.
   - **a.** Select the language of the control panel from the Menu M6, page 6.1. For instructions, see 8.7.3 Changing the Language.
   - **b.** Select the application from the Menu M6, page 6.2. For instructions, see 8.7.4 Changing the Application.
8. All parameters have factory default values. To make sure that the AC drive operates correctly, make sure that these group G2.1 parameters have the same data as the nameplate. For more information on the parameters in the list, see the VACON® All in One Application Manual.

   - Nominal voltage of the motor
   - Nominal frequency of the motor
   - Nominal speed of the motor
   - Nominal current of the motor
   - Motor cos phi
9. Obey the commissioning instructions, see 9.2 Commissioning the AC Drive.

The VACON® NXC Enclosed Drive is ready for operation.

2 Safety

2.1 Safety Symbols

The following symbols are used in this guide:

⚠ D A N G E R ⚠

Indicates a hazardous situation which, if not avoided, will result in death or serious injury.

⚠ W A R N I N G ⚠

Indicates a hazardous situation which, if not avoided, could result in death or serious injury.

⚠ C A U T I O N ⚠

Indicates a hazardous situation which, if not avoided, could result in minor or moderate injury.

N O T I C E

Indicates information considered important, but not hazard-related (for example, messages relating to property damage).

2.2 Danger and Warnings

⚠ D A N G E R ⚠

SHOCK HAZARD FROM POWER UNIT COMPONENTS

The power unit components are live when the drive is connected to mains. A contact with this voltage can lead to death or serious injury.

- Do not touch the components of the power unit when the drive is connected to mains. Before connecting the drive to mains, make sure that the covers of the drive are closed.

⚠ D A N G E R ⚠

SHOCK HAZARD FROM TERMINALS

The motor terminals U, V, W, the brake resistor terminals, or the DC terminals are live when the drive is connected to mains, also when the motor does not operate. A contact with this voltage can lead to death or serious injury.

- Do not touch the motor terminals U, V, W, the brake resistor terminals, or the DC terminals when the drive is connected to mains. Before connecting the drive to mains, make sure that the covers of the drive are closed.

⚠ D A N G E R ⚠

SHOCK HAZARD FROM DC LINK OR EXTERNAL SOURCE

The terminal connections and the components of the drive can be live 5 minutes after the drive is disconnected from the mains and the motor has stopped. Also the load side of the drive can generate voltage. A contact with this voltage can lead to death or serious injury.

- Before doing electrical work on the drive:
  Disconnect the drive from the mains and make sure that the motor has stopped.
  Lock out and tag out the power source to the drive.
  Make sure that no external source generates unintended voltage during work.
  Wait 5 minutes before opening the cabinet door or the cover of the AC drive.
  Use a measuring device to make sure that there is no voltage.

⚠ WARNING ⚠

SHOCK HAZARD FROM CONTROL TERMINALS

The control terminals can have a dangerous voltage also when the drive is disconnected from mains. A contact with this voltage can lead to injury.

- Make sure that there is no voltage in the control terminals before touching the control terminals.

⚠ WARNING ⚠

ACCIDENTAL MOTOR START

When there is a power-up, a power break, or a fault reset, the motor starts immediately if the start signal is active, unless the pulse control for Start/Stop logic is selected. If the parameters, the applications or the software change, the I/O functions (including the start inputs) can change. If you activate the auto reset function, the motor starts automatically after an automatic fault reset. See the Application Guide. Failure to ensure that the motor, system, and any attached equipment are ready for start can result in personal injury or equipment damage.

- Disconnect the motor from the drive if an accidental start can be dangerous. Make sure that the equipment is safe to operate under any condition.

⚠ WARNING ⚠

LEAKAGE CURRENT HAZARD

Leakage currents exceed 3.5 mA. Failure to ground the drive properly can result in death or serious injury.

- Ensure the correct grounding of the equipment by a certified electrical installer.

⚠ WARNING ⚠

SHOCK HAZARD FROM PE CONDUCTOR

The drive can cause a DC current in the PE conductor. Failure to use a residual current-operated protective (RCD) device Type B or a residual current-operated monitoring (RCM) device can lead to the RCD not providing the intended protection and therefore can result in death or serious injury.

- Use a type B RCD or RCM device on the mains side of the drive.

2.3 Cautions and Notices

⚠ CAUTION ⚠

DAMAGE TO THE AC DRIVE FROM INCORRECT MEASUREMENTS

Doing measurements on the AC drive when it is connected to mains can damage the drive.

- Do not do measurements when the AC drive is connected to mains.

⚠ CAUTION ⚠

DAMAGE TO THE AC DRIVE FROM INCORRECT SPARE PARTS

Using spare parts that are not from the manufacturer can damage the drive.

- Do not use spare parts that are not from the manufacturer.

⚠ CAUTION ⚠

DAMAGE TO THE AC DRIVE FROM INSUFFICIENT GROUNDING

Not using a grounding conductor can damage the drive.

- Make sure that the AC drive is always grounded with a grounding conductor that is connected to the grounding terminal that is identified with the PE symbol.

⚠ CAUTION ⚠

CUT HAZARD FROM SHARP EDGES

There can be sharp edges in the AC drive that can cause cuts.

- Wear protective gloves when mounting, cabling, or doing maintenance operations.

⚠ CAUTION ⚠

BURN HAZARD FROM HOT SURFACES

Touching surfaces, which are marked with the 'hot surface' sticker, can result in injury.

- Do not touch surfaces which are marked with the 'hot surface' sticker.

NOTICE

DAMAGE TO THE AC DRIVE FROM STATIC VOLTAGE

Some of the electronic components inside the AC drive are sensitive to ESD. Static voltage can damage the components.

- Remember to use ESD protection always when working with electronic components of the AC drive. Do not touch the components on the circuit boards without proper ESD protection.

NOTICE

DAMAGE TO THE AC DRIVE FROM MOVEMENT

Movement after installation can damage the drive.

- Do not move the AC drive during operation. Use a fixed installation to prevent damage to the drive.

NOTICE

DAMAGE TO THE AC DRIVE FROM INCORRECT EMC LEVEL

The EMC level requirements for the AC drive depend on the installation environment. An incorrect EMC level can damage the drive.

- Before connecting the AC drive to the mains, make sure that the EMC level of the AC drive is correct for the mains.

NOTICE

RADIO INTERFERENCE

In a residential environment, this product can cause radio interference.

- Take supplementary mitigation measures.

NOTICE

MAINS DISCONNECTION DEVICE

If the AC drive is used as a part of a machine, the machine manufacturer must supply a mains disconnection device (refer to EN 60204-1).

NOTICE

MALFUNCTION OF FAULT CURRENT PROTECTIVE SWITCHES

Because there are high capacitive currents in the AC drive, it is possible that the fault current protective switches do not operate correctly.

NOTICE

VOLTAGE WITHSTAND TESTS

Doing voltage withstand tests can damage the drive.

- Do not do voltage withstand tests on the AC drive. The manufacturer has already done the tests.

3 Product Overview

3.1 Intended Use

The VACON® NXC is a product range of free standing enclosed AC drives for the high power range. The VACON® NXC is a modular product intended for use in all applications where reliability and high availability is appreciated.

The drive is an electronic motor controller intended for:

- Regulation of motor speed in response to system feedback or to remote commands from external controllers. A power drive system consists of the AC drive, the motor, and equipment driven by the motor.
- System and motor status surveillance.

The drive can also be used for motor overload protection.

VACON® NXC Enclosed Drive can be used as programmable logic controller (PLC) in many applications due to extensive I/O and fieldbus options and easy programmability. Custom application development can be done with VACON® Programming tool and standard PLC programming languages defined in the IEC 61131/3.

Depending on the configuration, the drive can be used in standalone applications or form part of a larger appliance or installation.

The drive is allowed for use in residential, industrial, and commercial environments in accordance with local laws and standards.

N O T I C E

In a residential environment, this product can cause radio interference, in which case supplementary mitigation measures can be required.

Foreseeable misuse

Do not use the drive in applications which are non-compliant with specified operating conditions and environments. Ensure compliance with the conditions specified in 12.8 VACON® NXC Technical Data.

3.2 Package Label

The package label gives detailed information about the delivery.

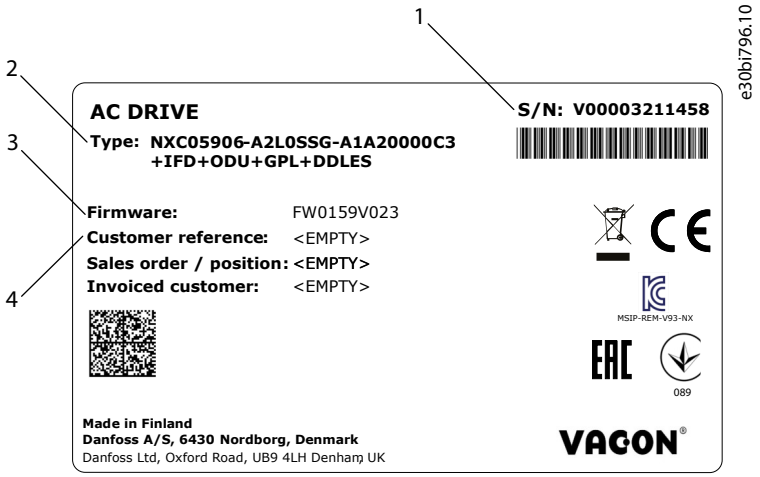

Illustration 1: Package Label of VACON® NXC Enclosed Drives

1	The serial number	3	The firmware code
2	The type code	4	The customer reference number

3.3 Description of the Type Code

The type code of VACON® is made of standard codes and optional codes. Each part of the type code agrees to the data in the order.

Example

The code can have this format, for example:

- NXC04605-A2L0SSG-A1A20000C3+IFD

Table 2: Description of the Type Code

Code	Description
VACON	This part is same for all the products.
NXC	The product range: • NXC = VACON® NXC Enclosed Drive
0460	The drive rating in amperes. For example, 0460 = 460 A
5	The mains voltage: • 5 = 380–500 V • 6 = 525–690 V
A	The control panel: • A = standard (text display) • B = no local control panel • F = dummy keypad • G = graphic display
2	The protection rating: • 2 = IP21 (UL Type 1) • 5 = IP54 (UL Type 12)
L	The EMC emission level: • L = complies with the category C3 of standard IEC/EN 61800-3 + A1, 2nd environment, and nominal voltage less than 1000 V • T = complies with the standard IEC/EN 61800-3 + A1 when used in IT networks (C4).
0	The brake chopper: • 0 = No brake chopper • 1 = Internal brake chopper (FR9–FR12)
SSG	The hardware changes: • The supply, the first letter (**X**xx): - S = 6-pulse connection - T = 12-pulse connection - R = Regenerative low-harmonic (AFE) • The mounting, the second letter: (x**X**x): - S = Air-cooled drive • The boards, the third letter (xx**X**): - F = Standard boards - N = separate IP54 (UL Type 12) control box, standard boards, fiber connection (FR9 IP00, ≥ FR10) - G = Coated boards - O = separate IP54 (UL Type 12) control box, coated boards, fiber connection (FR9 IP00, ≥ FR10)
AIA20000E3	The option boards. 2 characters for each slot. 00 = the slot is not used

Code	Description
	The option board abbreviations: • A = basic I/O board • B = expander I/O board • C = fieldbus board • D = special board • E = fieldbus board For example, E3 = PROFIBUS DP
+IFD	The optional codes. See the full list of option codes in 3.8 Available Options.

3.4 Enclosure Sizes

Example

The codes for nominal current and nominal mains voltage are part of the type code (see 3.3 Description of the Type Code) on the package label (see 3.2 Package Label). Use these values to find out the enclosure size of the AC drive from the table.

In the example "NXC**04605**-A2L0SSG-A1A20000E3+IFD", the code for nominal current is 0460 and the code for nominal mains voltage is 5.

Table 3: Enclosure Sizes

Nominal mains voltage	Nominal current [A]	Enclosure size
5 (380–500 V)	0261	FR9
	0300	
	0385	FR10
	0460	
	0520	
	0590	FR11
	0650	
	0730	
	0820	FR12
	0920	
	1030	
	1150	FR13
	1300	
	1450	
	1770	FR14
	2150	
6 (525–690 V)	0125	FR9
	0144	
	0170	

Nominal mains voltage	Nominal current [A]	Enclosure size
	0208	
	0261	FR10
	0325	
	0385	
	0416	
	0460	FR11
	0502	
	0590	
	0650	FR12
	0750	
	0820	
	0920	FR13
	1030	
	1180	
	1500	FR14
	1900	
	2250	

3.5 Enclosure Sizes, Low Harmonic Drives

Example

The codes for nominal current and nominal mains voltage are part of the type code (see 3.3 Description of the Type Code) on the package label (see 3.2 Package Label). Use these values to find out the enclosure size of the AC drive from the table.

In the example "NXC**04605**-A2L0**R**SG-A1A20000E3+IFD", the code for nominal current is 0460 and the code for nominal mains voltage is 5. R shows that the Drive is Low harmonic.

Table 4: Enclosure Sizes

Nominal mains voltage	Nominal current [A]	Enclosure size
5 (380–500 V)	0261	AF9
	0300	
	0385	AF10
	0460	
	0520	
	0650	AF12
	0730	
	0820	
	0920	

Nominal mains voltage	Nominal current [A]	Enclosure size
	1030	
	1150	AF13
	1300	
	1450	
	1770	AF14
	2150	
	2700	
6 (525–690 V)	0125	AF9
	0144	
	0170	
	0208	
	0261	AF10
	0325	
	0385	
	0416	
	0460	AF12
	0502	
	0590	
	0650	
	0750	
	0820	
	0920	AF13
	1030	
	1180	
	1500	AF14
	1900	
	2250	

3.6 Available Protection Ratings

Table 5: Available Protection Ratings

Mains voltage	Enclosure size	IP21 (UL Type 1)	IP54 (UL Type 12)
380–500 V	FR9–FR14	x	x
380–500 V	AF9–AF14 (Low Harmonic)	x	x
525–690 V	FR9–FR14	x	x
525–690 V	AF9–AF14 (Low Harmonic)	x	x

3.7 Available EMC Classes

The product standard (EMC immunity requirements) IEC/EN 61800-3 + A1 has 5 categories. The VACON® AC drives are divided into 5 EMC classes that have equivalents in the standard. All VACON® NX AC drives comply with the standard IEC/EN 61800-3 + A1.

The type code tells which category requirement the AC drive complies with (see 3.3 Description of the Type Code).

The category changes when these properties in the AC drive change:

- The level of electromagnetic disturbances
- The requirements of a power system network
- The installation environment (see the standard IEC/EN 61800-3 + A1)

Table 6: Available EMC Classes

EMC class in IEC/EN 61800-3 + A1	VACON® equivalent EMC class	Description	Available for
C3	L	Includes AC drives that have the nominal voltage of less than 1000 V. These AC drives are used in the 2nd environment only.	IP21 (UL Type 1) and IP54 (UL Type 12)
C4	T	These AC drives comply with the standard IEC/EN 61800-3 + A1 if they are used in IT systems. In IT systems, the networks are isolated from ground, or connected to ground through high impedance to decrease the leakage current. **NOTICE** If the AC drives are used with other supplies, they do not comply with the EMC requirements.	All products

3.8 Available Options

The VACON® NXC Enclosed Drives enclosure solution contains extra pre-engineered hardware options. These options are appended to the basic type code by using "+" codes. The most common VACON® NXC Enclosed Drives options are listed in these tables.

NOTE! Some options force the use of some other options. For example, if internal brake chopper is selected for FR9–FR12, also +MDC is needed.

Table 7: Control Terminal Options (T group)

Option code	Description	Comments
+TIO	Basic I/O wired to external single-tier terminals	X2
+TID	Basic I/O wired to external 2-tier terminals + extra terminals	Double-decker terminals X2
+TUP[1]	Terminals for 230 V AC control voltage	X1

[1] Included as standard in low harmonic drives.

Table 8: Input Device Options (I group)

Option code	Description	Comments
+ILS[1]	Load switch	
+IFD	Switch fuse and fuses	With aR Fuses
+ICO	Input contactor	
+IFU	Input fuses	With aR Fuses
+ICB[1]	Circuit breaker	

[1] Included as standard in low harmonic drives.

Table 9: Main Circuit Options (M group)

Option code	Description	Comments
+MDC	Terminals in cabinet for DC or brake chopper	Req. BSF converter hardware This option is always selected with FR9–FR12 with internal brake chopper.

Table 10: Output Filter Options (O group)

Option code	Description	Comments
+OCM	Common-mode filters	Ferrite
+OCH	Common-mode filters with output terminals	Nanoperm®
+ODU	dU/dt filter	
+OSI	Sine filter	

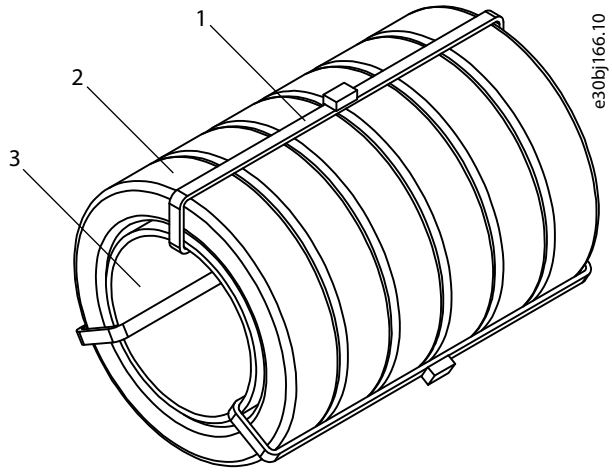

Illustration 2: +OCM Option

1	Cable tie	3	Common-mode filter tube
2	Ferrite ring		

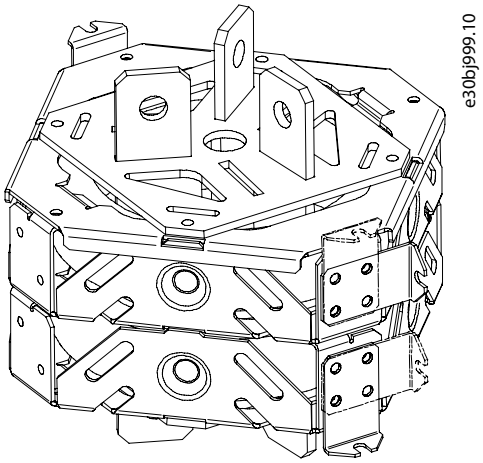

Illustration 3: +OCH Option for FR9–12, AF9–12

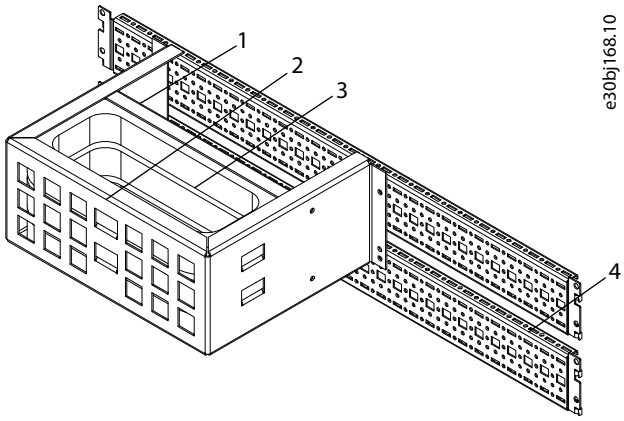

Illustration 4: +OCH Option for FR13–14, AF13–14

1	Common-mode filter	3	Nanoperm rings
2	Frame	4	TS-mounting rail

Table 11: Protection Devices (P group)

Option code	Description	Comments
+PTR	External thermistor relay	PTB certified
+PES[1]	Emergency stop (cat 0)	DI3
+PED[1]	Emergency stop (cat 1)	DI6 (system application)
+PAP	Arc protection	
+PIF	Insulation fault sensor	For IT grids

[1] With +PES or +PED option for Emergency Stop function, always use OPTAF board or +ICB option.

Table 12: General Options

Option code	Description	Comments
+G40	400 empty cabinet	
+G60	600 empty cabinet	
+G80	800 empty cabinet	
+GPL	100 mm base	For 400 mm, 600 mm or 800 mm
+GPH	200 mm base	For 400 mm, 600 mm or 800 mm
+FAT	Factory Acceptance Tests	
+MAR	Marine construction	
+SWP	Seaworthy packing	

Table 13: Cabling Options (C group)

Option code	Description	Comments
+CIT	Input (mains) cabling from top	
+COT	Output (motor) cabling from top	

Table 14: Auxiliary Equipment (A group)

Option code	Option code	Comments
+AMF	Motor fan control	
+AMH	Motor heater feeder	
+AMB	Mechanical brake control	
+AMO[1]	Motor operator for +ICB	
+ACH	Cabinet heater	
+ACL	Cabinet light	

Option code	Option code	Comments
+ACR	Control relay	
+AAI	Analog signal isolator	AI1, AO1, AI2
+AAC	Auxiliary contact (input device)	Wired to DI3
+AAA	Auxiliary contact (control voltage devices)	Chained to DI3
+AT1	Auxiliary voltage transformer 200 VA	
+AT2[1]	Auxiliary voltage transformer 750 VA	
+AT3[2]	Auxiliary voltage transformer 2500 VA	
+AT4	Auxiliary voltage transformer 4000 VA	
+ADC[1]	Supply 24 V DC 2.5 A	
+ACS	230 V AC customer socket	With 30 mA leak current prot.

[1] Included as standard in low harmonic drives

[2] With AF13 and AF14.

Table 15: Door-mounted Options (D group)

Option code	Description	Comments
+DLV	Pilot light (Control voltage on)	230 V AC
+DLD	Pilot light (DO1)	24 V DC, DO1
+DLF	Pilot light (FLT)	230 V AC, RO2
+DLR	Pilot light (RUN)	230 V AC, RO1
+DAR	Potentiometer for reference	AI1
+DCO[1]	Main contactor operation switch	0-1-START
+DRO[1]	Local/Remote operation switch	Loc/Rem wired to DI6
+DEP[2]	Emergency stop push-button	
+DRP	Reset push-button	DI6
+DAM	Analog meter (AO1)	
+DCM	Analog meter & current transformer	
+DVM	Analog voltage meter with selection switch	0, L1-L2, L2-L3, L3-L1

[1] Included as standard in low harmonic drives

[2] To use Emergency Stop function, OPTAF board, option +ICB, or external emergency stop device is required.

3.9 Control Panel

3.9.1 Introduction to Control Panel

The control panel is the interface between the AC drive and the user. Use the control panel to control the speed of a motor and monitor the status of the AC drive. Use it also to set the parameters of the AC drive.

The control panel can be removed from the AC drive. The control panel is isolated from the input line potential.

3.9.2 Keypad

The VACON® keypad has 9 buttons with which to control the AC drive (and motor), set parameters, and monitor values.

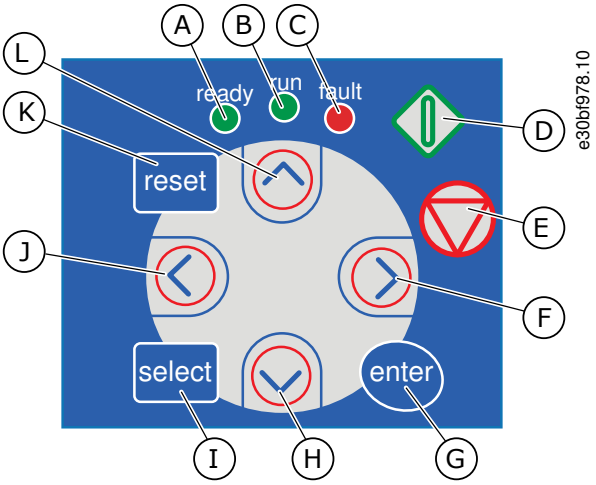

Illustration 5: Keypad Buttons for VACON® NXP

A	The [ready] LED is on when the AC power is connected to the drive and no faults are active. At the same time, the drive status indication shows *READY*.
B	The [run] LED is on when the drive operates. The LED blinks when the Stop button is pushed and the drive ramps down.
C	The [fault] LED blinks when the AC drive is stopped because of dangerous conditions (Fault Trip). See 8.5.1 Finding the Active Faults Menu.
D	The Start button. When the keypad is the active control mode, this button starts the motor. See 8.4.3 Changing the Control Mode.
E	The Stop button. The button stops the motor (unless the stop is disabled by the parameter R3.4/R3.6). See 8.4.2 Keypad Control Parameters M3.
F	The Menu button Right. Use it to move forward in the menu, move the cursor right (in the parameter menu) and to go to the edit mode.
G	The [enter] button. Use it to accept a selection, reset the fault history (push for 2–3 s).
H	The Browser button Down. Use it to scroll the main menu and the pages of different submenus and to decrease a value.
I	The [select] button. Use it to move between 2 last displays, for example, to see how new value changes some other value.
J	The Menu button Left. Use it to move back in the menu, move the cursor left (in the Parameter menu).
K	The [reset] button. Use it to reset a fault.
L	The Browser button Up. Use it to scroll the main menu and the pages of different submenus and to increase a value.

3.9.3 Display

The following figure describes the sections of the display.

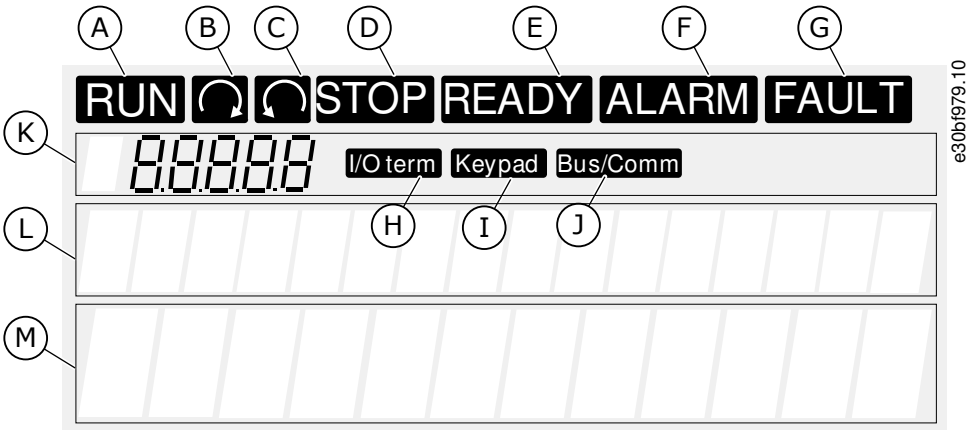

Illustration 6: Display Indications

A	The motor is in RUN state. The indication starts to blink when a stop command is given and blinks while the speed continues to decrease.	H	The I/O terminals is the active control mode.
B	The motor rotation direction is forward.	I	The control panel is the active control mode.
C	The motor rotation direction is reverse.	J	The fieldbus is the active control mode.
D	The drive does not operate.	K	The location indication. The line shows the symbol and number of the menu, parameter, and so on. For example, *M2* = Menu 2 (Parameters) or *P2.1.3* = Acceleration time.
E	The AC power is on.	L	The description line. The line shows the description of the menu, value, or fault.
F	An alarm is given.	M	The value line. The line shows the numerical and text values of references, parameters, and so on. It also shows the number of submenus that are available in each menu.
G	A fault is given and the AC drive is stopped.		

The drive status indicators (A–G) give information about the status of the motor and the AC drive.

The control mode indications (H, I, J) show the selection of the control mode. The control mode tells from where the START/STOP commands are given and reference values are changed. To make this selection, go to the Keypad control menu (M3) (see 8.4.3 Changing the Control Mode).

The three text lines (K, L, M) give information about the current location in the menu structure and the operation of the drive.

3.9.4 Basic Menu Structure

The data of the AC drive is in menus and submenus. The figure shows the basic menu structure of the AC drive.

This menu structure is only an example and the contents and items can vary depending on the application in use.

e30bf981.10

Main menu	Submenus
M1 Monitor	V1.1 Output frequency
	V1.2 Frequency ref.
	V1.3 Motor speed
	V1.4 Motor current
	V1.5 Motor torque
	V1.6 Motor power
	V1.7 Motor voltage
	V1.8 DC-link voltage
	V1.9 Unit temperature
	V1.10 Motor temp.
	V1.11 Analogue Input 1
	V1.12 Analogue Input 2
	V1.13 Current input
	V1.14 DIN1, DIN2, DIN3
	V1.15 DIN4, DIN5, DIN6
	V1.16 Analogue output
	V1.17 Multimonit. items
M2 Parameters	See Application Manual
M3 Keypad control	P3.1 Control place
	R3.2 Keypad reference
	P3.3 Direction (on keypad)
	P3.4 Stop button

Main menu	Submenus
M4 Active faults	
M5 Fault history	
M6 System menu	S6.1 Language selection
	S6.2 Application selection
	S6.3 Copy parameters
	S6.4 Compare param.
	S6.5 Security
	S6.6 Keypad settings
	S6.7 Hardware settings
	S6.8 System information
	S6.9 Power monitor
	S6.11 Power multi-monitor
M7 Expander boards	

Illustration 7: Basic Menu Structure of the AC Drive

4 Receiving the Delivery

4.1 Checking the Delivery

Before a VACON® AC drive is sent to the customer, the manufacturer makes many tests on the drive.

Procedure

1. After removing the packaging, examine the drive for transport damages.

   If the drive was damaged during the shipping, speak to the cargo insurance company or the carrier.

2. To make sure that the delivery is correct, compare the order data to the data on the package label, see 3.2 Package Label.

   If the delivery does not agree with the order, contact the vendor immediately.

3. To make sure that the contents of the delivery is correct and complete, compare the type code of the product to the type code, see 3.3 Description of the Type Code.
4. Attach the Product Modified Label. See 4.4 Using the Product Modified Label.

4.2 Storing the Product

If the product has to be stored before installing it, follow these instructions.

Procedure

1. If the AC drive must be stored before using it, make sure that the ambient conditions agree to the following:

   - Storage temperature: -40…+70 ° C (-40...+158 ° F)
   - Relative humidity: 0–95%, no condensation
   - The environment must be free from dust. If there is dust in the air, the AC drive must be well protected to make sure that no dust gets into the AC drive.

2. If the AC drive must be kept in storage for a long time, connect the power to the AC drive each year. Keep the power on for a minimum of 2 hours.
3. If the storage time is more than 12 months, charge the electrolytic DC capacitors with caution. To reform the capacitors, obey the instructions in 10.2 Reforming the Capacitors.

   We do not recommend a long storage time.

4.3 Lifting the Product

The unit is delivered either in a wooden box or a wooden cage. The box can be transported either horizontally or vertically, while transportation of the cage in a horizontal position is not allowed. Always refer to shipping marks for more detailed information. To lift the unit out of the box, use lifting equipment capable of handling the weight of the cabinet.

Find the lifting lugs on the top of the cabinet. NOTE! Location of lifting lugs varies between different enclosures.

Procedure

1. Use the lifting lugs to lift the cabinet into an upright position.

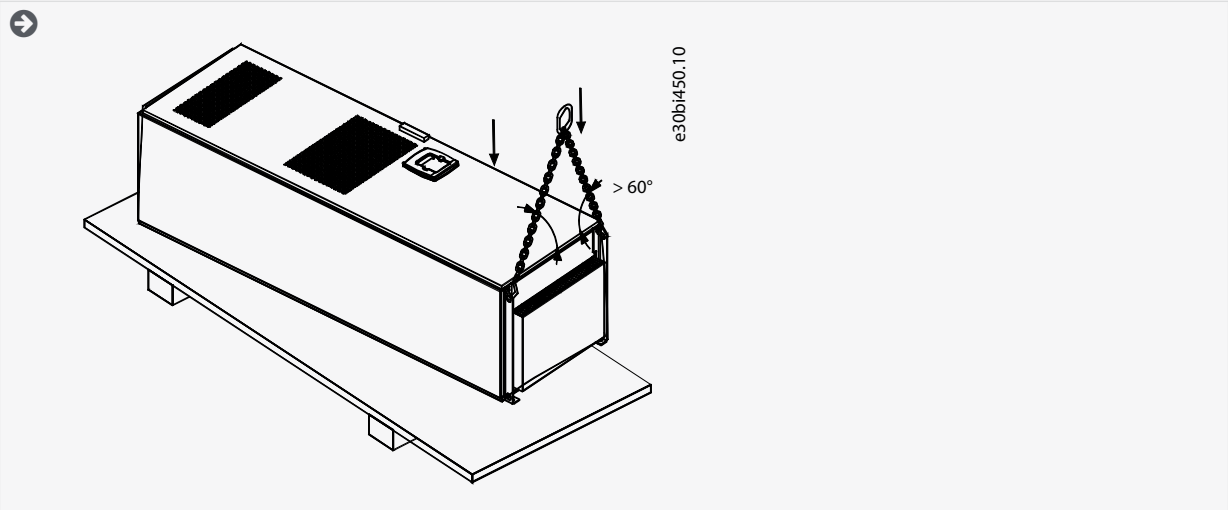

2. Move the cabinet to the place needed.

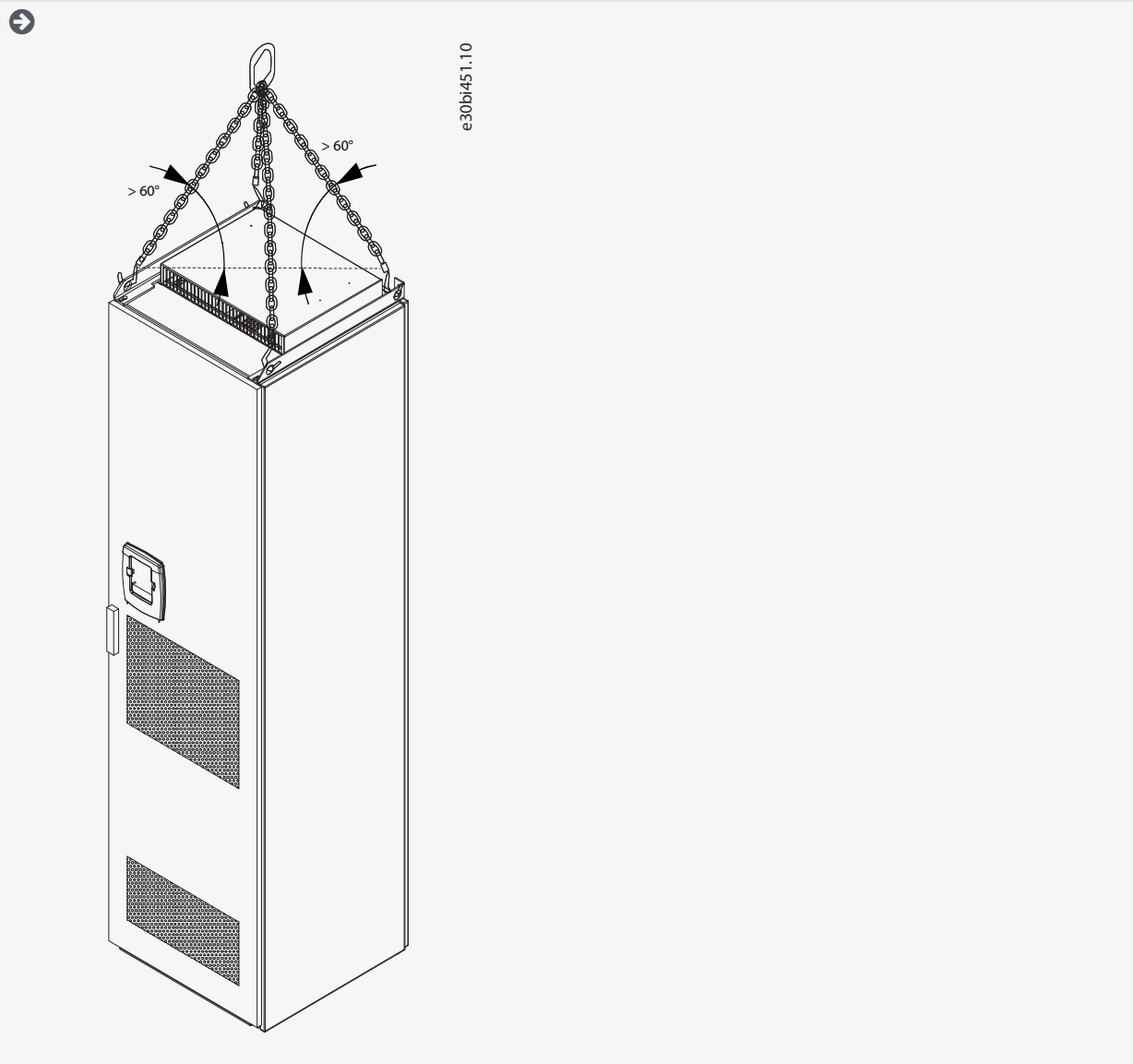

3. After lifting the drive, check for signs of damage on the drive.

4. Recycle the packaging material according to local regulations.

4.4 Using the Product Modified Label

In the accessories bag, there is also a "product modified" label. The function of the label is to tell the service personnel about the changes that are made in the AC drive.

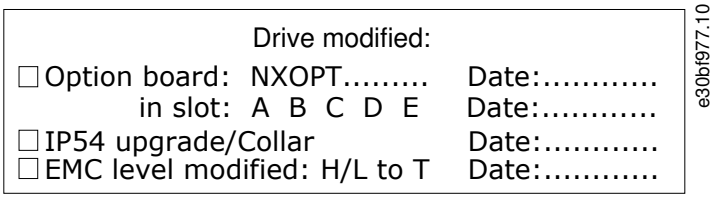

Illustration 8: The Product Modified Label

Procedure

1. Attach the label on the side of the AC drive, in a place where it is easy to find.
2. If changes are made to the AC drive, write the change and date on the label.

5 Mounting the Unit

5.1 Environmental Requirements

In environments with airborne liquids, particles, or corrosive gases, ensure that the protection rating of the equipment matches the installation environment. Failure to meet requirements for ambient conditions can reduce the lifetime of the AC drive. Ensure that requirements for humidity, temperature, and altitude are met.

Ensure that the space where the AC drive is installed, and the AC drive itself, is clean and free from particles, dust, or humidity that could harm the AC drive when it is powered on.

Vibration and shock

The AC drive complies with requirements for units mounted on the walls and floors of production premises, and in panels bolted to walls or floors.

AC drive is suitable for marine installations.

For detailed ambient conditions specifications, see 12.8 VACON® NXC Technical Data.

Installation requirements:

- Make sure that there is sufficiently free space around the AC drive for cooling, see 5.2 Cooling Requirements.
- Some free space is also necessary for maintenance.
- Make sure that the mounting surface is sufficiently flat.

5.2 Cooling Requirements

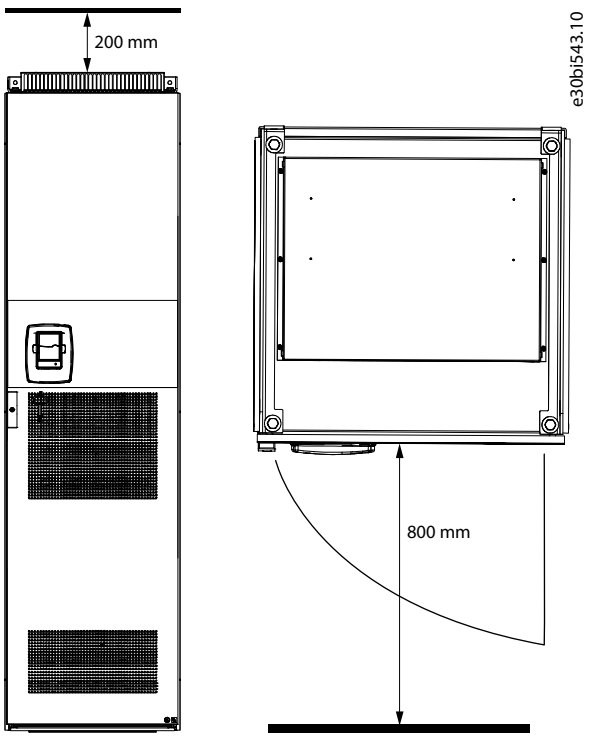

Illustration 9: Minimum Clearances around the AC Drive

Table 16: Required Cooling Air VACON® NXC 6- and 12-pulse Drives

Drive type	The quantity of cooling air [m^3/h]	The quantity of cooling air [CFM]
0261—0300 5 0125—0208 6	1000	589
0385—0520 5 0261—0416 6	2000	900

Drive type	The quantity of cooling air [m^3/h]	The quantity of cooling air [CFM]
0590—0730 5 0460—0590 6	3000	1765
0820—1030 5 0650—0820 6	4000	2354
1150 5 0920—1180 6	5000	2943
1300—1450 5 (6-p)	6000	3531
1300—1450 6 (12-p)	7000	4120
1500 6 (6-p)	9000	5297
1770—2150 5 1900—2250 6	10000	5886

Table 17: Required Cooling Air VACON® NXC Low-harmonic Drives

Drive type	The quantity of cooling air [m^3/h]	The quantity of cooling air [CFM]
0261—0520 5 0125—0416 6	3100	1825
0590—1030 5 0460—0820 6	6200	3649
1150—1450 5 0920—1180 6	7700	4532
1770—2700 5 1500—2250 6	15400	9064

5.2.1 Power Losses

The power loss of the AC drive varies greatly with load and output frequency and with the switching frequency used. The following generic formula gives a good approximation of the heat losses for VACON® NXC 6- and 12-pulse drives at nominal conditions. Use it for dimensioning of cooling or ventilation equipment for electrical rooms.

$$P_{loss}[kW] = P_{mot}[kW] \times 0.025$$

Heat losses of VACON®NXC low-harmonic drives are roughly 1.5–2 times more compared to 6-pulse and 12-pulse. Additional information on heat losses for specific enclosure size and current class is available on request.

5.3 Installation Sequence

5.3.1 Installation Sequence for Fixing to the Floor and to the Wall

Use these instructions when fixing the VACON® NXC Enclosed Drive to the floor and to the wall.

The cabinet must always be fixed to the floor or to the wall. Depending on installation conditions, the cabinet sections can be fixed in different ways. There are holes in the front corners which can be used for fixing. Also, the rails on the top of the cabinet have fixing lugs for fixing the cabinet to the wall.

Before starting the installation work, make sure that the level of the floor is within acceptable limits. The maximum deviation from the basic level can be no more than 5 mm over 3 m distance. The maximum acceptable height difference between cabinet front and rear edges must be within +2/-0 mm limit.

N O T I C E

RISK OF DAMAGE TO THE COMPONENTS FROM WELDING

Welding of the cabinet can risk sensitive components in the AC drive.

- Ensure that no grounding currents can flow through any part of the AC drive.

Procedure

1. Make sure that the mounting surface is sufficiently flat.
2. Check the dimensions of the AC drive, see 12.2.1 Dimensions.
3. Make sure that there is sufficiently free space around the AC drive for cooling, see 5.2 Cooling Requirements. Some free space is also necessary for maintenance.
4. Fix the cabinet in the two front corners to the floor with bolts.
5. Fix the top part to the wall with bolts.

   The rails and the fixing lugs can be moved horizontally to make sure the cabinet stands in a horizontal position.
6. In AC drives consisting of more than one cabinet section, fix all sections in the same way.

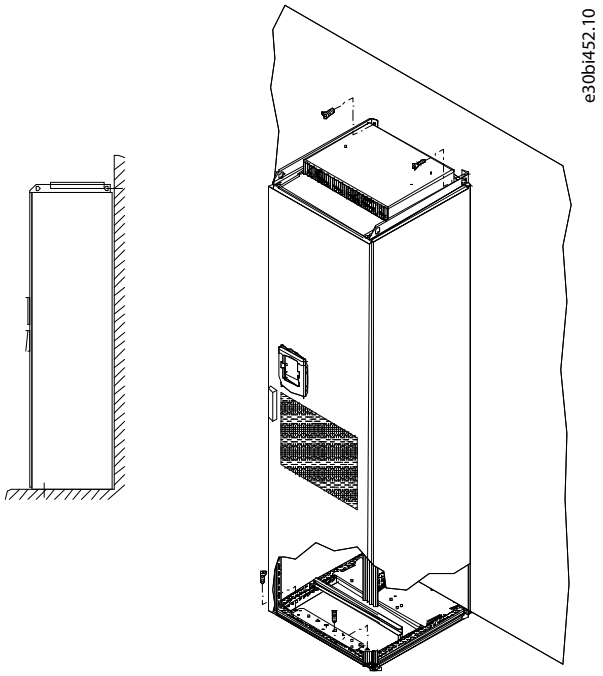

Illustration 10: Fixing the Cabinet to the Floor and to the Wall

5.3.2 Installation Sequence for Fixing only to the Floor

Use these instructions when fixing the VACON® NXC Enclosed Drive only to the floor.

NOTE! This option is not available for FR13 and bigger units. For fixing FR13 and bigger units, see delivery specific documentation.

The cabinet must always be fixed to the floor or to the wall. Depending on installation conditions, the cabinet sections can be fixed in different ways. There are holes in the front corners which can be used for fixing.

Before starting the installation work, make sure that the level of the floor is within acceptable limits. The maximum deviation from the basic level can be no more than 5 mm over 3 m distance. The maximum acceptable height difference between cabinet front and rear edges must be within +2/-0 mm limit.

In bottom-only fixing, extra mounting brackets (Rittal part.nr. 8800.210), or equivalent, are necessary.

N O T I C E

RISK OF DAMAGE TO THE COMPONENTS FROM WELDING

Welding of the cabinet can risk sensitive components in the AC drive.

- Ensure that no grounding currents can flow through any part of the AC drive.

Procedure

1. Make sure that the mounting surface is sufficiently flat.
2. Check the dimensions of the AC drive, see 12.2.1 Dimensions.
3. Make sure that there is sufficiently free space around the AC drive for cooling, see 5.2 Cooling Requirements. Some free space is also necessary for maintenance.
4. Drill holes on the floor for the bolts.
5. Fix the cabinet to the floor in the front with bolts.
6. In AC drives consisting of more than one cabinet section, fix all sections in the same way.

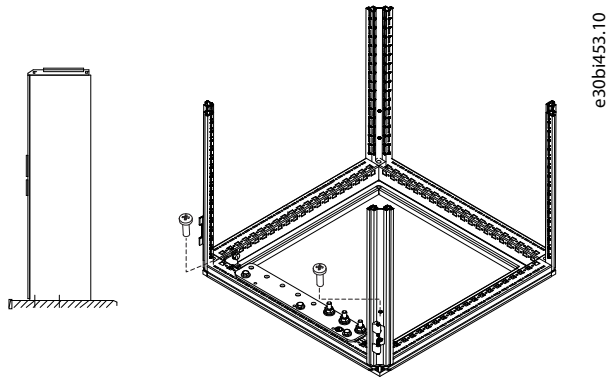

Illustration 11: Fixing the Cabinet to the Floor

6 Electrical Installation

6.1 Cable Connections

The mains cables are connected to terminals L1, L2, and L3 (12-pulse units 1L1, 1L2, 1L3, 2L1, 2L2, 2L3). The motor cables are connected to terminals U, V, and W.

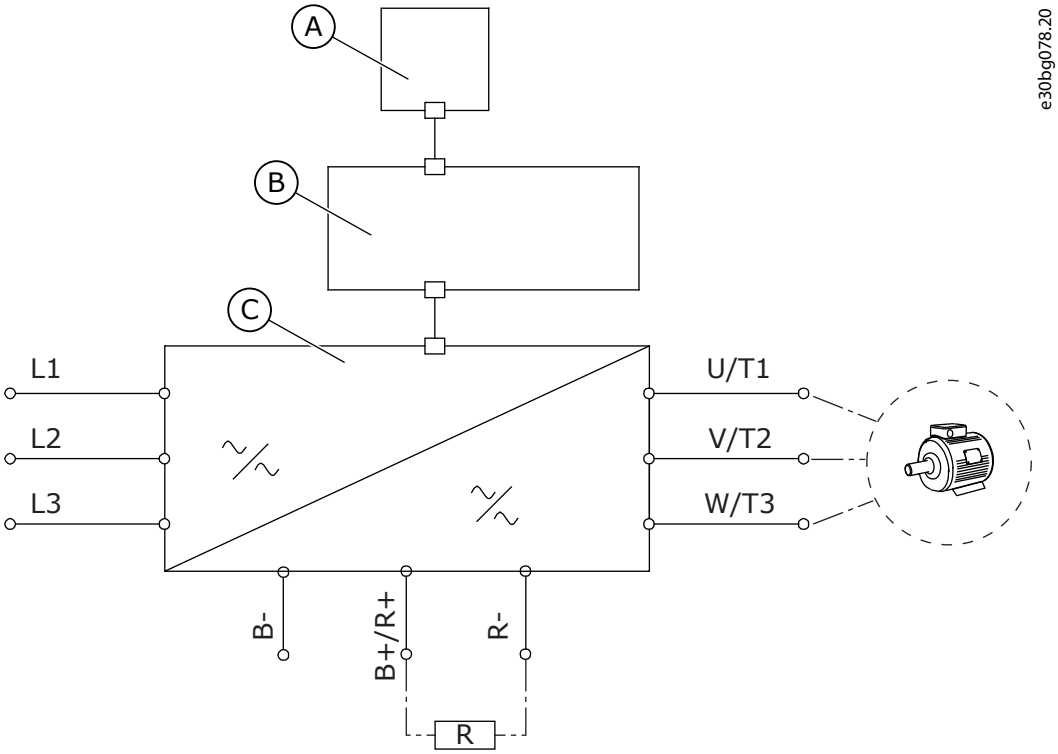

Illustration 12: Principal Connection Diagram

A	The control panel	C	The power unit
B	The control unit		

For EMC-compliant installation, see 6.2 EMC-compliant Installation.

6.1.1 General Cable Requirements

Use cables with a minimum heat resistance of +70 °C (158 °F). In the selection of the cables and the fuses, refer to the nominal output current of the drive. Find the nominal output current on the nameplate.

We recommend selecting the cables and the fuses to agree with the output current because the input current of the AC drive is almost the same as the output current.

In AC drives consisting of double input sections, an even number of input cables is required. In AC drives consisting of double power modules an even number of motor cables is needed. See 12.3 Cable and Fuse Sizes for list of cabling recommendations.

⚠ C A U T I O N ⚠

RISK OF DAMAGE TO DRIVE DUE TO UNEQUAL LOAD

In case the cabling between the AC drive modules is not symmetrical, unequal load might occur and reduce loadability or even damage the AC drive.

- In 12-pulse drives with double inputs or outputs it is very important that the same cable dimensions, type and routing is used for all cables.

⚠ C A U T I O N ⚠

RISK OF LOAD INBALANCE

In units with double motor outputs, the motor cables must not be connected together in the AC drive end to avoid overcurrent trip.

- Always connect the parallel motor cables together in the motor end only. The minimum motor cable length is 5 m.

NOTE! If a safe switch between the AC drive and the motor is used, make sure that it is switched on before setting the AC drive in run state.

For information on how to make the cable installation to comply with the UL standards, see 6.1.2 UL Standards on Cabling.

If the motor temperature protection of the drive (see VACON® All in One Application Guide) is used as an overload protection, select the cable to agree with the protection. If 3 or more cables are used in parallel for larger AC drives, use a separate overload protection for each cable.

6.1.2 UL Standards on Cabling

To comply with the UL (Underwriters Laboratories) regulations, use a UL-approved copper wire with a minimum heat resistance of 60 °C or 75 °C (140 °F or 167 °F).

The cable must be suitable for use on a circuit that gives a maximum of 100 000 rms symmetrical amperes, and a maximum of 600 V.

Use Class 1 wire only.

For the tightening torques of the terminals, see 12.5 Tightening Torques of the Terminals.

6.1.3 Cable Selection and Dimensioning

Find the typical sizes and types of cables used with the AC drive in the tables in 12.3 Cable and Fuse Sizes. In the selection of cables, refer to local regulations, cable installation conditions, and cable specification.

The dimensions of the cables must comply with the requirements of the standard IEC60364-5-52.

- The maximum ambient temperature is +30 °C.
- The maximum temperature of the cable surface is +70 °C.
- Use only motor cables with a concentric copper shield.
- The maximum number of parallel cables is 9.

When using parallel cables, make sure to obey the requirements of the cable cross-sections.

For important information on the requirements of the grounding conductor, see 6.3 Grounding.

For the correction factors for each temperature, see the standard IEC60364-5-52.

6.1.4 Fuse Selection

We recommend the fuse type aR (UL recognized, IEC 60269-4). To make a selection of the fuse voltage rating, refer to the mains. Refer also to local regulations, cable installation conditions, and cable specification. Do not use larger fuses than what is recommended.

External fuses in the input line are required for overload and short-circuit protection of the drive. The external fuses are not be provided by the manufacturer.

NOTE! For safety reasons, fuses must always be used. It is because circuit breakers alone do not provide the same level of protection as fuses.

Find the recommended fuses in tables in 12.3 Cable and Fuse Sizes.

6.1.5 Principle of the Power Unit Topology

The principles for mains and motor connections of the basic 6-pulse drive in enclosure sizes FR10 to FR14 show in Illustration 13 and Illustration 14.

Some units built in enclosure size FR11 have double input devices and require an even number of supply cables but an uneven number of motor cables can be used.

Units built in enclosure size FR12 consist of two power modules and require an even number of supply and motor cables. See Illustration 13 and the tables in 12.3 Cable and Fuse Sizes.

The 12-pulse drives always have a double set of inputs. The motor connection is size dependent as described in Illustration 13.

In all VACON® NXC FR14 sizes, dU/dt filters are integrated by default.

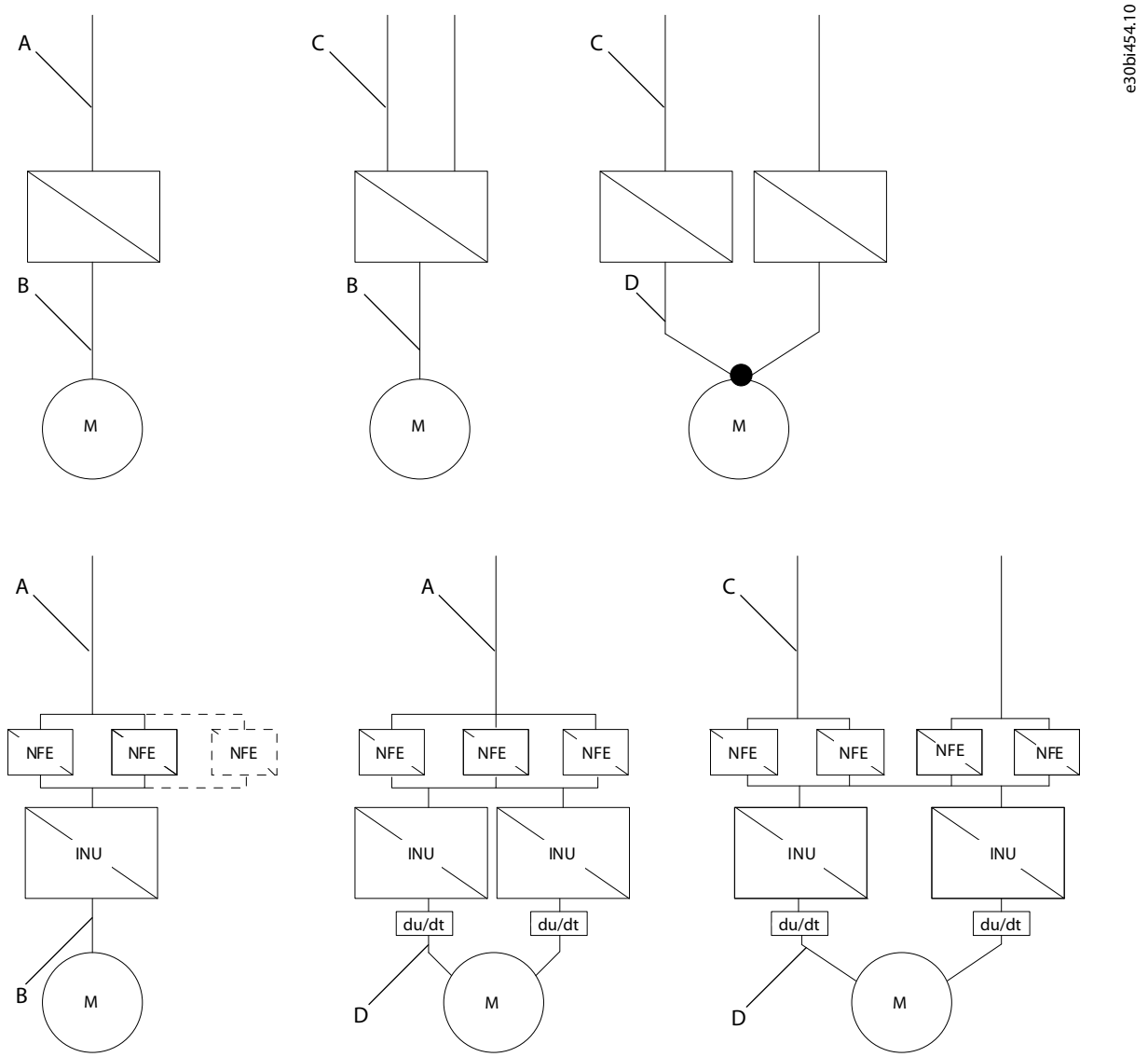

A	Single input	C	Double input
B	Single output	D	Double output

Illustration 13: Topology of Mechanical Sizes FR9 – FR14, 6/12-pulse Supply

NOTE! Minimum cable length for matched power units without dU/dt filter is 5 m. For unmatched power units, a min of 40 m of cable length is required from each power module if dU/dt or sine filters are not used.

In FR13 units NXP1300 and NXP 1450 there are 3 NFE units.

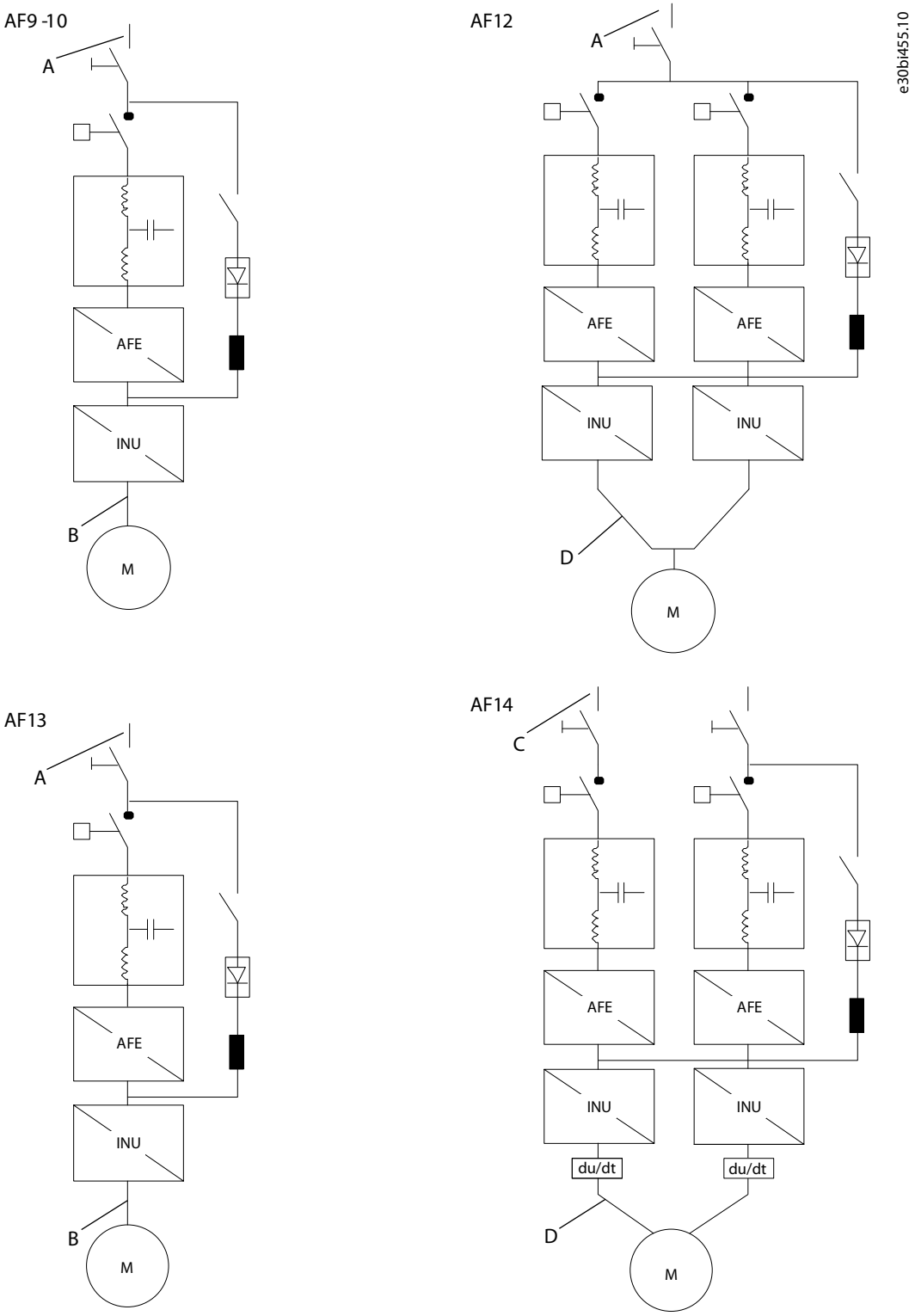

A	Single input	C	Double input
B	Single output	D	Double output

Illustration 14: Topology of Mechanical Sizes VACON® NXC Low-harmonic Drives AF9 – AF14

NOTE! Minimum cable length for matched power units without dU/dt filter is 5 m. For unmatched power units, a min of 40 m of cable length is required from each power module if dU/dt or sine filters are not used.

NOTE! Some options affect the wiring direction and principle for power cables; always check delivery specific documentation for exact information.

6.1.6 DC Supply and Brake Resistor Cables

VACON® 6- and 12-pulse AC drives have terminals for the DC supply and an optional external brake resistor. These terminals are identified with B–, B+/R+, and R–. The DC bus connection is made to terminals B– and B+ and the brake resistor connection to R+ and R–. The AC drive terminals can also optionally be wired to customer terminals in the cabinet. For additional information on integrated brake chopper and resistor values, see the VACON® NXS/NXP Wall-mounted and Standalone Operating Guide.

⚠ C A U T I O N ⚠

RISK OF DAMAGE TO THE DRIVE

Connecting the brake resistor between the terminals B- and B+ damages the drive.

- Connect the brake resistor to the brake resistor terminals R- and R+.

6.2 EMC-compliant Installation

For cable selections in different EMC levels, see Table 18.

The output cables to the motor must be 360º EMC grounded. Separate EMC grounding clamps are supplied with VACON® NXC FR9 with an output filter, and with all drives of sizes FR/AF10–12. In VACON® NXC FR/AF13–14, EMC grounding is implemented directly through cable glands and grounding clamps are unnecessary. The EMC grounding clamps can, for instance, be installed on the mounting plate in front of the AC choke. The EMC grounding clamps must be suited to the output cable diameter to give a 360º contact with the cables. More detailed instructions in Installing the Cables section.

Table 18: Recommendations for Cables

Cable type	Category C3[1]	Category C4[2]
Motor cable	A symmetrical power cable with a compact low-impedance shield. A cable for the specified mains voltage. We recommend DRAKA NK CABLES - MCCMK or similar.	• A symmetrical power cable with a compact low-impedance shield OR (recommended) with a concentric protection wire. • A cable for the specified mains voltage. • We recommend DRAKA NK CABLES - MCMK or similar.
Mains cable	A power cable for a fixed installation. A cable for the specified mains voltage. A shielded cable is not necessary. We recommend DRAKA NK CABLES - MCMK or similar.	
Control cable	A shielded cable with a compact low-impedance shield, for example, DRAKA NK CABLES - JAMAK, SAB/ÖZCuY-O, or similar.	

[1] EN61800-3, 2nd environment

[2] For IT networks

For the definitions of EMC protection levels, see IEC/EN 61800-3 + A1.

In all the enclosure sizes, to comply with the EMC standards, use the default values of the switching frequencies.

When using a safety switch, make sure that the EMC protection continues from the start of the cables until their ends.

The drive must obey the standard IEC 61000-3-12. To obey it, the short circuit power S_{SC} must be a minimum of 120 R_{SCE} at the interface point between mains and the public mains. Make sure to connect the drive and the motor to mains with a short circuit power S_{SC} that is a minimum of 120 R_{SCE}. If necessary, contact the mains operator.

6.3 Grounding

Ground the AC drive in accordance with applicable standards and directives.

⚠ C A U T I O N ⚠

DAMAGE TO THE AC DRIVE FROM INSUFFICIENT GROUNDING

Not using a grounding conductor can damage the drive.

- Make sure that the AC drive is always grounded with a grounding conductor that is connected to the grounding terminal that is identified with the PE symbol.

⚠ W A R N I N G ⚠

LEAKAGE CURRENT HAZARD

Leakage currents exceed 3.5 mA. Failure to ground the drive properly can result in death or serious injury.

- Ensure the correct grounding of the equipment by a certified electrical installer.

The standard EN 61800-5-1 tells that 1 or more of these conditions for the protective circuit must be true.

The connection must be fixed.

- The protective earthing conductor must have a cross-sectional area of minimum 10 mm^2 Cu or 16 mm^2 Al. OR
- There must be an automatic disconnection of the mains, if the protective earthing conductor breaks. OR
- There must be a terminal for a second protective earthing conductor in the same cross-sectional area as the first protective earthing conductor.

Cross-sectional area of the phase conductors (S) [mm^2]	The minimum cross-sectional area of the protective earthing conductor in question [mm^2]
$S \leq 16$	S
$16 < S \leq 35$	16
$35 < S$	S/2

The values of the table are valid only if the protective earthing conductor is made of the same metal as the phase conductors. If this is not so, the cross-sectional area of the protective earthing conductor must be determined in a manner that produces a conductance equivalent to that which results from the application of this table.

The cross-sectional area of each protective earthing conductor that is not a part of the mains cable or the cable enclosure, must be a minimum of:

- 2.5 mm^2 if there is mechanical protection, and
- 4 mm^2 if there is not mechanical protection. With cord-connected equipment, make sure that the protective earthing conductor in the cord is the last conductor to be interrupted, if the strain-relief mechanism breaks.

Obey the local regulations on the minimum size of the protective earthing conductor.

N O T I C E

MALFUNCTION OF FAULT CURRENT PROTECTIVE SWITCHES

Because there are high capacitive currents in the AC drive, it is possible that the fault current protective switches do not operate correctly.

N O T I C E

VOLTAGE WITHSTAND TESTS

Doing voltage withstand tests can damage the drive.

- Do not do voltage withstand tests on the AC drive. The manufacturer has already done the tests.

⚠ W A R N I N G ⚠

SHOCK HAZARD FROM PE CONDUCTOR

The drive can cause a DC current in the PE conductor. Failure to use a residual current-operated protective (RCD) device Type B or a residual current-operated monitoring (RCM) device can lead to the RCD not providing the intended protection and therefore can result in death or serious injury.

- Use a type B RCD or RCM device on the mains side of the drive.

6.4 AC Choke Connections

The AC input choke carries out several functions in the VACON® NX 6- and 12-pulse AC drive. The AC choke is needed as an essential component for motor control. It protects the input and DC-link components against abrupt changes of current and voltage as well as to function as a protection against harmonics.

NOTE! The VACON® NXC low-harmonic drive incorporates an LCL filter instead of AC choke and this instruction can be ignored.

The VACON® NXC (6- and 12-pulse) AC drive is equipped with one or more AC chokes. The AC chokes have two inductance levels to optimize the functionality at different supply voltages. In the installation phase, the wiring of the AC chokes must be checked and changed if needed (not for FR9).

The input is always connected to terminal #1 (see Illustration 15). Do not change the connection. The output of the AC choke must be connected to terminal #2 or #3 (see Illustration 15) as listed in Table 19. The terminals are marked with inductance values and applicable voltage.

In units FR10 to FR12, the connection is changed by moving the cable to the appropriate terminals. In FR13/14, the bridges of the busbar connection must be moved according to the settings shown in Table 19.

N O T I C E

RISK OF DAMAGE DUE TO INCONSISTENT AC CHOKE INSTALLATION

In units with two or more parallel AC chokes (some FR11 and all FR12 and FR13), all AC chokes have to be wired in the same way. If AC chokes are wired differently, the AC drive can be damaged.

- Always wire all AC chokes in the same way.

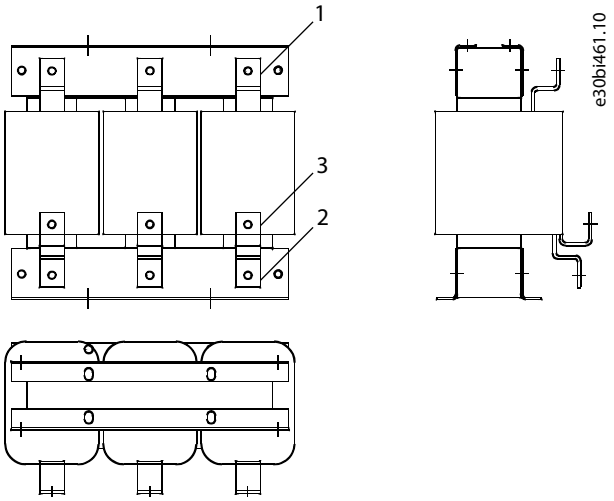

1	Terminal #1	3	Terminal #3
2	Terminal #2		

Illustration 15: AC Chokes

Table 19: AC Drive Terminals for AC Choke Connection

Supply voltage	AC drive connection (terminals)
400–480 V AC/50–60 Hz	2

Supply voltage	AC drive connection (terminals)
(500 V unit)	
500 V AC/50 Hz (500 V unit)	3
575–690 V AC/50–60 Hz (690 V unit)	3

6.5 Auxiliary Voltage Transformer Tappings

If the drive is ordered with an auxiliary voltage transformer for 230 V auxiliary voltage supply (+ATx option), the tappings of the transformer must be set according to the mains voltage.

NOTE! An auxiliary voltage transformer is always included as standard in VACON® NXC low-harmonic drives.

The tappings of the transformer in 500 V drives are by default set to 400 V or 500 V and in 690 V drives to 690 V unless otherwise ordered.

Locate the transformer in the lower part of the cabinet. The primary side of the transformer has tappings that correspond to standard main voltages. Change to tapping to correspond to the mains voltage in use.

6.6 LCL-filter

The LCL filter in the VACON® NXC low-harmonic drive contains inductors on the mains side and AFE side, and capacitors. The LCL filter also includes capacitors connected against ground potential. There are resistors connected across the capacitors for discharging when the LCL filter is disconnected from the input power.

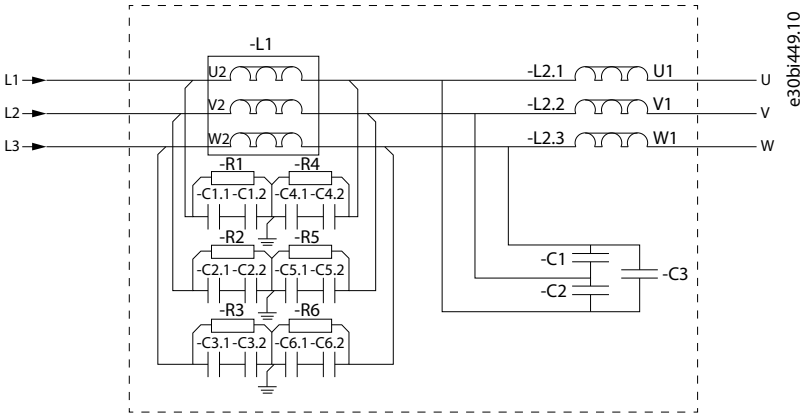

Illustration 16: VACON® LCL Filter Wiring Diagram

6.6.1 Removing HF Capacitors in AF9, AF10, and AF12

If a PWM modulated rectifier of another manufacturer is connected to the same input transformer, the capacitors must be removed. Do not remove the capacitors in any other case. See VACON® NX AFE User Manual for more information.

Procedure

1. To access the LCL filter and the capacitors, open the cabinet.
2. If the interference suppression capacitors are not to be used, remove the lead from each capacitor.

Removing the lead disconnects the capacitors from ground potential.

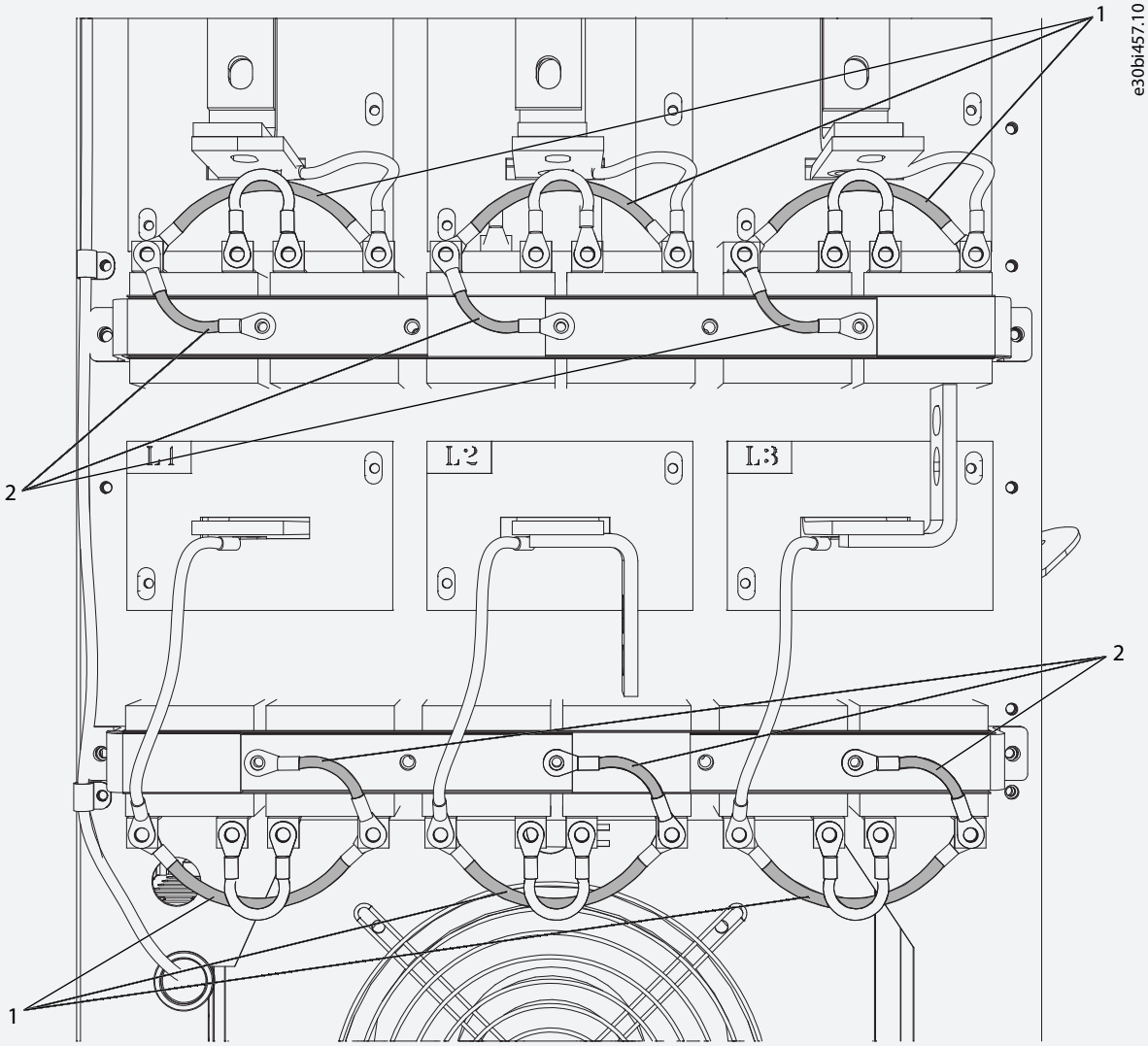

1	Leads that must be removed if the discharging resistors are not used.
2	Leads that must be removed if the HF capacitors are not used.

6.6.2 Removing HF Capacitors in AF13, and AF14

If a PWM modulated rectifier of another manufacturer is connected to the same input transformer, the capacitors must be removed. Do not remove the capacitors in any other case. See VACON® NX AFE User Manual for more information.

Procedure

1. To access the LCL filter and the capacitors, open the cabinet.
2. If the interference suppression capacitors are not to be used, remove the lead from each capacitor.

Removing the lead disconnects the capacitors from ground potential.

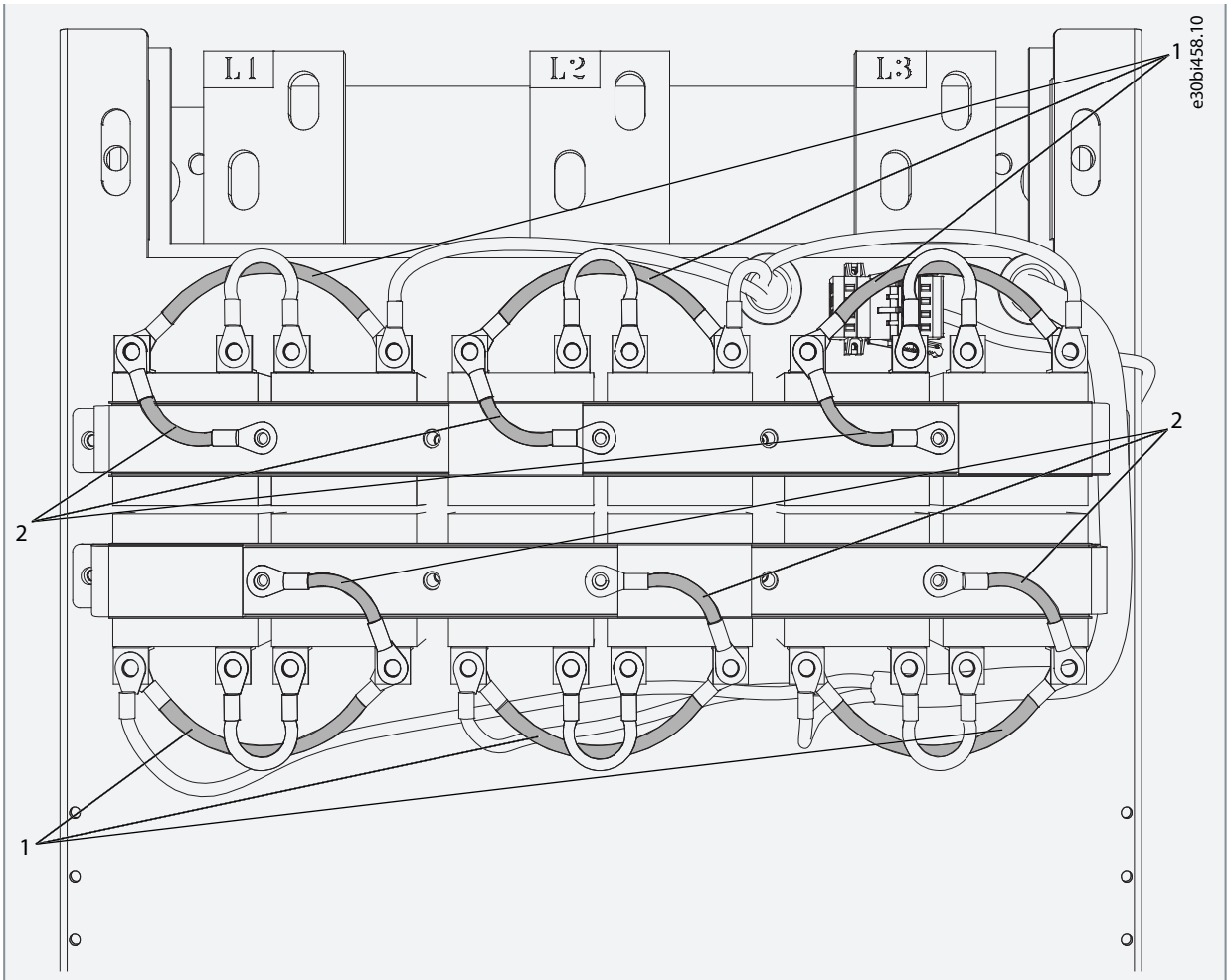

1	Leads that must be removed if the discharging resistors are not used.
2	Leads that must be removed if the HF capacitors are not used.

6.7 The dU/dT-filter Option +ODU

The dU/dT-filter option +ODU is providing reduction of the rise time of inverter output voltage and voltage overshoot in motor terminals. The filters are designed for a switching frequency of 1.5 kHz at 690 V and 3.6 kHz at 500 V AC voltage level. DO NOT EXCEED THIS VALUE, as there is a risk of overheating. Using the lower switching frequencies are allowed.

6.8 Common-mode Chokes on Motor Cables (Option +OCM)

The delivery consists of fixed sets of ferrite rings (Common-mode Choke option). When common-mode chokes are used to attenuate the risk of bearing damage, always use 2 common-mode chokes per motor cable.

Route only the motor phase conductors through the common-mode chokes. Do not route the PE/ground wire through the common-mode chokes. Leave the shield under and outside the common-mode chokes. Mount the PE/ground wire or pigtail on the ground busbar.

If there are parallel motor cables, reserve an equal amount of common-mode chokes for each cable. Route all the phase conductors of one cable through one common-mode choke.

NOTE! The common-mode chokes are only extra protection. The basic protection against bearing currents is an insulated bearing.

NOTE! When there are 2 or more motor cables, use the +OCH option. The +OCH option is easier to install and has enhanced common-mode inductance.

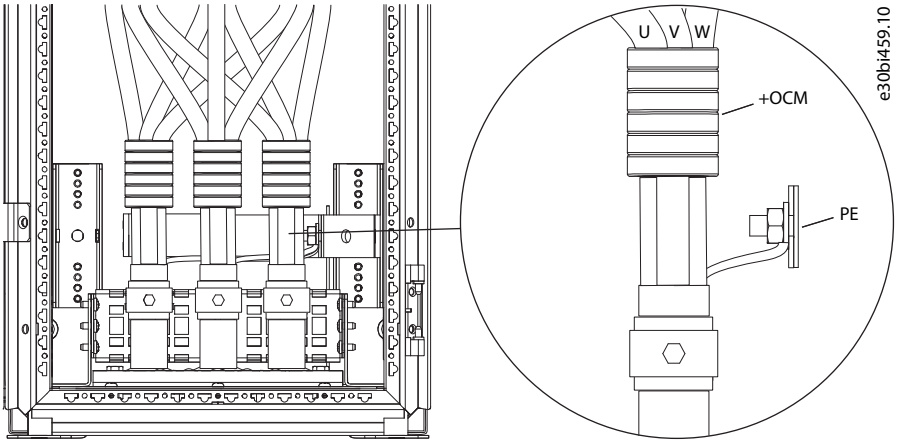

Illustration 17: Installation of Common-mode Chokes on Motor Cables

6.9 Control Devices on Low-harmonic Cabinet Drive

6.9.1 Control Place Selection for DC Pre-charging and Circuit Breakers

There are three different ways to control the DC pre-charging circuit and the circuit breakers (MCCB) of the low harmonic drive. The control place or the manner of control can be selected with the REM-MAN-AUTO selector switch (-SF6). The three possible control places/ways are:

- 1: REM – Remote operation with signals to the control terminals
- 2: MAN – Manual operation by the 0-1-Start switch on the cabinet door
- 3: AUTO – Automatic operation which automatically pre-charges and closes the MCCB when the supply voltage is energized

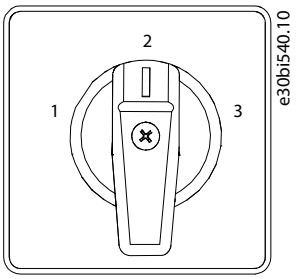

Illustration 18: MCCB Control Selector Switch (-SF6)

6.9.1.1 Remote Operation (REM)

It is possible to control the circuit breaker and the charging circuit from a remote location/system with potential-free contacts while the MCCB control switch –SF6 is in REM position.

Normally closed (NC) contact is connected to terminals X1:60 and X1:61 (terminal name can vary depending on the enclosure size). This contact must be in the NC state before the pre-charging can be activated. Opening this contact opens circuit breakers and stop the ongoing pre-charging.

A remote pulse duration (0.4–1 s) connected to terminals X1:57 and X1:58 starts the charging of the drive. When DC voltage has reached a certain level, the AFE unit automatically closes the circuit breakers (terminal name can vary depending on the enclosure size). The Run command must be given to the AFE unit from the keypad, I/O signal, or bus communication before the inverter INU can be started (operated).

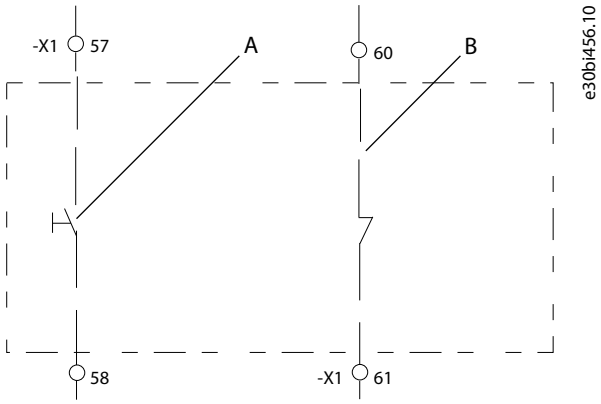

A	MCCB Close (Charging pulse)
B	MCCB Open

Illustration 19: Circuit Diagram of Remote Contacts for the Control of the MCCB and Pre-charging Circuit (NXC Low-harmonic FR12)

If there is a voltage drop of <0.7 x U_N or a blackout in the supplying network, the undervoltage release coil opens the circuit breaker and pre-charging. The remote charging pulse must activate the MCCB closing when the supply is energized.

6.9.1.2 Manual Operation (MAN)

The circuit breaker (MCCB) and the charging circuit can be controlled manually from the cabinet when the MCCB control switch –SF6 is in MAN position. The 0–1-Start switch is used for the local operation of the MCCB and pre-charging circuit.

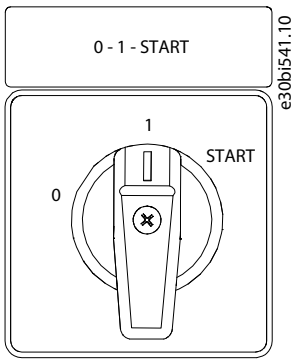

Illustration 20: 0-1-Start Control Switch (-SF7)

Turn the switch –SF7 into position 0 to open a closed circuit breaker, or to stop the possible ongoing pre-charging regardless of the control place/manner selected by the REM-MAN-AUTO switch.

Turn the switch into position 1 to control the pre-charging and the circuit breaker as selected with the REM-MAN-AUTO selector switch.

Turn the switch into position Start to start the pre-charging of DC busbar. The pre-charging takes about 5–10 s depending on the size of the drive. When DC voltage has reached a certain level, the AFE control unit automatically closes the circuit breaker. The Start position of the switch is spring-returned and the switch automatically returns to position 1 when released. To abort the pre-charging, turn the switch to position 0. If there is a blackout in the supplying network, the undervoltage release coil opens the circuit breaker. Activate the pre-charging and MCCB closing when the supply is energized.

The AFE Ready LED illuminates when the MCCB is closed and AC power is connected to the AFE unit and there are no active faults. The AFE ready LED works in the same way irrespective of the operation manner/place.

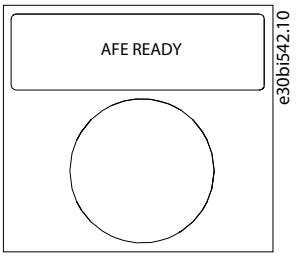

Illustration 21: AFE Ready Indicator

The Run command must be given to the AFE unit from the keypad, I/O signal, or bus communication before the inverter INU can be started (operated).

6.9.1.3 Automatic Operation (AUTO)

The pre-charging and closing of the circuit breaker is automatically done when the REM-MANAUTO selector switch is in AUTO position and the supply voltage is energized. The pre-charging of the units automatically (directly) starts when the control switch -SF6 is turned into Auto position. The AFE unit automatically closes the circuit breakers after DC voltage has reached a certain level and the AFE READY LED illuminates.

The unit recharges automatically, and closes the circuit breakers when the main supply voltage has been cut and turned back on (for example, voltage drop in the network). The 0-1-Start switch has to be in position 1 which enables automatic function.

Turning the switch –SF7 to position 0 opens the circuit breaker even if the REM-MAN-AUTO selector switch is in AUTO position.

6.9.2 Circuit Breaker Fault Indicator and Reset Button

The electronic trip unit opens/trips the circuit breaker when there is an overload or short circuit. The trip indication contacts of circuit breakers are connected in series. If one of the circuit breakers trips due to an overload or short-circuit current, it automatically opens/trips the other circuit breakers. The MCCB FAULT LED illuminates and indicates that the circuit breakers are in tripped state.

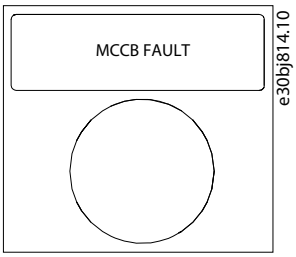

Illustration 22: MCCB FAULT Indicator, Button Color Red

If there is an overcurrent situation the fault that caused the circuit breaker to trip must be identified and removed before the circuit breakers can be reset. The MCCB can only be reset by pressing the push button -SF9 when the –SF6 REM-MAN-AUTO switch is in MAN position.

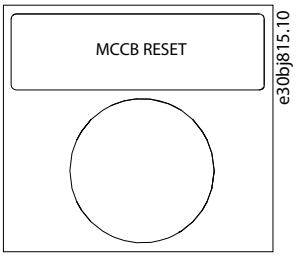

Illustration 23: MCCB Reset Push-button (-SF9), Button Color Blue

This button resets the circuit breaker and, at the same time in AF9, AF10 or AF12 solution, recharge the spring system of the motor operators. After the reset, it is possible to pre-charge and close the circuit breakers by methods described in previous chapters.

6.10 Get Access and Locate the Terminals

6.10.1 Get Access and Locate the Terminals for FR9

Follow these instructions to open the AC drive for installing the cables.

Procedure

1. Open the cabinet door.
2. Find the DC terminals and Brake resistor terminals on top of the AC drive.

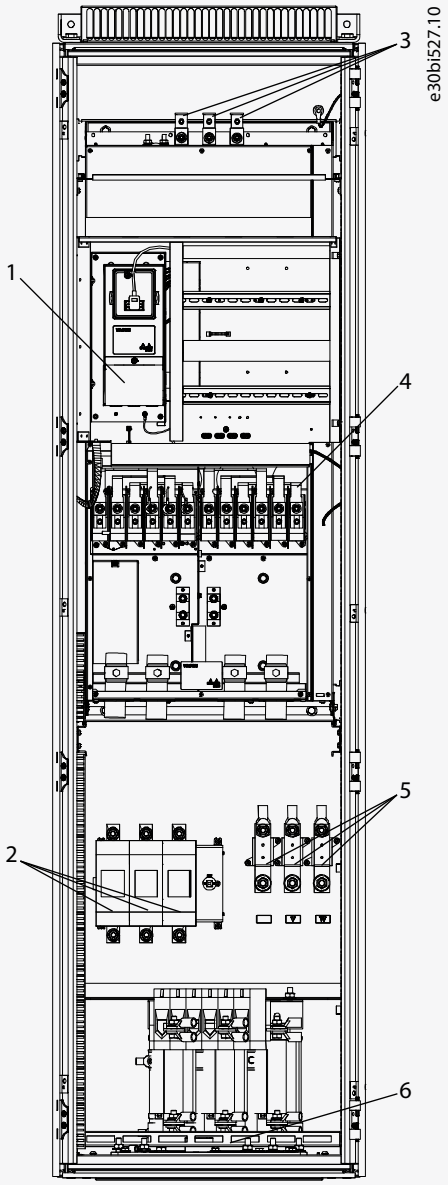

Illustration 24: Terminals for FR9 6-pulse +IFD +ODU +OCM

1	Control unit terminals	4	Mains/motor terminals inside the drive module (see next step)
2	Mains terminals: L1, L2, L3 (with +IFD)	5	Motor terminals: U, V, W (with +ODU)
3	DC/brake terminals (optional)	6	PE busbar

3. Locate the mains/motor terminals inside the drive module.

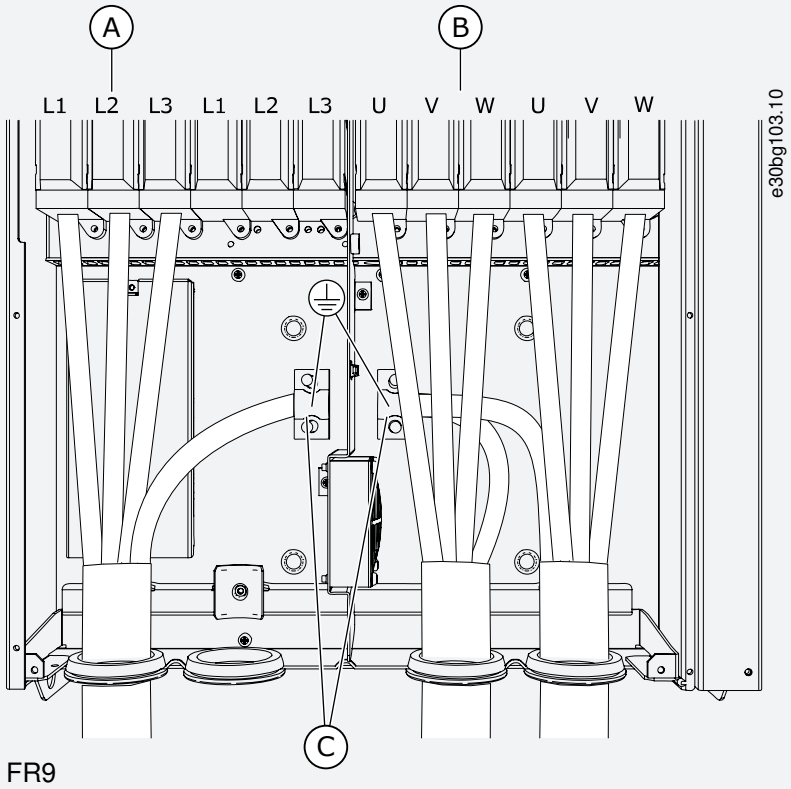

Illustration 25: FR9 Terminals inside the Drive Module

A	Mains terminals	C	Grounding terminals
B	Motor terminals		

6.10.2 Get Access and Locate the Terminals for FR10

Follow these instructions to open the AC drive for installing the cables.

Procedure

1. Open the cabinet door.
2. Locate the terminals.

NOTE: Second cabinet is included with output filter options (dU/dt filter, sine filter).

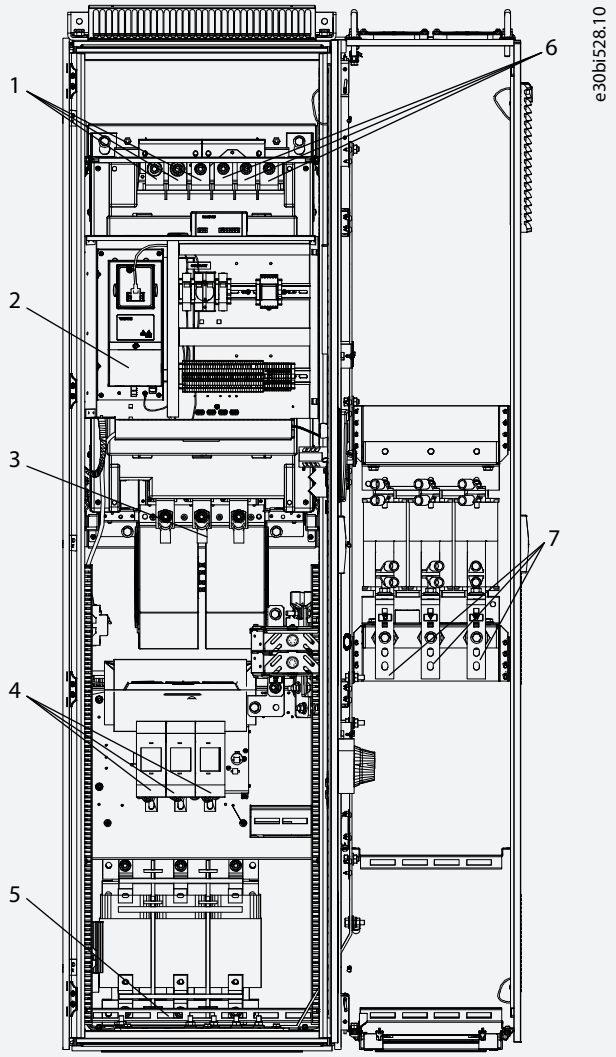

Illustration 26: Terminals for FR10 6-pulse +IFD +ODU +OCM

1	DC/brake terminals (optional)	5	PE Busbar
2	Control unit terminals	6	Mains terminals inside the drive module
3	Motor terminals inside the drive module	7	Motor terminals: U, V, W (with +ODU)
4	Mains terminals: L1, L2, L3 (with +IFD)		

6.10.3 Get Access and Locate the Terminals for FR11

Follow these instructions to open the AC drive for installing the cables.

Procedure

1. Open the cabinet door.

2. Locate the terminals.

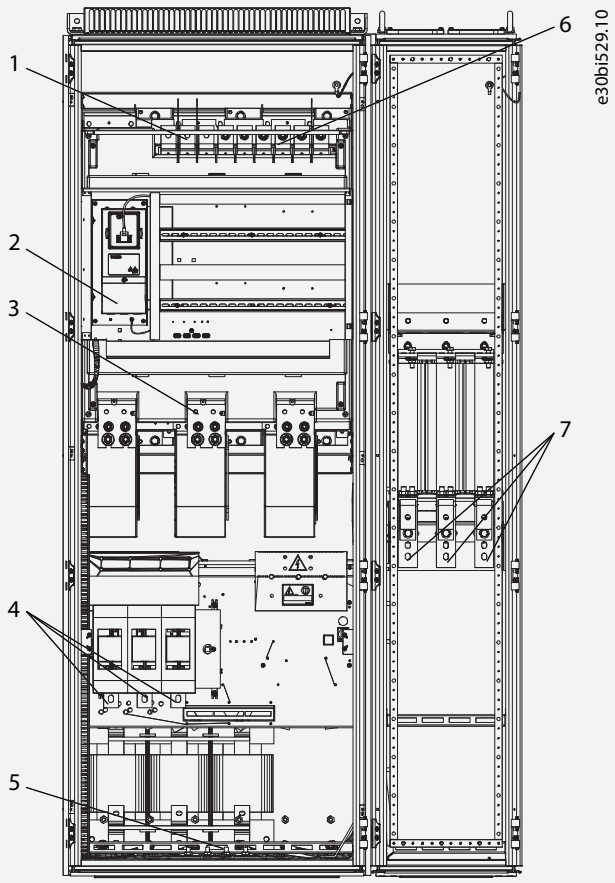

Illustration 27: Terminals for FR11 6-pulse +IFD +ODU +OCM, Single Input

1	DC/brake terminals (optional)	5	DC terminals and Brake resistor terminals
2	Control unit terminals	6	PE busbar
3	Motor terminals inside the drive module	7	Motor terminals: U, V, W (with +ODU)
4	Mains terminals: L1, L2, L3 (with +IFD)		

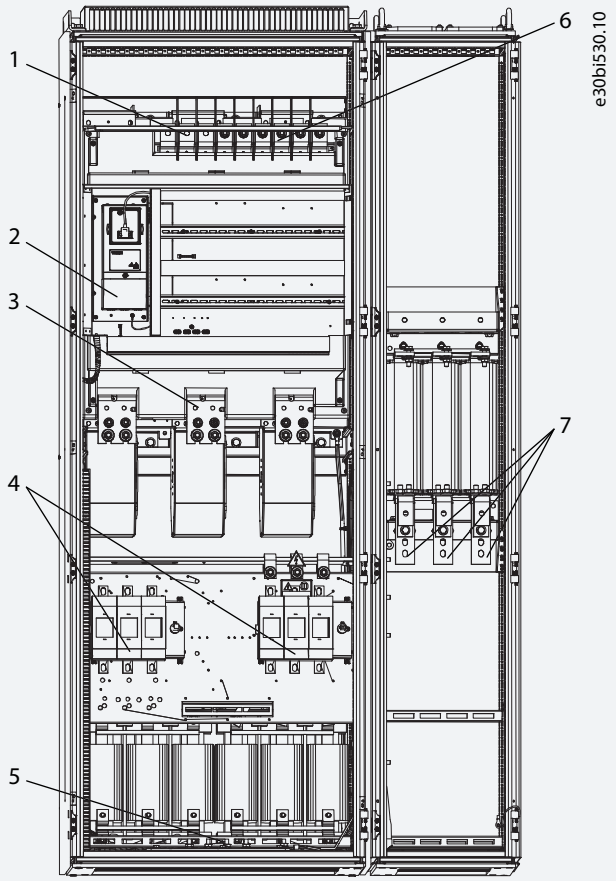

Illustration 28: Terminals for FR11 6-pulse +IFD +ODU +OCM, Double Input

1	DC/brake terminals (optional)	5	PE busbar
2	Control unit terminals	6	Mains terminals inside the drive module
3	Motor terminals inside the drive module	7	Motor terminals: U, V, W (with +ODU)
4	Mains terminals: L1, L2, L3 (with +IFD)		

6.10.4 Get Access and Locate the Terminals for FR12

Follow these instructions to open the AC drive for installing the cables.

Procedure

1. Open the cabinet door.
2. Locate the terminals.

NOTE: Middle cabinet is included with dU/dt filter option.

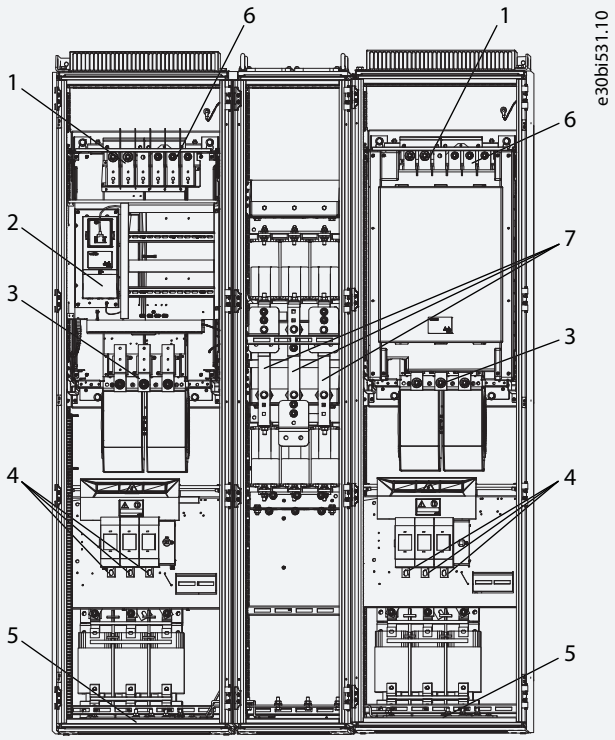

Illustration 29: Terminals for FR12 6/12-pulse +IFD +ODU +OCM

1	DC/brake terminals (optional)	5	PE busbar
2	Control unit terminals	6	Mains terminals inside the drive module
3	Motor terminals inside the drive module. Used if there is no output filter option.	7	Motor terminals: U, V, W (with +ODU)
4	Mains terminals: L1, L2, L3 (with +IFD)		

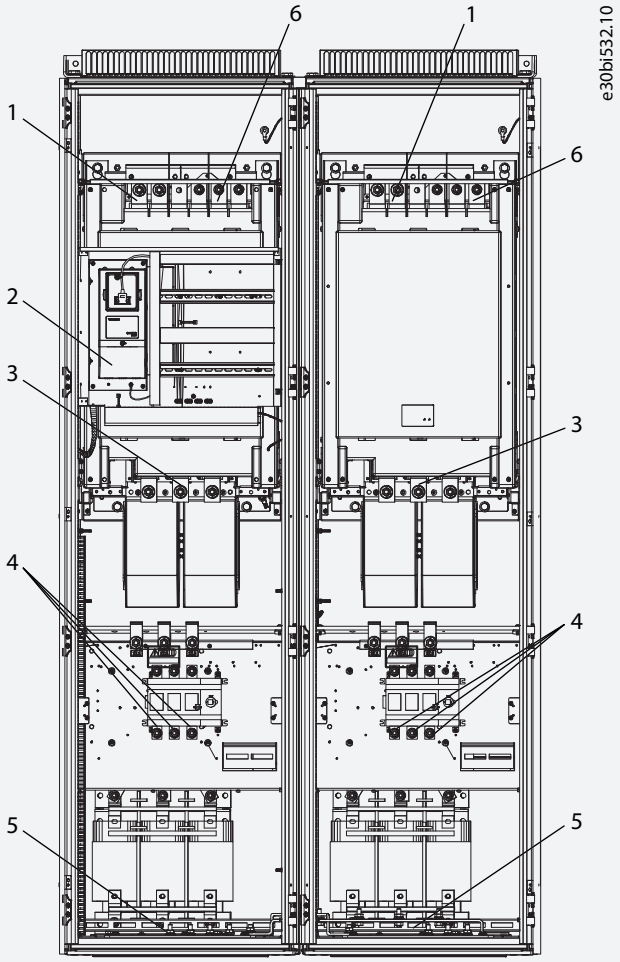

Illustration 30: Terminals for FR12 6/12-pulse +IFD

1	DC/brake terminals (optional)	4	Mains terminals: L1, L2, L3 (with +IFD)
2	Control unit terminals	5	PE busbar
3	Motor terminals inside the drive module. Used if there is no output filter option.	6	Mains terminals inside the drive module

6.10.5 Get Access and Locate the Terminals for FR13

Follow these instructions to open the AC drive for installing the cables.

Procedure

1. Open the cabinet door.
2. Locate the terminals.

NOTE! 6/12-pulse, 380–500 V, 1300/1450 A have 3/4 NFE units instead of 2.

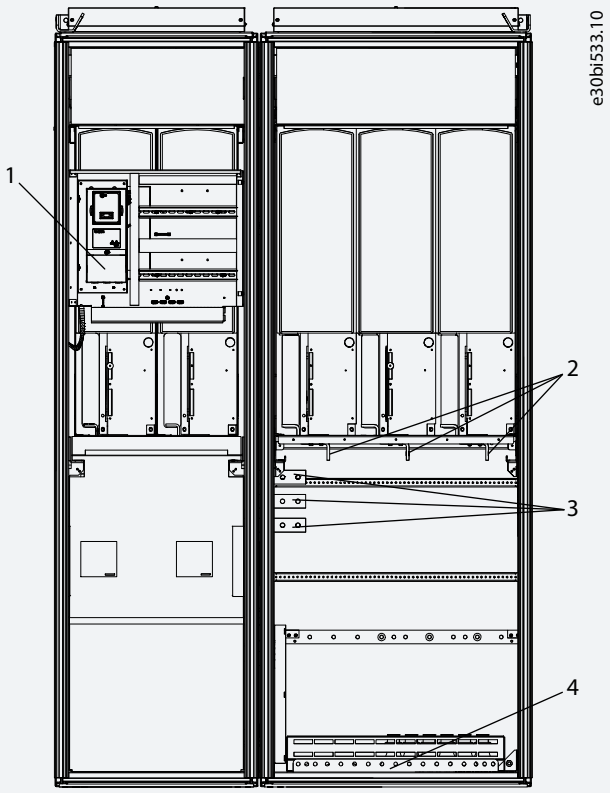

Illustration 31: FR13 Terminals

1	Control unit terminals	3	Mains terminals
2	Motor terminals	4	PE busbar

6.10.6 Get Access and Locate the Terminals for FR14

Follow these instructions to open the AC drive for installing the cables.

Procedure

1. Open the cabinet door.

2. Locate the terminals.

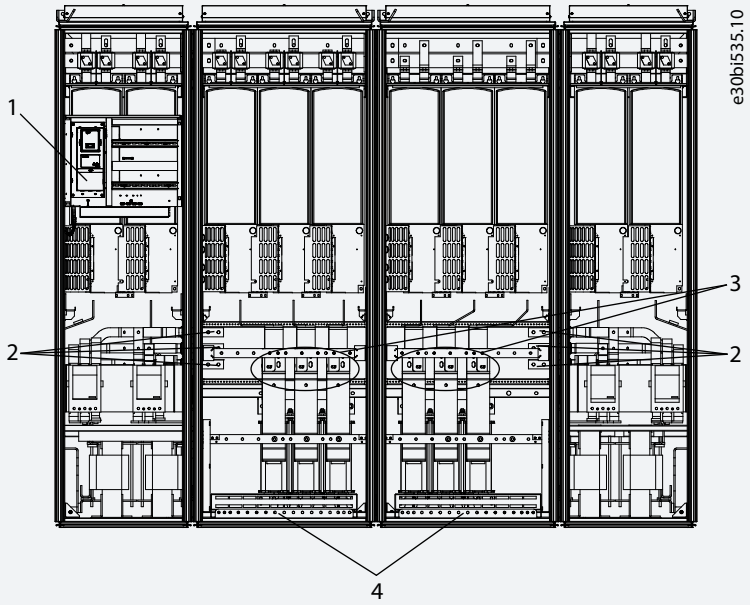

Illustration 32: Terminals for FR14

1	Control unit terminals	3	Motor terminals
2	Mains terminals	4	PE busbar

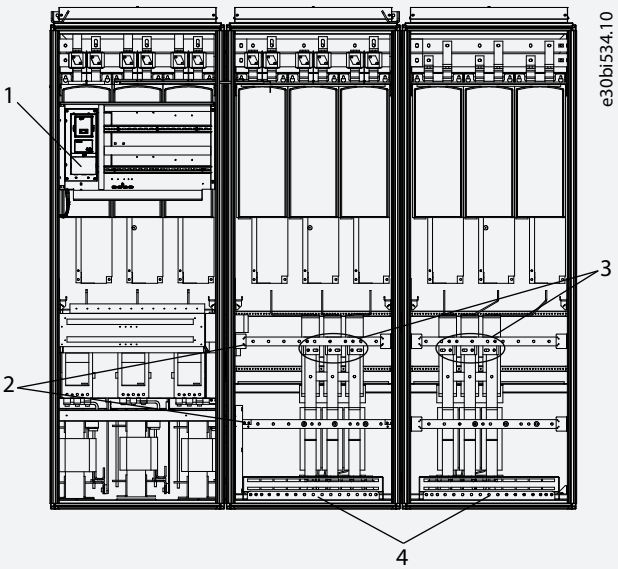

Illustration 33: Terminals for FR14 6-pulse 525-690 V, 1500 A

1	Control unit terminals	3	Mains terminals
2	Motor terminals	4	PE busbar

6.10.7 Get Access and Locate the Terminals for AF9/AF10

Follow these instructions to open the AC drive for installing the cables.

Procedure

1. Open the cabinet door.
2. Locate the terminals.

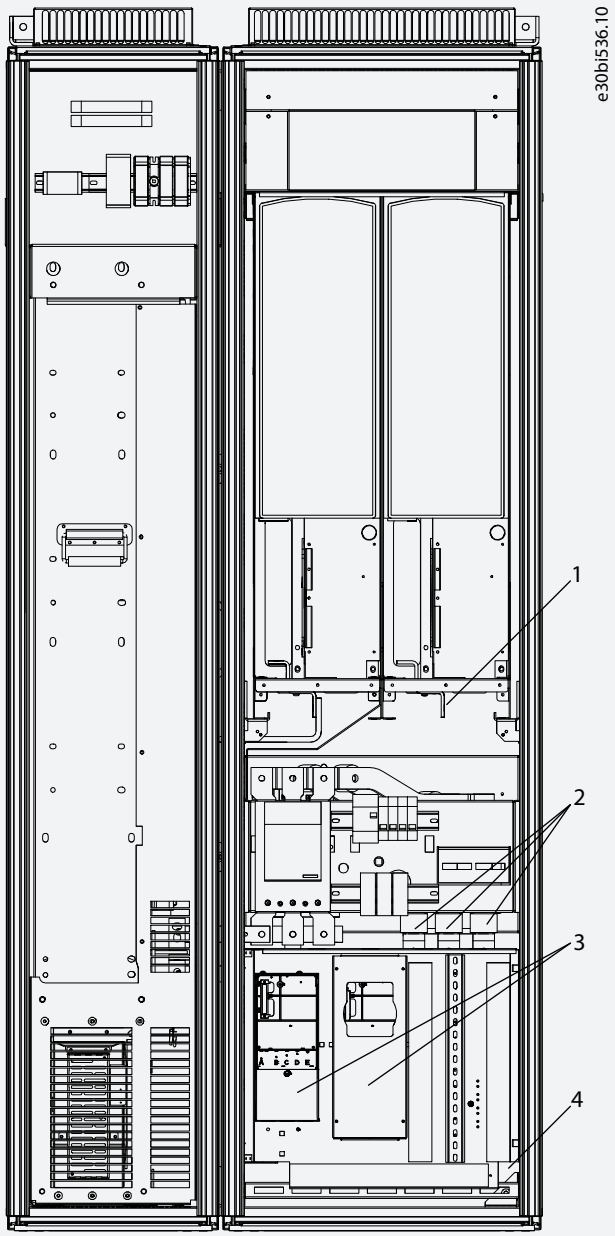

Illustration 34: AF9/AF10 Terminals

1	Motor terminals	3	Control unit terminals
2	Mains terminals	4	PE busbar

6.10.8 Get Access and Locate the Terminals for AF12

Follow these instructions to open the AC drive for installing the cables.

Procedure

1. Open the cabinet door.
2. Locate the terminals.

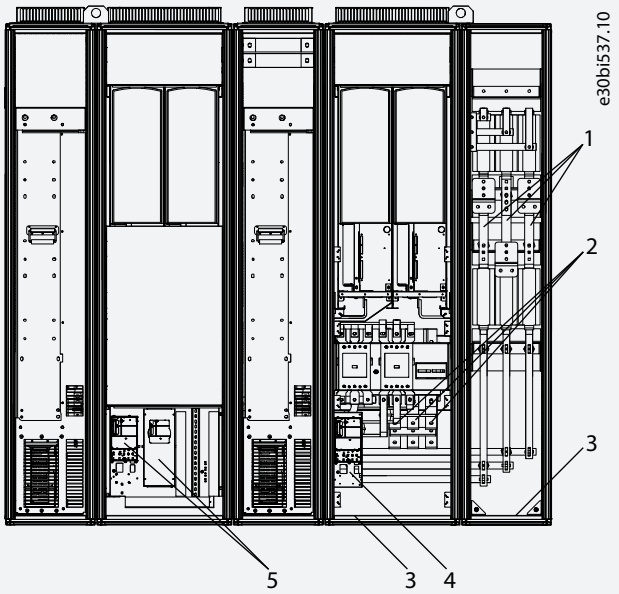

Illustration 35: AF12 Terminals

1	Motor terminals	4	Control terminals (INU+AFE)
2	Mains terminals	5	Control terminals (AFE)
3	PE busbar		

6.10.9 Get Access and Locate the Terminals for AF13

Follow these instructions to open the AC drive for installing the cables.

Procedure

1. Open the cabinet door.

2. Locate the terminals.

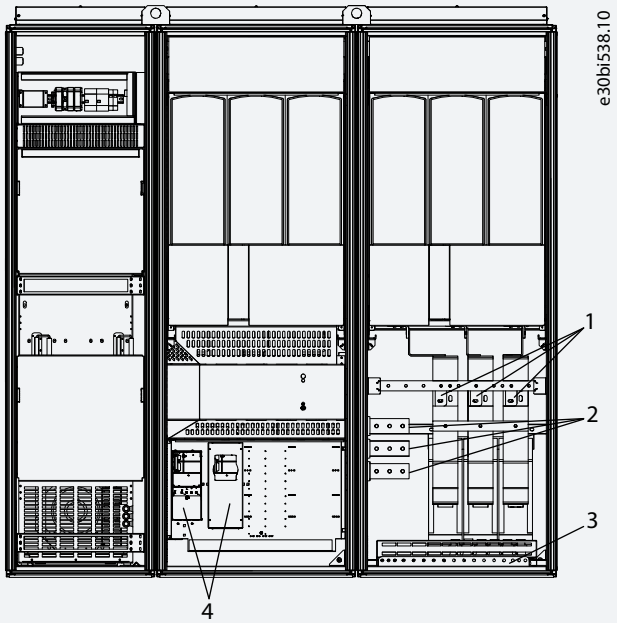

Illustration 36: AF13 Terminals

1	Motor terminals	3	PE busbar
2	Mains terminals	4	Control unit terminals (INU+AFE)

6.10.10 Get Access and Locate the Terminals for AF14

Follow these instructions to open the AC drive for installing the cables.

Procedure

1. Open the cabinet door.
2. Locate the terminals.

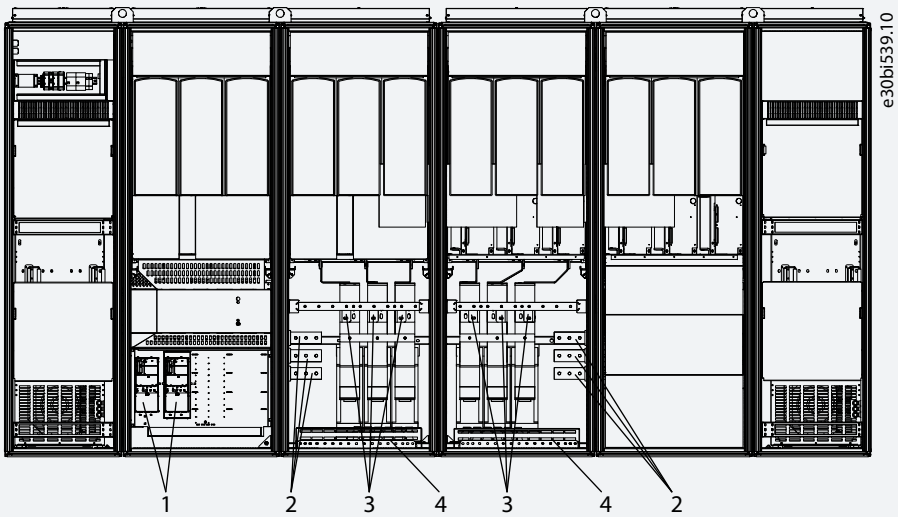

Illustration 37: AF14 Terminals

1	Control unit terminals	3	Motor terminals
2	Mains terminals	4	PE busbar

6.11 Installing the Cables

Use these instructions to find the installation instructions of the correct enclosure size.

Procedure

1. Check the requirements related to lengths, distances, and positioning of the cables according to instructions in 6.11.1 Additional Instructions for Cable Installation.
2. Follow the installation instructions of the correct enclosure size. To check the enclosure size of the AC drive, see 3.4 Enclosure Sizes.

- 6.11.2 Installing the Cables, FR9–12
- 6.11.3 Installing the Cables, FR13
- 6.11.4 Installing the Cables, FR14
- 6.11.5 Installing the Cables, AF9/AF10
- 6.11.6 Installing the Cables, AF12
- 6.11.7 Installing the Cables, AF13
- 6.11.8 Installing the Cables, AF14

6.11.1 Additional Instructions for Cable Installation

- Before starting, make sure that none of the components of the AC drive is live. Read carefully the warnings in Safety section.
- Make sure the connection of the AC choke and the optional 230 V auxiliary voltage transformer are suitable for the supply voltage in use (see 6.4 AC Choke Connections).
- Make sure that the motor cables are sufficiently far from other cables.
- The motor cables must go across other cables at an angle of 90°.
- If it is possible, do not put the motor cables in long parallel lines with other cables.
- If the motor cables are in parallel with other cables, obey the minimum distances (see Table 20).
- The distances are also valid between the motor cables and the signal cables of other systems.
- The maximum length of the motor cables is 300 m. If output dU/dt filters (+ODU option) are used, see the limitations for cable lengths in Table 21.
- If the cable insulation checks are necessary, see 9.3 Measuring the Cable and Motor Insulation.

Table 20: Minimum Distances between Cables

The distance between cables [m]	The length of the shielded cable [m]	The distance between cables [ft]	The length of the shielded cable [ft]
0.3	≤ 50	1.0	≤ 164
1.0	≤ 300	3.3	≤ 984

Table 21: Maximum Cable Lengths with dU/dt Filter

Maximum cable length with dU/dt filter	Switching frequency
100 m (328 ft) at 500 V level	3.6 kHz
150 m (492 ft) at 690 V level [1]	1.5 kHz

[1] For longer cable lenghts, contact Danfoss.

6.11.2 Installing the Cables, FR9–12

Follow these instructions to install the cables.

For information on how to comply with the UL regulations in cable installations, see 6.1.2 UL Standards on Cabling.

Make sure that the delivery contains all necessary components.

Open the covers according to instructions in:

- 6.10.1 Get Access and Locate the Terminals for FR9
- 6.10.2 Get Access and Locate the Terminals for FR10
- 6.10.4 Get Access and Locate the Terminals for FR12

Procedure

1. Strip the motor and mains cables.
2. Remove the protection grids for the input terminals and the protection covers on the unit(s).
3. Pull the cable through the bottom plate and fix the PE conductor to the PE busbar of the cabinet.
4. Route the motor phase conductors through common-mode chokes. See 6.8 Common-mode Chokes on Motor Cables (Option +OCM).
5. To make a 360° connection with the grounding clamp for cable shield, expose the shield of motor cables.

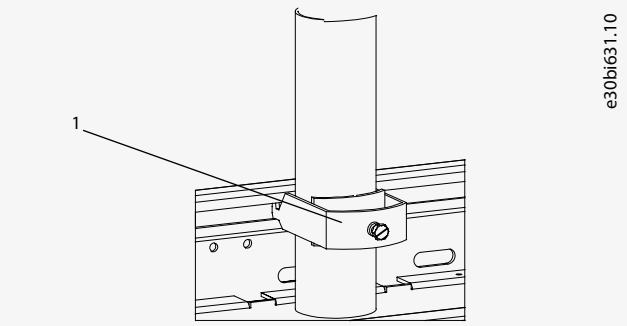

1	Cable clamp

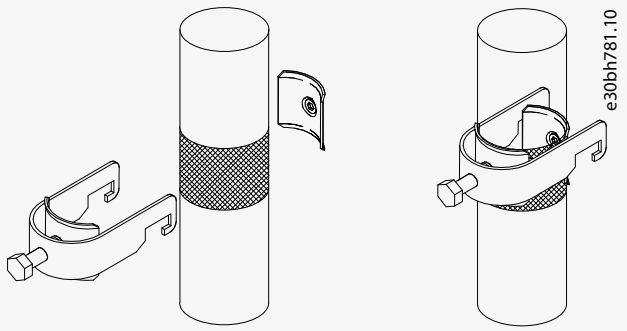

6. Connect the cables. See the correct tightening torques in 12.5 Tightening Torques of the Terminals and 12.6 Tightening Torques of the Busbar Connections.
   - **a.** Connect mains cables to terminals L1, L2, and L3 on the input device (if used) or to power terminals on the AC drive using cable lugs.
   -

b. Connect motor cables to terminals U, V, and W on AC drive using cable lugs.

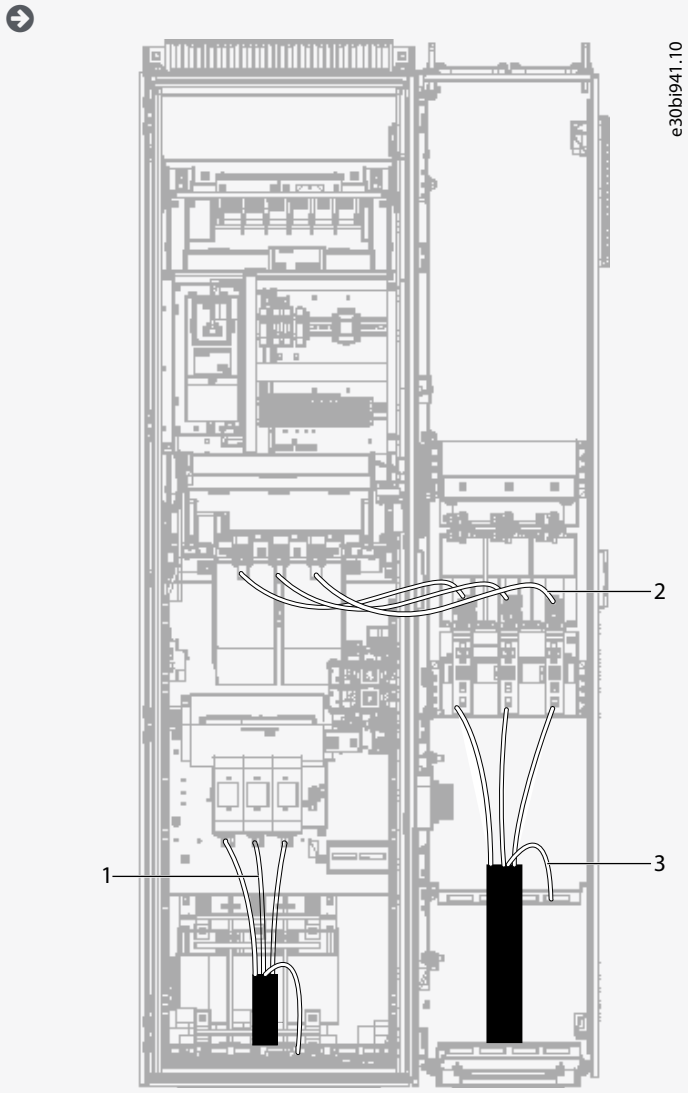

1	Mains cables, see step 6a.	3	PE conductor, see step 3.
2	Motor cables, see step 6b.		

7. If an external brake resistor (option) is used, connect its cable to the appropriate terminal (R+/R–). Also make sure that the AC drive is equipped with a brake chopper (indicated in the type code of the AC drive).

8. If an output filter (+ODU or +OSI) is used, set the switching frequency of the AC drive (parameter P2.6.9, ID 601) to the specification of the output filter.

Setting too high/low a switching frequency can damage the filter.

9. Close the cabinet doors.

6.11.3 Installing the Cables, FR13

Follow these instructions to install the cables.

For information on how to comply with the UL regulations in cable installations, see 6.1.2 UL Standards on Cabling.

Make sure that the delivery contains all necessary components.

Open the covers according to instructions in 6.10.5 Get Access and Locate the Terminals for FR13.

Procedure

1. Strip the motor and mains cables.

2. Remove the protection grids for the input terminals and the protection covers on the unit(s).
3. Pull the cable through the bottom plate and fix the PE conductor to the PE busbar of the cabinet.
4. To conform to the EMC requirements, use the cable gland set shown in Illustration 38. If the cable gland is not installed, install it:
   - **a.** Assemble the rubber sealing in the narrow groove of the bush ring. Make sure that the gap between the assembly plate and the sealing is tight.
   - **b.** The fastening spring is rather stiff. Therefore, we recommend using a cone-shaped tool to fit the metal sock in the bush ring. Then clamp it with the spring bent into a ring shape. Draw the sock over the groove far enough to be easily fastened with the spring. Make sure that the spring clamps the sock at 360°.
   - **c.** Roll up the sock as far as the fastening ring and remove the cone-shaped tool if used. The cable installation is now easier and the cable does not damage the sock.
   - **d.** Clamp the sock to the shielding of cable with a cable tie. **NOTE!** The inside diameter of the cable clamp is 61 mm.

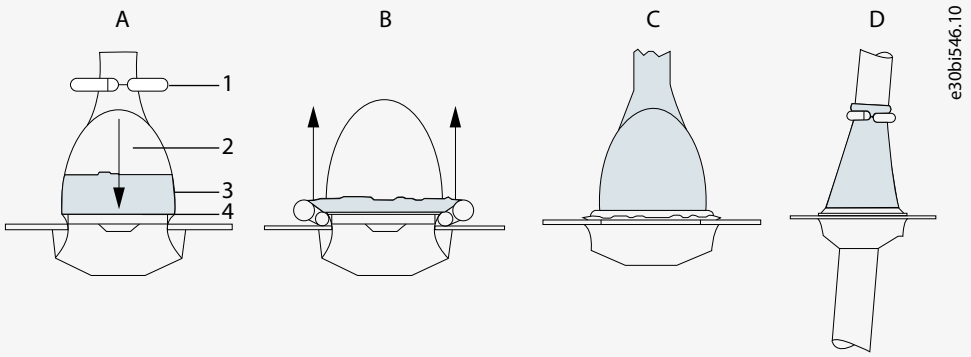

1	Cable tie	3	Metal sock
2	Cone shaped tool	4	Fastening spring

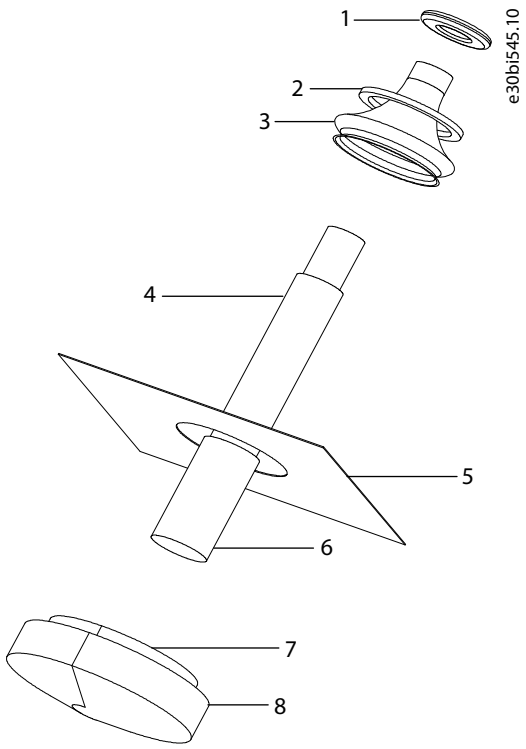

Illustration 38: Cable Gland Set

1	Cable tie	5	Assembly plate
2	Fastening spring	6	Cable
3	Metal sock	7	Bush ring
4	PE(N) screen	8	Rubber sealing

5. Route the motor phase conductors through common-mode chokes. See 6.8 Common-mode Chokes on Motor Cables (Option +OCM).
6. To make a 360° connection with the grounding clamp for cable shield, expose the shield of motor cables.

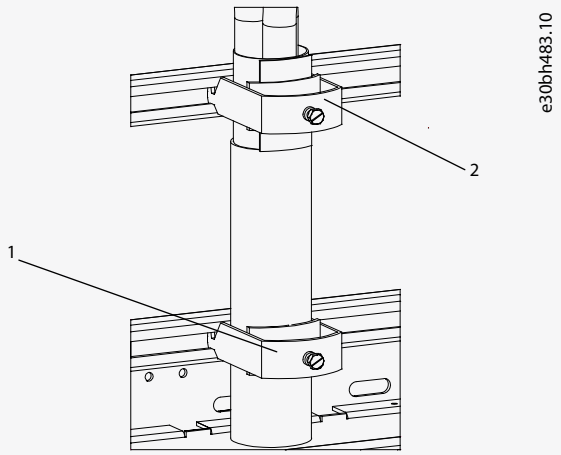

1	Cable clamp
2	EMC grounding clamp

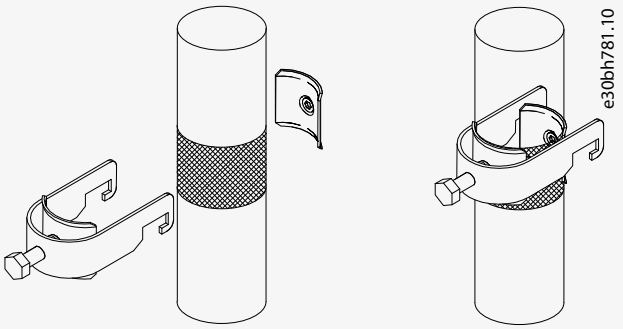

7. Connect the cables. See the correct tightening torques in 12.5 Tightening Torques of the Terminals and 12.6 Tightening Torques of the Busbar Connections.
   - **a.** Connect mains cables to terminals L1, L2, and L3 (behind the plexiglass) on the AC drive.
   -

b. Connect motor cables to terminals U, V, and W on AC drive.

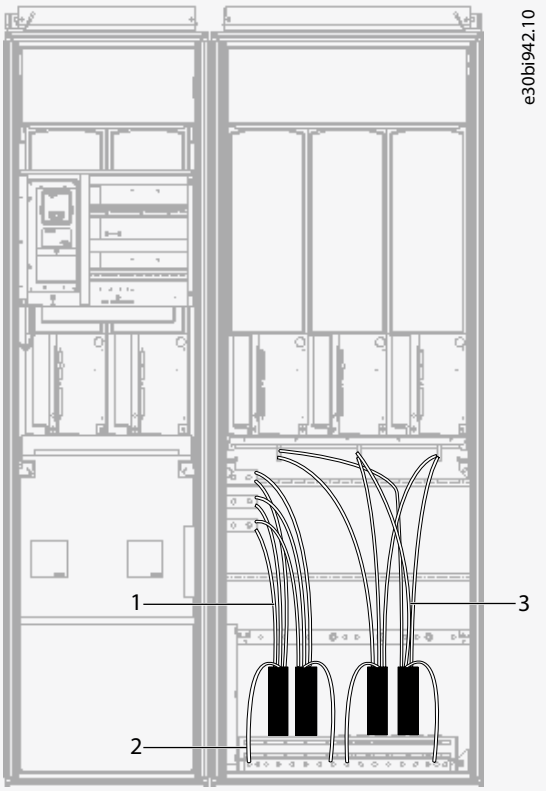

1	Mains cables, see step 7a.	3	Motor cables, see step 7b.
2	PE conductor, see step 3.		

8. If an external brake resistor (option) is used, connect its cable to the appropriate terminal (R+/R–). Also make sure that the AC drive is equipped with a brake chopper (indicated in the type code of the AC drive).
9. If an output filter (+ODU or +OSI) is used, set the switching frequency of the AC drive (parameter P2.6.9, ID 601) to the specification of the output filter.

   Setting too high/low a switching frequency can damage the filter.

10. Close the cabinet doors.

6.11.4 Installing the Cables, FR14

Follow these instructions to install the cables.

For information on how to comply with the UL regulations in cable installations, see 6.1.2 UL Standards on Cabling.

Make sure that the delivery contains all necessary components.

Open the covers according to instructions in 6.10.6 Get Access and Locate the Terminals for FR14.

Procedure

1. Strip the motor and mains cables.
2. Remove the protection grids for the input terminals and the protection covers on the unit(s).
3. Pull the cable through the bottom plate and fix the PE conductor to the PE busbar of the cabinet.
4. To conform to the EMC requirements, use the cable gland set shown in Illustration 38. If the cable gland is not installed, install it:
   - **a.** Assemble the rubber sealing in the narrow groove of the bush ring. Make sure that the gap between the assembly plate and the sealing is tight.
   -

b. The fastening spring is rather stiff. Therefore, we recommend using a cone-shaped tool to fit the metal sock in the bush ring. Then clamp it with the spring bent into a ring shape. Draw the sock over the groove far enough to be easily fastened with the spring. Make sure that the spring clamps the sock at 360°.

- **c.** Roll up the sock as far as the fastening ring and remove the cone-shaped tool if used. The cable installation is now easier and the cable does not damage the sock.
- **d.** Clamp the sock to the shielding of cable with a cable tie. **NOTE!** The inside diameter of the cable clamp is 61 mm.

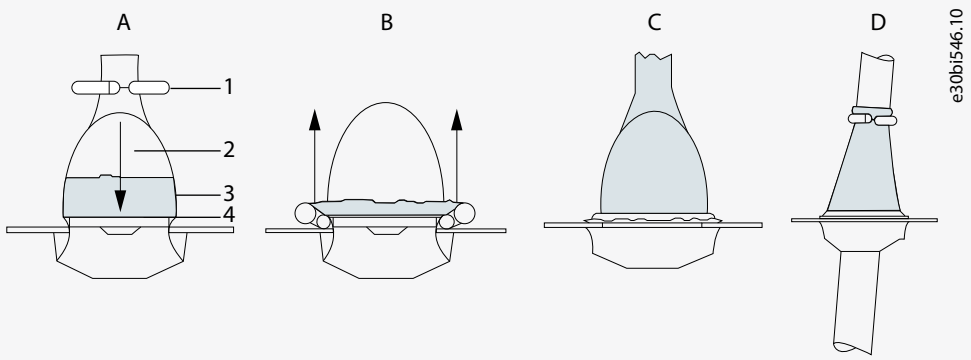

1	Cable tie	3	Metal sock
2	Cone shaped tool	4	Fastening spring

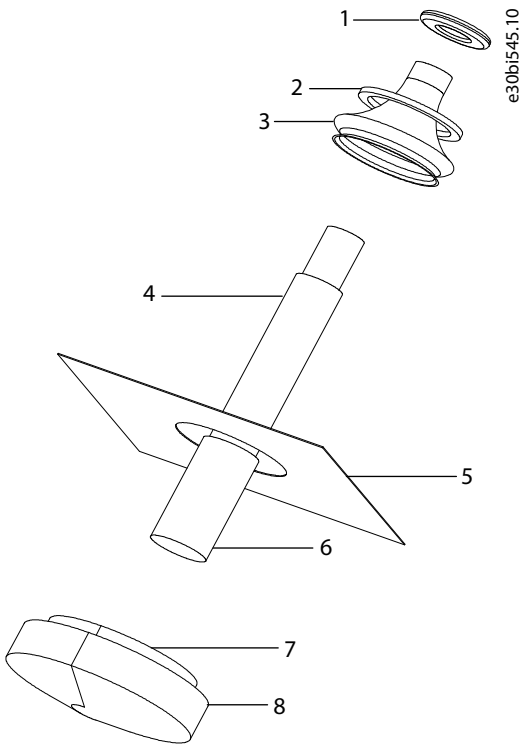

Illustration 39: Cable Gland Set

1	Cable tie	5	Assembly plate
2	Fastening spring	6	Cable
3	Metal sock	7	Bush ring
4	PE(N) screen	8	Rubber sealing

5. Route the motor phase conductors through common-mode chokes. See 6.8 Common-mode Chokes on Motor Cables (Option +OCM).
6. To make a 360° connection with the grounding clamp for cable shield, expose the shield of motor cables.

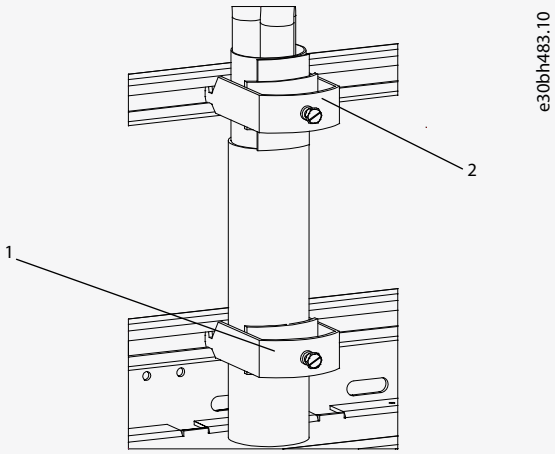

1	Cable clamp
2	EMC grounding clamp

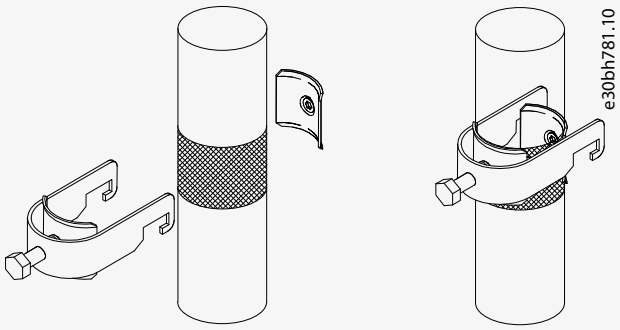

7. Connect the cables. See the correct tightening torques in 12.5 Tightening Torques of the Terminals and 12.6 Tightening Torques of the Busbar Connections.
   - **a.** Connect mains cables to terminals L1, L2, and L3 (behind the plexiglass) on the AC drive.
   - **b.** Connect motor cables to terminals U, V, and W on AC drive.

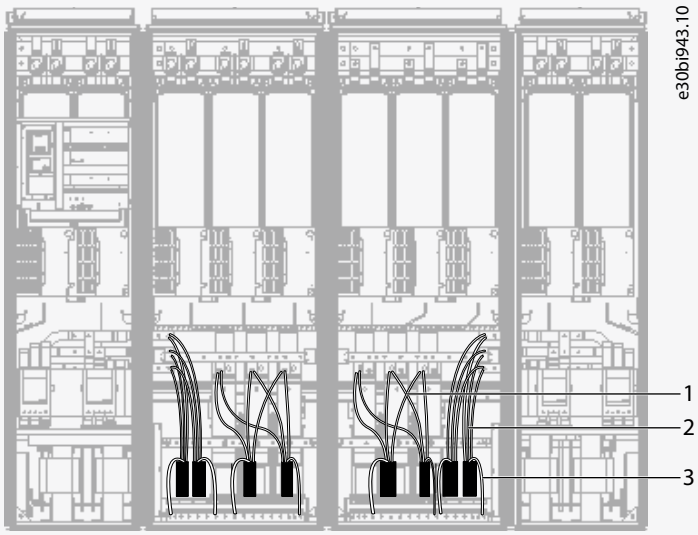

1	Motor cables, see step 7b.	3	PE conductor, see step 3.
2	Mains cables, see step 7a.		

8. If an external brake resistor (option) is used, connect its cable to the appropriate terminal (R+/R–). Also make sure that the AC drive is equipped with a brake chopper (indicated in the type code of the AC drive).
9. If an output filter (+ODU or +OSI) is used, set the switching frequency of the AC drive (parameter P2.6.9, ID 601) to the specification of the output filter.

   Setting too high/low a switching frequency can damage the filter.

10. Close the cabinet doors.

6.11.5 Installing the Cables, AF9/AF10

Follow these instructions to install the cables.

For information on how to comply with the UL regulations in cable installations, see 6.1.2 UL Standards on Cabling.

Make sure that the delivery contains all necessary components.

Open the covers according to instructions in 6.10.7 Get Access and Locate the Terminals for AF9/AF10.

Procedure

1. Strip the motor and mains cables.
2. Remove the protection grids for the input terminals and the protection covers on the unit(s).
3. Pull the cable through the bottom plate and fix the PE conductor to the PE busbar of the cabinet.
4. Route the motor phase conductors through common mode chokes. See 6.8 Common-mode Chokes on Motor Cables (Option +OCM).
5. To make a 360° connection with the grounding clamp for cable shield, expose the shield of motor cables.

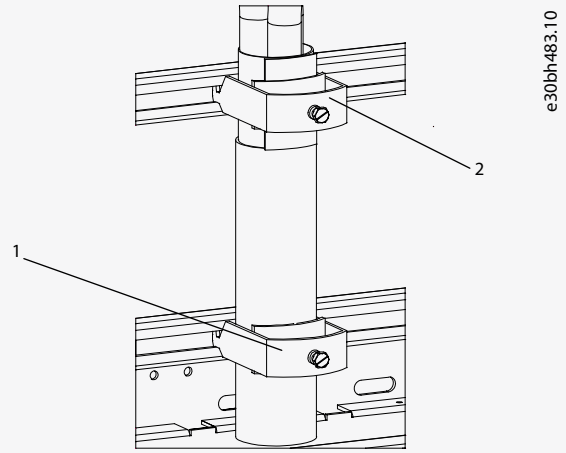

1	Cable clamp
2	EMC grounding clamp

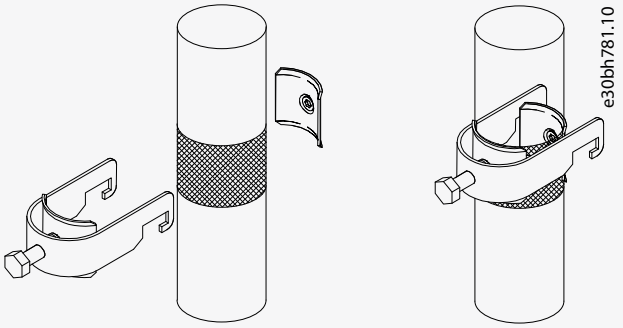

6. Connect the cables. See the correct tightening torques in 12.5 Tightening Torques of the Terminals and 12.6 Tightening Torques of the Busbar Connections.
   - **a.** Connect mains cables to terminals L1, L2, and L3 power terminals on the AC drive using cable.
   - **b.** Connect motor cables to terminals U, V, and W on AC drive using cable lugs.

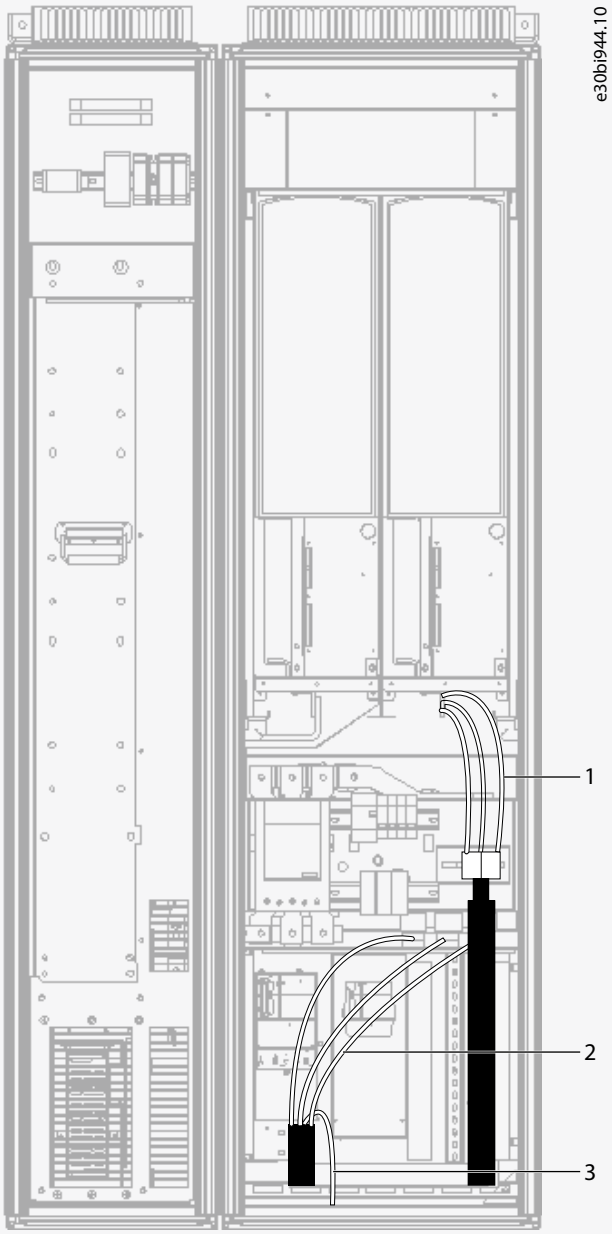

1	Motor cables, see step 6b.	3	PE conductor, see step 3.
2	Mains cables, see step 6a.		

7. If an external brake resistor (option) is used, connect its cable to the appropriate terminal (R+/R–). Also make sure that the AC drive is equipped with a brake chopper (indicated in the type code of the AC drive).
8. If an output filter (+ODU or +OSI) is used, set the switching frequency of the AC drive (parameter P2.6.9, ID 601) to the specification of the output filter.

   Setting too high/low a switching frequency can damage the filter.

9. Close the cabinet doors.

6.11.6 Installing the Cables, AF12

Follow these instructions to install the cables.

For information on how to comply with the UL regulations in cable installations, see 6.1.2 UL Standards on Cabling.

Make sure that the delivery contains all necessary components.

Open the covers according to instructions in:

- 6.10.8 Get Access and Locate the Terminals for AF12
- 6.10.9 Get Access and Locate the Terminals for AF13
- 6.10.10 Get Access and Locate the Terminals for AF14

Procedure

1. Strip the motor and mains cables.
2. Remove the protection grids for the input terminals and the protection covers on the unit(s).
3. Pull the cable through the bottom plate and fix the PE conductor to the PE busbar of the cabinet.
4. With AF13 and AF14, to conform to the EMC requirements, use the cable gland set shown in Illustration 38. If the cable gland is not installed, install it:
   - **a.** Assemble the rubber sealing in the narrow groove of the bush ring. Make sure that the gap between the assembly plate and the sealing is tight.
   - **b.** The fastening spring is rather stiff. Therefore, we recommend using a cone-shaped tool to fit the metal sock in the bush ring. Then clamp it with the spring bent into a ring shape. Draw the sock over the groove far enough to be easily fastened with the spring. Make sure that the spring clamps the sock at 360°.
   - **c.** Roll up the sock as far as the fastening ring and remove the cone-shaped tool if used. The cable installation is now easier and the cable does not damage the sock.
   - **d.** Clamp the sock to the shielding of cable with a cable tie. **NOTE!** The inside diameter of the cable clamp is 61 mm.

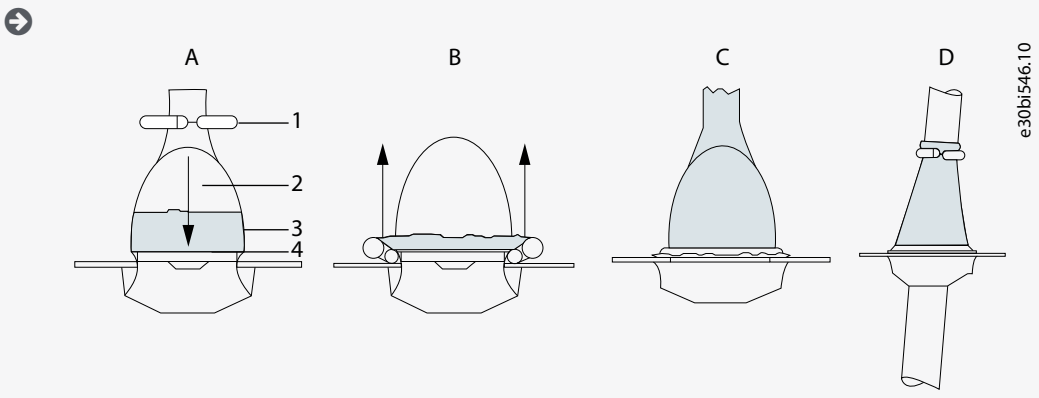

1	Cable tie	3	Metal sock
2	Cone shaped tool	4	Fastening spring

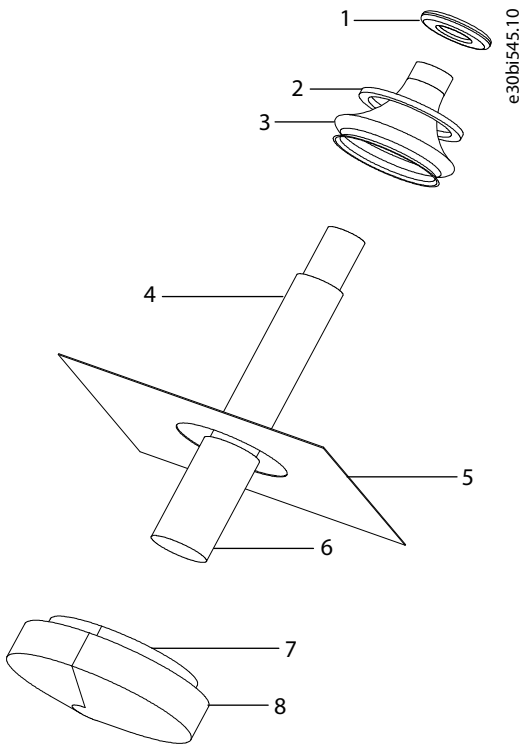

Illustration 40: Cable Gland Set

1	Cable tie	5	Assembly plate
2	Fastening spring	6	Cable
3	Metal sock	7	Bush ring
4	PE(N) screen	8	Rubber sealing

5. Route the motor phase conductors through common-mode chokes. See 6.8 Common-mode Chokes on Motor Cables (Option +OCM).
6. To make a 360° connection with the grounding clamp for cable shield, expose the shield of motor cables.

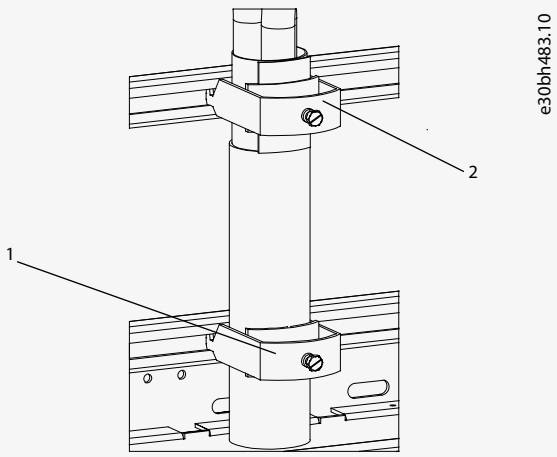

1	Cable clamp
2	EMC grounding clamp

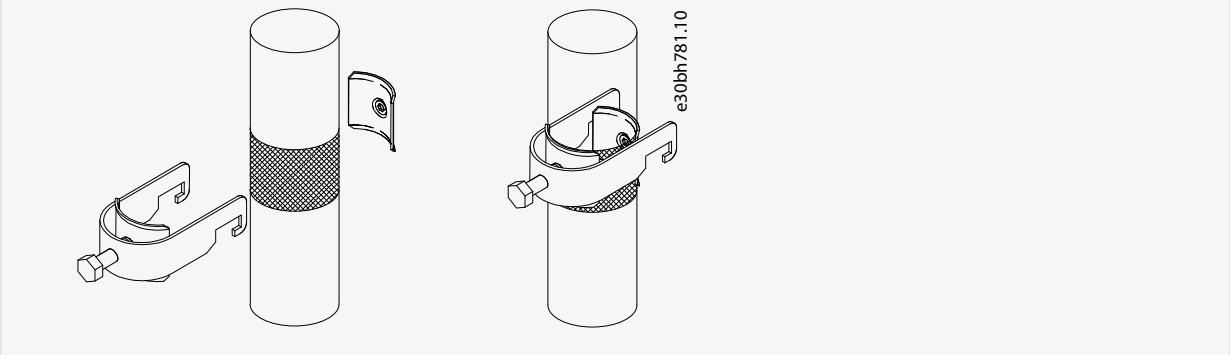

7. Connect the cables. See the correct tightening torques in 12.5 Tightening Torques of the Terminals and 12.6 Tightening Torques of the Busbar Connections.
   - **a.** Connect mains cables to terminals L1, L2, and L3 on the AC drive.
   - **b.** Connect motor cables to terminals U, V, and W on the AC drive.

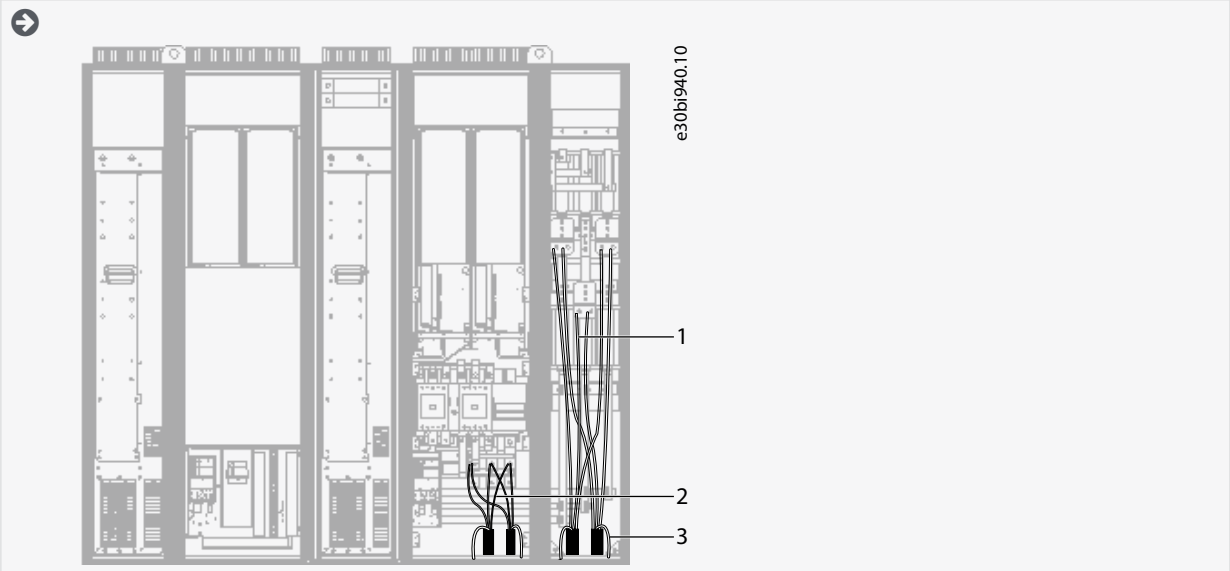

1	Motor cables, see step 7b.	3	PE conductor, see step 3.
2	Mains cables, see step 7a.		

8. If an external brake resistor (option) is used, connect its cable to the appropriate terminal (R+/R–). Also make sure that the AC drive is equipped with a brake chopper (indicated in the type code of the AC drive).
9. If an output filter (+ODU or +OSI) is used, set the switching frequency of the AC drive (parameter P2.6.9, ID 601) to the specification of the output filter.

   Setting too high/low a switching frequency can damage the filter.

10. Close the cabinet doors.

6.11.7 Installing the Cables, AF13

Follow these instructions to install the cables.

For information on how to comply with the UL regulations in cable installations, see 6.1.2 UL Standards on Cabling.

Make sure that the delivery contains all necessary components.

Open the covers according to instructions in:

- 6.10.8 Get Access and Locate the Terminals for AF12
- 6.10.9 Get Access and Locate the Terminals for AF13
- 6.10.10 Get Access and Locate the Terminals for AF14

Procedure

1. Strip the motor and mains cables.
2. Remove the protection grids for the input terminals and the protection covers on the unit(s).
3. Pull the cable through the bottom plate and fix the PE conductor to the PE busbar of the cabinet.
4. With AF13 and AF14, to conform to the EMC requirements, use the cable gland set shown in Illustration 38. If the cable gland is not installed, install it:
   - **a.** Assemble the rubber sealing in the narrow groove of the bush ring. Make sure that the gap between the assembly plate and the sealing is tight.
   - **b.** The fastening spring is rather stiff. Therefore, we recommend using a cone-shaped tool to fit the metal sock in the bush ring. Then clamp it with the spring bent into a ring shape. Draw the sock over the groove far enough to be easily fastened with the spring. Make sure that the spring clamps the sock at 360°.
   - **c.** Roll up the sock as far as the fastening ring and remove the cone-shaped tool if used. The cable installation is now easier and the cable does not damage the sock.
   - **d.** Clamp the sock to the shielding of cable with a cable tie. **NOTE!** The inside diameter of the cable clamp is 61 mm.

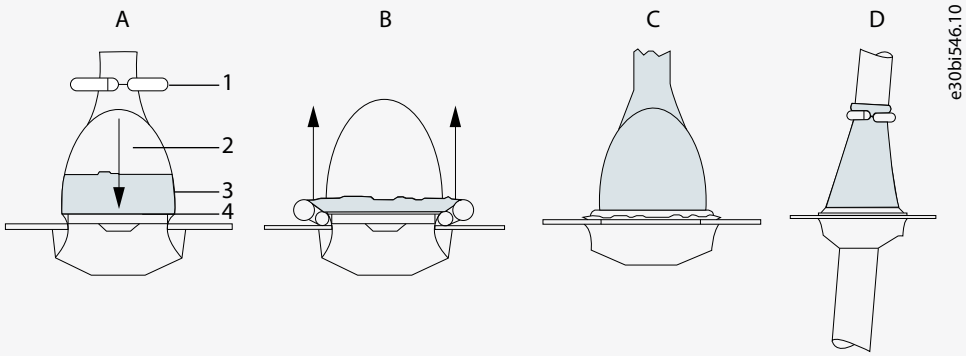

1	Cable tie	3	Metal sock
2	Cone shaped tool	4	Fastening spring

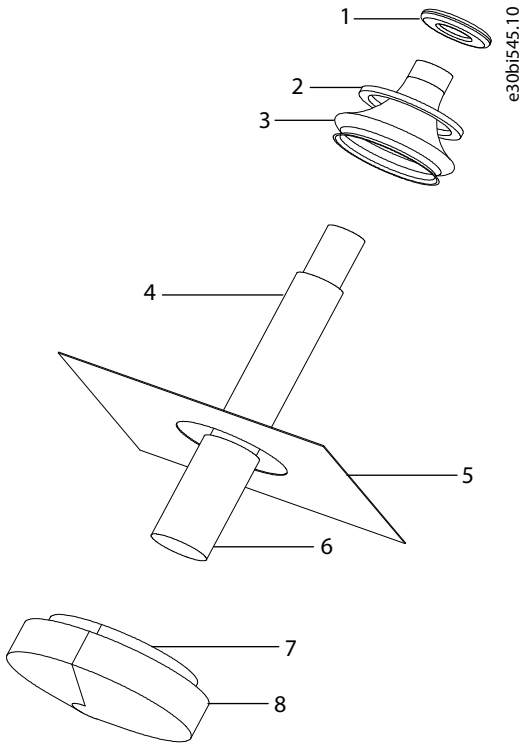

Illustration 41: Cable Gland Set

1	Cable tie	5	Assembly plate
2	Fastening spring	6	Cable
3	Metal sock	7	Bush ring
4	PE(N) screen	8	Rubber sealing

5. Route the motor phase conductors through common-mode chokes. See 6.8 Common-mode Chokes on Motor Cables (Option +OCM).
6. To make a 360° connection with the grounding clamp for cable shield, expose the shield of motor cables.

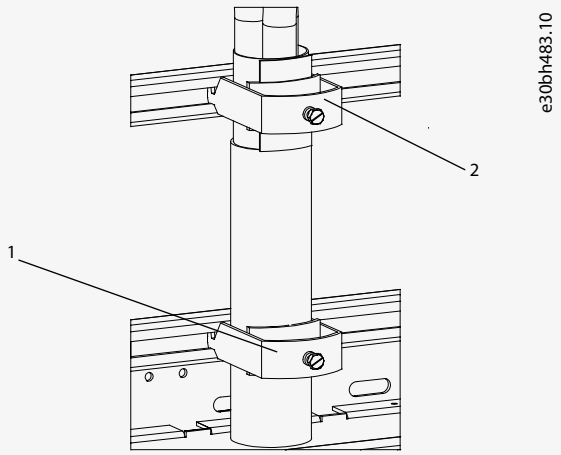

1	Cable clamp
2	EMC grounding clamp

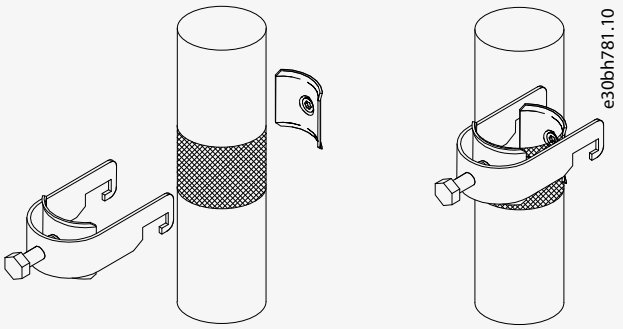

7. Connect the cables. See the correct tightening torques in 12.5 Tightening Torques of the Terminals and 12.6 Tightening Torques of the Busbar Connections.
   - **a.** Connect mains cables to terminals L1, L2, and L3 (behind the plexiglass) on the AC drive.
   -

b. Connect motor cables to terminals U, V, and W on the AC drive.

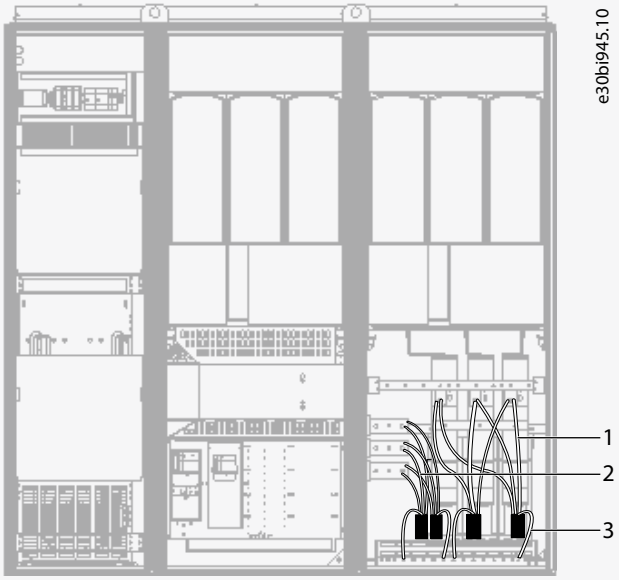

1	Motor cables, see step 7b.	3	PE conductor
2	Mains cables, see step 7a.		

8. If an external brake resistor (option) is used, connect its cable to the appropriate terminal (R+/R–). Also make sure that the AC drive is equipped with a brake chopper (indicated in the type code of the AC drive).
9. If an output filter (+ODU or +OSI) is used, set the switching frequency of the AC drive (parameter P2.6.9, ID 601) to the specification of the output filter.

   Setting too high/low a switching frequency can damage the filter.

10. Close the cabinet doors.

6.11.8 Installing the Cables, AF14

Follow these instructions to install the cables.

For information on how to comply with the UL regulations in cable installations, see 6.1.2 UL Standards on Cabling.

Make sure that the delivery contains all necessary components.

Open the covers according to instructions in:

- 6.10.8 Get Access and Locate the Terminals for AF12
- 6.10.9 Get Access and Locate the Terminals for AF13
- 6.10.10 Get Access and Locate the Terminals for AF14

Procedure

1. Strip the motor and mains cables.
2. Remove the protection grids for the input terminals and the protection covers on the unit(s).
3. Pull the cable through the bottom plate and fix the PE conductor to the PE busbar of the cabinet.
4. With AF13 and AF14, to conform to the EMC requirements, use the cable gland set shown in Illustration 38. If the cable gland is not installed, install it:
   - **a.** Assemble the rubber sealing in the narrow groove of the bush ring. Make sure that the gap between the assembly plate and the sealing is tight.
   - **b.** The fastening spring is rather stiff. Therefore, we recommend using a cone-shaped tool to fit the metal sock in the bush ring. Then clamp it with the spring bent into a ring shape. Draw the sock over the groove far enough to be easily fastened with the spring. Make sure that the spring clamps the sock at 360°.
   -

c. Roll up the sock as far as the fastening ring and remove the cone-shaped tool if used. The cable installation is now easier and the cable does not damage the sock.

- d. Clamp the sock to the shielding of cable with a cable tie. **NOTE!** The inside diameter of the cable clamp is 61 mm.

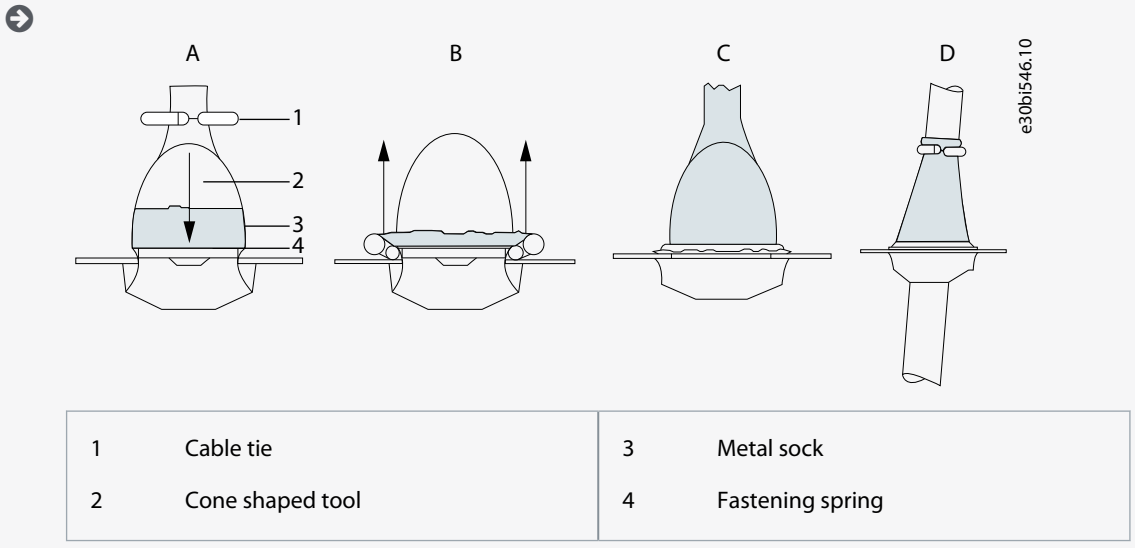

1	Cable tie	3	Metal sock
2	Cone shaped tool	4	Fastening spring

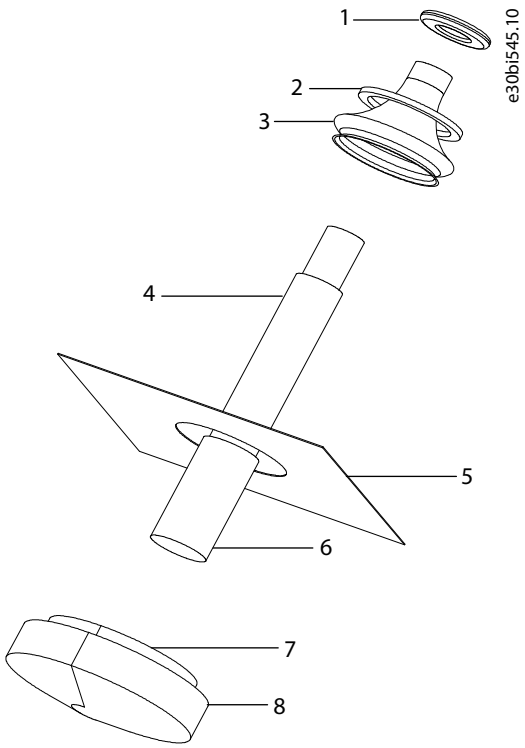

Illustration 42: Cable Gland Set

1	Cable tie	5	Assembly plate
2	Fastening spring	6	Cable
3	Metal sock	7	Bush ring
4	PE(N) screen	8	Rubber sealing

5. Route the motor phase conductors through common-mode chokes. See 6.8 Common-mode Chokes on Motor Cables (Option +OCM).

6. To make a 360° connection with the grounding clamp for cable shield, expose the shield of motor cables.

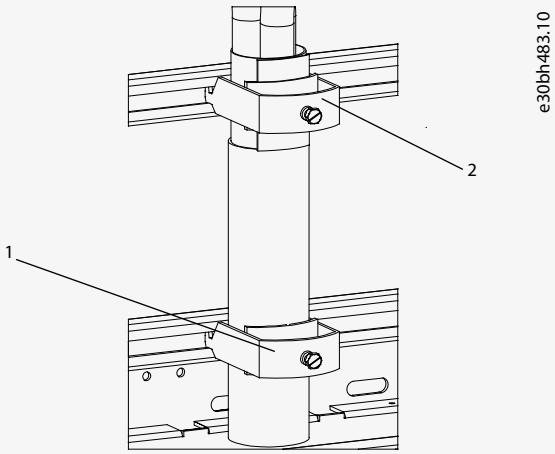

1	Cable clamp
2	EMC grounding clamp

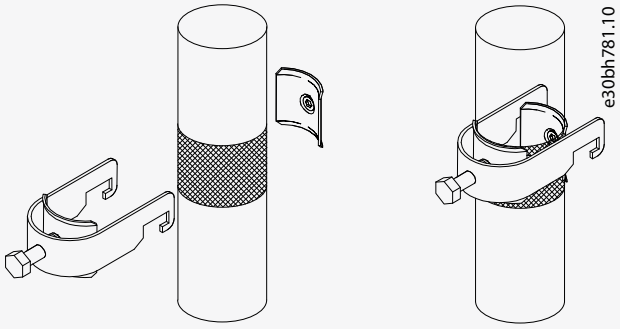

7. Connect the cables. See the correct tightening torques in 12.5 Tightening Torques of the Terminals and 12.6 Tightening Torques of the Busbar Connections.
   - **a.** Connect mains cables to terminals L1, L2, and L3 (behind the plexiglass) on the AC drive.
   - **b.** Connect motor cables to terminals U, V, and W on the AC drive.

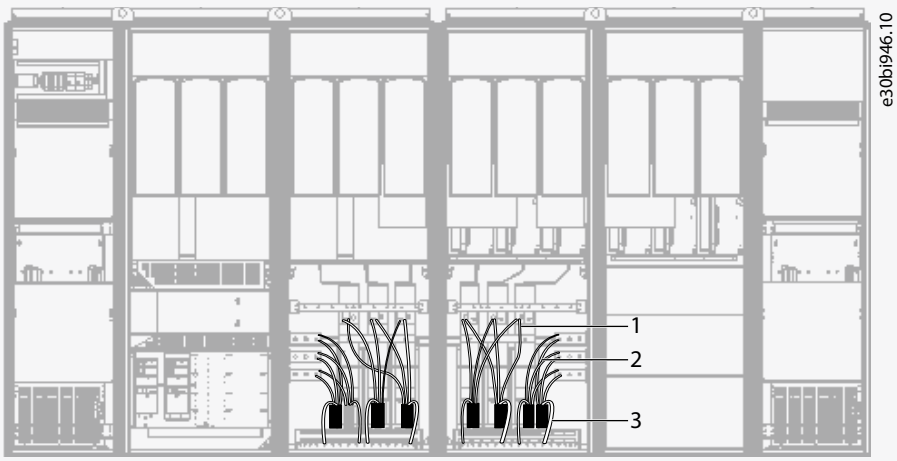

1	Motor cables, see step 7b.	3	PE conductor, see step 3.
2	Mains cables, see step 7a.		

8. If an external brake resistor (option) is used, connect its cable to the appropriate terminal (R+/R–). Also make sure that the AC drive is equipped with a brake chopper (indicated in the type code of the AC drive).
9. If an output filter (+ODU or +OSI) is used, set the switching frequency of the AC drive (parameter P2.6.9, ID 601) to the specification of the output filter.

   Setting too high/low a switching frequency can damage the filter.

10. Close the cabinet doors.

7 Control Unit

7.1 Control Unit Components

The NXP control unit gives the flexibility to create advanced features with options and programmability. See selection guide and application manual for full list of features.

The control unit of the AC drive contains the control board and additional boards (see Illustration 43) connected to the 5 slot connectors (A to E) of the control board. The control board is connected to the power unit through a D-connector or fiber optic cables (FR9–FR11).

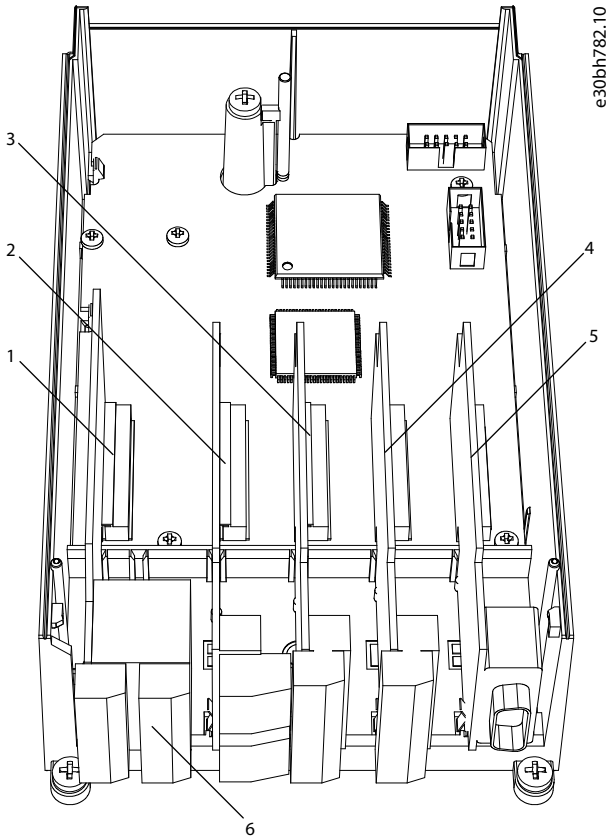

Illustration 43: Basic and Option Slots on the Control Board

1	Slot A; OPTA1	4	Slot D; option boards
2	Slot B; OPTA2	5	Slot E; option boards
3	Slot C; OPTA3	6	Control terminals

The control unit of the delivered AC drive contains the standard control interface. If the order included special options, the AC drive is delivered according to the order. The next pages contain information on the terminals and general wiring examples. The type code shows the I/O boards that are installed at the factory. For more information on the option boards, see VACON® NX I/O Boards User manual.

In VACON® NXC low-harmonic drives, each AFE unit has its own control unit. The three basic boards A1, A2, and B5 are included as standard. Usually one time is enough when parameterizing the AFE control during the commissioning of the drive.

The OPTA1 basic board has 20 control terminals, and the relay board has 6 or 7. The standard connections of the control unit and the descriptions of signals are shown in 7.3.2 Control Terminals on OPTA1.

7.2 Control Voltage (+24 V/EXT +24 V)

It is possible to use the drive with an external power source with these properties: +24 V DC ±10%, minimum 1000 mA. Use it to externally power up the control board, and the basic and option boards. The analog outputs and inputs at OPTA1 do not work with only +24 V supplied to the control unit.

Connect the external power source to one of the 2 bidirectional terminals (#6 or #12), see the option board manual or VACON® NX I/O Boards User Manual. With this voltage, the control unit stays on and parameters can be set. The measurements of the main circuit (for example, the DC-link voltage, and the unit temperature) are not available when the drive is not connected to mains.

N O T I C E

If the AC drive is supplied with external 24 V DC power, use a diode in terminal #6 (or #12) to prevent the current to flow in opposite direction. Put a 1 A fuse in 24 V DC line for each AC drive. The maximum current consumption of each drive is 1 A from the external supply.

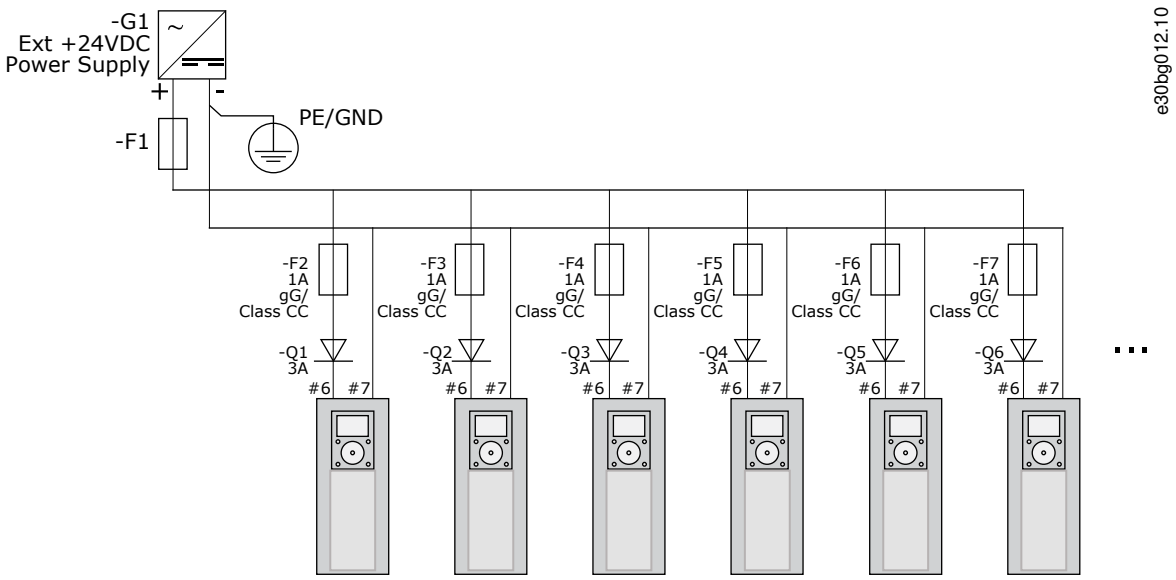

Illustration 44: Parallel Connection of 24 V Inputs with Many AC Drives

N O T I C E

The control unit I/O ground is not isolated from the chassis ground/protective earth. In the installation, consider the potential differences between the grounding points. We recommend using galvanic isolation in the I/O and 24 V circuitry.

7.3 Control Unit Cabling

7.3.1 Selection of the Control Cables

The control cables must be a minimum of 0.5 mm^2 (20 AWG) shielded multicore cables. See more on the cable types in Table 18. The terminal wires must be a maximum of 2.5 mm^2 (14 AWG) for the terminals of the relay board and 1.5 mm^2 (16 AWG) for other terminals.

Table 22: Tightening Torques of the Control Cables

The terminal	The terminal screw	The tightening torque in Nm (in-lb)
Relay and thermistor terminals	M3	0.5 (4.5)
Other terminals	M2.6	0.2 (1.8)

7.3.2 Control Terminals on OPTA1

The figure shows the basic description of the terminals of the I/O board. For more information, see 7.3.2.2 Jumper Selections on the OPTA1 Basic Board. For more information on control terminals, see VACON® All in One Application manual.

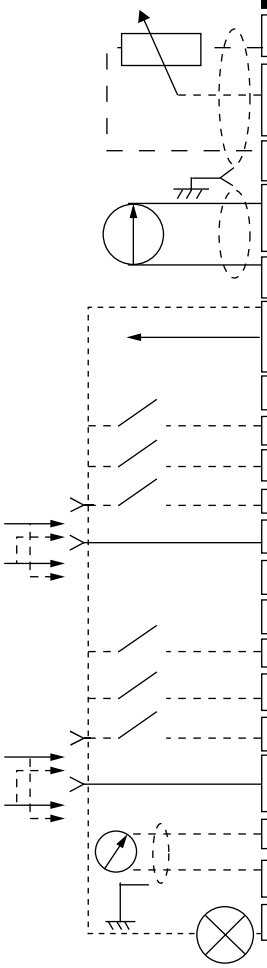

Reference potentiometer, 1-10kΩ

Standard I/O board

Terminal		Signal	Description
1	$+10V_{ref}$	Reference voltage	Maximum current 10 mA
2	AI1+	Analogue input, voltage or current	Selection V/mA with jumper block X1 (*) 0...+10 V (Ri = 200 kΩ) (-10V...+10V Joystick ctrl, sel. with jumper) 0-20 mA (Ri =250 Ω)
3	GND/AI1-	Analogue input common	Differential input if not connected to ground Allows ±20 V common mode voltage to GND
4	AI2+	Analogue input, voltage or current	Selection V/mA with jumper block X1 (*) 0...+10 V (Ri = 200 kΩ) (-10V...+10V Joystick ctrl, sel. with jumper) 0-20 mA (Ri =250 Ω)
5	GND/AI2-	Analogue input common	Differential input if not connected to ground Allows ±20 V common mode voltage to GND
6	+24V	24 V aux. voltage	±15%, max. 250 mA (all boards total) 150 mA (from single board) Can also be used as external power back-up for the control unit (and fieldbus)
7	GND	I/O ground	Ground for reference and controls
8	DIN1	Digital input 1	Ri = min. 5 kΩ 18-30 V = 1
9	DIN2	Digital input 2	
10	DIN3	Digital input 3	
11	CMA	Common A for DIN1—DIN3	Digital inputs can be disconnected from ground (*)
12	+24V	Control voltage output	Same as terminal #6
13	GND	I/O ground	Same as terminal #7
14	DIN4	Digital input 4	Ri = min. 5 kΩ 18-30 V = 1
15	DIN5	Digital input 5	
16	DIN6	Digital input 6	
17	CMB	Common B for DIN4-DIN6	Must be connected to GND or 24 V of I/O term. or to ext.24 V or GND Selection with jumper block X3 (*)
18	AO1+	Analogue signal (+output)	Output signal range: Current 0(4)-20 mA, RL max 500 Ω or Voltage 0-10 V, RL >1kΩ Selection with jumper block X6 (*)
19	AO1-	Analogue output common	
20	DO1	Open collector output	Maximum Uin = 48 VDC Maximum current = 50 mA

e30bg013.10

Illustration 45: Control Terminal Signals on OPTA1

*) See figure in 7.3.2.2 Jumper Selections on the OPTA1 Basic Board

Parameter references for I/O on control panel and NCDrive are: An.IN:A.1, An.IN:A.2, DigIN:A.1, DigIN:A.2, DigIN:A.3, DigIN:A.4, DigIN:A.5, DigIN:A.6, AnOUT:A.1 and DigOUT:A.1.

To use the control voltage output +24 V/EXT+24 V:

- Wire the +24 V control voltage to digital inputs through an external switch. OR
- Use the control voltage to power up external equipment, such as encoders and auxiliary relays.

The specified total load on all available +24 V/EXT+24 V output terminals must not exceed 250 mA.

The maximum load on the +24 V/EXT+24 V output per board is 150 mA. If there is a +24 V/EXT+24 V output on the board, it is locally short circuit protected. If one of the +24 V/ EXT+24 V outputs short circuits, the others remain powered because of the local protection.

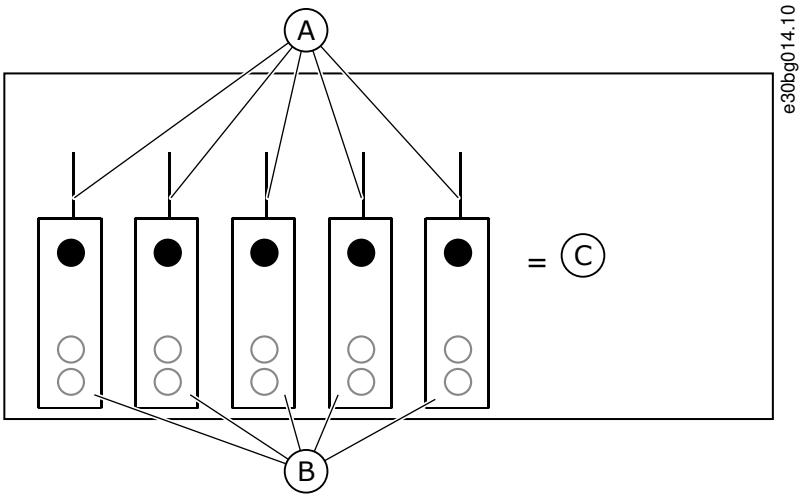

Illustration 46: Maximum Loads on +24 V/EXT+24 V Output

A	Maximum 150 mA	C	Maximum 250 mA
B	+24 V out		

7.3.2.1 Digital Input Signal Inversions

The active signal level is different when the common inputs CMA and CMB (terminals 11 and 17) are connected to +24 V or to ground (0 V).

The 24 V control voltage and the ground for the digital inputs and the common inputs (CMA, CMB) can be internal or external.

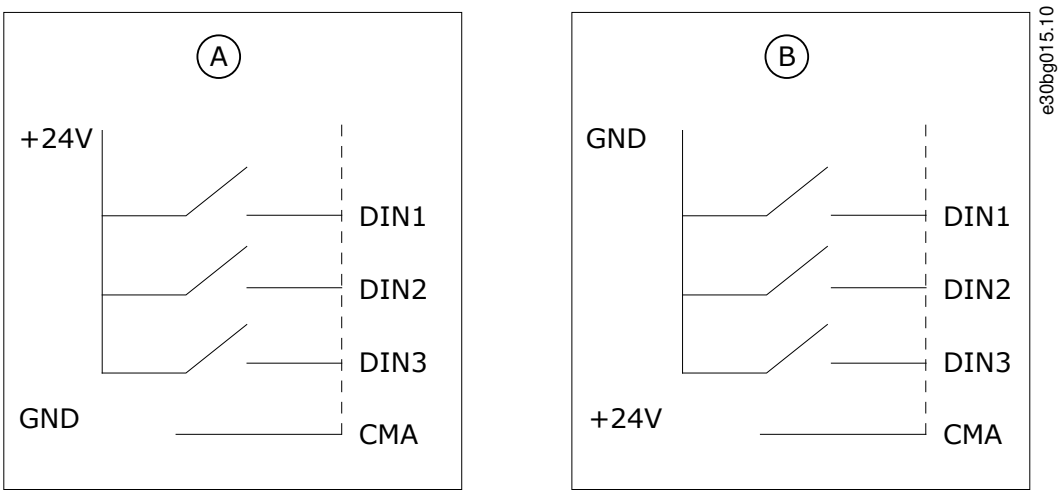

Illustration 47: Positive/Negative Logic

A	Positive logic (+24 V is the active signal) = the input is active when the switch is closed.
B	Negative logic (0 V is the active signal) = the input is active when the switch is closed. Set the jumper X3 to the position 'CMA/CMB isolated from ground'.

Related Links

- Jumper Selections on the OPTA1 Basic Board

7.3.2.2 Jumper Selections on the OPTA1 Basic Board

The functions of the AC drive can be changed to make them better agree with local requirements. To do it, change some positions for the jumpers on the OPTA1 board. The positions of the jumpers set the signal type of analog and digital inputs. Changing the AI/AO signal contents requires also a change in the related board parameter in menu M7.

On the A1 basic board, there are 4 jumper blocks: X1, X2, X3, and X6. Each jumper block contains 8 pins and 2 jumpers. See the possible jumper selections in Illustration 48.

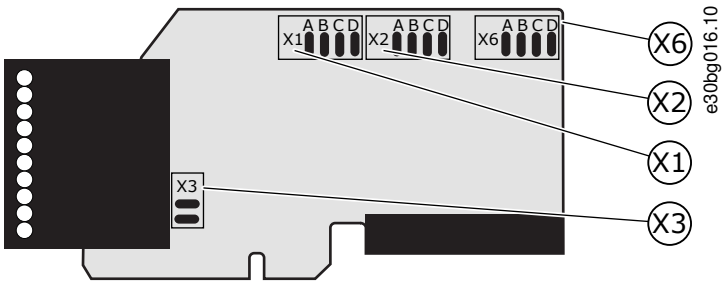

Illustration 48: Jumper Blocks on OPTA1

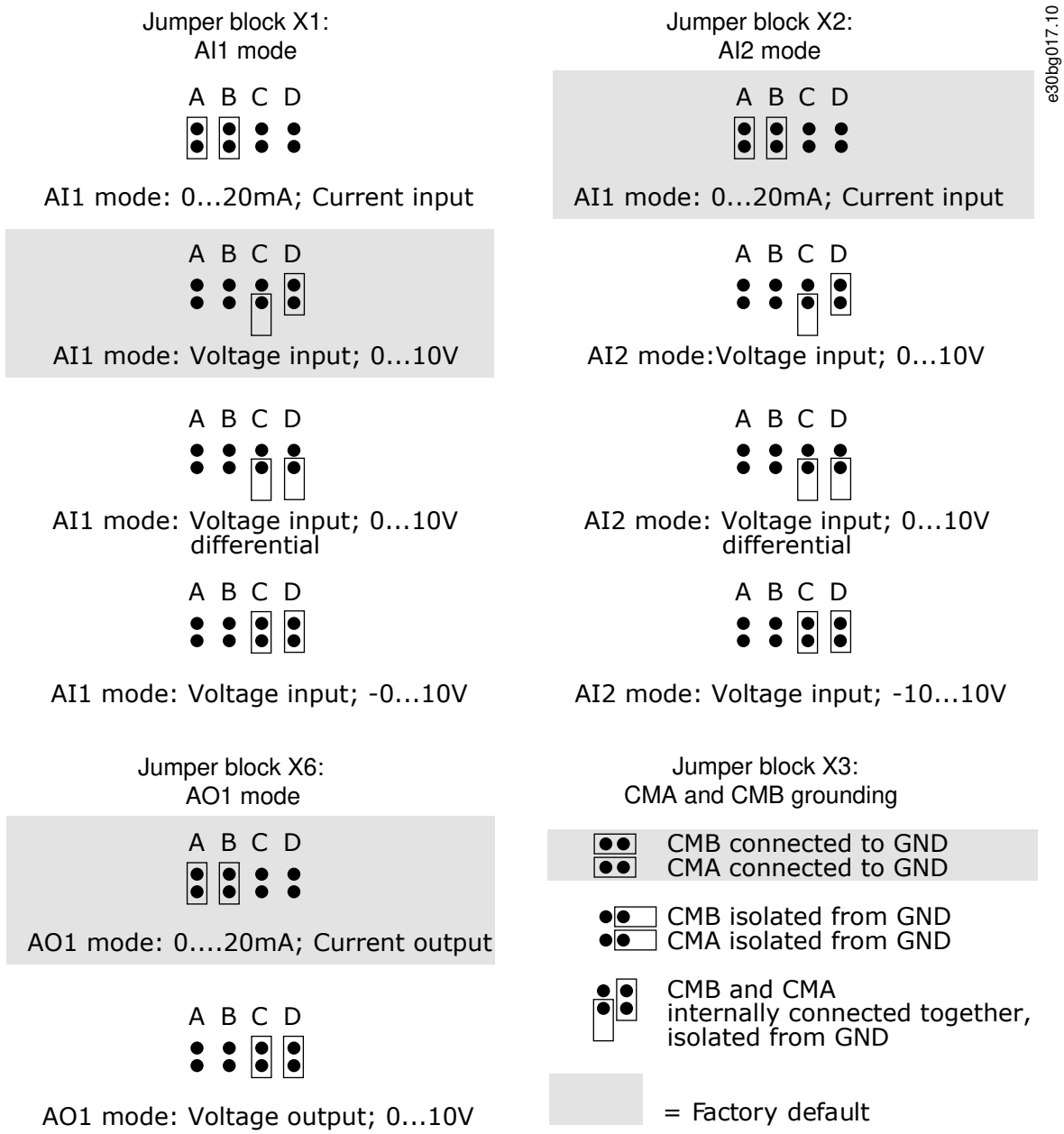

Illustration 49: Jumper Selections for OPTA1

7.3.3 Control Terminals on OPTA2 and OPTA3

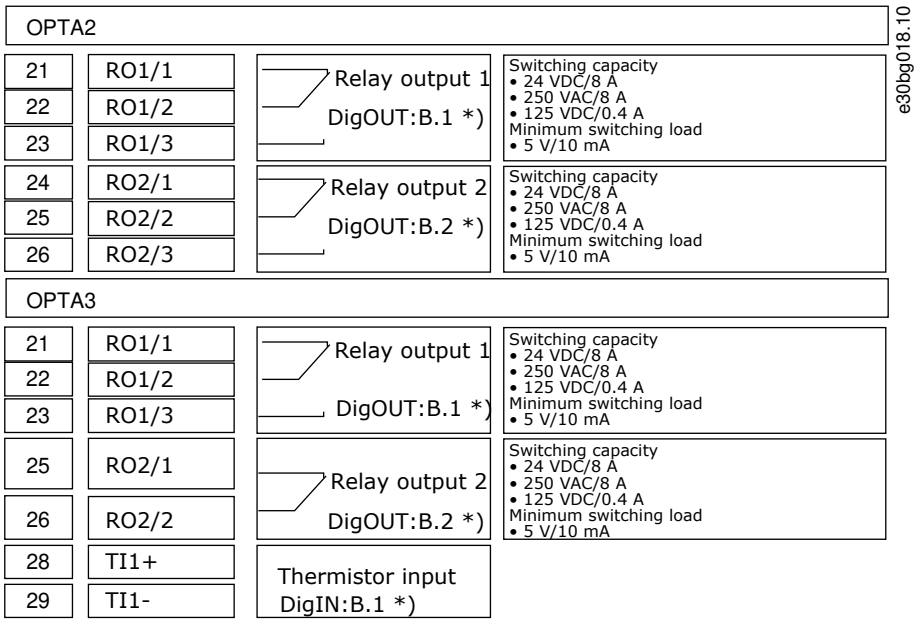

Illustration 50: Control Terminal Signals on Relay Boards OPTA2 and OPTA3

*)	Parameter reference on control panel and NCDrive.

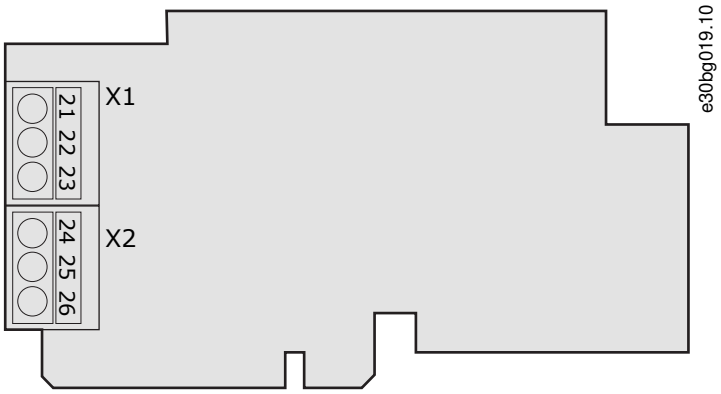

Illustration 51: OPTA2

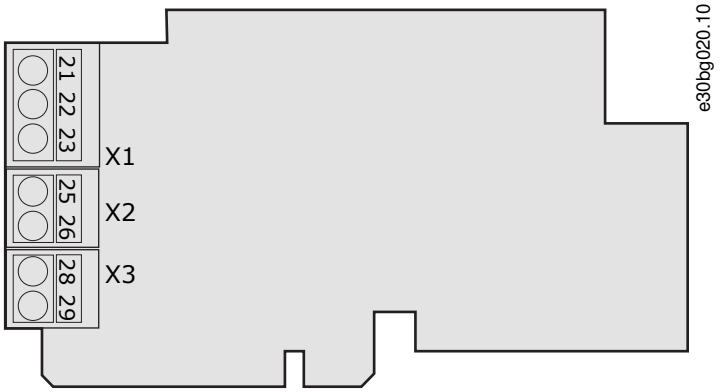

Illustration 52: OPTA3

7.4 Fiber Cable Connections

When optical cables are used to link the power unit and the control board, a special Optical Cable Adapter Board connected to the control board D-connector is used.

The control unit uses 24 V DC supplied from the ASIC board, which is on the left side of the power unit 1.

Each fiber optic cable has a number 1...8 and 11…18 marked on the cable shield at both cable ends. The list of the optic signals can be found in the following figures and table.

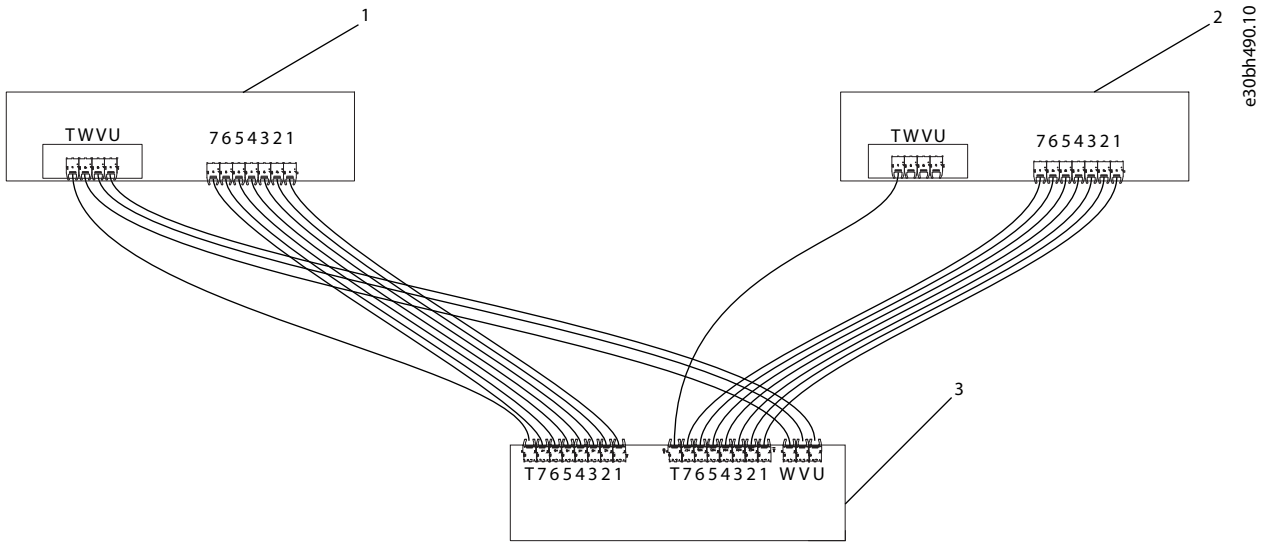

Illustration 53: Connections between the Star-coupler Board, ASIC Boards and Feedback Boards

1	Power unit 1 (ASIC board and Feedback board)	3	Star-coupler board on control unit
2	Power unit 2 (ASIC board and Feedback board)		

Table 23: Terminals on Optical Cable Adapter Board/Star-coupler Board, ASIC Boards and Feedback Boards

Terminal	Description
ASIC board of Power unit 1 / Power unit 2	
1	Gate control enable
2	Phase U control
3	Phase V control
4	Phase W control
5	ADC synchronization
6	VaconBus data from control board to ASIC
7	VaconBus data from ASIC to control board
Feedback board	
T	Trip signal (Power unit 1 / Power unit 2)
U	Feedback phase U (Power unit 1 only)
V	Feedback phase V (Power unit 1 only)
W	Feedback phase W (Power unit 1 only)
Optical fiber board/Star coupler board on control unit	
1	Gate control enable
2	Phase U control

Terminal	Description
3	Phase V control
4	Phase W control
5	ADC synchronization
6	VaconBus data from control board to ASIC
7	VaconBus data from ASIC to control board
T	Trip signal from power unit
U	Feedback phase U
V	Feedback phase V
W	Feedback phase W

7.4.1 Connecting the Optic Fiber Cables

In case the fiber cables are not connected, connect them from the star coupler board to the power module.

⚠ C A U T I O N ⚠

DAMAGE TO THE COMPONENTS FROM INCORRECT CONNECTIONS

Connecting the cables incorrectly damages power electronic components.

- Be careful to connect the fiber optic cables according to instructions.

The maximum length of the optical cable is 8 m.

The minimum bending radius for optical cables is 50 mm.

Procedure

1. To access the ASIC board, see enclosure size specific instructions in Get Access and Locate the terminals section.
2. Connect the supply cable to the X10 connector on the ASIC board and to the X2 connector on the rear side of the control unit. Connect only power unit 1. Power unit 2 is connected to Asic load resistor.

   Terminals X2 and X3 can be in use simultaneously. However, if the +24 V supply from the control I/O terminals (for example, from board OPT-A1) is used, this terminal must be protected with a diode.
3. Connect each cable to the connectors marked with the same number on the ASIC board and on the rear side of the control unit.
4. Connect the 4 fiber cables from the feedback boards to the star coupler board.

5. To prevent damages to the cables, attach the cable bundle at two or more points, at least once at each end.

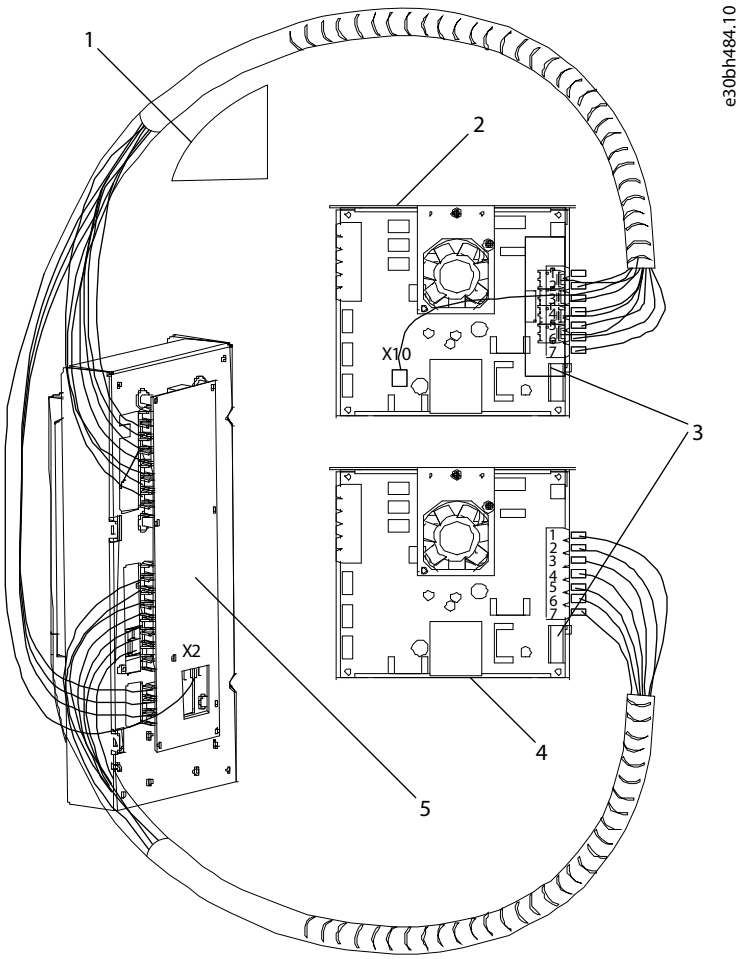

Illustration 54: Fiber Optic Cabling for FR12

1	Minimum bending radius 50 mm	4	Power module 2 ASIC board
2	Power module 1 ASIC board	5	Star-coupler board
3	Feedback board		

7.5 Installation of Option Boards

For information on how to install the option boards, see the option board manual or VACON® NX I/O Boards User Manual.

7.6 Galvanic Isolation Barriers

The control connections are isolated from mains. The GND terminals are permanently connected to I/O ground. See Illustration 55.

The digital inputs on the I/O board are galvanically isolated from the I/O ground (PELV). The relay outputs are also double-isolated from each other at 300 VAC (EN-50178).

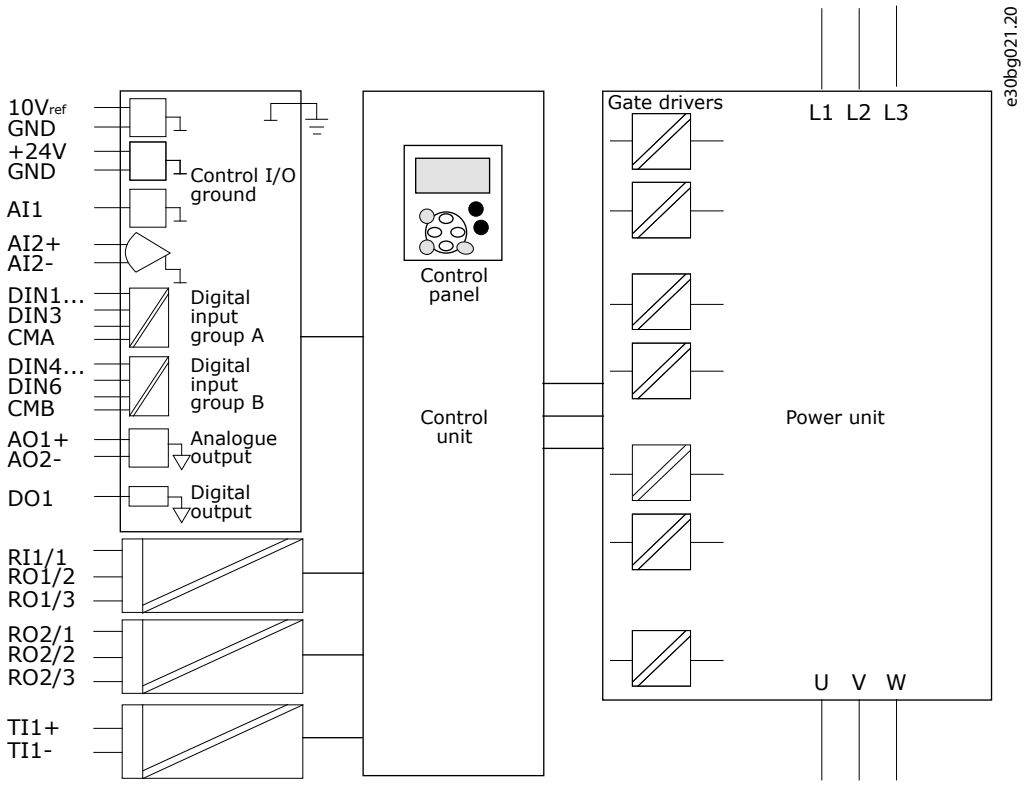

Illustration 55: Galvanic Isolation Barriers

8 Using the Control Panel

8.1 Navigating on the Control Panel

The data of the AC drive is in menus and submenus. Follow these instructions to navigate in the menu structure on the control panel.

Procedure

1. To move between the menus, use the Browser buttons Up and Down on the keypad.
2. To go into a group or an item, push the Menu button Right.

To go back to the previous level, push the Menu button Left.

The display shows the current location in the menu, for example *S6.3.2*. The display also shows the name of the group or item in the current location.

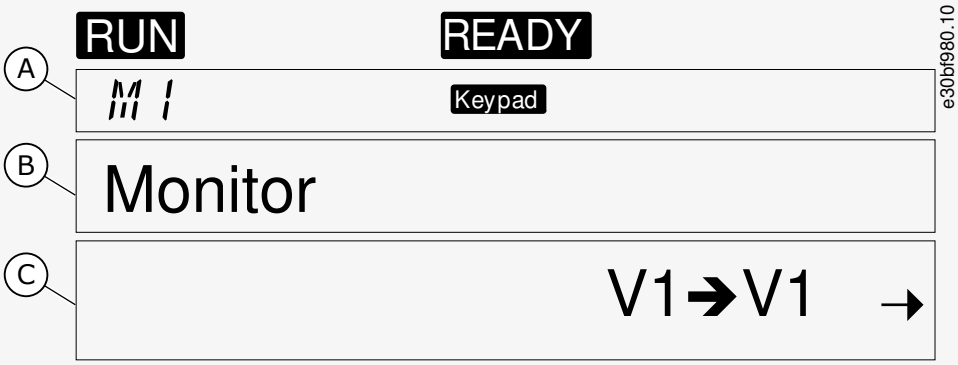

Illustration 56: Navigation Items on the Control Panel

A	The location on the menu	C	The number of items that are available or the item value.
B	The description (name of the page)		

8.2 Using the Monitoring Menu (M1)

Follow these instructions to monitor the actual values of the parameters and signals.

The values cannot be changed in the Monitoring menu. To change the values of parameters, see 8.3.2 Selecting Values or 8.3.3 Editing the Values Digit by Digit.

Procedure

1. To find the Monitoring menu, scroll down in the main menu until the location indication *M1* shows on the first line of the display.

2. To go to the Monitoring menu from the main menu, push the Menu button Right.
3. To scroll through the menu, push the Browser buttons Up and Down.

8.2.1 Monitored Values

The monitored values have the indication V#.#. The values update each 0.3 s.

Index	Monitored value	Unit	ID	Description
V1.1	Output frequency	Hz	1	The output frequency to the motor
V1.2	Frequency reference	Hz	25	The frequency reference to motor control
V1.3	Motor speed	rpm	2	The actual speed of the motor in rpm
V1.4	Motor current	A	3	Measured motor current
V1.5	Motor torque	%	4	The calculated shaft torque
V1.6	Motor power	%	5	The calculated motor shaft power in percentage
V1.7	Motor voltage	V	6	The output voltage to the motor
V1.8	DC link voltage	V	7	The measured voltage in the DC-link of the drive
V1.9	Unit temperature	°C	8	The heat sink temperature in Celsius or Fahrenheit
V1.10	Motor temperature	%	9	The calculated motor temperature in percentage of the nominal temperature. See VACON® All in One Application Manual.
V1.11	Analog input 1	V/mA	13	AI1[1]
V1.12	Analog input 2	V/mA	14	AI2[1]
V1.13	DIN 1, 2, 3	–	15	Shows the status of the digital inputs 1–3
V1.14	DIN 4, 5, 6	–	16	Shows the status of the digital inputs 4–6
V1.15	DO1, RO1, RO2	–	17	Shows the status of the digital and relay outputs 1–3
V1.16	Analog I_{out}	mA	26	AO1
V1.17	Multimonitoring items	–	–	Shows 3 monitored values to select from. See 8.7.6.9 Enabling/Disabling the Change of Multimonitoring Items.

[1] If the AC drive only has +24 V supply (for control board power-up), this value is not reliable.

See VACON® All in One Application Manual for more monitored values.

8.3 Using the Parameter Menu (M2)

8.3.1 Finding the Parameter

Use these instructions to find the parameter to edit.

Procedure

1. To find the Parameter menu, scroll down in the main menu until the location indication *M2* shows on the first line of the display.

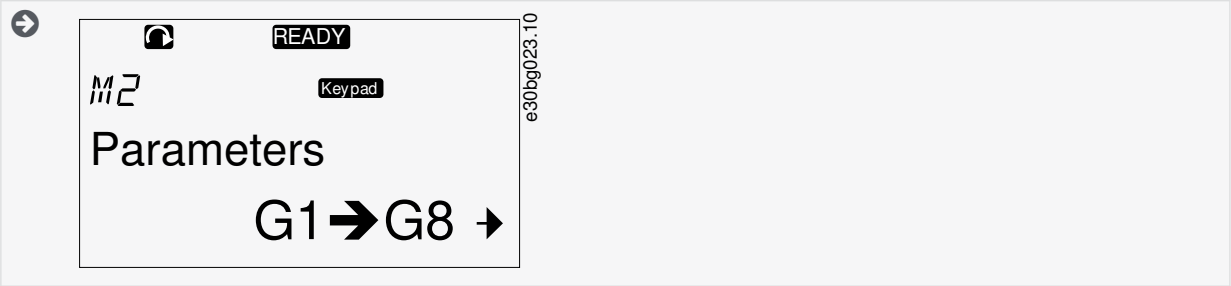

2. Push the Menu button Right to move into the Parameter Group Menu (G#).

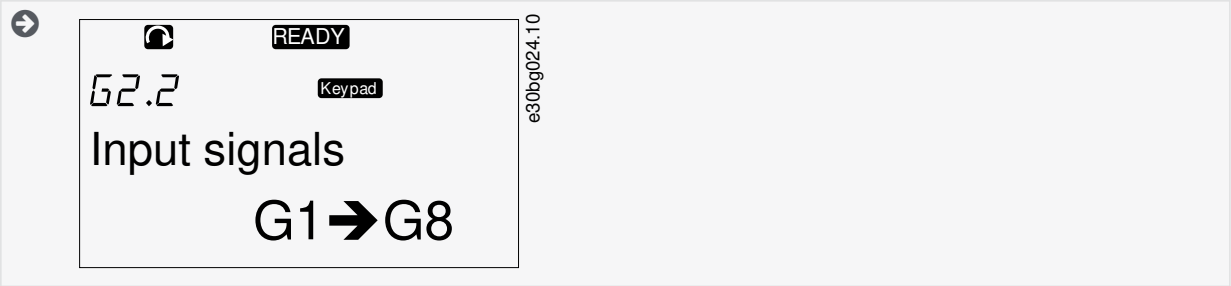

3. To find the parameter group, use the Browser buttons Up and Down.

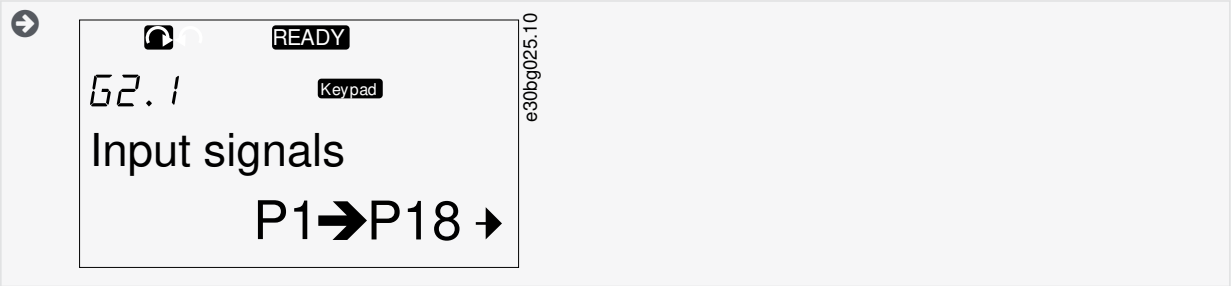

4. Use the Browser buttons Up and Down to find the parameter (P#) to edit. To move directly from the last parameter of a parameter group to the first parameter of that group, push the Browser button Up.

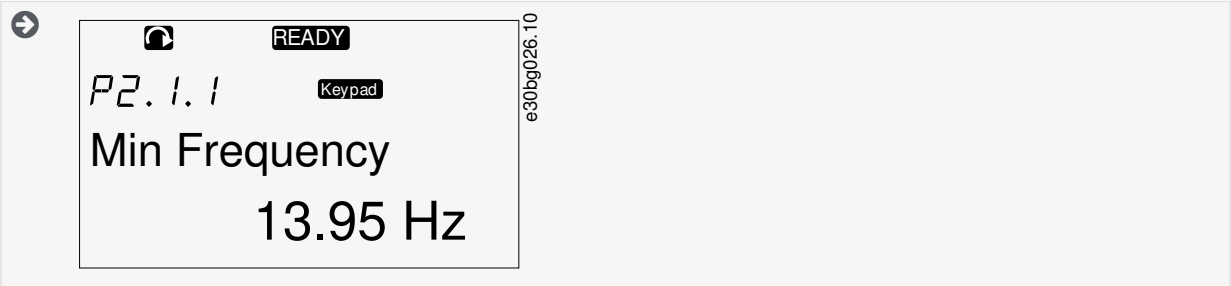

8.3.2 Selecting Values

Use these instructions to edit the text values on the control panel.

The basic application package "All in One+" includes 7 applications with different sets of parameters. For more information, see VACON® All in One Application Manual.

When the drive is in RUN state, many parameters are locked, and cannot be edited. Only the text *Locked* shows on the display. Stop the AC drive to edit these parameters.

Procedure

1. Use the Browser buttons Up and Down to find the parameter (P#) to edit. To move directly from the last parameter of a parameter group to the first parameter of that group, push the Browser button Up.

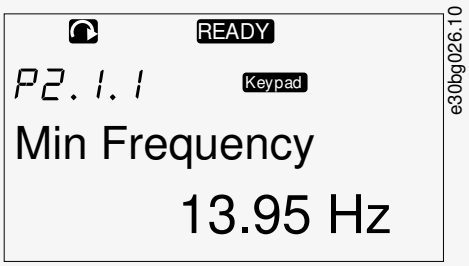

2. To go to the Edit mode, push the Menu button Right. The parameter value starts to blink.

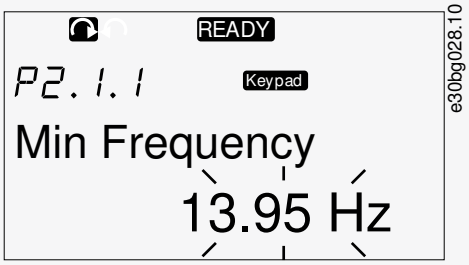

3. Set the new value with the Browser buttons Up and Down.
4. To accept the change, push the [enter] button or ignore the change with menu button Left.

If the [enter] button is pushed, the value stops to blink and the new value shows in the value field.

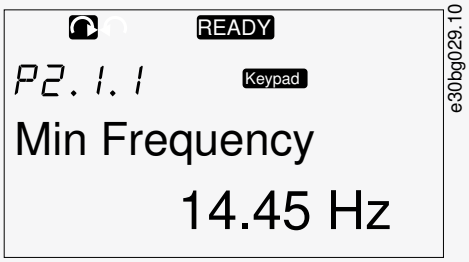

5. For locking the parameter values, use the *Parameter Lock* function in menu *M6*, see 8.7.6.6 Locking a Parameter.

8.3.3 Editing the Values Digit by Digit

Use these instructions to edit the numerical values on the control panel.

The basic application package "All in One+" includes 7 applications with different sets of parameters. For more information, see VACON® All in One Application Manual.

When the drive is in RUN state, many parameters are locked, and cannot be edited. Only the text *Locked* shows on the display. Stop the AC drive to edit these parameters.

Procedure

1. Find the parameter with the Browser and Menu buttons.

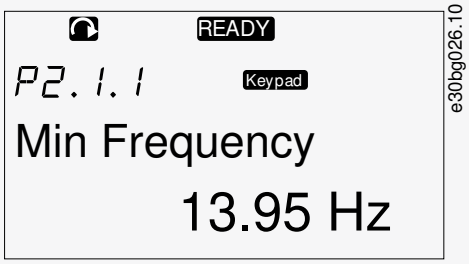

2. To go to the Edit mode, push the Menu button Right. The parameter value starts to blink.

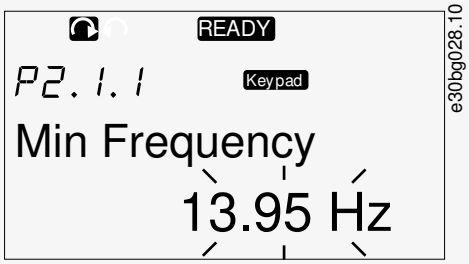

3. Push the Menu button Right. The value can now be edited digit by digit.
4. To accept the change, push the [enter] button.

To ignore the change, push Menu button Left many times, until the view goes back to the parameter list.

If the [enter] button is pushed, the value stops to blink and the new value shows in the value field.

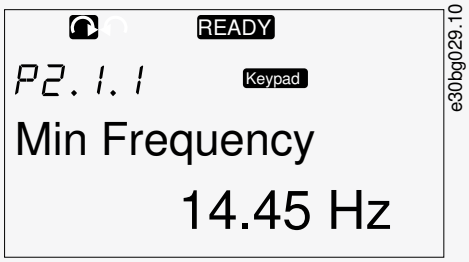

5. For locking the parameter values, use the *Parameter Lock* function in menu *M6*, see 8.7.6.6 Locking a Parameter.

8.4 Using the Keypad Control Menu

8.4.1 Finding the Keypad Control Menu

In the Keypad control menu, the following functions are available: selecting the control mode, editing the frequency reference, and changing the direction of the motor.

Procedure

1. To find the *Keypad control* menu, scroll down in the main menu until the location indication *M3* shows on the first line of the display.

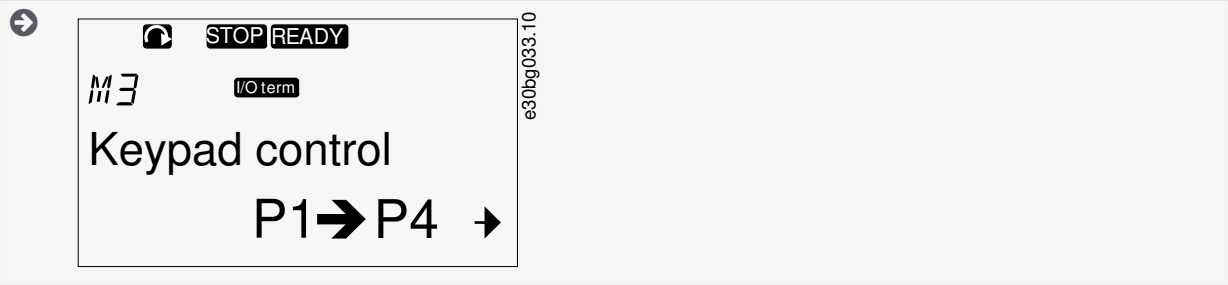

2. To go to the *Keypad control* menu from the main menu, push the Menu button Right.

8.4.2 Keypad Control Parameters M3

Index	Parameter	Min	Max	Unit	Default	Cust	ID	Description
P3.1	Control place	1	3	–	1		125	The control mode 1 = I/0 terminal 2 = Keypad (control panel) 3 = Fieldbus
R3.2	Keypad reference	P2.1.1	P2.1.2	Hz	0.00		123	0 = Forward 1 = Reverse
P3.3	Direction (on keypad)	0	1	–	0		–	–
P3.4	Stop button	0	1	–	1		114	0 = Limited function of Stop button 1 = Stop button always enabled

8.4.3 Changing the Control Mode

3 control modes are available to control the AC drive. For each control place, a different symbol shows on the display:

The control mode	The symbol
I/O terminals	I/O term
Keypad (control panel)	Keypad
Fieldbus	Bus/Comm

Procedure

1. In the *Keypad control* menu (*M3*), find the control mode (*Control Place*) with Menu buttons Up and Down.

2. To go to the edit mode, push the Menu button Right.

   The parameter value starts to blink.

3. To scroll through the options, push the Browser buttons Up and Down.
4. To select the control mode, push the [enter] button.

8.4.4 Keypad Reference

The keypad reference submenu (*P3.2*) shows the frequency reference. In this submenu, also the frequency reference can be edited.

8.4.4.1 Editing the Frequency Reference

Use these instructions to change the frequency reference.

Procedure

1. In the *Keypad control* menu (*M3*), find the Keypad reference with Menu buttons Up and Down.
2. To go to the edit mode, push the Menu button Right. The frequency reference value starts to blink.
3. Set the new value with the Browser buttons.

   The value changes only on the control panel.

4. To make the motor speed to agree with the value on the control panel, select the keypad as the control mode, see 8.4.3 Changing the Control Mode.

8.4.5 Changing the Rotation Direction

The keypad direction submenu shows the rotation direction of the motor. In this submenu, also the rotation direction can be changed.

For more information on how to control the motor with the control panel, see 3.9.2 Keypad and 9.2 Commissioning the AC Drive.

Procedure

1. In the *Keypad control* menu (*M3*), find the Keypad direction with the Menu buttons Up and Down.
2. To go to the edit mode, push the Menu button Right.

3. Select the direction with Menu buttons Up and Down.

   The rotation direction changes on the control panel.

4. To make the motor to agree with the set rotation direction, select the keypad as the control mode, see 8.4.3 Changing the Control Mode.

8.4.6 Disabling the Stop Motor Function

As a default, the motor stops when the Stop button is pushed no matter what is the control mode. Use these instructions to disable this function.

Procedure

1. In the *Keypad control* menu (*M3*), find the page 3.4. Stop button with the Browser buttons.
2. To go to the edit mode, push the Menu button Right.
3. To select Yes or No, use the Browser buttons.
4. Accept the selection with the [enter] button.

   When the Stop motor function is not active, the Stop button stops the motor only when the keypad is the control mode.

8.4.7 Special Functions in Keypad Control Menu

8.4.7.1 Selecting the Keypad as the Control Mode

This is a special function only available in menu M3.

Make sure to be in the menu M3 and control mode is other than keypad.

Procedure

1. Do one of the following options:
   - Keep the Start button pushed down for 3 s when the motor is in RUN state.
   - Keep the Stop button pushed down for 3 s when the motor is stopped.

   In other menu than M3, when the keypad is not the active control mode and the start button is pushed, an error message *Keypad Control NOT ACTIVE* shows. In some applications this error message is not shown.

   The keypad is selected as the control mode and the current frequency reference and direction is copied to the control panel.

8.4.7.2 Copying the Frequency Reference Set to the Control Panel

These are special functions only available in menu M3.

Use these instructions to copy the frequency reference set from I/O or fieldbus to control panel.

Make sure to be in menu M3 and that the control mode is other than keypad.

Procedure

1. Keep the [enter] button pushed down for 3 s.

   In other menu than M3, when the keypad is not the active control mode and the start button is pushed, an error message *Keypad Control NOT ACTIVE* shows.

8.5 Using the Active Faults Menu (M4)

8.5.1 Finding the Active Faults Menu

The Active faults menu shows a list of active faults. When there are no active faults, the menu is empty.

For more information on the fault types and how to reset faults, see 11.1 General Information on Fault Tracing and 11.2 Resetting a Fault. For the fault codes, possible causes and information on how to correct the fault, see the Faults and Alarms section.

Procedure

1. To find the *Active faults* menu, scroll down in the main menu until the location indication *M4* shows on the first line of the display.

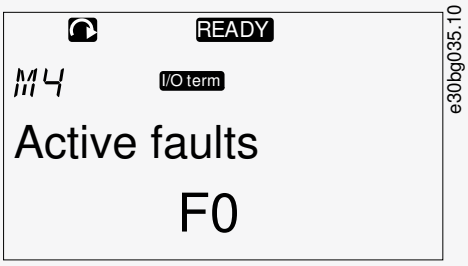

2. To go to the *Active faults* menu from the main menu, push the Menu button Right.

If there is a fault in the display, these symbols show:

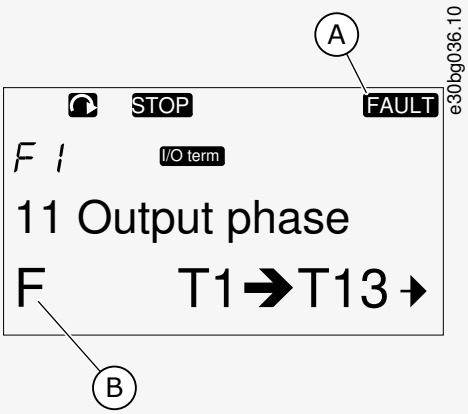

Illustration 57: Fault Symbols

A	Fault symbol
B	Fault type symbol

8.5.2 Examining the Fault Time Data Record

This menu shows some important data that was valid at the time of the fault. This helps to find the cause of the fault.

Procedure

1. Find the fault in *Active faults* menu or *Fault history* menu.
2. Push the Menu button Right.
3. Scroll the data *T.1-T.16* with the Browser buttons.

8.5.3 Fault Time Data Record

The fault time data record shows some important data that was valid at the time of the fault. This helps to find the cause of the fault.

If real time is set on the AC drive, the data items *T1* and *T2* show as in column Real Time Data Record.

In some special cases, some of the fields can show other data than described in the table. If the value of a field differs significantly from the expected value, this special usage can be the reason. Contact the nearest distributor to get help from the factory in understanding the data.

Code	Description	Value	Real Time Data Record
T.1	Counted operation days	d	yyyy-mm-dd
T.2	Counted operation hours	hh:mm:ss (d)	hh:mm:ss,sss
T.3	Output frequency	Hz (hh:mm:ss)	–
T.4	Motor current	A	–
T.5	Motor voltage	V	–
T.6	Motor power	%	–
T.7	Motor torque	%	–
T.8	DC voltage	V	–
T.9	Unit temperature	°C	–
T.10	Run status	–	–
T.11	Direction	–	–
T.12	Warnings	–	–
T.13	0-speed[1]	–	–
T.14	Subcode	–	–
T.15	Module	–	–
T.16	Submodule	–	–

[1] Tells if the drive was at zero speed (< 0.01 Hz) when the fault showed.

8.6 Using the Fault History Menu (M5)

8.6.1 Fault History Menu (M5)

There is a maximum number of 30 faults in the Fault history. The information on each fault shows in the Fault time data record, see 8.5.3 Fault Time Data Record.

The value line of the main page (H1->H#) shows the number of faults in the fault history. The location indication tells in which order the faults have shown. The newest fault has the indication *H5.1*, the second newest *H5.2*, and so on. If there are 30 faults in the history, the next fault that shows removes the oldest one (*H5.30*) from the history.

See the different fault codes in the Faults and Alarms section.

8.6.2 Resetting the Fault History

The Fault History shows 30 latest faults at a time. Use these instructions to reset the history.

Procedure

1. To find the *Fault history* menu, scroll down in the main menu until the location indication *M5* shows on the first line of the display.
2. To go to the *Fault history* menu from the main menu, push the Menu button Right.

3. In the *Fault history* menu, push the [enter] button for 3 s.

The symbol H# changes to *0*.

8.7 Using the System Menu (M6)

8.7.1 Finding the System Menu

The System menu includes the general settings of the AC drive. These are, for example, application selection, parameter sets and information about the hardware and software. The number of submenus and subpages shows as the symbol S# (or P#) on the value line.

Procedure

1. To find the System menu, scroll down in the main menu until the location indication *M6* shows on the first line of the display.
2. To go to the System menu from the main menu, push the Menu button Right.

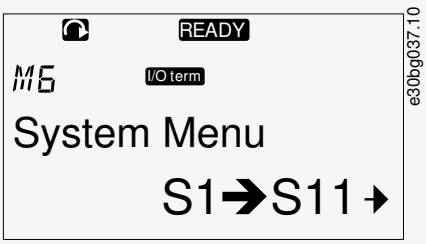

8.7.2 System Menu Functions

Table 24: System Menu Functions

Code	Function	Min	Max	Unit	Default	Cust	Description
S6.1	Language selection	–	–	–	English		The selection is different in all the language packages
S6.2	Application selection	–	–	–	Basic application		Basic application Standard application Local/Remote control appl. Multi-Step application PID Control application Multi-Purpose Control appl. Pump and Fan Control appl.
S6.3	Copy parameters	–	–	–	–		–
S6.3.1	Parameter sets	–	–	–	–		Store set 1 Load set 1 Store set 2 Load set 2 Load factory defaults
S6.3.2	Load up to keypad	–	–	–	–		All parameters
S6.3.3	Load down from keypad	–	–	–	–		All parameters All but motor parameters

Code	Function	Min	Max	Unit	Default	Cust	Description
							Application parameters
P6.3.4	Parameter back-up	–	–	–	Yes		Yes No
S6.4	Compare parameters	–	–	–	–		–
S6.4.1	Set1	–	–	–	Not used		–
S6.4.2	Set 2	–	–	–	Not used		–
S6.4.3	Factory settings	–	–	–	–		–
S6.4.4	Keypad set	–	–	–	–		–
S6.5	Security	–	–	–	–		–
S6.5.1	Password	–	–	–	Not used		0 = Not used
P6.5.2	Parameter lock	–	–	–	Change Ena-bled		Change Enabled Change Disabled
S6.5.3	Start-up wizard	–	–	–	–		No Yes
S6.5.4	Multimonitoring items	–	–	–	–		Change Enabled Change Disabled
S6.6	Keypad settings	–	–	–	–		–
P6.6.1	Default page	–	–	–	–		–
P6.6.2	Default page/ Operating menu	–	–	–	–		–
P6.6.3	Timeout time	0	65535	s	30		–
P6.6.4	Contrast	0	31	–	18		–
P6.6.5	Backlight time	Always	65535	min	10		–
S6.7	Hardware settings	–	–	–	–		–
P6.7.1	Internal brake resistor	–	–	–	Connected		Not connected Connected
P6.7.2	Fan control	–	–	–	Continuous		Continuous Temperature First start Calc temp
P6.7.3	HMI acknowledg. timeout	200	5000	ms	200		–

Code	Function	Min	Max	Unit	Default	Cust	Description
P6.7.4	HMI number of retries	1	10	–	5		–
P6.7.5	Sine filter	–	–	–	Connected		Not connected Connected
S6.8	System information	–	–	–	–		–
S6.8.1	Total counters	–	–	–	–		–
C6.8.1.1	MWh counter	–	–	kWh	–		–
C6.8.1.2	Power On day counter	–	–	–	–		–
C6.8.1.3	Power On hours counter	–	–	hh:mm: ss	–		–
S6.8.2	Trip counters	–	–	–	–		–
T6.8.2.1	MWh counter	–	–	kWh	–		–
T6.8.2.2	Clear MWh trip counter	–	–	–	–		–
T6.8.2.3	Operating days trip counter	–	–	–	–		–
T6.8.2.4	Operating hours trip counter	–	–	hh:mm: ss	–		–
T6.8.2.5	Clear operating time counter	–	–	–	–		–
S6.8.3	Software info	–	–	–	–		–
S6.8.3.1	Software package	–	–	–	–		–
S6.8.3.2	System software version	–	–	–	–		–
S6.8.3.4	System load	–	–	–	–		–
S6.8.4	Applications	–	–	–	–		–
S6.8.4.#	Name of application	–	–	–	–		–
D6.8.4.#. 1	Application ID	–	–	–	–		–
D6.8.4.#. 2	Applications: Version	–	–	–	–		–
D6.8.4.#. 3	Applications: Firmware interface	–	–	–	–		–
S6.8.5	Hardware	–	–	–	–		–
I6.8.5.1	Info: Power unit type code	–	–	–	–		–
I6.8.5.2	Info: Unit voltage	–	–	–	–		–

Code	Function	Min	Max	Unit	Default	Cust	Description
I6.8.5.3	Info: Brake chopper	–	–	–	–		–
I6.8.5.4	Info: Brake resistor	–	–	–	–		–
S6.8.6	Expander boards	–	–	–	–		–
S6.8.7	Debug menu	–	–	–	–		For Application programming only. Speak to the factory to get instructions.

8.7.3 Changing the Language

Use these instructions to change the language of the control panel. The possible languages are different in all language packages.

Procedure

1. In the *System* menu (*M6*), find the *Language* selection page (*S6.1*) with the Browser buttons.
2. To go to the edit mode, push the Menu button Right.

   The name of the language starts to blink.

3. To select the language for the control panel texts, use the Menu buttons Up and Down.
4. To accept the selection, push the [enter] button.

   The name of the languages stops to blink and all text information on the control panel shows in the selected language.

8.7.4 Changing the Application

The application can be changed in the *Application* selection page (*S6.2*). When the application is changed, all parameters are reset.

For more information on the Application Package, see VACON® NX All in One Application Manual.

Procedure

1. In the *System* menu (*M6*), find the Application selection page (*S6.2*, *Application*) with the Browser buttons.
2. Push the Menu button Right.
3. To go to the edit mode, push the Menu button Right.

   The name of the application starts to blink.

4. Scroll through the applications with the Browser buttons and select a different application.
5. To accept the selection, push the [enter] button.

   The AC drive starts again and goes through the set-up.

6. When the display shows the question *Copy parameters?*, there are 2 options:

   This question shows only if the parameter *P6.3.4 Parameter back-up* is set to *Yes*.

   - To upload the parameters of the new application to the control panel, select *Yes* with the Browser buttons.
   - To keep the parameters of the application that was last used in the control panel, select *No* with the Browser buttons.

8.7.5 Copy Parameters (S6.3)

Use this function to copy parameters from one AC drive to a different AC drive or to save parameter sets in the internal memory of the AC drive.

Stop the AC drive before copying or downloading parameters.

8.7.5.1 Saving Parameter Sets (Parameter Sets S6.3.1)

Use this function to get the factory default values back or save 1–2 customized parameter sets. A parameter set includes all parameters of the application.

Procedure

1. In the Copy parameters (*S6.3*) subpage, find the *Parameter sets* (*S6.3.1*) with the Browser buttons.
2. Push the Menu button Right.
3. To go to the edit mode, push the Menu button Right.

   The text *LoadFactDef* starts to blink.

4. There are 5 options to select from. Select the function with the Browser buttons.
   - Select *LoadFactDef* to download again the factory default values.
   - Select *Store set 1* to save actual values of all parameters as set 1.
   - Select *Load set 1* to download the values in set 1 as the actual values.
   - Select *Store set 2* to save actual values of all parameters as set 2.
   - Select *Load set 2* to download the values in set 2 as the actual values.
5. To accept the selection, push the [enter] button.
6. Wait until *OK* shows on the display.

8.7.5.2 Uploading Parameters to Control Panel (Up To Keypad, S6.3.2)

Use this function to upload all parameter groups to the control panel when the AC drive is stopped.

Procedure

1. In the Copy parameters (*S6.3*) subpage, find the *Up to keypad* page (*S6.3.2*).
2. Push the Menu button Right.
3. To go to the edit mode, push the Menu button Right.

   All param. starts to blink.

4. To accept the selection, push the [enter] button.
5. Wait until *OK* shows on the display.

8.7.5.3 Downloading Parameters to Drive (Down From Keypad, S6.3.3)

Use this function to download 1 or all parameter groups from the control panel to an AC drive when the AC drive is stopped.

Procedure

1. In the Copy parameters (*S6.3*) subpage, find the *Down from keypad* page (*S6.3.3*).
2. Push the Menu button Right.
3. To go to the edit mode, push the Menu button Right.
4. Use the Browser buttons to select 1 of these 3 options:
   - All parameters (*All param.*)
   - All parameters but the motor nominal value parameters (*All. no motor*)
   - Application parameters
5. To accept the selection, push the [enter] button.
6. Wait until *OK* shows on the display.

8.7.5.4 Activating or Deactivating the Automatic Parameter Back-up (P6.3.4)

Use these instructions to activate or deactivate the parameter back-up.

When the application is changed, the parameters in the parameter settings on page S6.3.1 are deleted. To copy parameters from one application to a different application, first upload them to the control panel.

Procedure

1. In the Copy parameters (*S6.3*) subpage, find the Automatic parameter back-up page (*S6.3.4*).
2. To go to the edit mode, push the Menu button Right.
3. There are 2 options:
   - To activate the Automatic parameter back-up, select *Yes* with the Browser buttons.
   - To deactivate the Automatic parameter back-up, select *No* with the Browser buttons.

When the Automatic parameter back-up is active, the control panel makes a copy of the parameters of the application. Each time a parameter is changed, the keypad back-up is automatically updated.

8.7.5.5 Comparing the Parameters

Use the Parameter comparison submenu (*S6.4*, *Param.Comparison*) to compare the actual parameter values to the values of the customized parameter sets and those uploaded to the control panel. The actual values can be compared to Set 1, Set 2, Factory Settings, and Keypad Set.

Procedure

1. In the Copy parameters (*S6.3*) subpage, find the Comparing parameters submenu with the Browser buttons.
2. Push the Menu button Right.

   The actual parameter values are first compared to those of the customized parameter Set 1. If no differences are found, *0* shows on the bottom line. If there are differences, the display shows the number of the differences (for example, *P1->P5* = 5 different values).

3. To compare the values to a different set, use the Browser buttons.
4. To go to the page with the parameter values, push the Menu button Right.

   In the display that opens, check the values on different lines:

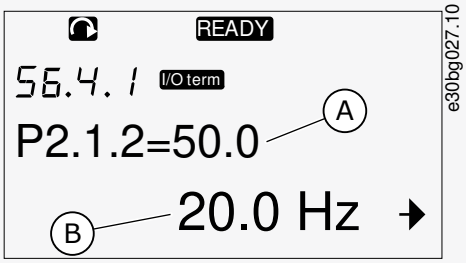

Illustration 58: Parameter Values in Parameter Comparison

A	Value of the selected set
B	Actual value

5. To go to the edit mode, push the Menu button Right.

   The actual value starts to blink.

6. To change the actual value, use the Browser buttons, or change the value digit by digit with the Menu button Right.

8.7.6 Security

8.7.6.1 Finding the Security Menu

The Security menu is password protected. Use it to handle passwords, start-up wizards, and multimonitoring items, and to lock parameters.

Procedure

1. To find the *Security* submenu, scroll down in the *System* menu until the location indication *S6.5* shows on the first line of the display.
2. To go to the *Security* submenu from the *System* menu, push the Menu button Right.

8.7.6.2 Passwords

To prevent unauthorized changes in the application selection, use the Password function (*S6.5.1*). By default, the password is not active.

NOTICE

Keep the password in a safe location!

8.7.6.3 Setting a Password

Set a password to protect the application selection menu.

NOTICE

Keep the password in a safe location! The password cannot be changed if a valid password is not available.

Procedure

1. In *Security* submenu, push the Menu button Right.
2. To go to the edit mode, push the Menu button Right.

   The display shows *0* that blinks.

3. There are 2 options to set a password: with the Browser buttons or by digits. The password can be a number between 1 and 65535.
   - With the Browser buttons: Push the Browser buttons Up and Down to find a number.
   - By digits: Push the Menu button Right. A second *0* shows on the display.

     Push the Browser buttons to set digit on the right.

     Push the Menu button Left, and set the digit on the left.

     To add a third digit, push the Menu button Left. Set up to 5 digits with Menu and Browser buttons and set the digit for each one with the Browser buttons.
4. To accept the new password, push the [enter] button.

The password activates after the Timeout time (P6.6.3) (see 8.7.7.4 Setting the Timeout Time).

8.7.6.4 Entering a Password

In a password-protected submenu, the display shows *Password?* Use these instructions to enter the password.

Procedure

1. When the display shows *Password?*, give the password with the Browser buttons.

8.7.6.5 Deactivating the Password Function

Use these instructions to deactivate the password protection for application selection menu.

Procedure

1. Find the *Password* (*S6.5.1*) in the *Security* menu with the Browser buttons.
2. To go to the edit mode, push the Menu button Right.
3. Set value *0* for the password.

8.7.6.6 Locking a Parameter

Use the Parameter lock function to prevent changes to the parameters. If the parameter lock is active, the text *locked* shows on the display when trying to edit a parameter value.

NOTICE

This function does not prevent unauthorized changes of parameter values.

Procedure

1. In the *Security* menu (*M6*), find the Parameter lock (*P6.5.2*) with the Browser buttons.
2. To go to the edit mode, push the Menu button Right.

3. To change the parameter lock status, use the Browser buttons.
4. To accept the change, push the [enter] button.

8.7.6.7 Start-up Wizard (P6.5.3)

The start-up wizard helps in the commissioning of the AC drive. By default, the start-up wizard is active.
In the start-up wizard, this information is set:

- the language
- the application
- the values for a set of parameters that are same to all applications
- the values for a set of application-specific parameters.

The table lists the functions of the keypad buttons in the start-up wizard.

Action	Button
Accepting a value	[enter] button
Scrolling for options	Browser buttons Up and Down
Changing a value	Browser buttons Up and Down

8.7.6.8 Activating/Deactivating the Start-up Wizard

Use these instructions to activate or deactivate the Start-up Wizard function.

Procedure

1. In the *System* menu (*M6*), find the page *P6.5.3*.
2. To go to the edit mode, push the Menu button Right.
3. Select the action:
   - To activate the start-up wizard, select *Yes* with the Browser buttons.
   - To deactivate the start-up wizard, select *No* with the Browser buttons.
4. To accept the selection, push the [enter] button.

8.7.6.9 Enabling/Disabling the Change of Multimonitoring Items

Use Multimonitoring to monitor up to 3 actual values at the same time (see 8.2 Using the Monitoring Menu (M1) and the chapter Monitored values in the Application Manual of your application).

Use these instructions to enable the change when changing the values that are monitored with other values.

Procedure

1. In the *Security* submenu, find Multimonitoring items page (*P6.5.4*, *Multimon. items*) with the Browser buttons.
2. To go to the edit mode, push the Menu button Right.

   Change Enabled starts to blink.

3. Use Browser buttons Up and Down to select *Change Enabled* or *Change Disabled*.
4. Accept the selection with the [enter] button.

8.7.7 Keypad Settings

8.7.7.1 Finding the Keypad Settings Menu

Use the Keypad settings submenu in the System menu for making changes in the control panel.

In the submenu, there are 5 pages (P#) that control the panel operation:

- *Default page* (*P6.6.1*)
- *Default page/Operating menu* (*P6.6.2*)
- *Timeout time* (*P6.6.3*)
- *Contrast adjustment* (*P6.6.4*)
- *Backlight time* (*P6.6.5*)

Procedure

1. In the *System* menu (*M6*), find the *Keypad settings* submenu (*S6.6*) with the Browser buttons.

8.7.7.2 Changing the Default Page

Use the Default page to set the location (page) to which the display automatically moves after the Timeout time or after the panel is set on.

For more information on the timeout time, see 8.7.7.4 Setting the Timeout Time.

If the Default Page value is 0, the function is not activated. When the Default page is not used, the control panel shows the page that was last showed on the display.

Procedure

1. In the *Keypad settings* submenu, find the *Default page* subpage (*P6.6.1*) with the Browser buttons.
2. To go to the edit mode, push the Menu button Right.
3. To change the number of the main menu, use the Browser buttons.
4. To edit the number of the submenu/page, push the Menu button Right. Change the number of the submenu/page with the Browser buttons.
5. To edit the third level page number, push the Menu button Right. Change the number of the third level page with the Browser buttons.
6. To accept the new default page value, push the [enter] button.

8.7.7.3 Default Page in the Operating Menu (P6.6.2)

Use this submenu to set the default page in the Operating menu. The display automatically moves to the set page after the Timeout time (see 8.7.7.4 Setting the Timeout Time) or after the control panel is set on. For instructions, see 8.7.7.2 Changing the Default Page.

The Operating menu is only available in special applications.

8.7.7.4 Setting the Timeout Time

The Timeout time sets the time after which the control panel display goes back to the *Default page* (*P6.6.1*), see 8.7.7.2 Changing the Default Page.

If the Default page value is 0, the Timeout time setting has no effect.

Procedure

1. In the *Keypad settings* submenu, find the *Timeout time* subpage (*P6.6.3*) with the Browser buttons.
2. To go to the Edit mode, push the Menu button Right.
3. To set the timeout time, use the Browser buttons.
4. To accept the change, push the [enter] button.

8.7.7.5 Contrast Adjustment (P6.6.4)

If the display is not clear, adjust its contrast with the same procedure as the one for the timeout time setting, see 8.7.7.4 Setting the Timeout Time.

8.7.7.6 Backlight Time (P6.6.5)

It is possible to set the time that the backlight stays on until it goes off. Select a value between 1 and 65535 minutes or *Forever*. For instructions on how to change the value, see 8.7.7.4 Setting the Timeout Time.

8.7.8 Hardware Settings

8.7.8.1 Finding the Hardware Setting Menu

Use the Hardware settings submenu (*S6.7*, *HW settings*) in the *System* menu to control these functions of the hardware in the AC drive:

- Internal brake resistor connection, *InternBrakeRes*
- *Fan control*
- HMI acknowledge timeout, *HMI ACK timeout*
- *HMI retry*
- Sine filter
- Pre-charge mode.

Use a password to go the Hardware settings submenu, see 8.7.6.2 Passwords.

Procedure

1. To find the Hardware settings submenu, scroll down in the *System* menu until the location indication *S6.7* shows on the first line of the display.
2. To go to the Hardware settings submenu from the *System* menu, push the Menu button Right.

8.7.8.2 Setting the Internal Brake Resistor Connection

Use this function to tell the AC drive if the internal brake resistor is connected or not.

If the AC drive has an internal brake resistor, the default value of this parameter is *Connected*. We recommend changing this value to *Not conn.* if:

- it is necessary to install an external brake resistor to increase the braking capacity
- the internal brake resistor is disconnected for some reason.

The brake resistor is available as optional equipment for all sizes. It can be installed internally in enclosure sizes FR4 to FR6.

Procedure

1. In the Hardware settings submenu, find the Internal brake resistor connection (*P6.7.1*) subpage with the Browser buttons.
2. To go to the edit mode, push the Menu button Right.
3. To change the internal brake resistor status, use the Browser buttons.
4. To accept the change, push the [enter] button.

8.7.8.3 Fan Control

Use this function to control the cooling fan of the AC drive. There are 4 options to select from:

- *Continuous* (default setting). The fan is always on when the power is on.
- *Temperature*. The fan starts automatically when the heat sink temperature goes to 60 °C (140 °F) or when the AC drive operates. The fan stops about a minute after one of the following:
  - the heat sink temperature falls to 55 °C (131 °F)
  - the AC drive stops
  - the fan control value is changed from *Continuous* to *Temperature*
- *First start*. When power is on, the fan is in the stop state. When the AC drive gets the first start command, the fan starts.
- *Calc temp*. The fan function agrees to the calculated IGBT temperature:
  - If the IGBT temperature is more than 40 °C (104 °F), the fan starts.
  - If the IGBT temperature is below 30 °C (86 °F), the fan stops.

As the default temperature at power-up is 25 °C (77 °F), the fan does not start immediately.

For instructions, see 8.7.8.4 Changing the Fan Control Settings.

8.7.8.4 Changing the Fan Control Settings

Use these instructions to change the Fan Control Settings.

Procedure

1. In the Hardware settings submenu, find the *Fan control* settings (*P6.7.2*) with the Browser buttons.
2. To go to the edit mode, push the Menu button Right.

   The parameter value starts to blink.

3. To select the fan mode, use the Browser buttons.
4. To accept the change, push the [enter] button.

8.7.8.5 HMI Acknowledge Timeout (P6.7.3)

Use this function to change the timeout of the HMI acknowledgement time. Use this function when there is more delay in the RS232 transmission, for example, when internet connection is used for communication over longer distances.

If the AC drive is connected to the PC with a cable, do not change the default values of parameters P6.7.3 and P6.7.4 (200 and 5).

If the AC drive is connected to the PC with an internet connection and the messages are transferred with a delay, set the values for parameter P6.7.3 to agree these delays.

For instructions, see 8.7.8.6 Changing the HMI Acknowledge Timeout.

Example

For example, if the transfer delay between the AC drive and the PC is 600 ms, make these settings:

- Set the value of parameter P6.7.3 to 1200 ms (2 x 600, sending delay + receiving delay)
- Set the [Misc]-part of the file NCDrive.ini to agree with the settings:
  - Retries = 5
  - AckTimeOut = 1200
  - TimeOut = 6000

Do not use intervals shorter than the AckTimeOut-time in the NC-Drive monitoring.

8.7.8.6 Changing the HMI Acknowledge Timeout

Use these instructions to change the HMI Acknowledge Timeout.

Procedure

1. In the Hardware settings submenu, find the HMI acknowledgement time (*HMI ACK timeout*) with the Browser buttons.
2. To go to the edit mode, push the Menu button Right.
3. To change the acknowledgement time, use the Browser buttons.
4. To accept the change, push the [enter] button.

8.7.8.7 Changing the Number of Retries to Receive HMI Acknowledgement (P6.7.4)

Use this parameter to set the number of times the AC drive tries to receive acknowledgement if it does not receive it during the acknowledgement time (P6.7.3) or if the received acknowledgement is defective.

Procedure

1. In the Hardware settings submenu, find the Number of retries to receive HMI acknowledgement (*P6.7.4*) with the Browser buttons.
2. To go to the edit mode, push the Menu button Right. The value starts to blink.
3. To change the number of retries, use the Browser buttons.
4. To accept the change, push the [enter] button.

8.7.8.8 Sine Filter (P6.7.5)

When using an old motor or a motor that was not made to be used with an AC drive, it can be necessary to use a sine filter. A sine filter makes the sine form of the voltage better than a dU/dt filter.

If a sine filter is used in the AC drive, set this parameter to *Connected* to put it into operation.

8.7.8.9 Pre-charge Mode (P6.7.6)

For an FI9 or a larger inverter unit, select *Ext.ChSwitch* to control an external charge switch.

8.7.9 System Info

8.7.9.1 Finding the System Info Menu

The *System info* submenu (*S6.8*) contains information on the hardware, software, and operation of the AC drive.

Procedure

1. To find the *System info* submenu, scroll down in the *System* menu until the location indication *S6.8* shows on the first line of the display.
2. To go to the *System info* submenu from the *System* menu, push the Menu button Right.

8.7.9.2 Total Counters (S6.8.1)

The *Total counters* page (*S6.8.1*) has information on the AC drive operation times. The counters show the total number of MWh, operation days, and operation hours. The Total counters cannot be reset.

The Power On time counter (days and hours) always counts, when the AC power is on. The counter does not count when control unit runs on +24 V only.

Table 25: Total Counters

Page	Counter	Example
C6.8.1.1.	MWh counter	
C6.8.1.2.	Power On day counter	Value on display is 1.013. The drive has operated for 1 year and 13 days.
C6.8.1.3	Power On hour counter	Value on display is 7:05:16. The drive has operated for 7 hours 5 minutes and 16 s.

8.7.9.3 Trip Counters (S6.8.2)

The *Trip counters* page (*S6.8.2*) has information on resettable counters, that is, counters, for which the value can be set back to *0*. The trip counters count only when the motor is in RUN state.

Table 26: Trip Counters

Page	Counter	Example
T6.8.2.1	MWh counter	–
T6.8.2.3	Operation day counter	Value on display is 1.013. The drive has operated for 1 year and 13 days.
T6.8.2.4	Operation hour counter	Value on display is 7:05:16. The drive has operated for 7 hours 5 minutes and 16 s.

8.7.9.4 Resetting the Trip Counters

Use these instructions to reset the trip counters.

Procedure

1. In the *System info* submenu, find the *Trip counters* page (*6.8.2*) with the Browser buttons.
2. To go to the Clear MWh counter page (*6.8.2.2*, *Clr MWh cntr*) or to the Clear Operation time counter page (*6.8.2.5*, *Clr Optime cntr*), use the Menu button Right.
3. To go to the edit mode, push the Menu button Right.
4. To select Reset, push Browser buttons Up and Down.
5. To accept the selection, push the [enter] button.
6. The display shows again *Not reset*.

8.7.9.5 Software (S6.8.3)

The Software information page includes information on the AC drive software.

Page	Content
6.8.3.1	Software package
6.8.3.2	System software version
6.8.3.3	Firmware interface
6.8.3.4	System load

8.7.9.6 Applications (S6.8.4)

The *Applications* submenu (*S6.8.4*) contains information on all applications on the AC drive.

Page	Content
6.8.4.#	Name of application
6.8.4.#.1	Application ID
6.8.4.#.2	Version
6.8.4.#.3	Firmware interface

8.7.9.7 Examining the Application Page

Use these instructions to examine the *Applications* pages.

Procedure

1. In the *System info* submenu, find the *Applications* page with the Browser buttons.
2. To go to the *Applications* page, push the Menu button Right.
3. To select the application, use the Browser buttons. There are as many pages as there are applications on the AC drive.
4. To go to the Information pages, use the Menu button Right.
5. To see the different pages, use the Browser buttons.

8.7.9.8 Hardware (S6.8.5)

The Hardware information page includes information on the AC drive hardware.

Page	Content
6.8.5.1	Power unit type code
6.8.5.2	Nominal voltage of the unit
6.8.5.3	Brake chopper
6.8.5.4	Brake resistor
6.8.5.5	Serial number

8.7.9.9 Checking the Status of an Option Board

The *Expander boards* pages give information about the basic and option boards connected to the control board. See 7.1 Control Unit Components for more information on the boards.

For more information on the parameters of the option boards, see 8.8.1 Expander Board Menu.

Procedure

1. In the *System info* submenu, find the *Expander boards* page (*6.8.6*) with the Browser buttons.
2. To go to the *Expander boards* page, push the Menu button Right.
3. To select the board, use the Browser buttons.

> If no board is connected to the slot, the display shows *no board*.
> If a board is connected to a slot but there is no connection, the display shows *no conn.*.

4. To see the status of the board, push the Menu button Right.
5. To see the program version of the board, push the Browser button Up or Down.

8.7.9.10 Debug Menu (S6.8.7)

The Debug menu is for advanced users and application designers. Speak to the factory to get instructions, if it is necessary.

8.8 Using the Expander Board Menu

8.8.1 Expander Board Menu

The *Expander board* menu, that is, the menu for option board information, allows to:

- see which option boards are connected to the control board
- find and edit the option board parameters.

Table 27: Option Board Parameters (Board OPTA1)

Page	Parameter	Min	Max	Default	Cust	Selections
P7.1.1.1	AI1 mode	1	5	3		1 = 0–20 mA 2 = 4–20 mA 3 = 0–10 V 4 = 2–10 V 5 = –10…+10 V
P7.1.1.2	AI2 mode	1	5	1		See P7.1.1.1
P7.1.1.3	AO1 mode	1	4	1		1 = 0–20 mA 2 = 4–20 mA 3 = 0–10 V 4 = 2–10 V

8.8.2 Examining the Connected Option Boards

Use these instructions to examine the connected option boards.

Procedure

1. To find the *Expander board* menu, scroll down in the main menu until the location indication *M7* shows on the first line of the display.
2. To go to the *Expander board* menu from the main menu, push the Menu button Right.
3. To examine the list of connected option boards, use the Browser buttons Up and Down.
4. To see the information on the option board, push the Menu button Right.

8.8.3 Finding the Option Board Parameters

Use these instructions to check the values of the option board parameters.

Procedure

1. Find the option board with the Browser and Menu buttons in the *Expander Board Menu*.
2. To see the information on the option board, push the Menu button Right. For instructions on how to examine the connected option boards, see 8.8.2 Examining the Connected Option Boards.
3. To scroll to the Parameters use the Browser buttons Up and Down.
4. To examine the parameter list, push the Menu button Right.
5. To scroll through the parameters, use the Browser buttons Up and Down.
6. To go to the edit mode, push the Menu button Right. For instructions on how to edit the parameter values, see 8.3.2 Selecting Values and 8.3.3 Editing the Values Digit by Digit.

8.9 Further Control Panel Functions

The VACON® NX control panel has more application-related functions. See VACON® NX Application Package for more information.

9 Commissioning

9.1 Safety Checks before Starting the Commissioning

Before starting the commissioning, read these warnings.

⚠ D A N G E R ⚠

SHOCK HAZARD FROM POWER UNIT COMPONENTS

The power unit components are live when the drive is connected to mains. A contact with this voltage can lead to death or serious injury.

- Do not touch the components of the power unit when the drive is connected to mains. Before connecting the drive to mains, make sure that the covers of the drive are closed.

⚠ D A N G E R ⚠

SHOCK HAZARD FROM TERMINALS

The motor terminals U, V, W, the brake resistor terminals, or the DC terminals are live when the drive is connected to mains, also when the motor does not operate. A contact with this voltage can lead to death or serious injury.

- Do not touch the motor terminals U, V, W, the brake resistor terminals, or the DC terminals when the drive is connected to mains. Before connecting the drive to mains, make sure that the covers of the drive are closed.

⚠ D A N G E R ⚠

SHOCK HAZARD FROM DC LINK OR EXTERNAL SOURCE

The terminal connections and the components of the drive can be live 5 minutes after the drive is disconnected from the mains and the motor has stopped. Also the load side of the drive can generate voltage. A contact with this voltage can lead to death or serious injury.

- Before doing electrical work on the drive:
  Disconnect the drive from the mains and make sure that the motor has stopped.
  Lock out and tag out the power source to the drive.
  Make sure that no external source generates unintended voltage during work.
  Wait 5 minutes before opening the cabinet door or the cover of the AC drive.
  Use a measuring device to make sure that there is no voltage.

⚠ W A R N I N G ⚠

SHOCK HAZARD FROM CONTROL TERMINALS

The control terminals can have a dangerous voltage also when the drive is disconnected from mains. A contact with this voltage can lead to injury.

- Make sure that there is no voltage in the control terminals before touching the control terminals.

9.2 Commissioning the AC Drive

Follow these instructions to commission the AC drive.

Read the safety instructions in 2.2 Danger and Warnings and 9.1 Safety Checks before Starting the Commissioning and obey them.

Procedure

1. Make sure that the motor is installed correctly.
2. Make sure that the motor is not connected to mains.
3. Make sure that the AC drive and the motor are grounded.

4. Make sure to select the mains cable, the brake cable, and the motor cable correctly.

   For information on cable selections, see:
   - 6.1.3 Cable Selection and Dimensioning and related tables
   - 6.1 Cable Connections
   - 6.2 EMC-compliant Installation

5. Make sure that the control cables are sufficiently far from the power cables. See 6.11.1 Additional Instructions for Cable Installation
6. Make sure that the shields of the shielded cables are connected to a grounding terminal that is identified with the grounding symbol.
7. Do a check of the tightening torques of all the terminals.
8. Make sure that no power correction capacitors are connected to the motor cable.
9. Make sure that the cables do not touch the electrical components of the drive.
10. Make sure that the common input +24 V is connected to an external power source and the ground of the digital input is connected to ground of the control terminal.
11. Do a check of the quality and quantity of the cooling air.

    For further information on cooling requirements, see:
    - 5.2 Cooling Requirements
    - 12.8 VACON® NXC Technical Data

12. Make sure that there is no condensation on the surfaces of the AC drive.
13. Make sure that there are no unwanted objects in the installation space.
14. Before connecting the drive to mains, do a check of the installation and the condition of all the fuses (see 12.3 Cable and Fuse Sizes) and other protective devices.

9.3 Measuring the Cable and Motor Insulation

Do these checks if necessary.

NOTE! AC drive is already measured at the factory.

- The insulation checks of the motor cable, see 9.3.1 Insulation Checks of the Motor Cable
- The insulation checks of the mains cable, see 9.3.2 Insulation Checks of the Mains Cable
- The insulation checks of the motor, see 9.3.3 Insulation Checks of the Motor

9.3.1 Insulation Checks of the Motor Cable

Use these instructions to check the insulation of the motor cable.

Procedure

1. Disconnect the motor cable from the terminals U, V, and W and from the motor.
2. Measure the insulation resistance of the motor cable between phase conductors 1 and 2, between phase conductors 1 and 3, and between phase conductors 2 and 3.
3. Measure the insulation resistance between each phase conductor and the grounding conductor.
4. The insulation resistance must be >1 MΩ at the ambient temperature of 20 °C (68 °F).

9.3.2 Insulation Checks of the Mains Cable

Use these instructions to check the insulation of the mains cable.

Procedure

1. Disconnect the mains cable from the terminals L1, L2, and L3 and from mains.
2. Measure the insulation resistance of the mains cable between phase conductors 1 and 2, between phase conductors 1 and 3, and between phase conductors 2 and 3.
3. Measure the insulation resistance between each phase conductor and the grounding conductor.
4. The insulation resistance must be >1 MΩ at the ambient temperature of 20 °C (68 °F).

9.3.3 Insulation Checks of the Motor

Use these instructions to check the insulation of the motor.

NOTICE

Obey the instructions of the motor manufacturer.

Procedure

1. Disconnect the motor cable from the motor.
2. Open the bridging connections in the motor connection box.
3. Measure the insulation resistance of each motor winding. The voltage must be the same or higher than the motor nominal voltage, but at least 1000 V.
4. The insulation resistance must be >1 MΩ at the ambient temperature of 20 °C (68 °F).
5. Connect the motor cables to the motor.
6. Do the final insulation check on the drive side. Put all phases together and measure to the ground.
7. Connect the motor cables to the drive.

9.4 Checks after Commissioning

9.4.1 Testing the AC Drive after Commissioning

Before starting the motor, do these checks.

- Before the tests, make sure that it is safe to do each test.
- Make sure that the other workers near know about the tests.

Procedure

1. Make sure that all the START and STOP switches that are connected to the control terminals are in the STOP position.
2. Make sure that the motor can be started safely.
3. Set the parameters of group 1 (see VACON® NX All in One Application Manual) to agree with the requirements of the used application. To find the necessary values for the parameters, see the motor nameplate.
   Set these parameters at a minimum:
   - Motor nominal voltage
   - Motor nominal frequency
   - Motor nominal speed
   - Motor nominal current
   - Motor cos phi
4. Set the maximum frequency reference (that is, the maximum speed of the motor) to agree with the motor and the device that is connected to the motor.
5. Do the following tests in this order:
   - **a.** RUN test without the load, see 9.4.2 RUN Test without Load
   - **b.** Start-up test, see 9.4.3 Start-up Test
   - **c.** Identification run, see 9.4.4 Identification Run

9.4.2 RUN Test without Load

Do either Test A or Test B.

- Test A: Controls from the control terminals
- Test B: Control from the control panel

9.4.2.1 Test A: Controls from the Control Terminals

Do this RUN test when the control mode is I/O terminals.

Procedure

1. Turn the Start/Stop switch to ON position.
2. Change the frequency reference (potentiometer).

3. Do a check in the Monitoring menu *M1* that the value of output frequency changes the equivalent quantity to the frequency reference.
4. Turn the Start/Stop switch to OFF position.

9.4.2.2 Test B: Control from the Keypad

Do this RUN test when the control mode is keypad.

Procedure

1. Change the control from the control terminals to the keypad. For the instructions, see 8.4.3 Changing the Control Mode.
2. Push the Start button on the control panel.
3. Go to the Keypad control menu (*M3*) and *Keypad Reference* submenu (see 8.4.4 Keypad Reference). To change the frequency reference, use the Browser buttons.
4. Do a check in the Monitoring menu *M1* that the value of output frequency changes the equivalent quantity to the frequency reference.
5. Push the Stop button on the control panel.

9.4.3 Start-up Test

Do the start-up tests without the load, if possible. If this is not possible, make sure that it is safe to do each test before doing it. Make sure that the other workers near know about the tests.

Procedure

1. Make sure that all Start/Stop switches are in Stop positions.
2. Turn the mains switch ON.
3. Check the rotation direction of the motor.
4. If close loop control is used, make sure that the encoder frequency and direction are the same as the motor direction and frequency.
5. Do again the Run test A or B, see 9.4.2 RUN Test without Load.
6. If the motor was not connected in the start-up test, connect the motor to the process.
7. Make the identification run without the motor running. If close loop control is used, make the identification run with the motor running. See 9.4.4 Identification Run.

9.4.4 Identification Run

The Identification Run helps to tune the motor and the drive-related parameters. It is a tool to be used in commissioning to find the best possible parameter values for most drives. The automatic motor identification calculates or measures the necessary motor parameters for the best possible motor and speed control. For more information on the Identification Run, see VACON® NX All in One Application Manual, parameter ID631.

9.5 Motor Run Checklist

Do these checks before starting the motor.

Procedure

1. Check that the motor is mounted properly and ensure that the machine connected to the motor allows the motor to be started.
2. Set the maximum frequency reference (that is, the maximum speed of the motor) according to the motor and the device that is connected to the motor.
3. Before reversing the motor, make sure it can be done safely.
4. Make sure that no power correction capacitors are connected to the motor cable.
5. Make sure that the motor terminals are not connected mains potential.

10 Maintenance

10.1 Preventive Maintenance Recommendations

Generally, all technical equipment, including Danfoss AC Drives need a minimum level of preventive maintenance. Regular maintenance is recommended to ensure trouble-free operation and long life of the drive. It is also recommended, as a good service practice to record a maintenance log with counter values, date, and time describing the maintenance and service actions.

Danfoss recommends the following inspections and service intervals for VACON® NXP family drive/system.

NOTE: The service schedule for part replacements may vary depending on operation conditions. Under specific conditions, the combination of stressful operating and environment conditions work together to significantly reduce the lifetime of the components. These conditions can include, for example, extreme temperature, dust, high humidity, hours of use, corrosive environment, and loading.

For operation in stressful conditions, Danfoss offers the DrivePro® Preventive Maintenance service. DrivePro® services extend the lifetime and increase the performance of the product with scheduled maintenance including customized part replacements. DrivePro® services are tailored to your application and operating conditions.

Table 28: Maintenance Schedule for Air-cooled Drives

Component	Inspection interval(1)	Service schedule(2)	Preventive maintenance actions
Installation			
Visual drive inspection	1 year	–	Check for the unusual, for example, for signs of overheating, aging, corrosion, and for dusty and damaged components.
Auxiliary equipment	1 year	According to manufacturer recommendations	Inspect equipment, switchgear, relays, disconnects or fuses/circuit breakers. Examine the operation and condition for possible causes of operational faults or defects. The continuity check on fuses is performed by trained service personnel.
EMC consideration	1 year	–	Inspect the installation wiring regarding the electromagnetic capability and the separation distance between control wiring and power cables.
Cable routing	1 year	–	Check for parallel routing of motor cables, mains wiring, and signal wiring. Parallel routing must be avoided. Avoid routing cables through free air without support. Check for aging and wearing of the cable insulation.
Control wiring	1 year	–	Check for tightness, damaged or crimped wires or ribbon wires. The connections should be terminated correctly with solid crimped ends. The use of screened cables and earthed EMC plate, or a twisted pair is recommended.
Proper clearances	1 year	–	Check that the required external clearances for proper airflow for cooling are followed according to the frame designation and drive type of the drive. For clearances, refer to the local design regulations.
Seals condition	1 year	–	Check that the seals of the enclosure, the covers, and the cabinet doors are in good condition.
Corrosive environments	1 year	–	Conductive dust and aggressive gases, such as sulphide, chloride, salt mist, and so on, can damage the electrical and mechanical components. Air filters will not remove airborne corrosive chemicals. Act based on findings.
Drive			
Programming	1 year	–	Check that the AC drive parameter settings are correct according to the motor, drive application, and I/O configuration. Only trained service personnel may perform this action.
Control panel	1 year	–	Check that the display pixels are intact. Check the event log for warnings, alarms, and faults. Repetitive events are a sign of potential issues. Contact your local service center.

Component	Inspection interval[1]	Service schedule[2]	Preventive maintenance actions
Drive Cooling capacity	1 year	–	Check for blockages or constrictions in the air passages of the cooling channel. The heat sinks must be free of dust and condensation.
Capacitors, DC link	1 year	8–15+ years	The expected lifetime of the capacitors is dependent on the loading profile of the application and the environmental temperature. For applications with heavy loads in demanding environments or high ripple current, replace electrolytic capacitors every 8 years. If within specification of the drive type, replace every 10–15+ years. Only trained service personnel may perform this action.
Cleaning and Filters	1 year	–	The interior of the enclosure should be cleaned annually, and more frequently if necessary. The level of dust in the filter or inside the enclosure is an indicator for when the next cleaning or filter replacement is required.
Fans	1 year	5–10 years	Inspect the condition and operational status of all cooling fans. With the power off, the fan axis should feel tight, and spinning the fan with a finger, the rotation should be almost silent and not have abnormal rotation resistance. When in RUN mode, fan vibration, excessive or strange noise is a sign of the bearings wearing, and the fan should be replaced.
Grounding	1 year	–	The drive system requires a dedicated ground wire connecting the drive, the output filter, and the motor to the building ground. Check that the ground connections are tight and free of paint or oxidation. Daisy-chain connections are not allowed. Braided straps are recommended if applicable.
PCB	1 year	10–12 years	Visually inspect the PCBs for signs of damage or degrading due to aging, corrosive environments, dust, or environments with high temperatures. Only trained service personnel may perform the inspection and service action.
Power cables and wiring	1 year	–	Check for loose connections, aging, insulation condition, and proper torque to the drive connections. Check for proper rating of fuses and continuity check. Observe if there are any signs of operation in a demanding environment. For example, discoloration of the fuse housing may be a sign of condensation or high temperatures.
Vibration	1 year	–	Check for abnormal vibration or noise coming from the drive to ensure that the environment is stable for electronic components.
Insulator gaskets	1 year	10–15 years	Inspect the insulators for signs of degradation due to high temperature and aging. Replacement is based on findings or done at the same time as DC capacitor replacement. Only trained service personnel may perform this action.
Spare parts			
Spare parts	1 year	2 years	Stock spares in their original boxes in a dry and clean environment. Avoid hot storage areas. Electrolytic capacitors require reforming as stated in the service schedule. The reforming is performed by trained service personnel. See 10.2 Reforming the Capacitors.
Exchange units and units stored for long periods before commissioning	1 year	2 years	Visually inspect for signs of damage, water, high humidity, corrosion, and dust within the visual field of view without disassembly. The exchange units with mounted electrolytic capacitors require reforming as stated in the service schedule. The reforming is performed by trained service personnel. See 10.2 Reforming the Capacitors.

[1] Defined as the time after the commissioning/start-up or the time from the previous inspection.

[2] Defined as the time after the commissioning/start-up or the time from the previous service schedule actions.

10.2 Reforming the Capacitors

The electrolytic capacitors in the DC link rely on a chemical process to provide the insulator between the two metal plates. This process can degrade over a period of years when the drive has been non-operational (stocked). The result is that the working voltage of the DC link gradually falls.

The correct course of action is to ensure that the insulation layer of the capacitor is 'reformed' by the application of a limited current using a DC supply. Current limiting ensures that the heat generated within the capacitor is kept at a sufficiently low level to prevent any damage.

⚠ D A N G E R ⚠

SHOCK HAZARD FROM CAPACITORS

The capacitors can be charged even when disconnected. Contact with this voltage can lead to death or serious injury.

- If the AC drive or spare capacitors are intended to be stocked, discharge the capacitors before storage. Use a measuring device to make sure that there is no voltage. If in doubt, contact your Danfoss Drives representative.

Case 1: AC drive which has been non-operational or stocked for over 2 years.

1. Connect the DC supply to L1 and L2 **or** the B+/B terminals (DC+ to B+, DC- to B-) of the DC link or directly to the capacitor terminals. In the NX AC drives with no B+/B- terminals (FR8–FR9/FI8–FI9), connect the DC supply between 2 input phases (L1 and L2).
2. Set the current limit maximum to 800 mA.
3. Slowly increase the DC voltage to the nominal DC voltage level of the AC drive (1.35 x U_n AC).
4. Start to reform the capacitors.

The time of reforming depends on the time of storage. See Illustration 59.

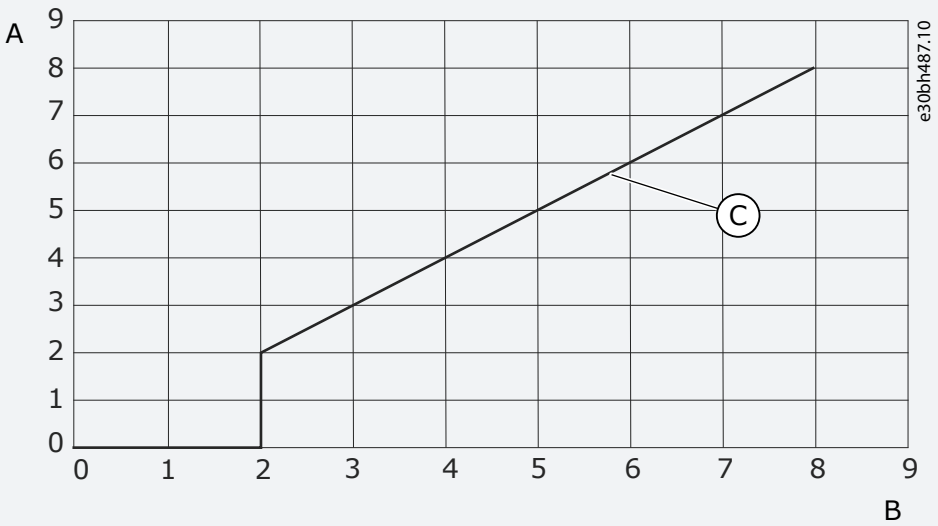

Illustration 59: Storage Time and Reforming Time

A	Storage time (years)	C	Reforming time
B	Reforming time (hours)		

5. After the reforming operation is done, discharge the capacitors.

Case 2: Spare capacitor which has been stocked for over 2 years.

1. Connect the DC supply to DC+/DC- terminals.
2. Set the current limit maximum to 800 mA.
3. Slowly increase the DC voltage to the capacitor nominal voltage level. See information from component or service documentation.
4. Start to reform the capacitors.

The time of reforming depends on the time of storage. See Illustration 59.

5. After the reforming operation is done, discharge the capacitors.

11 Fault Tracing

11.1 General Information on Fault Tracing

When the control diagnostics of the AC drive find an unusual condition in the operation of the drive, the drive shows this information:

- This information shows on the display (see 8.5.1 Finding the Active Faults Menu):
  - the location indication F1
  - the fault code, see the Faults and Alarms section
    For option board related fault codes, see the option board manual.
  - a short description of the fault
  - the fault type symbol, see Table 29
  - the *FAULT* or *ALARM* symbol
- The red LED on the control panel starts to blink (only when a fault shows).

If many faults show at the same time, examine the list of active faults with the Browser buttons.

In the VACON® NX AC drives, there are 4 different types of faults.

Table 29: Fault Types

Fault type symbol	Description
A (Alarm)	The type A fault (Alarm) tells about unusual operation on the drive. It does not stop the drive. The 'A fault' stays in the display for about 30 s.
F (Fault)	The type 'F fault' stops the drive. To start the drive again, find a solution to the problem.
AR (Fault Autoreset)	The type 'AR fault' stops the drive. The fault is reset automatically and the drive tries to start the motor again. If it cannot the start the motor again, a fault trip (see FT, Fault Trip) shows.
FT (Fault Trip)	If the drive cannot start the motor after an AR fault, an FT fault shows. The type 'FT fault' stops the AC drive.

The fault stays active until it is reset, see 11.2 Resetting a Fault. The memory of active faults can keep the maximum of 10 faults in the order in which they were shown.

Reset the fault with the [reset] button on the control panel, or through the control terminal, fieldbus, or the PC tool. The faults stay in the Fault history.

Before asking help from the distributor or the factory because of unusual operation, prepare some data. Write down all the texts on the display, the fault code, the source information, the Active Faults list, and the Fault History.

11.2 Resetting a Fault

The fault stays active until it is reset. Reset the fault using these instructions.

Procedure

1. Remove the external Start signal before resetting the fault to prevent that the drive starts again without a note.
2. There are 2 options to reset a fault:
   - Push the [reset] button on the control panel for 2 s.
   - Use a reset signal from the I/O terminal or fieldbus.

   The display goes back to the same state it was before the fault.

11.3 Creating Service Info File

Use these instructions to create a service info file in VACON® NCDrive PC tool to help to troubleshoot in a fault situation.

Make sure the VACON® NCDrive PC tool is installed on the computer. To install it, go to our website http://drives.danfoss.com/downloads/portal/ .

Procedure

1. Open the VACON® NCDrive.
2. Go to *File* and select *Service Info*....

   The service information file opens.

3. Save the service info file on the computer.

12 Specifications

12.1 Weights of the AC Drive

Table 30: Weights of VACON® NX 6- and 12-pulse Drives, Supply Voltage 380–500 V

AC drive type	Enclosure	Weight [kg][1]	Weight [lb][1]
NXC0261 5	FR9	371	817
NXC0300 5			
NXC0385 5	FR10	371	817
NXC0460 5	FR10	403	888
NXC0520 5			
NXC0590 5	FR11	577	1272
NXC0650 5			
NXC0730 5			
NXC0820 5	FR12	810	1785
NXC0920 5			
NXC1030 5			
NXC1150 5	FR13	1000	2204
NXC1300 5	FR13 (6-p & 12-p)	1150	2535
NXC1450 5			
NXC1770 5	FR14	2440	5379
NXC2150 5	FR14	2500	5511

[1] The weights indicated are for the basic 6-pulse IP21 version of the AC drive cabinet. Some options increase the weight of the cabinet. Check the delivery specific documentation for more details.

Table 31: Weights of VACON® low-harmonic drives, Supply Voltage 380–500 V

AC drive type	Enclosure	Weight [kg][1]	Weight [lb][1]
NXC0261 5	AF9	680	1499
NXC0300 5			
NXC0385 5	AF10	700	1543
NXC0460 5			
NXC0520 5			
NXC0650 5	AF12	1400	3086
NXC0730 5			
NXC0820 5			
NXC0920 5			
NXC1030 5			

AC drive type	Enclosure	Weight [kg][1]	Weight [lb][1]
NXC1150 5	AF13	1950	4299
NXC1300 5			
NXC1450 5			
NXC1770 5	AF14	3900	8598
NXC2150 5			
NXC2700 5			

[1] The weights indicated are for the basic low-harmonic IP21 version of the AC drive cabinet. Some options increase the weight of the cabinet. Check the delivery specific documentation for more details.

Table 32: Weights of VACON® NX 6- and 12-pulse Drives, Supply Voltage 525–690 V

AC drive type	Enclosure	Weight [kg][1]	Weight [lb] [1]
NXC0125 6	FR9	371	817
NXC0144 6			
NXC0170 6			
NXC0208 6			
NXC0261 6	FR10	371	817
NXC0325 6			
NXC0385 6			
NXC0416 6			
NXC0460 6	FR11	524	1155
NXC0502 6			
NXC0590 6	FR11	577	1272
NXC0650 6	FR12	745	1642
NXC0750 6			
NXC0820 6			
NXC0920 6	FR13	1000	2204
NXC1030 6			
NXC1180 6			
NXC1500 6	FR14	2350	5180
NXC1900 6	FR14	2440	5379
NXC2250 6	FR14	2500	5511

[1] The weights indicated are for the basic 6-pulse IP21 version of the AC drive cabinet. Some options increase the weight of the cabinet. Check the delivery specific documentation for more details.

Table 33: Weights of VACON® low-harmonic drives, Supply Voltage 525–690 V

AC drive type	Enclosure	Weight [kg][1]	Weight [lb] [1]
NXC0125 6	AF9	680	1499
NXC0144 6			
NXC0170 6			
NXC0208 6			
NXC0261 6	AF10	700	1543
NXC0325 6			
NXC0385 6			
NXC0416 6			
NXC0460 6	AF12	1400	3086
NXC0502 6			
NXC0590 6			
NXC0650 6			
NXC0750 6			
NXC0820 6			
NXC0920 6	AF13	1950	4299
NXC1030 6			
NXC1180 6			
NXC1500 6	AF14	3900	8598
NXC1900 6			
NXC2250 6			

[1] The weights indicated are for the basic low-harmonic IP21 version of the AC drive cabinet. Some options increase the weight of the cabinet. Check the delivery specific documentation for more details.

12.2 Dimensions

12.2.1 Dimensions

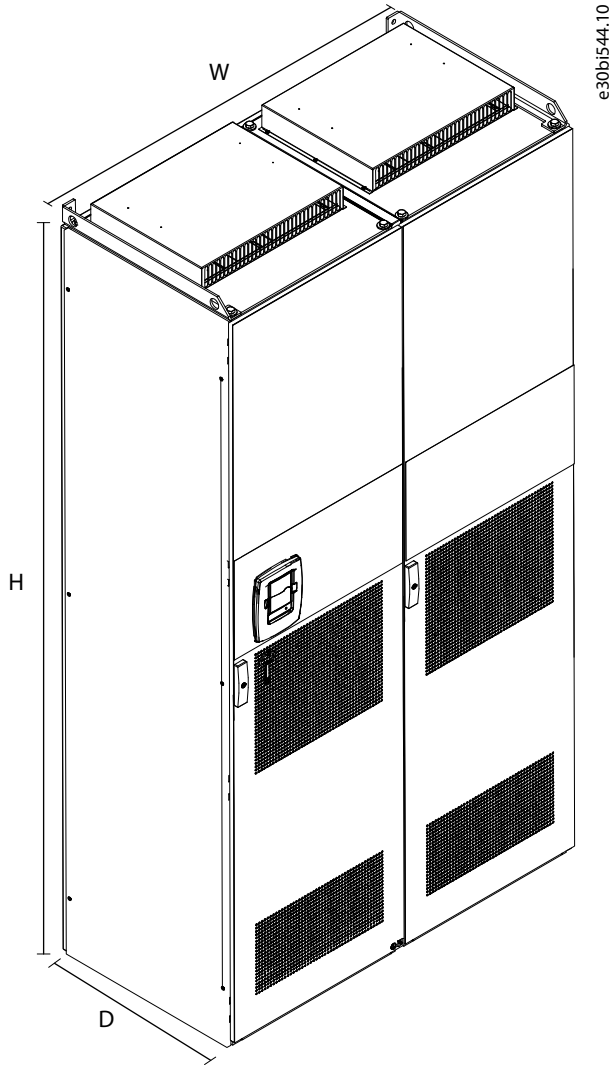

Illustration 60: Dimensions of the VACON® NXC Enclosed Drive Cabinets

Table 34: Dimensions in mm (in) of the VACON® NXC Enclosed Drive Cabinets, 6-pulse

Drive type	Dimensions for IP21			Dimensions for IP54		
	W(1)	H(2)	D	W(1)	H(2)	D
0261–0520 5 0125–0416 6	606 (23.86)	2275 (89.57)	605 (23.82)	606 (23.86)	2400 (94.49)	605 (23.82)
0650–0730 5 0460–0590 6	806 (31.73)	2275 (89.57)	605 (23.82)	806 (31.73)	2400 (94.49)	605 (23.82)
0820–1030 5 0650–0820 6	1206 (47.48)	2275 (89.57)	605 (23.82)	1206 (47.48)	2400 (94.49)	605 (23.82)
1150 5	1406 (55.35)	2275 (89.57)	605 (23.82)	1406 (55.35)	2400 (94.49)	605 (23.82)

Drive type	Dimensions for IP21			Dimensions for IP54		
	W[1]	H[2]	D	W[1]	H[2]	D
1300–1450 5	1606 (63.23)	2275 (89.57)	605 (23.82)	1606 (63.23)	2400 (94.49)	605 (23.82)
0920–1180 6	1406 (55.35)	2275 (89.57)	605 (23.82)	1406 (55.35)	2400 (94.49)	605 (23.82)
1500 6	2406 (94.75)	2275 (89.57)	605 (23.82)	2406 (94.75)	2400 (94.49)	605 (23.82)
1770–2150 5 1900–2250 6	2806 (110.47)	2275 (89.57)	605 (23.82)	2806 (110.47)	2400 (94.49)	605 (23.82)

[1] Some options affect the width of the cabinet. For example, +CIT (Top input cabling), +COT (Top output cabling) and +ODU (output dU/dt filter) +400 mm (15.75 in) each.

[2] The options +GPL or +GPH (Plinth) increase the height by 100 mm (3.94) or 200 mm (7.87 in) respectively.

Table 35: Dimensions in mm (in) of the VACON® NXC Enclosed Drive Cabinets, 12-pulse

Drive type	Dimensions IP21			Dimensions IP54		
	W[1]	H[2]	D	W[1]	H[2]	D
0385–0520 5 0261–0416 6	606 (23.86)	2275 (89.57)	605 (23.82)	606 (23.86)	2400 (94.49)	605 (23.82)
0590–0730 5 0460–0590 6	806 (31.73)	2275 (89.57)	605 (23.82)	806 (31.73)	2400 (94.49)	605 (23.82)
0820–1030 5 0650–0820 6	1206 (47.48)	2275 (89.57)	605 (23.82)	1206 (47.48)	2400 (94.49)	605 (23.82)
1150 5 0920–1180 6	1406 (55.35)	2275 (89.57)	605 (23.82)	1406 (55.35)	2400 (94.49)	605 (23.82)
1300–1450 5	2006 (78.98)	2275 (89.57)	605 (23.82)	2006 (78.98)	2400 (94.49)	605 (23.82)
1770–2150 5 1500–2250 6	2806 (110.47)	2275 (89.57)	605 (23.82)	2806 (110.47)	2400 (94.49)	605 (23.82)

[1] Some options affect the width of the cabinet. For example, +CIT (Top input cabling), +COT (Top output cabling) and +ODU (output dU/dt filter) +400 mm (15.75 in) each.

[2] The options +GPL or +GPH (Plinth) increase the height by 100 mm (3.94) or 200 mm (7.87 in) respectively.

Table 36: Dimensions in mm (in) of the VACON® NXC Enclosed Drive Cabinets, Low-harmonic

Drive type	Dimensions IP21			Dimensions IP54		
	W[1]	H[2]	D	W[1]	H[2]	D
0261–0520 5	1006	2275	605	1006	2405	605

Drive type	Dimensions IP21			Dimensions IP54		
	W[1]	H[2]	D	W[1]	H[2]	D
0125–0416 6	(39.61)	(89.57)	(23.82)	(39.61)	(94.69)	(23.82)
0590–1030 5 0460–0820 6	2006 (78.98)	2275 (89.57)	605 (23.82)	2006 (78.98)	2405 (94.69)	605 (23.82)
1150–1450 5 0920–1180 6	2206 (86.85)	2275 (89.57)	605 (23.82)	2206 (86.85)	2445 (96.26)	605 (23.82)
1770–2700 5 1500–2250 6	4406 (173.46)	2275 (89.57)	605 (23.82)	4406 (173.46)	2445 (96.26)	605 (23.82)

[1] Some options affect the width of the cabinet. For example, +CIT (Top input cabling), +COT (Top output cabling) and +ODU (output dU/dt filter) +400 mm (15.75 in) each.

[2] The options +GPL or +GPH (Plinth) increase the height by 100 mm (3.94) or 200 mm (7.87 in) respectively.

12.2.2 Bottom Dimensions, FR9, FR10, FR11, FR12

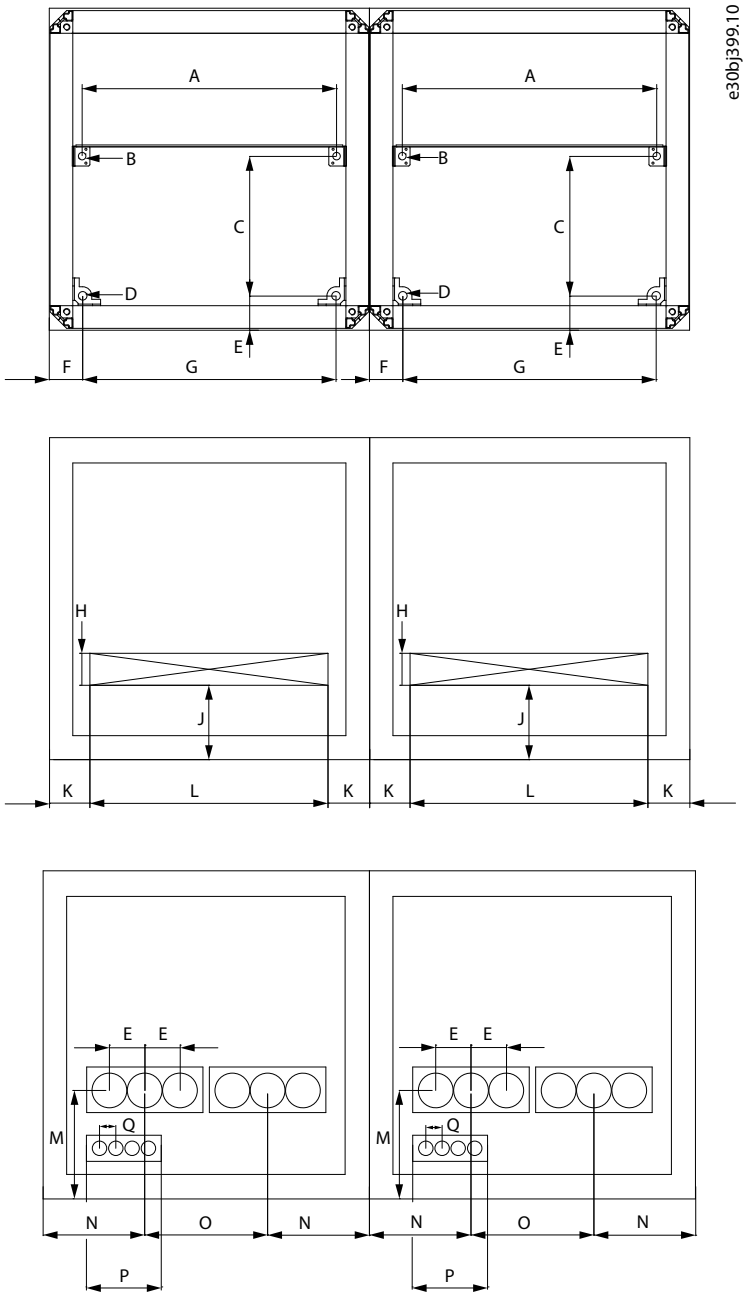

Illustration 61: Bottom Dimensions, FR9, FR10, FR11, FR12

The enclosure sizes FR9 and FR10 only include half of the cabinets presented in the illustration.

Some options affect the width of the cabinet, for example, +CIT (top input cabling), +COT (top output cabling), and +ODU (output dU/dt filter). See the delivery-specific documentation for more details.

Table 37: Bottom Dimensions in mm (in) of the 6-pulse Enclosed Drives, FR9, FR10, FR11, FR12

Drive	A	B	C	D	E	F	G
FR9, FR10, FR12	477 (18.8)	14 (0.55)	262 (10.3)	16 (0.63)	65 (2.6)	63 (2.5)	475 (18.7)
FR11	677 (26.7)	14 (0.55)	262 (10.3)	16 (0.63)	65 (2.6)	63 (2.5)	675 (26.6)

Table 38: Bottom Cable Entry Dimensions in mm (in) of the 6-pulse Enclosed Drives, FR9, FR10, FR11, FR12

Drive	H	J	K	L	M	N	O	P	Q
FR9, FR10, FR12 (IP21)	60 (2.4)	140 (5.5)	80 (3.1)	440 (17.3)	–	–	–	–	–
FR11 (IP21)	60 (2.4)	140 (5.5)	80 (3.1)	640 (25.2)	–	–	–	–	–
FR9, FR10, FR12 (IP54)	–	–	–	–	200 (7.9)	187 (7.4)	226 (8.9)	138 (5.4)	26 (1.0)
FR11 (IP54)	–	–	–	–	200 (7.9)	184 (7.2)	216 (8.5)	138 (5.4)	26 (1.0)

12.2.3 Bottom Dimensions, FR13

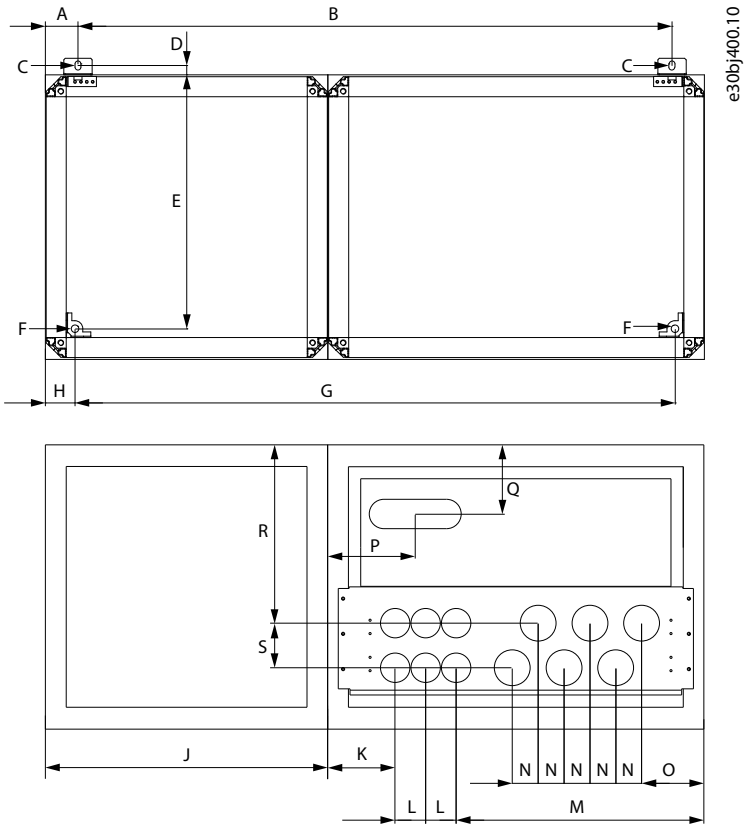

Illustration 62: Bottom Dimensions, FR13

Some options affect the width of the cabinet, for example, +CIT (top input cabling), +COT (top output cabling), and +ODU (output dU/dt filter). See the delivery-specific documentation for more details.

Table 39: Bottom Dimensions in mm (in) of the 6-pulse Enclosed Drives, FR13

Drive	A	B	C	D	E	F	G	H
FR13 (1150 A)	69 (2.7)	1262 (49.7)	13 (0.51)	20 (0.8)	540 (21.3)	16 (0.63)	1275 (50.2)	63 (2.5)
FR13 (1450 A)	69 (2.7)	1462 (57.6)	13 (0.51)	20 (0.8)	540 (21.3)	16 (0.63)	1475 (58.1)	63 (2.5)

Table 40: Bottom Cable Entry Dimensions in mm (in) of the 6-pulse Enclosed Drives, FR13

Drive	J	K	L	M	N	O	P	Q	R	S
FR13 (1150 A)	600 (23.6)	143 (5.6)	65 (2.6)	527 (20.7)	55 (2.2)	133 (5.2)	184 (7.2)	147 (5.8)	379 (14.9)	95 (3.7)
FR13 (1450 A)	800 (31.5)	143 (5.6)	65 (2.6)	527 (20.7)	55 (2.2)	133 (5.2)	184 (7.2)	147 (5.8)	379 (14.9)	95 (3.7)

12.2.4 Bottom Dimensions, FR14

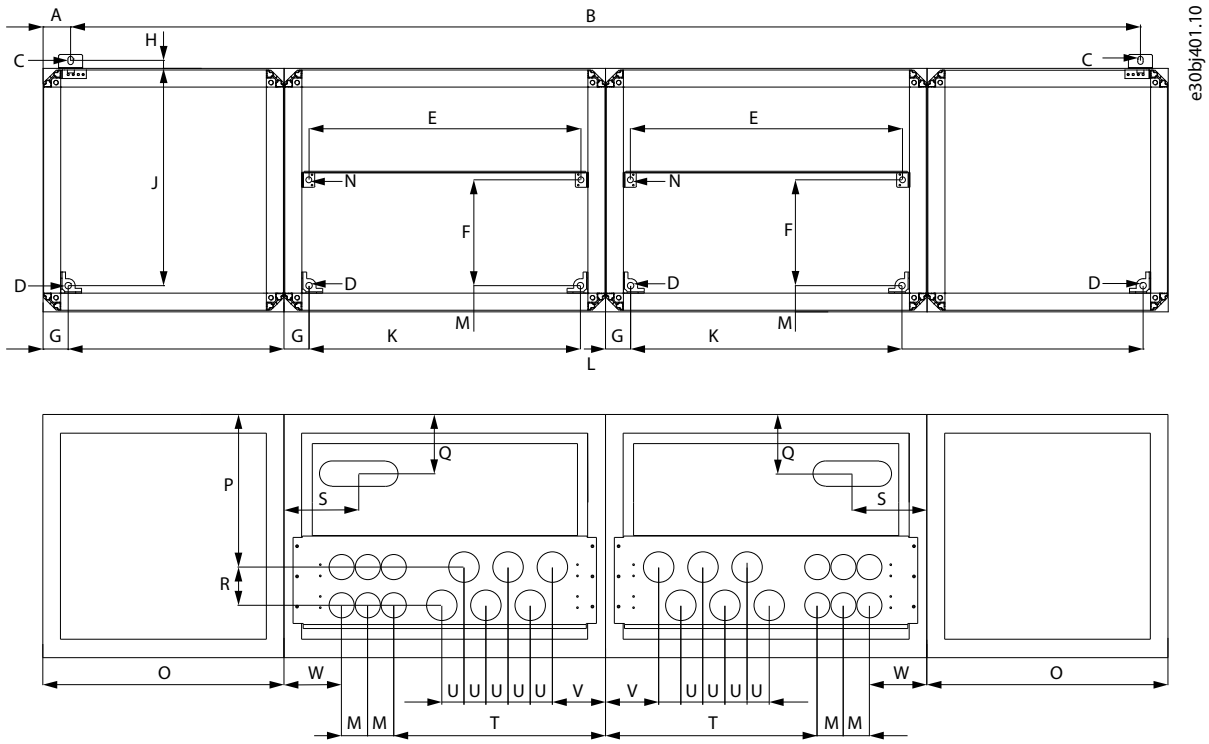

Illustration 63: Bottom Dimensions, FR14

Some options affect the width of the cabinet, for example, +CIT (top input cabling), +COT (top output cabling), and +ODU (output dU/dt filter). See the delivery-specific documentation for more details.

Table 41: Bottom Dimensions in mm (in) of the 6-pulse Enclosed Drives, FR14

Drive	A	B	C	D	E	F	G	H	J	K	L	M	N
FR14	69 (2.7)	2662 (104.8)	13 (0.51)	16 (0.63)	677 (26.7)	262 (10.3)	63 (2.5)	20 (0.8)	540 (21.3)	675 (26.6)	2675 (105.3)	65 (2.6)	14 (0.55)

Table 42: Bottom Cable Entry Dimensions in mm (in) of the 6-pulse Enclosed Drives, FR14

Drive	O	P	Q	R	S	T	U	V	W
FR14	600 (23.6)	379 (14.9)	147 (5.8)	95 (3.7)	184 (7.2)	527 (20.7)	55 (2.2)	133 (5.2)	143 (5.6)

12.2.5 Bottom Dimensions, AF9, AF10, AF12

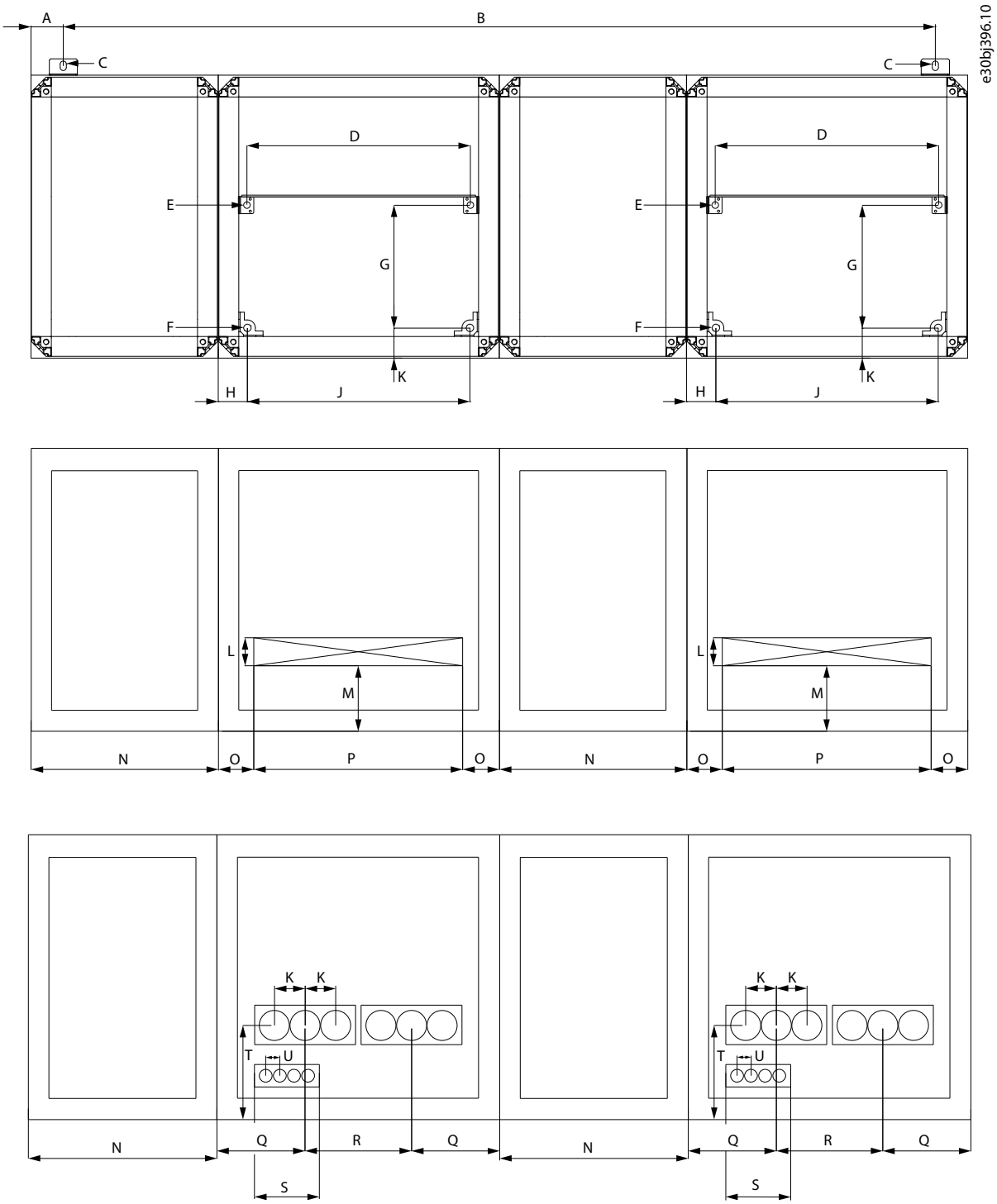

Illustration 64: Bottom Dimensions, AF9, AF10, AF12

The enclosure sizes AF9 and AF10 only include half of the cabinets presented in the illustration.

Some options affect the width of the cabinet, for example, +CIT (top input cabling), +COT (top output cabling), and +ODU (output dU/dt filter). See the delivery-specific documentation for more details.

Table 43: Bottom Dimensions in mm (in) of the Low-harmonic Enclosed Drives, AF9, AF10, AF12

Drive	A	B	C	D	E	F	G	H	J	K
AF9, AF10	–	–	–	477 (18.8)	14 (0.55)	16 (0.63)	262 (10.3)	63 (2.5)	475 (18.7)	65 (2.6)
AF12	69 (2.7)	1862 (73.3)	13 (0.51)	477 (18.8)	14 (0.55)	16 (0.63)	262 (10.3)	63 (2.5)	475 (18.7)	65 (2.6)

Table 44: Bottom Cable Entry Dimensions in mm (in) of the Low-harmonic Enclosed Drives, AF9, AF10, AF12

Drive	L	M	N	O	P	Q	R	S	T	U
AF9, AF10, AF12 (IP21)	60 (2.4)	140 (5.5)	400 (15.7)	80 (3.1)	440 (17.3)	–	–	–	–	–
AF9, AF10, AF12 (IP54)	–	–	–	–	–	187 (7.4)	226 (8.9)	138 (5.4)	200 (7.9)	26 (1.0)

12.2.6 Bottom Dimensions, AF13

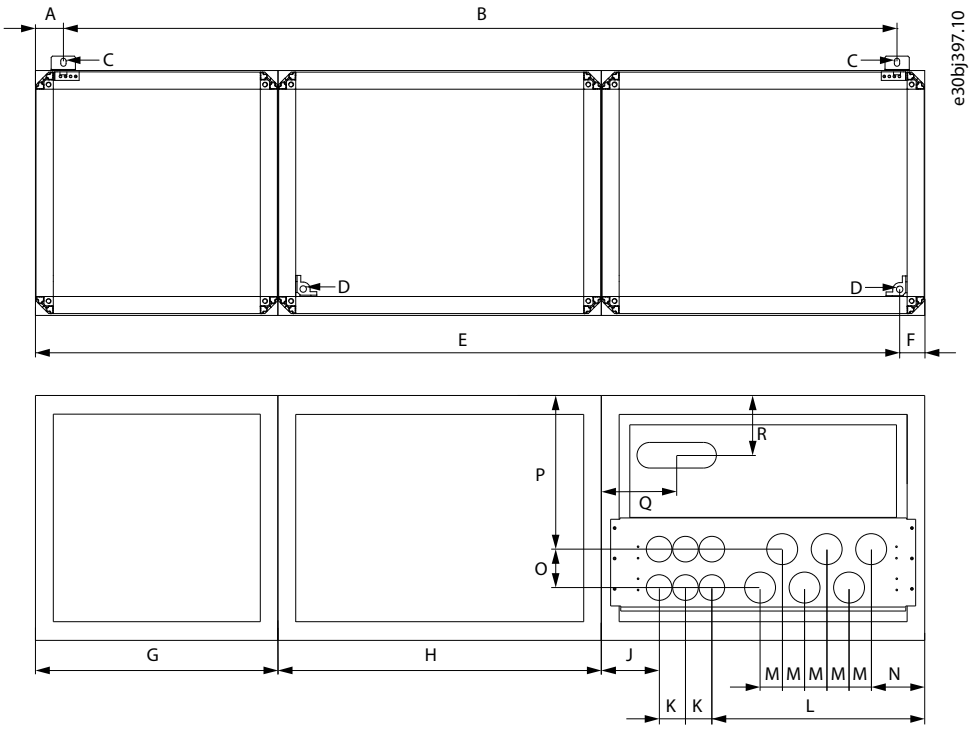

Illustration 65: Bottom Dimensions, AF13

Some options affect the width of the cabinet, for example, +CIT (top input cabling), +COT (top output cabling), and +ODU (output dU/dt filter). See the delivery-specific documentation for more details.

Table 45: Bottom Dimensions in mm (in) of the Low-harmonic Enclosed Drives, AF13

Drive	A	B	C	D	E	F
AF13	69 (2.7)	2062 (81.2)	13 (0.51)	16 (0.63)	2138 (84.2)	63 (2.5)

Table 46: Bottom Cable Entry Dimensions in mm (in) of the Low-harmonic Enclosed Drives, AF13

Drive	G	H	J	K	L	M	N	O	P	Q	R
AF13	600 (23.6)	800 (31.5)	143 (5.6)	65 (2.6)	527 (20.7)	55 (2.2)	133 (5.2)	95 (3.7)	379 (14.9)	184 (7.2)	147 (5.8)

12.2.7 Bottom Dimensions, AF14

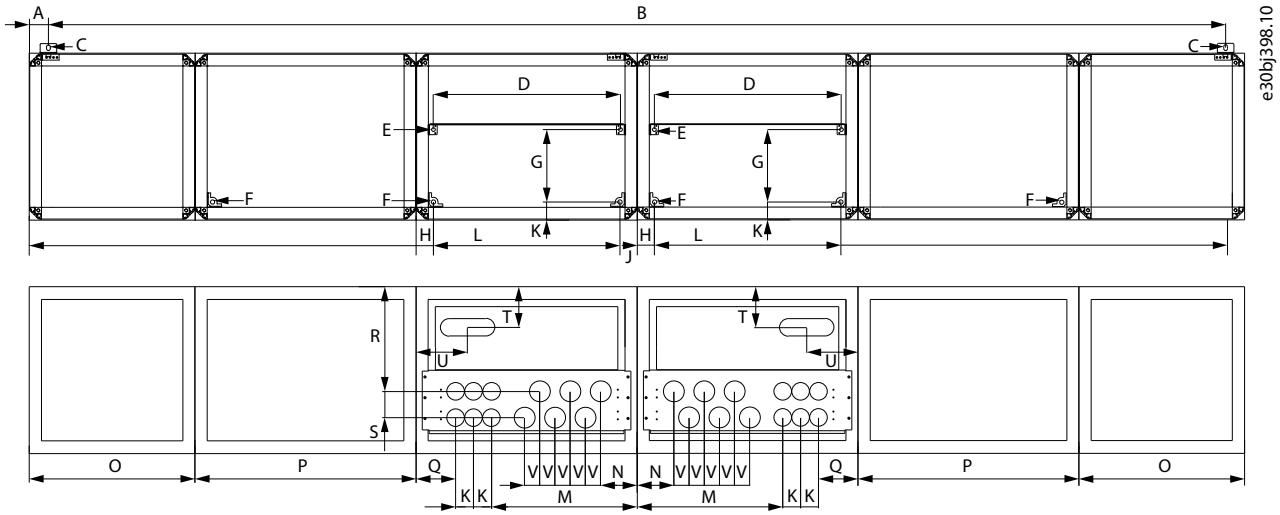

Illustration 66: Bottom Dimensions, AF14

Some options affect the width of the cabinet, for example, +CIT (top input cabling), +COT (top output cabling), and +ODU (output dU/dt filter). See the delivery-specific documentation for more details.

Table 47: Bottom Dimensions in mm (in) of the Low-harmonic Enclosed Drives, AF14

Drive	A	B	C	D	E	F	G	H	J	K	L
AF14	69 (2.7)	2062 (81.2)	13 (0.51)	677 (26.7)	14 (0.55)	16 (0.63)	262 (10.3)	63 (2.5)	4338 (170.8)	65 (2.6)	675 (26.6)

Table 48: Bottom Cable Entry Dimensions in mm (in) of the Low-harmonic Enclosed Drives, AF14

Drive	M	N	O	P	Q	R	S	T	U	V
AF14	527 (20.7)	133 (5.2)	600 (23.6)	800 (31.5)	143 (5.6)	379 (14.9)	95 (3.7)	147 (5.8)	184 (7.2)	55 (2.2)

12.2.8 Dimensions for the +OCM and +OCH Options

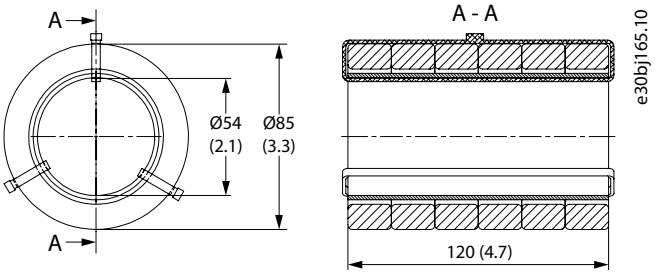

Illustration 67: Dimensions for +OCM option in mm (in)

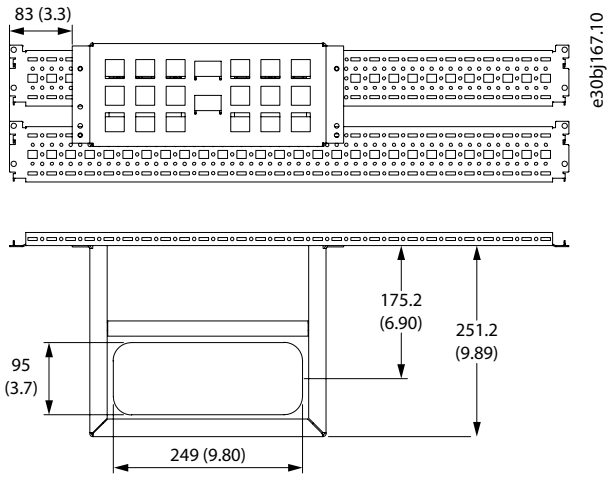

Illustration 68: Dimensions for +OCH option in mm (in), FR 13–14, AF13–14

12.3 Cable and Fuse Sizes

To see the typical cable sizes and types that can be used with the AC drive, see the topics listed here. The final selection must be made according to local regulations, cable installation conditions and cable specification.

- 12.3.1 6-pulse Drives, 380–500 V Units
- 12.3.2 12-pulse Drives, 380–500 V Units
- 12.3.3 Low-harmonic Drives, 380–500 V Units
- 12.3.4 6-pulse Drives, 525–690 V Units
- 12.3.5 12-pulse Drives, 525–690 V Units
- 12.3.6 Low-harmonic Drives, 525–690 V Units

12.3.1 6-pulse Drives, 380–500 V Units

Table 49: Cable and Fuse Sizes for VACON® NXC Enclosed Drives, 6-pulse, 380–500 V Units

Enclosure	Type	I_L[A]	Bussmann/Mersen fuse type	Fuse I_n [A]	Mains and motor cable [mm^2][(1)]	Number of supply cables	Number of motor cables
FR9 [(2)]	NXC0261 5	261	170M5813 (3 pcs) NH2UD69V500PV (3 pcs)	700/500	Cu: 3*185+95 or 2*(3*120+70)	Even/Odd	Even/Odd
	NXC0300 5	300	170M5813 (3 pcs) NH2UD69V500PV (3 pcs)	700/500	Cu: 2*(3*120+70)	Even/Odd	Even/Odd
	NXC0385 5	385	170M5813 (3 pcs) NH2UD69V700PV (3 pcs)	700	Cu: 2*(3*120+70) Al: 2*(3*185Al+57Cu)	Even/Odd	Even/Odd
FR10 [(2)]	NXC0460 5	460	170M8547 (3 pcs) NH3UD69V1000PV (3 pcs)	1250/ 1000	Cu: 2*(3*150+70) Al: 2*(3*240Al+72Cu)	Even/Odd	Even/Odd
	NXC0520 5	520	170M8547 (3 pcs) NH3UD69V1000PV (3 pcs)	1250/ 1000	Cu: 2*(3*185+95) Al: 2*(3*300Al+88Cu)	Even/Odd	Even/Odd
FR11 [(2)]	NXC0590 5	590	170M5813 (6 pcs) NH2UD69V700PV (6 pcs)	700	Cu: 2*(3*240+120) Al: 4*(3*120Al+41Cu)	Even[(3)]	Even/Odd
	NXC0650 5	650	170M5813 (6 pcs) NH2UD69V700PV (6 pcs)	700	Cu: 4*(3*95+50) Al: 4*(3*150Al+41Cu)	Even[(3)]	Even/Odd

Enclosure	Type	I_L[A]	Bussmann/Mersen fuse type	Fuse I_n [A]	Mains and motor cable [mm^2][1]	Number of supply cables	Number of motor cables
	NXC0730 5	730	170M5813 (6 pcs) NH2UD69V700PV (6 pcs)	700	Cu: 4*(3*120+70) Al: 4*(3*185Al+57Cu)	Even[3]	Even/Odd
	NXC0820 5	820	170M8547 (6 pcs) NH3UD69V1000PV (6 pcs)	1250/ 1000	Cu: 4*(3*150+70) Al: 4*(3*185Al+57Cu)	Even	Even
FR12 [2]	NXC0920 5	920	170M8547 (6 pcs) NH3UD69V1000PV (6 pcs)	1250/ 1000	Cu: 4*(3*150+70) Al: 4*(3*240Al+72Cu)	Even	Even
	NXC1030 5	1030	170M8547 (6 pcs) NH3UD69V1000PV (6 pcs)	1250/ 1000	Cu: 4*(3*185+95) Al: 4*(3*300Al+88Cu)	Even	Even
FR13 [4]	NXC1150 5	1150	170M6466 (6 pcs) PC33UD69V1000TF (6 pcs)	1250/ 1000	Cu: 5*(3*150+70) Al: 6*(3*185+57Cu)	Even/Odd	Even/Odd
	NXC1300 5	1300	170M6466 (9 pcs) PC33UD69V1000TF (9 pcs)	1250/ 1000	Cu: 5*(3*185+95) Al: 6*(3*240+72Cu)	Even/Odd	Even/Odd
	NXC1450 5	1450	170M6466 (9 pcs) PC33UD69V1000TF (9 pcs)	1250/ 1000	Cu: 6*(3*185+95) Al: 6*(3*240+72Cu)	Even/Odd	Even/Odd
FR14[4]	NXC1770 5	1770	170M6466 (12 pcs) PC33UD69V1000TF (12 pcs)	1250/ 1000	Cu: 6*(3*240+120) Al: 8*(3*240+72Cu)	Even	Even
	NXC2150 5	2150	170M6466 (12 pcs) PC33UD69V1000TF (12 pcs)	1250/ 1000	Cu: 8*(3*185+95) Al: 8*(3*300+88Cu)	Even	Even

[1] Based on correction factor 0.7. Cables are laid on a cable ladder side by side, three ladders on top of each other. Ambient temperature is 30 °C (86 °F). EN60204-1 and IEC 60364-5-523.

[2] Fuses are blade type. If some other type is needed, contact your distributor.

[3] Odd number of supply cables possible on request. Contact the nearest distributor for more information.

[4] Fuses are flush-end type. If some other type is needed, contact your distributor.

12.3.2 12-pulse Drives, 380–500 V Units

Table 50: Cable and Fuse Sizes for VACON® NXC Enclosed Drives, 12-pulse, 380–500 V Units

Enclo-sure	Type	I_L [A]	Bussmann/Mersen fuse type	Fuse I_n [A]	Mains and motor cable [mm^2][1]	Number of sup-ply ca-bles	Number of motor cables
FR10[2]	NXC0385 5	385	170M5813 (6 pcs) NH2UD69V500PV (6 pcs)	700/500	Cu: 2*(3*120+70) Al: 2*(3*185Al+57Cu)	Even	Even/Odd
	NXC0460 5	460	170M5813 (6 pcs) NH2UD69V500PV (6 pcs)	700/500	Cu: 2*(3*150+70) Al: 2*(3*240Al+72Cu)	Even	Even/Odd
	NXC0520 5	520	170M5813 (6 pcs) NH2UD69V500PV (6 pcs)	700/500	Cu: 2*(3*185+95) Al: 2*(3*300Al+88Cu)	Even	Even/Odd

Enclosure	Type	I_L [A]	Bussmann/Mersen fuse type	Fuse I_n [A]	Mains and motor cable [mm²][1]	Number of supply cables	Number of motor cables
FR11[2]	NXC0590 5	590	170M5813 (6 pcs) NH2UD69V700PV (6 pcs)	700	Cu: 2*(3*240+120) Al: 4*(3*120Al+41Cu)	Even	Even/Odd
	NXC0650 5	650	170M5813 (6 pcs) NH2UD69V700PV (6 pcs)	700	Cu: 4*(3*95+50) Al: 4*(3*150Al+41Cu)	Even	Even/Odd
	NXC0730 5	730	170M5813 (6 pcs) NH2UD69V700PV (6 pcs)	700	Cu: 4*(3*120+70) Al: 4*(3*185Al+57Cu)	Even	Even/Odd
FR12[2]	NXC0820 5	820	170M8547 (6 pcs) NH3UD69V1000PV (6 pcs)	1250/ 1000	Cu: 4*(3*150+70) Al: 4*(3*185Al+57Cu)	Even	Even
	NXC0920 5	920	170M8547 (6 pcs) NH3UD69V1000PV (6 pcs)	1250/ 1000	Cu: 4*(3*150+70) Al: 4*(3*240Al+72Cu)	Even	Even
	NXC1030 5	1030	170M8547 (6 pcs) NH3UD69V1000PV (6 pcs)	1250/ 1000	Cu: 4*(3*185+95) Al: 4*(3*300Al+88Cu)	Even	Even
FR13[3]	NXC1150 5	1150	170M6466 (6 pcs) PC33UD69V1000TF (6 pcs)	1250/ 1000	Cu: 4(3*240+170) Al: 6*(3*185Al+57Cu)	Even	Even/Odd
	NXC1300 5	1300	170M6461 (12 pcs) PC33UD69V630TF (12 pcs)	700/ 630	Cu: 6(3*150+70) Al: 6*(3*240Al+72Cu)	Even	Even/Odd
	NXC1450 5	1450	170M6461 (12 pcs) PC33UD69V630TF (12 pcs)	700/ 630	Cu: 6(3*185+95) Al: 6*(3*240Al+72Cu)	Even	Even/Odd
FR14 [3]	NXC1770 5	1770	170M6466 (12 pcs) PC33UD69V1000TF (12 pcs)	1250/ 1000	Cu: 6*(3*240+120) Al: 8*(3*240Al+72Cu)	Even	Even
	NXC2150 5	2150	170M6466 (12 pcs) PC33UD69V1000TF (12 pcs)	1250/ 1000	Cu: 8*(3*185+95) Al: 8*(3*300Al+88Cu)	Even	Even

[1] Based on correction factor 0.7. Cables are laid on a cable ladder side by side, three ladders on top of each other. Ambient temperature is 30 °C (86 °F). EN60204-1 and IEC 60364-5-523.

[2] Fuses are blade type. If some othertype is needed, contact your distributor.

[3] Fuses are flush-end type. If some other type is needed, contact your distributor.

12.3.3 Low-harmonic Drives, 380–500 V Units

Table 51: Cable and Fuse Sizes for VACON® NXC Enclosed Drives, Low-harmonic, 380–500 V Units

Enclosure	Type	I_L [A]	Bussmann/Mersen fuse type	Fuse I_n [A]	Mains and motor cable [mm²][1]	Number of supply cables	Number of motor cables
AF9	NXC0261 5	261	170M6202 (3 pcs) NH2UD69V500PV (3 pcs)	500/ 500	Cu: 3*185+95 or 2*(3*120+70)	Even/Odd	Even/Odd
	NXC0300 5	300	170M6305 (3 pcs)	700/	Cu: 2*(3*120+70)	Even/Odd	Even/Odd

Enclo-sure	Type	I_L [A]	Bussmann/Mersen fuse type	Fuse I_n [A]	Mains and motor cable [mm^2][1]	Number of supply cables	Number of motor cables
			NH2UD69V500PV (3 pcs)	500			
AF10	NXC0385 5	385	170M6305 (3 pcs) NH2UD69V500PV (3 pcs)	700/ 500	Cu: 2*(3*120+70) Al: 2*(3*185Al+57Cu)	Even/Odd	Even/Odd
	NXC0460 5	460	170M6203 (3 pcs) NH3UD69V800PV (3 pcs)	800/ 800	Cu: 2*(3*150+70) Al: 2*(3*240Al+72Cu)	Even/Odd	Even/Odd
	NXC0520 5	520	170M6277 (3 pcs) NH3UD69V1000PV (3 pcs)	1000/ 1000	Cu: 2*(3*185+95) Al: 2*(3*300Al+88Cu)	Even/Odd	Even/Odd
AF12	NXC0650 5	650	170M6305 (6 pcs) NH2UD69V700PV (6 pcs)	700/ 700	Cu: 4*(3*95+50) Al: 4*(3*150Al+41Cu)	Even/Odd	Even
	NXC0730 5	730	170M6305 (6 pcs) NH2UD69V700PV (6 pcs)	700/ 700	Cu: 4*(3*120+70) Al: 4*(3*185Al+57Cu)	Even/Odd	Even
	NXC0820 5	820	170M6277 (6 pcs) NH3UD69V800PV (6 pcs)	1000/ 800	Cu: 4*(3*150+70) Al: 4*(3*185Al+57Cu)	Even/Odd	Even
	NXC0920 5	920	170M6277 (6 pcs) NH3UD69V800PV (6 pcs)	1000/ 800	Cu: 4*(3*150+70) Al: 4*(3*240Al+72Cu)	Even/Odd	Even
	NXC1030 5	1030	170M6277 (6 pcs) NH3UD69V1000PV (6 pcs)	1000/ 1000	Cu: 4*(3*185+95) Al: 4*(3*300Al+88Cu)	Even/Odd	Even
AF13	NXC1150 5	1150	No additional drive fuses needed[2]		Cu: 5*(3*150+70) Al: 6*(3*185+57Cu)	Even/Odd	Even/Odd
	NXC1300 5	1300	No additional drive fuses needed[2]		Cu: 5*(3*185+95) Al: 6*(3*240+72Cu)	Even/Odd	Even/Odd
	NXC1450 5	1450	No additional drive fuses needed[2]		Cu: 6*(3*185+95) Al: 6*(3*240+72Cu)	Even/Odd	Even/Odd
AF14	NXC1770 5	1770	No additional drive fuses needed[2]		Cu: 6*(3*240+120) Al: 8*(3*240+72Cu)	Even	Even
	NXC2150 5	2150	No additional drive fuses needed[2]		Cu: 8*(3*185+95) Al: 8*(3*300+88Cu)	Even	Even
	NXC2700 5	2700	No additional drive fuses needed[2]		Cu: 8*(3*185+95) Al: 8*(3*300+88Cu)	Even	Even

[1] Based on correction factor 0.7. Cables are laid on a cable ladder side by side, three ladders on top of each other. Ambient temperature is 30 °C (86 °F). EN60204-1 and IEC 60364-5-523.

[2] Drive includes the fuses and no additional drive fuses needed.

12.3.4 6-pulse Drives, 525–690 V Units

Table 52: Cable and Fuse Sizes for VACON® NXC Enclosed Drives, 6-pulse, 525–690 V Units

Enclo-sure	Type	I_L [A]	Bussmann/Mersen fuse type	Fuse I_n [A]	Mains and motor cable [mm^2][(1)]	Number of supply cables	Number of motor cables
FR9[(2)]	NXC01256 NXC01446 NXC01706 NXC02086	125 144 170	170M3819 (3 pcs) NH1UD69V400PV (3 pcs)	400	Cu: 3*95+50	Even/Odd	Even/Odd
		208	170M3819 (3 pcs) NH1UD69V400PV (3 pcs)	400	Cu: 3*150+70	Even/Odd	Even/Odd
FR10[(2)]	NXC0261 6	261	170M5813 (3 pcs) NH2UD69V700PV (3 pcs)	700	Cu: 3*185+95 Al: 2*(3*95Al +29Cu)	Even/Odd	Even/Odd
	NXC0325 6	325	170M5813 (3 pcs) NH2UD69V700PV (3 pcs)	700	Cu: 2*(3*95+50) Al: 2*(3*150Al+41Cu)	Even/Odd	Even/Odd
	NXC0385 6	385	170M5813 (3 pcs) NH2UD69V700PV (3 pcs)	700	Cu: 2*(3*120+70) Al: 2*(3*185Al+57Cu)	Even/Odd	Even/Odd
	NXC0416 6	416	170M5813 (3 pcs) NH2UD69V700PV (3 pcs)	700	Cu: 2*(3*150+70) Al: 2*(3*185Al+57Cu)	Even/Odd	Even/Odd
FR11[(2)]	NXC0460 6	460	170M8547 (3 pcs) NH3UD69V1000PV (3 pcs)	1250	Cu: 2*(3*150+70) Al: 2*(3*240Al+72Cu)	Even/Odd	Even/Odd
	NXC0502 6	502	170M8547 (3 pcs) NH3UD69V1000PV (3 pcs)	1250	Cu: 2*(3*185+95) Al: 2*(3*300Al+88 Cu)	Even/Odd	Even/Odd
	NXC0590 6	590	170M5813 (6 pcs) NH2UD69V700PV (6 pcs)	700	Cu: 2*(3*240+120) Al: 4*(3*120Al+41Cu)	Even	Even/Odd
FR12[(2)]	NXC0650 6	650	170M5813 (6 pcs) NH2UD69V700PV (6 pcs)	700	Cu: 4*(3*95+50) Al: 4*(3*150Al+41Cu)	Even	Even
	NXC0750 6	750	170M5813 (6 pcs) NH2UD69V700PV (6 pcs)	700	Cu: 4*(3*120+70) Al: 4*(3*150Al+41Cu)	Even	Even
	NXC0820 6	820	170M5813 (6 pcs) NH2UD69V700PV (6 pcs)	700	Cu: 4*(3*150+70) Al: 4*(3*185Al+57Cu)	Even	Even
FR13 [(3)]	NXC0920 6	920	170M6466 (6 pcs) PC33UD69V1000TF (6 pcs)	1250/ 1000	Cu: 4*(3*150+70) Al: 4*(3*2405+72Cu)	Even/Odd	Even/Odd
	NXC1030 6	1030	170M6466 (6 pcs) PC33UD69V1000TF (6 pcs)	1250/ 1000	Cu: 4*(3*185+95) Al: 5*(3*185+57Cu)	Even/Odd	Even/Odd
	NXC1180 6	1180	170M6466 (6 pcs) PC33UD69V1000TF (6 pcs)	1250/ 1000	Cu: 5*(3*185+95) Al: 6*(3*185+72Cu)	Even/Odd	Even/Odd
FR14 [(3)]	NXC1500 6	1500	170M6466 (9 pcs)	1250/	Cu: 6*(3*185+95) Al: 8*(3*185+57Cu)	Even/Odd	Even

Enclo-sure	Type	I_L [A]	Bussmann/Mersen fuse type	Fuse I_n [A]	Mains and motor cable [mm^2][1]	Number of supply cables	Number of motor cables
			PC33UD69V1000TF (9 pcs)	1000			
	NXC1900 6	1900	170M6466 (12 pcs) PC33UD69V1000TF (12 pcs)	1250/ 1000	Cu: 6*(3*240+120) Al: 8*(3*240+72Cu)	Even	Even
	NXC2250 6	2250	170M6466 (12 pcs) PC33UD69V1000TF (12 pcs)	1250/ 1000	Cu: 8*(3*240+120) Al: 8*(3*300+88Cu)	Even	Even

[1] Based on correction factor 0.7. Cables are laid on a cable ladder side by side, three ladders on top of each other. Ambient temperature is 30 °C (86 °F). EN60204-1 and IEC 60364-5-523.

[2] Fuses are blade type. If some othertype is needed, contact your distributor.

[3] Fuses are flush-end type. If some other type is needed, contact your distributor.

12.3.5 12-pulse Drives, 525–690 V Units

Table 53: Cable and Fuse Sizes for VACON® NXC Enclosed Drives, 12-pulse, 525–690 V Units

Enclo-sure	Type	I_L [A]	Bussmann/Mersen fuse type	Fuse I_n [A]	Mains and motor cable [mm^2][1]	Num-ber of supply cables	Number of motor cables
FR10[2]	NXC0261 6	261	170M5813 (6 pcs) NH2UD69V500PV (6 pcs)	700/500	Cu: 2*(3*120+70) Al: 2*(3*185Al+57Cu)	Even	Even/Odd
	NXC0325 6	325	170M5813 (6 pcs) NH2UD69V500PV (6 pcs)	700/500	Cu: 2*(3*120+70) Al: 2*(3*185Al+57Cu)	Even	Even/Odd
	NXC0385 6	385	170M5813 (6 pcs) NH2UD69V500PV (6 pcs)	700/500	Cu: 2*(3*120+70) Al: 2*(3*185Al+57Cu)	Even	Even/Odd
	NXC0416 6	416	170M5813 (6 pcs) NH2UD69V500PV (6 pcs)	700/500	Cu: 2*(3*150+70) Al: 2*(3*185Al+57Cu)	Even	Even/Odd
FR11[2]	NXC0460 6	460	170M5813 (6 pcs) NH2UD69V700PV (6 pcs)	700	Cu: 2*(3*150+70) Al: 2*(3*240Al+72Cu)	Even	Even/Odd
	NXC0502 6	502	170M5813 (6 pcs) NH2UD69V700PV (6 pcs)	700	Cu: 2*(3*185+95) Al: 2*(3*300Al+88 Cu)	Even	Even/Odd
	NXC0590 6	590	170M5813 (6 pcs) NH2UD69V700PV (6 pcs)	700	Cu: 2*(3*240+120) Al: 4*(3*120Al+41Cu)	Even	Even/Odd
FR12[2]	NXC0650 6	650	170M5813 (6 pcs) NH2UD69V700PV (6 pcs)	700	Cu: 4*(3*95+50) Al: 4*(3*150Al+41Cu)	Even	Even
	NXC0750 6	750	170M5813 (6 pcs) NH2UD69V700PV (6 pcs)	700	Cu: 4*(3*120+70) Al: 4*(3*150Al+41Cu)	Even	Even
	NXC0820 6	820	170M5813 (6 pcs) NH2UD69V700PV (6 pcs)	700	Cu: 4*3*150+70) Al: 4*(3*185Al+57Cu)	Even	Even

Enclo-sure	Type	I_L [A]	Bussmann/Mersen fuse type	Fuse I_n [A]	Mains and motor cable [mm²][1]	Num-ber of supply cables	Number of motor cables
FR13[3]	NXC0920 6	920	170M6466 (6 pcs) PC33UD69V1000TF (6 pcs)	1250/ 1000	Cu: 4x(3x150+70) Al: 4x(3x2405+72Cu)	Even	Even/Odd
	NXC1030 6	1030	170M6466 (6 pcs) PC33UD69V1000TF (6 pcs)	1250/ 1000	Cu: 4x(3x185+95) Al: 6x(3x150+41Cu)	Even	Even/Odd
	NXC1180 6	1180	170M6466 (6 pcs) PC33UD69V1000TF (6 pcs)	1250/ 1000	Cu: 6x(3x185+95) Al: 6x(3x185+72Cu)	Even	Even/Odd
FR14 [3]	NXC1500 6	1500	170M6461 (12 pcs) PC33UD69V630TF (12 pcs)	700/ 630	Cu: 8*(3*185+95) Al: 8*(3*185+57Cu)	Even	Even
	NXC1900 6	1900	170M6466 (12 pcs) PC33UD69V1000TF (12 pcs)	1250/ 1000	Cu: 8*(3*240+120) Al: 8*(3*240+72Cu)	Even	Even
	NXC2250 6	2250	170M6466 (12 pcs) PC33UD69V1000TF (12 pcs)	1250/ 1000	Cu: 8*(3*240+120) Al: 8*(3*300+88Cu)	Even	Even

[1] Based on correction factor 0.7. Cables are laid on a cable ladder side by side, three ladders on top of each other. Ambient temperature is 30 °C (86 °F). EN60204-1 and IEC 60364-5-523.

[2] Fuses are blade type. If some othertype is needed, contact your distributor.

[3] Fuses are flush-end type. If some other type is needed, contact your distributor.

12.3.6 Low-harmonic Drives, 525–690 V Units

Table 54: Cable and Fuse Sizes for VACON® NXC Enclosed Drives, Low-harmonic, 525–690 V Units

Enclo-sure	Type	I_L [A]	Bussmann/Mersen fuse type	Fuse I_n [A]	Mains and motor cable [mm²][1]	Number of supply cables	Number of motor cables
AF9	NXC01256 NXC01446 NXC01706 NXC02086	125 144 170	170M4198 (3 pcs) PC71UD13C315PA (3 pcs)	315/ 315	Cu: 3*95+50	Even/Odd	Even/Odd
		208	170M4199 (3 pcs) PC71UD13C400PA (3 pcs)	400/ 400	Cu: 3*150+70	Even/Odd	Even/Odd
AF10	NXC0261 6	261	170M6202 (3 pcs) PC73UD13C500PA (3 pcs)	500/ 500	Cu: 3*185+95 Al: 2*(3*95Al +29Cu)	Even/Odd	Even/Odd
	NXC0325 6	325	170M6305 (3 pcs) PC73UD13C630PA (3 pcs)	700/ 630	Cu: 2*(3*95+50) Al: 2*(3*150Al+41Cu)	Even/Odd	Even/Odd
	NXC0385 6	385	170M6305 (3 pcs) PC73UD13C630PA (3 pcs)	700/ 630	Cu: 2*(3*120+70) Al: 2*(3*185Al+57Cu)	Even/Odd	Even/Odd
	NXC0416 6	416	170M6305 (3 pcs) PC73UD12C700PA (3 pcs)	700/ 700	Cu: 2*(3*150+70) Al: 2*(3*185Al+57Cu)	Even/Odd	Even/Odd

Enclo-sure	Type	I_L [A]	Bussmann/Mersen fuse type	Fuse I_n [A]	Mains and motor cable [mm^2][1]	Number of supply cables	Number of motor cables
AF12	NXC0460 6	460	170M6202(6 pcs) PC73UD13C500PA (6 pcs)	500/ 500	Cu: 2*(3*150+70) Al: 2*(3*240Al+72Cu)	Even/Odd	Even
	NXC0502 6	502	170M6305 (6 pcs) PC73UD13C500PA (6 pcs)	700/ 500	Cu: 2*(3*185+95) Al: 2*(3*300Al+88 Cu)	Even/Odd	Even
	NXC0590 6	590	170M6305 (6 pcs) PC73UD13C630PA (6 pcs)	700/ 630	Cu: 2*(3*240+120) Al: 4*(3*120Al+41Cu)	Even/Odd	Even
	NXC0650 6	650	170M6305 (6 pcs) PC73UD13C630PA (6 pcs)	700/ 630	Cu: 4*(3*95+50) Al: 4*(3*150Al+41Cu)	Even/Odd	Even
	NXC0750 6	750	170M6305 (6 pcs) PC73UD13C630PA (6 pcs)	700/ 630	Cu: 4*(3*120+70) Al: 4*(3*150Al+41Cu)	Even/Odd	Even
	NXC0820 6	820	170M6277 (6 pcs) PC73UD12C700PA (6 pcs)	1000/ 700	Cu: 4*(3*150+70) Al: 4*(3*185Al+57Cu)	Even/Odd	Even
AF13	NXC0920 6	920	No additional drive fuses needed[2]		Cu: 4*(3*150+70) Al: 4*(3*2405+72Cu)	Even/Odd	Even/Odd
	NXC1030 6	1030	No additional drive fuses needed[2]		Cu: 4*(3*185+95) Al: 5*(3*185+57Cu)	Even/Odd	Even/Odd
	NXC1180 6	1180	No additional drive fuses needed[2]		Cu: 5*(3*185+95) Al: 6*(3*185+72Cu)	Even/Odd	Even/Odd
AF14	NXC1500 6	1500	No additional drive fuses needed[2]		Cu: 6*(3*185+95) Al: 8*(3*185+57Cu)	Even/Odd	Even
	NXC1900 6	1900	No additional drive fuses needed[2]		Cu: 6*(3*240+120) Al: 8*(3*240+72Cu)	Even	Even
	NXC2250 6	2250	No additional drive fuses needed[2]		Cu: 8*(3*240+120) Al: 8*(3*300+88Cu)	Even	Even

[1] Based on correction factor 0.7. Cables are laid on a cable ladder side by side, three ladders on top of each other. Ambient temperature is 30 °C (86 °F). EN60204-1 and IEC 60364-5-523.

[2] Drive includes the fuses and no additional drive fuses needed.

12.4 Main Circuit Diagrams

12.4.1 Main Circuit Diagram of FR9

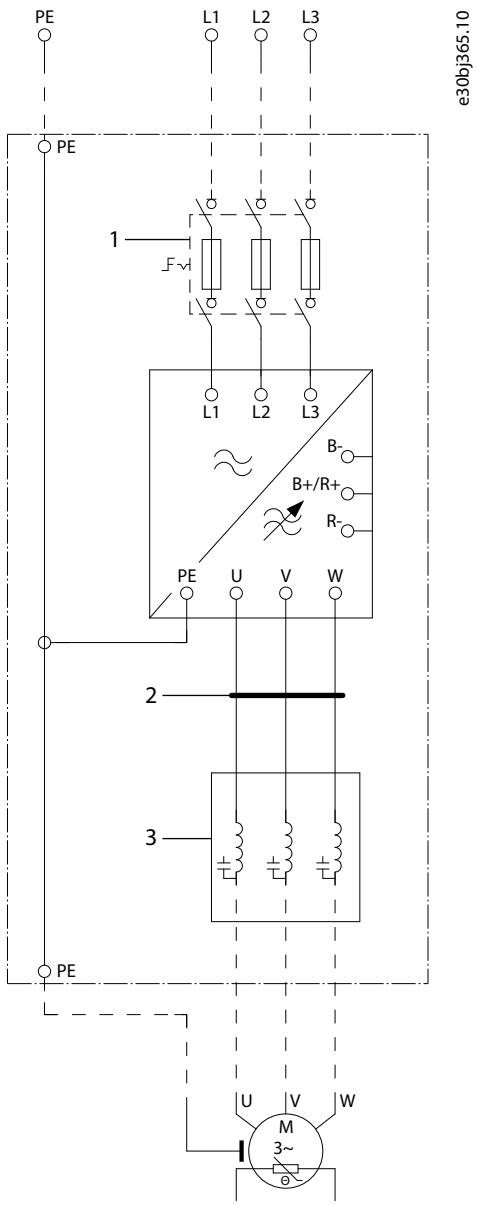

Illustration 69: Main Circuit Diagram of FR9

1	Fuse switch option +IFD (Other options are also available.)	3	dU/dt filter option +ODU or sine filter option +OSI
2	Common-mode filter option +OCM or +OCH		

12.4.2 Main Circuit Diagram of FR10

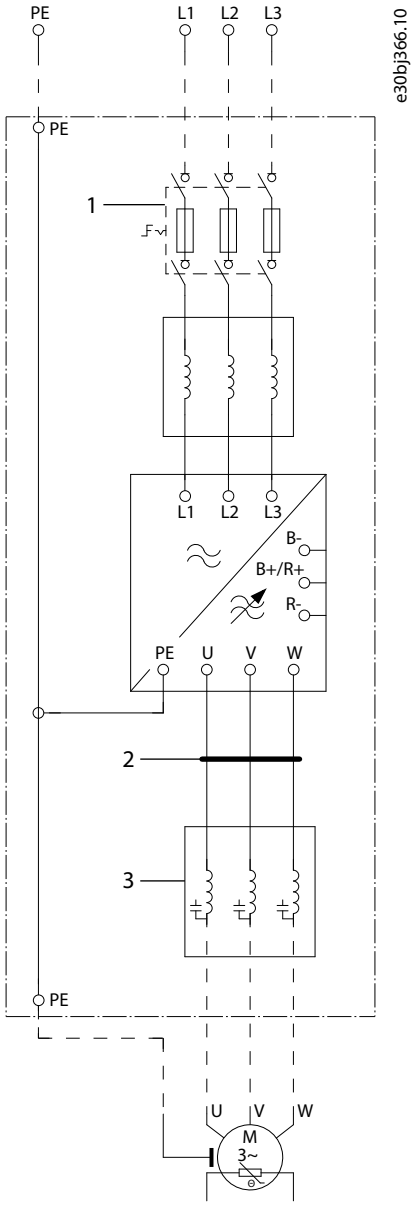

Illustration 70: Main Circuit Diagram of FR10

1	Fuse switch option +IFD (Other options are also available.)	3	dU/dt filter option +ODU or sine filter option +OSI
2	Common-mode filter option +OCM or +OCH		

12.4.3 Main Circuit Diagram of FR11

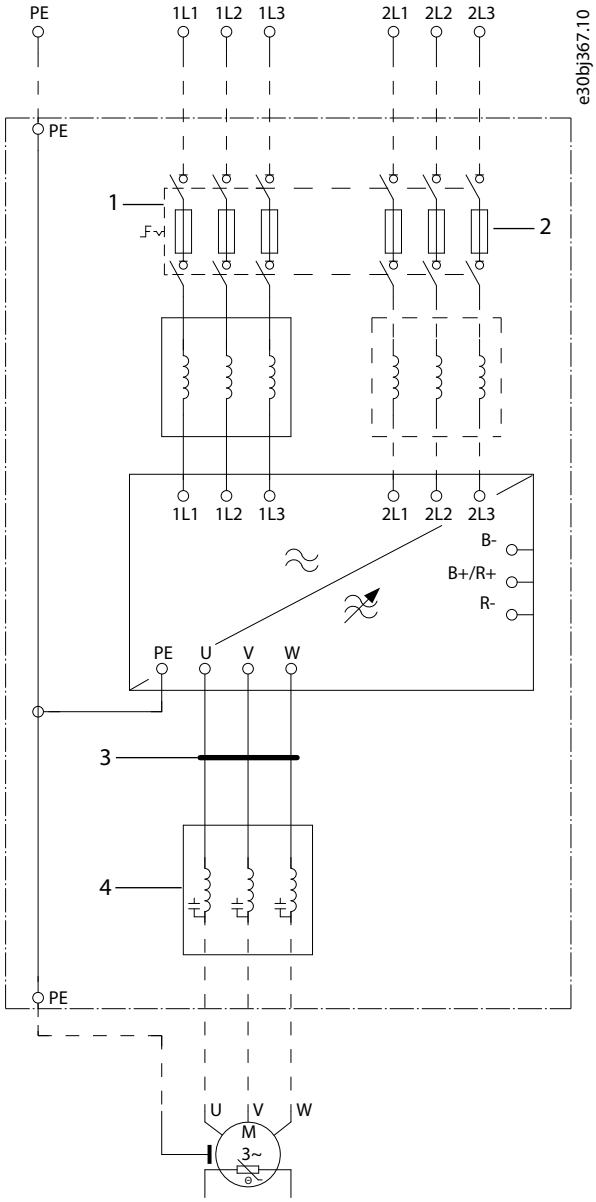

Illustration 71: Main Circuit Diagram of FR11

1	Fuse switch option +IFD (Other options are also available.)	3	Common-mode filter option +OCM or +OCH
2	FR11 types 0460 6 and 0502 6 have only one input.	4	dU/dt filter option +ODU or sine filter option +OSI

12.4.4 Main Circuit Diagram of FR12

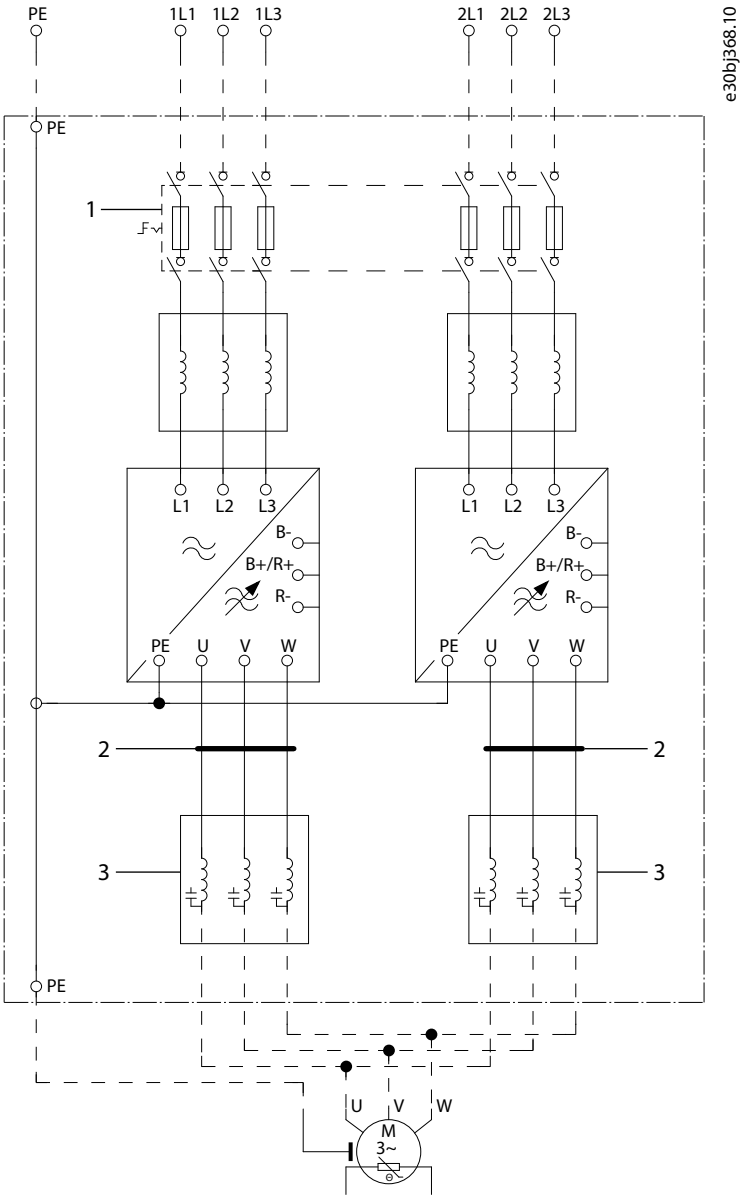

Illustration 72: Main Circuit Diagram of FR12

1	Fuse switch option +IFD (Other options are also available.)	3	dU/dt filter option +ODU or sine filter option +OSI
2	Common-mode filter option +OCM or +OCH		

12.4.5 Main Circuit Diagram of FR13

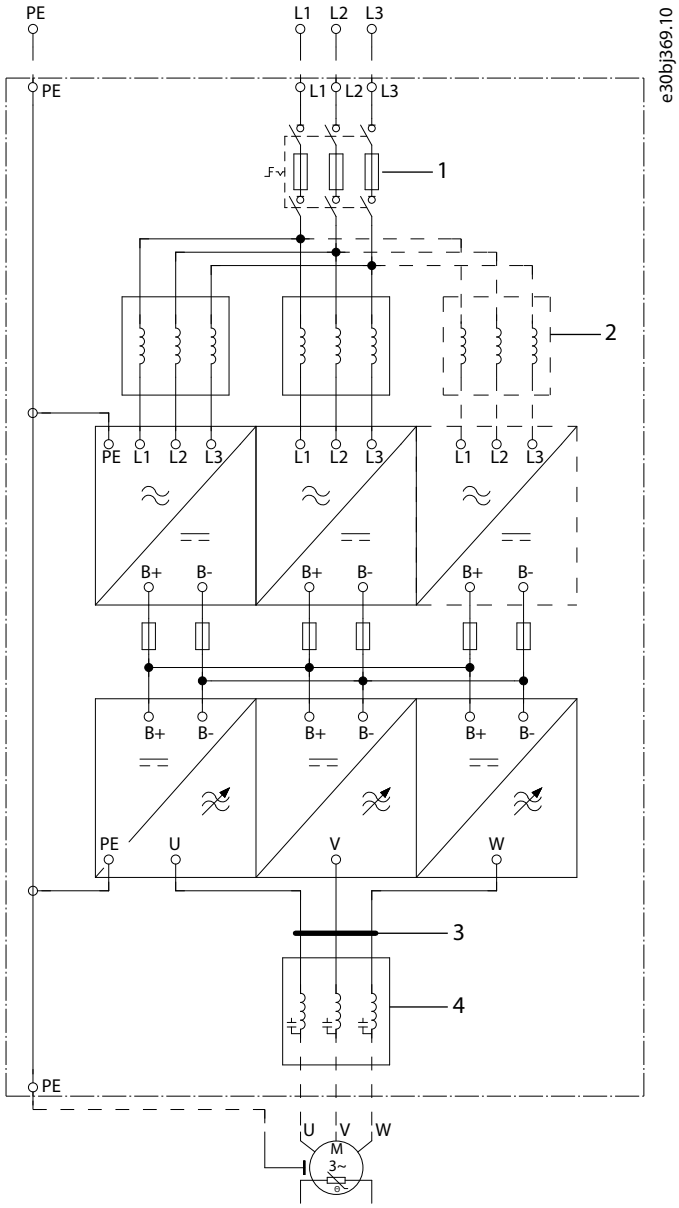

Illustration 73: Main Circuit Diagram of FR13

1	Fuse switch option +IFD (Other options are also available.)	3	Common-mode filter option +OCM or +OCH
2	FR13 drive types 1300 5 and 1450 5 have three NFE units.	4	dU/dt filter option +ODU or sine filter option +OSI

12.4.6 Main Circuit Diagram of FR14, Excluding Drive Type 1500 6

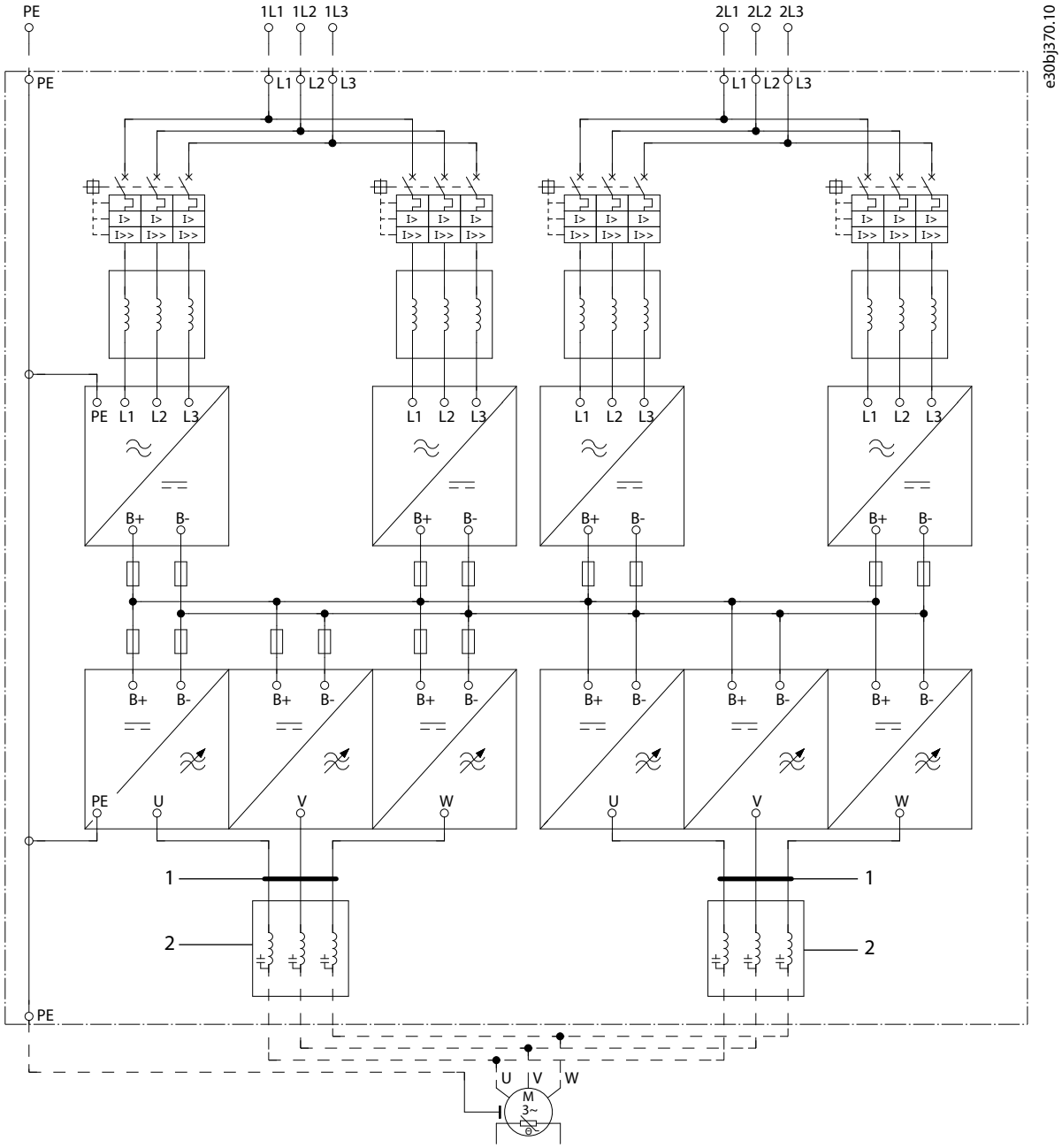

Illustration 74: Main Circuit Diagram of FR14, Excluding Drive Type 1500 6

1	Common-mode filter option +OCM or +OCH
2	Sine filter option +OSI

The dU/dt filter +ODU is included as default.

12.4.7 Main Circuit Diagram of FR14, Drive Type 1500 6

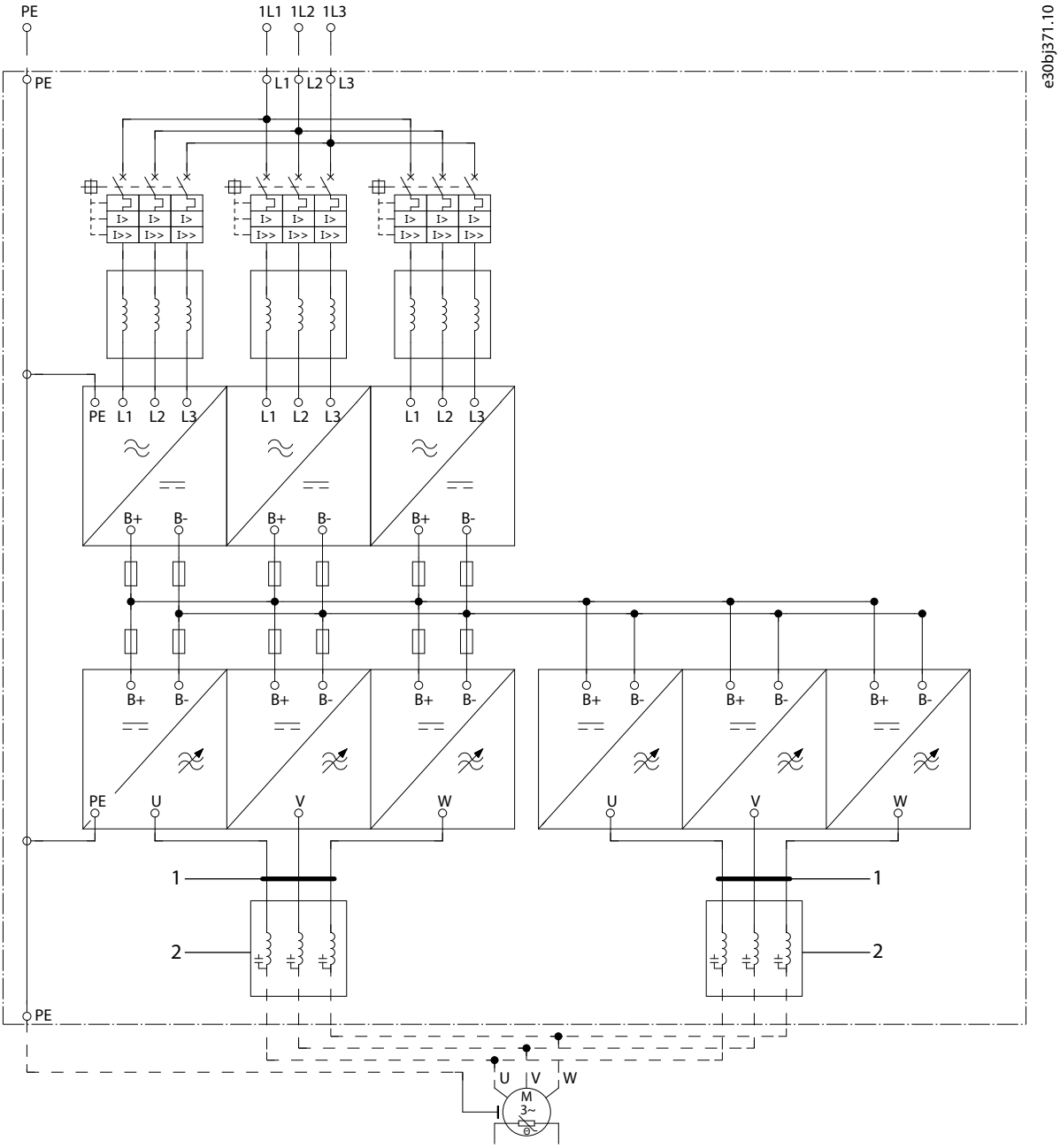

Illustration 75: Main Circuit Diagram of FR14, Drive Type 1500 6

1	Common-mode filter option +OCM or +OCH
2	Sine filter option +OSI

The dU/dt filter +ODU is included as default.

12.4.8 Main Circuit Diagram of AF9-10

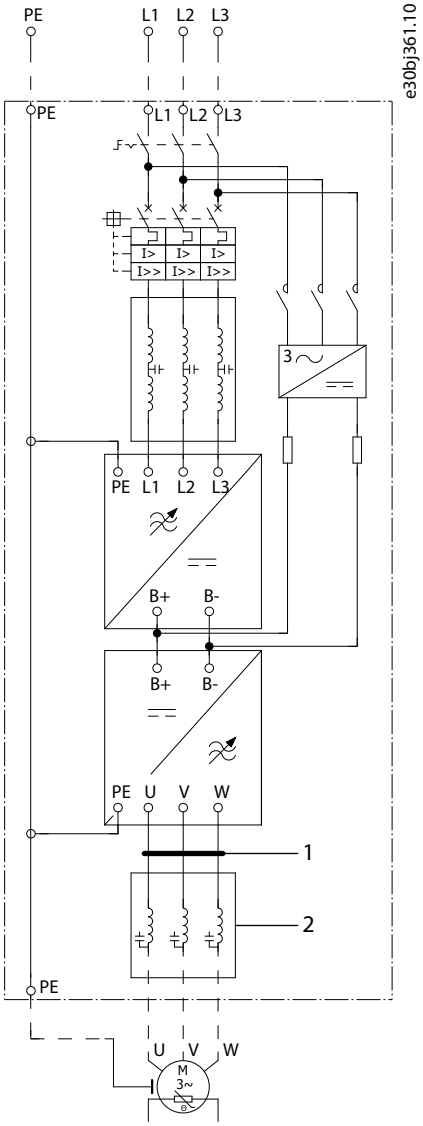

Illustration 76: Main Circuit Diagram of AF9-10

1	Common-mode filter option +OCM or +OCH
2	dU/dt filter option +ODU or sine filter option +OSI

12.4.9 Main Circuit Diagram of AF12

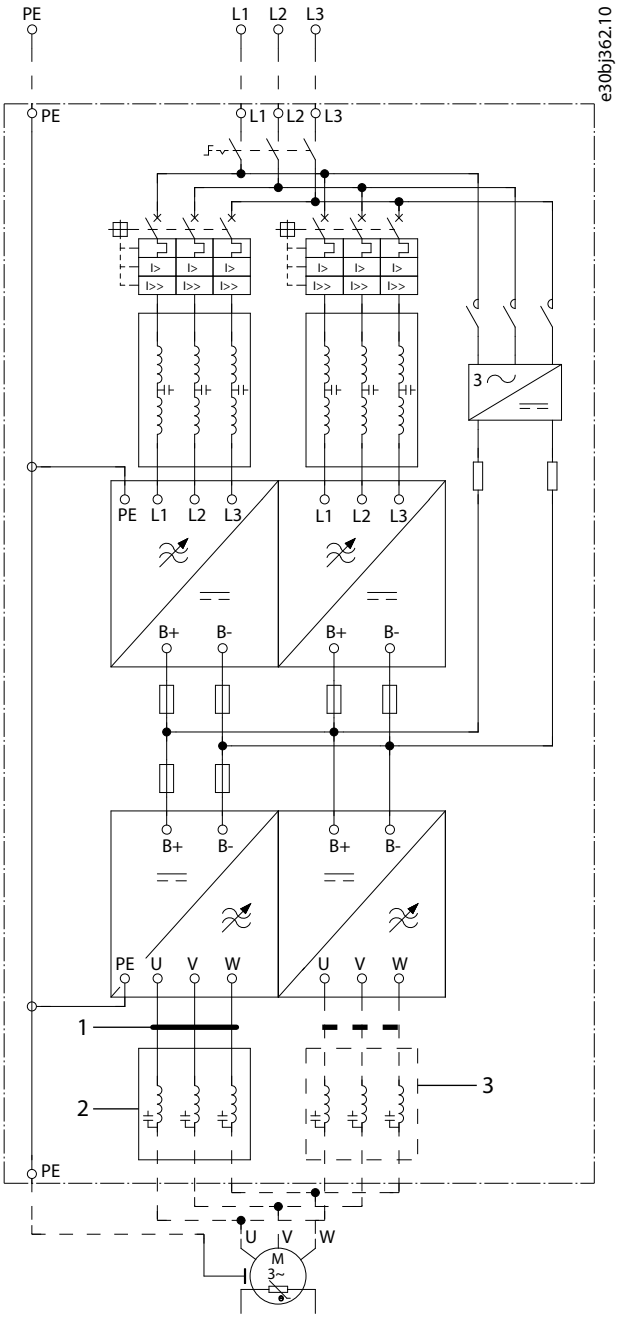

Illustration 77: Main Circuit Diagram of AF12

1	Common-mode filter option +OCM or +OCH	3	There are two outputs without filters or with sine filters, and only one output with dU/dt filters.
2	dU/dt filter option +ODU or sine filter option +OSI		

12.4.10 Main Circuit Diagram of AF13

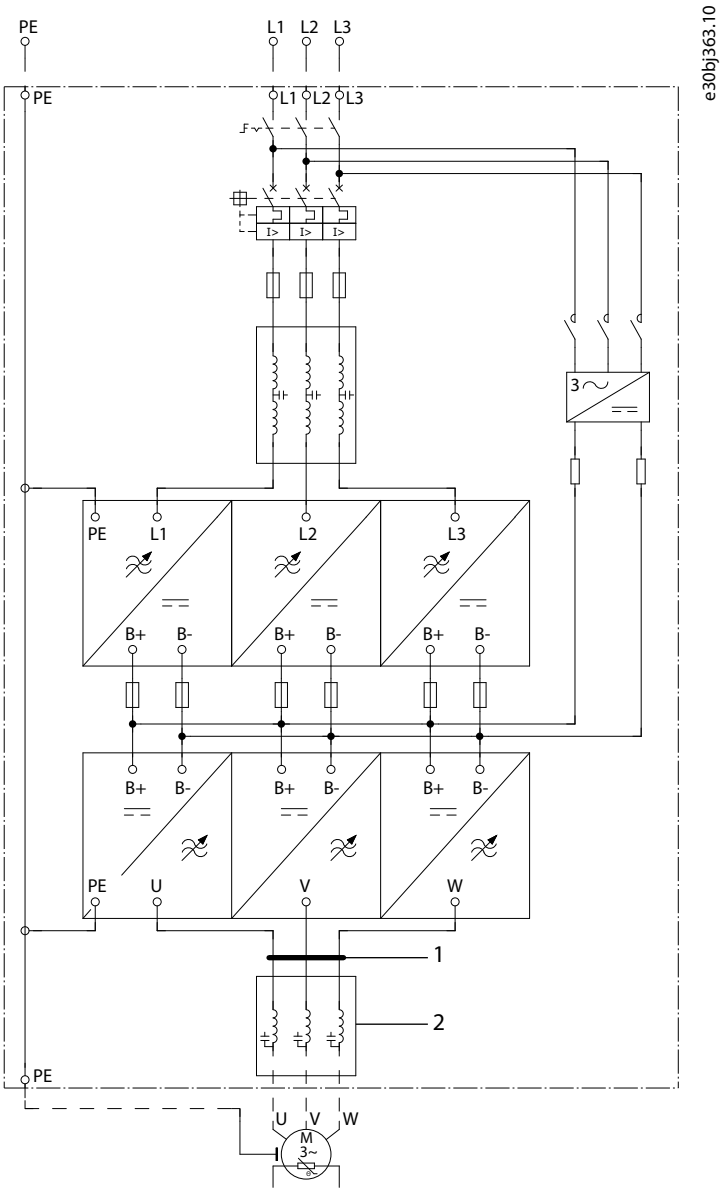

Illustration 78: Main Circuit Diagram of AF13

1	Common-mode filter option +OCM or +OCH
2	dU/dt filter option +ODU or sine filter option +OSI

12.4.11 Main Circuit Diagram of AF14

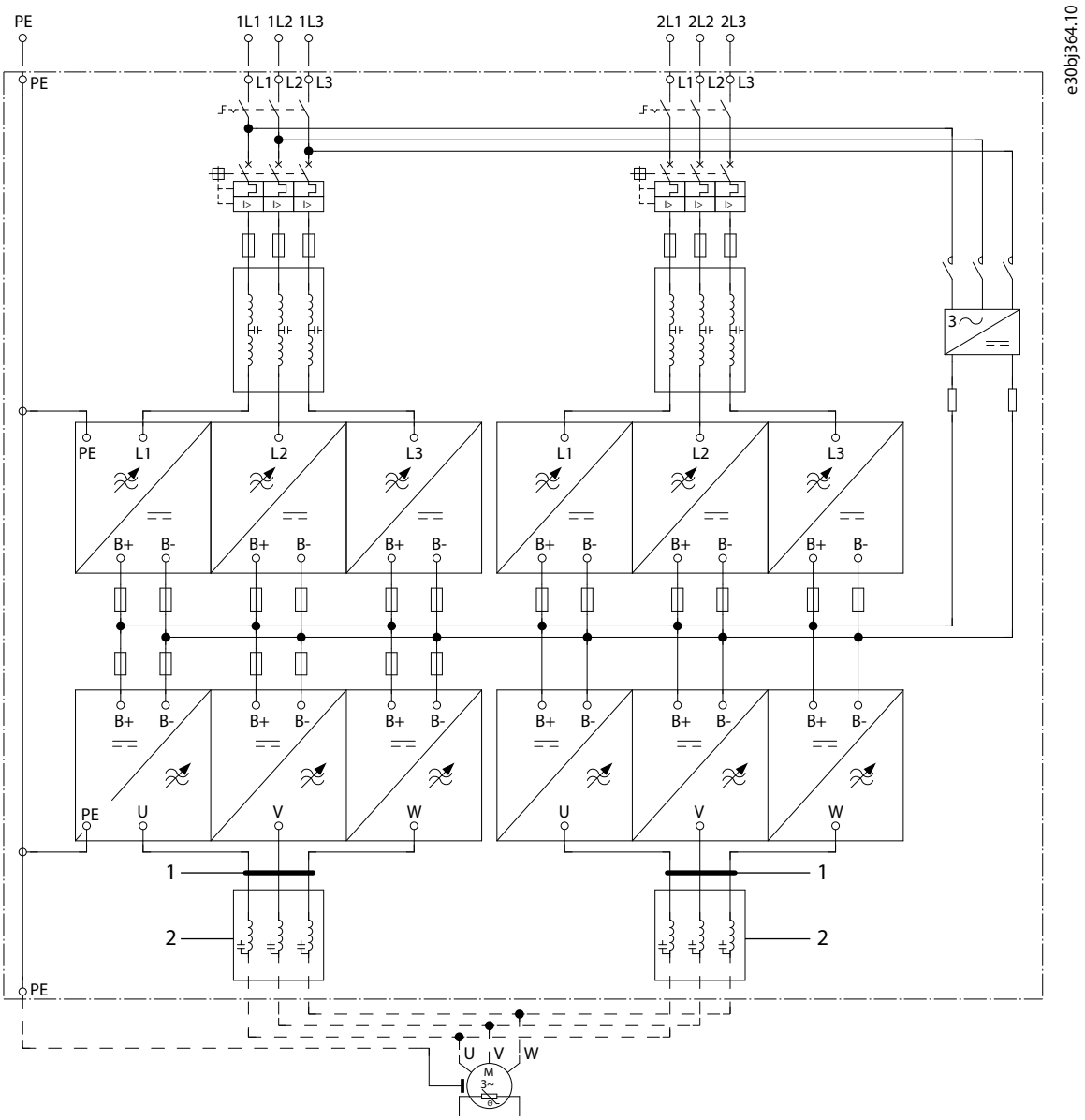

Illustration 79: Main Circuit Diagram of AF14

1	Common-mode filter option +OCM or +OCH
2	sine filter option +OSI

The dU/dt filter +ODU is included as default.

12.5 Tightening Torques of the Terminals

Table 55: Tightening Torques of the Mains and Motor Terminals

Enclosure size	Drive type	Tightening torque (Nm)	Tightening torque (in-lb)
FR9	0261 2–0300 2 0261 5–0300 5	40/22[(1)]	354/194[(1)]

Enclosure size	Drive type	Tightening torque (Nm)	Tightening torque (in-lb)
	0125 6–0208 6		
FR10–FR14	0385 5–1450 5	40[(2)]	354[(2)]
FR10–FR14	0261 6–1180 6	40[(2)]	354[(2)]

[1] Tightening torque of terminal connection to the isolative base in Nm/in-lbs. **NOTE:** This value is needed only if the motor connection is made directly to the AC drive (no devices between AC drive and motor).

[2] Apply counter torque to the nut on the other side of the terminal when tightening or loosening the terminal screw to avoid damage to the terminal

12.6 Tightening Torques of the Busbar Connections

Table 56: Tightening Torques of the Busbar Connections

Bolt	Tightening torque (Nm)	Tightening torque (in-lb)
M8	20	177
M10	40	354
M12	70	620

Apply counter torque to the nut on the other side of the terminal when tightening or loosening the terminal screw to avoid damage to the terminal.

Two full threads must protrude above face of the nut.

Always use pressure balancing washer with busbar-busbar connections.

12.7 Power Ratings

12.7.1 Overload Capability

The **low overload** means that if 110% of the continuous current (I_L) is required for 1 minute every 10 minutes, the remaining 9 minutes must be approximately 98% of I_L or less. This is to make sure that the output RMS current is not more than I_L during the duty cycle.

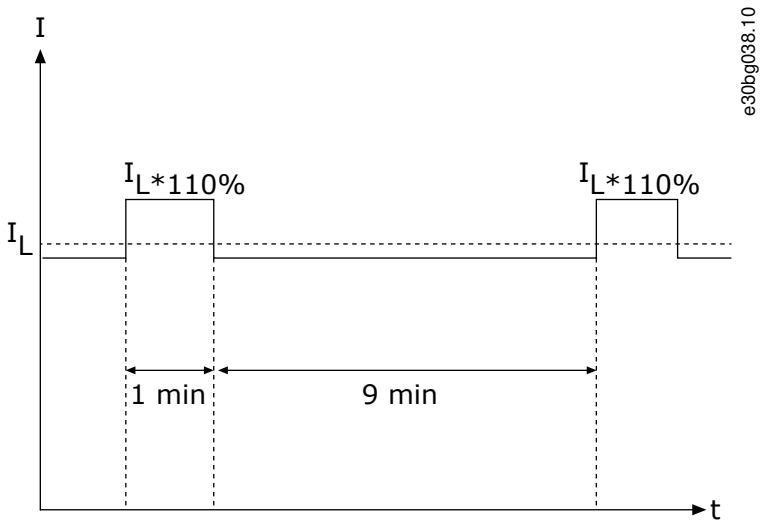

Illustration 80: Low Overload

The **high overload** means that if 150% of the continuous current (I_H) is required for 1 minute every 10 minutes, the remaining 9 minutes must be approximately 92% of I_H or less. This is to make sure that the output RMS current is not more than I_H during the duty cycle.

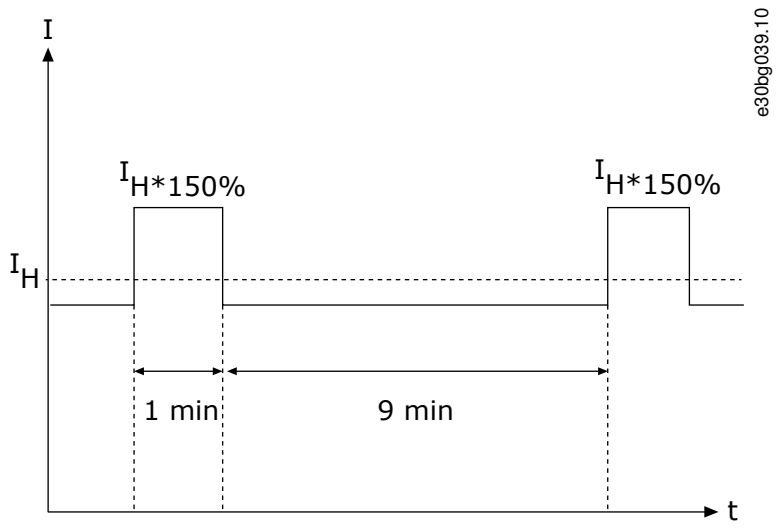

Illustration 81: High Overload

For more information, refer to the standard IEC61800-2.

12.7.2 Power Ratings for Mains Voltage 380–500 V

Table 57: Power Ratings in Mains 380–500 V, 50/60 Hz, 3~

Enclosure size	Drive type	Loadability[1]					Motor shaft power			
		Low		High			400 V supply		500 V supply	
		Rated continuous current I_L (A) [2]	Rated overload current (A)	Rated continuous current I_H (A)	Rated overload current (A)	Max current I_S	Low overload P (kW)	High overload P (kW)	Low overload P (kW)	High overload P (kW)
FR9	NXC0261 5	261	287	205	308	349	132	110	160	132
	NXC0300 5	300	330	245	368	444	160	132	200	160
FR10	NXC0385 5	385	424	300	450	540	200	160	250	200
	NXC0460 5	460	506	385	578	693	250	200	315	250
	NXC0520 5	520	572	460	690	828	250	250	355	315
FR11	NXC0590 5	590	649	520	780	936	315	250	400	355
	NXC0650 5	650	715	590	885	1062	355	315	450	400
	NXC0730 5	730	803	650	975	1170	400	355	500	450
FR12	NXC0820 5	820	902	730	1095	1314	450	400	560	500
	NXC0920 5	920	1012	820	1230	1476	500	450	630	560
	NXC1030 5	1030	1133	920	1380	1656	560	500	710	630
FR13	NXC1150 5	1150	1265	1030	1545	1620	630	560	800	710

Enclosure size	Drive type	Loadability[1]					Motor shaft power			
		Low		High			400 V supply		500 V supply	
		Rated continuous current I_L (A) [2]	Rated overload current (A)	Rated continuous current I_H (A)	Rated overload current (A)	Max current I_S	Low overload P (kW)	High overload P (kW)	Low overload P (kW)	High overload P (kW)
	NXC1300 5	1300	1430	1150	1725	2079	710	630	900	800
	NXC1450 5	1450	1595	1300	1950	2484	800	710	1000	900
FR14	NXC1770 5	1770	1947	1600	2400	2880	1000	900	1200	1100
	NXC2150 5	2150	2365	1940	2910	3492	1200	1100	1500	1300

[1] See 12.7.1 Overload Capability

[2] The currents in given ambient temperatures are achieved only when the switching frequency is the same or smaller than the factory default.

12.7.3 Power Ratings for Low Harmonics, Mains Voltage 380–500 V

Table 58: Power Ratings in Low Harmonics Drives, Mains 380–500 V, 50/60 Hz, 3~

Enclosure size	Drive type	Loadability[1]					Motor shaft power	
		Low		High			400 V supply	
		Rated continuous current I_L (A)[2]	Rated overload current (A)	Rated continuous current I_H (A)	Rated overload current (A)	Max current I_S	Low overload P (kW)	High overload P (kW)
AF9	NXC0261 5	261	287	205	308	349	132	110
	NXC0300 5	300	330	245	368	444	160	132
AF10	NXC0385 5	385	424	300	450	540	200	160
	NXC0460 5	460	506	385	578	693	250	200
	NXC0520 5	520	572	460	690	828	250	250
AF12	NXC0650 5	650	715	590	885	1062	355	315
	NXC0730 5	730	803	650	975	1170	400	355
	NXC0820 5	820	902	730	1095	1314	450	400
	NXC0920 5	920	1012	820	1230	1476	500	450
	NXC1030 5	1030	1133	920	1380	1656	560	500
AF13	NXC1150 5	1150	1265	1030	1545	1854	630	560
	NXC1300 5	1300	1430	1150	1725	2079	710	630
	NXC1450 5	1450	1595	1300	1950	2484	800	710

Enclosure size	Drive type	Loadability[1]					Motor shaft power	
		Low		High			400 V supply	
		Rated continuous current I_L (A)[2]	Rated overload current (A)	Rated continuous current I_H (A)	Rated overload current (A)	Max current I_S	Low overload P (kW)	High overload P (kW)
AF14	NXC1770 5	1770	1947	1600	2400	2880	1000	900
	NXC2150 5	2150	2365	1940	2910	3492	1200	1100
	NXC2700 5	2700	2970	2300	3278	3933	1500	1200

[1] See 12.7.1 Overload Capability

[2] The currents in given ambient temperatures are achieved only when the switching frequency is the same or smaller than the factory default.

12.7.4 Power Ratings for Mains Voltage 525–690 V

Table 59: Power Ratings in Mains 525–690 V, 50/60 Hz, 3~

Enclosure size	Drive type	Loadability[1]					Motor shaft power			
		Low		High			690 V supply		575 V supply	
		Rated continuous current I_L (A) [2]	Rated overload current (A)	Rated continuous current I_H (A)	50 % overload current (A)	Max current I_S	Low overload P (kW)	High overload P (kW)	Low overload P (hp)	High overload P (hp)
FR9	NXC0125 6	125	138	100	150	200	110	90	125	100
	NXC0144 6	144	158	125	188	213	132	110	150	125
	NXC0170 6	170	187	144	216	245	160	132	150	150
	NXC0208 6	208	229	170	255	289	200	160	200	150
FR10	NXC0261 6	261	287	208	312	375	250	200	250	200
	NXC0325 6	325	358	261	392	470	315	250	300	250
	NXC0385 6	385	424	325	488	585	355	315	400	300
	NXC0416 6[3]	416	416	325	488	585	400	315	450	300
FR11	NXC0460 6	460	506	385	578	693	450	355	450	400
	NXC0502 6	502	552	460	690	828	500	450	500	450
	NXC0590 6[3]	590	649	502	753	904	560	500	600	500
FR12	NXC0650 6	650	715	590	885	1062	630	560	650	600
	NXC0750 6	750	825	650	975	1170	710	630	800	650
	NXC0820 6[3]	820	902	650	975	1170	800	630	750	650
FR13	NXC0920 6	920	1012	820	1230	1410	900	800	900	800
	NXC1030 6	1030	1130	920	1380	1755	1000	900	1000	900

Enclosure size	Drive type	Loadability[1]					Motor shaft power			
		Low		High			690 V supply		575 V supply	
		Rated continuous current I_L (A) [2]	Rated overload current (A)	Rated continuous current I_H (A)	50 % overload current (A)	Max current I_S	Low overload P (kW)	High overload P (kW)	Low overload P (hp)	High overload P (hp)
	NXC1180 6[3]	1180	1298	1030	1463	1755	1150	1000	1100	1000
FR14	NXC1500 6	1500	1650	1300	1950	2340	1500	1300	1500	1350
	NXC1900 6	1900	2090	1500	2250	2700	1800	1500	2000	1500
	NXC2250 6[3]	2250	2475	1900	2782	3335	2000	1800	2300	2000

[1] See 12.7.1 Overload Capability

[2] The currents in given ambient temperatures are achieved only when the switching frequency is the same or smaller than the factory default.

[3] Maximum ambient temperature +35 °C (+95 °F).

12.7.5 Power Ratings for Low Harmonics, Mains Voltage 525–690 V

Table 60: Power Ratings in Low Harmonics Drives, Mains 525–690 V, 50/60 Hz, 3~

Enclosure size	Drive type	Loadability[1]					Motor shaft power	
		Low		High			690 V supply	
		Rated continuous current I_L (A)[2]	Rated overload current (A)	Rated contin. current I_H (A)	50 %overload current (A)	Max current I_S	Low overload P (kW)	High overload P (kW)
AF9	NXC0125 6	125	138	100	150	200	110	90
	NXC0144 6	144	158	125	188	213	132	110
	NXC0170 6	170	187	144	216	245	160	132
	NXC0208 6	208	229	170	255	289	200	160
AF10	NXC0261 6	261	287	208	312	375	250	200
	NXC0325 6	325	358	261	392	470	315	250
	NXC0385 6	385	424	325	488	585	355	315
	NXC0416 6[3]	416	416	325	488	585	400	315
AF12	NXC0460 6	460	506	385	578	693	450	355
	NXC0502 6	502	552	460	690	828	500	450
	NXC0590 6[3]	590	649	502	753	904	560	500
	NXC0650 6	650	715	590	885	1062	630	560
	NXC0750 6	750	825	650	975	1170	710	630
	NXC0820 6[3]	820	902	650	975	1170	750	650
AF13	NXC0920 6	920	1012	820	1230	1476	900	800

Enclosure size	Drive type	Loadability[1]					Motor shaft power	
		Low		High			690 V supply	
		Rated continuous current I_L (A)[2]	Rated overload current (A)	Rated contin. current I_H (A)	50 %overload current (A)	Max current I_S	Low overload P (kW)	High overload P (kW)
	NXC1030 6	1030	1133	920	1380	1656	1000	900
	NXC1180 6[3]	1180	1298	1030	1463	1755	1150	1000
AF14	NXC1500 6	1500	1650	1300	1950	2340	1500	1300
	NXC1900 6	1900	2090	1500	2250	2700	1800	1500
	NXC2250 6[3]	2250	2475	1900	2782	3335	2000	1800

[1] See 12.7.1 Overload Capability

[2] The currents in given ambient temperatures are achieved only when the switching frequency is the same or smaller than the factory default.

[3] Maximum ambient temperature +35 °C (+95 °F).

12.8 VACON® NXC Technical Data

Table 61: Technical Data

Technical item or function		Technical data
Connection of mains	Input voltage U_{in}	380–500 V; 525–690 V; –10%…+10% 380–500 V; 525–690 V; –10%…+10% (low harmonic drives)
	Input frequency	45–66 Hz
	Connection to mains	Once per minute or less (normal case)
	Starting delay	Maximum ±3% of the nominal voltage
	Network imbalance	5 s (AF9–AF14 and FR9–FR14
	Supply grounding system	TN-S, TN-C, TN-CS, TT or IT
	Short circuit ratings	Defined by ratings of installed fuses or circuit breakers. Maximum permitted values 50 kA at 380–500 V AC, 40 kA at 525–690 V AC. Refer to cabinet specific documentation for more details
Motor connection	Output voltage	0—U_{in}
	Continuous output current	Ambient temperature maximum +40 °C (+104 °F), up to +50 °C (+122 °F) with current derating 1.5% per 1°. See 12.7.2 Power Ratings for Mains Voltage 380–500 V and 12.7.4 Power Ratings for Mains Voltage 525–690 V.
	Starting current	IS for 2 s every 20 s
	Output frequency	0–320 Hz; (higher with special software)

Technical item or function		Technical data
Control qualities	Control performance	• Open Loop Vector Control (5–150% of basic speed): Speed control 0.5%, dynamic 0.3%/s, torque lin. <2%, torque rise time ~5 ms • Closed Loop Vector Control (entire speed range): Speed control 0.01%, dynamic 0.2%/s, torque lin. <2%, torque rise time ~2 ms
	Switching frequency	NX_5: 1–6 kHz; Factory default 3.6 kHz(1)
		NX_6: 1–6 kHz; Factory default 1.5 kHz(1)
	Frequency reference • Analog input • Panel reference	• Resolution 0.1% (10-bit), accuracy ±1% • Resolution 0.01 Hz
	Field weakening point	8–320 Hz
	Acceleration time	0.1–3000 s
	Deceleration time	0.1–3000 s
	Braking	DC brake: 30% x T_N (without brake option); flux braking
Ambient conditions	Ambient operating temperature	–10 °C (no frost)…+40 °C (+14 °F (no frost)...+104 °F)
	Storage temperature	–40 °C…+70 °C (-140 °F...+158 °F)
	Relative humidity	0–95% RH, non-condensing, non-corrosive, no dripping water
	Air quality: • chemical vapors • mechanical particles	• IEC 60721-3-3 Edition 2.2, AC drive in operation, class 3C3 • IEC 60721-3-3 Edition 2.2, AC drive in operation, class 3S2
	Pollution degree	PD2
	Cabinet surface treatment	Nanoceramic pretreatment. Anodic dipcoat-priming and textured powder-coating.
	Altitude	100% load capacity (no derating) up to 1000 m 1-% derating for each 100 m above 1000; maximum 3000 m (690 V max 2000 m).
	Vibration: EN50178/EN60068-2-6	Displacement amplitude 0.25 mm (peak) at 5–31 Hz Max acceleration 1 G at 31–150 Hz. Use anti-vibration mountings under the drive if extra vibration resistance is required.
	Shock: EN50178, EN60068-2-27	UPS Drop Test (for applicable UPS weights) Storage and shipping: max 15 G, 11 ms (in package)
	Protection rating	IP21/NEMA1 standard in entire kW/HP range IP54/NEMA12 option in entire kW/HP range.
EMC (at default settings)	Immunity	Fulfills all EMC immunity requirements
	Emissions	EMC level L: EN 61800-3 (2004) + A1:2012, Category C3 EMC level T: Low earth-current solution for IT-networks, EN 61800-3 (2004) + A1:2012, Category C4 (can be modified from level L units).
Noise level	Average noise level (cooling fan) in dB(A)	The sound pressure depends on the cooling fan speed, which is controlled in accordance with the drive temperature.

Technical item or function		Technical data
		FR9–FR13, AF9–AF10: 76 FR14, AF12–AF13: 78 AF14: 80
Functional safety	Hardware based 'Safe Torque Off' safety function to prevent the drive from generating torque on the motor shaft. STO safety function has been designed for use in accordance with the following standards	• EN 61800-5-2 Safe Torque Off (STO) SIL3 • EN ISO 13849-1 PL "e" Category 3 • EN 62061 SILCL3 • IEC 61508 SIL3 • The function also corresponds to an uncontrolled stop in accordance with stop category 0, EN 60204-1. • EN 954-1, Category 3
	SS1 safety function is realized in compliance with type C of the drives safety standard EN61800-5-2 (Type C: "The PDS(SR) initiates the motor deceleration and initiates the STO function after an applicationspecific time delay"). SS1 safety function has been designed for use in accordance with the following standards:	• EN 61800-5-2 Safe Stop 1 (SS1) SIL3 • EN ISO 13849-1 PL "e" Category 3 • EN 62061 SILCL3 • IEC 61508 SIL3 • The function also corresponds to a controlled stop in accordance with stop category 1, EN60204-1.
	ATEX thermistor input	2014/34/EU, CE 0537 Ex 11 (2) GD
Approvals	CE	EN 61800-5-1:2007 EMC: EN 61800-3:2004+A1:2012 RoHS: EN IEC 63000:2018 EN 60204-1:2018 (stop category 0) EN 61439-1:2011 (as relevant) EN 61439-2:2011 (as relevant)
	c-UL-us	UL 508C and CSA 22.2 No.14
	UKCA	Compliance to BS EN 61800-3, BS EN 61800-5-1, BS EN IEC 63000, BS EN 61800-9-2, BS EN 60204-1, BS EN 61439-1, BS EN 61439-2
	Morocco	Compliance to NM EN 61800-5-1
	KC	Korean Certification
	UA	Ukrainian Approval
	EAC	Eurasian Certification
	Efficiency class	Ecodesign regulation: EN 61800-9-2:2017
	RCM	Compliance to EN 61800-3
Efficiency	-	See 5.2.1 Power Losses
Control connections (factory default I/O)	Analog input voltage	0…+10 V, R_i = 200 kW, (–10 V…+10 V joystick control) Resolution 0.1%, accuracy ±1%
	Analog input current	0(4)…20 mA, R_i = 250 W differential; Resolution 0.1%, accuracy ±1%
	Digital inputs (6)	Positive or negative logic; 18…30 V DC

Technical item or function		Technical data
	Auxiliary voltage	+24 V, ±15%, max volt. ripple < 100 m Vrms; maximum 250 mA Dimensioning: Maximum 1000 mA/control box
	Output reference voltage	+10 V, ±3%, maximum load 10 mA
	Analog output	0(4)…20 mA; RL maximum 500 W; Resolution 10 bit; Accuracy ±2%
	Digital outputs	Open collector output, 50 mA/48 V
	Relay outputs	2 programmable change-over relay outputs Switching capacity: 24 VDC/8 A, 250 VAC/8 A, 125 VDC/0.4 A Minimum switching load: 5 V/10 mA
	Thermistor input (OPTA3)	Galvanically isolated, Rtrip = 4.7 kΩ
Protections	Overvoltage trip limit	NX_5: 911 V DC; NX_6: 1200 V DC
	Undervoltage trip limit	NX_5: 333 V DC; NX_6: 460 V DC
	Ground fault protection	If there is a ground fault in motor or motor cable, only the AC drive is protected
	Mains supervision	Trips if any of the input phases is missing
	Motor phase supervision	Trips if any of the output phases is missing
	Overcurrent protection	Yes
	Unit overtemperature protection	Yes
	Motor overload protection	Yes[(2)] Motor overload protection provided at 110% of full load current
	Motor stall protection	Yes
	Motor underload protection	Yes
	Short-circuit protection of +24 V and +10 V reference voltages	Yes
Drive enclosure materials	-	Dark grey = NCS 7010-R90B (Pantone 7546C)

[1] The rated currents in given ambient temperatures are achieved only when the switching frequency is equal to or less than the factory default. Thermal management can reduce the switching frequency.

[2] System software version NXP00002V186 (or newer) must be used for the motor thermal memory and memory retention functionality to conform to UL 508C requirements. If an older system software version is used, motor overtemperature protection is required at installation to comply with UL requirements.

12.9 Faults and Alarms

12.9.1 Fault 1 - Overcurrent, Subcode S1 - Hardware trip

Cause

There is too high a current in the motor cable. Its cause can be 1 of the following:

- A sudden heavy load increase
- A short circuit in the motor cables
- The motor is not the correct type

Troubleshooting

- Check the load.
- Check the motor.
- Check the cables and connections.
- Make an identification run.

12.9.2 Fault 1 - Overcurrent, Subcode S3 - Current limit controller supervision

Cause

There is too high a current in the motor cable. Its cause can be 1 of the following:

- A sudden heavy load increase
- A short circuit in the motor cables
- The motor is not the correct type

Troubleshooting

- Check the load.
- Check the motor.
- Check the cables and connections.
- Make an identification run.

12.9.3 Fault 1 - Overcurrent, Subcode S4 - Software-based overcurrent fault

Cause

There is too high a current in the motor cable. Its cause can be 1 of the following:

- A sudden heavy load increase
- A short circuit in the motor cables
- The motor is not the correct type

Troubleshooting

- Check the load.
- Check the motor.
- Check the cables and connections.
- Make an identification run.

12.9.4 Fault 2 - Overvoltage, Subcode S1 - Hardware trip

Cause

The DC-link voltage is higher than the limits.

- Too short a deceleration time
- High overvoltage spikes in the supply
- Start/Stop sequence too fast

Troubleshooting

- Set the deceleration time longer.
- Use the brake chopper or the brake resistor. They are available as options.
- Activate the overvoltage controller.
- Do a check of the input voltage.

12.9.5 Fault 2 - Overvoltage, Subcode S2 - Overvoltage control supervision

Cause

The DC-link voltage is higher than the limits.

- Too short a deceleration time
- High overvoltage spikes in the supply
- Motor load is generative
- Start/Stop sequence too fast

Troubleshooting

- Set the deceleration time longer.
- Use the brake chopper or the brake resistor. They are available as options.
- Activate the overvoltage controller.
- Do a check of the input voltage.

12.9.6 Fault 3 - Earth fault

Cause

The measurement of current tells that the sum of the motor phase current is not zero.

- Insulation malfunction in the cables or in the motor.

It is possible to set different responses in the application for this fault. See parameter group Protections.

Troubleshooting

Do a check of the motor cables and the motor.

12.9.7 Fault 5 - Charging switch

Cause

The charging switch is open, when the START command is given.

- Operation malfunction
- Defective component

Troubleshooting

- Reset the fault and start the drive again.
- If the fault shows again, ask instructions from the local distributor.

12.9.8 Fault 6 - Emergency stop

Cause

Stop signal has been given from the option board.

Troubleshooting

Do a check of the emergency stop circuit.

12.9.9 Fault 7 - Saturation trip

Cause

- Defective component
- Brake resistor short circuit or overload

Troubleshooting

This fault cannot be reset from the control panel.

- Switch off the power.
- DO NOT RESTART THE DRIVE OR CONNECT THE POWER!
- Ask instructions from the factory. If this fault shows at the same time with Fault 1, do a check of the motor cable and the motor.

12.9.10 Fault 8 - System fault, Subcode S1 - ASIC phase feedback

Cause

- Operation malfunction
- Defective component

Troubleshooting

- Reset the fault and start the drive again.
- If the fault shows again, ask instructions from the local distributor.

12.9.11 Fault 8 - System fault, Subcode S4 - ASIC trip

Cause

- Operation malfunction
- Defective component

Troubleshooting

- Reset the fault and start the drive again.
- If the fault shows again, ask instructions from the local distributor.

12.9.12 Fault 8 - System fault, Subcode S5 - Disturbance in VaconBus

Cause

- Operation malfunction
- Defective component

Troubleshooting

- Reset the fault and start the drive again.
- If the fault shows again, ask instructions from the local distributor.

12.9.13 Fault 8 - System fault, Subcode S6 - Feedback of charging switch

Cause

- Operation malfunction
- Defective component

Troubleshooting

- Reset the fault and start the drive again.
- If the fault shows again, ask instructions from the local distributor.

12.9.14 Fault 8 - System fault, Subcode S7 - Charging switch

Cause

- Operation malfunction
- Defective component

Troubleshooting

- Reset the fault and start the drive again.
- If the fault shows again, ask instructions from the local distributor.

12.9.15 Fault 8 - System fault, Subcode S8 - No power to driver card

Cause

- Operation malfunction
- Defective component

Troubleshooting

- Reset the fault and start the drive again.
- If the fault shows again, ask instructions from the local distributor.

12.9.16 Fault 8 - System fault, Subcode S9 - Power unit communication (TX)

Cause

- Operation malfunction
- Defective component

Troubleshooting

- Reset the fault and start the drive again.
- If the fault shows again, ask instructions from the local distributor.

12.9.17 Fault 8 - System fault, Subcode S10 - Power unit communication (Trip)

Cause

- Operation malfunction
- Defective component

Troubleshooting

- Reset the fault and start the drive again.
- If the fault shows again, ask instructions from the local distributor.

12.9.18 Fault 8 - System fault, Subcode S11 - Power unit comm. (Measurement)

Cause

- Operation malfunction
- Defective component

Troubleshooting

- Reset the fault and start the drive again.
- If the fault shows again, ask instructions from the local distributor.

12.9.19 Fault 8 - System fault, Subcode S12 - System bus fault (slot D or E)

Cause

Error in system bus option board (OPTD1 or OPTD2) in slot D or E.

- Operation malfunction
- Defective component

Troubleshooting

- Reset the fault and start the drive again.
- If the fault shows again, ask instructions from the local distributor.
- Check the cables and connections.

12.9.20 Fault 8 - System fault, Subcode S30 - OPTAF: STO channels are different from each other

Cause

The Safe Disable inputs are in different states. It is not allowed according to EN954-1, category 3. This fault occurs when the Safe Disable inputs are in different states for more than 5 s.

Troubleshooting

- Check the S1 switch.
- Check the cabling to the OPTAF board.
- If the fault shows again, ask instructions from the local distributor.

12.9.21 Fault 8 - System fault, Subcode S31 - OPTAF: Thermistor short circuit detected

Cause

Thermistor short circuit detected.

Troubleshooting

- Correct the cable connections.
- Check the jumper for the thermistor short circuit supervision, if the thermistor function is not used and the thermistor input is short-circuited.

12.9.22 Fault 8 - System fault, Subcode S32 - OPTAF board has been removed

Cause

OPTAF board has been removed. It is not allowed to remove the OPTAF board once the software has recognized it.

Troubleshooting
The system requires a manual acknowledgement using *System* menu parameter P6.5.5 OPTAF Remove. Ask help from the local distributor.

12.9.23 Fault 8 - System fault, Subcode S33 - OPTAF: EEPROM error

Cause
OPTAF board EEPROM error (checksum, not answering and so on).

Troubleshooting
Change the OPTAF board.

12.9.24 Fault 8 - System fault, Subcode S34 - OPTAF: Voltage problem

Cause
OPTAF supply voltage hardware problem detected.

Troubleshooting
Change the OPTAF board.

12.9.25 Fault 8 - System fault, Subcode S35 - OPTAF: Overvoltage

Cause
OPTAF supply voltage hardware problem detected.

Troubleshooting
Change the OPTAF board.

12.9.26 Fault 8 - System fault, Subcode S36 - OPTAF: Undervoltage

Cause
OPTAF supply voltage hardware problem detected.

Troubleshooting
Change the OPTAF board.

12.9.27 Fault 8 - System fault, Subcode S37 - OPTAF: Test pulse is not detected in both STO channels

Cause
Single hardware problem detected in Safe Disable inputs.

Troubleshooting

- Change the OPTAF board.
- Change the control board.

12.9.28 Fault 8 - System fault, Subcode S38 - OPTAF: Test pulse is not detected in STO channel 1

Cause
Single hardware problem detected in Safe Disable inputs.

Troubleshooting

- Change the OPTAF board.
- Change the control board.

12.9.29 Fault 8 - System fault, Subcode S39 - OPTAF: Test pulse is not detected in STO channel 2

Cause
Single hardware problem detected in Safe Disable inputs.

Troubleshooting

- Change the OPTAF board.
- Change the control board.

12.9.30 Fault 8 - System fault, Subcode S40 - OPTAF: ASIC trip ETR is not set, even if STO channel 1 is active

Cause
Single hardware problem detected in Safe Disable inputs.

Troubleshooting

- Change the OPTAF board.
- Change the control board.

12.9.31 Fault 8 - System fault, Subcode S41 - OPTAF: STO channels are not active when the thermistor trip is active

Cause
Single hardware problem detected in the thermistor input.

Troubleshooting
Change the OPTAF board.

12.9.32 Fault 8 - System fault, Subcode S42 - OPTAF: Test pulse low is not detected on thermistor

Cause
Single hardware problem detected in the thermistor input.

Troubleshooting
Change the OPTAF board.

12.9.33 Fault 8 - System fault, Subcode S43 - OPTAF: Test pulse high is not detected on thermistor

Cause
Single hardware problem detected in the thermistor input.

Troubleshooting
Change the OPTAF board.

12.9.34 Fault 8 - System fault, Subcode S44 - OPTAF: STO channel 1 is not active, even if the analog input supervision indicates

Cause
Single hardware problem detected in Safe Disable inputs or in the thermistor input.

Troubleshooting

- Change the OPTAF board.
- Change the control board.

12.9.35 Fault 8 - System fault, Subcode S45 - OPTAF: STO channel 2 is not active, even if the analog input supervision indicates

Cause
Single hardware problem detected in Safe Disable inputs or in the thermistor input.

Troubleshooting

- Change the OPTAF board.
- Change the control board.

12.9.36 Fault 8 - System fault, Subcode S46 - OPTAF: Thermistor or analog input is not set, even if STO is active

Cause
Single hardware problem detected in Safe Disable inputs or in the thermistor input.

Troubleshooting

- Change the OPTAF board.
- Change the control board.

12.9.37 Fault 8 - System fault, Subcode S47 - OPTAF: Board mounted in old NXP control board with no safety hardware

Cause
OPTAF board mounted in old VACON® NXP control board, which is not equipped with the Safe Disable function.

Troubleshooting
Change the control board to VB00561 revision H or newer.

12.9.38 Fault 8 - System fault, Subcode S48 - OPTAF: Mismatch between Therm Trip (HW) parameter and jumper setting

Cause

The parameter Expander boards/ SlotB/ Therm Trip(HW) is set to OFF even though the jumper X12 is not cut.

Troubleshooting

Correct the parameter P7.2.1.1 Therm Trip (HW) to match the X12 jumper setting.

12.9.39 Fault 8 - System fault, Subcode S49 - OPTAF: Board mounted in VACON NXS control board

Cause

OPTAF is only compatible with VACON® NXP.

Troubleshooting

Remove the OPTAF board.

12.9.40 Fault 8 - System fault, Subcode S50 - OPTAF: Filter discharge resistor fault

Cause

Problem with the control board.

Troubleshooting

Ask instructions from the local distributor.

12.9.41 Fault 8 - System fault, Subcode S70 - False fault activated

Cause

Fault in application.

Troubleshooting

Ask instructions from the local distributor.

12.9.42 Fault 9 - Undervoltage, Subcode S1 - DC-link too low during run

Cause

The DC-link voltage is lower than the limits.

- Too low a supply voltage
- AC drive internal fault
- A defective input fuse
- The external charge switch is not closed.

It is possible to set different responses in the application for this fault. See parameter group Protections.

Troubleshooting

- If there is a temporary supply voltage break, reset the fault and start the drive again.
- Do a check of the supply voltage. If the supply voltage is sufficient, there is an internal fault.
- Ask instructions from the local distributor.

12.9.43 Fault 9 - Undervoltage, Subcode S2 - No data from power unit

Cause

The DC-link voltage is lower than the limits.

- Too low a supply voltage
- AC drive internal fault
- a defective input fuse
- the external charge switch is not closed.

It is possible to set different responses in the application for this fault. See parameter group Protections.

Troubleshooting

- If there is a temporary supply voltage break, reset the fault and start the drive again.
- Do a check of the supply voltage. If the supply voltage is sufficient, there is an internal fault.
- Ask instructions from the local distributor.

12.9.44 Fault 9 - Undervoltage, Subcode S3 - Undervoltage control supervision

Cause

The DC-link voltage is lower than the limits.

- Too low a supply voltage
- AC drive internal fault
- A defective input fuse
- The external charge switch is not closed.

It is possible to set different responses in the application for this fault. See parameter group Protections.

Troubleshooting

- If there is a temporary supply voltage break, reset the fault and start the drive again.
- Do a check of the supply voltage. If the supply voltage is sufficient, there is an internal fault.
- Ask instructions from the local distributor.

12.9.45 Fault 10 - Input line supervision, Subcode S1 - Phase supervision diode supply

Cause

The input line phase is missing.

It is possible to set different responses in the application for this fault. See parameter group Protections.

Troubleshooting

Do a check of the supply voltage, the fuses, and supply cable.

12.9.46 Fault 11 - Output phase supervision, Subcode S1 - Common output phase supervision

Cause

The measurement of current tells that there is no current in 1 motor phase.

It is possible to set different responses in the application for this fault. See parameter group Protections.

Troubleshooting

Do a check of the motor cable and the motor.

12.9.47 Fault 11 - Output phase supervision, Subcode S2 - Additional closed loop control output phase fault

Cause

The measurement of current tells that there is no current in 1 motor phase.

It is possible to set different responses in the application for this fault. See parameter group Protections.

Troubleshooting

Do a check of the motor cable and the motor.

12.9.48 Fault 11 - Output phase supervision, Subcode S3 - Additional open loop control output phase fault during start DC brake

Cause

The measurement of current tells that there is no current in 1 motor phase.

It is possible to set different responses in the application for this fault. See parameter group Protections.

Troubleshooting

Do a check of the motor cable and the motor.

12.9.49 Fault 11 - Output phase supervision, Subcode S4 - Additional closed loop output phase fault during PM StartAngleID run

Cause

The measurement of current tells that there is no current in 1 motor phase.

It is possible to set different responses in the application for this fault. See parameter group Protections.

Troubleshooting

Do a check of the motor cable and the motor.

12.9.50 Fault 12 - Brake chopper supervision

Cause

- There is no brake resistor.
- The brake resistor is broken.
- A defective brake chopper.

Troubleshooting

- Do a check of the brake resistor and the cabling.
- If they are in good condition, there is a fault in the resistor or the brake chopper. Ask instructions from the local distributor.

12.9.51 Fault 13 - AC drive undertemperature

Cause

Too low a temperature in the heat sink of the power unit or in the power board. The heat sink temperature is below -10 °C (14 °F).

Troubleshooting

Add an external heater near the AC drive.

12.9.52 Fault 14 - AC drive overtemperature, Subcode S1 - Overtemperature warning in unit, board, or phases

Cause

Overheating detected in AC drive.

Heat sink temperature is over 90 °C (194 °F). Overtemperature alarm is issued when the heat sink temperature goes over 85 °C (185 °F).

In 525–690 V, FR6: Heat sink temperature is over 77 °C (170.6 °F). Overtemperature alarm is issued when the heat sink temperature goes over 72 °C (161.6 °F).

Troubleshooting

- Do a check of the actual amount and flow of cooling air.
- Examine the heat sink for dust.
- Do a check of the ambient temperature.
- Make sure that the switching frequency is not too high in relation to the ambient temperature and the motor load.
- For FR10-FR11 Standalone: check door filters, and clean or replace if needed.

12.9.53 Fault 14 - AC drive overtemperature, Subcode S2 - Overtemperature in power board

Cause

Overheating detected in AC drive.

Heat sink temperature is over 90 °C (194 °F). Overtemperature alarm is issued when the heat sink temperature goes over 85 °C (185 °F).

In 525–690 V, FR6: Heat sink temperature is over 77 °C (170.6 °F). Overtemperature alarm is issued when the heat sink temperature goes over 72 °C (161.6 °F).

Troubleshooting

- Do a check of the actual amount and flow of cooling air.
- Examine the heat sink for dust.
- Do a check of the ambient temperature.
- Make sure that the switching frequency is not too high in relation to the ambient temperature and the motor load.
- For FR10-FR11 Standalone: check door filters, and clean or replace if needed.

12.9.54 Fault 14 - AC drive overtemperature, Subcode S4 - Overtemperature on ASIC board or driver boards

Cause

Overheating detected in AC drive.

Heat sink temperature is over 90 °C (194 °F). Overtemperature alarm is issued when the heat sink temperature goes over 85 °C (185 °F).

In 525–690 V, FR6: Heat sink temperature is over 77 °C (170.6 °F). Overtemperature alarm is issued when the heat sink temperature goes over 72 °C (161.6 °F).

Troubleshooting

- Do a check of the actual amount and flow of cooling air.
- Examine the heat sink for dust.
- Do a check of the ambient temperature.
- Make sure that the switching frequency is not too high in relation to the ambient temperature and the motor load.
- For FR10-FR11 Standalone: check door filters, and clean or replace if needed.

12.9.55 Fault 15 - Motor stalled

Cause

The motor stalled.

It is possible to set different responses in the application for this fault. See parameter group Protections.

Troubleshooting

- Check the motor and the load.
- Insufficient motor power, check motor stall protection parameterization.

12.9.56 Fault 16 - Motor overtemperature

Cause

There is too heavy a load on the motor.

It is possible to set different responses in the application for this fault. See parameter group Protections.

Troubleshooting

- Decrease the motor load.
- If there is no motor overload, do a check of the temperature model parameters.

12.9.57 Fault 17 - Motor underload

Cause

Motor underload protection has tripped.

It is possible to set different responses in the application for this fault. See parameter group Protections.

Troubleshooting

- Check the load.
- Check underload protection parameterization.

12.9.58 Fault 18 - Unbalance, Subcode S1 - Current unbalance

Cause

Unbalance between power modules in paralleled power units.

This fault is type A fault (Alarm).

Troubleshooting

If the fault occurs again, ask instructions from the local distributor.

12.9.59 Fault 18 - Unbalance, Subcode S2 - DC voltage unbalance

Cause

Unbalance between power modules in paralleled power units.

This fault is type A fault (Alarm).

Troubleshooting

If the fault occurs again, ask instructions from the local distributor.

12.9.60 Fault 19 - Current overload

Cause

Motor current overload warning.

Troubleshooting

Ask instructions from the local distributor.

12.9.61 Fault 22 - Parameter fault, Subcode S1 - Firmware interface power down variable checksum error

Cause
Parameter save fault.

- Operation malfunction
- defective component

Troubleshooting
If the fault occurs again, ask instructions from the local distributor.

12.9.62 Fault 22 - Parameter fault, Subcode S2 - Firmware interface variable check sum error

Cause
Parameter save fault.

- Operation malfunction
- defective component

Troubleshooting
If the fault occurs again, ask instructions from the local distributor.

12.9.63 Fault 22 - Parameter fault, Subcode S3 - System power down variable check sum error

Cause
Parameter save fault.

- Operation malfunction
- defective component

Troubleshooting
If the fault occurs again, ask instructions from the local distributor.

12.9.64 Fault 22 - Parameter fault, Subcode S4 - System parameter checksum error

Cause
Parameter save fault.

- Operation malfunction
- defective component

Troubleshooting
If the fault occurs again, ask instructions from the local distributor.

12.9.65 Fault 22 - Parameter fault, Subcode S5 - Application-defined power-down, variable checksum error

Cause
Parameter save fault.

- Operation malfunction
- defective component

Troubleshooting
If the fault occurs again, ask instructions from the local distributor.

12.9.66 Fault 22 - Parameter fault, Subcode S6 - Application-defined power-down, variable checksum

Cause
Parameter save fault.

- Operation malfunction
- defective component

Troubleshooting
If the fault occurs again, ask instructions from the local distributor.

12.9.67 Fault 22 - Parameter fault, Subcode S10 - System parameter checksum error

Cause
Parameter save fault.

- Operation malfunction
- defective component

Troubleshooting
If the fault occurs again, ask instructions from the local distributor.

12.9.68 Fault 22 - Parameter fault, Subcode S13 - Checksum error in application-specific parameter set

Cause
Parameter save fault.

Troubleshooting

- Recommission the application.
- Check parameters.

12.9.69 Fault 24 - Counter fault

Cause
Values that showed on the counters are incorrect.

Troubleshooting
Have a critical attitude towards values shown on counters.

12.9.70 Fault 25 - Microprocessor watchdog fault, Subcode S1 - CPU watchdog timer

Cause

- operation malfunction
- defective component

Troubleshooting

- Reset the fault and start the drive again.
- If the fault shows again, ask instructions from the local distributor.

12.9.71 Fault 25 - Microprocessor watchdog fault, Subcode S2 - ASIC reset

Cause

- operation malfunction
- defective component

Troubleshooting

- Reset the fault and start the drive again.
- If the fault shows again, ask instructions from the local distributor.

12.9.72 Fault 26 - Start-up prevented, Subcode S1 - Prevention of accidental start-up

Cause
Start-up of the drive has been prevented. Run request is ON when new application is downloaded to the drive.

Troubleshooting

- Cancel prevention of start-up if it can be done safely.
- Remove Run request.

12.9.73 Fault 26 - Start-up prevented, Subcode S2 - RUN request is kept active after drive returns to READY state from safe state

Cause
Start-up of the drive has been prevented. START command is ON when returning to READY state after Safe Disable has been active.

Troubleshooting

- Cancel prevention of start-up if it can be done safely.
- Remove Run request.

12.9.74 Fault 26 - Start-up prevented, Subcode S30 - RUN request given too quickly

Cause

Start-up of the drive has been prevented. START command is ON after system software or application was downloaded, or after application was changed.

Troubleshooting

- Cancel prevention of start-up if it can be done safely.
- Remove Run request.

12.9.75 Fault 29 - Thermistor fault, Subcode S1 - Thermistor input activated on OPTAF board

Cause

The thermistor input of option board has detected increase of the motor temperature.

It is possible to set different responses in the application for this fault. See parameter group Protections.

Troubleshooting

- Do a check of the motor cooling and loading.
- Do a check of the thermistor connection.
- (If thermistor input of the option board is not in use it has to be short-circuited).

12.9.76 Fault 29 - Thermistor fault, Subcode S2 - Special application

Cause

The thermistor input of option board has detected increase of the motor temperature.

It is possible to set different responses in the application for this fault. See parameter group Protections.

Troubleshooting

- Do a check of the motor cooling and loading.
- Do a check of the thermistor connection.
- (If thermistor input of the option board is not in use it has to be short-circuited).

12.9.77 Fault 30 - Safe disable

Cause

The input on OPTAF board has opened.

STO inputs SD1 and SD2 are activated through the OPTAF option board.

Troubleshooting

Cancel Safe Disable if it can be done safely.

12.9.78 Fault 31 - IGBT temperature (hardware)

Cause

IGBT Inverter Bridge overtemperature protection has detected too high a short-term overload current.

Troubleshooting

- Check the load.
- Check the motor frame size.
- Make an identification run.

12.9.79 Fault 32 - Fan cooling

Cause

Cooling fan of the AC drive does not start, when ON command is given.

Troubleshooting

Ask instructions from the local distributor.

12.9.80 Fault 34 - CAN bus communication

Cause
Sent message not acknowledged.

Troubleshooting
Make sure that there is another device on the bus with the same configuration.

12.9.81 Fault 35 - Application

Cause
Problem in application software.

Troubleshooting

- Ask instructions from the local distributor.
- For an application programmer: do a check of the application program.

12.9.82 Fault 36 - Control unit

Cause

- The software needs newer version of the control unit.

Troubleshooting

- Change the control unit.

12.9.83 Fault 37 - Device changed (same type), Subcode S1 - Control board

Cause
A new option board has replaced the old one in the same slot. The parameters are available in the drive.

Troubleshooting
Reset the fault. The device is ready for use. The drive starts to use the old parameter settings.

12.9.84 Fault 38 - Device added (same type), Subcode S1 - Control board

Cause
The option board was added. The same option board has been used in the same slot before. The parameters are available in the drive.

Troubleshooting
Reset the fault. The device is ready for use. The drive starts to use the old parameter settings.

12.9.85 Fault 39 - Device removed

Cause
An option board was removed from the slot.

Troubleshooting
The device is not available. Reset the fault.

12.9.86 Fault 40 - Device unknown, Subcode S1 - Unknown device

Cause
An unknown or mismatching device was connected (the power unit or option board).

Troubleshooting
Ask instructions from the local distributor.

12.9.87 Fault 40 - Device unknown, Subcode S2 - StarCoupler: power sub units are not identical

Cause
An unknown or mismatching device was connected (the power unit or option board).

Troubleshooting
Ask instructions from the local distributor.

12.9.88 Fault 40 - Device unknown, Subcode S3 - StarCoupler is not compatible with the control board

Cause
An unknown or mismatching device was connected (the power unit or option board).

Troubleshooting
Ask instructions from the local distributor.

12.9.89 Fault 40 - Device unknown, Subcode S4 - Wrong PropertiesType in control board EEPROM

Cause
An unknown or mismatching device was connected (the power unit or option board).

Troubleshooting
Ask instructions from the local distributor.

12.9.90 Fault 40 - Device unknown, Subcode S5 - Wrong VACON® NXP control board EEPROM size detected

Cause
An unknown or mismatching device was connected (the power unit or option board).

Troubleshooting
Ask instructions from the local distributor.

12.9.91 Fault 40 - Device unknown, Subcode S6 - Old power unit (Asic) and new software mismatch

Cause
An unknown or mismatching device was connected (the power unit or option board).

Troubleshooting
Ask instructions from the local distributor.

12.9.92 Fault 40 - Device unknown, Subcode S7 - Old ASIC detected

Cause
An unknown or mismatching device was connected (the power unit or option board).

Troubleshooting
Ask instructions from the local distributor.

12.9.93 Fault 41 - IGBT temperature, Subcode S1 - Calculated IGBT temperature too high

Cause
IGBT Inverter Bridge overtemperature protection has detected too high a short-term overload current.

Troubleshooting

- Check the load.
- Check the motor frame size.
- Make an identification run.

12.9.94 Fault 41 - IGBT temperature, Subcode S3 - Calculated IGBT temperature too high (long-term protection)

Cause
IGBT Inverter Bridge overtemperature protection has detected too high a short-term overload current.

Troubleshooting

- Check the load.
- Check the motor frame size.
- Make an identification run.

12.9.95 Fault 41 - IGBT temperature, Subcode S4 - Peak current too high

Cause
IGBT Inverter Bridge overtemperature protection has detected too high a short-term overload current.

Troubleshooting

- Check the load.
- Check the motor frame size.
- Make an identification run.

12.9.96 Fault 41 - IGBT temperature, Subcode S5 - BCU: Filtered current too high for some time

Cause

IGBT Inverter Bridge overtemperature protection has detected too high a short-term overload current.

Troubleshooting

- Check the load.
- Check the motor frame size.
- Make an identification run.

12.9.97 Fault 41 - IGBT temperature, Subcode S6 - BCU: Current momentarily too high

Cause

IGBT Inverter Bridge overtemperature protection has detected too high a short-term overload current.

Troubleshooting

- Check the load.
- Check the motor frame size.
- Make an identification run.
- Check brake resistor resistance.

12.9.98 Fault 42 - Brake resistor overtemperature, Subcode S1 - Internal brake chopper overtemperature

Cause

Brake resistor overtemperature protection has detected too heavy braking.

Troubleshooting

- Reset unit.
- Set the deceleration time longer.
- Dimensioning of the brake chopper is not correct.
- Use external brake resistor.

12.9.99 Fault 42 - Brake resistor overtemperature, Subcode S2 - Brake resistance too high (BCU)

Cause

Brake resistor overtemperature protection has detected too heavy braking.

Troubleshooting

- Reset unit.
- Set the deceleration time longer.
- Dimensioning of the brake chopper is not correct.
- Use external brake resistor.

12.9.100 Fault 42 - Brake resistor overtemperature, Subcode S3 - Brake resistance too low (BCU)

Cause

Brake resistor overtemperature protection has detected too heavy braking.

Troubleshooting

- Reset unit.
- Set the deceleration time longer.
- Dimensioning of the brake chopper is not correct.
- Use external brake resistor.

12.9.101 Fault 42 - Brake resistor overtemperature, Subcode S4 - Brake resistance not detected (BCU)

Cause

Brake resistor overtemperature protection has detected too heavy braking.

Troubleshooting

- Reset unit.
- Set the deceleration time longer.
- Dimensioning of the brake chopper is not correct.
- Use external brake resistor.

12.9.102 Fault 42 - Brake resistor overtemperature, Subcode S5 - Brake resistance leakage (earth fault) (BCU)

Cause

Brake resistor overtemperature protection has detected too heavy braking.

Troubleshooting

- Reset unit.
- Set the deceleration time longer.
- Dimensioning of the brake chopper is not correct.
- Use external brake resistor.

12.9.103 Fault 43 - Encoder fault, Subcode S1 - Encoder 1 channel A is missing

Cause

Problem detected in encoder signals.

Encoder channel A is missing.

Troubleshooting

- Do a check of the encoder connections.
- Do a check of the option board.
- Measure the encoder pulses.
  - If the pulses are correct, the option board is faulty.
  - If the pulses are not correct, the encoder/cabling is faulty.

12.9.104 Fault 43 - Encoder fault, Subcode S2 - Encoder 1 channel B is missing

Cause

Problem detected in encoder signals.

Encoder channel B is missing.

Troubleshooting

- Do a check of the encoder connections.
- Do a check of the option board.
- Measure the encoder pulses.
  - If the pulses are correct, the option board is faulty.
  - If the pulses are not correct, the encoder/cabling is faulty.

12.9.105 Fault 43 - Encoder fault, Subcode S3 - Both encoder 1 channels are missing

Cause

Problem detected in encoder signals.

Encoder channels A and B are missing.

Troubleshooting

- Do a check of the encoder connections.
- Do a check of the option board.
- Measure the encoder pulses.
  - If the pulses are correct, the option board is faulty.
  - If the pulses are not correct, the encoder/cabling is faulty.

12.9.106 Fault 43 - Encoder fault, Subcode S4 - Encoder reversed

Cause

Problem detected in encoder signals.

The encoder is reversed. The output frequency has been set to the positive value, but the encoder signal is negative.

Troubleshooting

Change the frequency value polarity so that the encoder signal is positive. With some encoders, interchanging the encoder channels can be used to change the indicated rotation direction.

12.9.107 Fault 43 - Encoder fault, Subcode S5 - Encoder board missing

Cause

The encoder board is missing.

Troubleshooting

- Do a check of the encoder board.
- Do a check of the terminals.
- Do a check of the board connections.

12.9.108 Fault 43 - Encoder fault, Subcode S6 - Serial communication fault

Cause

Problem detected in encoder signals.

Serial communication fault. The encoder cable is not connected or there are interferences in the cable.

Troubleshooting

- Check cabling between encoder and OPTBE, especially Data and Clock signals.
- Check that actual encoder type matches with OPTBE “Operating mode” parameter.

12.9.109 Fault 43 - Encoder fault, Subcode S7 - Ch A / Ch B Mismatch

Cause

Problem detected in encoder signals.

Encoder channels A and B are mismatched.

Troubleshooting

Do a check of the cable connections and terminals.

12.9.110 Fault 43 - Encoder fault, Subcode S8 - Resolver/Motor pole pair mismatch

Cause

Problem detected in parameterization of option board.

There is a mismatch of the resolver/ motor pole pair number. Resolver pole pair number (if >1) is not matching the motor pole pair number.

Troubleshooting

Check that OPTBC parameter “Resolver Poles” and possible Gear Ratio parameters in application match motor pole count.

12.9.111 Fault 43 - Encoder fault, Subcode S9 - Missed Start Angle

Cause

Encoder zero positioning identification run has not been made.

The encoder start angle is missing.

Troubleshooting

Make encoder identification run.

12.9.112 Fault 43 - Encoder fault, Subcode S10 - Sin/Cos encoder feedback is missing

Cause

Problem detected in encoder signals.

For the closed loop control, encoder modes "EnDat only" or "SSI only" (absolute channel only) are not allowed.

Troubleshooting

- Do a check of the wiring, jumper settings, and encoder mode.
- Change OPTBE “Operating mode” parameter is either "EnDat+SinCos", "SSI+SinCos" or "SinCos only", or avoid using closed loop control.

12.9.113 Fault 43 - Encoder fault, Subcode S11 - Encoder angle is drifting

Cause

Error angle between the angle read from the absolute channel and the angle calculated from the incremental channels.

Troubleshooting

- Check the encoder cable, cable shield, and grounding of the cable shield.
- Check the mechanical mounting of the encoder and make sure that the encoder is not slipping.
- Check the encoder parameters (for example, encoder ppr).

12.9.114 Fault 43 - Encoder fault, Subcode S12 - Dual speed supervision fault

Cause

Encoder speed supervision. The difference between the encoder speed and estimated speed is too large. Dual speed supervision: Estimated speed and encoder speed difference is too high (0.05 x f_n or minimum motor nominal slip frequency). See variable EstimatedShaftFrequency.

Troubleshooting

- Check the encoder speed signal ShaftFrequency vs. EstimatedShaftFrequency.
- If the ShaftFrequency is incorrect, check the encoder, cable, and encoder parameters.
- If the EstimatedShaftFrequency is incorrect, check the motor parameters.

12.9.115 Fault 43 - Encoder fault, Subcode S13 - Encoder angle supervision fault

Cause

The estimated shaft position error (estimated angle - encoder angle) is more than 90° electrical.

See variable EstimatedAngleError.

Troubleshooting

- Repeat the encoder ID run (absolute encoders).
- Check the mechanical mounting of the encoder and make sure that the encoder is not slipping.
- Check the encoder ppr number.
- Check the encoder cable.

12.9.116 Fault 43 - Encoder fault, Subcode S14 - Encoder estimated missing pulse fault, switch from the CL ctrl to the OL sensorl

Cause

Problem detected in encoder signals.

Software has detected too many missing pulses in the encoder. Closed loop control is switched to sensorless open loop control.

Troubleshooting

- Do a check of the encoder.
- Do a check of the encoder cable, cable shield, and grounding of the cable shield.
- Do a check of the mechanical mounting of the encoder.
- Do a check of the encoder parameters.

12.9.117 Fault 44 - Device changed (different type), Subcode S1 - Control board

Cause

- Option board or power unit changed.
- New device of different type or different power rating.

Troubleshooting

- Reset.
- If option board was changed, set the option board parameters again.
- If power unit was changed, set AC drive parameters again.

12.9.118 Fault 45 - Device added (different type), Subcode S1 - Control board

Cause

Option board of different type added.

Troubleshooting

- Reset.
- Set the power unit parameters again.

12.9.119 Fault 49 - Division by zero in application

Cause
Division by zero has occurred in application program.

Troubleshooting

- If the fault shows again while the AC drive is in run state, ask instructions from the local distributor.
- For an application programmer: do a check of the application program.

12.9.120 Fault 50 - Analogue input Iin < 4 mA (sel. signal range 4 to 20 mA)

Cause
Current at the analog input is < 4 mA.

- Control cable is broken or loose
- signal source has failed.

It is possible to set different responses in the application for this fault. See parameter group Protections.

Troubleshooting
Do a check of the current loop circuitry.

12.9.121 Fault 51 - External fault 1

Cause
Digital input fault.

Digital input has been programmed as external fault 1 input and this input is active.

Troubleshooting

- Check the programming.
- Check the device which the error message indicates.
- Check the cabling for the respective device.

12.9.122 Fault 52 - Keypad communication fault

Cause
The connection between the control panel (or VACON® NCDrive) and the drive is defective.

Troubleshooting
Do a check of the control panel connection and the control panel cable.

12.9.123 Fault 53 - Fieldbus fault

Cause
The data connection between the fieldbus master and the fieldbus board is defective.

Troubleshooting

- Do a check of the installation and fieldbus master.
- If the installation is correct, ask instructions from the local distributor.

12.9.124 Fault 54 - Slot fault

Cause
Defective option board or slot.

Troubleshooting

- Do a check of the board and slot.
- Ask instructions from the local distributor.

12.9.125 Fault 56 - Measured Temperature

Cause

Shows temperature measurement fault for option board OPTBH or OPTB8.

- Temperature exceeded set limit.
- Sensor disconnected.
- Short circuit.

Troubleshooting

Find the cause of temperature rise.

12.9.126 Fault 57 - Identification

Cause

Identification run has failed.

This fault is type A fault (Alarm).

Troubleshooting

- Run command was removed before completion of identification run.
- The motor is not connected to the AC drive.
- There is load on motor shaft.

12.9.127 Fault 58 - Brake

Cause

Actual status of the brake is different from the control signal.

It is possible to set different responses in the application for this fault. See parameter group Protections.

Troubleshooting

Do a check of the mechanical brake state and connections.

12.9.128 Fault 59 - Follower communication

Cause

SystemBus or CAN communication is broken between Master and Follower.

Troubleshooting

- Do a check of the option board parameters.
- Do a check of the optical fiber cable or CAN cable.

12.9.129 Fault 60 - Cooling

Cause

External cooling has failed.

Normally this fault comes from the heat exchanger unit.

Troubleshooting

Do a check of the reason for the failure on the external system.

12.9.130 Fault 61 - Speed error

Cause

Motor speed is unequal to reference.

Troubleshooting

- Do a check of the encoder connection.
- PMS motor has exceeded the pull-out torque.

12.9.131 Fault 62 - Run disable

Cause

Run enable signal is low.

Troubleshooting

Do a check of the reason for the Run enable signal.

12.9.132 Fault 63 - Quick stop

Cause
Command for quick stop received from digital input or fieldbus.

This fault is type A fault (Alarm).

Troubleshooting
Reset the fault.

12.9.133 Fault 64 - Input switch open

Cause
Drive input switch is open.

This fault is type A fault (Alarm)

Troubleshooting
Do a check of the main power switch of the drive.

12.9.134 Fault 65 - Measured Temperature

Cause
Shows temperature measurement fault for option board OPTBH or OPTB8.

- Temperature exceeded set limit.
- Sensor disconnected.
- Short circuit.

Troubleshooting
Find the cause of temperature rise or sensor malfunction.

12.9.135 Fault 70 - Active filter fault

Cause
Fault triggered by digital input (see param. P2.2.7.33).

It is possible to set different responses in the application for this fault. See parameter group Protections.

Troubleshooting
Remove fault situation on active filter.

12.9.136 Fault 74 - Follower fault

Cause
When using normal Master Follower function this fault code is given if one or more follower drives trips to fault.

Troubleshooting
Correct the fault cause on follower and reset fault.

12.9.137 Fault 85 - Baseline Run

Cause
There was a failure during the baseline run.

Troubleshooting
Check parameters in the baseline run settings.

12.9.138 Fault 86 - Condition-based Monitoring, Subcode A1 - Motor Stator Winding Current Fault

Cause
Current unbalance has exceeded the detection high limit.

Troubleshooting
Check motor stator windings.

12.9.139 Fault 86 - Condition-based Monitoring, Subcode A2 - Motor Stator Winding Voltage Fault

Cause
Voltage unbalance has exceeded the detection high limit.

Troubleshooting
Check motor stator windings.

12.9.140 Fault 86 - Condition-based Monitoring, Subcode A3 - Motor Stator Winding Current Warning S2

Cause
Current unbalance has exceeded the detection high limit.

Troubleshooting
Check motor stator windings.

12.9.141 Fault 86 - Condition-based Monitoring, Subcode A4 - Motor Stator Winding Voltage Warning S2

Cause
Voltage unbalance has exceeded the detection high limit.

Troubleshooting
Check motor stator windings.

12.9.142 Fault 86 - Condition-based Monitoring, Subcode A5 - Motor Stator Winding Current Warning S1

Cause
Current unbalance has exceeded the detection high limit.

Troubleshooting
Check motor stator windings.

12.9.143 Fault 86 - Condition-based Monitoring, Subcode A6 - Motor Stator Winding Voltage Warning S1

Cause
Voltage unbalance has exceeded the detection high limit.

Troubleshooting
Check motor stator windings.

12.9.144 Fault 86 - Condition-based Monitoring, Subcode A7 - Vibration Fault

Cause
Vibration has exceeded the detection high limit.

Troubleshooting
Check root cause for increased vibration.

12.9.145 Fault 86 - Condition-based Monitoring, Subcode A8 - Vibration Warning S2

Cause
Vibration has exceeded the detection high limit.

Troubleshooting
Check root cause for increased vibration.

12.9.146 Fault 86 - Condition-based Monitoring, Subcode A9 - Vibration Warning S1

Cause
Vibration has exceeded the detection high limit.

Troubleshooting
Check root cause for increased vibration.

12.9.147 Fault 86 - Condition-based Monitoring, Subcode A10 - Load Fault

Cause
Load outside of the window limits.

Troubleshooting
Check root cause for excessive overload or underload.

12.9.148 Fault 86 - Condition-based Monitoring, Subcode A11 - Load Warning S2

Cause
Load outside of the window limits.

Troubleshooting
Check root cause for excessive overload or underload.

12.9.149 Fault 86 - Condition-based Monitoring, Subcode A12 - Load Warning S1

Cause
Load outside of the window limits.

Troubleshooting
Check root cause for excessive overload or underload.

Index

+

+24 V control voltage output 82
+24 V DC external power 80

A

AC choke 42
Active faults menu 99
Application information 113
Application selection 104
Approvals and certifications 10
Automatic operation (AUTO) 48
Automatic parameter back-up 105
Auxiliary voltage transformer tappings 43

B

Brake resistor 40
Busbar connections, tightening torques 157

C

Cable installation 61
Cable requirements 36, 37
Cables, distance between 61
Capacitors, reforming of 122
Changing the rotation direction 97
Circuit breaker fault indicator 48
Commissioning 116
Commissioning, checks after 118
Commissioning, safety 116
Common-mode choke 45
Control cable 81
Control mode 97
Control mode, keypad 98
Control panel 26, 91
Control terminals, OPTA1 81
Control terminals, OPTA2 85
Control terminals, OPTA3 85
Control unit components 80
Cooling space 32
Copy parameters 104
Copying frequency reference set 98

D

DC supply 40
Debug menu 114
Default page 109
Digital input signal inversion 83
Dimensions
- 6-pulse 129
- 12-pulse 130
- Low-harmonic 130
- Bottom view 132,133,134,136,136,137

Display indications 26
Display, backlight 110
Display, contrast 109
Disposal 10
Down from keypad 105

E

EMC class 21
EMC-compliant installation 40
Enclosure size 18, 19
Environment requirements 32
Expander board menu 114
Expander boards page 114
External controller 16

F

Fan control 110
Fault history menu 100
Fault time data record 99, 99
Fault types 124
Faults 124
Faults, resetting of 124
Fiber cables 86, 88
Fuse 37, 37

G

Galvanic isolation barriers 89
Grounding principle 40

H

Hardware information 113
Hardware settings menu 110
High overload 158
HMI acknowledge timeout 111

I

Identification run 119
Installation environment 32
Installing the cables, AF12 71
Installing the cables, AF13 73
Installing the cables, AF14 76
Installing the cables, AF9/AF10 69
Installing the cables, FR10-12 62
Installing the cables, FR13 63
Installing the cables, FR14 66
Insulation checks 117
Intended use 16, 16
Internal brake resistor connection 110

J

Jumper selections, OPTA1 84

K

Keypad 26
Keypad control menu 96
Keypad control parameters 96
Keypad reference 97
Keypad settings menu 109

L

Language selection 104
LCL-filter 43
Lifting the product 29
Low overload 157

M

Main circuit diagrams.... 145, 152
Maintenance.... 120
Manual operation (MAN).... 47
MCCB control selector switch (-SF6).... 46
Menu structure.... 27
Monitored values.... 91
Monitoring menu.... 91
Motor overload protection.... 16
Motor run checklist.... 119
Motor status.... 16
Multimonitoring items.... 108

O

Option +OCM.... 45
Option +ODU.... 45
Option boards.... 80, 89, 114, 114
Options.... 21
Overload capability.... 157

P

Package label.... 16
Parameter lock.... 107
Parameter menu.... 93
Parameter set, saving.... 105
Parameter, comparing.... 106
Parameter, downloading to drive.... 105
Parameter, editing.... 94, 94
Parameter, uploading to control panel.... 105
Password.... 107
Power losses.... 33
Power ratings.... 158, 159, 160, 161
Power unit topology.... 37
Pre-charge mode parameter.... 112
Principal connection diagram.... 36
Product modified label.... 31
Purpose of the manual.... 10

Q

Qualified personnel.... 10

R

Remote commands.... 16
Remote operation (REM).... 46
Reset button.... 48
Resetting fault history.... 100
RUN test.... 118

S

Safety.... 12, 13
Security menu.... 106
Service Info file.... 124
Sine filter parameter.... 111
Software information.... 113
Start-up quick guide.... 11
Start-up test.... 119
Start-up wizard.... 108
Stop motor function.... 98
Storage.... 29
Surveillance.... 16
Symbols.... 12
System feedback.... 16
System info menu.... 112
System menu.... 101
System menu functions.... 101

T

Technical data.... 162
Terminals
- FR9.... 49
- FR10.... 50
- FR11.... 51
- FR12.... 53
- FR13.... 55
- FR14.... 56
- AF9.... 58
- AF10.... 58
- AF12.... 59
- AF13.... 59
- AF14.... 60

Terminals, tightening torques.... 156
Timeout time.... 109
Total counters.... 112
Trip counters.... 112
Type code.... 16

U

UL certification.... 10
UL requirements, cables.... 37
Up to keypad.... 105

V

VACON® NXC Low-harmonic Drives.... 46
Vibration and shock.... 32

ENGINEERING
TOMORROW

Vacon Ltd, Member of the
Danfoss Group
Runsorintie 7
FIN-65380 Vaasa
www.danfoss.com

Danfoss can accept no responsibility for possible errors in catalogs, brochures and other printed material. Danfoss reserves the right to alter its products without notice. This also applies to products already on order provided that such alterations can be made without subsequential changes being necessary in specifications already agreed. All trademarks in this material are property of the respective companies. Danfoss and the Danfoss logotype are trademarks of Danfoss A/S. All rights reserved.