VACON®

AC DRIVES

OPTEC

ETHERCAT OPTION BOARD

INSTALLATION MANUAL

VACON®

Table of Contents

Document: DPD01207D
Release date: 27/5/20

1. SAFETY

This manual contains clearly marked cautions and warnings that are intended for your personal safety and to avoid any unintentional damage to the product or connected appliances.

Please read the information included in cautions and warnings carefully.

The cautions and warnings are marked as follows:

Table 1. Warning signs

	**= DANGER! Dangerous voltage**
	**= WARNING or CAUTION**
	**= Caution! Hot surface**

1.1 DANGER

	The **components of the power unit are live** when the drive is connected to mains potential. Coming into contact with this voltage is **extremely dangerous** and may cause death or severe injury.
	The **motor terminals U, V, W and the brake resistor terminals are live** when the AC drive is connected to mains, even if the motor is not running.
	**After disconnecting** the AC drive from the mains, **wait** until the indicators on the keypad go out (if no keypad is attached, see the indicators on the cover). Wait 5 more minutes before doing any work on the connections of the drive. Do not open the cover before this time has expired. After expiration of this time, use a measuring equipment to absolutely ensure that no voltage is present. **Always ensure absence of voltage before starting any electrical work!**
	The control I/O-terminals are isolated from the mains potential. However, the **relay outputs and other I/O-terminals may have a dangerous control voltage** present even when the AC drive is disconnected from mains.
	**Before connecting** the AC drive to mains make sure that the front and cable covers of the drive are closed.
	During a ramp stop (see the Application Manual), the motor is still generating voltage to the drive. Therefore, do not touch the components of the AC drive before the motor has completely stopped. Wait until the indicators on the keypad go out (if no keypad is attached, see the indicators on the cover). Wait additional 5 minutes before starting any work on the drive.

1.2 WARNINGS

⚠	The AC drive is meant for **fixed installations only**.
⚠	**Do not perform any measurements** when the AC drive is connected to the mains.
⚠	The **earth leakage current** of the AC drives exceeds 3.5mA AC. According to standard EN61800-5-1, **a reinforced protective ground connection** must be ensured. See Chapter 1.3.
⚠	If the AC drive is used as a part of a machine, the **machine manufacturer is responsible** for providing the machine with a **supply disconnecting device** (EN 60204-1).
⚠	Only **spare parts** delivered by the manufacturer can be used.
⚠	At power-up, power brake or fault reset **the motor will start immediately** if the start signal is active, unless the pulse control for Start/Stop logic has been selected. Furthermore, the I/O functionalities (including start inputs) may change if parameters, applications or software are changed. Disconnect, therefore, the motor if an unexpected start can cause danger.
⚠	The **motor starts automatically** after automatic fault reset if the auto restart function is activated. See the Application Manual for more detailed information.
⚠	**Prior to measurements on the motor or the motor cable**, disconnect the motor cable from the AC drive.
⚠	**Do not touch the components on the circuit boards**. Static voltage discharge may damage the components.
⚠	Check that the **EMC level** of the AC drive corresponds to the requirements of your supply network.

1.3 GROUNDING AND EARTH FAULT PROTECTION

CAUTION!

The AC drive must always be earthed with an grounding conductor connected to the grounding terminal marked with ⏚.

The earth leakage current of the drive exceeds 3.5mA AC. According to EN61800-5-1, one or more of the following conditions for the associated protective circuit must be satisfied:

a) The protective conductor must have a cross-sectional area of at least 10 mm2 Cu or 16 mm2 Al, through its total run.

b) Where the protective conductor has a cross-sectional area of less than 10 mm2 Cu or 16 mm2 Al, a second protective conductor of at least the same cross-sectional area must be provided up to a point where the protective conductor has a cross-sectional area not less than 10 mm2 Cu or 16 mm2 Al.

c) Automatic disconnection of the supply in case of loss of continuity of the protective conductor.

The cross-sectional area of every protective grounding conductor which does not form part of the supply cable or cable enclosure must, in any case, be not less than:

- 2.5mm² if mechanical protection is provided or
- 4mm² if mechanical protection is not provided.

The earth fault protection inside the AC drive protects only the drive itself against earth faults in the motor or the motor cable. It is not intended for personal safety.

Due to the high capacitive currents present in the AC drive, fault current protective switches may not function properly.

Do not perform any voltage withstand tests on any part of the AC drive. There is a certain procedure according to which the tests must be performed. Ignoring this procedure can cause damage to the product.

NOTE! You can download the English and French product manuals with applicable safety, warning and caution information from https://www.danfoss.com/en/service-and-support/.

REMARQUE Vous pouvez télécharger les versions anglaise et française des manuels produit contenant l'ensemble des informations de sécurité, avertissements et mises en garde applicables sur le site https://www.danfoss.com/en/service-and-support/.

2. OPTEC EtherCAT - General

OPTEC EtherCAT option board is field bus option for VACON® drives. With OPTEC option board it is possible to connect a VACON® AC drive to an EtherCAT network and command/monitor the drive via EtherCAT field bus.

EtherCAT is a fieldbus protocol which uses standard Ethernet network as its media to transfer data structures between other EtherCAT devices in the bus. EtherCAT uses Master-Slave type communication. EtherCAT master device controls the states of the EtherCAT bus. States of the EtherCAT bus can be seen from the table below.

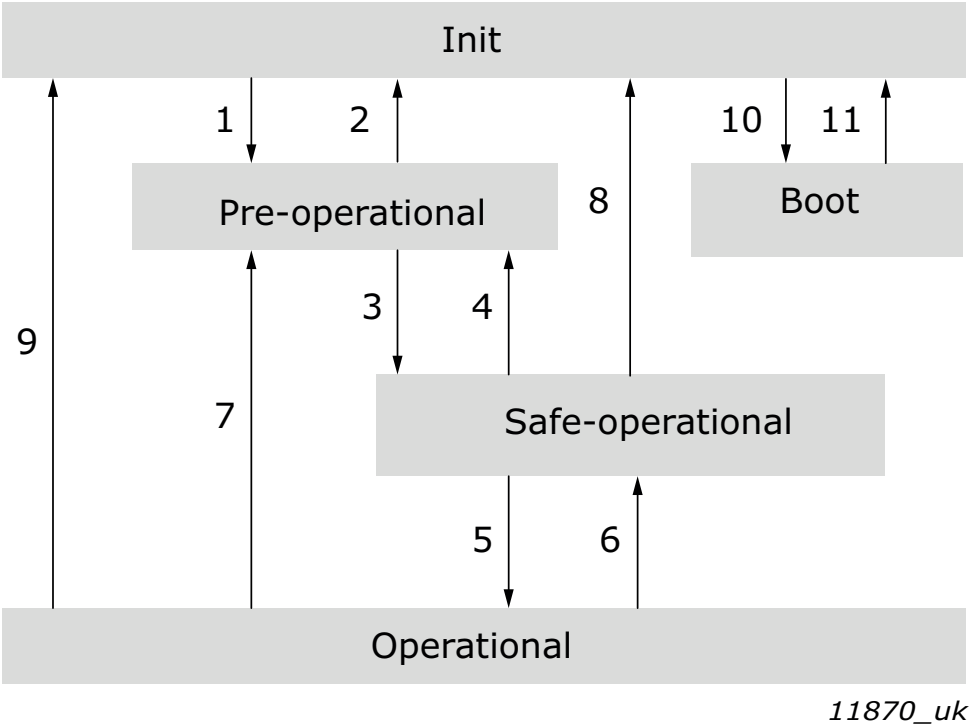

Figure 1. EtherCAT device states

Table 2. EtherCAT device states

State transition	Service activation/deactivation
1	Start mailbox communication
2	Stop mailbox communication
3	Start process data transfer from EtherCAT slave to EtherCAT master
4	Stop process transfer from EtherCAT slave to EtherCAT master
5	Start process data transfer from EtherCAT master to EtherCAT slave
6	Stop process data transfer from EtherCAT master to EtherCAT slave
7	Stop process data transfers
8	Stop mailbox communication, stop process data transfer from EtherCAT slave to EtherCAT master
9	Stop mailbox communication, stop process data transfers
10	Start bootup mode (not supported in OPTEC EtherCAT)
11	Restart device (not supported in OPTEC EtherCAT)

OPTEC option board is EtherCAT-slave device and requires EtherCAT-Master device presence in the bus to operate.

The VACON® EtherCAT Option Board uses CAN application protocol over EtherCAT (CoE).

Device Profile Drives and Motion Control (CiA DSP-402) document represents the standardized CANopen Device Profile for digitally controlled motion products like servo controllers, AC drives or stepper motors. All the above-mentioned devices use communication techniques which conform to those described in the CANopen Application Layer and Communication Profile. The starting and stopping of the drive and several mode specific commands are executed by the statemachine. The operation mode defines the behaviour of the drive. The following modes are defined in this profile:

- Homing Mode
- Profile Position Mode
- Interpolated Position Mode
- Profile Velocity Mode
- Profile Torque Mode
- Velocity Mode

The VACON® EtherCAT Option Board supports the Velocity Mode

Table 3. List of abbreviations used in this document

Abbreviation	Explanation
EoE	Ethernet over EtherCAT
FB	Fieldbus
PPO	Parameter Process Data Object
PLC	Programmable Logic Controller
PHY(X)	EtherCAT physical interface X, where X represents the number of interface
PDO	Process Data Object (Inputs and outputs. Values of type rotational speed, voltage, frequency, electric current, etc.)
RPM	Revolutions per minute
SDO	Service Data Object (Configuration settings, possibly node ID, baud rate, offset, gain, etc.)

Table 4. List of data types used in this document

Type name	Bit size	Explanation
INT8	8	Signed short integer
UINT8	8	Unsigned short integer
INT16	16	Signed integer
UINT16	16	Unsigned integer
INT32	32	Signed long integer
UINT32	32	Unsigned long integer
FLOAT32	32	32-bit floating point
STRING3	24	Three byte string
STRING5	40	Five byte string

2.1 New features

The following table shows the new features that are added in the OPTEC EtherCAT option board's firmware versions.

Table 5. OPTEC EtherCAT firmware versions

New features	Firmware version
• Support for VACON® NXP and VACON® 20 drives.	V001
• Support for VACON® 100 INDUSTRIAL, VACON® 100 FLOW, VACON® 100 X and VACON® 20 X/CP drives.	V002
• Support for panel parameters and monitor values. See details in Chapter 6.1 "AC drive and OPTEC EtherCAT option board parametrization" • Support for Fast Communication and 16 process data when installed to VACON® NXP drive. See details in "APPENDIX F - FIELDBUS OPTION BOARD COMMUNICATION"	V003
• Ethernet over EtherCAT support, see Chapter 6 "Commissioning" and Chapter 7.5 "Ethernet over EtherCAT". • Added support for SM sync and DC sync modes, see Chapter 7.2.3 "Sync Manager". • Support for EtherCAT Device ID, see Chapter 6 "Commissioning". • New CANOpen objects: 0xFFF1 Fault history object and 0x604B velocity setpoint factor. • Added new parameters and monitor values. • Support for 16 process data items for VACON® 100, either 16bit or 32bit.	V004

3. EtherCAT option board technical data

3.1 General

Table 6. Technical data

General	Board name	OPTEC
EtherCAT connections	Interface	Two RJ-45 connectors
	Transfer cable	Shielded and Foiled Twisted Pair (S/FTP) CAT5e * Shielded Twisted Pair (STP) CAT5e Foiled Twisted Pair (FTP) CAT5e Unshielded Twisted Pair (UTP) CAT5e**
Communications	Speed	10 / 100 Mb
	Supported features	Mailbox - CoE • SDO Upload/Download • SDO Info Service Mailbox - EoE
	Synchronization	Freerun/SM sync, DC sync
Protocol	EtherCAT	
Environment	Ambient operating temperature	-10°C...50°C
	Storing temperature	-40°C...70°C
	Humidity	<95%, no condensation allowed
	Altitude	Max. 1000 m
	Vibration	0.5 G at 9...200 Hz
Safety	Fulfils EN50178 standard.	

* Shielded and foiled twisted pair cable is recommended cable for EtherCAT connections
** Unshielded cable is not recommended for industrial purpose

3.2 Cables

For connecting the EtherCAT devices use only Ethernet cables that meet at least the requirements of category 5 (CAT5) according to EN 50173 or ISO/IEC 11801. EtherCAT uses 4 wires for signal transfer. We recommend that shielded CAT5 cables are used.

4. LAYOUT AND CONNECTIONS

The VACON® EtherCAT Option Board is connected to EtherCAT bus using the RJ-45 connectors compatible with Ethernet standard (ISO/IEC 8802-3). The communication between the control board and the AC drive takes place through a standard VACON® Interface Board Connector.

Table 7. EtherCAT connector pin assignment

Pin	Core colouring	Signal	Description
1	yellow	TD +	Transmission Data +
2	orange	TD -	Transmission Data -
3	white	RD +	Receiver Data +
6	blue	RD -	Receiver Data -

4.1 LAYOUT AND CONNECTIONS

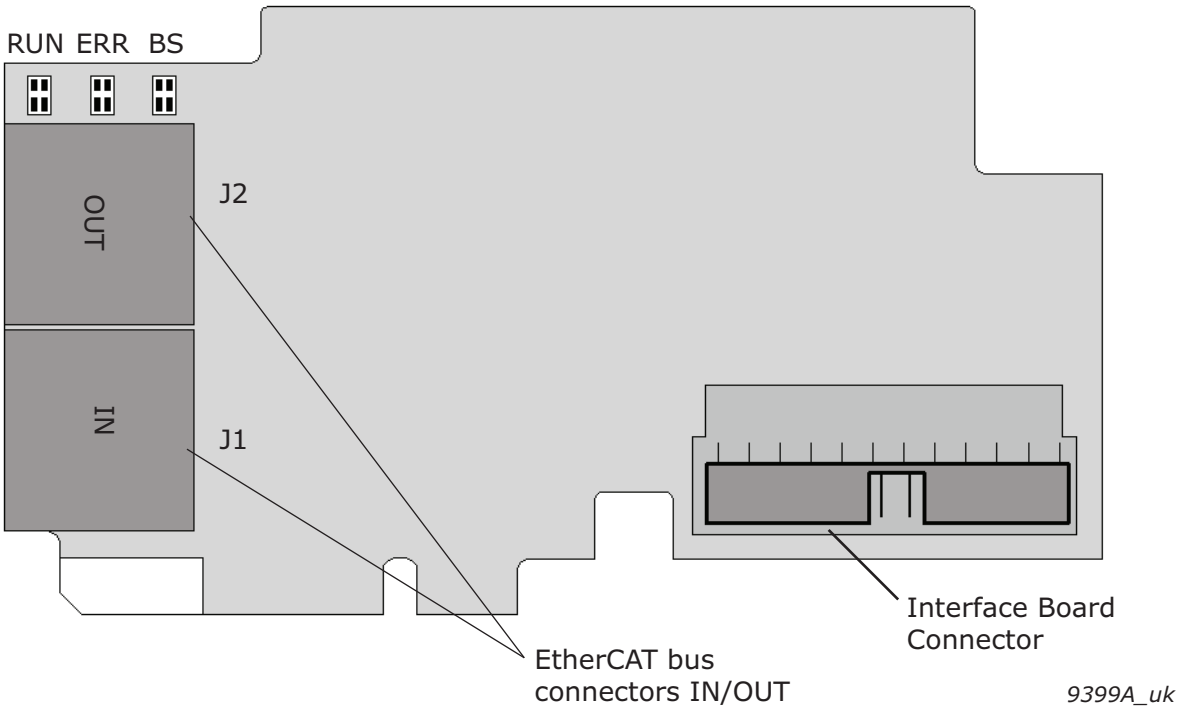

Figure 2.VACON® EtherCAT option board OPTEC

Table 8. EtherCAT connectors

EtherCAT connector	Description
J1	EtherCAT bus IN (PHY1)
J2	EtherCAT bus OUT (PHY2)

4.2 LED INDICATIONS

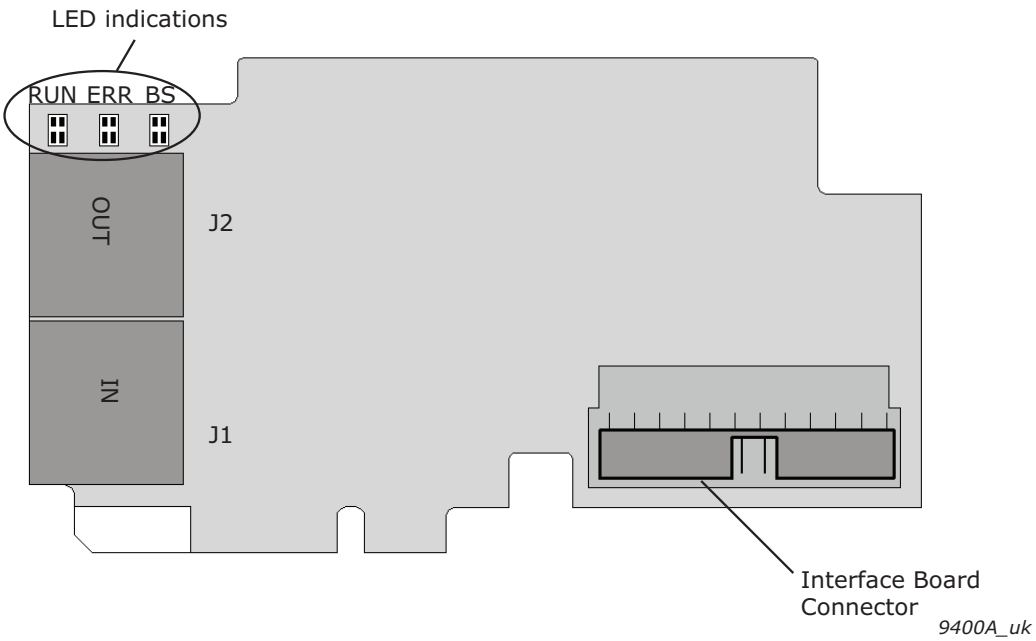

Figure 3. VACON® EtherCAT option board OPTEC LED indicators

The RUN LED indicator describes the state of the bus and the ERR LED indicator describes the status of the board. OPTEC EtherCAT stays in INITIALISATION state until EtherCAT master device commands it into another state.

Table 9. EtherCAT RUN, GREEN

LED RUN	Meaning
OFF	OPTEC EtherCAT is in INITIALISATION state.
Blinking (once/0,2 s)	OPTEC EtherCAT is in PRE-OPERATIONAL state.
Single Flash (once/2 s)	OPTEC EtherCAT is in SAFE-OPERATIONAL state.
Flickering	OPTEC EtherCAT is in INITIALISATION state.
ON	OPTEC EtherCAT is in OPERATIONAL state.

Table 10. EtherCAT ERR, RED

LED ERR	Meaning
OFF	No Error
Blinking (once/0,4 s)	Invalid configuration
Single Flash (once/2 s)	ASIC synchronization error
Double Flash	Process Data Watchdog Timeout/EtherCAT Watchdog Timeout
Flickering	ASIC hardware failure
ON	Application Controller Failure

LED ERR Green is used by EtherCAT option board only at startup to indicate boot status.

Table 11. EtherCAT ERR, GREEN

LED ERR	Meaning
OFF	No Error
Blink once	Option board is powered on
Blinking	Option board boot failure

LED BS provides information about the EtherCAT option board internal state.

Table 12. BS = OPTEC board status, GREEN

LED BS	Meaning
OFF	Option board is not activated.
ON	Option board is in initialization state, waiting activation command from the AC drive.
Blinking fast (once /1 s)	Option board is activated and in RUN state • Option board is ready for external communication

In the case of unrecoverable error the OPTEC board will notify you of this by using the red error LED. The cause of the error will be coded into a series of long and short flashes. The sequence coded error message will repeat indefinitely. If more than one error has occurred the board will cycle through each error code repeatedly.

Table 13. Error codes

Error number	Error name	Long flashes	Short flashes	Description
1	Initialization Error	1	2	Board Initialization Failed
2	Setup Error	1	3	Board Setup Failed
3	System Error 1	1	4	Internal System Error 1
4	System Error 2	2	1	Internal System Error 2
5	System Error 3	2	2	Internal System Error 3
6	EEPROM Error	2	3	Option Board EEPROM Read/Write Error
7	ASIC Error	2	4	EtherCAT ASIC Communication Error
8	Fieldbus Error	3	1	Fieldbus Interface Error
9	OB Service Error	3	2	Option Board Service Error
10	OB Manager Error	3	3	Option Board Manager Error

4.3 TOPOLOGIES

EtherCAT supports the following Ethernet topologies:

- Line
- Daisy chain
- Daisy chain branches
- Tree
- Star
- Cable redundancy

Each of these topologies has its own advantages. Note that the start address may vary depending on which Master implementation is used. The OPTEC boards are connected using line topology.

4.4 CONNECTING THE BOARD IN LINE TOPOLOGY

Connect the EtherCAT master to IN connector of the OPTEC Option Board using an Ethernet cable. For more information, see the figure below.

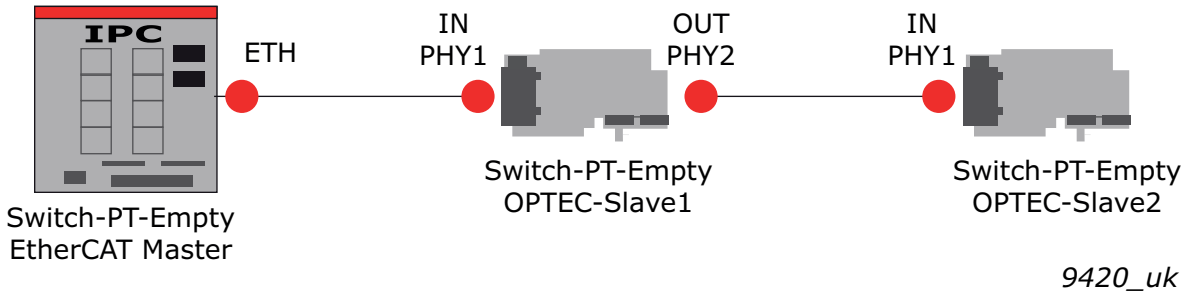

Figure 4. VACON® OPTEC option board EtherCAT IN/OUT

After the EtherCAT master is connected to the OPTEC Option Board and the power is switched on in both devices, the Rx-Led of the IN connector in the OPTEC Option Board should be on or blinking depending on if there is communication in the bus or not. The Tx-Led is not used.

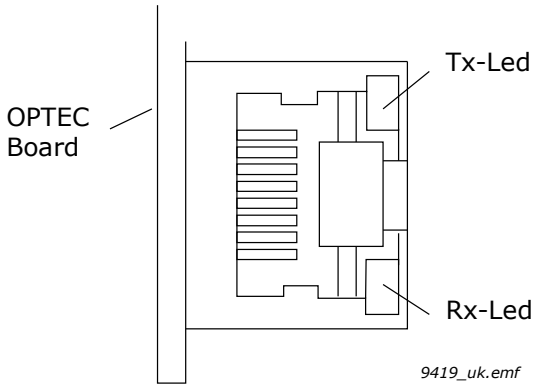

Figure 5.OPTEC option board EtherCAT in connector

5. INSTALLATION

The VACON® OPTEC EtherCAT option board can be used with the following VACON® AC drives.

Table 14. Supported AC drives and slots

AC drive	Slots	From AC drive SW version on	From OPTEC SW version on
VACON® NXP	D, E	NXP00002V187	V001
VACON® 100 INDUSTRIAL and 100 X	D, E	FW0072V016	V002
VACON® 100 FLOW	D, E	FW0159V010	V002
VACON® 20 X and CP	-	FW0117V006	V002
VACON® 20	-	FW0107V009	V001

5.1 INSTALLATION IN VACON® NXP

Make sure that the AC drive **is switched off** before an option or fieldbus board is changed or added!

1	VACON® NXP AC drive. 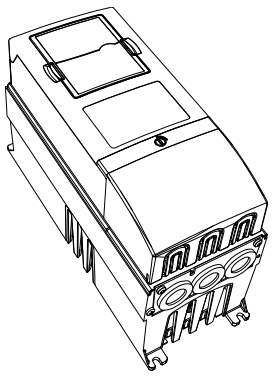
2	Remove the cable cover. 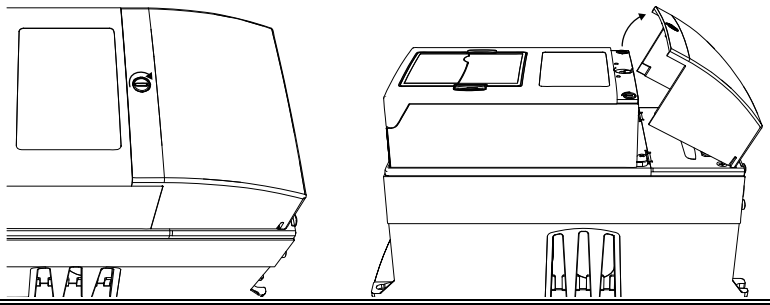

3	Open the cover of the control unit. 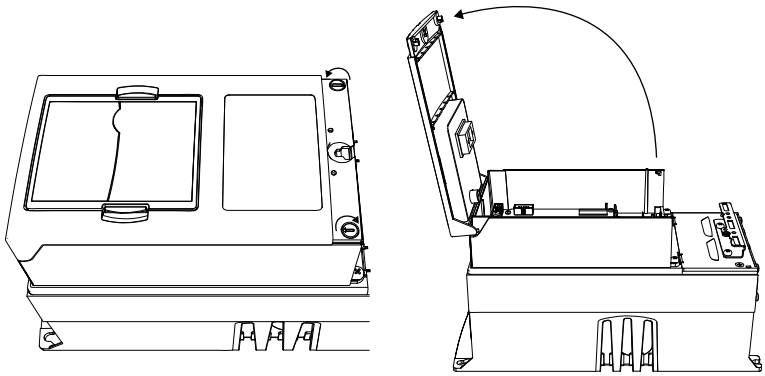
4	Install the OPTEC EtherCAT Option Board in slot D or E on the control board of the AC drive. Make sure that the grounding plate fits tightly in the clamp. 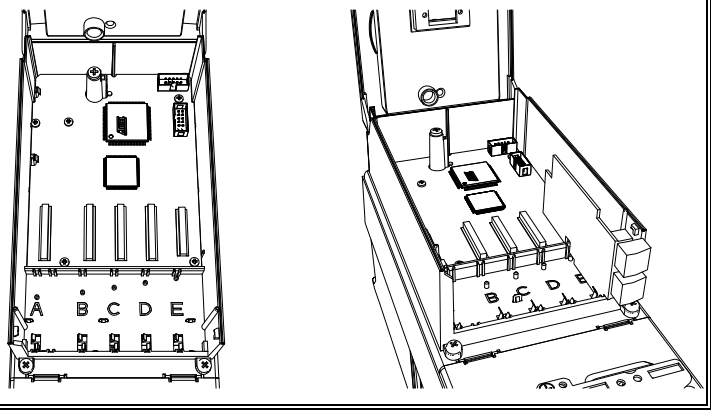
5	Make a sufficiently wide opening for your cable by cutting the grid as wide as necessary. 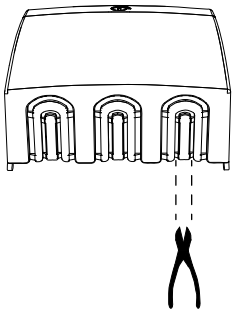
6	Close the cover of the control unit and the cable cover.

5.2 Installation in VACON® 20

5.2.1 Frames MI1, MI2, MI3

1	Remove the cable connector lid from the AC drive.	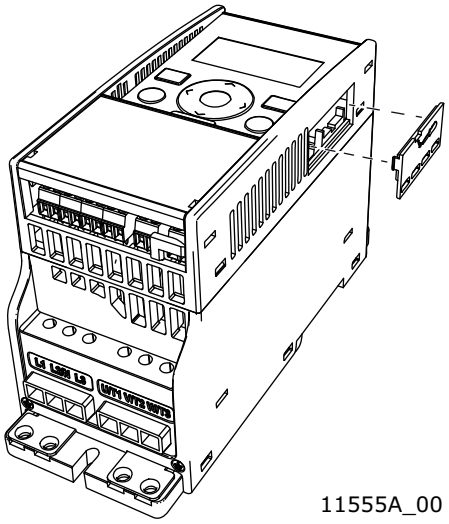 11555A_00
2	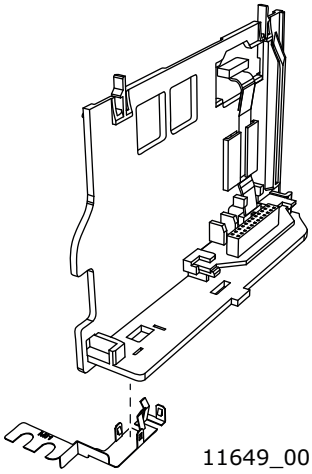 11649_00	Select a correct grounding plate and attach it to the option board mounting frame. The grounding plate is marked with the supported enclosure size.
3	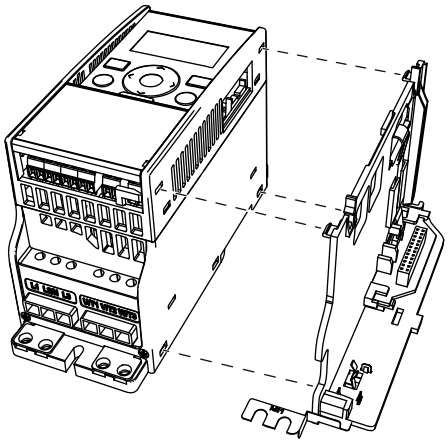 11556A_00	Attach an option board mounting frame to the AC drive.

4	Connect the flat cable from the option board mounting frame to VACON® 20. 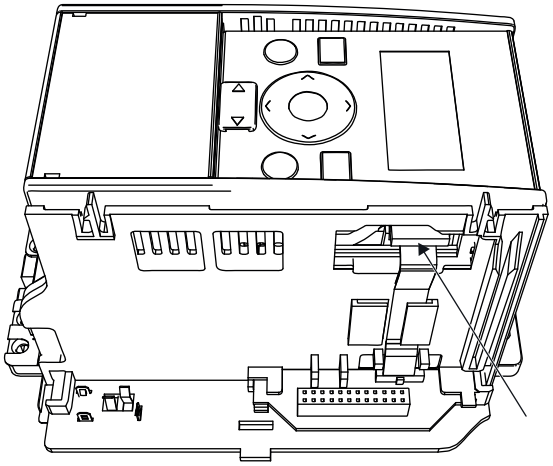 11557A_00

5	If a cable strain relief is required, attach the parts as shown in the figure. 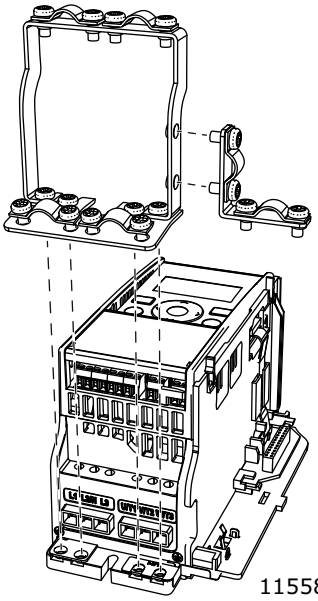 11558A_00

6	Install the option board to the option board holder. Make sure that the option board is securely fastened.	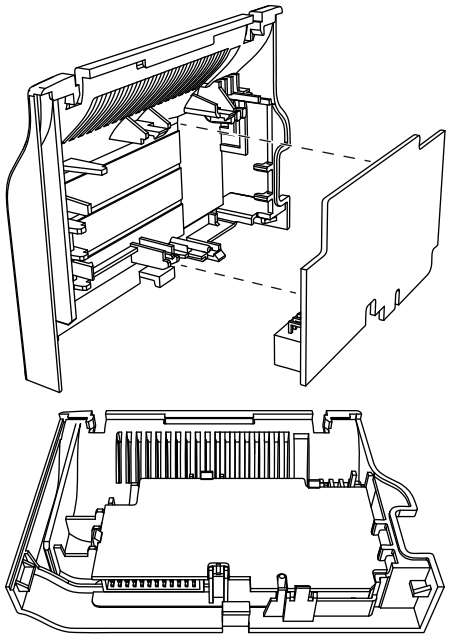 11559A_00
7	Cut free a sufficiently wide opening for the option board connector.	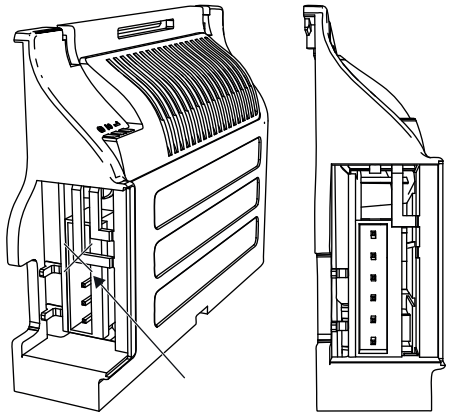 11650_00
8	Attach the option board cover to VACON® 20. Attach the strain relief cable clamp with screws if needed.	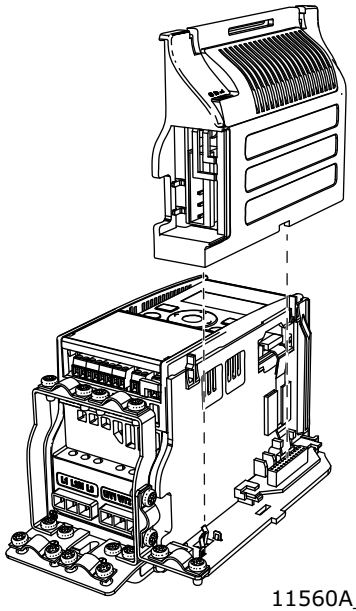 11560A_00

5.2.2 FRAMES MI4, MI5

Make sure power is disconnected before opening the VACON® 20 cover.

1	1a: For MI4: Open the cover. 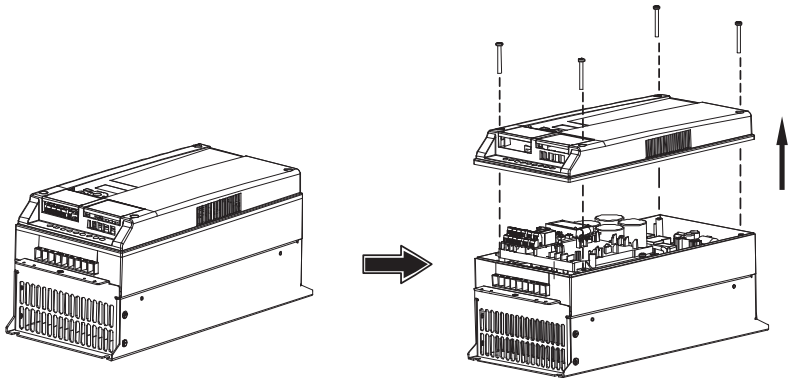 11561_00 1b: For MI5: Open the cover and release the fan connector. 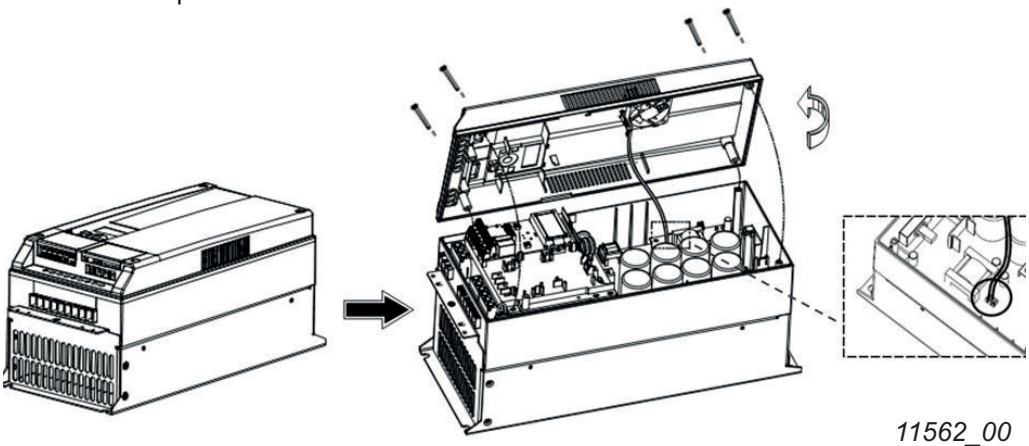 11562_00
2	Connect the flex cable to option board connector PCB. 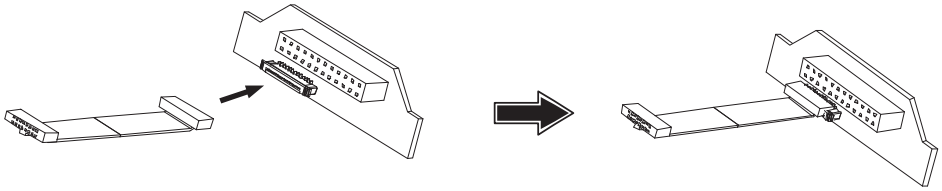 11564_00

3	Connect the option board to connector PCB. 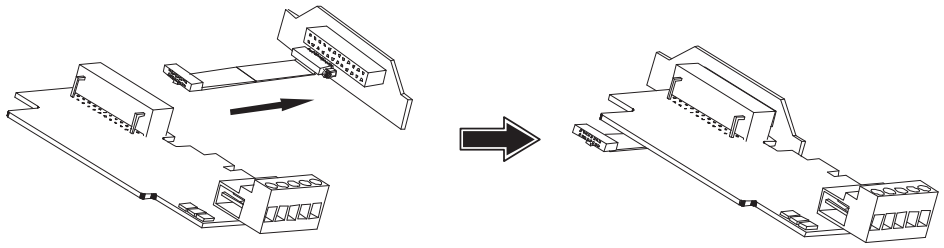 11565_00
4	Attach the option board with connector PCB to VACON® 20 and connect the flex cable. 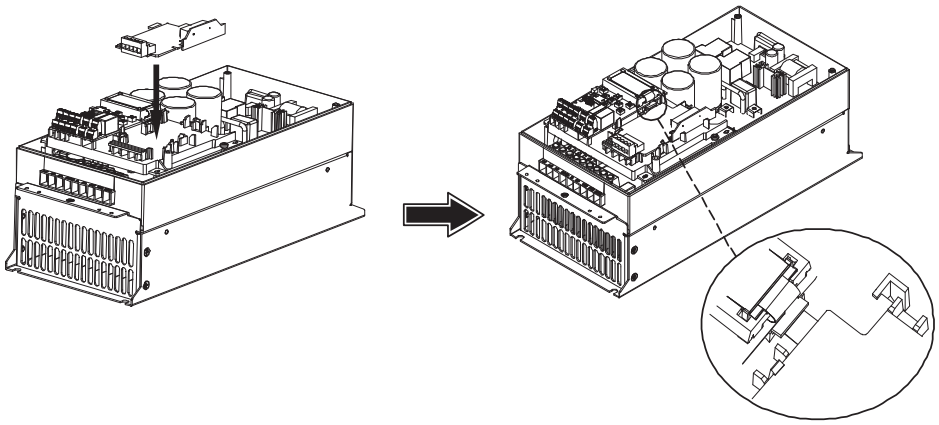 11566_00
5	Attach a suitable grounding plate to VACON® 20. The grounding plate is marked with supported enclosure size. 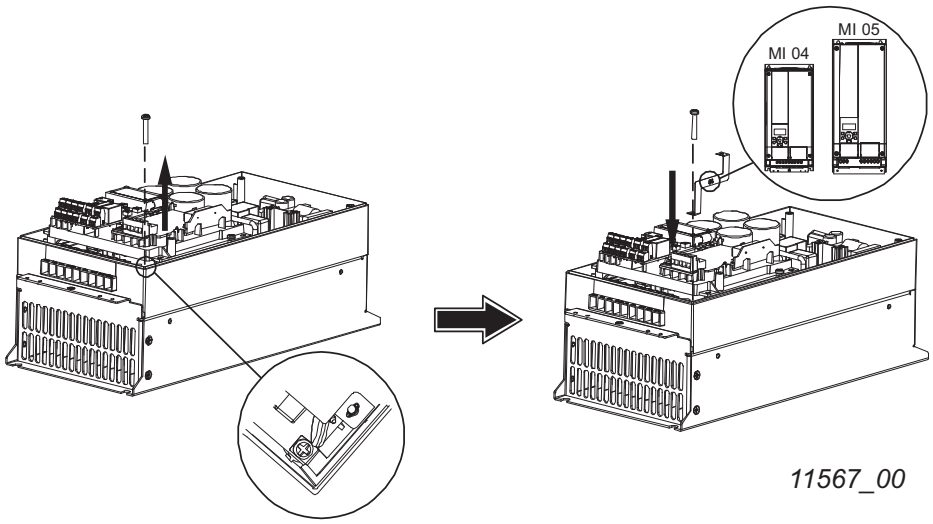 11567_00

6	Assemble a clamp on top of the grounding plate on both sides of the option board. 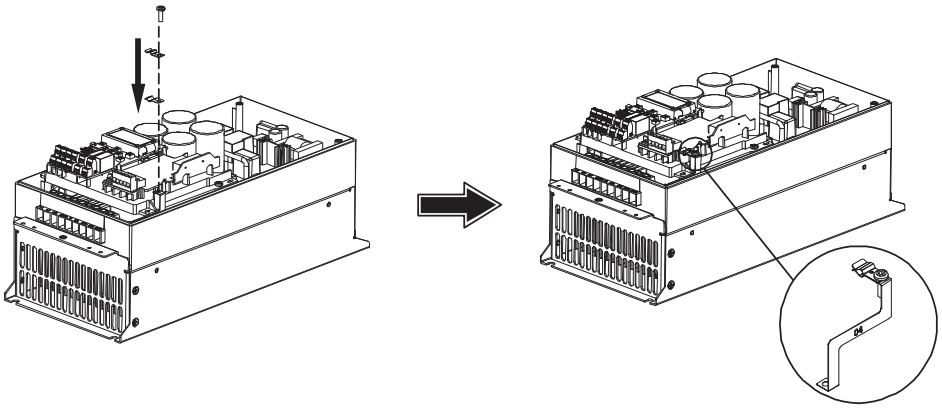 11568_00

7	8a: For MI4: Close the cover. 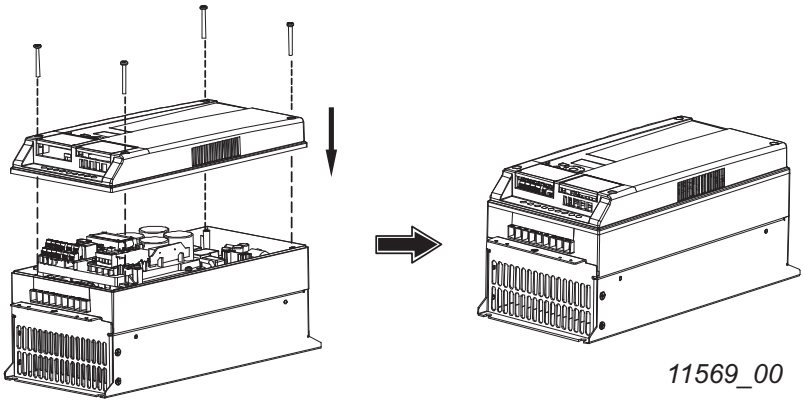 11569_00 8b: For MI5: Remount the fan connector and close the cover. 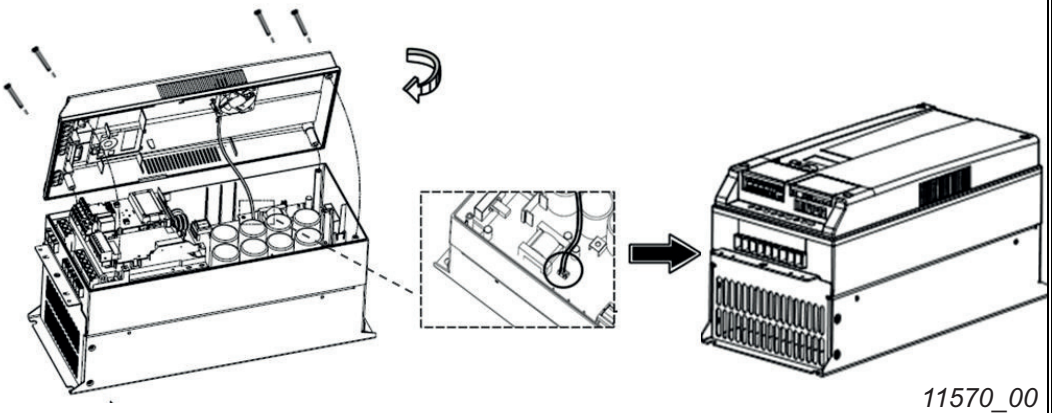 11570_00

5.3 INSTALLATION IN VACON® 20 X AND 20 CP

Do not add or replace option boards or fieldbus boards on an AC drive with the power switched on. This may damage the boards.

1	Open the cover of the drive. 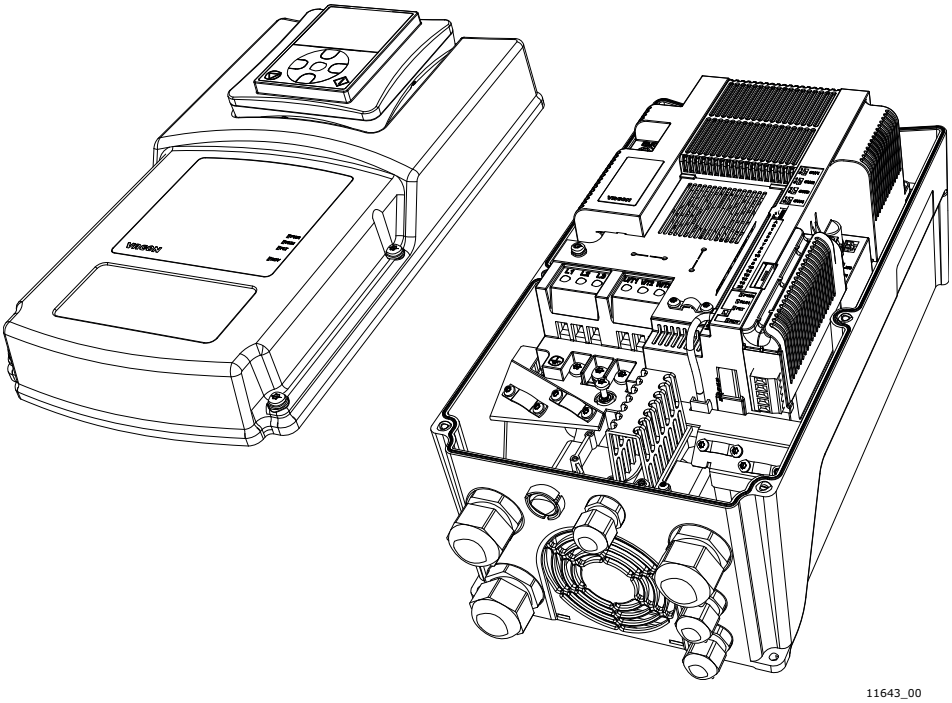 MU3 example

The relay outputs and other I/O-terminals may have a dangerous control voltage present even when the drive is disconnected from mains.

2	Remove the option slot cover. 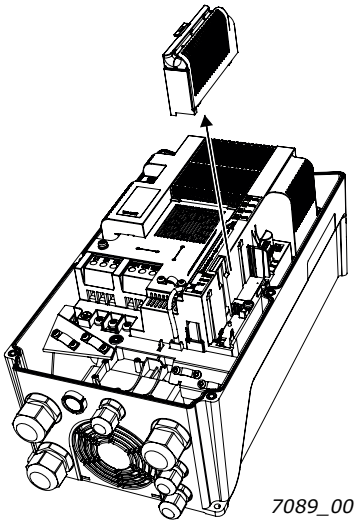 7089_00
3	Install the option board into the slot as shown in the figure. 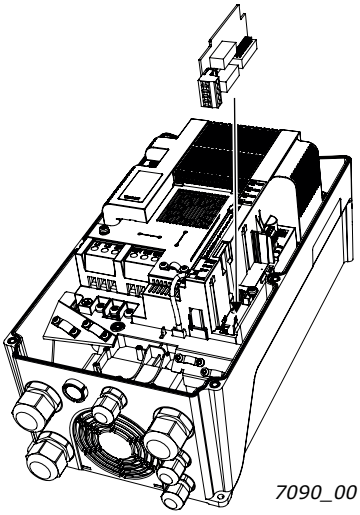 7090_00
4	Mount the option slot cover. Remove the plastic opening for the option board terminals. 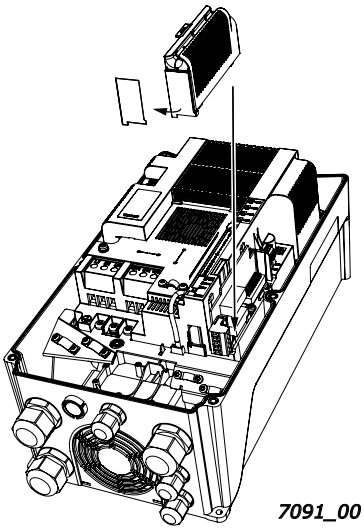 7091_00

5.4 INSTALLATION IN VACON® 100 FAMILY

1	Open the cover of the AC drive. 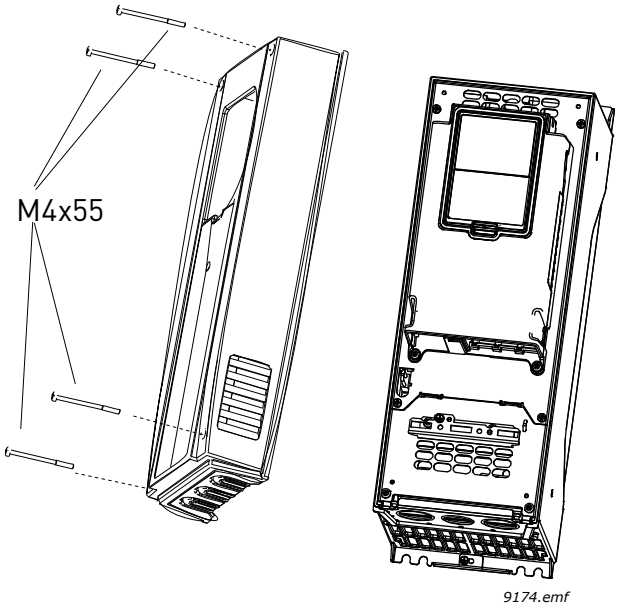

DANGER

The relay outputs and other I/O-terminals may have a dangerous control voltage present even when VACON® 100 family AC drive is disconnected from mains.

2	Open the inner cover to reveal the option board slots **(C,D,E)**. 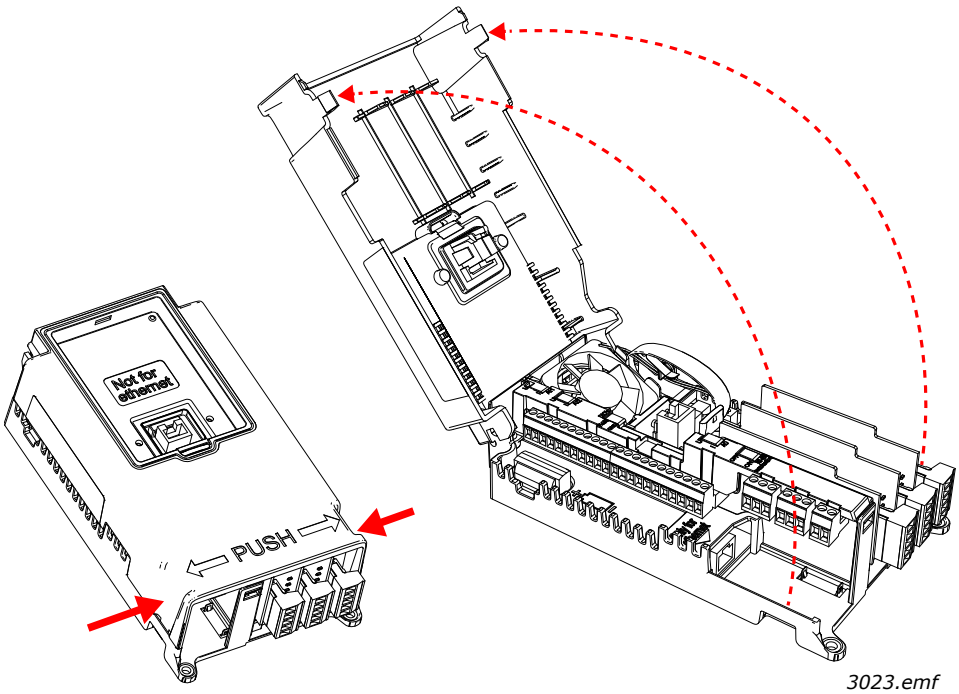 *3023.emf*
3	Install the fieldbus board into slot **D** or **E**. **NOTE:** Incompatible boards cannot be installed on VACON® 100 family AC drive. Compatible boards have a slot coding that enable the placing of the board. 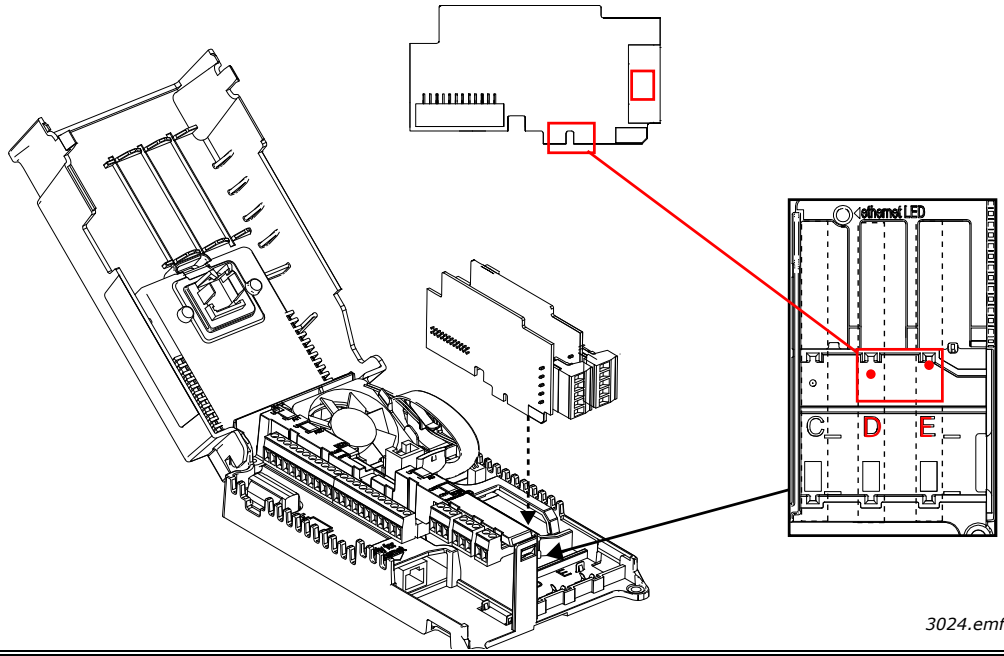 *3024.emf*
4	Then connect the cable to its appropriate OPTEC EtherCAT option board RJ-45 connector.

5	Unless already done for the other control cables, cut free the opening on the AC drive cover for the fieldbus cable (protection class IP21). **NOTE:** Cut the opening on the same side you have installed the board in!	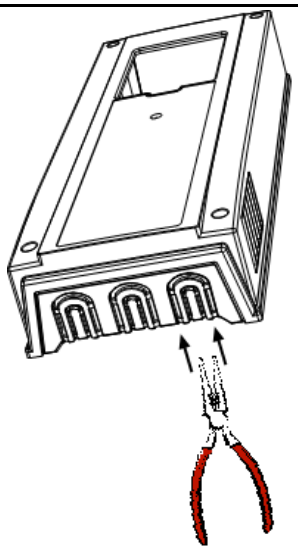
6	Remount the AC drive cover and run the cable as shown in picture. **NOTE:** When planning the cable runs, remember to keep the distance between the fieldbus cable and the motor cable at a **minimum of 30 cm**. It is recommended to route the option board cables away from the power cables as shown in the picture.	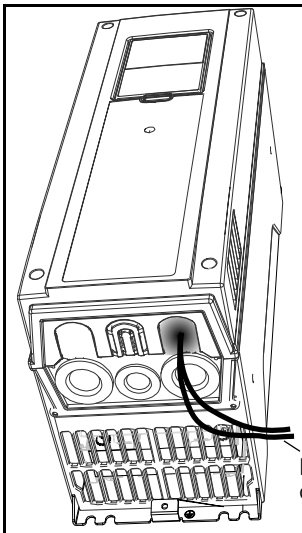

6. COMMISSIONING

This chapter explains the configuration of AC drive and EtherCAT master to enable communication between EtherCAT master and OPTEC EtherCAT option board.

6.1 AC DRIVE AND OPTEC ETHERCAT OPTION BOARD PARAMETRIZATION

VACON® AC drive and OPTEC EtherCAT option board parameters can be read and modified with AC drive control keypad or with PC tools. See description of VACON® PC tools in Chapter 6.6 "VACON® PC-tools".

Step 1. Enable field bus control in AC drive to make AC drive to be controllable via field bus. Enabling of field bus control in a different VACON® AC drives is described in Chapter 12 "APPENDIX D - FIELDBUS PARAMETRISATION".

If OPTEC EtherCAT is used only for monitoring and data collection purposes, then Step 1 is no required.

Step 2. Parametrize OPTEC EtherCAT option board and monitor option board status.

- In case of VACON® NXP parameters are located under the menu M7 Expander boards menu.
- In case of VACON® 100 family parameters are located under the menu M5 I/O and Hardware menu.

Minimum AC drive firmware version required by OPTEC EtherCAT parameter and monitor value functionality is described in the following table. With older control firmware versions, the parameters and monitor values are not available. In this case parametrization must be done via EtherCAT bus.

Table 15. EtherCAT parameters and monitor value support

AC drive	AC drive SW version	From OPTEC EtherCAT SW version
VACON® NXP	NXP00002V196	OPTEC_FW0128V003
VACON® 100 INDUSTRIAL and 100 X	FW0072V029	OPTEC_FW0128V003
VACON® 100 FLOW	FW0159V019	OPTEC_FW0128V003
VACON® 20 X and CP	To be defined	OPTEC_FW0128V003
VACON® 20	To be defined	OPTEC_FW0128V003

6.1.1 OPTION BOARD PARAMETERS

OPTEC EtherCAT can be parametrized with a following option board parameters. Option board parameters are stored into AC drive permanent memory. It is possible to backup and restore AC drive parameters. See details of backup and restore operation in AC drive user manual.

Using of parameters is optional, OPTEC EtherCAT can be fully parametrized by EtherCAT master. In this case parameters are set into default values.

Table 16. OPTEC EtherCAT Parameters

Name	Default	Range	Description
Operation mode	Drive Profile	Drive Profile (1), Bypass (2)	Operation mode defines how EtherCAT master can control the motor.

Table 16. OPTEC EtherCAT Parameters

Name	Default	Range	Description
Comm. Timeout	0 s	0...65535 s	Communication timeout in seconds
Station Alias	0	0...65535	Configured Station Alias for OPTEC EtherCAT.
Device ID	1	1...65535	Device ID of OPTEC EtherCAT
Vl setpoint factor	1	1, 10, 100	Scaling factor for vl speed reference (only in NXP).

6.1.1.1 Operation mode

Operation mode parameter defines how EtherCAT master can control the motor and monitor the motor control status.

- Drive Profile means CiA-402 Drive and Motion Control Profile's Velocity mode.
- Bypass means VACON® specific control mode

See details of operation mode in Chapter 7.3 "Operating modes".

Operation mode can be selected with a following methods that are described in Chapter 6.3 "Operation mode selection". Latest modification is taken into use and currently used setting is stored into Operation mode parameter. Currently used Operation mode can be seen in Operation mode monitor value.

- Operation mode selection with parameter
- Operation mode selection by writing into 0x6060 CiA-402 Modes of Operation object. See details in Chapter 7.2.26 "CiA 402 Modes of Operation".
- Operation mode selection with PDO assignment. See details in Chapter 6.3.3 "Operation mode selection using PDO assignment".

NOTE! If EtherCAT master assigns only Bypass specific process data objects and CiA-402 specific process data objects (RxPDO 0x1600, TxPDO 0x1A00) are not assigned then selecting of Drive Profile is not possible.

NOTE! In CiA-402 Drive Profile mode it is recommended to set AC drive's "Fieldbus min scale" and "Fieldbus max scale" parameters value to zero. In otherwise RPM scaling does not work properly. Part of NXP applications contains "Fieldbus min scale" and "Fieldbus max scale" settings. In APFIFF06 Multipurpose application these parameters can be found from menu P2.9.1 and P2.9.2.

6.1.1.2 Communication timeout

Communication timeout parameter defines wait time in seconds for fault activation.

In EtherCAT communication EtherCAT master typically defines SM watchdog time to the EtherCAT slave device. If OPTEC EtherCAT cannot receive process data from EtherCAT master within SM watchdog time, then it activates F53 Field bus fault.

With Communication timeout parameter it is possible to extend the time when F53 field bus fault is activated.

- If Communication timeout is 0 then F53 field bus fault is activated after SM watchdog time
- If Communication timeout is other than 0 then F53 field bus fault is activated after SM watchdog time + Communication timeout time (seconds)

See details of communication time out behavior in Chapter 8.3 "Fieldbus timeout fault (F53)".

6.1.1.3 Station alias

Station Alias parameter defines Configured Station Alias for OPTEC EtherCAT. EtherCAT master devices can use the alias for node addressing. Usage of the alias is optional for the master device.

- If Station alias parameter is 0 then OPTEC uses Configured Station Alias defined by EtherCAT master. EtherCAT master (PLC or EtherCAT configuration tool) can write Configured Station Alias to OPTEC EtherCAT EEPROM. New alias is taken into use after power cycle of variable-frequency drive.
- If Station alias parameter is other than 0 then OPTEC EtherCAT uses Configured Station Alias defined by AC drive panel parameter. New alias is taken into use immediately after change.

See more about Configured Station Alias in Chapter 6.2.3 "Addressing and identification".

6.1.1.4 Device ID

This parameter can be used to set the unique device identification value for OPTEC EtherCAT within the EtherCAT network. EtherCAT master needs to be configured to use this identification method. If EtherCAT master does not use Device ID as identification method, this parameter has no effect.

More detailed description is found in Chapter 6.2.3 "Addressing and identification".

6.1.1.5 Vl setpoint factor

If the default RPM range of vl target velocity and vl velocity actual in not enough for high speed applications, this parameter can be used to increase the range by 10 or 100. The default speed range with vl setpoint factor 1 is -32768...+32767 RPM. With vl scaling factor 10 this is -327680...327670. In practice, this means that vl target velocity value of 100 RPM translates to 1000 RPM internally and vl velocity actual value of 100 RPM needs to be multiplied by 10 to get actual RPM of the drive.

NOTE! This panel parameter is only visible in VACON® NXP drives.

6.1.2 Option board monitor values

OPTEC EtherCAT option board monitor values tells useful information about the option board status.

Table 17. OPTEC EtherCAT monitor values

Name	Range	Description
FB Protocol Status	Initializing (1), Stopped (2), Operational (3), Faulted (4), Failing (5), Pre-Operational (6)	Generic communication status
EtherCAT Run	Init (1), Pre-Operational (3), Safe-Operational (4), Operational (5)	EtherCAT RUN indicator
Communication status	0.0...6553.9	Number of successfully received process data frames and error frames during a second.
Operate Mode	None (1), Drive Profile (2), Bypass (3)	Currently used Operate mode

Table 17. OPTEC EtherCAT monitor values

Name	Range	Description
AL Status Code	0x0...0xFFFF	EtherCAT AL Status Code
SM Watchdog	0...65535	SM Watchdog time in milliseconds
Station Alias	0...65535	Currently used Configured Station Alias
Drive control word	-	Control word in drive format
Drive status word	-	Status word in drive format
Protocol control word	-	Control word in protocol format
Protocol status word	-	Status word in protocol format
Sub menu: ESI Selection Mode		
ESI Selection Mode	Off (1), Automatic (2), Static (3)	ESI file selection mode
Product Code	0...0xFFFFFFFF	Currently used EtherCAT Product Code
Revision Number	0...0xFFFF	Currently used EtherCAT Revision Number
Sub menu EoE		
IP part 1	0-255	IP address part 1
IP part 2	0-255	IP address part 2
IP part 3	0-255	IP address part 3
IP part 4	0-255	IP address part 4
Subnet P1	0-255	Subnet mask part 1
Subnet P2	0-255	Subnet mask part 2
Subnet P3	0-255	Subnet mask part 3
Subnet P4	0-255	Subnet mask part 4
Default GW P1	0-255	Gateway IP address part 1
Default GW P2	0-255	Gateway IP address part 2
Default GW P3	0-255	Gateway IP address part 3
Default GW P4	0-255	Gateway IP address part 4
EoE	Enabled / Disabled	Shows if EoE is enabled or disabled by master

6.1.2.1 FB Protocol status

FB Protocol status monitor value shows generic status of field bus. When device has started, it stays in "Initializing" status until the connection is opened to the device.

When EtherCAT master commands OPTEC EtherCAT to Pre-Operational or Safe-Operational state then the status changes to "Pre-Operational".

When EtherCAT master commands OPTEC EtherCAT to Operational state then the status changes to "Operational".

See EtherCAT state machine states in Chapter 2 "OPTEC EtherCAT - General".

If the connection is closed or lost, the status changes to "Failing" until communication time out time has elapsed. Then the status changes to "Faulted". See details of communication time out behavior in Chapter 8.3 "Fieldbus timeout fault (F53)".

6.1.2.2 EtherCAT Run

EtherCAT Run monitor value shows EtherCAT state. See EtherCAT state machine states in Chapter 2 "OPTEC EtherCAT - General". When device has started, it stays in "Initialisation" state until the connection is opened to the device.

State is changed to "Initialisation", "Pre-operational", "Safe-operational", or "Operational" when EtherCAT master commands OPTEC EtherCAT to move into these states.

OPTEC EtherCAT moves from "Operational" to "Safe-operational" when it cannot get process data from EtherCAT master within time defined by SM Watchdog time.

Bootstrap state is not supported at a moment in OPTEC EtherCAT.

6.1.2.3 Communication status

Communication status monitor value is shown in format "nnnn.y":

- nnnn shows number of successfully received process data frames during a second
- y shows number of error frames during a second. Processing of these frames failed.

NOTE! When using virtual EtherCAT master in PC workstation non-EtherCAT data frames might be passed to the Ethernet interface in which OPTEC EtherCAT is connected to. In this case the diagnostic shows that OPTEC EtherCAT receives error frames.

6.1.2.4 Operate Mode

Operate Mode monitor value shows currently used operate mode.

- None means that operate mode is not defined.
- Drive Profile means CiA-402 Drive and Motion Control Profile's Velocity mode.
- Bypass means VACON specific control mode.

6.1.2.5 AL Status Code

AL Status Code value shows OPTEC EtherCAT option board's EtherCAT Application Layer status which might tell information about possible EtherCAT communication or configuration problem.

Acronyms I, P, S, O, E on the table below describes EtherCAT states: Initialization, Pre-operational, Safe-operational, Operational, Error. See EtherCAT state machine states in Chapter 2 "OPTEC EtherCAT - General".

Table 18. EtherCAT AL Status Codes

Code	Description	Current state or state changes	Resulting state
0x0000	No error	Any	Current state
0x0001	Unspecified error	Any	I + E, P + E, S + E
0x0002	No memory	Any	I + E, P + E, S + E
0x0003	Invalid device setup	P -> S	P + E
0x0011	Invalid requested state change	I -> S, I -> O, P -> O, O -> B, S -> B, P -> B	I +E, P + E, S + E
0x0012	Unknown requested state	Any	I +E, P + E, S + E
0x0013	Bootstrap not supported	I -> B	I + E
0x0014	No valid firmware	I -> P	I + E
0x0015	Invalid mailbox configuration	I -> B	I + E
0x0016	Invalid mailbox configuration	I -> P	I + E

Table 18. EtherCAT AL Status Codes

Code	Description	Current state or state changes	Resulting state
0x0017	Invalid sync manger configuration	P -> S, S -> O	Current state + E
0x0018	No valid inputs available	S, O, S -> O	S + E
0x0019	No valid outputs	O, S -> O	S + E
0x001A	Synchronization error	O, S -> O	S + E
0x001B	Sync manager watchdog	O, S	S + E
0x001C	Invalid Sync Manager Types	O, S, P -> S	S + E
0x001D	Invalid Output Configuration	O, S, P -> S	P + E
0x001E	Invalid Input Configuration	O, S, P -> S	P + E
0x001F	Invalid Watchdog Configuration	O, S, P -> S	P + E
0x0020	Slave needs cold start	Any	I + E, P + E, S + E
0x0021	Slave needs INIT	B, P, S, O	I + E, P + E, S + E
0x0022	Slave needs PREOP	S, O	S + E
0x0023	Slave needs SAFEOP	O	S + E
0x0024	Invalid Input Mapping	P -> S	P + E
0x0025	Invalid Output Mapping	P -> S	P + E
0x0026	Inconsistent Settings	P -> S	P + E
0x0027	Freerun not supported	P -> S	P + E
0x0028	SyncMode not supported	P -> S	P + E
0x0029	Freerun needs 3 buffer mode	P -> S	P + E
0x002A	Background Watchdog	S, O	P + E
0x002B	No Valid Inputs and Outputs	O, S -> O	S + E
0x002C	Fatal Sync Error	O	S + E
0x002D	No Sync Error	S -> O	S + E
0x0030	Invalid DC SYNC Configuration	O, S -> O, P -> S	P + E, S + E
0x0031	Invalid DC Latch Configuration	O, S -> O, P -> S	P + E, S + E
0x0032	PLL Error	O, S -> O	S + E
0x0033	DC Sync IO Error	O, S -> O	S + E
0x0034	DC Sync Timeout Error	O, S -> O	S + E
0x0035	DC Invalid Sync Cycle Time	P -> S	P + E
0x0036	DC Sync0 Cycle Time	P -> S	P + E
0x0037	DC Sync1 Cycle Time	P -> S	P + E
0x0041	MBX_AOE	B, P, S, O	I + E, P + E, S + E
0x0042	MBX_EOE	B, P, S, O	I + E, P + E, S + E
0x0043	MBX_COE	B, P, S, O	I + E, P + E, S + E
0x0044	MBX_FOE	B, P, S, O	I + E, P + E, S + E
0x0045	MBX_SOE	B, P, S, O	I + E, P + E, S + E
0x004F	MBX_VOE	B, P, S, O	I + E, P + E, S + E
0x0050	EEPROM no access	Any	I + E, P + E, S + E
0x0051	EEPROM Error	Any	I + E, P + E, S + E

Table 18. EtherCAT AL Status Codes

Code	Description	Current state or state changes	Resulting state
0x0060	Slave restarted locally	Any	I
0x0061	Device Identification value updated	P	P + E

6.1.2.6 SM Watchdog

SM Watchdog monitor value tells SM watchdog time in milliseconds. If usage of SM watchdog is configured into EtherCAT master device then the master configures this time the to EtherCAT slave devices before process data communication is started.

See setting of SM watchdog in Chapter 6.2.4 "Setting the watchdog".

6.1.2.7 Station Alias

Station Alias monitor value shows currently used Configured Station Alias. EtherCAT master devices can use the alias for node addressing.

See setting of the alias in Chapter 6.2.3.2 "Configured station alias".

6.1.2.8 Drive control word

Drive control word monitor value shows the control word in AC drive specific format. In most cases the control word is transferred to AC drive in VACON® format which is described in Chapter 11 "APPENDIX C - CONTROL AND STATUS WORD".

If PROFIdrive operate mode is used, then OPTEC EtherCAT converts the control word into VACON® format before transmitting it to the application. In Bypass mode PLC can send the control word in a special application specific format to the application.

6.1.2.9 Drive status word

Drive status monitor value shows the status word in AC drive specific format. In most cases the status word is transferred from AC drive application to OPTEC EtherCAT in VACON® format which is described in Chapter 11 "APPENDIX C - CONTROL AND STATUS WORD".

If CiA-402 Drive Profile operate mode is used, then OPTEC EtherCAT converts the status word into CiA-402 Drive Profile format before transmitting it to the PLC. In Bypass mode AC drive application can send the status word in a special application specific format to OPTEC EtherCAT which then passed the status word to the PLC.

6.1.2.10 Protocol control word

Protocol control word monitor value shows the control word that was received from EtherCAT master.

If Operate mode is "Drive Profile" then control word is in CiA-402 format. See CiA-402 Drive profile mode.

If Operate mode is "Bypass" then control word is usually in VACON® specific format. See Chapter 11 "APPENDIX C - CONTROL AND STATUS WORD". Special applications might use other formats.

6.1.2.11 Protocol status word

Protocol status word monitor value shows the status word that OPTEC EtherCAT option board sends to EtherCAT master.

If Operate mode is "Drive Profile" then status word is in CiA-402 format. See CiA-402 Drive profile mode.

If Operate mode is "Bypass" then status word is usually in VACON® specific format. See Chapter 11 "APPENDIX C - CONTROL AND STATUS WORD". Special applications might use other formats.

6.1.2.12 ESI Selection Mode

ESI Selection Mode shows currently used ESI Selection Mode. See details of this functionality in Chapter 6.4 "ESI file selection".

6.1.2.13 Product Code

Product Code monitor value shows currently used EtherCAT Product Code. It affects into automatic selection of Slave Information (ESI) file in EtherCAT master configuration tools. See details of this functionality in Chapter 6.4 "ESI file selection".

6.1.2.14 Revision Number

Revision Number monitor value shows currently used EtherCAT Revision Number. It affects into automatic selection of Slave Information (ESI) file in EtherCAT master configuration tools. See details of this functionality in Chapter 6.4 "ESI file selection".

6.1.2.15 IP part 1

The most significant byte of OPTEC IP address.

6.1.2.16 IP part 2

Second byte of OPTEC IP address.

6.1.2.17 IP part 3

Third byte of OPTEC IP address.

6.1.2.18 IP part 4

The least significant byte of OPTEC IP address.

6.1.2.19 Subnet mask P1

The most significant byte of OPTEC subnet mask.

6.1.2.20 Subnet mask P2

Second byte of OPTEC subnet mask.

6.1.2.21 Subnet mask P3

Third byte of OPTEC subnet mask.

6.1.2.22 Subnet mask P4

The least significant byte of OPTEC subnet mask.

6.1.2.23 Default GW IP P1

The most significant byte of default gateway IP address.

6.1.2.24 Default GW IP P2

Second byte of default gateway IP address.

6.1.2.25 Default GW IP P3

Third byte of default gateway IP address.

6.1.2.26 Default GW IP P4

The least significant byte of gateway IP address.

6.1.2.27 EoE

Status of Ethernet over EtherCAT. Shows “Enabled” if OPTEC EoE is activated by master and other monitor values (IP part 1 etc) are valid. If status is “Disabled” OPTEC has no valid IP address and it cannot be connected via VACON® live for example.

6.2 EtherCAT master configuration

EtherCAT master (PLC) is typically connected to OPTEC EtherCAT option board with a following procedure.

Step 1. Import EtherCAT Slave Information files (ESI files) into EtherCAT master configuration tool.

Step 2. Connect EtherCAT master to OPTEC EtherCAT option board.

Step 3. Configure connection to OPTEC EtherCAT.

6.2.1 Importing OPTEC EtherCAT ESI files

ESI file defines slave device's functionality and object list to EtherCAT master device. Using of ESI files is optional, but eases data mapping between EtherCAT master and EtherCAT slave.

OPTEC EtherCAT option board ESI files can be downloaded from https://www.danfoss.com/en/service-and-support/ -> Software -> Select "Drives" as Business unit -> Fieldbus configuration files.

- OPTEC_VACON_OPTEC_Vxx_yyyymmdd.xml is generic ESI file for OPTEC option. It can be used with all VACON® AC drives and AC drive applications. This ESI file does not define CoE objects for accessing of application specific IDs.
- AC drive and AC drive application specific ESI files (for example OPTEC_VACON_NX_ALLINONE_yyyymmdd.xml) defines CoE objects for accessing of application specific parameters.

NOTE! Application specific parameters can be accessed even when ESI file does not does not define CoE objects for them. See details in Chapter 7.4 "Accessing drive parameters via CoE MailBox".

ESI files must be imported to the PC hard disk from where EtherCAT master configuration tool can find them. In some case restart of EtherCAT master configuration tool is required before new ESI files are taken into use.

- In case of TwinCAT 2.x ESI file default location is: C:\TwinCAT\Io\EtherCAT
- In case of TwinCAT 3.x ESI file default location is: C:\TwinCAT\3.x\Config\Io\EtherCAT
- In case of CODESYS V3.x ESI file is selected as part of EtherCAT slave device importing process. See Chapter 6.2.2.3 "Slave scan in CODESYS V3.x"

See more about ESI file selection logic in Chapter 6.4 "ESI file selection".

6.2.2 Establishing connection to OPTEC EtherCAT

The following chapters shows scanning of OPTEC EtherCAT option board in TwinCAT 2.x and TwinCAT 3.x.

6.2.2.1 Slave scan in TwinCAT 2.x

1	Connect the Ethernet cable from the Ethernet card of the computer to the IN Connector of the OPTEC Option Board EtherCAT (for more information see Chapter 4.1 "Layout and connections").

2	Start the TwinCAT System Manager by right-clicking on the toolbar icon and by selecting 'System Manager'. 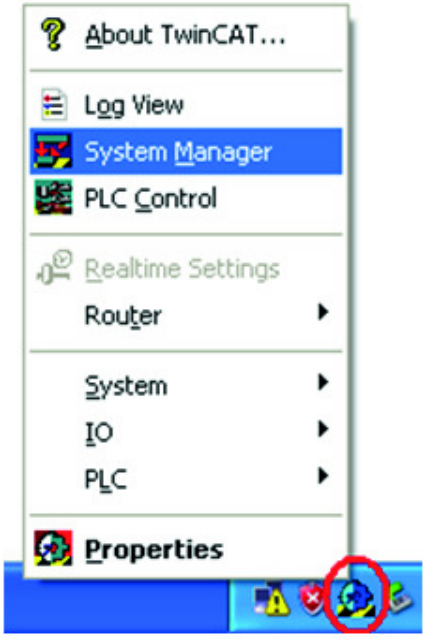 11258.jpg
3	In the TwinCAT System Manager, go to 'Options' -> 'Show Real Time Ethernet Compatible Devices...' 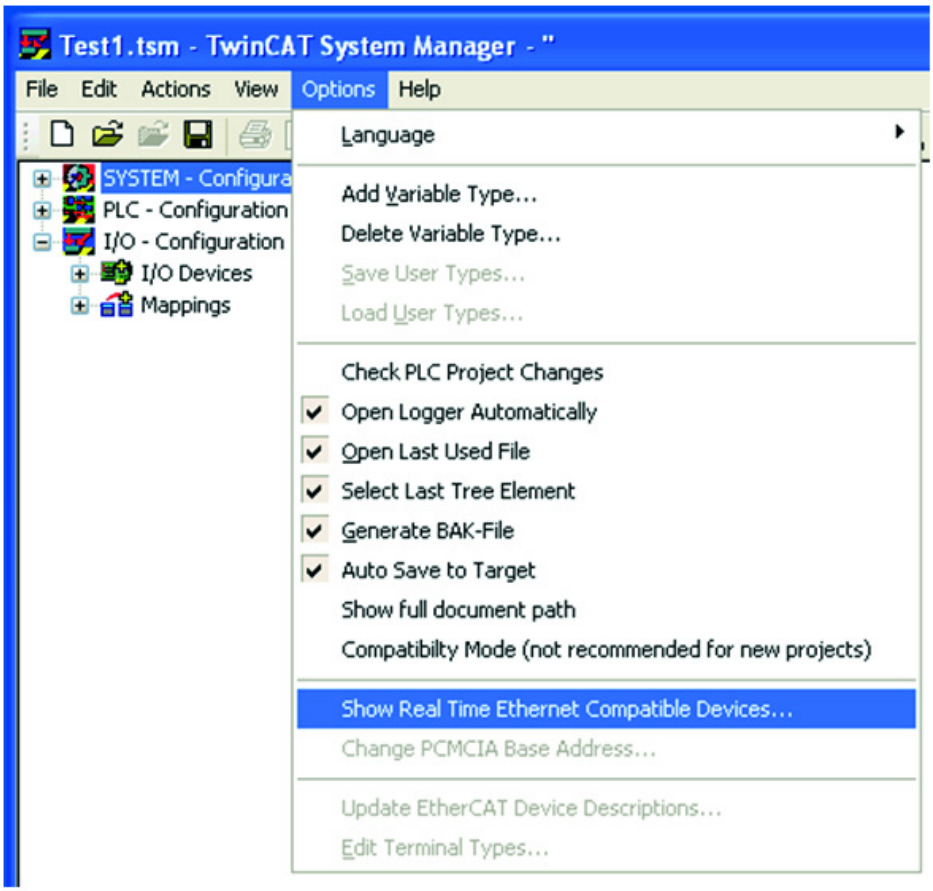 11259.jpg

4	In the first phase your Ethernet card is shown under "Incompatible devices". Select the card and click "Install". After this operation the card is visible under "Installed and ready to use devices. 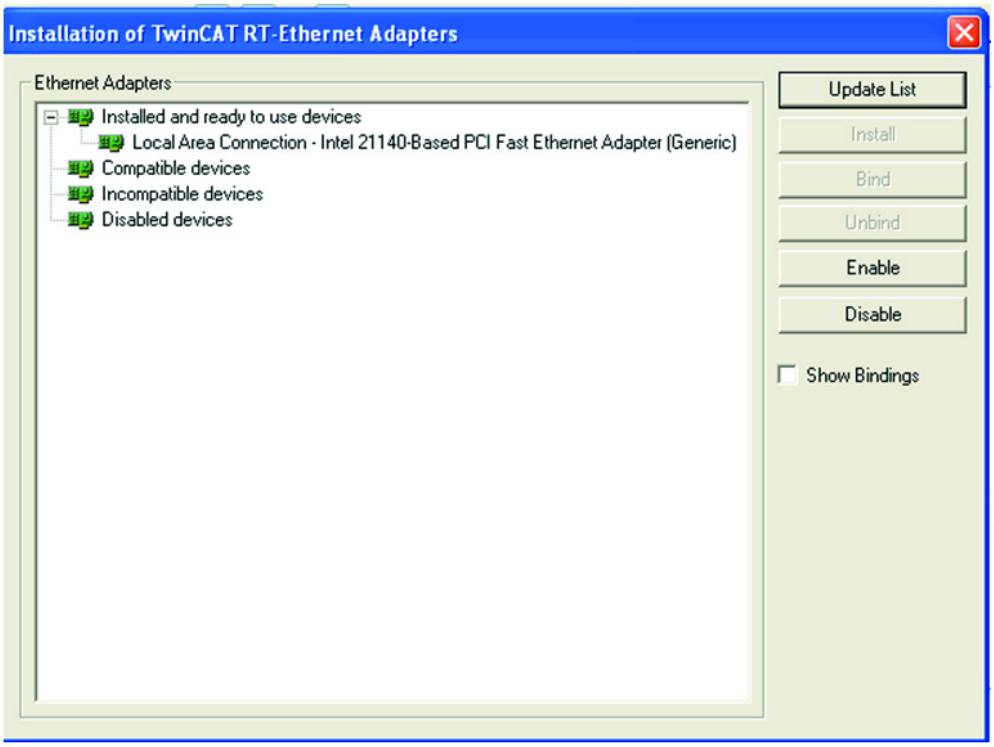 11260.jpg
5	Make sure that TwinCAT is in the Config mode (check that the text Config mode is visible in the bottom right corner). 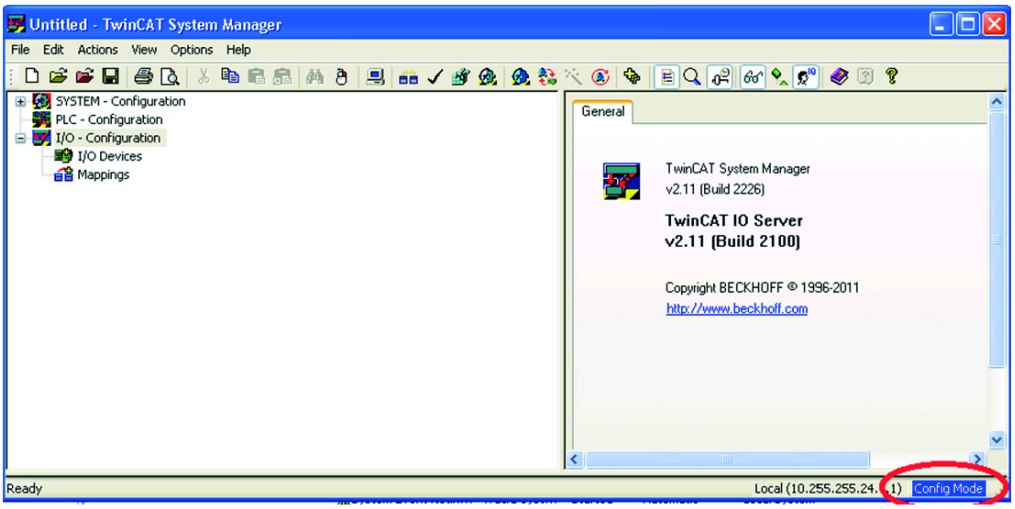 11261.jpg
6	If this is not the case, switch the TwinCAT System Manager to the Config Mode by clicking 'Set/Reset TwinCAT to Config Mode'.  11262.jpg
7	In the 'Load I/O devices?' dialog, click 'Yes'.
8	In the 'Active Free Run?' dialog, click 'No'

9	Start a new project by clicking 'New' from the toolbar or by clicking 'File' -> 'New'.
10	Scan the devices by right-clicking on top of the 'I/O devices' tree item and by selecting 'Scan Devices...'. 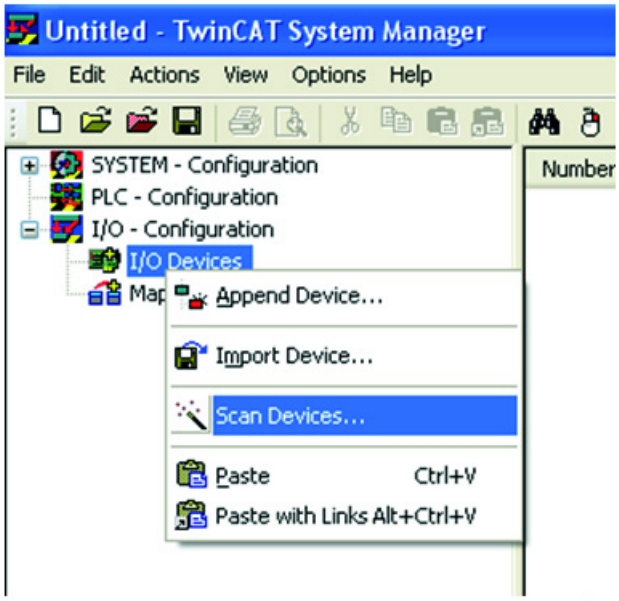 11263.jpg
11	Select the Ethernet card used for communication with the OPTEC Option Board (the Ethernet card which is connected to the IN connector of the OPTEC Option Board), and click 'OK'. 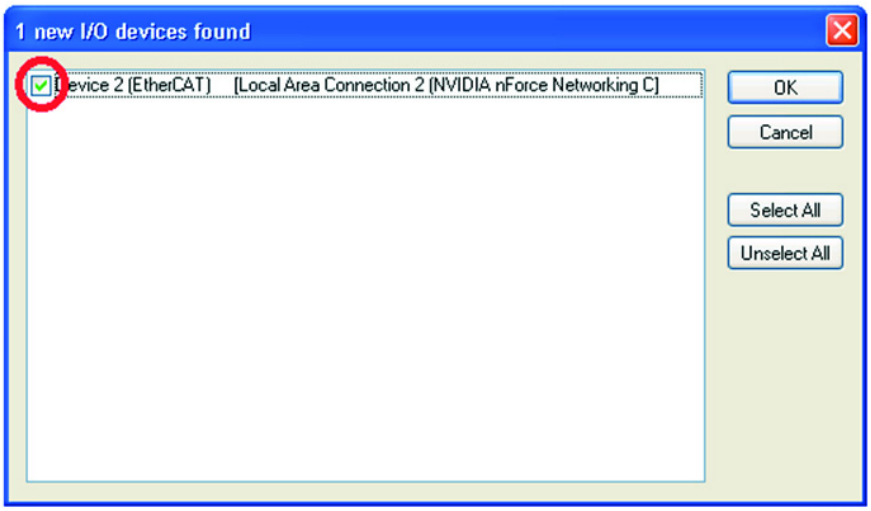 11264.jpg
12	In the 'Scan for boxes?' dialog, click 'Yes'.
13	To switch the EtherCAT bus to OPERATIONAL state, click 'Yes' in the 'Activate free run?' dialog.

14	When the connection has been established, TwinCAT looks like in the picture below.

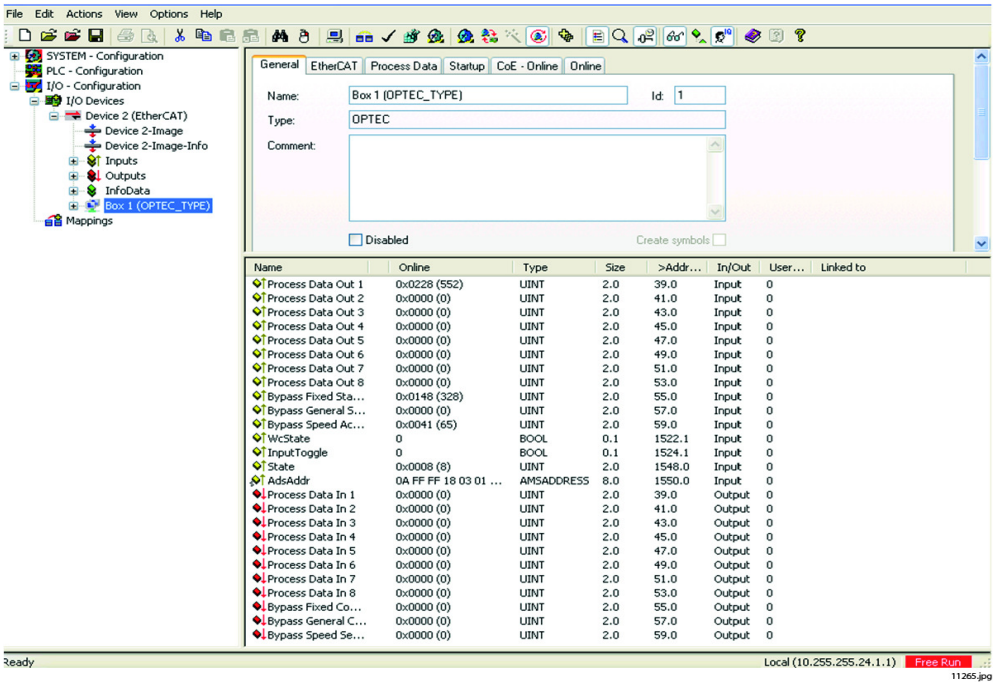

6.2.2.2 Slave scan in TwinCAT 3.x

1	Connect the Ethernet cable from the Ethernet card of the computer to the IN Connector of the OPTEC EtherCAT option board. For more information see Chapter 4 "Layout and connections".
2	Open TwinCAT XAE program from Windows Programs folder. 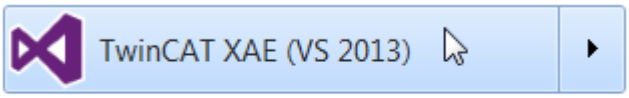 11872_00
3	Define Ethernet interface for TwinCAT by opening "TWINCAT" -> "Show Realtime Ethernet Compatible Devices..."
4	From the list, select the Ethernet interface in which EtherCAT master is connected. After that, select "Install". 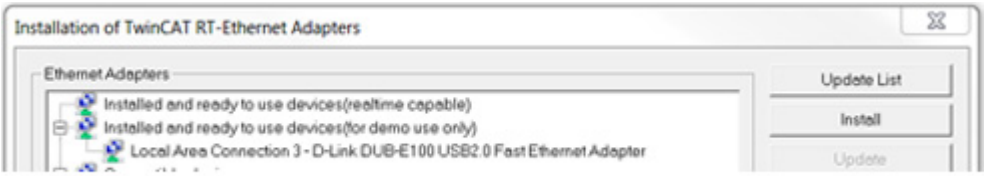 11873_00

5

In Solution Explorer, add EtherCAT master to the project. EtherCAT master can be searched by scanning (see A below). Alternatively, EtherCAT master can be added with "Add New Item..." option (see B below).

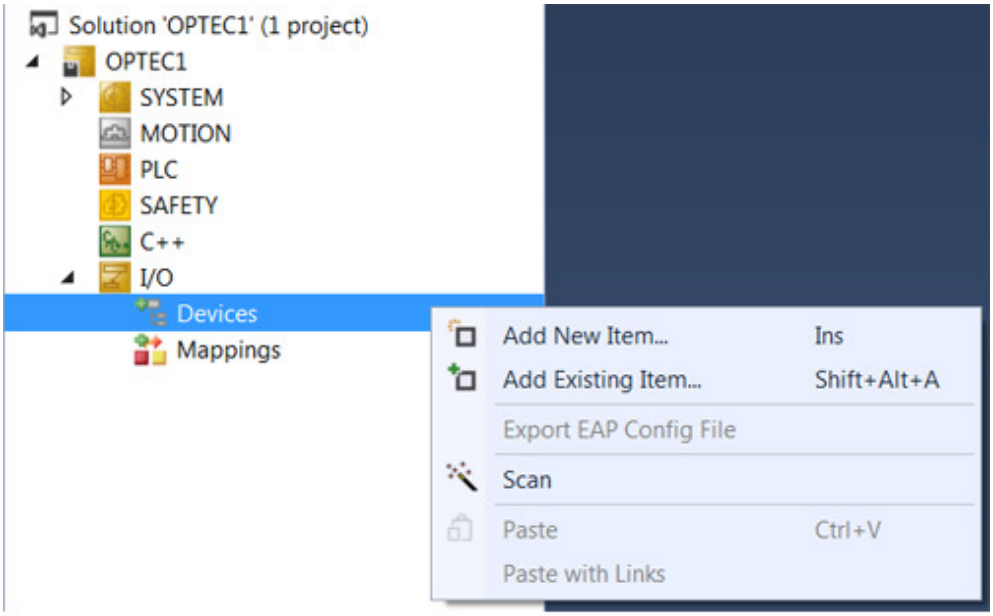

11874_00

5A. In case of scanning TwinCAT shows Ethernet interface which is connected to EtherCAT devices. Select the interface and press "OK".

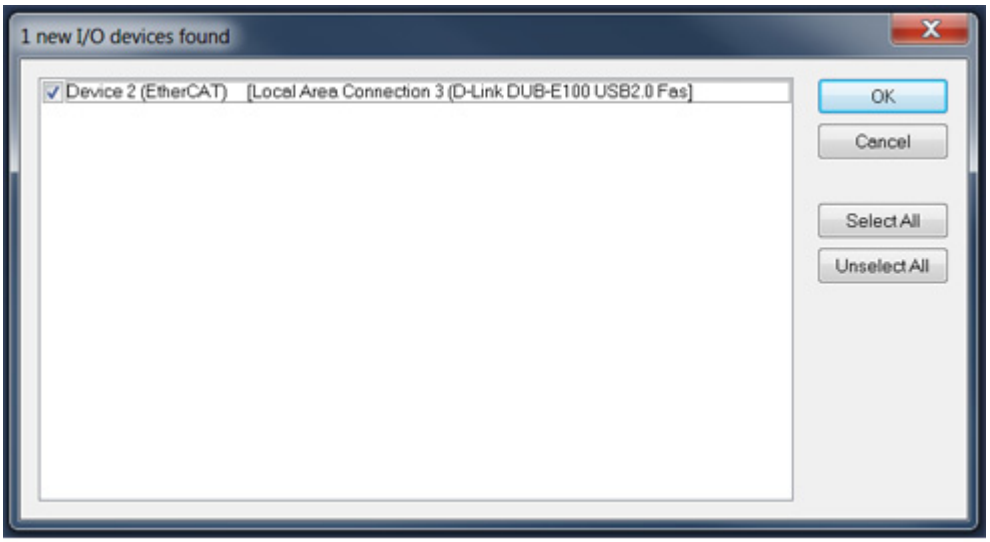

11875_00

5B. In case of "Add New Item..." select "EtherCAT master" device from the list and press "OK".

6	After this TwinCAT shows list of Ethernet interfaces. Select the interface in which EtherCAT master device is connected and press “OK”. 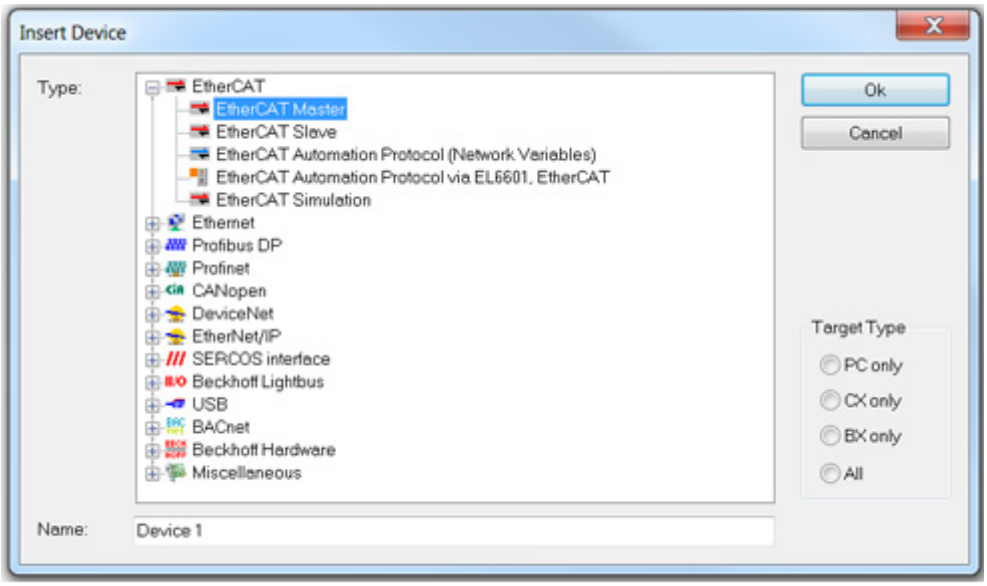 *11876_00* 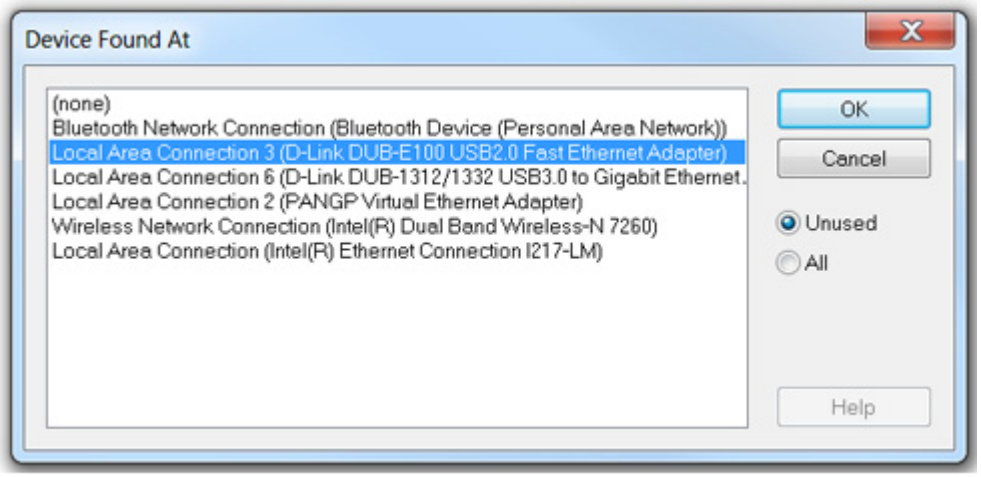 *11877_00*
7	Set TwinCAT into configuration mode. Press “OK” to the following "Restart TwinCAT System in Config Mode" and "Load I/O Devices" queries. 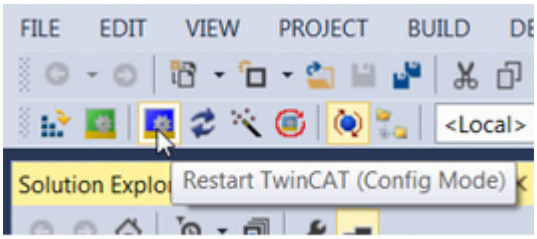 *11878_00*

8	Scan Ethernet boxes (slave devices) by pressing right mouse key over EtherCAT master device. After that select "Scan". 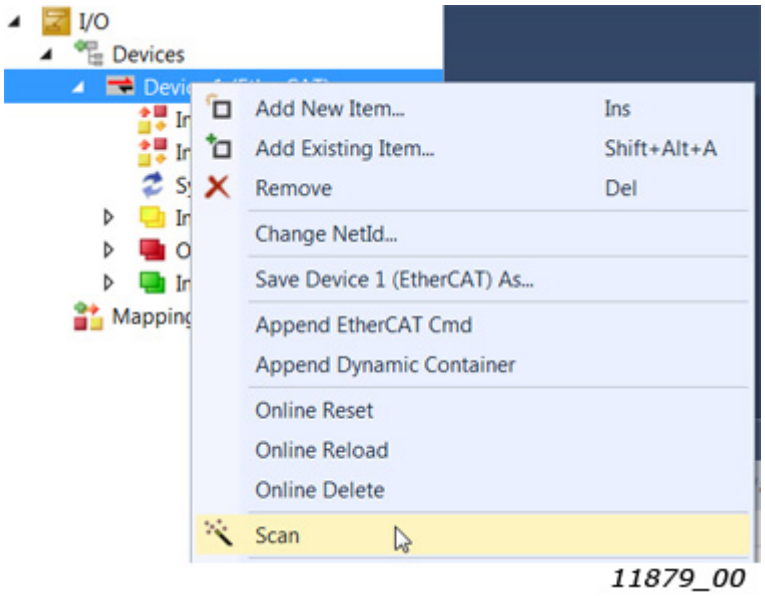

9

New EtherCAT slave box should appear into menu tree if TwinCAT finds a correct ESI file for the device.

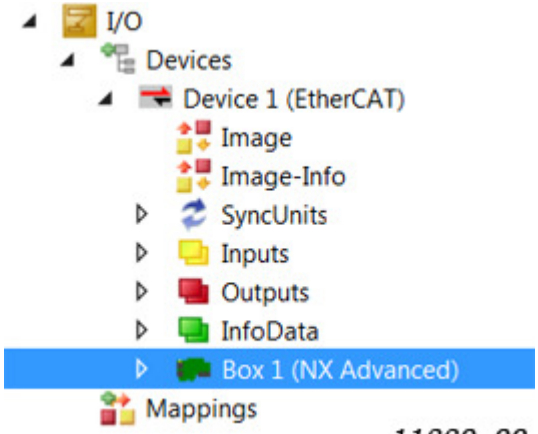

11880_00

If TwinCAT cannot find ESI file for the device then it is possible to use object online description. Press "Yes" for online description query. After that "OPTEC" box should appear into menu tree.

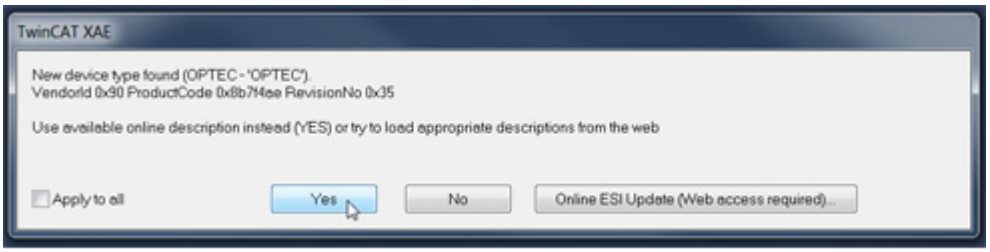

11881_00

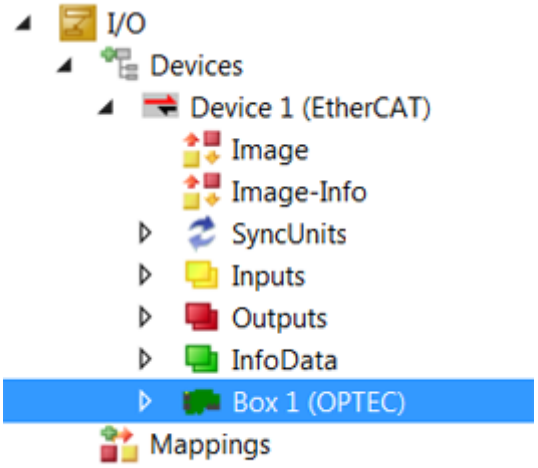

11936_00

6.2.2.3 Slave scan in CODESYS V3.x

1	Make sure WinPCAP Ethernet drivers are installed into your PC. Scanning of EtherCAT slave devices with CODESYS virtual EtherCAT master is going to fail without WinPCAP driver.
2	Open Gateway configuration file which is located in C:\Program Files (x86)\3S CODESYS\GatewayPLC\ CODESYSControl.cfg. Then add "SysEthernet" component into Component manager. [ComponentManager] Component.1=CmpTargetVisuStub Component.2=CmpWebServer Component.3=CmpWebServerHandlerV3 Component.4=SysEthernet ;Component.4=CmpHilscherCIFX ;Component.5=CmpPCANBasicDrv
3	Start "CODESYS V.3x" program and select "New Project..." 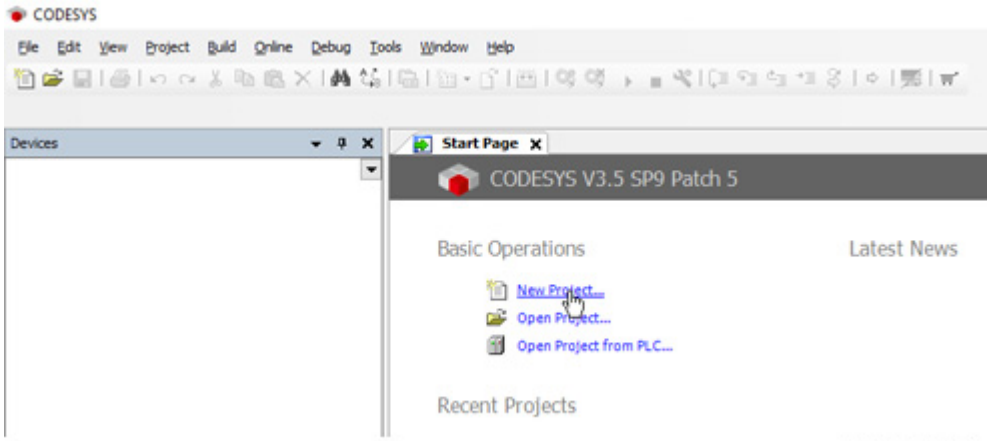

4	Select for example "Standard Project" as a base project and write name for the project. Then press "OK". 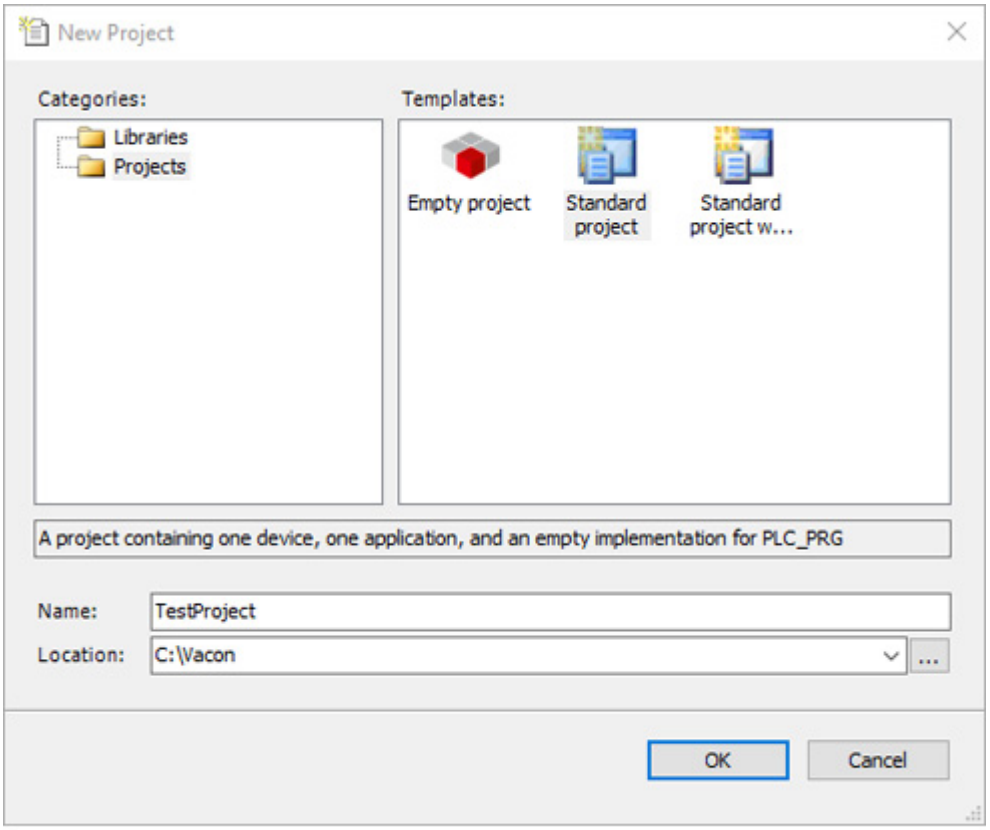 11883_00 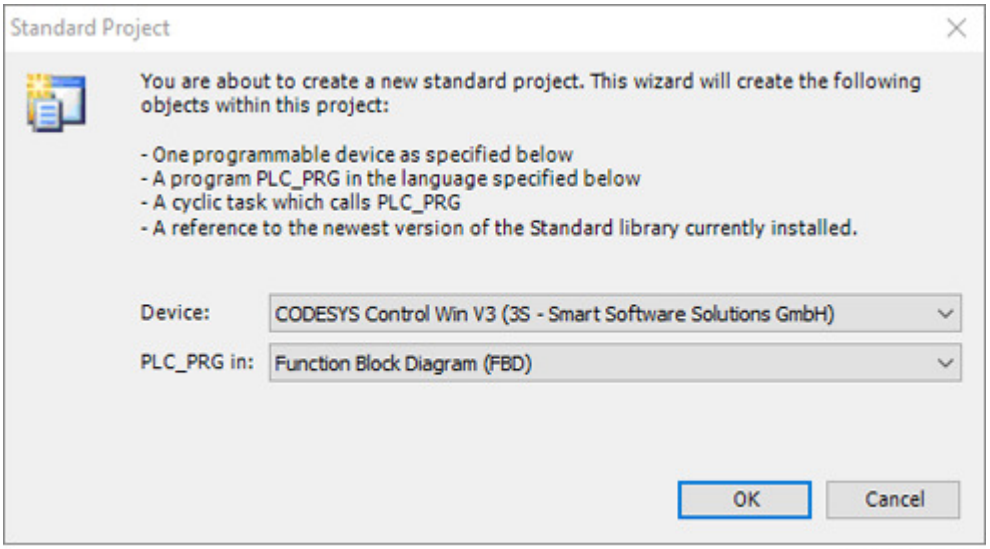 11884_00

5

Select "Tools" -> "Device Repository..." menu. Then click "Install..." and select ESI file for OPTEC EtherCAT.

NOTE! In this example generic OPTEC_VACON_OPTEC_Vxx_yyyymmdd.xml ESI file is used. As a result, OPTEC EtherCAT is shown in CODESYS with name "OPTEC". The device name is different when using drive and application specific ESI file.

After selecting the ESI file the device is added into "Installed devices" list. Device Repository can be now closed.

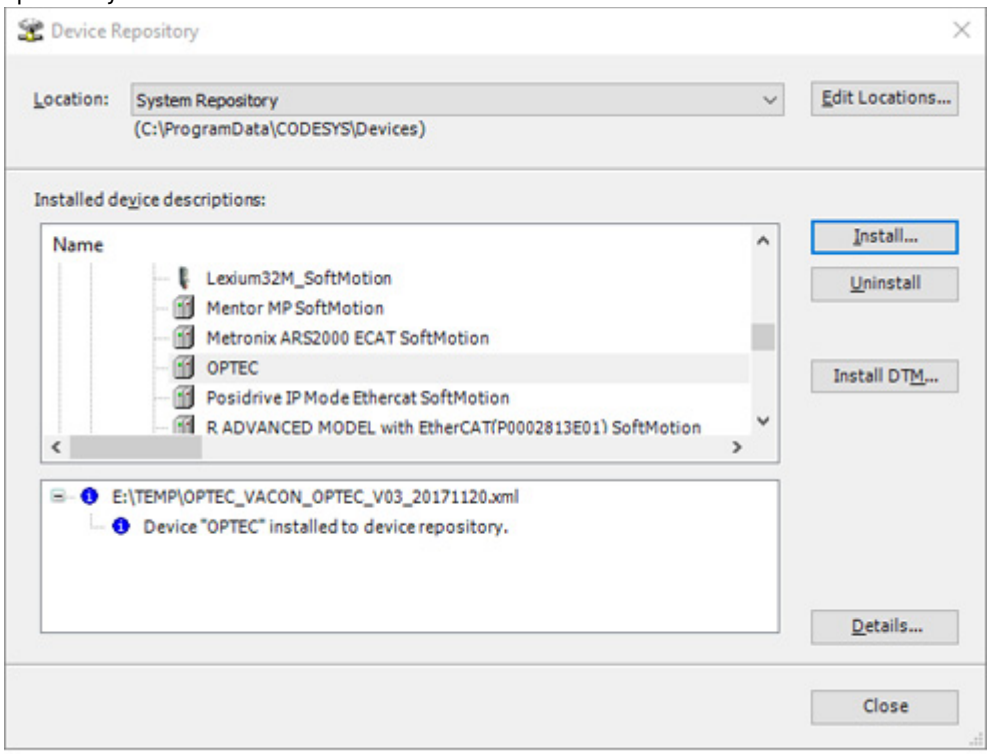

11885_00

6

Double click "Device (CODESYS Control Win V3)" in Devices list.

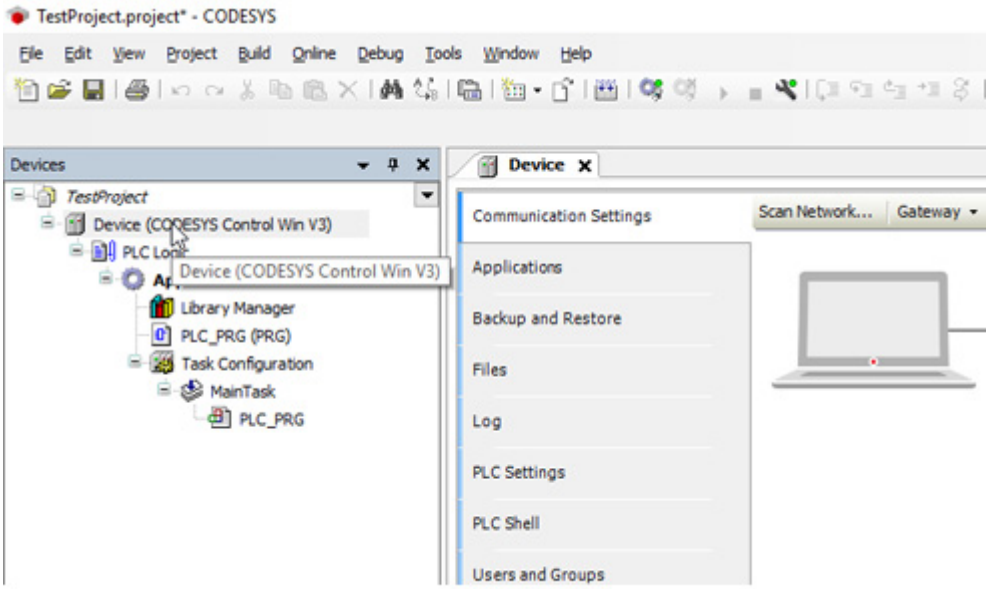

11886_00

7	Check that Gateway module's IP-Address is "localhost". If not, then create a new Gateway from "Gateway" -> "Add new gateway..." and define localhost address for it. 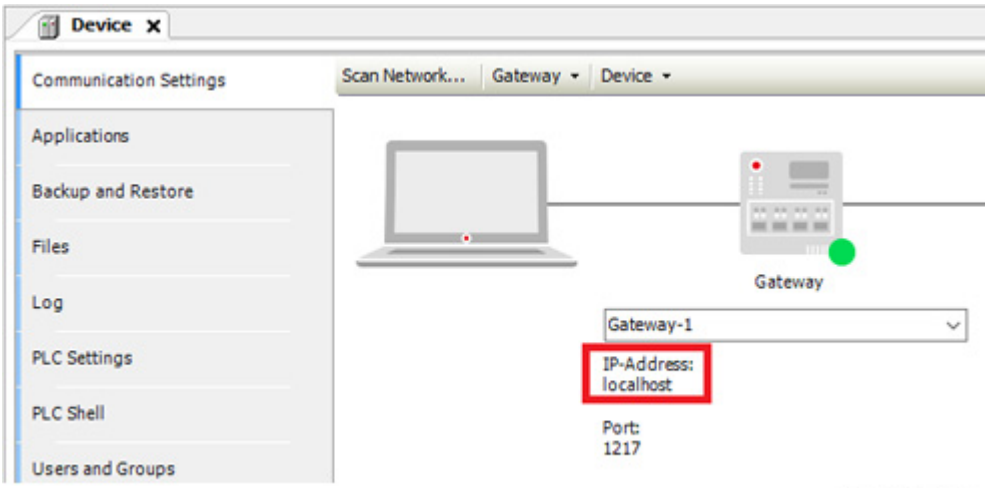 11887_00
8	Check from Windows system tray that CODESYS PLC is running. Click "Start PLC" if it is in stopped state. 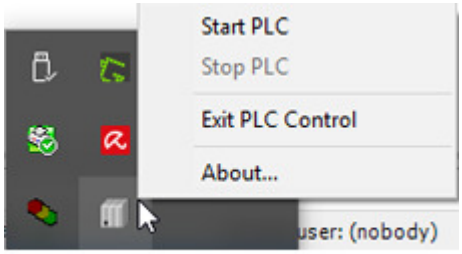 11888_00
9	Select "Scan Network..." and then select the device which is your PC computer. Then click "OK". 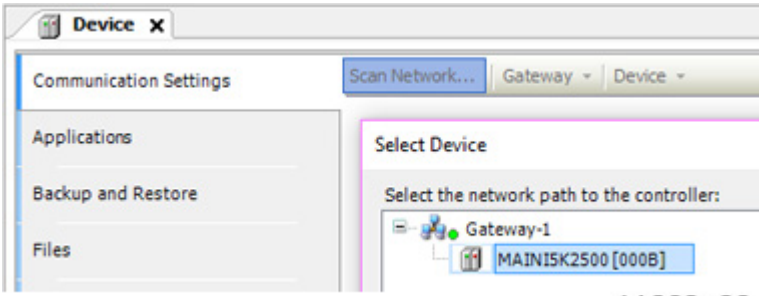 11889_00

10	If operation is successful, then Device view shows green color for both Gateway module and PC computer. 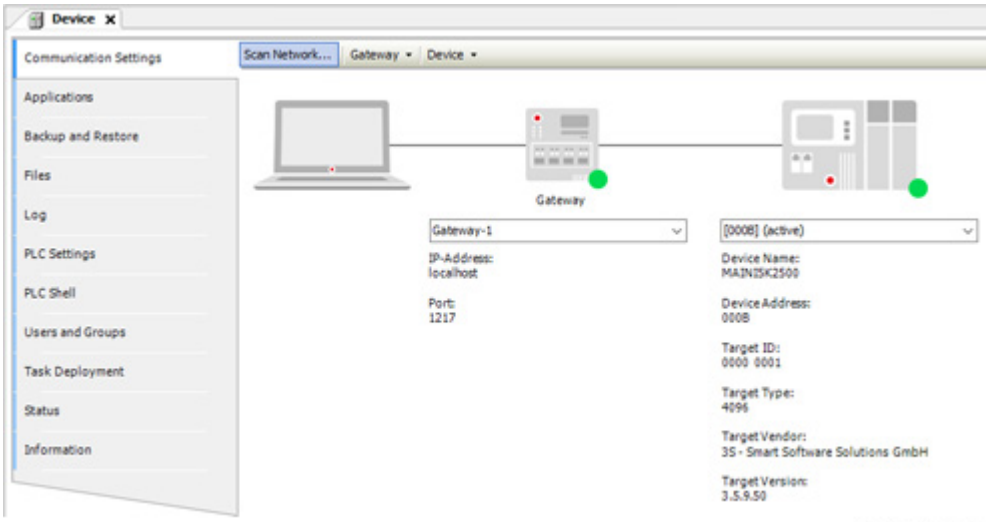 *11890_00*
11	Select with right mouse "Device (CODESYS Control Win V3)" -> "Add Device.." 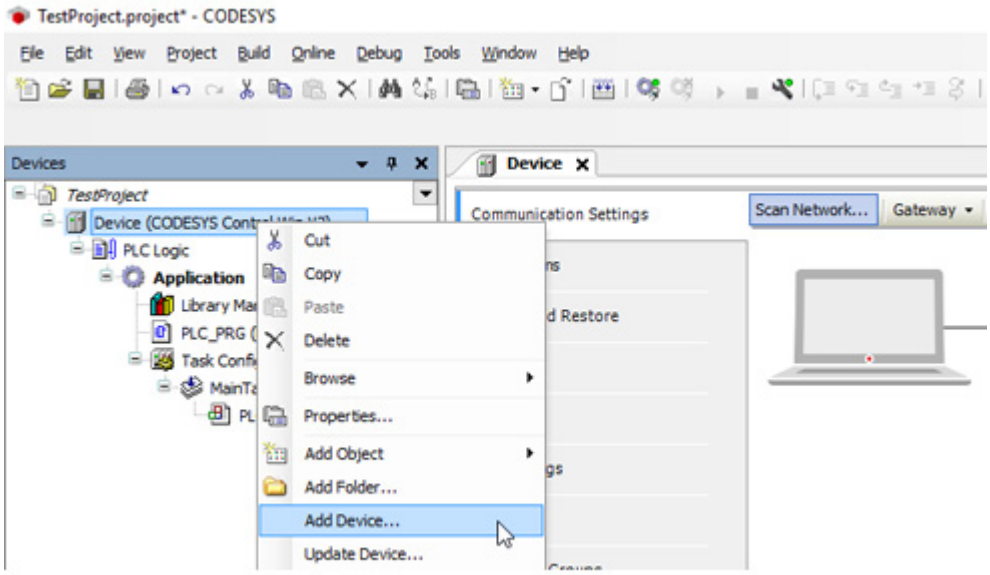 *11891_00*
12	Select from "Add Device" menu "EtherCAT Master". Then click "Add device" and close "Add Device menu". 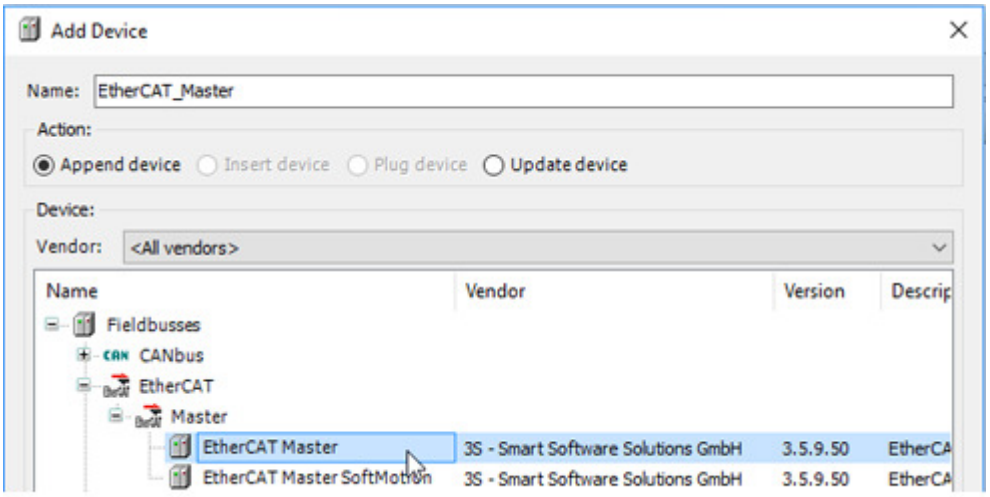 *11892_00*

13	EtherCAT_Master should appear into left side Devices menu. Open EtherCAT master configuration page by double clicking "EtherCAT_Master (EtherCAT Master)". 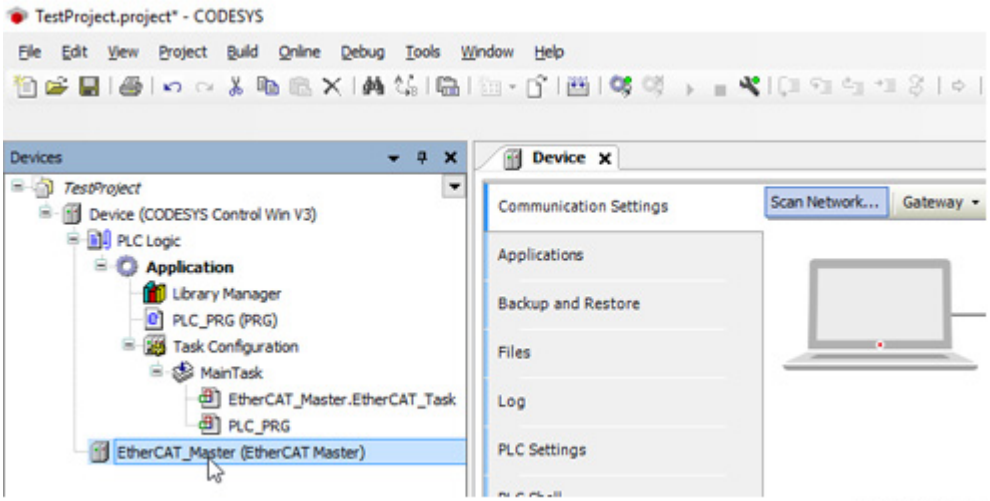 11893_00
14	Select Ethernet interface for EtherCAT master by clicking "Browse...". Then select Ethernet interface in which OPTEC EtherCAT is connected to. After that click "OK" in Select Network Adapter view. After this EtherCAT_Master tab should show your network interface name and MAC address. 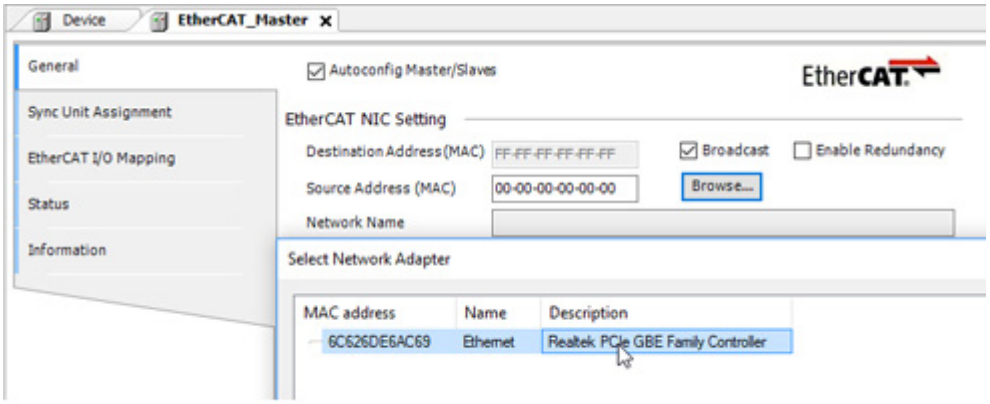 11894_00

15	Select with left mouse key "EtherCAT_Master (EtherCAT Master)" -> "Scan for Devices...". Scan Devices window is opened. Then click "Scan Devices" button from the left corner of the window. 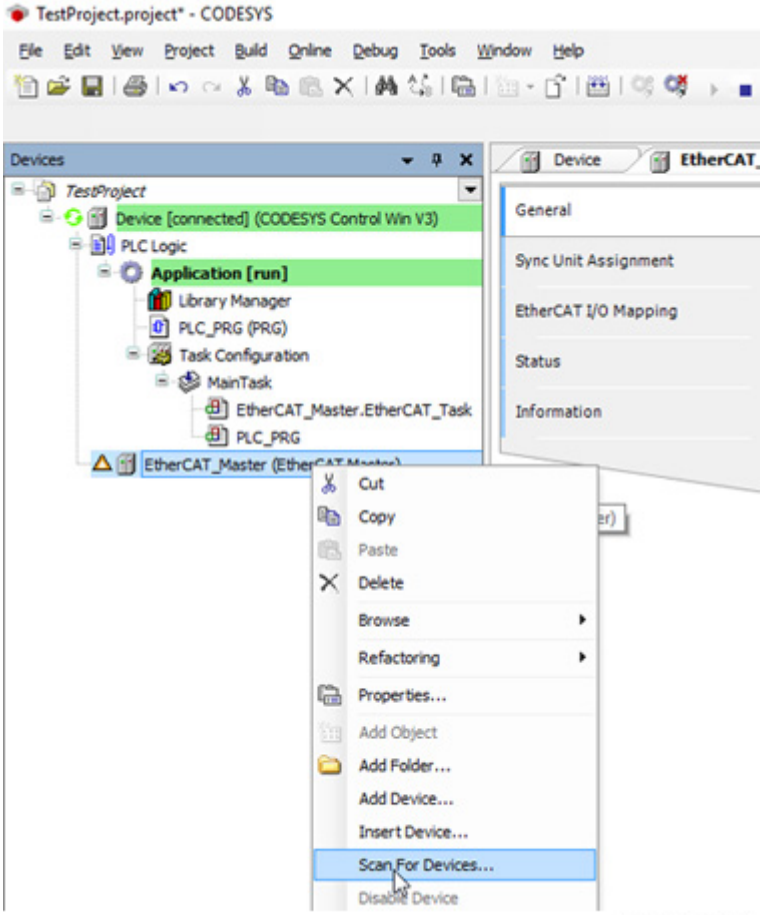

16	EtherCAT device should appear into Scanned Devices list. CODESYS shows Alias Address of the device. This alias is same as shown in OP-TEC EtherCAT's monitor value view (Chapter 6.1.2.7 "Station Alias"). The alias can be changed by changing the value and then clicking "Assign Address". After power cycle of VACON® AC drive the new alias is taken into use. Click "Copy to project". 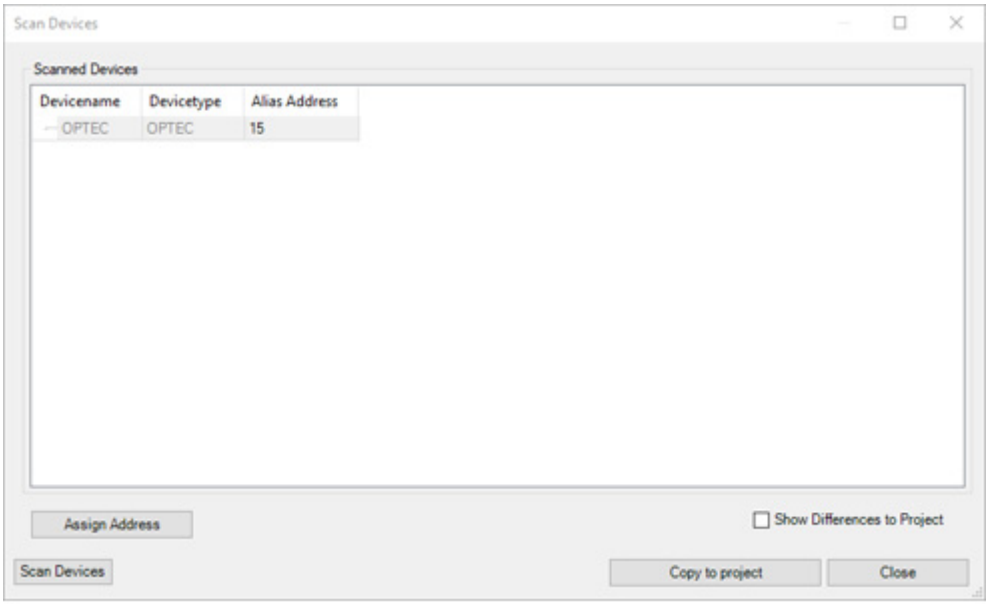 11896_00
17	OPTEC EtherCAT is added under EtherCAT_Master. 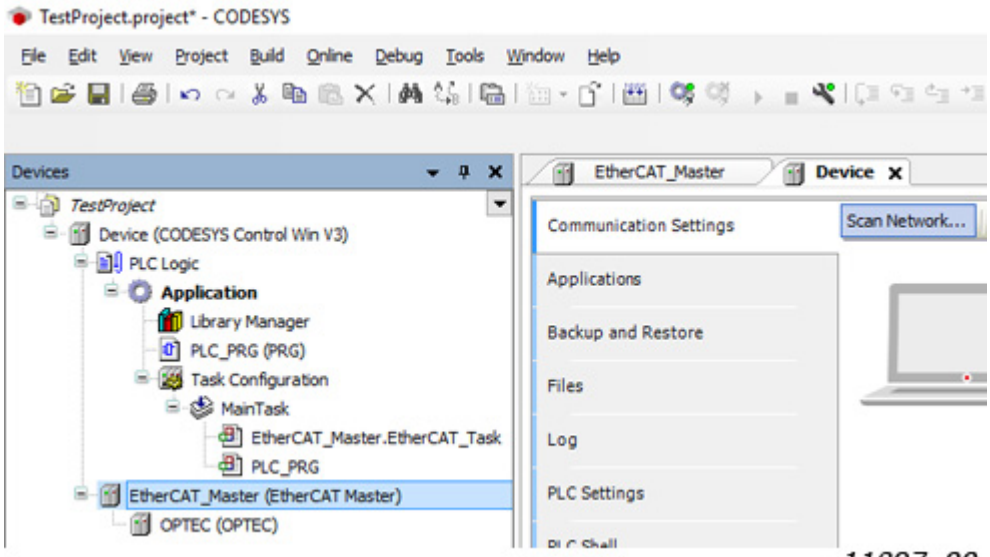 11897_00

6.2.3 Addressing and identification

EtherCAT protocol supports various of different mechanisms for EtherCAT slave device addressing and identification. Following mechanisms are possible with OPTEC EtherCAT option board:

- Positional addressing where EtherCAT master defines address for each slave device via its physical position in the communication ring.
- Configured Station Alias which is stored permanently into EtherCAT slave device.
- Device ID value that is loaded to AL status code register upon request from master.

Additionally, EtherCAT master and EtherCAT configuration tool might use following information for EtherCAT slave device identification:

- Vendor ID
- Product Code
- Revision Number

6.2.3.1 Positional addressing

Part of EtherCAT master devices supports positional addressing where EtherCAT master defines address for each slave device via its physical position in the communication ring.

For example, Beckhoff TwinCAT supports "Auto-increment" addressing where EtherCAT master assigns automatically addresses for the slave devices during the start-up phase. The first slave in the ring has an address of 0 and following the addresses are decremented 0xFFFF(-1), 0xFFFE(-2) etc.

6.2.3.2 Configured station alias

Configured station alias is stored into permanent memory of EtherCAT slave device. In start-up the slave device writes the station alias value into EtherCAT register 0x0012, from where it can be read by the EtherCAT master. The master can then use this unique address for slave device identification and addressing.

Configured station alias can be set to OPTEC EtherCAT with two methods.

1. EtherCAT master or EtherCAT configuration tool writes configured station alias permanently into EtherCAT slave device's EEPROM. In startup the EtherCAT slave device loads this address into its EtherCAT register 0x0012.
2. Configured station alias can be set with Station alias panel parameter. In startup OPTEC EtherCAT writes Station alias panel parameter value into EtherCAT register 0x0012.

Using of Station alias panel parameter might be useful in following cases:

- Special tools for writing EtherCAT slave device EEPROM are not available.
- Configured station alias must be stored into AC drive parameter backup.

OPTEC EtherCAT currently used Configured station alias can be seen in Station alias monitor value. See monitor and parameter value usage in Chapter 6.1 "AC drive and OPTEC EtherCAT option board parametrization".

6.2.3.3 Device ID value

Device ID value of OPTEC is set via panel parameter “Device ID”. It is permanently saved to non-volatile memory and loaded during startup.

6.2.3.4 Configured station alias in TwinCAT

Step 1. Beckhoff TwinCAT can write Configured station alias into EtherCAT slave device's EEPROM. Go to EtherCAT tab -> Advanced Settings... -> ESC Access -> E2PROM -> Configured Station Alias. In this view TwinCAT also shows EtherCAT slave device's currently used Configured Station Alias.

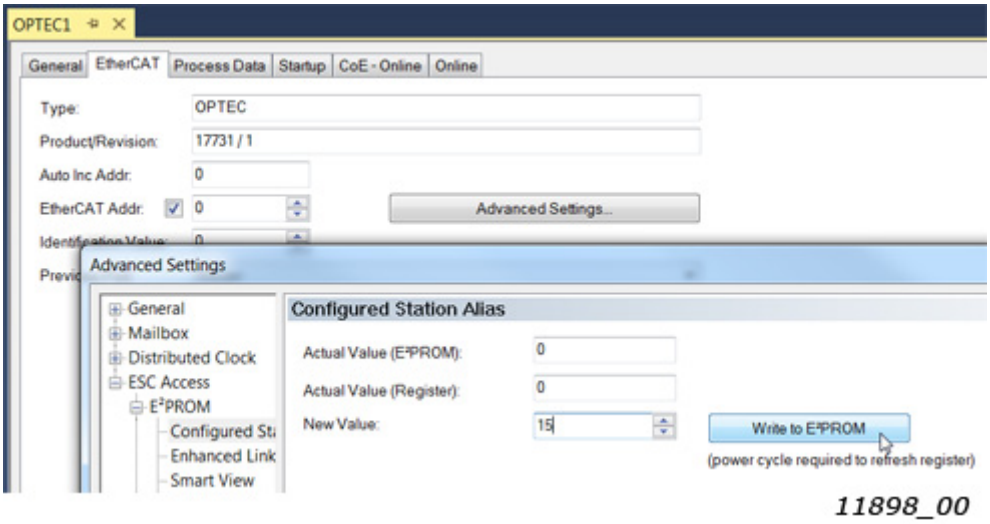

Figure 6.Configured station alias settings in TwinCAT

Step 2. Select Configured Station Alias as an identification method in General -> Idenfication settings.

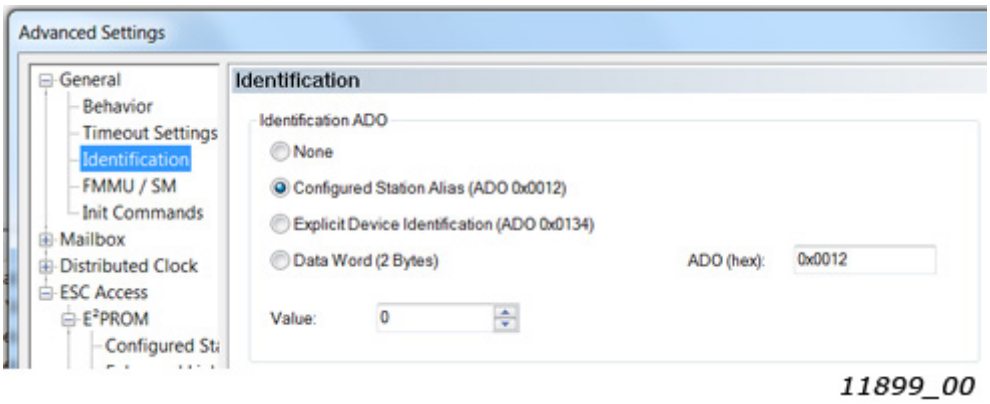

Figure 7.EtherCAT slave identification settings in TwinCAT

Step 3. Go to General -> Behaviour menu and make sure that "Check Identification" is checked to enable Configured station address usage in EtherCAT slave device identification.

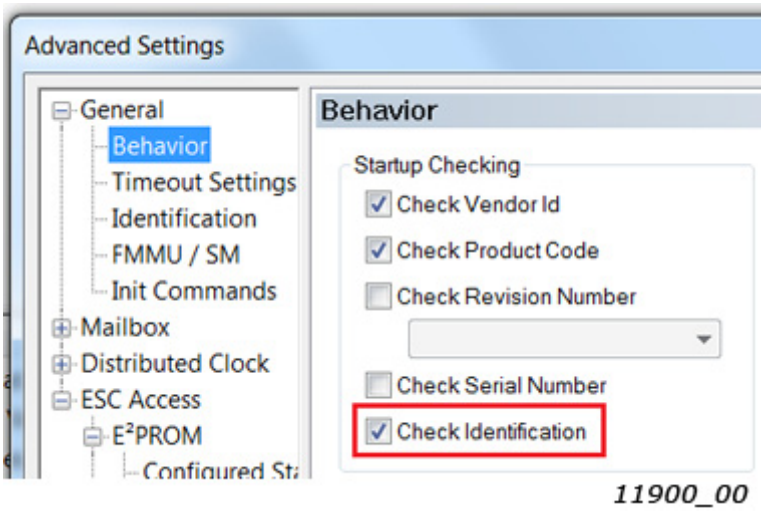

Figure 8.Startup check settings in TwinCAT

Step 4. Define Configured Station Alias into EtherCAT tabs "Identification Value" field.

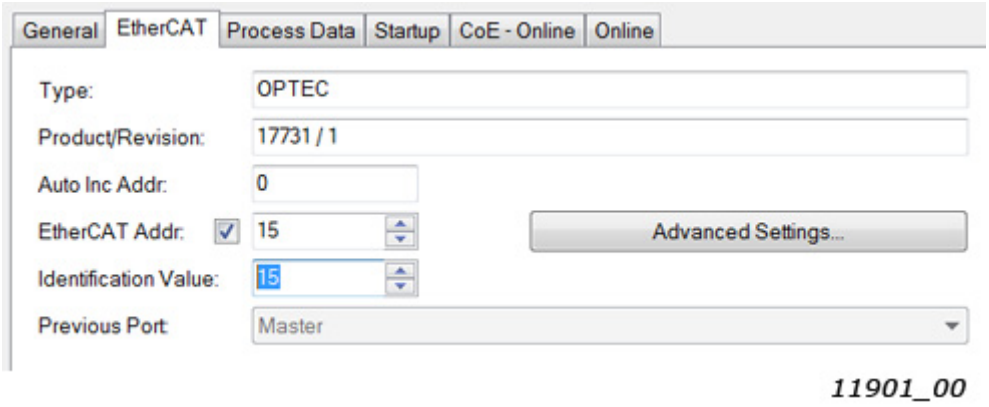

Figure 9. EtherCAT address view in TwinCAT

6.2.3.5 Configured station alias in CODESYS V3.x

Setting of EtherCAT slave devices's Station alias was instructed in Chapter 6.2.2.3 "Slave scan in CODESYS V3.x" where the Station alias was modified in EtherCAT slave device scanning phase.

Station alias can be selected as EtherCAT slave device identification method in EtherCAT slave device's General settings. By checking "Enable Expert Settings" it is possible to select following start-up checking methods:

- Vendor ID
- Product ID
- Revision Number

Station alias can be selected by checking "Optional" settings.

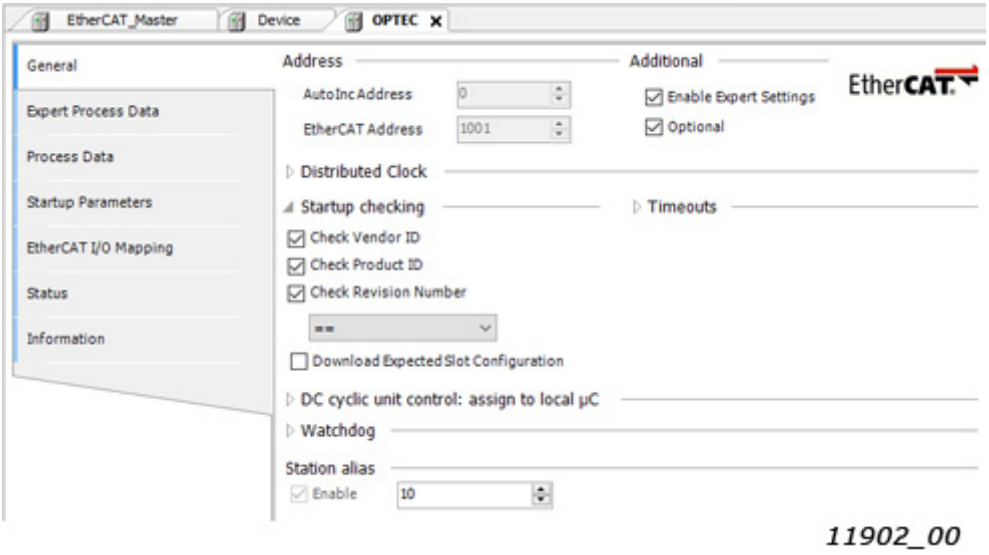

Figure 10. EtherCAT slave general settings in CODESYS

6.2.3.6 Device ID in TwinCAT

OPTEC device ID is set via panel. To use it as identification method, check the "Explicit Device Identification (ADO 0x0134)" box as seen in Figure 11.

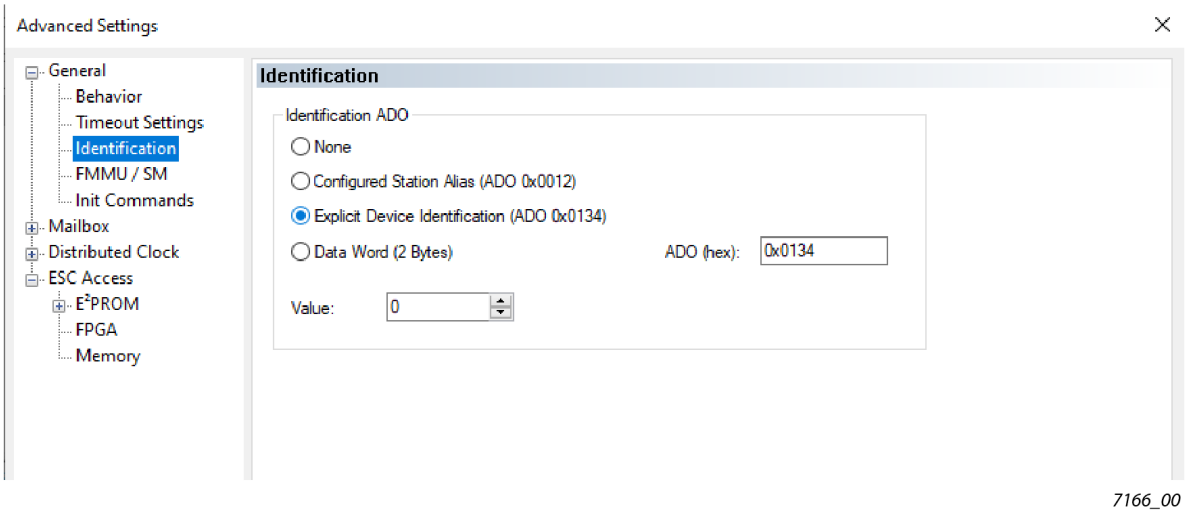

Figure 11.

Also tick the box "Check Identification" as shown in figure 8 and set the "Identification value" to one set on panel as shown in figure 9. Now master is configured to use device ID as identification method.

6.2.3.7 Other identification methods

EtherCAT master and configuration tools might use following information for EtherCAT slave device identification. For example, EtherCAT configuration tools might use this information for automatic ESI file selection for the EtherCAT slave device.

- Vendor ID. In case of OPTEC EtherCAT it is value 144.
- Product Code. By default, OPTEC EtherCAT uses value 17731. The value can be modified.
- Revision Number. By default, OPTEC uses value 1. The value can be modified.

See modification of Product Code and Revision Number in Chapter 6.4 "ESI file selection".

6.2.4 SETTING THE WATCHDOG

OPTEC EtherCAT supports SM watchdog (SyncManager Watchdog). The SM watchdog is a timer which is reset after each successful EtherCAT process data communication. If OPTEC EtherCAT cannot successfully receive process data within SM watchdog time, then Fieldbus timeout fault (F53) is activated. See details in Chapter 8.3 "Fieldbus timeout fault (F53)".

OPTEC EtherCAT can be used without SM watchdog time. If SM watchdog time is not defined, then Fieldbus timeout fault is not activated at all because of interrupted process data communication.

EtherCAT master sets SM watchdog time to EtherCAT slave devices. In a following Example TwinCAT sets SM watchdog time 40ms to OPTEC EtherCAT.

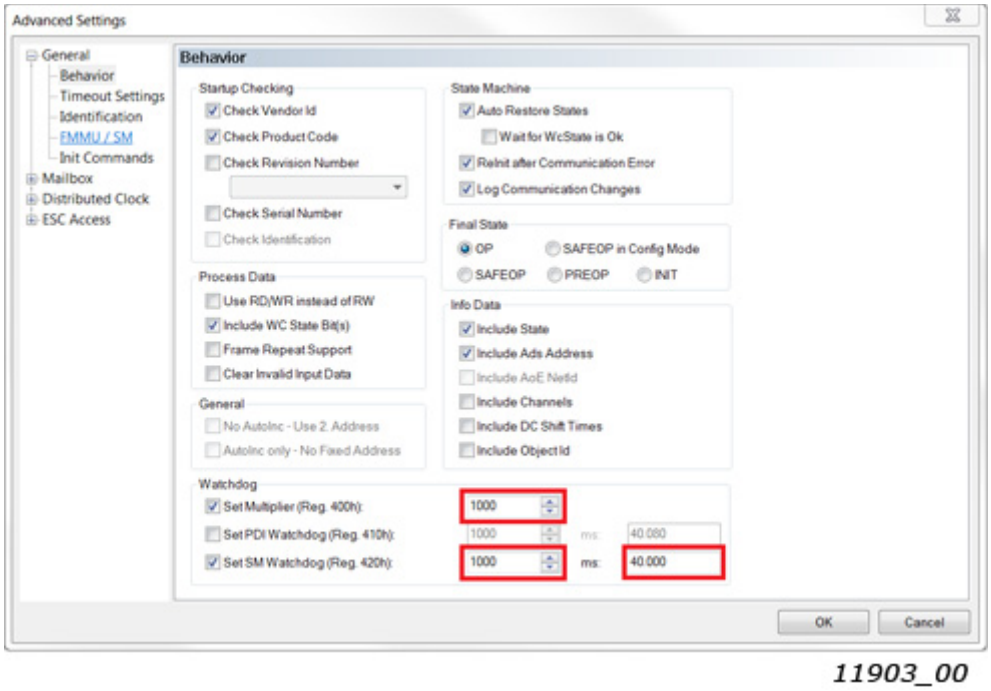

Figure 12. TwinCAT SM Watchdog configuration

6.2.5 SYNC UNIT ASSIGNMENT

Assignment of separate sync units for EtherCAT slave devices is needed in case where automation system must continue operation even when part of EtherCAT slave devices fails.

Sync unit is a module which defines the process data transfers between EtherCAT master and EtherCAT slave devices. It ensures that process data is exchanged synchronously and consistently with all EtherCAT slave devices. If one or more EtherCAT slave devices fails during the process data transfer, then EtherCAT master stops process control to the whole sync unit segment. In this case WcState (working counter) of every EtherCAT slave device is set to 1 which means invalid working counter.

In a following TwinCAT example two OPTEC EtherCAT slave devices are assigned into two separated sync units: Sync unit 1 and Sync unit 2. With this configuration, Sync unit 2 can continue operation

even when one device in Sync unit 1 fails. TwinCAT sync unit configuration can be done from EtherCAT master's Sync Unit Assigment settings.

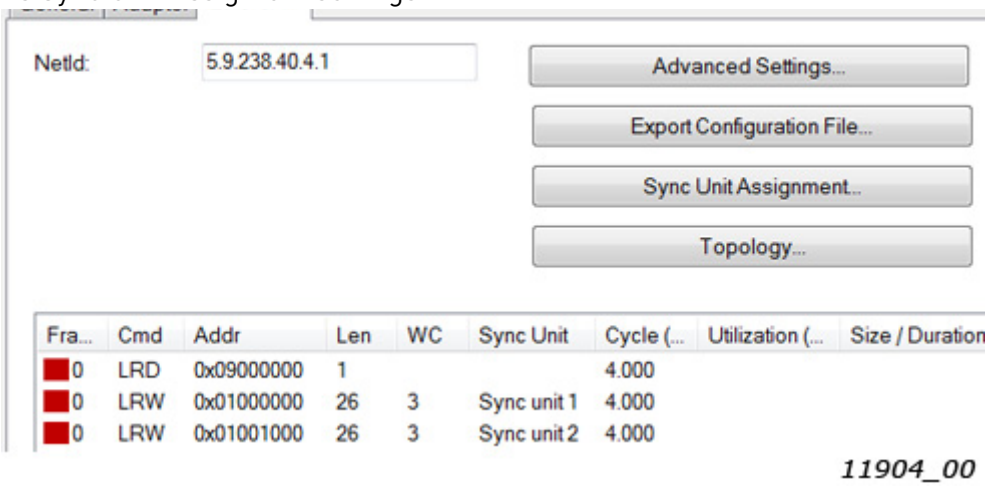

Figure 13. TwinCAT Sync Unit Assigment

6.3 Operation mode selection

Operation mode defines how EtherCAT master can control the motor and monitor the motor control status. OPTEC EtherCAT supports following modes:

- Drive Profile means CiA-402 Drive and Motion Control Profile's Velocity mode. This mode is enabled by default.
- Bypass means VACON specific control mode.

See detailed description of these modes in Chapter 7.3 "Operating modes".

Operation mode can be selected with three different methods that are described in following chapters. Latest modification is taken into use and currently used setting is stored into Operation mode parameter. Currently used Operation mode can be seen in Operation mode monitor value (Chapter 6.1.2 "Option board monitor values").

NOTE! If EtherCAT master assigns only Bypass specific process data objects and CiA-402 specific process data objects (RxPDO 0x1600, TxPDO 0x1A00) are not assigned then selecting of Drive Profile is not possible.

NOTE! In CiA-402 Drive Profile mode it is recommended to set AC drive's "Fieldbus min scale" and "Fieldbus max scale" parameters value to zero. In otherwise RPM scaling does not work properly. Part of NXP applications contains "Fieldbus min scale" and "Fieldbus max scale" settings. In APFIFF06 Multipurpose application these parameters can be found from menu P2.9.1 and P2.9.2.

6.3.1 Operation mode selection using parameter

Operation mode can be selected with AC drive keypad parameter. See details in Chapter 6.1.1 "Option board parameters".

6.3.2 Operation mode selection using CoE object

Operation mode can we selected by writing into 0x6060 CiA-402 Modes of Operation CoE object. See details in Chapter 7.2.26 "CiA 402 Modes of Operation".

6.3.3 Operation mode selection using PDO assignment

Operation mode can we selected with a different PDO assignments. CiA-402 drive profile can be activated by assigning CiA-402 specific process data objects in EtherCAT master. Bypass profile can be activated by assigning only bypass specific process data objects in EtherCAT master.

6.3.3.1 Swithcing to CiA-402 Drive Profile Mode

1	Establish the connection to EtherCAT bus as instructed in Chapter "".

2	In the tree on the left side, select the desired OPTEC Option Board, and select the 'Process data' tab. 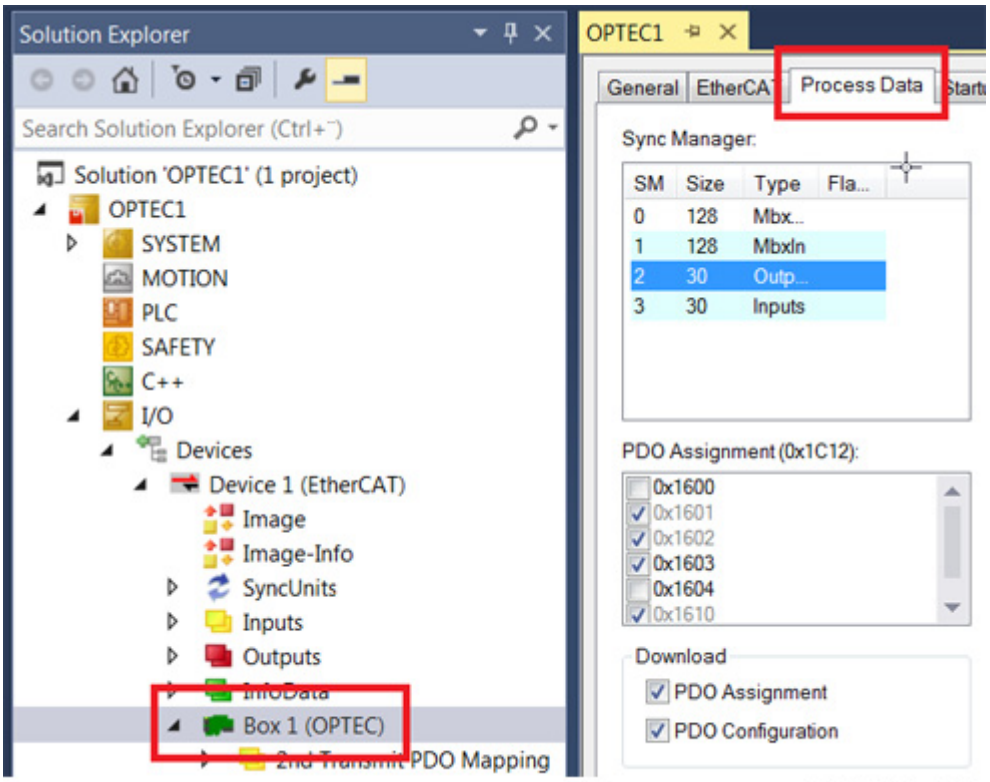 *11269A_00*
3	Under 'Inputs', select the PDO Assignment '0x1A00'. Under 'Outputs', select the PDO Assignment '0x1600'. 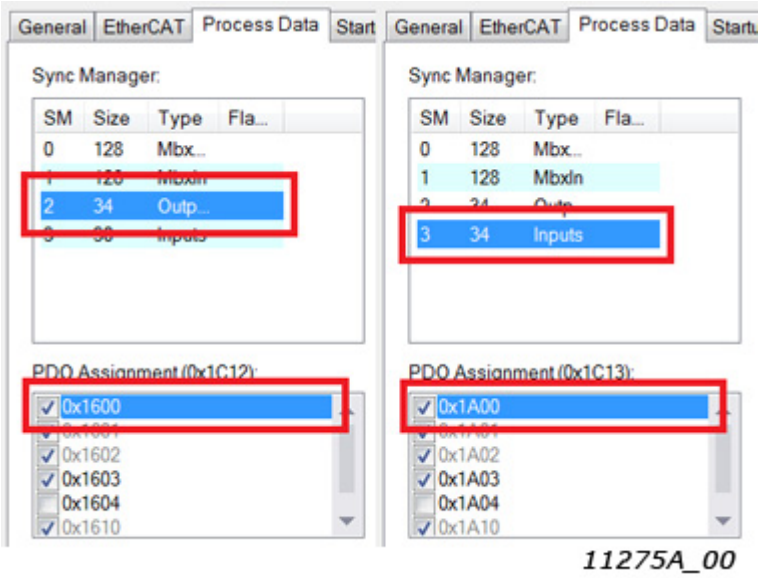 *11275A_00*

4	Make sure that 'PDO Assignment' and 'PDO Configuration' are selected. 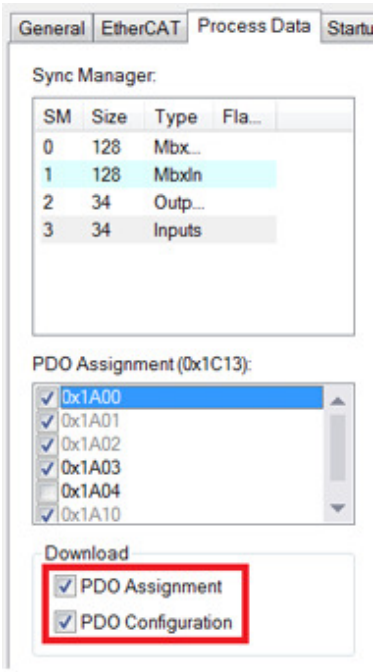 11271A_00
5	Reset TwinCAT to configuration mode by clicking 'Set/Reset TwinCAT config mode' from the toolbar. 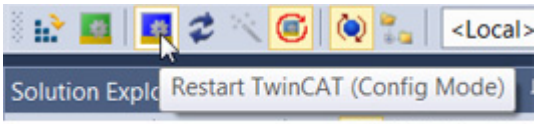 11272A_00
6	In the 'Restart TwinCAT System in Config Mode' dialog, click 'OK'.
7	In the 'Load I/O Devices' dialog, click 'Yes'.
8	In the 'Activate Free Run' dialog, click 'Yes'.
9	To verfiy that the OPTEC Option Board is in the Bypass mode, select the 'CoE - Online' tab and make sure that there are four subitems under both Can object groups 'RxPDO' and 'TxPDO'. Currenly used Operation mode can be seen in Operation mode monitor value. See Chapter 6.1.2 "Option board monitor values". Currently used Operation mode can be read with EtherCAT master from CoE object: 0x6061 CiA 402 Modes of Operation Display.

6.3.3.2 Swithcing to Bypass mode

1	Establish the connection to EtherCAT bus as instructed in Chapter 6.2.2 "Establishing connection to OPTEC EtherCAT".
2	In the tree on the left side, select the desired OPTEC Option Board, and select 'Process data' tab. 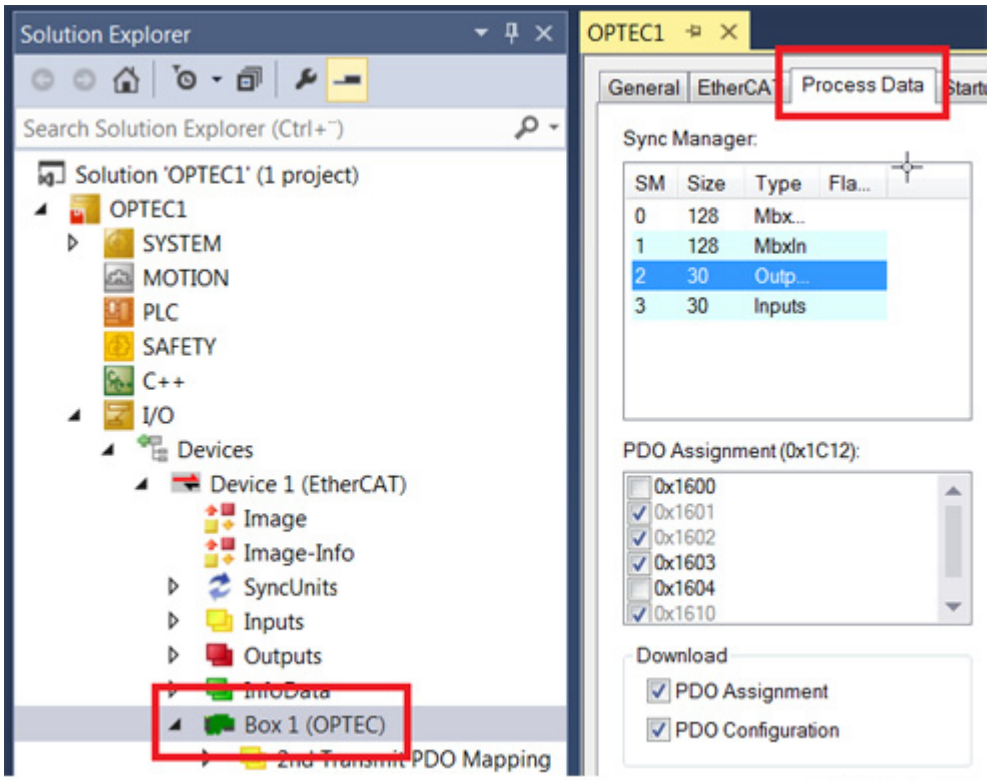 11269A_00
3	Under 'Inputs', click to clear the PDO Assignment '0x1A00' checkbox. Under 'Outputs', click to clear the PDO Assignment '0x1600' checkbox. 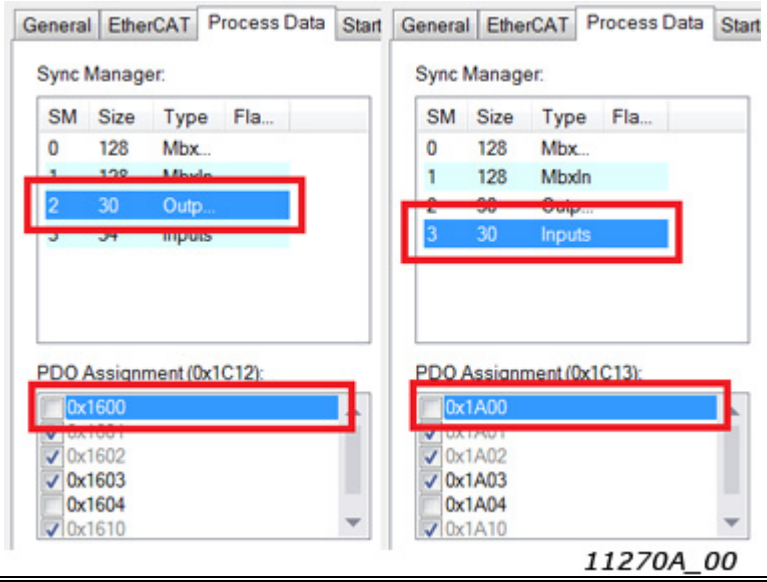 11270A_00

4	Under 'Download', make sure that 'PDO Assignment' and 'PDO Configuration' are selected. 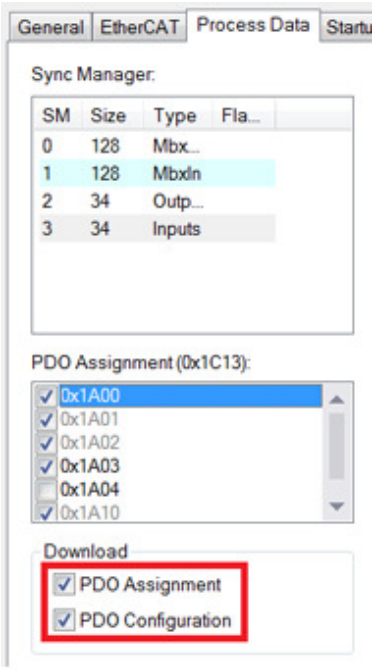 11271A_00
5	Reset TwinCAT to configuration mode by clicking 'Set/Reset TwinCAT config mode' from the toolbar. 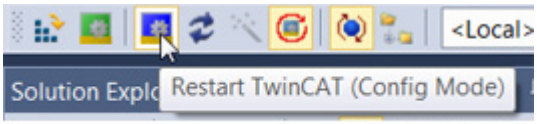 11272A_00
6	In the 'Restart TwinCAT System in Config Mode' dialog, click 'OK'.
7	In the 'Load I/O Devices' dialog, click 'Yes'.
8	In the 'Activate Free Run' dialog, click 'Yes'.
9	To verfiy that the OPTEC Option Board is in the Bypass mode, select the 'CoE - Online' tab and make sure that there are only three subitems under both Can object groups 'RxPDO' and 'TxPDO'. Currenly used Operation mode can be seen in Operation mode monitor value. See Chapter 6.1.2 "Option board monitor values". Currently used Operation mode can be read with EtherCAT master from CoE object: 0x6061 CiA 402 Modes of Operation Display.

6.4 ESI FILE SELECTION

This chapter tells how the different ESI files can be used with OPTEC EtherCAT. Downloading and importing of OPTEC EtherCAT ESI files into EtherCAT configuration tool is instructed in Chapter 6.2.1 "Importing OPTEC EtherCAT ESI files".

EtherCAT configuration tools uses typically Vendor ID, Product Code and Revision Number information to select the correct ESI description for the slave device. OPTEC EtherCAT uses following settings by default.

- Vendor ID: 144
- Product Code: 17731. The value can be modified.
- Revision Number: 1. The value can be modified.

Currently used Product Code and Revision Number can be seen in OPTEC EtherCAT option board's monitor values. See details in Chapter 6.1.2 "Option board monitor values".

With default Product Code and Revision Number settings OPTEC_VACON_OPTEC_Vxx_yyyymmdd.xml ESI file must be always used. Generic OPTEC_VACON_OPTEC_Vxx_yyyymmdd.xml ESI file can be used with all applications but it does not define application specific CoE objects. Application specific ESI files defines own CoE objects for application specific data which eases configuration of EtherCAT master.

NOTE! Application specific parameters can be accessed even when ESI file does not does not define CoE objects for them. See details in Chapter 7.4 "Accessing drive parameters via CoE MailBox".

6.4.1 ESI FILE SELECTION MODE

EtherCAT master can change OPTEC EtherCAT Product Code and Revision Number by writing into CoE object 0x5FF4.

5FF4:0	ESI File Selection Mode	RO	> 3 <
5FF4:01	Selection Mode	RW	0x0000 (0)
5FF4:02	Static Product Code	RW	0x00000000 (0)
5FF4:03	Static Revision Number	RW	0x0000 (0)

9456A_00

Figure 14. CiA-402 process data from AC drive

Selection Mode (0x5FF4:1) defines currently used ESI file selection mode. Default value is 0 (OFF). Content of Static Product Code (0x5FF4:2) and Static Revision Number (0x5FF4:3) fields is used only when "Static" ESI file selection mode is used.

Table 19. ESI file selection mode

Mode	Value	Description
OFF	0	Automatic generation is switched off. The product code is set to the default value 0x4543 and the revision number is set to 1.
Automatic	1	Product Code and Revision Number are generated by using information about the drive and the currently running application.
Static	2	Product Code and Revision Number defined by Static Product Code (0x5FF4:2) and Static Revision Number (0x5FF4:3) are used.

After writing new settings to 0x5FF4 CoE object OPTEC EtherCAT must be moved from INIT state to PREOP state for the change to take effect. This operation can be done with EtherCAT master or EtherCAT configuration tool, for example with Beckhoff TwinCAT.

NOTE! If EtherCAT master or configuration tool uses Product Code and/or Revision Number for EtherCAT slave device identification, then OPTEC EtherCAT must be scanned again in EtherCAT master or configuration tool. See Chapter 6.2.2 "Establishing connection to OPTEC EtherCAT".

NOTE! Product Code and Revision Number are stored into EtherCAT slave device's EtherCAT EEPROM. They are not stored into AC drive parameter storage and parameter backup. This means:

- Product Code and Revision Number are not reset with AC drive factory reset
- Product Code and Revision Number are not restored from AC drive parameter backup

6.4.1.1 OFF mode

In OFF mode OPTEC EtherCAT uses Product Code 17731 (0x4543) and Revision Number 1 which means that generic OPTEC_VACON_OPTEC_Vxx_yyyymmdd.xml ESI file shall be always used.

6.4.1.2 Automatic mode

In the automatic mode, the OPTEC board generates a unique product code. The generated product code together with the revision number is used by the configuration tool to automatically choose the correct device description from the ESI file.

The product code depends on the drive type, and the type of the application the drive runs.

OPTEC EtherCAT option board's Product Code and Revision Number can be seen from the monitor values (Chapter 6.1.2 "Option board monitor values"). Another possibility is to scan EtherCAT network with EtherCAT configuration tool's scanning functionality which usually shows Product Code and Revision Number of found EtherCAT slave devices.

Read the object 1018 sub-index 2 and 3 To find the product code and revision number, as shown below:

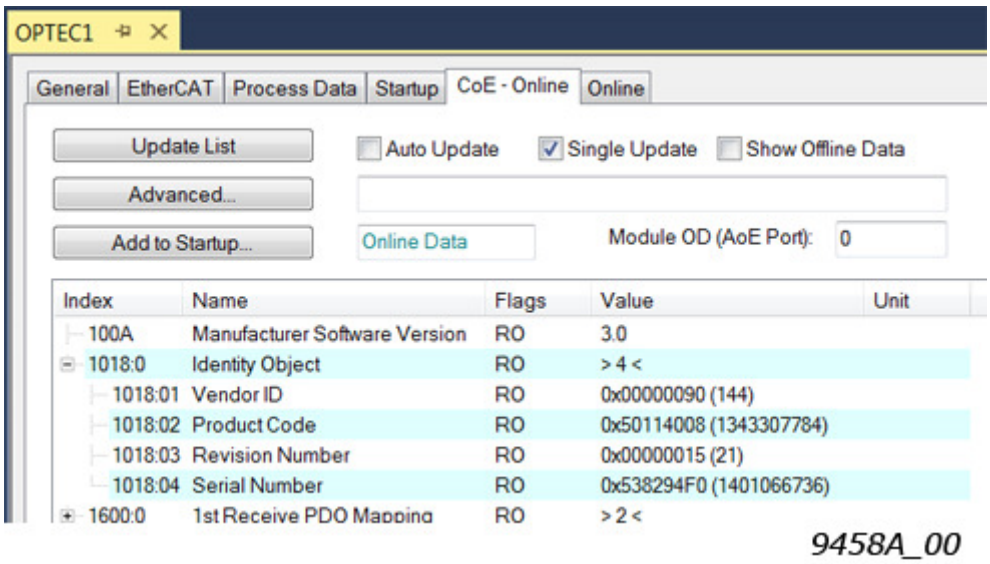

If you do not have access to the online description, you can calculate the product code. The method varies depending on the drive family.

Table 20. Calculating the product code for devices in the V20 and V100 family

Bits	Description		
31-24	Drive family	Value	Description
	V20	0x43	Drive type identifier
	V100	0x4d	Drive type identifier
23-16	Not used		
15-0	Application identifier, which is the unique identification code of the application. The code shows in the name of the application installation file. For example, in the installation file AMFI1234V567.vcx, 1234 is the application identification code.		

Table 21. Calculating the product code for devices in the NX family

Bits	Description		
31-24	Drive family	Value	Description
	NXP	0x50	Drive type identifier
	NXS	0x53	Drive type identifier
23	Not used		
Bits	**Name**	**Description**	
22-13	Country code	Calculate the value from the country code in the file name of the installation package. For example, in the file ASFIFF01V101.vcx, FI is the country code. Use a formula with the ASCII values: Country_code = (ASCII(F) – ASCII(A)) x 26 + (ASCII(I) – ASCII(A))	
12-10	Category	Category is the non-numerical part of the application ID. For example, in the file ASFIFF01V101.vcx, FF01 is the application ID and FF is the category.	
		Category	**Value**
		FF	0
		F	1
		BR	2
		EN	3
		E	4
		Q	5
		C	6
		S	7
9-0	Application identifier	Application identifier consists of the category part and the numerical part. For example, in the file ASFIFF01V101.vcx, FF01is the application identifier. FF is the category and 01 is the numerical part. The total length of the application identifier is always 4 characters. A possible variation is, for example, F001.	

You must add a device description for every configuration to be supported. Add the new device to the Devices element in the ESI file.

Enter the calculated product code and the revision number of the application into the 'ProductCode' and 'RevisionNo' attributes in the Type element of the device, as shown below:

```
<Devices>
  <Device Physics="YY">
    <Type ProductCode="#x00001234" RevisionNo="#x0321">MY_STATIC_DEVICE_TYPE</Type>
    <Name LcId="2057">MY_STATIC_DEVICE</Name>
```

9457A_00

6.4.1.3 Static mode

In the static mode, you define the product code and revision number for the device description. Any value that is unique in the network is valid as a device description.

In the description file, enter the product code and revision number of your device description in the Device section.

```
<Devices>
  <Device Physics="YY">
    <Type ProductCode="#x00001234" RevisionNo="#x0321">MY_STATIC_DEVICE_TYPE</Type>
    <Name LcId="2057">MY_STATIC_DEVICE</Name>
```

9460A_00

Make sure the device is in the pre-operational state, and that the selection mode is set to either OFF or Automatic.

5FF4:0	ESI File Selection Mode	RO	> 3 <
5FF4:01	Selection Mode	RW	OFF (0)
5FF4:02	Static Product Code	RW	0x00000000 (0)
5FF4:03	Static Revision Number	RW	0x0000 (0)

9459

Write the product code and revision number to their respective objects.

5FF4:0	ESI File Selection Mode	RO	> 3 <
5FF4:01	Selection Mode	RW	OFF (0)
5FF4:02	Static Product Code	RW	0x00001234 (4660)
5FF4:03	Static Revision Number	RW	0x0321 (801)

9462

Change the selection mode to Static and rescan the network.

5FF4:0	ESI File Selecton Mode	RO	> 3 <
5FF4:01	Selection Mode	RW	Static (2)
5FF4:02	Static Product Code	RW	0x00001234 (4660)
5FF4:03	Static Revisior Number	RW	0x0321 (801)

9463

6.5 CONTROLLING THE MOTOR

Controlling of the motor via OPTEC EtherCAT is instructed in this chapter. In this example basic PDO mapping is used. See detailed description of PDO mapping in Chapter 7.2 "Data Object Descriptions".

Before running the motor, do the following checks:

1. Check that field bus control is enabled in AC drive. Enabling of field bus control in a different VACON® AC drives is described in Chapter 12 "APPENDIX D - FIELDBUS PARAMETRISATION".

2. Check that OPTEC EtherCAT is on Operational state.

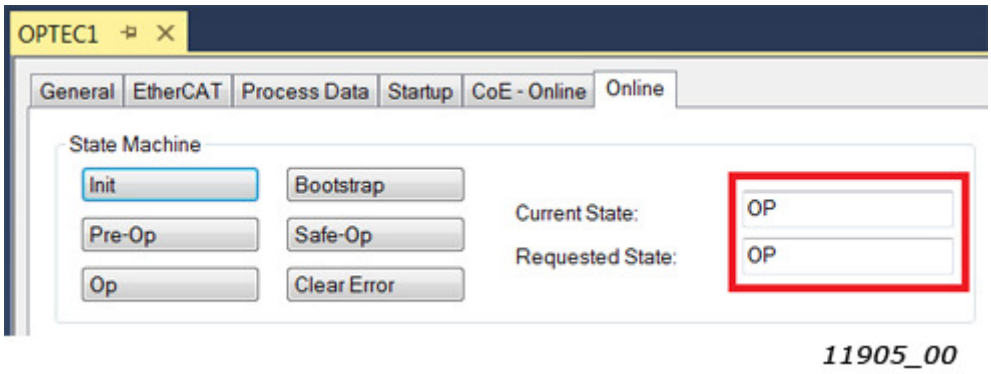

Figure 15. Online view in TwinCAT

NOTE! If motor is started in Operational state and EtherCAT master commands OPTEC EtherCAT into other state, then OPTEC EtherCAT activates Fieldbus fault because process data transfer from EtherCAT master to OPTEC EtherCAT is stopped and motor control is not anymore possible.

- See EtherCAT state machine states in chapter OPTEC EtherCAT - General
- See Fieldbus fault in Chapter 8.3 "Fieldbus timeout fault (F53)"

6.5.1 CONTROLLING IN CIA-402 DRIVE PROFILE MODE

AC drive motor control mode is usually set to "Speed control" when using CiA-402 Drive Profile mode.

In VACON® 100 AC drives motor control mode can be changed with parameter P.3.1.2.1 Control Mode -> select "OL Speed Ctrl".

In VACON® NXP AC drive this setting depends from application. In case of following applications:

- APFIFF06 Multipurpose application: P2.6.1 Motor Ctrl Mode -> select "OL SpeedCont"
- APFIFF08 Advanced application: P2.8.1 Motor Ctrl Mode -> select "OL SpeedCont"

EtherCAT master can control the motor by writing into two process data objects.

- CiA 402 Control Word
- CiA 402 vl Target Velocity

EtherCAT master can monitor the motor status by reading two process data objects:

- CiA 402 Status Word
- CiA 402 Velocity Actual

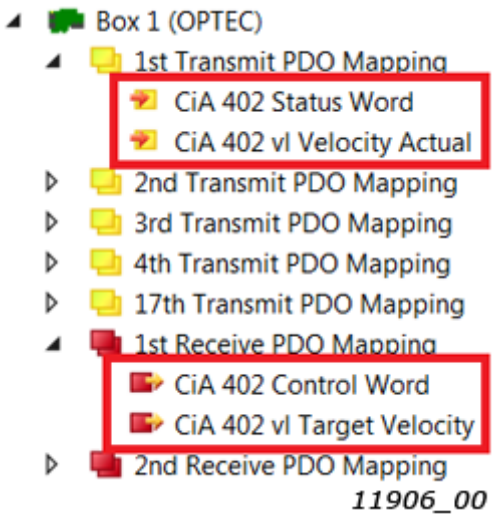

Figure 16. CiA-402 specific process data objects

In the following Beckhoff TwinCAT example EtherCAT master sets the motor into running state with target velocity 0x100. EtherCAT master writes following values into CiA-402 process data objects.

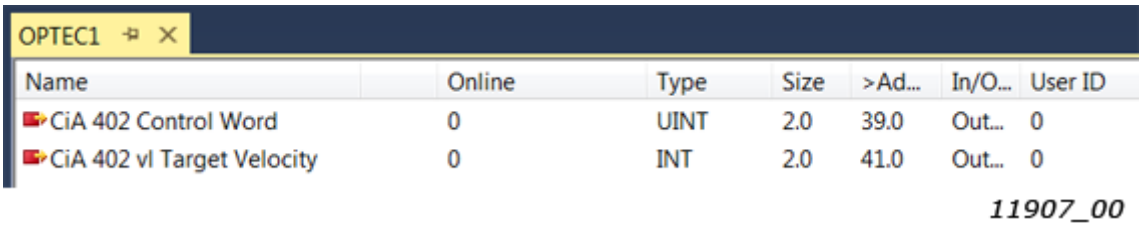

Figure 17. CiA-402 specific process data to AC drive

Table 22. Motor to run state in CiA-402 Drive Profile mode

Step	Write to	Value	Description
1	CiA 402 Control Word	0x80	Request reset of active faults from AC drive
2	CiA 402 vl Target Velocity	0x100	Motor start to run with target velocity 0x100 after CiA-402 state machine goes to "Operational enabled" state.
3	CiA 402 Control Word	0x06	CiA-402 State machine to "Ready to switch on" state
4	CiA 402 Control Word	0x0F	CiA-402 State machine to "Operation enabled" state. Motor starts to run with target speed defined by Target Velocity.

EtherCAT master can read motor control status from CiA-402 Status Word process data object. Actual velocity can be read from CiA-402 vl Velocity Actual object.

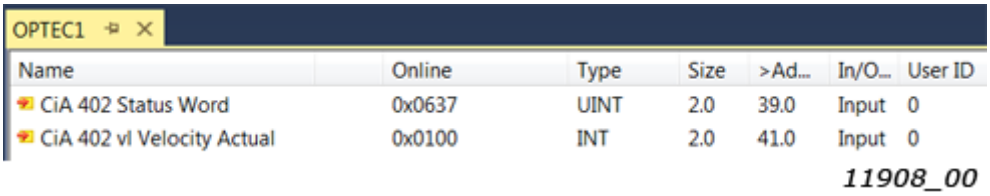

Figure 18. CiA-402 specific process data from AC drive

CiA-402 state machine, control word, status word and other details are explained in chapter 7.3 Operating modes.

6.5.2 CONTROLLING IN BYPASS MODE

AC drive motor control mode is usually set to "Frequency control" when using Bypass mode.

In VACON® 100 AC drives motor control mode can be changed with parameter P.3.1.2.1 Control Mode -> select "Frequency Ctrl".

In VACON® NXP this setting depends from application. In case of following applications:

- APFIFF06 Multipurpose application: P2.6.1 Motor Ctrl Mode -> select "Freq Control"
- APFIFF08 Advanced application: P2.8.1 Motor Ctrl Mode -> select "Freq Control"

EtherCAT master can control the motor by writing into three process data objects. Bypass General Control Word content is application specific. All applications do not require usage of General Control Word. In this case content of this process data item is just ignored in AC drive.

- Bypass Fixed Control Word
- Bypass General Control Word
- Bypass Speed Setpoint Value

EtherCAT master can monitor the motor status by reading three process data objects. All applications do not require usage of General Status Word. In this case content of this process data item can be just ignored in EtherCAT master.

- Bypass Fixed Status Word
- Bypass General Status Word
- Bypass Speed Actual Value

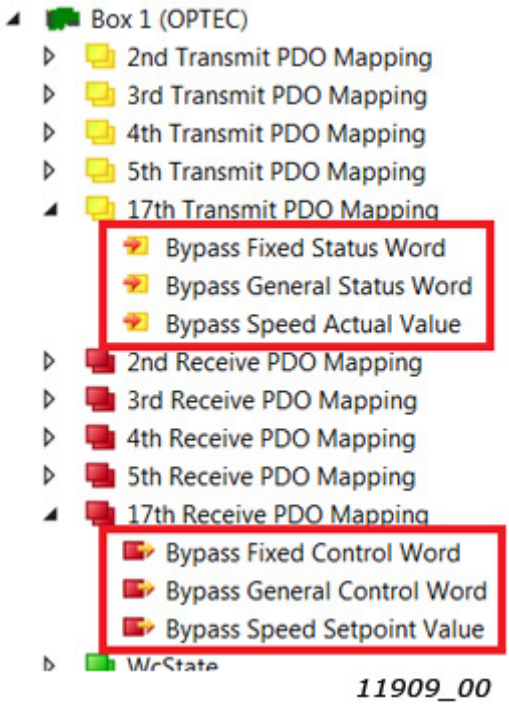

Figure 19. Bypass specific process data objects

In the following Beckhoff TwinCAT example EtherCAT master sets the motor into running state with Speed setpoint value 2000. EtherCAT master writes following values into Bypass process data objects.

OPTEC1

Name	Online	Type	Size	>Ad...	In/O...	User ID	Linked to
Bypass Fixed Control Word	0	UINT	2.0	71.0	Out...	0	
Bypass General Control Word	0	UINT	2.0	73.0	Out...	0	
Bypass Speed Setpoint Value	0	UINT	2.0	75.0	Out...	0	

11910_00

Figure 20. Bypass specific process data to AC drive

Table 23. Motor to run state in Bypass mode

Step	Write to	Value	Description
1	Bypass Fixed Control Word	0x04	Request reset of active faults from AC drive
3	Bypass Speed Setpoint Value	2000	Target frequency is 20% from frequency range defined by MinimumFrequency and MaximumFrequency parameters.
2	Bypass Fixed Control Word	0x01	Switch AC drive to RUN mode. Motor starts to run with target frequency defined by Bypass Speed Setpoint Value.

EtherCAT master can read motor control status from Bypass Status Word data objects. Actual speed can be read from Bypass Speed Actual Value.

OPTEC1

Name	Online	Type	Size	>Ad...	In/O...	User ID	Linked to
Bypass Fixed Status Word	35	UINT	2.0	71.0	Input	0	
Bypass General Status Word	32771	UINT	2.0	73.0	Input	0	
Bypass Speed Actual Value	2000	UINT	2.0	75.0	Input	0	

11911_00

Figure 21. CiA-402 process data from AC drive

Bypass control word, status word and other details are explained in Chapter 7.3 "Operating modes".

6.5.3 CONTROLLING THE MOTOR WITH CODESYS V3.X

Previous chapters instructed VACON® drive configuration and controlling the motor by using TwinCAT configuration tool. In case of CODESYS, the process data mapping can be done in EtherCAT slave device's Process data view.

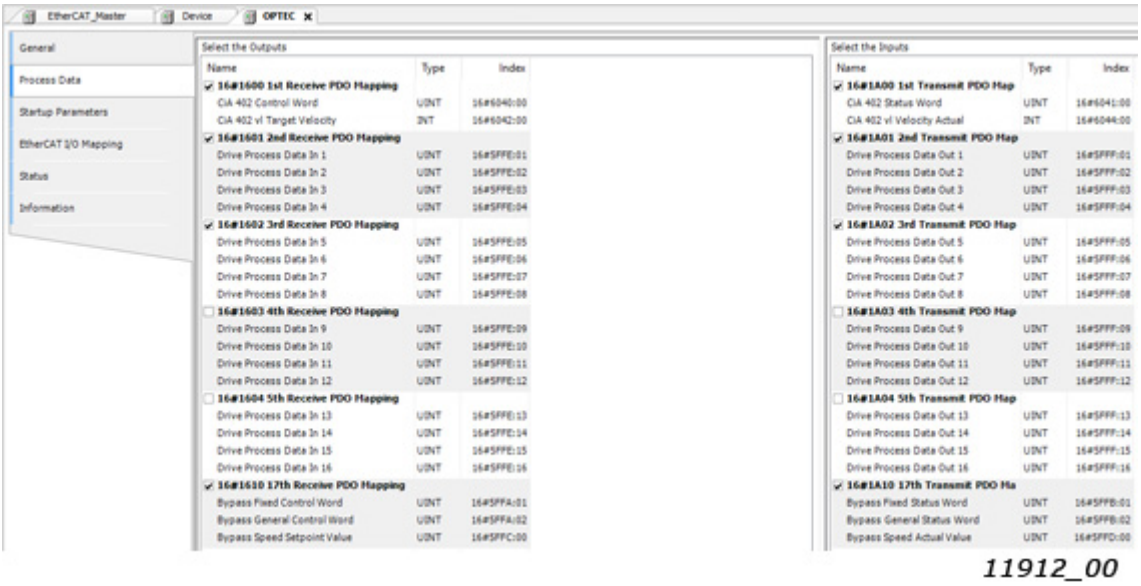

Figure 22. Process data view in CODESYS

Step 1. Select "EtherCAT I/O Mapping" from EtherCAT slave device's menu tree to change "Always update variable" settings. Then select "Enabled 1 (use bus cycle task if not used in any task)".

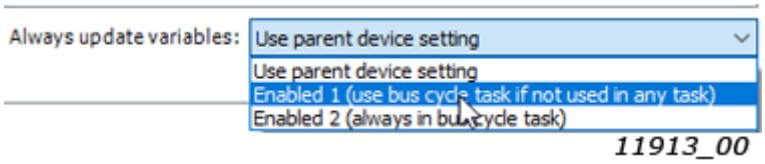

Figure 23. I/O data update settings in CODESYS

Step 2. Select CODESYS program's menu bar "Online" -> "Login" to login into system.

If CODESYS asks about downloading the change to the application, then select download option. After this changed configuration settings are taken into use in CODESYS virtual EtherCAT master.

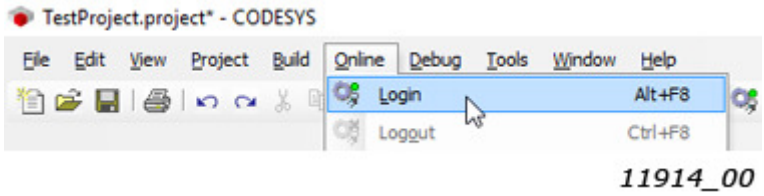

Figure 24. Login into system in CODESYS

Step 3. Click Start button to start communication.

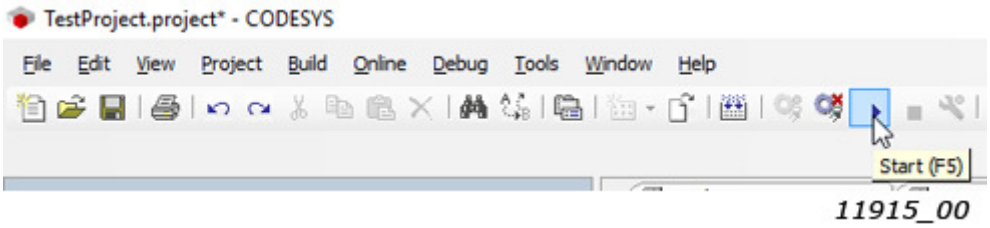

Figure 25. Start system in CODESYS

EtherCAT master have now connection to OPTEC EtherCAT. Process data values transferred between EtherCAT master and OPTEC EtherCAT can be seen in EtherCAT I/O Mapping page.

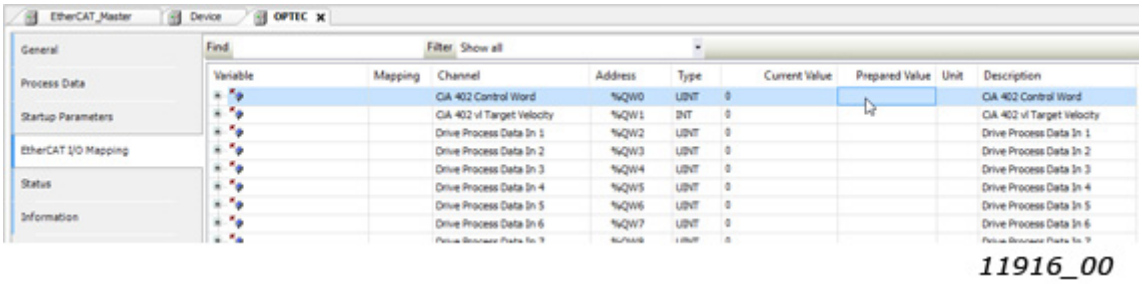

Figure 26. EtherCAT I/O mapping in CODESYS

6.5.3.1 Controlling in CiA-402 Drive Profile mode with CODESYS

Ensure that OPTEC EtherCAT is in CiA-402 Drive Profile mode. See Chapter 6.3 "Operation mode selection".

In the following Beckhoff TwinCAT example EtherCAT master sets the motor into running state with target velocity 200. New values are written into "Prepared Value field". New values are taken into use by pressing Ctrl + F7. After that the values are shown in Current value column.

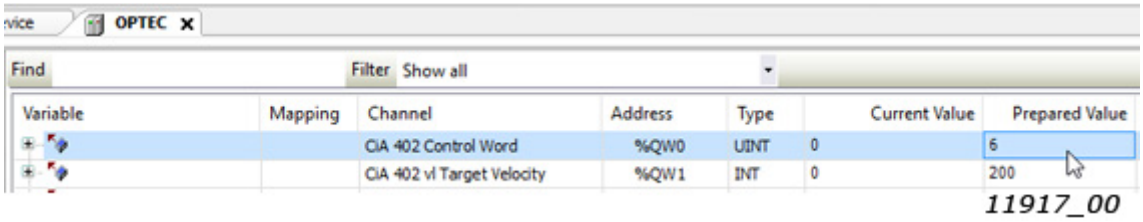

Figure 27. CiA-402 Drive Profile commands in CODESYS

Table 24. Motor to run state in CiA-402 Drive Profile mode in CODESYS

Step	Write to:	Value	Description
1	CiA 402 Control Word	128 (0x80)	Request reset of active faults from AC drive
2	CiA 402 vl Target Velocity	200 (0xC8)	Motor start to run with target velocity 200 after CiA-402 state machine goes to "Operational enabled" state.
3	CiA 402 Control Word	6 (0x06)	CiA-402 State machine to "Ready to switch on" state
4	CiA 402 Control Word	15 (0x0F)	CiA-402 State machine to "Operation enabled" state. Motor starts to run with speed defined by Target Velocity.

After this motor starts to run. "CiA 402 Status Word" and "CiA 402 vl Actual Velocity" can be monitored from CODESYS.

6.5.3.2 Controlling in Bypass mode with CODESYS

Ensure that OPTEC EtherCAT is in Bypass mode. See Chapter 6.3 "Operation mode selection".

In the following Beckhoff TwinCAT example EtherCAT master sets the motor into running state with Speed setpoint value 1000. New values are written into "Prepared Value field". New values are taken into use by pressing Ctrl + F7. After that the values are shown in Current value column.

		Bypass Fixed Control Word	%QW10	UINT	0	1
		Bypass General Control Word	%QW11	UINT	0	
		Bypass Speed Setpoint Value	%QW12	UINT	0	1000

11918_00

Figure 28. Bypass mode commands in CODESYS

Table 25. Motor to run state in Bypass mode in CODESYS

Step	Write to:	Value	Description
1	Bypass Fixed Control Word	4 (0x04)	Request reset of active faults from AC drive
2	Bypass Speed Setpoint Value	1000 (0x3E8)	Target frequency is 10% from frequency range defined by MinimumFrequency and Maximum-Frequency parameters.
3	Bypass Fixed Control Word	1 (0x01)	Switch AC drive to RUN mode. Motor starts to run with frequency defined by Bypass Speed Setpoint Value.

After this motor starts to run. Following status process values can be monitored in CODESYS:

- Bypass Fixed Status Word
- Bypass General Status Word
- Bypass Speed Actual Value

6.6 VACON® PC-TOOLS

With VACON® PC-tools it is possible to do following operations for OPTEC EtherCAT:

- Update firmware into OPTEC EtherCAT option board
- Set parameters for OPTEC EtherCAT
- Read monitor values of OPTEC EtherCAT

6.6.1 PC TOOL SUPPORT

This table describes which PC tools are supported in each AC drive type. The connection type "serial" means a direct serial connection to the AC drive. The connection type "Ethernet" means that Ethernet connection is supported by using for example the inbuilt Ethernet interface of VACON® 100 or the OPTE9 Dual Port Ethernet option board. As of OPTEC firmware V004 and after, also Ethernet over EtherCAT (EoE) is supported.

Table 26.

Tool	VACON® 100 family		VACON® NXS/NXP		VACON® 20 family	
	Serial	Ethernet	Serial	Ethernet	Serial	Ethernet
VACON® Loader	x		x		x	
VACON® Live	x	x			x	
NCIPConfig	Not used with OPTEC EtherCAT					
NCDrive			x	x		
NCLoad	Not used with OPTEC EtherCAT					

6.6.2 OPTEC OPTION BOARD FIRMWARE UPDATE WITH VACON® LOADER

You can update OPTEC EtherCAT firmware with VACON® Loader PC-tool. You need to have:

- PC with VACON® Loader installed
- VACON® AC drive in which OPTEC EtherCAT option board is installed
- Serial cable:
- VACON® NXP is connected to PC with RS232 serial cable which is connected from PC to VACON® NXP control unit's 9-pin DSUB connector (female). If PC does not contain RS232 serial port, then USB – RS232 converter device is needed between PC and VACON® NXP control.
- VACON® 100 and VACON® 20 are connected to PC with VACON® Serial Cable.

The VACON® Loader can be downloaded from https://www.danfoss.com/en/service-and-support/ -> Downloads -> Software -> select "Drives" as Business unit. It is bundled with the VACON® Live software package. After starting the installation program, follow the on-screen instructions.

The OPTEC EtherCAT firmware can be downloaded from https://www.danfoss.com/en/service-and-support/ -> Software -> select "Drives" as Business unit -> Fieldbus firmware.

To update the option board firmware, follow the steps below.

NOTE! With VACON® 20, the baud rate 9600 must be used. With VACON® 20 X and VACON® 20 CP, the following baud rates are supported: 9600, 19200, 38400 or 57600. With VACON® 100 and VACON® NXP drives VACON® Loader selects a correct baud rate automatically.

Step 1: Connect your PC to the controller by using the serial cable.

Then select the firmware file which you want to load to the option board and double click it. This starts the VACON® Loader software. You can also start the program from the Windows Start menu. In this case, select the firmware file using the "Browse"-button.

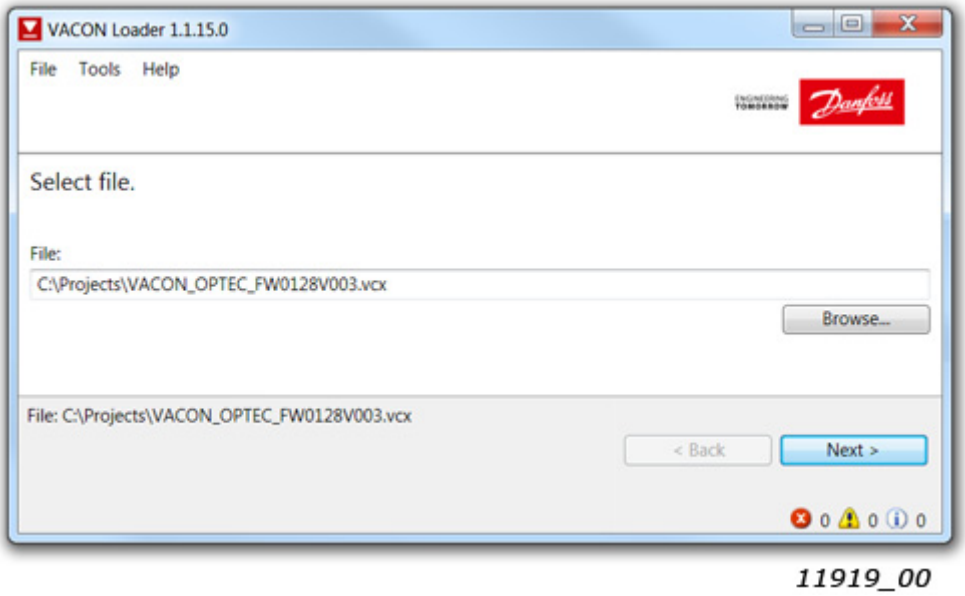

Figure 29. VACON® Loader: File selection

Step 2: Press 'next' and wait for the loader to find the network drives.

Then select a drive from the list and press 'Connect to Selected'.

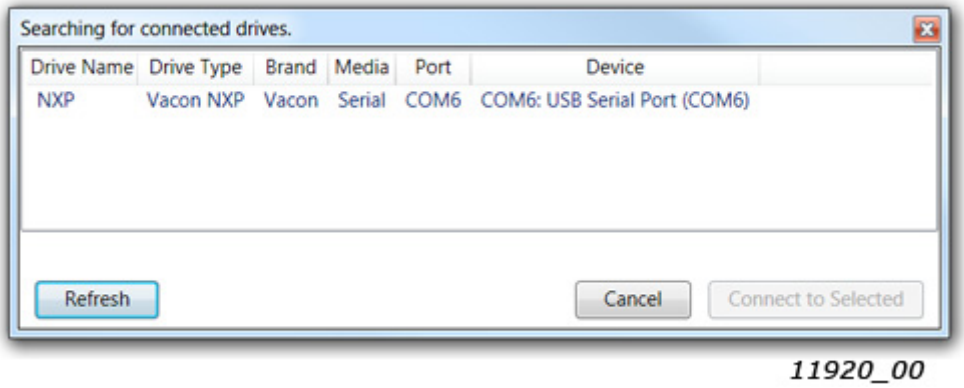

Figure 30. VACON® Loader: Connecting to drive

Step 3: Select the modules to be updated, press 'next' and wait until the operation is finished.

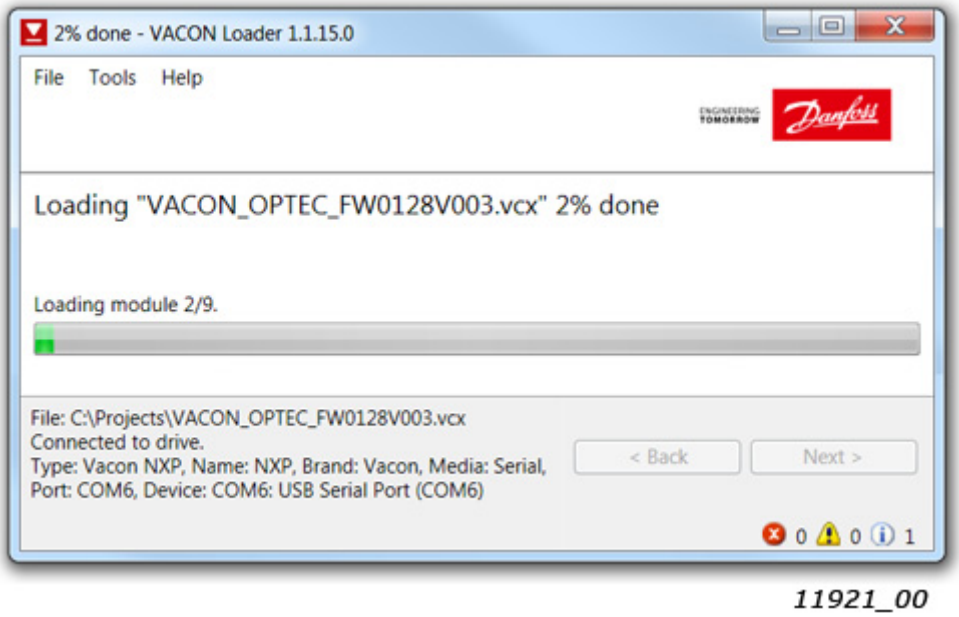

Figure 31. VACON® Loader: Firmware loading

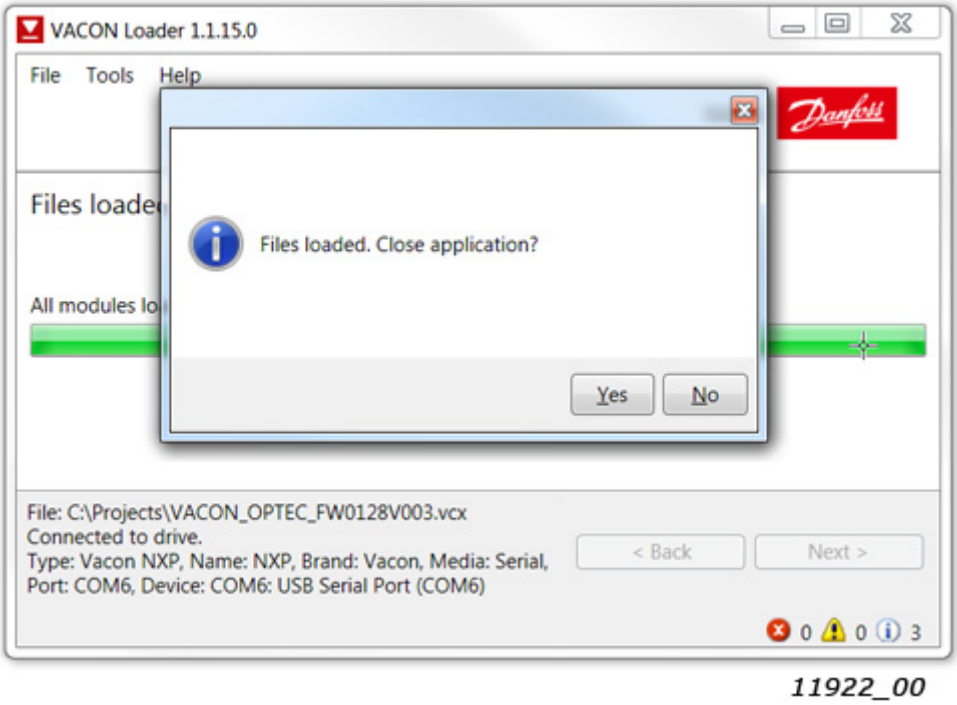

Figure 32.VACON® Loader: Loading is finished

6.6.3 PC TOOLS FOR VACON® NXP: NCDRIVE

You can configure the VACON® NXP AC drive and OPTEC EtherCAT parameters with the NCDrive PC-tool. You need to have:

- PC with NCDrive installed
- VACON® NXP drive
- In case of Serial connection:
  - If PC contains RS232 serial port, then connect the serial cable from PC to VACON® NXP control unit's 9-pin DSUB connector (female).
  - If PC does not contain RS232 serial port, then USB – RS232 converter device is needed between PC and VACON® NXP control.
- In case of Ethernet connection:
  - Another option board supporting Ethernet connection, for example OPTE9 Dual Port Ethernet Option Board and an Ethernet cable connected to it or
  - OPTEC EtherCAT option board with firmware V004 or later and Ethernet over EtherCAT enabled on master PLC.

The NCDrive can be downloaded from https://www.danfoss.com/en/service-and-support/ -> Downloads -> Software -> select "Drives" as Business unit. After starting the installation program, follow the on-screen instructions.

Once the program is installed successfully, you can launch it by selecting it in the Windows Start menu. Select Help --> Contents if you want more information about the software features.

6.6.3.1 NCDrive Serial communication settings

Connect your PC to the controller by using the USB/RS485 cable.

Select Tools -> Options... -> Communication tab. Then define settings for your USB - RS232 adapter and press Ok.

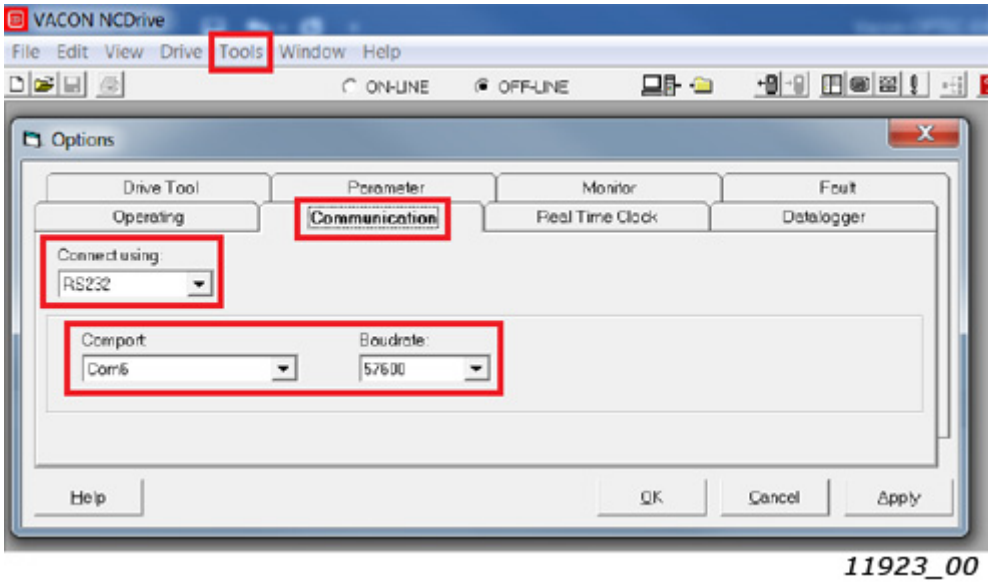

Figure 33. NCDrive: Serial communication settings

6.6.3.2 NCDrive Ethernet communication settings

For NCDrive Ethernet connection you need to have:

- Working Ethernet connection between PC and AC drive
- NCDrive is parametrized to use Ethernet connection

See instructions from Ethernet option board manual. Option board manuals can be downloaded from https://www.danfoss.com/en/service-and-support/ -> Documentation -> Select "Drives" as Business unit -> Select "VACON Option Boards" as Product Series.

6.6.3.3 Connecting to NCDrive

Press the "ON-LINE" button. The NCDrive will connect to the drive and start loading parameter information.

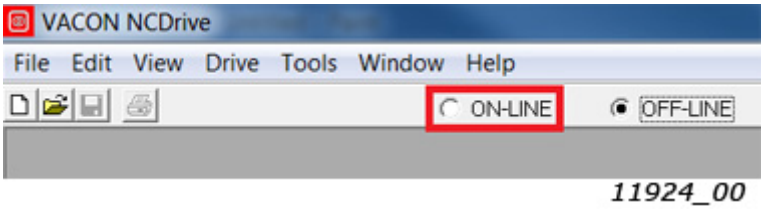

Figure 34. NCDrive: Going online

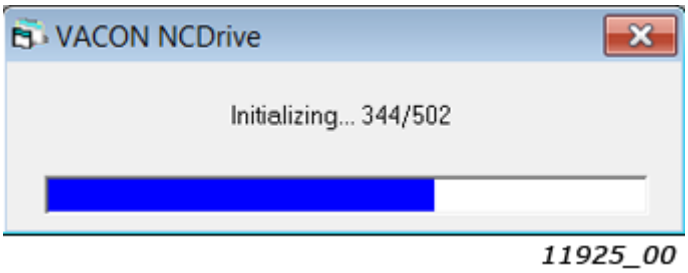

Figure 35. NCDrive: Loading information from the drive

To change the option board settings, navigate to the "M 7 Expander boards" menu and select the slot in which OPTEC EtherCAT is connected to. It is possible to change parameters defined in Chapter 6.1 "AC drive and OPTEC EtherCAT option board parametrization".

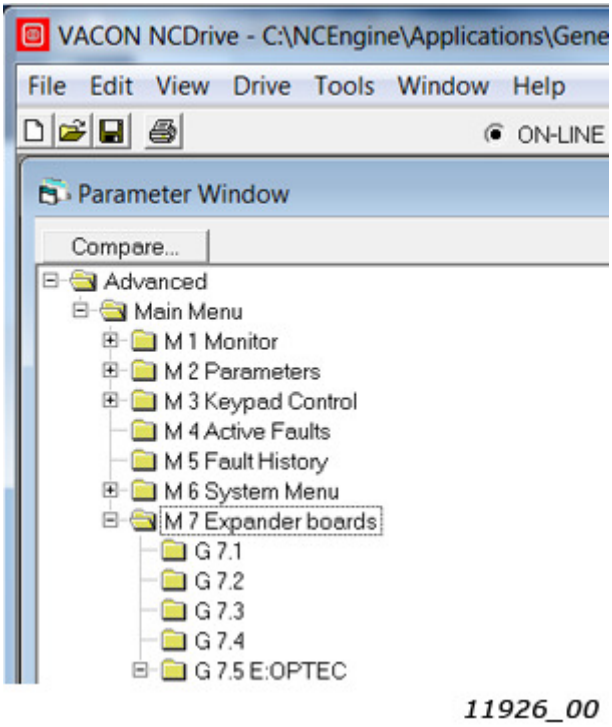

Figure 36. NCDrive: Parameter menu

6.6.4 PC Tools for VACON® 100 and VACON® 20: VACON® Live

You can configure the VACON® 100 AC drives, VACON® 20 AC drives and OPTEC EtherCAT parameters with the VACON® Live PC-tool. Also monitor values of these devices can be read with VACON® Live. You need to have:

- PC with VACON® Live installed
- VACON® 100 or VACON® 20 AC drive
- In case of Serial connection:
  - VACON® Serial Cable (USB - Serial cable) which is connected from PC to AC drive control unit.
  - In case of VACON® 20 also MCA (Micro Communications Adapter) is required. This adapter is not needed in case of VACON® 20 X / CP.
- In case of Ethernet connection:
  - Another option board supporting Ethernet connection, for example OPTE9 Dual Port Ethernet Option Board and an Ethernet cable connected to it or
  - OPTEC EtherCAT option board with firmware V004 or later and Ethernet over EtherCAT enabled on master PLC.
  - In case of VACON® 100 it is possible to use inbuilt Ethernet connection.

NOTE! VACON® 20, VACON® 20 X and VACON® 20 Cold Plate do not support VACON® Live connection over Ethernet.

The VACON® Live can be downloaded from https://www.danfoss.com/en/service-and-support/ -> Downloads -> Software -> select "Drives" as Business unit. After starting the installation program, follow the on-screen instructions.

Once the program is installed successfully, you can launch it by selecting it in the Windows Start menu. Select Help --> Contents if you want more information about the software features.

6.6.4.1 VACON® Live Serial communication settings

Step 1: Connect your PC to VACON® AC drive with VACON® Serial Cable.

Step 2: Start VACON® Live. When the program starts, it asks "Select startup mode". Select "Online" startup mode. After this the program scans compatible drives.

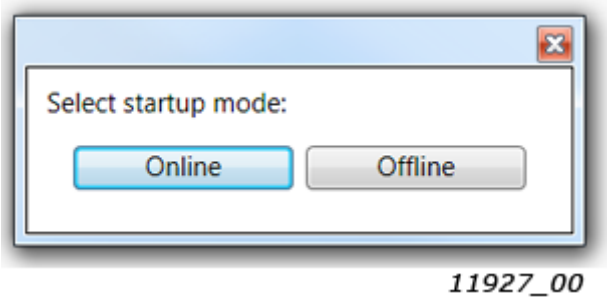

Figure 37. VACON® Live: To online mode

Step 2b: If VACON® Live cannot find your AC drive then ensure that "Serial / Ethernet" or "Serial" is selected. After that press "Scan".

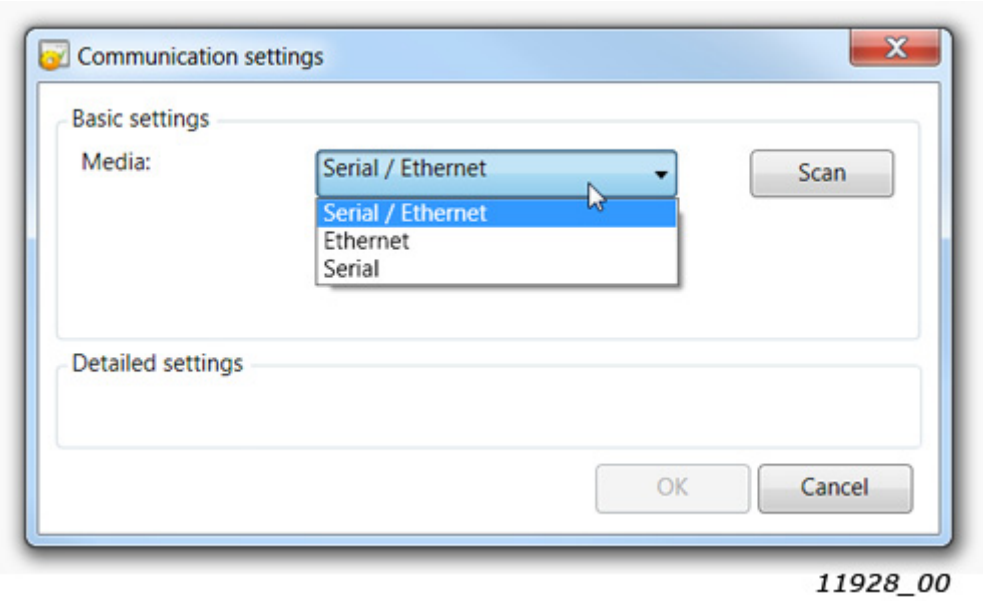

Figure 38. VACON® Live: Communication settings

Step 3: After successful scanning VACON® Live shows the drive in connected drives window. Select the drive and press "Connected to Selected". After this VACON® Live reads parameter and monitor value tree from the drive.

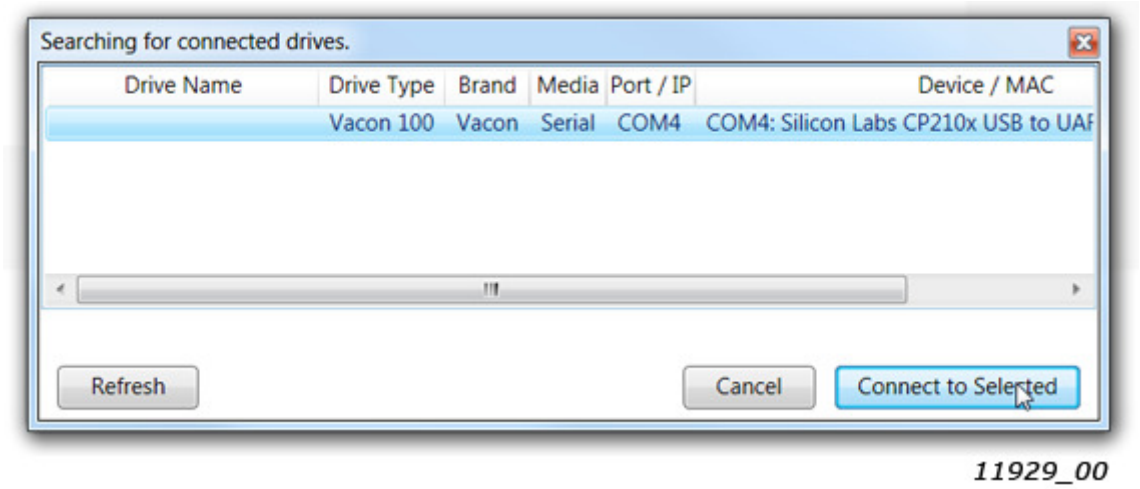

Figure 39. VACON® Live: Communication settings

6.6.4.2 VACON® Live Ethernet communication settings

For VACON® Live Ethernet connection you need to have:

- Working Ethernet connection between PC and AC drive
- VACON® Live is parametrized to use Ethernet connection

See instructions from VACON® 100 Modbus, PROFINET IO, Ethernet/IP, BACnet or OPTE9 Dual Port Ethernet option board manual. Manuals can be downloaded from https://www.danfoss.com/en/service-and-support/ -> Documentation -> Select "Drives" as Business unit -> Select "VACON Option Boards" as Product Series.

6.6.4.3 OPTEC EtherCAT parameters in VACON Live

OPTEC EtherCAT parameters and monitor values can be found from "5. I/O and Hardware" menu. With VACON® Live it is possible to modify OPTEC EtherCAT parameters and view monitor values.

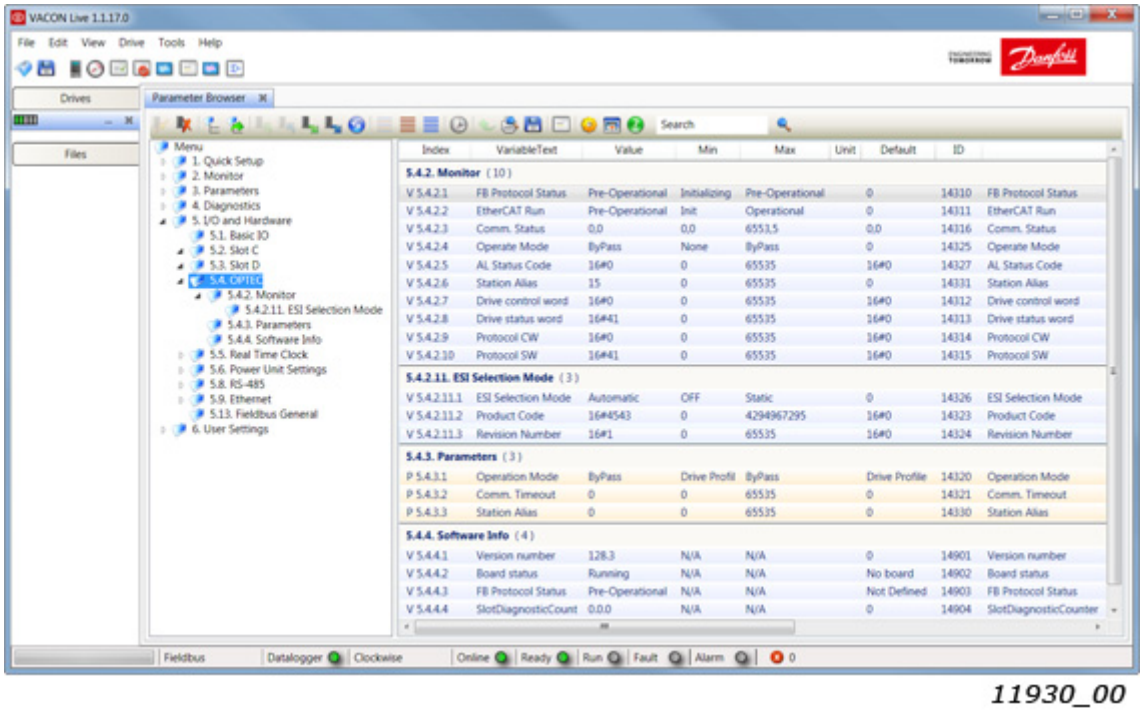

Figure 40. VACON® Live: OPTEC EtherCAT parameters.

7. EtherCAT

The OPTEC Option Board offers data objects through EtherCAT by the process data image and by mailbox protocols. The supported mailbox protocols is CanOpen Over EtherCAT(CoE). The available data objects depend on the accessing method used.

The difference between the process data image and mailbox protocols are that the mailbox transfer is initiated only on demand and the process data image is constantly kept up-to date between the EtherCAT Master and all EtherCAT slaves in the EtherCAT bus.

Figure 41. Communication between EtherCAT bus and VACON® drive

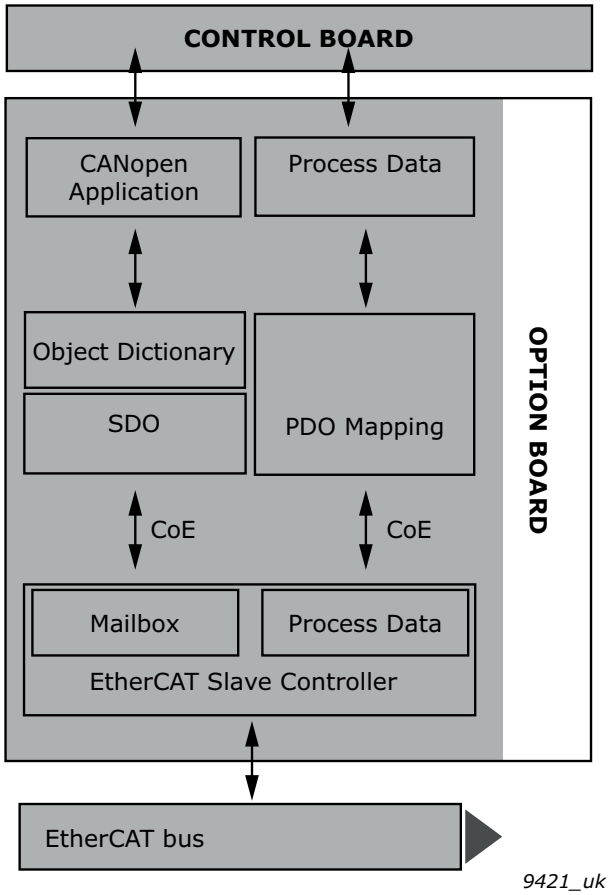

7.1 Data object list

Data objects from index 1000h to 1018h are CANopen DS-301 specific and descriptions can be found from Chapter 9 "APPENDIX A: CANOPEN DS301 SPECIFIC DATA OBJECT DESCRIPTIONS". Data objects from index 1C30h to 1C4Fh are EtherCAT sync manager specific.

Data objects from 2000h to 5EFFh are dynamically mapped, meaning that they are not defined by the option board. These objects are defined by the EtherCAT Master ESI configuration file and vary depending on the drive and application used. See Figure 18 for more details.

Table 27. All data objects

Index: Sub-index		Name	Type	R/W	Description
General Parameters					
1000	-	Device type	UINT32	RO	See Chapter 9 for description
1001	-	Error register	UINT8	RO	
1008	-	Manufacturer Device Name	STRING5	RO	
1009	-	Manufacturer Hardware Version	STRING3	RO	
100A	-	Manufacturer Software Version	STRING8	RO	
1018	0	Identity Object	Group	RO	
	01	Vendor ID	UINT32	RO	
	02	Product Code	UINT32	RO	
	03	Revision Number	UINT32	RO	
	04	Serial Number	UINT32	RO	
Receive PDO Mapping Parameters					
1600	0	1st Receive PDO Mapping	Group	RO	EtherCAT process data objects from EtherCAT master to OPTEC EtherCAT
	01	CiA-402 Control word	UINT32	RO	
	02	CiA-402 vl Target Velocity	UINT32	RO	
1601	0	2nd Receive PDO Mapping	Group	RO	
	01	Drive Process Data In 1	UINT32	RO	
	02	Drive Process Data In 2	UINT32	RO	
	03	Drive Process Data In 3	UINT32	RO	
	04	Drive Process Data In 4	UINT32	RO	
1602	0	3rd Receive PDO Mapping	Group	RO	
	01	Drive Process Data In 5	UINT32	RO	
	02	Drive Process Data In 6	UINT32	RO	
	03	Drive Process Data In 7	UINT32	RO	
	04	Drive Process Data In 8	UINT32	RO	
1603	0	4th Receive PDO Mapping	Group	RO	
	01	Drive Process Data In 9	UINT32	RO	
	02	Drive Process Data In 10	UINT32	RO	
	03	Drive Process Data In 11	UINT32	RO	
	04	Drive Process Data In 12	UINT32	RO	

Table 27. All data objects

Index: Sub-index		Name	Type	R/W	Description
1604	0	5th Receive PDO Mapping	Group	RO	EtherCAT process data objects from EtherCAT master to OPTEC EtherCAT
	01	Drive Process Data In 13	UINT32	RO	
	02	Drive Process Data In 14	UINT32	RO	
	03	Drive Process Data In 15	UINT32	RO	
	04	Drive Process Data In 16	UINT32	RO	
1605	0	6th Receive PDO Mapping	Group	RO	
	01	Drive process data in 1, 32bit	UINT32	RO	
	02	Drive process data in 2, 32bit	UINT32	RO	
	03	Drive process data in 3, 32bit	UINT32	RO	
	04	Drive process data in 4, 32bit	UINT32	RO	
1606	0	7th Receive PDO Mapping	Group	RO	
	01	Drive process data in 5, 32bit	UINT32	RO	
	02	Drive process data in 6, 32bit	UINT32	RO	
	03	Drive process data in 7, 32bit	UINT32	RO	
	04	Drive process data in 8, 32bit	UINT32	RO	
1607	0	8th Receive PDO Mapping	Group	RO	
	01	Drive process data in 9, 32bit	UINT32	RO	
	02	Drive process data in 10, 32bit	UINT32	RO	
	03	Drive process data in 11, 32bit	UINT32	RO	
	04	Drive process data in 12, 32bit	UINT32	RO	
1608	0	9th Receive PDO Mapping	Group	RO	
	01	Drive process data in 13, 32bit	UINT32	RO	
	02	Drive process data in 14, 32bit	UINT32	RO	
	03	Drive process data in 15, 32bit	UINT32	RO	
	04	Drive process data in 16, 32bit	UINT32	RO	
1610	0	17th Receive PDO Mapping	Group	RO	
	01	Bypass Fixed Control Word	UINT32	RO	
	02	Bypass General Control Word	UINT32	RO	
	03	Bypass Speed Setpoint Value	UINT32	RO	
Transmit PDO Mapping Parameters					
1A00	0	1st Transmit PDO Mapping	Group	RO	EtherCAT process data objects from OPTEC EtherCAT to EtherCAT master
	01	CiA-402 Status Word	UINT32	RO	
	02	CiA-402 vl Velocity Actual Value	UINT32	RO	

Table 27. All data objects

Index: Sub-index		Name	Type	R/W	Description
1A01	0	2nd Transmit PDO Mapping	Group	RO	EtherCAT process data objects from OPTEC EtherCAT to EtherCAT master
	01	Drive Process Data out 1	UINT32	RO	
	02	Drive Process Data out 2	UINT32	RO	
	03	Drive Process Data out 3	UINT32	RO	
	04	Drive Process Data out 4	UINT32	RO	
1A02	0	3rd Transmit PDO Mapping	Group	RO	
	01	Drive Process Data out 5	UINT32	RO	
	02	Drive Process Data out 6	UINT32	RO	
	03	Drive Process Data out 7	UINT32	RO	
	04	Drive Process Data out 8	UINT32	RO	
1A03	0	4th Transmit PDO Mapping	Group	RO	EtherCAT process data objects from OPTEC EtherCAT to EtherCAT master
	01	Drive Process Data out 9	UINT32	RO	
	02	Drive Process Data out 10	UINT32	RO	
	03	Drive Process Data out 11	UINT32	RO	
	04	Drive Process Data out 12	UINT32	RO	
1A04	0	5th Transmit PDO Mapping	Group	RO	
	01	Drive Process Data out 13	UINT32	RO	
	02	Drive Process Data out 14	UINT32	RO	
	03	Drive Process Data out 15	UINT32	RO	
	04	Drive Process Data out 16	UINT32	RO	
1A05	0	6th Transmit PDO Mapping	Group	RO	EtherCAT process data objects from OPTEC EtherCAT to EtherCAT master
	01	Drive process data out 1, 32bit	UINT32	RO	
	02	Drive process data out 2, 32bit	UINT32	RO	
	03	Drive process data out 3, 32bit	UINT32	RO	
	04	Drive process data out 4, 32bit	UINT32	RO	
1A06	0	7th Transmit PDO Mapping	Group	RO	
	01	Drive process data out 5, 32bit	UINT32	RO	
	02	Drive process data out 6, 32bit	UINT32	RO	
	03	Drive process data out 7, 32bit	UINT32	RO	
	04	Drive process data out 8, 32bit	UINT32	RO	
1A07	0	8th Transmit PDO Mapping	Group	RO	EtherCAT process data objects from OPTEC EtherCAT to EtherCAT master
	01	Drive process data out 9, 32bit	UINT32	RO	
	02	Drive process data out 10, 32bit	UINT32	RO	
	03	Drive process data out 11, 32bit	UINT32	RO	
	04	Drive process data out 12, 32bit	UINT32	RO	

Table 27. All data objects

Index: Sub-index		Name	Type	R/W	Description
1A08	0	9th Transmit PDO Mapping	Group	RO	EtherCAT process data objects from OPTEC EtherCAT to EtherCAT master
	01	Drive process data out 13, 32bit	UINT32	RO	
	02	Drive process data out 14, 32bit	UINT32	RO	
	03	Drive process data out 15, 32bit	UINT32	RO	
	04	Drive process data out 16, 32bit	UINT32	RO	
1A10	0	17th Transmit PDO Mapping	Group	RO	EtherCAT process data objects from OPTEC EtherCAT to EtherCAT master
	01	Bypass Fixed Status Word	UINT32	RO	
	02	Bypass General Status Word	UINT32	RO	
	03	Bypass Speed Actual Value	UINT32	RO	
PDO Assign Parameters					
1C12	0	RxPDO assign	Group	RW	Assign of EtherCAT process data objects that are transferred from EtherCAT master to OPTEC EtherCAT
	01	Receive PDO Mapping 1	UINT16	RW	
	02	Receive PDO Mapping 2	UINT16	RW	
	03	Receive PDO Mapping 3	UINT16	RW	
	04	Receive PDO Mapping 4	UINT16	RW	
	05	Receive PDO Mapping 5	UINT16	RW	
	06	Receive PDO Mapping 6	UINT16	RW	
1C13	0	TxPDO assign	Group	RW	Assign of EtherCAT process data objects that are transferred from OPTEC EtherCAT to EtherCAT master
	01	Transmit PDO Mapping 1	UINT16	RW	
	02	Transmit PDO Mapping 2	UINT16	RW	
	03	Transmit PDO Mapping 3	UINT16	RW	
	04	Transmit PDO Mapping 4	UINT16	RW	
	05	Transmit PDO Mapping 5	UINT16	RW	
	06	Transmit PDO Mapping 6	UINT16	RW	
Sync Manager Parameters					
1C32	0	SM Output parameters	Group	RO	
	01	Sync mode	UINT16	RW	Current output sync mode
	04	Sync modes supported	UINT16	RO	Supported output sync modes
	05	Minimum cycle time	UINT32	RO	Minimum cycle time supported
	06	Calc and copy time	UINT32	RO	Calculation and copy time
	09	Delay time	UINT32	RO	Hardware delay time
	0B	SM-Event missed	UINT16	RO	SM event missed counter
	0C	Cycle time too small	UINT16	RO	Cycle time too small counter
	20	Sync error	BOOLEAN	RO	Indicates sync error

Table 27. All data objects

Index: Sub-index		Name	Type	R/W	Description
1C33	0	SM Input parameter	Group	RO	
	01	Sync mode	UINT16	RW	Current input sync mode
	04	Sync modes supported	UINT16	RO	Supported input sync modes
	05	Minimum cycle time	UINT32	RO	Minimum cycle time supported
	06	Calc and copy time	UINT32	RO	Calculation and copy time
	09	Delay time	UINT32	RO	Hardware delay time
	0B	SM-Event missed	UINT16	RO	SM event missed counter
	0C	Cycle time too small	UINT16	RO	Cycle time too small counter
	20	Sync error	BOOLEAN	RO	Indicates sync error
Dynamic Manufacturer Specific Parameter Area					
2000	-	First application specific object	-	-	Chapter 7.4 "Accessing drive parameters via CoE MailBox"
5EFF	-	Last application specific object	-	-	Chapter 7.4 "Accessing drive parameters via CoE MailBox"
Static Manufacturer Specific Parameters					
5FF1	0	Fault history	Group	RW	Number of subindexes (4 times number of fault history items). Cleared if 0 is written.
	01	Item 1, fault code	UINT16	RO	Fault code of fault history item 1
	02	Item 1, subcode	UINT16	RO	Subcode of fault history item 1
	03	Item 1, seconds	UINT32	RO	Timestamp seconds of fault history item 1
	04	Item 1, milliseconds	UINT16	RO	Timestamp milliseconds of fault history item 1
	05	Item 2, fault code	UINT16	RO	Fault code of fault history item 2
	06	Item 2, subcode	UINT16	RO	Subcode of fault history item 2
	...	...			As many as there are subindexes
5FF2	-	Drive System Time	UINT32	RW	Time in Unix format
5FF3	0	Drive Information	Group	RO	
	01	Drive Serial Number	STRING20	RO	Serial number
	02	Drive Name	STRING40	RW	VACON® 100 drive name
5FF4	0	ESI File Selection Mode	Group	RO	
	01	Selection Mode	UINT16	RW	Selected mode
	02	Static Product Code	UINT32	RW	Static mode product code
	03	Static Revision Number	UINT16	RW	Static mode revision number

Table 27. All data objects

Index: Sub-index		Name	Type	R/W	Description
5FF5	0	Operating Energy	Group	RO	Access drive energy counters
	01	Energy	FLOAT32	RO	Total energy
	02	Trip Energy	FLOAT32	RO	Trip energy value
	03	Reset Trip Energy	UINT16	RW	Reset Trip Energy
5FF6	0	Trip Operating Time	Group	RO	
	01	Years	UINT16	RO	Trip operating years
	02	Days	UINT16	RO	Trip operating days
	03	Hours	UINT16	RO	Trip operating hours
	04	Minutes	UINT16	RO	Trip operating minutes
	05	Seconds	UINT16	RO	Trip operating seconds
	06	Total seconds	UINT32	RO	Total trip operating seconds
	07	Reset Trip Operating Time	UINT16	RW	Reset Trip Operating Time
5FF7	0	Operating Time	Group	RO	
	01	Years	UINT16	RO	Operating years
	02	Days	UINT16	RO	Operating days
	03	Hours	UINT16	RO	Operating hours
	04	Minutes	UINT16	RO	Operating minutes
	05	Seconds	UINT16	RO	Operating seconds
	06	Total seconds	UINT32	RO	Total operating seconds
5FF8	0	ParReadCoE	Group	RO	Parameter channel read
	01	ParReadID	UINT16	RW	Read ID
	02	ParReadIDValue	UINT32	RO	Read value
	03	ParReadSeqNo	UINT16	RO	Read sequence number
	04	ParReadIDStatus	INT16	RO	Read status
5FF9	0	ParWriteCoE	Group	RO	Parameter channel write
	01	ParWriteID	UINT16	RW	Write ID
	02	ParWriteIDValue	UINT32	RW	Write value
	03	ParWriteSeqNo	UINT16	RO	Write sequence number
	04	ParWriteIDStatus	INT16	RO	Write status
5FFA	0	Bypass Control	Group	RO	
	01	Bypass Fixed Control Word	UINT16	RW	Bypass mode control word
	02	Bypass General Control Word	UINT16	RW	Application specific control word
5FFB	0	Bypass Status	Group	RO	
	01	Bypass Fixed Status Word	UINT16	RO	Bypass mode status word
	02	Bypass General Status Word	UINT16	RO	Application specific status word

Table 27. All data objects

Index: Sub-index		Name	Type	R/W	Description
5FFC	-	Bypass Speed Setpoint Value	UINT16	RW	Bypass speed control
5FFD	-	Bypass Speed Actual Value	UINT16	RO	Bypass actual speed
5FFE	0	Drive Process Data In	Group	RO	Application specific process data from EtherCAT master to OPTEC EtherCAT
	01	Drive Process Data In 1	UINT16	RO	
	02	Drive Process Data In 2	UINT16	RO	
	03	Drive Process Data In 3	UINT16	RO	
	04	Drive Process Data In 4	UINT16	RO	
	05	Drive Process Data In 5	UINT16	RO	
	06	Drive Process Data In 6	UINT16	RO	
	07	Drive Process Data In 7	UINT16	RO	
	08	Drive Process Data In 8	UINT16	RO	
	09	Drive Process Data In 9	UINT16	RO	
	10	Drive Process Data In 10	UINT16	RO	
	11	Drive Process Data In 11	UINT16	RO	
	12	Drive Process Data In 12	UINT16	RO	
	13	Drive Process Data In 13	UINT16	RO	
	14	Drive Process Data In 14	UINT16	RO	
	15	Drive Process Data In 15	UINT16	RO	
	16	Drive Process Data In 16	UINT16	RO	
	17	Drive Process Data In 1, 32bit	UINT32	RO	32bit value of Process Data In. Supported only by VACON® 100.
	18	Drive Process Data In 2, 32bit	UINT32	RO	
	19	Drive Process Data In 3, 32bit	UINT32	RO	
	20	Drive Process Data In 4, 32bit	UINT32	RO	
	21	Drive Process Data In 5, 32bit	UINT32	RO	
	22	Drive Process Data In 6, 32bit	UINT32	RO	
	23	Drive Process Data In 7, 32bit	UINT32	RO	
	24	Drive Process Data In 8, 32bit	UINT32	RO	
	25	Drive Process Data In 9, 32bit	UINT32	RO	
	26	Drive Process Data In 10, 32bit	UINT32	RO	
	27	Drive Process Data In 11, 32bit	UINT32	RO	
	28	Drive Process Data In 12, 32bit	UINT32	RO	
	29	Drive Process Data In 13, 32bit	UINT32	RO	
	30	Drive Process Data In 14, 32bit	UINT32	RO	
	31	Drive Process Data In 15, 32bit	UINT32	RO	
	32	Drive Process Data In 16, 32bit	UINT32	RO	

Table 27. All data objects

Index: Sub-index		Name	Type	R/W	Description
5FFF	0	Drive Process Data Out	Group	RO	Application specific process data from OPTEC EtherCAT to EtherCAT master
	01	Drive Process Data Out 1	UINT16	RO	
	02	Drive Process Data Out 2	UINT16	RO	
	03	Drive Process Data Out 3	UINT16	RO	
	04	Drive Process Data Out 4	UINT16	RO	
	05	Drive Process Data Out 5	UINT16	RO	
	06	Drive Process Data Out 6	UINT16	RO	
	07	Drive Process Data Out 7	UINT16	RO	
	08	Drive Process Data Out 8	UINT16	RO	
	09	Drive Process Data Out 9	UINT16	RO	
	10	Drive Process Data Out 10	UINT16	RO	
	11	Drive Process Data Out 11	UINT16	RO	
	12	Drive Process Data Out 12	UINT16	RO	
	13	Drive Process Data Out 13	UINT16	RO	
	14	Drive Process Data Out 14	UINT16	RO	
	15	Drive Process Data Out 15	UINT16	RO	
	16	Drive Process Data Out 16	UINT16	RO	
	17	Drive Process Data Out 1, 32bit	UINT32	RO	32bit value of Process Data Out. Supported only by VACON® 100.
	18	Drive Process Data Out 2, 32bit	UINT32	RO	
	19	Drive Process Data Out 3, 32bit	UINT32	RO	
	20	Drive Process Data Out 4, 32bit	UINT32	RO	
	21	Drive Process Data Out 5, 32bit	UINT32	RO	
	22	Drive Process Data Out 6, 32bit	UINT32	RO	
	23	Drive Process Data Out 7, 32bit	UINT32	RO	
	24	Drive Process Data Out 8, 32bit	UINT32	RO	
	25	Drive Process Data Out 9, 32bit	UINT32	RO	
	26	Drive Process Data Out 10, 32bit	UINT32	RO	
	27	Drive Process Data Out 11, 32bit	UINT32	RO	
	28	Drive Process Data Out 12, 32bit	UINT32	RO	
	29	Drive Process Data Out 13, 32bit	UINT32	RO	
	30	Drive Process Data Out 14, 32bit	UINT32	RO	
	31	Drive Process Data Out 15, 32bit	UINT32	RO	
	32	Drive Process Data Out 16, 32bit	UINT32	RO	
CiA-402 Parameters					
6040		CiA 402 Control Word	UINT16	RW	Control CiA-402 State Machine

Table 27. All data objects

Index: Sub-index		Name	Type	R/W	Description
6041		CiA 402 Status Word	UINT16	RO	Current CiA-402 state
6042		CiA 402 vl Target Velocity	INT16	RW	RPM-speed request
6043	-	CiA 402 vl Velocity Demand	INT16	RO	Ramp generator output scaled into RPM
6044	-	CiA 402 vl Velocity Actual	INT16	RO	Current RPM-speed
6046	0	CiA 402 vl Velocity Min Max Amount	Group	RO	
	01	CiA 402 vl Velocity Min Amount	UINT32	RW	Minimum RPM-speed
	02	CiA 402 vl Velocity Max Amount	UINT32	RW	Maximum RPM-speed
6048	0	CiA 402 vl Velocity Acceleration	Group	RO	Slope of the acceleration ramp
	01	CiA 402 vl Velocity Delta Speed	UINT32	RW	
	02	CiA 402 vl Velocity Delta Time	UINT16	RW	
6049	0	CiA 402 vl Velocity Deceleration	Group	RO	Slope of the deceleration ramp
	01	CiA 402 vl Velocity Delta Speed	UINT32	RW	
	02	CiA 402 vl Velocity Delta Time	UINT16	RW	
604B	0	CiA-402 vl Velocity Setpoint Factor	Group	RO	Adjust scaling of CiA-402 vl Target Velocity and CiA-402 vl Velocity Actual
	01	vl Velocity Setpoint Factor Numerator	UINT16	RO	Numerator of scaling factor
	02	vl Velocity Setpoint Factor Denominator	UINT16	RW	Denominator of scaling factor
6060	-	Modes of Operation	INT8	RW	Select operate mode
6061	-	CiA 402 Modes Of Operation Display	INT8	RO	Current CiA-402 operation mode
6502		CiA 402 Supported Drive Modes	UINT32	RO	Supported CiA-402 drive

7.2 Data Object Descriptions

This chapter explains thoroughly all the data objects mentioned in Chapter 7.1.

The table below explains for the format of the data object tables of the following chapters.

Table 28. Legend of Data Object description table

Name of the Data Object			
PDO Index	**CoE Index**	**Valid in Mode**	**R/W**
Process data object index if the object is mapped to the process data.	CoE MailBox index of the described data object.	States the OPTEC Option Board mode in which data of this object is valid: • Bypass = Data is valid when OPTEC is in Bypass mode • CiA-402 = Data is valid when OPTEC is in CiA402 Drive Profile Mode	States the access right of this data object: • R = Data object is Read-Only • RW = Data object is Writable and Readable

7.2.1 RxPDO ASSIGN

The RxPDO assign object is used to select the process data objects that are transmitted from EtherCAT master to OPTEC EtherCAT. In OPTEC EtherCAT all these indices are fixed, meaning that process data object's internal content cannot be modified in EtherCAT bus level.

In case of CiA-402 Drive Profile mode:

- Assigning of following RxPDO objects is mandatory: 0x1600, 0x1601, 0x1602, 0x1610
- Assigning of following RxPDO objects is optional: 0x1603, 0x1604

In case of Bypass mode:

- Assigning of following RxPDO objects is mandatory: 0x1601, 0x1602, 0x1610
- Assigning of following RxPDO objects is optional: 0x1603, 0x1604
- Assigning of following RxPDO objects is not required: 0x1600

NOTE! Enabling and disabling of 0x1600 CiA-402 specific process data object changes Operation mode of OPTEC EtherCAT. See details in Chapter 6.3.3 "Operation mode selection using PDO assignment".

Each of following RxPDOs contains four (4) process data items: 0x1601, 0x1602, 0x1603 and 0x1604. For example, 0x01601 2nd Receive PDO Mapping contains following process data items:

- Drive Process Data In 1
- Drive Process Data In 2
- Drive Process Data In 3
- Drive Process Data In 4

All VACON® AC drives supports eight (8) receive process data items. Using of 9-16 process data items requires Normal Extended Communication or Fast Communication support from VACON® AC drive. See details of communication modes in Chapter 14 "APPENDIX F - FIELDBUS OPTION BOARD COMMUNICATION".

If EtherCAT master assigns 16 process data items and VACON® AC drive supports only 8 process data items, then content of RxPDOs 9-16 is ignored in VACON® AC drive.

RxPDO assign descriptions			
PDO Index	**CoE Index**	**Valid in Mode**	**R/W**
-	1C12:0	Bypass, CiA-402	RW

Sub-index	Name	Type	Access	Description
1C12:01	Sub-index 001	UINT16	RO	Fixed, mandatory
1C12:02	Sub-index 002	UINT16	RO	Fixed, mandatory
1C12:03	Sub-index 003	UINT16	RO	Fixed, mandatory
1C12:04	Sub-index 004	UINT16	RO	Fixed, mandatory in CiA-402 Drive Profile mode, optional in Bypass mode
1C12:05	Sub-index 005	UINT16	RO	Fixed, optional
1C12:06	Sub-index 006	UINT16	RO	Fixed, optional

7.2.2 TxPDO assign

The TxPDO assign object is used to select the process data objects that are transmitted from OPTEC EtherCAT to EtherCAT master. In OPTEC EtherCAT all these indices are fixed, meaning that process data object's internal content cannot be modified in EtherCAT bus level.

In case of CiA-402 Drive Profile mode:

- Assigning of following TxPDO objects is mandatory: 0x1A00, 0x1A01, 0x1A02, 0x1A10
- Assigning of following TxPDO objects is optional: 0x1A03, 0x1A04

In case of Bypass mode:

- Assigning of following TxPDO objects is mandatory: 0x1A01, 0x1A02, 0x1A10
- Assigning of following TxPDO objects is optional: 0x1A03, 0x1A04
- Assigning of following TxPDO objects is not required: 0x1A00

NOTE! Enabling and disabling of 0x1A00 CiA-402 specific process data object changes Operation mode of OPTEC EtherCAT. Please see details in chapter 6.3.3 Operation mode selection using PDO assignment

Each of following TxPDOs contains four (4) process data items: 0x1A01, 0x1A02, 0x1A03 and 0x1A04. For example, 0x01A01 2nd Transmit PDO Mapping contains following process data items:

- Drive Process Data Out 1
- Drive Process Data Out 2
- Drive Process Data Out 3
- Drive Process Data Out 4

All VACON® AC drives supports eight (8) transmit process data items. Using of 9-16 process data items requires Normal Extended Communication or Fast Communication support from VACON® AC drive. See details of communication modes in Chapter 14 "APPENDIX F - FIELDBUS OPTION BOARD COMMUNICATION".

If EtherCAT master assigns 16 process data items and VACON® AC drive supports only 8 process data items, then content of TxPDOs 9-16 is set to zero in OPTEC EtherCAT option board.

TxPDO assign descriptions			
PDO Index	**CoE Index**	**Valid in Mode**	**R/W**
-	1C13:0	Bypass, CiA-402	RW

Sub-index	Name	Type	Access	Description
1C13:01	Sub-index 001	UINT16	RW	Fixed, mandatory
1C13:02	Sub-index 002	UINT16	RW	Fixed, mandatory
1C13:03	Sub-index 003	UINT16	RW	Fixed, mandatory
1C13:04	Sub-index 004	UINT16	RW	Fixed, mandatory in CiA-402 Drive Profile mode, optional in Bypass mode
1C13:05	Sub-index 005	UINT16	RW	Fixed, optional
1C13:06	Sub-index 006	UINT16	RW	Fixed, optional

7.2.3 Sync Manager

These objects are used to set the inputs and outputs of the synchronization parameters.

7.2.3.1 Sync mode

The status of the input and output parameters of the synchronization manager. To identify the current synchronization mode read the objects 0x1c32 and 0x1c33. To select the synchronization mode write to these indexes. OPTEC V003 and earlier support only freerun mode. OPTEC V004 and later supports SM synchronous or DC synchronous modes.

Sync mode descriptions			
PDO Index	**CoE Index**	**Valid in Mode**	**R/W**
-	1C32:01, 1C33:01	Bypass, CiA-402	RW

1C32:01	1C33:01	Name	Description
2	2	DC sync	Application is run synchronous to EtherCAT sync0 event based on distributed clocks unit
1	34	SM sync	Application is run synchronous to bus cycle
0	0	Free run mode	The EtherCAT communication and the application run independently of each other

Writing an unsupported value to SM sync mode produces an error. It is recommended to set the sync mode via master PLC settings and not by writing manually Sync mode parameter.

7.2.3.2 Sync modes supported

Supported sync modes can be determined by reading the logical high (1) bits from this object.

Sync Modes Supported descriptions			
PDO Index	**CoE Index**	**Valid in Mode**	**R/W**
-	1C32:04, 1C33:04	Bypass, CiA-402	RO

Bit	Name	Description	
		V004 and later	**V003 and earlier**
15	Not in use	-	-
14	Dynamic Cycle time	Not supported	Not supported
3-13	Not in use	-	-
2	DC synchronous mode supported	Supported	Not supported
1	SM synchronous mode supported	Supported	Not supported
0	Free run mode supported	Supported	Supported

7.2.3.3 Other parameters

All other Sync mode input and sync mode output parameters are explained in the following table. They are only supported by OPTEC V004 and later.

Index	Name	Description
05	Minimum cycle time	Minimum cycle time supported by device
06	Calc and copy time	Calculation and copy time of device
09	Delay time	Delay time of device
11	SM-Event missed	Increases if DC sync0 event triggers and SM event was not detected before sync0 event
12	Cycle time too small	Increases if SM event occurs while handling earlier SM event
32	Sync error	Boolean flag to indicate if SM_event missed or Cycle time too small have been detected

7.2.4 Drive System Time

Use the object to read and write drive system time. Feature is supported in VACON® NXP and VACON® 100 product family. Time is presented as unsigned 32 bit Unix time. For example, Unix time 1614179339 is 24-February-2021 15:08:59. Drive System Time can be accessed also via parameter channel by using ID 2551. See details of parameter channel in Chapter 7.4 "Accessing drive parameters via CoE MailBox".

In VACON® 100 family, the default time zone is UTC. Local time can be configured by changing the time zone and setting the daylight-saving mode. If VACON® 100 AC drive is equipped with Real-time clock battery, then setting of the time is not necessary after power cycle.

VACON® NXP AC drive does not have time settings, so value written to this ID must be local time. VACON® NXP system time is zero after the drive boots up. The system time is started after writing into ID 2551.

CiA-402 Modes of operation Display descriptions			
PDO Index	CoE Index	Valid in Mode	R/W
-	5FF2	Bypass, CiA-402	RW

Bit(s)		Name	Description
0-31		Drive System Time	Range 0...4294967295

7.2.5 Drive Information

Use the object to read information from the drive. In case of VACON® 100 product family you can also use this object to read and write the name of the drive.

Drive Information descriptions			
PDO Index	CoE Index	Valid in Mode	R/W
-	5FF3:0	Bypass, CiA-402	RO

Sub-index	Name	Type	Access	Description
5FF3:01	Drive serial number	STRING20	RO	The serial number of the drive

5FF3:02	Drive name	STRING40	RW	The user-defined name of the drive. Supported in VACON® 100 product family. Drive name can be seen in panel menu P6.7.

7.2.6 ESI File Selection Mode

Use the object to select the way that the OPTEC generates the product code and revision number for this device. The product code and revision number is used by the master device to recognise the slave. See details of this functionality in Chapter 7.4 "Accessing drive parameters via CoE MailBox".

Operating Energy descriptions			
PDO Index	**CoE Index**	**Valid in Mode**	**R/W**
-	5FF4:0	Bypass, CiA-402	RO

Sub-index	Name	Type	Access	Description
5FF4:01	Selection Mode	UINT16	RW	Selects the mode used to identify the slave description in the ESI file. The available modes are: OFF, Automatic and Static.
5FF4:02	Static Product Code	UINT32	RW	The product code when the static selection mode is used.
5FF4:03	Static Revision Number	UINT16	RW	The revision number when the static selection mode is used.

7.2.7 Operating Energy Counters

This object is used to read the drive's energy counters and reset the trip energy counter.

Operating Energy descriptions			
PDO Index	CoE Index	Valid in Mode	R/W
-	5FF4:0	Bypass, CiA-402	RO

Sub-index	Name	Type	Access	Description
5FF5:01	Energy	FLOAT32	RO	Total Energy consumed
5FF5:02	Trip energy	FLOAT32	RO	Trip Energy counter
5FF5:03	Reset Trip energy	UINT16	RW	Reset Trip Energy counter by writing '1' to this sub-index

NOTE! Resetting the counters is not supported in VACON® 20, VACON® 20 X and VACON® 20 CP. Therefore writing 1 to index 5FF5:03 has no effect.

7.2.8 Operating Trip Time Counters

This object is used to read and reset the drive's operating trip time counters.

Trip Operating Time descriptions			
PDO Index	CoE Index	Valid in Mode	R/W
-	5FF6:0	Bypass, CiA-402	RO

Sub-index	Name	Type	Access	Description
5FF6:01	Years	UINT16	RO	Trip counter value in years
5FF6:02	Days	UINT16	RO	Trip counter value in days
5FF6:03	Hours	UINT16	RO	Trip counter value in hours
5FF6:04	Minutes	UINT16	RO	Trip counter value in minutes
5FF6:05	Seconds	UINT16	RO	Trip counter value in seconds
5FF6:06	Total seconds	UINT32	RO	Total trip counter value in seconds
5FF6:07	Reset Trip Operat-ing Time	UINT16	RW	Reset Trip Operating Time by writing '1' to this sub-index.

NOTE! Resetting the counters is not supported in VACON® 20, VACON® 20 X and VACON® 20 CP. Therefore writing 1 to index 5FF6:07 has no effect.

7.2.9 Operating Time Counters

This object is used to access the drive's operating time counters.

Operating Time descriptions			
PDO Index	**CoE Index**	**Valid in Mode**	**R/W**
-	5FF7:0	Bypass, CiA-402	RO

Sub-index	Name	Type	Access	Description
5FF7:01	Years	UINT16	RO	Time counter value in years
5FF7:02	Days	UINT16	RO	Time counter value in days
5FF7:03	Hours	UINT16	RO	Time counter value in hours
5FF7:04	Minutes	UINT16	RO	Time counter value in minutes
5FF7:05	Seconds	UINT16	RO	Time counter value in seconds
5FF7:06	Total seconds	UINT32	RO	Total time counter value in seconds

7.2.10 Parameter Channel Read

This object is used to read drive specific parameters using the parameter ID. See example of using this object in Chapter 7.4 "Accessing drive parameters via CoE MailBox".

ParReadCoE descriptions			
PDO Index	**CoE Index**	**Valid in Mode**	**R/W**
-	5FF8:0	Bypass, CiA-402	RO

Sub-index	Name	Type	Access	Description	
5FF8:01	ParReadID	UINT16	RW	ParReadIDStatus	
5FF8:02	ParReadIDValue	UINT32	RO	Parameter value	
5FF8:03	ParReadIDSeqNo	UINT16	RO	Parameter read sequence number. This value will increase by one for every successful operation	
5FF8:04	ParReadIDStatus	INT16	RO	Read Operation status	
				Return code	**Description**
				0	Read operation successful
				-2	Parameter ID not found
				-5	Internal communication error
				-6	Parameter type not supported for reading
				-9	Operation not supported in Fast Process Data Mode
				-127	Undefined error

7.2.11 Parameter Channel Write

This object is used to write drive specific parameters using the parameter ID. See example of using this object in Chapter 7.4 "Accessing drive parameters via CoE MailBox".

ParWriteCoE descriptions			
PDO Index	**CoE Index**	**Valid in Mode**	**R/W**
-	5FF9:0	Bypass, CiA-402	RO

Sub-index	Name	Type	Access	Description	
5FF9:01	ParWriteID	UINT16	RW	Parameter ID to write	
5FF9:02	ParWriteIDValue	UINT32	RW	Parameter value to write	
5FF9:03	ParWriteIDSeqNo	UINT16	RO	Parameter write sequence number. This value will increase by one for every successful operation	
5FF9:04	ParWriteIDStatus	INT16	RO	Write operation status	
				Return code	**Description**
				0	Read operation successful
				-1	Parameter is read only
				-2	Parameter ID not found
				-3	Value out of range
				-4	Parameter is locked by drive
				-5	Internal communication error
				-6	Parameter type not supported for writing
				-8	Internal communication timeout
				-9	Operation not supported in Fast Process Data Mode
				-127	Undefined error

7.2.12 Bypass Control

7.2.12.1 Bypass Fixed Control Word

Bypass fixed Control Word is used to control the AC drive when the OPTEC Option Board is in Bypass Mode. See details of mode selection in Chapter 6.3 "Operation mode selection".

NOTE! Fixed Control Word content depends from the drive model and application. See drive model specific control word definitions in Chapter 11 "APPENDIX C - CONTROL AND STATUS WORD".

Bypass Fixed Control Word field descriptions			
PDO Index	**CoE Index**	**Valid in Mode**	**R/W**
1610:01	5FFA:01	Bypass	RW

Bit(s)	Name	Description
0-15	Bypass Control Word	See Bypass control word definition in Chapter 11 "APPENDIX C - CONTROL AND STATUS WORD"

7.2.12.2 Bypass General Control Word

The functionality of Bypass General Control Word depends on the selected application.

Bypass General Control Word field descriptions			
PDO Index	**CoE Index**	**Valid in Mode**	**R/W**
1610:02	5FFA:02	Bypass	RW

Bit(s)		Name	Description
15-0			Application dependent, see application manual for more information.

7.2.13 Bypass status

7.2.13.1 Bypass Fixed Status Word

The manufacturer specific state of the AC drive can be determined by reading the bit values of this object in Bypass Mode. See details of mode selection in Chapter 6.3 "Operation mode selection".

NOTE! Fixed Status Word content depends from the drive model and application. See drive model specific status word definitions in Chapter 11 "APPENDIX C - CONTROL AND STATUS WORD".

Bypass Fixed Status Word descriptions			
PDO Index	**CoE Index**	**Valid in Mode**	**R/W**
1A10:01	5FFB:01	Bypass	RO

Bit(s)	Name	Description
0-15	Bypass Status Word	See Bypass control word definition in Chapter 11 "APPENDIX C - CONTROL AND STATUS WORD".

7.2.13.2 Bypass General Status Word

The functionality of Bypass General Status Word depends on the selected application.

Bypass General Status Word descriptions			
PDO Index	**CoE Index**	**Valid in Mode**	**R/W**
1A10:02	5FFB:02	Bypass	RO

Bit(s)		Name	Description
0 - 15			Application dependent. See application manual for more information.

7.2.14 Bypass Speed SetPoint Value

Bypass Speed SetPoint Value is used to set the speed of the AC drive's motor in percentages, when the OPTEC Option Board is in Bypass Mode. Speed value is unsigned in the range 0...10000d (0...2710h). The value 0 corresponds to MinimumFrequency and the value 10000d corresponds to MaximumFrequency. The scale of the value is 0.01%.

Bypass Speed SetPoint Value field descriptions (W)			
PDO Index	**CoE Index**	**Valid in Mode**	**R/W**
1610:03	5FFC	Bypass	RW

Bit(s)		Name	Description
0-15		Speed SetPoint Value	Speed reference. The spin direction is controlled by the direction bit 1 in Bypass Fixed Control Word. Range: 0...10000 • **10000** = 100.00%

7.2.15 Bypass Speed Actual Value

The percentage of Minimum and Maximum RPM speed of the AC drive's motor can be read from this object. Actual speed value is unsigned in the range 0...10000d (0...2710h). The value 0 corresponds to MinimumFrequency and the value 10000d corresponds to MaximumFrequency. The scale of the value is 0.01%.

Bypass Speed Actual Value field descriptions			
PDO Index	**CoE Index**	**Valid in Mode**	**R/W**
1A10:03	5FFD	Bypass	RO

Bit(s)		Name	Description
0-15		Speed Actual Value	Motor actual speed. The spin direction is read in Bypass Fixed Status Word bit 2. Range: 0...10000 • **10000** = 100.00%

7.2.16 Process Data In

EtherCAT master can write to AC drive's internal variables through these process data objects. The behavior depends on the application that is currently active and running on the AC drive. See field bus process data mapping in Chapter 13 "APPENDIX E - FIELDBUS PROCESS DATA mAPPING AND SCALING".

Each RxPDO contains four (4) process data items. For example, 0x01601 2nd Receive PDO Mapping contains following process data items:

- Drive Process Data In 1
- Drive Process Data In 2
- Drive Process Data In 3
- Drive Process Data In 4

All VACON® AC drives supports eight (8) receive process data items. Using of 9-16 process data items requires Normal Extended Communication or Fast Communication support from VACON® AC drive. See details of communication modes in Chapter 14 "APPENDIX F - FIELDBUS OPTION BOARD COMMUNICATION".

If EtherCAT master uses 16 process data items and VACON® AC drive supports only 8 process data items, then content of process data items 9-16 is ignored in VACON® AC drive.

Process Data In 1-16 descriptions			
PDO Index	**CoE Index**	**Valid in Mode**	**R/W**
0x1601:1-4 0x1602:1-4 0x1603:1-4 0x1604:1-4	5FFE:1-16	Bypass, CiA-402	RW

The figure below shows how RxPDO process data objects are transferred inside of EtherCAT datagram. In this example CiA-402 Drive Profile mode is used for controlling AC drive. Drive Process Data items 1 - 12 are just carrying running number 1001 - 1012. EtherCAT master have assigned RxPDOs 0x1600, 0x1601, 0x1602, 0x1603 and 0x1610 by using RxPDO assign object 0x1C12.

Transition	Protocol	Index	Data	Comment
C <PS>	CoE	0x1C12:00	0x00 (0)	clear sm pdos (0x1C12)
C <PS>	CoE	0x1C13:00	0x00 (0)	clear sm pdos (0x1C13)
C <PS>	CoE	0x1C12:01	0x1600 (5632)	download pdo 0x1C12:01 index
C <PS>	CoE	0x1C12:02	0x1601 (5633)	download pdo 0x1C12:02 index
C <PS>	CoE	0x1C12:03	0x1602 (5634)	download pdo 0x1C12:03 index
C <PS>	CoE	0x1C12:04	0x1603 (5635)	download pdo 0x1C12:04 index
C <PS>	CoE	0x1C12:05	0x1610 (5648)	download pdo 0x1C12:05 index
C <PS>	CoE	0x1C12:00	0x05 (5)	download pdo 0x1C12 count
C <PS>	CoE	0x1C13:01	0x1A00 (6656)	download pdo 0x1C13:01 index
C <PS>	CoE	0x1C13:02	0x1A01 (6657)	download pdo 0x1C13:02 index
C <PS>	CoE	0x1C13:03	0x1A02 (6658)	download pdo 0x1C13:03 index
C <PS>	CoE	0x1C13:04	0x1A03 (6659)	download pdo 0x1C13:04 index
C <PS>	CoE	0x1C13:05	0x1A10 (6672)	download pdo 0x1C13:05 index
C <PS>	CoE	0x1C13:00	0x05 (5)	download pdo 0x1C13 count

11931_00

Figure 42. RxPDO process data assignment example

Table 29. RxPDO process data objects inside of EtherCAT datagram

PDO Index	Process data item name	Process data item value (dec)	EtherCAT datagram byte index (hex)	EtherCAT datagram value (hex)
0x1600:1	CiA 402 Control Word	15	00	0F
			01	00
0x1600:2	CiA 402 vl Target Velocity	300	02	2C
			03	01
0x1601:1	Drive Process Data In 1	1001	04	E9
			05	03
0x1601:2	Drive Process Data In 2	1002	06	EA
			07	03
0x1601:3	Drive Process Data In 3	1003	08	EB
			09	03
0x1601:4	Drive Process Data In 4	1004	0A	EC
			0B	03
0x1602:1	Drive Process Data In 5	1005	0C	ED
			0D	03
0x1602:2	Drive Process Data In 6	1006	0E	EE
			0F	03
0x1602:3	Drive Process Data In 7	1007	10	EF
			11	03
0x1602:4	Drive Process Data In 8	1008	12	F0
			13	03
0x1603:1	Drive Process Data In 9	1009	14	F1
			15	03
0x1603:2	Drive Process Data In 10	1010	16	F2
			17	03
0x1603:3	Drive Process Data In 11	1011	18	F3
			19	03
0x1603:4	Drive Process Data In 12	1012	1A	F4
			1B	03
0x1610:1	Bypass Fixed Control Word	0	1C	00
			1D	00
0x1610:2	Bypass General Control Word	0	1E	00
			1F	00
0x1610:3	Bypass Speed Setpoint Value	0	20	00
			21	00

7.2.17 Process Data Out

EtherCAT master can receive feedback and status information from AC drive through these process data objects. Content of process data mapped to the field bus depends on application currently running in the AC drive. See application manual for more information.

Each TxPDOs contains four (4) process data items: 0x1A01. For example, 0x01A01 2nd Transmit PDO Mapping contains following process data items:

- Drive Process Data Out 1
- Drive Process Data Out 2
- Drive Process Data Out 3
- Drive Process Data Out 4

All VACON® AC drives supports eight (8) transmit process data items. Using of 9-16 process data items requires Normal Extended Communication or Fast Communication support from VACON® AC drive. See details of communication modes in Chapter 14 "APPENDIX F - FIELDBUS OPTION BOARD COMMUNICATION".

If EtherCAT master uses 16 process data items and VACON AC drive supports only 8 process data items, then content of TxPDO data items 9-16 is set to zero in OPTEC EtherCAT option board.

Process Data Out 1-16 descriptions			
PDO Index	**CoE Index**	**Valid in Mode**	**R/W**
0x1A01:1-4 0x1A02:1-4 0x1A03:1-4 0x1A04:1-4	5FFF:1-16	Bypass, CiA-402	RO

Following example shows how TxPDO process data objects are transferred inside of EtherCAT datagram. In this example Bypass mode is used for controlling AC drive. Drive Process Data items 1 - 8 are just carrying running number 1001 - 1008. EtherCAT master have assigned TxPDOs 0x1A01, 0x1A02 and 0x1A10 by using TxPDO assign object 0x1C13.

Transition	Protocol	Index	Data	Comment
C <PS>	CoE	0x1C12:00	0x00 (0)	clear sm pdos (0x1C12)
C <PS>	CoE	0x1C13:00	0x00 (0)	clear sm pdos (0x1C13)
C <PS>	CoE	0x1C12:01	0x1601 (5633)	download pdo 0x1C12:01 index
C <PS>	CoE	0x1C12:02	0x1602 (5634)	download pdo 0x1C12:02 index
C <PS>	CoE	0x1C12:03	0x1610 (5648)	download pdo 0x1C12:03 index
C <PS>	CoE	0x1C12:00	0x03 (3)	download pdo 0x1C12 count
C <PS>	CoE	0x1C13:01	0x1A01 (6657)	download pdo 0x1C13:01 index
C <PS>	CoE	0x1C13:02	0x1A02 (6658)	download pdo 0x1C13:02 index
C <PS>	CoE	0x1C13:03	0x1A10 (6672)	download pdo 0x1C13:03 index
C <PS>	CoE	0x1C13:00	0x03 (3)	download pdo 0x1C13 count

11932_00

Figure 43. TxPDO process data assignment example

Table 30. TxPDO process data objects inside of EtherCAT datagram

PDO Index	Process data item name	Process data item value (dec)	EtherCAT datagram byte index (hex)	EtherCAT datagram value (hex)
0x1A01:1	Drive Process Data Out 1	1001	00	E9
			01	03
0x1A01:2	Drive Process Data Out 2	1002	02	EA
			03	03
0x1A01:3	Drive Process Data Out 3	1003	04	EB
			05	03
0x1A01:4	Drive Process Data Out 4	1004	06	EC
			07	03
0x1A02:1	Drive Process Data Out 5	1005	08	ED
			09	03
0x1A02:1	Drive Process Data Out 6	1006	0A	EE
			0B	03
0x1A03:1	Drive Process Data Out 7	1007	0C	EF
			0D	03
0x1A04:1	Drive Process Data Out 8	1008	0E	F0
			0F	03
0x1A10:1	Bypass Fixed Status Word	163	10	A3
			11	00
0x1A10:2	Bypass General Status Word	308	12	34
			13	01
0x1A10:3	Bypass Speed Actual Value	1000	14	E8
			15	03

7.2.18 CiA-402 Control Word

The state of the AC drive's CiA-402 State machine can be changed by writing the desired bit to the logical high (1). See details of CiA-402 mode in Chapter 7.3.1 "CiA-402 Drive profile mode".

CiA-402 Control Word field descriptions			
PDO Index	**CoE Index**	**Valid in Mode**	**R/W**
1600:1	6040	CiA-402	RW

Bit(s)		Name	Description
12-15	na	Not Used	Bits 12 through 15 are not in use.
11	ar	Alarm reset	The rising edge resets the alarm.
10	r	Reserved	Bit 10 is not in use
9	oms	Operation mode specific	Bit 9 is not in use

8	h	Halt	Bit 8 is not in use.
7	fr	Fault reset	The rising edge resets the fault.
4-6	na	Not Used	Bits 4 through 6 are not in use.
3	eo	Enable operation	Start drive
2	qs	Quick stop	Stops the drive by using the drive- or application-specific stop function that is used as quick stop.
1	ev	Enable Voltage	Enables/Disables output voltage
0	so	Switch on	Enables the possibility to start the drive together with ev.

7.2.19 CiA-402 Status Word

The CiA-402 State of the AC drive can be determined from this object by reading the logical high bits. See details of CiA-402 mode in Chapter 7.3.1 "CiA-402 Drive profile mode" .

CiA-402 Status word field descriptions			
PDO Index	**CoE Index**	**Valid in Mode**	**R/W**
1A00:01	6041	CiA-402	RO

Bit(s)		Name	Description
15	na	Not in Use	Bit 15 is not used.
14	idm	Incorrect drive mode	Indicates that the drive is in incorrect “Control mode” for the used CiA-402 profile
12-13	oms	Operation mode specific	Bits 12 through 13 are not in use
10	tr	Target reached	Target velocity reached
9	rm	Remote	Indicates that the drive is controllable by Fieldbus.
8	na	Not in Use	Bit 8 not in use.
7	w	Warning	AC drive has active Alarm
6	sod	Switch on disabled	PDS switch on disable
5	qs	Quick stop	PDS quick stop active
4	ve	Voltage enabled	Voltage is enabled
3	f	Fault	PDS Fault (Indicates fault condition)
2	oe	Operation enabled	PDS operation enabled (drive is running)
1	so	Switched on	PDS switched on
0	rtso	Ready to switch on	PDS ready to switch on

7.2.20 CiA-402 vl Target Velocity

RPM speed request for the AC drive’s motor in revolutions per minute. A negative value means that the motor is requested to run counterclockwise.

NOTE! In CiA-402 Drive Profile mode it is recommended to set AC drive’s “Fieldbus min scale” and “Fieldbus max scale” parameters value to zero. In otherwise RPM scaling does not work properly.

NOTE! CiA-402 object 0x604B can be used to increase the supported RPM range of this object. This is mainly for NXP High Speed applications where RPMs can be over 100k RPM.

Part of NXP applications contains "Fieldbus min scale" and "Fieldbus max scale" settings. In AP-FIFF06 Multipurpose application these parameters can be found from menu P2.9.1 and P2.9.2.

CiA-402 vl Target Velocity field descriptions			
PDO Index	**CoE Index**	**Valid in Mode**	**R/W**
1600:02	6042	CiA-402	RW

Bit(s)		Name	Description
0-15		Target Velocity	Range -32768...32767 RPM

7.2.21 CiA-402 vl Velocity Demand

The value of the ramp generator output scaled into RPM. The actual value in RPM of the AC drive's motor rotation. A negative value means that the motor is running counterclockwise.

CiA-402 vl Velocity Demand descriptions			
PDO Index	**CoE Index**	**Valid in Mode**	**R/W**
-	6043	CiA-402	RO

Bit(s)		Name	Description
0-15		Velocity Demand	Range -32768...32767

7.2.22 CiA-402 vl Velocity Actual Value

The RPM speed of the AC drive's motor can be read from this object. A negative value means that the motor is running counterclockwise.

NOTE! CiA-402 object 0x604B can be used to increase the supported RPM range of this object. This is mainly for NXP High Speed applications where RPMs can be over 100k RPM.

CiA-402 vl Velocity Actual Value field descriptions			
PDO Index	**CoE Index**	**Valid in Mode**	**R/W**
1A00:02	6044	CiA-402	RO

Bit(s)		Name	Description
0-15		Velocity Actual Value	Range -32768...32767

7.2.23 CiA-402 vl Velocity Min Max Amount

7.2.23.1 CiA-402 vl Velocity Min Amount

Minimum RPM speed of the AC drive's motor. The motor runs on speed defined here when the CiA-402 cl Target Velocity is set to 0.

CiA-402 vl Velocity Min Amount descriptions			
PDO Index	**CoE Index**	**Valid in Mode**	**R/W**
-	6046:01	CiA-402	RW

Bit(s)	Name	Description

0-31		Velocity Min Amount	Range 0...4294967295

7.2.23.2 CiA-402 vl Velocity Max Amount

Maximum RPM speed of AC drive's motor.

CiA-402 vl Velocity Max Amount descriptions			
PDO Index	**CoE Index**	**Valid in Mode**	**R/W**
-	6046:02	CiA-402	RW

Bit(s)		Name	Description
0-31		Velocity Max Amount	Range 0...4294967295

7.2.24 CiA-402 vl Velocity Acceleration

This object indicates the configured delta speed and delta time of the slope of the acceleration ramp.

CiA-402 vl Velocity Acceleration descriptions			
PDO Index	**CoE Index**	**Valid in Mode**	**R/W**
-	6048:0	CiA-402	RO

Sub-index	Name	Type	Access	Description
6048:01	Acceleration Delta Speed	UINT32	RW	Defines the maximum change of RPM the motor will accelerate during the time specified in Acceleration Delta Time.
6048:02	Acceleration Delta Time	UINT16	RW	Defines the time (in seconds) in which the RPM of the motor will accelerate the amount specified in Acceleration Delta Speed.

7.2.25 CiA-402 vl Velocity Deceleration

This object indicates the configured delta speed and delta time of the slope of the deceleration ramp.

CiA-402 vl Velocity Deceleration descriptions			
PDO Index	**CoE Index**	**Valid in Mode**	**R/W**
-	6049:0	CiA-402	RO

Sub-index	Name	Type	Access	Description
6049:01	Deceleration Delta Speed	UINT32	RW	Defines the maximum change of RPM the motor will decelerate during the time specified in Deceleration Delta Time.
6049:02	Deceleration Delta Time	UINT16	RW	Defines the time (in seconds) in which the RPM of the motor will decelerate the amount specified in Deceleration Delta Speed.

7.2.26 CiA 402 Modes of Operation

Select Operation mode. The Operation mode defines how EtherCAT master can control the motor and monitor the motor control status. OPTEC EtherCAT supports following modes:

- Drive Profile means CiA-402 Drive and Motion Control Profile's Velocity mode. This mode is enabled by default.
- Bypass means VACON® specific control mode

See detailed description of these modes in Chapter 7.3 "Operating modes".

CiA-402 Modes of operation descriptions			
PDO Index	**CoE Index**	**Valid in Mode**	**R/W**
-	6060	Bypass, CiA-402	RW

Value	Name	Description
-128 to -2	Manufacturer-specific operation modes	Not supported.
-1	Bypass mode	VACON® specific Bypass mode
0	No mode	Not supported.
+1	Profile position mode	Not supported.
+2	Velocity mode	CiA-402 Drive and Motion Control Profile's Velocity mode. Used to control the velocity of the drive with no special regard to the position.
+3	Profile velocity mode	Not supported.
+4	Torque profile mode	Not supported.
+5	Reserved	Not supported.
+6	Homing mode	Not supported.
+7	Interpolated position mode	Not supported.
+8	Cyclic sync position mode	Not supported.
+9	Cyclic sync velocity mode	Not supported.
+10	Cyclic sync torque mode	Not supported.
+11 to +127	Reserved	

7.2.27 CiA-402 Modes of Operation Display

The current CiA-402 operation mode can be determined by reading the Integral value of this object. See the table below for more details.

CiA-402 Modes of operation Display descriptions			
PDO Index	**CoE Index**	**Valid in Mode**	**R/W**
-	6061	Bypass, CiA-402	RO

Value	Name	Description
-128 to -2	Manufacturer-specific operation modes	Not supported
-1	Bypass mode	VACON® specific Bypass mode
0	No mode	No mode is selected
+1	Profile position mode	Not supported
+2	Velocity mode	CiA-402 Drive and Motion Control Profile's Velocity mode. Used to control the velocity of the drive with no special regard to the position.
+3	Profile velocity mode	Not supported
+4	Torque profile mode	Not supported
+5	Reserved	Not supported
+6	Homing mode	Not supported
+7	Interpolated position mode	Not supported
+8	Cyclic sync position mode	Not supported
+9	Cyclic sync velocity mode	Not supported
+10	Cyclic sync torque mode	Not supported
+11 to +127	Reserved	

7.2.28 CiA-402 supported Drive Modes

Supported CiA-402 drive modes can be determined by reading the logical high (1) bits from this object.

CiA-402 Supported Drive Modes descriptions			
PDO Index	**CoE Index**	**Valid in Mode**	**R/W**
-	6502	Bypass, CiA-402	RO

Bit(s)		Name	Description
31	ms	Manufacturer specific	Supported
30-16	na	Not in use	Reserved for manufacturer specific modes
15-10	r	Reserved	
9	cst	Cyclic sync torque mode	Not supported
8	csv	Cyclic sync velocity mode	Not supported
7	csp	Cyclic sync position mode	Not supported
6	Ip	Interpolated position mode	Not supported
5	hm	Homing mode	Not supported
4	r	Reserved	
3	tq	Torque profile mode	Not supported
2	pv	Profile velocity mode	Not supported
1	vl	Velocity mode	Supported
0	pp	Profile position mode	Not supported

7.3 Operating modes

The OPTEC Option Board has two modes: CiA-402 and Bypass mode. By default, the option board is set to CiA-402 mode. Switching of Operate mode is described in Chapter 6.3 "Operation mode selection".

7.3.1 CiA-402 Drive profile mode

The OPTEC Option Board is set by default to this mode. In CiA-402 mode, the AC drive can be controlled using the CiA-402 Drive and Motion Control Profile's Velocity mode. The following data objects are usable in CiA-402 mode:

Table 31. Data objects available in CiA-402 mode

Process data	CoE Index	Data object Name	R/W
0x1601:1-4 0x1602:1-4 0x1603:1-4 0x1604:1-4	5FFE:1-16	Process Data In 1-16	RW
0x1A01:1-4 0x1A02:1-4 0x1A03:1-4 0x1A04:1-4	5FFF:1-16	Process Data Out 1-16	RO
0x1605:1-4 0x1606:1-4 0x1607:1-4 0x1607:1-4	5FFE:17-32	Process Data In 1-16, 32bit, only in VACON® 100	RW
0x1A05:1-4 0x1A06:1-4 0x1A07:1-4 0x1A07:1-4	5FFF:17-32	Process Data Out 1-16, 32bit, only in VACON® 100	RO
0x1600:1	0x6040	CiA 402 Control Word	RW
0x1A00:1	0x6041	CiA 402 Status Word	R

Table 31. Data objects available in CiA-402 mode

Process data	CoE Index	Data object Name	R/W
0x1600:2	0x6042	CiA 402 vl Target Velocity	RW
-	0x6043	CiA-402 vl Velocity Demand	R
0x1A00:2	0x6044	CiA 402 vl Velocity Actual	R
-	0x6046:1	CiA-402 vl Velocity Min Amount	RW
-	0x6046:2	CiA-402 vl Velocity Max Amount	RW
-	0x6048:1	Acceleration Velocity Delta Speed	RW
-	0x6048:2	Acceleration Velocity Delta Time	RW
-	0x6049:1	Deceleration Velocity Delta Speed	RW
-	0x6049:2	Deceleration Velocity Delta Time	RW
-	0x6060	CiA 402 Modes of Operation	RW
-	0x6061	CiA 402 Modes Of Operation Display	R
-	0x6502	CiA 402 Supported Drive Modes	R

Data objects **CiA-402 Control Word** and **CiA-402 Status Word** can be used to control the AC drive's CiA-402 state machine and to read the state of the AC drive's CiA-402 State machine. See description of CiA-402 Control Word and Status Word in a following chapters: Chapter 7.2.18 "CiA-402 Control Word" and Chapter 7.2.19 "CiA-402 Status Word".

The possible CiA-402 State machine states and transitions can be seen from Figure 45. The state of the AC drive's CiA-402 state machine can be changed by writing the corresponding bits to **CiA 402 Control Word** data object. The needed bit values for each command can be seen from the Figure 44.

Command	Bits of the *controlword*					Transitions
	Bit 7	Bit 3	Bit 2	Bit 1	Bit 0	
Shutdown	0	X	1	1	0	2.6.8
Switch on	0	0	1	1	1	3
Switch on + enable operation	0	1	1	1	1	3 + 4 (NOTE)
Disable voltage	0	X	X	0	X	7,9,10,12
Quick stop	0	X	0	1	X	7,10,11
Disable operation	0	0	1	1	1	5
Enable operation	0	1	1	1	1	4,16
Fault reset	↑	X	X	X	X	15
NOTE Automatic transition to Enable operation state after executing SWITCHED ON state funtionality. 9422_uk						

Figure 44.CiA-402 Control word commands

For example **CiA-402 Control Word** data object value for *Fault reset command* would be 0x80.

If CiA-402 mode is enabled, the state machine will always follow the state of the drive. However the state machine is controllable via CiA-402 Control Word only if Remote Control Place is set to Field-bus control .

If Control mode is not set to speed control, CiA-402 vl Target Velocity will not work as intended. CiA-402 Status Word bit 14 (idm) is set if drive is not in correct control mode. In NXP Closed loop speed control can be also used.

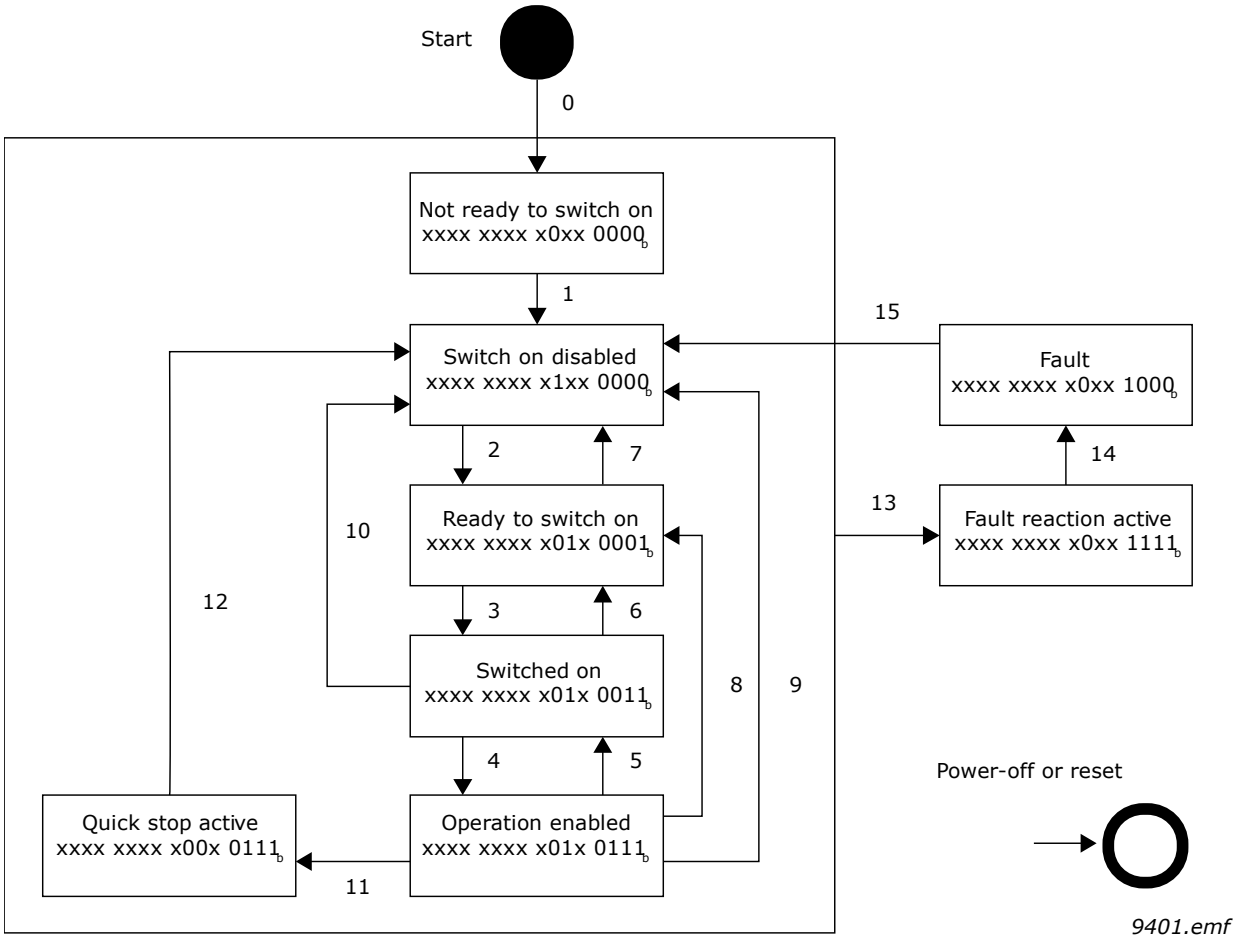

Figure 45.CiA-402 States

The table below explains the actions taken in different state transitions and which event triggers which state transition. If the used drive/application does not support different stop bits in Fixed Control Word, the stop method will always be according to set stop function.

Table 32. State transition events and actions

Transition	Event(s)	Action(s)
0	Automatic transition after power-on or reset	Self-initialization is performed
1	Automatic transition after drive status is 'ready'	None
2,6	Shutdown command	None
3	Switch on command	None
4	Enable operation command	Drive function is enabled
5	Disable operation command	Drive function is disabled
7	Disable voltage or quick stop command	None

Table 32. State transition events and actions

Transition	Event(s)	Action(s)
8	Shutdown command	Stop by ramp /stop function
9	Disable voltage command	Stop by coast / stop function
10, 12	Disable voltage command	None
11	Quick stop command	Quick stop / stop function
13	Fault signal	Go to fault state and stop by stop function
14	Automatic transition	None
15	Fault reset command	Reset fault if no fault currently exists on drive

Current CiA-402 state can be determined by reading the value of CiA 402 Status Word Data Object and comparing the value of bits to the table below.

Table 33. Statusword bits

Bits of the statusword									**PDS state**
15-8	**7**	**6**	**5**	**4**	**3**	**2**	**1**	**0**	
x	x	0	x	x	0	0	0	0	Not ready to switch on
x	x	1	x	x	0	0	0	0	Switch on disabled
x	x	0	1	x	0	0	0	1	Ready to switch on
x	x	0	1	x	0	0	1	1	Switched on
x	x	0	1	x	0	1	1	1	Operation enabled
x	x	0	0	x	0	1	1	1	Quick stop active
x	x	0	x	x	1	1	1	1	Fault reaction active
x	x	0	x	x	1	0	0	0	Fault
x = Do not care									

7.3.2 Bypass mode

Bypass mode is an optional mode for controlling the AC drive with the OPTEC Option Board. In Bypass mode, it is possible to write data values of the AC drive through Process Data. The valid data objects in Bypass mode can be seen from Table .

Table 34. Data objects available in Bypass mode

Process data	CoE Index	Data object Name	R/W
0x1601:1-4 0x1602:1-4 0x1603:1-4 0x1604:1-4	5FFE:1-16	Process Data In 1-16	RW
0x1A01:1-4 0x1A02:1-4 0x1A03:1-4 0x1A04:1-4	5FFF:1-16	Process Data Out 1-16	R
0x1605:1-4 0x1606:1-4 0x1607:1-4 0x1607:1-4	5FFE:17-32	Process Data In 1-16, 32bit, only in VACON® 100	RW
0x1A05:1-4 0x1A06:1-4 0x1A07:1-4 0x1A07:1-4	5FFF:17-32	Process Data Out 1-16, 32bit, only in VACON® 100	RO
0x1610:1	0x5FFA:1	Bypass Fixed Control Word	RW
0x1610:2	0x5FFA:2	Bypass General Control Word	RW
0x1A10:1	0x5FFB:1	Bypass Fixed Status Word	R
0x1A10:2	0x5FFB:2	Bypass General Status Word	R
0x1610:3	0x5FFC	Bypass Speed Setpoint Value	RW
0x1A10:3	0x5FFD	Bypass Speed Actual Value	R
-	0x6060	CiA 402 Modes of Operation	RW
-	0x6061	CiA 402 Modes Of Operation Display	R
-	0x6502	CiA 402 Supported Drive Modes	R

In Bypass mode, the AC drive can be controlled using the data objects Bypass Fixed Control Word and Bypass General Control Word.

Please see description of bypass Control Word and Status Word in Chapter 11 "APPENDIX C - CONTROL AND STATUS WORD".

7.4 Accessing drive parameters via CoE MailBox

AC drive parameters can be accessed via CoE MailBox functionality. Only requirement is that AC drive parameter must have a unique ID. Parameters can be accessed via CoE objects that are mapped in the manufacturers specific area between 0x2000 and 0x5EFF. IDs are mapped with their ID number at the base address starting from 0x2000.

For example, ID 103 (0x67) acceleration time is found at CoE index: 0x2000 + 0x67 = 0x2067.

NOTE! Most of VACON AC drive's parameters are application dependent. See parameter description and functionality from application specific manual. Application specific manuals can be downloaded from: https://www.danfoss.com/en/service-and-support/ -> Documentation -> Select “Drives” as Business unit -> Select "Application guide" as Document type -> Select a correct AC drive model in Product series.

7.4.1 CoE objects in ESI files

EtherCAT slave device's CoE objects are described in EtherCAT ESI files which can be imported EtherCAT master configuration tool. OPTEC EtherCAT option board's ESI file package can be downloaded from https://www.danfoss.com/en/service-and-support/ -> Software -> Select "Drives" as Business unit -> Fieldbus configuration files.

Drive and application specific ESI files defines CoE objects for application specific parameters. Following figure shows CoE objects from OPTEC_VACON_100_INDUSTRIAL_AMFI1002 ESI file. Index column tells CoE object index. Number inside of brackets tells ID number of the parameter. For example, Output frequency is located in ID 1 in AC drive. ID numbers are described in application manuals.

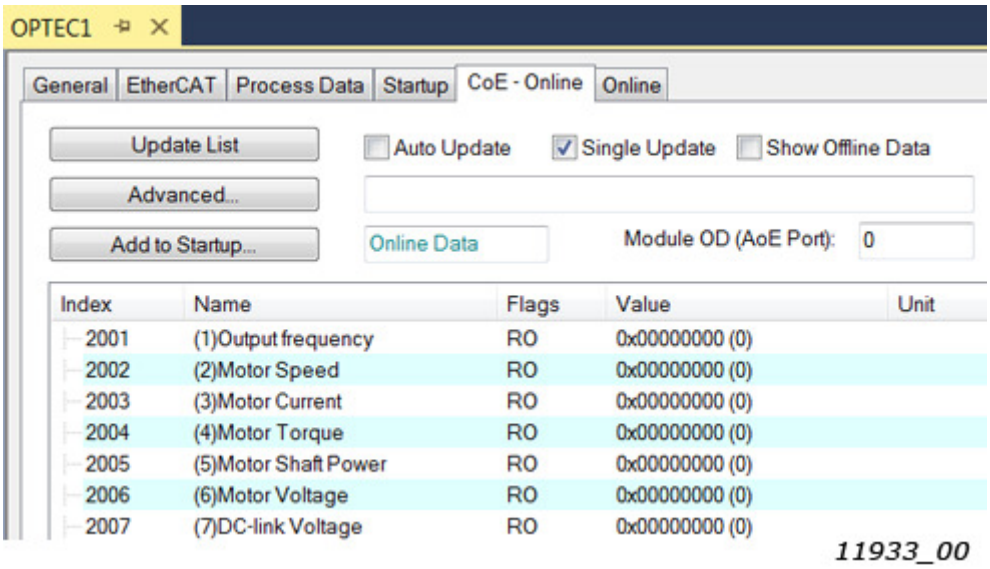

Figure 46. Application specific CoE object in TwinCAT

Importing of ESI files into configuration tool is described in Chapter 6.2.1 "Importing OPTEC EtherCAT ESI files". Selecting of ESI files with Product Code Number and Revision number is described in Chapter 6.4 "ESI file selection".

7.4.2 Adding CoE objects into ESI files

Parameters can be added into OPTEC EtherCAT ESI file. In a following figure object for Acceleration Time 1 (ID 103) have been added into generic OPTEC_VACON_OPTEC_Vxx_yyyymmdd.xml ESI file.

- x2067 is CoE index. Please see index calculation example from chapter 7.3 Accessing drive parameters via CoE MailBox
- (103)Acceleration time 1 is name for CoE object.
- UDINT is data type for the data. UDINT means unsigned 32bit variable. Other data types can be seen in "DATA TYPES" section in ESI file.
- 32 is number of bits in data. The bit size must match with the chosen data type.
- rw means that object data can be read and written. Other common access type is "ro" which means read only.

```
    <Category>0</Category>
    </Flags>
  </Object>
  <Object>
    <Index>#x2067</Index>
    <Name>(103)Acceleration Time 1</Name>
    <Type>UDINT</Type>
    <BitSize>32</BitSize>
    <Flags>
      <Access>rw</Access>
    </Flags>
  </Object>
  <!--
    OPERATING COUNTER AND PARAMETER CHANNEL OBJECTS
  -->
  <Object>
```

11934_00

Figure 47. Object for Acceleration Time 1 in ESI file

Modified ESI file can be imported into EtherCAT master's configuration tool. This specific parameter is stored into VACON® 100 drive by using four digits. Value 1234000 can be seen in AC drive keypad panel in format 123,4 s.

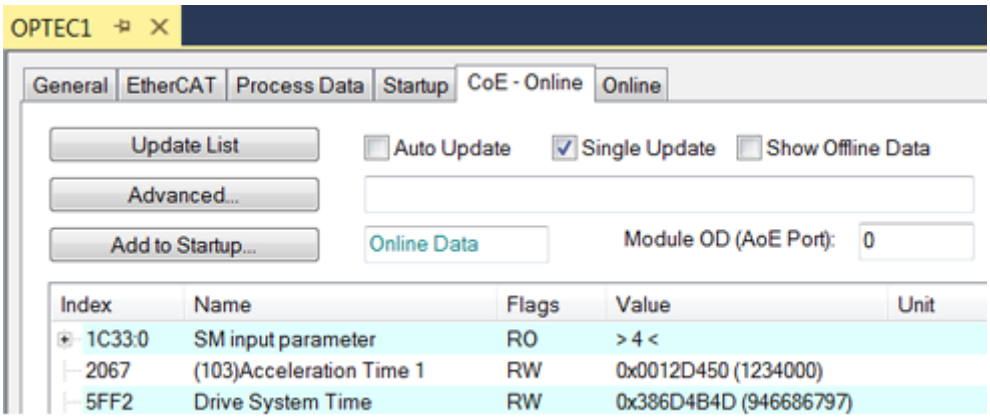

11935_00

Figure 48. Object for Acceleration Time 1 in TwinCAT

7.4.3 ERROR CODES

If the reading or writing an object fails, an error message appears. The corresponding error messages are explained in the table below.

Table 35. Object error messages

Code	Message	Description
0x06020000	Object does not exist in the object dictionary.	This object is invalid for this drive or application
0x05040000	SDO protocol timed out.	The option board timed out when trying to access the parameter
0x08000021	Data cannot be transferred or stored to the application because of local control	Parameter is locked

Table 35. Object error messages

Code	Message	Description
0x08000022	Data cannot be transferred or stored to the application because of the present device state.	The Control is busy. No data can currently be read or stored.
0x06010002	Attempt to write a read only object.	The parameter is read only
0x06090030	Value range of parameter exceeded (only for write access).	Attempted to write outside parameter valid range.

7.4.4 Example 1: Reading ID 103 'acceleration time' using the parameter channel

1	In TwinCAT's CoE -Online tab, find the object 5FF8 and expand the tree view. 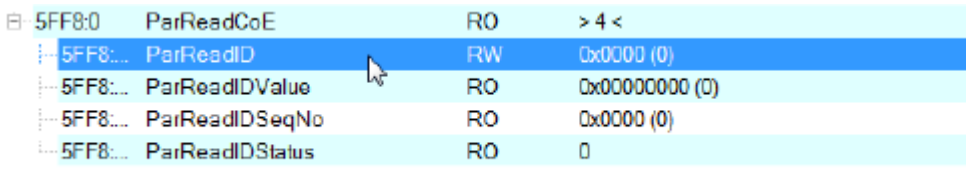 *11300A_00*
2	Double-click sub-index 5FF8:01 ParReadID and enter the acceleration time ID 103 in the dialog. Click OK. 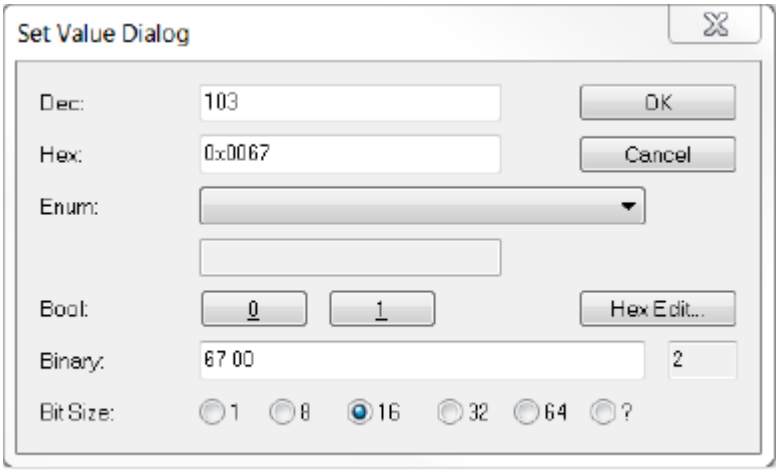 *11301A_00*
3	To indicate an executed operation, the sub-index 5FF8:03 ParReadIDSeqNo is increased by one and the status of the write has been updated to sub-index 5FF9:04 ParReadIDStatus. The status 0 indicates a successful read, as explained in Chapter 7.2.10 "Parameter Channel Read".

7.4.5 Example 2: Writing ID 103 'acceleration time' using the parameter channel

1

In TwinCAT's CoE -Online tab, find the object 5FF9 ParWriteCoE and expand the tree view.

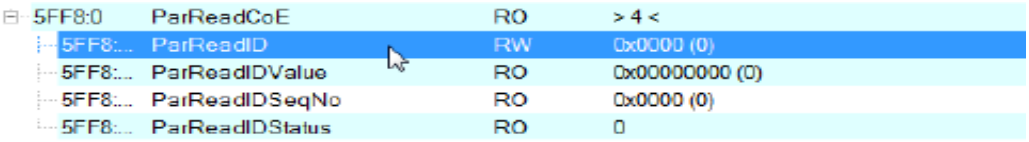

11300A_00

2

Double-click sub-index 5FF9:01 ParWriteID and enter the acceleration time ID 103 in the dialog. Click OK.

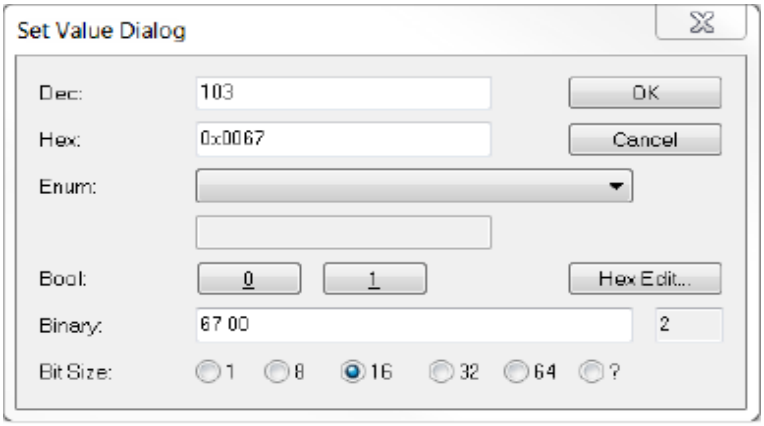

11301A_00

3

The ID is now selected for writing.

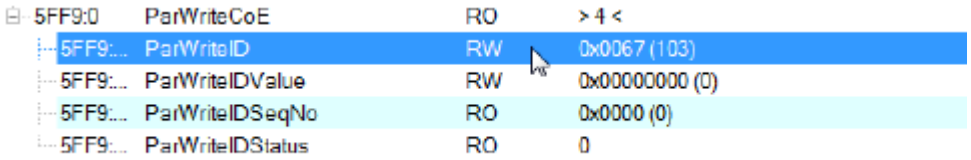

11302A_00

4

Double-click sub-index 5FF9:02 ParWriteIDValue. Enter the new acceleration time 1100 in the dialog. Click OK. The value is written to the drive.

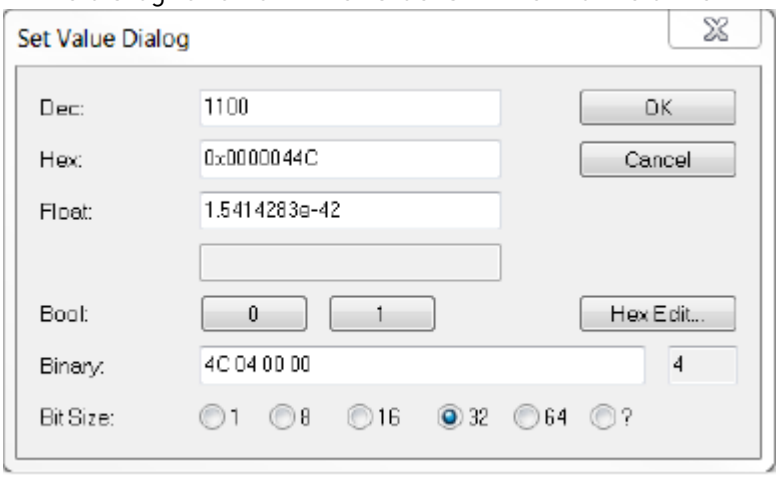

11303A_00

5	To indicate an executed operation, the sub-index 5FF9:03 ParWriteIDSeqNo is increased by one and the status of the write has been updated to sub-index 5FF9:04 ParWriteIDStatus. The status 0 indicates a successful write. 5FF9:0 ParWriteCoE RO >4< 5FF9:... ParWriteID RW 0x0067 (103) 5FF9:... ParWriteIDValue RW 0x0000044C (1100) 5FF9:... ParWriteIDSeqNo RO 0x0001 (1) 5FF9:... ParWriteIDStatus RO 0 *11304A_00*
6	To verify that the value was written correctly, the ID can be read by following the steps in the reading example in Chapter 7.4.4.

7.4.6 Example 3: Attempting to write an invalid value using the parameter channel

1	Double-click sub-index 5FF9:02 ParWriteIDValue. Enter the new acceleration time 31000 in the dialog. Set Value Dialog Dec: 31000 OK Hex: 0x00007918 Cancel Float: 4.3440252e-41 Bool: 0 1 Hex Edit... Binary: 18 79 00 00 4 Bit Size: 1 8 16 32 64 ? *11305A_00*
2	Click OK. The option board now attempts to write the new value to the drive.
3	The sequence number increases by one to indicate that the operation was executed. The status word indicates that the operation failed (the status is not 0). 5FF9:0 ParWriteCoE RO >4< 5FF9:... ParWriteID RW 0x0067 (103) 5FF9:... ParWriteIDValue RW 0x00007918 (31000) 5FF9:... ParWriteIDSeqNo RO 0x0001 (1) 5FF9:... ParWriteIDStatus RO -3 *11306A_00*
4	Check the object description in Chapter 7.2.11. It shows that the value in step 1 is out of range for this particular parameter.

7.4.7 EXAMPLE 4: WRITING TO PARAMETER USING COE OBJECT LIST

1

To write a new value to the parameter, double-click the object in TwinCAT.

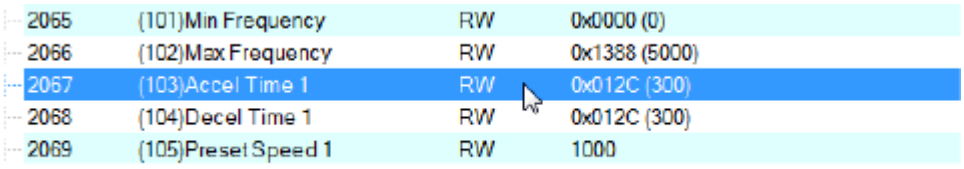

2065	(101)Min Frequency	RW	0x0000 (0)
2066	(102)Max Frequency	RW	0x1388 (5000)
2067	(103)Accel Time 1	RW	0x012C (300)
2068	(104)Decel Time 1	RW	0x012C (300)
2069	(105)Preset Speed 1	RW	1000

11307A_00

2

Enter a new value and click OK.

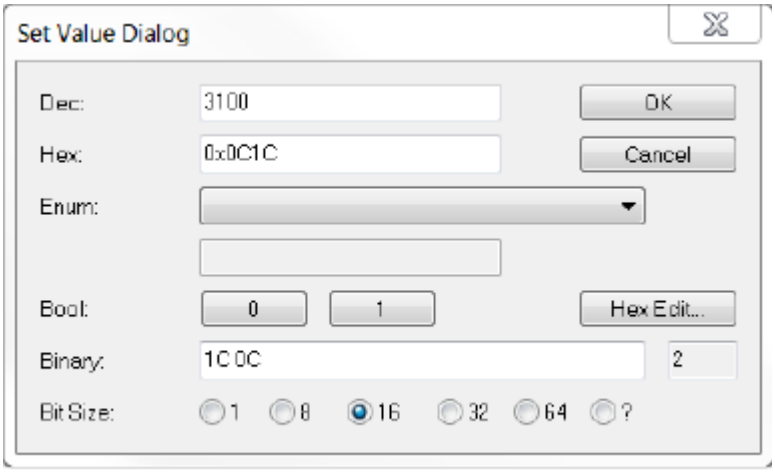

11308A_00

3

If the operation is successful, you see the updated value.

2065	(101)Min Frequency	RW	0x0000 (0)
2066	(102)Max Frequency	RW	0x1388 (5000)
2067	(103)Accel Time 1	RW	0x0C1C (3100)
2068	(104)Decel Time 1	RW	0x012C (300)
2069	(105)Preset Speed 1	RW	1000

11309A_00

4

If the operation is unsuccessful, the object value is not updated and there is an error message in the logger output describing the type of error.

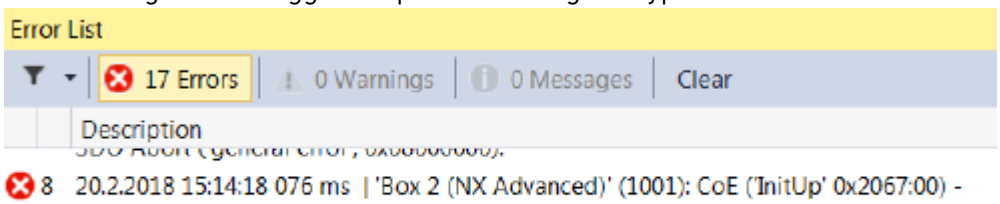

11431A_00

7.5 Ethernet over EtherCAT

As of firmware version V004 OPTEC supports standard Ethernet communication over EtherCAT and it is possible to use VACON® Live and VACON® NCDrive to parametrize the drive and monitor the drive while operational. Using latest ESI file for OPTEC is also required.

NOTE! Cyclic process data communication is prioritized over all other communication. Thus, performance of normal Ethernet communication in EtherCAT network is depended on the amount of nodes in EtherCAT network and the amount and cycle time of process data communication. Very fast cycle times might prevent Ethernet over EtherCAT communication completely.

7.5.1 Master configuration

With TwinCAT 3.x enabling EoE is done by enabling EoE communication and setting the device IP address, subnet mask and default gateway IP address as shown in the following figure:

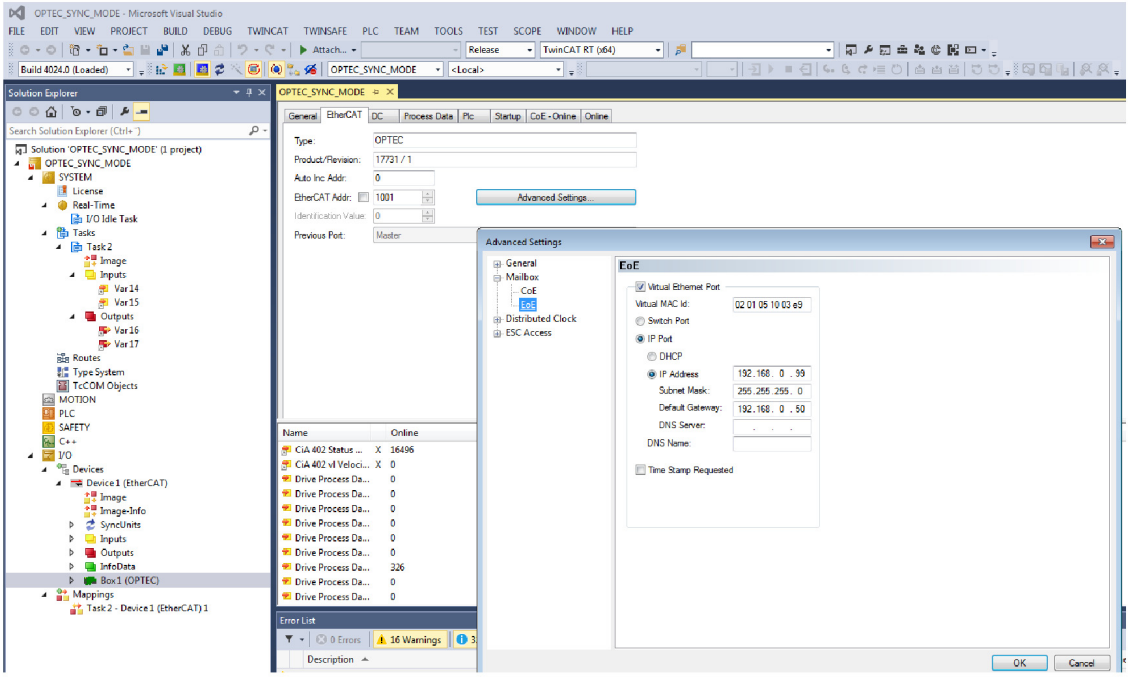

Figure 49.

Set the IP address etc. manually as DHCP is not supported by OPTEC. Default gateway is set to the master IP address of the EtherCAT network.

In the master settings, the virtual Ethernet switch needs to be enabled (see Figure 50). The maximum number of ports should be at least the amount of EoE devices in the network.

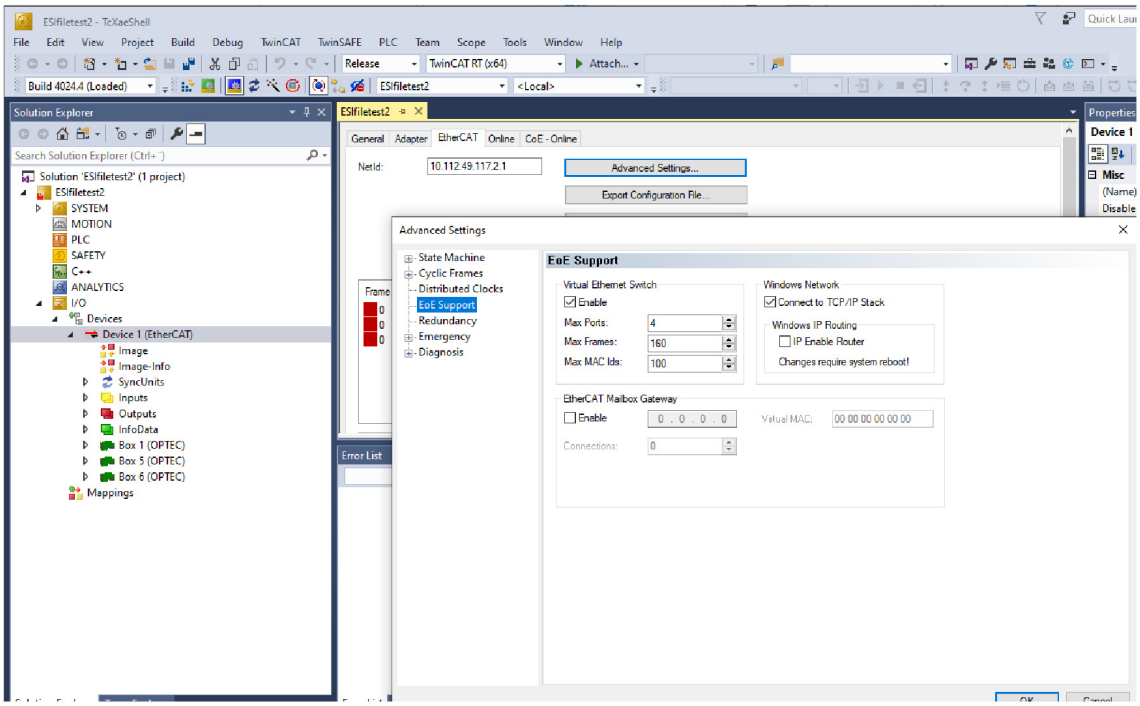

Figure 50.

Once master is operational and OPTEC is in at least pre-operational state, EoE communication is enabled. This can be verified from OPTEC monitor values under EoE. It should display the IP address and other settings that were configured in TwinCAT and EoE status as "Enabled". See further info about EoE related monitor values in Chapter 6.1.2 "Option board monitor values".

Now VACON® Live and VACON® NCDrive can find the device with "Scan" and communication can be established.

8. Fault tracing

When the option board or the AC drive control diagnostics detect an unusual operating condition, the drive opens a notification, for example, on the keypad. The keypad shows the ordinal number of the fault, the fault code and a short fault description.

You can reset the fault with the Reset button on the control keypad, via the I/O terminal or via the used fieldbus protocol. The faults are stored in the Fault history menu, which can be browsed.

NOTE! When you contact a distributor or a factory because of a fault condition, always write down all the texts and codes on the keypad display. Then send detailed problem description together with the Drive Info (Service Info) File to the local distributor.

Service Info can be read from the drive with PC-tool.

- In case of VACON® Live connect to the drive and select from VACON® Live menu bar: Drive -> Service information...
- In case of NCDrive connect to the drive and select from NCDrive menu bar: File -> Service Info...

See basic usage of VACON PC-tools in Chapter 6.6.1 PC tool support.

See local contacts in Danfoss web pages: https://www.danfoss.com/en/contact-us/contacts-list/ -> select "Drives" as Business unit.

8.1 Diagnostic information

OPTEC EtherCAT offers following diagnostic information for problem solving:

- Monitor values. See chapter 6.1 AC drive and OPTEC EtherCAT option board parametrization
- Option board leds. See chapter 4.2 LED Indications
- RJ45 connector leds. See chapter 4.4 Connecting the board in line topology
- Field bus fault diagnostic. See chapter 8.3 Fieldbus timeout fault (F53).

8.2 Typical fault conditions

8.2.1 No connection between EtherCAT master and OPTEC EtherCAT

EtherCAT master cannot connect to OPTEC EtherCAT.

1. Check OPTEC EtherCAT option board's RJ45 port leds (described in chapter 4. Layout and connections). If the leds are flickering, then this means that there is at least some network activity.

2. Check that Ethernet cable coming from EtherCAT master is connected into IN port in every EtherCAT slave in the communication chain. Ethernet cable going to the following EtherCAT slave device is connected to OUT port.

3. Check that supply or motor cables are not located too close to the fieldbus cable. Refer to chapter 5. Installation.

4.Check Ethernet cable type. Refer to chapter 3. EtherCAT option board technical data.

5.Check Ethernet cable length. Refer to chapter 3. EtherCAT option board technical data.

8.2.2 EtherCAT master cannot find OPTEC EtherCAT option board

EtherCAT master must identify EtherCAT slave device before operations can be started. EtherCAT master devices are usually configured to command EtherCAT slave devices into Pre-operational

state after successful identification. OPTEC EtherCAT stays in Init state until EtherCAT master commands it to transfer into Pre-Operational state.

EtherCAT master uses different methods for EtherCAT slave device identification. EtherCAT master device configuration defines which identification methods are used. Check that EtherCAT master uses same identification information as OPTEC EtherCAT option board provides.

1. Vendor ID

2.Product Code and Revision Number

3. Serial Number

4. Configured Station Alias

See chapter 6.2.3 Addressing and identification.

"AL Status Code" monitor value might tell information about the problem. See chapter 6.1.2.5 AL Status Code.

8.2.3 OPTEC EtherCAT option board does not go to Operational state

EtherCAT master must configure OPTEC EtherCAT process data transfers before transition from Pre-operational -> Safe-operational -> Operational is possible. Transition to Operational state is not possible if process data configuration is missing or it is invalid.

Read in chapter 7.2 Data Object Descriptions:

- RxPDO assign
- TxPDO assign
- Process Data In
- Process Data Out
- AL Status Code" monitor value might tell information about the problem. See chapter 6.1.2.5 AL Status Code.

8.2.4 OPTEC EtherCAT is Operational but process data is not transferred

Process data transfer of whole sync unit is stopped in case where one or more EtherCAT slave devices are dropped out or deactivated. In this situation functional EtherCAT slave devices might be in Operational state but EtherCAT master does not update the process data that is coming from the functional EtherCAT slave devices.

1. Check that all EtherCAT slave devices in the sync unit are in Operational state.

2. Check from EtherCAT master that WcState (working counter state) value is zero for every EtherCAT slave device. Value zero means that working counter is running properly. Value 1 means tat working counter have failed.

If process data transfer problem occurs only in the last device of EtherCAT communication chain, then check that Ethernet cable is connected into EtherCAT slave device's IN port and OUT port is not connected. Last EtherCAT slave device might go to Operational state in case where Ethernet cable is connected to OUT port. However, process data control does not work.

8.2.5 Drive does not start to run

EtherCAT master gives run command via EtherCAT to AC drive but the motor is not started.

1. Check that AC drive is configured to field bus control. See chapter 12. APPENDIX D - FIELDBUS PARAMETRISATION.

2. Check that fault is not active in AC drive. See fault behavior in AC drive specific manual.

3. Check that AC drive is in "Ready" state. VACON® NXP and VACON® 100 AC drives shows this information in keypad panel. In case of VACON® 20 and VACON® 20 X/CP drives please see AC drive specific manual.

4. Check that OPTEC EtherCAT is on correct state:

- In Pre-operational state motor control is possible via CoE MailBox objects.
- In Operational state motor control is via RxPDO/TxPDO process data. Usually process data overwrites motor control commands written via CoE MailBox objects.

5. Check that OPTEC EtherCAT and EtherCAT master uses same Operation mode. See chapter 6.3 Operation mode selection.

6. Check that EtherCAT master gives run command in a correct format.

- See chapter 6.5.1 Controlling in CiA-402 Drive Profile mode
- See chapter 6.5.2 Controlling in Bypass mode

7. Check that OPTEC EtherCAT really receives run command from EtherCAT master. Control words and status words handled by OPTEC EtherCAT can be seen from monitor values. See following monitor values in chapter 6.1 AC drive and OPTEC EtherCAT option board parametrization.

- Drive control word
- Drive status word
- Protocol control word
- Protocol status word

8.2.6 Drive runs with wrong speed

See chapter 12. APPENDIX D - FIELDBUS PARAMETRISATION.

8.2.7 AC drive reports F53 Fieldbus timeout fault

See chapter 8.3 Fieldbus timeout fault (F53).

8.2.8 F53 Fieldbus timeout fault cannot be reset

See chapter 8.3 Fieldbus timeout fault (F53).

8.3 Fieldbus timeout fault (F53)

VACON® fieldbuses create a fieldbus timeout fault (F53) when a fault has occurred in the fieldbus protocol and the AC drive is set to fieldbus control.

NOTE! If the control place is set to e.g. I/O, no fieldbus fault is triggered even if a fault condition is met. The fault response can also be modified in the AC drive application, see 12. APPENDIX D - FIELDBUS PARAMETRISATION for more details.

NOTE! Part of drive applications requires that field bus writes non-zero process data before field bus fault activation is possible.

8.3.1 OPTEC EtherCAT Fault conditions

OPTEC EtherCAT creates a F53 Fieldbus fault in the conditions mentioned in a following table.

Table 36. OPTEC EtherCAT Fieldbus fault trigger conditions

Fault	Description
EtherCAT link lost	• Ethernet cable disconnected • Powered OFF EtherCAT device which is connected to OPTEC EtherCAT's IN port
Watchdog timeout	• OPTEC EtherCAT could not receive process data from EtherCAT master within Watchdog timeout time
Illegal EtherCAT state change	• EtherCAT master commanded OPTEC EtherCAT to change EtherCAT state while running the motor

All fault reasons must be resolved before resetting of F53 Fieldbus fault is possible.

1. If F53 Fieldbus fault was activated because Ethernet link was lost, then Ethernet link must be established again

- Check Ethernet cabling
- Check status of EtherCAT devices in the EtherCAT communication chain

2. If F53 Fieldbus fault was activated because of EtherCAT watchdog timeout then EtherCAT communication must return into Operational state

- Check in EtherCAT master that Watchdog timeout is significantly bigger than EtherCAT master's free run cycle time.

3. If F53 Fieldbus fault was activated because EtherCAT master changed OPTEC EtherCAT state while running the motor, then OPTEC EtherCAT state must be returned into original state

- If OPTEC EtherCAT was in Operational state while running the motor, then OPTEC EtherCAT must be returned to Operational state
- If OPTEC EtherCAT was in Pre-operational state while running the motor, then OPTEC EtherCAT must be returned to Pre-operational state

8.3.2 FIELDBUS TIMEOUT FAULT (F53) DIAGNOSTIC INFO

In VACON® 100 family a detailed fault code for fieldbuses is "Source3" in the fault history. This feature is available from VACON® 100 firmware version V026 (INDUSTRIAL) and V018 (FLOW).

This information can be read with:

- Panel (4.1.x.26): Diagnostics ' Active Faults ' "FB Timeout" ' Details ' Source 3
- Panel (4.3.x.26): Diagnostics ' Fault History ' "FB Timeout" ' Details ' Source 3
- VACON® Live: View ' Fault Diagnostics ' Icon "Load active faults" ' Source3
- VACON® Live: View ' Fault Diagnostics ' Icon "Load fault history" ' Source3

Table 37. VACON® 100 family fieldbus fault Source3 codes

Fault code	Source3 code	Description
F53	5	EtherCAT link lost
F53	1	Watchdog timeout
F53	18	Illegal EtherCAT state change

8.3.3 FIELDBUS FAULT ACTIVATION TIMERS

OPTEC EtherCAT activates Fieldbus fault when at least one of fault condition occurs (8.3.1 OPTEC EtherCAT Fault conditions). Activation of Fieldbus fault can be delayed with a following time counters. If the problem situation is resolved before time counters expires then Fieldbus fault is not activated.

- SM Watchdog. See chapter 6.2.4 Setting the watchdog.
- Communication timeout parameter. See chapter 6.1 AC drive and OPTEC EtherCAT option board parametrization.

NOTE! Fieldbus fault is not activated at all if SM Watchdog is not set and Communication timeout parameter value is 0.

NOTE! Field bus fault is not activated because of SM Watchdog if SM Watchdog time is set to 0.

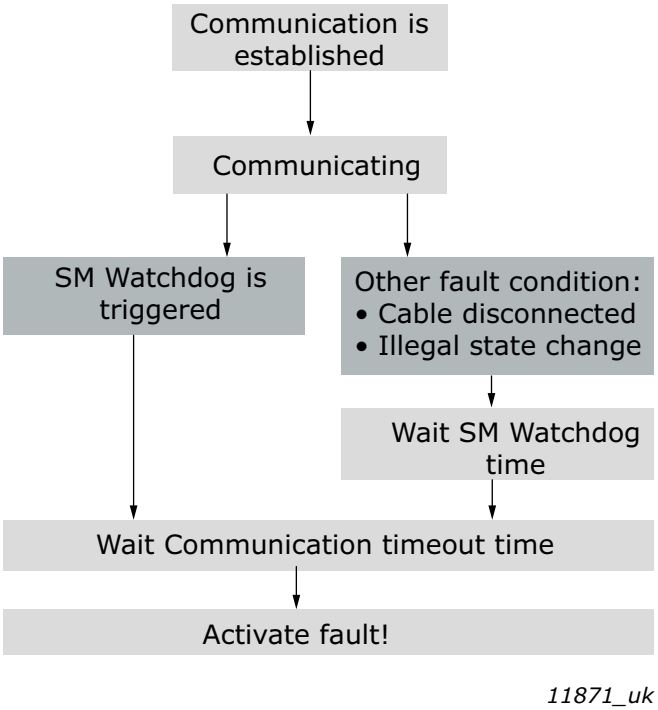

Figure 51. Fieldbus fault activation timers

9. APPENDIX A: CANOPEN DS301 SPECIFIC DATA OBJECT DESCRIPTIONS

Table 38. CANopen DS301 specific data object descriptions

Name	Index	Object code	Data type	Access	PDO-mapping	Default value	
Device type	1000h	Variable	UDINT	RO	No	00010192h	The device type specifies the kind of device. The lower 16 bit contain the device profile number and the upper 16 bit additional information.
Error register	1001h	Variable	USINT	RO	No	0	Eight bit filed representing the current error types. See Chapter 9.1 for details.
Manufacturer device name	1008h	Variable	VISIBLE STRING	RO	No	"OPTEC"	This object contains the manufacturer device name.
Manufacturer Hardware Version	1009h	Variable	VISIBLE STRING	RO	No	"F"	This object contains the version number of the manufacturer's hardware.
Manufacturer software version	100Ah	Variable	VISIBLE STRING	RO	No	"V003"	This object contains the version identification of the manufacturer's software.
Identity object	1018h:00	Record	USINT	RO	No	4	This object contains general information about the device.
Vendor ID	1018h:01	Variable	UDINT	RO	No	00000090h	Contains a unique value allocated to each manufacturer.
Product code	1018h:02	Variable	UDINT	RO	No	00004543h	Identifies the manufacturer specific product code (device version).
Revision number	1018h:03	Variable	UDINT	RO	No	00000001h	Contains the revision number. Bit 31-16 is the major revision number and bit 15-0 the minor revision number.
Serial number	1018h:04	Variable	UDINT	RO	No	---	Identifies a manufacturer specific serial number.

9.1 Object 1001h: Error Register

The error register is a field of 8 bits, each for a certain error type. If an error occurs, the corresponding error bit is set.

Table 39.

Bit	Meaning
0	generic error
1	current
2	voltage
3	temperature
4	communication error (overrun, error state)
5	device profile specific*
6	Reserved*
7	manufacturer specific*

* Not used/supported

10. APPENDIX B: DEVICE PROFILE FOR DRIVES

The VACON® EtherCAT Option Board follows the Drive device profile DSP-402. The Velocity mode is supported.

Figure 52. Basic Device Control and Device Data Interface

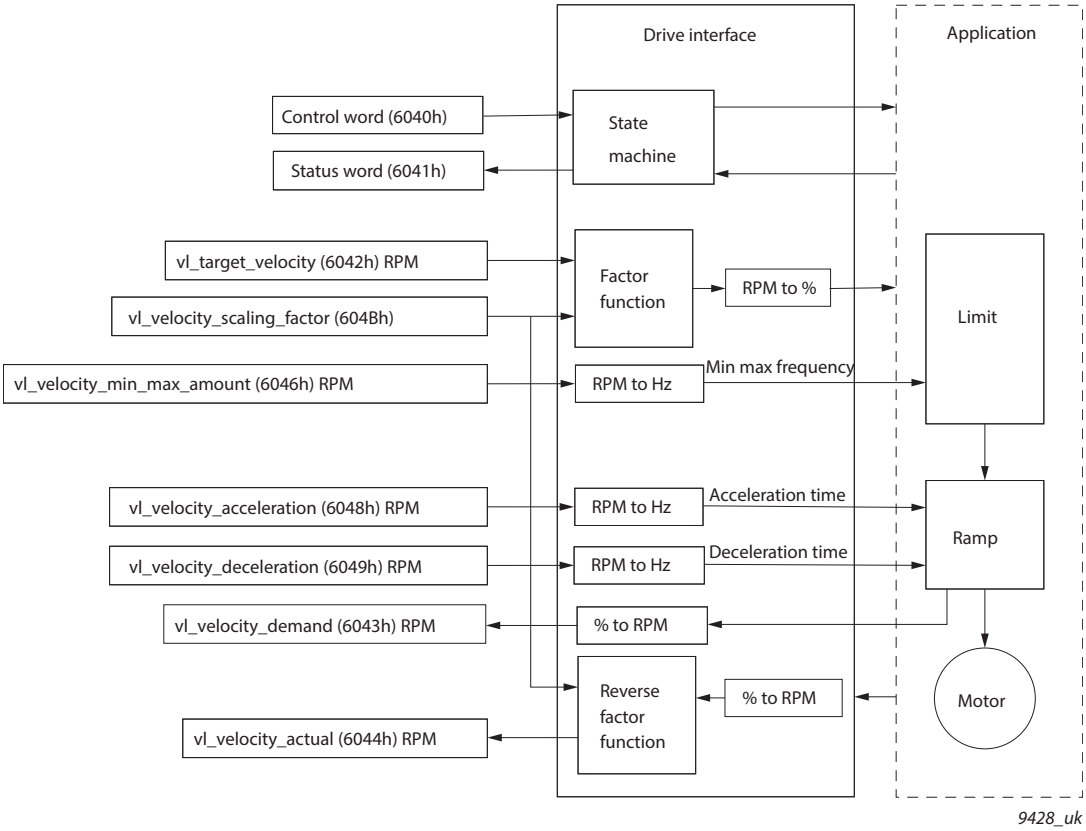

11. APPENDIX C - CONTROL AND STATUS WORD

11.1 Control Word bit description

The Control word is composed of 32 bits. FBFixedControlWord consist of the first 16 bits. FBGeneralControlWord consist of the remaining 16 bits. While the functionality of FBFixedControlWord is fixed in the VACON® standard applications, the functionality of FBGeneralControlWord is totally application specific and can vary even in the VACON® standard applications.

The meanings of FBFixedControlWord bits are described below. Unused bits have to be set to zero.

NOTE! This table is valid for VACON® standard applications.

NOTE! There are some control word bit modifications in VACON® NXP AC drive. These modifications are described in Table 41. Unused bits have to be set to zero.

Table 40. FBFixedControlWord bits

Bit	Function		Description
B0	Start/Stop	0	Stop request from fieldbus.
		1	Run request from fieldbus.
B1	Direction	0	Requested direction is "FORWARD".
		1	Requested direction is "REVERSE".
B2	Fault reset	0	No action.
		1	No action. Rising edge (0->1) = Active faults, alarms and infos are reset.
B3	Stop mode 1	0	Stop mode is unmodified.
		1	Stop mode is overridden to "Coasting".
B4	Stop mode 2	0	Stop mode is unmodified.
		1	Stop mode is overridden to "Ramping".
B5	Quick ramp time	0	Normal deceleration ramp time.
		1	Deceleration ramp time is switched to shorter than normal.
B6	Freeze Setpoint	0	Changes in the setpoint value from fieldbus (FB Speed Reference) are taken into use by the application.
		1	Changes in the setpoint value from fieldbus (FB Speed Reference) are not taken into use by the application.
B7	Setpoint to Zero	0	The setpoint value from fieldbus is taken from FB Speed Reference.
		1	The setpoint value from fieldbus is changed to 0.
B8	Request Fieldbus Control	0	Control Place is as parameterized in the drive (unchanged).
		1	Control Place is overridden to Fieldbus Control.
B9	Request Fieldbus Reference	0	Source of the setpoint value is as parameterized in the drive (unchanged).
		1	Source of the setpoint value is overridden to Fieldbus.

Table 40. FBFixedControlWord bits

Bit	Function		Description
B10	Jogging 1	0	No action.
		1	Jogging request with ref1.
B11	Jogging 2	0	No action.
		1	Jogging request with ref2.
B12	Quick stop	0	Drive operates as normal.
		1	Drive executes quick stop / emergency stop.
B13	Reserved	0	-
		1	-
B14	Reserved	0	-
		1	-
B15	Reserved	0	-
		1	-

Table 41. FBFixedControWord modifications in VACON® NXP

Bit	Function	Value	Description
3	Fieldbus DIN 1	0	Fieldbus DIN 1 off
		1	Fieldbus DIN 1 on
4	Fieldbus DIN 2	0	Fieldbus DIN 2 off
		1	Fieldbus DIN 2 on
5	Fieldbus DIN 3	0	Fieldbus DIN 3 off
		1	Fieldbus DIN 3 on
6	Fieldbus DIN 4	0	Fieldbus DIN 4 off
		1	Fieldbus DIN 4 on
7	Fieldbus DIN 5	0	Fieldbus DIN 5 off
		1	Fieldbus DIN 5 on

11.2 Status Word Descriptions

The Status word is composed of 32 bits. FBFixedStatusWord consist of the first 16 bits. FBGeneralStatusWord consist of the remaining 16 bits. While the functionality of FBFixedStatusWord is fixed in the VACON® standard applications, the functionality of FBGeneralStatusWord is totally application specific and can vary even in the VACON® standard applications.

The meanings of FBFixedStatusWord bits are described below. Unused bits have to be set to zero.

In VACON® NX series AC drives the FBFixedStatusWord comes from firmware variable "MCStatus".

Table 42. FBFixedStatusWord bits

Bit	Function		Description
B0	Ready	0	Drive is not ready.
		1	Drive is ready to run.
B1	Run	0	Motor is not running.
		1	Motor is running.
B2	Direction	0	Motor is running clockwise.
		1	Motor is running counterclockwise.
B3	Fault	0	No fault active.
		1	Drive has an active fault.
B4	Alarm	0	No alarm active.
		1	Drive has active alarm.
B5	At reference	0	Motor is not running at reference speed.
		1	Motor is running at reference speed.
B6	Zero speed	0	Motor is not at zero speed.
		1	Motor is running at zero speed.
B7	Flux ready	0	Motor is not magnetized.
		1	Motor is magnetized.
B8-B12	Reserved		

11.3 Control word bit support in drives

This table describes the control word bit support in different AC drives. Notice that this table is valid only for the VACON® standard applications. Always check the application-specific status from the application manual.

Table 43. Control word

Bit	Function	VACON® 100 family	VACON® NXS/ NXP	VACON® 20	VACON® 20 X
B0	Start/Stop	x	x	x	x
B1	Direction	x	x	x	x
B2	Fault reset	x	x	x	x
B3	Stop mode 1	x			x
B4	Stop mode 2	x			x
B5	Quick ramp time	x		x	x
B6	Freeze setpoint	x			x
B7	Setpoint to zero	x			x
B8	Request fieldbus control	x	x		x
B9	Request fieldbus reference	x	x		x
B10	Jogging 1	x			
B11	Jogging 2	x			
B12	Quick stop	x			x
B13	Reserved				
B14	Reserved				
B15	Reserved				

11.4 Status word bit support in drives

This table describes the status word bit support in different drives. Notice that this table is valid only for the VACON® standard applications. Always check the application-specific status from the application manual.

Table 44. Status word

Bit	Function	VACON® 100 family	VACON® NXS/ NXP	VACON® 20	VACON® 20 X
B0	Ready	x	x	x	x
B1	Run	x	x	x	x
B2	Direction	x	x	x	x
B3	Fault	x	x	x	x
B4	Alarm	x	x	x	x
B5	At reference	x	x	x	x
B6	Zero speed	x	x		x
B7	Flux ready	x	x		
B8	Reserved				
B9	Reserved				
B10	Reserved				
B11	Reserved				
B12	Reserved				
B13	Reserved				
B14	Reserved				
B15	Reserved				

12. APPENDIX D - FIELDBUS PARAMETRISATION

The following chapter describes briefly how to parametrise the AC drive in order for the motor to be controllable via fieldbus. These instructions are written for basic applications. For more information, consult the application-specific manual.

In order for the AC drive to accept commands from the fieldbus network, the control place of the AC drive has to be set to fieldbus. The default value of the parameter "Control Place" is usually I/O. Note that if the control unit firmware is updated, the default settings are restored. In addition, some applications may have the remote speed reference selection set by default to other than fieldbus. In these cases, the speed reference selection must be set to fieldbus, in order for the speed reference to be controlled via fieldbus.

NOTE! The motor control mode should be selected to support the used process and profile.

12.1 Fieldbus control and basic reference selection

The following tables list some of the parameters related to fieldbus control in case of VACON® applications for the VACON® 100 family, VACON® 20 / 20X and VACON® NXP. See the application specific manuals for more detailed information.

Parameters can be read and written by using the drive panel, PC Tools or fieldbus protocol. The table below contains links to chapters where the ID value reading is described.

Table 45. Parametrization for VACON® 100 (standard application)

Parameter name	ID	Value	Default	Panel Tree
Control mode	600	0 = Frequency 1 = Speed 2 = Torque	0	P 3.1.2.1
Remote control place	172	1 = Fieldbus CTRL	0	P 3.2.1
Local / remote	211	0 = Remote	0	P 3.2.2
Fieldbus ref. sel.	122	3 = Fieldbus	3	P 3.3.1.10
Controlling fieldbus	2539	-	1	P5.13.1

Table 46. Parametrization for VACON® 20 (standard application)

Parameter name	ID	Value	Default	Panel Tree
Disable showing of Quick menu	-	0 = Advanced menu 1 = Quick setup parameters	1	P 17.2
Motor control mode	600	0 = Frequency 1 = Speed	0	P 1.8
Rem. Control place 1 sel.	172	1 = Fieldbus CTRL	0	P 2.1
Local / remote	211	0 = Remote	0	P 2.5
Rem. Control place 1 freq. ref. sel.	117	3 = Fieldbus	7	P 3.3

Table 47. Parametrization for VACON® 20X (standard application)

Parameter name	ID	Value	Default	Panel Tree
Motor control mode	600	0 = Frequency 1 = Speed	0	P 8.1
Control place selection	125	2 = Fieldbus	0	P 1.11
Local / remote	211	0 = Remote	0	P 3.2.2
Frequency ref. sel.	1819	5 = Fieldbus	5-7	P 1.12

Table 48. Parametrization for VACON® NXP (multipurpose application)

Parameter name	ID	Value	Default	Panel Tree
Motor control mode	600	0 = Frequency 1 = Speed 2 = Torque	0	P 2.6.1
Control place selection	125	3 = Fieldbus	1	P 3.1
Fieldbus Ctrl Ref.	122	9 = Fieldbus	3	P 2.1.13

12.2 Controlling Fieldbus Parameter

Use the "Controlling Fieldbus"-parameter to select the instance from which the process data is sent to the drive application. By default the setting is in "Automatic" and the functionality (when receiving process data from multiple sources) is application dependent.

For example, if the option board has been installed to slot E and it is used with PROFINET to control the drive, user can select "Slot E" as value for this parameter. Now only the process data from the option board in slot E is forwarded to the application. All other fieldbusses will still receive process data out. With this setting it is possible to prevent that the monitoring fieldbusses accidentally write process data in.

Table 49.

Value name	Value	Description
Automatic	1	Process data from all sources is forwarwed to application
Slot D	2	Only process data from slot D is forward to application. Value is visible only, if option board is installed to slot D.
Slot E	3	Only process data from slot E is forward to application. Value is visible only, if option board is installed to slot E.
RS485	4	Only process data from VACON® 100 family internal RS 485 protocol is forwared to application
PROFINET IO	5	Only process data from VACON® 100 family internal PROFINET IO protocol is forwared to application
EtherNet/IP	6	Only process data from VACON® 100 family internal EtherNet/IP protocol is forwared to application

Table 49.

Value name	Value	Description
Modbus TCP/ UDP	7	Only process data from VACON® 100 family internal Modbus TCP/UDP protocol is forwared to application
Bacnet IP	8	Only process data from VACON® 100 family internal Bacnet IP protocol is forwared to application

12.3 Torque control parametrization

Some extra parametrisation has to be made in order to control the frequency control with torque control. The following instructions are for the VACON® 100 family and VACON® NXP application, see the application-specific manual for more detailed information.

- Motor control mode (ID 600) should be configured to "Torque control" (2).

To configure the drive to use correct torque reference, select the parameter "Torque Reference Selection" to ProcessDataIn1 (9). This can be done with:

- PC-tool or panel (VACON® 100 family: P 3.3.2.1, VACON® NXP: P 2.10.4) / ID 641
- Vendor Parameter Object

13. APPENDIX E - FIELDBUS PROCESS DATA MAPPING AND SCALING

Fieldbus process data items can be used to write and read variables quickly and periodically to/from VACON® AC drives. Incoming process data can be used for multiple different purposes (e.g. torque reference), and outgoing process data can be used for information about the state of the AC drive.

For fast access to any VACON® AC drive application ID over any fieldbus, generic Process Data Out parameters are defined. The content of the process data items are selected with the FB DataOut Sel parameters. Writing any application ID number to these parameters will then map the data value of that application ID to be sent in the corresponding Process Data Out variable.

Figure 53 illustrates how the fieldbus data mapping (FB DataOut x Sel) affects the data of the corresponding Process Data Out variable. By writing ID value 1 to FB DataOut1 Sel (ID 852), the value of ID 1 (Output Frequency) is sent in Process Data Out 1. The value is always raw value in process data out, so e.g. 16.43 Hz has value 1643. The scaling of the parameters can be checked from application manuals.

The status word and actual speed values cannot be changed, however the values sent by the fieldbus protocol might differ if a profile is used. In Bypass mode, these values are given as is.

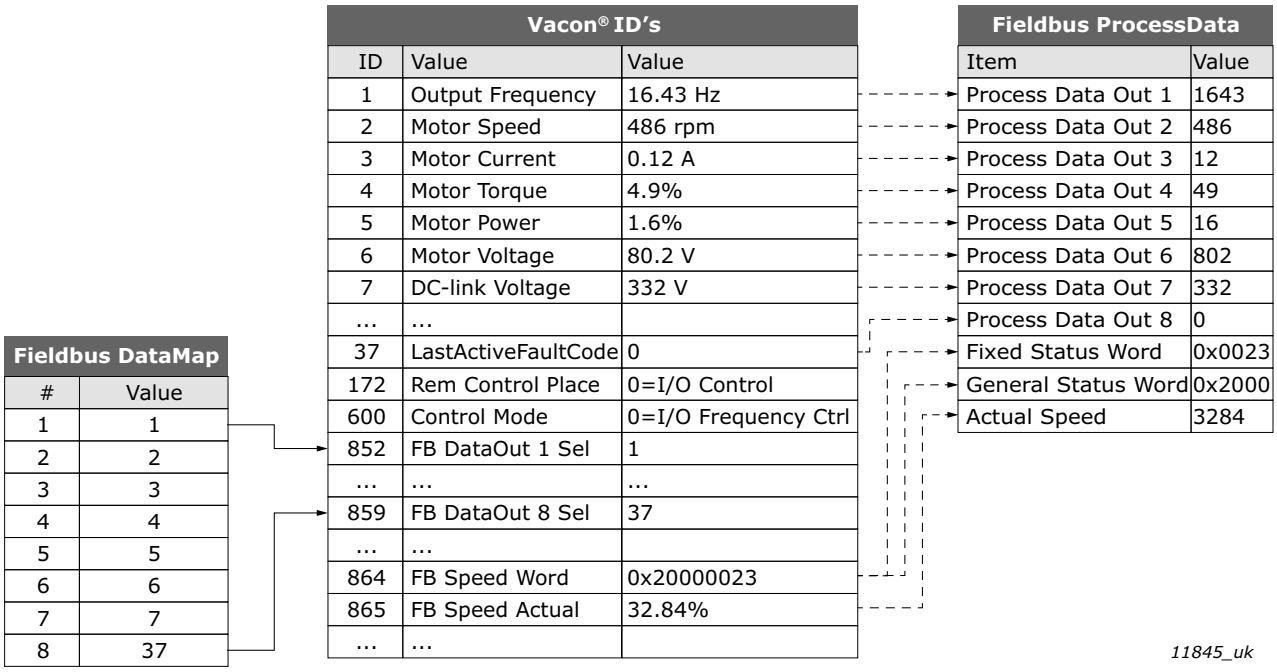

Figure 53. Fieldbus Datamapping

Table 50. Fieldbus Process Data Selection Panel Tree for VACON® AC drives

Parameter name	ID	Panel Tree			
		VACON® 100 family	VACON® NXP **	VACON® 20	VACON® 20 X/CP
FB DataOut 1 Selection	852	P3.6.1	P2.13.3	P10.1	P11.1
FB DataOut 2 Selection	853	P3.6.2	P2.13.4	P10.2	P11.2
...	...	...	...	...	...
FB DataOut 8 Selection	859	P3.6.8	P2.13.10	P10.8	P11.8
FB DataOut 9 Selection*	*	-	*	-	-

Table 50. Fieldbus Process Data Selection Panel Tree for VACON® AC drives

Parameter name	ID	Panel Tree			
		VACON® 100 family	VACON® NXP **	VACON® 20	VACON® 20 X/CP
FB DataOut 10 Selection*	*	-		-	-
...	...	-	...	-	-
FB DataOut 16 Selection*	*	-		-	-

* Only in applications supporting Normal Extended Communication or Fast Communication
** Multipurpose application

Table 51. Default process data mapping for VACON® 100 family and VACON® NXP

VACON® 100 family					VACON® NXP				
PD	Mapped Application Data	ID	Unit	Scale	PD	Mapped Application Data	ID	Unit	Scale
1	Output Frequency	1	Hz	0.01 Hz	1	Output Frequency	1	Hz	0.01 Hz
2	Motor Speed	2	rpm	1 rpm	2	Motor Speed	2	rpm	1 rpm
3	Motor Current	3	A	Varies*	3	Motor Current	45	A	0.1 A
4	Motor Torque	4	%	0.1 %	4	Motor Torque	4	%	0.1 %
5	Motor Power	5	%	0.1 %	5	Motor Power	5	%	0.1 %
6	Motor Voltage	6	V	0.1 V	6	Motor Voltage	6	V	0.1 V
7	DC Link Voltage	7	V	1 V	7	DC Link Voltage	7	V	1 V
8	Last Active Fault Code	37	-	-	8	Last Active Fault Code	37	-	-

*Scaling is based on drive nominal power. Scaling can be seen from Table 41.

Table 52. Default process data mapping for VACON® 20 X/CP and VACON® 20

VACON® 20 X/CP					VACON® 20				
PD	Mapped Application Data	ID	Unit	Scale	PD	Mapped Application Data	ID	Unit	Scale
1	Output Frequency	1	Hz	0.01 Hz	1	Frequency Reference	25	Hz	0.01 Hz
2	Motor Speed	2	rpm	1 rpm	2	Output Reference	1	Hz	0.01 Hz
3	Motor Current	3	A	Varies*	3	Motor Speed	2	rpm	1 rpm
4	Motor Torque	4	%	0.1 %	4	Motor Voltage	6	V	0.1 V
5	Motor Power	5	%	0.1 %	5	Motor Torque	4	%	0.1 %
6	Motor Voltage	6	V	0.1 V	6	Motor Current	3	A	Varies*
7	DC Link Voltage	7	V	1 V	7	Motor Power	5	%	0.1 %
8	Last Active Fault Code	37	-	-	8	DC Link Voltage	7	V	1 V

* Scaling is based on drive nominal power. Scaling can be seen from Table 53.

Table 53. Current scaling based on nominal power

Nominal power	Current scale
< 5 kW	0.01 A
5 - 100 kW	0.1 A
> 100 kW	1 A

14. APPENDIX F - FIELDBUS OPTION BOARD COMMUNICATION

The different communication modes can be enabled for fieldbus option board for different features. There are different modes available for different setups:

- Normal mode, for most commonly used setups. 8 process data items.
- Normal extended mode, for setups that require 16 process data items.
- Fast mode, with low latency process data. 16 process data items.
- Fast safety mode, with safety "black channel". 16 process data items.
- Fast PROFIBUS mode, for backward compatibility. 8 process data items.

NOTE! OPTEC EtherCAT does not support Fast Safety mode.

The fast communication modes can be enabled to get minimum communication delay between fieldbus and application.

14.1 Requirements for communication modes

The following table describes the required components for different communication modes:

Table 54. Requirements for different fieldbus communication modes

	Fast / Normal Extended	Fast Safe	Fast PROFIBUS
Control Board	NXP (serial no. 761 or later)	NXP (SN 761 or later)	NXP (serial no. 561 or later)
Applications	Multipurpose V236 (Normal Extended Mode) or later	Any*	System Interface V110 or later
			Advanced V085 or later
			Marine V107 or later
Fieldbus option	OPTE3-E5, V006 or later	OPTE3-E5, V006 or later	OPTC3_10502V014.vcn
	OPTE9, V007 or later	-	OPTC3-5_FW0232V001.vcx or later
	OPTEA, V001 or later	OPTEA, V001 or later	
	OPTEC, V003 or later	-	OPTEC, V001 or later
	OPTE6, V010 or later	-	-
System software	INDUSTRIAL: FW0072V030	-	-
	FLOW: FW0159V022	-	-
	NXP: NXP00002V196	-	-

Refer to application specific manuals for latest information about application support for fieldbus communication modes.

14.2 Fiedlbus communication mode features and limitations

Fast mode:

- 1 ms process data interval
- Available in VACON® NXP slots D and E
- Possible to run both slots simultaneously
- Have similar process data latency in both slots
- Service data latency is also reduced
- Running multiple service data queries at high interval can cause high CPU load in VACON® NXP AC drive.

16 process data items:

- 16 process data items always require support from application
- Available in both Fast mode and Normal Extended mode
- If no support is available the process data out shall always be '0', while incoming process data items 9-16 are discarded

14.3 Normal fieldbus communication

The normal fieldbus communication between option board and the AC drive application is visible in Figure 54. In normal communication both process data and service data are transferred in succession at 5 ms interval.

Communication delay for process data can be calculated by summing all delays together:

$$t = t_{IOdatacycle} + t_{updateinterval} + 2 \cdot t_{communicationdelay} + t_{applicationcycle}$$

Example: With fieldbus cycle time of 4 ms and application cycle of 10 ms, the delay is:

$$t = 4ms + 10ms + (2 \cdot 5)ms + 10ms = 34ms$$

NOTE: This value does not include delays of the fieldbus master, jitter in the process data cycle of the communication protocol or resending due to electronic interference.

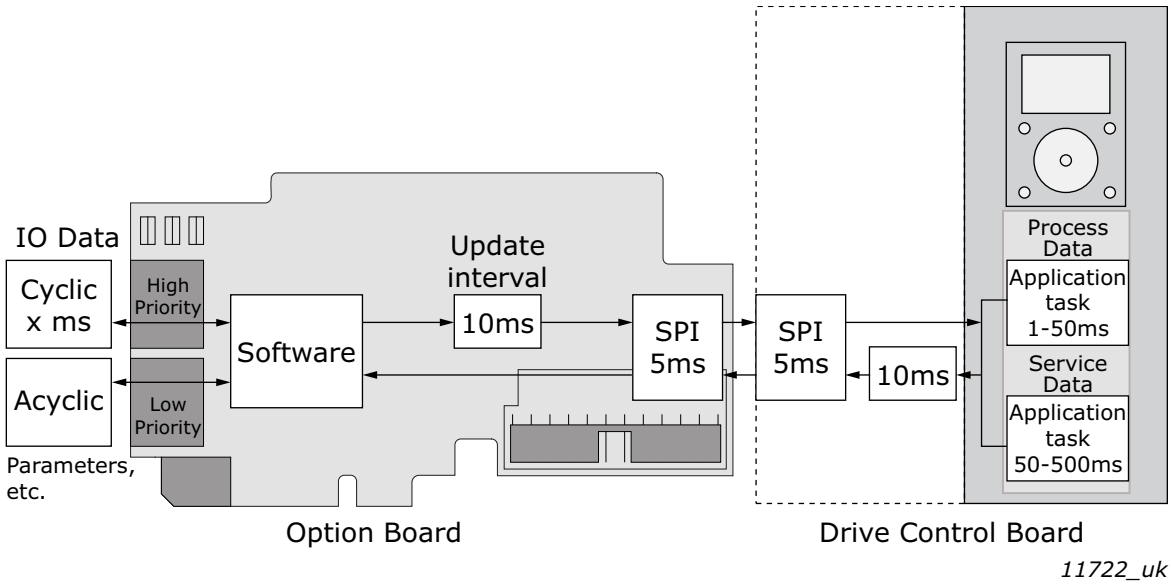

Figure 54. Normal fieldbus communication

14.4 Fast fieldbus communication

The fast mode decreases the communication delay between the PLC and the AC drive application significantly by using two communication channels separately for process and service data. The process data interval is set to 1 ms, while other data is sent acyclically. When the fast mode is activated, the application can be synchronized to run with the communication cycle. The Fast communication mode is visible in Figure 55. This mode also includes the ability to transfer 16 process data items.

The communication delay for process data in fast communication mode is (when application task is synchronized with communication):

$$t = t_{IOdata\ cycle} + t_{update\ interval} + t_{application\ cycle}$$

Example: With fieldbus cycle time of 1 ms an application cycle of 1 ms the delay is::

$$t = 1\ \text{ms} + 1 + 1\ \text{ms} = 3\ \text{ms}$$

NOTE: This value does not include delays of the fieldbus master, jitter in the process data cycle of the communication protocol or resending due to electronic interference.

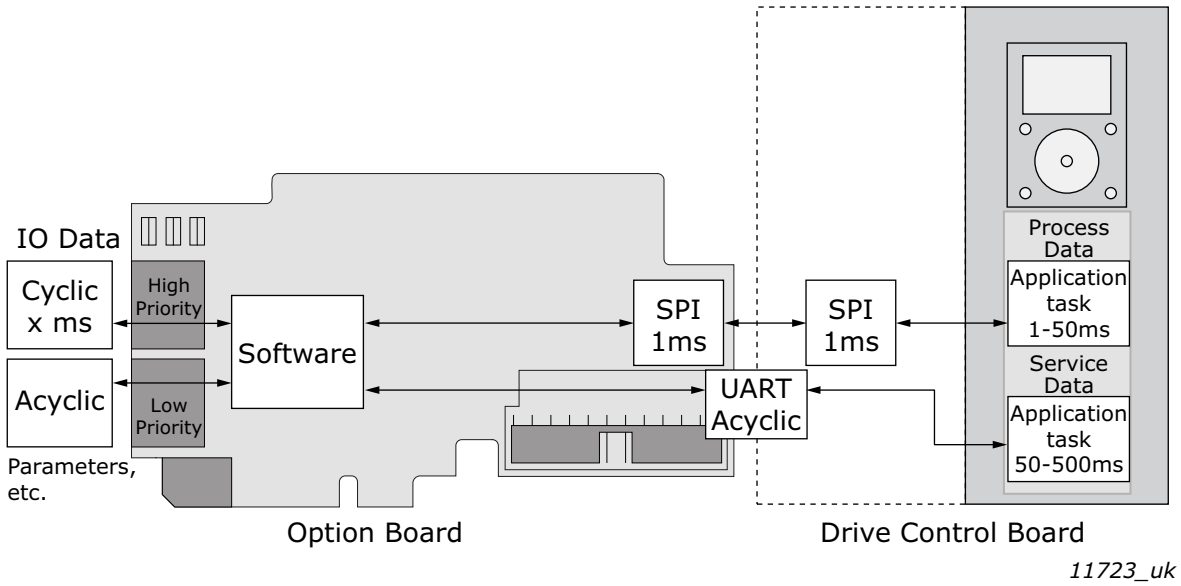

Figure 55. Fast fieldbus communication

14.5 Fast PROFIBUS fieldbus communication

NOTE! This mode is not recommended for new installations.

There is also a second type of fast communication mode, the Fast PROFIBUS mode originally meant for the OPTC3/C5 PROFIBUS board. This mode can be seen in Figure 56. This mode can achieve same latencies for process data as the fast mode introduced in Chapter 14.2. However, this mode imposes the following limitations:

- No service data is available
- Option board can be run only in Bypass mode.

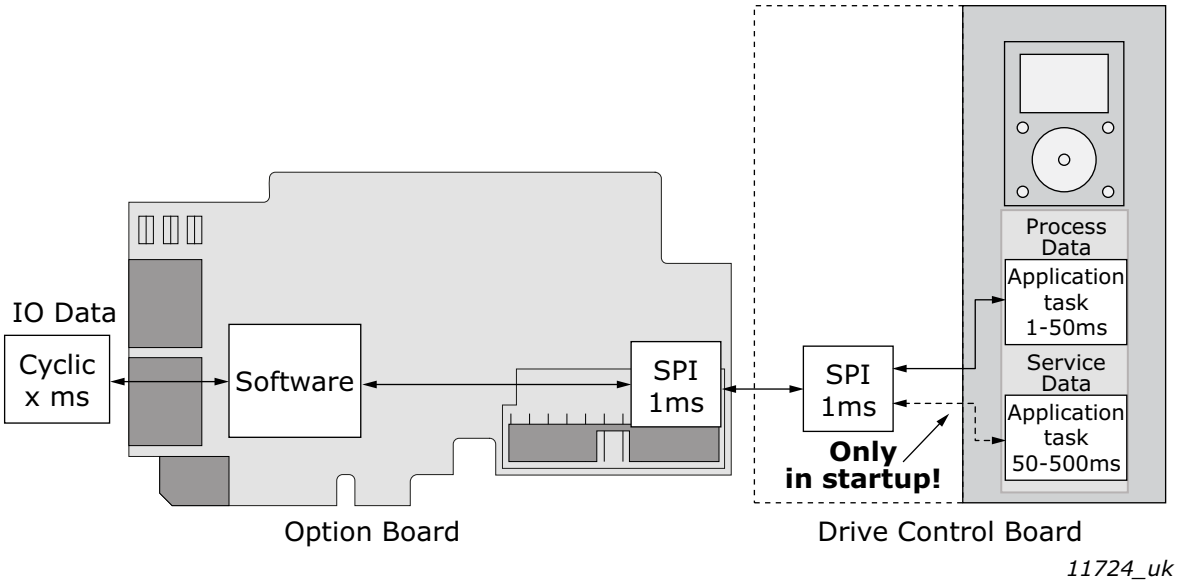

Figure 56. Fast PROFIBUS communication

14.6 Normal Extended Mode

The normal extended mode uses the same communication method that is used in "Fast mode", but reduces the communication cycle to 5ms. Therefore, the communication delay is still faster than in "Normal mode".

This mode can be used in applications where 16 process data items are required but the lowest possible communication delay is not needed or the increased CPU load of Fast mode to VACON® NXP AC drives is problematic.

NOTE: This mode is automatically enabled in VACON® Applications supporting 16 process data items.

15. APPENDIX G - PARAMETERS FOR APPLICATION DEVELOPERS

This appendix gives information for the application developers and system integrators on the VACON® NXP system software variables used to activate and control different fieldbus communication modes and features.

NOTE! Changing of mode while running the motor is not supported because of security reasons.

Table 55. System software variables for selecting communication modes

Parameter	Value	Default
FBModeSlotD_fwu8	0 = Normal mode 1 = Fast safety mode* 2 = Fast mode 3 = Fast PROFIBUS mode 4 = Normal extended mode	0
FBModeSlotE_fwu8		0

* Fast safety mode is automatically enabled/disabled by system software. Cannot be set by user. This mode is not supported in OPTEC EtherCAT.

FBModeSlotX_fwu8 variables are used to select the active fieldbus option board communication mode. If no fieldbus option board is connected to the related slot, the selection of the FBModeSlot parameter is set to 0 = Normal mode.

Table 56. System software variables for monitoring supported communication modes

Parameter	Value	Default
FBModeSlotDSupModes_fwu16	0x00 = Not yet updated. Read again later 0x01 = Fieldbus communication not supported 0x02 = Normal mode supported 0x04 = Fast safety mode supported 0x08 = Fast mode supported 0x10 = Fast PROFIBUS mode supported 0x20 = Normal extended mode supported	0
FBModeSlotESupModes_fwu16		0

FBModeSlotXSupModes_fwu16 variables can be used to determine the different supported modes of the fieldbus option boards. All features are set as bit fields as multiple modes can be supported.

Value '0' is returned while the feature set of the option board is not yet retrieved. Value should be asked again. Any option board not supporting fieldbus communication shall return value '1'.

Example 1: OPTE3-E5_FW0083V006 PROFIBUS board returns value: 0x0E, indicating support for Normal, Fast and Fast safety modes.

Example 2: OPTE9_FW0196V006 Dual Port Ethernet board returns value: 0x0A, indicating support for Normal and Fast modes.

Table 57. System software variables for selecting the input process data slot

Parameter	Value	Default
FBControlSlotSelector_fwu8	0 = All slots 4 = Slot D only 5 = Slot E only 6 = Fast PROFIBUS D slot 7 = Fast PROFIBUS E slot	0

FBControlSlotSelector_fwu8 variable is used to select the controlling fieldbus option board slot. When selected (other than '0'), process data is accepted only from the selected slot and all other process data is discarded. Process data out is still updated normally to all slots.

This selector can be used to support redundant fieldbus connection. In fieldbus redundancy mode two fieldbus option boards are installed to VACON® NXP option board slots D and E. Application selects with FBControlSlotSelector_fwu8 variable which fieldbus option board can deliver process data from fieldbus master to the application.

Default value for FBControlSlotSelector_fwu8 is '0' which means that process data is accepted from both fieldbus option boards.

11279.jpg

EtherCAT® is a registered trademark and patented technology, licensed by Beckhoff Automation GmbH, Germany.

VACON®

www.danfoss.com

Document ID:
DPD01207D
Rev. D

Sales code: DOC-OPTEC-10+DLUK

Vacon Ltd
Member of the Danfoss Group
Runsorintie 7
65380 Vaasa
Finland