ENGINEERING
TOMORROW

Installation Guide

Advanced Harmonic Filter OF7P2

iC7 series

drives.danfoss.com | iC7

1 Installation Instructions

1.1 Safety and Installation Awareness

Before starting installation, review all safety guidelines and precautions in this guide. Additional resources – including the drive installation guide and the application guide – can be downloaded at www.danfoss.com/service-and-support.

1.2 Qualified Personnel

The products must only be assembled, installed, programmed, commissioned, maintained, and decommissioned by persons with proven skills. Persons with proven skills:

- Are qualified electrical engineers, or persons who have received training from qualified electrical engineers and are suitably experienced to operate devices, systems, plant, and machinery in accordance with the general standards and guidelines for safety technology.
- Are familiar with the basic regulations concerning health and safety/accident prevention.
- Have read and understood the safety guidelines given in this manual and also the instructions given in the operating guide of the drive.
- Have good knowledge of the generic and specialist standards applicable to the specific application.

1.3 Safety Symbols

The following symbols are used in this guide:

⚠ D A N G E R ⚠

Indicates a hazardous situation which, if not avoided, will result in death or serious injury.

⚠ W A R N I N G ⚠

Indicates a hazardous situation which, if not avoided, could result in death or serious injury.

⚠ C A U T I O N ⚠

Indicates a hazardous situation which, if not avoided, could result in minor or moderate injury.

N O T I C E

Indicates information considered important, but not hazard-related (for example, messages relating to property damage).

1.4 General Safety Precautions

N O T I C E

The Advanced Harmonic Filter (AHF) is designed and qualified for use with any Danfoss drive.

- If multiple drives are connected to the filter, the sum of the input RMS currents must be equal to or less than the current rating of the filter. For more details, refer to the *iC7-Automation Frequency Converters, 1.3–1260 A Design Guide*.
- Danfoss takes no responsibility for the use of third-party harmonic mitigation filters installed with Danfoss drives.

N O T I C E

HAZARDOUS VOLTAGE

Advanced harmonic filters contain hazardous voltage when connected to the grid or a drive. Failure to perform installation, start-up, and maintenance by qualified personnel can result in death or serious injury.

- Only qualified personnel must perform installation, start-up, and maintenance.
- Never work on a filter in operation.

⚠ W A R N I N G ⚠

LIFTING HEAVY LOAD

The filter is heavy. Failure to follow local safety regulations for lifting heavy weights can cause death, personal injury, or property damage.

- Follow local regulations for lifting.
- Check the weight of the filter. The weight is provided on the outside of the shipping box and the exterior of the filter.
- If needed, ensure that the lifting equipment is in proper working condition and can safely lift the weight of the filter.
- Use the integrated lifting eyes to lift the filter. Do not lift by the fan housing or terminal plate. See Illustration 1.
- Test lift the unit to verify the proper center of gravity lift point. Reposition if not level.

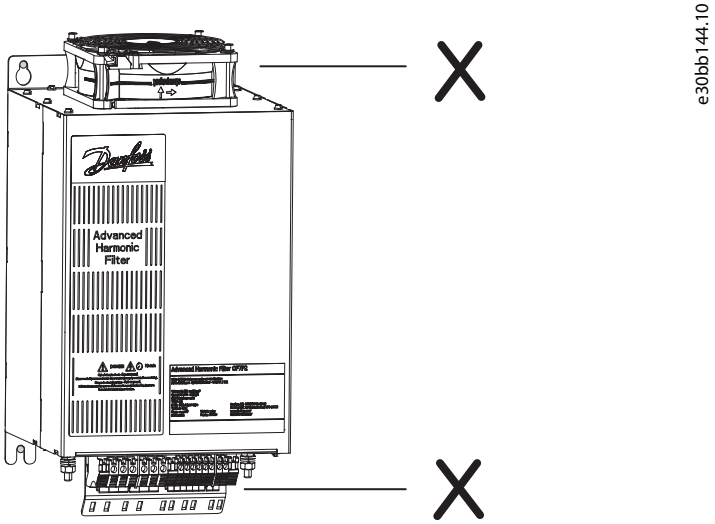

Illustration 1: Avoid Lifting by Fan Housing or Terminal Plate

⚠ W A R N I N G ⚠

DISCHARGE TIME

The drive and filter contain capacitors that can remain charged even when the drive and filter are powered off. High voltage can be present in filter terminals even when the drive's warning indicator lights are off. Failure to wait the specified time after power has been removed before performing service or repair work can result in death or serious injury.

- Stop the motor.
- Disconnect all power sources, including permanent magnet type motors.
- Wait for the drive and filter capacitors to discharge fully. The discharge time is shown on the exterior of the drive and filter.
- Verify full discharge by measuring the AC and DC voltage levels on the filter input (X1.1, X1.2, X1.3) and output (X2.1, X2.2, X2.3) terminals. Also measure the voltage levels on the drive output terminals (U, V, W).

⚠ W A R N I N G ⚠

INDUCED VOLTAGE

Induced voltage from unshielded motor cables that are routed near the filter input and output phase cables can charge equipment capacitors, even with the equipment turned off and locked out. Failure to route unshielded motor cables away from the filter input and output phase cables could result in death or serious injury.

- Route unshielded motor cables away from the filter input terminals (X1) and output terminals (X2), or use shielded cables.
- Simultaneously lock out all the drives.

⚠ W A R N I N G ⚠

ELECTRICAL SHOCK HAZARD

Due to the stray capacitance of the motor cable, the leakage currents of the connected drive can exceed 3.5 mA. Failure to properly connect both the filter and the drive to protective earth can result in death or serious injury.

- Ensure that the minimum size of the ground conductor complies with the local safety regulations for high touch current equipment.
- Ensure reinforced protective earthing (PE) conductor according to IEC 60364-5-54 cl. 543.7 or local safety regulations for equipment with leakage current >3.5 mA.
- The reinforced protective earthing can be done with:
  PE conductor with a cross-section of at least 10 mm^2 (8 AWG) Cu or 16 mm^2 (6 AWG) Al, or an extra PE conductor of the same cross-sectional area as the original PE conductor as specified by IEC 60364-5-54, with a minimum cross-sectional area of 2.5 mm^2 (14 AWG) mechanically protected or 4 mm^2 (12 AWG) not mechanically protected.
  PE conductor enclosed within an enclosure or otherwise protected throughout its length against mechanical damage.
  PE conductor that is part of a multi-conductor power cable with a minimum PE conductor cross-section of 2.5 mm^2 (14 AWG) that is permanently connected or plugged in by an industrial connector. Install the multi-conductor power cable with an appropriate strain relief.

⚠ C A U T I O N ⚠

INTERNAL FAILURE HAZARD

An internal failure in the filter can result in serious injury when the filter cover is not properly secured.

- Ensure that all safety covers are in place and securely fastened before applying power.

1.5 Required Tools

- Lifting aid
- Tape measurer
- Wrench with extension and various sockets (see the wiring illustrations for the specific size)
- Torx, slotted, and Pozidrive screwdrivers (T20, T30, T50, SL1.2, SL2, PZ3)
- Wire crimper
- Cabling for thermal switch
- Cabling for disconnect (if ordered)

1.6 Verifying the Shipment and the Contents

Make sure that the items supplied and the information on the product label correspond to the order confirmation. The product label is found on the front of the filter.

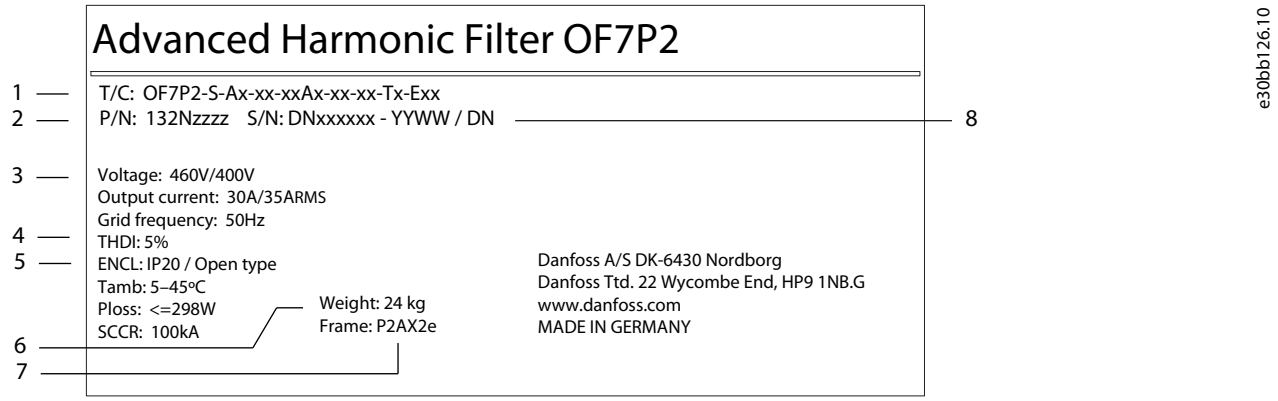

Illustration 2: Example of the Product Label

1	Type code	5	Protection rating
2	Part number	6	Weight
3	Voltage range, grid frequency, and current	7	Frame
4	Total harmonic distortion value	8	Serial number

1.7 EMC-compliant Installation

For EMC-compliant installation guidelines, refer to the drive design or installation guide, and follow the electrical installation instructions.

- Follow the same guidelines for filter installation as for drive installation.
- Keep control wires as short as possible and keep separate from high-power cables. Provide a minimum 200 mm (7.9 in) separation, if possible, between mains input, motor cables, and control cables.

1.8 Installing the Filter

Installation location is important. Full nominal current is available when the following installation conditions are met:

- Maximum surrounding air temperature is 45 °C (113 °F)
- Minimum surrounding air temperature is 5 °C (41 °F).
- Altitude is less than 1000 m (3280 ft) above sea level.
- Minimum clearance above and below the filter. See step 4 in the Illustrations section.
- Vibration levels according to IEC 60721-3-3:2019 have been considered.

For temperatures and altitudes outside this range, as well as derating values, see the design guide.

Procedure

1. Identify the filter frame (see Illustration 2). Certain illustrations/steps pertain to specific frames and are marked as such.
2. Make sure that the operating environment and electrical installation meet the following requirements.
   - **a.** Indoor unconditioned/pollution degree 2.
   - **b.** Overvoltage category 3.
3. Review the wiring diagram. See step 1 in the Illustrations section.

   All wiring must comply with local and national regulations regarding cross-section and ambient temperature requirements. Loose connections can cause equipment faults or reduced performance. Tighten the terminals according to the proper torque value shown in step 6 in the Illustrations section.
4. Follow the fuse requirements for the drive as described in the drive installation guide. Fuses can be installed upstream of the filter.
5. Review the power cable specifications. See step 2 in the Illustrations section.

   Use copper wire with a minimum 70 °C (158 °F) rating. For aluminum wire, see the product-specific design guide.
6. If necessary, use a proper lifting method (step 3) to ready the unit for mounting. Provide required clearance above and below the filter and secure the unit to a solid, non-combustible mounting surface – such as concrete or metal – with no gaps between the surface and the AHF unit. See step 4 in the Illustrations section.

   If the filter is installed on rails or there is space between the filter and the mounting surface, the filter does not receive enough airflow for cooling. In such installations, use a 2 mm (0.8 in) backplate. To order a backplate, see 1.10 AHF Backplate Kit Numbers.
7. Using customer-supplied cabling, connect the thermal switch A and B terminals to the X11.12 and X11.14 terminals. See step 5 in the Illustrations section.

   The illustration shows a typical configuration, however the switch can be connected to any available I/O, or even the PLC status word.
8. Install the ground wiring, then the X2 wiring, and then the X1 wiring. See step 6 in the Illustrations section.

9. To install the optional disconnect wiring, see step 7 in the Illustrations section. Use customer-supplied cabling to connect the disconnect terminals X10 and X11 to the relay terminals X101.1 and X101.2.

   The illustration shows a typical configuration, however the disconnect can be connected to any available I/O, or even the PLC status word.

10. To install the optional IP21/UL Type 1 kit, see step 8 in the Illustrations section. To order an IP21/UL Type 1 kit, see 1.11 AHF IP21/UL Type 1 Kit Numbers.

1.9 Configuring the Filter Parameters

Procedure

1. For more information on parameters, see the iC7 application guide.
   - **a.** To run the drive with the filter on, set *parameter P3.4.1 Advanced Harmonic Filter* to [Enable].
   - **b.** If using the filter disconnect option, set *parameter P3.4.2 Capacitor Disconnect Output* to any available digital I/O or PLC status word as the output. If not using the disconnect, select [None].
   - **c.** To select how the application reacts in case the AHF overheats, set *parameter P3.4.3 Thermal Switch Function* to either [Fault, ramp down to stop] or [Derate].

     [Fault, Ramp down to stop] uses the customer selected down ramp and attempts to ramp down the load within 30 s. If the drive is unable to ramp down, the drive coasts. [Derate] reduces the drive output power to 50%, disconnects the capacitors, and activates the thermal fault. If the temperature is still too high after 15 min of derated operation, the drive coasts. If the temperature is low enough, the drive continues to operate at 50% power with the fault active.
   - **d.** The AHF must always run with a thermal switch. To specify the thermal switch input, use *parameter P3.4.4 Thermal Switch Input* to select an available I/O channel or the PLC status word. In the wiring examples shown in this guide, [Basic I/O T14] is used. Do not set the parameter to [True].

1.10 AHF Backplate Kit Numbers

AHF frame	Kit ordering number
P2AX1	130B3283
P2AX2	130B3284
P2AX3	130B3285
P2AX4	130B3286
P2AX5/P2AX6	130B3287
P2AX7/P2AX8	130B3288

1.11 AHF IP21/UL Type 1 Kit Numbers

AHF frame	IP21/UL Type 1 kit with disconnect	IP21/UL Type 1 kit without disconnect
P2AX1	136B3132	136B3119
P2AX2	136B3133	136B3120
P2AX3	136B3134	136B3121
P2AX4	136B3135	136B3122
P2AX5	136B3136	136B3123
P2AX6	136B3137	136B3124
P2AX7	136B3138	136B3125
P2AX8	136B3139	136B3126

1.12 Illustrations

1.12.1 Illustrations

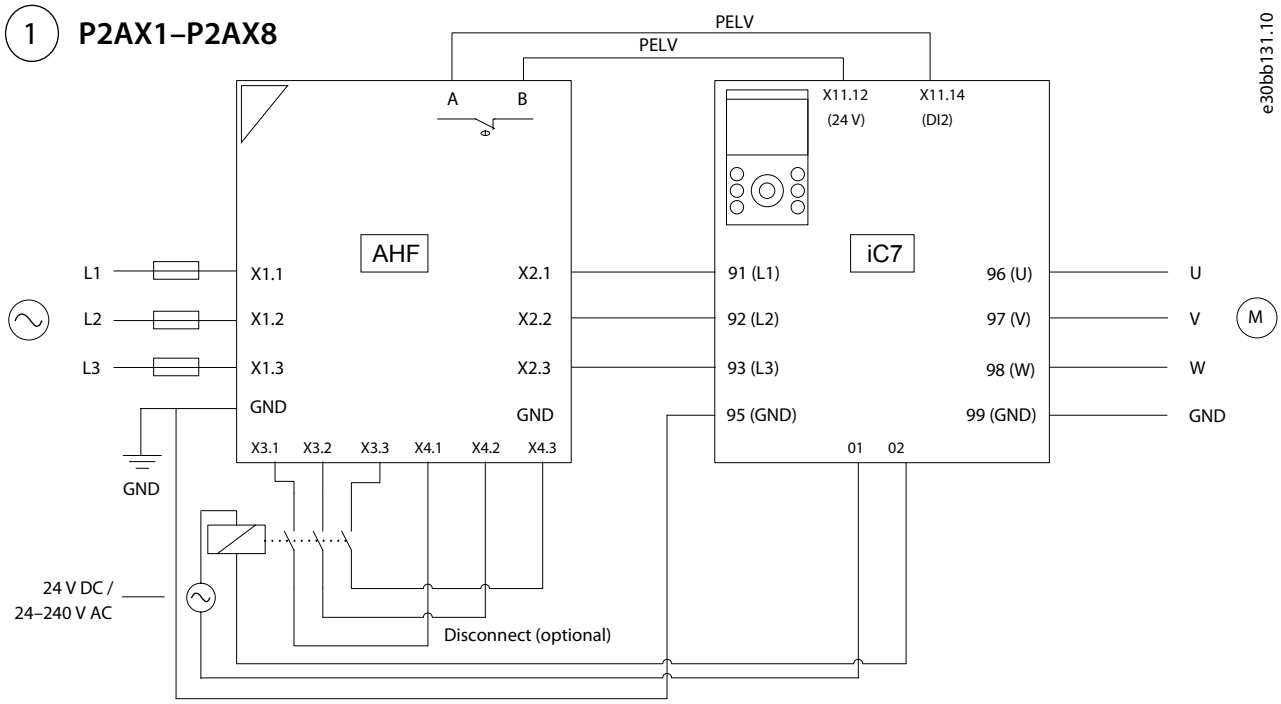

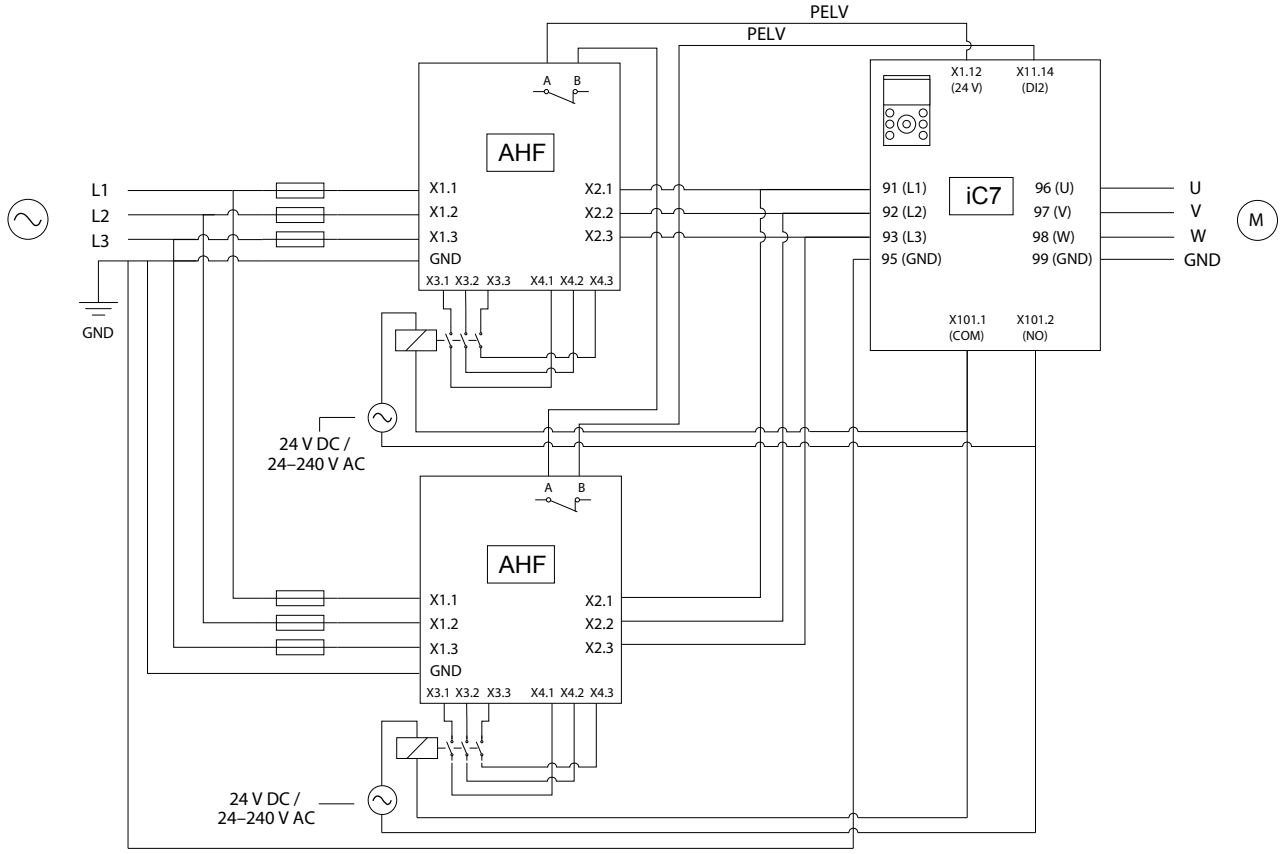

Illustration 3:

2 P2AX1x–P2AX8x

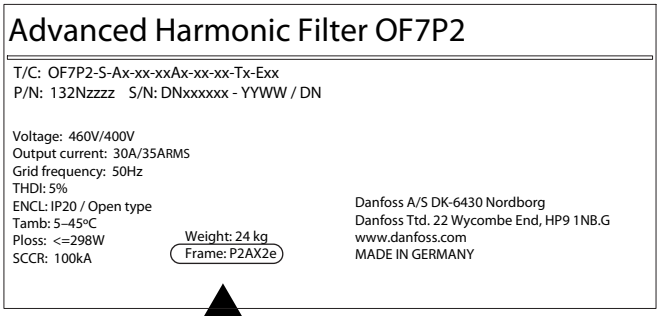

e30bb132.10

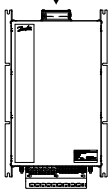

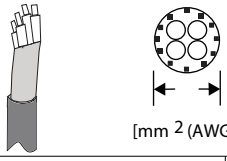

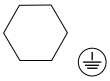

	X1/X2	X3/X4	A/B	
P2AX1	0.5–10 (20–8)	0.5–4 (20–12)	0.5–4 (20–12)	M6
P2AX2	1.5–16 (16–6)	0.5–4 (20–12)	0.5–4 (20–12)	M6
P2AX3	1.5–25 (16–4)	1.5–16 (16–6)	0.5–4 (20–12)	M8
P2AX4	1.5–50 (16–1-1/0)	1.5–25 (16–4)	0.5–4 (20–12)	M8
P2AX5	10–70 (8–2/0)	1.5–25 (16–4)	0.5–4 (20–12)	M8
P2AX6	2.5–95 (14–3/0)	1.5–50 (16–1-1/0)	0.5–4 (20–12)	M8
P2AX7	25–300 (4–600)	16–150 (6–300)	0.5–4 (20–12)	M12
P2AX8	25–300 (4–600)	16–150 (6–300)	0.5–4 (20–12)	M12

Illustration 4:

3 P2AX1–P2AX8

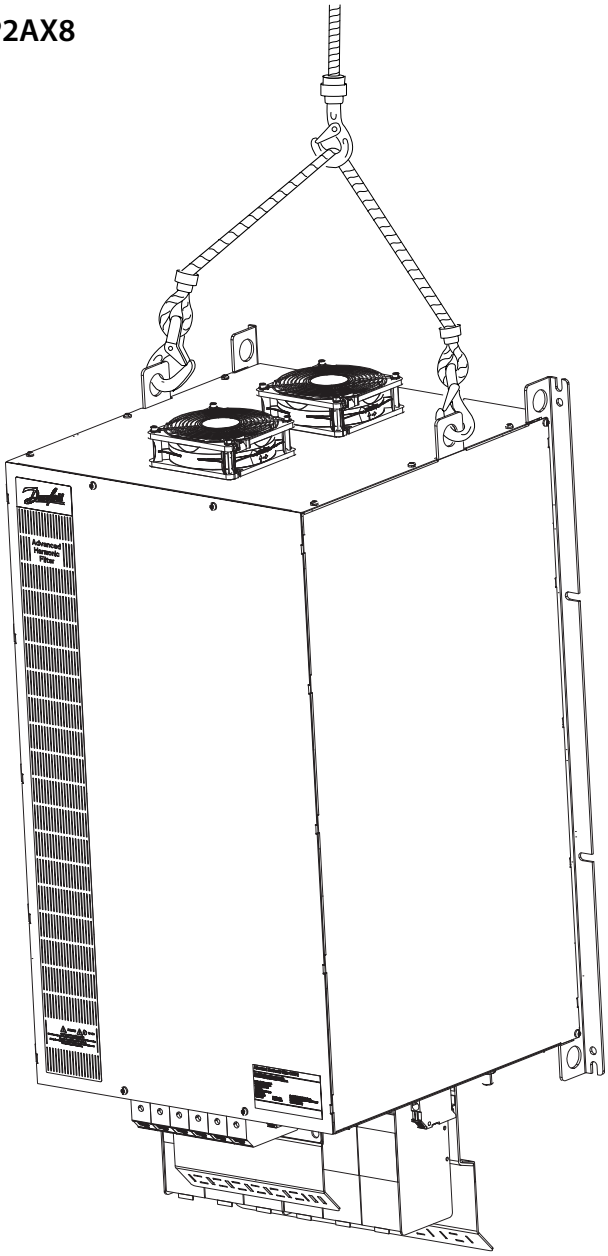

	kg (lbs)
P2AX1x	19 (42)
P2AX2x	33 (73)
P2AX3x	58 (128)
P2AX4x	98 (216)
P2AX5x	106 (234)
P2AX6x	135 (298)
P2AX7x	206 (454)
P2AX8x	272 (600)

Illustration 5:

4 P2AX1–P2AX2

mm (in)	P2AX1	P2AX2
A	278 (10.9)	382 (15.0)
B	163 (6.4)	205 (8.1)
C	150 (5.9)	150 (5.9)
	4 x M6	4 x M6

e30bb124.10

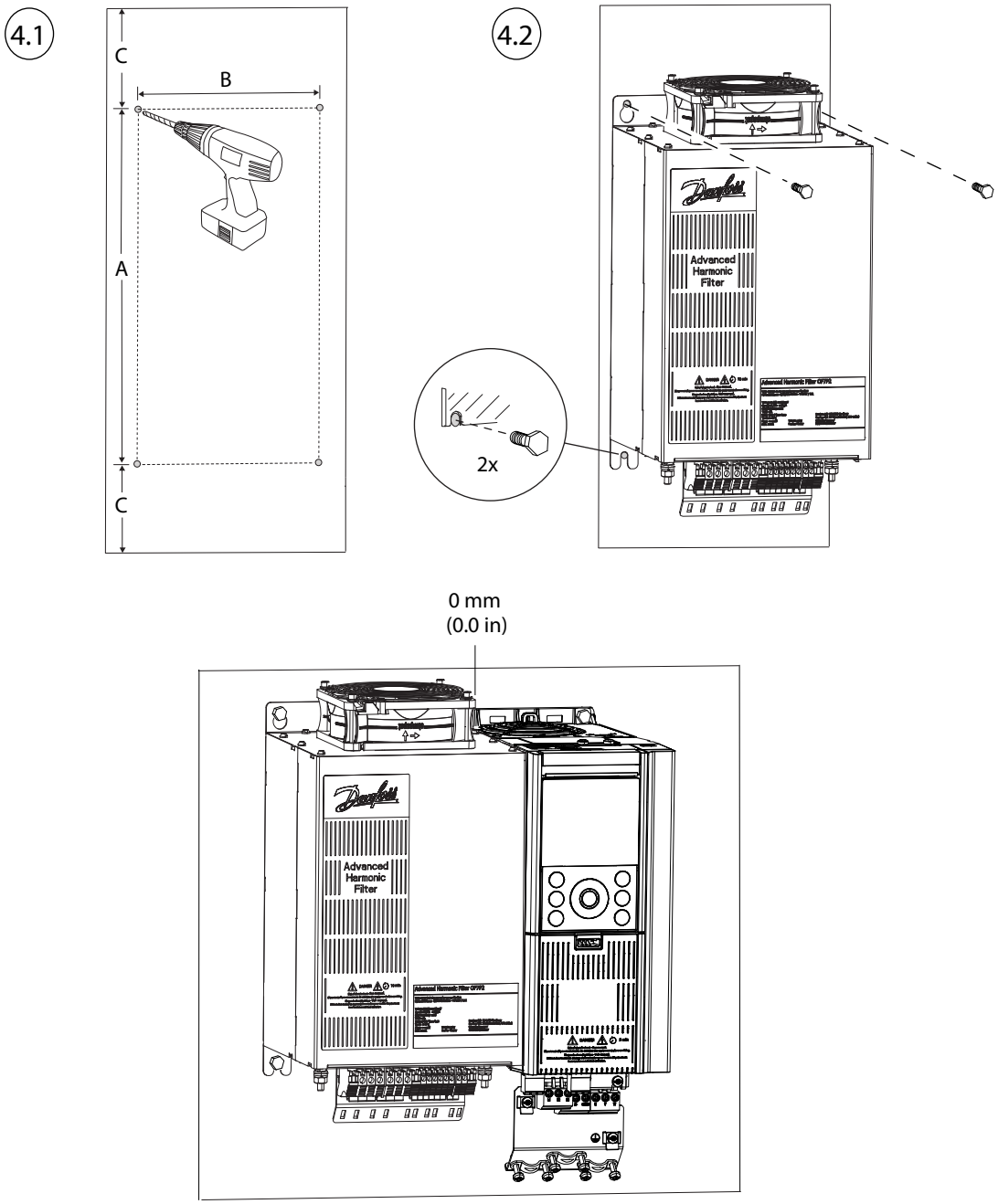

Illustration 6:

P2AX3–P2AX8

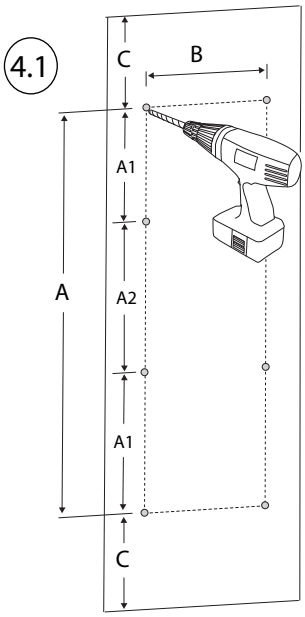

mm (in)	P2AX3	P2AX4	P2AX5	P2AX6	P2AX7	P2AX8
A	523 (20.6)	554 (21.8)	661 (26.0)	661 (26.0)	780 (30.7)	780 (30.7)
A1	145 (5.7)	157 (6.2)	210 (8.3)	210 (8.3)	240 (9.5)	240 (9.5)
A2	233 (9.2)	240 (9.5)	240 (9.5)	240 (9.5)	300 (11.8)	300 (11.8)
B	535 (21.1)	353 (13.9)	392 (15.4)	387 (15.3)	443 (17.4)	443 (17.4)
C	150 (5.9)	150 (5.9)	150 (5.9)	150 (5.9)	150 (5.9)	150 (5.9)
	8 x M8	8 x M8	8 x M8	8 x M8	8 x M12	8 x M12

e30bb125.10

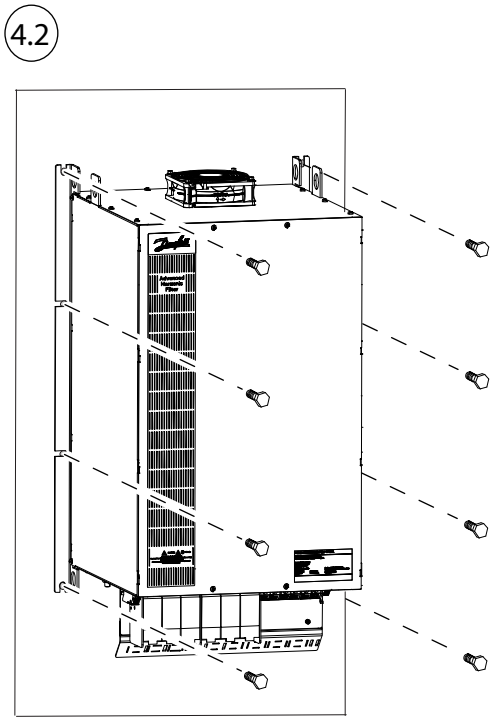

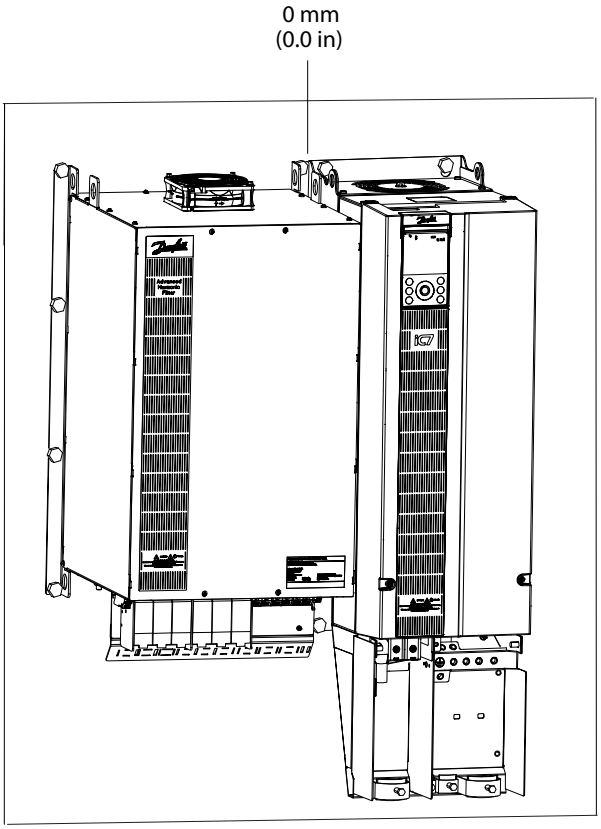

Illustration 7:

5 P2AX1–P2AX8

e30bb133.10

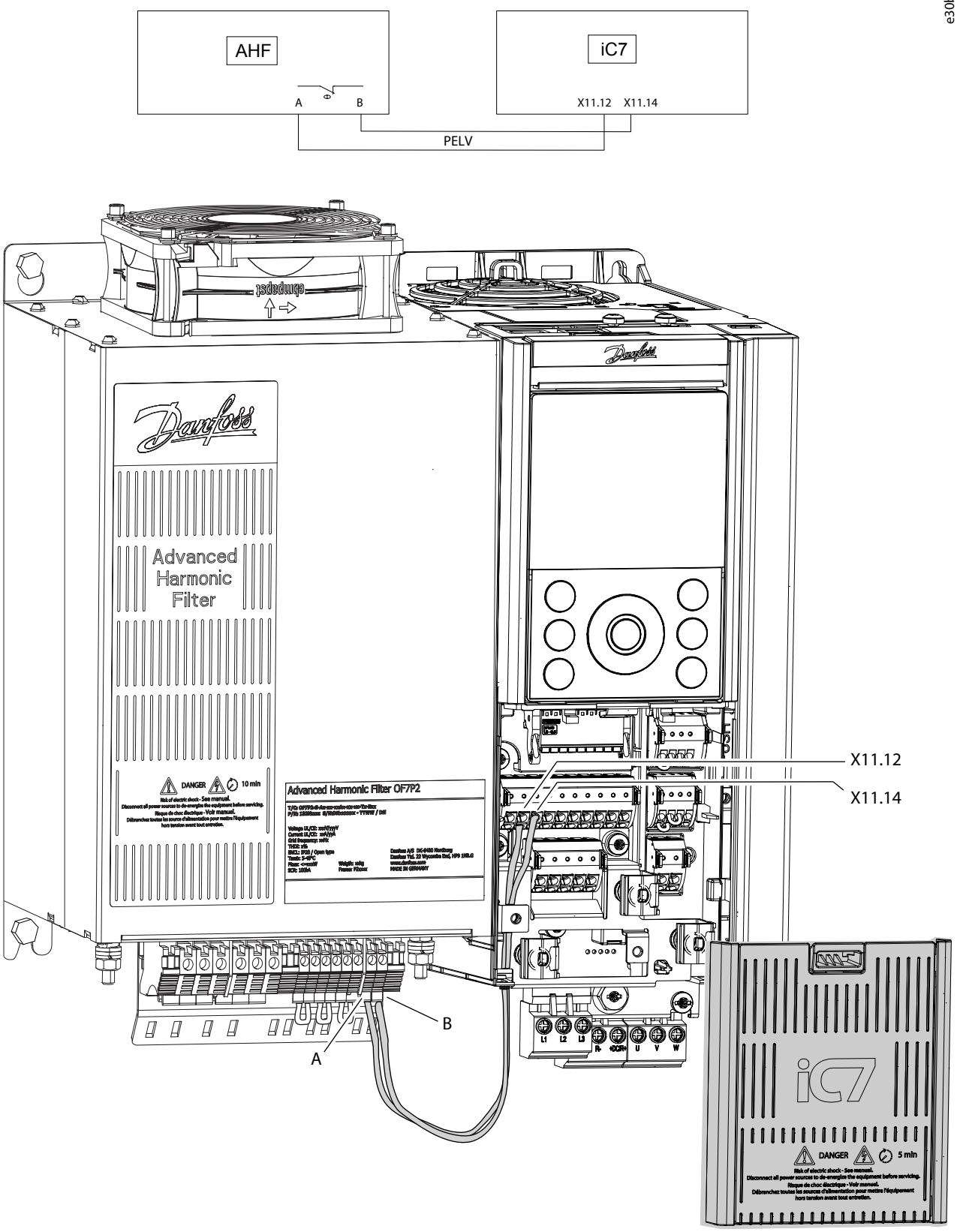

Illustration 8:

6 P2AX1–P2AX2

e30bb127.10

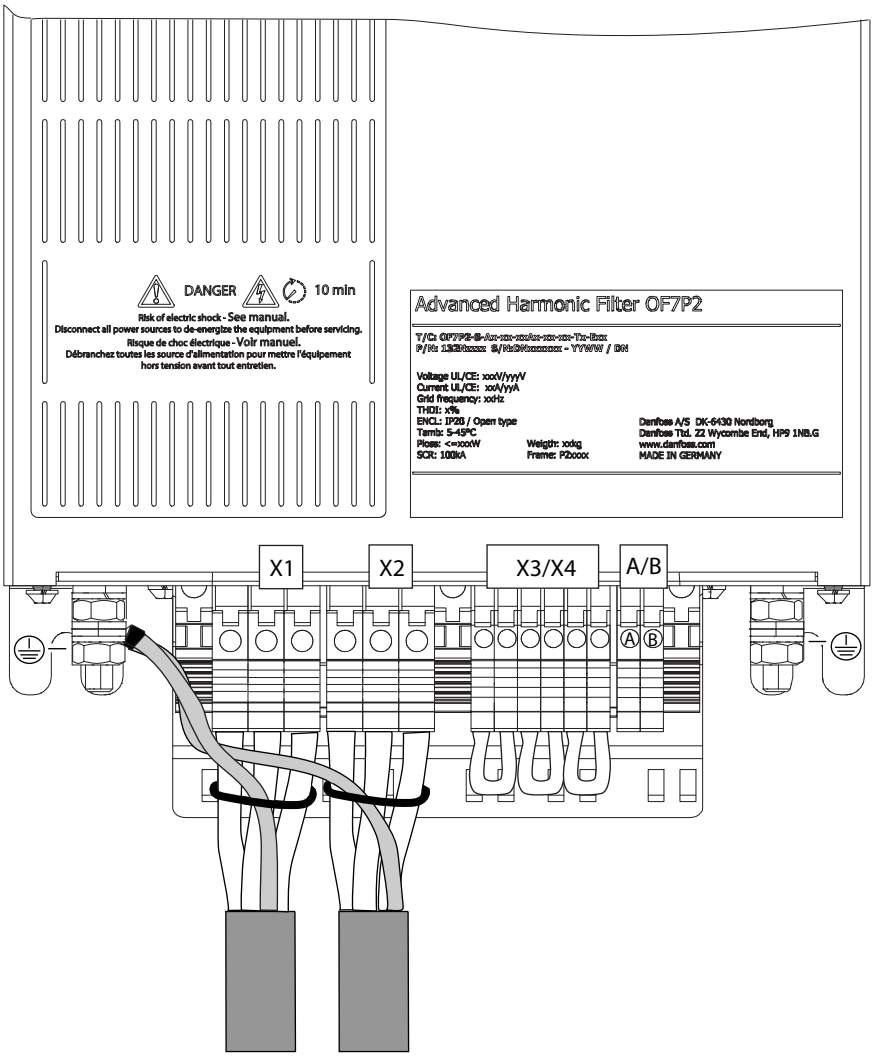

P2AX1 P2AX2	X1/X2	1.2–2.0 Nm (11–18 in-lb)
	X3/X4	1.2–2.0 Nm (11–18 in-lb)
	A/B	1.2–2.0 Nm (11–18 in-lb)
	⏚	1.8 Nm (16 in-lb)
SL1 T20		10 mm

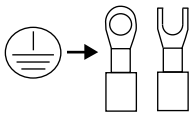

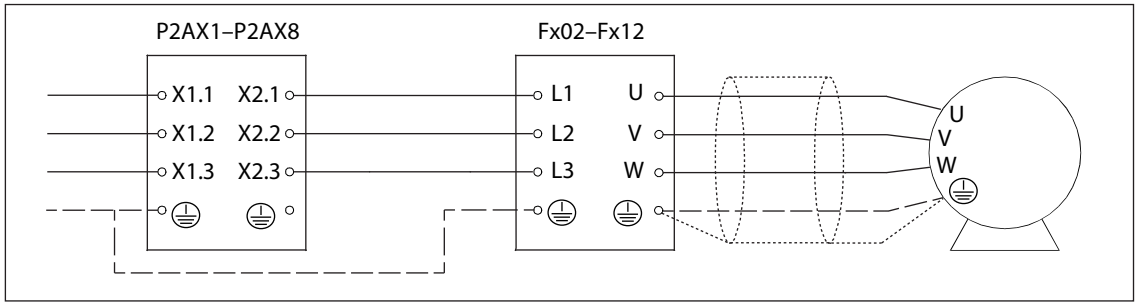

Illustration 9:

P2AX3–P2AX5

e30bb128.10

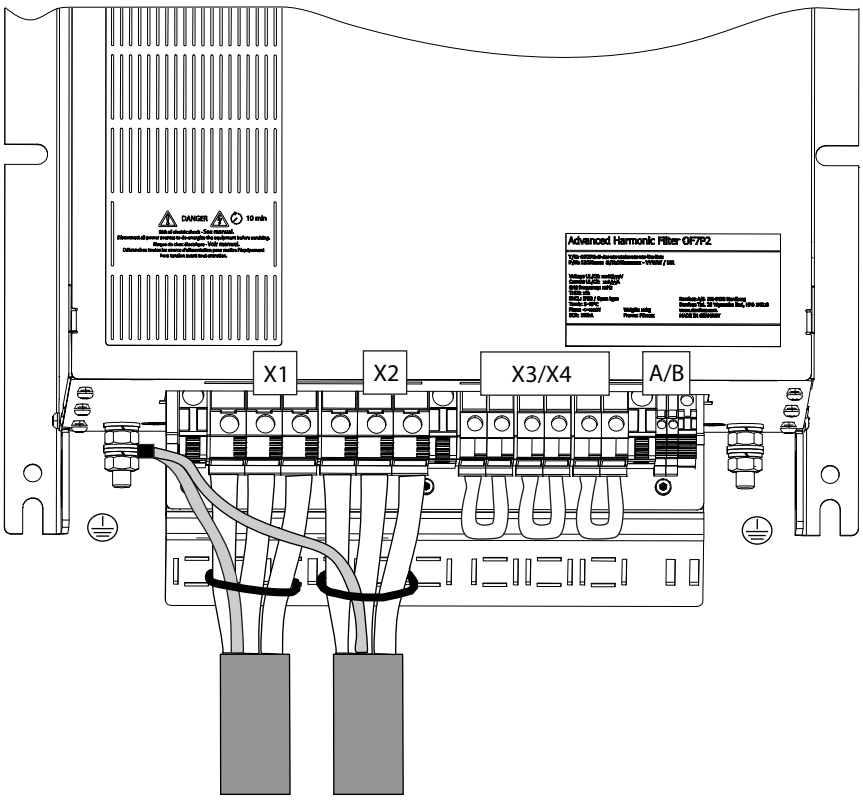

P2AX3 P2AX4 P2AX5	X1/X2	1.2–2.0 Nm (11–18 in-lb)
	X3/X4	1.2–2.0 Nm (11–18 in-lb)
	A/B	1.2–2.0 Nm (11–18 in-lb)
	⏚	1.8 Nm (16 in-lb)
SL1 T20		10 mm

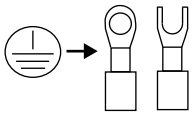

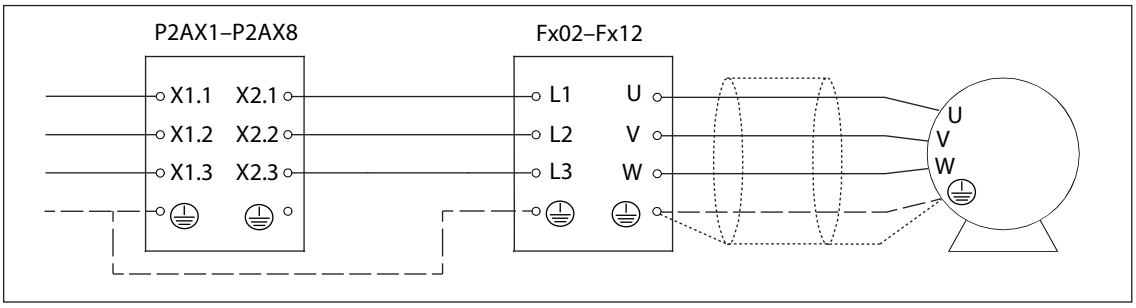

Illustration 10:

P2AX6

e30bb129.10

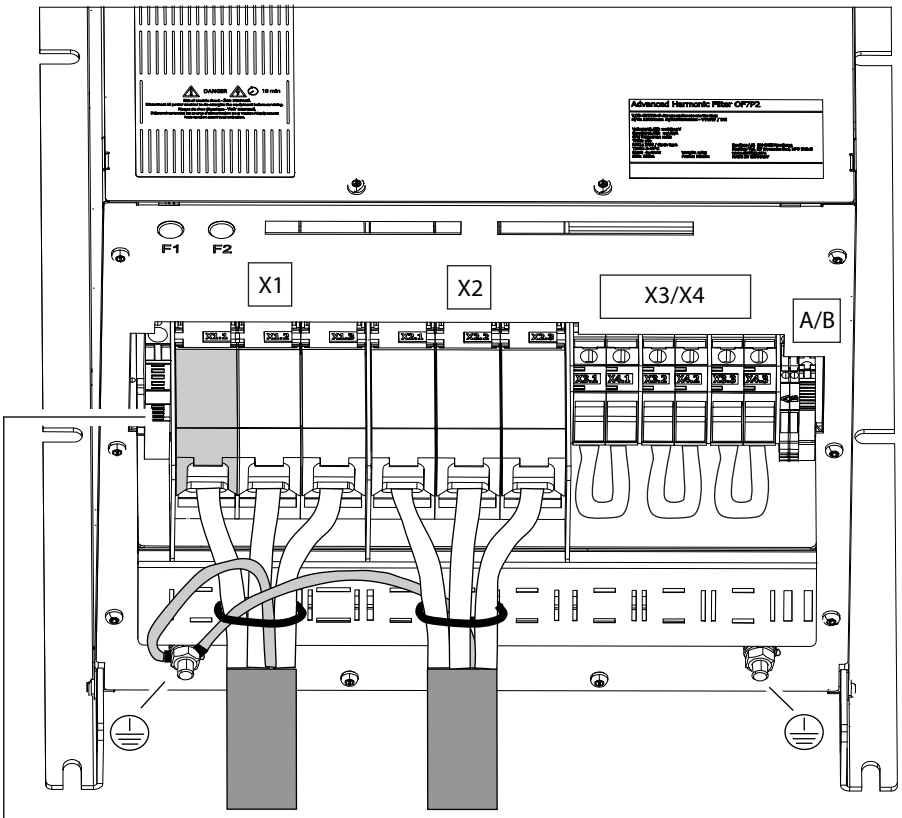

P2AX6	X1/X2	1.2–2.0 Nm (11–18 in-lb)
	X3/X4	1.2–2.0 Nm (11–18 in-lb)
	A/B	1.2–2.0 Nm (11–18 in-lb)
	⏚	1.8 Nm (16 in-lb)
SL1 T20	10 mm	

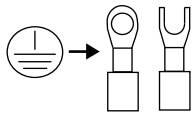

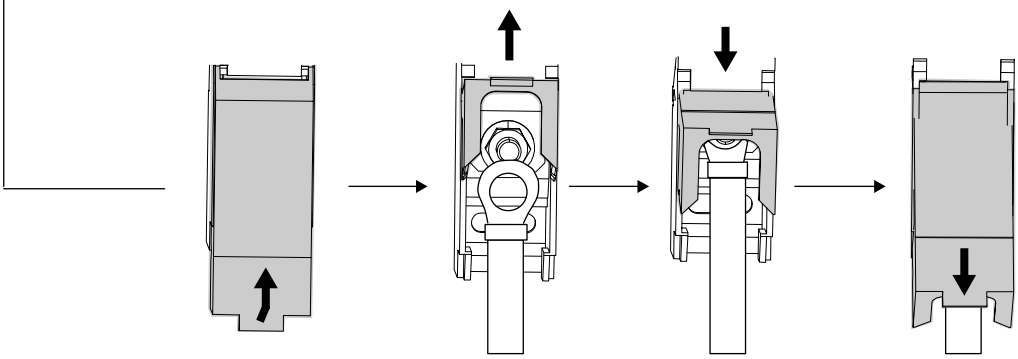

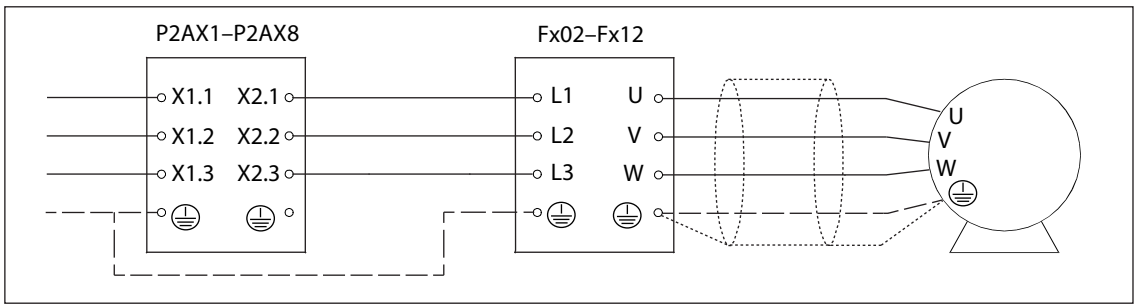

Illustration 11:

P2AX7–P2AX8

e30bb130.10

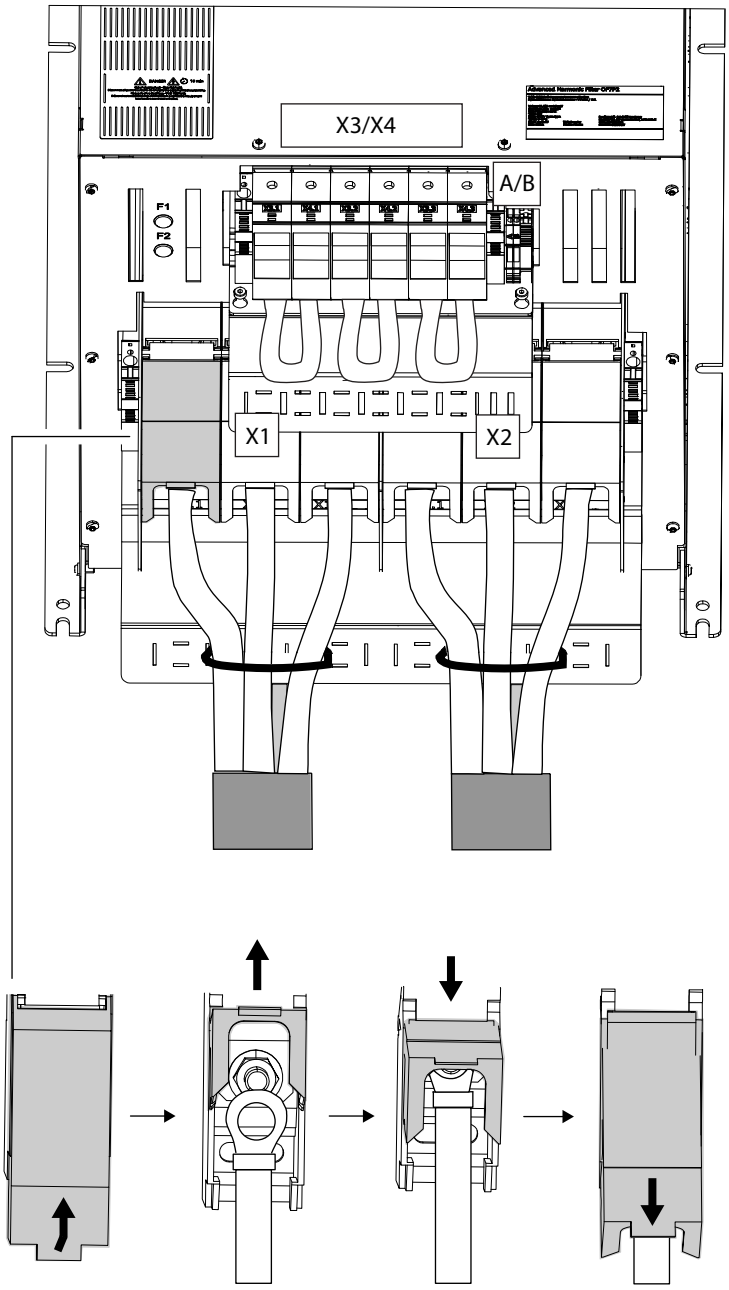

P2AX7 P2AX8	X1/X2	1.2–2.0 Nm (11–18 in-lb)
	X3/X4	1.2–2.0 Nm (11–18 in-lb)
	A/B	1.2–2.0 Nm (11–18 in-lb)
	⏚	1.8 Nm (16 in-lb)
SL1 T20		10 mm

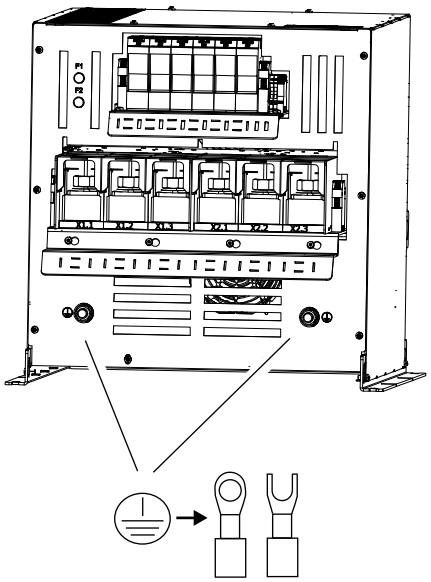

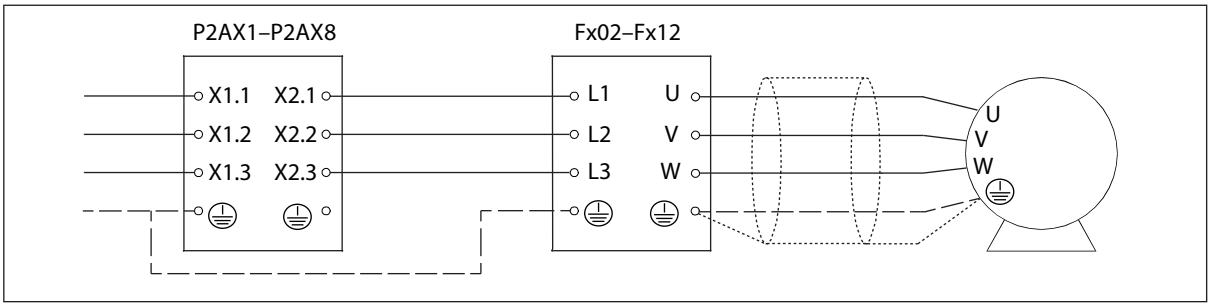

Illustration 12:

7 P2AX1–P2AX8

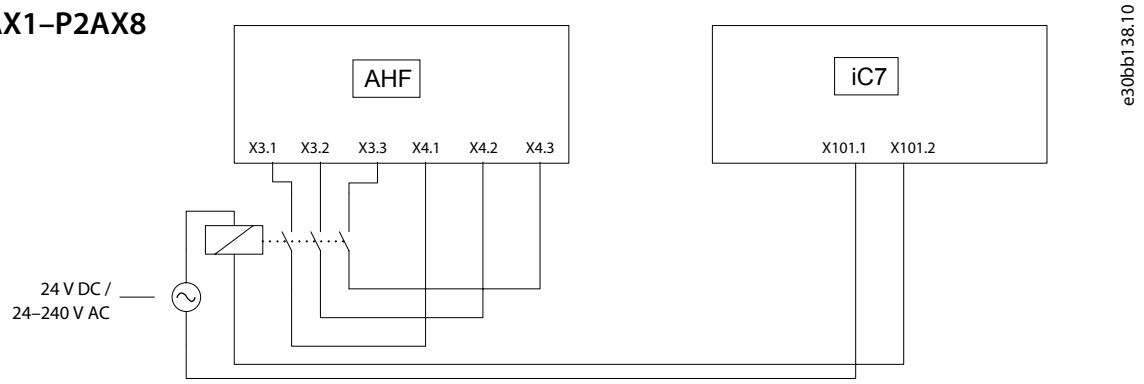

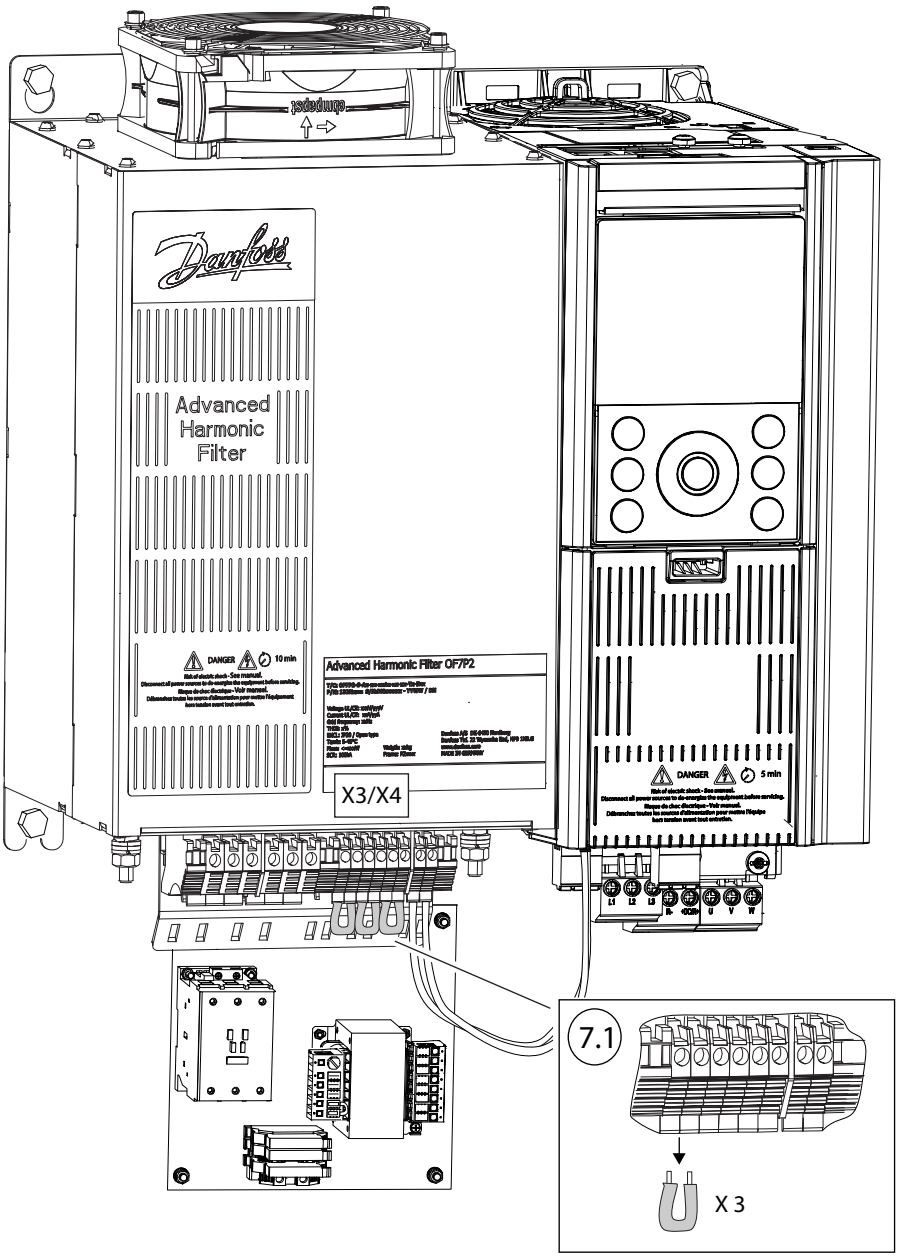

Illustration 13:

e30bb134.10

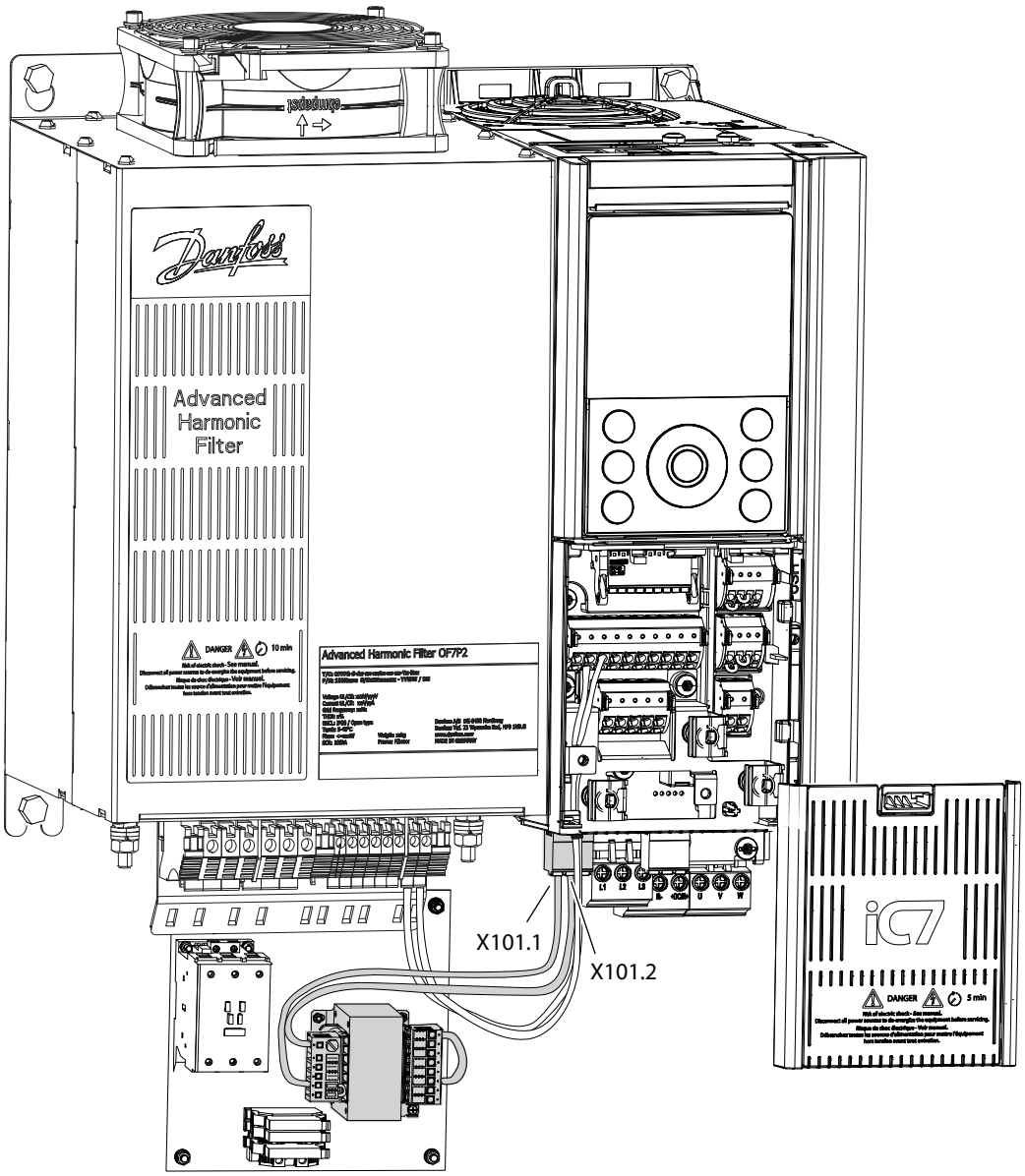

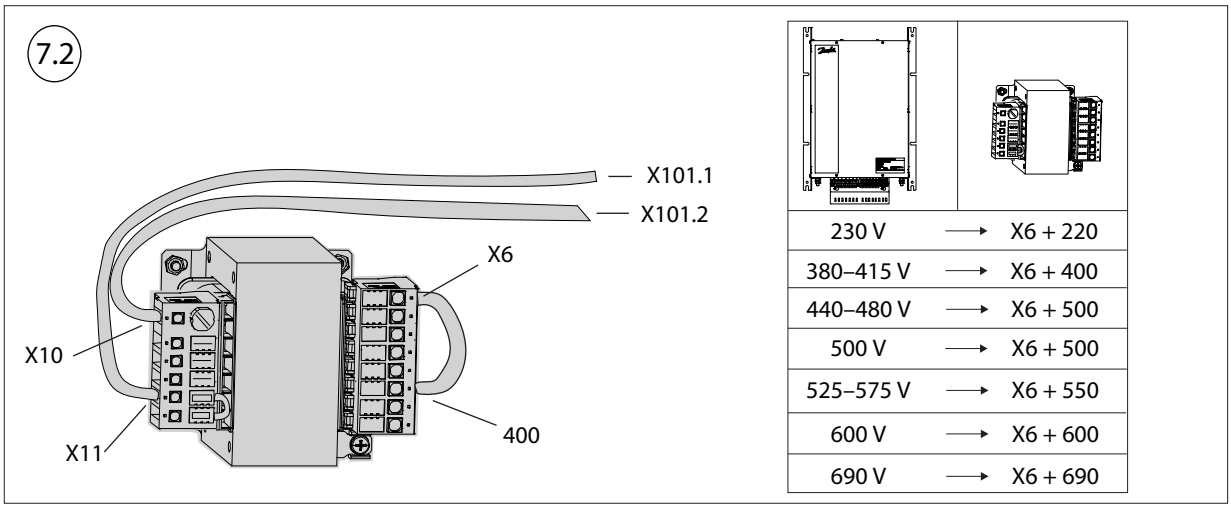

230 V	→	X6 + 220
380–415 V	→	X6 + 400
440–480 V	→	X6 + 500
500 V	→	X6 + 500
525–575 V	→	X6 + 550
600 V	→	X6 + 600
690 V	→	X6 + 690

Illustration 14:

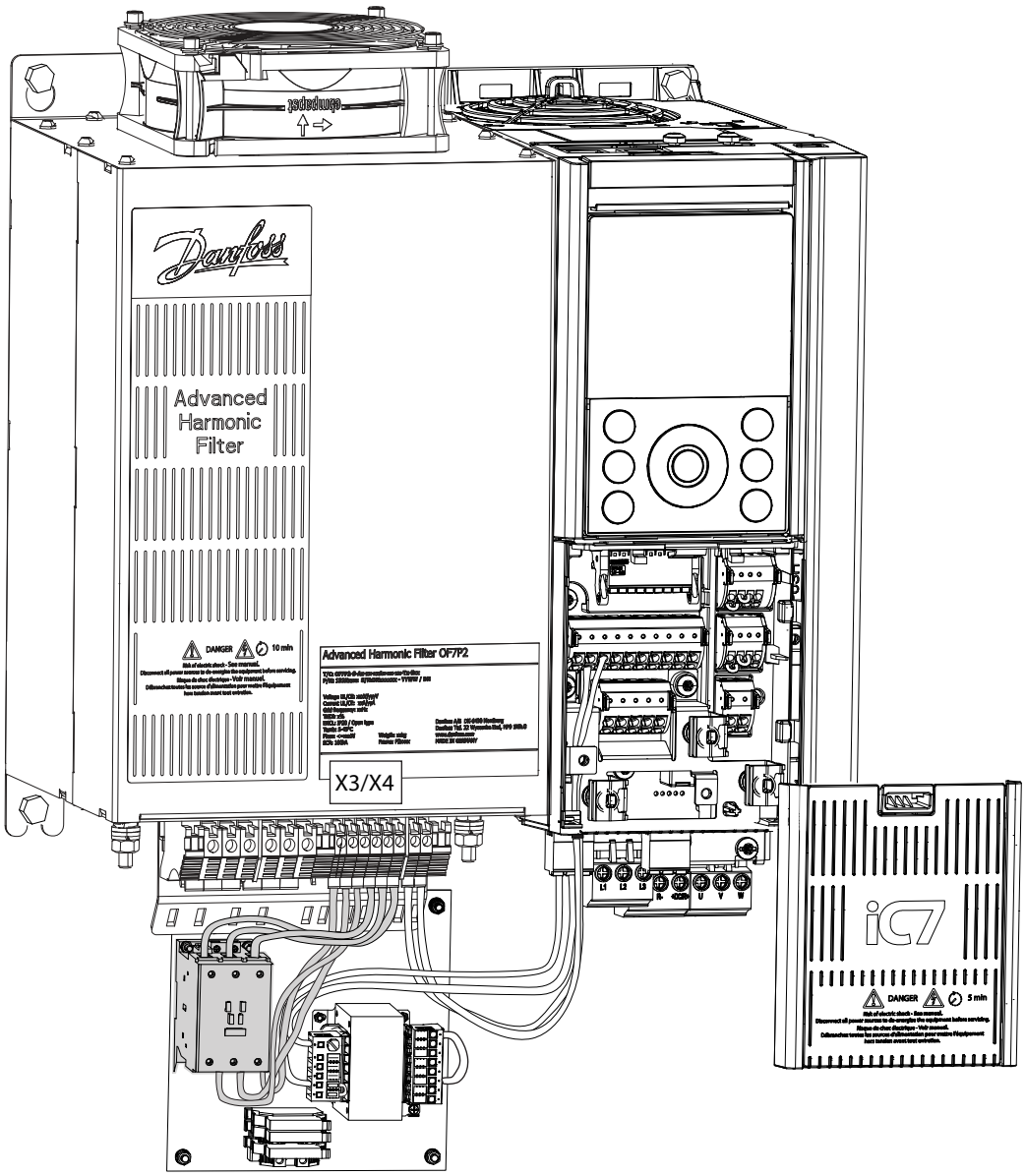

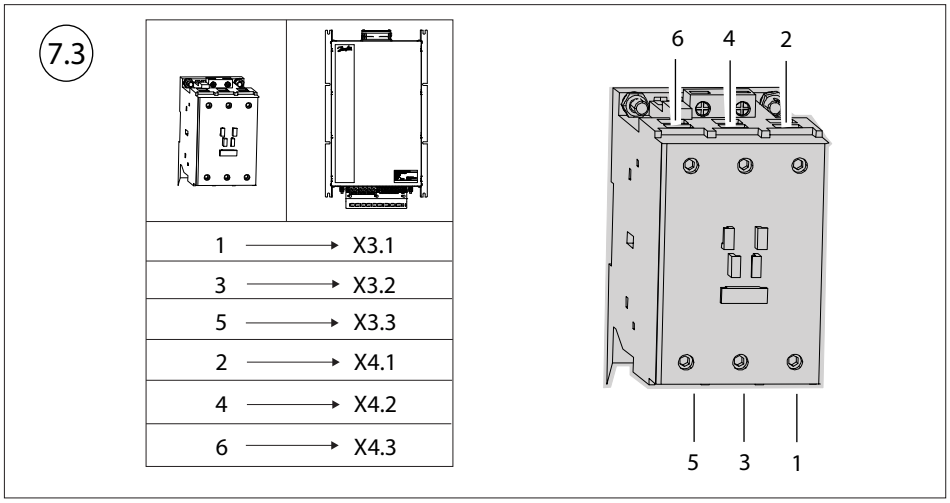

Illustration 15:

8 P2AX1–P2AX8

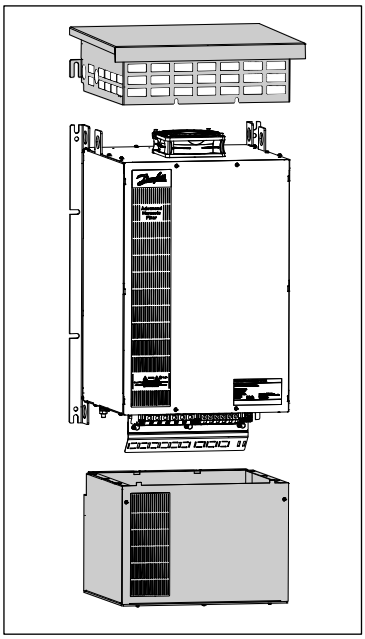

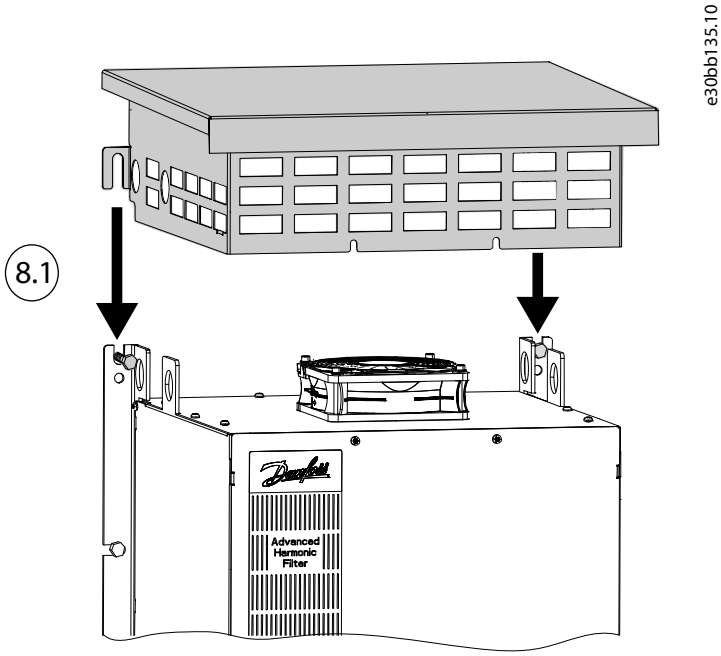

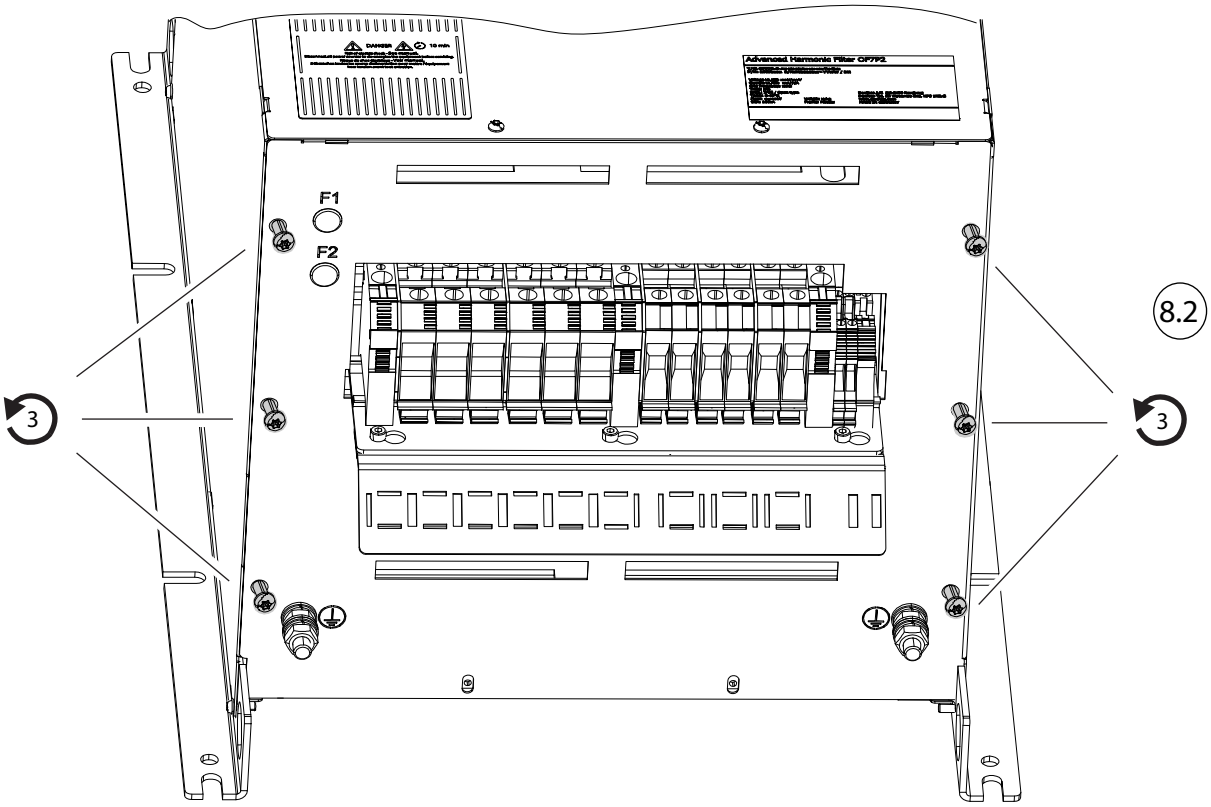

Illustration 16:

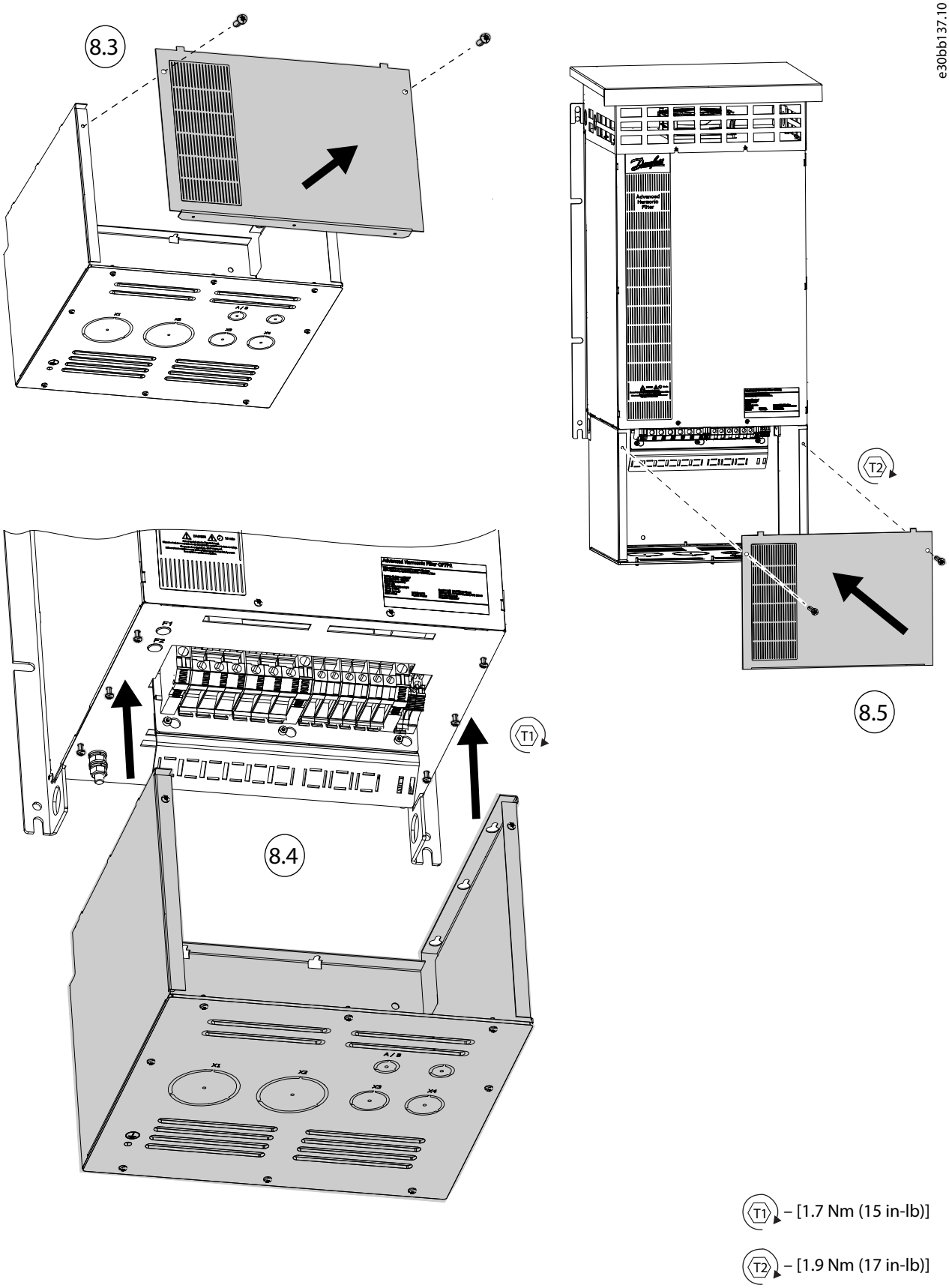

Illustration 17:

ENGINEERING
TOMORROW

Danfoss A/S
Ulsnaes 1
DK-6300 Graasten
drives.danfoss.com

Any information, including, but not limited to information on selection of product, its application or use, product design, weight, dimensions, capacity or any other technical data in product manuals, catalogues descriptions, advertisements, etc. and whether made available in writing, orally, electronically, online or via download, shall be considered informative, and is only binding if and to the extent, explicit reference is made in a quotation or order confirmation. Danfoss cannot accept any responsibility for possible errors in catalogues, brochures, videos and other material. Danfoss reserves the right to alter its products without notice. This also applies to products ordered but not delivered provided that such alterations can be made without changes to form, fit or function of the product. All trademarks in this material are property of Danfoss A/S or Danfoss group companies. Danfoss and the Danfoss logo are trademarks of Danfoss A/S. All rights reserved.