ENGINEERING
TOMORROW

Operating Guide

VLT® AQUA Drive FC 202
110-800 kW, Enclosures D9h-D10h and E5h-E6h

drives.danfoss.com | VLT®

Contents

1 Introduction 8
1.1 Purpose of this Operating Guide 8
1.2 Additional Resources 8
1.3 Manual Version 8
1.4 Approvals and Certifications 8
1.5 Disposal 9

2 Safety 10
2.1 Safety Symbols 10
2.2 Qualified Personnel 10
2.3 Safety Precautions 10

3 Product Overview 13
3.1 Intended Use 13
3.2 What is an Enclosed Drive? 13
3.3 Location of Options within an Enclosed Drive 16
3.4 Drive Identification 18
3.4.1 Identifying the Drive and Its Options 18
3.4.2 Enclosure Size Identification 20
3.4.3 Option Code Identification 20
3.5 Power Ratings and Dimensions for D9h–D10h and E5h–E6h Enclosures 24
3.6 Control Compartment and Local Control Panel 25
3.6.1 Control Compartment Overview 25
3.6.2 Control Compartment Door 26
3.6.3 Local Control Panel (LCP) 27
3.6.4 LCP Menu 29

4 Mechanical Installation 31
4.1 Items Supplied 31
4.2 Split Shipment 31
4.3 Tools Needed 32
4.4 Storage 32
4.5 Operating Environment 32
4.5.1 Operating Environment Overview 32
4.5.2 Gases within the Operating Environment 33
4.5.3 Dust within the Operating Environment 33
4.5.4 Potentially Explosive Atmospheres 33
4.6 Installation Requirements 34
4.7 Cooling Requirements 34
4.8 Airflow Rates 35

4.9 Lifting the Drive 36
4.10 Combining Multiple Cabinets from a Split Shipment 37
4.11 Installing the Enclosed Drive 39
4.11.1 Creating an Entry for Cables 39
4.11.2 Installing the Drive with Back-channel Cooling Option 40
4.11.3 Securing the Cabinet(s) to the Floor 40

5 Electrical Installation 42
5.1 Safety Instructions 42
5.2 EMC-compliant Installation 42
5.3 Wiring Schematic for D9h and D10h Enclosed Drives 46
5.4 Wiring Schematic for E5h and E6h Enclosed Drives 47
5.5 Wiring Diagram Cross-reference 48
5.6 Split Shipment Wiring Harnesses 49
5.6.1 Connecting Wiring Harnesses 49
5.6.2 D10h Wiring Harness 50
5.6.3 E5h Wiring Harness 54
5.6.4 E6h Wiring Harness 60
5.7 Control Compartment Wiring 66
5.7.1 Safety Precautions 66
5.7.2 Control Compartment Interior View 67
5.7.3 Control Terminals 68
5.7.4 Relay Terminals 69
5.7.5 Option Card Terminals 69
5.7.6 Overview of Options Wiring 72
5.8 Connecting Motor, Mains, and Ground Cables 79
5.8.1 Power Cabling and Grounding Considerations 79
5.8.2 Connecting to the Mains 81
5.8.3 Connecting the Drive Module to the Motor 85
5.8.4 Connecting the Sine-wave Filter to the Motor 87
5.8.5 Connecting the dU/dt Filter to the Motor 89
5.8.6 Connecting to Ground 91
5.9 Installing Upstream Fuses 92
5.9.1 Upstream Fuse Considerations 92
5.9.2 Recommended Fuse Ratings for IEC Installation 92
5.9.3 Recommended Fuse Ratings for UL Installation 93
5.10 Enabling Motor Operation 94
5.11 Selecting the Voltage/Current Input Signal 94
5.12 Setting Up RS485 Serial Communication 95
5.13 Configuring the Passive Harmonic Filter (PHF) 96
5.14 Configuring the dU/dt Filter 96
5.15 Configuring the Sine-wave Filter 97

5.16 MCCB Configuration 97
5.17 Safe Torque Off (STO) Wiring 98

6 Pre-start Check List 99

7 Commissioning 101
7.1 Applying Power to the Drive 101
7.2 Programming the Drive 101
7.2.1 Parameter Overview 101
7.2.2 Parameter Navigation 102
7.2.3 Programming Example for an Open-loop Application 102
7.2.4 Entering System Information 103
7.2.5 Configuring Automatic Energy Optimization 104
7.2.6 Configuring Automatic Motor Adaptation 105
7.3 Testing Before System Start-up 105
7.3.1 Testing Motor Rotation 105
7.3.2 Testing Encoder Rotation 106
7.4 Starting Up the Drive for the First Time 106
7.5 Parameter Settings 106
7.5.1 Parameter Setting Overview 106
7.5.2 Uploading and Downloading Parameter Settings 107
7.5.3 Restoring Factory Default Settings Using the Recommended Initialization 107
7.5.4 Restoring Factory Default Settings Using Manual Initialization 108

8 Wiring Configuration Examples 109
8.1 Application Examples 109
8.1.1 Wiring Configuration for Automatic Motor Adaptation (AMA) 109
8.1.2 Wiring Configuration for Automatic Motor Adaptation (AMA) without T27 110
8.1.3 Wiring Configuration: Speed 110
8.1.4 Wiring Configuration: Feedback 113
8.1.5 Wiring Configuration: Run/Stop 115
8.1.6 Wiring Configuration: Start/Stop 117
8.1.7 Wiring Configuration: External Alarm Reset 119
8.1.8 Wiring Configuration: RS485 120
8.1.9 Wiring Configuration: Motor Thermistor 120
8.1.10 Wiring for Regeneration 121
8.1.11 Wiring Configuration for a Relay Set-up with Smart Logic Control 122
8.1.12 Wiring Configuration for a Submersible Pump 122
8.1.13 Wiring Configuration for a Cascade Controller 125
8.1.14 Wiring Configuration for a Fixed Variable Speed Pump 127
8.1.15 Wiring Configuration for Lead Pump Alternation 128

9 Maintenance, Diagnostics, and Troubleshooting 129
9.1 Maintenance and Service 129
9.2 Status Messages 129
9.2.1 Status Message Overview 129
9.2.2 Status Messages - Operating Mode 130
9.2.3 Status Messages - Reference Site 130
9.2.4 Status Messages - Operation Status 130
9.3 Warnings and Alarms 133
9.4 Troubleshooting 157

10 Specifications 160
10.1 Electrical Data 160
10.1.1 Electrical Data, 380–480 V AC 160
10.1.2 Electrical Data, 525–690 V AC 165
10.2 Mains Supply 170
10.3 Motor Output and Motor Data 170
10.3.1 Motor Output (U, V, W) 170
10.3.2 Torque Characteristics 170
10.4 Ambient Conditions 171
10.5 Control Cables 171
10.6 Control Input/Output and Control Data 171
10.6.1 Control Card, USB Serial Communication 171
10.6.2 STO Terminal XD2.19 (Terminal XD2.19 is Fixed PNP Logic) 172
10.6.3 Control Card, 24 V DC Output 172
10.6.4 Control Card, +10 V DC Output 172
10.6.5 Digital Outputs 172
10.6.6 Digital Inputs 173
10.6.7 Pulse/Encoder Inputs 173
10.6.8 Control Characteristics 174
10.6.9 Relay Outputs 174
10.6.10 Analog Output 175
10.6.11 Control Card, RS485 Serial Communication 175
10.6.12 Control Card Performance 175
10.6.13 Analog Inputs 175
10.7 Filter Specifications 176
10.7.1 Passive Harmonic Filter Specifications 176
10.7.2 Line Reactor Specifications 176
10.7.3 dU/dt Filter Specifications 177
10.7.4 Sine-wave Filter Specifications 178
10.8 Fuses and Circuit Breakers 179
10.8.1 Types of Fuses 179
10.8.2 Panel Fuses 180

10.8.3 Fusible Disconnect Switches 181
10.8.4 Non-fusible Disconnect Switches 182
10.8.5 Contactor Fuses 183
10.8.6 Molded-case Circuit Breakers 184
10.9 Enclosure Dimensions 185
10.9.1 Pedestal Dimensions 185
10.9.2 D9h Enclosed Drive Dimension 186
10.9.3 D10h Enclosed Drive Dimensions 187
10.9.4 E5h Enclosed Drive Dimensions 188
10.9.5 E6h Enclosed Drive Dimensions 189
10.10 Enclosure Airflow 190
10.11 Fastener Torque Ratings 190

11 Appendix 191
11.1 Conventions 191
11.2 Abbreviations 191
11.3 International/North American Default Parameter Settings 193
11.4 Required Parameter Settings for Drive Options 194
11.5 Block Diagrams 195
11.6 Input Power Option Losses 198
11.6.1 Contactor Losses 198
11.6.2 Fusible Disconnect Losses 199
11.6.3 Non-fusible Disconnect Losses 200
11.6.4 MCCB Losses 201
11.6.5 Passive Harmonic Filter Losses 202
11.6.6 dU/dt Filter Losses 203
11.6.7 Sine-wave Filter Losses 204

1 Introduction

1.1 Purpose of this Operating Guide

This operating guide provides information for safe installation and commissioning of the AC drive. It is intended for use by qualified personnel. Read and follow the instructions to use the drive safely and professionally. Pay particular attention to the safety instructions and general warnings. Always keep this operating guide available with the drive.

1.2 Additional Resources

Other resources are available to understand advanced drive functions and programming.

- The programming guide provides greater detail on working with parameters and shows many application examples.
- The design guide provides detailed information about capabilities and functionality to design motor control systems.
- The Safe Torque Off Operating Guide provides detailed specifications, requirements, and installation instructions for the Safe Torque Off function.
- Supplementary publications and manuals are available from Danfoss.

See https://www.danfoss.com/en/search/?filter=type%3Adocumentation.

1.3 Manual Version

This manual is regularly reviewed and updated. All suggestions for improvement are welcome.

The original language of this manual is English.

Table 1: Manual and Software Version

Version	Remarks	Software version
MG80H102	First version	3.31

1.4 Approvals and Certifications

The following list is a selection of possible type approvals and certifications for Danfoss drives:

The specific approvals and certification for the enclosed drive are on the nameplate of the drive. For more information, contact the local Danfoss office or partner.

Themal memory retention requirement

This enclosed drive complies with UL 508C and UL 61800-5-1 thermal memory retention requirements. The enclosed drive is UL listed per UL508A and CSA 14 standards. For more information on UL 508C thermal memory retention requirements, refer to the Motor Thermal Protection section in the product-specific design guide.

NOTICE

OUTPUT FREQUENCY LIMIT

Due to export control regulations, the output frequency of the drive is limited to 590 Hz. For demands exceeding 590 Hz, contact Danfoss.

ADN-compliance

For more information on compliance with the European Agreement concerning International Carriage of Dangerous Goods by Inland Waterways (ADN), refer to section *ADN-compliant Installation* in the product-specific *design guide*.

1.5 Disposal

Do not dispose of equipment containing electrical components together with domestic waste. Collect it separately in accordance with applicable local regulations.

2 Safety

2.1 Safety Symbols

The following symbols are used in this manual:

⚠ DANGER ⚠

Indicates a hazardous situation which, if not avoided, will result in death or serious injury.

⚠ WARNING ⚠

Indicates a hazardous situation which, if not avoided, could result in death or serious injury.

⚠ CAUTION ⚠

Indicates a hazardous situation which, if not avoided, could result in minor or moderate injury.

NOTICE

Indicates a property damage message.

2.2 Qualified Personnel

To allow trouble-free and safe operation of the unit, only qualified personnel with proven skills are allowed to transport, store, assemble, install, program, commission, maintain, and decommission this equipment.

Persons with proven skills:

- Are qualified electrical engineers, or persons who have received training from qualified electrical engineers and are suitably experienced to operate devices, systems, plant, and machinery in accordance with pertinent laws and regulations.
- Are familiar with the basic regulations concerning health and safety/accident prevention.
- Have read and understood the safety guidelines given in all manuals provided with the unit, especially the instructions given in the operating guide of the unit.
- Have good knowledge of the generic and specialist standards applicable to the specific application.

2.3 Safety Precautions

⚠ WARNING ⚠

LACK OF SAFETY AWARENESS

This document gives important information on how to prevent injury and damage to the equipment or your system. Ignoring them can lead to death, serious injury, or severe damage to the equipment.

- Make sure to fully understand the dangers and safety measures incurred in your application.

⚠ WARNING ⚠

DISCHARGE TIME

The drive contains DC-link capacitors and, if input filter options are present, extra capacitors and inductors. These components can remain charged even when the drive is not powered. High voltage can be present even when the warning indicator lights are off.

Failure to wait the specified time after power has been removed before performing service or repair work could result in death or serious injury.

- Stop the motor.
- Disconnect AC mains, permanent magnet type motors, and remote DC-link supplies, including battery back-ups, UPS, and DC-link connections to other drives.
- Wait for the capacitors to discharge fully. The minimum waiting time is specified both in the Discharge Time table and on the nameplate on top of the drive.
- Before performing any service or repair work, use an appropriate voltage measuring device to make sure that the capacitors are fully discharged.

Table 2: Discharge Time

Voltage [V]	Minimum waiting time (minutes)	
	20	**40**
380–480	110–315 kW (150–450 hp)	355–560 kW (500–750 hp)
525–690	110–400 kW (125–400 hp)	450–800 kW (450–950 hp)

⚠ WARNING ⚠

HIGH VOLTAGE

AC drives contain high voltage when connected to AC mains input. Failure to perform installation , start-up, and maintenance by qualified personnel can result in death or serious injury.

- Only qualified personnel must perform installation, start-up, and maintenance.

⚠ WARNING ⚠

UNINTENDED START

When the drive is connected to the AC mains, DC supply, or load sharing, the motor may start at any time, causing risk of death, serious injury, and equipment, or property damage. The motor may start by activation of an external switch, a fieldbus command, an input reference signal from the LCP or LOP, via remote operation using MCT 10 Set-up software, or after a cleared fault condition.

- Press [Off] on the LCP before programming parameters.
- Disconnect the drive from the mains whenever personal safety considerations make it necessary to avoid unintended motor start.
- Check that the drive, motor, and any driven equipment is in operational readiness.

⚠ WARNING ⚠

LEAKAGE CURRENT HAZARD

Leakage currents exceed 3.5 mA. Failure to ground the drive properly can result in death or serious injury.

- Ensure the correct grounding of the equipment by a certified electrical installer.

⚠ WARNING ⚠

ROTATING SHAFTS

Contact with rotating shafts and electrical equipment can result in death or serious injury.

- Ensure that only trained and qualified personnel perform installation, start-up, and maintenance.
- Ensure that electrical work conforms to national and local electrical codes.
- Follow the procedures in this guide.

⚠ CAUTION ⚠

HOT SURFACES

The drive contains metal components that are still hot even after the drive has been powered off. Failure to observe the high temperature symbol (yellow triangle) on the drive can result in serious burns.

- Be aware that internal components, such as busbars, may be extremely hot even after the drive has been powered off.
- Do not touch exterior areas that are marked by the high temperature symbol (yellow triangle). These areas are hot while the drive is in use and immediately after being powered off.

⚠ CAUTION ⚠

INTERNAL FAILURE HAZARD

An internal failure in the drive can result in serious injury when the drive is not properly closed.

- Ensure that all safety covers are in place and securely fastened before applying power.

3 Product Overview

3.1 Intended Use

NOTICE

OUTPUT FREQUENCY LIMIT

Due to export control regulations, the output frequency of the drive is limited to 590 Hz. For demands exceeding 590 Hz, contact Danfoss.

The enclosed drive is an electronic motor controller that converts AC mains input into a variable AC waveform output. The frequency and voltage of the output are regulated to control the motor speed or torque. Depending on the configuration, the drive can be used in standalone applications or form part of a larger system or installation. The enclosed drive is designed to:

- Regulate motor speed in response to system feedback or remote commands from external controllers.
- Provide motor overload protection.
- Monitor system and motor status.
- Reduce harmonics and increase the power factor using the optional passive harmonic filter or line reactor.
- Reduce motor acoustic noise and protect motor insulation with the optional output filters.
- Reduce bearing current and shaft voltage with the optional common-mode filter.
- Reduce high-frequency, electromagnetic noise in the motor cables with the optional dU/dt filter.
- Provide sinusoidal output with optional sine-wave filter.

The enclosed drive is designed for residential, industrial, and commercial environments in accordance with local laws and standards. Do not use this drive in applications that are non-compliant with specified operating conditions and environments.

NOTICE

RADIO INTERFERENCE

In a residential environment, this product can cause radio interference.

- Take supplementary mitigation measures.

3.2 What is an Enclosed Drive?

The enclosed drive is an IP21/54 (NEMA 1/12) enclosure surrounding an IP20 (Protected Chassis) drive to form the basis of the system. There are 4 enclosed drive models with varying power ratings.

- D9h model: 110–160 kW (125–250 hp)
- D10h model: 200–400 kW (250–450 hp)
- E5h model: 355–630 kW (450–650 hp)
- E6h model: 500–800 kW (650–950 hp)

The enclosed drive is available with various power options and input and output filters to create a factory-built, custom drive. Some options and filters result in extra cabinets attached to the left or right side of the drive cabinet. These optional cabinets are shown with dotted lines, while the drive cabinet is shaded.

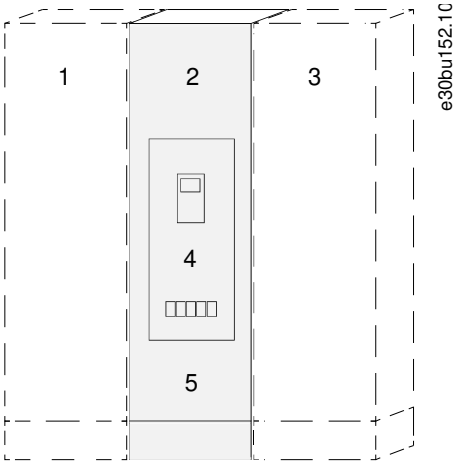

1	Input filter cabinet (passive harmonic filter or line reactor)	**2**	Drives cabinet
3	Sine-wave cabinet	**4**	Control compartment
5	Input power options [1]		

[1] *The D9h enclosure does not require an input power options cabinet – the input power options are placed in the drive cabinet.*

Illustration 1: Possible Configurations for a D9h Enclosed Drive

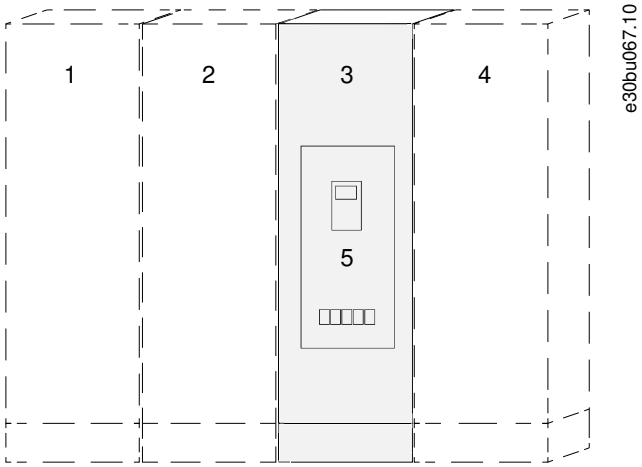

1	Input filter cabinet (passive harmonic filter or line reactor)	**2**	Input power options cabinet [1]
3	Drive cabinet	**4**	Sine-wave filter cabinet
5	Control compartment		

[1] *If more than 1 input power option is ordered, the D10h enclosed drive requires an input power options cabinet. Otherwise the single input power option is placed below the control compartment in the drive cabinet.*

Illustration 2: Possible Configurations for a D10h Enclosed Drive

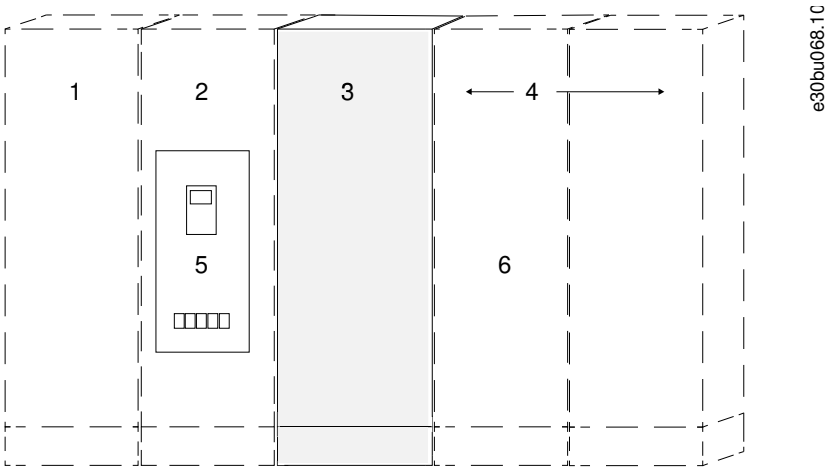

1	Input filter cabinet (passive harmonic filter or line reactor)	**2**	Input power options cabinet
3	Drive cabinet	**4**	Sine-wave filter cabinet
5	Control compartment	**6**	dU/dt filter cabinet

Illustration 3: Possible Configurations for an E5h or E6h Enclosed Drive

3.3 Location of Options within an Enclosed Drive

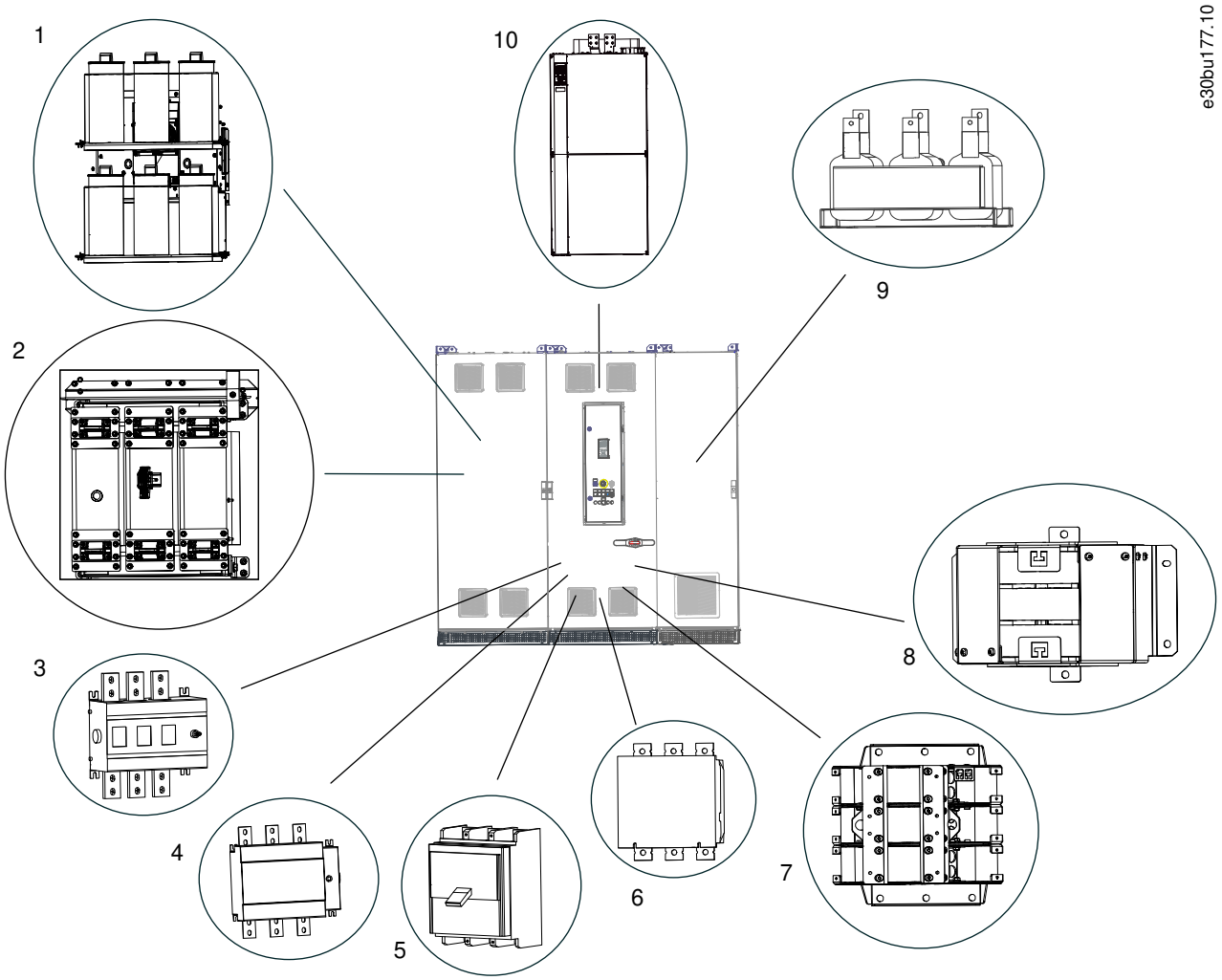

1	Passive harmonic filter (PHF)	**2**	Line reactor
3	Non-fusible disconnect	**4**	Fusible disconnect
5	Molded-case circuit breaker (MCCB)	**6**	Contactor
7	dU/dt filter	**8**	Common-mode filter
9	Sine-wave filter	**10**	Drive module (varies in power rating)

Illustration 4: Visual Representation of a D9h Enclosure and the Locations of Available Options

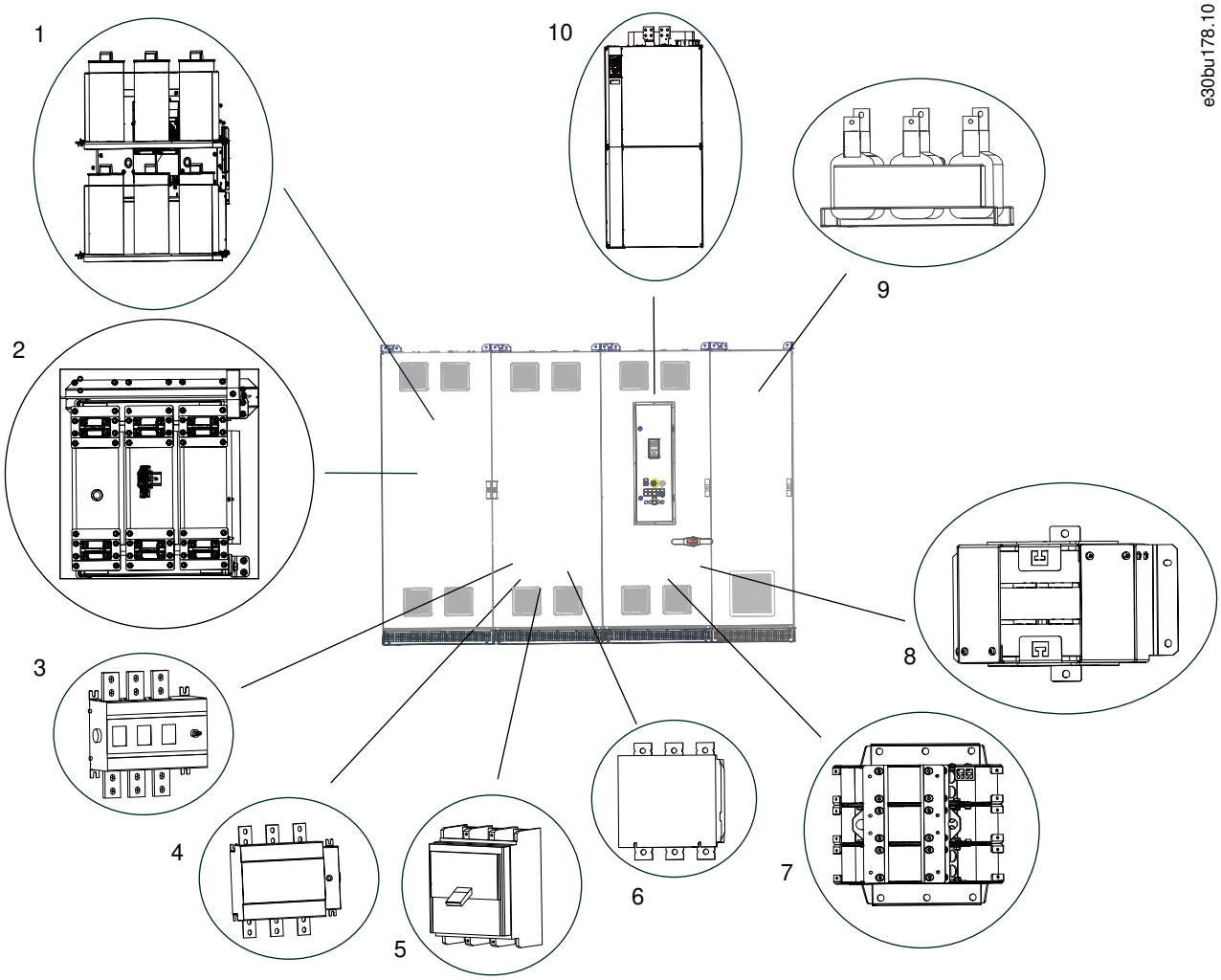

1	Passive harmonic filter (PHF)	**2**	Line reactor
3	Non-fusible disconnect	**4**	Fusible disconnect
5	Molded-case circuit breaker (MCCB)	**6**	Contactor
7	dU/dt filter	**8**	Common-mode filter
9	Sine-wave filter	**10**	Drive module (varies in power rating)

Illustration 5: Visual Representation of a D10h Enclosure and the Locations of Available Options

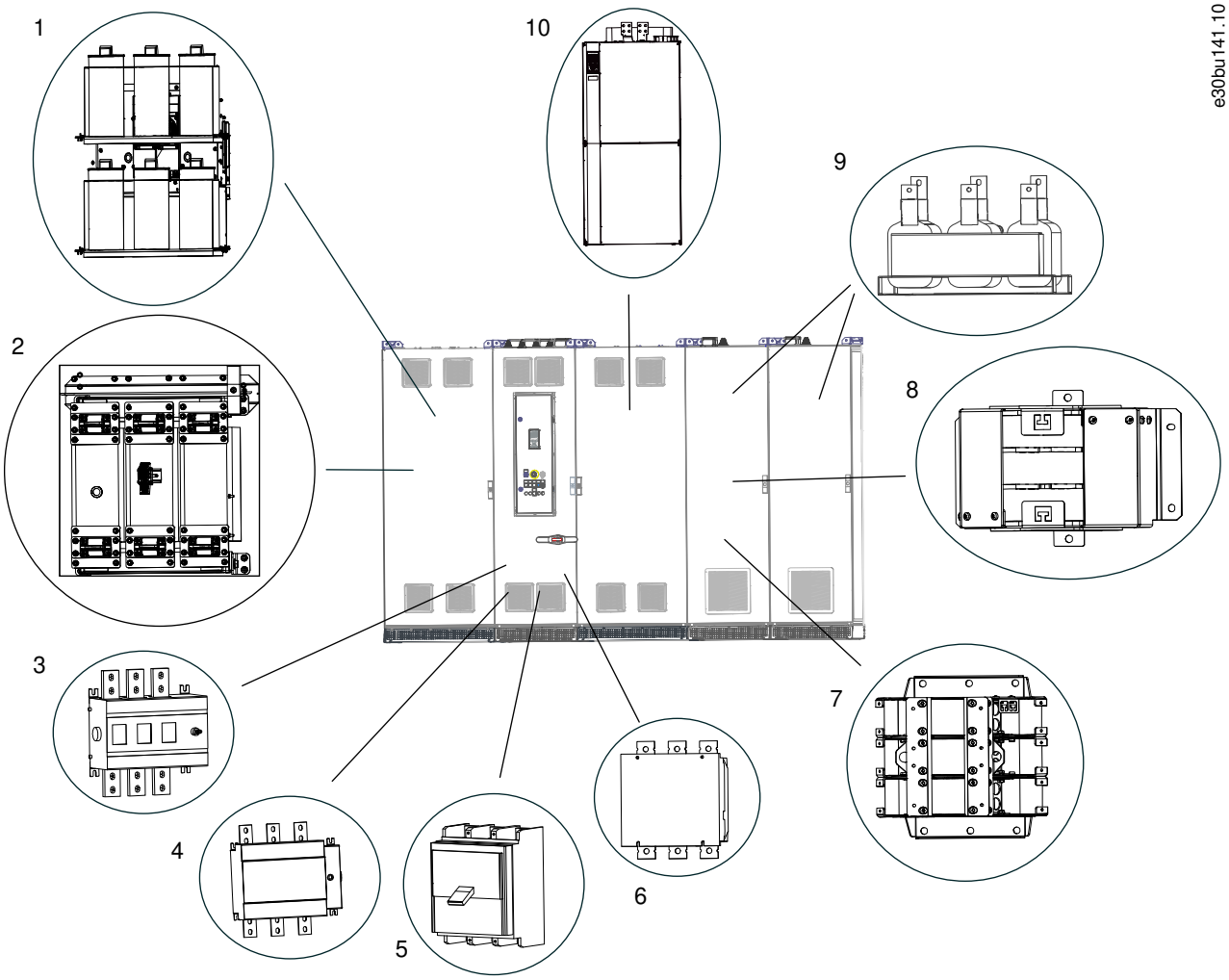

1	Passive harmonic filter (PHF)	**2**	Line reactor
3	Non-fusible disconnect	**4**	Fusible disconnect
5	Molded-case circuit breaker (MCCB)	**6**	Contactor
7	dU/dt filter	**8**	Common-mode filter
9	Sine-wave filter	**10**	Drive module (varies in power rating)

Illustration 6: Visual Representation of a E5h/E6h Enclosure and the Locations of Available Options

3.4 Drive Identification

3.4.1 Identifying the Drive and Its Options

Context:

Enclosure size and specific options are used throughout this guide whenever procedures or components differ based on the drive and its options. Use the following steps to identify the enclosed drive:

Procedure

1. Locate the type code (T/C) on the nameplate. The nameplate is found on the exterior of the drive by the bottom grill or on the inside cabinet door that contains the control compartment.
2. Determine the type of enclosure by obtaining the following information from the type code:
   - **A** Product group and drive series (characters 1–6).
   - **B** Voltage rating (character 8).
   - **C** Model/power rating (characters 10–12).
3. Go to table 3 and use the model number and voltage rating to find the enclosure size.
4. Obtain the following option codes from the type code.
   - **A** Low harmonic filter (character 7).
   - **B** Brake (character 15).
   - **C** Mains (character 16–17).
   - **D** Output filter (character 18).
   - **E** Extra empty cabinet (character 19).
   - **F** Cable infeed (character 20).
   - **G** Back-channel cooling (character 22).
   - **H** Auxiliary function (characters 22–23).
   - **I** Door-mounted options (characters 28–29).
5. Using the option codes, refer to 3.4.3 Option Code Identification to identify the installed options.

Example:

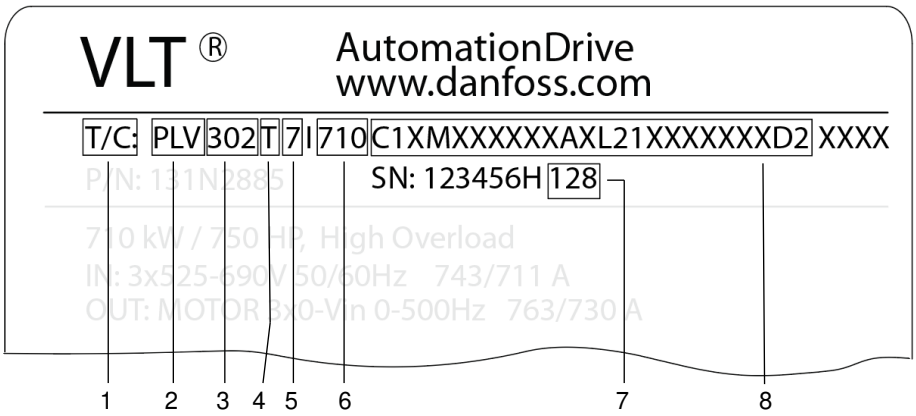

e30bu139.10

1	Type code.	**2**	Product group (PLV = enclosed drive)
3	Drive series • 102 = VLT® HVAC Drive • 202 = VLT® AQUA Drive • 302 = VLT® AutomationDrive	**4**	Low harmonic filter option
		6	Model/power rating
		8	Option codes

5 Mains voltage • 4 = 380–480 V • 5 = 380–500 V • 6 = 525–690 V	
7 Build date (wwy, where ww = the week and y = the last digit of the year)	

Illustration 7: Using the Nameplate to Find the Enclosure Size and Installed Options

3.4.2 Enclosure Size Identification

Table 3: Model by Drive Voltage

Model	Enclosure size (380–480 V)	Enclosure size (525–690 V)
N110	D9h	D9h
N132	D9h	D9h
N160	D9h	D9h
N200	D10h	D10h
N250	D10h	D10h
N315	D10h	D10h
N355	E5h	–
N400	E5h	D10h
N450	E5h	E5h
N500	E6h	E5h
N560	E6h	E5h
N630	–	E5h
N710	–	E6h
N800	–	E6h

3.4.3 Option Code Identification

Table 4: Low-harmonic Filter Option Codes

Character position	Option code	Description
7	T	None
	A	Active filter
	P	Passive filter, THDi=5%, 50 Hz
	H	Passive filter, THDi=8%, 50 Hz
	L	Passive filter, THDi=5%, 60 Hz
	U	Passive filter, THDi=8%, 60 Hz

Table 5: Brake Option Codes

Character position	Option code	Description
15	X	No brake IGBT
	B	Brake IGBT
	T	Safe Torque Off
	U	Brake IGBT + Safe Torque Off

Table 6: Mains Option Codes

Character position	Option code	Description
16–17	MX	None
	M1	Fusible disconnect
	M2	Non-fusible disconnect
	M3	Circuit breaker (MCCB)
	M4	Contactor
	M5	AC reactor
	M6	Fuses
	MA	Fusible disconnect + contactor
	MB	Non-fusible disconnect + contactor
	MC	AC reactor + fusible disconnect
	MD	AC reactor + fusible disconnect + contactor
	ME	AC reactor + non-fusible disconnect
	MF	AC reactor + circuit breaker (MCCB)
	MG	AC reactor + contactor
	MH	AC reactor + non-fusible disconnect + contactor

Table 7: Output Filter Option Codes

Character position	Option code	Description
18	X	None
	D	dU/dt
	S	Sine-wave
	C	Common-mode
	1	Common-mode + dU/dt
	2	Common-mode + sine-wave

Table 8: Extra Cabinet Option Codes

Character position	Option code	Description
19	X	None
	4	400 mm (15.8 in), left-hand side
	6	600 mm (23.6 in), left-hand side
	A	400 mm (15.8 in), right-hand side
	B	600 mm (23.6 in), right-hand side

Table 9: Cable Infeed Option Codes

Character position	Option code	Description
20	X	Bottom
	T	Top
	L	Mains top, motor bottom
	M	Mains bottom, motor top

Table 10: Auxiliary Power Supply Codes

Character position	Option code	Description
21	X	No supply
	1	230 V AC external
	2	230 V AC internal
	4	230 V AC internal + 24 V DC internal
	5	230 V AC external + 24 V DC internal
	6	120 V AC external
	7	120 V AC internal
	8	120 V AC internal + 24 V DC internal
	9	120 V AC external + 24 V DC internal

Table 11: Back-channel Cooling Option Codes

Character position	Option code	Description
22	X	Bottom in, top out
	1	Back in, back out
	C	Back in, top out
	D	Bottom in, back out
	N	None

Table 12: Auxiliary Function Option Codes

Character position	Option code	Description
23–24	XX	No auxiliary options
	A1	AC socket+cabinet light
	A2	Extended I/O terminals
	A3	Cabinet heater
	A4	Motor heater control
	A5	Insulation monitor
	AA	AC socket + cabinet light + extended I/O terminals
	AB	AC socket + cabinet light + cabinet heater
	AC	AC socket + cabinet light + motor heater control
	AD	AC socket + cabinet light + insulation monitor
	AE	AC socket + cabinet light + extended I/O terminals + cabinet heater
	AF	AC socket + cabinet light + extended I/O terminals + motor heater control
	AG	AC socket + cabinet light + extended I/O terminals + insulation monitor
	AH	AC socket + cabinet light + extended I/O terminals + cabinet heater + motor heater control
	AI	AC socket + cabinet light + extended I/O terminals + cabinet heater + insulation monitor
	AJ	AC socket + cabinet light + extended I/O terminals + motor heater control + insulation monitor
	AK	AC socket + cabinet light + extended I/O terminals + cabinet heater + motor heater control + insulation monitor
	AL	AC socket + cabinet light + cabinet heater + motor heater control
	AM	AC socket + cabinet light + cabinet heater + insulation monitor
	AN	AC socket + cabinet light + cabinet heater + motor heater control + insulation monitor
	AO	AC socket + cabinet light + motor heater control + insulation monitor
	AP	Extended I/O terminals + cabinet heater
	AQ	Extended I/O terminals + motor heater control
	AR	Extended I/O terminals + insulation monitor
	AS	Extended I/O terminals + cabinet heater + motor heater control
	AT	Extended I/O terminals + cabinet heater + insulation monitor
	AU	Extended I/O terminals + cabinet heater + motor heater control + insulation monitor
	AV	Extended I/O terminals + motor heater control + insulation monitor
	AW	Cabinet heater + motor heater control
	AX	Cabinet heater + insulation monitor
	AY	Cabinet heater + motor heater control + insulation monitor
	AZ	Motor heater control + insulation monitor

Table 13: Door-mounted Option Codes

Character position	Option code	Description
28–29	XX	None
	D1	Indicator lights and reset button
	D2	Emergency switch off + emergency push-button
	D3	STO w/ emergency push-button (no functional safety)
	D4	STO/SS1 w/ emergency push-button + safely limited speed (TTL encoder)
	D5	STO/SS1 w/ emergency push-button + safely limited speed (HTL encoder)
	DA	Indicator lights and reset button + emergency switch off and emergency push-button
	DB	Indicator lights and reset button + STO w/ emergency push-button (no functional safety)
	DC	Indicator lights and reset button + STO/SS1 w/ emergency push-button + safely limited speed (TTL encoder)
	DE	Indicator lights and reset button + STO/SS1 w/ emergency push-button + safely limited speed (HTL encoder)

3.5 Power Ratings and Dimensions for D9h–D10h and E5h–E6h Enclosures

Table 14: Power Ratings and Dimensions for D9h–D10h and E5h–E6h Enclosures (Standard Configurations)

Enclosed drive	D9h	D10h	E5h	E6h
Rated power at 380–480 V [kW (hp)]	110–160 (150–250)	200–315 (300–450)	355–450 (500–600)	500–560 (650–750)
Rated power at 525–690 V [kW (hp)]	110–160 (125–200)	200–400 (250–400)	450–630 (450–650)	710–800 (750–950)
Protection rating	IP21 (NEMA 1)/ IP54 (NEMA 12)	IP21 (NEMA 1)/IP54 (NEMA 12)	IP21 (NEMA 1)/IP54 (NEMA 12)	IP21 (NEMA 1)/IP54 (NEMA 12)
Drive cabinet	**D9h**	**D10h**	**E5h**	**E6h**
Height [mm (in)] (1)	2100 (82.7)	2100 (82.7)	2100 (82.7)	2100 (82.7)
Width [mm (in)] (2)	400 (15.8)	600 (23.6)	600 (23.6)	800 (31.5)
Depth [mm (in)]	600 (23.6)	600 (23.6)	600 (23.6)	600 (23.6)
Weight [kg (lb)] (2)	280 (617)	355 (783)	400 (882)	431 (950)
Input filter cabinet	**D9h**	**D10h**	**E5h**	**E6h**
Height [mm (in)] (1)	2100 (82.7)	2100 (82.7)	2100 (82.7)	2100 (82.7)
Width [mm (in)]	400 (15.8)	400 (15.8)/600 (23.6)	600 (23.6)	600 (23.6)/800 (31.5)
Depth [mm (in)]	600 (23.6)	600 (23.6)	600 (23.6)	600 (23.6)
Weight [kg (lb)]	410 (904)	410 (904)/530 (1168)	530 (1168)	530 (1168)/955 (2105)
Input power options cabinet	**D9h**	**D10h**	**E5h**	**E6h**

Enclosed drive	D9h	D10h	E5h	E6h
Height [mm (in)] [1]	–	2100 (82.7)	2100 (82.7)	2100 (82.7)
Width [mm (in)]	–	600 (23.6)	600 (23.6)	600 (23.6)
Depth [mm (in)]	–	600 (23.6)	600 (23.6)	600 (23.6)
Weight [kg (lb)]	–	380 (838)	380 (838)	380 (838)
Sine-wave filter cabinet	**D9h**	**D10h**	**E5h**	**E6h**
Height [mm (in)] [1]	2100 (82.7)	2100 (82.7)	2100 (82.7)	2100 (82.7)
Width [mm (in)]	600 (23.6)	600 (23.6)	1200 (47.2)	1200 (47.2)
Depth [mm (in)]	600 (23.6)	600 (23.6)	600 (23.6)	600 (23.6)
Weight [kg (lb)]				
dU/dt filter cabinet	**D9h**	**D10h**	**E5h**	**E6h**
Height [mm (in)] [1]	–	–	2100 (82.7)	2100 (82.7)
Width [mm (in)] [3]	–	–	400 (15.8)	400 (15.8)
Depth [mm (in)]	–	–	600 (23.6)	600 (23.6)
Weight [kg (lb)]	–	–	240 (529)	240 (529)
Top entry/exit cabinet	**D9h**	**D10h**	**E5h**	**E6h**
Height [mm (in)] [1]	2100 (82.7)	2100 (82.7)	2100 (82.7)	2100 (82.7)
Width [mm (in)] [3]	400 (15.8)	400 (15.8)	400 (15.8)	400 (15.8)
Depth [mm (in)]	600 (23.6)	600 (23.6)	600 (23.6)	600 (23.6)
Weight [kg (lb)]	164 (362)	164 (362)	164 (362)	164 (362)

[1] *Cabinet height includes standard 100 mm (3.9 in) pedestal. A 200 mm (7.9 in) or 400 mm (15.8 in) pedestal is optional.*

[2] *Without options.*

[3] *The E5h and E6h enclosures contain 2 sine-wave cabinets. The provided width is the total of both cabinets.*

3.6 Control Compartment and Local Control Panel

3.6.1 Control Compartment Overview

The control compartment is a self-contained space that can be accessed without opening the drive enclosure. The control compartment contains the following:

- Local control panel (LCP).
- Terminals for option cards.
- Optional auxiliary components and related wiring.
- Terminals for internal connections.
- Terminals for control cabling.
- Product nameplate.
- Buttons and indicator lights (on the exterior door).

For wiring and terminal descriptions, see 5.7.2 Control Compartment Interior View.

3.6.2 Control Compartment Door

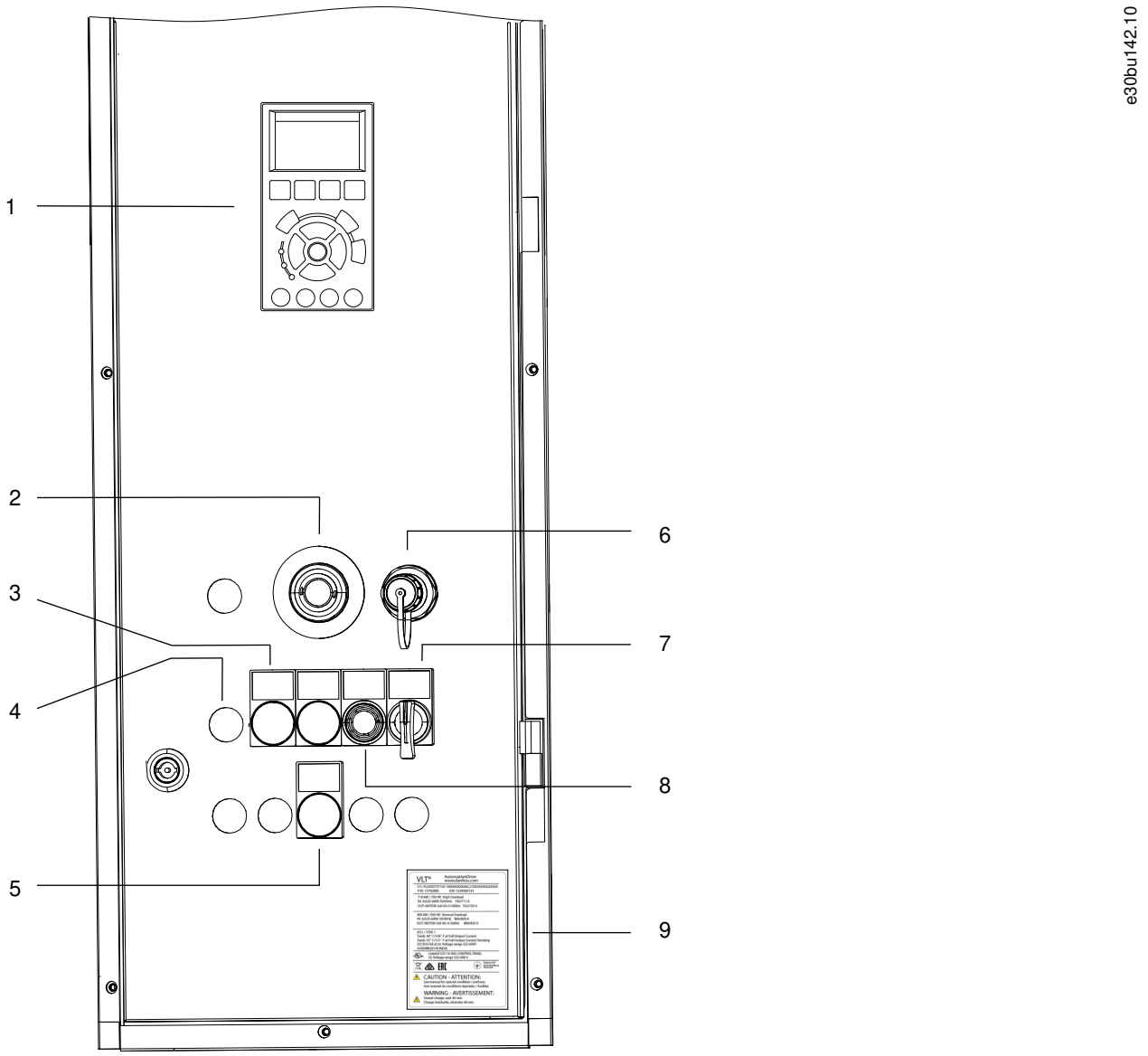

1	Local control panel (LCP)	**2**	Emergency push-button
3	Fault indicator light	**4**	Run indicator light
5	Insulation fault indicator light	**6**	USB slot
7	0–1 Start switch	**8**	Reset button
9	Nameplate		

Illustration 8: Exterior Door of Control Compartment (Shown with All Options)

3.6.3 Local Control Panel (LCP)

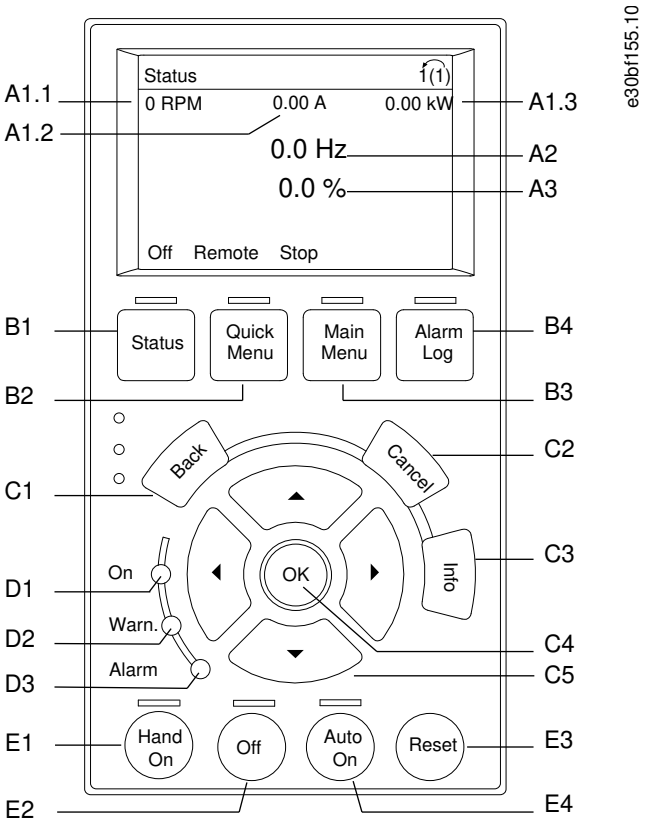

Illustration 9: Graphical Local Control Panel (LCP)

A. Display area

Each display readout has a parameter associated with it. See table 15. The information shown on the LCP can be customized for specific applications. Refer to My Personal Menu in the LCP Menu section.

Table 15: LCP Display Area

Callout	Parameter	Default setting
A1.1	*Parameter 0-20 Display Line 1.1 Small*	Reference [Unit]
A1.2	*Parameter 0-21 Display Line 1.2 Small*	Analog input 53 [V]
A1.3	*Parameter 0-22 Display Line 1.3 Small*	Motor current [A]
A2	*Parameter 0-23 Display Line 2 Large*	Frequency [Hz]
A3	*Parameter 0-24 Display Line 3 Large*	Feedback [Unit]

B. Menu keys

Menu keys are used to access the menu for setting up parameters, toggling through status display modes during normal operation, and viewing fault log data.

Table 16: LCP Menu Keys

Callout	Key	Function
B1	Status	Shows operational information.
B2	Quick Menu	Allows access to parameters for initial set-up instructions. Also provides detailed application steps. Refer to Quick Menu Mode in the LCP Menu section.
B3	Main Menu	Allows access to all parameters. Refer to Main Menu Mode in the LCP Menu section.
B4	Alarm Log	Shows a list of current warnings and the last 10 alarms.

C. Navigation keys

Navigation keys are used for programming functions and moving the display cursor. The navigation keys also provide speed control in local (hand) operation. The display brightness can be adjusted by pressing [Status] and [▵]/[▿] keys.

Table 17: LCP Navigation Keys

Callout	Key	Function
C1	Back	Reverts to the previous step or list in the menu structure.
C2	Cancel	Cancels the last change or command as long as the display mode has not changed.
C3	Info	Shows a definition of the function being shown.
C4	OK	Accesses parameter groups or enables an option.
C5	[▵][▹] [▿] [◃]	Moves between items in the menu.

D. Indicator lights

Indicator lights identify the drive status and provides a visual notification of warning or fault conditions.

Table 18: LCP Indicator Lights

Callout	Indicator	Light	Function
D1	On	Green	Activates when the drive receives power from the mains voltage or a 24 V external supply.
D2	Warn.	Yellow	Activates when warning conditions are active. Text appears in the display area identifying the problem.
D3	Alarm	Red	Activates during a fault condition. Text appears in the display area identifying the problem.

E. Operation keys and reset

The operation keys are found toward the bottom of the local control panel.

Table 19: LCP Operation Keys and Reset

Callout	Key	Function
E1	[Hand On]	Starts the drive in local control. An external stop signal by control input or serial communication overrides the local [Hand On].
E2	Off	Stops the motor but does not remove power to the drive.
E3	Reset	Resets the drive manually after a fault has been cleared.

Callout	Key	Function
E4	Auto On	Puts the system in remote operational mode so it can respond to an external start command by control terminals or serial communication.

3.6.4 LCP Menu

Quick Menus

The *Quick Menus* mode provides a list of menus used to configure and operate the drive. Select the *Quick Menus* mode by pressing the [Quick Menus] key. The resulting readout appears on the LCP display.

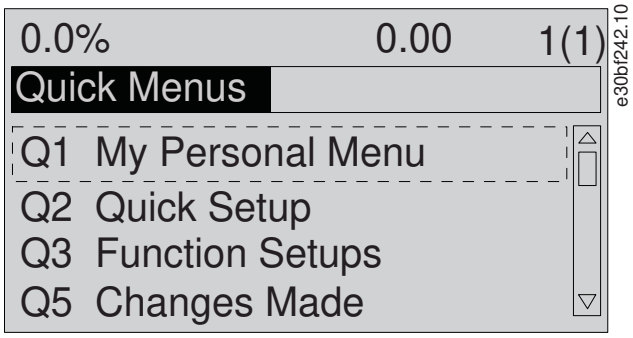

Illustration 10: Quick Menu View

Q1 My Personal Menu

The Personal Menu is used to determine what is shown in the display area. Refer to 3.6.3 Local Control Panel (LCP). This menu can also show up to 50 pre-programmed parameters. These 50 parameters are manually entered using *parameter 0-25 My Personal Menu*.

Q2 Quick Setup

The parameters found in the Q2 Quick Setup contain basic system and motor data that are always necessary for configuring the drive. See 7.2.4 Entering System Information for the set-up procedures.

Q3 Function Setups

The parameters found in the Q3 Function Setups contain data for fan, compressor, and pump functions. This menu also includes parameters for LCP display, digital preset speeds, scaling of analog references, closed-loop single zone, and multizone applications.

Q4 Smart Setup

Q4 Smart Setup guides the user through typical parameter settings used to configure 1 of the following 3 applications:

- Mechanical brake.
- Conveyor.
- Pump/fan.

The [Info] key can be used to see help information for various selections, settings, and messages.

Q5 Changes Made

Select Q5 Changes Made for information about:

- The 10 most recent changes.
- Changes made from default setting.

Q6 Loggings

Use Q6 Loggings for fault finding. To get information about the display line readout, select Loggings. The information is shown as graphs. Only parameters selected in *parameter 0-20 Display Line 1.1 Small* through *parameter 0-24 Display Line 3 Large* can be viewed. It is possible to store up to 120 samples in the memory for later reference.

Table 20: Logging Parameter Examples

Q6 Loggings	
Parameter 0-20 Display Line 1.1 Small	Reference [Unit]
Parameter 0-21 Display Line 1.2 Small	Analog input 53 [V]
Parameter 0-22 Display Line 1.3 Small	Motor current [A]
Parameter 0-23 Display Line 2 Large	Frequency [Hz]
Parameter 0-24 Display Line 3 Large	Feedback [Unit]

Q7 Water and Pumps

The parameters found in the Q7 Water and Pumps contain basic data that is necessary for configuring water pump applications.

Main Menu

The *Main Menu* mode is used to:

- List the parameter groups available to the drive and drive options.
- Change parameter values.

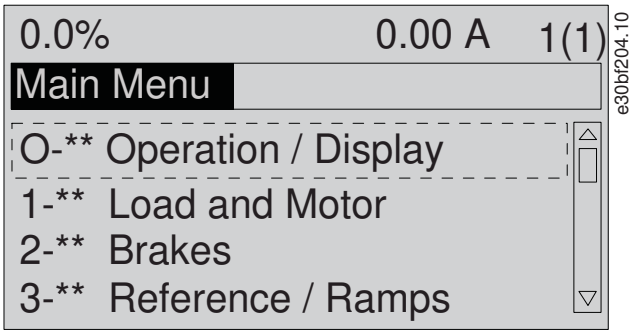

Illustration 11: Main Menu View

4 Mechanical Installation

4.1 Items Supplied

Items supplied can vary according to product configuration.

- Make sure that the items supplied and the information on the nameplate correspond to the order confirmation.
- Visually check the packaging and the drive for damage caused by inappropriate handling during shipment. File any claim for damage with the carrier. Retain damaged parts for clarification.

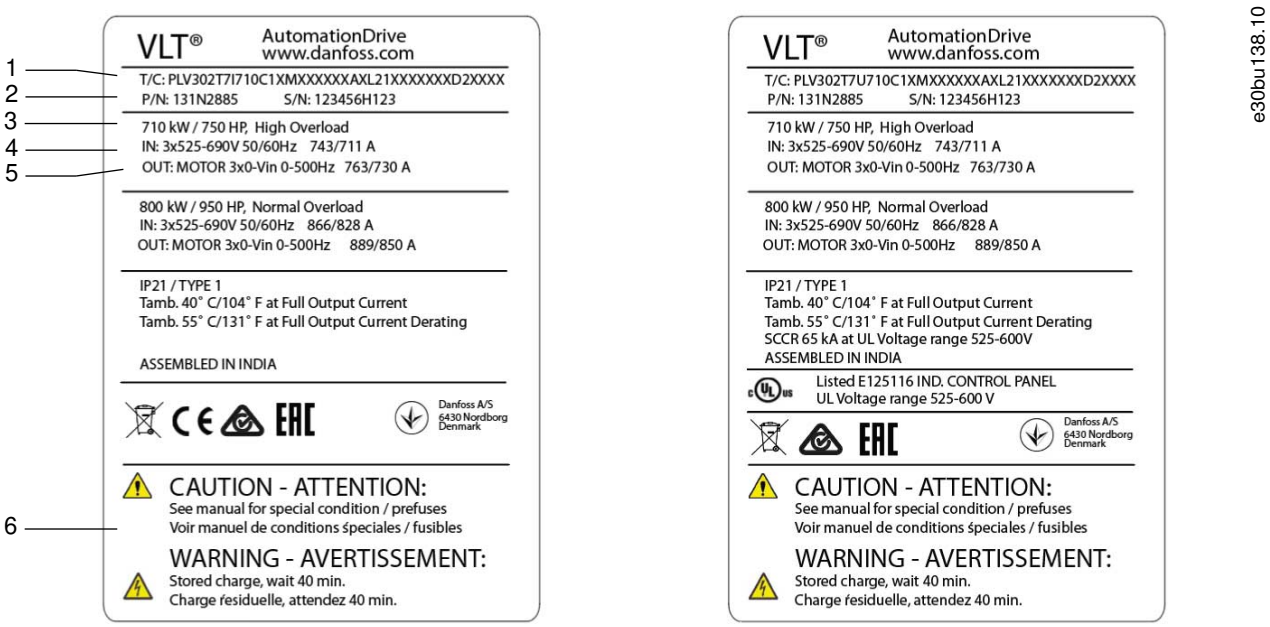

1	Type code	**2**	Part number and serial number
3	Power rating	**4**	Input voltage, frequency, and current (at low/high voltages)
5	Output voltage, frequency, and current (at low/high voltages)	**6**	Discharge time

Illustration 12: Example of a Product Nameplate for E6h Enclosure (IEC Version on Left, UL Version on Right)

NOTICE

WARRANTY

Removing the nameplate from the drive can result in the loss of warranty.

4.2 Split Shipment

Depending on what options are ordered with an enclosed drive, the drive can consist of 5 cabinets and measure 3400 mm (134 in) in width, which can be difficult to transport and handle. In cases where an enclosed drive exceeds 1800 mm (71 in) in width, the cabinets are separated and shipped in multiple boxes. All necessary fasteners needed for reassembly are provided in the delivery. To reassemble a split shipment, refer to 4.10 Combining Multiple Cabinets from a Split Shipment and 5.6.1 Connecting Wiring Harnesses.

4.3 Tools Needed

- I-beam and hooks rated to lift the weight of the drive. Refer to the Power Ratings, Weight, and Dimensions section.
- Crane or other lifting aid to place the unit into position.
- Drill with 10 mm or 12 mm drill bits.
- Tape measurer.
- Various sizes of Phillips and flat bladed screwdrivers.
- Wrench with relevant metric sockets (7–17 mm).
- Wrench extensions.
- Torx drives (T25 and T50).
- Sheet metal punch for cable entry plate.

4.4 Storage

Store the drive in a dry location. Keep the equipment sealed in its packaging until installation. Refer to the Ambient Conditions section for recommended ambient temperature.

Periodic forming (capacitor charging) is not necessary during storage unless storage exceeds 12 months.

4.5 Operating Environment

4.5.1 Operating Environment Overview

In environments with airborne liquids, particles, or corrosive gases, ensure that the IP/NEMA protection rating of the equipment matches the installation environment. Refer to the Ambient Conditions section.

NOTICE

CONDENSATION

Moisture can condense on the electronic components and cause short circuits.

- Avoid installation in areas subject to frost.
- Install an optional space heater when the drive is colder than the ambient air.
- Operating in standby mode reduces the risk of condensation as long as the power dissipation keeps the circuitry free of moisture.

NOTICE

EXTREME AMBIENT CONDITIONS

Hot or cold temperatures compromise unit performance and longevity.

- Do not operate in environments where the ambient temperature exceeds 55 °C (131 °F).
- The drive can operate at temperatures down to -10 °C (14 °F). However, proper operation at rated load is only guaranteed at 0 °C (32 °F) or higher.
- Provide extra air conditioning for the cabinet or installation site when the temperature exceeds ambient temperature limits.

4.5.2 Gases within the Operating Environment

Aggressive gases, such as hydrogen sulphide, chlorine, or ammonia can damage the electrical and mechanical components. The unit uses conformal-coated circuit boards to reduce the effects of aggressive gases.

For conformal coating class specifications and ratings, see the Ambient Conditions section.

4.5.3 Dust within the Operating Environment

When installing the drive in dusty environments, keep the following free from dust buildup:

- Electronic components.
- Heat sink.
- Fans.

Periodic maintenance

When dust accumulates on electronic components, it acts as a layer of insulation. This layer reduces the cooling capacity of the components, and the components become warmer. The hotter environment decreases the life of the electronic components. Dust can also accumulate on fan blades, causing an imbalance which prevents the fan from properly cooling the unit. Dust buildup can also damage fan bearings and cause premature fan failure.

For more information, refer to the Maintenance and Service section.

4.5.4 Potentially Explosive Atmospheres

⚠ WARNING ⚠

EXPLOSIVE ATMOSPHERE

Installing the drive in a potentially explosive atmosphere can lead to death, personal injury, or property damage.

- Install the unit in a cabinet outside of the potentially explosive area.
- Use a motor with ATEX protection class d or class e.
  - Class d (if a spark occurs, it is contained in a protected area).
  - Class e (prohibits any occurrence of a spark).
- Install a PTC temperature sensor to monitor the motor temperature.
- Install short motor cables.
- Use sine-wave output filters when shielded motor cables are not used.

As required by the EU Directive 94/9/EC, any electrical or electronic device intended for use in an environment with a potentially explosive mixture of air, flammable gas, or dust must be ATEX-certified. Systems operated in this environment must fulfill the following special conditions to comply with the ATEX protection class:

Motors with class d protection

Does not require approval. Special wiring and containment are required.

Motors with class e protection

When combined with an ATEX-approved PTC monitoring device like the VLT® PTC Thermistor Card MCB 112, installation does not need an individual approval from an approbated organization.

Motors with class d/e protection

The motor itself has an e ignition protection class, while the motor cabling and connection environment is in compliance with the d classification. To attenuate the high peak voltage, use a sine-wave filter at the drive output.

NOTICE

MOTOR THERMISTOR SENSOR MONITORING

VLT® AutomationDrive units with the VLT® PTC Thermistor Card MCB 112 option are PTB-certified for potentially explosive atmospheres.

4.6 Installation Requirements

NOTICE

OVERHEATING

Improper mounting can result in overheating and reduced performance.

- Install the drive according to the installation and cooling requirements.

- Locate the unit as near to the motor as possible. For the maximum motor cable length, see 10.5 Control Cables.
- Ensure unit stability by mounting the unit to a solid surface.
- Ensure that the strength of the mounting location supports the unit weight.
- Ensure that there is enough space around the unit for proper cooling. Refer to 10.10 Enclosure Airflow.
- Ensure enough access to open the door.
- Ensure cable entry from the bottom.

4.7 Cooling Requirements

NOTICE

OVERHEATING

Improper mounting can result in overheating and reduced performance.

- Install the drive following the installation and cooling requirements.

- Ensure that top and bottom clearance for air cooling is provided. Clearance requirement: 225 mm (9 in).
- Provide sufficient airflow flow rate. See 4.8 Airflow Rates.
- Consider derating for temperatures starting between 45 °C (113 °F) and 50 °C (122 °F) and elevation 1000 m (3300 ft) above sea level. See the product-specific design guide for detailed information.

The enclosed drive, excluding the input power options cabinet, utilizes a back-channel cooling concept that removes the air used to cool the heat sink. The heat sink cooling air carries approximately 90% of the heat out of the back channel of the drive. A back-channel cooling option allows the cooling air to be brought into and vented out of the room where the drive is installed.

4.8 Airflow Rates

Table 21: Airflow Rates for D9h Enclosure

Cabinet	Back-channel fan [m³/hr (cfm)]	Drive module top fan [m³/hr (cfm)]	Cabinet door fan [m³/hr (cfm)]
PHF/line reactor	450 (265)	–	–
Drive	420 (250)	102 (60)	150 (90)
dU/dt	–	–	–
Sine-wave	900 (530)	–	–
Top entry/top exit	–	–	–

Table 22: Airflow Rates for D10h Enclosure

Cabinet	Back-channel fan [m³/hr (cfm)]	Drive module top fan [m³/hr (cfm)]	Cabinet door fan [m³/hr (cfm)]
PHF/line reactor	450 (265)	–	–
Input options	–	–	510 (310)
Drive	840 (500)	204 (120)	315 (185)
dU/dt	–	–	–
Sine-wave	900 (530)	–	–
Top entry/top exit	–	–	–

Table 23: Airflow Rates for E5h Enclosure

Cabinet	Back-channel fan [m³/hr (cfm)]	Drive module top fan [m³/hr (cfm)]	Cabinet door fan [m³/hr (cfm)]
PHF/line reactor	765 (450)	–	–
Input options	–	–	510 (310)
Drive	994 (585)	595 (350)	335 (200)
dU/dt	665 (392)	–	–
Sine-wave	2x900 (530)	–	–
Top entry/top exit	–	–	–

Table 24: Airflow Rates for E6h Enclosure

Cabinet	Back-channel fan [m³/hr (cfm)]	Drive module top fan [m³/hr (cfm)]	Cabinet door fan [m³/hr (cfm)]
PHF/line reactor	1285 (755)	–	–
Input options	–	–	510 (310)
Drive	1053–1206 (620–710)	629 (370)	430 (255)
dU/dt	665 (392)	–	–
Sine-wave	2x900 (530)	–	–
Top entry/top exit	–	–	–

4.9 Lifting the Drive

⚠ WARNING ⚠

HEAVY WEIGHT

The weight of the drive is heavy. Failure to follow local safety regulations for lifting heavy weights may cause death, personal injury, or property damage.

- Ensure that the lifting equipment is in proper working condition.
- Check the weight of the drive and verify that the lifting equipment can safely lift the weight.
- Ensure that the angle from the top of the drive to the lifting cable is 65° or greater.
- Test lift the drive approximately 610 mm (24 in) to verify the proper center of gravity lift point. Reposition the lifting point if the unit is not level.
- Never walk under suspended loads.

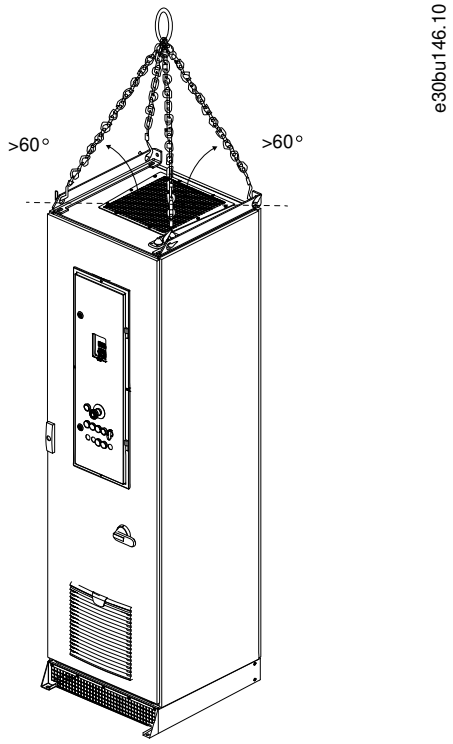

Illustration 13: Recommended Lifting Method

4.10 Combining Multiple Cabinets from a Split Shipment

Procedure

1. Make sure the cabinets are in the right order and place them side by side. For the proper order, refer to 3.2 What is an Enclosed Drive?.
2. Attach the cabinets to one another:
   - **A** Remove the Rittal back cover from each cabinet.
   - **B** Secure the back side of the cabinets to one another using the back brackets. See illustration 14.
   - **C** Secure the front side of the cabinets to one another using the front brackets. See illustration 14.
   - **D** Secure the lifting eyelets to the top of the cabinets. See illustration 15.
   - **E** Join the grounding bars using the connector piece (see the shaded piece in illustration 16).

Example:

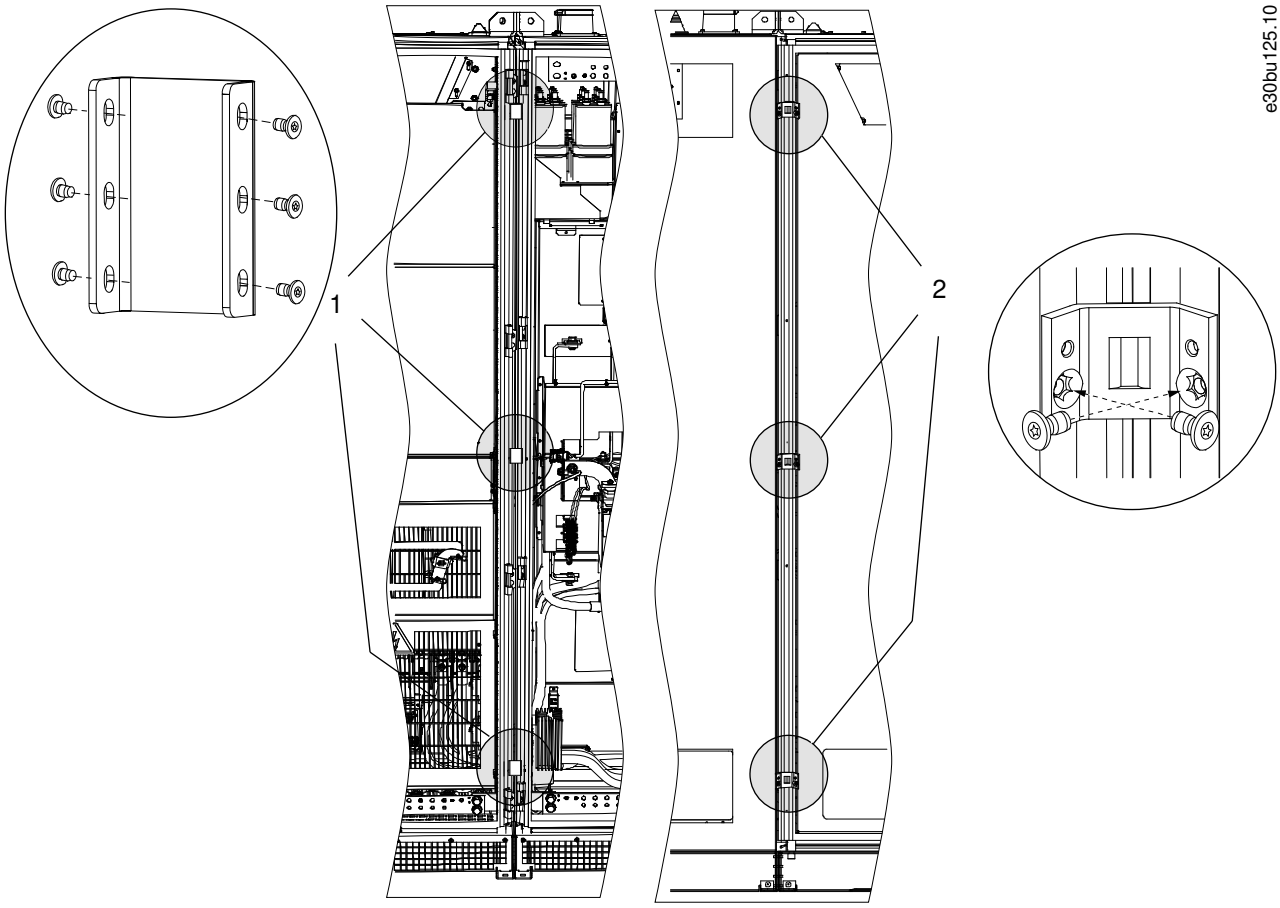

1 Front brackets	**2** Back brackets

Illustration 14: Bracket Mounting Points for Cabinets

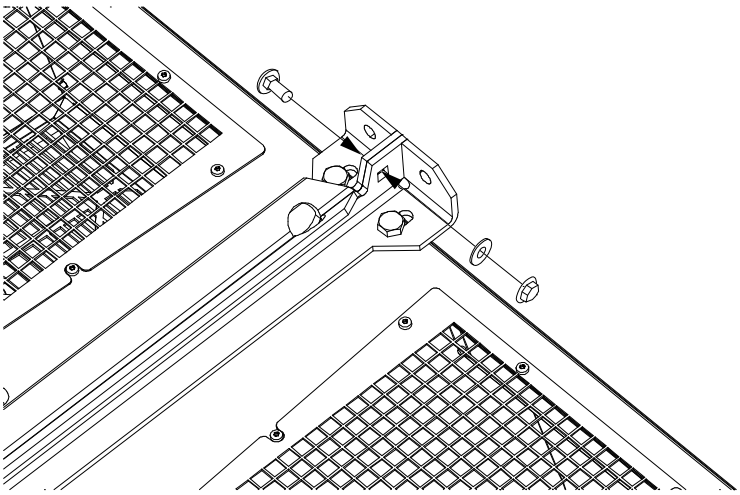

e30bu133.10

Illustration 15: Connecting the Lifting Eyelet Between Cabinets

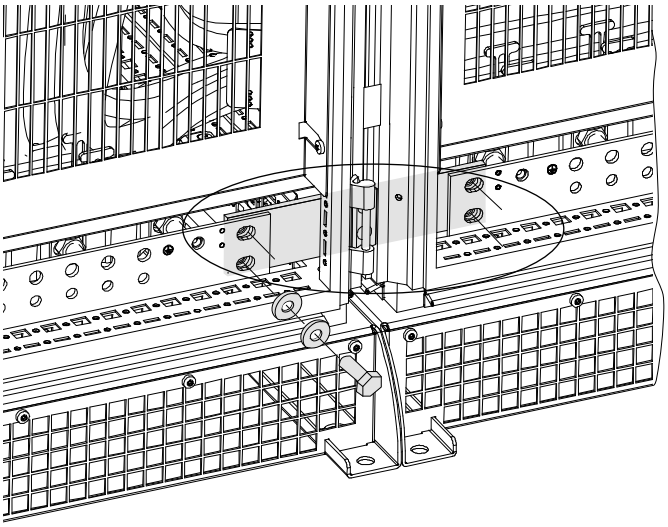

e30bu134.10

Illustration 16: Connecting the Grounding Bar Between Cabinets

4.11 Installing the Enclosed Drive

4.11.1 Creating an Entry for Cables

Procedure

1. Locate the cabinets that contain the motor and mains terminals.
2. Open the cabinet doors and remove any protective covers placed over the terminals.
3. Create the cable openings.
   - For IEC versions, cut the grommet openings just enough to pass the cables through them.
   - For UL versions, cut or drill openings in the cable entry plate and fit with appropriate UL conduits, according to the mains and motor cable sizes.
4. Terminate the shields properly.
   - Use the metallic glands to terminate the output cable shields.
   - Use the flex sheets to firmly terminate the shields. For certain configurations, Danfoss supplies the flex sheets.

Example:

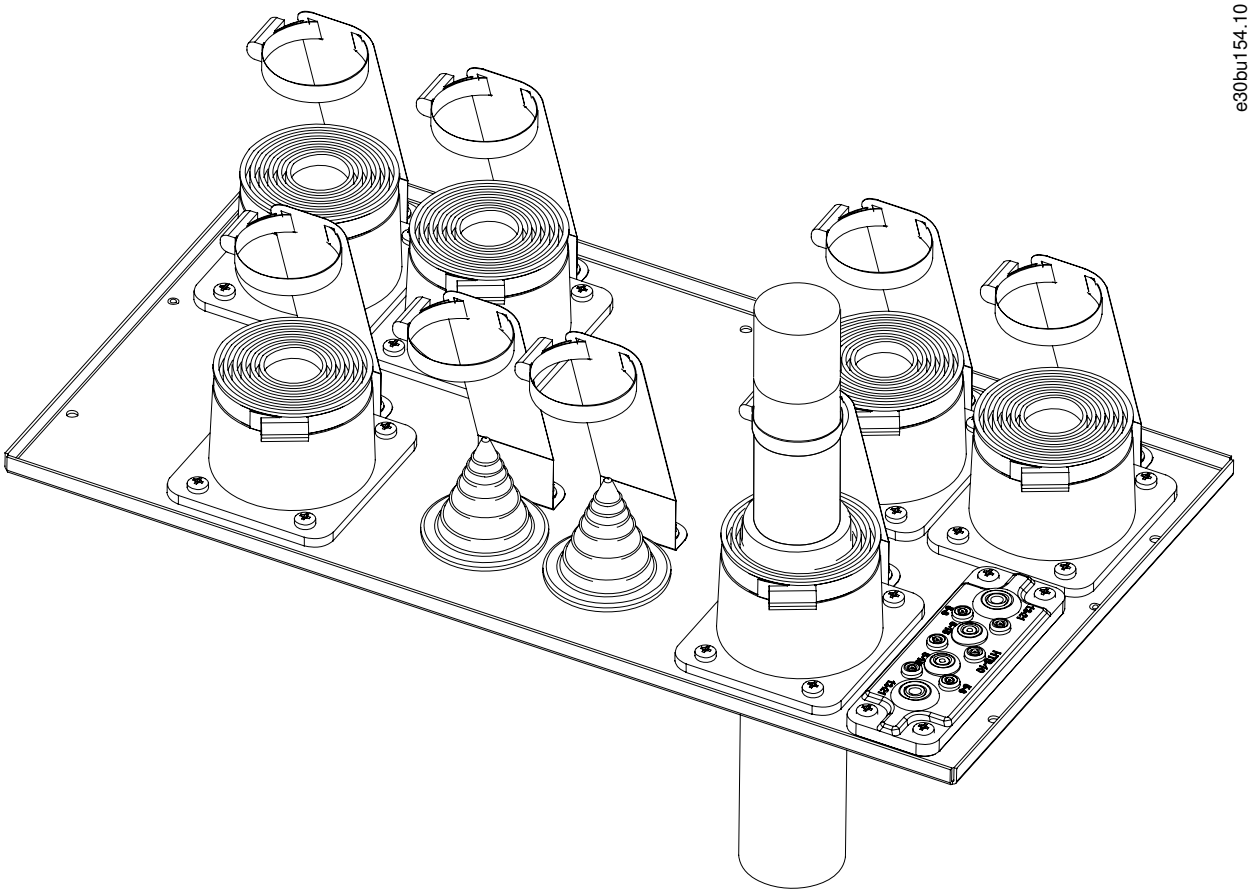

Illustration 17: Installing Motor and Mains Cables Through an IP54 (IEC version) Cable Entry Plate

4.11.2 Installing the Drive with Back-channel Cooling Option

Procedure

1. Select an area in which to install the enclosure. Do not install the enclosure in an airtight space. The drive receives approximately 5–10% of intake air from the front of the cabinet.
2. Measure the duct openings in the back of the cabinets and create corresponding openings in the wall where the enclosure will be located.
3. If the enclosed drive is configured with a cabinet heater, connect the cabinet heater supply cable to the correct terminals in the control compartment. Refer to 5.7.2 Control Compartment Interior View.
4. Move the enclosure near the wall, lining up the enclosure ducts with the openings in the wall.
5. Make sure to provide an airtight seal for between the duct and wall opening.

Example:

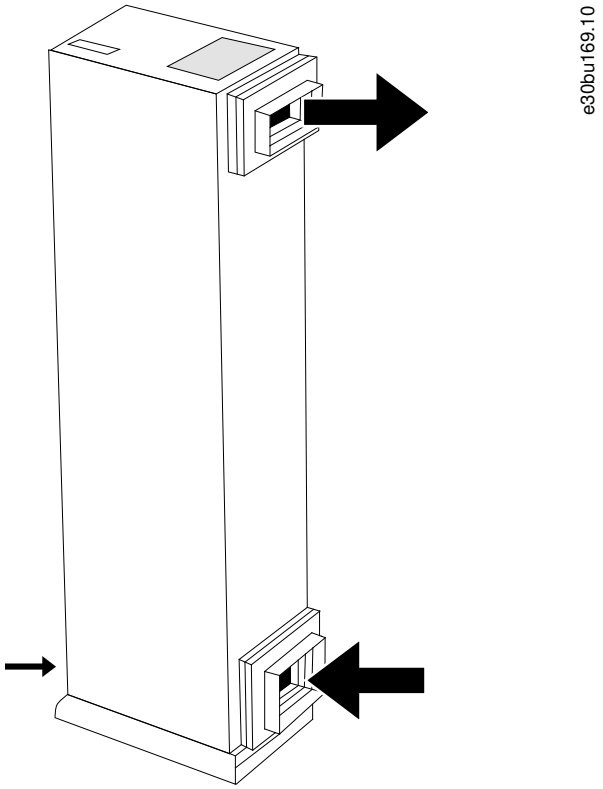

Illustration 18: Cabinet Airflow with the Back-channel Option (Duct Adapter Flanges not Provided with Option)

4.11.3 Securing the Cabinet(s) to the Floor

Context:

There are 3 methods to secure the cabinet to the floor:

- Use the 4 mounting points at the base of the pedestal.
- Use the 2 mounting points at the front base of the pedestal and the 2 mounting points at the upper back of the cabinet.
- To use the mounting bracket, first attach it to the floor by sliding the edge of the cabinet pedestal under the mounting bracket. Then secure the 2 mounting holes to the front base of the pedestal.

Example:

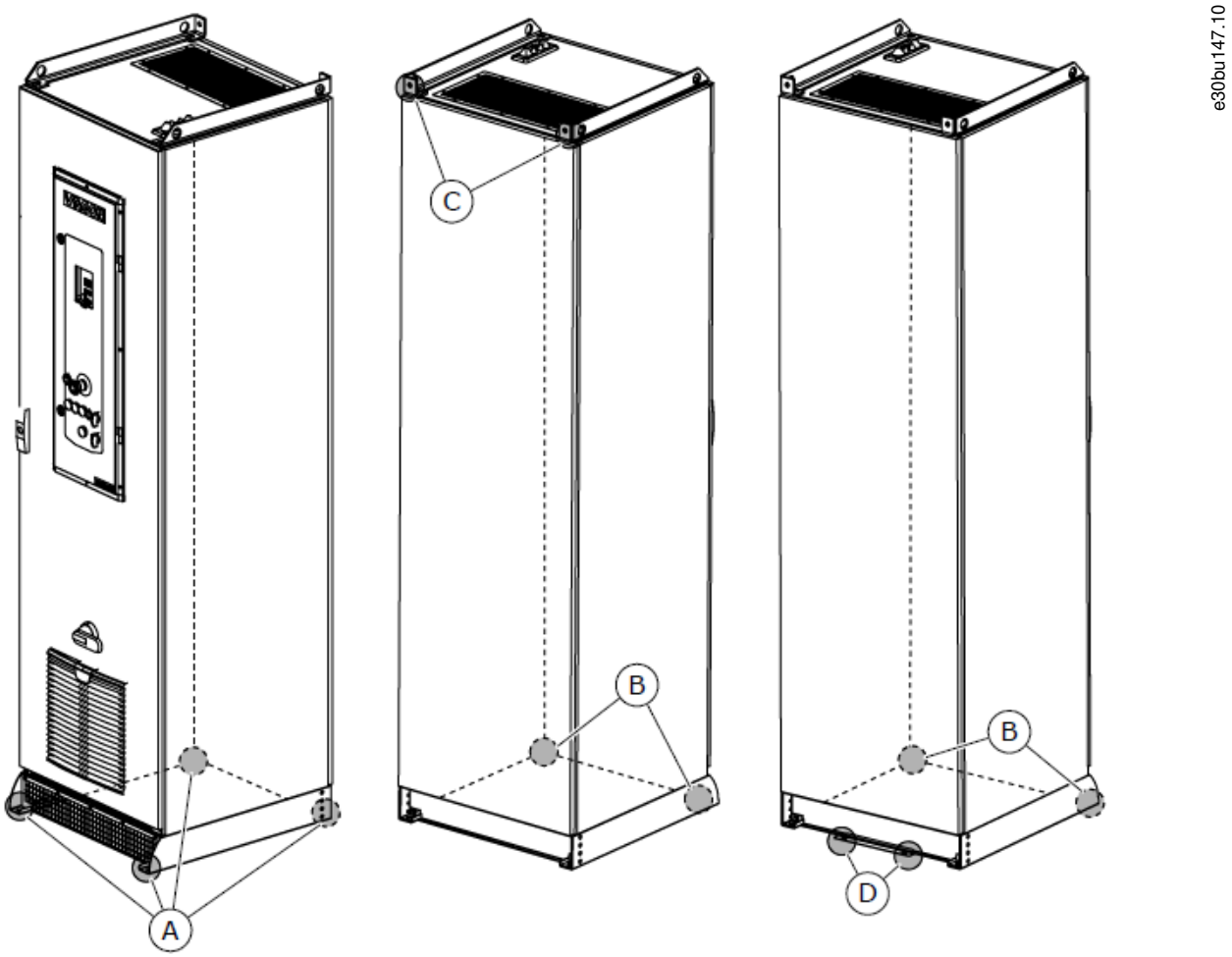

A	The 4 mounting points at the base of the pedestal	**B**	The 2 mounting points at the front base of the pedestal
C	The 2 mounting points at the upper back of the cabinet	**D**	The 2 mounting points in the mounting bracket

Illustration 19: Cabinet Mounting Points

5 Electrical Installation

5.1 Safety Instructions

See 2.3 Safety Precautions for general safety warnings.

NOTICE

APPLICATIONS WITH MULTIPLE MOTORS

To provide overcurrent protection, extra protective equipment such as short-circuit protection or motor thermal protection between drive and motor is required for applications with multiple motors.

NOTICE

WIRE TYPE AND RATINGS

All wiring must comply with local and national regulations regarding cross-section and ambient temperature requirements. For power connections, minimum 75 °C (167 °F) rated copper wire is recommended.

WARNING

INDUCED VOLTAGE

Induced voltage from output motor cables that run together can charge equipment capacitors, even with the equipment turned off and locked out. Failure to run output motor cables separately or to use shielded cables could result in death or serious injury.

- Run output motor cables separately.
- Use shielded cables.

WARNING

SHOCK HAZARD

The drive can cause a DC current in the PE conductor. Failure to use a Type B residual current-operated protective device (RCD) may lead to the RCD not providing the intended protection and therefore may result in death or serious injury.

- When an RCD is used for protection against electrical shock, only a Type B device is allowed on the supply side.

CAUTION

MOTOR OVERLOAD

Protection against motor overload is not included in the default setting. For the North American market, the ETR function provides class 20 motor overload protection in accordance with NEC. Failure to set the ETR function means that motor overload protection is not provided and property damage can occur if the motor overheats.

- Enable the ETR function by setting *parameter 1-90 Motor Thermal Protection* to *[ETR trip]* or *[ETR warning]*.

5.2 EMC-compliant Installation

To obtain an EMC-compliant installation, be sure to follow all electrical installation instructions.

Also, remember to practice the following:

- When using relays, control cables, a signal interface, fieldbus, or brake, connect the shield to the enclosure at both ends. If the ground path has high impedance, is noisy, or is carrying current, break the shield connection on 1 end to avoid ground current loops.
- Convey the currents back to the unit using a metal mounting plate. Ensure good electrical contact from the mounting plate by securely fastening the mounting screws to the drive chassis.
- Use shielded cables for motor output cables. An alternative is unshielded motor cables within metal conduit.
- Ensure that motor and brake cables are as short as possible to reduce the interference level from the entire system.
- Avoid placing cables with a sensitive signal level alongside motor and brake cables.
- For communication and command/control lines, follow the particular communication protocol standards. For example, USB must use shielded cables, but RS485/ethernet can use shielded UTP or unshielded UTP cables.
- Ensure that all control terminal connections are rated protective extra low voltage (PELV).

NOTICE

TWISTED SHIELD ENDS (PIGTAILS)

Twisted shield ends increase the shield impedance at higher frequencies, which reduces the shield effect and increases the leakage current.

- Use integrated shield clamps instead of twisted shield ends.

NOTICE

SHIELDED CABLES

If shielded cables or metal conduits are not used, the unit and the installation do not meet regulatory limits on radio frequency (RF) emission levels.

NOTICE

EMC INTERFERENCE

Failure to isolate power, motor, and control cables can result in unintended behavior or reduced performance.

- Use shielded cables for motor and control wiring.
- Provide a minimum 200 mm (7.9 in) separation between mains input, motor cables, and control cables.

NOTICE

INSTALLATION AT HIGH ALTITUDE

There is a risk for overvoltage. Isolation between components and critical parts could be insufficient, and may not comply with PELV requirements.

- Use external protective devices or galvanic isolation. For installations above 2000 m (6500 ft) altitude, contact Danfoss regarding protective extra low voltage (PELV) compliance.

NOTICE

PROTECTIVE EXTRA LOW VOLTAGE (PELV) COMPLIANCE

Prevent electric shock by using PELV electrical supply and complying with local and national PELV regulations.

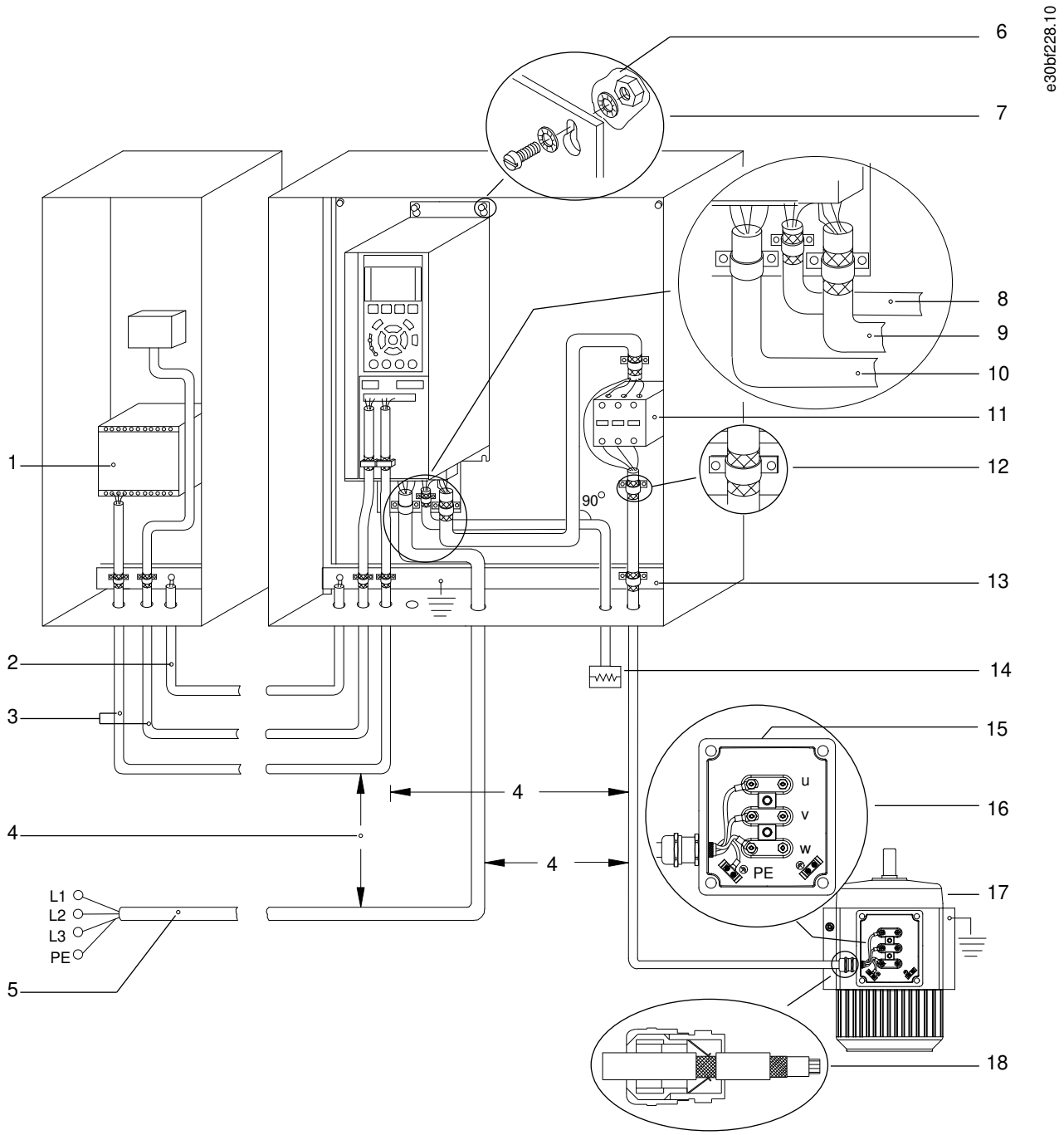

1	Programmable logic controller (PLC)	**2**	Minimum 16 mm^2 (6 AWG) equalizing cable
3	Control cables	**4**	Minimum 200 mm (7.9 in) between control cables, motor cables, and mains cables
5	Mains supply	**6**	Bare (unpainted) surface
7	Star washers	**8**	Brake cable (shielded)
9	Motor cable (shielded)	**10**	Mains cable (unshielded)

11	Output contactor, and so on.	**12**	Cable insulation stripped
13	Common ground busbar. Follow local and national requirements for cabinet grounding.	**14**	Brake resistor
15	Metal box	**16**	Connection to motor
17	Motor	**18**	EMC cable gland

Illustration 20: Example of Proper EMC Installation

5.3 Wiring Schematic for D9h and D10h Enclosed Drives

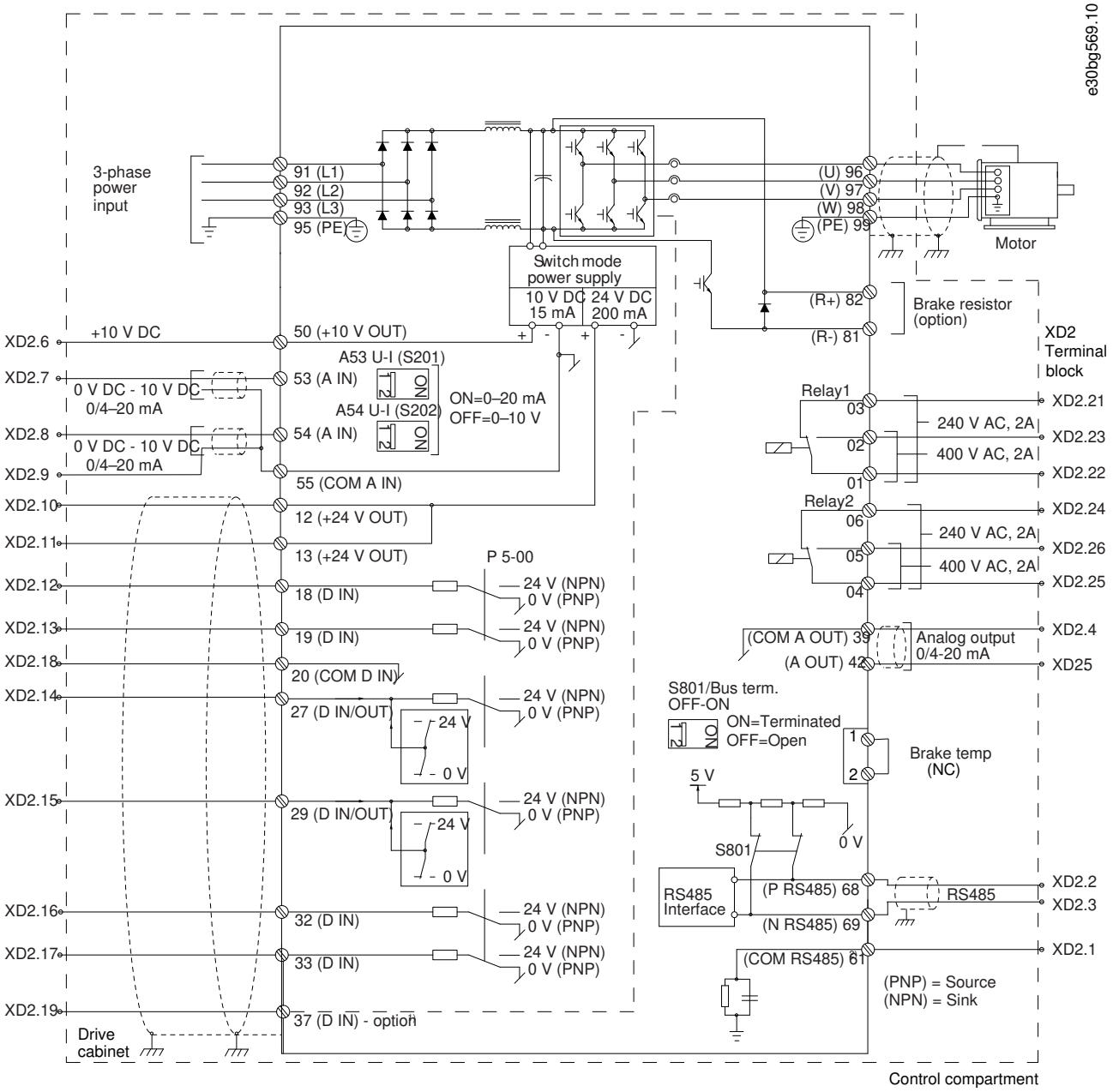

1 Terminal 37 (optional) is used for Safe Torque Off. Refer to the *VLT® FC Series - Safe Torque Off Operating Guide* for installation instructions.

Illustration 21: Basic Wiring Schematic for Enclosures D9h and D10h

5.4 Wiring Schematic for E5h and E6h Enclosed Drives

1 Terminal 37 (optional) is used for Safe Torque Off. Refer to the *VLT® FC Series - Safe Torque Off Operating Guide* for installation instructions.

Illustration 22: Wiring Schematic for Enclosures E5h and E6h

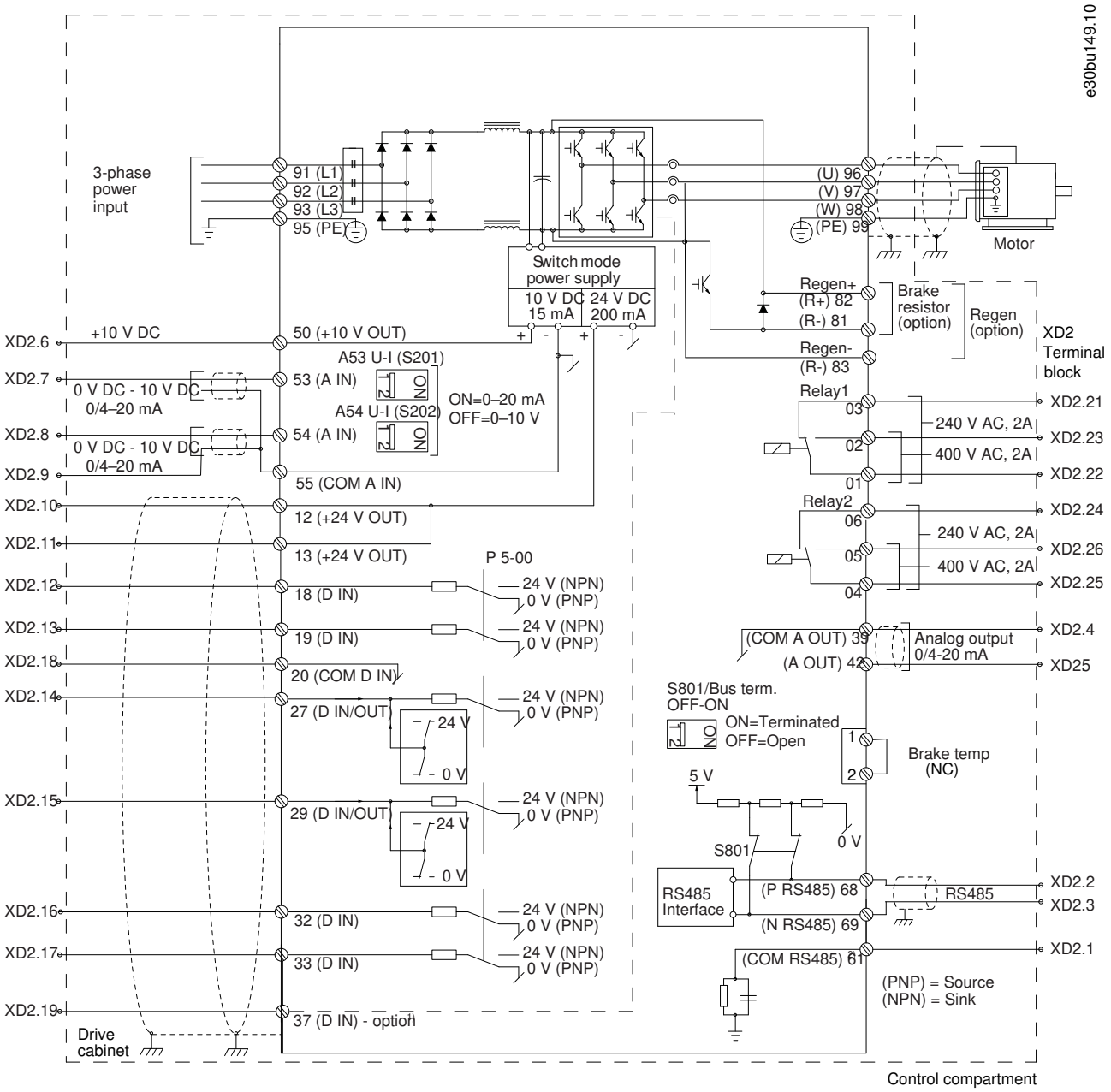

5.5 Wiring Diagram Cross-reference

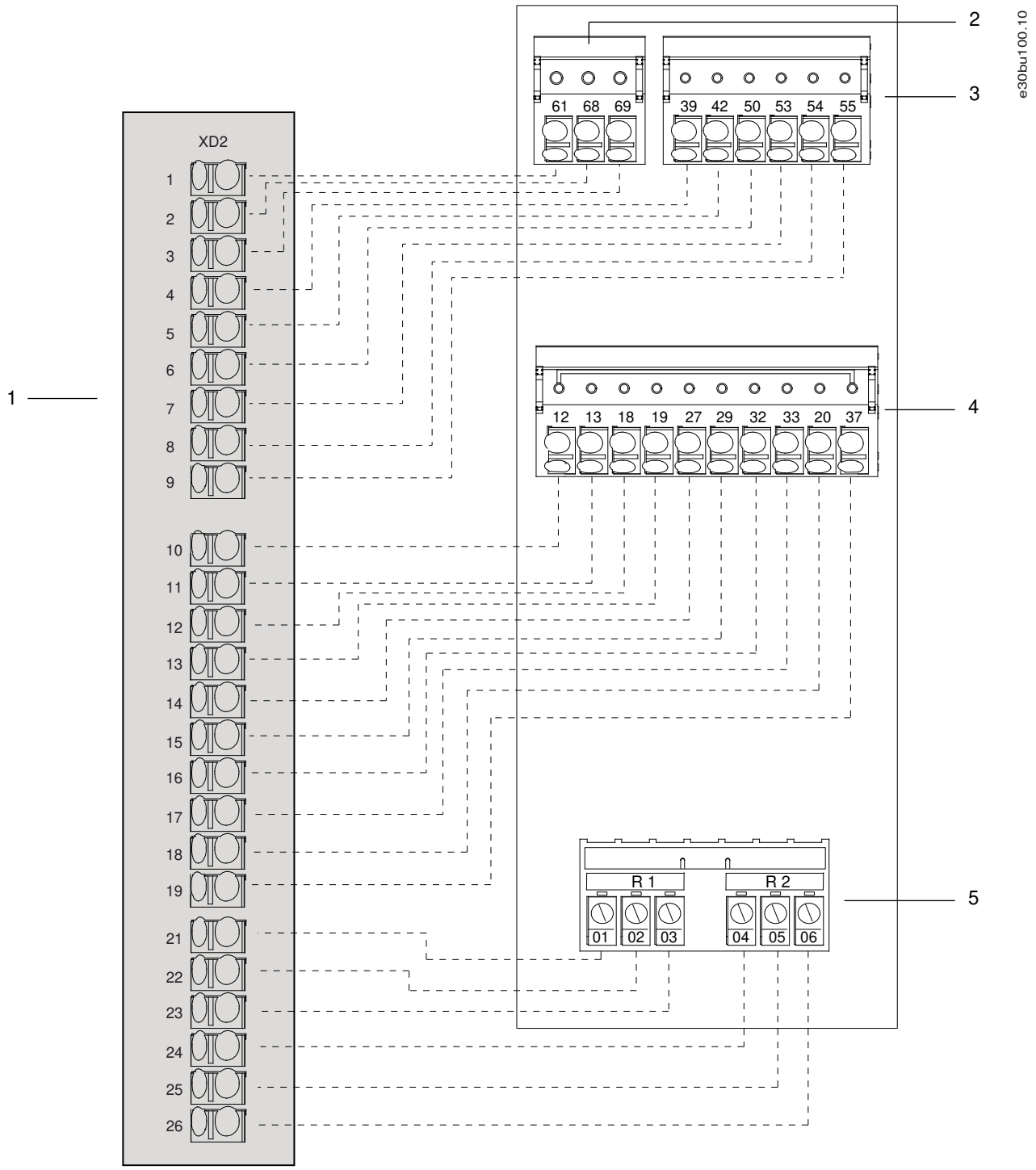

1	User-accessible terminals (control compartment)	**2**	Serial communication terminals (drive module)
3	Analog input/output terminals (drive module)	**4**	Digital input/output terminals (drive module)

5 Relay terminals (drive module)	

Illustration 23: Serial Communication, Digital Input/Output, Analog Input/Output, and Relay Terminals Cross-reference

5.6 Split Shipment Wiring Harnesses

5.6.1 Connecting Wiring Harnesses

Context:

Procedure

1. Connect the wiring harnesses according to how the enclosed drive is split. Each wiring harness in the enclosed drive is labeled. Refer to the illustrations in this section for label names and descriptions.
   - **A** Connect the fan supply wiring harness.
   - **B** Connect the thermal protection harness.
   - **C** If applicable, connect the PHF contactor harnesses.
   - **D** If applicable, connect the cabinet heater harness.
2. Connect the output filter cables. Refer to the illustrations in this section.

   - For the sine-wave filter option, there is 1 set of cables for each sine-wave filter. One end of each cable is already connected to the filter, the other end is bundled in the sine-wave filter cabinet. Connect the unattached sine-wave cable ends to the motor terminals inside the drive cabinet.

   - For the dU/dt filter option, the unattached filter cables are bundled inside the dU/dt filter cabinet. Connect the unattached cable ends to the motor terminals within the drive cabinet.
3. Connect the input filter cables. Refer to the illustrations in this section.

   - For the passive harmonic filter (PHF) option, the filter cables are bundled inside the input filter cabinet. First connect the unattached PHF cable ends (R/S/T) to the corresponding terminals in the input power options cabinet. Then connect the unattached PHF cable ends (L1R/L2S/L3T) to the R/S/T terminals in the drive cabinet.

   - For the line reactor option, the line reactor cables are bundled inside the input filter cabinet. First connect the unattached line reactor cable ends (R/S/T) to the corresponding terminals in the input power options cabinet. Then connect the unattached line reactor cable ends (L1R/L2S/L3T) to the R/S/T terminals in the drive cabinet.

5.6.2 D10h Wiring Harness

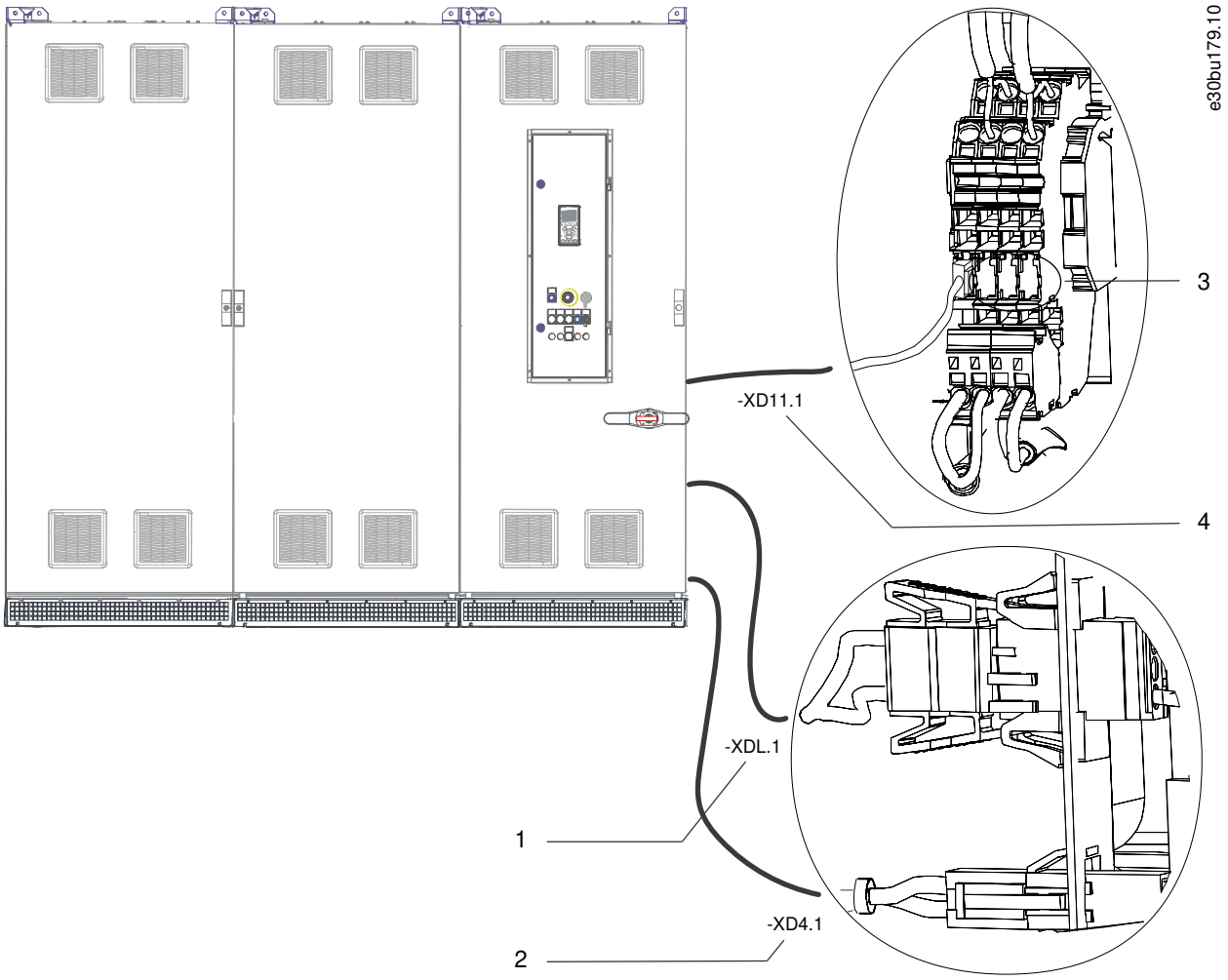

1	DC-link harness to fan supply in output filter cabinet	**2**	Cabinet heater supply harness to output filter cabinet
3	Additional terminal connections	**4**	Thermal protection wiring harness to output filter cabinet

Illustration 24: Split Shipment Electrical Connections (Input Filter Cabinet + Input Power Options Cabinet + D10h Drive Cabinet)

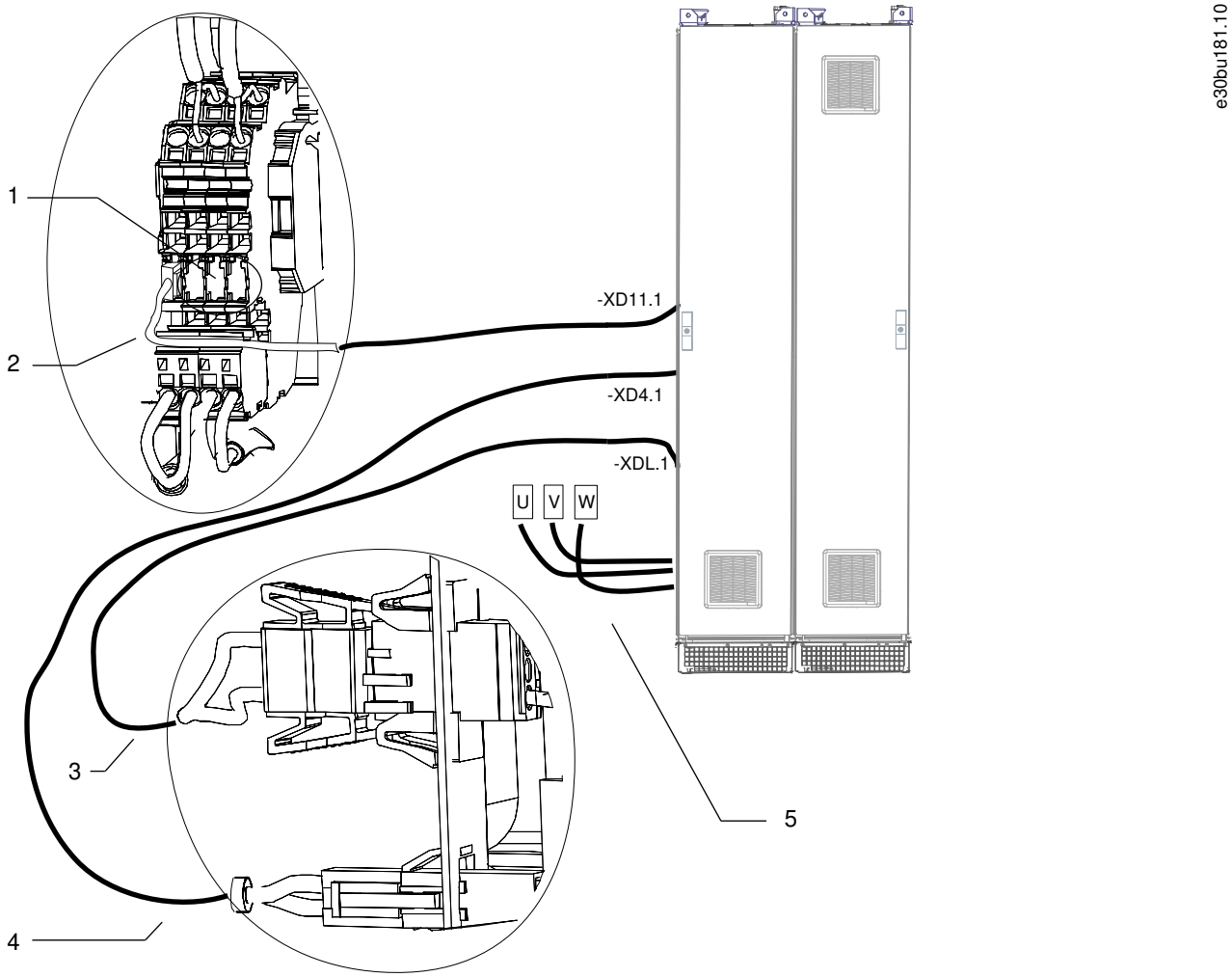

1	Additional terminal connections	**2**	Thermal protection wiring harness to drive cabinet
3	DC-link harness to fan supply in drive cabinet	**4**	Cabinet heater supply harness to drive cabinet
5	Motor cables (U/V/W) to motor terminals (U/V/W) in drive cabinet		

Illustration 25: Split Shipment Electrical Connections (dU/dt Cabinet + Top Exit Cabinet)

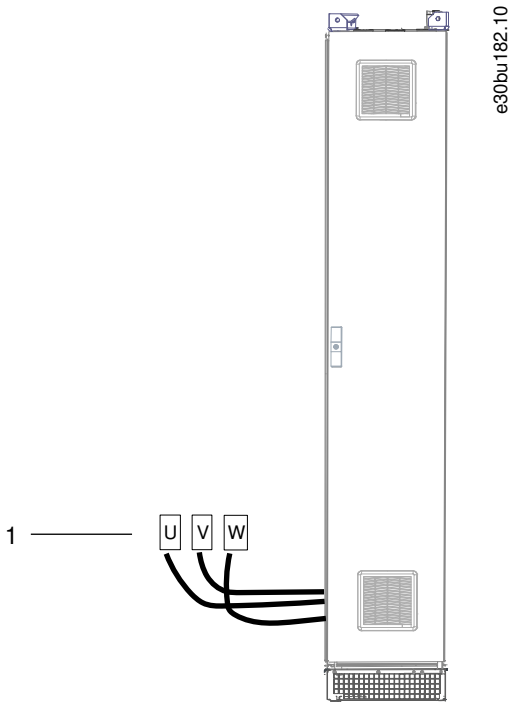

1	Motor cables (U/V/W) to motor terminals (U/V/W) in drive cabinet

Illustration 26: Split Shipment Electrical Connections (Top Exit Cabinet)

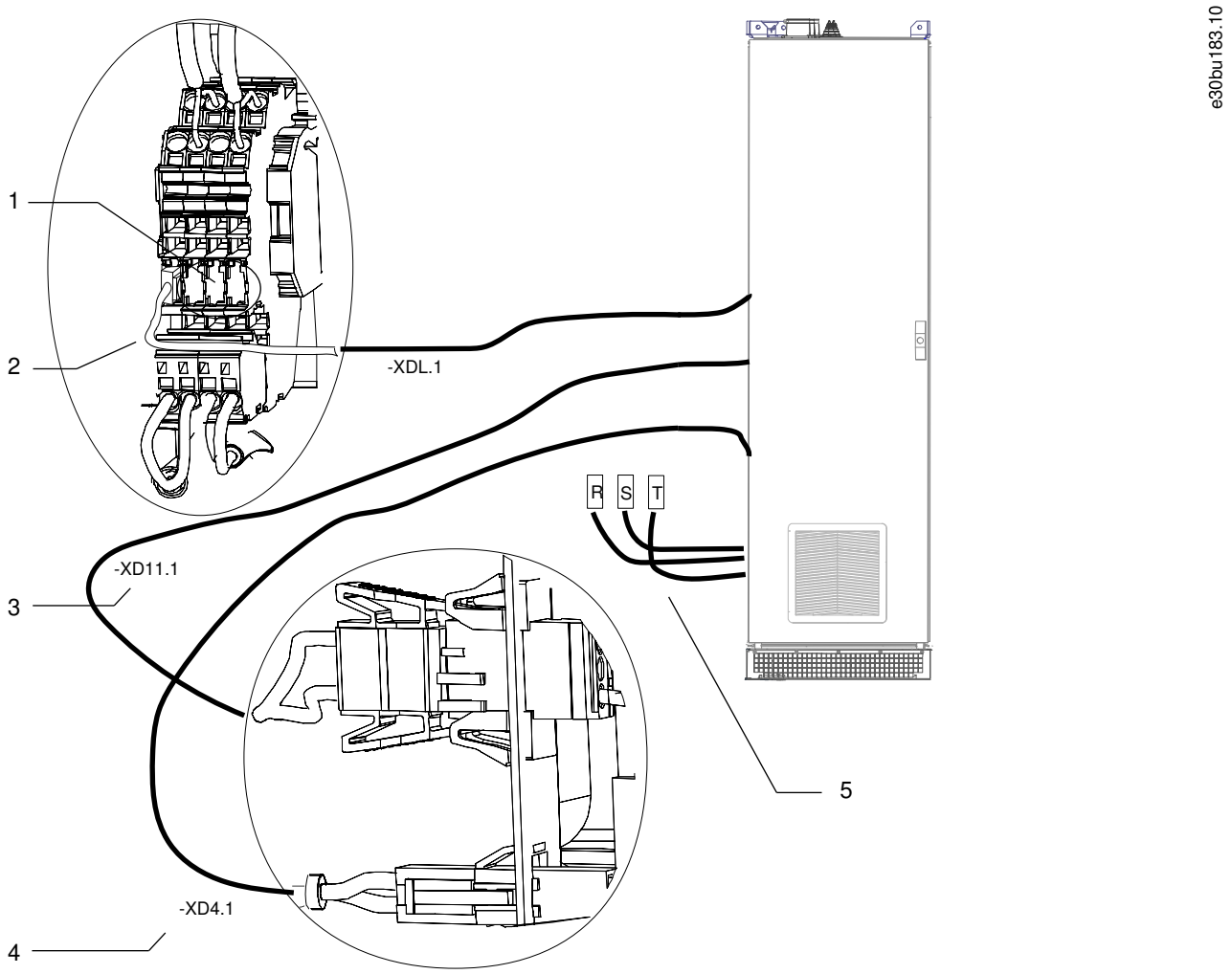

1	Additional terminal connections	**2**	Thermal protection wiring harness to drive cabinet
3	DC-link harness to fan supply in drive cabinet	**4**	Cabinet heater supply harness to drive cabinet
5	Motor cables (U/V/W) to motor terminals (U/V/W) in drive cabinet		

Illustration 27: Split Shipment Electrical Connections (D10h Sine-wave Cabinet)

5.6.3 E5h Wiring Harness

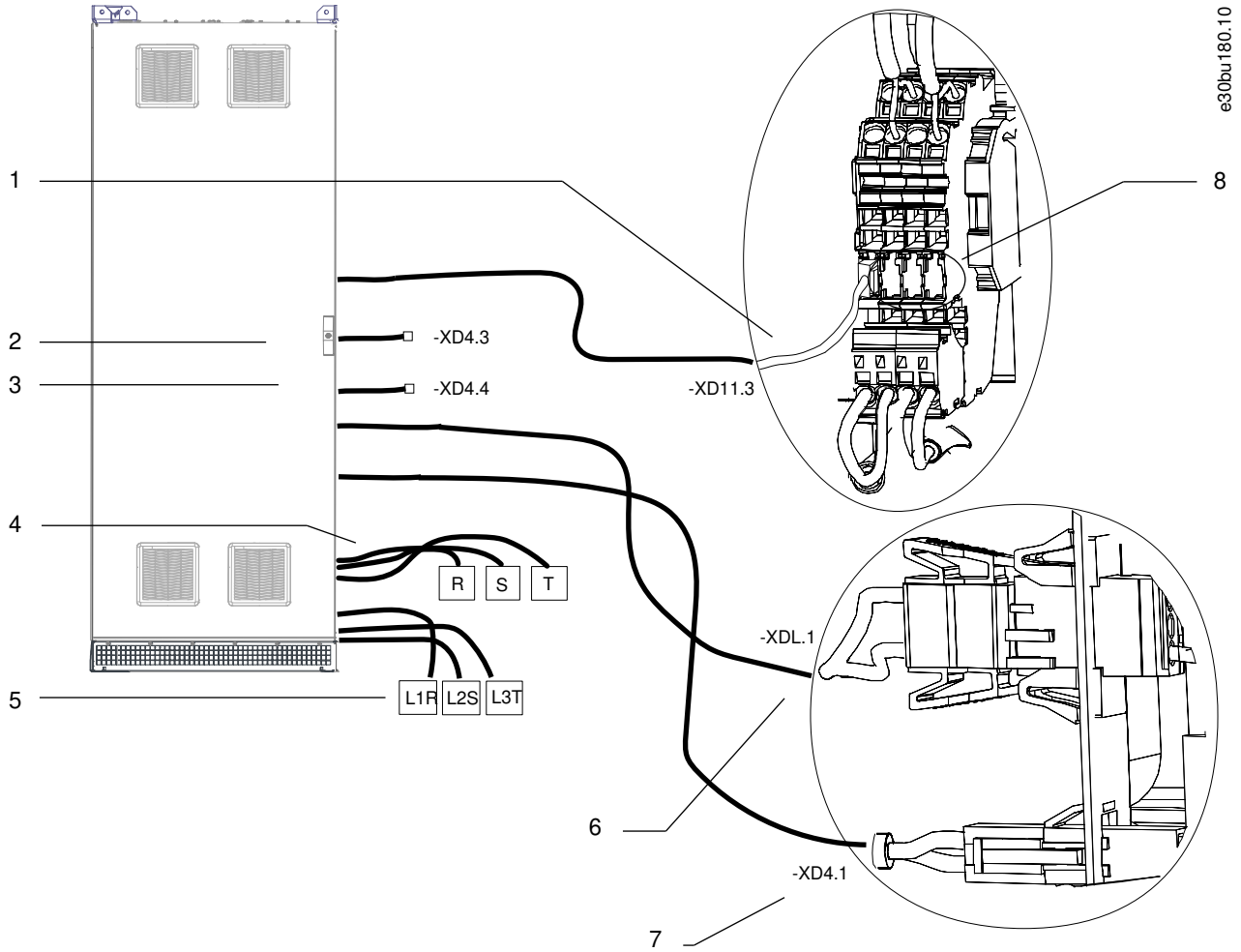

1	Thermal protection wiring harness to input power options cabinet	**2**	PHF contactor 1 supply harness to input power options cabinet (only with PHF option)
3	PHF contactor 2 supply harness to input power options cabinet (only with PHF option)	**4**	Input terminal cables (R/S/T) to mains terminals (R/S/T) in the input power options cabinet
5	Output terminal cables (L1R/L2S/L3T) to mains terminals (R/S/T) in the drives cabinet	**6**	DC-link harness to fan supply in the input power options cabinet
7	Cabinet heater supply harness to input power options cabinet	**8**	Additional terminal connections

Illustration 28: Split Shipment Electrical Connections (Input Filter Cabinet)

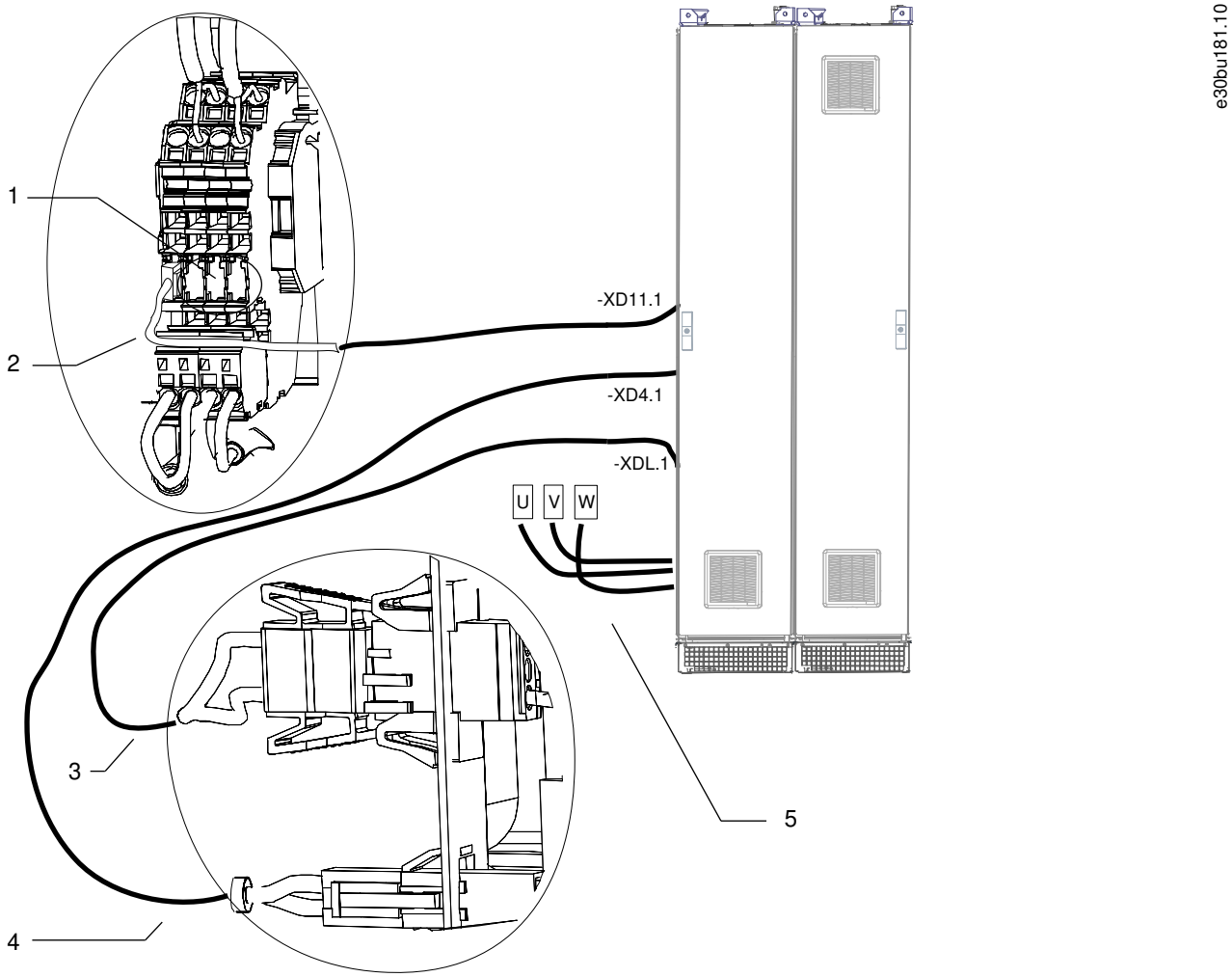

1	Additional terminal connections	**2**	Thermal protection wiring harness to drive cabinet
3	DC-link harness to fan supply in drive cabinet	**4**	Cabinet heater supply harness to drive cabinet
5	Motor cables (U/V/W) to motor terminals (U/V/W) in drive cabinet		

Illustration 29: Split Shipment Electrical Connections (dU/dt Cabinet + Top Exit Cabinet)

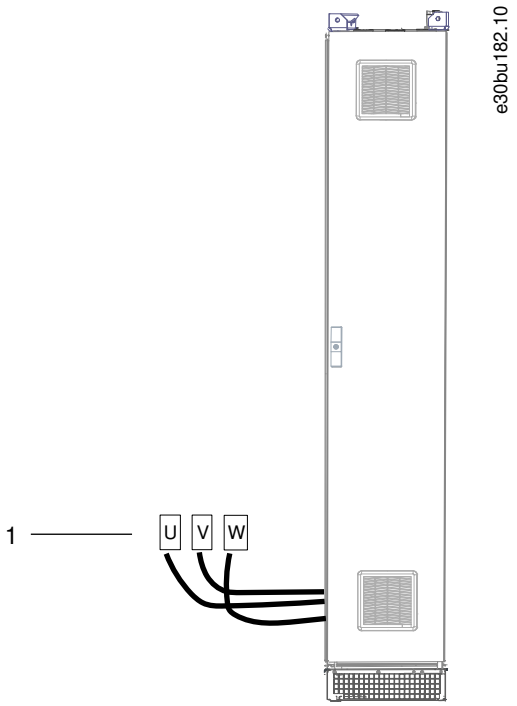

1	Motor cables (U/V/W) to motor terminals (U/V/W) in drive cabinet

Illustration 30: Split Shipment Electrical Connections (Top Exit Cabinet)

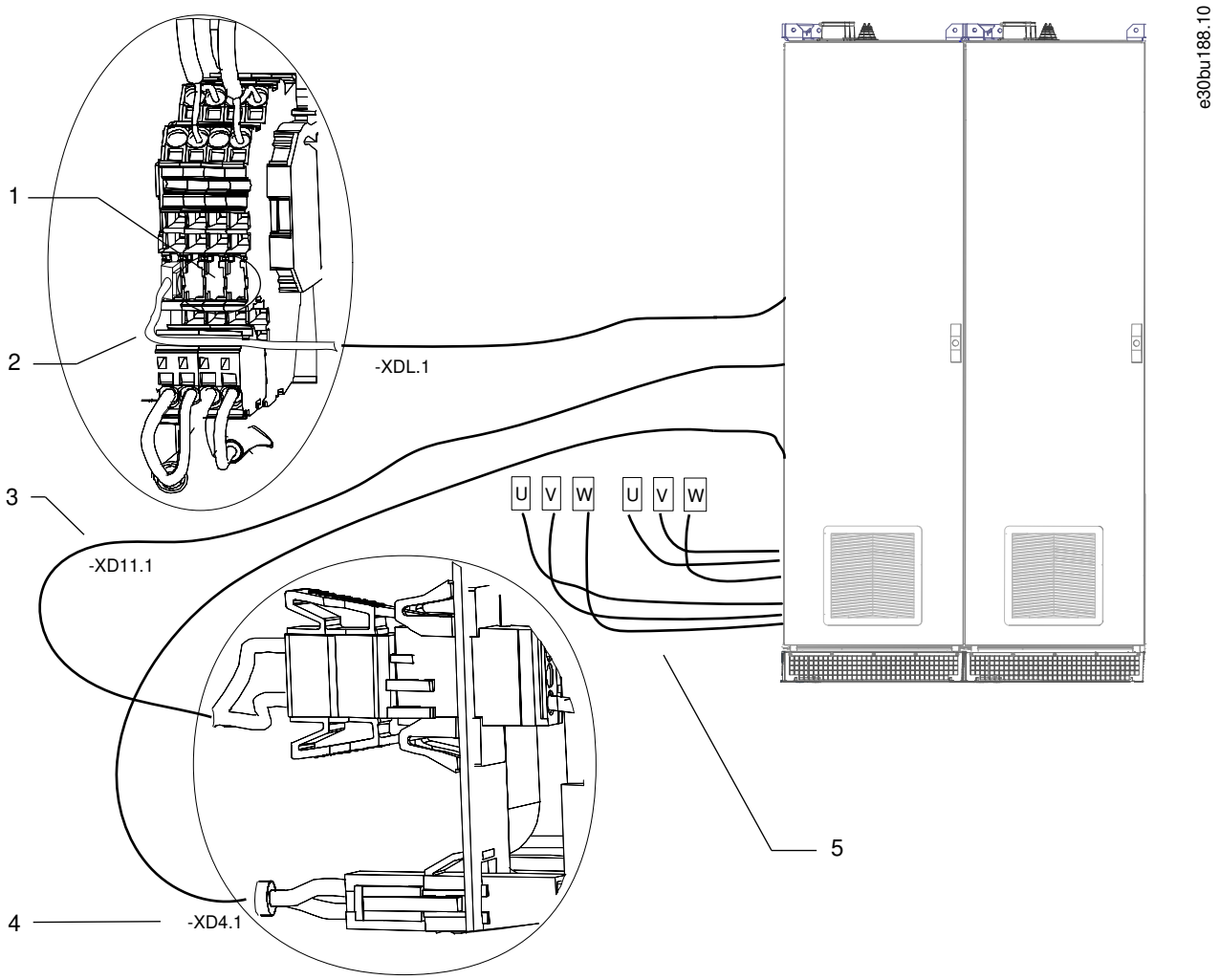

1	Additional terminal connections	**2**	Thermal protection wiring harness to drive cabinet
3	DC-link harness to fan supply in drive cabinet	**4**	Cabinet heater supply harness to drive cabinet
5	Motor cables (U/V/W) to motor terminals (U/V/W) in drive cabinet		

Illustration 31: Split Shipment Electrical Connections (E5h/E6h Sine-wave Cabinets)

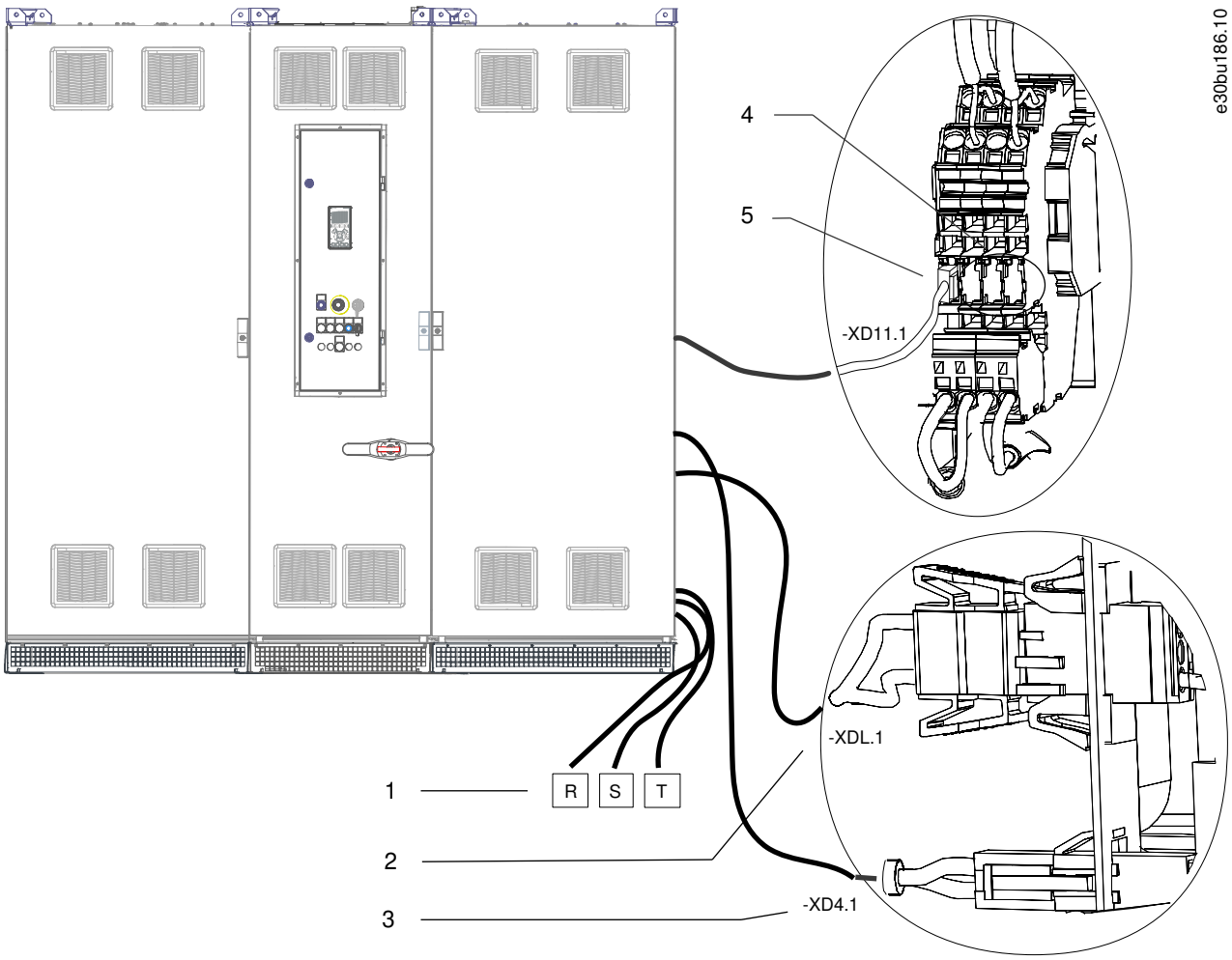

1	Motor cables (U/V/W) to motor terminals (U/V/W) in output filter cabinet	**2**	DC-link harness to fan supply in output filter cabinet
3	Cabinet heater supply harness to output filter cabinet	**4**	Additional terminal connections
5	Thermal protection wiring harness to output filter cabinet		

Illustration 32: Split Shipment Electrical Connections (Input Filter Cabinet + Input Power Options Cabinet + E5h Drive Cabinet)

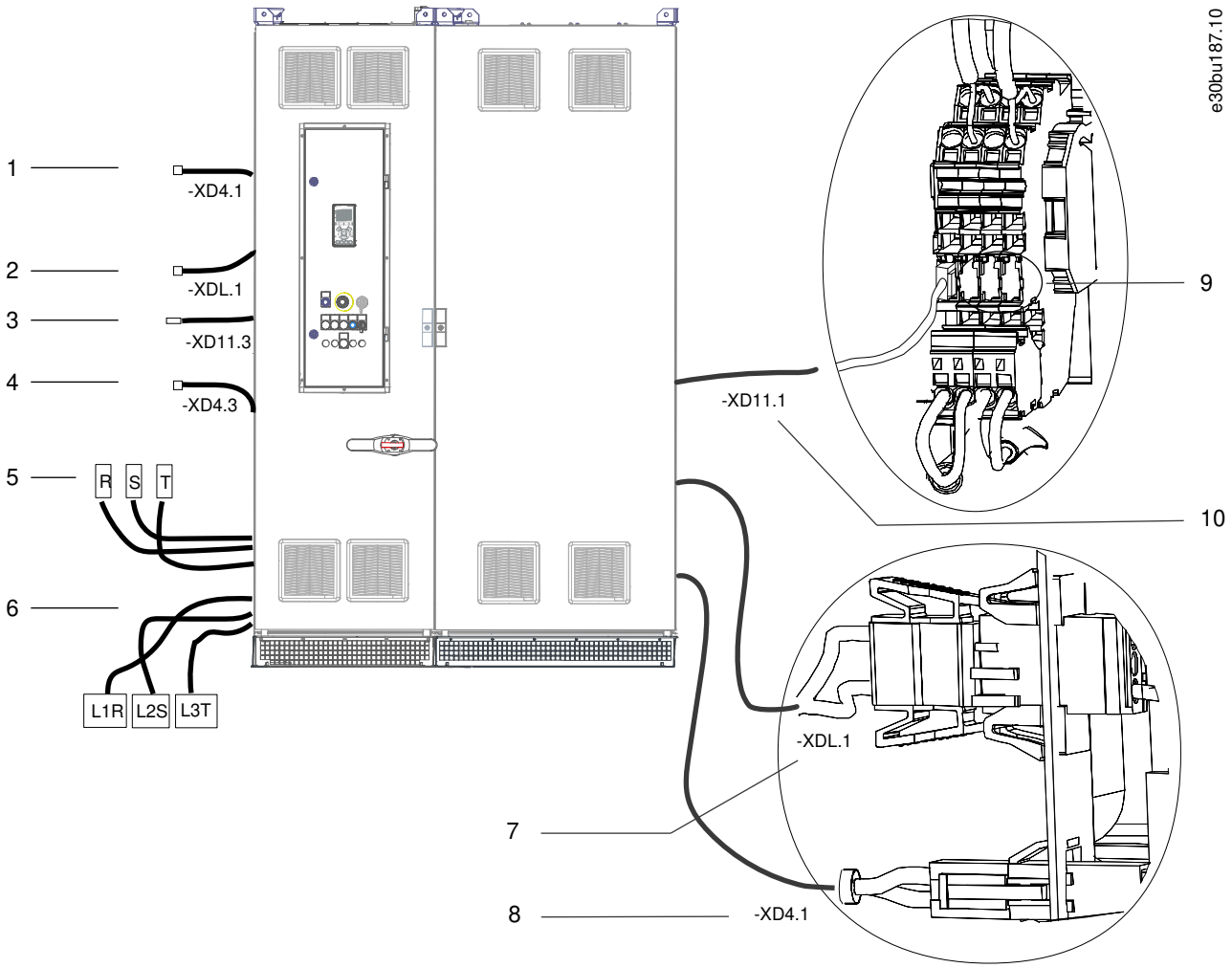

1	Cabinet heater supply harness to input filter cabinet	**2**	DC-link harness to fan supply in input filter cabinet
3	Thermal protection harness to input filter cabinet	**4**	PHF contactor 1 supply harness to input filter cabinet (only with PHF option)
5	Mains cables (R/S/T) to input terminals (R/S/T) in the input filter cabinet	**6**	Mains cables (L1R/L2S/L3T) to output terminals (L1R/L2S/L3T) in the input filter cabinet
7	DC-link harness to fan supply to output filter cabinet	**8**	Cabinet heater supply harness to output filter cabinet
9	Available terminal connections	**10**	Thermal protection wiring harness to output filter cabinet

Illustration 33: Split Shipment Electrical Connections (Input Power Options Cabinet + E5h Drive Cabinet)

5.6.4 E6h Wiring Harness

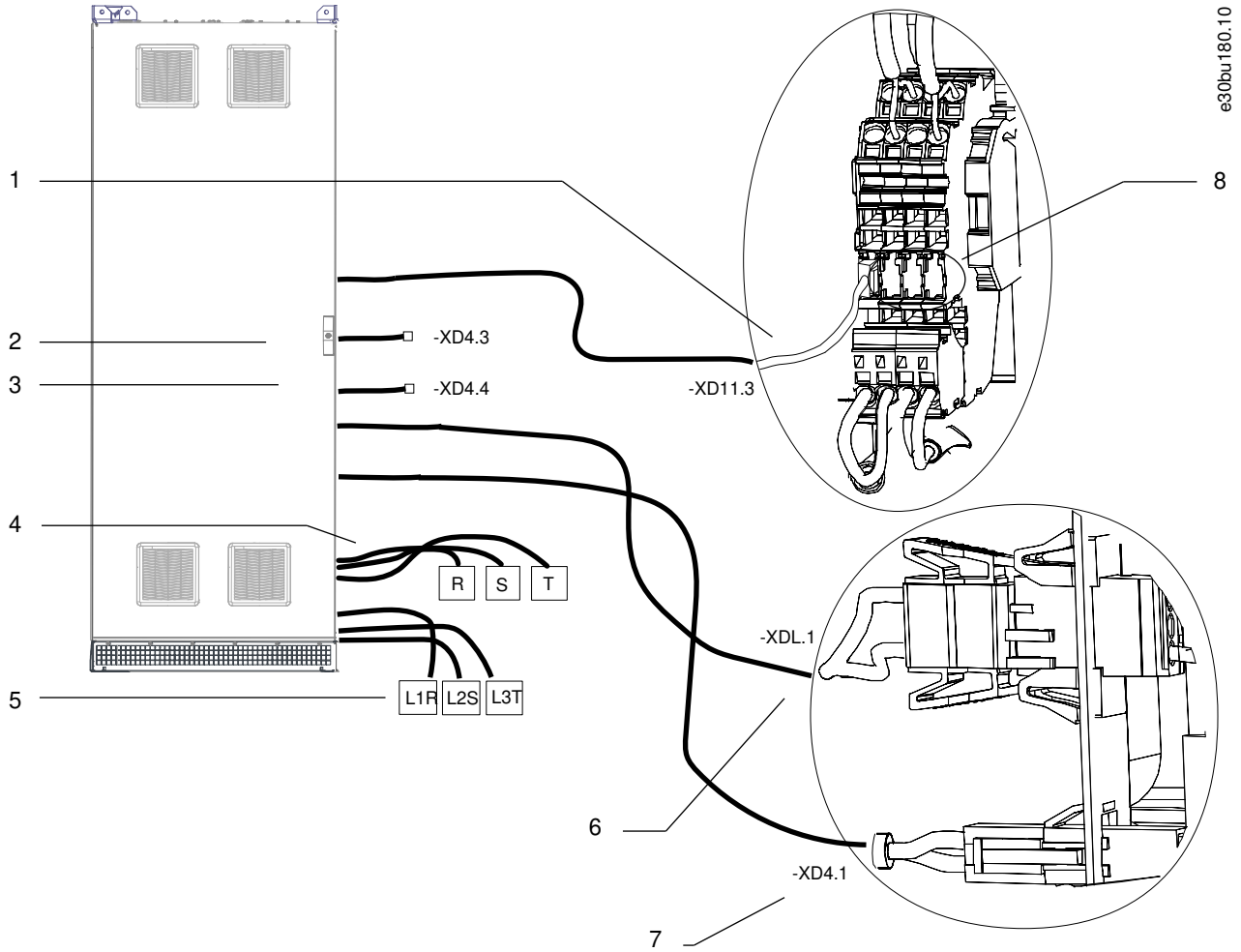

1	Thermal protection wiring harness to input power options cabinet	**2**	PHF contactor 1 supply harness to input power options cabinet (only with PHF option)
3	PHF contactor 2 supply harness to input power options cabinet (only with PHF option)	**4**	Input terminal cables (R/S/T) to mains terminals (R/S/T) in the input power options cabinet
5	Output terminal cables (L1R/L2S/L3T) to mains terminals (R/S/T) in the drives cabinet	**6**	DC-link harness to fan supply in the input power options cabinet
7	Cabinet heater supply harness to input power options cabinet	**8**	Additional terminal connections

Illustration 34: Split Shipment Electrical Connections (Input Filter Cabinet)

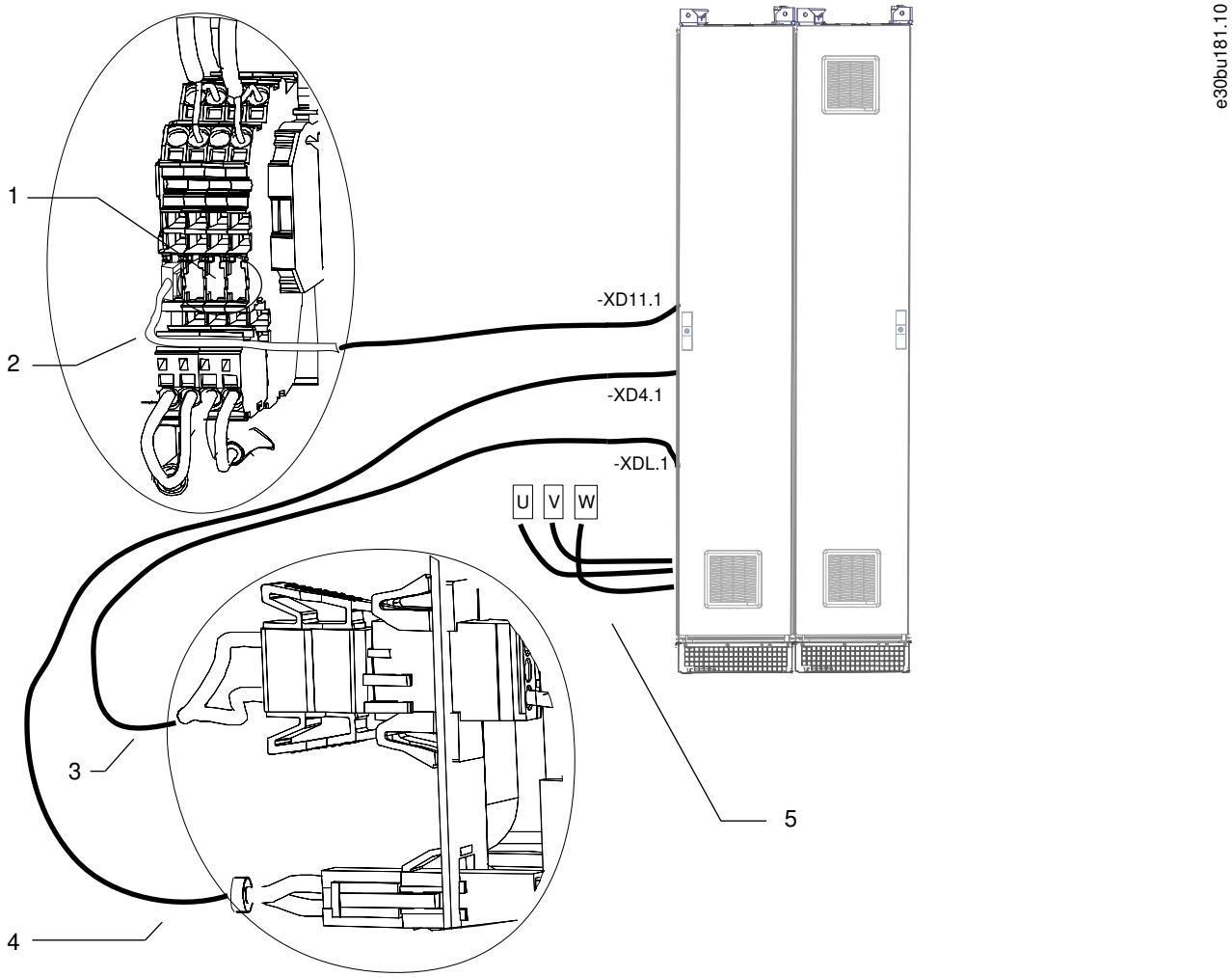

1	Additional terminal connections	**2**	Thermal protection wiring harness to drive cabinet
3	DC-link harness to fan supply in drive cabinet	**4**	Cabinet heater supply harness to drive cabinet
5	Motor cables (U/V/W) to motor terminals (U/V/W) in drive cabinet		

Illustration 35: Split Shipment Electrical Connections (dU/dt Cabinet + Top Exit Cabinet)

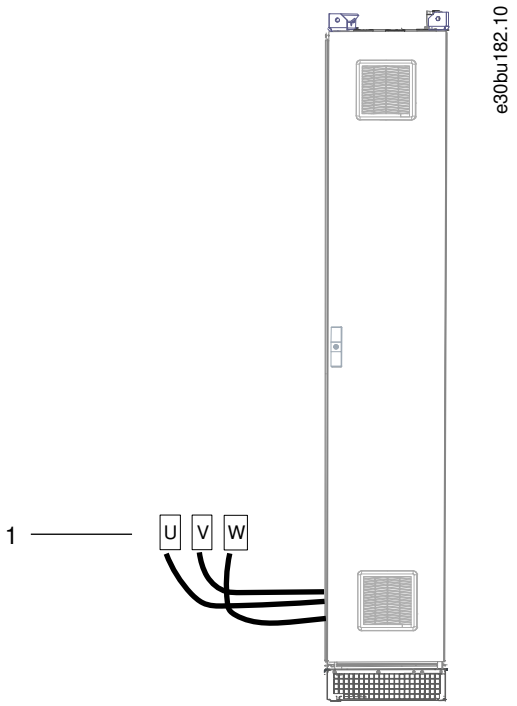

1	Motor cables (U/V/W) to motor terminals (U/V/W) in drive cabinet

Illustration 36: Split Shipment Electrical Connections (Top Exit Cabinet)

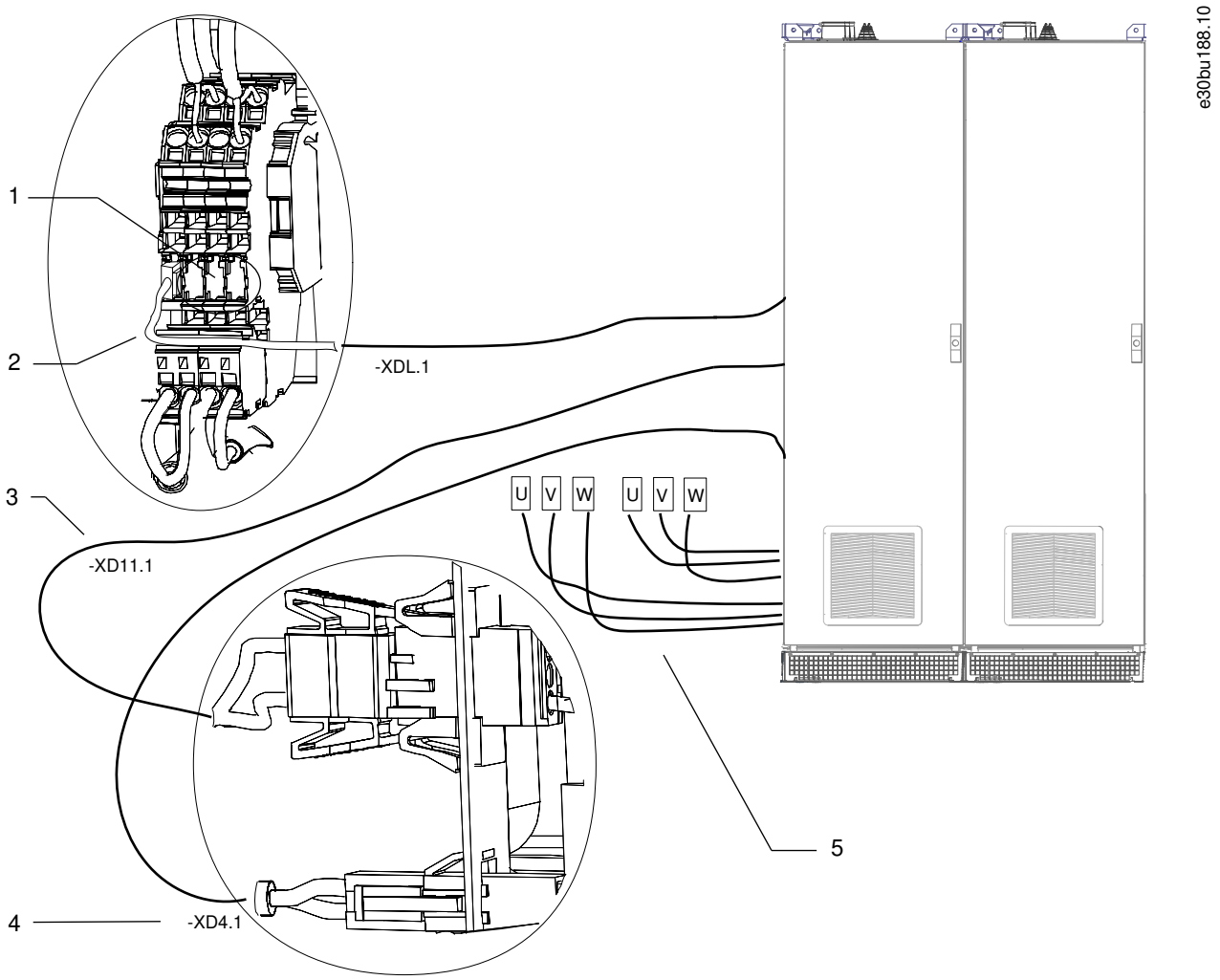

1	Additional terminal connections	**2**	Thermal protection wiring harness to drive cabinet
3	DC-link harness to fan power supply in drive cabinet	**4**	Cabinet heater supply harness to drive cabinet
5	Motor cables (U/V/W) to motor terminals (U/V/W) in drive cabinet		

Illustration 37: Split Shipment Electrical Connections (E5h/E6h Sine-wave Cabinets)

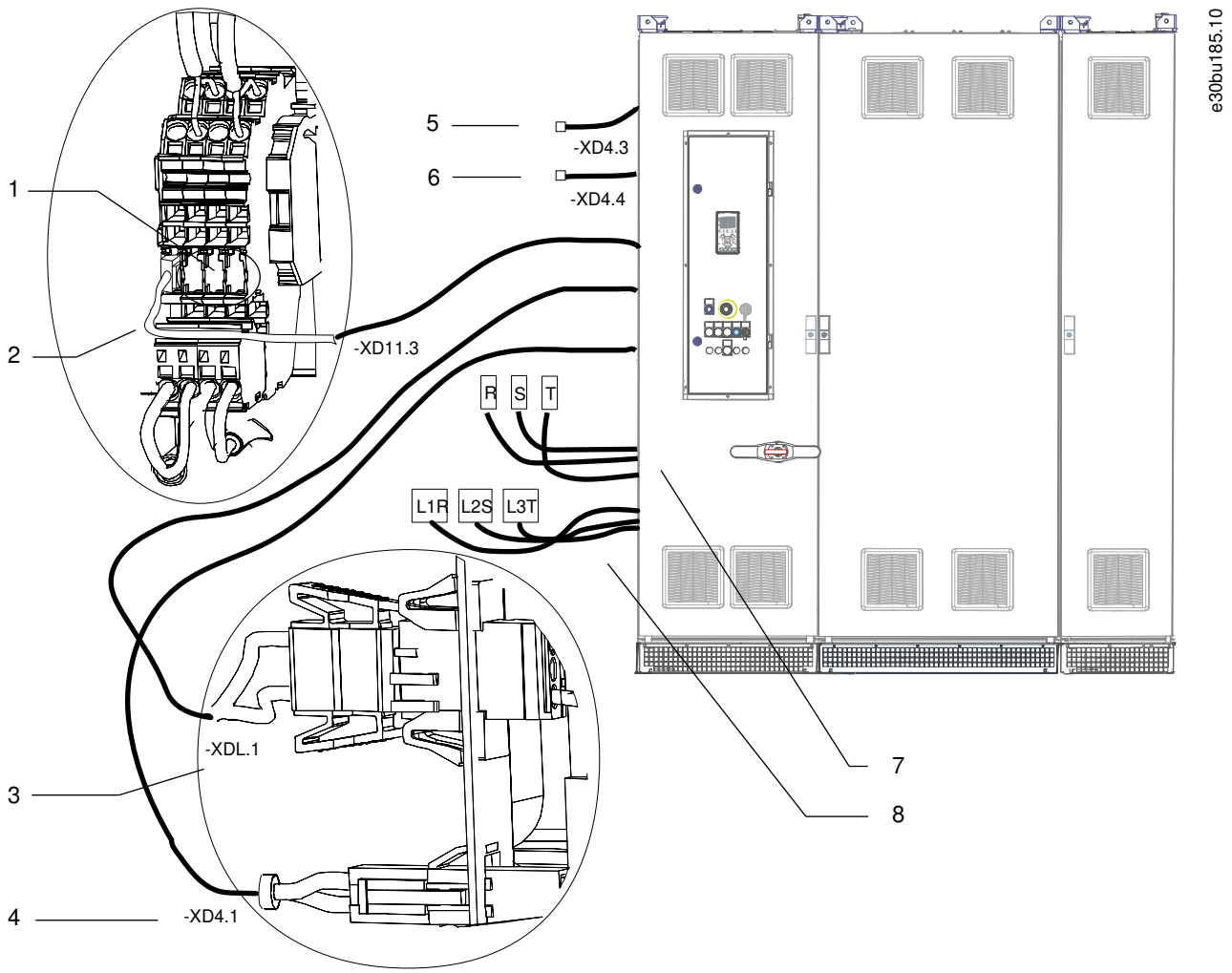

1	Additional terminal connections	**2**	Thermal protection wiring harness to input filter cabinet
3	DC-link harness to fan supply in the input filter cabinet	**4**	Cabinet heater supply harness to input filter cabinet
5	PHF contactor 1 supply harness to input filter cabinet (only with PHF option)	**6**	PHF contactor 2 supply harness to input filter cabinet (only with PHF option)
7	Mains cables (R/S/T) to input terminals (R/S/T) in the input filter cabinet	**8**	Mains cables (L1R/L2S/L3T) to output terminals (L1R/L2S/L3T) in the input filter cabinet

Illustration 38: Split Shipment Electrical Connections (Input Power Options Cabinet + E6h Drive Cabinet + Top Exit Cabinet)

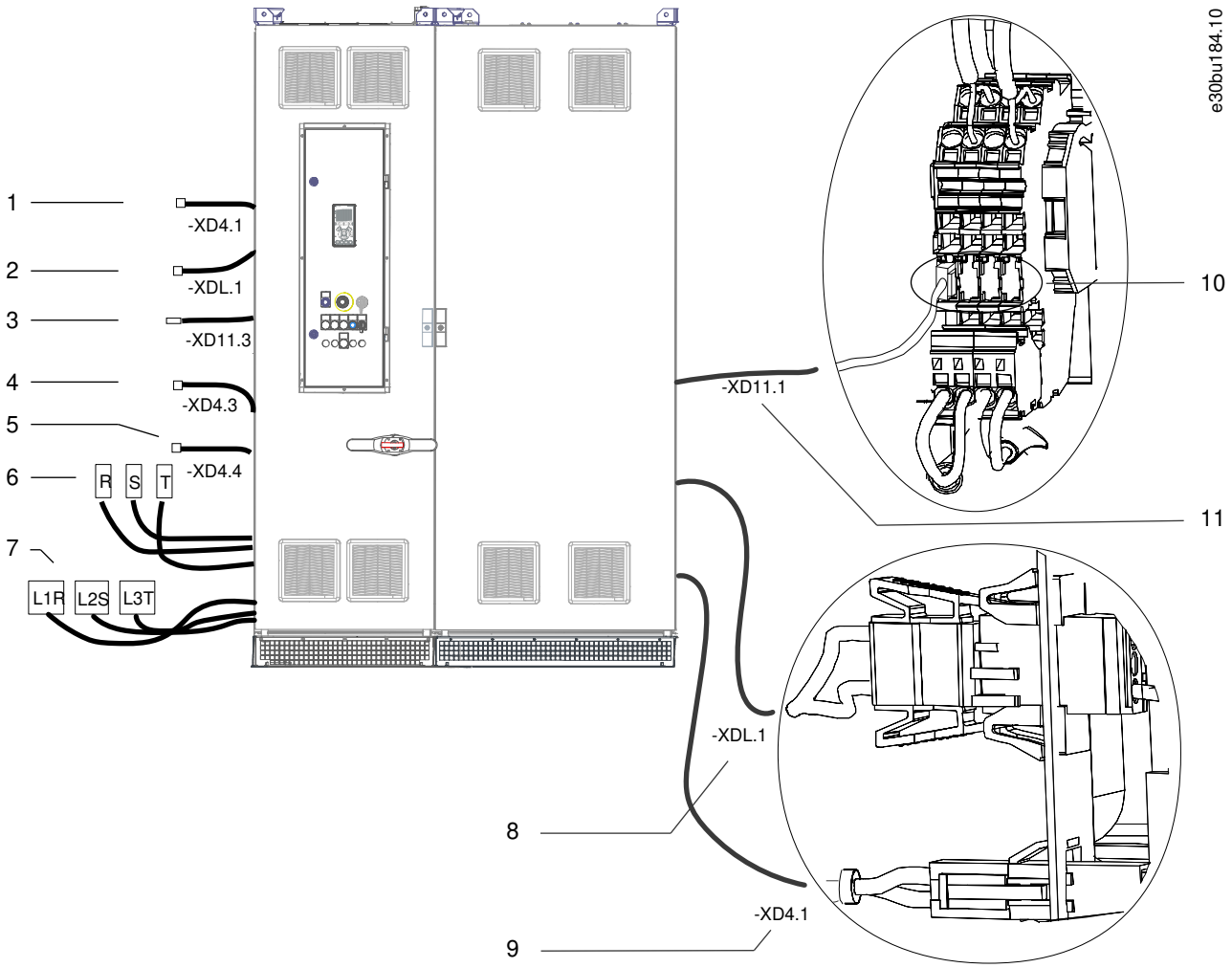

1	Cabinet heater supply harness to input filter cabinet	**2**	DC-link harness to fan supply to input filter cabinet
3	Thermal protection wiring harness in the input filter cabinet	**4**	PHF contactor 1 supply harness to PHF cabinet (only with PHF option)
5	PHF contactor 2 supply harness to PHF cabinet (only with PHF option)	**6**	Mains cables R, S, T to input terminals (R/S/T) in the input filter cabinet
7	Mains cables (L1R/L2S/L3T) to output terminals (L1R/L2S/L3T) in the input filter cabinet	**8**	DC-link harness to fan supply in output filter cabinet
9	Cabinet heater supply harness to output filter cabinet	**10**	Available terminal connections
11	Thermal protection wiring harness to output filter cabinet		

Illustration 39: Split Shipment Electrical Connections (Input Power Options Cabinet + E6h Drive Cabinet)

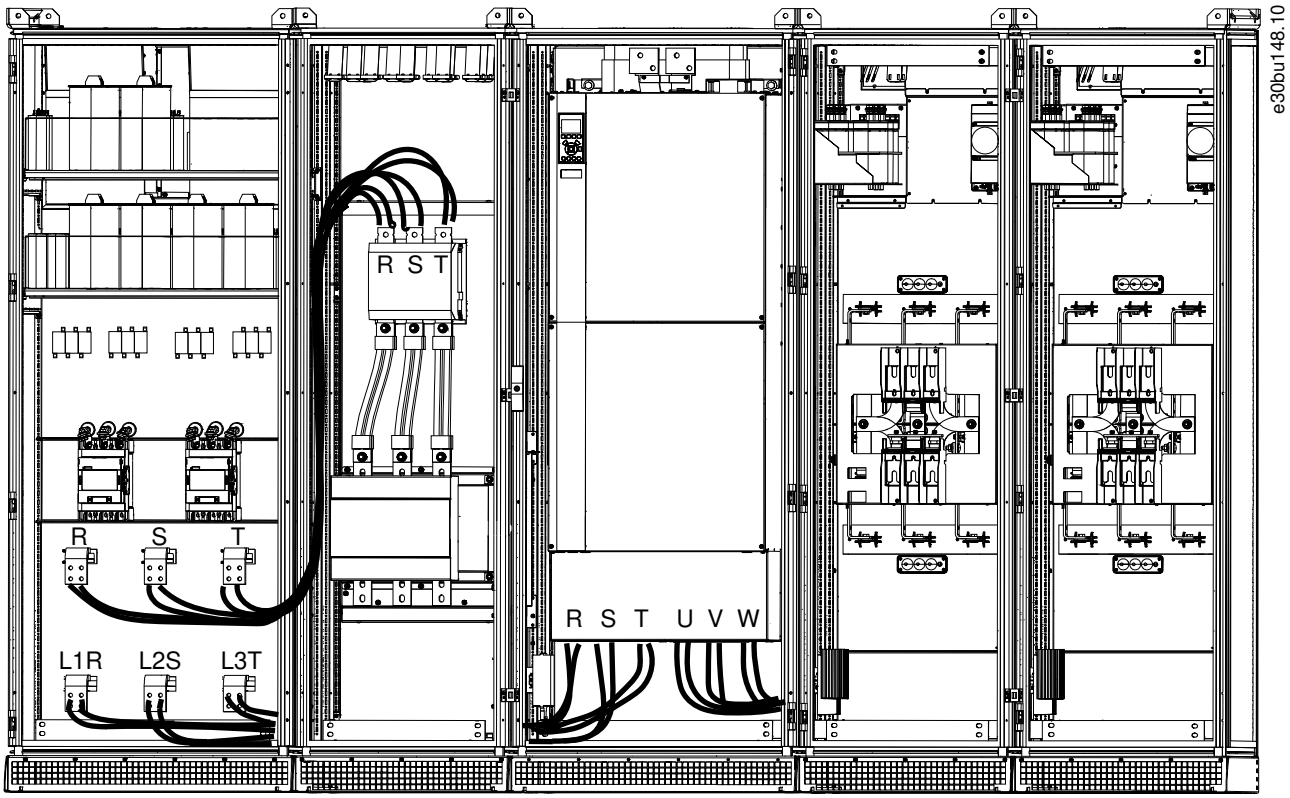

Illustration 40: Connecting Motor and Mains Cables (Example Shows a PHF Cabinet + Input Power Options Cabinet + E6h Drive Cabinet + Sine-wave Cabinets)

5.7 Control Compartment Wiring

5.7.1 Safety Precautions

⚠ WARNING ⚠

HIGH VOLTAGE

The mains disconnect switch does not disconnect the external voltage supply. Failure to disconnect the external voltage supply before touching any components in the control compartment can result in death or serious injury.

- Only qualified personnel must install, start up, and maintain the drive.
- Disconnect the external voltage supply.

5.7.2 Control Compartment Interior View

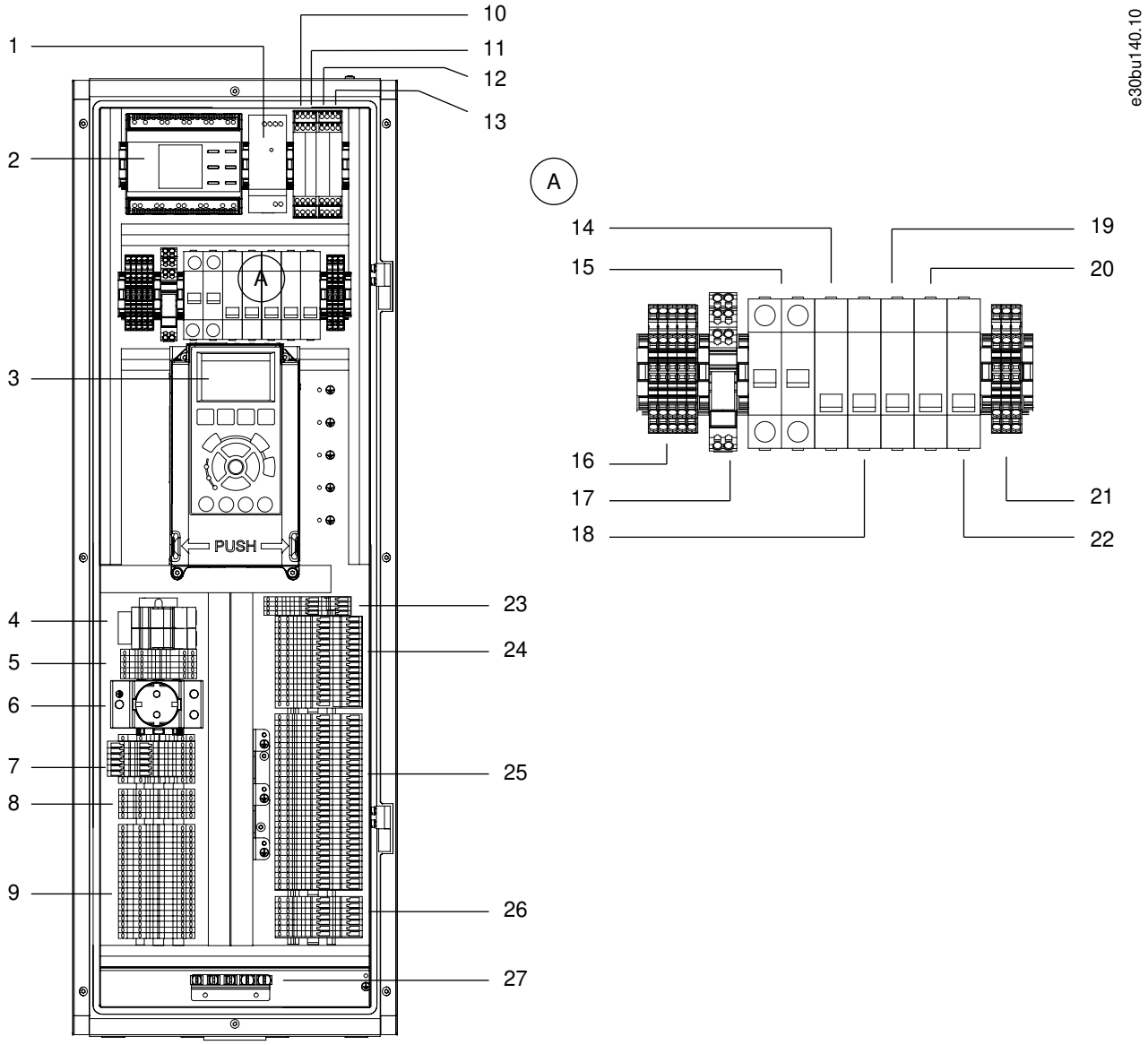

1	24 V DC supply (-TB7)	**2**	Insulation monitor (-BE1)
3	Local control panel (LCP). See 3.6.3 Local Control Panel (LCP).	**4**	RJ45 terminal blocks 1 and 2 (-RJ45_1 and RJ45_2)
5	Protection terminal block set (-XD11)	**6**	Socket outlet (-XD10)
7	Contactor control circuit terminal block (-XD0)	**8**	Cabinet heater terminal block (-XD4)
9	Customer terminal block/option C0 terminal block (-XDW)	**10**	Thermal trip indicator relay, input power options cabinet (-KFJ.1)
11	Thermal trip indicator relay, output filter cabinet (-KFJ.2)	**12**	Thermal trip indicator relay, input filter cabinet (-KFJ.3)
13	PHF capacitor connect/disconnect contactor relay (-QAF)	**14**	+24 DC supply protection MCB (-FC7)
15	AC circuit protection MCB (-FC6)	**16**	AC distribution circuit terminal block (-XD1)

17	Auxiliary relay for heater (-QAM)	**18**	Contactor control circuit protection MCB (-FC10)
19	Cabinet light/socket outlet protection MCB (-FCC)	**20**	Cabinet heater(s) circuit protection MCB (-FCE)
21	DC distribution circuit terminal block (-XD3)	**22**	Motor heater circuit protection MCB (-FCN)
23	AC fan supply terminal block set (-XDY)	**24**	Option C2 terminal block set (-XDF)
25	Basic I/O terminal block and option A, B, D card terminal block set (-XD2)	**26**	Door components terminal block set (-XDJ)
27	Grounding clamp for the shield termination of wires.		

Illustration 41: Layout of Control Compartment Interior with All Options

5.7.3 Control Terminals

Table 25: Serial Communication Terminals

XD2 terminal	Parameter	Default Setting	Description
1	–	–	Integrated RC-filter for cable shield. Used only for connecting the shield in case of EMC problems.
2	*Parameter group 8-3* FC Port Settings*	–	RS485 interface. A switch (BUS TER.) is provided on the control card for bus termination resistance. See *Illustration 5.22*.
3	*Parameter group 8-3* FC Port Settings*	–	

Table 26: Digital Input/Output Terminal Descriptions

XD2 terminal	Parameter	Default setting	Description
10, 11	–	+24 V DC	24 V DC supply voltage for digital inputs and external transducers. Maximum output current 200 mA for all 24 V loads.
12	*Parameter 5-10 Terminal 18 Digital Input*	*[8] Start*	Digital inputs.
13	*Parameter 5-11 Terminal 19 Digital Input*	*[10] Reversing*	
16	*Parameter 5-14 Terminal 32 Digital Input*	*[0] No operation*	
17	*Parameter 5-15 Terminal 33 Digital Input*	*[0] No operation*	
14	*Parameter 5-12 Terminal 27 Digital Input*	*[2] Coast inverse*	For digital input or output. Default setting is input.
15	*Parameter 5-13 Terminal 29 Digital Input*	*[14] JOG*	
18	–	–	Common for digital inputs and 0 V potential for 24 V supply.

XD2 terminal	Parameter	Default setting	Description
19	–	STO	When not using the optional STO feature, a jumper wire is required between terminal 10 (or 11) and terminal 19. This setup allows the drive to operate with factory default programming values.

Table 27: Analog Input/Output Terminal Descriptions

XD2 terminal	Parameter	Default setting	Description
4	–	–	Common for analog output.
5	*Parameter 6-50 Terminal 42 Output*	*[0] No operation*	Programmable analog output. 0–20 mA or 4–20 mA at a maximum of 500 Ω.
6	–	+10 V DC	10 V DC analog supply voltage for potentiometer or thermistor. 15 mA maximum.
7	*Parameter group 6-1* Analog Input 1*	Reference	Analog input. For voltage (V) or current (mA).
8	*Parameter group 6-2* Analog Input 2*	Feedback	
9	–	–	Common for analog input.

5.7.4 Relay Terminals

Table 28: Relay Terminal Descriptions

XD2 terminal	Parameter	Default setting	Description
21, 22, 23	*Parameter 5-40 Function Relay [0]*	*[0] No operation*	Form C relay outputs. For AC or DC voltage.
24, 25, 26	*Parameter 5-40 Function Relay [1]*	*[0] No operation*	

5.7.5 Option Card Terminals

The option cards extend the functionality of drives and provide a high variety of interfaces to automation systems. When the option cards are specified in the type code, they are mounted in slots A, B, C, and D of the control card within the drive module. The option card wiring is routed to a terminal block within the control compartment. For more details, refer to the installation/operating guide for the respective option card.

NOTICE

OPTION CARD INSTALLATION

If the option card is ordered along with the drive using the type code, the factory installs the option card and its wiring. If the option is ordered separately, the customer is responsible for installing the option card and the wiring extensions to the control compartment.

Table 29: Option A Terminal Connections

Option card terminal	Corresponding terminal within the control compartment
1	XD2.40
2	XD2.41
3	XD2.42
4	XD2.43
5	XD2.44

Table 30: Option B Terminal Connections

Option card terminal	Corresponding terminal within the control compartment
1	XD2.46
2	XD2.47
3	XD2.48
4	XD2.49
5	XD2.50
6	XD2.51
7	XD2.52
8	XD2.53
9	XD2.54
10	XD2.55
11	XD2.56
12	XD2.57

Table 31: Option C1 Terminal Connections

Option card terminal	Corresponding terminal within the control compartment
X46.1	XDF.1
X46.2	XDF.2
X46.3	XDF.3
X46.4	XDF.4
X46.5	XDF.5
X46.6	XDF.6
X46.7	XDF.7
X46.8	XDF.8
X46.9	XDF.9
X46.10	XDF.10
X46.11	XDF.11

Option card terminal	Corresponding terminal within the control compartment
X46.12	XDF.12
X46.13	XDF.13
X46.14	XDF.14
X58.1	XDF.15
X58.2	XDF.16
X45.1	XDF.17
X45.2	XDF.18
X45.3	XDF.19
X45.4	XDF.20
X47.1	XDF.21
X47.2	XDF.22
X47.3	XDF.23
X47.4	XDF.24
X47.5	XDF.25
X47.6	XDF.26
X47.7	XDF.27
X47.8	XDF.28
X47.9	XDF.29
X47.10	XDF.30
X47.11	XDF.31
X47.12	XDF.32

Table 32: Option D Terminal Connections

Option card terminal	Corresponding terminal within the control compartment
35	XD2.28
36	XD2.29

5.7.6 Overview of Options Wiring

5.7.6.1 Auxiliary Supply Terminals

Table 33: Auxiliary Supply Codes

Character position	Option code	Description
21	1	230 V AC external
	5	230 V AC external + 24 V DC internal
	6	120 V AC external
	9	120 V AC external + 24 V DC internal

The auxiliary supply terminal option provides an external voltage supply to the –XD1.1 terminal. The external supply must be short-circuit protected. The power of the external supply depends on other selected cabinet options.

Illustration 42: Auxiliary AC Supply Terminals

WARNING

HIGH VOLTAGE

The mains disconnect switch does not disconnect the external voltage supply. Failure to disconnect the external voltage supply before touching any components in the control compartment can result in death or serious injury.

- Disconnect the external voltage supply.
- Only qualified personnel must install, start up, and maintain the drive.

5.7.6.2 Auxiliary Voltage Transformer

Table 34: Auxiliary Supply Codes

Character position	Option code	Description
21	2	230 V AC internal
	4	230 V AC internal + 24 V DC internal
	7	120 V AC internal
	8	120 V AC internal + 24 V DC internal

The auxiliary voltage transformer is an option fitted internally that allows for the supply to be tapped from the mains. If the enclosed drive is specified with a fused disconnect, the supply for the auxiliary voltage transformer is taken from between the drive and the fused disconnect. This configuration allows the control voltage to be disconnected with the main switch.

The transformer has multiple tappings on the primary side for the standard range of voltages on which the drive operates. The factory default wiring connects to the highest voltage tapping on the primary side, and the trip settings for the -FC4 terminal is set accordingly. The customer can change the tapping provided the correct voltage is applied and the thermal magnetic circuit breaker is set accordingly.

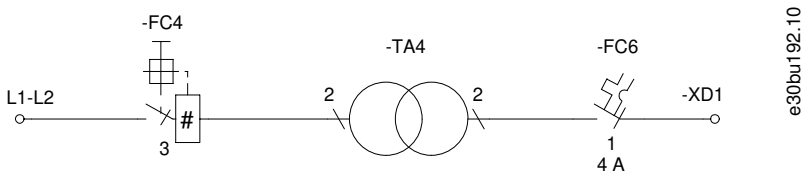

Illustration 43: Auxiliary Voltage Transformer Terminals

NOTICE

AUXILIARY COMPONENT FAILURE

Incorrect voltage or incorrect tapping installation will cause other auxiliary components in the control compartment to fail.

- When tapping the transformer, make sure to apply the correct voltage for the drive.
- Use the correct tapping and trip settings.

5.7.6.3 +24 DC External Supply

Table 35: Auxiliary Supply Codes

Character position	Option code	Description
21	4	230 V AC internal+24 V DC internal
	5	230 V AC external+24 V DC internal
	8	120 V AC internal+24 V DC internal
	9	120 V AC external+24 V DC internal

The 24 V DC external supply option enables other auxiliary options to be connected to a 24 V DC supply within the control compartment.

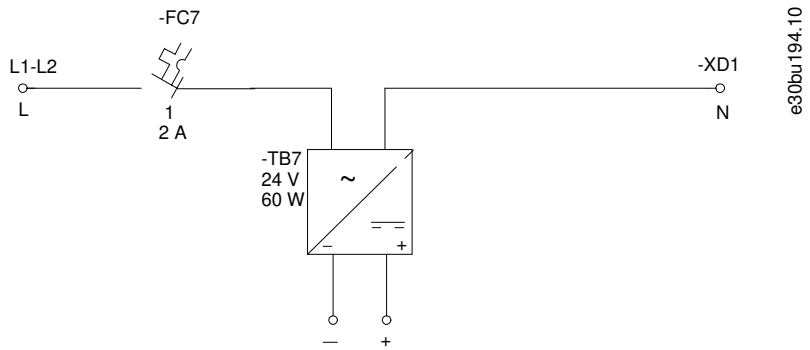

Illustration 44: 24 V DC External Supply Terminals

5.7.6.4 AC Customer Socket

Table 36: Auxiliary Function Option Codes

Character position	Option code	Description
23–24	A1	AC socket + cabinet light
	AA	AC socket + cabinet light + extended I/O terminals
	AB	AC socket + cabinet light + cabinet heater
	AC	AC socket + cabinet light + motor heater control
	AD	AC socket + cabinet light + insulation monitor
	AE	AC socket + cabinet light + extended I/O terminals + cabinet heater
	AF	AC socket + cabinet light + extended I/O terminals + motor heater control
	AG	AC socket + cabinet light + extended I/O terminals + insulation monitor
	AH	AC socket + cabinet light + extended I/O terminals + cabinet heater + motor heater control
	AI	AC socket + cabinet light + extended I/O terminals + cabinet heater + insulation monitor
	AJ	AC socket + cabinet light + extended I/O terminals + motor heater control + insulation monitor
	AK	AC socket + cabinet light + extended I/O terminals + cabinet heater + motor heater control + insulation monitor
	AL	AC socket + cabinet light + cabinet heater + motor heater control
	AM	AC socket + cabinet light + cabinet heater + insulation monitor
	AN	AC socket + cabinet light + cabinet heater + motor heater control + insulation monitor
	AO	AC socket + cabinet light + motor heater control + insulation monitor

The socket provides a supply for measurement tools, equipment, or a computer. The socket type is CEE 7/3 ("Schuko", Type F) or NEMA 5-15 grounded (Type B). The default voltage is 230 V AC (IEC variant) and 115 V AC (UL variant). When using an external supply, the maximum output power is 450 VA (IEC variant) and 230 VA (UL variant). When using a transformer supply, the maximum output power is 200 VA for both variants.

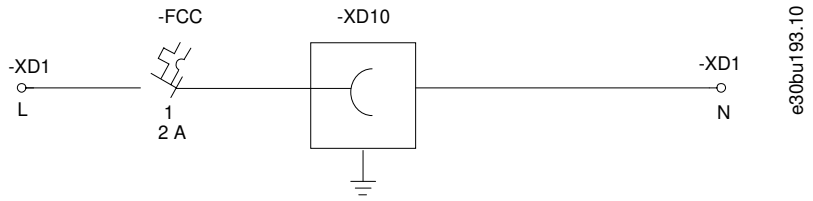

Illustration 45: AC Customer Socket Terminals

5.7.6.5 Extended I/O Terminals

Table 37: Auxiliary Function Option Codes

Character position	Option code	Description
23–24	A2	Extended I/O terminals
	AA	AC socket+cabinet light + extended I/O terminals
	AE	AC socket+cabinet light + extended I/O terminals + cabinet heater
	AF	AC socket+cabinet light + extended I/O terminals + motor heater control
	AG	AC socket+cabinet light + extended I/O terminals + insulation monitor
	AH	AC socket+cabinet light + extended I/O terminals + cabinet heater + motor heater control
	AI	AC socket+cabinet light + extended I/O terminals + cabinet heater + insulation monitor
	AJ	AC socket+cabinet light + extended I/O terminals + motor heater control + insulation monitor
	AK	AC socket+cabinet light + extended I/O terminals + cabinet heater + motor heater control + insulation monitor
	AP	Extended I/O terminals + cabinet heater
	AQ	Extended I/O terminals + motor heater control
	AR	Extended I/O terminals + insulation monitor
	AS	Extended I/O terminals + cabinet heater + motor heater control
	AT	Extended I/O terminals + cabinet heater + insulation monitor
	AU	Extended I/O terminals + cabinet heater + motor heater control + insulation monitor
	AV	Extended I/O terminals + motor heater control + insulation monitor

The extended I/O terminal option includes 25 control terminals (-XDW) in the control compartment for use by the customer. If the enclosed drive is configured with any option C1 card, the -XDW terminal block is used for the option C1 card wiring.

5.7.6.6 Cabinet Heater

Table 38: Auxiliary Function Option Codes

Character position	Option code	Description
23–24	A3	Cabinet heater
	AB	AC socket + cabinet light + cabinet heater
	AE	AC socket + cabinet light + extended I/O terminals + cabinet heater
	AH	AC socket + cabinet light + extended I/O terminals + cabinet heater + motor heater control
	AI	AC socket + cabinet light + extended I/O terminals + cabinet heater + insulation monitor
	AK	AC socket + cabinet light + extended I/O terminals + cabinet heater + motor heater control + insulation monitor
	AL	AC socket + cabinet light + cabinet heater + motor heater control
	AM	AC socket + cabinet light + cabinet heater + insulation monitor
	AN	AC socket + cabinet light + cabinet heater + motor heater control + insulation monitor
	AP	Extended I/O terminals + cabinet heater
	AS	Extended I/O terminals + cabinet heater + motor heater control
	AT	Extended I/O terminals + cabinet heater + insulation monitor
	AU	Extended I/O terminals + cabinet heater + motor heater control + insulation monitor
	AW	Cabinet heater + motor heater control
	AX	Cabinet heater + insulation monitor
	AY	Cabinet heater + motor heater control + insulation monitor

The cabinet heater option increases the inside temperature of the cabinet above the ambient temperature, preventing condensation in the cabinet. Each cabinet has 1 cabinet heater. The heater element is self regulating. The external supply is connected to terminal -XD1.1. When the drive is not in run state, the control relay +QAM changes the supply to the output terminals (-XD4). When the drive is in run state, the control relay disconnects the supply to the cabinet heater. The function is disabled when MCB –FCE is open.

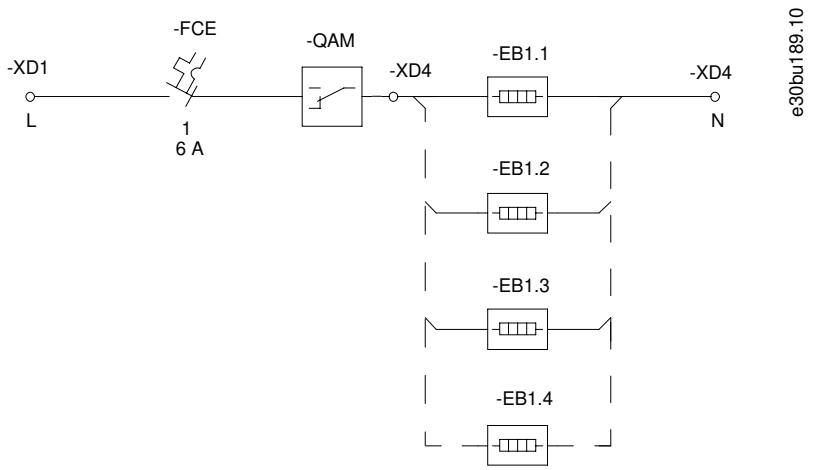

Illustration 46: Cabinet Heater Terminals

5.7.6.7 Motor Heater Control

Table 39: Auxiliary Function Option Codes

Character position	Option code	Description
23–24	A4	Motor heater control
	AC	AC socket + cabinet light + motor heater control
	AF	AC socket + cabinet light + extended I/O terminals + motor heater control
	AH	AC socket + cabinet light + extended I/O terminals + cabinet heater + motor heater control
	AJ	AC socket + cabinet light + extended I/O terminals + motor heater control + insulation monitor
	AK	AC socket + cabinet light + extended I/O terminals + cabinet heater + motor heater control + insulation monitor
	AL	AC socket + cabinet light + cabinet heater + motor heater control
	AN	AC socket + cabinet light + cabinet heater + motor heater control + insulation monitor
	AO	AC socket + cabinet light + motor heater control + insulation monitor
	AQ	Extended I/O terminals + motor heater control
	AS	Extended I/O terminals + cabinet heater + motor heater control
	AU	Extended I/O terminals + cabinet heater + motor heater control + insulation monitor
	AV	Extended I/O terminals + motor heater control + insulation monitor
	AW	Cabinet heater + motor heater control
	AY	Cabinet heater + motor heater control + insulation monitor
	AZ	Motor heater control + insulation monitor

The motor heater option provides the ability to control the supply for the motor anti-condensation heater. The 24 V DC external supply is connected to terminal -XD1.1 in the lower part of the cabinet. When the drive is not in run state, the control relay +QAM changes the external supply to the -XDN output terminals. When the drive is in run state, the control relay disconnects the external supply to the motor heater. The function is disabled when MCB –FCN is open.

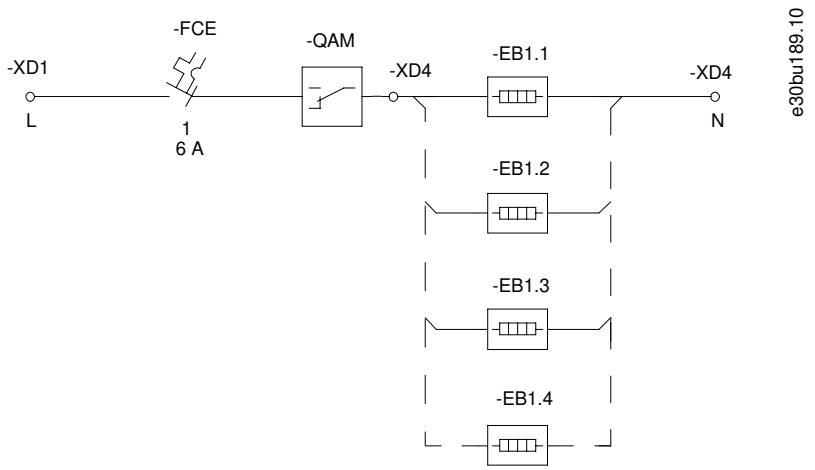

Illustration 47: Motor Heater Control (Heater Element not Included)

5.7.6.8 Insulation Monitor

Table 40: Auxiliary Function Option Codes

Character position	Option code	Description
23–24	A5	Insulation monitor
	AD	AC socket+cabinet light + insulation monitor
	AG	AC socket+cabinet light + extended I/O terminals + insulation monitor
	AI	AC socket+cabinet light + extended I/O terminals + cabinet heater + insulation monitor
	AJ	AC socket+cabinet light + extended I/O terminals + motor heater control + insulation monitor
	AK	AC socket+cabinet light + extended I/O terminals + cabinet heater + motor heater control + insulation monitor
	AM	AC socket+cabinet light + cabinet heater + insulation monitor
	AN	AC socket+cabinet light + cabinet heater + motor heater control + insulation monitor
	AO	AC socket+cabinet light + motor heater control + insulation monitor
	AR	Extended I/O terminals + insulation monitor
	AT	Extended I/O terminals + cabinet heater + insulation monitor
	AU	Extended I/O terminals + cabinet heater + motor heater control + insulation monitor
	AV	Extended I/O terminals + motor heater control + insulation monitor
	AX	Cabinet heater + insulation monitor
	AY	Cabinet heater + motor heater control + insulation monitor
	AZ	Motor heater control + insulation monitor

The insulation monitor option monitors the supply and insulation faults within the insulation level in an IT supply network with an insulation monitor in the control compartment.

5.7.6.9 Indicator Lights and Reset Buttons

Table 41: Door-mounted Option Codes

Character position	Option code	Description
28–29	D1	Indicator lights and reset button
	DA	Indicator lights and reset button + emergency switch off and emergency push-button
	DB	Indicator lights and reset button + STO w/ emergency push-button (no functional safety)
	DC	Indicator lights and reset button + STO/SS1 w/ emergency push-button + safely limited speed (TTL encoder)
	DE	Indicator lights and reset button + STO/SS1 w/ emergency push-button + safely limited speed (HTL encoder)

The indicator light and reset button option includes indicator lights on the control compartment door for run and fault states of the AC drive. The door also has a button for the reset function of the drive.

5.7.6.10 Emergency Switch Off

Table 42: Door-mounted Option Codes

Character position	Option code	Description
28–29	D2	Emergency switch off + emergency push-button
	DA	Indicator lights and reset button + emergency switch off and emergency push-button

The emergency switch off option uses an input contactor to disconnect the drive from mains. Pushing the emergency stop push-button on the control compartment door opens the control circuit of the input contactor.

5.7.6.11 STO with Emergency Push-button on Door

Table 43: Door-mounted Option Codes

Character position	Option code	Description
28–29	D3	STO w/ emergency push-button (no functional safety)
	DB	Indicator lights and reset button + STO w/ emergency push-button (no functional safety)

This option provides the STO (safe torque off) function via an emergency push-button mounted on the door of the control compartment. The control terminals of the control card are extended from inside the drive module and routed out to the terminal block set -XD2 in the control compartment. The emergency push-button is wired between terminals -XD2.10 and -XD2.19.

Activating the emergency push-button prevents the unit from generating the voltage required to rotate the motor. The option provides:

- Safe Torque Off (STO), as defined by EN IEC 61800-5-2.
- Stop Category 0, as defined in EN 60204-1.

5.8 Connecting Motor, Mains, and Ground Cables

5.8.1 Power Cabling and Grounding Considerations

Motor and mains connections

- Size the wiring according to the input current of the drive. For maximum wire sizes, see the Electrical Data section.
- Comply with local and national electrical codes for cable sizes.
- Follow motor manufacturer wiring requirements.
- Motor wiring knockouts or access panels are provided on the pedestal of IP21/IP54 (NEMA 1/NEMA 12) units.
- Do not wire a starting or pole-changing device (for example Dahlander motor or slip ring induction motor) between the drive and the motor.

Ground connection

- Ground the drive in accordance with applicable standards and directives.
- Use a dedicated ground wire for input power, motor power, and control wiring.
- Do not ground 1 drive to another in a daisy chain fashion.
- Keep the ground wire connections as short as possible.
- Follow motor manufacturer wiring requirements.
- Minimum cable cross-section: 10 mm^2 (6 AWG) (or 2 rated ground wires terminated separately).
- Tighten the terminals in accordance with the information provided in 10.11 Fastener Torque Ratings.

EMC-compliant Installation

Refer to 5.2 EMC-compliant Installation.

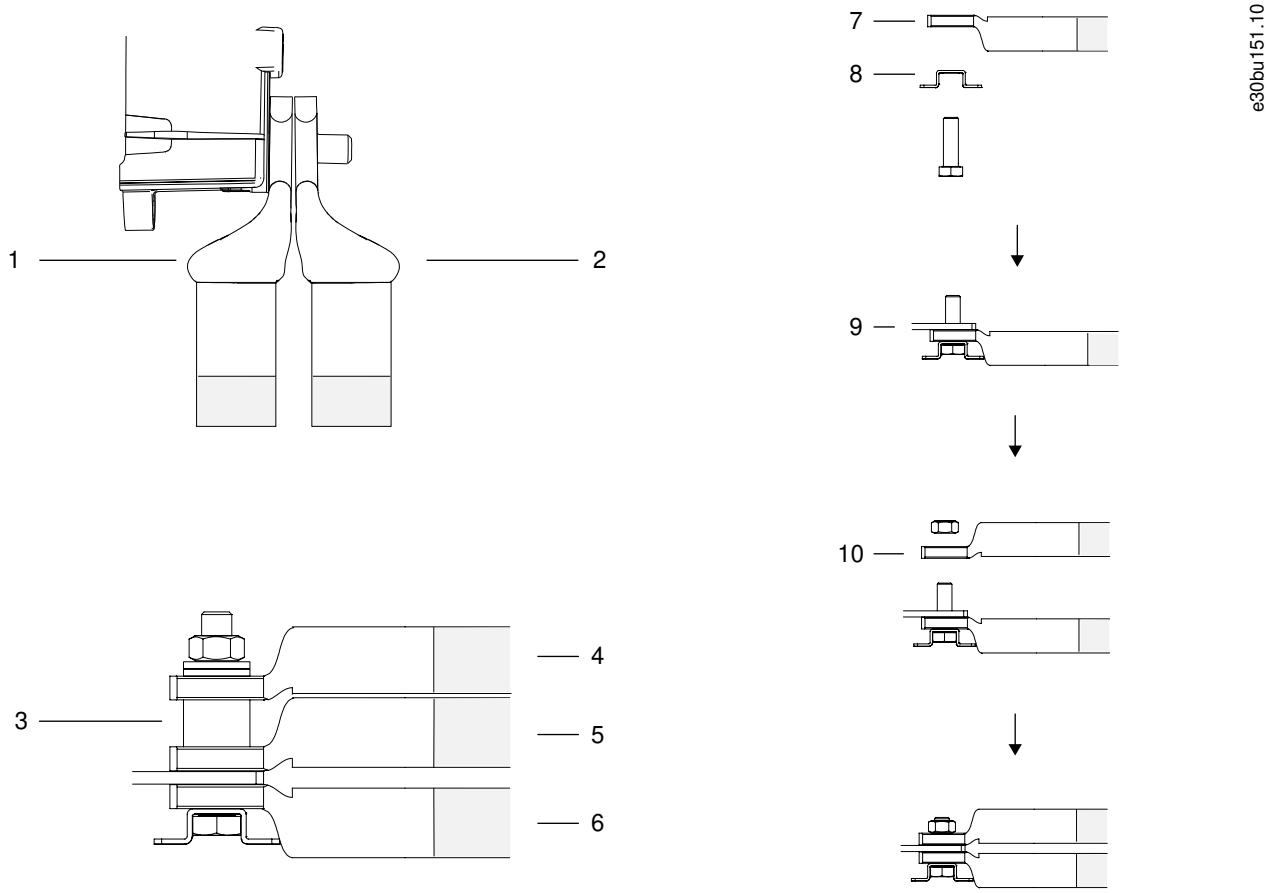

1	Cable 1	**2**	Cable 2
3	Connection bushing	**4**	Cable 1
5	Cable 2	**6**	Cable 3
7	Cable 1 lug	**8**	Bolt holder on the connector
9	Terminal connector	**10**	Cable 2 lug

Illustration 48: Different Ways of Connecting Multiple Cables to 1 Terminal

5.8.2 Connecting to the Mains

Context:

If the enclosed drive is not configured with an input filter or input power option, connect the mains to the drive module. Otherwise, connect the mains to the input power option.

Procedure

1. Strip a section of the outer cable insulation.
2. Fasten a connector/cable lug to the end of the stripped cable.
3. Create an electrical connection between the cable shield and ground by securing the stripped wire under the cable clamp.
4. Connect the ground wire to the nearest grounding terminal in accordance with the grounding instructions provided in 5.8.6 Connecting to Ground.
5. Connect the 3-phase AC input power cables to terminals R (L1), S (L2), and T (L3).
6. When supplied from an isolated mains source (IT mains or floating delta) or TT/TN-S mains with a grounded leg (grounded delta), ensure that *parameter 14-50 RFI Filter* is set to *[0] Off* to avoid damage to the DC link and to reduce ground capacity currents.
7. Tighten the terminals in accordance with the specifications shown in 10.11 Fastener Torque Ratings.

Example:

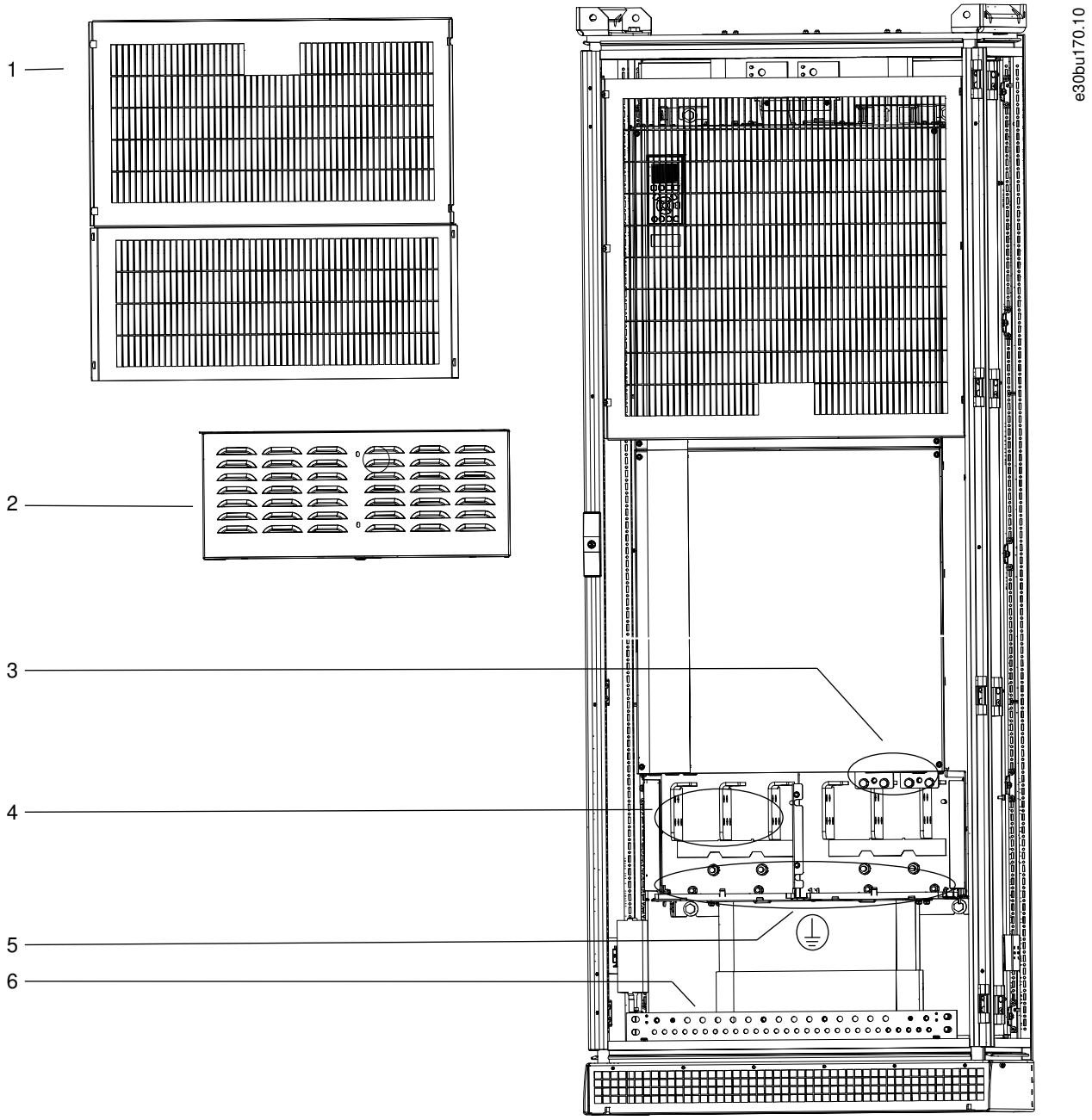

1	Cabinet screen (lower)	**2**	Terminal cover
3	Brake and load share terminals	**4**	Mains terminals
5	Ground terminals	**6**	Grounding bar

Illustration 49: Connection Points for Mains to Drive Module

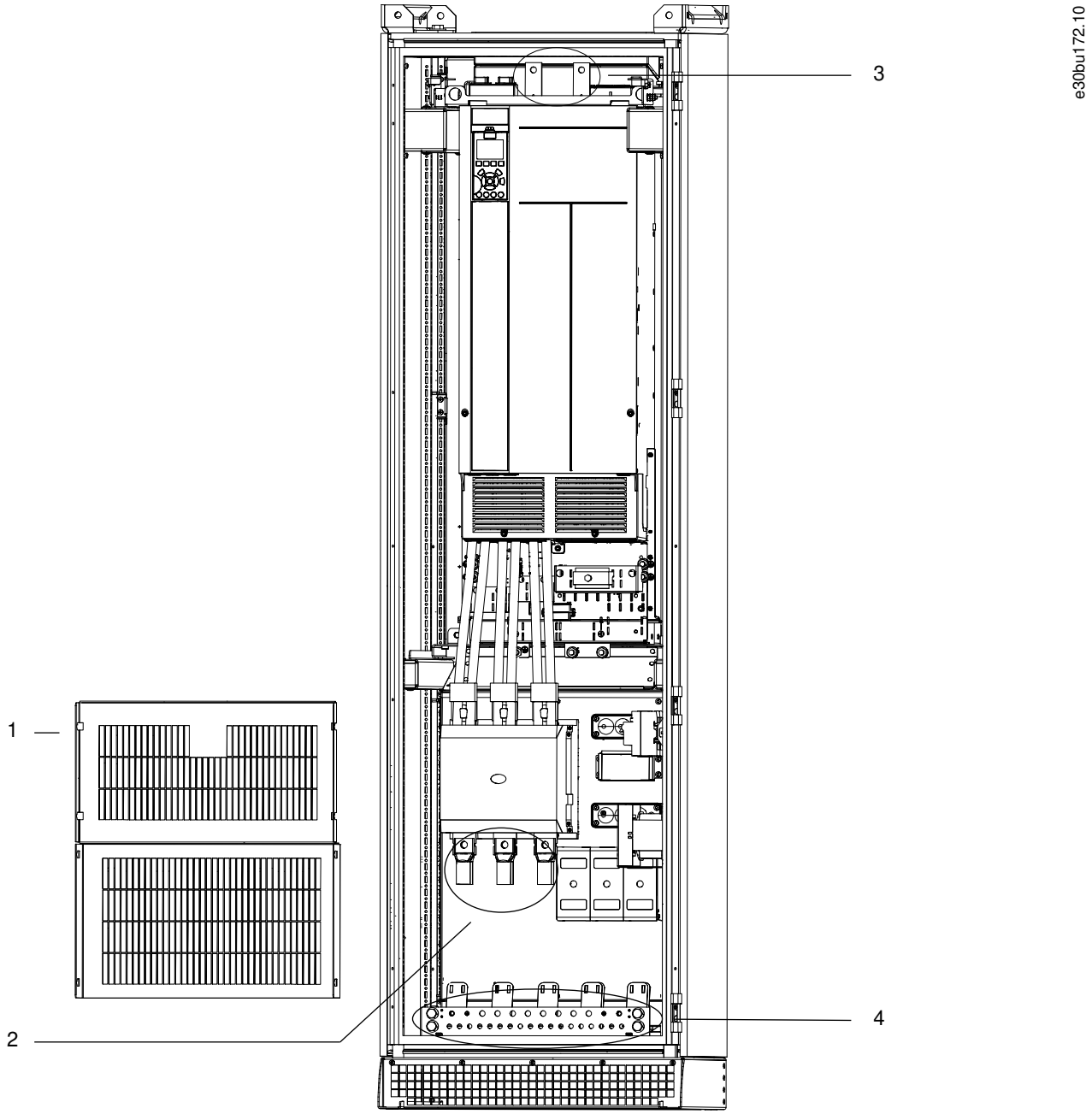

1	Cabinet screen (lower)	**2**	Input power terminals (contactor option is shown)
3	DC terminals	**4**	Grounding bar

Illustration 50: Connection Points for Mains to Input Power Option (Enclosed Drive Configured without Power Options Cabinet)

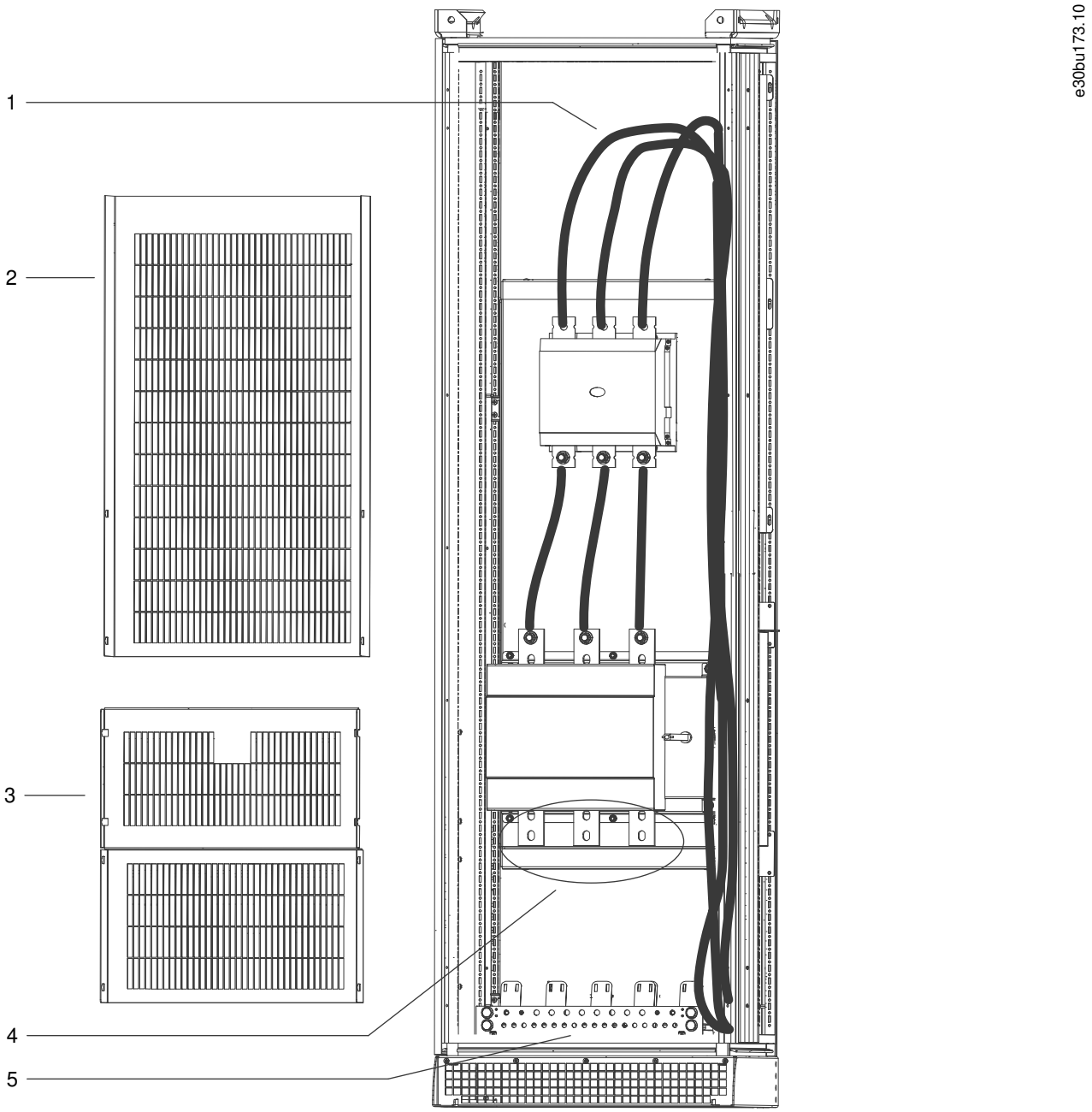

1	Factory cables connecting contactor to drive input terminals	**2**	Cabinet screen (upper)
3	Cabinet screen (lower)	**4**	Input power terminals (disconnect option is shown)
5	Grounding bar		

Illustration 51: Connection Points for Mains to Input Power Option (Enclosed Drive Configured with Power Options Cabinet)

5.8.3 Connecting the Drive Module to the Motor

Procedure

1. Strip a section of the outer cable insulation.
2. Fasten a connector/cable lug to the end of the stripped cable.
3. Create an electrical connection between the cable shield and ground by securing the stripped wire under the cable clamp.
4. Connect the ground wire to the nearest grounding terminal in accordance with the grounding instructions provided in 5.8.6 Connecting to Ground.
5. Connect the 3-phase AC motor cables to terminals U (T1), V (T2), and W (T3).
6. Tighten the terminals in accordance with the specifications shown in 10.11 Fastener Torque Ratings.

Example:

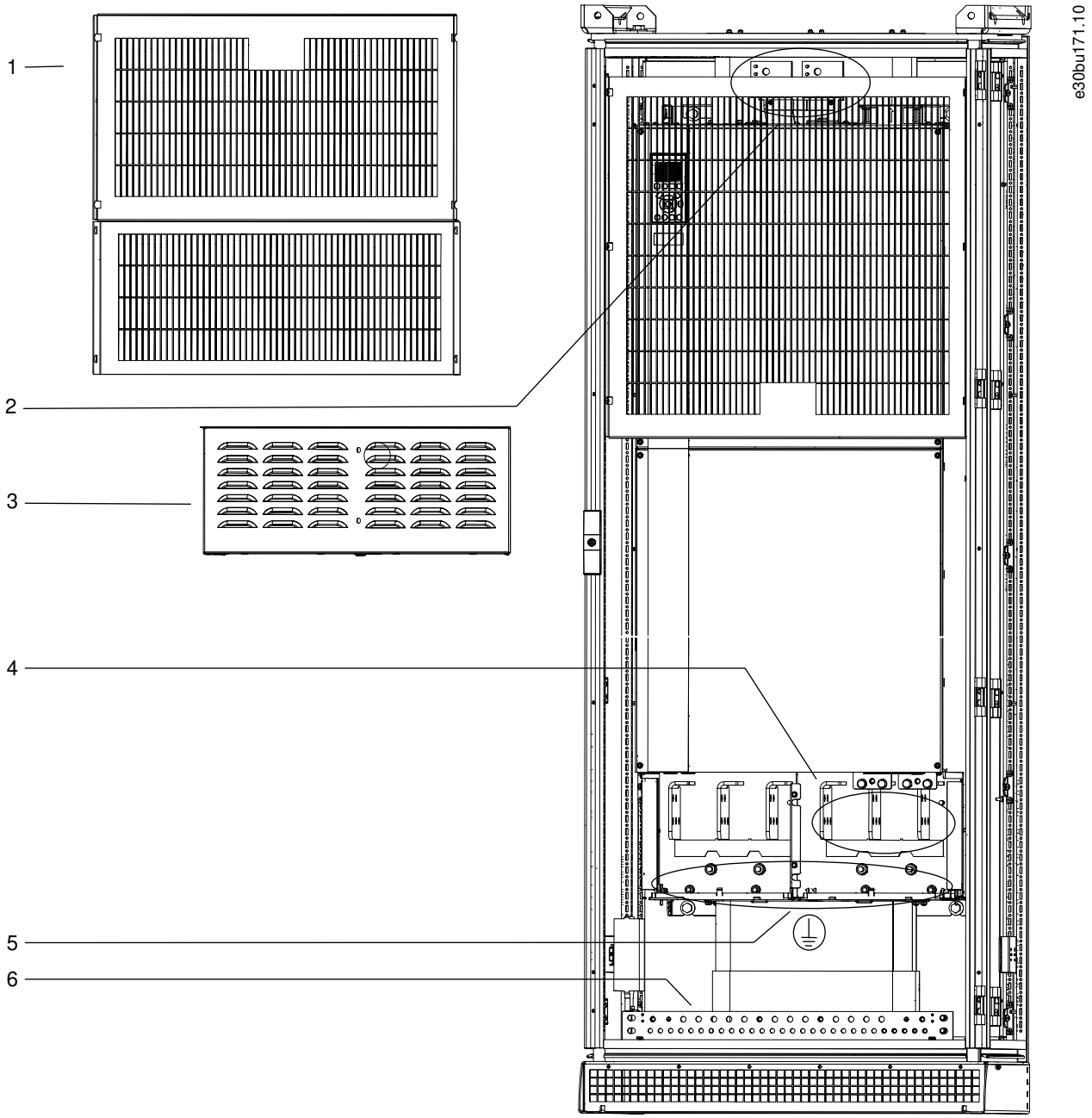

1	Cabinet screen (lower)	**2**	DC terminals
3	Terminal cover	**4**	Motor terminals
5	Ground terminals on drive module	**6**	Grounding bar

Illustration 52: Connection Points for Drive Module to Motor

5.8.4 Connecting the Sine-wave Filter to the Motor

Procedure

1. Strip a section of the outer cable insulation.
2. Fasten a connector/cable lug to the end of the stripped cable.
3. Create an electrical connection between the cable shield and ground by securing the stripped wire under the cable clamp.
4. Connect the ground cable to the nearest grounding terminal in accordance with the grounding instructions provided in 5.8.6 Connecting to Ground.
5. Connect the 3-phase AC motor cable to the sine-wave terminals U, V, and W.
   - If the enclosed drive has 1 sine-wave filter cabinet, run 1 set of motor cables to the cabinet.
   - If the enclosed drive has 2 sine-wave filter cabinets, run 2 sets of motor cables, 1 set to each sine-wave filter cabinet.

NOTICE

- Each sine-wave cabinet must have the same number of motor phase cables and they must be in quantities of 2 (for example, 2, 4, 6, or 8). 1 cable is not allowed. The cables are required to be equal length.

6. Tighten the terminals in accordance with the specifications shown in 10.11 Fastener Torque Ratings.

Example:

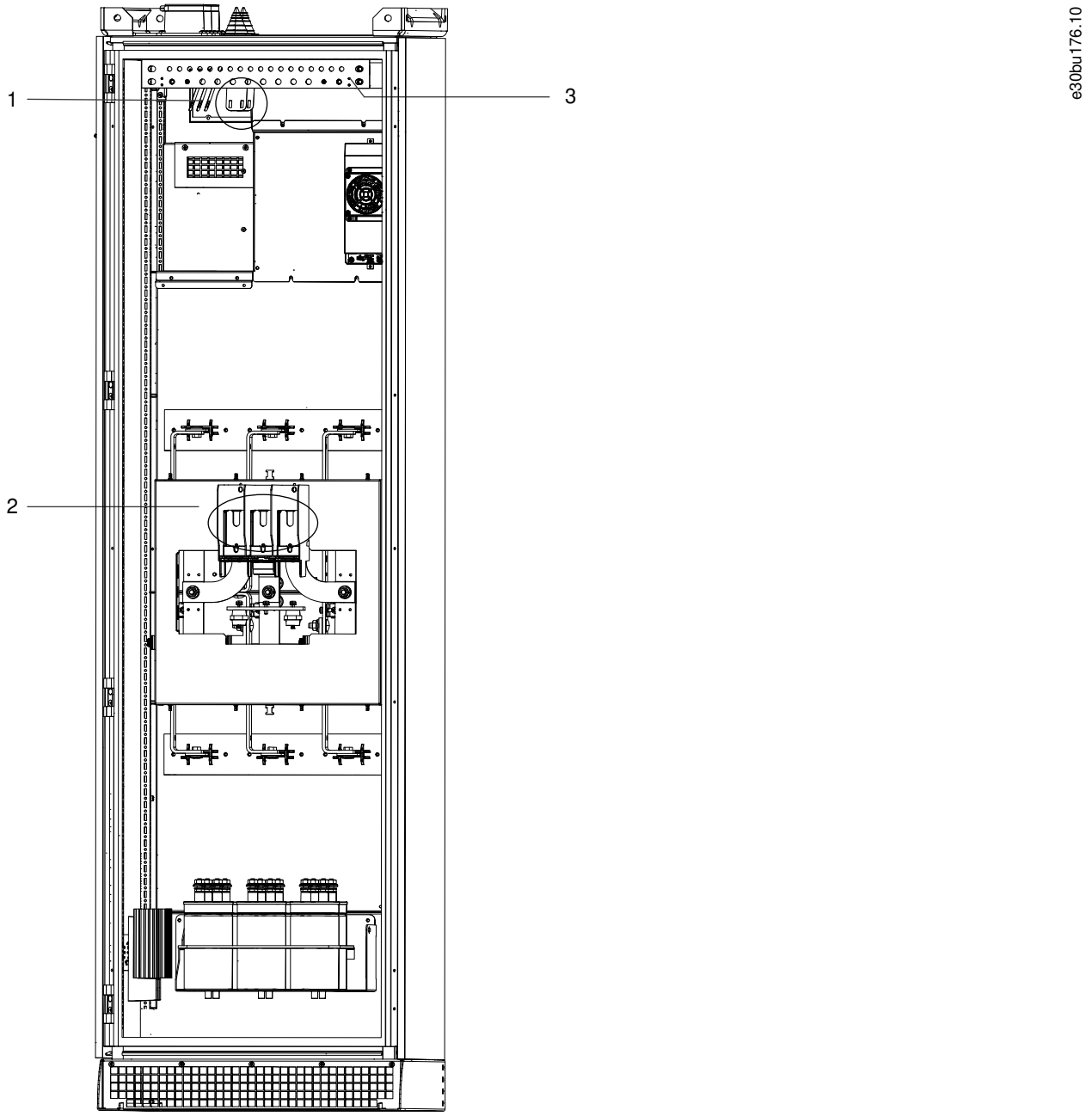

1 DC bus terminals	**2** Motor terminals
3 Grounding bar	

Illustration 53: Connection Points for the Sine-wave Filter to Motor

5.8.5 Connecting the dU/dt Filter to the Motor

Procedure

1. Strip a section of the outer cable insulation.
2. Fasten a connector/cable lug to the end of the stripped cable.
3. Create an electrical connection between the cable shield and ground by securing the stripped wire under the cable clamp.
4. Connect the ground cable to the nearest grounding terminal in accordance with the grounding instructions provided in 5.8.6 Connecting to Ground.
5. Connect the 3-phase AC motor wiring to the dU/dt terminals U (T1), V (T2), and W (T3).
6. Tighten the terminals in accordance with the specifications shown in 10.11 Fastener Torque Ratings.

Example:

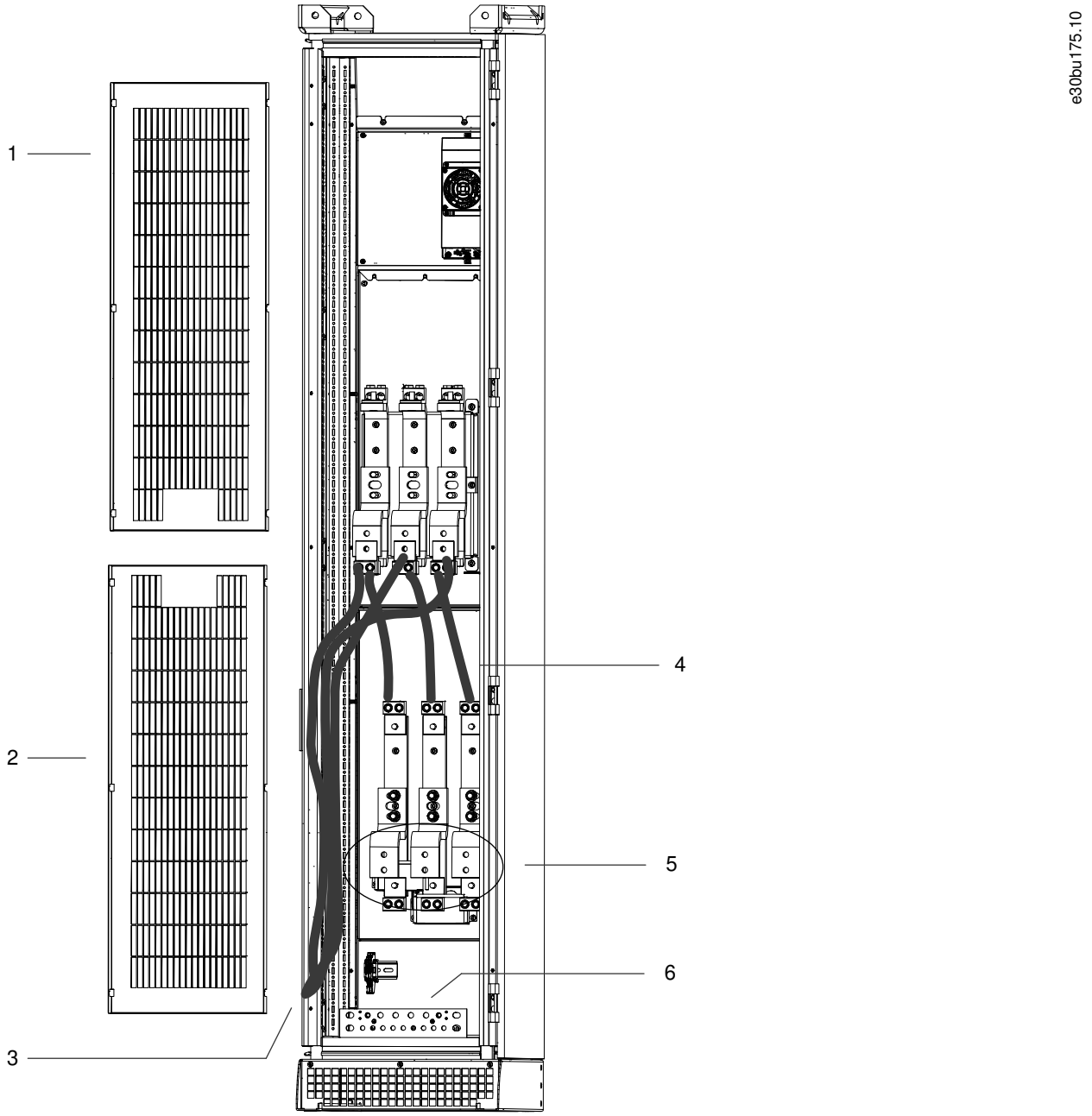

1	Cabinet screen (upper)	**2**	Cabinet screen (lower)
3	Factory-installed power cables from the drive module	**4**	Factory-installed cables
5	Motor terminals	**6**	Grounding bar

Illustration 54: Connection Points for the dU/dt Filter to Motor

5.8.6 Connecting to Ground

Context:

WARNING

LEAKAGE CURRENT HAZARD

Leakage currents exceed 3.5 mA. Failure to ground the drive properly can result in death or serious injury.

- Ensure the correct grounding of the equipment by a certified electrical installer.

NOTICE

POTENTIAL EQUALIZATION

There is a risk of burst transient when the ground potential between the drive and the control system is different.

- Install equalizing cables between the system components. Recommended cable cross-section: 16 mm^2 (5 AWG).

1. Strip a section of the outer cable insulation.
2. Fasten a connector/cable lug to the end of the stripped cable.
3. Connect the ground cable to the nearest grounding terminal.
4. Tighten the terminals in accordance with the specifications shown in 10.11 Fastener Torque Ratings.

Example:

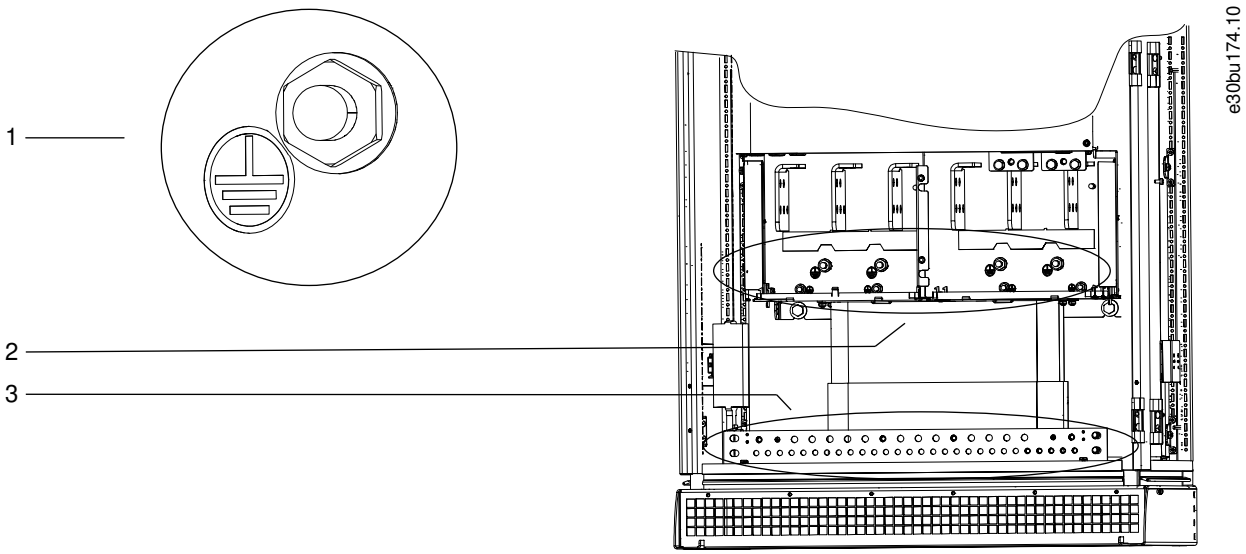

1	Symbol indicating grounding terminals	2	Grounding points on drive module
3	Grounding bar (provided in every cabinet)		

Illustration 55: Connection Grounding Points

5.9 Installing Upstream Fuses

5.9.1 Upstream Fuse Considerations

Factory fuse options like a fusible disconnector or MCCB protect the busbars and circuits within the drive. To protect the cables, an installer should use separate F1 fuses for upstream protection.

- Danfoss recommends the fuse type gG (IEC 60269-1) for the mains fuses. Use only fuses with a sufficient voltage rating according to the mains voltage. Do not use larger fuses than what is recommended. These fuses are selected for short-circuit protection only.
- Operation time of the fuse must be less than 0.4 s. The operation time must also agree with the fuse type and the impedance of the supply circuit.
- The recommended mains cable and fuse sizes are valid up to a cable length of 100 m, with mains having a short-circuit current of 20 kA. Recommended cable sizes are shown in the Electrical Data section.
- Danfoss recommends the use of FC1 fuses to meet short-circuit protection for any enclosed drives supplied with only the non-fusible disconnect, a non-fusible disconnect and contactor, or a contactor only option.

5.9.2 Recommended Fuse Ratings for IEC Installation

Table 44: Recommended Fuse Ratings for IEC Installation, 380–480 V

Drive model	Fuse P/N	Fuse size	Rated current [A]	Minimum SCCR [kA]	Maximum fuse rating F1 [A]	Minimum voltage rating [V]	Type F1
N110K	Mersen NH1GG50V250	1	250	6.8	250	500	gG/gL
N132	Mersen NH2GG50V315	2	315	7	315	500	gG/gL
N160	Mersen NH2GG50V355	2	355	8.5	355	500	gG/gL
N200	Mersen NH3GG50V425	3	425	10	425	500	gG/gL
N250	Mersen NH3AGG50V630	3	630	13	630	500	gG/gL
N315	Mersen NH3AGG50V630	3	630	13	630	500	gG/gL
N355	Mersen NH4GG50V800	4	800	18	800	500	gG/gL
N400	Mersen NH4GG50V1000	4	1000	25	1000	500	gG/gL
N450	Mersen NH4GG50V1000	4	1000	25	1000	500	gG/gL
N500	Mersen NH4GG50V1000	4	1000	25	1000	500	gG/gL
N560	Mersen NH4GG50V1250	4	1250	33	1250	500	gG/gL

Table 45: Recommended Fuse Ratings for IEC Installation, 525–690 V

Drive model	Fuse P/N	Fuse size	Rated current [A]	Minimum SCCR [kA]	Maximum fuse rating F1 [A]	Minimum voltage rating [V]	Type F1
N110	Mersen NH2GG69V250	2	250	6.5	250	690	gG/gL
N132	Mersen NH2GG69V250	2	250	6.5	250	690	gG/gL
N160K	Mersen NH2GG69V250	2	250	6.5	250	690	gG/gL
N200	Mersen NH2GG69V315	2	315	7.5	315	690	gG/gL

Drive model	Fuse P/N	Fuse size	Rated current [A]	Minimum SCCR [kA]	Maximum fuse rating F1 [A]	Minimum voltage rating [V]	Type F1
N250	Mersen NH3GG69V355	3	355	8.5	355	690	gG/gL
N315	Mersen NH3GG69V425	3	425	9.5	425	690	gG/gL
N400	Mersen NH3GG69V500	3	500	12	500	690	gG/gL
N450	Mersen NH3GG69V500	3	500	12	500	690	gG/gL
N500	Mersen NH4GG69V630	4	630	14	630	690	gG/gL
N560	Mersen NH4GG69V800	4	800	19	800	690	gG/gL
N630	Mersen NH4GG69V800	4	800	19	800	690	gG/gL
N710	ABB OFAA4GG1000	4	1000	25	1000	690	gG/gL
N800	ABB OFAA4GG1000	4	1000	25	1000	690	gG/gL

5.9.3 Recommended Fuse Ratings for UL Installation

The table values are calculated using correction factors for a 40 °C (104 °F) ambient operating condition and using cables with a minimum insulation rating of 90 °C (194 °F).

UL Approval is valid for maximum input voltage of 600 V. Per UL508A, the short-circuit current rating (SCCR) is as follows:

- Enclosed drives with a fusible disconnect or fusible disconnect and contactor option have 65 kA SCCR at the rated voltage.
- Enclosed drives with single switchgear (mains contactor only or non-fusible disconnect only option) have a 5 kA SCCR, but can reach 65 kA if the recommended Class fuses are used upstream.
- Enclosed drives with the MCCB option have a 65 kA interrupting rating for 380–480 V, and a 50 kA interrupting rating for525–690 V.

Table 46: Recommended Fuse Ratings for UL Installation, 380–480 V

Drive model	Fuse P/N	Maximum current [A]	Cutoff current [A]	Peak let thru [A]	Maximum fuse rating F1 [A]	Minimum voltage rating [V]	Class F1
N110	Mersen A4J300	300	4000	9000	300	500	Class J
N132	Mersen A4J350	350	4600	10000	350	500	Class J
N160	Mersen A4J400	400	5000	10400	400	500	Class J
N200	Mersen A4J500	500	8000	11500	500	500	Class J
N250	Mersen A4J600	600	9000	12000	600	500	Class J
N315	Mersen AABY750	750	11500	28000	750	500	Class J
N355	Mersen A4BY800	800	12000	28000	800	500	Class J
N400	Mersen A4BY1000	1000	15000	35000	1000	500	Class J
N450	Mersen A4BY1000	1000	15000	35000	1000	500	Class J
N500	Mersen A4BY1000	1100	18500	42000	1100	500	Class J
N560	Mersen A4BY1200	1200	19000	42000	1200	500	Class J

Table 47: Recommended Fuse Ratings for UL Installation, 525–690 V

Drive model	Fuse P/N	Maximum current [A]	Cutoff current [A]	Peak let thru [A]	Maximum fuse rating F1 [A]	Minimum voltage rating [V]	Class F1
N110	Mersen A4J300	175	2400	5400	175	600	Class L
N132	Mersen A4J350	200	2700	6	200	600	Class L
N160	Mersen A4J400	250	3200	7500	250	600	Class L
N200	Mersen A4J500	350	4600	10000	350	600	Class L
N250	Mersen A4J600	400	5000	10400	400	600	Class L
N315	Mersen AABY750	500	8000	11500	500	600	Class L
N400	Mersen A4BY800	600	9000	12000	600	600	Class L
N450	Mersen A4BY1000	600	9000	12000	600	600	Class L
N500	Mersen A4BY1000	650	11500	28000	750	600	Class L
N560	Mersen A4BY1200	750	11500	28000	750	600	Class L
N6300	Mersen A4BY1200	800	12000	28000	800	600	Class L
N710	Mersen A4BY1200	1000	15000	35000	1000	600	Class L
N800	Mersen A4BY1200	1100	18500	42000	1100	600	Class L

5.10 Enabling Motor Operation

Context:

If the status line at the bottom of the LCP reads AUTO REMOTE COAST, the unit is ready to operate but is missing an input signal from terminal XD2.14 in the control compartment. Digital input terminal XD2.14 is designed to receive a 24 V DC external interlock command that allows the drive to operate when using factory default programming values.

NOTICE

FACTORY-INSTALLED OPTIONAL EQUIPMENT

Do not remove factory-installed wiring to terminal XD2.14. If the drive does not run, refer to the documentation for the optional equipment that is wired into terminal XD2.14.

Procedure

1. When no interlock device is used, use a push-in type jumper (WAGO 2002-433) between terminal XD2.11 and XD2.14 in the control compartment. This wire provides an internal 24 V signal on terminal XD2.14. The drive is ready for operation.

5.11 Selecting the Voltage/Current Input Signal

Context:

The analog input terminals XD2.7 and XD2.8 in the control compartment allow setting of input signal to voltage (0–10 V) or current (0/4–20 mA).

- Terminal XD2.7: Speed reference signal in open loop (see *parameter 16-61 Terminal 53 Switch Setting*).
- Terminal XD2.8: Feedback signal in closed loop (see *parameter 16-63 Terminal 54 Switch Setting*).

Procedure

1. Disconnect power to the drive.
2. Remove the LCP (local control panel).
3. Remove any optional equipment covering the switches.
4. Set switches A53 and A54 to select the signal type (U = voltage, I = current).

Example:

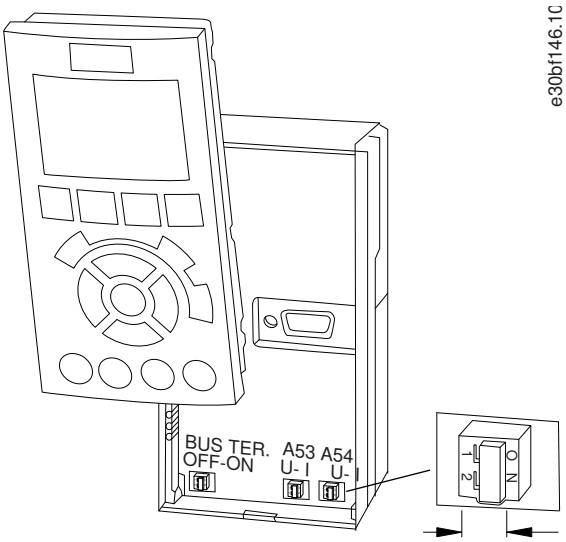

Illustration 56: Location of Switches A53 and A54

5.12 Setting Up RS485 Serial Communication

5.12.1 RS485 Features

RS485 is a 2-wire bus interface compatible with multi-drop network topology. This interface contains the following features:

- Either Danfoss FC or Modbus RTU communication protocol can be used.
- Functions can be programmed remotely using the protocol software and RS485 connection or in *parameter group 8-** Communications and Options*.
- Selecting a specific communication protocol changes various default parameter settings to match the specifications of the protocol, making more protocol-specific parameters available.
- Option cards for the drive are available to provide more communication protocols. See the option card documentation for installation and operation instructions.
- A switch (BUS TER) is provided on the control card for bus termination resistance.

5.12.2 Configuring RS485 Serial Communication

Procedure

1. Connect RS485 serial communication wiring to terminals (+) XD2.2 and (-) XD2.3.
   - Use shielded serial communication cable.
   - Properly ground the wiring. Refer to 5.8.6 Connecting to Ground.
2. Select the protocol type in *parameter 8-30 Protocol*.
3. Select the drive address in *parameter 8-31 Address*.
4. Select the baud rate in *parameter 8-32 Baud Rate*.

Example:

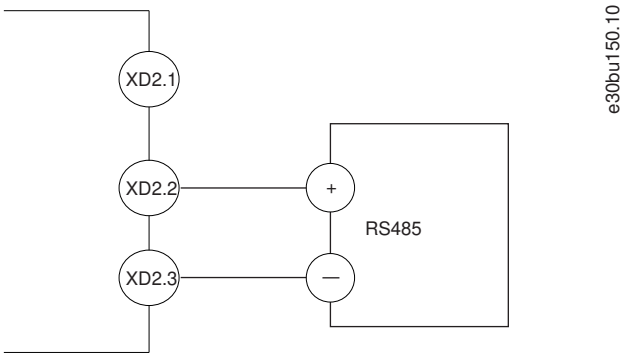

Illustration 57: RS485 Wiring Connection

5.13 Configuring the Passive Harmonic Filter (PHF)

Context:

NOTICE

EQUIPMENT DAMAGE

Failure to use the correct settings can result in the AC drive overheating, resulting in damage to the AC drive and its surroundings.

- **Verify that the value in *parameter 5-02 Terminal 29 Mode* is set to *[1] Output*.**
- **Verify that the value in *parameter 5-31 Terminal 29* is set to *[188] AHF Capacitor Connect*.**

Procedure

1. Set *parameter 5-02 Terminal 29 Mode* to *[1] Output*.
2. Set *parameter 5-31 Terminal 29* to *[188] AHF Capacitor Connect*.

5.14 Configuring the dU/dt Filter

Context:

NOTICE

EQUIPMENT DAMAGE

Failure to use the correct settings for the D9h and D10h enclosures can result in the AC drive overheating, resulting in damage to the AC drive and its surroundings.

- **For the D9h and D10h enclosures, verify that the value in *parameter 14-52 Fan Control* is set to *[3] 100%*. E5h and E6h enclosures are not required to use the 100% setting.**

Procedure

1. Set *parameter 14-52 Output Filter* to *[3] 100%*.

5.15 Configuring the Sine-wave Filter

Context:

NOTICE

EQUIPMENT DAMAGE

Failure to use the correct settings can result in the AC drive overheating, resulting in damage to the AC drive and its surroundings.

- **Verify that the value in *parameter 14-55 Output Filter* matches the type of output filter being used.**

Procedure

1. Set *parameter 14-55 Output Filter* to *[1] Sine-wave*.

5.16 MCCB Configuration

The molded-case circuit breaker (MCCB) offers the following trip settings:

- **Protection against overload (L)**. The drive trips when there is an overload with inverse long-time delay trip according to the IEC 60947-2 Standard (I2t=k).
- **Protection against short circuit with time delay (S)**. The drive trips when there is a short circuit, with long inverse time-delay trip (I2t=k ON) or a constant trip time (I2t=k OFF).
- **Instantaneous protection against short circuit (I)**. The drive trips immediately if there is a short circuit. The trip function (L) is always available and either (S) or (I) can be selected by the DIP switch[S/I] on the trip unit of the MCCB.

Factory default settings are provided for functions L and I.

- Overcurrent setting (L) is done at 100% of the 1.5 times high overload FLA (I_1).
- Time delay (t1) is selected as 12 s for 6 times of I_1.
- Short circuit instant trip setting (I) is followed. Short circuit trip with time delay (S) is ignored with the factory settings.
- Short circuit instant trip setting (I) is targeted at 300% of the 100% normal overload FLA (I_3) of the drive.
- Neutral setting (N) is 100%.
- Frequency of operation is set at 50 Hz from the factory.

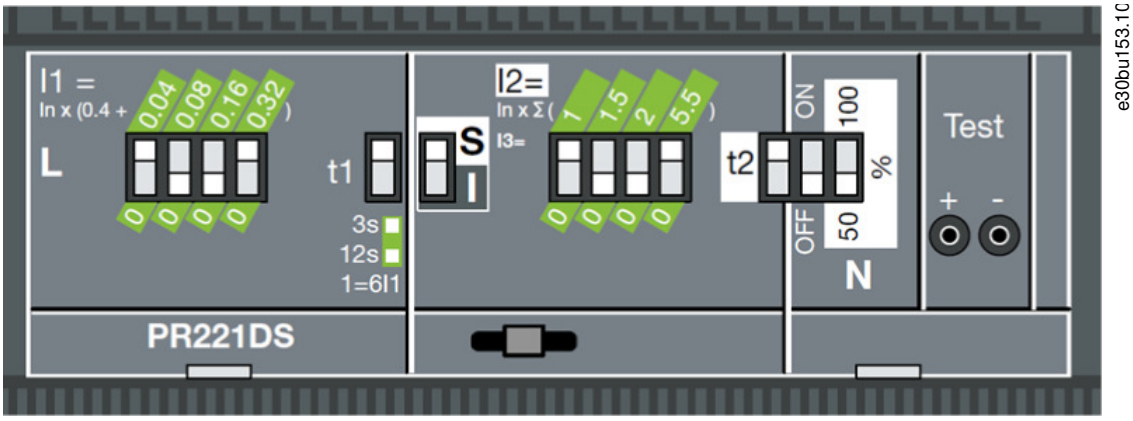

Illustration 58: MCCB Factory Default Settings

5.17 Safe Torque Off (STO) Wiring

The Safe Torque Off (STO) function is a component in a safety control system. STO prevents the unit from generating the voltage required to rotate the motor. To run the STO function, more wiring for the drive is required. Refer to the *VLT® FC Series - Safe Torque Off Operating Guide*.

6 Pre-start Check List

6.1 Pre-start Check List

Motor
• Confirm continuity of the motor by measuring ohm values on U–V (96–97), V–W (97–98), and W–U (98–96). • Confirm that the supply voltage matches the voltage of the drive and the motor.
Switches
• Ensure that all switch and disconnect settings are in the proper positions.
Auxiliary equipment
• Look for auxiliary equipment, switches, disconnects, or input fuses/circuit breakers that reside on the input power side of the drive or output side to the motor. Ensure that they are ready for full-speed operation. • Check function and installation of any sensors used for feedback to the drive. • Remove any power factor correction caps on motor. • Adjust any power factor correction caps on the mains side and ensure that they are dampened.
Cable/wire routing
• Ensure that motor wiring, brake wiring (if equipped), and control wiring are separated or shielded or in 3 separate metallic conduits for high-frequency interference isolation.
Control wiring
• Check for broken or damaged wires and loose connections. • Check that control wiring is isolated from high-power wiring for noise immunity. • Check the voltage source of the signals, if necessary. • Use shielded or twisted pair cable. • Ensure that the shield is terminated correctly.
Input and output power wiring
• Check for loose connections. • Check that motor and mains are in separate conduit or separated shielded cables.
Grounding
• Make sure that a proper ground is used. Grounding to conduit or mounting the back panel to a metal surface is not a suitable grounding. • Check for good ground connections that are tight and free of oxidation.
Fuses and circuit breakers
• Check for proper fusing or circuit breakers. • Check that all fuses are inserted firmly and are in operational condition. • Check that all circuit breakers (if used) are in the open position.
Cooling clearance
• Look for any obstructions in the airflow path. • Measure top and bottom clearance of the drive to verify that there is at least 225 mm (9 in) of clearance for adequate airflow.

Ambient conditions
• Check that requirements for ambient conditions are met. See the Ambient Conditions section.
Interior of drive
• Inspect that the unit interior is free of dirt, metal chips, moisture, and corrosion. • Verify that all installation tools have been removed from unit interior. • For enclosures with a IP20/Chassis protection rating, ensure that the unit is mounted to an unpainted, metal surface.
Vibration
• Ensure that the unit is mounted solidly, or that shock mounts are used, if necessary. • Check for an unusual amount of vibration.

7 Commissioning

7.1 Applying Power to the Drive

Context:

Before applying power to the drive, verify that the drive and any associated equipment is ready for operation. Refer to the Pre-start Checklist.

⚠ WARNING ⚠

UNINTENDED START

When the drive is connected to the AC mains, DC supply, or load sharing, the motor may start at any time, causing risk of death, serious injury, and equipment, or property damage. The motor may start by activation of an external switch, a fieldbus command, an input reference signal from the LCP or LOP, via remote operation using MCT 10 Set-up software, or after a cleared fault condition.

- Press [Off] on the LCP before programming parameters.
- Disconnect the drive from the mains whenever personal safety considerations make it necessary to avoid unintended motor start.
- Check that the drive, motor, and any driven equipment is in operational readiness.

NOTICE

MISSING SIGNAL

If the status line at the bottom of the LCP reads AUTO REMOTE COASTING, or if *alarm 60, External interlock* is shown, it indicates that the unit is ready to operate but is missing an input signal on, for example, terminal 27.

- See 5.10 Enabling Motor Operation for details.

Procedure

1. Confirm that the input voltage is balanced within 3%. If not balanced, correct the input voltage imbalance before proceeding. Repeat this procedure after the voltage correction.
2. Ensure that any optional equipment wiring matches the installation requirements.
3. Ensure that all operator devices are in the OFF position.
4. Close and securely fasten all covers and doors on the drive.
5. Apply power to the unit, but do not start the drive. For units with a disconnect switch, turn the switch to the ON position to apply power to the drive.

7.2 Programming the Drive

7.2.1 Parameter Overview

Parameters contain various settings that are used to configure and operate the drive and motor. These parameter settings are programmed into the local control panel (LCP) through the different LCP menus. For more detail on parameters, see the programming guide.

Parameter settings are assigned a default value at the factory, but can be configured for their unique application. Each parameter has a name and number that remain the same regardless of the programming mode.

In the Main Menu mode, the parameters are divided into groups. The first digit of the parameter number (from the left) indicates the parameter group number. The parameter group is then broken down into sub groups, if necessary. For example:

Table 48: Example of Parameter Group Hierarchy

Example	Description
*0–** Operation/Display*	Parameter group
0–0 Basic Settings*	Parameter sub group
Parameter 0-01 Language	Parameter
Parameter 0-02 Motor Speed Unit	Parameter
Parameter 0-03 Regional Settings	Parameter

7.2.2 Parameter Navigation

Use the following LCP keys to navigate through the parameters.

- Press [▲] [▼] to scroll up or down.
- Press [◀] [▶] to shift a space to the left or right of a decimal point while editing a decimal parameter value.
- Press [OK] to accept the change.
- Press [Cancel] to disregard the change and exit edit mode.
- Press [Back] twice to show the status view.
- Press [Main Menu] once to go back to the main menu.

7.2.3 Programming Example for an Open-loop Application

Context:

This procedure, which is used to configure a typical open-loop application, programs the drive to receive a 0–10 V DC analog control signal on input terminal 53. The drive responds by providing 20–50 Hz output to the motor proportional to the input signal (0–10 V DC=20–50 Hz). The wiring connections used to enable the external device set-up are shown in illustration 59.

Procedure

1. Press [Quick Menu].
2. Select Q3 Function Setups and press [OK].
3. Select Parameter Data Set and press [OK].
4. Select Q3-2 Open Loop Settings and press [OK].
5. Select Q3-21 Analog Reference and press [OK].
6. Select *parameter 3-02 Minimum Reference*. Set the minimum internal drive reference to 0 Hz and press [OK].
7. Select *parameter 3-03 Maximum Reference*. Set the maximum internal drive reference to 60 Hz and press [OK].
8. Select *parameter 6-10 Terminal 53 Low Voltage*. Set the minimum external voltage reference on terminal 53 at 0 V and press [OK].
9. Select *parameter 6-11 Terminal 53 High Voltage*. Set maximum external voltage reference on terminal 53 at 10 V and press [OK].
10. Select *parameter 6-14 Terminal 53 Low Ref./Feedb. Value*. Set minimum speed reference on terminal 53 at 20 Hz and press [OK].
11. Select *parameter 6-15 Terminal 53 High Ref./Feedb. Value*. Set maximum speed reference on terminal 53 at 50 Hz and press [OK].

    → With an external device providing a 0–10 V control signal connected to drive terminal 53, the system is now ready for operation.

NOTICE

SET-UP STATUS

When the scroll bar on the right of the display is at the bottom, the procedure is complete.

Example:

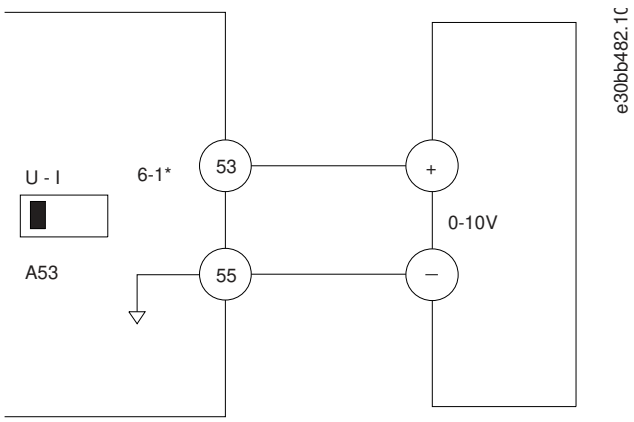

Illustration 59: Wiring Example for External Device Providing 0–10 V Control Signal

7.2.4 Entering System Information

Context:

The following steps are used to enter basic system information into the drive. Recommended parameter settings are intended for start-up and checkout purposes. Application settings vary.

Although these steps assume that an induction motor is used, a permanent magnet motor can also be used. For more information on specific motor types, see the product-specific programming guide.

NOTICE

SOFTWARE DOWNLOAD

For commissioning via a PC, install VLT® Motion Control Tool MCT 10 set-up software. A basic version, which is sufficient for most applications, is available for download. An advanced version, which can commission multiple drives at once, can be ordered.

- See https://www.danfoss.com/en/service-and-support/downloads/?sort=title_asc&filter=download-type%3Dtools.

Procedure

1. Press [Main Menu] on the LCP.
2. Select *0–** Operation/Display* and press [OK].
3. Select *0–0* Basic Settings* and press [OK].
4. Select *parameter 0-03 Regional Settings* and press [OK].
5. Select *[0] International* or *[1] North America* as appropriate and press [OK]. (This action changes the default settings for some basic parameters).
6. Press [Quick Menus] on the LCP and then select *02 Quick Setup*.
7. If needed, change the following parameter settings. Motor data is found on the motor nameplate.
   - **A** *Parameter 0-01 Language* (English)
   - **B** *Parameter 1-20 Motor Power [kW]* (4.00 kW)
   - **C** *Parameter 1-22 Motor Voltage* (400 V)
   - **D** *Parameter 1-23 Motor Frequency* (50 Hz)
   - **E** *Parameter 1-24 Motor Current* (9.00 A)
   - **F** *Parameter 1-25 Motor Nominal Speed* (1420 RPM)
   - **G** *Parameter 5-12 Terminal 27 Digital Input* (Coast Inverse)
   - **H** *Parameter 0-01 Language* (0.000 RPM)
   - **I** *Parameter 3-03 Maximum Reference* (1500.000 RPM)
   - **J** *Parameter 3-41 Ramp 1 Ramp up Time* (3.00 s)
   - **K** *Parameter 3-42 Ramp 1 Ramp Down Time* (3.00 s)
   - **L** *Parameter 3-13 Reference Site* (Linked to Hand/Auto)
   - **M** *Parameter 1-29 Automatic Motor Adaptation (AMA)* (Off)

7.2.5 Configuring Automatic Energy Optimization

Context:

Automatic energy optimization (AEO) is a procedure that minimizes voltage to the motor, reducing energy consumption, heat, and noise.

Procedure

1. Press [Main Menu].
2. Select *1–** Load and Motor* and press [OK].
3. Select *1–0* General Settings* and press [OK].
4. Select *parameter 1-03 Torque Characteristics* and press [OK].
5. Select either *[2] Auto Energy Optim CT* or *[3] Auto Energy Optim VT* and press [OK].

7.2.6 Configuring Automatic Motor Adaptation

Context:

Automatic motor adaptation is a procedure that optimizes compatibility between the drive and the motor.

The drive builds a mathematical model of the motor for regulating output motor current. The procedure also tests the input phase balance of electrical power. It compares the motor characteristics with the data entered in parameters 1–20 to 1–25.

NOTICE

Some motors are unable to run the complete version of the test and will trigger an alarm.

- In that case, or if an output filter is connected to the motor, select *[2] Enable reduced AMA*.

Procedure

1. Press [Main Menu].
2. Select *1–** Load and Motor* and press [OK].
3. Select *1–2* Motor Data* and press [OK].
4. Select *parameter 1-29 Automatic Motor Adaptation (AMA)* and press [OK].
5. Select *[1] Enable complete AMA* and press [OK].
6. Press [Hand On] and then [OK].

   The test runs automatically and indicates when it is complete.

7.3 Testing Before System Start-up

7.3.1 Testing Motor Rotation

Context:

NOTICE

INCORRECT MOTOR ROTATION

If the motor runs in the wrong direction, it can damage equipment.

- Before running the unit, check the motor rotation by briefly running the motor.

Procedure

1. Press [Hand On].
2. Move the left cursor to the left of the decimal point by using the left arrow key.
3. Enter an RPM that slowly rotates the motor and press [OK].

   The motor runs briefly at either 5 Hz or the minimum frequency set in *parameter 4-12 Motor Speed Low Limit [Hz]*.
4. If the motor rotation is wrong, set *parameter 1-06 Clockwise Direction* to *[1] Inverse*.

7.3.2 Testing Encoder Rotation

Context:

Use this procedure if encoder feedback is used. For more information on the encoder option, refer to the option manual.

Procedure

1. Select *[0] Open Loop* in *parameter 1-00 Configuration Mode*.
2. Select *[1] 24 V encoder* in *parameter 7-00 Speed PID Feedback Source*.
3. Press [Hand On].
4. Press [►] for positive speed reference (*parameter 1-06 Clockwise Direction* at *[0] Normal*).
5. Check feedback in *parameter 16-57 Feedback [RPM]*.

   - If feedback is positive, the test was successful.

   - If feedback is negative, the encoder connection is wrong. Use either *parameter 5-71 Term 32/33 Encoder Direction* or *parameter 17-60 Feedback Direction* to inverse the direction, or reverse the encoder cables. *Parameter 17-60 Feedback Direction* is only available with the VLT® Encoder Input MCB 102 option.

7.4 Starting Up the Drive for the First Time

Context:

The procedure in this section requires user-wiring and application programming to be completed. The following procedure is recommended after application set-up is completed.

⚠ WARNING ⚠

MOTOR START

Starting the drive can cause the motor to start. Failure to ensure that the motor, system, and any attached equipment are ready for start can result in personal injury or equipment damage.

- Ensure that equipment is safe to operate under any condition.
- Ensure that the motor, system, and any attached equipment are ready for start.

1. Press [Auto On].

   If warnings or alarms occur, see the Warnings and Alarms section.
2. Apply an external run command. Examples of external run commands are a switch, button, or programmable logic controller (PLC).
3. Adjust the speed reference throughout the speed range.
4. Ensure that the system is working as intended by checking the sound and vibration levels of the motor.
5. Remove the external run command.

7.5 Parameter Settings

7.5.1 Parameter Setting Overview

Parameters are operational settings accessed through the LCP that are used to configure and operate the drive and motor for specific applications.

Some parameters have different default settings for international or North America. For a list of the different default values, see the International/North American Default Parameter Settings section.

Parameter settings are stored internally in the drive, allowing the following advantages:

- Parameter settings can be uploaded into the LCP memory and stored as a back-up.
- Multiple units can be programmed quickly by connecting the LCP to the unit and downloading the stored parameter settings.
- Settings that are stored in the LCP are not changed when restoring factory default settings.
- Changes made to default settings and parameter variables are stored and available for viewing in the quick menu. See the LCP Menu section.

7.5.2 Uploading and Downloading Parameter Settings

Context:

The drive operates using parameters stored on the control card, which is located within the drive. The upload and download functions move the parameters between the control card and the LCP.

Procedure

1. Press [Off].
2. Go to *parameter 0-50 LCP Copy* and press [OK].
3. Select 1 of the following:
   - To upload data from the control card to the LCP, select *[1] All to LCP*.
   - To download data from the LCP to the control card, select *[2] All from LCP*.
4. Press [OK].

   A progress bar shows the uploading or downloading process.
5. Press [Hand On] or [Auto On].

7.5.3 Restoring Factory Default Settings Using the Recommended Initialization

Context:

NOTICE

LOSS OF DATA

Restoring default settings results in a loss of programming, motor data, localization, and monitoring records.

- To create a back-up, upload data to the LCP before initialization. See 7.5.2 Uploading and Downloading Parameter Settings.

1. Press [Main Menu] twice to access parameters.
2. Go to *parameter 14-22 Operation Mode* and press [OK].

   Parameter 14-22 Operation Mode does not reset the following settings:
   - Running hours.
   - Serial communication options.
   - Personal menu settings.
   - Fault log, alarm log, and other monitoring functions.
3. Scroll to Initialization and press [OK].
4. Remove power to the unit and wait for the display to turn off.
5. Apply power to the unit. Default parameter settings are restored during start-up. Start-up takes slightly longer than normal.
6. After *alarm 80, Drive initialized* appears, press [Reset].

7.5.4 Restoring Factory Default Settings Using Manual Initialization

Context:

NOTICE

LOSS OF DATA

Restoring default settings results in a loss of programming, motor data, localization, and monitoring records.

- To create a back-up, upload data to the LCP before initialization. See 7.5.2 Uploading and Downloading Parameter Settings.

Procedure

1. Remove power to the unit and wait for the display to turn off.
2. Press and hold [Status], [Main Menu], and [OK] simultaneously while applying power to the unit (approximately 5 s or until an audible click sounds and the fan starts).

   Manually initializing does not reset the following parameter settings:
   - *Parameter 15-00 Operating Hours*
   - *Parameter 15-03 Power Up's*
   - *Parameter 15-04 Over Temp's*
   - *Parameter 15-05 Over Volt's*

   Start-up takes slightly longer than normal.

8 Wiring Configuration Examples

8.1 Application Examples

The examples in this section are intended as a quick reference for common applications.

- Parameter settings are the regional default values selected in *parameter 0-03 Regional Settings*, unless otherwise indicated.
- Parameters associated with the terminals and their settings are shown next to the drawings.
- Required switch settings for analog terminals A53 or A54 are also shown.

8.1.1 Wiring Configuration for Automatic Motor Adaptation (AMA)

Table 49: Wiring Configuration for AMA with T27 Connected

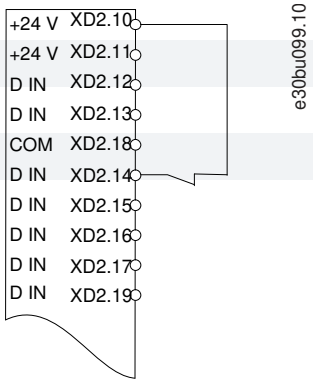

Parameters	
Function	**Setting**
Parameter 1-29 Automatic Motor Adaptation (AMA)	*[1] Enable complete AMA*
Parameter 5-12 Terminal 27 Digital Input	*[2]* Coast inverse*
*=Default value	
Notes/comments: Set *parameter group 1-2* Motor Data* according to motor nameplate. Terminal 27 in the parameter title corresponds to terminal XD2.14 in the control compartment.	

8.1.2 Wiring Configuration for Automatic Motor Adaptation (AMA) without T27

Table 50: Wiring Configuration for AMA without T27 Connected

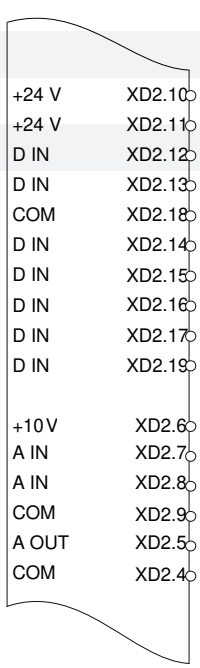

Parameters	
Function	**Setting**
Parameter 1-29 Automatic Motor Adaptation (AMA)	*[1] Enable complete AMA*
Parameter 5-12 Terminal 27 Digital Input	*[0] No operation*
*=Default value	
Notes/comments: Set *parameter group 1-2* Motor Data* according to motor nameplate. Terminal 27 in the parameter title corresponds to terminal XD2.14 in the control compartment.	

8.1.3 Wiring Configuration: Speed

Table 51: Wiring Configuration for Analog Speed Reference (Voltage)

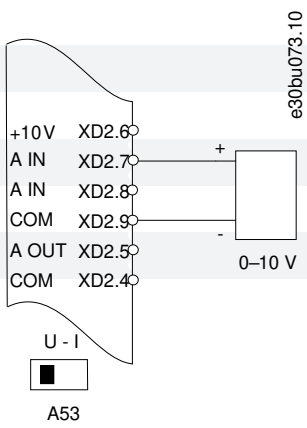

Parameters	
Function	**Setting**
Parameter 6-10 Terminal 53 Low Voltage	0.07 V*
Parameter 6-11 Terminal 53 High Voltage	10 V*
Parameter 6-14 Terminal 53 Low Ref./Feedb. value	0 Hz
Parameter 6-15 Terminal 53 High Ref./Feedb. Value	50 Hz
*=Default value	
Notes/comments: D IN 37 is an option. Terminal 53 in the parameter title corresponds to terminal XD2.7 in the control compartment.	

Table 52: Wiring Configuration for Analog Speed Reference (Current)

	Parameters	
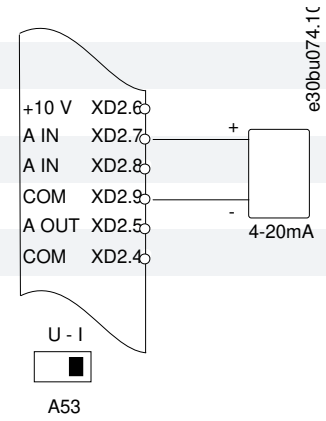	**Function**	**Setting**
	Parameter 6-12 Terminal 53 Low Current	4 mA*
	Parameter 6-13 Terminal 53 High Current	20 mA*
	Parameter 6-14 Terminal 53 Low Ref./Feedb. value	0 Hz
	Parameter 6-15 Terminal 53 High Ref./Feedb. Value	50 Hz
	*=Default value	
	Notes/comments: D IN 37 is an option. Terminal 53 in the parameter title corresponds to terminal XD2.7 in the control compartment.	

Table 53: Wiring Configuration for Speed Reference (Using a Manual Potentiometer)

	Parameters	
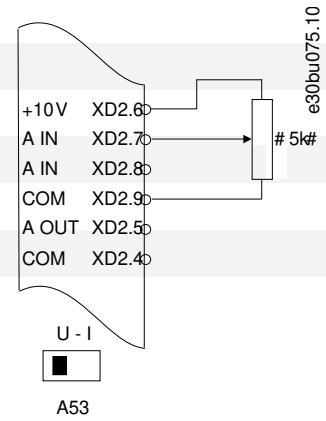	**Function**	**Setting**
	Parameter 6-10 Terminal 53 Low Voltage	0.07 V*
	Parameter 6-11 Terminal 53 High Voltage	10 V*
	Parameter 6-14 Terminal 53 Low Ref./Feedb. value	0 Hz
	Parameter 6-15 Terminal 53 High Ref./Feedb. Value	50 Hz
	*=Default value	
	Notes/comments: D IN 37 is an option. Terminal 53 in the parameter title corresponds to terminal XD2.7 in the control compartment.	

Table 54: Wiring Configuration for Speed Up/Down

	Parameter	
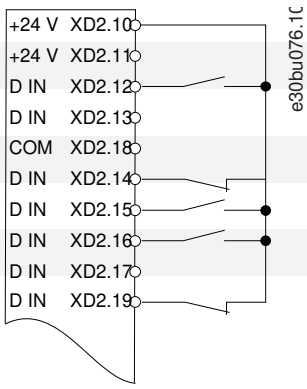	**Function**	**Setting**
	Parameter 5-10 Terminal 18 Digital Input	*[8] Start**
	Parameter 5-12 Terminal 27 Digital Input	*[19] Freeze Reference*
	Parameter 5-13 Terminal 29 Digital Input	*[21] Speed Up*
	Parameter 5-14 Terminal 32 Digital Input	*[22] Speed Down*
	*=Deafult value	
	Notes/comments: D IN 37 is an option. Terminal 18 in the parameter title corresponds to terminal XD2.12 in the control compartment. Terminal 27 in the parameter title corresponds to terminal XD2.14 in the control compartment. Terminal 29 in the parameter title corresponds to terminal XD2.15 in the control compartment. Terminal 32 in the parameter title corresponds to terminal XD2.16 in the control compartment.	

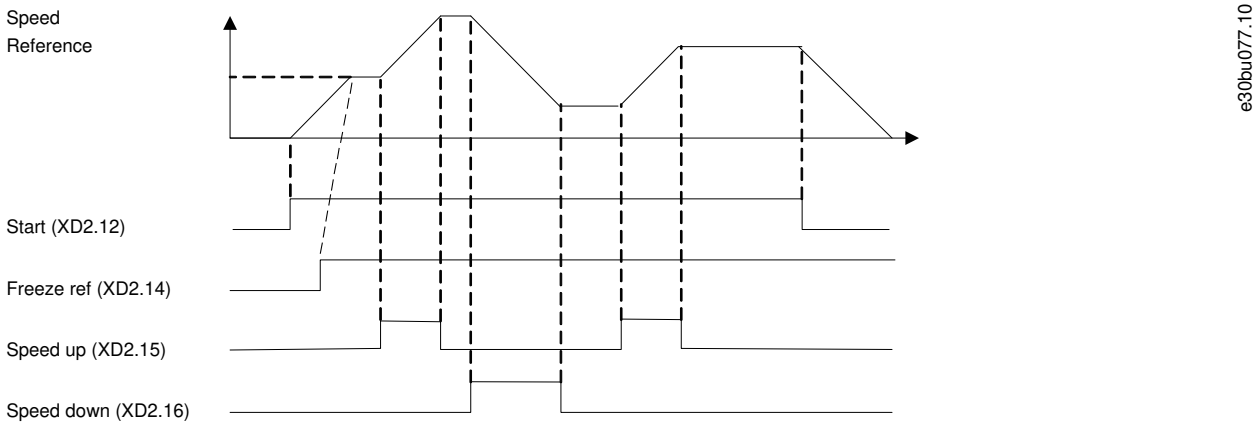

Illustration 60: Speed Up/Down

8.1.4 Wiring Configuration: Feedback

Table 55: Wiring Configuration for Analog Current Feedback Transducer (2-wire)

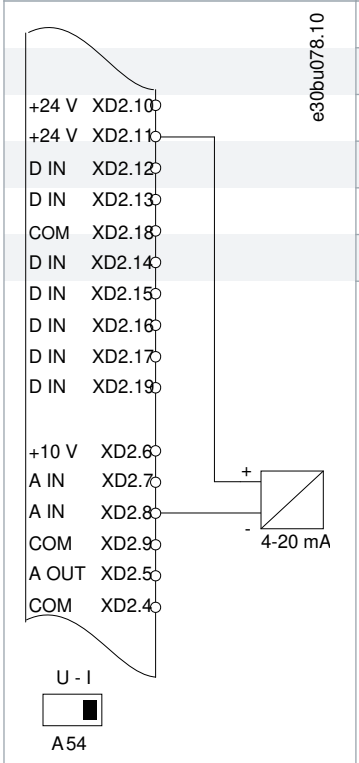

Parameters	
Function	**Setting**
Parameter 6-22 Terminal 54 Low Current	4 mA*
Parameter 6-23 Terminal 54 High Current	20 mA*
Parameter 6-24 Terminal 54 Low Ref./Feedb. value	0*
Parameter 6-25 Terminal 54 High Ref./Feedb. Value	50*
*=Default value	
Notes/comments: D IN 37 is an option. Terminal 54 in the parameter title corresponds to terminal XD2.8 in the control compartment.	

Table 56: Wiring Configuration for Analog Voltage Feedback Transducer (3-wire)

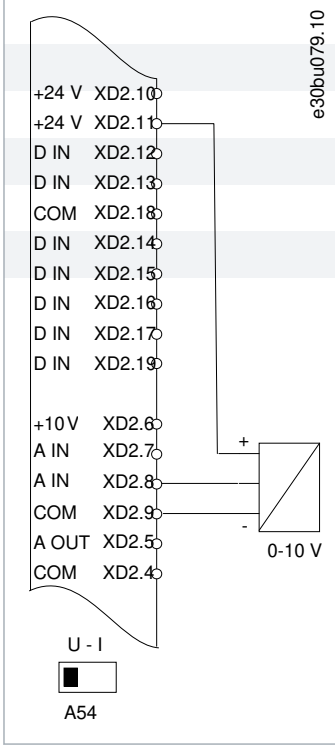

Parameters	
Function	**Setting**
Parameter 6-20 Terminal 54 Low Voltage	0.07 V*
Parameter 6-21 Terminal 54 High Voltage	10 V*
Parameter 6-24 Terminal 54 Low Ref./Feedb. value	0*
Parameter 6-25 Terminal 54 High Ref./Feedb. Value	50*
*=Default value	
Notes/comments: D IN 37 is an option. Terminal 54 in the parameter title corresponds to terminal XD2.8 in the control compartment.	

Table 57: Wiring Configuration for Analog Voltage Feedback Transducer (4-wire)

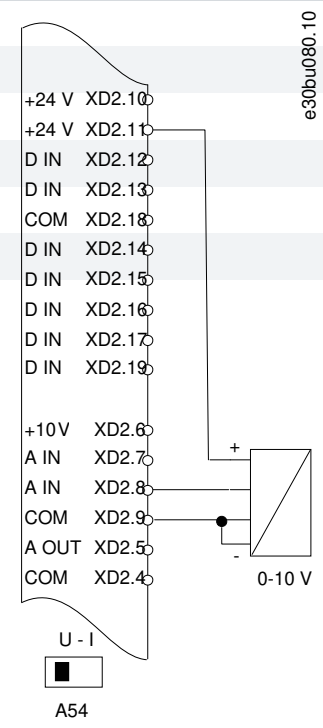

Parameters	
Function	**Setting**
Parameter 6-20 Terminal 54 Low Voltage	0.07 V*
Parameter 6-21 Terminal 54 High Voltage	10 V*
Parameter 6-24 Terminal 54 Low Ref./Feedb. value	0*
Parameter 6-25 Terminal 54 High Ref./Feedb. Value	50*
*=Default value	
Notes/comments: D IN 37 is an option. Terminal 54 in the parameter title corresponds to terminal XD2.8 in the control compartment.	

8.1.5 Wiring Configuration: Run/Stop

Table 58: Wiring Configuration for Run/Stop Command with External Interlock

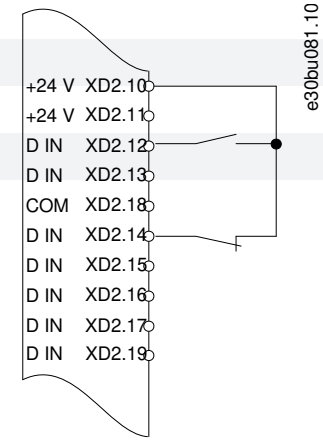

Parameter	
Function	**Setting**
Parameter 5-10 Terminal 18 Digital Input	*[8] Start**
Parameter 5-12 Terminal 27 Digital Input	*[7] External interlock*
*=Default value	
Notes/comments: D IN 37 is an option. Terminal 18 in the parameter title corresponds to terminal XD2.12 in the control compartment. Terminal 27 in the parameter title corresponds to terminal XD2.14 in the control compartment.	

Table 59: Wiring Configuration for Run/Stop Command without External Interlock

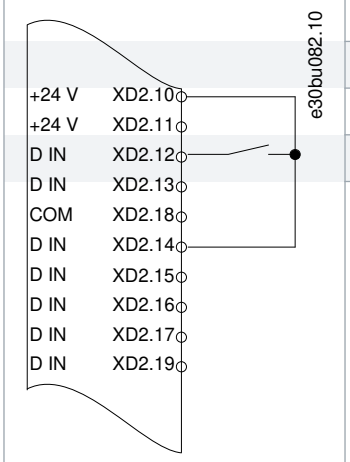

Parameter	
Function	**Setting**
Parameter 5-10 Terminal 18 Digital Input	*[8] Start**
Parameter 5-12 Terminal 27 Digital Input	*[7] External interlock*
*=Default value	

Notes/comments:

If *parameter 5-12 Terminal 27 Digital Inputs* is set to *[0] No operation*, a jumper wire to terminal XD2.14 is not needed.

D IN 37 is an option.

Terminal 18 in the parameter title corresponds to terminal XD2.12 in the control compartment.

Terminal 27 in the parameter title corresponds to terminal XD2.14 in the control compartment.

Table 60: Wiring Configuration for Run Permissive

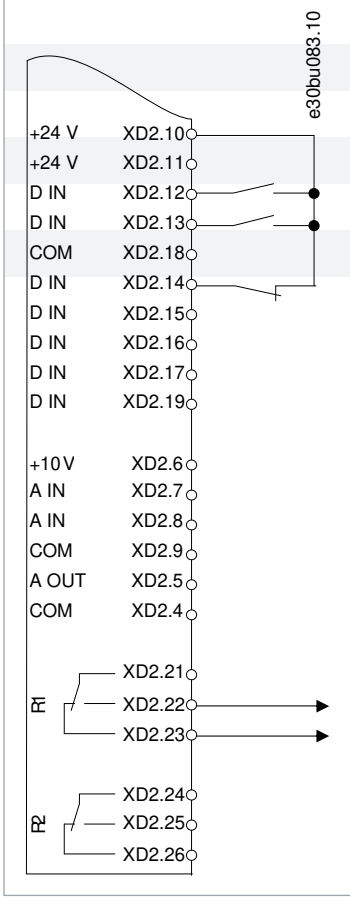

Parameter	
Function	**Setting**
Parameter 5-10 Terminal 18 Digital Input	*[8] Start**
Parameter 5-11 Terminal 19 Digital Input	*[52] Run permissive*
Parameter 5-12 Terminal 27 Digital Input	*[7] External interlock*
Parameter 5-40 Function Relay	*[167] Start command act.*
*=Default value	

Notes/comments:

D IN 37 is an option.

Terminal 18 in the parameter title corresponds to terminal XD2.12 in the control compartment.

Terminal 19 in the parameter title corresponds to terminal XD2.13 in the control compartment.

Terminal 27 in the parameter title corresponds to terminal XD2.14 in the control compartment.

8.1.6 Wiring Configuration: Start/Stop

Table 61: Wiring Configuration for Start/Stop Command with Safe Torque Off Option

	Parameter	
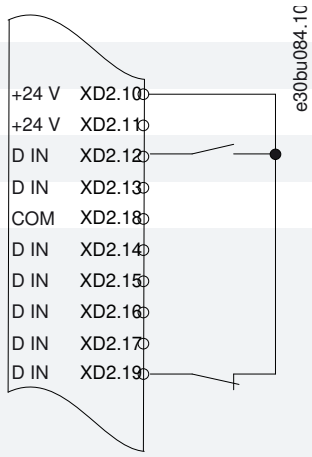	**Function**	**Setting**
	Parameter 5-10 Terminal 18 Digital Input	*[Start]**
	Parameter 5-12 Terminal 27 Digital Input	*[0] No operation*
	Parameter 5-19 Terminal 37 Safe Stop	*[1] Safe Stop Alarm*
	*=Default value	
	Notes/comments: If *parameter 5-12 Terminal 27 Digital Input* is set to *[0] No operation*, a jumper wire to terminal XD2.14 is not needed. D IN 37 is an option. Terminal 18 in the parameter title corresponds to terminal XD2.12 in the control compartment. Terminal 27 in the parameter title corresponds to terminal XD2.14 in the control compartment. Terminal 37 in the parameter title corresponds to terminal XD2.19 in the control compartment.	

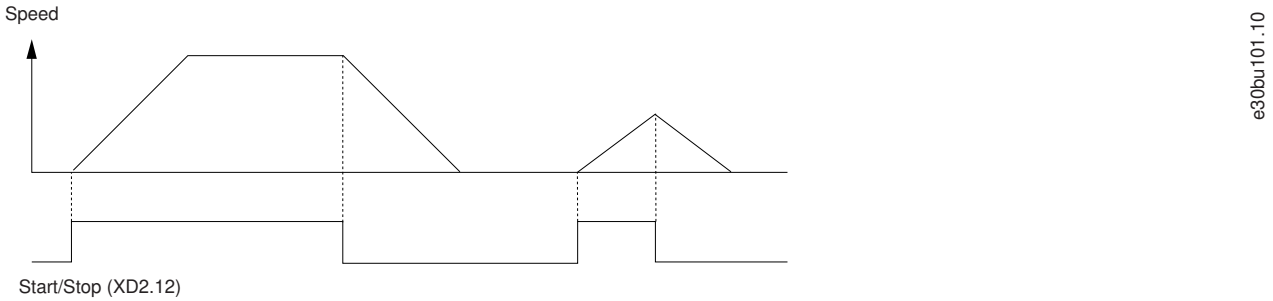

Illustration 61: Wiring Configuration for Start/Stop Command with Safe Torque Off

Table 62: Wiring Configuration for Pulse Start/Stop

	Parameter	
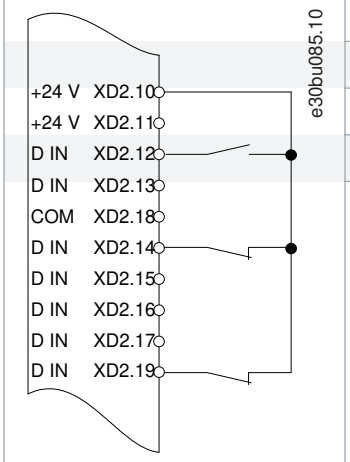	**Function**	**Setting**
	Parameter 5-10 Terminal 18 Digital Input	*[9] Latched Start*
	Parameter 5-12 Terminal 27 Digital Input	*[6] Stop Inverse*
	*=Default value	
	Notes/comments: If *parameter 5-12 Terminal 27 Digital Input* is set *[0] No operation*, a jumper wire to terminal XD2.14 is not needed. D IN 37 is an option. Terminal 18 in the parameter title corresponds to terminal XD2.12 in the control compartment. Terminal 27 in the parameter title corresponds to terminal XD2.14 in the control compartment.	

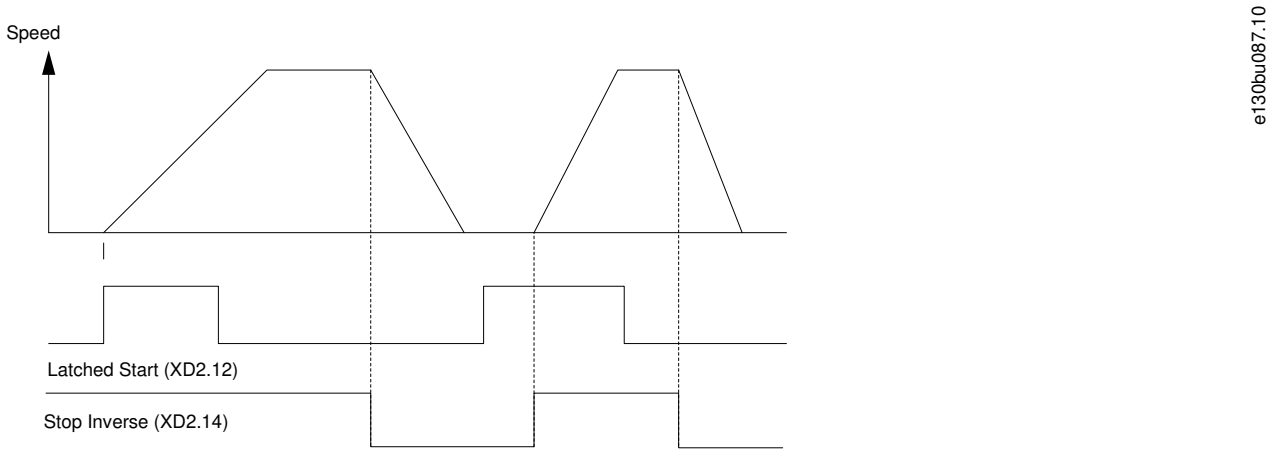

Illustration 62: Latched Start/Stop Inverse

Table 63: Wiring Configuration for Start/Stop with Reversing and 4 Preset Speeds

	Parameters	
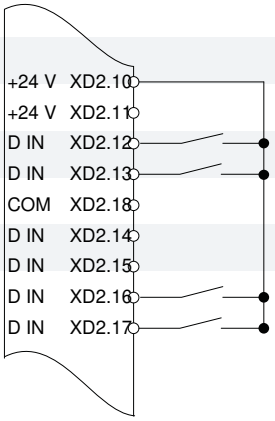	**Function**	**Setting**
	Parameter 5-10 Terminal 18 Digital Input	*[8] Start*
	Parameter 5-11 Terminal 19 Digital Input	*[10] Reversing**
	Parameter 5-12 Terminal 27 Digital Input	*[0] No operation*
	Parameter 5-14 Terminal 32 Digital Input	*[16] Preset ref bit 0*
	Parameter 5-15 Terminal 33 Digital Input	*[17] Preset ref bit 1*
	Parameter 3-10 Preset Reference	• Preset ref. 0 = 25% • Preset ref. 1 = 50% • Preset ref. 2 = 75% • Preset ref. 3 = 100%
	*=Default value	
	Notes/comments: D IN 37 is an option. Terminal 18 in the parameter title corresponds to terminal XD2.12 in the control compartment. Terminal 19 in the parameter title corresponds to terminal XD2.13 in the control compartment. Terminal 27 in the parameter title corresponds to terminal XD2.14 in the control compartment. Terminal 32 in the parameter title corresponds to terminal XD2.16 in the control compartment. Terminal 33 in the parameter title corresponds to terminal XD2.17 in the control compartment.	

8.1.7 Wiring Configuration: External Alarm Reset

Table 64: Wiring Configuration for External Alarm Reset

	Parameter	
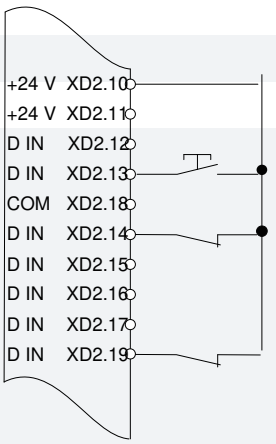	**Function**	**Setting**
	Parameter 5-11 Terminal 19 Digital Input	*[1] Reset*
	*=Default value	
	Notes/comments: D IN 37 is an option. Terminal 19 in the parameter title corresponds to terminal XD2.13 in the control compartment.	

8.1.8 Wiring Configuration: RS485

Table 65: Wiring Configuration for RS485 Network Connection

	Parameter	
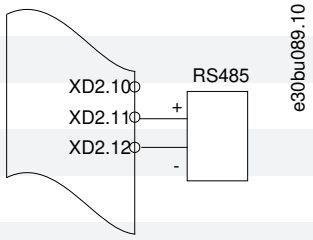	**Function**	**Setting**
	Parameter 8-30 Protocol	FC*
	Parameter 8-31 Address	1*
	Parameter 8-32 Baud Rate	9600*
	*=Default value	
	Notes/comments: Select protocol, address, and baud rate in the above-mentioned parameters. D IN 37 is an option.	

8.1.9 Wiring Configuration: Motor Thermistor

⚠ CAUTION ⚠

THERMISTOR INSULATION

Risk of personal injury or equipment damage.

- Use only thermistors with reinforced or double insulation to meet PELV insulation requirements.

Table 66: Wiring Configuration for Motor Thermistor

	Parameters	
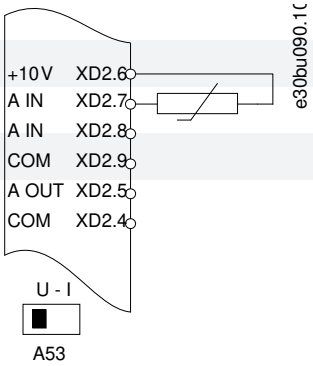	**Function**	**Setting**
	Parameter 1-90 Motor Thermal Protection	*[2] Thermistor trip*
	Parameter 1-93 Thermistor Source	*[1] Analog input 53*
	* = Default value	
	If only a warning is required, set *parameter 1-90 Motor Thermal Protection* to *[1] Thermistor warning*. D IN 37 is an option. Input 53 in the parameter corresponds to terminal XD2.7 in the control compartment.	

8.1.10 Wiring for Regeneration

Table 67: Wiring Configuration for Regeneration

<table>
<tr><th></th><th colspan="2">Parameters</th></tr>
<tr><td rowspan="4"> 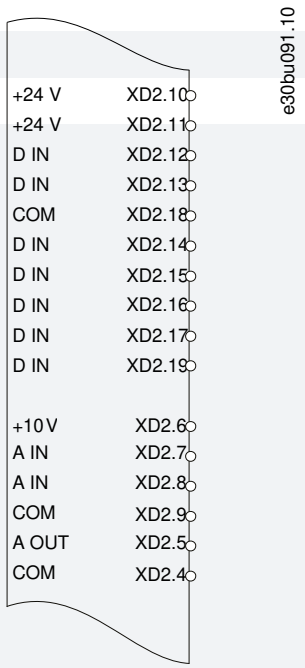
</td><td>Function</td><td>Setting</td></tr>
<tr><td>Parameter 1-90 Motor Thermal Protection</td><td>100%*</td></tr>
<tr><td colspan="2">* = Default value</td></tr>
<tr><td colspan="2">To disable regeneration, decrease parameter 1-90 Motor Thermal Protection to 0%. However, if the application uses motor brake power and regeneration is not enabled, the drive will trip.</td></tr>
</table>

8.1.11 Wiring Configuration for a Relay Set-up with Smart Logic Control

Table 68: Wiring Configuration for a Relay Set-up with Smart Logic Control

	Parameters	
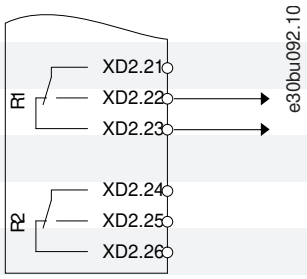	**Function**	**Setting**
	Parameter 4-30 Motor Feedback Loss Function	*[1] Warning*
	Parameter 4-31 Motor Feedback Speed Error	100 RPM
	Parameter 4-32 Motor Feedback Loss Timeout	5 s
	Parameter 7-00 Speed PID Feedback Source	*[2] MCB 102*
	Parameter 17-11 Resolution (PPR)	1024*
	Parameter 13-00 SL Controller Mode	*[1] On*
	Parameter 13-01 Start Event	*[19] Warning*
	Parameter 13-02 Stop Event	*[44] Reset key*
	Parameter 13-10 Comparator Operand	*[21] Warning no.*
	Parameter 13-11 Comparator Operator	*[1] ≈ (equal)**
	Parameter 13-12 Comparator Value	90
	Parameter 13-51 SL Controller Event	*[22] Comparator 0*
	Parameter 13-52 SL Controller Action	*[32] Set digital out A low*
	Parameter 5-40 Function Relay	*[80] SL digital output A*
	*=Default value	
	Notes/comments: If the limit in the feedback monitor is exceeded, *warning 90, Feedback Mon.* is issued. The SLC monitors *warning 90, Feedback Mon.* and if the warning becomes true, relay 1 is triggered. External equipment may require service. However, if the feedback error goes below the limit again within 5 s and the warning disappears, press [Reset] on the LCP.	

8.1.12 Wiring Configuration for a Submersible Pump

The system consists of a submersible pump controlled by a Danfoss VLT® AQUA Drive and a pressure transmitter. The transmitter gives a 4–20 mA feedback signal to the drive, which keeps a constant pressure by controlling the speed of the pump. To design a drive for a submersible pump application, there are a few important issues to consider. Select the drive according to motor current.

- The CAN motor is a motor with a stainless steel can between the rotor and stator that contains a larger and a more magnetic resistant air-gap than on a normal motor. This weaker field results in the motors being designed with a higher rated current than a normal motor with similar rated power. The special CAN motor is used because of the wet installation conditions. Design the system according to output current to be able to run the motor at nominal power.
- The pump contains thrust bearings that are damaged when running below minimum speed, which is normally 30 Hz.
- The motor reactance is nonlinear in submersible pump motors and, therefore, automatic motor adaption (AMA) may not be possible. Normally, submersible pumps are operated with long motor cables that might eliminate the nonlinear motor reactance and enable the drive to perform AMA. If AMA fails, the motor data can be set from *parameter group 1-3* Adv. Motor Data* (see the motor datasheet). If AMA has succeeded, the drive compensates for the voltage drop in the long motor cables. If the advanced motor data are set manually, the length of the motor cable must be considered to optimize system performance.
- It is important that the system is operated with a minimum of wear and tear on the pump and motor. A Danfoss sine-wave filter can lower the motor insulation stress and increase lifetime (check actual motor insulation and the drive dU/dt specification). Most manufacturers of submersible pumps require the use of output filters.
- EMC performance can be difficult to achieve because the special pump cable, which is able to withstand the wet conditions in the well, is normally unshielded. A solution could be to use a shielded cable above the well and attach the shield to the well pipe, if it is made of steel. A sine-wave filter also reduces the EMI from unshielded motor cables.

To prevent damage to the thrust bearings of the pump, and to ensure sufficient motor cooling as quickly as possible, it is important to ramp the pump from stop to minimum speed as quickly as possible. Most submersible pump manufacturers recommend that the pump ramps to minimum speed (30 Hz) in maximum 2–3 s. The VLT® AQUA Drive FC 202 is designed with initial and final ramp for these applications. The initial and final ramps are 2 individual ramps, where initial ramp, if enabled, ramps the motor from stop to minimum speed and automatically switches to normal ramp, when minimum speed is reached. Final ramp does the opposite from minimum speed to stop in a stop situation. Consider also enabling advanced minimum speed monitoring.

To achieve extra pump protection, use the dry-run detection function. For more information, see the programming guide.

Pipe-fill mode can be enabled to prevent water hammering. The Danfoss drive can fill the vertical pipes using the PID controller to ramp up the pressure slowly with a user-specified rate (units/second). If enabled, the drive enters pipe-fill mode when it reaches minimum speed after start-up. The pressure is slowly ramped up until it reaches a user-specified filled setpoint, where the drive automatically disables pipe fill mode and continues in normal closed-loop operation.

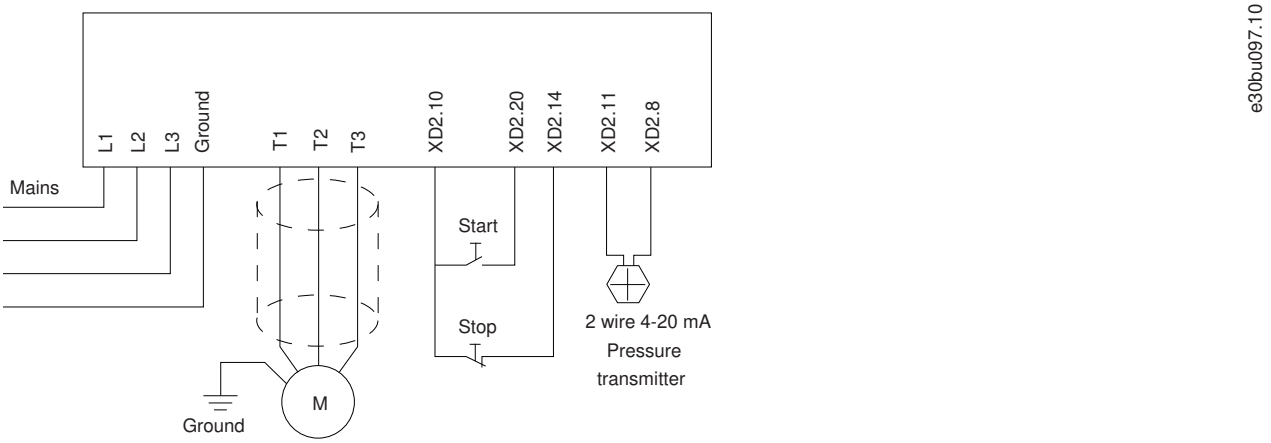

Illustration 63: Wiring for Submersible Pump Application

NOTICE

Set the analog input 2, (terminal XD2.8) format to mA (switch 202).

Parameter settings

Table 69: Relevant Parameters for Submersible Pump Application

Parameter
Parameter 1-20 Motor Power [kW]/parameter 1-21 Motor Power [HP]
Parameter 1-22 Motor Voltage
Parameter 1-24 Motor Current
Parameter 1-28 Motor Rotation Check
Parameter 1-29 Automatic Motor Adaptation (AMA) = [2] Enable Reduced AMA

Table 70: Example of Settings for Submersible Pump

Parameter	Setting
Parameter 3-02 Minimum Reference	The minimum reference unit matches the unit in *parameter 20-12 Reference/ Feedback Unit*
Parameter 3-03 Maximum Reference	The maximum reference unit matches the unit in *parameter 20-12 Reference/ Feedback Unit*
Parameter 3-84 Initial Ramp Time	(2 s)
Parameter 3-88 Final Ramp Time	(2 s)
Parameter 3-41 Ramp 1 Ramp Up Time	(8 s depending on size)
Parameter 3-42 Ramp 1 Ramp Down Time	(8 s depending on size)
Parameter 4-11 Motor Speed Low Limit [RPM]	(30 Hz)
Parameter 4-13 Motor Speed High Limit [RPM]	(50/60 Hz)
To set up the feedback settings in the PID controller, use the Closed-loop wizard under Quick Menu, Function Set-up.	

Table 71: Example of Settings for Pipe-Fill Mode

Parameter	Setting
Parameter 29-00 Pipe Fill Enable	Disabled
Parameter 29-04 Pipe Fill Rate	(Feedback units)
Parameter 29-05 Filled Setpoint	(Feedback units)

Performance

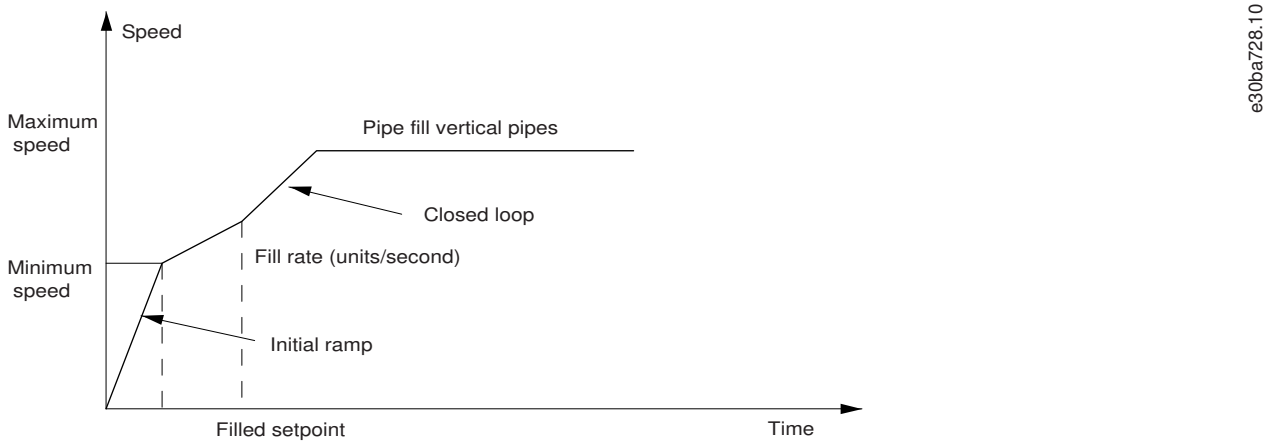

Illustration 64: Performance Curve for Pipe Fill Mode

8.1.13 Wiring Configuration for a Cascade Controller

See illustration 65 for an example of a built-in basic cascade controller with 1 variable-speed pump (lead) and 2 fixed-speed pumps, a 4–20 mA transmitter, and system safety interlock.

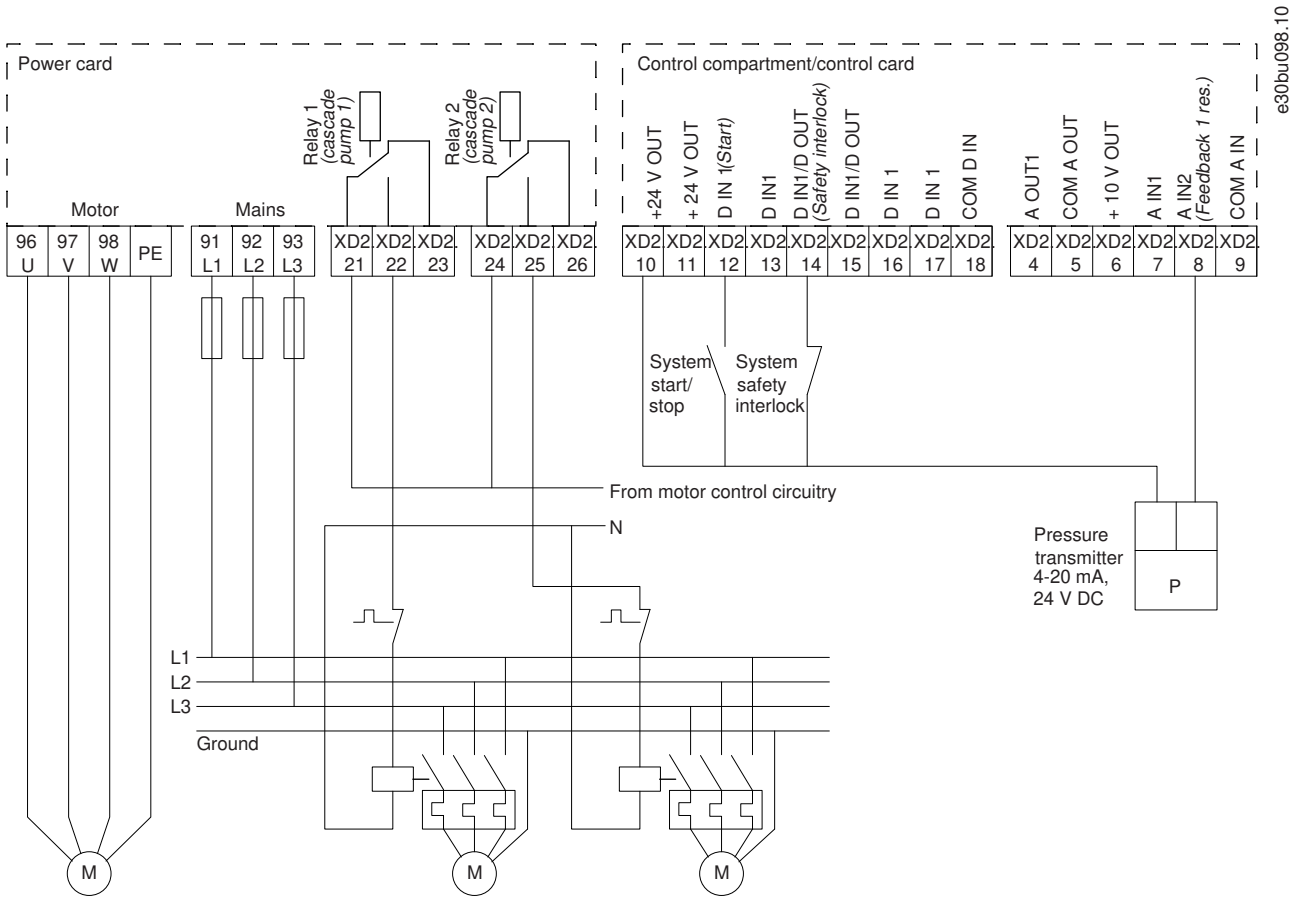

Illustration 65: Cascade Controller Wiring Diagram

8.1.14 Wiring Configuration for a Fixed Variable Speed Pump

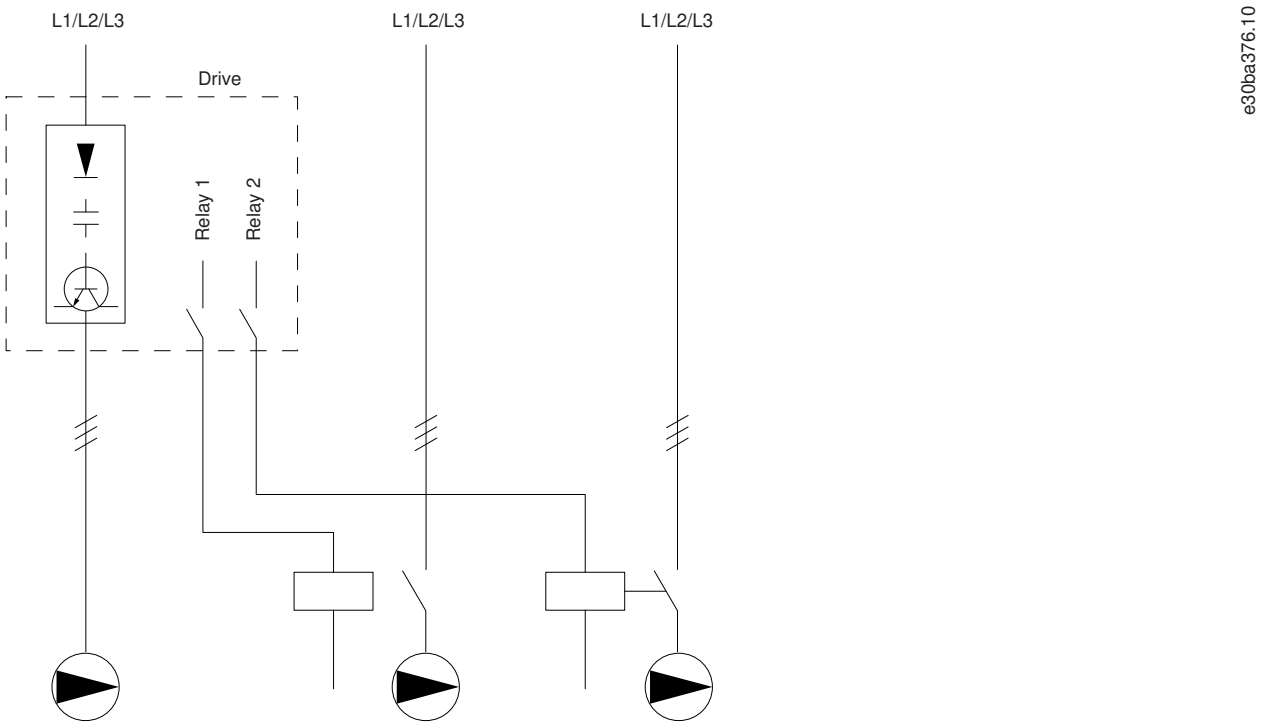

Illustration 66: Fixed Variable Speed Pump Wiring Diagram

8.1.15 Wiring Configuration for Lead Pump Alternation

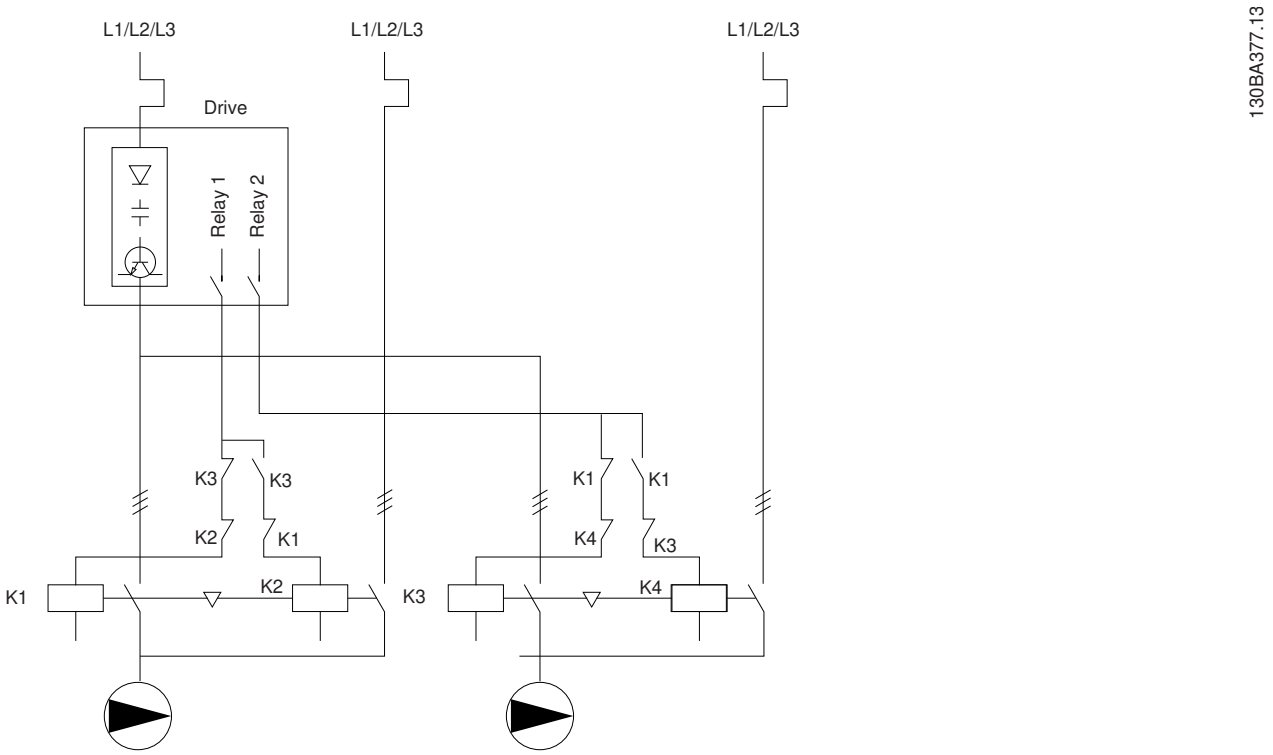

Illustration 67: Lead Pump Alternation Wiring Diagram

Every pump must be connected to 2 contactors (K1/K2 and K3/K4) with a mechanical interlock. Thermal relays or other motor overload protection devices must be applied according to local regulation and/or individual demands.

- Relay 1 (R1) and relay 2 (R2) are the built-in relays in the drive.
- When all relays are de-energized, the 1st built-in relay that is energized cuts in the contactor corresponding to the pump controlled by the relay. For example, relay 1 cuts in contactor K1, which becomes the lead pump.
- K1 blocks for K2 via the mechanical interlock, preventing mains from being connected to the output of the drive (via K1).
- Auxiliary break contact on K1 prevents K3 from cutting in.
- Relay 2 controls contactor K4 for on/off control of the fixed-speed pump.
- At alternation, both relays de-energize and now relay 2 is energized as the 1st relay.

For a detailed description of commissioning for mixed pump and master/slave applications, refer to VLT® Cascade Controller Options MCO 101/102 Operating Instructions.

9 Maintenance, Diagnostics, and Troubleshooting

9.1 Maintenance and Service

Under normal operating conditions and load profiles, the drive is maintenance-free throughout its designed lifetime. To prevent breakdown, danger, and damage, examine the drive for loose terminal connections, excessive dust buildup, and so on, at regular intervals. Replace worn or damaged parts with Danfoss authorized parts. For service and support, contact the local Danfoss supplier.

⚠ WARNING ⚠

UNINTENDED START

When the drive is connected to the AC mains, DC supply, or load sharing, the motor may start at any time, causing risk of death, serious injury, and equipment, or property damage. The motor may start by activation of an external switch, a fieldbus command, an input reference signal from the LCP or LOP, via remote operation using MCT 10 Set-up software, or after a cleared fault condition.

- Press [Off] on the LCP before programming parameters.
- Disconnect the drive from the mains whenever personal safety considerations make it necessary to avoid unintended motor start.
- Check that the drive, motor, and any driven equipment is in operational readiness.

9.2 Status Messages

9.2.1 Status Message Overview

When the drive is in status mode, status messages automatically appear in the bottom line of the LCP display. See illustration 68.

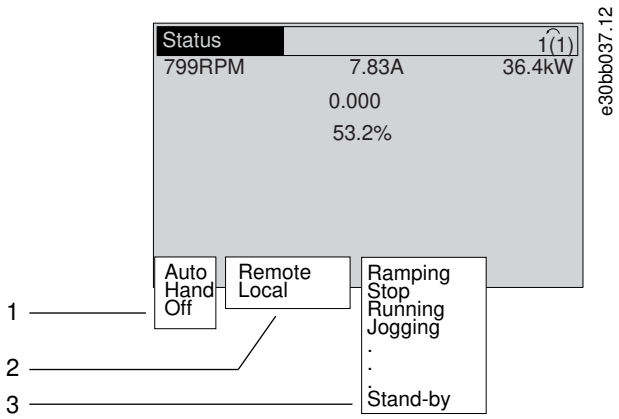

1	Operating mode. Refer to 9.2.2 Status Messages - Operating Mode.	2	Reference site. Refer to 9.2.3 Status Messages - Reference Site.
3	Operation status. Refer to 9.2.4 Status Messages - Operation Status.		

Illustration 68: Status Display

9.2.2 Status Messages - Operating Mode

Table 72: Operating Mode

Operating mode	Description
Off	The drive does not react to any control signal until [Auto On] or [Hand On] is pressed.
Auto	The drive requires external commands to execute functions. The start/stop commands are sent via the control terminals and/or the serial communication.
Hand	The navigation keys on the LCP can be used to control the drive. Stop commands, reset, reversing, DC brake, and other signals applied to the control terminals override local control.

9.2.3 Status Messages - Reference Site

Table 73: Reference Site

Reference site	Description
Remote	The speed reference is given from • External signals. • Serial communication. • Internal preset references.
Local	The drive uses reference values from the LCP.

9.2.4 Status Messages - Operation Status

Table 74: Operation Status

Operation status	Description
AC brake	AC brake was selected in *parameter 2-10 Brake Function*. The AC brake overmagnetizes the motor to achieve a controlled slow down.
AMA finish OK	Automatic motor adaptation (AMA) was carried out successfully.
AMA ready	AMA is ready to start. To start, press [Hand On].
AMA running	AMA process is in progress.
Braking	The brake chopper is in operation. The brake resistor absorbs the generative energy.
Braking max.	The brake chopper is in operation. The power limit for the brake resistor defined in *parameter 2-12 Brake Power Limit (kW)* has been reached.
Coast	• *[2] Coast inverse* was selected as a function for a digital input (*parameter group 5–1* Digital Inputs*). The corresponding terminal is not connected. • Coast activated by serial communication.
Ctrl. ramp-down	*[1] Ctrl. ramp-down* was selected in *parameter 14-10 Mains Failure*. • The mains voltage is below the value set in *parameter 14-11 Mains Voltage at Mains Fault*. • The drive ramps down the motor in a controlled manner.

Operation status	Description
Current high	The drive output current is above the limit set in *parameter 4-51 Warning Current High*.
Current low	The drive output current is below the limit set in *parameter 4-52 Warning Speed Low*.
DC hold	DC hold is selected in *parameter 1-80 Function at Stop* and a stop command is active. The motor is held by a DC current set in *parameter 2-00 DC Hold Current*.
DC stop	The motor is held with a DC current (*parameter 2-01 DC Brake Current*) for a specified time (*parameter 2-02 DC Braking Time*). • DC brake is activated in *parameter 2-03 DC Brake Cut In Speed [RPM]* and a stop command is active. • DC brake (inverse) is selected as a function for a digital input (*parameter group 5–1* Digital Inputs*). The corresponding terminal is not active. • The DC brake is activated via serial communication.
Feedback high	The sum of all active feedbacks is above the feedback limit set in *parameter 4-57 Warning Feedback High*.
Feedback low	The sum of all active feedbacks is below the feedback limit set in *parameter 4-56 Warning Feedback Low*.
Freeze output	The remote reference is active, which holds the present speed. • *[20] Freeze Output* was selected as a function for a digital input (*parameter group 5–1* Digital Inputs*). The corresponding terminal is active. Speed control is only possible via the terminal functions speed up and speed down. • Hold ramp is activated via serial communication.
Freeze output request	A freeze output command has been given, but the motor remains stopped until a run permissive signal is received.
Freeze ref.	*[19] Freeze Reference* was selected as a function for a digital input (*parameter group 5–1* Digital Inputs*). The corresponding terminal is active. The drive saves the actual reference. Changing the reference is now only possible via terminal functions speed up and speed down.
Jog request	A jog command has been given, but the motor is stopped until a run permissive signal is received via a digital input.
Jogging	The motor is running as programmed in *parameter 3-19 Jog Speed [RPM]*. • *[14] Jog* was selected as function for a digital input (*parameter group 5–1* Digital Inputs*). The corresponding terminal (for example, terminal 29) is active. • The jog function is activated via the serial communication. • The jog function was selected as a reaction for a monitoring function (for example, No signal). The monitoring function is active.
Motor check	In *parameter 1-80 Function at Stop, [2] Motor Check* was selected. A stop command is active. To ensure that a motor is connected to the drive, a permanent test current is applied to the motor.
OVC control	Overvoltage control was activated by *[2] Enabled* in *parameter 2-17 Over-voltage Control*. The connected motor is supplying the drive with generative energy. The overvoltage control adjusts the V/Hz ratio to run the motor in controlled mode and to prevent the drive from tripping.
Power unit off	(For drives with a 24 V external supply installed only.) Mains supply to the drive is removed, but the control card is supplied by the external 24 V.
Protection md	Protection mode is active. The unit has detected a critical status (an overcurrent or overvoltage). • To avoid tripping, the switching frequency is reduced to 1.5 kHz if *parameter 14-55 Output Filter* is set to *[2] Sine-Wave Filter Fixed*. Otherwise, the switching frequency is reduced to 1.0 kHz. • If possible, protection mode ends after approximately 10 s. • Protection mode can be restricted in *parameter 14-26 Trip Delay at Inverter Fault*.

Operation status	Description
QStop	The motor is decelerating using *parameter 3-81 Quick Stop Ramp Time*. • *[4] Quick stop inverse* was selected as a function for a digital input (*parameter group 5–1* Digital Inputs*). The corresponding terminal is not active. • The quick stop function was activated via serial communication.
Ramping	The motor is accelerating/decelerating using the active ramp up/down. The reference, a limit value, or a standstill is not yet reached.
Ref. high	The sum of all active references is above the reference limit set in *parameter 4-55 Warning Reference High*.
Ref. low	The sum of all active references is below the reference limit set in *parameter 4-54 Warning Reference Low*.
Run on ref.	The drive is running in the reference range. The feedback value matches the setpoint value.
Run request	A start command has been given, but the motor is stopped until a run permissive signal is received via digital input.
Running	The drive is driving the motor.
Sleep mode	The energy-saving function is enabled. This function being enabled means that now the motor has stopped, but that it restarts automatically when required.
Speed high	The motor speed is above the value set in *parameter 4-53 Warning Speed High*.
Speed low	The motor speed is below the value set in *parameter 4-52 Warning Speed Low*.
Standby	In auto-on mode, the drive starts the motor with a start signal from a digital input or serial communication.
Start delay	In *parameter 1-71 Start Delay*, a delay starting time was set. A start command is activated and the motor starts after the start delay time expires.
Start fwd/rev	*[12] Enable Start Forward* and *[13] Enable Start Reverse* were selected as functions for 2 different digital inputs (*parameter group 5–1* Digital Inputs*). The motor starts in forward or reverse depending on which corresponding terminal is activated.
Stop	The drive has received a stop command from 1 of the following: • LCP. • Digital input. • Serial communication.
Trip	An alarm occurred and the motor is stopped. Once the cause of the alarm is cleared, reset the drive using 1 of the following: • Pressing [Reset]. • Remotely by control terminals. • Via serial communication.
Trip lock	An alarm occurred and the motor is stopped. Once the cause of the alarm is cleared, cycle power to the drive. Reset the drive manually by 1 of the following: • Pressing [Reset]. • Remotely by control terminals. • Via serial communication.

9.3 Warnings and Alarms

9.3.1 Warning and Alarm Types

Alarm

An alarm indicates a fault that requires immediate attention. The fault always triggers a trip or trip lock. Reset the drive after an alarm using 1 of the following methods:

- Press [Reset]/[Off/Reset].
- Digital reset input command.
- Serial communication reset input command.
- Auto reset.

Warning

A state entered in fault situations, for example if the drive is subject to an overtemperature or when the drive is protecting the motor, process, or mechanism. The drive prevents a restart until the cause of the fault has disappeared. To cancel the trip state, restart the drive. Do not use the trip state for personal safety.

Trip lock

The drive enters this state in fault situations to protect itself. The drive requires physical intervention, for example when there is a short circuit on the output. A trip lock can only be canceled by disconnecting mains, removing the cause of the fault, and reconnecting the drive. Restart is prevented until the trip state is canceled by activating reset or, sometimes, by being programmed to reset automatically. Do not use the trip lock state for personal safety.

LCP notification

When a fault is triggered, the LCP indicates the type of fault (alarm, warning, or trip lock) and shows the alarm or warning number in the display.

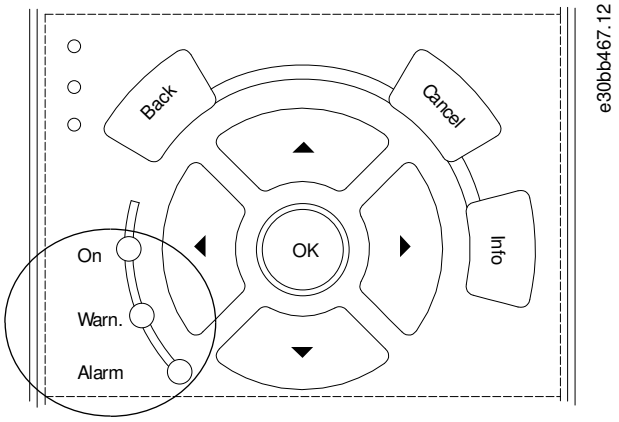

Illustration 69: Status Indicator Lights

Table 75:

Type of fault	Warning indicator light	Alarm indicator light
Warning	On	Off

Type of fault	Warning indicator light	Alarm indicator light
Alarm	Off	On (flashing)
Trip lock	On	On (flashing)

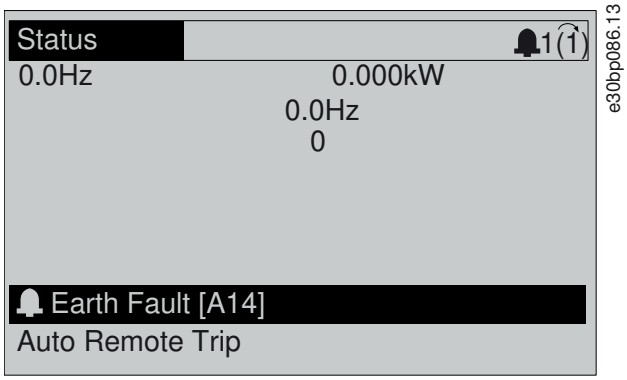

Illustration 70: Alarm Example

9.3.2 WARNING 1, 10 Volts Low

Cause

The control card voltage is less than 10 V from terminal 50. Remove some of the load from terminal 50, as the 10 V supply is overloaded. Maximum 15 mA or minimum 590 Ω.

A short circuit in a connected potentiometer or incorrect wiring of the potentiometer can cause this condition.

Troubleshooting

- Remove the wiring from terminal 50. If the warning clears, the problem is with the wiring. If the warning does not clear, replace the control card.

9.3.3 WARNING/ALARM 2, Live Zero Error

Cause

This warning or alarm only appears if programmed in *parameter 6-01 Live Zero Timeout Function*. The signal on 1 of the analog inputs is less than 50% of the minimum value programmed for that input. Broken wiring or a faulty device sending the signal can cause this condition.

Troubleshooting

- Check connections on all analog mains terminals.
  - Control card terminals 53 and 54 for signals, terminal 55 common.
- Check that the drive programming and switch settings match the analog signal type.

9.3.4 WARNING/ALARM 3, No Motor

Cause

No motor is connected to the output of the drive.

9.3.5 WARNING/ALARM 4, Mains Phase Loss

Cause

A phase is missing on the supply side, or the mains voltage imbalance is too high. This message also appears for a fault in the input rectifier. Options are programmed in *parameter 14-12 Function at Mains Imbalance*.

Troubleshooting

- Check the supply voltage and supply currents to the drive.

9.3.6 WARNING 5, DC Link Voltage High

Cause

The DC-link voltage (DC) is higher than the high-voltage warning limit. The limit depends on the drive voltage rating. The unit is still active.

9.3.7 WARNING 6, DC Link Voltage Low

Cause

The DC-link voltage (DC) is lower than the low voltage warning limit. The limit depends on the drive voltage rating. The unit is still active.

9.3.8 WARNING/ALARM 7, DC Overvoltage

Cause

If the DC-link voltage exceeds the limit, the drive trips after a certain time.

Troubleshooting

- Connect a brake resistor.
- Extend the ramp time.
- Change the ramp type.
- Activate the functions in *parameter 2-10 Brake Function*.
- Increase *parameter 14-26 Trip Delay at Inverter Fault*.
- If the alarm/warning occurs during a power sag, use kinetic back-up (*parameter 14-10 Mains Failure*).

9.3.9 WARNING/ALARM 8, DC Undervoltage

Cause

If the DC-link voltage drops below the undervoltage limit, the drive checks for 24 V DC back-up supply. If no 24 V DC back-up supply is connected, the drive trips after a fixed time delay. The time delay varies with unit size.

Troubleshooting

- Check that the supply voltage matches the drive voltage.
- Perform an input voltage test.
- Perform a soft-charge circuit test.

9.3.10 WARNING/ALARM 9, Inverter Overload

Cause

The drive has run with more than 100% overload for too long and is about to cut out. The counter for electronic thermal inverter protection issues a warning at 98% and trips at 100% with an alarm. The drive cannot be reset until the counter is below 90%.

Troubleshooting

- Compare the output current shown on the LCP with the drive rated current.
- Compare the output current shown on the LCP with the measured motor current.
- Show the thermal drive load on the LCP and monitor the value. When running above the drive continuous current rating, the counter increases. When running below the drive continuos current rating, the counter decreases.

9.3.11 WARNING/ALARM 10, Motor Overload Temperature

Cause

According to the electronic thermal protection (ETR), the motor is too hot.

Select 1 of these options:

- The drive issues a warning or an alarm when the counter is >90% if *parameter 1-90 Motor Thermal Protection* is set to warning options.
- The drive trips when the counter reaches 100% if *parameter 1-90 Motor Thermal Protection* is set to trip options.

The fault occurs when the motor runs with more than 100% overload for too long.

Troubleshooting

- Check for motor overheating.
- Check if the motor is mechanically overloaded.
- Check that the motor current set in *parameter 1-24 Motor Current* is correct.
- Ensure that the motor data in *parameters 1-20* to *1-25* is set correctly.
- If an external fan is in use, check that it is selected in *parameter 1-91 Motor External Fan*.
- Running AMA in *parameter 1-29 Automatic Motor Adaptation (AMA)* tunes the drive to the motor more accurately and reduces thermal loading.

9.3.12 WARNING/ALARM 11, Motor Thermistor Overtemp

The motor thermistor indicates that the motor temperature is too high.

Troubleshooting

- Check for motor overheating.
- Check that the thermistor is securely connected.
- Check if the motor is mechanically overloaded.
- When using terminal 53 or 54, check that the thermistor is connected correctly between either terminal 53 or 54 (analog voltage input) and terminal 50 (+10 V supply). Also check that the terminal switch for 53 and 54 is set for voltage. Check that *parameter 1-93 Thermistor Resource* selects 53 or 54.
- When using terminal 18, 19, 31, 32, or 33 (digital inputs), check that the thermistor is connected correctly between the digital input terminal used (digital input PNP only) and terminal 50. Select the terminal to use in *parameter 1-93 Thermistor Resource*.

9.3.13 WARNING/ALARM 12, Torque Limit

Cause

The torque has exceeded the value in *parameter 4-16 Torque Limit Motor Mode* or the value in *parameter 4-17 Torque Limit Generator Mode*. *Parameter 14-25 Trip Delay at Torque Limit* can change this warning from a warning-only condition to a warning followed by an alarm.

Troubleshooting

- If the motor torque limit is exceeded during ramp-up, extend the ramp-up time.
- If the generator torque limit is exceeded during ramp-down time, extend the ramp-down time.
- If torque limit occurs while running, increase the torque limit. Make sure that the system can operate safely at a higher torque.
- Check the application for excessive current draw on the motor.

9.3.14 WARNING/ALARM 13, Overcurrent

Cause

Troubleshooting

- Remove power and check if the motor shaft can be turned.
- Check that the motor size matches the drive.
- Check that the motor data is correct in *parameters 1-20* to *1-25*.

9.3.15 ALARM 14, Earth (Ground) Fault

Cause

There is current from the output phase to ground, either in the cable between the drive and the motor, or in the motor itself. The current transducers detect the ground fault by measuring current going out from the drive and current going into the drive from the motor. Ground fault is issued if the deviation of the 2 currents is too large. The current going out of the drive must be the same as the current going into the drive.

Troubleshooting

- Remove power to the drive and repair the ground fault.
- Check for ground faults in the motor by measuring the resistance to ground of the motor cables and the motor with a megohmmeter.
- Reset any potential individual offset in the 3 current transducers in the drive. Perform a manual initialization or perform a complete AMA. This method is most relevant after changing the power card.

9.3.16 ALARM 15, Hardware Mismatch

Cause

A fitted option is not operational with the present control card hardware or software.

Troubleshooting

Record the value of the following parameters and contact Danfoss.

- *Parameter 15-40 FC Type*.
- *Parameter 15-41 Power Section*.
- *Parameter 15-42 Voltage*.
- *Parameter 15-43 Software Version*.
- *Parameter 15-45 Actual Typecode String*.
- *Parameter 15-49 SW ID Control Card*.
- *Parameter 15-50 SW ID Power Card*.
- *Parameter 15-60 Option Mounted*.
- *Parameter 15-61 Option SW Version* (for each option slot).

9.3.17 ALARM 16, Short Circuit

Cause

There is short-circuiting in the motor or motor wiring.

Troubleshooting

⚠ WARNING ⚠

HIGH VOLTAGE

AC drives contain high voltage when connected to AC mains input , DC supply , or load sharing. Failure to perform installation , start-up, and maintenance by qualified personnel can result in death or serious injury.

- Only qualified personnel must perform installation, start-up, and maintenance.

- Disconnect power before proceeding.
- Remove the power to the drive and repair the short circuit.

9.3.18 WARNING/ALARM 17, Control Word Timeout

Cause

There is no communication to the drive. The warning is only active when *parameter 8-04 Control Word Timeout Function* is NOT set to *[0] Off*.

If *parameter 8-04 Control Word Timeout Function* is set to *[5] Stop and trip*, a warning appears, and the drive ramps down to a stop and shows an alarm.

Troubleshooting

- Check the connections on the serial communication cable.
- Increase *parameter 8-03 Control Word Timeout Time*.
- Check the operation of the communication equipment.
- Verify that proper EMC installation was performed.

9.3.19 WARNING/ALARM 20, Temp. Input Error

Cause

The temperature sensor is not connected.

9.3.20 WARNING/ALARM 21, Parameter Error

Cause

The parameter is out of range. The parameter number is shown in the display.

Troubleshooting

- Set the affected parameter to a valid value.

9.3.21 WARNING/ALARM 22, Hoist Mechanical Brake

Cause

The value of this warning/alarm shows the type of warning/alarm.

0 = The torque reference was not reached before timeout (*parameter 2-27 Torque Ramp Up Time*).

1 = Expected brake feedback was not received before timeout (*parameter 2-23 Activate Brake Delay*, *parameter 2-25 Brake Release Time*).

9.3.22 WARNING 23, Internal Fan Fault

Cause

The fan warning function is a protective function that checks if the fan is running/mounted. The fan warning can be disabled in *parameter 14-53 Fan Monitor* (*[0] Disabled*).

For drives with DC fans, a feedback sensor is mounted in the fan. If the fan is commanded to run and there is no feedback from the sensor, this alarm appears. For drives with AC fans, the voltage to the fan is monitored.

Troubleshooting

- Check for proper fan operation.
- Cycle power to the drive and check that the fan operates briefly at start-up.
- Check the sensors on the control card.

9.3.23 WARNING 24, External Fan Fault

Cause

The fan warning function is a protective function that checks if the fan is running/mounted. The fan warning can be disabled in *parameter 14-53 Fan Monitor* (*[0] Disabled*).

For drives with DC fans, a feedback sensor is mounted in the fan. If the fan is commanded to run and there is no feedback from the sensor, this warning appears. For drives with AC fans, the voltage to the fan is monitored.

Troubleshooting

- Check for proper fan operation.
- Cycle power to the drive and check that the fan operates briefly at start-up.
- Check the sensors on the heat sink.

9.3.24 WARNING 25, Brake Resistor Short Circuit

Cause

The brake resistor is monitored during operation. If a short circuit occurs, the brake function is disabled and the warning appears. The drive is still operational, but without the brake function.

Troubleshooting

- Remove the power to the drive and replace the brake resistor (refer to *parameter 2-15 Brake Check*).

9.3.25 WARNING/ALARM 26, Brake Resistor Power Limit

Cause

The power transmitted to the brake resistor is calculated as a mean value over the last 120 s of run time. The calculation is based on the DC-link voltage and the brake resistor value set in *parameter 2-16 AC Brake Max. Current*. The warning is active when the dissipated braking power is higher than 90% of the brake resistor power. If option *[2] Trip* is selected in *parameter 2-13 Brake Power Monitoring*, the drive trips when the dissipated braking power reaches 100%.

9.3.26 WARNING/ALARM 27, Brake Chopper Fault

Cause

The brake transistor is monitored during operation, and if a short circuit occurs, the brake function is disabled, and a warning is issued. The drive is still operational, but since the brake transistor has short-circuited, substantial power is transmitted to the brake resistor, even if it is inactive.

Troubleshooting

- Remove the power to the drive and remove the brake resistor.

9.3.27 WARNING/ALARM 28, Brake Check Failed

Cause

The brake resistor is not connected or not working.

Troubleshooting

- Check *parameter 2-15 Brake Check*.

9.3.28 ALARM 29, Heat Sink Temp

Cause

The maximum temperature of the heat sink is exceeded. The temperature fault is not reset until the temperature drops below a defined heat sink temperature. The trip and reset points are different based on the drive power size.

Troubleshooting

- The ambient temperature is too high.
- The motor cables are too long.
- Incorrect airflow clearance above and below the drive.
- Blocked airflow around the drive.
- Damaged heat sink fan.
- Dirty heat sink.

9.3.29 ALARM 30 Motor Phase U Missing

Cause

Motor phase U between the drive and the motor is missing.

Troubleshooting

⚠ WARNING ⚠

HIGH VOLTAGE

AC drives contain high voltage when connected to AC mains input , DC supply , or load sharing. Failure to perform installation , start-up, and maintenance by qualified personnel can result in death or serious injury.

- Only qualified personnel must perform installation, start-up, and maintenance.

- Disconnect power before proceeding.
- Remove the power from the drive and check motor phase U.

9.3.30 ALARM 31 Motor Phase V Missing

Cause

Motor phase V between the drive and the motor is missing.

Troubleshooting

⚠ WARNING ⚠

HIGH VOLTAGE

AC drives contain high voltage when connected to AC mains input , DC supply , or load sharing. Failure to perform installation , start-up, and maintenance by qualified personnel can result in death or serious injury.

- Only qualified personnel must perform installation, start-up, and maintenance.

- Disconnect power before proceeding.
- Remove the power from the drive and check motor phase V.

9.3.31 ALARM 32 Motor Phase W Missing

Cause

Motor phase W between the drive and the motor is missing.

Troubleshooting

⚠ WARNING ⚠

HIGH VOLTAGE

AC drives contain high voltage when connected to AC mains input , DC supply , or load sharing. Failure to perform installation , start-up, and maintenance by qualified personnel can result in death or serious injury.

- Only qualified personnel must perform installation, start-up, and maintenance.

- Disconnect power before proceeding.
- Remove the power from the drive and check motor phase W.

9.3.32 ALARM 33, Inrush Fault

Cause

Too many power-ups have occurred within a short time period.

Troubleshooting

- Let the unit cool to operating temperature.

9.3.33 WARNING/ALARM 34, Fieldbus Communication Fault

Cause

The fieldbus on the communication option card is not working.

9.3.34 WARNING/ALARM 35, Option Fault

Cause

An option alarm is received. The alarm is option-specific. The most likely cause is a power-up or a communication fault.

9.3.35 WARNING/ALARM 36, Mains Failure

Cause

This warning/alarm is only active if the supply voltage to the drive is lost and *parameter 14-10 Mains Failure* is not set to *[0] No Function*.

Troubleshooting

- Check the fuses to the drive and mains supply to the unit.

9.3.36 ALARM 37, Phase Imbalance

Cause

There is a current imbalance between the power units.

9.3.37 ALARM 38, Internal Fault

Cause

When an internal fault occurs, a code number defined in table 76 is shown.

Troubleshooting

- Cycle power.
- Check that the option is properly installed.
- Check for loose or missing wiring.

It may be necessary to contact the Danfoss supplier or service department. Note the code number for further troubleshooting directions.

Table 76: Internal Fault Codes

Number	Text
0	The serial port cannot be initialized. Contact the Danfoss supplier or Danfoss service department.
256-258	The power EEPROM data is defective or too old. Replace the power card.
512-519	Internal fault. Contact the Danfoss supplier or Danfoss service department.
783	Parameter value outside of minimum/maximum limits.

Number	Text
1024-1284	Internal fault. Contact the Danfoss supplier or Danfoss service department.
1299	The option software in slot A is too old.
1300	The option software in slot B is too old.
1302	The option software in slot C1 is too old.
1315	The option software in slot A is not supported/allowed.
1316	The option software in slot B is not supported/ allowed.
1318	The option software in slot C1 is not supported/ allowed.
1379-2819	Internal fault. Contact the Danfoss supplier or Danfoss service department.
1792	Hardware reset of digital signal processor.
1793	Motor-derived parameters not transferred correctly to the digital signal processor.
1794	Power data not transferred correctly at power-up to the digital signal processor.
1795	The digital signal processor has received too many unknown SPI telegrams. The AC drive also uses this fault code if the MCO does not power up correctly. This situation can occur due to poor EMC protection or improper grounding.
1796	RAM copy error.
2561	Replace the control card.
2820	LCP stack overflow.
2821	Serial port overflow.
2822	USB port overflow.
3072-5122	Parameter value is outside its limits.
5123	Option in slot A: Hardware incompatible with the control board hardware.
5124	Option in slot B: Hardware incompatible with the control board hardware.
5125	Option in slot C0: Hardware incompatible with the control board hardware.
5126	Option in slot C1: Hardware incompatible with the control board hardware.
5376-6231	Internal fault. Contact the Danfoss supplier or Danfoss service department.

9.3.38 ALARM 39, Heat Sink Sensor

Cause

No feedback from the heat sink temperature sensor.

The signal from the IGBT thermal sensor is not available on the power card. The problem could be on the power card, on the gatedrive card, or on the ribboncable between the power card and the gatedrive card.

9.3.39 WARNING 40, Overload of Digital Output Terminal 27

Troubleshooting

- Check the load connected to terminal 27 or remove the short-circuit connection.
- Check *parameter 5-00 Digital I/O Mode* and *parameter 5-01 Terminal 27 Mode*.

9.3.40 WARNING 41, Overload of Digital Output Terminal 29

Troubleshooting

- Check the load connected to terminal 29 or remove the short-circuit connection.
- Check *parameter 5-00 Digital I/O Mode* and *parameter 5-02 Terminal 29 Mode*.

9.3.41 WARNING 42, Ovrld X30/6-7

Troubleshooting

For terminal X30/6:

- Check the load connected to the terminal, or remove the short-circuit connection.
- Check *parameter 5-32 Term X30/6 Digi out (MCB 101)* (VLT® General Purpose I/O MCB 101).

For terminal X30/7:

- Check the load connected to the terminal, or remove the short-circuit connection.
- Check *parameter 5-33 Term X30/7 Digi Out (MCB 101)* (VLT® General Purpose I/O MCB 101).

9.3.42 ALARM 43, Ext. Supply

Either connect a 24 V DC external supply or specify that no external supply is used via *parameter 14-80 Option Supplied by External 24VDC*, *[0] No*. A change in *parameter 14-80 Option Supplied by External 24VDC* requires a power cycle.

Cause

VLT® Extended Relay Option MCB 113 is mounted without 24 V DC.

Troubleshooting

Choose 1 of the following:

- Connect a 24 V DC external supply.
- Specify that no external supply is used via *parameter 14-80 Option Supplied by External 24VDC*, *[0] No*. A change in *parameter 14-80 Option Supplied by External 24VDC* requires a power cycle.

9.3.43 ALARM 45, Earth Fault 2

Cause

Ground fault.

Troubleshooting

- Check for proper grounding and loose connections.
- Check for proper wire size.
- Check the motor cables for short circuits or leakage currents.

9.3.44 ALARM 46, Power Card Supply

Cause

The supply on the power card is out of range. Another reason can be a defective heat sink fan.

There are 3 supplies generated by the switch mode supply (SMPS) on the power card:

- 24 V.
- 5 V.
- ±18 V.

When powered with VLT® 24 V DC Supply MCB 107, only 24 V and 5 V supplies are monitored. When powered with 3-phase mains voltage, all 3 supplies are monitored.

Troubleshooting

- Check for a defective power card.
- Check for a defective control card.
- Check for a defective option card.
- If a 24 V DC supply is used, verify proper supply power.
- Check for a defective heat sink fan.

9.3.45 WARNING 47, 24 V Supply Low

Cause

The supply on the power card is out of range.

There are 3 supplies generated by the switch mode supply (SMPS) on the power card:

- 24 V
- 5 V
- ±18 V

Troubleshooting

- Check for a defective power card.

9.3.46 WARNING 48, 1.8 V Supply Low

Cause

The 1.8 V DC supply used on the control card is outside of the allowed limits. The supply is measured on the control card.

Troubleshooting

- Check for a defective control card.
- If an option card is present, check for overvoltage.

9.3.47 WARNING 49, Speed Limit

Cause

The warning is shown when the speed outside of the specified range in *parameter 4-11 Motor Speed Low Limit [RPM]* and *parameter 4-13 Motor Speed High Limit [RPM]*. When the speed is below the specified limit in *parameter 1-86 Trip Speed Low [RPM]* (except when starting or stopping), the drive trips.

9.3.48 ALARM 50, AMA Calibration Failed

Troubleshooting

- Contact the Danfoss supplier or service department.

9.3.49 ALARM 51, AMA Check Unom and Inom

Cause

The settings for motor voltage, motor current, and motor power are wrong.

Troubleshooting

- Check settings in *parameters 1-20* to *1-25*.

9.3.50 ALARM 52, AMA Low Inom

Cause

The motor current is too low.

Troubleshooting

- Check the settings in *parameter 1-24 Motor Current*.

9.3.51 ALARM 53, AMA Motor Too Big

Cause

The motor is too big for the AMA to operate.

9.3.52 ALARM 54, AMA Motor Too Small

Cause

The motor is too small for the AMA to operate.

9.3.53 ALARM 55, AMA Parameter Out of Range

Cause

The AMA cannot run because the paramenter values of the motor are out of the acceptable range.

9.3.54 ALARM 56, AMA Interrupted by User

Cause

The AMA is manually interrupted.

9.3.55 ALARM 57, AMA Internal Fault

Cause

Try to restart the AMA. Repeated restarts can overheat the motor.

9.3.56 ALARM 58, AMA Internal Fault

Troubleshooting

Contact the Danfoss supplier.

9.3.57 WARNING 59, Current Limit

Cause

The current is higher than the value in *parameter 4-18 Current Limit*.

Troubleshooting

- Ensure that the motor data in *parameters 1-20* to *1-25* is set correctly.
- Increase the current limit if necessary. Ensure that the system can operate safely at a higher limit.

9.3.58 ALARM 60, External Interlock

Cause

A digital input signal indicates a fault condition external to the drive. Within the control compartment, the following 3 relay contacts are connected in series to 1 digit input that is used as a thermal overload relay:

- KFJ.1 monitors the heat within the input power options cabinet.
- KFJ.2 monitors the heat within the output filter cabinet.
- KFJ.3 monitors the heat within the input filter cabinet.

When the thermal switches in any of these cabinets open due to overtemperature, the drive trips on External Interlock [A60].

Troubleshooting

- Open the control compartment and check for any lights in relays KFJ.1, KFJ.2, and KFJ.3. If no lights are present, check for other external interlocks.
- Clear the external fault condition.
- To resume normal operation, apply 24 V DC to the terminal programmed for external interlock.
- Reset the drive.

9.3.59 WARNING/ALARM 61, Feedback Error

Cause

An error between calculated speed and speed measurement from feedback device.

Troubleshooting

- Check the settings for warning/alarm/disabling in *parameter 4-30 Motor Feedback Loss Function*.
- Set the tolerable feedback loss time in *parameter 4-32 Motor Feedback Loss Timeout*.

9.3.60 WARNING 62, Output Frequency at Maximum Limit

Cause

The output frequency has reached the value set in *parameter 4-19 Max Output Frequency*.

Troubleshooting

- Check the application for possible causes.
- Increase the output frequency limit. Be sure that the system can operate safely at a higher output frequency.

The warning clears when the output drops below the maximum limit.

9.3.61 ALARM 63, Mechanical Brake Low

Cause

The actual motor current has not exceeded the release brake current within the start delay time window.

9.3.62 WARNING 64, Voltage Limit

Cause

The load and speed combination demands a motor voltage higher than the actual DC-link voltage.

9.3.63 WARNING/ALARM 65, Control Card Overtemperature

Cause

The cutout temperature of the control card has exceeded the upper limit.

Troubleshooting

- Check that the ambient operating temperature is within the limits.
- Check the fan operation.
- Check the control card.

9.3.64 WARNING 66, Heat Sink Temperature Low

Cause

The drive is too cold to operate. This warning is based on the temperature sensor in the IGBT module.

Troubleshooting

- Increase the ambient temperature of the unit.
- Supply a trickle amount of current to the drive whenever the motor is stopped by setting *parameter 2-00 DC Hold/Preheat Current* to 5% and *parameter 1-80 Function at Stop*.

9.3.65 ALARM 67, Option Module Configuration has Changed

Cause

One or more options have either been added or removed since the last power-down.

Troubleshooting

- Check that the configuration change is intentional and reset the unit.

9.3.66 ALARM 68, Safe Stop Activated

Cause

Safe Torque Off (STO) has been activated.

Troubleshooting

- To resume normal operation, apply 24 V DC to terminal 37, then send a reset signal (via bus, digital, or by pressing [Reset]).

9.3.67 ALARM 69, Power Card Temperature

Cause

The temperature sensor on the power card is either too hot or too cold.

Troubleshooting

- Check that the ambient operating temperature is within the limits.
- Check for clogged filters.
- Check fan operation.
- Check the power card.

9.3.68 ALARM 70, Illegal FC Configuration

Cause

The control card and power card are incompatible.

Troubleshooting

- To check compatibility, contact the Danfoss supplier with the type code from the unit nameplate and the part numbers on the cards.

9.3.69 ALARM 71, PTC 1 Safe Stop

Cause

Because the motor is too warm, the VLT® PTC Thermistor Card MCB 112 activated the Safe Torque Off (STO).

Troubleshooting

- Once the motor temperature reaches an acceptable level and the digital input from MCB 112 is deactivated,send a reset signal via bus or digital I/O, or press [Reset].

9.3.70 ALARM 72, Dangerous Failure

Cause

Safe Torque Off (STO) with trip lock.

Troubleshooting

An unexpected combination of STO commands has occurred:

- VLT® PTC Thermistor Card MCB 112 enables X44/10, but STO is not enabled.
- MCB 112 is the only device using STO (specified through selection *[4] PTC 1 alarm* or *[5] PTC 12 warning* in *parameter 5-19 Terminal 37 Safe Stop*). STO is activated, but X44/10 is not activated.

9.3.71 WARNING 73, Safe Stop Auto Restart

Cause

STO activated.

Troubleshooting

- With automatic restart enabled, the motor can start when the fault is cleared.

9.3.72 ALARM 74, PTC Thermistor

Cause

The PTC is not working. Alarm is related to VLT® PTC Thermistor Card MCB 112.

9.3.73 ALARM 75, Illegal Profile Sel.

Cause

Do not write the parameter value while the motor is running.

Troubleshooting

- Stop the motor before writing the MCO profile to *parameter 8-10 Control Word Profile*.

9.3.74 Warning 76, Power Unit Setup

Cause

The required number of power units do not match the detected number of active power units.

Troubleshooting

- When replacing an F-frame module, this will occur if the power specific data in the module power card does not match the rest of the drive. Please confirm the spare part and its power card are the correct part number.

9.3.75 WARNING 77, Reduced Power Mode

Cause

The drive is operating in reduced power mode (less than allowed number of inverter sections). The warning is generated on power cycle when the drive is set to run with fewer inverters and remains on.

9.3.76 ALARM 78, Tracking Error

Cause

The difference between setpoint value and actual value exceeds the value in *parameter 4-35 Tracking Error*.

Troubleshooting

- Disable the function or select an alarm/warning in *parameter 4-34 Tracking Error Function*.
- Investigate the mechanics around the load and motor. Check feedback connections from motor encoder to drive.
- Select motor feedback function in *parameter 4-30 Motor Feedback Loss Function*.
- Adjust the tracking error band in *parameter 4-35 Tracking Error* and *parameter 4-37 Tracking Error Ramping*.

9.3.77 ALARM 79, Illegal Power Section Configuration

Cause

The scaling card has an incorrect part number or is not installed. The MK102 connector on the power card could not be installed.

9.3.78 ALARM 80, Drive Initialized to Default Value

Cause

Parameter settings are initialized to default settings after a manual reset. To clear the alarm, reset the unit.

9.3.79 ALARM 81, CSIV Corrupt

Cause

The CSIV file has syntax errors.

9.3.80 ALARM 82, CSIV Parameter Error

Cause

CSIV failed to initialize a parameter.

9.3.81 ALARM 83, Illegal Option Combination

Cause

The mounted options are incompatible.

9.3.82 ALARM 84, No Safety Option

Cause

The safe option was removed without applying a general reset.

Troubleshooting

Reconnect the safety option.

9.3.83 ALARM 85, Dang Fail PB

Cause

PROFIBUS/PROFIsafe error.

9.3.84 ALARM 88, Option Detection

Cause

A change in the option layout is detected. *Parameter 14-89 Option Detection* is set to *[0] Frozen configuration* and the option layout has been changed.

Troubleshooting

- To apply the change, enable option layout changes in *parameter 14-89 Option Detection*.
- Alternatively, restore the correct option configuration.

9.3.85 WARNING 89, Mechanical Brake Sliding

Cause

The hoist brake monitor detects a motor speed exceeding 10 RPM.

9.3.86 ALARM 90, Feedback Monitor

Troubleshooting

- Check the connection to the encoder/resolver option and, if necessary, replace the VLT® Encoder Input MCB 102 or VLT® Resolver Input MCB 103.

9.3.87 ALARM 91, Analog Input 54 Wrong Settings

Troubleshooting

- Set switch S202 in position OFF (voltage input) when a KTY sensor is connected to analog input terminal 54.

9.3.88 ALARM 99, Locked Rotor

Cause

9.3.89 WARNING/ALARM 104, Mixing Fan Fault

Cause

The fan is not operating. The fan monitor checks that the fan is spinning at power-up or whenever the mixing fan is turned on. The mixing fan fault can be configured as a warning or an alarm in *parameter 14-53 Fan Monitor*.

Troubleshooting

- Cycle power to the drive to determine if the warning/alarm returns.

9.3.90 WARNING/ALARM 122, Mot. Rotat. Unexp.

Cause

The drive performs a function that requires the motor to be at standstill, for example DC hold for PM motors.

9.3.91 WARNING 163, ATEX ETR Cur.Lim.Warning

Cause

The drive has run above the characteristic curve for more than 50 s. The warning is activated at 83% and deactivated at 85% of the allowed thermal overload.

9.3.92 ALARM 164, ATEX ETR Cur.Lim.Alarm

Cause

Running above the characteristic curve for more than 60 s within a period of 600 s activates the alarm, and the drive trips.

9.3.93 WARNING 165, ATEX ETR Freq.Lim.Warning

Cause

The drive has run for more than 50 s below the allowed minimum frequency (*parameter 1-98 ATEX ETR Interpol. Points Freq.*).

9.3.94 ALARM 166, ATEX ETR Freq.Lim.Alarm

The drive has run for more than 60 s (in a period of 600 s) below the allowed minimum frequency (*parameter 1-98 ATEX ETR Interpol. Points. Freq.*).

9.3.95 ALARM 244, Heat Sink Temperature

Cause

The maximum temperature of the heat sink has been exceeded. The temperature fault cannot reset until the temperature drops below the defined heat sink temperature. The trip and reset points are different based on the power size. This alarm is equivalent to *Alarm 29, Heat Sink Temp*.

Troubleshooting

Check for the following:

- Ambient temperature too high.
- Motor cables too long.
- Incorrect airflow clearance above or below the AC drive.
- Blocked airflow around the unit.
- Damaged heat sink fan.
- Dirty heat sink.

9.3.96 WARNING 251, New Typecode

Cause

The power card or other components have been replaced, and the typecode has changed.

9.3.97 ALARM 421, Temperature Fault

Cause

A fault caused by the on-board temperature sensor is detected on the fan power card.

Troubleshooting

- Check wiring.
- Check the on-board temperture sensor.
- Replace fan power card.

9.3.98 ALARM 423, FPC Updating

Cause

The alarm is generated when the fan power card reports it has an invalid PUD. The control card attempts to update the PUD. A subsequent alarm can result depending on the update. See *Alarm 424, FPC Update Successful* and *Alarm 425 FPC Update Failure*.

9.3.99 ALARM 424, FPC Update Successful

Cause

This alarm is generated when the control card has successfully updated the fan power card PUD.

Troubleshooting

- Press [Reset] to stop the alarm.

9.3.100 ALARM 425, FPC Update Failure

Cause

This alarm is generated after the control card failed to update the fan power card PUD.

Troubleshooting

- Check the fan power card wiring.
- Replace fan power card.
- Contact supplier.

9.3.101 ALARM 426, FPC Config

Cause

The number of found fan power cards do not match the number of configured fan power cards. See *parameter group 15-6* Option Ident* for the number of configured fan power cards.

Troubleshooting

- Check fan power card wiring.
- Replace fan power card.

9.3.102 ALARM 427, FPC Supply

Cause

Supply voltage fault (5 V, 24 V, or 48 V) on fan power card is detected.

Troubleshooting

- Check fan power card wiring.
- Replace fan power card.

9.4 Troubleshooting

Table 77: Troubleshooting

Symptom	Possible cause	Test	Solution
Display dark/No function	Missing input power.	See 6.1 Pre-start Check List.	Check the input power source.
	Missing or open fuses.	See *Open power fuses* in this table for possible causes.	Follow the recommendations provided.
	No power to the LCP.	Check the LCP cable for proper connection or damage.	Replace the faulty LCP or connection cable.
	Short-circuit on control voltage (terminal 12 or 50) or at control terminals.	Check the 24 V control voltage supply for terminal 12/13 to 20–39, or 10 V supply for terminals 50–55.	Wire the terminals properly.
	Incompatible LCP (LCP from VLT® 2800 or 5000/6000/8000/FCD or FCM).	–	Use only LCP 101 (P/N 130B1124) or LCP 102 (P/N. 130B1107).
	Wrong contrast setting.	–	Press [Status] + [▲]/[▼] to adjust the contrast.
	Display (LCP) is defective.	Test using a different LCP.	Replace the faulty LCP or connection cable.
	Internal voltage supply fault or SMPS is defective.	–	Contact supplier.
Intermittent display	Overloaded supply (SMPS) due to improper control wiring or a fault within the AC drive.	To rule out a problem in the control wiring, disconnect all control wiring by removing the terminal blocks.	If the display stays lit, the problem is in the control wiring. Check the wiring for shorts or incorrect connections. If the display continues to cut out, follow the procedure for *Display dark\No function*.

Symptom	Possible cause	Test	Solution
Motor not running	Service switch open or missing motor connection.		Connect the motor and check the service switch.
	No mains power with 24 V DC option card.		Apply mains power.
	LCP stop.		Depending on the operating mode, press [Auto On] or [Hand On].
	Missing start signal (Standby).		Apply a valid start signal.
	Motor coast signal active (Coasting).		Apply 24 V on terminal 27 or program this terminal to *[0] No operation*.
	Wrong reference signal source.	Check reference signal: • Local • Remote or bus reference? • Preset reference active? • Terminal connection correct? • Scaling of terminals correct? • Reference signal available?	Program correct settings. Check *parameter 3-13 Reference Site*. Set preset reference active in *parameter group 3-1* References*. Check for correct wiring. Check scaling of terminals. Check reference signal.
Motor running in wrong direction	Motor rotation limit.	Check that *parameter 4-10 Motor Speed Direction* is programmed correctly.	Program correct settings.
	Active reversing signal.	Check if a reversing command is programmed for the terminal in *parameter group 5-1* Digital inputs*.	Deactivate reversing signal.
	Wrong motor phase connection.	–	See 7.3.1 Testing Motor Rotation.
Motor is not reaching maximum speed	Frequency limits set wrong.	Check output limits in *parameter 4-13 Motor Speed High Limit [RPM]*, *parameter 4-14 Motor Speed High Limit [Hz]*, and *parameter 4-19 Max Output Frequency*.	Program correct limits.
	Reference input signal not scaled correctly.	Check reference input signal scaling in *parameter group 6-0* Analog I/O mode* and *parameter group 3-1* References*.	Program correct settings.
Motor speed unstable	Possible incorrect parameter settings.	Check the settings of all motor parameters, including all motor compensation settings. For closed-loop operation, check PID settings.	Check settings in *parameter group 1-6* Load Depen. Setting*. For closed-loop operation, check settings in *parameter group 20-0* Feedback*.
Motor runs rough	Possible overmagnetization.	Check for incorrect motor settings in all motor parameters.	Check motor settings in *parameter groups 1-2* Motor data*, *1-3* Adv Motor Data*, and *1-5* Load Indep. Setting*.
Motor does not brake	Possible incorrect settings in the brake parameters. Ramp-down times may be too short.	Check brake parameters. Check ramp time settings.	Check *parameter groups 2-0* DC Brake* and *3-0* Reference Limits*.

Symptom	Possible cause	Test	Solution
Open power fuses	Phase-to-phase short.	Motor or panel has a short phase-to-phase. Check motor and panel phases for shorts.	Eliminate any shorts detected.
	Motor overload.	Motor is overloaded for the application.	Perform start-up test and verify that motor current is within specifications. If motor current is exceeding the nameplate full load current, the motor can run only with reduced load. Review the specifications for the application.
	Loose connections.	Perform pre-start-up check for loose connections.	Tighten loose connections.
Mains current imbalance greater than 3%	Problem with mains power (see *Alarm 4, Mains phase loss* description).	Rotate input power leads into the 1 position: A to B, B to C, C to A.	If imbalanced leg follows the wire, it is a power problem. Check the mains supply.
	Problem with the AC drive.	Rotate input power leads into the AC drive 1 position: A to B, B to C, C to A.	If the imbalanced leg stays on same input terminal, it is a problem with the AC drive. Contact the supplier.
Motor current imbalance greater than 3%	Problem with motor or motor wiring.	Rotate output motor cables 1 position: U to V, V to W, W to U.	If the imbalanced leg follows the wire, the problem is in the motor or motor wiring. Check motor and motor wiring.
	Problem with AC drive.	Rotate output motor cables 1 position: U to V, V to W, W to U.	If the imbalanced leg stays on same output terminal, it is a problem with the unit. Contact the supplier.
AC drive acceleration problems	Motor data are entered incorrectly.	If warnings or alarms occur, refer to the Warnings and Alarms section. Check that motor data are entered correctly.	Increase the ramp-up time in *parameter 3-41 Ramp 1 Ramp Up Time*. Increase current limit in *parameter 4-18 Current Limit*. Increase torque limit in *parameter 4-16 Torque Limit Motor Mode*.
AC drive deceleration problems	Motor data are entered incorrectly.	If warnings or alarms occur, refer to the Warnings and Alarms section. Check that motor data are entered correctly.	Increase the ramp-down time in *parameter 3-42 Ramp 1 Ramp Down Time*. Enable overvoltage control in *parameter 2-17 Over-voltage Control*.

10 Specifications

10.1 Electrical Data

10.1.1 Electrical Data, 380–480 V AC

Table 78: Electrical Data, Mains Supply 3x380–480 V AC

FC 202	N110		N132		N160	
High/normal overload High overload=150% or 160% torque for a duration of 60 s. Normal overload=110% torque for a duration of 60 s.	**HO**	**NO**	**HO**	**NO**	**HO**	**NO**
Typical shaft output at 400 V [kW]	90	110	110	132	132	160
Typical shaft output at 460 V [hp]	125	150	150	200	200	250
Typical shaft output at 480 V [kW]	110	132	132	160	160	200
Enclosure size	D9h		D9h		D9h	
Output current (3-phase)						
Continuous (at 400 V) [A]	177	212	212	260	260	315
Intermittent (60 s overload) (at 400 V) [A]	266	233	318	286	390	347
Continuous (at 460/480 V) [A]	160	190	190	240	240	302
Intermittent (60 s overload) (at 460/480 V) [A]	240	209	285	264	360	332
Continuous kVA (at 400 V) [kVA]	123	147	147	180	180	218
Continuous kVA (at 460 V) [kVA]	127	151	151	191	191	241
Continuous kVA (at 480 V) [kVA]	139	165	165	208	208	262
Maximum input current						
Continuous (at 400 V) [A]	171	204	204	251	251	304
Continuous (at 460/480 V) [A]	154	183	183	231	231	291
Maximum number and size of cables per phase						
- Mains [mm^2 (AWG)]	2x95 (2x3/0 mcm)		2x95 (2x3/0 mcm)		2x95 (2x3/0 mcm)	
- Mains with disconnect [mm^2 (AWG)]	2x95 (2x3/0 mcm)		2x95 (2x3/0 mcm)		2x95 (2x3/0 mcm)	
- Mains with fusible disconnect [mm^2 (AWG)]	2x95 (2x3/0 mcm)		2x95 (2x3/0 mcm)		2x95 (2x3/0 mcm)	
- Mains with contactor [mm^2 (AWG)]	2x95 (2x3/0 mcm)		2x95 (2x3/0 mcm)		2x95 (2x3/0 mcm)	
- Motor [mm^2 (AWG)]	2x95 (2x3/0 mcm)		2x95 (2x3/0 mcm)		2x95 (2x3/0 mcm)	
Drive module power loss at 400 V [W] *(1) (2) (3)*	2031	2559	2289	2954	2923	3770
Drive module power loss at 460 V [W] *(1) (2) (3)*	1828	2261	2051	2724	2089	3628
Drive efficiency *(2)*	0.98		0.98		0.98	
Output frequency [Hz] *(4)*	0–590		0–590		0–590	

FC 202	N110	N132	N160
Heat sink overtemperature trip [°C (°F)]	110 (230)	110 (230)	110 (230)
Control card overtemperature trip [°C (°F)]	75 (167)	75 (167)	75 (167)
PHF overtemperature trip [°C (°F)]	150 (302)	150 (302)	150 (302)
dU/dt filter overtemperature trip [°C (°F)]	150 (302)	150 (302)	150 (302)
Sine-wave filter overtemperature trip [°C (°F)]	150 (302)	150 (302)	150 (302)

[1] *Typical power loss is at normal conditions and expected to be within ±15% (tolerance relates to variety in voltage and cable conditions.) These values are based on a typical motor efficiency (IE/IE3 border line). Lower efficiency motors add to the power loss in the drive. Applies to dimensioning of drive cooling. If the switching frequency is higher than the default setting, the power losses can increase. LCP and typical control card power consumptions are included. For power loss data according to EN 50598-2, refer to drives.danfoss.com/knowledge-center/energy-efficiency-directive/#/. Options and customer load can add up to 30 W to the losses, though usually a fully loaded control card and options for slots A and B each add only 4 W.*

[2] *Measured using 5 m (16.4 ft) shielded motor cables at rated load and rated frequency. Efficiency measured at nominal current. For energy efficiency class, see the Ambient Conditions section. For part load losses, see drives.danfoss.com/knowledge-center/energy-efficiency-directive/#/.*

[3] *See also Input Power Option Losses.*

[4] *If using an output filter, the output frequency is limited further. See the Motor Output (U, V, W) section.*

Table 79: Electrical Data, Mains Supply 3x380–480 V AC

FC 202	N200		N250		N315	
High/normal overload High overload=150% or 160% torque for a duration of 60 s. Normal overload=110% torque for a duration of 60 s.	**HO**	**NO**	**HO**	**NO**	**HO**	**NO**
Typical shaft output at 400 V [kW]	160	200	200	250	250	315
Typical shaft output at 460 V [hp]	250	300	300	350	350	450
Typical shaft output at 480 V [kW]	200	250	250	315	315	355
Enclosure size	D10h		D10h		D10h	
Output current (3-phase)						
Continuous (at 400 V) [A]	315	395	395	480	480	588
Intermittent (60 s overload) (at 400 V) [A]	473	435	593	528	720	647
Continuous (at 460/480 V) [A]	302	361	361	443	443	535
Intermittent (60 s overload) (at 460/480 V) [A]	453	397	542	487	665	589
Continuous kVA (at 400 V) [kVA]	218	274	274	333	333	407
Continuous kVA (at 460 V) [kVA]	241	288	288	353	353	426
Continuous kVA (at 480 V) [kVA]	262	313	313	384	384	463
Maximum input current						
Continuous (at 400 V) [A]	304	381	381	463	463	567
Continuous (at 460/480 V) [A]	291	348	348	427	427	516
Maximum number and size of cables per phase						
- Mains [mm^2 (AWG)]	2x185 (2x350 mcm)		2x185 (2x350 mcm)		2x185 (2x350 mcm)	

FC 202	N200		N250		N315	
- Mains with disconnect [mm^2 (AWG)]	2x185 (2x350 mcm)		2x185 (2x350 mcm)		2x185 (2x350 mcm)	
- Mains with fusible disconnect [mm^2 (AWG)]	2x185 (2x350 mcm)		2x185 (2x350 mcm)		2x185 (2x350 mcm)	
- Mains with contactor [mm^2 (AWG)]	2x185 (2x350 mcm)		2x185 (2x350 mcm)		2x185 (2x350 mcm)	
- Mains [mm^2 (AWG)]	2x185 (2x350 mcm)		2x185 (2x350 mcm)		2x185 (2x350 mcm)	
Drive module power loss at 400 V [W] [(1) (2) (3)]	3093	4116	4039	5137	5005	6674
Drive module power loss at 460 V [W] [(1) (2) (3)]	2872	3569	3575	4566	4458	5714
Drive efficiency [(2)]	0.98		0.98		0.98	
Output frequency [Hz] [(4)]	0–590		0–590		0–590	
Heat sink overtemperature trip [°C (°F)]	110 (230)		110 (230)		110 (230)	
Control card overtemperature trip [°C (°F)]	80 (176)		80 (176)		80 (176)	
PHF overtemperature trip [°C (°F)]	150 (302)		150 (302)		150 (302)	
dU/dt filter overtemperature trip [°C (°F)]	150 (302)		150 (302)		150 (302)	
Sine-wave filter overtemperature trip [°C (°F)]	150 (302)		150 (302)		150 (302)	

[1] *Typical power loss is at normal conditions and expected to be within ±15% (tolerance relates to variety in voltage and cable conditions.) These values are based on a typical motor efficiency (IE/IE3 border line). Lower efficiency motors add to the power loss in the drive. Applies to dimensioning of drive cooling. If the switching frequency is higher than the default setting, the power losses can increase. LCP and typical control card power consumptions are included. For power loss data according to EN 50598-2, refer to drives.danfoss.com/knowledge-center/energy-efficiency-directive/#/. Options and customer load can add up to 30 W to the losses, though usually a fully loaded control card and options for slots A and B each add only 4 W.*

[2] *Measured using 5 m (16.4 ft) shielded motor cables at rated load and rated frequency. Efficiency measured at nominal current. For energy efficiency class, see the Ambient Conditions section. For part load losses, see drives.danfoss.com/knowledge-center/energy-efficiency-directive/#/.*

[3] *See also Input Power Option Losses.*

[4] *If using an output filter, the output frequency is limited further. See the Motor Output (U, V, W) section.*

Table 80: Electrical Data, Mains Supply 3x380–480 V AC

FC 202	N355		N400		N450	
High/normal overload High overload=150% or 160% torque for a duration of 60 s. Normal overload=110% torque for a duration of 60 s.	**HO**	**NO**	**HO**	**NO**	**HO**	**NO**
Typical shaft output at 400 V [kW]	315	355	355	400	400	450
Typical shaft output at 460 V [hp]	450	500	500	600	550	600
Typical shaft output at 480 V [kW]	355	400	400	500	500	530
Enclosure size	E5h		E5h		E5h	
Output current (3-phase)						
Continuous (at 400 V) [A]	600	658	658	745	695	800
Intermittent (60 s overload) (at 400 V) [A]	900	724	987	820	1043	880
Continuous (at 460/480 V) [A]	540	590	590	678	678	730
Intermittent (60 s overload) (at 460/480 V) [A]	810	649	885	746	1017	803

FC 202	N355		N400		N450	
Continuous kVA (at 400 V) [kVA]	416	456	456	516	482	554
Continuous kVA (at 460 V) [kVA]	430	470	470	540	540	582
Continuous kVA (at 480 V) [kVA]	468	511	511	587	587	632
Maximum input current						
Continuous (at 400 V) [A]	578	634	634	718	670	771
Continuous (at 460/480 V) [A]	520	569	569	653	653	704
Maximum number and size of cables per phase						
- Mains [mm^2 (AWG)]	4x120 (4x250 mcm)		4x120 (4x250 mcm)		4x120 (4x250 mcm)	
- Mains with disconnect [mm^2 (AWG)]	4x120 (4x250 mcm)		4x120 (4x250 mcm)		4x120 (4x250 mcm)	
- Mains with fusible disconnect [mm^2 (AWG)]	4x120 (4x250 mcm)		4x120 (4x250 mcm)		4x120 (4x250 mcm)	
- Mains with contactor [mm^2 (AWG)]	4x120 (4x250 mcm)		4x120 (4x250 mcm)		4x120 (4x250 mcm)	
- Motor [mm^2 (AWG)]	4x120 (4x250 mcm)		4x120 (4x250 mcm)		4x120 (4x250 mcm)	
Drive module power loss at 400 V [W] *(1) (2) (3)*	6178	6928	6851	8036	7297	8783
Drive module power loss at 460 V [W] *(1) (2) (3)*	5322	5910	5846	6933	7240	7969
Drive efficiency *(2)*	0.98		0.98		0.98	
Output frequency [Hz] *(4)*	0–590		0–590		0–590	
Heat sink overtemperature trip [°C (°F)]	110 (230)		110 (230)		110 (230)	
Control card overtemperature trip [°C (°F)]	80 (176)		80 (176)		80 (176)	
PHF overtemperature trip [°C (°F)]	150 (302)		150 (302)		150 (302)	
dU/dt filter overtemperature trip [°C (°F)]	150 (302)		150 (302)		150 (302)	
Sine-wave filter overtemperature trip [°C (°F)]	150 (302)		150 (302)		150 (302)	

[1] *Typical power loss is at normal conditions and expected to be within ±15% (tolerance relates to variety in voltage and cable conditions.) These values are based on a typical motor efficiency (IE/IE3 border line). Lower efficiency motors add to the power loss in the drive. Applies to dimensioning of drive cooling. If the switching frequency is higher than the default setting, the power losses can increase. LCP and typical control card power consumptions are included. For power loss data according to EN 50598-2, refer to drives.danfoss.com/knowledge-center/energy-efficiency-directive/#/. Options and customer load can add up to 30 W to the losses, though usually a fully loaded control card and options for slots A and B each add only 4 W.*

[2] *Measured using 5 m (16.4 ft) shielded motor cables at rated load and rated frequency. Efficiency measured at nominal current. For energy efficiency class, see the Ambient Conditions section. For part load losses, see drives.danfoss.com/knowledge-center/energy-efficiency-directive/#/.*

[3] *See also Input Power Option Losses.*

[4] *If using an output filter, the output frequency is limited further. See the Motor Output (U, V, W) section.*

Table 81: Electrical Data, Mains Supply 3x380–480 V AC

FC 202	N500		N560	
High/normal overload High overload=150% or 160% torque for a duration of 60 s. Normal overload=110% torque for a duration of 60 s.	**HO**	**NO**	**HO**	**NO**
Typical shaft output at 400 V [kW]	450	500	500	560

FC 202	N500		N560	
Typical shaft output at 460 V [hp]	600	650	650	750
Typical shaft output at 480 V [kW]	530	560	560	630
Enclosure size	E6h		E6h	
Output current (3-phase)				
Continuous (at 400 V) [A]	800	880	880	990
Intermittent (60 s overload) (at 400 V) [A]	1200	968	1320	1089
Continuous (at 460/480 V) [A]	730	780	780	890
Intermittent (60 s overload) (at 460/480 V) [A]	1095	858	1170	979
Continuous kVA (at 400 V) [kVA]	554	610	610	686
Continuous kVA (at 460 V) [kVA]	582	621	621	709
Continuous kVA (at 480 V) [kVA]	632	675	675	771
Maximum input current				
Continuous (at 400 V) [A]	771	848	848	954
Continuous (at 460/480 V) [A]	704	752	752	858
Maximum number and size of cables per phase				
- Mains [mm^2 (AWG)]	4x185 (4x350 mcm)		4x185 (4x350 mcm)	
- Mains with disconnect [mm^2 (AWG)]	4x185 (4x350 mcm)		4x185 (4x350 mcm)	
- Mains with fusible disconnect [mm^2 (AWG)]	4x185 (4x350 mcm)		4x185 (4x350 mcm)	
- Mains with contactor [mm^2 (AWG)]	4x185 (4x350 mcm)		4x185 (4x350 mcm)	
- Motor [mm^2 (AWG)]	4x185 (4x350 mcm)		4x185 (4x350 mcm)	
Drive module power loss at 400 V [W] *(1) (2) (3)*	8352	9473	9449	11102
Estimated power loss at 460 V [W] *(1) (2) (3)*	7182	7809	7771	9236
Drive efficiency *(2)*	0.98		0.98	
Output frequency [Hz] *(4)*	0–590		0–590	
Heat sink overtemperature trip [°C (°F)]	110 (230)		100 (212)	
Control card overtemperature trip [°C (°F)]	80 (176)		80 (176)	
PHF overtemperature trip [°C (°F)]	150 (302)		150 (302)	
dU/dt filter overtemperature trip [°C (°F)]	150 (302)		150 (302)	
Sine-wave filter overtemperature trip [°C (°F)]	150 (302)		150 (302)	

[1] *Typical power loss is at normal conditions and expected to be within ±15% (tolerance relates to variety in voltage and cable conditions.) These values are based on a typical motor efficiency (IE/IE3 border line). Lower efficiency motors add to the power loss in the drive. Applies to dimensioning of drive cooling. If the switching frequency is higher than the default setting, the power losses can increase. LCP and typical control card power consumptions are included. For power loss data according to EN 50598-2, refer to drives.danfoss.com/knowledge-center/energy-efficiency-directive/#/. Options and customer load can add up to 30 W to the losses, though usually a fully loaded control card and options for slots A and B each add only 4 W.*

[2] *Measured using 5 m (16.4 ft) shielded motor cables at rated load and rated frequency. Efficiency measured at nominal current. For energy efficiency class, see the Ambient Conditions section. For part load losses, see drives.danfoss.com/knowledge-center/energy-efficiency-directive/#/.*

[3] *See also Input Power Option Losses.*

[4] *If using an output filter, the output frequency is limited further. See the Motor Output (U, V, W) section.*

10.1.2 Electrical Data, 525–690 V AC

Table 82: Electrical Data, Mains Supply 3x525–690 V AC

FC 202	N110		N132		N160		N200	
High/normal overload High overload=150% or 160% torque for a duration of 60 s. Normal overload=110% torque for a duration of 60 s.	**HO**	**NO**	**HO**	**NO**	**HO**	**NO**	**HO**	**NO**
Typical shaft output at 550 V [kW]	75	90	90	110	110	132	132	160
Typical shaft output at 575 V [hp]	100	125	125	150	150	200	200	250
Typical shaft output at 690 V [kW]	90	110	110	132	132	160	160	200
Enclosure size	D9h		D9h		D9h		D10h	
Output current (3-phase)								
Continuous (at 550 V) [A]	113	137	137	162	162	201	201	253
Intermittent (60 s overload) (at 550 V) [A]	170	151	206	178	243	221	301	278
Continuous (at 575/690 V) [A]	108	131	131	155	155	192	192	242
Intermittent (60 s overload) (at 575/690 V) [A]	162	144	197	171	233	211	288	266
Continuous kVA (at 550 V) [kVA]	103	125	125	147	147	183	183	230
Continuous kVA (at 575 V) [kVA]	108	131	131	154	154	191	191	241
Continuous kVA (at 690 V) [kVA]	129	157	157	185	185	230	229	289
Maximum input current								
Continuous (at 525 V) [A]	109	132	132	156	156	193	193	244
Continuous (at 575/690 V) [A]	104	126	126	149	149	185	185	233
Maximum number and size of cables per phase								
- Mains [mm^2 (AWG)]	2x95 (2x3/0 mcm)		2x95 (2x3/0 mcm)		2x95 (2x3/0 mcm)		2x185 (2x350 mcm)	
- Mains with disconnect [mm^2 (AWG)]	2x95 (2x3/0 mcm)		2x95 (2x3/0 mcm)		2x95 (2x3/0 mcm)		2x185 (2x350 mcm)	
- Mains with fusible disconnect [mm^2 (AWG)]	2x95 (2x3/0 mcm)		2x95 (2x3/0 mcm)		2x95 (2x3/0 mcm)		2x185 (2x350 mcm)	
- Mains with contactor [mm^2 (AWG)]	2x95 (2x3/0 mcm)		2x95 (2x3/0 mcm)		2x95 (2x3/0 mcm)		2x185 (2x350 mcm)	
- Motor [mm^2 (AWG)]	2x95 (2x3/0 mcm)		2x95 (2x3/0 mcm)		2x95 (2x3/0 mcm)		2x185 (2x350 mcm)	
Drive module power loss at 600 V [W] *(1) (2) (3)*	1430	1740	1742	2101	2080	2649	2361	3074
Drive module power loss at 690 V [W] *(1) (2) (3)*	1480	1798	1800	2167	2159	2740	2446	3175
Drive efficiency *(2)*	0.98		0.98		0.98		0.98	
Output frequency [Hz] *(4)*	0–590		0–590		0–590		0–590	

FC 202	N110	N132	N160	N200
Heat sink overtemperature trip [°C (°F)]	110 (230)	110 (230)	110 (230)	110 (230)
Control card overtemperature trip [°C (°F)]	80 (176)	80 (176)	80 (176)	80 (176)
PHF overtemperature trip [°C (°F)]	150 (302)	150 (302)	150 (302)	150 (302)
dU/dt filter overtemperature trip [°C (°F)]	150 (302)	150 (302)	150 (302)	150 (302)
Sine-wave filter overtemperature trip [°C (°F)]	150 (302)	150 (302)	150 (302)	150 (302)

[1] *Typical power loss is at normal conditions and expected to be within ±15% (tolerance relates to variety in voltage and cable conditions.) These values are based on a typical motor efficiency (IE/IE3 border line). Lower efficiency motors add to the power loss in the drive. Applies to dimensioning of drive cooling. If the switching frequency is higher than the default setting, the power losses can increase. LCP and typical control card power consumptions are included. For power loss data according to EN 50598-2, refer to drives.danfoss.com/knowledge-center/energy-efficiency-directive/#/. Options and customer load can add up to 30 W to the losses, though usually a fully loaded control card and options for slots A and B each add only 4 W.*

[2] *Measured using 5 m (16.4 ft) shielded motor cables at rated load and rated frequency. Efficiency measured at nominal current. For energy efficiency class, see the Ambient Conditions section. For part load losses, see drives.danfoss.com/knowledge-center/energy-efficiency-directive/#/.*

[3] *See also Input Power Option Losses.*

[4] *If using an output filter, the output frequency is limited further. See the Motor Output (U, V, W) section.*

Table 83: Electrical Data, Mains Supply 3x525–690 V AC

FC 202	N250		N315		N400	
High/normal overload High overload=150% or 160% torque for a duration of 60 s. Normal overload=110% torque for a duration of 60 s.	**HO**	**NO**	**HO**	**NO**	**HO**	**NO**
Typical shaft output at 550 V [kW]	160	200	200	250	250	315
Typical shaft output at 575 V [hp]	250	300	300	350	350	400
Typical shaft output at 690 V [kW]	200	250	250	315	315	400
Enclosure size	D10h		D10h		D10h	
Output current (3-phase)						
Continuous (at 550 V) [A]	395	303	303	360	360	418
Intermittent (60 s overload) (at 550 V) [A]	380	333	455	396	540	460
Continuous (at 575/690 V) [A]	242	290	290	344	344	400
Intermittent (60 s overload) (at 575/690 V) [A]	363	319	435	378	516	440
Continuous kVA (at 550 V) [kVA]	230	276	276	327	327	380
Continuous kVA (at 575 V) [kVA]	241	289	289	343	343	398
Continuous kVA (at 690 V) [kVA]	289	347	347	411	411	478
Maximum input current						
Continuous (at 525 V) [A]	381	453	413	504	504	574
Continuous (at 575/690 V) [A]	366	434	395	482	482	549
Maximum number and size of cables per phase						
- Mains [mm^2 (AWG)]	2x185 (2x350 mcm)		2x185 (2x350 mcm)		2x185 (2x350 mcm)	

FC 202	N250		N315		N400	
- Mains with disconnect [mm^2 (AWG)]	2x185 (2x350 mcm)		2x185 (2x350 mcm)		2x185 (2x350 mcm)	
- Mains with fusible disconnect [mm^2 (AWG)]	2x185 (2x350 mcm)		2x185 (2x350 mcm)		2x185 (2x350 mcm)	
- Mains with contactor [mm^2 (AWG)]	2x185 (2x350 mcm)		2x185 (2x350 mcm)		2x185 (2x350 mcm)	
- Motor [mm^2 (AWG)]	2x185 (2x350 mcm)		2x185 (2x350 mcm)		2x185 (2x350 mcm)	
Drive module power loss at 600 V [W] (1) (2) (3)	3012	3723	3642	4465	4146	5028
Drive module power loss at 690 V [W] (1) (2) (3)	3123	3851	3771	4614	4258	5155
Drive efficiency (2)	0.98		0.98		0.98	
Output frequency [Hz] (4)	0–590		0–590		0–590	
Heat sink overtemperature trip [°C (°F)]	110 (230)		110 (230)		110 (230)	
Control card overtemperature trip [°C (°F)]	80 (176)		80 (176)		80 (176)	
PHF overtemperature trip [°C (°F)]	150 (302)		150 (302)		150 (302)	
dU/dt filter overtemperature trip [°C (°F)]	150 (302)		150 (302)		150 (302)	
Sine-wave filter overtemperature trip [°C (°F)]	150 (302)		150 (302)		150 (302)	

[1] *Typical power loss is at normal conditions and expected to be within ±15% (tolerance relates to variety in voltage and cable conditions.) These values are based on a typical motor efficiency (IE/IE3 border line). Lower efficiency motors add to the power loss in the drive. Applies to dimensioning of drive cooling. If the switching frequency is higher than the default setting, the power losses can increase. LCP and typical control card power consumptions are included. For power loss data according to EN 50598-2, refer to drives.danfoss.com/knowledge-center/energy-efficiency-directive/#/. Options and customer load can add up to 30 W to the losses, though usually a fully loaded control card and options for slots A and B each add only 4 W.*

[2] *Measured using 5 m (16.4 ft) shielded motor cables at rated load and rated frequency. Efficiency measured at nominal current. For energy efficiency class, see the Ambient Conditions section. For part load losses, see drives.danfoss.com/knowledge-center/energy-efficiency-directive/#/.*

[3] *See also Input Power Option Losses.*

[4] *If using an output filter, the output frequency is limited further. See the Motor Output (U, V, W) section.*

Table 84: Electrical Data, Mains Supply 3x525–690 V AC

FC 202	N450		N500		N560	
High/normal overload High overload=150% or 160% torque for a duration of 60 s. Normal overload=110% torque for a duration of 60 s.	**HO**	**NO**	**HO**	**NO**	**HO**	**NO**
Typical shaft output at 550 V [kW]	315	355	315	400	400	450
Typical shaft output at 575 V [hp]	400	450	400	500	500	600
Typical shaft output at 690 V [kW]	355	450	400	500	500	560
Enclosure size	E5h		E5h		E5h	
Output current (3-phase)						
Continuous (at 550 V) [A]	395	470	429	523	523	596
Intermittent (60 s overload) (at 550 V) [A]	593	517	644	575	785	656
Continuous (at 575/690 V) [A]	380	450	410	500	500	570
Intermittent (60 s overload) (at 575/690 V) [A]	570	495	615	550	750	627

FC 202	N450		N500		N560	
Continuous kVA (at 550 V) [kVA]	376	448	409	498	498	568
Continuous kVA (at 575 V) [kVA]	378	448	408	498	498	568
Continuous kVA (at 690 V) [kVA]	454	538	490	598	598	681
Maximum input current						
Continuous (at 525 V) [A]	381	453	413	504	504	574
Continuous (at 575/690 V) [A]	366	434	395	482	482	549
Maximum number and size of cables per phase						
- Mains [mm^2 (AWG)]	4x120 (4x250 mcm)		4x120 (4x250 mcm)		4x120 (4x250 mcm)	
- Mains with disconnect [mm^2 (AWG)]	4x120 (4x250)		4x120 (4x250)		4x120 (4x250)	
- Mains with fusible disconnect [mm^2 (AWG)]	4x120 (4x250)		4x120 (4x250)		4x120 (4x250)	
- Mains with contactor [mm^2 (AWG)]	4x120 (4x250)		4x120 (4x250)		4x120 (4x250)	
- Motor [mm^2 (AWG)]	4x120 (4x250)		4x120 (4x250)		4x120 (4x250)	
Drive module power loss at 600 V [W] [(1) (2) (3)]	4989	6062	5419	6879	6833	8076
Drive module power loss at 690 V [W] [(1) (2) (3)]	4920	5939	5332	6715	6678	7852
Drive efficiency [(2)]	0.98		0.98		0.98	
Output frequency [Hz] [(4)]	0–590		0–590		0–590	
Heat sink overtemperature trip [°C (°F)]	110 (230)		110 (230)		110 (230)	
Control card overtemperature trip [°C (°F)]	80 (176)		80 (176)		80 (176)	
PHF overtemperature trip [°C (°F)]	150 (302)		150 (302)		150 (302)	
dU/dt filter overtemperature trip [°C (°F)]	150 (302)		150 (302)		150 (302)	
Sine-wave filter overtemperature trip [°C (°F)]	150 (302)		150 (302)		150 (302)	

[1] *Typical power loss is at normal conditions and expected to be within ±15% (tolerance relates to variety in voltage and cable conditions.) These values are based on a typical motor efficiency (IE/IE3 border line). Lower efficiency motors add to the power loss in the drive. Applies to dimensioning of drive cooling. If the switching frequency is higher than the default setting, the power losses can increase. LCP and typical control card power consumptions are included. For power loss data according to EN 50598-2, refer to drives.danfoss.com/knowledge-center/energy-efficiency-directive/#/. Options and customer load can add up to 30 W to the losses, though usually a fully loaded control card and options for slots A and B each add only 4 W.*

[2] *Measured using 5 m (16.4 ft) shielded motor cables at rated load and rated frequency. Efficiency measured at nominal current. For energy efficiency class, see the Ambient Conditions section. For part load losses, see drives.danfoss.com/knowledge-center/energy-efficiency-directive/#/.*

[3] *See also Input Power Option Losses.*

[4] *If using an output filter, the output frequency is limited further. See the Motor Output (U, V, W) section.*

Table 85: Electrical Data, Mains Supply 3x525–690 V AC

FC 202	N630		N710		N800	
High/normal overload High overload=150% or 160% torque for a duration of 60 s. Normal overload=110% torque for a duration of 60 s.	**HO**	**NO**	**HO**	**NO**	**HO**	**NO**
Typical shaft output at 550 V [kW]	450	500	500	560	560	670

FC 202	N630		N710		N800	
Typical shaft output at 575 V [hp]	600	650	650	750	750	950
Typical shaft output at 690 V [kW]	560	630	630	710	710	800
Enclosure size	E5h		E6h		E6h	
Output current (3-phase)						
Continuous (at 550 V) [A]	596	630	659	763	763	889
Intermittent (60 s overload) (at 550 V) [A]	894	693	989	839	1145	978
Continuous (at 575/690 V) [A]	570	630	630	730	730	850
Intermittent (60 s overload) (at 575/690 V) [A]	855	693	945	803	1095	935
Continuous kVA (at 550 V) [kVA]	568	600	628	727	727	847
Continuous kVA (at 575 V) [kVA]	568	627	627	727	727	847
Continuous kVA (at 690 V) [kVA]	681	753	753	872	872	1016
Maximum input current						
Continuous (at 550 V) [A]	574	607	635	735	735	857
Continuous (at 575/690 V) [A]	549	607	607	704	704	819
Maximum number and size of cables per phase						
- Mains [mm^2 (AWG)]	4x120 (4x250 mcm)		4x185 (4x350 mcm)		4x185 (4x350 mcm)	
- Mains with disconnect [mm^2 (AWG)]	4x120 (4x250)		4x185 (4x350 mcm)		4x185 (4x350 mcm)	
- Mains with fusible disconnect [mm^2 (AWG)]	4x120 (4x250)		4x185 (4x350 mcm)		4x185 (4x350 mcm)	
- Mains with contactor [mm^2 (AWG)]	4x120 (4x250)		4x185 (4x350 mcm)		4x185 (4x350 mcm)	
- Motor [mm^2 (AWG)]	4x120 (4x250)		4x185 (4x350 mcm)		4x185 (4x350 mcm)	
Drive module power loss at 600 V [W] *(1) (2) (3)*	8069	9208	8543	10346	10319	12723
Drive module power loss at 690 V [W] *(1) (2) (3)*	7848	8921	8363	10066	10060	12321
Drive efficiency *(2)*	0.98		0.98		0.98	
Output frequency [Hz] *(4)*	0–590		0–590		0–590	
Heat sink overtemperature trip [°C (°F)]	110 (230)		110 (230)		110 (230)	
Control card overtemperature trip [°C (°F)]	80 (176)		80 (176)		80 (176)	
PHF overtemperature trip [°C (°F)]	150 (302)		150 (302)		150 (302)	
dU/dt filter overtemperature trip [°C (°F)]	150 (302)		150 (302)		150 (302)	
Sine-wave filter overtemperature trip [°C (°F)]	150 (302)		150 (302)		150 (302)	

[1] *Typical power loss is at normal conditions and expected to be within ±15% (tolerance relates to variety in voltage and cable conditions.) These values are based on a typical motor efficiency (IE/IE3 border line). Lower efficiency motors add to the power loss in the drive. Applies to dimensioning of drive cooling. If the switching frequency is higher than the default setting, the power losses can increase. LCP and typical control card power consumptions are included. For power loss data according to EN 50598-2, refer to drives.danfoss.com/knowledge-center/energy-efficiency-directive/#/. Options and customer load can add up to 30 W to the losses, though usually a fully loaded control card and options for slots A and B each add only 4 W.*

[2] *Measured using 5 m (16.4 ft) shielded motor cables at rated load and rated frequency. Efficiency measured at nominal current. For energy efficiency class, see the Ambient Conditions section. For part load losses, see drives.danfoss.com/knowledge-center/energy-efficiency-directive/#/.*

[3] *See also Input Power Option Losses.*

[4] *If using an output filter, the output frequency is limited further. See the Motor Output (U, V, W) section.*

10.2 Mains Supply

The unit is suitable for use on a circuit capable of delivering not more than 100 kA short circuit current rating (SCCR) at 480/600 V.

Supply terminals	L1, L2, L3
Supply voltage [1]	380–480/500 V ±10%, 525–690 V ±10%
Supply frequency	50/60 Hz ±5%
Maximum imbalance temporary between mains phases	3.0% of rated supply voltage [2]
True power factor (λ)	≥0.9 nominal at rated load
Displacement power factor (cos Φ)	Near unity (>0.98)
Switching on the input supply L1, L2, L3 (power-ups)	Maximum 1 time/2 minutes
Environment according to EN60664-1	Overvoltage category III/pollution degree 2

[1] *Mains voltage low/mains drop-out: During low mains voltage or a mains drop-out, the drive continues until the DC-link voltage drops below the minimum stop level, which corresponds typically to 15% below the drive's lowest rated supply voltage. Power-up and full torque cannot be expected at mains voltage lower than 10% below the drive's lowest rated supply voltage.*

[2] *Calculations based on UL/IEC61800-3.*

10.3 Motor Output and Motor Data

10.3.1 Motor Output (U, V, W)

Motor output (U, V, W)	
Output voltage	0–100% of supply voltage
Output frequency (without sine-wave filter)	0–590 Hz [1]
Output frequency (with sine-wave filter and no derating)	0–60 Hz without derating
Output frequency (with sine-wave filter and derating)	0–100 Hz
Output frequency in flux mode	0–300 Hz
Switching on output	Unlimited
Ramp times	0.01–3600 s

[1] *Dependent on voltage and power.*

10.3.2 Torque Characteristics

Torque characteristics	
Starting torque (constant torque)	Maximum 160% for 60 s once in 10 minutes [1]
Starting/overload torque (variable torque)	Maximum 110% up to 0.5 s once in 10 minutes [1]
Torque rise time in flux (for 5 kHz f_{sw})	1 ms
Torque rise time in VVC$^+$ (independent of f_{sw})	10 ms

[1] *Percentage relates to the nominal torque.*

10.4 Ambient Conditions

Environment	
Enclosure	IP21/NEMA 1, IP54/NEMA 12
Vibration test	1.0 g
Maximum THDv	10%
Maximum relative humidity	5–93 (IEC 721-3-3); Class 3K3 (non-condensing) during operation
Aggressive environment (IEC 60068-2-43) H_2S test	Class Kd
Ambient temperature	Maximum 50° C (122° F) (24-hour average maximum 45 °C (113 °F)) [1]
Minimum ambient temperature during full-scale operation	0 °C (32 °F) [1]
Minimum ambient temperature at reduced speed performance	-10 °C (14 °F) [1]
Temperature during storage/transport	-25 to +65/70 °C (-13 to +149/158 °F)
Maximum altitude above sea level without derating	1000 m (3280 ft)
EMC standards, Emission	EN 61800-3
EMC standards, Immunity	EN 61800-3
Energy efficiency class [2]	IE2

[1] *For more information on derating, refer to the product-specific design guide.*

[2] *Determined according to EN 50598-2 at:*

- *Rated load.*
- *90% rated frequency.*
- *Switching frequency factory setting.*
- *Switching pattern factory setting.*

10.5 Control Cables

Control cable lengths and cross-sections	
Maximum motor cable length, shielded	150 m (492 ft)
Maximum motor cable length, unshielded	300 m (984 ft)
Maximum cross-section to control terminals, flexible/rigid wire without cable end sleeves	1.5 mm^2/16 AWG
Maximum cross-section to control terminals, flexible wire with cable end sleeves	1 mm^2/18 AWG
Maximum cross-section to control terminals, flexible wire with cable end sleeves with collar	0.5 mm^2/20 AWG
Minimum cross-section to control terminals	0.25 mm^2/24 AWG

For power cables, see 10.1.1 Electrical Data, 380–480 V AC to 10.1.2 Electrical Data, 525–690 V AC.

10.6 Control Input/Output and Control Data

10.6.1 Control Card, USB Serial Communication

USB standard	1.1 (full speed)

USB plug [1]	USB type B plug

[1] *Connection to the PC is carried out via a standard host/device USB cable.*

The USB connection is galvanically isolated from the supply voltage (PELV) and other high-voltage terminals; however, the USB ground connection is not galvanically isolated from ground. Use only an isolated laptop as PC connection to the USB connector on the drive.

10.6.2 STO Terminal XD2.19 (Terminal XD2.19 is Fixed PNP Logic)

STO Terminal XD2.19 [1] [2]	
Voltage level	0–24 V DC
Voltage level, logic 0 PNP	<4 V DC
Voltage level, logic 1 PNP	>20 V DC
Maximum voltage on input	28 V DC
Typical input current at 24 V	50 mA rms
Typical input current at 20 V	60 mA rms
Input capacitance	400 nF

[1] *For more information about Terminal XD2.19 (Terminal 37 on the drive module) and Safe Torque Off, see the design guide.*

[2] *When using a contactor with a DC coil inside with STO, it is important to make a return way for the current from the coil when turning it off. This can be done by using a freewheel diode (or, alternatively, a 30 V or 50 V MOV for quicker response time) across the coil. Typical contactors can be bought with this diode.*

All digital inputs are galvanically isolated from the supply voltage (PELV) and other high-voltage terminals.

10.6.3 Control Card, 24 V DC Output

Terminal number	XD2.10, XD2.11
Output voltage	24 V +1, -3 V
Maximum load	200 mA

The 24 V DC supply is galvanically isolated from the supply voltage (PELV), but has the same potential as the analog and digital inputs and outputs.

10.6.4 Control Card, +10 V DC Output

Terminal number	XD2.6
Output voltage	10.5 V ±0.5 V
Maximum load	15 mA

The 10 V DC supply is galvanically isolated from the supply voltage (PELV) and other high-voltage terminals.

10.6.5 Digital Outputs

Programmable digital/pulse outputs	2
Terminal number [1]	XD2.14, XD2.15

Voltage level at digital/frequency output	0–24 V
Maximum output current (sink or source)	40 mA
Maximum load at frequency output	1 kΩ
Maximum capacitive load at frequency output	10 nF
Minimum output frequency at frequency output	0 Hz
Maximum output frequency at frequency output	32 kHz
Accuracy of frequency output	Maximum error: 0.1% of full scale
Resolution of frequency outputs	12 bit

[1] *Can also be programmed as input.*

The digital output is galvanically isolated from the supply voltage (PELV) and other high-voltage terminals.

10.6.6 Digital Inputs

Programmable digital inputs	4 (6)
Terminal number [(1)]	XD2.12, XD2.13, XD2.14, XD2.15, XD2.16, XD2.17
Logic	PNP or NPN
Voltage level	0–24 V DC
Voltage level, logic 0 PNP	<5 V DC
Voltage level, logic 1 PNP	>10 V DC
Voltage level, logic 0 NPN [(2)]	>19 V DC
Voltage level, logic 1 NPN [(2)]	<14 V DC
Maximum voltage on input	28 V DC
Pulse frequency range	0–110 kHz
(Duty cycle) minimum pulse width	4.5 ms
Input resistance, R_i	Approximately 4 kΩ

[1] *Terminals XD2.14 and XD2.15 can also be programmed as output.*

[2] *Except STO input terminal XD2.19.*

All digital inputs are galvanically isolated from the supply voltage (PELV) and other high-voltage terminals.

10.6.7 Pulse/Encoder Inputs

Programmable pulse/encoder inputs	2/1
Terminal number (pulse inputs)	XD2.15 [(1)], XD2.17
Terminal number (encoder inputs) [(2)]	XD2.16, XD2.17
Maximum frequency at terminals XD2.15, XD2.16, XD2.17 (push-pull driven)	110 kHz
Maximum frequency at terminals XD2.15, XD2.16, XD2.17 (open collector)	5 kHz
Maximum frequency at terminals XD2.15, XD2.16, XD2.17	4 kHz
Voltage level	See *Control Input/Output and Control Data*.
Maximum voltage on input	28 V DC
Input resistance, R_i	Approximately 4 kΩ

Pulse input accuracy (0.1–1 kHz)	Maximum error: 0.1% of full scale
Encoder input accuracy (1–11 kHz)	Maximum error: 0.05% of full scale

[1] *FC 302 only.*

[2] *Encoder inputs: XD2.16=A, XD2.17=B.*

The pulse and encoder inputs (terminals XD2.15, XD2.16, XD2.17) are galvanically isolated from the supply voltage (PELV) and other high-voltage terminals.

10.6.8 Control Characteristics

Resolution of output frequency at 0–590 Hz	±0.003 Hz
Repeat accuracy of precise start/stop (terminals XD2.12, XD2.13)	≤±0.1 ms
System response time (terminals XD2.12, XD2.13, XD2.14, XD2.15, XD2.16, XD2.17)	≤2 ms
Speed control range (open loop)	1:100 of synchronous speed
Speed control range (closed loop)	1:1000 of synchronous speed
Speed accuracy (open loop)	30–4000 RPM: Error ±8 RPM
Speed accuracy (closed loop), depending on resolution of feedback device	0–6000 RPM: Error ±0.15 RPM
Torque control accuracy (speed feedback)	Maximum error ±5% of rated torque

All control characteristics are based on a 4-pole, asynchronous motor.

10.6.9 Relay Outputs

Programmable relay outputs	FC 302: 2
Relay 01 terminal number [(1)]	21–23 (break), 21–22 (make)
Maximum terminal load (AC-1) on 21–23 (NC), 21–22 (NO) (resistive load) [(2) (3)]	240 V AC, 2 A
Maximum terminal load (AC-15) (inductive load @ cosφ 0.4)	240 V AC, 0.2 A
Maximum terminal load (DC-1) on 21–22 (NO), 21–23 (NC) (resistive load)	60 V DC, 1 A
Maximum terminal load (DC-13) (inductive load)	24 V DC, 0.1 A
Relay 02 (FC 302 only) terminal number [(1)]	24–26 (break), 24–25 (make)
Maximum terminal load (AC-1) on 24–25 (NO) (resistive load) [(2) (3)]	400 V AC, 2 A
Maximum terminal load (AC-15) on 24–25 (NO) (inductive load @ cosφ 0.4)	240 V AC, 0.2 A
Maximum terminal load (DC-1) on 24–25 (NO) (resistive load)	80 V DC, 2 A
Maximum terminal load (DC-13) on 24–25 (NO) (inductive load)	24 V DC, 0.1 A
Maximum terminal load (AC-1) on 24–26 (NC) (resistive load)	240 V AC, 2 A
Maximum terminal load (AC-15) on 24–26 (NC) (inductive load @ cosφ 0.4)	240 V AC, 0.2 A
Maximum terminal load (DC-1) on 24–26 (NC) (resistive load)	50 V DC, 2 A
Maximum terminal load (DC-13) on 24–26 (NC) (inductive load)	24 V DC, 0.1 A
Minimum terminal load on 21–23 (NC), 21–22 (NO), 24–26 (NC), 24–25 (NO)	24 V DC 10 mA, 24 V AC 20 mA
Environment according to EN 60664-1	Overvoltage category III/pollution degree 2

[1] *IEC 60947 parts 4 and 5. The relay contacts are galvanically isolated from the rest of the circuit by reinforced isolation (PELV).*

[2] *Overvoltage category II.*

[3] *UL applications 300 V AC 2 A.*

10.6.10 Analog Output

Number of programmable outputs	1
Terminal number	XD2.5
Current range at analog output	0/4 to 20 mA
Maximum load GND - analog output less than	500 Ω
Accuracy on analog output	Maximum error: 0.5% of full scale
Resolution of analog output	12 bit

The analog output is galvanically isolated from the supply voltage (PELV) and other high-voltage terminals.

10.6.11 Control Card, RS485 Serial Communication

Terminal number	XD2.2 (P,TX+, RX+), XD2.3 (N,TX-, RX-)
Terminal number XD2.1	Common for terminals XD2.2 and XD2.3

The RS485 serial communication circuit is galvanically isolated from the supply voltage (PELV).

10.6.12 Control Card Performance

Scan interval	1 ms

10.6.13 Analog Inputs

Number of analog inputs	2
Terminal number	XD2.7, XD2.8
Modes	Voltage or current
Mode select	Switch S201 and switch S202
Voltage mode	Switch S201/switch S202 = OFF (U)
Voltage level	-10 V to +10 V (scaleable)
Input resistance, R_i	Approximately 10 kΩ
Maximum voltage	±20 V
Current mode	Switch S201/S202 = ON (I)
Current level	0/4 to 20 mA (scaleable)
Input resistance, R_i	Approximately 200 Ω
Maximum current	30 mA
Resolution for analog inputs	10 bit (+ sign)
Accuracy of analog inputs	Maximum error 0.5% of full scale
Bandwidth	100 Hz

The analog inputs are galvanically isolated from the supply voltage (PELV) and other high-voltage terminals.

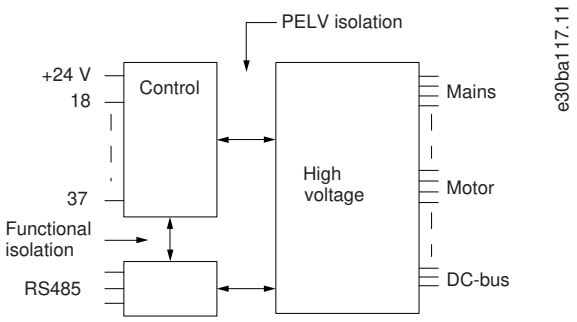

Illustration 71: PELV Isolation

10.7 Filter Specifications

10.7.1 Passive Harmonic Filter Specifications

Phase imbalance	Maximum of 3% (Drives have to be functional up to 8%)
Voltage variation	+10%–15%
Nominal frequency	-2%, +2% (of 50 Hz or 60 Hz) when PHF is installed
Overload capability	150% for 60 s in a period of 10 minutes
Maximum inrush current, drive side	Maximum $5xI_{nom\ drive}$
Maximum inrush current, PHF input side	Maximum $2xI_{nom\ drive}$
Cos of IL at 25% IPHF, N	0.85 Ind
Cos of IL at 50% IPHF, N	0.88 Ind
Cos of IL at 75% IPHF, N	0.92 Ind
Cos of IL at 100% IPHF, N	0.99 Ind
Cos of IL at 160% IPHF, N	0.98 Ind
Power derating	Same as drive

10.7.2 Line Reactor Specifications

All line reactors are equipped with thermal switches and are looped to the enclosed drive for overtemperature protection. For more details, refer to the control compartment section. The line reactor configuration varies depending on the enclosure and voltage required.

Table 86: Line Reactor Configuration for D9h–D10h and E5h–E6h Enclosures, 380–480 V

Enclosure	Model	Line reactor [A]
D9h	N110	312
	N132	312
	N160	425
D10h	N200	425
	N250	2x312
	N315	2x312

Enclosure	Model	Line reactor [A]
E5h	N355	2x425
	N400	2x425
	N450	2x425
E6h	N500	3x425
	N560	3x425

Table 87: Line Reactor Configuration for D9h–D10h and E5h–E6h Enclosures, 525–690 V

Enclosure	Model	Line reactor [A]
D9h	N110	225
	N132	225
	N160	225
D10h	N200	315
	N250	315
	N315	2x225
	N400	2x225
E5h	N450	2x315
	N500	2x315
	N560	2x315
	N630	3x225
E6h	N710	3x315
	N800	3x315

10.7.3 dU/dt Filter Specifications

Voltage rating	3x380–690 V
Nominal current @ 50 Hz	Up to 590 A [(1)]
Motor frequency derating, 50 Hz	Nominal
Motor frequency derating, 60 Hz	Nominal
Motor frequency derating, 100 Hz	0.75 x nominal
Minimum switching frequency	No limit
Maximum switching frequency	Nominal switching frequency
Overload capacity	150% for 60 s, every 10 minutes.
Ambient temperature [°C (°F)]	-10 (14) to +45 (113)
Storage temperature [°C (°F)]	-25 (-13) to +60 (150)
Transport temperature [°C (°F)]	-25 (-13) to +70 (158)
Maximum ambient temperature with derating [°C (°F)]	55 (131)
Maximum altitude without derating [°C (°F)]	–

Noise level	< drive module

[1] *The current ratings for the E5h and E6h enclosures are achieved by filter paralleling.*

Table 88: dU/dt Filter Configurations for D9h–D10h and E5h–E6h Enclosures, 380–480 V

Enclosure	Model	Current rating [A]	Filters required
D9h	N110	261	1
D9h	N132	261	1
D9h	N160	418	1
D10h	N200	418	1
D10h	N250	590	1
D10h	N315	590	1
E5h	N355	418	2
E5h	N400	418	2
E5h	N450	418	2
E6h	N500	590	2
E6h	N560	590	2

Table 89: dU/dt Filter Configurations for D9h–D10h and E5h–E6h Enclosures, 525–690 V

Enclosure	Model	Current rating [A]	Filters required
D9h	N110	144	1
D9h	N132	261	1
D9h	N160	261	1
D10h	N200	418	1
D10h	N250	418	1
D10h	N315	418	1
D10h	N355	418	1
E5h	N400	590	1
E5h	N500	418	2
E5h	N560	418	2
E5h	N630	418	2
E6h	N710	590	2
E6h	N800	590	2

10.7.4 Sine-wave Filter Specifications

Voltage rating	3x380–480 V and 525–690 V AC
Nominal current @ 50 Hz	212 A and 315 A for 380–480 V, 137 A and 222 A for 525–690 V [(1)]

Motor frequency with derating	Up to 150 Hz
Motor frequency without derating	0–70 Hz
Minimum switching frequency	2 kHz for 380–480 V, 1.5 kHz for 525–690 V
Maximum switching frequency	Nominal switching frequency
Overvoltage category	OVC III as defined in IEC61800-5-1
Overload capacity	150% for 60 s every 10 minutes
Ambient temperature [°C (°F)]	-15 (5) to +60 (140)
Storage temperature [°C (°F)]	-40 (-40) to +70 (158)
Transport temperature [°C (°F)]	-40 (-40) to +70 (158)
Altitude during operation	
	100% current (no derating) up to 1000 m (3280 ft)
	1% current derating for each 100 m (328 ft) above 1000 m (3280 ft)
	Maximum 4000 m (13123 ft) with 500 V AC
	Maximum 2000 m (6561 ft) with 690 V AC
Noise level	< 80 dB(A)

[1] *The current ratings for the E5h and E6h enclosures are achieved by filter paralleling.*

10.8 Fuses and Circuit Breakers

10.8.1 Types of Fuses

Panel fuses

Panel fuses are an option for upstream protection, and can be ordered as either a UL class fuse for UL variant or a gG fuse for IEC variant.

Fusible disconnector switch

The fusible disconnector switch is an option that safely isolates the drive from the mains with a fuse switch mounted below the drive module.

Non-fusible disconnector switch

The non-fusible disconnector switch is an option. All units ordered and supplied with a factory-installed, non-fusible disconnect switch require a UL Class fuse to meet 65kA SCCR for the drive system.

Mains contactor

The mains contactor is an option. All units ordered and supplied with a factory-installed contactor require a Class L/J branch circuit fusing to meet the 65kA SCCR for the drive system.

This option makes it possible to connect or disconnect the drive from the mains by using a control switch on the control compartment door or an external switch. The external switch must be wired to terminals XD0. See 5.3 Wiring Schematic for D9h and D10h Enclosed Drives and 5.4 Wiring Schematic for E5h and E6h Enclosed Drives. The mains contactor is supplied with 2 sets of auxiliary contacts (1 normally open and 1 normally closed). They are located on the sides of the contactor. By default, the NO auxiliary contact is wired at the factory and used by the system.

MCCB

With the recommended MCCBs, the SCCR for the drive system can be declared as shown below.

10.8.2 Panel Fuses

Panel fuses are an option for upstream protection, and can be ordered as either a UL class fuse for UL variant or a gG fuse for IEC variant.

Table 90: Panel Fuses for N110K–N315 Models, 380–480 V

	N110	N132	N160	N200	N250	N315
IEC (Type gG)	250 A/500 V	315 A/500 V	355 A/500 V	425 A/500 V	630 A/500 V	630 A/500 V
Mersen P/N	NH1GG50V250	NH2GG50V315	NH2GG50V355	NH3GG50V425	NH3AGG50V630	NH3AGG50V630
UL (Class J/L/T)	300 A/600 V	350 A/600 V	400 A/600 V	500 A/600 V	600 A/600 V	750 A/600 V
Mersen P/N	A4J300	A4J350	A4J400	A4J500	A4J600	AABY750

Table 91: Panel Fuses for N355–N560 Models, 380–480 V

	N355	N400	N450	N500	N560
IEC (Type gG)	800 A/500 V	1000 A/500 V	1000 A/500 V	1000 A/500 V	1250 A/500 V
Mersen P/N	NH4GG50V800	NH4GG50V1000	NH4GG50V1000	NH4GG50V1000	NH4GG50V1250
UL (Class J/L/T)	800 A/600 V	1000 A/600 V	1000 A/600 V	1100 A/600 V	1200 A/600 V
Mersen P/N	A4BY800	A4BY1000	A4BY1000	A4BY1100	A4BY1200

Table 92: Panel Fuses for N110–N315 Models, 525–690 V

	N110	N132	N160	N200	N250	N315
IEC (Type gG)	250 A/690 V	250 A/690 V	250 A/690 V	315 A/690 V	355 A/690 V	425 A/690 V
Mersen P/N	NH2GG69V250	NH2GG69V250	NH2GG69V250	NH2GG69V315	NH3GG69V355	NH3GG69V425
UL (Class J/L/T)	175 A/600 V	200 A/600 V	250 A/600 V	350 A/600 V	400 A/600 V	500 A/600 V
Mersen P/N	A4J175	A4J200	A4J250	A4J350	A4J400	A4J500

Table 93: Panel Fuses for N400–N630 Models, 525–690 V

	N400	N450	N500	N560	N630
IEC (Type gG)	500 A/690 V	500 A/500 V	630 A/500 V	800 A/500 V	800 A/500 V
Mersen P/N	NH3GG69V500	NH3GG69V500	NH4GG69V630	NH4GG69V800	NH4GG69V800
UL (Class J/L/T)	600 A/600 V	600 A/600 V	650 A/600 V	750 A/600 V	800 A/600 V
Mersen P/N	A4J600	A4J600	A4BY650	A4BY750	A4BY800

Table 94: Panel Fuses for N710–N800 Models, 525–690 V

	N710	N800
IEC (Type gG)	1000 A/690 V	1000 A/690 V
ABB P/N	OFAA4AGG1000	OFAA4AGG1000
UL (Class J/L/T)	1000 A/600 V	1100 A/600 V
Mersen P/N	A4BY1000	A4BY1100

10.8.3 Fusible Disconnect Switches

The fusible disconnector switch is an option that safely isolates the drive from the mains with a fuse switch mounted below the drive module. All units ordered and supplied with a factory-installed fusible disconnect switch have a fuse built in to the switch. The fuse has been sized to meet 65kA SCCR for the system. The input voltage and power rating of the drive determines the specific class or gG fuse. The input voltage and power rating are found on the name plate. See 4.1 Items Supplied.

Table 95: Fusible Disconnect Switches for N110–N315 Models, 380–480 V

	N110	N132	N160	N200	N250	N315
IEC	400 A/690 V	400 A/690 V	400 A/690 V	630 A/690 V	630 A/690 V	630 A/690 V
ABB P/N	OS400D30P	OS400D30P	OS400D30P	OS630D30P	OS630D30P	OS630D30P
UL	400 A/600 V	400 A/600 V	400 A/600 V	600 A/600 V	600 A/600 V	800 A/600 V
ABB P/N	OS400J30	OS400J30	OS400J30	OS600J30	OS600J30	OS800L30

Table 96: Fusible Disconnect Switches for N355–N560 Models, 380–480 V

	N355	N400	N450	N500	N560
IEC	1250 A/690 V	1250 A/690 V	1250 A/690 V	1250 A/690 V	1250 A/690 V
ABB P/N	OS1250D30P	OS1250D30P	OS1250D30P	OS1250D30P	OS1250D30P
UL	800 A/600 V	1200 A/600 V	1200 A/600 V	1200 A/600 V	1200 A/600 V
ABB P/N	OS800L30	OS1200L30	OS1200L30	OS1200L30	OS1200L30

Table 97: Fusible Disconnect Switches for N110–N315 Models, 525–690 V

	N110	N132	N160	N200	N250	N315
IEC	400 A/690 V	400 A/690 V	400 A/690 V	630 A/690 V	630 A/690 V	630 A/690 V
ABB P/N	OS400D30P	OS400D30P	OS400D30P	OS630D30P	OS630D30P	OS630D30P
UL	400 A/600 V	400 A/600 V	400 A/600 V	400 A/600 V	400 A/600 V	600 A/600 V
ABB P/N	OS400J30	OS400J30	OS400J30	OS400J30	OS400J30	OS600J30

Table 98: Fusible Disconnect Switches for N400–N630 Models, 525–690 V

	N400	N450	N500	N560	N630
IEC	630 A/690 V	630 A/690 V	1250 A/690 V	1250 A/690 V	1250 A/690 V

	N400	N450	N500	N560	N630
ABB P/N	OS630D30P	OS630D30P	OS1250D30P	OS1250D30P	OS1250D30P
UL	600 A/600 V	600 A/600 V	800 A/600 V	800 A/600 V	800 A/600 V
ABB P/N	OS600J30	OS600J30	OS800L30	OS800L30	OS800L30

Table 99: Fusible Disconnect Switches for N710–N800 Models, 525–690 V

	N710	N800
IEC	1250 A/690 V	1250 A/690 V
ABB P/N	OS1250D30P	OS1250D30P
UL	1200 A/600 V	1200 A/600 V
ABB P/N	OS1200L30	OS1200L30

10.8.4 Non-fusible Disconnect Switches

The non-fusible disconnector switch is an option. All units ordered and supplied with a factory-installed, non-fusible disconnect switch require a UL Class fuse to meet 65kA SCCR for the drive system.

Table 100: Non-fusible Disconnect Switches for N110–N315 Models, 380–480 V

	N110	N132	N160	N200	N250	N315
IEC	400 A/600 V	400 A/600 V	400 A/600 V	630 A/600 V	630 A/600 V	630 A/600 V
ABB P/N	OT400E30	OT400E30	OT400E30	OT630E30	OT630E30	OT630E30
UL	400 A/690 V	400 A/690 V	400 A/690 V	600 A/690 V	600 A/690 V	800 A/690 V
ABB P/N	OT400U30	OT400U30	OT400U30	OT600U30	OT600U30	OT800U30

Table 101: Non-fusible Disconnect Switches for N355–N560 Models, 380–480 V

	N355	N400	N450	N500	N560
IEC	1000 A/600 V	1000 A/600 V	1250 A/600 V	1250 A/600 V	1250 A/600 V
ABB P/N	OT1000E30	OT1000E30	OT1250E30	OT1250E30	OT1250E30
UL	800 A/690 V	1200 A/690 V	1200 A/690 V	1200 A/690 V	1200 A/690 V
ABB P/N	OT800U30	OT1200U30	OT1200U30	OT1200U30	OT1200U30

Table 102: Non-fusible Disconnect Switches for N110–N315 Models, 525–690 V

	N110	N132	N160	N200	N250	N315
IEC	400 A/600 V	400 A/600 V	400 A/600 V	630 A/600 V	630 A/600 V	630 A/600 V
ABB P/N	OT400E30	OT400E30	OT400E30	OT630E30	OT630E30	OT630E30
UL	400 A/690 V	400 A/690 V	400 A/690 V	600 A/690 V	600 A/690 V	600 A/690 V
ABB P/N	OT400U30	OT400U30	OT400U30	OT600U30	OT600U30	OT600U30

Table 103: Non-fusible Disconnect Switches for N400–N630 Models, 525–690 V

	N400	N450	N500	N560	N630
IEC	630 A/600 V	630 A/600 V	630 A/600 V	1000 A/600 V	1000 A/600 V
ABB P/N	OT630E30	OT630E30	OT630E30	OT1000E30	OT1000E30
UL	600 A/690 V	600 A/690 V	600 A/690 V	800 A/690 V	800 A/690 V
ABB P/N	OT600U30	OT600U30	OT600U30	OT800U30	OT800U30

Table 104: Non-fusible Disconnect Switches for N710–N800 Models, 525–690 V

	N710	N800
IEC	1250 A/600 V	1250 A/600 V
ABB P/N	OT1250E30	OT1250E30
UL	1200 A/690 V	1200 A/690 V
ABB P/N	OT1200U30	OT1200U30

10.8.5 Contactor Fuses

The mains contactor is an option. All units ordered and supplied with a factory-installed contactor require a Class L/J branch circuit fusing to meet the 65 kA SCCR for the drive system.

This option makes it possible to connect or disconnect the drive from the mains by using a control switch on the control compartment door or an external switch. The external switch must be wired to terminals XD0. See 5.3 Wiring Schematic for D9h and D10h Enclosed Drives and 5.4 Wiring Schematic for E5h and E6h Enclosed Drives. The mains contactor is supplied with 2 sets of auxiliary switches (1 normally open and 1 normally closed). These switches are on the sides of the contactor. By default, the NO auxiliary switch is wired at the factory and used by the system.

Auxiliary switch specifications	
Rated operation current @ 230 V	6 A
Rated operation current @ 380 V	4 A
Rated operation current @ 480 V	1.5 A
Conventional thermal current, Ith	10 A
Rated voltage	500 V AC
Rated impulse withstand voltage	600 V AC

Table 105: Mains Contactor Fuses for N110–N315 Models, 380–480 V

	N110	N132	N160	N200	N250	N315
IEC	185 A/1000 V	185 A/1000 V	185 A/1000 V	400 A/1000 V	580 A/1000 V	500 A/1000 V
Eaton P/N	XTCE400M22A	XTCE400M22A	XTCE400M22A	XTCE400M22A	XTCE400M22A	XTCE500M22A
UL	185 A/1000 V	185 A/1000 V	185 A/1000 V	400 A/1000 V	400 A/1000 V	580 A/1000 V
Eaton P/N	XTCE400M22A	XTCE400M22A	XTCE400M22A	XTCE400M22A	XTCE580N22A	XTCE580N22A

Table 106: Mains Contactor Fuses for N355–N560 Models, 380–480 V

	N355	N400	N450	N500	N560
IEC	580 A/1000 V	580 A/1000 V	580 A/1000 V	820 A/1000 V	820 A/1000 V
Eaton P/N	XTCE580N22A	XTCE580N22A	XTCE580N22A	XTCE820N22A	XTCE820N22A
UL	820 A/1000 V	820 A/1000 V	820 A/1000 V	1000 A/1000 V	1000 A/1000 V
Eaton P/N	XTCE820N22A	XTCE820N22A	XTCE820N22A	XTCEC10N22A	XTCEC10N22A

Table 107: Mains Contactor Fuses for N110–N315 Models, 525–690 V

	N110	N132	N160	N200	N250	N315
IEC	185 A/1000 V	185 A/1000 V	185 A/1000 V	400 A/1000 V	400 A/1000 V	400 A/1000 V
Eaton P/N	XTCE400H22A	XTCE400H22A	XTCE400H22A	XTCE400M22A	XTCE400M22A	XTCE400M22A
UL	185 A/1000 V	185 A/1000 V	185 A/1000 V	400 A/1000 V	400 A/1000 V	400 A/1000 V
Eaton P/N	XTCE400H22A	XTCE400H22A	XTCE400H22A	XTCE400M22A	XTCE400M22A	XTCE400M22A

Table 108: Mains Contactor Fuses for N400–N630 Models, 525–690 V

	N400	N450	N500	N560	N630
IEC	400 A/1000 V	580 A/1000 V	580 A/1000 V	580 A/1000 V	580 A/1000 V
Eaton P/N	XTCE400M22A	XTCE580N22A	XTCE580N22A	XTCE580N22A	XTCE580N22A
UL	400 A/1000 V	580 A/1000 V	580 A/1000 V	580 A/1000 V	580 A/1000 V
Eaton P/N	XTCE400M22A	XTCE580N22A	XTCE580N22A	XTCE580N22A	XTCE580N22A

Table 109: Mains Contactor Fuses for N710–N800 Models, 525–690 V

	N710	N800
IEC	580 A/1000 V	820 A/1000 V
Eaton P/N	XTCE580N22A	XTCE820N22A
UL	820 A/1000 V	1000 A/1000 V
Eaton P/N	XTCE820N22A	XTCEC10N22A

10.8.6 Molded-case Circuit Breakers

The molded-case circuit breaker (MCCB) is an option that combines a temperature sensitive device with a current sensitive electromagnetic device to protect the drive.

Table 110: MCCB Part Numbers for N110–N315 Models, 380–480 V

	N110	N132	N160	N200	N250	N315
IEC	400 A/600 V	400 A/600 V	400 A/600 V	800 A/600 V	800 A/600 V	800 A/600 V
ABB P/N	T5L400T	T5L400T	T5L400T	T6L800T	T6L800T	T6L800T
UL	400 A/690 V	400 A/690 V	400 A/690 V	600 A/690 V	600 A/690 V	800 A/690 V

	N110	N132	N160	N200	N250	N315
ABB P/N	T5L400TW	T5L400TW	T5L400TW	T6L600TW	T6L600TW	T6L800TW

Table 111: MCCB Part Numbers for N355K–N560 Models, 380–480 V

	N355	N400	N450	N500	N560
IEC	1000 A/690 V	1000 A/690 V	1250 A/690 V	1250 A/690 V	1600 A/690 V
ABB P/N	T71000LSPR231 DS-LS	T71000LSPR231 DS-LS	T71250LSPR231 DS-LS	T71250LSPR231 DS-LS	T71600LSPR231 DS-LS
UL	1200 A/600 V	1200 A/600 V	1200 A/600 V	1600 A/600 V	1600 A/600 V
ABB P/N	T7L1200PR231/P	T7L1200PR231/P	T7LQ1200PR231/P	T8V1600PR231/P	T8V1600PR231/P

Table 112: MCCB Part Numbers for N110–N315 Models, 525–690 V

	N110	N132	N160	N200	N250	N315
IEC	400 A/690 V	400 A/690 V	400 A/690 V	630 A/690 V	630 A/690 V	630 A/690 V
ABB P/N	T5L400T	T5L400T	T5L400T	T6L630T	T6L630T	T6L630T
UL	400 A/600 V	400 A/600 V	400 A/600 V	600 A/600 V	600 A/600 V	600 A/600 V
ABB P/N	T5L400TW	T5L400TW	T5L400TW	T6L600TW	T6L600TW	T6L600TW

Table 113: MCCB Part Numbers for N400–N630 Models, 525–690 V

	N400	N450	N500	N560	N630
IEC	600 A/690 V	1000 A/690 V	1000 A/690 V	1000 A/690 V	1000 A/690 V
ABB P/N	T6L630T	T7L1000LSPR23 1 DS-LS	T7L1000LSPR23 1 DS-LS	T7L1000LSPR23 1 DS-LS	T7L1000LSPR23 1 DS-LS
UL	600 A/600 V	1000 A/600 V	1000 A/600 V	1000 A/600 V	1000 A/600 V
ABB P/N	T6LQ600TW	T7L1000PR231/P	T7L1000PR231/P	T7LQ1000PR231/P	T7LQ1000PR231/P

Table 114: MCCB Part Numbers for N710–N800 Models, 525–690 V

	N710	N800
IEC	1250 A/690 V	1250 A/690 V
ABB P/N	T7L1250LSPR23 1 DS-LS	T7L1250LSPR23 1 DS-LS
UL	1200 A/600 V	1200 A/600 V
ABB P/N	T7L1200PR231/ P	T7L1200PR231/ P

10.9 Enclosure Dimensions

10.9.1 Pedestal Dimensions

The pedestal on which the enclosure sits is available in 3 sizes:

- 100 mm (3.9 in)
- 200 mm (7.9 in)
- 400 mm (15.8 in)

10.9.2 D9h Enclosed Drive Dimension

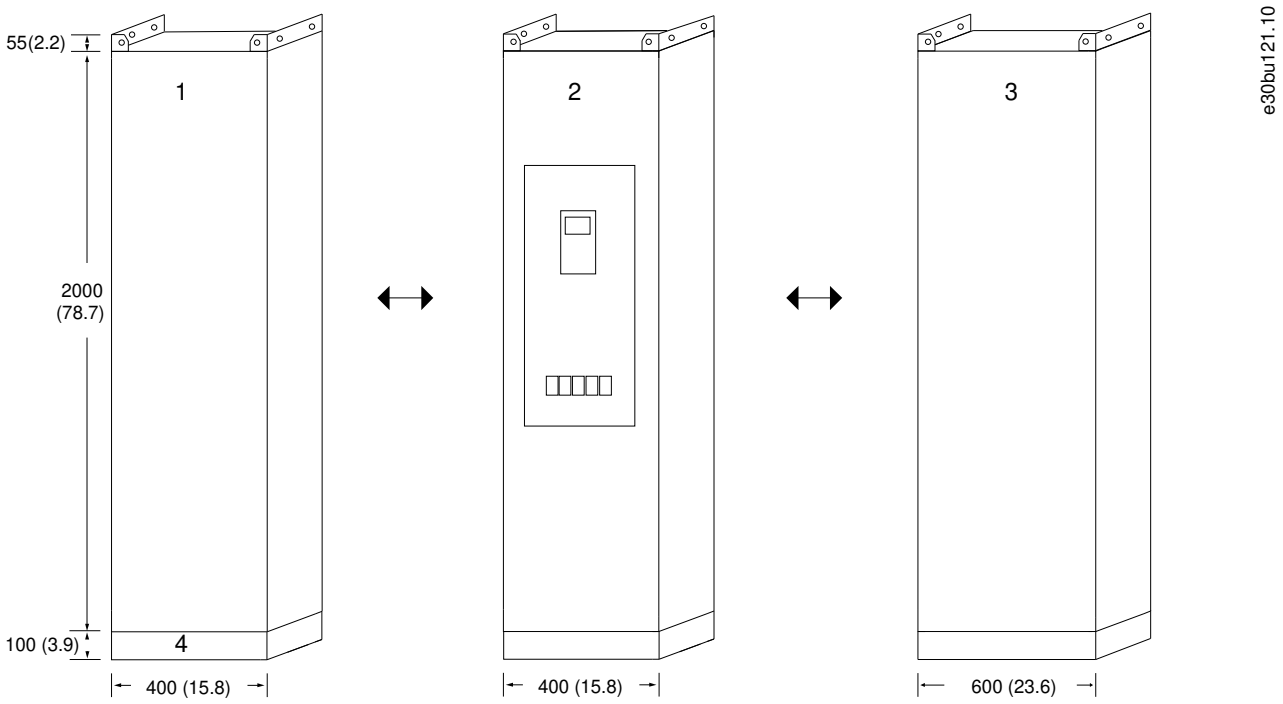

1	Passive harmonic filter/line reactor cabinet	**2**	D9h drive cabinet
3	Sine-wave cabinet	**4**	Standard pedestal

Illustration 72: Dimensions for D9h Enclosure with Standard Pedestal

10.9.3 D10h Enclosed Drive Dimensions

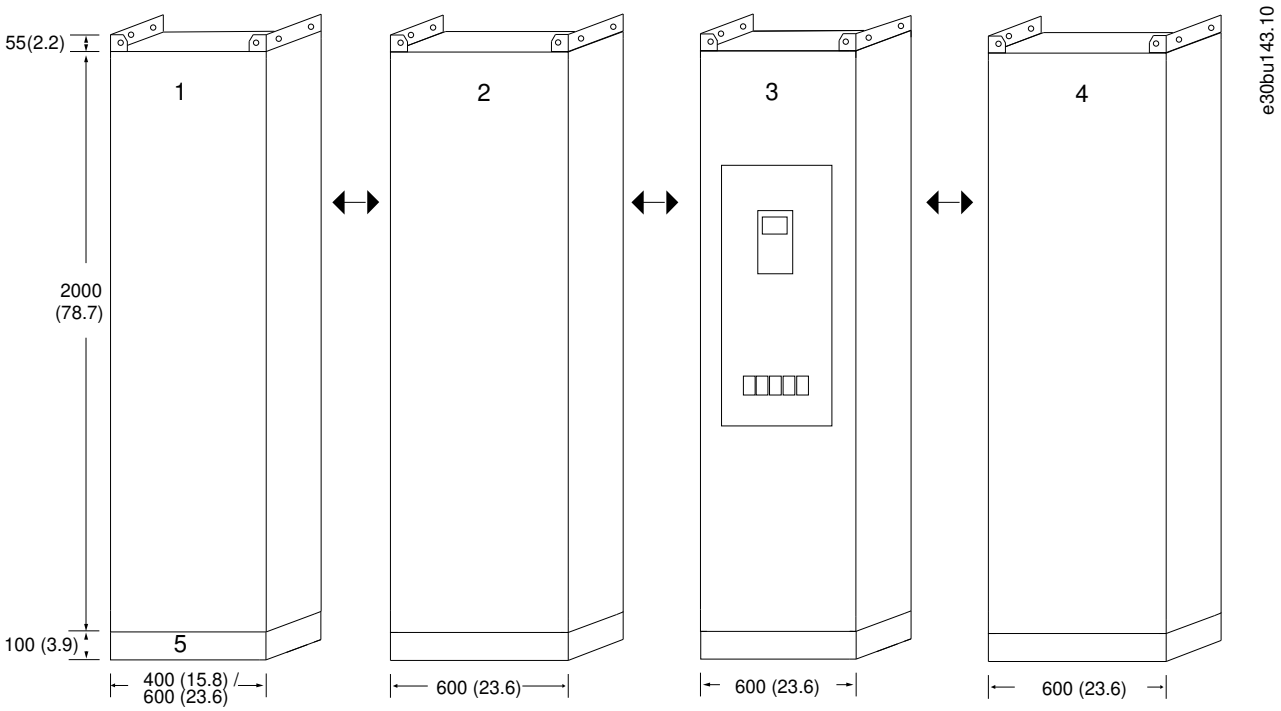

1	Passive harmonic filter/line reactor cabinet	**2**	Options cabinet (provided when more than 1 input option is ordered)
3	D10h drive cabinet	**4**	Sine-wave cabinet
5	Standard pedestal		

Illustration 73: Dimensions for D10h Enclosure with Standard Pedestal

10.9.4 E5h Enclosed Drive Dimensions

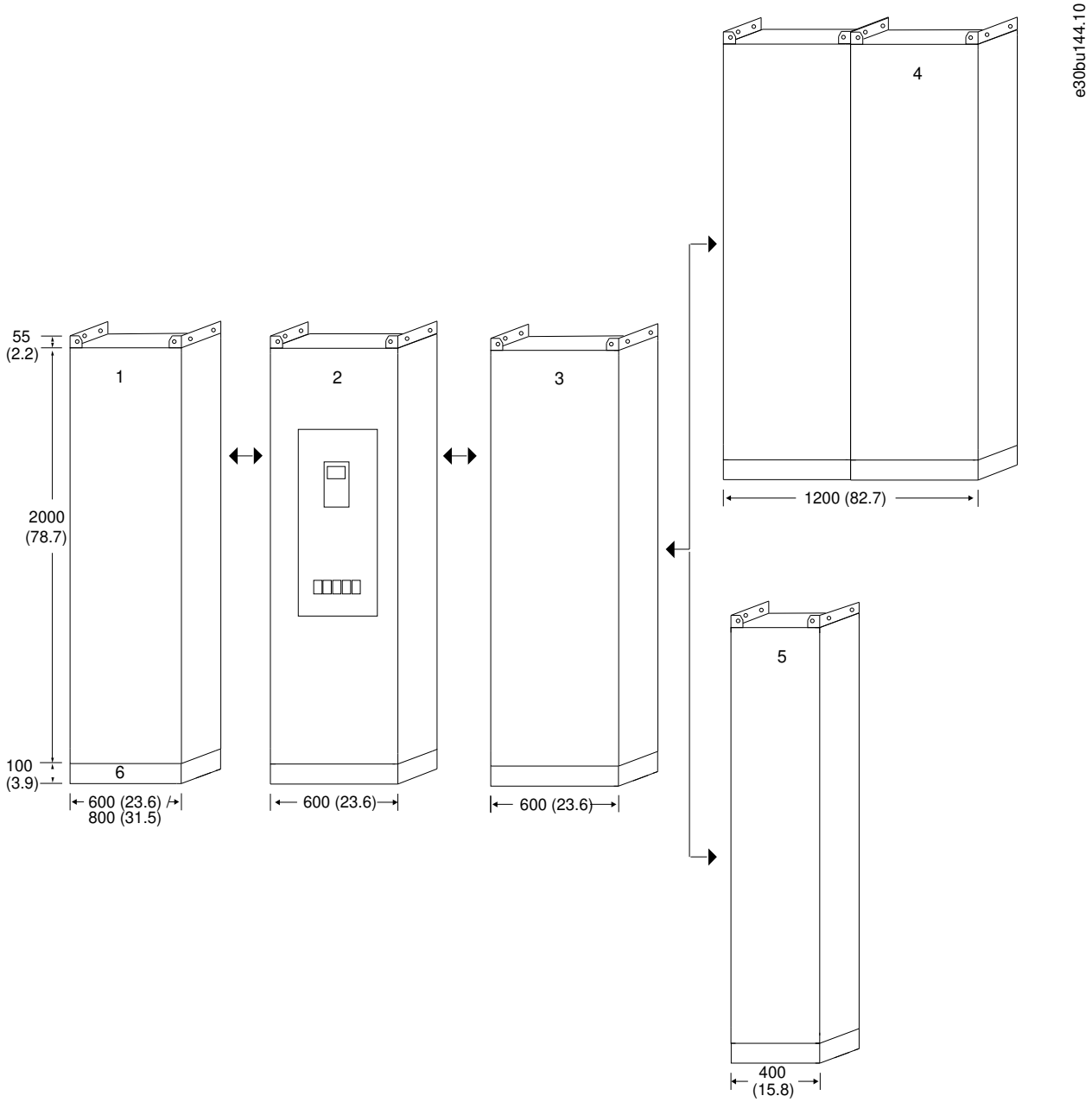

1	Passive harmonic filter/line reactor cabinet	**2**	Options cabinet
3	E5h drive cabinet	**4**	Sine-wave cabinet
5	dU/dt cabinet	**6**	Standard pedestal

Illustration 74: Dimensions for E5h Enclosure with Standard Pedestal

10.9.5 E6h Enclosed Drive Dimensions

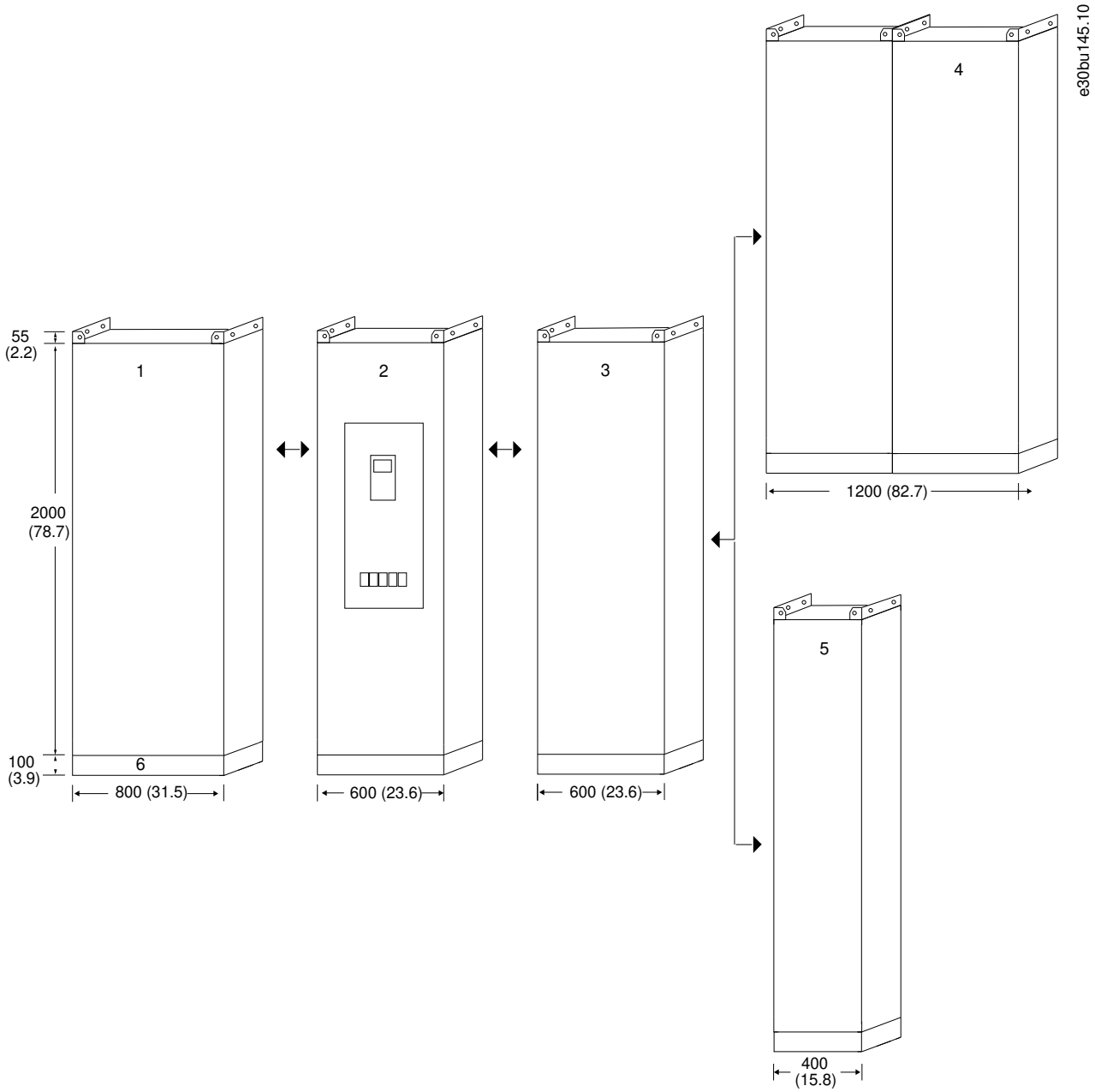

1	Passive harmonic filter/line reactor cabinet	**2**	Options cabinet
3	E6h drive cabinet	**4**	Sine-wave cabinet
5	dU/dt cabinet	**6**	Standard pedestal

Illustration 75: Dimensions for E6h Enclosure with Standard Pedestal

10.10 Enclosure Airflow

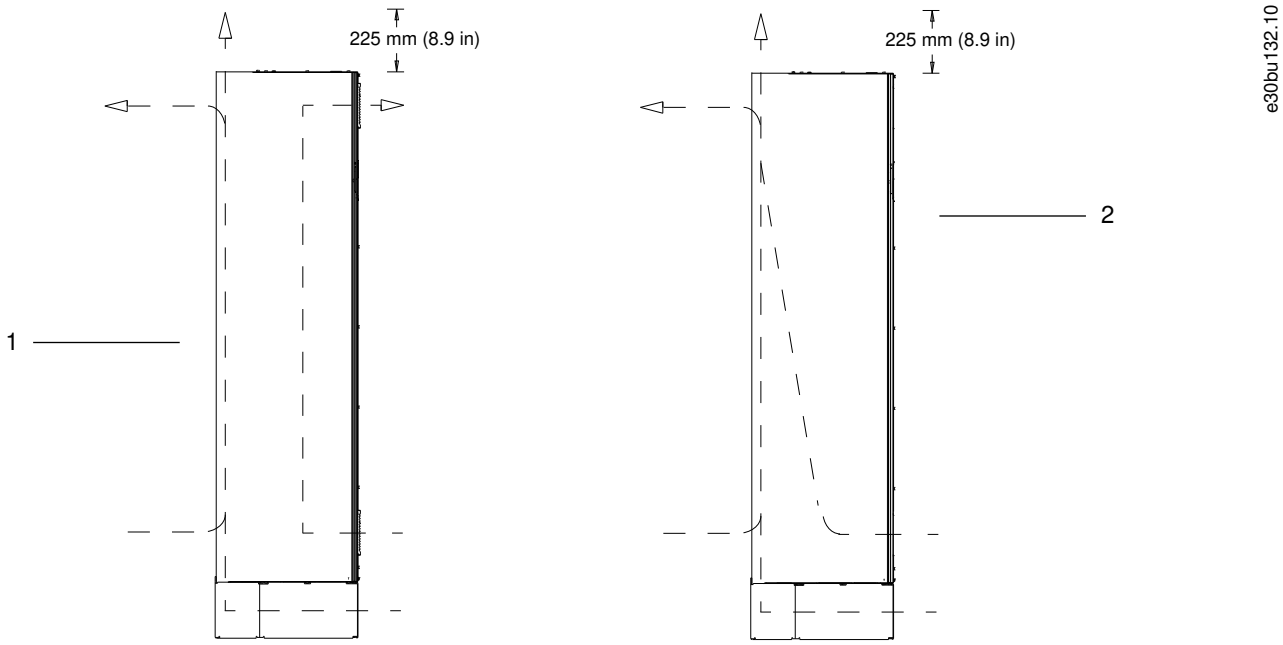

1 PHF and drive cabinet	**2** Sine-wave cabinets

Illustration 76: Enclosure Airflow

10.11 Fastener Torque Ratings

Apply the correct torque when tightening fasteners in the locations that are listed in the table. Too low or too high torque when fastening an electrical connection results in a bad electrical connection. To ensure correct torque, use a torque wrench.

Table 115: Fastener Torque Ratings

Location	Bolt size	Torque [Nm (in-lb)]
Mains terminals	M10/M12	19 (168)/37 (335)
Motor terminals	M10/M12	19 (168)/37 (335)
Ground terminals	M8/M10	9.6 (84)/19.1 (169)
Brake terminals	M8	9.6 (84)
Load sharing terminals	M10/M12	19 (168)/37 (335)
Relay terminals	-	0.5 (4)
Door/panel cover	M5	2.3 (20)
Cable entry plate	M5	2.3 (20)
Heat sink access panel	M5	2.3 (20)
Serial communication cover	M5	2.3 (20)

11 Appendix

11.1 Conventions

- Numbered lists indicate procedures.
- Bullet lists indicate other information and description of illustrations.
- Italicized text indicates:
  - Cross reference.
  - Link.
  - Footnote.
  - Parameter name.
  - Parameter group name.
  - Parameter option.
- All dimensions are in mm (inch).

11.2 Abbreviations

Table 116: Abbreviations, Acronyms, and Symbols

Term	Definition
°C	Degrees Celsius
°F	Degrees Fahrenheit
Ω	Ohm
AC	Alternating current
AEO	Automatic energy optimization
ACP	Application control processor
AMA	Automatic motor adaptation
AWG	American wire gauge
CPU	Central processing unit
CSIV	Customer-specific initialization values
CT	Current transformer
DC	Direct current
DVM	Digital voltmeter
EEPROM	Electrically erasable programmable read-only memory
EMC	Electromagnetic compatibility
EMI	Electromagnetic interference
ESD	Electrostatic discharge
ETR	Electronic thermal relay
$f_{M,N}$	Nominal motor frequency
HF	High frequency

Term	Definition
HVAC	Heating, ventilation, and air conditioning
Hz	Hertz
I_{LIM}	Current limit
I_{INV}	Rated inverter output current
$I_{M,N}$	Nominal motor current
$I_{VLT,MAX}$	Maximum output current
$I_{VLT,N}$	Rated output current supplied by the drive
IEC	International Electrotechnical Commission
IGBT	Insulated-gate bipolar transistor
I/O	Input/output
IP	Ingress protection
kHz	Kilohertz
kW	Kilowatt
L_d	Motor d-axis inductance
L_q	Motor q-axis inductance
LC	Inductor-capacitor
LCP	Local control panel
LED	Light-emitting diode
LOP	Local operation pad
mA	Milliamp
MCB	Miniature circuit breakers
MCCB	Molded-case circuit breaker
MCO	Motion control option
MCP	Motor control processor
MCT	Motion control tool
MDCIC	Multi-drive control interface card
mV	Millivolts
NEMA	National Electrical Manufacturers Association
NTC	Negative temperature coefficient
$P_{M,N}$	Nominal motor power
PCB	Printed circuit board
PE	Protective earth
PELV	Protective extra low voltage
PHF	Passive harmonic filter

Term	Definition
PID	Proportional integral derivative
PLC	Programmable logic controller
P/N	Part number
PROM	Programmable read-only memory
PS	Power section
PTC	Positive temperature coefficient
PWM	Pulse width modulation
R_S	Stator resistance
RAM	Random-access memory
RCD	Residual current device
Regen	Regenerative terminals
RFI	Radio frequency interference
RMS	Root means square (cyclically alternating electric current)
RPM	Revolutions per minute
SCR	Silicon controlled rectifier
SMPS	Switch mode power supply
S/N	Serial number
STO	Safe Torque Off
T_{LIM}	Torque limit
$U_{M,N}$	Nominal motor voltage
V	Volt
VVC	Voltage vector control
X_h	Motor main reactance

11.3 International/North American Default Parameter Settings

Setting *parameter 0-03 Regional Settings* to *[0] International* or *[1] North America* changes the default settings for some parameters. Table 10.2 lists the parameters that are affected.

Table 117: VLT® FC Series International/North American Default Parameter Settings

Parameter	International default value	North American default value
Parameter 0-03 Regional Settings	International	North America
Parameter 0-71 Date Format	DD-MM-YYYY	MM/DD/YYYY
Parameter 0-72 Time Format	24 h	12 h
Parameter 1-23 Motor Frequency	50 Hz	60 Hz
Parameter 1-25 Motor Nominal Speed	1400 RPM	1680 RPM

Parameter	International default value	North American default value
Parameter 1-53 Model Shift Frequency	16.7	20.0
Parameter 1-56 U/f Characteristic	50 Hz	60 Hz
Parameter 6-15 Terminal 53 High Ref./Feedb. Value	1500 RPM	1800 RPM
Parameter 14-37 Fieldweakening Speed	1400 RPM	1680 RPM

11.4 Required Parameter Settings for Drive Options

On performing a factory reset on the drive, all drive parameters revert to their factory default value. Several drive options have parameter settings that must be configured differently from the factory default values in order for the options to perform properly.

Table 118: Parameter Setting for the Active Filter Option (Typecode Character 7 = A)

Parameter	Change value to
Parameter 5-02 Terminal 29 Mode	*[1] Output*

Table 119: Parameter Settings for the Passive Filter Option (Typecode Character 7 = P/H/L/U)

Parameter	Change value to
Parameter 5-02 Terminal 29 Mode	*[1] Output*
Parameter 5-10 Terminal 18 Digital Input	*[51] External Interlock*
Parameter 5-31 Terminal 29 Digital Output	*[188] AHF Capacitor Connect*

Table 120: Parameter Settings for the dU/dt and Sine-wave Filter Options (Typecode Character 18 = D/S/1/2)

Parameter	Change value to
Parameter 5-02 Terminal 29 Mode	*[1] Output*
Parameter 14-52 Fan Control	*[3] On 100%*

Table 121: Parameter Settings for the Indicator Light + Reset Button Option (Typecode Character 28–29 = D1/DA/DB/DC/DD/DE)

Parameter	Change value to
Parameter 5-40 Function Relay [1]	*[5] Running*
Parameter 5-40 Function Relay [2]	*[5] Running*
Parameter 5-11 Terminal 19 Digital Input	*[1] Reset*

11.5 Block Diagrams

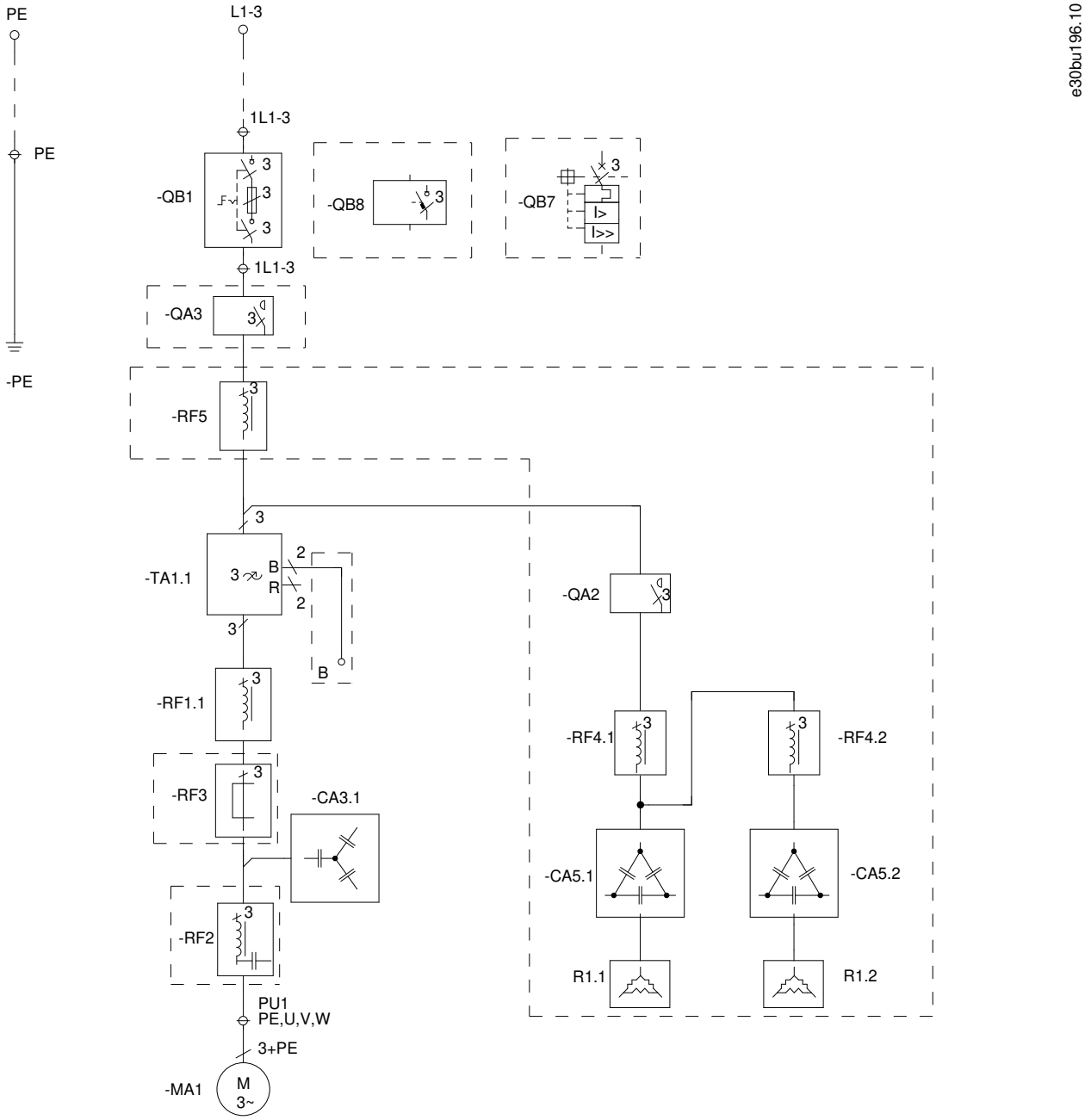

-RFI Radio frequency interference (RFI) filter	**R1** Resistor
-RF5 Passive harmonic filter (PHF) L0	**-RF4** PHF inductors
-CA5 PHF capacitors	**-QA2** PHF contactor
-RFL Line reactor	**-QAF** PHF relay
-QB7 Molded-case circuit breaker (MCCB)	**-QA3** Mains contactor

-QB2 Mains fused disconnect	**-QB8** Mains disconnect
-MA7 dU/dt and sine-wave filter fans	**-MA8** PHF fans
-RF2 Sine-wave filter inductor	**-CA4** Sine-wave filter capacitor
-RF1 dU/dt filter inductor	**-CA3** dU/dt filter capacitor
-RF3 Common-mode filter	**-MA1** Motor (customer side)
-TA1 Drive module	**LCP** Local control panel

Illustration 77: Electrical Power Flow for D9h/D10h Enclosure

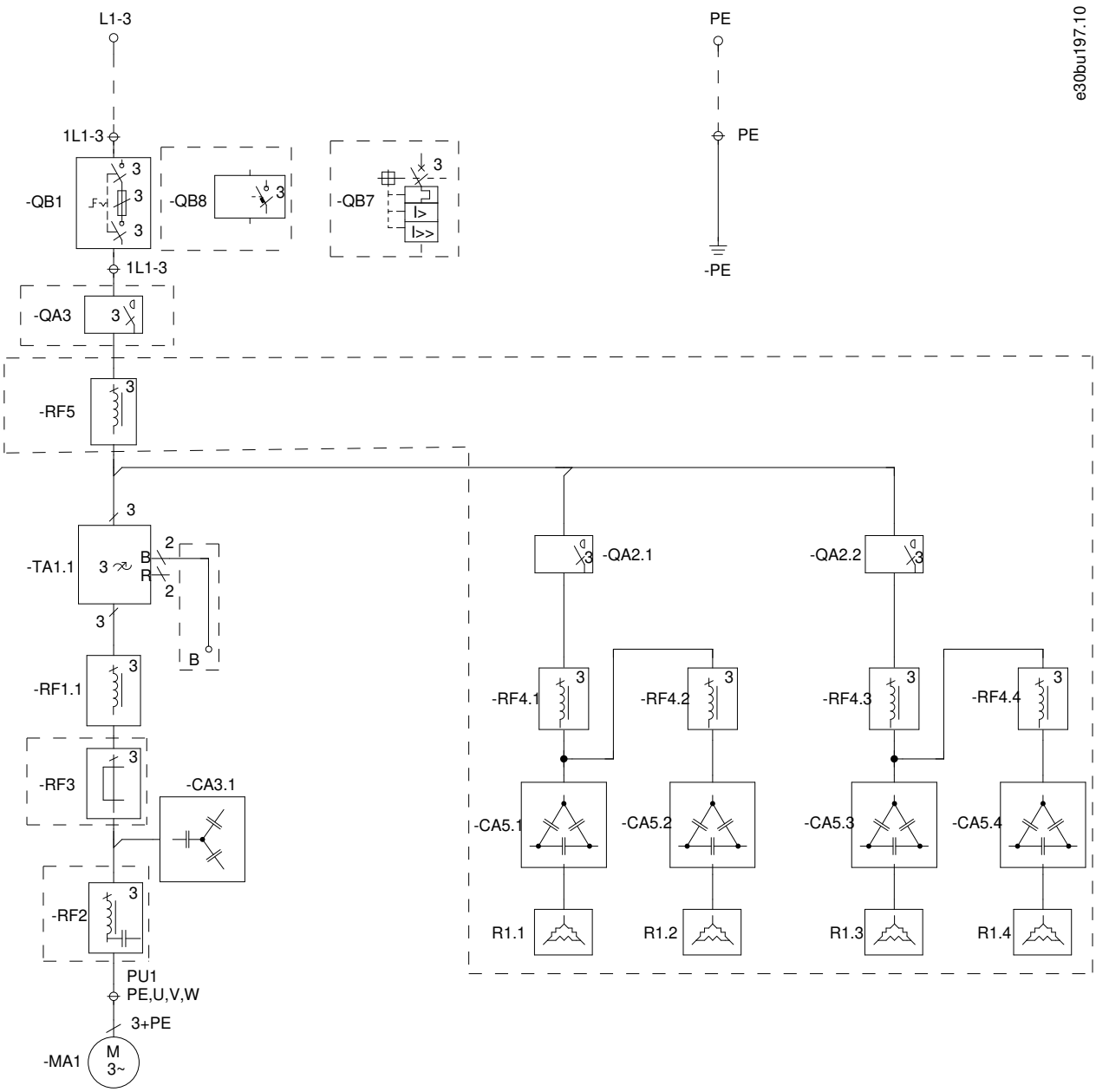

-RFI Radio frequency interference (RFI) filter	**R1** Resistor
-RF5 Passive harmonic filter (PHF) L0	**-RF4** PHF inductors
-CA5 PHF capacitors	**-QA2** PHF contactor
-RFL Line reactor	**-QAF** PHF relay
-QB7 Molded-case circuit breaker (MCCB)	**-QA3** Mains contactor
-QB2 Mains fused disconnect	**-QB8** Mains disconnect
-MA7 dU/dt and sine-wave filter fans	**-MA8** PHF fans

-RF2 Sine-wave filter inductor	**-CA4** Sine-wave filter capacitor
-RF1 dU/dt filter inductor	**-CA3** dU/dt filter capacitor
-RF3 Common-mode filter	**-MA1** Motor (customer side)
-TA1 Drive module	**LCP** Local control panel

Illustration 78: Electrical Power Flow for E5h/E6h Enclosure

11.6 Input Power Option Losses

11.6.1 Contactor Losses

Table 122: Power Losses for Contactor Option, 380–500 V (Losses Shown in Watts)

Model	380–440 V		441–500 V	
–	NO	HO	NO	HO
N90K	16	11	13	9
N110	25	16	21	13
N132	36	25	33	21
N160	57	36	47	33
N200	42	28	36	24
N250	63	42	52	36
N315	62	51	50	42
N355	79	62	66	50
N400	91	69	76	66
N450	74	61	58	51
N500	94	74	76	58

Table 123: Power Losses for Contactor Option, 525–690 V (Losses Shown in Watts)

Model	525–550 V		551–690 V	
–	NO	HO	NO	HO
N90K	7	5	6	4
N110	10	7	9	6
N132	15	10	13	9
N160	23	15	21	13
N200	33	23	30	21
N250	47	33	43	30
N315	63	47	58	43
N355	40	28	37	26
N400	50	33	45	30

Model	525–550 V		551–690 V	
N500	64	50	59	45
N560	72	64	72	59
N630	83	62	76	57
N710	76	56	69	51

11.6.2 Fusible Disconnect Losses

Table 124: Power Losses for Fusible Disconnect Option, 380–500 V (Losses Shown in Watts)

Model	380–440 V		441–500 V	
–	NO	HO	NO	HO
N90K	71	49	57	40
N110	89	59	76	48
N132	131	90	121	76
N160	142	91	119	83
N200	155	105	132	88
N250	233	155	193	132
N315	188	156	151	127
N355	202	158	168	127
N400	233	176	194	168
N450	282	233	222	194
N500	305	241	246	189

Table 125: Power Losses for Fusible Disconnect Option, 525–690 V (Losses Shown in Watts)

Model	525–550 V		551–690 V	
–	NO	HO	NO	HO
N90K	29	20	27	18
N110	41	29	37	27
N132	63	41	57	37
N160	71	45	65	41
N200	101	70	92	64
N250	118	84	108	77
N315	151	112	138	102
N355	191	135	175	125
N400	134	90	123	83
N500	154	119	141	109

Model	525–550 V		551–690 V	
N560	173	154	173	141
N630	208	155	190	142
N710	282	208	258	190

11.6.3 Non-fusible Disconnect Losses

Table 126: Power Losses for Non-fusible Disconnect Option, 380–500 V (Losses Shown in Watts)

Model	380–440 V		441–500 V	
–	NO	HO	NO	HO
N90K	8	6	7	5
N110	13	8	11	7
N132	19	13	17	11
N160	29	19	25	17
N200	44	29	37	25
N250	65	44	54	37
N315	25	21	20	17
N355	32	25	26	20
N400	36	27	30	26
N450	43	36	34	30
N500	55	43	44	34

Table 127: Power Losses for Non-fusible Disconnect Option, 525–690 V (Losses Shown in Watts)

Model	525–550 V		551–690 V	
–	NO	HO	NO	HO
N90K	4	2	3	2
N110	5	4	5	3
N132	8	5	7	5
N160	12	8	11	7
N200	17	12	16	11
N250	24	17	22	16
N315	33	24	30	22
N355	42	29	38	27
N400	52	35	47	32
N500	20	16	19	14
N560	23	20	23	19

Model	525–550 V		551–690 V	
N630	32	24	30	22
N710	44	32	40	30

11.6.4 MCCB Losses

Table 128: Power Losses for MCCB Option, 380–500 V (Losses Shown in Watts)

Model	380–440 V		441–500 V	
–	NO	HO	NO	HO
N90K	25	18	20	14
N110	38	25	32	20
N132	56	38	51	32
N160	54	35	45	32
N200	80	54	68	45
N250	120	80	100	68
N315	62	52	50	42
N355	80	62	66	50
N400	92	70	77	66
N450	112	92	88	77
N500	92	73	74	57

Table 129: Power Losses for MCCB Option, 525–690 V (Losses Shown in Watts)

Model	525–550 V		551–690 V	
–	NO	HO	NO	HO
N90K	11	7	10	7
N110	15	11	14	10
N132	23	15	21	14
N160	22	14	20	13
N200	32	22	29	20
N250	45	32	41	29
N315	61	45	56	41
N355	43	30	39	28
N400	53	36	49	33
N500	69	53	63	49
N560	77	69	77	63
N630	84	63	77	57

Model	525–550 V		551–690 V	
N710	114	84	104	77

11.6.5 Passive Harmonic Filter Losses

Table 130: Power Losses for Passive Harmonic Filter Option, 380–500 V (Losses Shown in Watts)

Model	380–440 V		441–500 V	
–	NO	HO	NO	HO
N90K	1083	841	1083	841
N110	1284	1083	1284	1083
N132	1511	1284	1511	1284
N160	1704	1511	1704	1511
N200	1814	1704	1814	1704
N250	2242	1814	1980	1814
N315	2302	2242	2242	1980
N355	2498	2302	2302	2242
N400	2613	2498	2498	2302
N450	2838	2613	2613	2498
N500	3160	2838	2838	2613

Table 131: Power Losses for Passive Harmonic Filter Option, 525–690 V (Losses Shown in Watts)

Model	525–550 V		551–690 V	
–	NO	HO	NO	HO
N90K	3406	2689	2689	2151
N110	4302	3406	3406	2689
N132	5199	4302	4302	3406
N160	6454	5199	5199	4302
N200	8246	6454	6454	5199
N250	10308	8246	8246	6454
N315	10308	10308	10308	8246
N355	7768	6872	6872	5498
N400	10995	6872	7768	6872
N500	9919	9919	8605	7768
N560	10995	9919	9919	8605
N630	13744	10995	10995	9919
N710	13744	13744	13744	10995

11.6.6 dU/dt Filter Losses

Table 132: Power Losses for dU/dt Filter Option, 380–500 V (Losses Shown in Watts)

Model	380–440 V		441–500 V	
–	NO	HO	NO	HO
N90K	350	244	281	199
N110	526	350	448	281
N132	327	223	300	190
N160	514	327	429	300
N200	834	565	710	472
N250	1251	834	1036	710
N315	713	593	573	480
N355	914	713	757	573
N400	1054	795	878	757
N450	1402	1158	1101	964
N500	1774	1402	1434	1101

Table 133: Power Losses for dU/dt Filter Option, 525–690 V (Losses Shown in Watts)

Model	525–550 V		551–690 V	
–	NO	HO	NO	HO
N90K	453	308	414	281
N110	204	146	187	134
N132	314	204	287	187
N160	498	314	456	287
N200	302	211	277	193
N250	427	302	390	277
N315	575	427	527	390
N355	800	565	733	523
N400	989	666	905	608
N500	585	450	535	412
N560	654	585	654	535
N630	959	715	878	654
N710	1430	1054	1308	964

11.6.7 Sine-wave Filter Losses

Table 134: Power Losses for Sine-wave Filter Option, 380–500 V (Losses Shown in Watts)

Model	380–440 V		441–500 V	
–	NO	HO	NO	HO
N90K	1320	920	1060	752
N110	1363	906	1161	728
N132	2000	1363	1838	1161
N160	2291	1457	1914	1339
N200	2322	1572	1978	1313
N250	3484	2322	2885	1978
N315	3179	2643	2556	2141
N355	4075	3179	3375	2556
N400	4699	3547	3913	3375
N450	3902	3225	3066	2685
N500	4939	3902	3991	3066

Table 135: Power Losses for Sine-wave Filter Option, 525–690 V (Losses Shown in Watts)

Model	525–550 V		551–690 V	
–	NO	HO	NO	HO
N90K	1100	748	1006	684
N110	1065	762	975	696
N132	1640	1065	1496	975
N160	1876	1184	1716	1080
N200	1863	1299	1706	1188
N250	2630	1863	2401	1706
N315	3545	2630	3246	2401
N355	3237	2286	2967	2116
N400	4004	2697	3663	2463
N500	3603	2772	3296	2536
N560	4027	3603	4027	3296
N630	5909	4406	5406	4027
N710	8018	5906	7330	5406

ENGINEERING
TOMORROW

Danfoss can accept no responsibility for possible errors in catalogues, brochures and other printed material. Danfoss reserves the right to alter its products without notice. This also applies to products already on order provided that such alterations can be made without subsequential changes being necessary in specifications already agreed. All trademarks in this material are property of the respective companies. Danfoss and the Danfoss logotype are trademarks of Danfoss A/S. All rights reserved.

Danfoss A/S
Ulsnaes 1
DK-6300 Graasten
vlt-drives.danfoss.com