ENGINEERING
TOMORROW

Operating Guide

VLT® OneGearDrive®

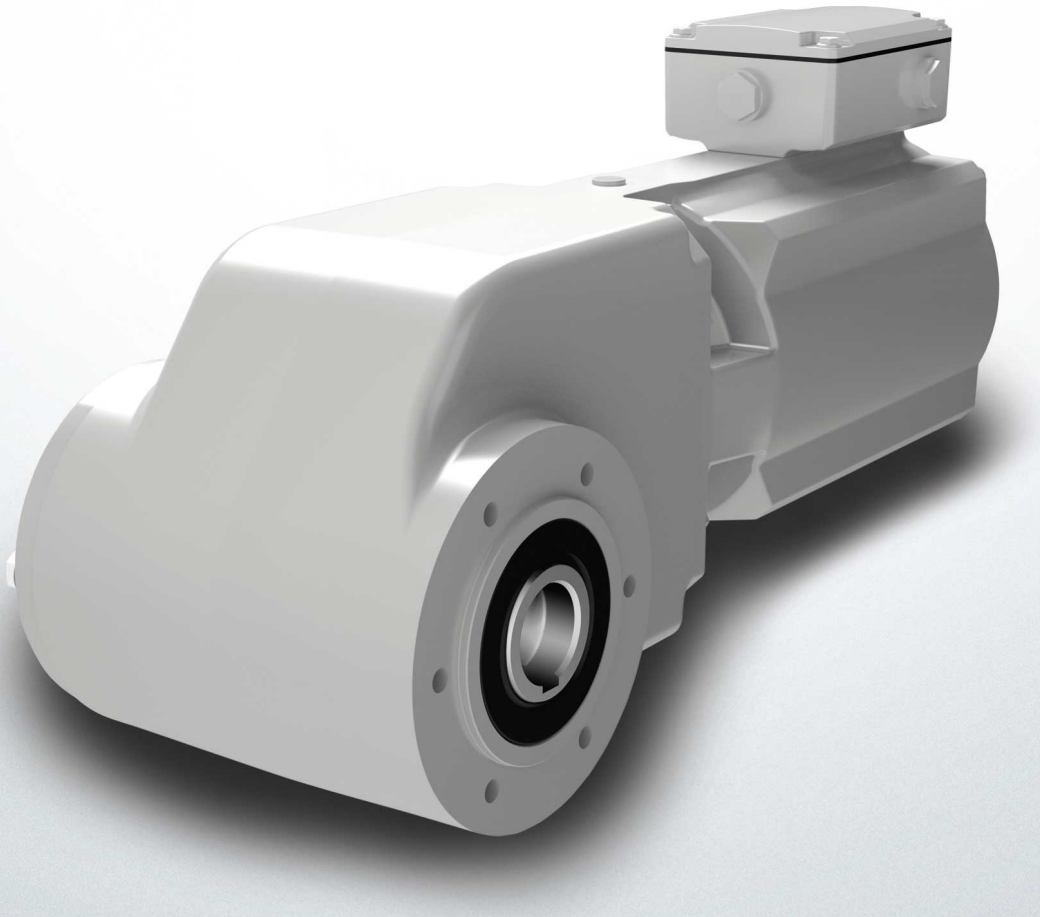

drives.danfoss.com | VLT®

ENGINEERING
TOMORROW

Danfoss A/S
6430 Nordborg
Denmark
CVR nr.: 20 16 57 15

Telephone: +45 7488 2222
Fax: +45 7449 0949

EU DECLARATION OF CONFORMITY

Danfoss A/S

Danfoss Drives A/S

declares under our sole responsibility that the

Product category: Gear Motor
Type designation(s): OGDSK2xxKxx1xxxL09RXTB1xxx9010H1Bxxxxxxx
OGDSK2xxKxx1xxxL06RXTB1xxx9010H1Bxxxxxxx
OGDHK2xxKxx1xx2L09RXSx1xxA9010H1Bxxxxxxx
OGDHK2xxKxx1xx2L06RXSx1xxA9010H1Bxxxxxxx
OGDSK2xxKxx1xxxL09RXTB1xxx9010H1B180xxxx
OGDSK2xxKxx1xxxL06RXTB1xxx9010H1B220xxxx

Covered by this declaration is in conformity with the following directive(s), standard(s) or other normative document(s), provided that the product is used in accordance with our instructions.

Low Voltage Directive 2014/35/EU

EN60529 (1991) + A1 (2000)	Degrees of protection provided by enclosures (IP Code)
EN60034-1 (2010)	Rotating electrical machines. Rating and performance

EMC Directive 2014/30/EU

EN61000-6-2 (2005)	Electromagnetic compatibility (EMC) - Part 6-2: Generic standards - Immunity for industrial environments
EN61000-6-4 (2007) + A1 (2011)	Electromagnetic compatibility (EMC). Generic standards. Emission standard for industrial environments

RoHS Directive 2011/65/EU including amendment 2015/863.

EN63000:2018	Technical documentation for the assessment of electrical and electronic products with respect to the restriction of hazardous substances

Date: 2020.11.26 **Place of issue:** Bruchsal, DE	**Issued by** Johannes Feistritzer **Signature:** **Name: Johannes Feistritzer** **Title: Product Manager**	Date: 2020.11.26 **Place of issue:** Graasten, DK	**Approved by** **Signature:** **Name: Michael Termansen** **Title: VP, PD Center Denmark**

Danfoss only vouches for the correctness of the English version of this declaration. In the event of the declaration being translated into any other language, the translator concerned shall be liable for the correctness of the translation

Classified as Business

Contents

1 Introduction 6
1.1 Purpose of the Operating Guide 6
1.2 Copyright 6
1.3 Approvals 6
2 Safety 7
2.1 Safety Symbols 7
2.2 Qualified Personnel 7
2.3 Due Diligence 7
2.4 Safety Instructions and Precautions 7
3 Product Description 9
3.1 Overview of the VLT® OneGearDrive® 9
3.2 VLT® OneGearDrive® Types 9
4 Mechanical Installation 11
4.1 Items Supplied 11
4.2 Transport 11
4.3 Inspection on Receipt 11
4.4 Protection Rating 11
4.5 Protective Coating 11
4.6 Mounting Arrangement 11
4.6.1 Mounting Procedure 12
4.7 Assembly Kit 12
4.7.1 Overview 12
4.7.2 Dimensions of Assembly Kit for Metric Shafts 12
4.7.3 Dimensions of Assembly Kit for Imperial Shafts 13
4.8 Mounting Instructions 13
4.9 Dimensions of the Metric Shaft and Disk 14
4.10 Dimensions of the Imperial Shaft and Disk 14
4.11 Torque Restraint 14
4.12 Final Assembly 15
5 Electrical Installation 17
5.1 EMC-Compliant Installation 17
5.2 Electrical Connection 17
5.3 Terminal Box 17
5.3.1 Terminal Box Connection 18

5.4 CAGE CLAMP® Connection 18
5.5 CleanConnect® Connection 20
5.6 Overload Protection 20

6 Commissioning 21
6.1 Measures before Commissioning 21
6.2 Commissioning Procedure 21

7 Diagnostics 22
7.1 Troubleshooting 22

8 Maintenance, Decommissioning, and Disposal 24
8.1 Warnings 24
8.2 Maintenance Tasks 24
8.2.1 Replacing the Brake and Rotor 24
8.3 Inspection during Operation 26
8.4 Repair 26
8.5 Oil 26
8.5.1 Oil Changes 26
8.5.2 Oil Grade 26
8.5.3 Oil Volume 26
8.5.4 Changing the Oil 27
8.5.4.1 Draining the Oil 27
8.5.4.2 Filling the Oil 27
8.6 Spare Parts 27
8.7 Decommissioning 28
8.7.1 Dismounting 28
8.7.2 Product Returns 28
8.8 Disposal 28

9 Specifications 29
9.1 Nameplate 29
9.2 Storage 29
9.2.1 Measures during Storage 29
9.2.2 Measures after Storage 29
9.3 Technical Data: Permanent Magnet 3-phase Synchronous Motor 30
9.4 Speed/Torque Characteristics 30
9.4.1 Ratio i=31.13 30
9.4.2 Ratio i=14.13 31
9.4.3 Ratio i=5.92 31

9.4.4 Speed/Torque Values 31
9.5 General Specifications and Environmental Conditions 32
9.6 Dimensions 32
9.6.1 VLT® OneGearDrive® Standard 32
9.6.2 VLT® OneGearDrive® Standard with Torque Arm in Front Position (Optional) 32
9.6.3 VLT® OneGearDrive® Hygienic 33
9.6.4 VLT® OneGearDrive® Hygienic with Torque Arm in Front Position (Optional) 33
9.6.5 Shaft Dimensions 34
9.6.5.1 30 mm Shaft 34
9.6.5.2 35 mm Shaft 34
9.6.5.3 40 mm Shaft 34
9.6.5.4 I1 Shaft 34
9.6.5.5 I2 Shaft 35
9.6.5.6 I3 Shaft 35
9.7 Options 35
9.7.1 Torque Arm Set 35
9.7.2 Mechanical Brake 36
9.7.2.1 Technical Data 37
9.7.2.2 Dimensions 37
9.7.2.3 Connections 37
9.8 Accessories 39
9.8.1 Accessories for VLT® OneGearDrive® Standard 39
9.8.2 Accessories for VLT® OneGearDrive® Hygienic 39
10 Appendix 40
10.1 Abbreviations 40
10.2 Conventions 40

1 Introduction

1.1 Purpose of the Operating Guide

The purpose of this Operating Guide is to describe the VLT® OneGearDrive®. The Operating Guide contains information about:

- Safety
- Installation
- Commissioning
- Maintenance and repair
- Specifications
- Options and accessories

The VLT® OneGearDrive® is available with 2 different motor types:

- LA10 (type code L09), service period since August 2015.
- V210 (type code L06), since August 2015.

Check the motor type on the nameplate.

N O T I C E

– If exchanging a VLT® OneGearDrive® with LA10 motor type with a V210 motor type, always ensure to update the motor model in the drive, see 9.3 Technical Data: Permanent Magnet 3-phase Synchronous Motor. Contact Danfoss Service for further instructions.

N O T I C E

– For reasons of clarity, the instructions and safety information do not contain all information relating to all VLT® OneGearDrive® types and cannot take into account every conceivable case of installation, operation, or maintenance. The information is limited to that which is required for qualified personnel in normal working situations. Contact Danfoss for further assistance.

This Operating Guide is intended for use by qualified personnel. Read this operating guide in full in order to use the VLT® OneGearDrive® safely and professionally. Pay particular attention to the safety instructions and general warnings.

This Operating Guide is a part of the VLT® OneGearDrive® and also contains important service information. Always keep this Operating Guide available with the VLT® OneGearDrive®.

Compliance with the information in this Operating Guide is a prerequisite for:

- Trouble-free operation.
- Recognition of product liability claims.

Therefore, read this Operating Guide before working on or with the VLT® OneGearDrive®.

1.2 Copyright

VLT® and OneGearDrive® are Danfoss registered trademarks.

1.3 Approvals

Table 1: Approvals

CE	c UL us (depending on the configuration)

2 Safety

2.1 Safety Symbols

The following symbols are used in this guide:

⚠ W A R N I N G ⚠

Indicates a potentially hazardous situation that could result in death or serious injury.

⚠ C A U T I O N ⚠

Indicates a potentially hazardous situation that could result in minor or moderate injury. It can also be used to alert against unsafe practices.

N O T I C E

Indicates important information, including situations that can result in damage to equipment or property.

2.2 Qualified Personnel

Installation, commissioning, and maintenance may only be carried out by qualified personnel. For the purposes of this manual and the safety instructions in this manual, qualified personnel are trained personnel who are authorized to fit, install, commission, ground, and label equipment, systems, and circuits in accordance with the standards for safety technology and who are familiar with the safety concepts of automation engineering.

Additionally, the personnel must be familiar with all the instruction and safety measures described in this manual. They must have suitable safety equipment and be trained in first aid.

2.3 Due Diligence

The operator and/or fabricator must ensure that:

- The VLT® OneGearDrive® is used only as intended.
- The VLT® OneGearDrive® is only operated in a perfect operational condition.
- The Operating Guide is always available near the VLT® OneGearDrive® in complete and readable form.
- The VLT® OneGearDrive® and its components are fitted, installed, commissioned, and maintained only by adequately qualified and authorized personnel.
- These personnel are regularly instructed on all relevant matters of occupational safety and environmental protection, as well as the contents of the Operating Guide and the instructions it contains.
- The product markings and identification markings applied to the VLT® OneGearDrive®, as well as safety and warning instructions, are not removed and are always kept in a legible condition.
- The national and international regulations regarding the control of machinery and equipment, that are applicable at the place of use, are complied with.
- The users always have all current information relevant to their interests about the VLT® OneGearDrive® and its use and operation.

2.4 Safety Instructions and Precautions

⚠ W A R N I N G ⚠

HIGH VOLTAGE

High voltage, which can lead to death or serious injury, is present on the connectors.

- Before working on the power connectors (disconnecting or connecting the cable to the VLT® OneGearDrive®), disconnect the power supply to the drive and wait for the discharge time to elapse (see the drive Operating Guide).
- Installation, start-up, maintenance, and decommissioning must only be performed by qualified personnel.

NOTICE

DANGER OF BURNS

The surface of the VLT® OneGearDrive® and the oil in the VLT® OneGearDrive® can reach high temperatures during operation.

- Do not touch the VLT® OneGearDrive® until it has cooled down.
- Do not carry out an oil change until the oil has cooled sufficiently.

3 Product Description

3.1 Overview of the VLT® OneGearDrive®

VLT® OneGearDrive® comprises a high-efficiency permanent magnet (PM) motor coupled to an optimized bevel gearbox. As part of the Danfoss VLT® FlexConcept®, the drive is an energy-efficient drive system that helps to optimize plant productivity and reduce energy costs. The VLT® FlexConcept® comprises the VLT® OneGearDrive® combined with a VLT® Decentral Drive FCD 302 or VLT® AutomationDrive FC 302.

The VLT® OneGearDrive® features a 3-phase synchronous non-salient PM motor with 3 available gear ratios. With an efficiency of 94.9%, the motor achieves the IE5 Ultra Premium Efficiency Class defined in IEC TS 60034-30-2.

The VLT® OneGearDrive® is available in 2 versions:

- Standard: For use in dry and wet production areas.
- Hygienic: For use in aseptic areas.

The VLT® OneGearDrive® is intended for commercial installations, unless otherwise expressly agreed. It complies with the standards of the series EN 60034/DIN VDE 0530. Use in a potentially explosive atmosphere is forbidden if not expressly intended for this purpose.

Increased safety precautions (for example, protection against access by children's fingers) are required in special cases, such as use in non-commercial installations. Ensure these safety conditions when setting up the installation.

The VLT® OneGearDrive® is designed for ambient temperatures between –20 °C and 40 °C (68 °F and 104 °F) and for installation heights up to 1000 m (3280 ft) above sea level. Any deviations found on the nameplate must be considered. Ensure that the conditions at the place of work correspond to all the nameplate data.

3.2 VLT® OneGearDrive® Types

NOTICE

– The Drive Configurator shows the valid configuration of drive variants. Only valid combinations are shown. Therefore, not all variants detailed in the type code are visible.

Table 2: Type Code VLT® OneGearDrive®

1–3	4	5	6	7–11	12	13–14	15	16–18	19–20	21–22	23	24–25	26	27–30	31–32	33–36	37
OGD		K	2		1			L06	RX		1			9010	H1		

Table 3: Legend to Type Code

[01–03]	**Product group**	OGD	VLT® OneGearDrive®
[04]	**Product variant**	S	Standard
		H	Hygienic
[05]	**Gear type**	K	Bevel gear
[06]	**Size**	2	Gear size 2
[07–11]	**Gear ratio**	05K92	5.92
		14K13	14.13
		31K13	31.13
[12]	**Output shaft design**	1	Hollow shaft
[13–14]	**Output shaft size**	30	30 mm
		35	35 mm
		40	40 mm
		I1	1 1/4 inch

		I2	1 7/16 inch
		I3	1 1/2 inch
[15]	**Output shaft material**	1	Mild steel[1]
		2	Stainless steel, AISI 316 Ti[2]
[16–18]	**Motor size**	L06	Max 2.3 kW (V210)
[19–20]	**Reserved**	RX	Reserved
[21–22]	**Motor connection**	TB	With terminal box[1]
		S2	Motor with plug socket and motor connector, without cable[3]
		S3	Motor with plug socket and motor connector, with 5 m cable[3]
		S4	Motor with plug socket and motor connector, with 10 m cable[3]
[23]	**Connector position**	1	Top
[24–25]	**Installation position**	P2	Horizontal, connections up or down[4]
		P3	Vertical, motor up
[26]	**Surface coating**	A	Aseptic[2]
		S	Standard[1]
[27–30]	**RAL color code**	9010	Standard
[31–32]	**Lubricants**	H1	Food grade oil
[33–36]	**Brake**	BXXX	Without brake
		B180	180 V DC / 400 V AC[5]
		B220	220 V DC / 480 V AC[5]
[37]	**CSA/UL**	X	Without
		1	CSA/UL

[1] Only OneGearDrive® standard

[2] Standard for OneGearDrive® hygienic, optional for OneGearDrive® standard

[3] Only OneGearDrive® hygienic

[4] Use P2 also for P1

[5] Option for OneGearDrive® standard only

4 Mechanical Installation

4.1 Items Supplied

The items supplied with the VLT® OneGearDrive® are:

- VLT® OneGearDrive®
- Installation instructions
- Eyebolt
- Plastic cap for eyebolt opening
- Hollow shaft cover with 3 washers and fixing screws
- Mounting set for axial fastening on the shaft

4.2 Transport

If the provided eyebolt is used to lift the VLT® OneGearDrive®, ensure the eyebolt is firmly tightened down to its bearing surface. Only use the eyebolt to transport the VLT® OneGearDrive® and not for lifting attached machines.

4.3 Inspection on Receipt

Procedure

1. After receiving the delivery, immediately check whether the items supplied match the shipping documents. Danfoss does not honor claims for faults registered later.
2. Register a complaint immediately with the carrier if there is visible transport damage.
3. Register a complaint immediately with the responsible Danfoss representative if there are visible defects or the delivery is incomplete.

4.4 Protection Rating

The VLT® OneGearDrive® range complies with EN 60529 and IEC 34-5/529.

The VLT® OneGearDrive® Standard is suitable for use in wet and dry areas and is supplied in protection rating IP67 as standard. The VLT® OneGearDrive® Hygienic is rated for both IP67 and IP69K.

4.5 Protective Coating

NOTICE

DAMAGE TO THE PROTECTIVE COATING

Damage to the paint coating reduces its protective function.

- Handle the VLT® OneGearDrive® with care and do not place it on any rough surfaces.

4.6 Mounting Arrangement

⚠ CAUTION ⚠

HIGH TORQUE AND FORCE

Depending on the reduction ratio, the VLT® OneGearDrive® develops substantially higher torques and forces than high-speed motors of similar power. The installer is responsible for the mechanical protection depending on the back driving torques.

- Rate the mounts, substructure, and torque restraint for the high forces anticipated during operation. Secure them sufficiently against loosening.

Avoid as much vibration as possible when installing the VLT® OneGearDrive®.

Observe the special instructions for installation locations with abnormal operating conditions (for example high ambient temperatures >40 °C (104 °F)). Ensure that the free circulation of air is not restricted by unsuitable installation or build-up of dirt (see 9.5 General Specifications and Environmental Conditions).

The surface temperature of the VLT® OneGearDrive® is usually below 70 °C (158 °F) during operation. If unexpected overheating occurs, refer to 7.1 Troubleshooting and 8.3 Inspection during Operation.

With certain layouts (for example unventilated machines), temperatures on the surface may exceed the limits of DIN EN 563, but still be within the specified limits for the VLT® OneGearDrive®. If the VLT® OneGearDrive® is installed in a place where it is subject to intensive contact, the installer or operator must provide protective shielding.

Take care when fitting the shaft with keyway onto the hollow shaft of the VLT® OneGearDrive®. Use the tapped end hole (according to DIN 332) for axial fixing of the OGD to the conveyor shaft.

4.6.1 Mounting Procedure

Procedure

1. Fasten the VLT® OneGearDrive® by its flange using the torque arm (see 9.7.1 Torque Arm Set).
2. Attach the VLT® OneGearDrive® to the driven shaft using the means provided.

4.7 Assembly Kit

4.7.1 Overview

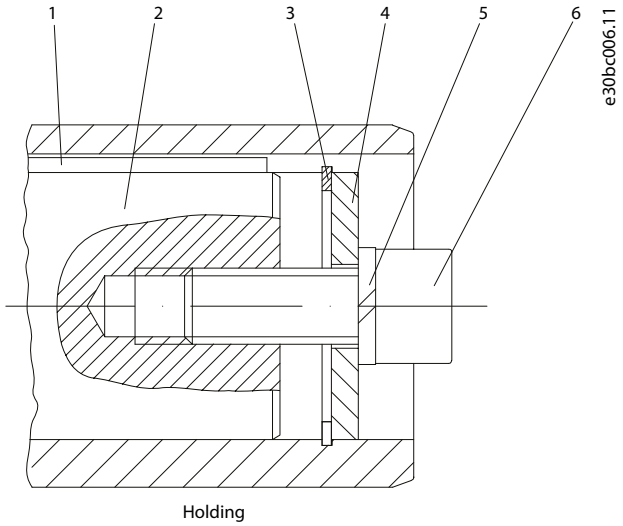

Illustration 1: Assembly Kit

1	Key, DIN 6885 (not included)	4	Disk
2	Shaft	5	Lock washer, DIN 7980 (not included)
3	Stainless steel retaining ring, DIN 472	6	Fixing screw, fillister head, DIN 912-8.8 (not included)

4.7.2 Dimensions of Assembly Kit for Metric Shafts

Table 4: Dimensions of Assembly Kit Items for Metric Shafts [mm]

Type	Stainless steel retaining ring	Lock washer[1]	Fixing screw[1]	Key[1]
OGD-30	30 x 1.2 mm	10 mm	M10 x 30	A 8 x 7 x 100 mm[2]
OGD-35	35 x 1.5 mm	12 mm	M12 x 35	A 10 x 8 x 100 mm[2]
OGD-40	40 x 1.75 mm	16 mm	M16 x 35	A 12 x 8 x 100 mm[2]

[1] Not included

[2] Key length required for b_{min} is shown in 4.9 Dimensions of the Metric Shaft and Disk. Adapt the key length according to the shaft length used.

The dimensions shown could differ from the customer conditions and must potentially be changed by the customer.

4.7.3 Dimensions of Assembly Kit for Imperial Shafts

Table 5: Dimensions of Assembly Kit Items for Imperial Shafts [inch]

Type	Stainless steel retaining ring	Lock washer[1]	Fixing screw[1]	Key[1]
OGD-I1	1.250 x 0.050	0.375	0.500–13 x 1.1875 [M12 x 30]	0.2500 x 0.2500 x 3.937[2]
OGD-I2	1.4375 x 0.050	0.500	0.500–13 x 1.3750 [M12 x 35]	0.3750 x 0.3750 x 3.937[2]
OGD-I3	1.500 x 0.050	0.625	0.625–11 x 1.6250 [M16 x 35]	0.3750 x 0.3750 x 3.937[2]

[1] Not included

[2] Key length required for b_{min} is shown in 4.10 Dimensions of the Imperial Shaft and Disk. Adapt the key length according to the shaft length used.

The dimensions shown could differ from the customer conditions and must potentially be changed by the customer.

4.8 Mounting Instructions

Procedure

1. Rotate the disk and fit it against the retaining ring. Both items are included in every delivery.
2. Attach the fixing screw and lock washer (not included).

-

NOTICE

– The fixing screw and washer required depend on the length and size of the shaft. For further information, refer to the mounting arrangement (see 4.6 Mounting Arrangement).

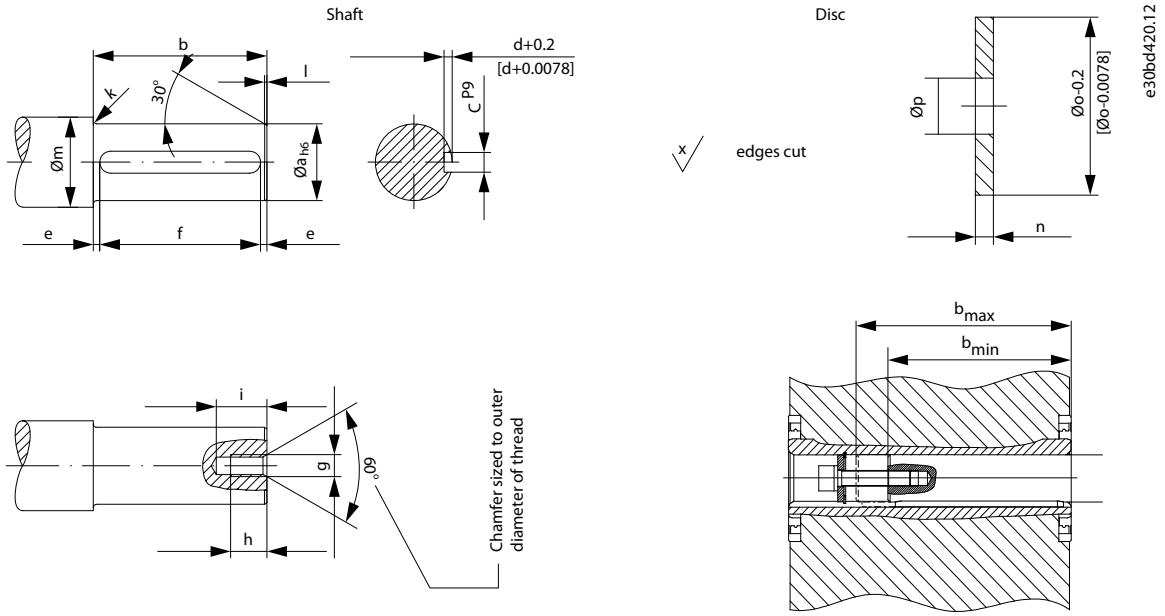

Illustration 2: Axial Fastening

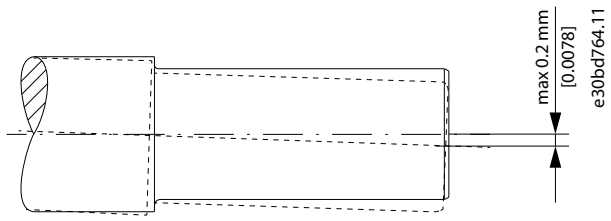

Illustration 3: Maximum Eccentricity of the Conveyor Shaft

4.9 Dimensions of the Metric Shaft and Disk

Table 6: Dimensions of the Metric Shaft and Disk [mm]

Type	Shaft dimensions [mm]													Disk dimensions [mm]		
	a	b_{min}	b_{max}	c	d	e	f[1]	g	h	i	k	l	m	n	o	p
OGD-30	30	120	140	8	4	5	100	M10	22	30	3	1.5	38	4	29.8	11
OGD-35	35	120	140	10	5	5	100	M12	28	37	3	1.5	43	4	34.8	13
OGD-40	40	120	140	12	5	5	100	M16	36	45	3	2	48	4	39.8	17

[1] Key length required for b_{min}. Adapt the key length according to the shaft length used (b).

NOTICE

- The dimensions shown could differ from the customer conditions and must potentially be changed by the customer.
- Use grease to mount the VLT® OneGearDrive® onto the shaft. For example, CASTROL Obeen Paste NH1, ARAL Noco Fluid, or similar. Always use a stainless steel key with the VLT® OneGearDrive® and the stainless steel hollow shafts option.

4.10 Dimensions of the Imperial Shaft and Disk

Table 7: Dimensions of the Imperial Shaft

Type	Shaft dimensions [inch]												
	a	b_{min}	b_{max}	c	d	e	f[1]	g	h	i	k	l	m
OGD-I1	1.250	4.724	5.512	0.250	0.138	0.195	5.122	M12	0.866	1.181	0.118	0.059	1.496
OGD-I2	1.4375	4.724	5.512	0.375	0.214	0.195	5.122	M12	1.102	1.457	0.118	0.059	1.693
OGD-I3	1.500	4.724	5.512	0.375	0.211	0.195	5.122	M16	1.417	1.772	0.118	0.079	1.890

[1] Key length required for b_{min}. Adapt the key length according to the shaft length used (b).

Table 8: Dimensions of the Imperial Disk

Type	Disk dimensions [inch]		
	n	o	p
OGD-I1	0.1575	1.236	0.512
OGD-I2	0.1575	1.425	0.512
OGD-I3	0.1575	1.488	0.669

NOTICE

- The dimensions shown could differ from the customer conditions and must potentially be changed by the customer.
- Use grease to mount the VLT® OneGearDrive® onto the shaft. For example, CASTROL Obeen Paste NH1, ARAL Noco Fluid, or similar. Always use a stainless steel key with the VLT® OneGearDrive® and the stainless steel hollow shafts option.

4.11 Torque Restraint

The VLT® OneGearDrive® requires a suitable torque restraint to resist the reaction torque. The torque arm with mounting set is available as an option (see 9.7.1 Torque Arm Set). Ensure that the torque arm does not create excessive constraining forces, for example due to the driven shaft running untrue. Excessive backlash can result in excessive shock torques in switching or reversing operations.

4.12 Final Assembly

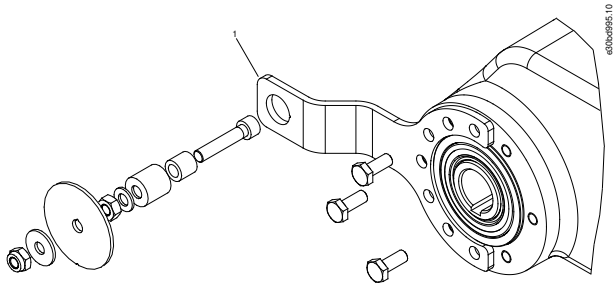

Illustration 4: Final Assembly

1	Torque arm (optional)

Procedure

1. Assemble the VLT® OneGearDrive® to the shaft with the assembly kit.

   -

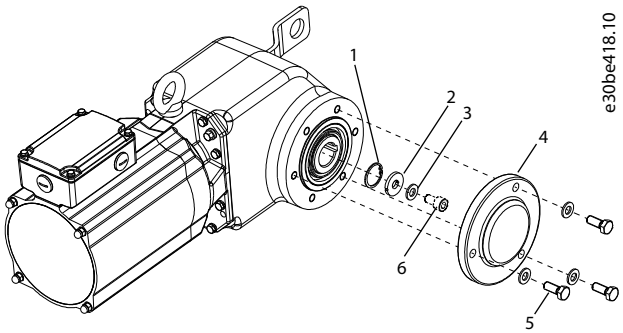

Illustration 5: Assembly of the Mounting Arrangement and the Hollow Shaft Cover

1	Retaining ring	4	Shaft cover
2	Disk	5	Shaft cover screws
3	Lock washer, DIN 7980	6	Screw (not included)

2. Assemble the hollow shaft cover [3] onto the VLT® OneGearDrive® using the 3 shaft cover screws [4].
   - Fasten the screws by hand.
   - The tightening torque is 4.5 Nm (39.8 in-lb).
3. After installation, remove the eyebolt [1] and cover the hole with the plastic cap [2]. This ensures the hygienic features of a smooth surface.

   -

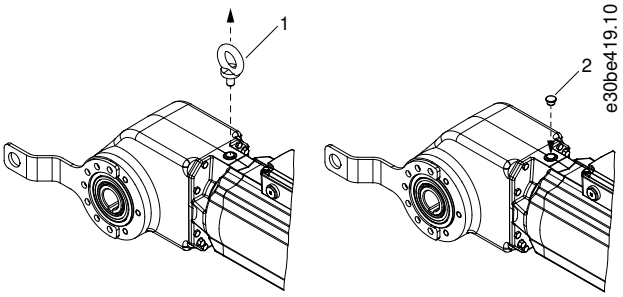

Illustration 6: Exchanging the Eyebolt with the Plastic Cap after Installation

1	Eyebolt

2	Plastic cap

5 Electrical Installation

5.1 EMC-Compliant Installation

To guarantee electromagnetic compatibility (EMC) as defined in EMC Directive 2014/30/EU, all signal lines must use shielded cables. The drive Operating Guide indicates whether a shielded cable is necessary for the motor supply line.

Adhere to the following instructions:

- Ground the cable sheath at both ends.
- Ensure that hybrid cables are double-shielded.
- Always use shielded cables when laying signal cables and power cables parallel to each other.
- Ensure that the cable shields are connected to the terminal box.

N O T I C E

– When using a brake option, use a drive with a mains filter.

The operation of the low voltage machine in its intended application must meet the protection requirements of the EMC (electromagnetic compatibility) Directive 2014/30/EU. Correct installation (for example, shielded cables) is the responsibility of the system's installers. For systems with drives and rectifiers, the manufacturer's electromagnetic compatibility information must also be considered. The electromagnetic compatibility directive in accordance with IEC/EN 61800-3 is complied with given proper use and installation of the VLT® OneGearDrive®. This is also true in combination with Danfoss drives and rectifiers.

5.2 Electrical Connection

When connecting the motor, take note of the nameplate data, the connection diagram, and the relevant safety regulations and rules for the prevention of accidents.

Unless a special design is concerned, the data on the nameplate refers to:

- A voltage tolerance of ±5%.
- An ambient temperature of –20 °C to +40 °C (–4 °F to +104 °F).
- Altitudes up to 1000 m (3280 ft) above sea level.

5.3 Terminal Box

Feed the motor cables (motor with or without brakes) into the motor terminal box and connect them.

Ensure a perfect seal when closing the terminal box.

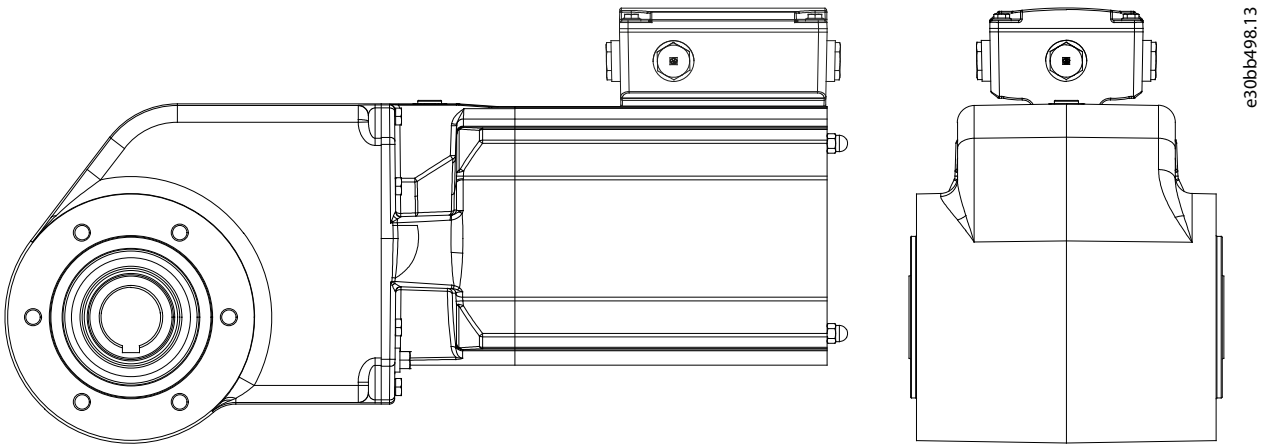

Illustration 7: Terminal Box

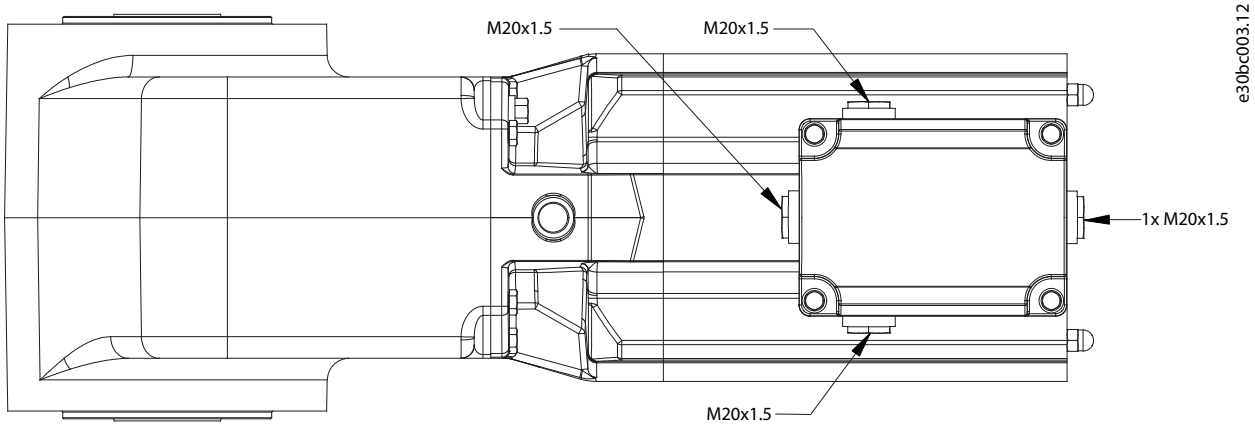

Illustration 8: Terminal Box Screws

N O T I C E

- Never alter the position of the terminal box or open any screws unless instructed to in this manual. Doing so can damage the VLT® OneGearDrive® and invalidate the warranty.

5.3.1 Terminal Box Connection

Ensure that the power is switched off before opening the terminal box. The information on voltage and frequency on the name-plate must correspond with the mains voltage under observance of the terminal circuit. Exceeding the tolerances as in EN 60034/DIN VDE 0530, that is, voltages ±5%, frequency ±2%, cam form, and symmetry, increases heating and reduces service life.

Observe any accompanying connection diagrams, particularly for special equipment (for example, thermistor protection). The type and cross-section of the main conductors, as well as the protective conductors and any potential equalization which may become necessary, must correspond to the general and local installation regulations. With switching duty, take the starting current into account.

Protect the VLT® OneGearDrive® against overload and, in dangerous situations, against unintended starts. Lock the terminal box again to protect against contact with live components.

⚠ C A U T I O N ⚠

RISK OF SHORT CIRCUITS

Short circuits can occur if water penetrates through the cables into the terminal box. The installed end caps on the terminal box support the IP protection rating of the VLT® OneGearDrive® (see 4.4 Protection Rating).

- Always use the adequate sealed components when removing the end caps and plugging the wire connection.
- Always ensure that the terminal box is closed properly.

N O T I C E

- Refer to the Operating Guides for VLT® AutomationDrive FC 302 and VLT® Decentral Drive FCD 302 to connect the terminals.
- Do not connect the VLT® OneGearDrive® directly to the supply.

5.4 CAGE CLAMP® Connection

Illustration 9 shows the VLT® OneGearDrive® V210 with terminal box and the connection to the thermal protection.

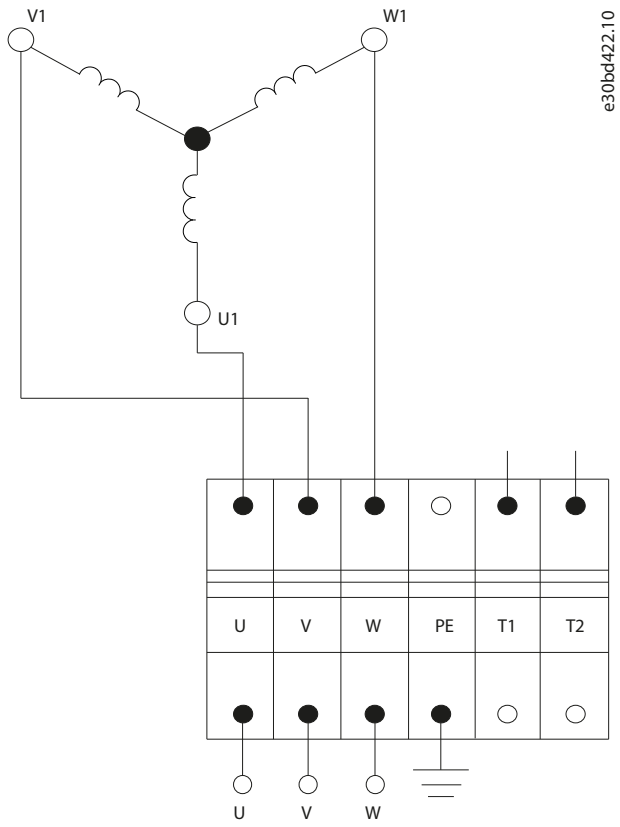

Illustration 9: CAGE CLAMP® Connection

Table 9: CAGE CLAMP® connections

Description	Inverter output	Color	Typical cross-section	Maximum cross-section[1]
Motor winding	U	Black	1.5 mm^2/AWG 16	4 mm^2/AWG 12
	V	Blue		
	W	Brown		
Protective earth	PE	Yellow/green	1.5 mm^2/AWG 16	4 mm^2/AWG 12
Temperature protection[2] KTY 84-130	T1	White	0.75 mm^2/AWG 20	1.5 mm^2/AWG 16
	T2	Brown		

[1] Do not use the maximum allowed cross-section with a cable lug.

[2] When connected to VLT® AutomationDrive FC 302 and VLT® Decentral Drive FCD 302, use analog input terminal 54, KTY sensor 1. For information about parameter setting and programming, refer to the corresponding Operating Guides.

Table 10: Connections T1 and T2

T1	KTY 84-130	VLT® AutomationDrive FC 302[1]	VLT® AutomationDrive FCD 302[1]
T2		KTY sensor 1 Analog input 54	

[1] Only if connected.

N O T I C E

- After connection, tighten all 4 screws on the terminal box cover. The tightening torque is 3 Nm (26.6 in-lb).

5.5 CleanConnect® Connection

Illustration 10 shows the connection power plug for VLT® OneGearDrive® Hygienic V210 with thermistors.

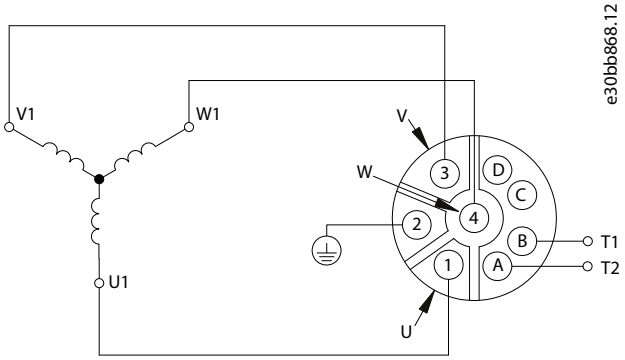

Illustration 10: CleanConnect® OneGearDrive Connection Diagram

Table 11: CleanConnect® Connections

Description	Inverter output	Pin	Typical cross-section	Maximum cross-section
Motor winding	U	1	1.5 mm²/AWG 16	2.5 mm²/AWG 14
	V	3		
	W	4		
Protective earth	PE	2	1.5 mm²/AWG 16	2.5 mm²/AWG 14
Temperature protection[1] KTY 84-130	T1	A	0.75 mm²/AWG 20	1.5 mm²/AWG 16
	T2	B		

[1] When connected to VLT® AutomationDrive FC 302 and VLT® Decentral Drive FCD 302, use analog input terminal 54, KTY sensor 1. For information about parameter setting and programming, refer to the corresponding Operating Guides.

Table 12: Connections T1 and T2

T1	KTY 84-130	VLT® AutomationDrive FC 302[1]	VLT® AutomationDrive FC 302[1]
T2		KTY sensor 1 Analog input 54	

[1] Only if connected.

5.6 Overload Protection

Take note of the relevant circuit diagram for motors with thermally activated winding protection (see 5.4 CAGE CLAMP® Connection).

For thermal protection, the built-in KTY sensor can be connected. Alternatively, the ETR function of the VLT® AutomationDrive FC 302 or VLT® Decentral Drive FCD 302 can be used.

6 Commissioning

6.1 Measures before Commissioning

If the VLT® OneGearDrive® has been stored, take the measures detailed here.

- Oil
  - Change the oil in the VLT® OneGearDrive® if the storage period exceeds 5 years or the temperatures were harsh throughout a shorter storage period. For detailed instructions and oil recommendations, see 8.5.3 Oil Volume.
- Shaft seals
  - When changing the oil, check the function of the shaft seals on the output shaft. Replace the shaft seals if there is any change in shape, color, hardness, or if any sealing defect is detected.

6.2 Commissioning Procedure

Procedure

1. Check the mechanical mounting, especially the axial fastening and the torque arm.
2. Check for any mechanical damage to the VLT® OneGearDrive®. A damaged hollow shaft seal can lead to a leakage.
3. Check the electrical connection and ensure that the VLT® OneGearDrive® is grounded correctly.
4. Start up the system according to the application setup. Further information can be found in the OEM's documentation or in the documentation for the drive.
5. Examine the direction of rotation at low speed in the no-load state.
6. Ensure that the current draw in the loaded condition does not exceed the rated current indicated on the nameplate of the VLT® OneGearDrive® for any length of time (see 9.4 Speed/Torque Characteristics).
7. After first commissioning, observe the VLT® OneGearDrive® for at least 1 hour to detect any unusual heat or noise.

7 Diagnostics

7.1 Troubleshooting

Table 13: Troubleshooting

Symptom	Possible cause	Troubleshooting
Motor not running	Incorrect cabling	Check the cabling.
	Drive setup incorrect	Check the setup and parameters in the drive or PLC. Refer to the drive Operating Guide.
	Brake closed	Check the cabling and supply voltage.
	Conveyor blocked	Remove the blockage from the conveyor.
Motor rotating in wrong direction	Wrong cabling (OGD Standard)	Check the cabling of phases U, V, and W.
	Wrong crimping (OGD Hygienic)	Check the pin configuration of phases U, V, and W.
	Drive setup incorrect	Check the setup and parameters. Refer to the drive Operating Guide.
	OGD mounted in wrong direction	Rotate the OGD by 180°.
Motor only rotating in 1 direction	Drive setup incorrect	Check the setup and parameters. Refer to the drive Operating Guide.
Unusual mechanical noise	Noise from application (for example, conveyor)	Check the application.
	Oil level low due to incorrect mounting position	Check the oil level using the oil check kit provided by Danfoss.
	Smallest gear ratio with high speed	The smallest gear ratio i=5.92 at high speed is louder than the bigger gear ratios – this is normal.
Hammering noise from gear	Gears damaged	Contact Danfoss service.
Movement of OGD when running on the conveyor shaft	Conveyor shaft out of specification	Use a shaft as specified in this manual.
Black powder in the hollow shaft cover	Conveyor shaft out of specification	Use a shaft as specified in this manual.
	Torque arm fixed to the conveyor	Use a torque arm that allows the motor to move, for example, the torque arm available from Danfoss.
Motor temperature too high	Motor frequency/current too high	Check the gear ratio.
	Current too high	Check the conveyor lubrication.
Oil on hollow shaft seal	Grease from conveyor bearing which can appear to be oil. It can get from the conveyor side of the hollow shaft to the other side (white plastic cover) through the hollow shaft, especially when it is warm.	Clean off the grease and reapply a smaller amount of grease.
	Heated mounting grease which can appear to be oil.	Clean
	Heated grease from hollow shaft seal. The hollow shaft seal is greased when it is mounted in	Clean and check again after 1–2 weeks. Repeat the procedure if necessary.

Symptom	Possible cause	Troubleshooting
	the factory. If the grease gets hot, it can get out of the hollow shaft seal and look like oil.	
	Small initial leakage during the first time of operation. This can happen until the sealing system reaches its full function and is normal.	Clean and check again after 1–2 weeks. Repeat the procedure if necessary. An initial leakage will typically disappear without further actions.
	Oil level too high	Check and correct the oil level using the oil check kit provided by Danfoss.
	Actual hollow shaft seal leakage. It has been confirmed that none of the other root causes apply. An actual leakage is permanent with a significant loss of oil.	Change the hollow shaft seal.

8 Maintenance, Decommissioning, and Disposal

8.1 Warnings

⚠ W A R N I N G ⚠

HIGH VOLTAGE

High voltage, which can lead to death or serious injury, is present on the connectors.

- Before working on the power connectors (disconnecting or connecting the cable to the VLT® OneGearDrive®), disconnect the power supply to the drive and wait for the discharge time to elapse (see the drive Operating Guide).
- Installation, start-up, maintenance, and decommissioning must only be performed by qualified personnel.

N O T I C E

DANGER OF BURNS

The surface of the VLT® OneGearDrive® and the oil in the VLT® OneGearDrive® can reach high temperatures during operation.

- Do not touch the VLT® OneGearDrive® until it has cooled down.
- Do not carry out an oil change until the oil has cooled sufficiently.

8.2 Maintenance Tasks

To prevent breakdown, danger, and damage, examine the VLT® OneGearDrive® at regular intervals depending on the operating conditions. Replace worn or damaged parts using original spare parts or standard parts.

Contact the local service representative for service and support.

The VLT® OneGearDrive® has a low rate of maintenance. The maintenance tasks listed in Table 14 may be performed by the customer. No other tasks are required.

Table 14: Maintenance Tasks

Component	Maintenance task	Maintenance interval	Instruction
VLT® OneGearDrive®	Check for abnormal noise and vibration.	Every 6 months.	Contact Danfoss Service.
Protective coating	Check for damage.	Every 6 months.	Repair damage using the VLT® OneGearDrive® Paint Repair Set[1].
Hollow shaft seal (stainless steel shaft)	Check the condition and check for leakage.	Every 6 months.	If damaged, replace with a Viton seal. Always use a new track 1–2 mm (0.039–0.079 in) behind the initial one.
Hollow shaft seal (mild steel shaft)	Check the condition and check for leakage.	Every 6 months.	If damaged, replace with an NBR seal. Always use a new track 1–2 mm (0.039–0.079 in) behind the initial one.
Oil	Change the oil.	Food grade oil: After 35000 hours run.	See 8.5.4 Changing the Oil.
	Check for oil leakage on gear and motor housing.	Every 12 months.	Replace the VLT® OneGearDrive®.

[1] Not available in all countries.

8.2.1 Replacing the Brake and Rotor

All work must only be carried out by qualified technical personnel on a stationary machine that has been protected against restarting. This also applies to auxiliary circuits.

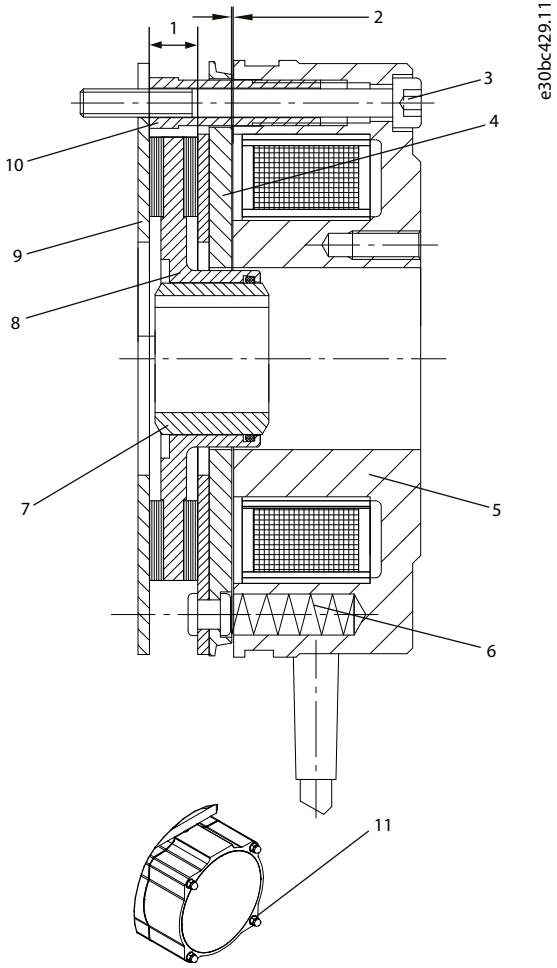

1	Rotor width, minimum 5.5 mm (0.2 in)	7	Hub for rotor
2	Air gap, maximum 0.45 mm (0.02 in)	8	Rotor
3	Fastening screws	9	Friction plate
4	Armature plate	10	Hollow screws
5	Magnet	11	Brake cover, plastic disks, and nuts
6	Springs		

Illustration 11: Brake and Rotor

Procedure

1. Disconnect the brake from the rectifier (see 9.7.2.3 Connections).
2. Open the brake completely by turning the brake cover nuts [11] counterclockwise.
3. Loosen the fastening screws [3] completely by turning them counterclockwise.
4. Remove the installed brake and rotor from the hub of the rotor [7].
5. Assemble the new brake and rotor on the hub of the rotor [7].
6. Tighten the fastening screws [3].
7. Check the brake cover seal and exchange it if any damage is detected.
8. Close the brake cover and tighten the covering nuts [11] with tightening torque 2.3 Nm (20.36 in-lb). Always replace the plastic disks with new ones.
9. Connect the brake to the rectifier (see 9.7.2.3 Connections).

8.3 Inspection during Operation

Changes in relation to normal operation, such as higher temperatures, vibrations, or noises, indicate that the function is impaired. To avoid faults that could lead, directly or indirectly, to injury to persons or damage to property, inform the maintenance staff responsible. If in any doubt, switch off the VLT® OneGearDrive® immediately.

Carry out regular inspections during operation. Check the VLT® OneGearDrive® at regular intervals for anything unusual. Also see 8.2 Maintenance Tasks.

Pay particular attention to:

- Unusual noises.
- Overheated surfaces (temperatures up to 70 °C (158 °F) may occur in normal operation), see 9.4 Speed/Torque Characteristics.
- Uneven running.
- Strong vibrations.
- Loose fastenings.
- Condition of electrical wiring and cables.
- Poor heat dispersion.

Overheated surfaces can be caused by incorrect gearbox selection or incorrect parameter setup in the drive. If irregularities or problems occur, contact Danfoss Service.

8.4 Repair

NOTICE

– Always contact the local Danfoss sales company for information about the repair policy.

8.5 Oil

8.5.1 Oil Changes

The VLT® OneGearDrive® is supplied with oil ready for operation.

The oil change period in part load is up to 35000 hours run (for motor characteristics at different loads, see 9.4 Speed/Torque Characteristics). The oil change interval is based on normal operating conditions and an oil temperature of approximately 70 °C (158 °F). The oil change interval must be reduced at higher temperatures (halve the interval for each 10 K increase in the oil temperature).

The VLT® OneGearDrive® has drain and filling plugs that make it possible to change the oil without disassembly.

When changing the oil, inspect and, if necessary, replace the seals.

Flush the VLT® OneGearDrive® if the oil grade or oil type is changed (see 8.5.4 Changing the Oil).

8.5.2 Oil Grade

The filled oil type is specified on the nameplate. Danfoss uses food grade oils that comply with NSF H1.

Do not mix different oil types as this may impair the characteristics of the oil.

Contact Danfoss for further information on oil types.

8.5.3 Oil Volume

The recommended oil quantity for the particular mounting position is indicated on the motor nameplate. After filling, check that the oil level is correct using the oil dipstick supplied with the optional oil check service kit.

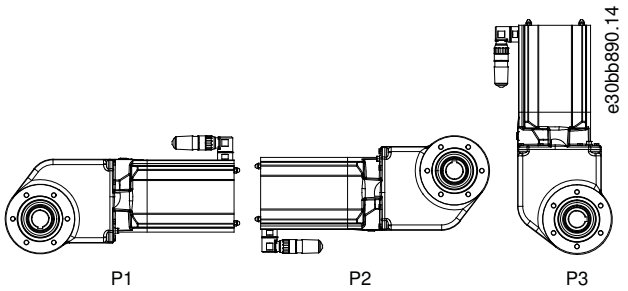

Illustration 12: Mounting Positions

Table 15: Oil Volume

	P1[1]	P2	P3
Oil volume [l (fl oz)]	2.2 (74.4)		3.1 (105)

[1] P1 is no longer available in the Danfoss DRIVECAT configurator. Use P2 also for P1 installations.

8.5.4 Changing the Oil

N O T I C E

DANGER OF BURNS

The surface of the VLT® OneGearDrive® and the oil in the VLT® OneGearDrive® can reach high temperatures during operation.

- Do not touch the VLT® OneGearDrive® until it has cooled down.
- Do not carry out an oil change until the oil has cooled sufficiently.

8.5.4.1 Draining the Oil

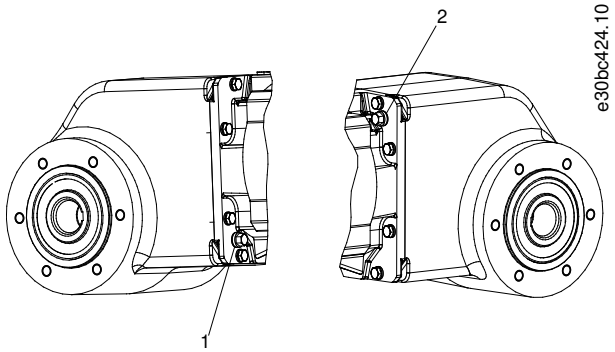

Illustration 13: VLT® OneGearDrive® Oil Screws 1 and 2

Procedure

1. Once the VLT® OneGearDrive® and the oil have cooled down, remove the VLT® OneGearDrive® from the system.
2. Bring the VLT® OneGearDrive® into a vertical position and remove oil screws [1] and [2].
3. Turn the VLT® OneGearDrive® into a horizontal position and drain the oil through screw hole [1] into a suitable container.
4. Turn the VLT® OneGearDrive® back into a vertical position.

8.5.4.2 Filling the Oil

N O T I C E

- The required oil quantities can be found on the nameplate and in 8.5.3 Oil Volume.

Procedure

1. Fill the VLT® OneGearDrive® with the appropriate amount of oil through screw hole [1].
2. Check that the oil level is correct using the oil dipstick supplied with the optional oil check service kit
3. Remove all traces of oil from the surface of the VLT® OneGearDrive® using a soft cloth.
4. Reinsert and tighten oil screws [1] and [2] with tightening torque 7 Nm (61.96 in-lb).

8.6 Spare Parts

Contact the local Danfoss sales company for information on spare parts.

8.7 Decommissioning

⚠ W A R N I N G ⚠

HIGH VOLTAGE

High voltage, which can lead to death or serious injury, is present on the connectors.

- Before working on the power connectors (disconnecting or connecting the cable to the VLT® OneGearDrive®), disconnect the power supply to the drive and wait for the discharge time to elapse (see the drive Operating Guide).
- Installation, start-up, maintenance, and decommissioning must only be performed by qualified personnel.

N O T I C E

DANGER OF BURNS

The surface of the VLT® OneGearDrive® and the oil in the VLT® OneGearDrive® can reach high temperatures during operation.

- Do not touch the VLT® OneGearDrive® until it has cooled down.
- Do not carry out an oil change until the oil has cooled sufficiently.

8.7.1 Dismounting

Procedure

1. Disconnect the supply to the drive and wait for the discharge time to elapse (see the drive Operating Guide).
2. Remove the electrical cable from the drive to the VLT® OneGearDrive®.
3. Dismount the VLT® OneGearDrive®.

8.7.2 Product Returns

Danfoss products can be returned for disposal at no charge. A prerequisite for this is that they are free of deposits, such as oil, grease, or other types of contamination that hampers disposal. Furthermore, foreign materials or third-party components cannot be included with the returned product. Ship the products free on board to the local Danfoss sales company.

8.8 Disposal

Do not dispose of equipment containing electrical components together with domestic waste. Collect it separately in accordance with local and currently valid legislation.

9 Specifications

9.1 Nameplate

The nameplate on the VLT® OneGearDrive® is corrosion-proof. It is made of a special plastic, approved for hazardous areas by the Physikalisch-Technische-Bundesanstalt (PTB).

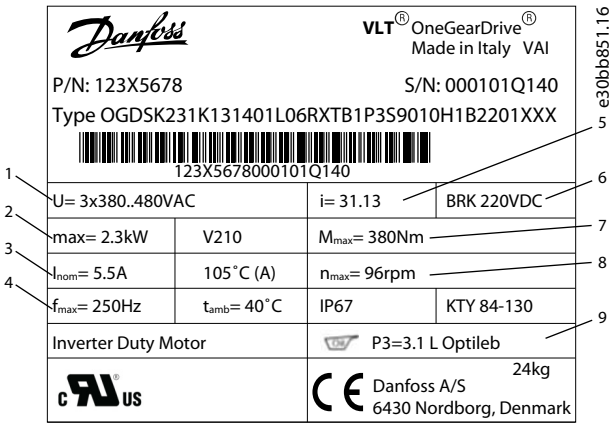

Illustration 14: Example Nameplate

1	Supply voltage	6	Brake data
2	Power	7	Output torque
3	Nominal motor current	8	Output speed
4	Motor frequency	9	Mounting position and oil data
5	Gear ratio		

9.2 Storage

If the VLT® OneGearDrive® is to be stored, ensure a dry, dust free, and well-ventilated environment. If the temperature in the storage space exceeds the normal range of –20 °C (–4 °F) to 40 °C (+104 °F) for an extended period or varies frequently, employ the measures before start-up specified in 6.1 Measures before Commissioning, even after short storage times.

Damage sustained during storage:

- The life of the oils and seals is reduced with longer storage times.
- There is a risk of fracture at low temperatures (under approximately –20 °C (–4 °F).

If the VLT® OneGearDrive® is being stored for an extended time before start-up, increased protection against damage by corrosion or humidity can be achieved by observing the information in 9.2.1 Measures during Storage and 9.2.2 Measures after Storage. Observe the instructions in this Operating Guide.

The actual load depends strongly on local conditions, therefore the time period stated is only a guiding value. This period does not include any extension of the warranty.

If disassembly is necessary before start-up, contact Danfoss Service.

9.2.1 Measures during Storage

Turn the VLT® OneGearDrive® 180° every 12 months so that the oil in the gear unit covers the bearings and gear wheels that were previously positioned on top. Also, turn the output shaft manually to churn the rolling-contact bearing grease and distribute it evenly.

9.2.2 Measures after Storage

Repair any damage to the exterior paint layer or to the rust protection of the bright hollow shafts.

Check that the VLT® OneGearDrive® contains the correct amount of oil and confirm the correct mounting position (see 8.5.4 Changing the Oil).

9.3 Technical Data: Permanent Magnet 3-phase Synchronous Motor

Table 16: Technical Data: Permanent Magnet 3-phase Synchronous Motor

Specification	V210	LA10
Rated torque	13 Nm (115 in-lb)	12.6 Nm (115 in-lb)
Rated current	5.5 A	7.2 A
Rated speed	3000 RPM	3000 RPM
Rated frequency	250 Hz	250 Hz
Motor circuit	Y	Y
Stator resistance (Rs)	1.0 Ω	0.5 Ω
Inductivity - D axis (Ld)	13.5 mH	5 mH
Motor poles (2p)	10	10
Inertia moment	0.0043 Kgm^2	0.0043 Kgm^2
Back EMF constant (ke)	155 V/1000 RPM	120 V/1000 RPM
Torque constant (kt)	2.35 Nm/A (20.8 in-lb/A)	1.75 Nm/A (15.5 in-lb/A)
Efficiency rating	IE5 η_motor=94.9%	Better than IE4

9.4 Speed/Torque Characteristics

For more details, see the VLT® OneGearDrive® Selection Guide.

9.4.1 Ratio i=31.13

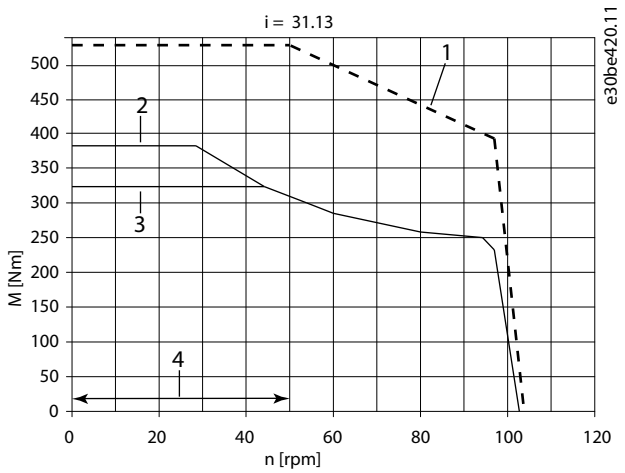

1	Maximum high starting torque, M_{HST} (maximum 3 s,10 cycles/h)	3	Nominal torque, M_n
2	Torque in part load operation	4	Typical operating range

Illustration 15: Ratio i=31.13

9.4.2 Ratio i=14.13

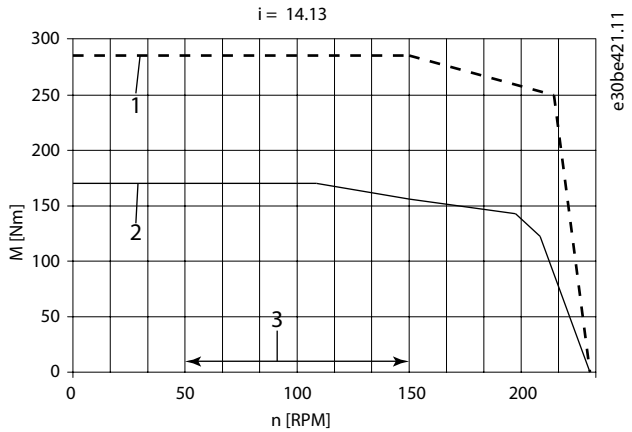

1	Maximum high starting torque, M_{HST}	3	Typical operating range
2	Nominal torque, M_n		

Illustration 16: Ratio i=14.13

9.4.3 Ratio i=5.92

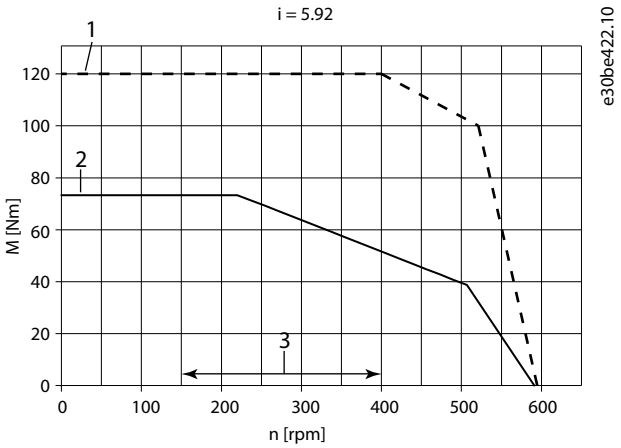

1	Maximum high starting torque, M_{HST}	3	Typical operating range
2	Nominal torque, M_n		

Illustration 17: Ratio i=5.92

9.4.4 Speed/Torque Values

Table 17: Speed/Torque Values

i	$n_{max\ [RPM]}$	I_{max} [A]	I_N [A]	$M_{HST\ [Nm]}$	Mn [Nm]	M_{max} [Nm]
5.92	507	9.0	5.5	120	75	75
14.13	212	9.0	5.5	280	180	180
31.13	96	7.2	5.5	520	320	380

9.5 General Specifications and Environmental Conditions

Table 18: General Specifications and Environmental Conditions

Installation elevation	There is no derating of the VLT® OneGearDrive® itself. Refer to the Design Guide for the installed drive.
Maximum backlash of gearbox unit	±0.07°

9.6 Dimensions

9.6.1 VLT® OneGearDrive® Standard

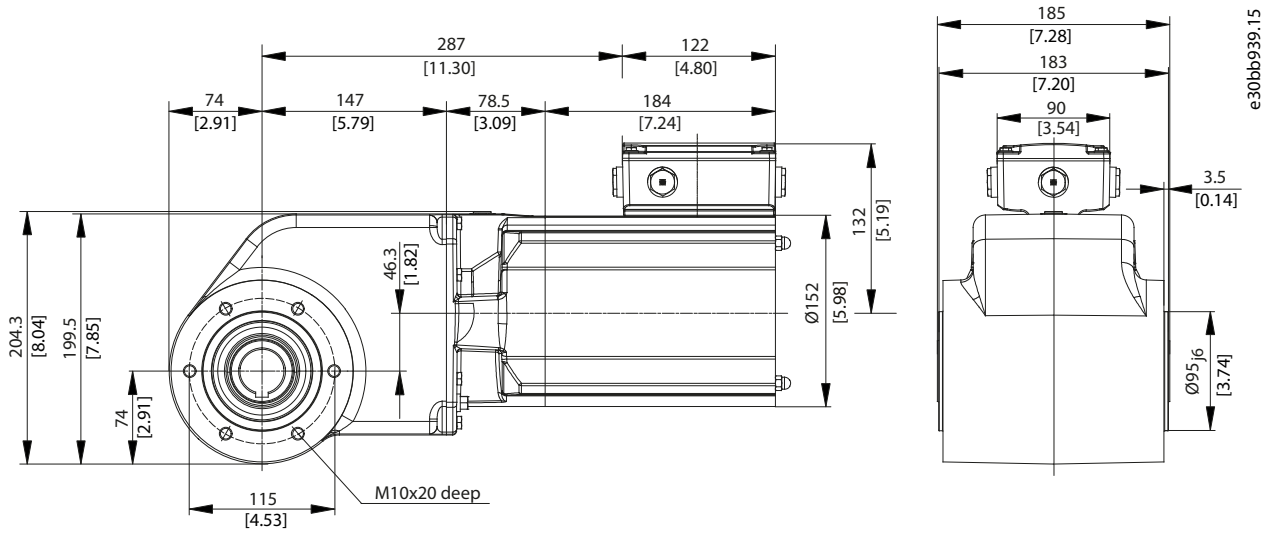

Illustration 18: VLT® OneGearDrive® Standard

9.6.2 VLT® OneGearDrive® Standard with Torque Arm in Front Position (Optional)

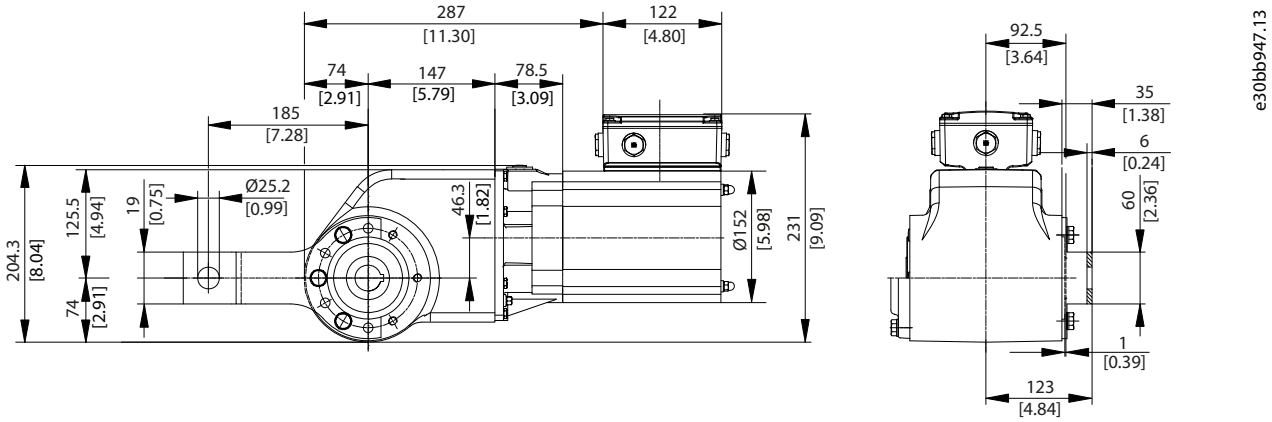

Illustration 19: VLT® OneGearDrive® Standard with Torque Arm in Front Position (Optional)

9.6.3 VLT® OneGearDrive® Hygienic

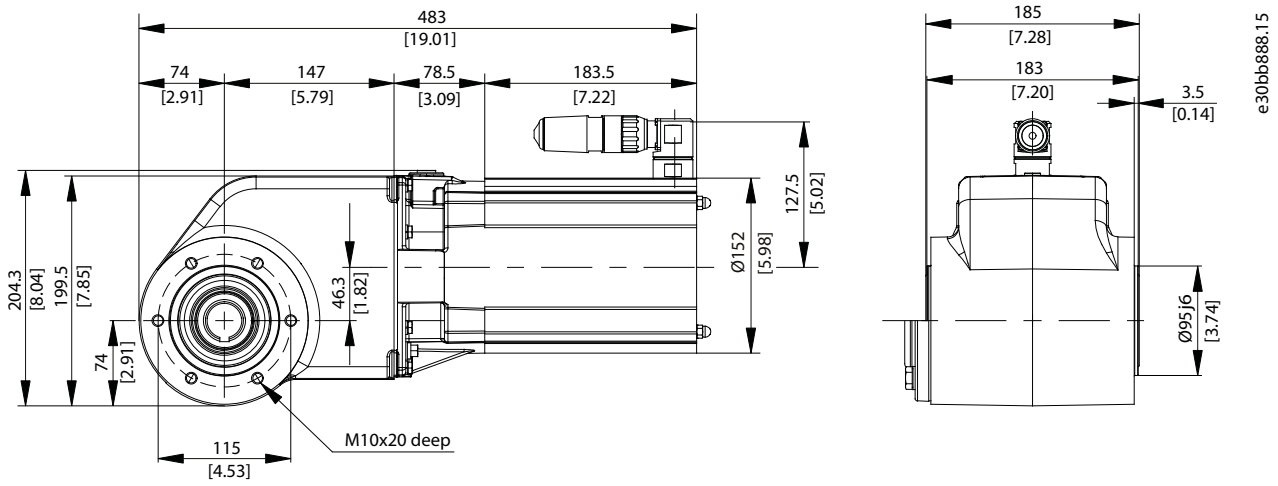

Illustration 20: VLT® OneGearDrive® Hygienic

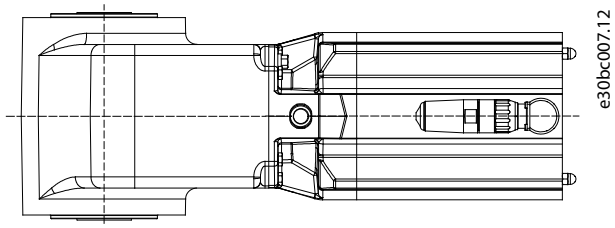

Illustration 21: Connector Position

N O T I C E

- Never turn the CleanConnect® plug from the delivered position and do not use it to lift the VLT® OneGearDrive®. If the plug is rotated, the cables could be damaged, causing a short circuit. Contact Danfoss Service if the plug is loose.

9.6.4 VLT® OneGearDrive® Hygienic with Torque Arm in Front Position (Optional)

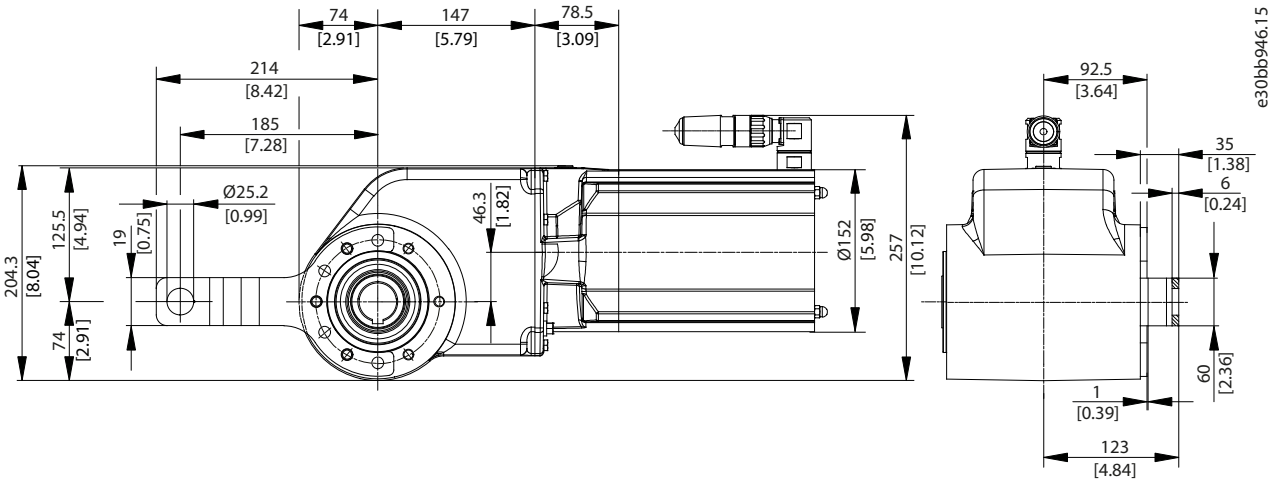

Illustration 22: VLT® OneGearDrive® Hygienic with Torque Arm in Front Position (Optional)

9.6.5 Shaft Dimensions

9.6.5.1 30 mm Shaft

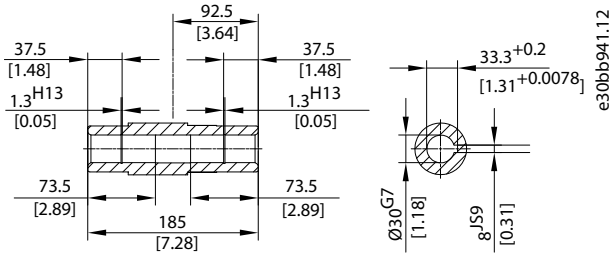

Illustration 23: Steel/Stainless Steel 30 mm Shaft

9.6.5.2 35 mm Shaft

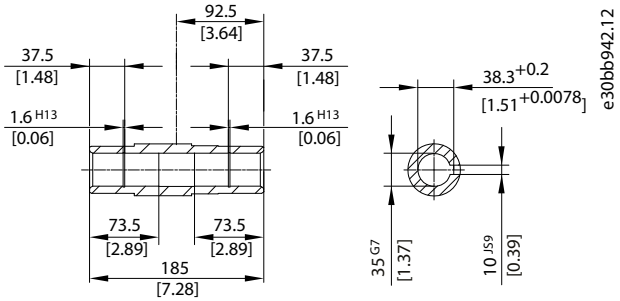

Illustration 24: Steel/Stainless Steel 35 mm Shaft

9.6.5.3 40 mm Shaft

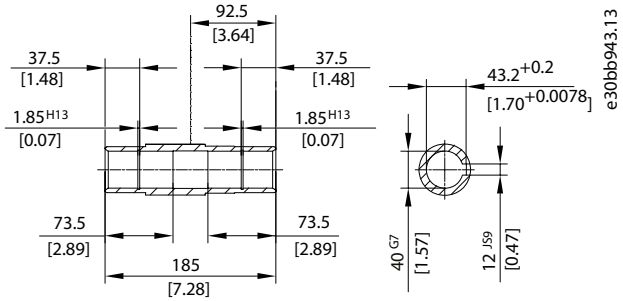

Illustration 25: Steel/Stainless Steel 40 mm Shaft

9.6.5.4 I1 Shaft

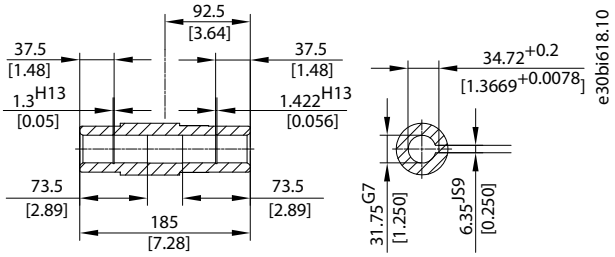

Illustration 26: Steel/Stainless Steel I1 Shaft

9.6.5.5 I2 Shaft

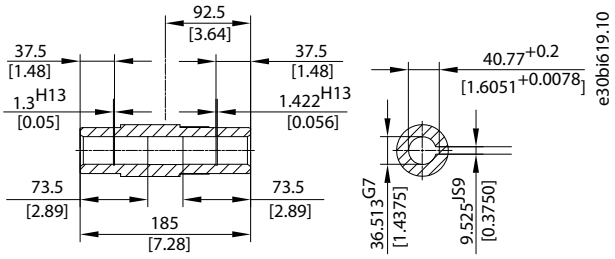

Illustration 27: Steel/Stainless Steel I2 Shaft

9.6.5.6 I3 Shaft

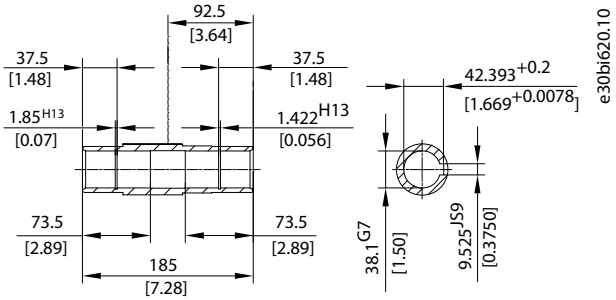

Illustration 28: Steel/Stainless Steel I1 Shaft

9.7 Options

9.7.1 Torque Arm Set

Ordering number: 178H5006

The torque arm set consists of the torque arm (see Illustration 29) and the mounting set (see Illustration 30).

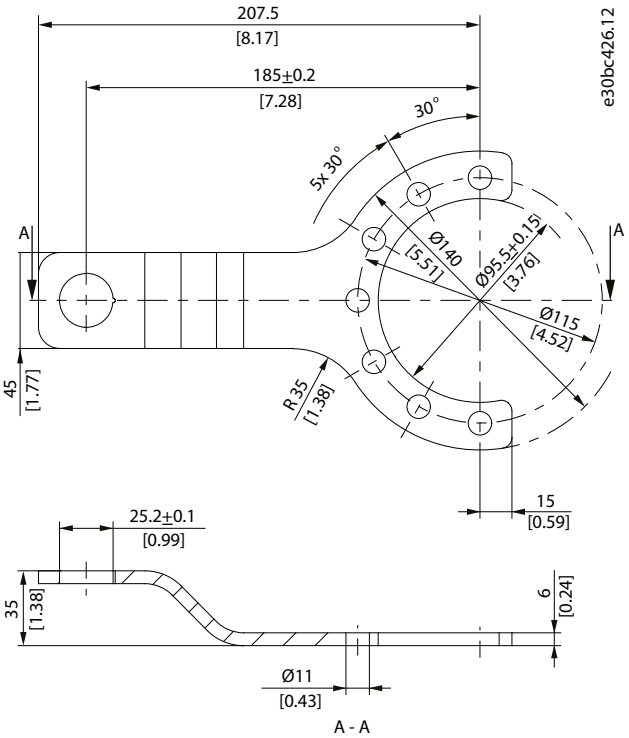

Illustration 29: Torque Arm

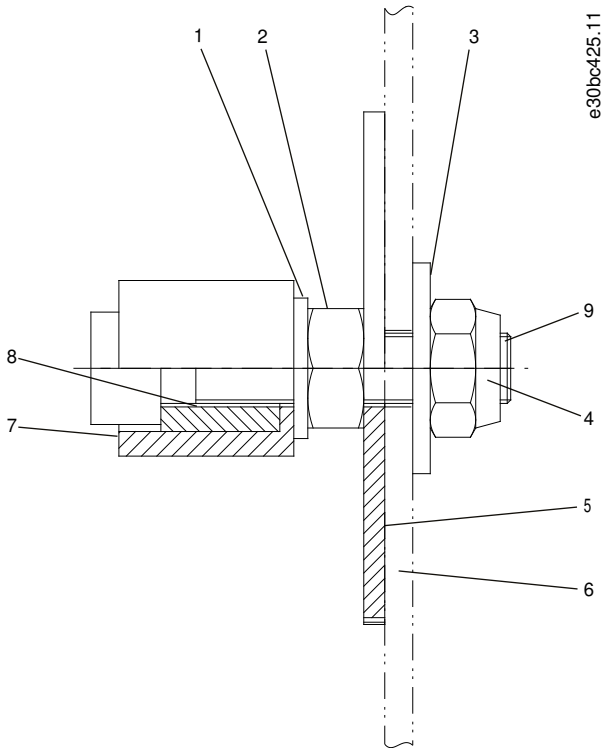

1	Disk (DIN 125-A10 5)	6	Customer frame
2	Nut (DIN 934 M10)	7	Barrel (POM-C white)
3	Disk (DIN 9021 10, 5x30x25)	8	Bushing (stainless steel)
4	Nut (DIN 985 M10)	9	Screw (stainless steel)
5	Disk (Ø73x3 stainless steel)		

Illustration 30: Mounting Set

NOTICE

- The set also contains 3xDIN 933, M10x25, 8.8, stainless steel screws. The tightening torque is 49 Nm (433.7 in-lb).
- Only use the original Danfoss or comparable mounting set to mount the VLT® OneGearDrive® to the conveyor. The mounting equipment used must ensure the same degree of flexibility as the original Danfoss mounting set. Do not screw the torque arm directly onto the conveyor frame.

9.7.2 Mechanical Brake

The VLT® OneGearDrive® Standard is available with a 180 V DC/400 V AC or a 220 V DC/480 V AC brake option. This mechanical brake option is intended for emergency stop and park brake duty. Spring-loaded brakes are safety brakes that continue to work if a power failure or usual wear occurs. As other components could also fail, take suitable safety precautions to avoid any injury to persons or damage to objects caused by operation without a brake.

⚠ WARNING ⚠

SEVERE OR FATAL INJURIES

The VLT® OneGearDrive® is designed exclusively for horizontal conveyor applications with or without any angle (inclined belt conveyor). Using the VLT® OneGearDrive® in vertical lifting and hoisting applications can cause danger of fatal injury if the hoist falls.

- Do not use the brake in safety relevant vertical lifting and hoisting applications.

9.7.2.1 Technical Data

Table 19: Technical Data for Mechanical Brake Option

	Unit	B180	B220
Voltage	V DC	180	220
Voltage	V AC	400	480
Pel	W	18	19
Maximum brake torque	Nm (in-lb)	10 (88.5)	

9.7.2.2 Dimensions

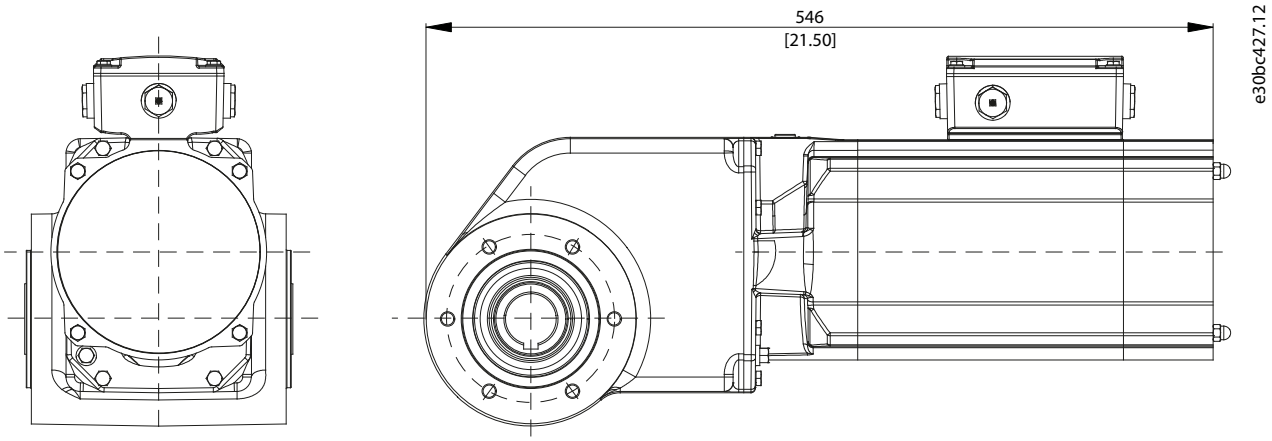

Illustration 31: Dimensions of VLT® OneGearDrive® with Mechanical Brake Option

9.7.2.3 Connections

Illustration 32 shows the cage clamp and the connections to the VLT® AutomationDrive FC 302.

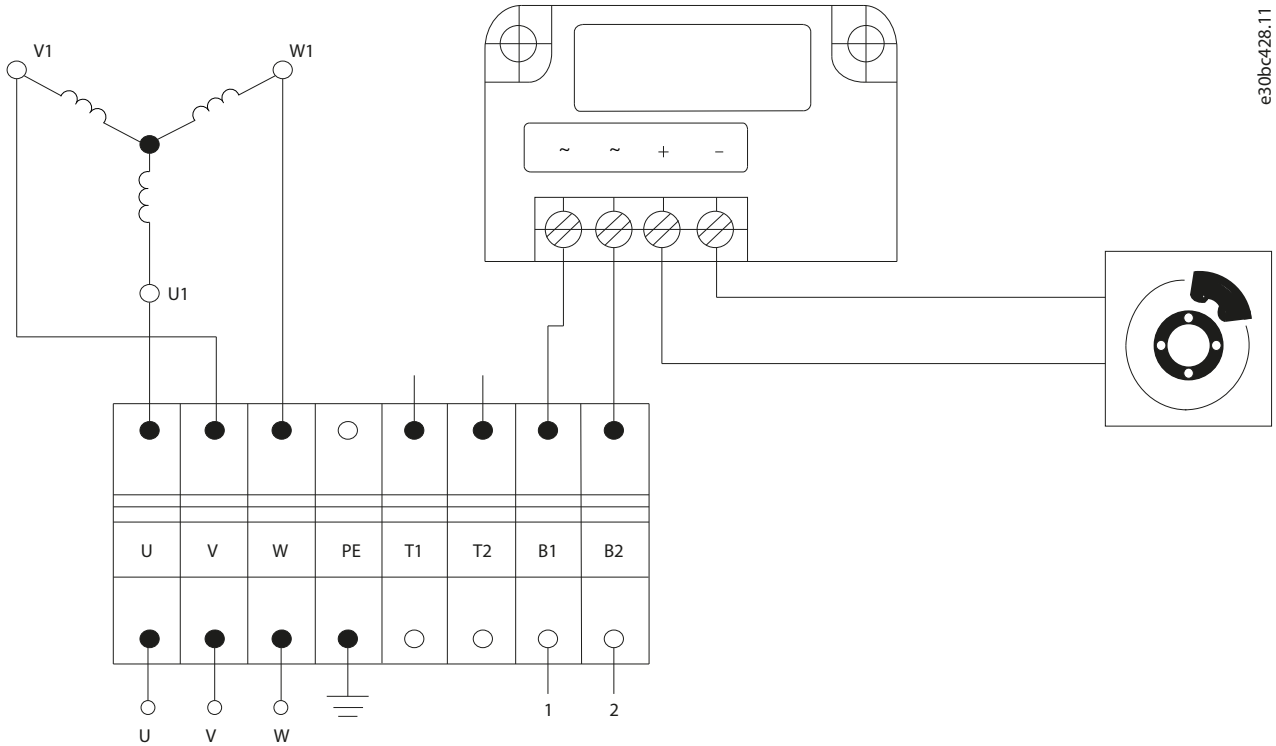

Illustration 32: Cage Clamp and Connection to VLT® AutomationDrive FC 302

Table 20: Mechanical Brake Option Connections

Description	Coding	Pin	Color	Typical cross-section [mm^2 (AWG)]	Maximum cross-section [mm^2 (AWG)]	VLT® Automation-Drive FC 302	VLT® Decentral Drive FCD 302	External DC supply
Brake supply	B1	1	Brown	0.75 (20)	2.5 (14)	See Illustration 33	Terminal 122 (MBR +)	+
	B2	2	Black				Terminal 122 (MBR–)	–

An example of how to connect the VLT® OneGearDrive® mechanical brake to the drive is shown in Illustration 33.

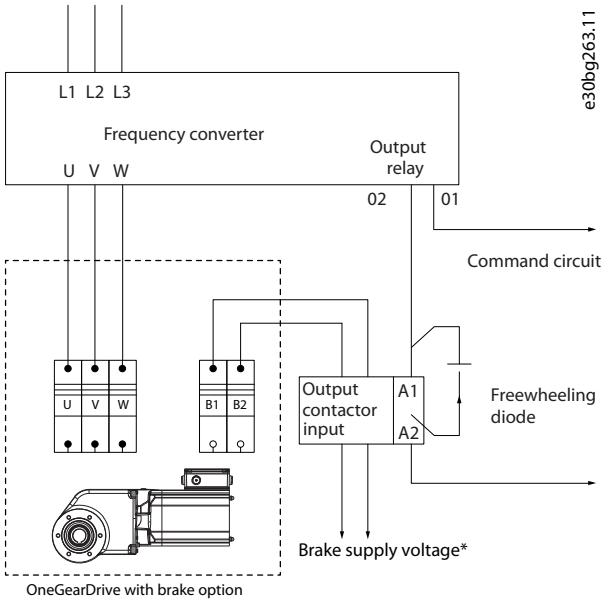

Illustration 33: Example of Connecting the Mechanical Brake to the Drive

*	See 9.7.2 Mechanical Brake.

The connection and use of the mechanical brake have been tested and released with VLT® AutomationDrive FC 302 and VLT® Decentral Drive FCD 302. Any other drive may require a different connection. Contact Danfoss Service for further information. For information about parameter setting and programming when using VLT® AutomationDrive FC 302 or VLT® Decentral Drive FCD 302, refer to the corresponding Operating Guide.

9.8 Accessories

9.8.1 Accessories for VLT® OneGearDrive® Standard

Table 21: Accessories for VLT® OneGearDrive® Standard

Accessory	Ordering number
Torque arm, stainless steel	178H5006

9.8.2 Accessories for VLT® OneGearDrive® Hygienic

Table 22: Accessories for VLT® OneGearDrive® Hygienic

Accessory	Ordering number
Motor connector without cable	178H1613
Motor connector with 5 m cable	178H1630
Motor connector with 10 m cable	178H1631
Torque arm, stainless steel	178H5006

10 Appendix

10.1 Abbreviations

Table 23: Abbreviations

°C	Degrees Celsius
°F	Degrees Fahrenheit
AC	Alternating current
AWG	American wire gauge
DC	Direct current
EMC	Electromagnetic compatibility
ETR	Electronic thermal relay
FC	Frequency converter
IP	Ingress protection
PE	Protective earth
PELV	Protective extra low voltage
PM motor	Permanent magnet motor
RPM	Revolutions per minute

10.2 Conventions

- Numbered lists indicate procedures.
- Italicized text indicates:
  - Cross-reference
  - Link
  - Footnote
  - Parameter name or group
- All dimension drawings are in [mm (in)].

Index

A

Abbreviations ... 40
Accessories ... 39
Approvals ... 6
Assembly kit ... 12

B

Backlash ... 32
Brake
- Replacement ... 24
- Overview ... 36
- Dimensions ... 37
- Connections ... 37

C

CAGE CLAMP® connection ... 18
CleanConnect® connection ... 20
Coating (protective) ... 11
Commissioning
- Measures before commissioning ... 21
- Procedure ... 21

Copyright ... 6
Current (rated) ... 30

D

Decommissioning ... 28
Dimensions
- OneGearDrive® Standard ... 32
- OneGearDrive® Standard with Torque Arm ... 32
- OneGearDrive® Hygienic ... 33
- OneGearDrive® Hygienic with Torque Arm ... 33
- Mechanical brake option ... 37

Dismounting ... 28
Disposal ... 28
Due diligence ... 7

E

Efficiency rating ... 30
Electrical connection ... 17
Electrical installation ... 17
EMC-compliant installation ... 17
Environmental conditions ... 32

F

Frequency (rated) ... 30

G

Glossary ... 42

I

Inductivity ... 30
Inertia ... 30
Inspection during operation ... 26
Inspection on receipt ... 11
Installation
- Mechanical ... 11
- Electrical ... 17

Installation elevation ... 32
Items supplied ... 11

M

Maintenance tasks ... 24
Mechanical brake ... 36
Mechanical installation ... 11
Motor circuit ... 30
Motor torque ... 30
Mounting
- Arrangement ... 11
- Procedure ... 12

N

Nameplate ... 29

O

Oil
- Grade ... 26
- Volume ... 26
- Change ... 27

Overload protection ... 20

P

Precautions ... 8
Product description ... 9
Protection rating ... 11
Protective coating ... 11

Q

Qualified personnel ... 7

R

Repair ... 26
Returns ... 28
Rotor replacement ... 24

S

Spare parts ... 27
Speed (rated) ... 30
Speed/torque
- Characteristics ... 30
- Values ... 31

Storage ... 29

T

Technical data ... 30
Terminal box ... 17
Torque arm set ... 35
Torque mounting set ... 35
Torque restraint ... 14
Trademarks ... 6
Transport ... 11
Troubleshooting ... 22

VLT® OneGearDrive® Glossary

A

Ambient temperature	The temperature in the immediate vicinity of the system or component.
Axial force	The force in newton-meters acting on the rotor axis in the axial direction.

C

CE	European test and certification mark.
CSA	Canadian test and certification mark.
Cage clamp	Wire retention method without using special tools in the terminal box.
CleanConnect	EHEDG certified connection from Danfoss with a stainless steel connector.

E

EHEDG	European Hygienic Engineering and Design Group.
ExtensionBox	Optional part for VLT® OneGearDrive® that increases the output torque.

F

f_{max}	Maximum frequency specified.

G

Gear ratio	The speed ratio of the input pinion and the output shaft of the VLT® OneGearDrive®.

H

Hygienic	Variant of the VLT® OneGearDrive® for hygienic critical areas.

I

I_{MAX}	Maximum allowed current for the VLT® OneGearDrive®.
I_N	Nominal current specified for the VLT® OneGearDrive®.
IP	International protection codes.
Installation elevation	Installation elevation above normal sea level, typically associated with a de-rating factor.

M

M20x1.5	Thread specification in the terminal box.
M_{HST}	Maximum allowed high starting torque within 3 s and 10 cycles/h for the VLT® OneGearDrive®.
M_{MAX}	Maximum allowed torque in part-load operation for the VLT® OneGearDrive®.
Mechanical brake	Option for the VLT® OneGearDrive®.
M_n	Specified nominal torque for the VLT® OneGearDrive®.
Motor shaft	Rotating shaft on the A side of the motor, typically without a key groove.
Mounting set	Extra components to fix the torque arm to the conveyor frame and included in the torque arm set.

N

n_{MAX}	Maximum allowed speed at final shaft.

R

Radial force	The force in newton-meters acting at 90° to the longitudinal direction of the rotor axis.

T

Terminal box	Connection cage for the VLT® OneGearDrive®.
Torque arm set	Accessory for the VLT® OneGearDrive® that includes a torque arm and a mounting-set.
t_{amb}	Maximum ambient temperature specified.

U

UL	Underwriters Laboratories.

ENGINEERING
TOMORROW

Danfoss A/S
Ulsnaes 1
DK-6300 Graasten
vlt-drives.danfoss.com

Danfoss can accept no responsibility for possible errors in catalogs, brochures and other printed material. Danfoss reserves the right to alter its products without notice. This also applies to products already on order provided that such alterations can be made without subsequential changes being necessary in specifications already agreed. All trademarks in this material are property of the respective companies. Danfoss and the Danfoss logotype are trademarks of Danfoss A/S. All rights reserved.

130R0239