Contents

1 Safety 1-1
- Safety instructions 1-1
- Before Commencing Repair Work 1-2
- Special conditions 1-2
- Avoid unintended Start. 1-3
- Safe Stop of the Adjustable Frequency Drive 1-3
- IT Line Power 1-5

2 Introduction 2-1

3 Mechanical installation 3-1
- Before starting 3-1
- Mechanical Dimensions 3-3

4 Electrical installation 4-1
- How to connect 4-1
- Line power wiring overview 4-6
- Motor wiring overview 4-13
- DC bus connection 4-17
- Brake Connection Option 4-18
- Relay Connection 4-20
- How to Test Motor and Direction of Rotation. 4-24
- Electrical Installation and Control Cables 4-27

5 How to operate the adjustable frequency drive 5-1
- Three ways of operating 5-1
- How to operate the numeric LCP (NLCP) 5-1
- Tips and tricks 5-5

6 How to program the adjustable frequency drive 6-1
- How to program 6-1
- Quick Menu Mode 6-1
- Function Set-ups 6-10
- Parameter list 6-55
- Main Menu Structure 6-55
- 0-** Operation and Display 6-56
- 1-** Load / Motor 6-58
- 2-** Brakes 6-59

3-** Reference / Ramps 6-60
4-** Limits / Warnings 6-61
5-** Digital In / Out 6-62
6-** Analog In / Out 6-64
8-** Communication and Options 6-66
9-** Profibus 6-67
10-** CAN Fieldbus 6-68
11-** LonWorks 6-69
13-** Smart Logic Controller 6-70
14-** Special Functions 6-71
15-** FC Information 6-72
16-** Data Readouts 6-74
18-** Info & Readouts 6-76
20-** FC Closed-loop 6-77
21-** Ext. Closed-loop 6-78
22-** Application Functions 6-80
23-** Time-based Funtions 6-82
24-** Application Functions 2 6-83
25-** Cascade Controller 6-84
26-** Analog I / O Option MCB 109 6-86

7 Troubleshooting 7-1
Alarms and warnings 7-1
Fault messages 7-4
Acoustic noise or vibration 7-6

8 Specifications 8-1
General Specifications 8-1
Special Conditions 8-20

9 Index 9-1

1 Safety

1.1.1 Symbols

Symbols used in this manual:



NOTE!
Indicates something to be noted by the reader.



Indicates a general warning.



Indicates a high-voltage warning.

★ Indicates a default setting

1.1.2 High voltage warning



The voltage of the adjustable frequency drive and the MCO 101 option card is dangerous whenever it is connected to line power. Incorrect installation of the motor or adjustable frequency drive may cause damage to the equipment, serious injury or death. Consequently, it is essential to comply with the instructions in this manual as well as local and national rules and safety regulations.

1.1.3 Safety instructions



Prior to using functions directly or indirectly influencing personal safety (e.g., Safe Stop, Fire Mode or other functions either forcing the motor to stop or attempting to keep it functioning), a thorough risk analysis and system test must be carried out. The system tests must include testing failure modes regarding the control signaling (analog and digital signals and serial communication.



NOTE!
Before using fire mode, contact Danfoss

1

- Make sure the adjustable frequency drive is properly grounded.
- Do not remove AC line input connections, motor connections or other power connections while the adjustable frequency drive is connected to line power.
- Protect users against supply voltage.
- Protect the motor against overloading in accordance with national and local regulations.
- The ground leakage current exceeds 3.5 mA.
- The [OFF] key is not a safety switch. It does not disconnect the adjustable frequency drive from line power.

1.1.4 Before Commencing Repair Work

1. Disconnect the adjustable frequency drive from line power.
2. Disconnect DC bus terminals 88 and 89.
3. Wait at least the time mentioned above in the section General Warning.
4. Remove motor cable

1.1.5 Special conditions

Electrical ratings:
The rating indicated on the nameplate of the adjustable frequency drive is based on a typical 3-phase line power supply within the specified voltage, current and temperature ranges, which are expected to be used in most applications.

The adjustable frequency drives also support other special applications, which affect the electrical ratings of the adjustable frequency drive.
Special conditions that affect the electrical ratings might be:

- Single phase applications.
- High temperature applications that require derating of the electrical ratings.
- Marine applications with more severe environmental conditions.

Other applications might also affect the electrical ratings.

Consult the relevant sections in this manual and in the *VLT HVAC Drive Design Guide, MG.11.BX.YY* for information about the electrical ratings.

Installation requirements:
The overall electrical safety of the adjustable frequency drive requires special installation considerations regarding:

- Fuses and circuit breakers for overcurrent and short-circuit protection
- Selection of power cables (line power, motor, brake, load sharing and relay)
- Grid configuration (IT,TN, grounded leg, etc.)
- Safety of low-voltage ports (PELV conditions).

Consult the relevant clauses in these instructions and in the *VLT HVAC Drive Design Guide* for information about the installation requirements.

1.1.6 Caution



Caution

The adjustable frequency drive DC link capacitors remain charged after power has been disconnected. To avoid an electrical shock hazard, disconnect the adjustable frequency drive from line power before carrying out maintenance. Wait at least as follows before doing service on the adjustable frequency drive:

Voltage	Minimum Waiting Time				
	4 min.	15 min.	20 min.	30 min.	40 min.
200–240 V	1.1 - 3.7 kW	7.5–60 hp [5.5–45 kW]			
380–480 V	1.1 - 7.5 kW	15–125 hp [11–90 kW]	150–300 hp [110–200 kW]		350–600 hp [250–450 kW]
525–600 V	1.5–10 hp [1.1–7.5 kW]		150–350 hp [110–250 kW]	450–750 hp [315–560 kW]	
525–690 V		60–125 hp [45–90 kW]	150–350 hp [110– 250 kW]	450–750 hp [315– 560 kW]	850–1600 hp [630–1200 kW]

Be aware that there may be high voltage on the DC link even when the LEDs are turned off.

1.1.7 Installation at high altitudes (PELV)



At altitudes above 6,600 feet [2 km], please contact Danfoss regarding PELV.

1.1.8 Avoid unintended Start.

While the adjustable frequency drive is connected to line power, the motor can be started/ stopped using digital commands, bus commands, references or via the Local Control Panel.

- Disconnect the adjustable frequency drive from line power whenever personal safety considerations make it necessary to avoid an unintended start.
- To avoid an unintended start, always activate the [OFF] key before changing parameters.
- Unless terminal 37 is turned off, an electronic fault, temporary overload, a fault in the line power supply or lost motor connection may cause a stopped motor to start.

1.1.9 Safe Stop of the Adjustable Frequency Drive

For versions equipped with a Safe Stop terminal 37 input, the adjustable frequency drive can perform the safety function *Safe Torque Off* (as defined by draft CD IEC 61800-5-2) or *Stop Category 0* (as defined in EN 60204-1).

It is designed and deemed suitable for the requirements of Safety Category 3 in EN 954-1. This functionality is called Safe Stop. Prior to integrating and using safe stop in an installation, a thorough risk analysis must be carried out on the installation in order to determine whether the safe stop functionality and safety category are appropriate and sufficient. In order to install and use the safe stop function in accordance with the requirements of Safety Category 3 in EN 954-1, the related information and instructions of the *VLT HVAC Drive Design Guide* must be followed! The information and instructions contained in the Instruction Manual are not sufficient for a correct and safe use of the safe stop functionality!

Prüf- und Zertifizierungsstelle
im BG-PRÜFZERT

BGIA
Berufsgenossenschaftliches Institut für Arbeitsschutz

Hauptverband der gewerblichen Berufsgenossenschaften

Translation
In any case, the German original shall prevail.

Type Test Certificate

05 06004
No. of certificate

Name and address of the holder of the certificate: (customer)	Danfoss Drives A/S, Ulnaes 1 DK-6300 Graasten, Dänemark
Name and address of the manufacturer:	Danfoss Drives A/S, Ulnaes 1 DK-6300 Graasten, Dänemark

Ref. of customer:	Ref. of Test and Certification Body: Apf/Köh VE-Nr. 2003 23220	Date of Issue: 13.04.2005

Product designation:	Frequency converter with integrated safety functions
Type:	VLT® Automation Drive FC 302
Intended purpose:	Implementation of safety function „Safe Stop"
Testing based on:	EN 954-1, 1997-03, DKE AK 226.03, 1998-06, EN ISO 13849-2; 2003-12, EN 61800-3, 2001-02, EN 61800-5-1, 2003-09,
Test certificate:	No.: 2003 23220 from 13.04.2005
Remarks:	The presented types of the frequency converter FC 302 meet the requirements laid down in the test bases. With correct wiring a category 3 according to DIN EN 954-1 is reached for the safety function.

The type tested complies with the provisions laid down in the directive 98/37/EC (Machinery).

Further conditions are laid down in the Rules of Procedure for Testing and Certification of April 2004.

Head of certification body
(Prof. Dr. rer. nat. Dietmar Reinert)

Certification officer
(Dipl.-Ing. R. Apfeld)

PZB10E
01.05

Postal adress:
53754 Sankt Augustin

Office:
Alte Heerstraße 111
53757 Sankt Augustin

Phone: 0 22 41/2 31-02
Fax: 0 22 41/2 31-22 34

130BA491

This certificate also covers FC 102 and FC 202!

1.1.10 IT Line Power



IT Line Power

Do not connect 400 V adjustable frequency drives with RFI filters to line supplies with a voltage between phase and ground of more than 440 V.

For IT line power and delta ground (grounded leg), AC line voltage may exceed 440 V between phase and ground.

par. 14-50 *RFI 1* can be used to disconnect the internal RFI capacitors from the RFI filter to ground. If this is done, it will reduce the RFI performance to A2 level.

1.1.11 Software version and approvals: VLT HVAC Drive

VLT HVAC Drive
Software version: 3.1.x

This manual can be used with all VLT HVAC Drive adjustable frequency drives with software version 3.1.x.
The software version number can be seen from par. 15-43 *Software Version*.

1.1.12 Disposal Instructions



Equipment containing electrical components must not be disposed of together with domestic waste.
It must be separately collected with electrical and electronic waste according to local and currently valid legislation.

1

2 Introduction

2.1 Introduction

2.1.1 Available literature

- Instruction Manual MG.11.Ax.yy provides the necessary information for getting the adjustable frequency drive up and running.
- Design Guide MG.11.Bx.yy contains all the technical information about the adjustable frequency drive and customer design and applications.
- Programming Guide MG.11.Cx.yy provides information on how to program and includes complete parameter descriptions.
- Mounting Instruction, Analog I/O Option MCB109, MI.38.Bx.yy
- PC-based Configuration Tool MCT 10, MG.10.Ax.yy enables the user to configure the adjustable frequency drive from a Windows™ based PC environment.
- Danfoss VLT® Energy Box software at *www.danfoss.com/BusinessAreas/DrivesSolutions* , then choose PC Software Download
- VLT® VLT HVAC Drive Drive Applications, MG.11.Tx.yy
- Instruction Manual VLT HVAC Drive BACnet, MG.11.Dx.yy
- Instruction ManualVLT HVAC Drive Profibus, MG.33.Cx.yy.
- Instruction ManualVLT HVAC Drive Device Net, MG.33.Dx.yy
- Instruction ManualVLT HVAC Drive LonWorks, MG.11.Ex.yy
- Instruction Manual VLT HVAC Drive High Power, MG.11.Fx.yy
- Instruction ManualVLT HVAC Drive Metasys, MG.11.Gx.yy
- Instruction Manual VLT HVAC Drive FLN, MG.11.Zx.yy

x = Revision number
yy = Language code

Danfoss technical literature is available in print from your local Danfoss Sales Office or online at:
www.danfoss.com/BusinessAreas/DrivesSolutions/Documentations/Technical+Documentation.htm

2.1.2 Adjustable Frequency Drive Identification

Below is an example of an identification label. This label is situated on the adjustable frequency drive and shows the type and the options with which the unit is equipped. See below for details of how to read the Type code string (T/C).

2



Figure 2.1: This example shows an identification label.

NOTE!
Please have T/C (type code) number and serial number ready before contacting Danfoss.

2.1.3 Type Code String

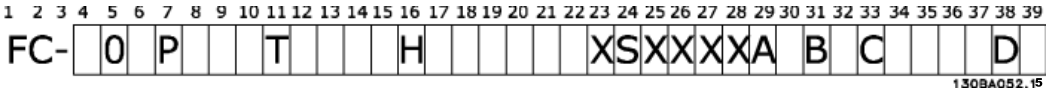

Description	Pos	Possible choice
Product group & FC Series	1-6	FC 102
Power rating	8-10	1.1–560 kW (P1K1 - P560)
Number of phases	11	Three phases (T)
AC line voltage	11-12	T 2: 200–240 V AC T 4: 380–480 V AC T 6: 525–600 V AC
Enclosure	13-15	E20: IP20 E21: IP 21/NEMA Type 1 E55: IP 55/NEMA Type 12 E2M: IP21/NEMA Type 1 w/ line power shield E5M: IP 55/NEMA Type 12 w/ line power shield E66: IP66 P21: IP21/NEMA Type 1 w/ backplate P55: IP55/NEMA Type 12 w/ backplate
RFI filter	16-17	H1: RFI filter class A1/B H2: RFI filter class A2 H3: RFI filter class A1/B (reduced cable length) H4: RFI filter class A2/A1
Brake	18	X: No brake chopper included B: Brake chopper included T: Safe Stop U: Safe + brake
Display	19	G: Graphical Local Control Panel (GLCP) N: Numeric Local Control Panel (NLCP) X: No Local Control Panel
Coating PCB	20	X. No coated PCB C: Coated PCB
Line power option	21	X: No line power disconnect switch 1: With line power disconnect switch (IP55 only). See Chapter 8 for max. cable sizes.
Adaptation	22	Reserved
Adaptation	23	Reserved
Software release	24-27	Current software
Software language	28	
A options	29-30	AX: No options A0: MCA 101 Profibus DP V1 A4: MCA 104 DeviceNet AG: MCA 108 Lonworks AJ: MCA 109 BACnet gateway
B options	31-32	BX: No option BK: MCB 101 General purpose I/O option BP: MCB 105 Relay option BO: MCB 109 Analog I/O option
C0 options MCO	33-34	CX: No options
C1 options	35	X: No options
C option software	36-37	XX: Standard software
D options	38-39	DX: No option D0: DC backup

Table 2.1: Type code description.

The various options and accessories are described further in the *VLT HVAC Drive Design Guide, MG.11.BX.YY* .

2

2.1.4 Abbreviations and Standards

Abbreviations:	Terms:	SI units:	I-P units:
a	Acceleration	m/s^2	ft/s^2
AWG	American wire gauge		
Auto Tune	Automatic Motor Tuning		
°C	Celsius		
I	Current	A	Amp
I_{LIM}	Current limit		
Joule	Energy	J = N•m	ft-lb, Btu
°F	Fahrenheit		
FC	Adjustable Frequency Drive		
f	Frequency	Hz	Hz
kHz	Kilohertz	kHz	kHz
LCP	Local Control Panel		
mA	Milliampere		
ms	Millisecond		
min	Minute		
MCT	Motion Control Tool		
M-TYPE	Motor Type Dependent		
Nm	Newton meters		in-lbs
$I_{M,N}$	Nominal motor current		
$f_{M,N}$	Nominal motor frequency		
$P_{M,N}$	Nominal motor power		
$U_{M,N}$	Nominal motor voltage		
par.	Parameter		
PELV	Protective Extra Low Voltage		
Watt	Power	W	Btu/hr, hp
Pascal	Pressure	$Pa = N/m^2$	psi, psf, ft of water
I_{INV}	Rated Inverter Output Current		
RPM	Revolutions Per Minute		
SR	Size Related		
T	Temperature	C	F
t	Time	s	s, hr
T_{LIM}	Torque limit		
U	Voltage	V	V

Table 2.2: Abbreviation and Standards table

3 Mechanical installation

3.1 Before starting

3.1.1 Checklist

When unpacking the adjustable frequency drive, make sure that the unit is undamaged and complete. Use the following table to identify the packaging:

Enclosure type:	A2 (IP 20-21)	A3 (IP 20-21)	A5 (IP 55-66)	B1/B3 (IP 20-21-55-66)	B2/B4 (IP 20-21-55-66)	C1/C3 (IP 20-21-55-66)	C2*/C4 (IP 20-21-55-66)
	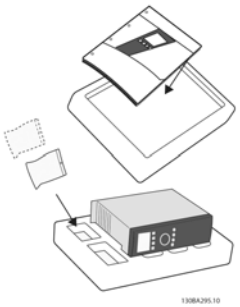		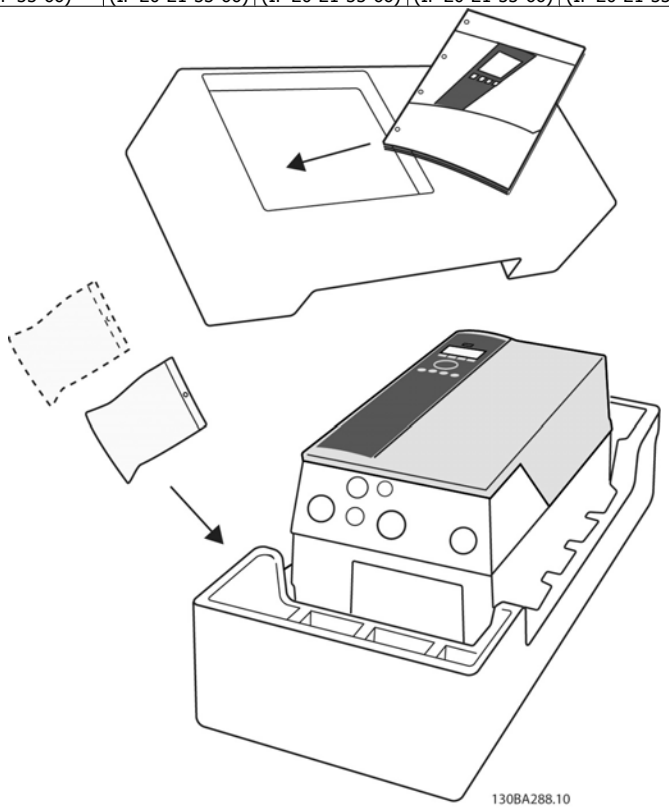				
Unit size (kW):							
200–240 V	1.1–3.0	3.7	1.1–3.7	5.5–11/ 5.5–11	15/ 15–18.5	18.5–30/ 22–30	37-45/ 37-45
380–480 V	1.1–4.0	5.5–7.5	1.1–7.5	11–18.5/ 11–18.5	22-30/ 22-37	37-55/ 45-55	75-90/ 75-90
525–600 V		1.1–7.5		11–18.5/ 11–18.5	22-37/ 22-37	45-55/ 45-55	75-90/ 75-90

Table 3.1: Unpacking table

Please note that it is recommended to have a selection of screwdrivers (phillips or cross-thread screwdriver and torx), a side-cutter, drill and knife handy for unpacking and mounting the adjustable frequency drive. The packaging for these enclosures contains, as shown: accessory bag(s), documentation and the unit. Depending on options fitted, there may be one or two bags and one or more booklets.

3

3.2.1 Mechanical Front Views

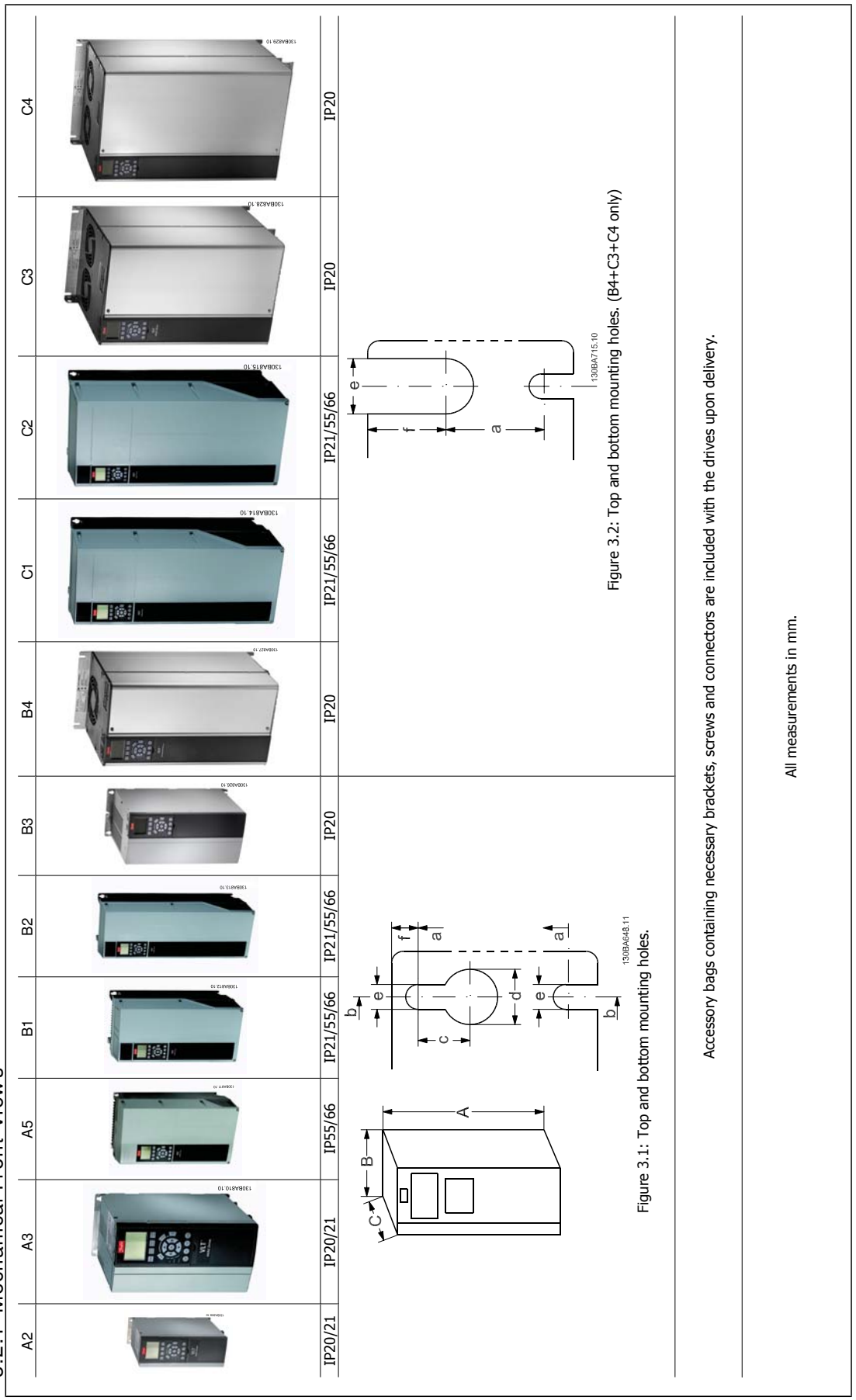

Figure 3.2: Top and bottom mounting holes. (B4+C3+C4 only)

Figure 3.1: Top and bottom mounting holes.

Accessory bags containing necessary brackets, screws and connectors are included with the drives upon delivery.

All measurements in mm.

3.2.2 Mechanical Dimensions

Mechanical dimensions														
Frame size (kW):		A2		A3		A5	B1	B2	B3	B4	C1	C2	C3	C4
200–240 V		1.1–3.0		3.7		1.1–3.7	5.5–11	15	5.5–11	15–18.5	18.5–30	37-45	22-30	37-45
380–480 V		1.1–4.0		5.5–7.5		1.1–7.5	11–18.5	22-30	11–18.5	22–37	37–55	75-90	45-55	75-90
525–600 V		-		1.1–7.5		1.1–7.5	11–18.5	22-30	11–18.5	22–37	37–55	75-90	45-55	75-90
IP		20	21	20	21	55/66	21/ 55/66	21/ 55/66	20	20	21/ 55/66	21/ 55/66	20	20
NEMA		Chassis	Type 1	Chassis	Type 1	Type 12	Type 1/12	Type 1/12	Chassis	Chassis	Type 1/12	Type 1/12	Chassis	Chassis
Height (mm)														
Enclosure	A**	246	372	246	372	420	480	650	350	460	680	770	490	600
..with de-coupling plate	A2	374	-	374	-	-	-	-	419	595	-	-	630	800
Backplate	A1	268	375	268	375	420	480	650	399	520	680	770	550	660
Distance between mount. holes	a	257	350	257	350	402	454	624	380	495	648	739	521	631
Width (mm)														
Enclosure	B	90	90	130	130	242	242	242	165	231	308	370	308	370
With one C option	B	130	130	170	170	242	242	242	205	231	308	370	308	370
Backplate	B	90	90	130	130	242	242	242	165	231	308	370	308	370
Distance between mount. holes	b	70	70	110	110	215	210	210	140	200	272	334	270	330
Depth (mm)														
Without option A/B	C	205	205	205	205	200	260	260	248	242	310	335	333	333
With option A/B	C*	220	220	220	220	200	260	260	262	242	310	335	333	333
Screw holes (mm)														
	c	8.0	8.0	8.0	8.0	8.2	12	12	8	-	12	12	-	-
Diameter ø	d	11	11	11	11	12	19	19	12	-	19	19	-	-
Diameter ø	e	5.5	5.5	5.5	5.5	6.5	9	9	6.8	8.5	9.0	9.0	8.5	8.5
	f	9	9	9	9	9	9	9	7.9	15	9.8	9.8	17	17
Max weight (kg)		4.9	5.3	6.6	7.0	14	23	27	12	23.5	45	65	35	50

* Depth of enclosure will vary with different options installed.
** The free space requirements are above and below the bare enclosure height measurement A. See section 3.2.3 for further information.

MG.11.A9.22 - VLT® is a registered Danfoss trademark

3.2.3 Accessory Bags

Accessory Bags: Find the following parts included in the adjustable frequency drive accessory bags

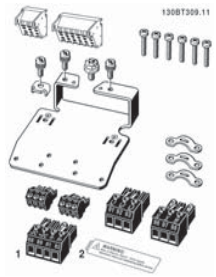

Frame sizes A1, A2 and A3

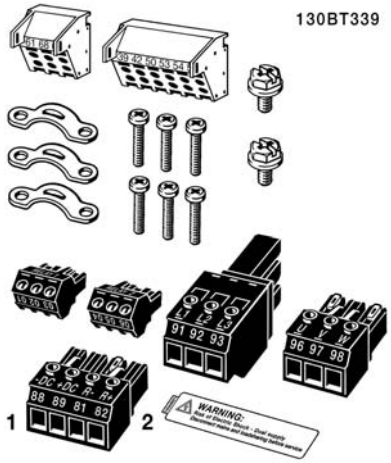

Frame size A5



Frame sizes B1 and B2

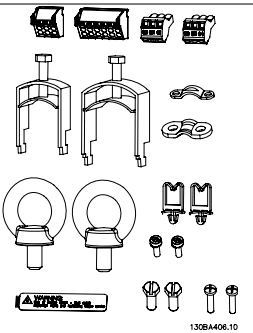

Frame sizes C1 and C2

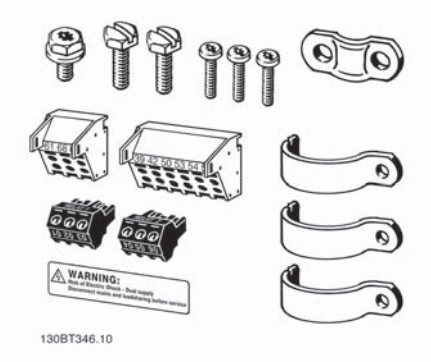

Frame size B3

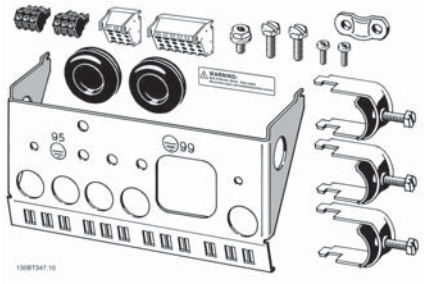

Frame size B4

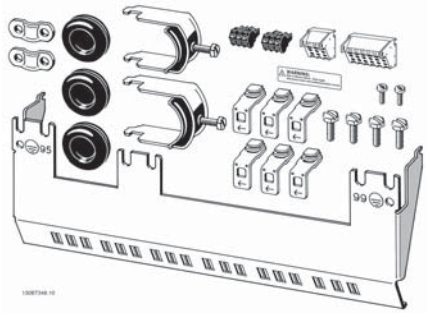

Frame size C3

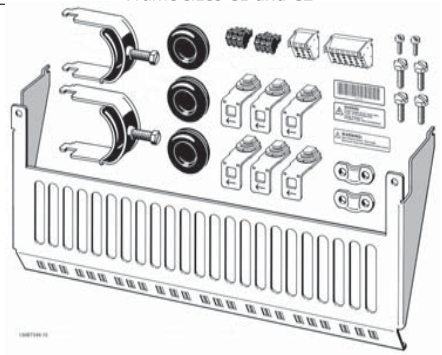

Frame size C4

1 + 2 only available in units with brake chopper. For DC link connection (load sharing) the connector 1 can be ordered separately (Code no. 130B1064)
An eight-pole connector is included in accessory bag for FC 102 without Safe Stop.

MG.11.A9.22 - VLT® is a registered Danfoss trademark

3.2.4 Mechanical mounting

All IP20 enclosure sizes as well as IP21/ IP55 enclosure sizes except A2 and A3 allow side-by-side installation.

If the IP 21 Enclosure kit (130B1122 or 130B1123) is used on enclosure A2 or A3,, there must be a minimum of 2 in [50 mm] of clearance between drives.

For optimal cooling conditions, allow a free air passage above and below the adjustable frequency drive. See table below.

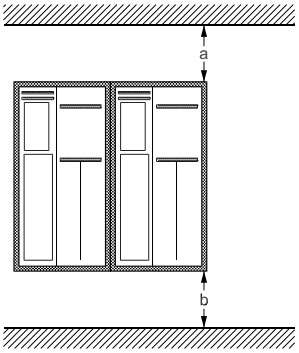

Air passage for different enclosures

Enclo-sure:	A2	A3	A5	B1	B2	B3	B4	C1	C2	C3	C4
a (mm):	100	100	100	200	200	200	200	200	225	200	225
b (mm):	100	100	100	200	200	200	200	200	225	200	225

1. Drill holes in accordance with the measurements given.
2. You must provide screws suitable for the surface on which you want to mount the adjustable frequency drive. Re-tighten all four screws.

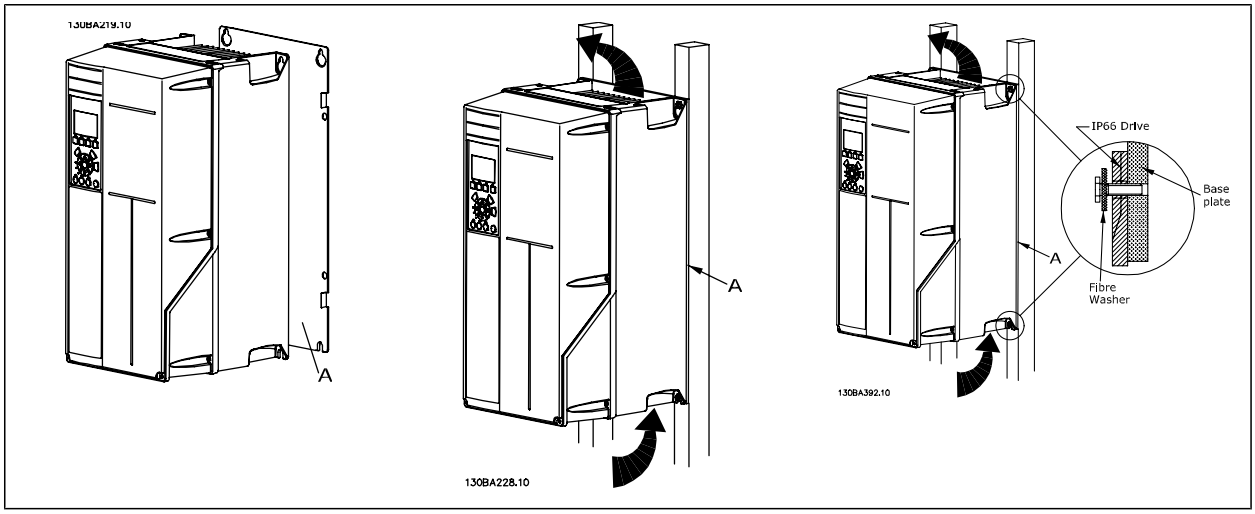

Table 3.2: Mounting frame sizes A5, B1, B2, B3, B4, C1, C2, C3 and C4 on a non-solid back wall, the drive must be provided with a backplate A due to insufficient cooling air over the heatsink.

For heavier drives (B4, C3, C4), use a lift. First wall-mount the 2 lower bolts, then lift the drive onto the lower bolts. Finally, fasten the drive against the wall with the 2 top bolts.

3.2.5 Safety Requirements for Mechanical Installation

Pay attention to the requirements that apply to integration and the field mounting kit. Follow the information in the list to avoid serious damage or injury, especially when installing large units.

The adjustable frequency drive is cooled by air circulation.
To protect the unit from overheating, it must be ensured that the ambient temperature *does not exceed the maximum temperature stated for the adjustable frequency drive*, and that the 24-hour average temperature *is not exceeded*. Locate the maximum temperature and 24-hour average in the paragraph *Derating for Ambient Temperature*.
If the ambient temperature is in the range of 113°–131°F [45°–55°C], derating of the adjustable frequency drive will become relevant, see *Derating for Ambient Temperature*.
The service life of the adjustable frequency drive is reduced if derating for ambient temperature is not taken into account.

3.2.6 Field Mounting

For field mounting the IP 21/IP 4X top/,TYPE 1 kits or IP 54/55 units are recommended.

3.2.7 Panel Through Mounting

A Panel Through mount kit is available for adjustable frequency drive series VLT HVAC Drive, VLT Aqua Drive and .

In order to increase heatsink cooling and reduce panel depth, the adjustable frequency drive may be mounted in a through panel. Furthermore, the built-in fan can then be removed.

The kit is available for enclosures A5 through C2.

NOTE!
This kit cannot be used with cast front covers. No cover or imminent plastic cover must be used instead.

Information on ordering numbers is found in the *Design Guide*, section *Ordering Numbers.*
More detailed information is available in the *Panel Through Mount Kit instruction, MI.33.H1.YY,* where yy=language code.

4 Electrical installation

4.1 How to connect

4.1.1 Cables General

NOTE!
For the VLT HVAC Drive High Power series line power and motor connections, please see the VLT HVAC Drive *High Power Instruction ManualMG.11.FX.YY*.

NOTE!
Cables General
All cabling must comply with national and local regulations on cable cross-sections and ambient temperature. Copper (140°–167°F [60°–75°C]) conductors are recommended.

Details of terminal tightening torques.

	Power (kW)			Torque (Nm)					
Enclosure	200–240 V	380–480 V	525–600 V	Line power	Motor	DC connection	Brake	Ground	Relay
A2	1.1–3.0	1.1–4.0		1.8	1.8	1.8	1.8	3	0.6
A3	3.7	5.5–7.5	1.1–7.5	1.8	1.8	1.8	1.8	3	0.6
A5	1.1–3.7	1.1–7.5	1.1–7.5	1.8	1.8	1.8	1.8	3	0.6
B1	5.5–11	11–18.5	-	1.8	1.8	1.5	1.5	3	0.6
B2	- 15	22 30	- -	4.5 4.5[2)]	4.5 4.5[2)]	3.7 3.7	3.7 3.7	3 3	0.6 0.6
B3	5.5–11	11–18.5	11–18.5	1.8	1.8	1.8	1.8	3	0.6
B4	11–18.5	18.5–37	18.5–37	4.5	4.5	4.5	4.5	3	0.6
C1	18.5–30	37 - 55	-	10	10	10	10	3	0.6
C2	37 - 45	75 - 90	- -	14/24[1)]	14/24[1)]	14	14	3	0.6
C3	18.5–30	37 - 55	37 - 55	10	10	10	10	3	0.6
C4	30 - 45	55 - 90	55 - 90	14/24 [1)]	14/24 [1)]	14	14	3	0.6
D1/D3	-	110 - 132	110 - 132	19	19	9.6	9.6	19	0.6
D2/D4	-	160-250	160-315	19	19	9.6	9.6	19	0.6
E1/E2	-	315-450	355-560	19	19	19	9.6	19	0.6
F1–F4[3)]	-								

Table 4.1: Tightening of terminals

1) For different cable dimensions x/y, where x ≤0.147 in² [95 mm²] and y≥0.147 in² [95 mm²]

2) Cable dimensions above 25 hp [18.5 kW] ≥ 0.0542 in² [35 mm²] and below 30 hp [22 kW] ≤ 0.0155 in² [10 mm²]

3) For data on the F-series, please consult VLT® HVAC Drive High Power Instruction Manual, MG.11.F1.02

4.1.2 Fuses

Branch circuit protection

In order to protect the installation against electrical and fire hazard, all branch circuits in an installation, switch gear, machines, etc., must be short-circuit and overcurrent protected according to the national/international regulations.

Short circuit protection

The adjustable frequency drive must be protected against short-circuit to avoid electrical or fire hazard. Danfoss recommends using the fuses mentioned below to protect service personnel or other equipment in case of an internal failure in the unit. The adjustable frequency drive provides full short circuit protection in case of a short circuit in the motor output.

Overcurrent protection

Provide overload protection to avoid fire hazard due to overheating of the cables in the installation. Overcurrent protection must always be provided in accordance with national regulations. The adjustable frequency drive is equipped with internal overcurrent protection that can be used for upstream overload protection (UL applications excluded). See par. 4-18 *Current Limit* in the *VLT HVAC Drive Programming Guide* . Fuses must be designed for protection in a circuit capable of supplying a maximum of 100,000 A_{rms} (symmetrical), 500 V/600 V maximum.

Non-UL compliance

If UL/cUL is not to be complied with, Danfoss recommends using the fuses mentioned in the table below, which will ensure compliance with EN50178. In case of malfunction, not following the recommendation may result in unnecessary damage to the adjustable frequency drive.

Non-UL compliance

Adjustable frequency drive	Max. fuse size	Voltage	Type
200–240 V			
1K1-1K5	16A[1]	200–240 V	type gG
2K2	25A[1]	200–240 V	type gG
3K0	25A[1]	200–240 V	type gG
3K7	35A[1]	200–240 V	type gG
5K5	50A[1]	200–240 V	type gG
7K5	63A[1]	200–240 V	type gG
11K	63A[1]	200–240 V	type gG
15K	80A[1]	200–240 V	type gG
18K5	125A[1]	200–240 V	type gG
22K	125A[1]	200–240 V	type gG
30K	160A[1]	200–240 V	type gG
37K	200A[1]	200–240 V	type aR
45K	250A[1]	200–240 V	type aR
380–480 V			
1K1	10A[1]	380–500 V	type gG
2K2-3K0	16A[1]	380–500 V	type gG
4K0-5K5	25A[1]	380–500 V	type gG
7K5	35A[1]	380–500 V	type gG
11K–15K	63A[1]	380–500 V	type gG
18K	63A[1]	380–500 V	type gG
22K	63A[1]	380–500 V	type gG
30K	80A[1]	380–500 V	type gG
37K	100A[1]	380–500 V	type gG
45K	125A[1]	380–500 V	type gG
55K	160A[1]	380–500 V	type gG
75K	250A[1]	380–500 V	type aR
90K	250A[1]	380–500 V	type aR
1) Max. fuses - see national/international regulations to select an appropriate fuse size.			

Table 4.2: Non-UL fuses 200 V to 480 V

Circuit Breakers manufactured by General Electric, Cat. No. SKHA36AT0800, 600 V AC maximum, with the rating plugs listed below can be used to meet UL requirements.

Size/ Type	Rating plug catalog #	Amps
P110	SRPK800A300	300
P132	SRPK800A350	350
P160	SRPK800A400	400
P200	SRPK800A500	500
P250	SRPK800A600	600

Table 4.3: Circuit Breaker Tables - D enclosures, 380–480 V

Size/ Type	Bussmann PN*	Rating	Ferraz	Siba
P250	170M4017	700 A, 700 V	6.9URD31D08A0700	20 610 32.700
P315	170M6013	900 A, 700 V	6.9URD33D08A0900	20 630 32.900
P355	170M6013	900 A, 700 V	6.9URD33D08A0900	20 630 32.900
P400	170M6013	900 A, 700 V	6.9URD33D08A0900	20 630 32.900

Table 4.4: E enclosures, 380–480 V

Danfoss PN	Bussmann	Ferraz	Siba
20220	170M4017	6.9URD31D08A0700	20 610 32.700
20221	170M6013	6.9URD33D08A0900	20 630 32.900

Table 4.5: Additional Fuses for Non-UL Applications, E enclosures, 380–480 V

Size/ Type	Bussmann PN*	Danfoss PN	Rating	Losses (W)
P355	170M4017 170M5013	20220	700 A, 700 V	85
P400	170M4017 170M5013	20220	700 A, 700 V	85
P500	170M6013	20221	900 A, 700 V	120
P560	170M6013	20221	900 A, 700 V	120

Table 4.6: E enclosures, 525–600 V

*170M fuses from Bussmann shown use the -/80 visual indicator; -TN/80 Type T, -/110 or TN/110 Type T indicator fuses of the same size and amperage may be substituted for external use.

Danfoss PN	Bussmann	Ferraz	Siba
20220	170M4017	6.9URD31D08A0700	20 610 32.700
20221	170M6013	6.9URD33D08A0900	20 630 32.900

Table 4.7: Additional Fuses for Non-UL Applications E enclosures, 525–600 V

Suitable for use on a circuit capable of delivering not more than 100,000 rms symmetrical amperes, 500/600/690 Volts maximum when protected by the above fuses.

If UL/cUL is not to be complied with, we recommend using the following fuses, which will ensure compliance with EN50178:
In case of malfunction, not following the recommendation may result in unnecessary damage to the adjustable frequency drive.

P110 - P200	380 –500 V	type gG
P250 - P450	380 –500 V	type gR

Table 4.8: Additional High Power Non-UL compliance

UL Compliance

Adjustable frequency drive	Bussmann	Bussmann	Bussmann	SIBA	Littel fuse	Ferraz-Shawmut	Ferraz-Shawmut
200–240 V							
kW	Type RK1	Type J	Type T	Type RK1	Type RK1	Type CC	Type RK1
K25-K37	KTN-R05	JKS-05	JJN-05	5017906-005	KLN-R005	ATM-R05	A2K-05R
K55-1K1	KTN-R10	JKS-10	JJN-10	5017906-010	KLN-R10	ATM-R10	A2K-10R
1K5	KTN-R15	JKS-15	JJN-15	5017906-015	KLN-R15	ATM-R15	A2K-15R
2K2	KTN-R20	JKS-20	JJN-20	5012406-020	KLN-R20	ATM-R20	A2K-20R
3K0	KTN-R25	JKS-25	JJN-25	5012406-025	KLN-R25	ATM-R25	A2K-25R
3K7	KTN-R30	JKS-30	JJN-30	5012406-030	KLN-R30	ATM-R30	A2K-30R
5K5	KTN-R50	JKS-50	JJN-50	5012406-050	KLN-R50	-	A2K-50R
7K5	KTN-R50	JKS-60	JJN-60	5012406-050	KLN-R60	-	A2K-50R
11K	KTN-R60	JKS-60	JJN-60	5014006-063	KLN-R60	A2K-60R	A2K-60R
15K	KTN-R80	JKS-80	JJN-80	5014006-080	KLN-R80	A2K-80R	A2K-80R
18K5	KTN-R125	JKS-150	JJN-125	2028220-125	KLN-R125	A2K-125R	A2K-125R
22K	KTN-R125	JKS-150	JJN-125	2028220-125	KLN-R125	A2K-125R	A2K-125R
30K	FWX-150	-	-	2028220-150	L25S-150	A25X-150	A25X-150
37K	FWX-200	-	-	2028220-200	L25S-200	A25X-200	A25X-200
45K	FWX-250	-	-	2028220-250	L25S-250	A25X-250	A25X-250

Table 4.9: UL fuses 200–240 V

Adjustable frequency drive	Bussmann	Bussmann	Bussmann	SIBA	Littel fuse	Ferraz-Shawmut	Ferraz-Shawmut
380–480 V, 525–600 V							
kW	Type RK1	Type J	Type T	Type RK1	Type RK1	Type CC	Type RK1
K37-1K1	KTS-R6	JKS-6	JJS-6	5017906-006	KLS-R6	ATM-R6	A6K-6R
1K5-2K2	KTS-R10	JKS-10	JJS-10	5017906-010	KLS-R10	ATM-R10	A6K-10R
3K0	KTS-R15	JKS-15	JJS-15	5017906-016	KLS-R16	ATM-R16	A6K-16R
4K0	KTS-R20	JKS-20	JJS-20	5017906-020	KLS-R20	ATM-R20	A6K-20R
5K5	KTS-R25	JKS-25	JJS-25	5017906-025	KLS-R25	ATM-R25	A6K-25R
7K5	KTS-R30	JKS-30	JJS-30	5012406-032	KLS-R30	ATM-R30	A6K-30R
11K	KTS-R40	JKS-40	JJS-40	5014006-040	KLS-R40	-	A6K-40R
15K	KTS-R40	JKS-40	JJS-40	5014006-040	KLS-R40	-	A6K-40R
18K	KTS-R50	JKS-50	JJS-50	5014006-050	KLS-R50	-	A6K-50R
22K	KTS-R60	JKS-60	JJS-60	5014006-063	KLS-R60	-	A6K-60R
30K	KTS-R80	JKS-80	JJS-80	2028220-100	KLS-R80	-	A6K-80R
37K	KTS-R100	JKS-100	JJS-100	2028220-125	KLS-R100		A6K-100R
45K	KTS-R125	JKS-150	JJS-150	2028220-125	KLS-R125		A6K-125R
55K	KTS-R150	JKS-150	JJS-150	2028220-160	KLS-R150		A6K-150R
75K	FWH-220	-	-	2028220-200	L50S-225		A50-P225
90K	FWH-250	-	-	2028220-250	L50S-250		A50-P250

Table 4.10: UL fuses 380–600 V

KTS fuses from Bussmann may substitute for KTN for 240 V adjustable frequency drives.

FWH fuses from Bussmann may substitute for FWX for 240 V adjustable frequency drives.

KLSR fuses from LITTEL FUSE may substitute for KLNR fuses for 240 V adjustable frequency drives.

L50S fuses from LITTEL FUSE may substitute for L50S fuses for 240 V adjustable frequency drives.

A6KR fuses from FERRAZ SHAWMUT may substitute for A2KR for 240 V adjustable frequency drives.

A50X fuses from FERRAZ SHAWMUT may substitute for A25X for 240 V adjustable frequency drives.

High Power Fuse Tables

Size/ Type	Bussmann E1958 JFHR2**	Bussmann E4273 T/JDDZ**	SIBA E180276 RKI/JDDZ	LittelFuse E71611 JFHR2**	Ferraz-Shawmut E60314 JFHR2**	Bussmann E4274 H/JDDZ**	Bussmann E125085 JFHR2*	Internal Option Bussmann
P110	FWH-300	JJS-300	2028220-315	L50S-300	A50-P300	NOS-300	170M3017	170M3018
P132	FWH-350	JJS-350	2028220-315	L50S-350	A50-P350	NOS-350	170M3018	170M4016
P160	FWH-400	JJS-400	206xx32-400	L50S-400	A50-P400	NOS-400	170M4012	170M4016
P200	FWH-500	JJS-500	206xx32-500	L50S-500	A50-P500	NOS-500	170M4014	170M4016
P250	FWH-600	JJS-600	206xx32-600	L50S-600	A50-P600	NOS-600	170M4016	170M4016

Table 4.11: D enclosures, 380–480 V

*170M fuses from Bussmann shown use the -/80 visual indicator; -TN/80 Type T, -/110 or TN/110 Type T indicator fuses of the same size and amperage may be substituted for external use

**Any minimum 480 V UL-listed fuse with associated current rating may be used to meet UL requirements.

Size/ Type	Bussmann E125085 JFHR2	Amps	SIBA E180276 JFHR2	Ferraz-Shawmut E76491 JFHR2
P110	170M3017	315	2061032.315	6.6URD30D08A0315
P132	170M3018	350	2061032.350	6.6URD30D08A0350
P160	170M4011	350	2061032.350	6.6URD30D08A0350
P200	170M4012	400	2061032.400	6.6URD30D08A0400
P250	170M4014	500	2061032.500	6.6URD30D08A0500
P315	170M5011	550	2062032.550	6.6URD32D08A0550

Table 4.12: D enclosures, 525–600 V

Size/ Type	Bussmann PN*	Danfoss PN	Rating	Losses (W)
P315	170M5013	20221	900 A, 700 V	120
P355	170M6013	20221	900 A, 700 V	120
P400	170M6013	20221	900 A, 700 V	120
P450	170M6013	20221	900A, 700 V	120

Table 4.13: E enclosures, 380–480 V

Size/ Type	Bussmann JFHR2*	SIBA Type RK1	FERRAZ-SHAWMUT Type RK1
P355	170M5013/170M4017	2061032.700	900 A, 700 V
P400	170M5013/170M4017	2061032.700	900 A, 700 V
P450	170M6013	2063032.900	900 A, 700 V
P500	170M6013	2063032.900	900A, 700 V
P560	170M6013	2063032.900	

Table 4.14: E enclosures, 525–600 V

*170M fuses from Bussmann shown, use the -/80 visual indicator, -TN/80 Type T, -/110 or TN/110 Type T indicator fuses of the same size and amperage may be substituted for external use.

4.1.3 Grounding and IT line power

The ground connection cable cross-section must be at least 0.016 in^2 [10 mm^2]or 2 rated line power wires terminated separately according to *EN 50178 or IEC 61800-5-1* unless national regulations specify differently. Always comply with national and local regulations on cable cross-sections.

The line power is connected to the main disconnect switch if this is included.

NOTE!
Make sure that the AC line voltage corresponds to the AC line voltage of the adjustable frequency drive nameplate.

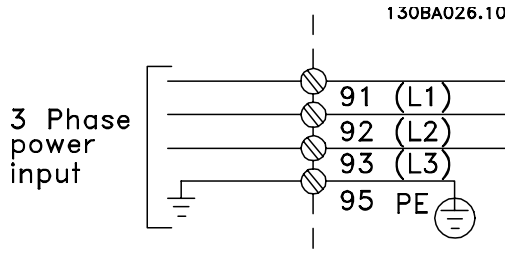

Figure 4.1: Terminals for line power and grounding.

IT Line Power
Do not connect 400 V adjustable frequency drives with RFI filters to line power supplies with a voltage between phase and ground of more than 440 V.
For IT line power and delta ground (grounded leg), AC line voltage may exceed 440 V between phase and ground.

4.1.4 Line power wiring overview

Enclosure:	A2 (IP 20/IP 21)	A3 (IP 20/IP 21)	A5 (IP 55/IP 66)	B1 (IP 21/IP 55/IP 66)	B2 (IP 21/IP 55/IP 66)	B3 (IP 20)	B4 (IP 20)	C1 (IP 21/IP 55/66)	C2 (IP 21/IP 55/66)	C3 (IP 20)	C4 (IP20)
	 130BA340.10	 130BA341.10									
Motor size:											
200–240 V	1.1–3.0 kW	3.7 kW	1.1–3.7 kW	5.5–11 kW	15 kW	5.5–11 kW	15–18.5 kW	18.5–30 kW	37–45 kW	22–30 kW	37–45 kW
380–480 V	1.1–4.0 kW	5.5–7.5 kW	1.1–7.5 kW	11–18.5 kW	22–30 kW	11–18.5 kW	22–37 kW	37–55 kW	75–90 kW	45–55 kW	75–90 kW
525–600 V		1.1–7.5 kW	1.1–7.5 kW	11–18.5 kW	22–30 kW	11–18.5 kW	22–37 kW	37–55 kW	75–90 kW	45–55 kW	75–90 kW
Go to:	4.1.5		4.1.6	4.1.7			4.1.8			4.1.9	

Table 4.15: Line power wiring table.

MG.11.A9.22 - VLT® is a registered Danfoss trademark

4.1.5 AC line input connections for A2 and A3

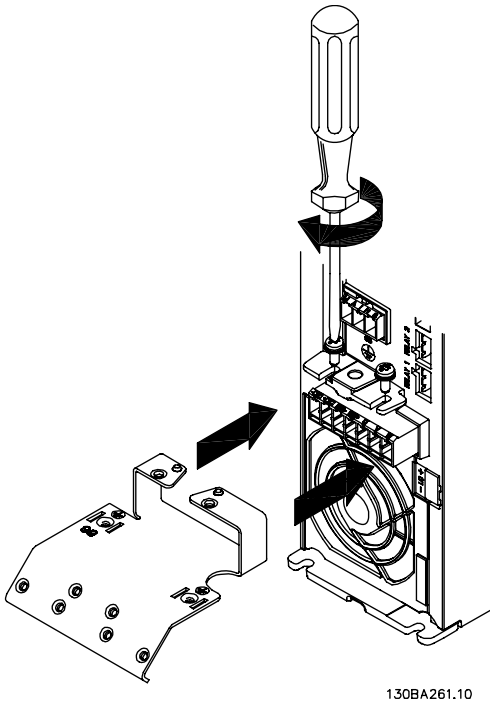

Figure 4.2: First, mount the two screws on the mounting plate, slide it into place and tighten fully.

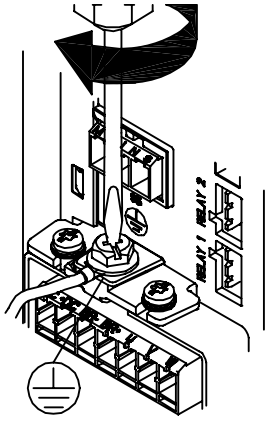

Figure 4.3: When mounting cables, first mount and tighten ground cable.

The ground connection cable cross-section must be at least 0.016 in^2 [10 mm^2] or 2 rated line power wires terminated separately according to *EN 50178/IEC 61800-5-1*.

4

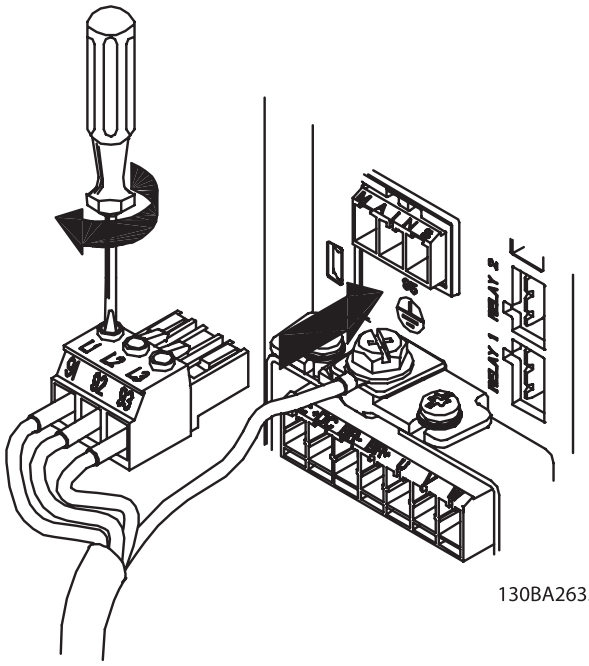

Figure 4.4: Then mount line power plug and tighten wires.

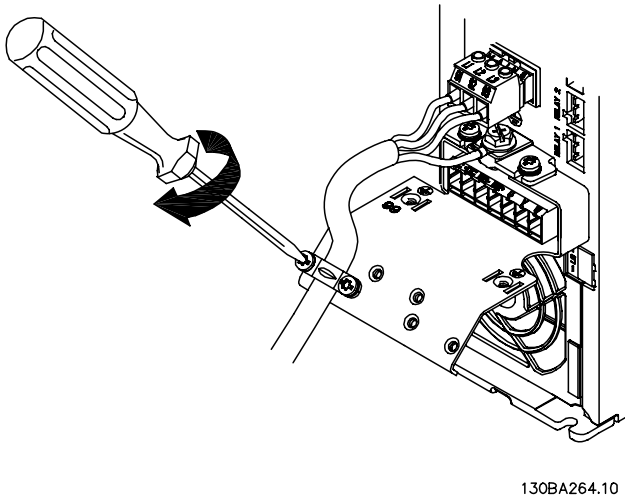

Figure 4.5: Finally, tighten support bracket on line power wires.

NOTE!
With single phase A3 use L1 and L2 terminals.

4.1.6 AC line input connections for A5

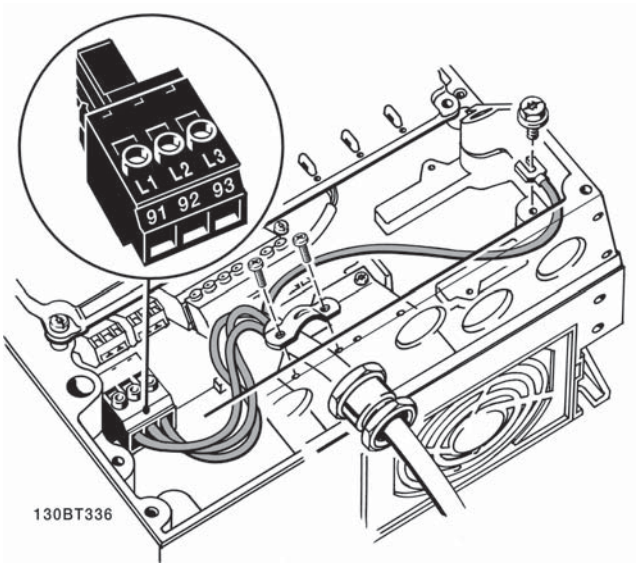

Figure 4.6: How to connect to line power and grounding without a line power disconnect switch. Note that a cable clamp is used.

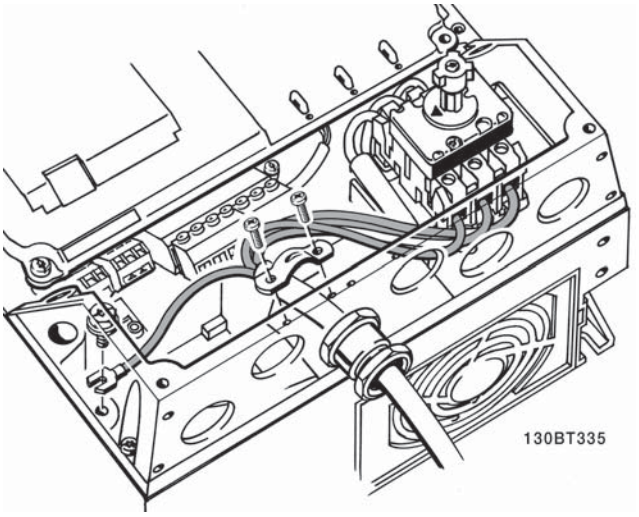

Figure 4.7: How to connect to line power and grounding with a line power disconnect switch.

NOTE!
With single phase A5 use L1 and L2 terminals.

4.1.7 AC line input connections for B1, B2 and B3

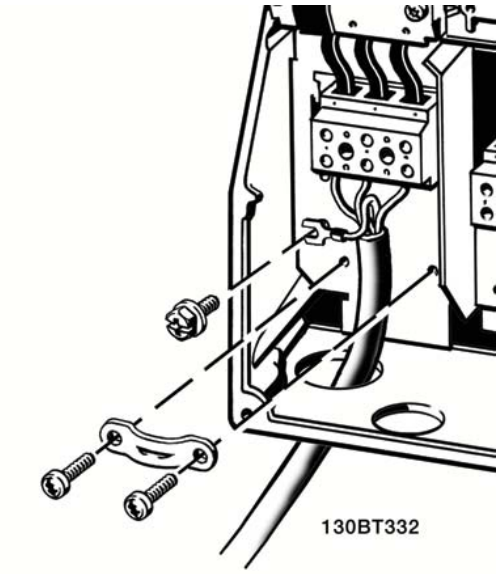

Figure 4.8: How to connect to line power and grounding for B1 and B2

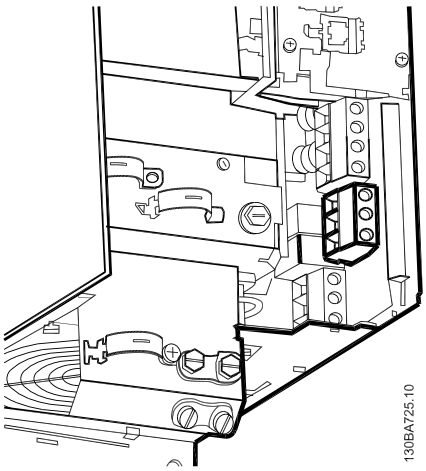

Figure 4.9: How to connect to line power and grounding for B3 without RFI.

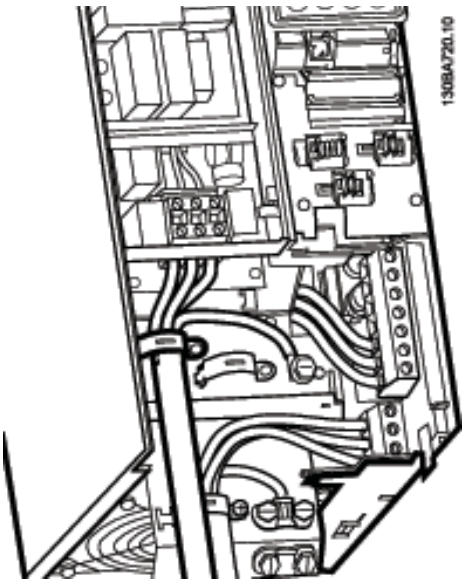

Figure 4.10: How to connect to line power and grounding for B3 with RFI.

NOTE!
With single phase B1 use L1 and L2 terminals.

NOTE!
For correct cable dimensions, please see the section General Specifications at the back of this manual.

4.1.8 AC line input connections for B4, C1 and C2

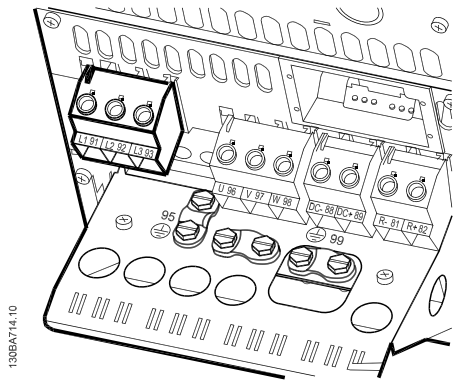

Figure 4.11: How to connect to line power and grounding for B4.

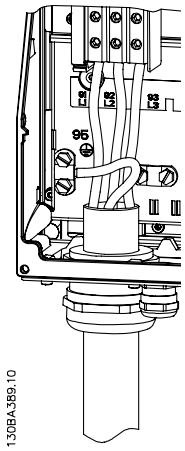

Figure 4.12: How to connect to line power and grounding for C1 and C2.

4.1.9 AC line input connections for C3 and C4

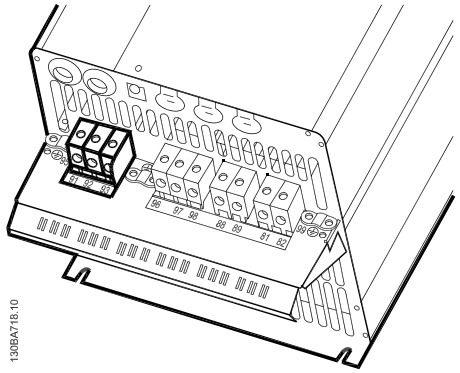

Figure 4.13: How to connect C3 to line power and grounding.

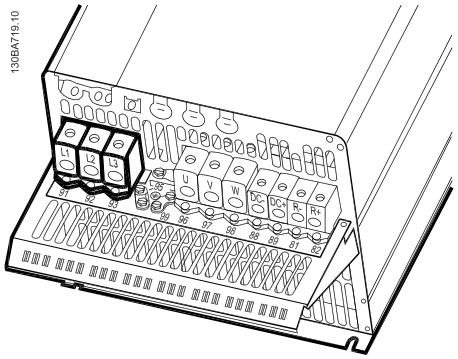

Figure 4.14: How to connect C4 to line power and grounding.

4.1.10 How to connect the motor - foreword

See section General Specifications for correct dimensioning of motor cable cross-section and length.

- Use a shielded/armored motor cable to comply with EMC emission specifications (or install the cable in a metal conduit).
- Keep the motor cable as short as possible to reduce the noise level and leakage currents.
- Connect the motor cable shield/armor to both the decoupling plate of the adjustable frequency drive and to the metal of the motor. (The same applies to both ends of the metal conduit if used instead of a shield.)

- Make the shield connections with the largest possible surface area (by using a cable clamp or an EMC cable connector). This is done by using the supplied installation devices in the adjustable frequency drive.
- Avoid terminating the shield by twisting the ends (pigtails), as this will spoil high frequency shielding effects.
- If it is necessary to break the continuity of the shield to install a motor isolator or motor relay, the continuity must be maintained with the lowest possible HF impedance.

Cable length and cross-section

The adjustable frequency drive has been tested with a given length of cable and a given cross-section of that cable. If the cross-section is increased, the cable capacitance - and thus the leakage current - may increase, thereby requiring that the cable length is reduced accordingly.

Switching frequency

When adjustable frequency drives are used together with sine wave filters to reduce the acoustic noise from a motor, the switching frequency must be set according to the sine wave filter instructions in par.14-01 *Switching Frequency*.

4

Precautions while using aluminum conductors

Aluminum conductors are not recommended for cable cross-sections less than 0.054 in² [35 mm²]. Terminals can accept aluminum conductors, but the conductor surface has to be clean, oxidation must be removed, and the area must be sealed by neutral acid-free Vaseline grease before the conductor is connected.

Furthermore, the terminal screw must be retightened after two days due to the softness of the aluminum. It is crucial to ensure that the connection makes a gas tight joint, otherwise the aluminum surface will oxidize again.

All types of three-phase asynchronous standard motors can be connected to the adjustable frequency drive. Normally, small motors are star-connected (230/400 V, D/Y). Large motors are delta-connected (400/690 V, D/Y). Refer to the motor nameplate for correct connection mode and voltage.

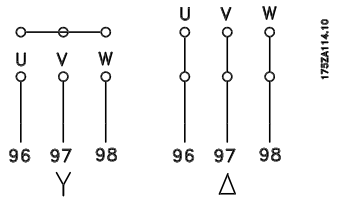

Figure 4.15: Terminals for motor connection

NOTE!

In motors without phase insulation paper or other insulation reinforcement suitable for operation with the voltage supply (such as an adjustable frequency drive), fit a sine-wave filter on the output of the adjustable frequency drive. (Motors that comply with IEC 60034-17 do not require a sine-wave filter).

No.	96	97	98	Motor voltage 0–100% of AC line voltage.
	U	V	W	3 cables out of motor
	U1	V1	W1	6 cables out of motor, Delta-connected
	W2	U2	V2	
	U1	V1	W1	6 cables out of motor, Star-connected
				U2, V2, W2 to be interconnected separately
				(optional terminal block)
No.	99			Ground connection
	PE			

Table 4.16: 3 and 6 cable motor connection.

4.1.11 Motor wiring overview

Enclosure:	A2 (IP 20/IP 21)	A3 (IP 20/IP 21)	A5 (IP 55/IP 66)	B1 (IP 21/IP 55/ IP 66)	B2 (IP 21/IP 55/ IP 66)	B3 (IP 20)	B4 (IP 20)	C1 (IP 21/IP 55/66)	C2 (IP 21/IP 55/66)	C3 (IP 20)	C4 (IP20)
											
Motor size:											
200–240 V	1.1–3.0 kW	3.7 kW	1.1–3.7 kW	5.5–11 kW	15 kW	5.5–11 kW	15–18.5 kW	18.5–30 kW	37–45 kW	22–30 kW	37–45 kW
380–480 V	1.1–4.0 kW	5.5–7.5 kW	1.1–7.5 kW	11–18.5 kW	22–30 kW	11–18.5 kW	22–37 kW	37–55 kW	75–90 kW	45–55 kW	75–90 kW
525–600 V		1.1–7.5 kW	1.1–7.5 kW	11–18.5 kW	22–30 kW	11–18.5 kW	22–37 kW	37–55 kW	75–90 kW	45–55 kW	75–90 kW
Go to:	4.1.12		4.1.13	4.1.14		4.1.15		4.1.16		4.1.17	

Table 4.17: Motor wiring table.

MG.11.A9.22 - VLT® is a registered Danfoss trademark

4.1.12 Motor connection for A2 and A3

Follow these drawings step-by-step for connecting the motor to the adjustable frequency drive.

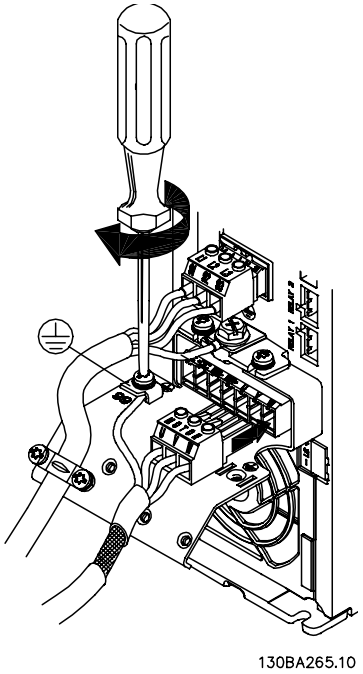

130BA265.10

Figure 4.16: First terminate the motor ground, then place motor U, V and W wires in the plug and tighten them.

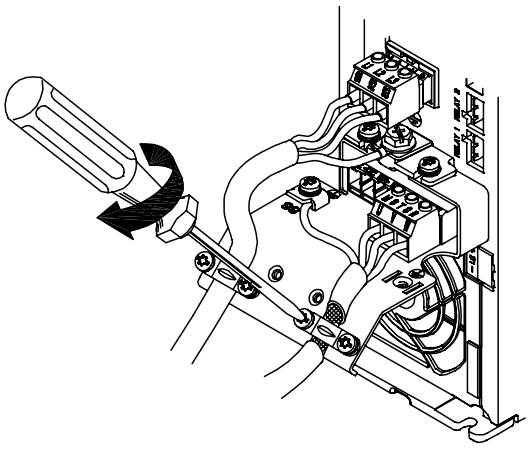

130BA266.10

Figure 4.17: Mount cable clamp to ensure 360 degree connection between chassis and shield; ensure that the outer insulation of the motor cable is removed under the clamp.

4.1.13 Motor connection for A5

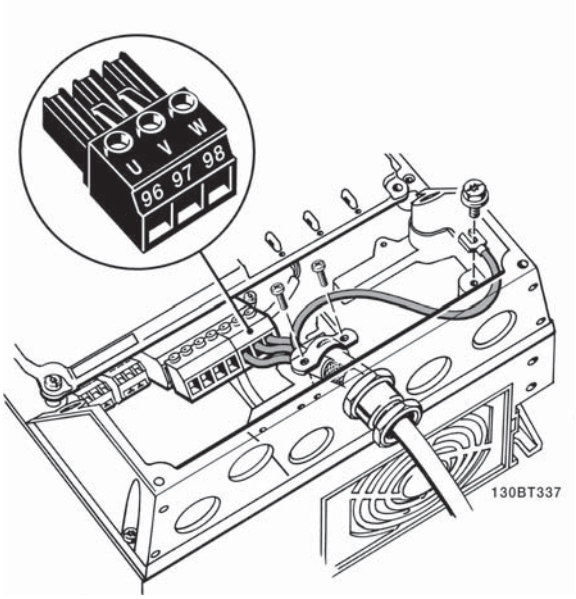

Figure 4.18: First, terminate the motor ground, then insert the motor U, V and W wires in the terminal and tighten them. Please ensure that the outer insulation of the motor cable is removed under the EMC clamp.

4.1.14 Motor connection for B1 and B2

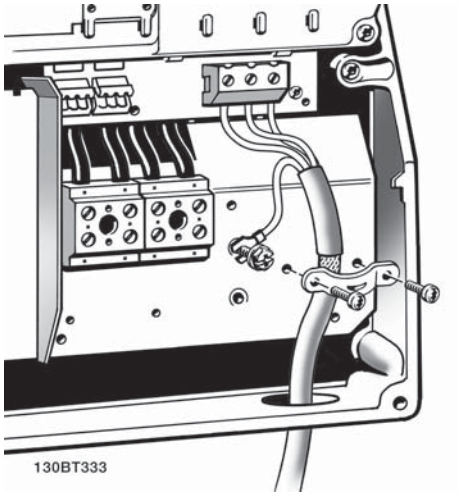

Figure 4.19: First terminate the motor ground, then place motor U, V and W wires in the terminal and tighten them. Please ensure that the outer insulation of the motor cable is removed under the EMC clamp.

4

4.1.15 Motor connection for B3 and B4

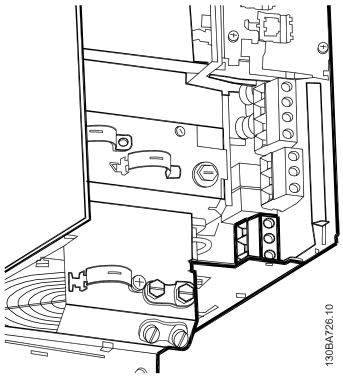

Figure 4.20: First terminate the motor ground, then place motor U, V and W wires in the terminal and tighten them. Please ensure that the outer insulation of the motor cable is removed under the EMC clamp.

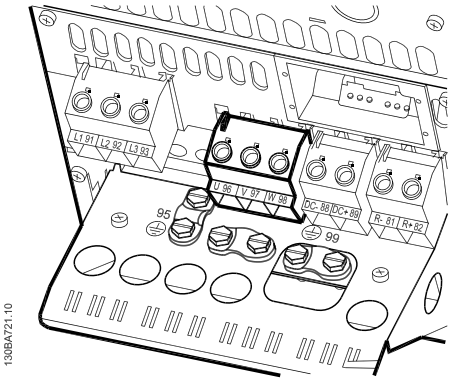

Figure 4.21: First terminate the motor ground, then place motor U, V and W wires in the terminal and tighten them. Please ensure that the outer insulation of the motor cable is removed under the EMC clamp.

4.1.16 Motor connection for C1 and C2

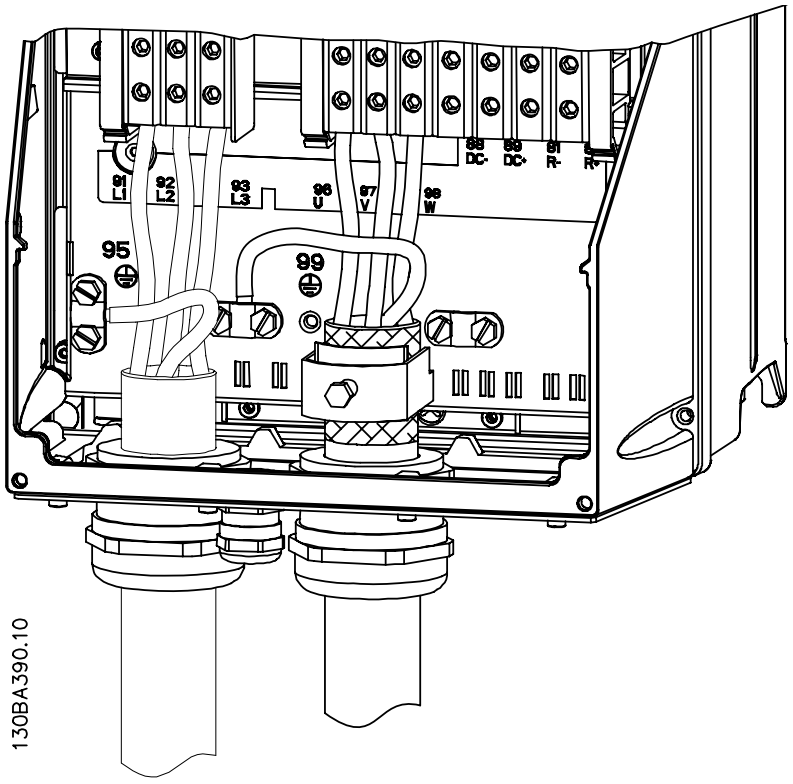

Figure 4.22: First terminate the motor ground, then place motor U, V and W wires in the terminal and tighten them. Please ensure that the outer insulation of the motor cable is removed under the EMC clamp.

4.1.17 Motor connection for C3 and C4

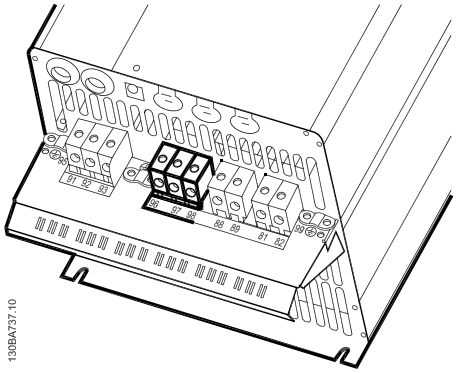

Figure 4.23: First terminate the motor ground, then place motor U, V and W wires into the appropriate terminals and tighten. Please ensure that the outer insulation of the motor cable is removed under the EMC clamp.

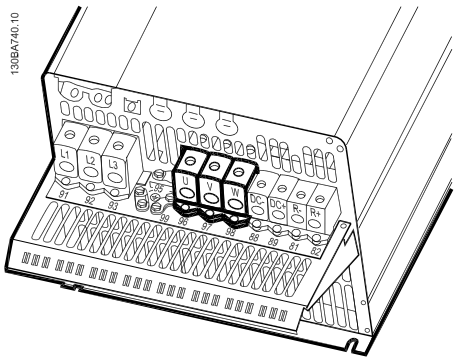

Figure 4.24: First terminate the motor ground, then place motor U, V and W wires into the appropriate terminals and tighten. Please ensure that the outer insulation of the motor cable is removed under the EMC clamp.

4.1.18 Wiring Example and Testing

The following section describes how to terminate and access control wires. For an explanation of the function, programming and wiring of the control terminals, please see chapter *How to program the adjustable frequency drive.*

4.1.19 DC bus connection

The DC bus terminal is used for DC back-up, with the intermediate circuit being supplied from an external source.

Terminal numbers used: 88, 89

4

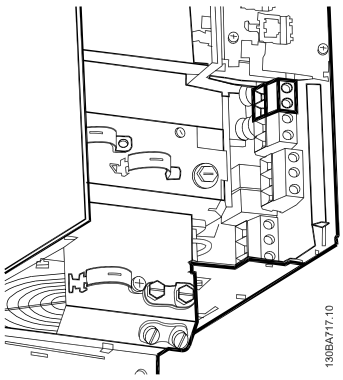

Figure 4.25: DC bus connections for enclosure B3.

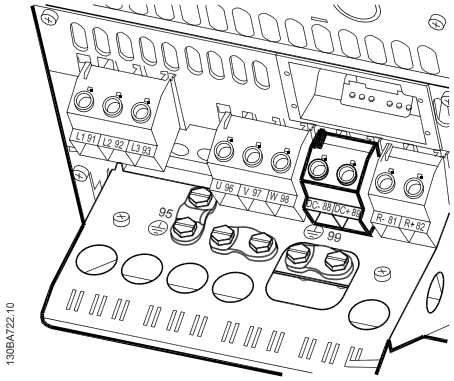

Figure 4.26: DC bus connections for enclosure B4.

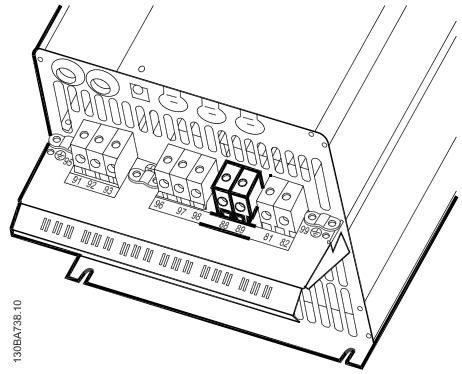

Figure 4.27: DC bus connections for enclosure C3.

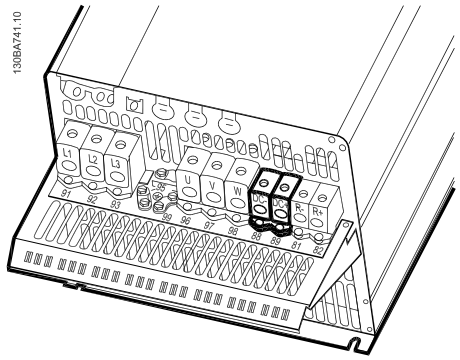

Figure 4.28: DC bus connections for enclosure enclosure C4.

Please contact Danfoss if you require further information.

4.1.20 Brake Connection Option

The connection cable to the brake resistor must be shielded/armored.

Enclosure	A+ B+ C+ D+ F	A+ B+ C+ D+ F
Brake resistor	81	82
Terminals	R-	R+

NOTE!
Dynamic brake calls for extra equipment and safety considerations. For further information, please contact Danfoss.

1. Use cable clamps to connect the shield to the metal cabinet of the adjustable frequency drive and to the decoupling plate of the brake resistor.
2. Dimension the cross-section of the brake cable to match the brake current.

NOTE!
Voltages of up to 975 V DC (@ 600 V AC) may occur between the terminals.

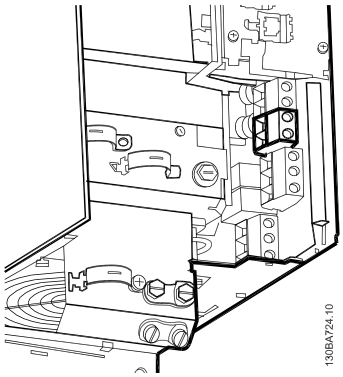

Figure 4.29: Brake connection terminal for B3.

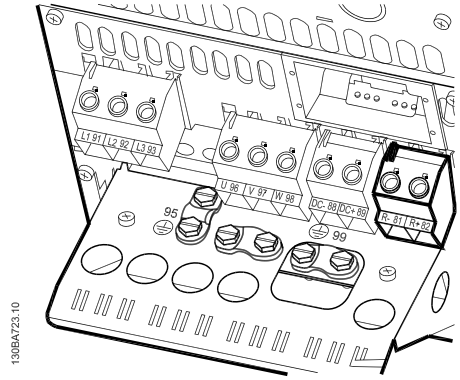

Figure 4.30: Brake connection terminal for B4.

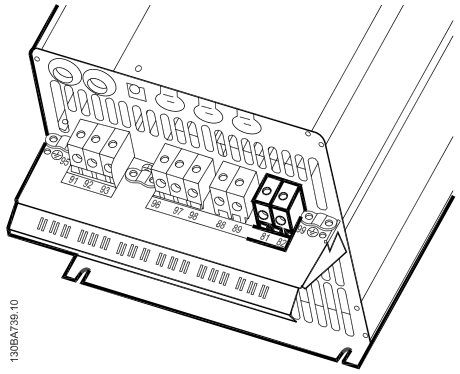

Figure 4.31: Brake connection terminal for C3.

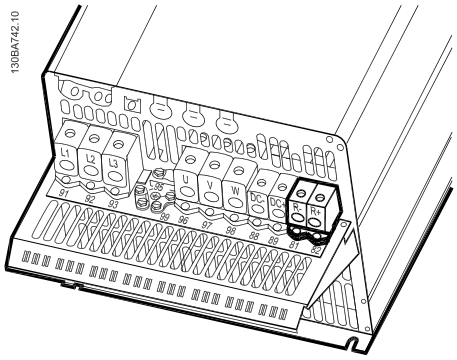

Figure 4.32: Brake connection terminal for C4.

NOTE!
If a short circuit in the brake IGBT occurs, prevent power dissipation in the brake resistor by using a line switch or contactor to disconnect the line power from the adjustable frequency drive. Only the adjustable frequency drive should control the contactor.

NOTE!
Place the brake resistor in an environment free of fire risk and ensure that no external objects can fall into the brake resistor through ventilation slots.
Do not cover ventilation slots and grids.

4.1.21 Relay Connection

To set relay output, see par. group 5-4* Relays.

No.	01 - 02	make (normally open)
	01 - 03	break (normally closed)
	04 - 05	make (normally open)
	04 - 06	break (normally closed)

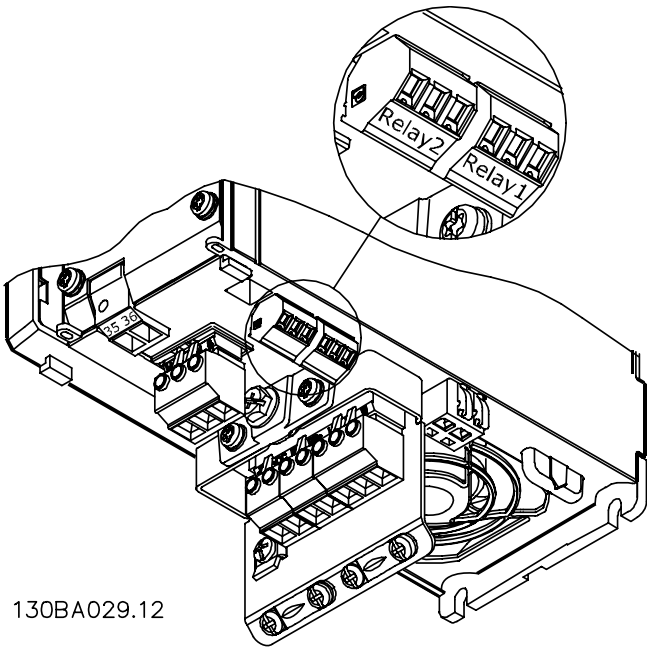

Terminals for relay connection
(A2 and A3 enclosures).

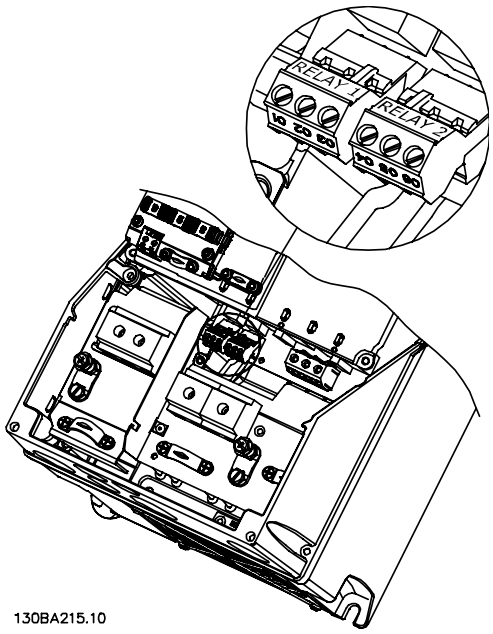

Terminals for relay connection
(A5, B1 and B2 enclosures).

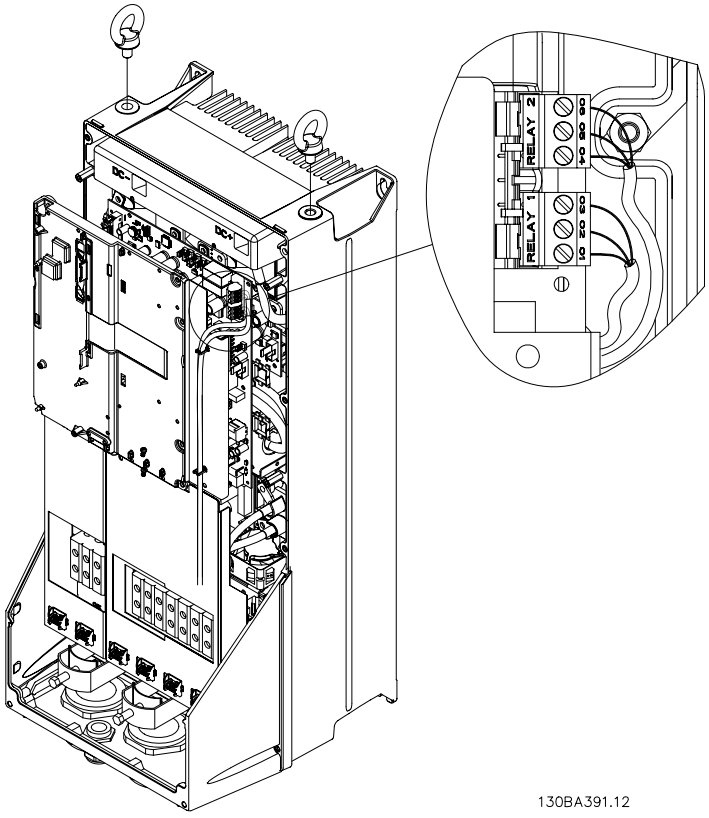

Figure 4.33: Terminals for relay connection (C1 and C2 enclosures).
The relay connections are shown in the cut-out with relay plugs (from the accessory bag) fitted.

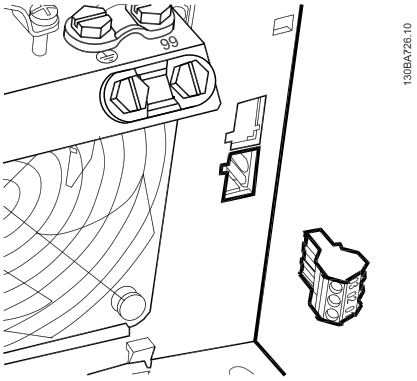

Figure 4.34: Terminals for relay connections for B3. Only one knock-out is fitted from the factory.

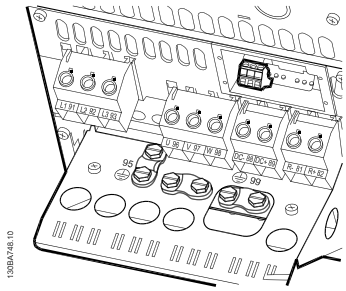

Figure 4.35: Terminals for relay connections for B4.

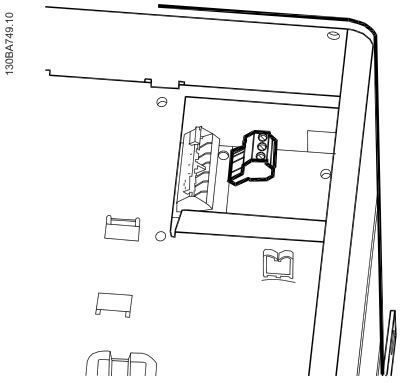

Figure 4.36: Terminals for relay connections for C3 and C4. Located in the upper right corner of the adjustable frequency drive.

4.1.22 Relay Output

Relay 1

- Terminal 01: common
- Terminal 02: normal open 240 V AC
- Terminal 03: normal closed 240 V AC

Relay 2

- Terminal 04: common
- Terminal 05: normal open 400 V AC
- Terminal 06: normal closed 240 V AC

Relay 1 and relay 2 are programmed in par.5-40 *Function Relay*, par. 5-41 *On Delay, Relay*, and par. 5-42 *Off Delay, Relay*.

Additional relay outputs by using option module MCB 105.

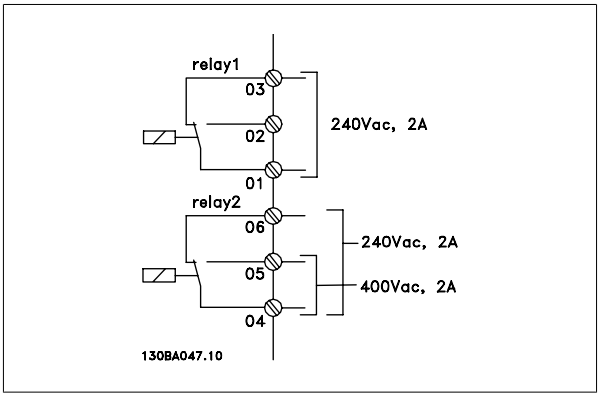

4

4.1.23 How to Test Motor and Direction of Rotation.

Note that unintended motor start can occur; make sure no personnel or equipment is in danger!

Please follow these steps to test the motor connection and direction of rotation. Start with no power to the unit.

4

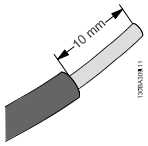

Figure 4.37:
Step 1: First, remove the insulation on both ends of a 1.97–2.76 in [50–70 mm] piece of wire.

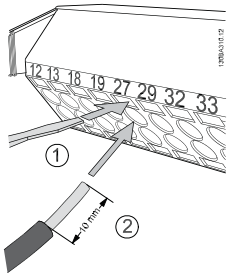

Figure 4.38:
Step 2: Insert one end in terminal 27 using a suitable terminal screwdriver. (Note: For units with the Safe Stop function, the existing jumper between terminal 12 and 37 should not be removed for the unit to be able to run!)

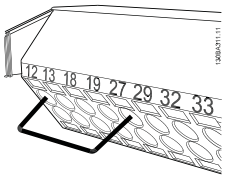

Figure 4.39:
Step 3: Insert the other end in terminal 12 or 13. (Note: For units with the Safe Stop function, the existing jumper between terminal 12 and 37 should not be removed for the unit to be able to run!)

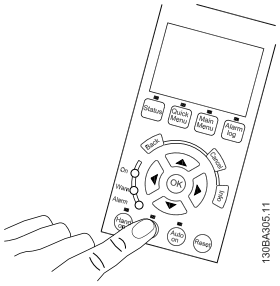

Figure 4.40:
Step 4: Power up the unit and press the [Off] button. In this state, the motor should not rotate. Press [Off] to stop the motor at any time. Note that the LED on the [OFF] button should be lit. If alarms or warnings are flashing, please see chapter 7 for more information.



Figure 4.41:
Step 5: By pressing the [Hand on] button, the LED above the button should be lit and the motor may rotate.

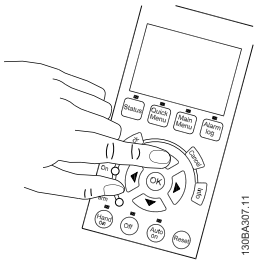

Figure 4.42:
Step 6: The speed of the motor can be seen in the LCP. It can be adjusted by pushing the up ▲ and down ▼ arrow buttons.

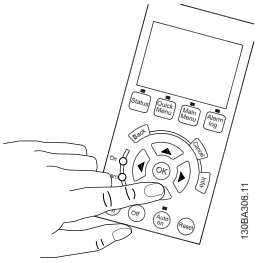

Figure 4.43:
Step 7: To move the cursor, use the left ◄ and right ► arrow buttons. This enables speed changes by larger increments.



Figure 4.44:
Step 8: Press the [Off] button to stop the motor again.

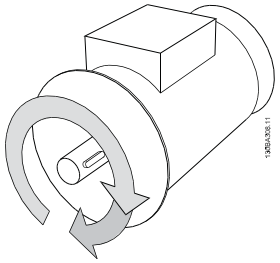

Figure 4.45:
Step 9: Change two motor wires if the desired direction of rotation is not achieved.



Remove line power from the adjustable frequency drive before changing motor wires.

4.1.24 Access to Control Terminals

All terminals to the control cables are located underneath the terminal cover on the front of the adjustable frequency drive. Remove the terminal cover with a screwdriver.

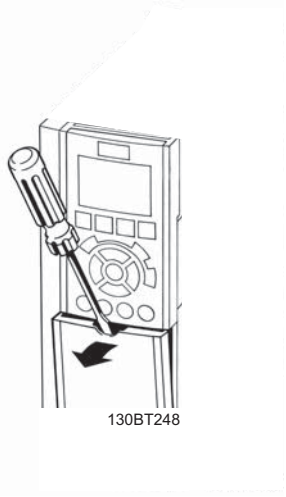

Figure 4.46: Access to control terminals for A2, A3, B3, B4, C3 and C4 enclosures

Remove front-cover to access control terminals. When replacing the front cover, ensure proper fastening by applying a torque of 2 Nm.

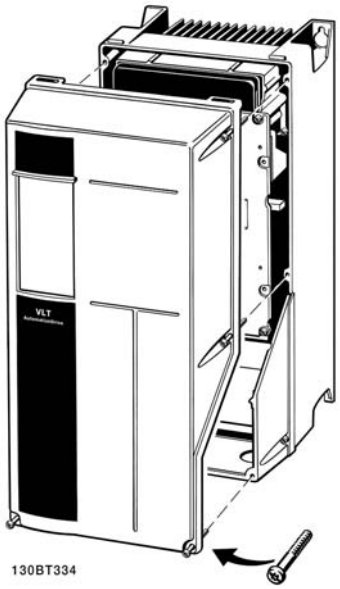

Figure 4.47: Access to control terminals for A5, B1, B2, C1 and C2 enclosures

4.1.25 Control Terminals

Drawing reference numbers:

1. 10-pole plug, digital I/O.
2. 3-pole plug, RS-485 bus.
3. 6-pole, analog I/O.
4. USB connection.

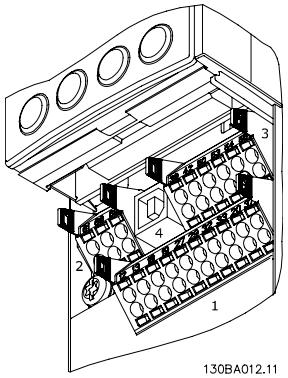

Figure 4.48: Control terminals (all enclosures)

4.1.26 Electrical Installation and Control Cables

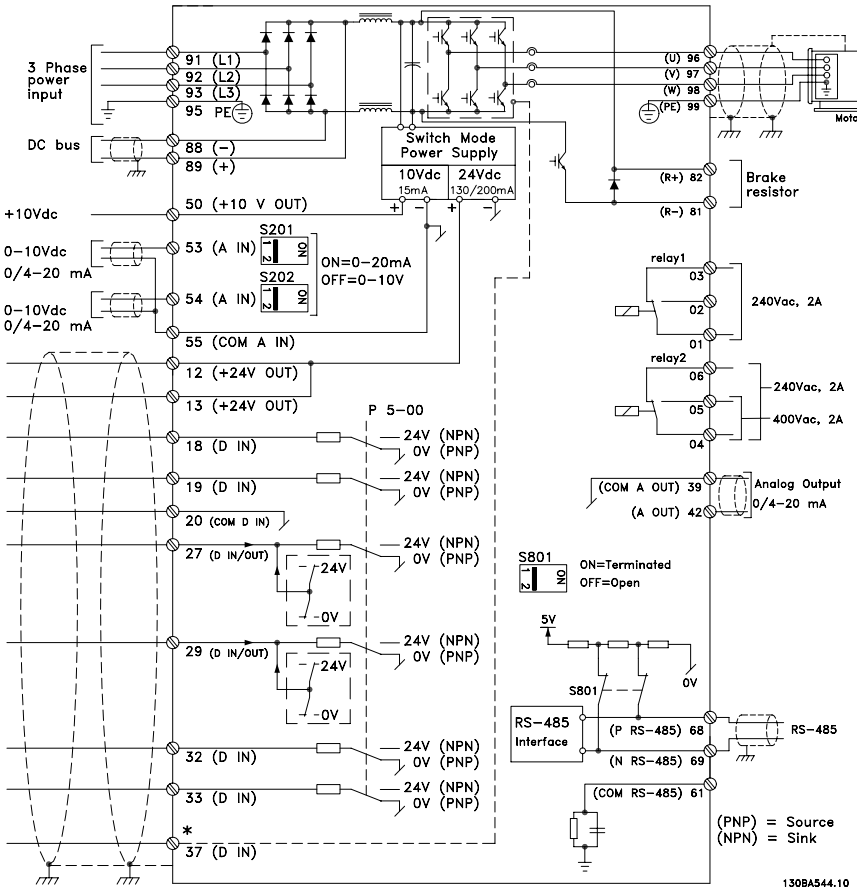

Figure 4.49: Diagram showing all electrical terminals. (Terminal 37 present for units with safe stop function only.)

Terminal number	Terminal description	Parameter number	Factory default
1+2+3	Terminal 1+2+3-Relay1	5-40	No operation
4+5+6	Terminal 4+5+6-Relay2	5-40	No operation
12	Terminal 12 Supply	-	+24 V DC
13	Terminal 13 Supply	-	+24 V DC
18	Terminal 18 Digital Input	5-10	Start
19	Terminal 19 Digital Input	5-11	No operation
20	Terminal 20	-	Common
27	Terminal 27 Digital Input/Output	5-12/5-30	Coast inverse
29	Terminal 29 Digital Input/Output	5-13/5-31	Jog
32	Terminal 32 Digital Input	5-14	No operation
33	Terminal 33 Digital Input	5-15	No operation
37	Terminal 37 Digital Input	-	Safe Stop
42	Terminal 42 Analog Output	6-50	No operation
53	Terminal 53 Analog Input	3-15/6-1*/20-0*	Reference
54	Terminal 54 Analog Input	3-15/6-2*/20-0*	Feedback

Table 4.18: Terminal connections

Very long control cables and analog signals may, in rare cases and depending on the installation, result in 50/60 Hz ground loops due to noise from line power supply cables.

If this occurs, break the shield or insert a 100 nF capacitor between shield and chassis.

NOTE!
The common of digital / analog inputs and outputs should be connected to separate common terminals 20, 39, and 55. This will prevent ground current interference among groups. For example, it prevents switching on digital inputs from disturbing analog inputs.

NOTE!
Control cables must be shielded/armored.

4.1.27 Switches S201, S202, and S801

Switches S201 (Al 53) and S202 (Al 54) are used to select a current (0-20 mA) or a voltage (0 to 10 V) configuration of the analog input terminals 53 and 54 respectively.

Switch S801 (BUS TER.) can be used to enable termination on the RS-485 port (terminals 68 and 69).

Please note that the switches may be covered by an option, if so equipped.

Default setting:

S201 (AI 53) = OFF (voltage input)

S202 (AI 54) = OFF (voltage input)

S801 (Bus termination) = OFF

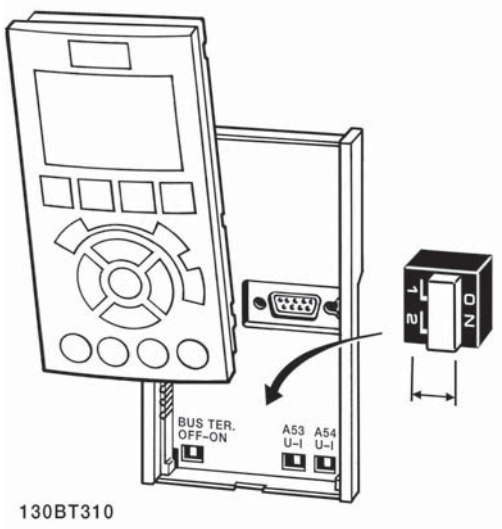

Figure 4.50: Switches location.

4.2 Final optimization and test

4.2.1 Final optimization and test

To optimize motor shaft performance and optimize the adjustable frequency drive for the connected motor and installation, please follow these steps: Ensure that the adjustable frequency drive and motor are connected and that power is applied to the adjustable frequency drive.

NOTE!
Before power-up, ensure that connected equipment is ready for use.

Step 1. Locate motor nameplate

NOTE!
The motor is either star- (Y) or delta-connected (Δ). This information is located on the motor nameplate data.

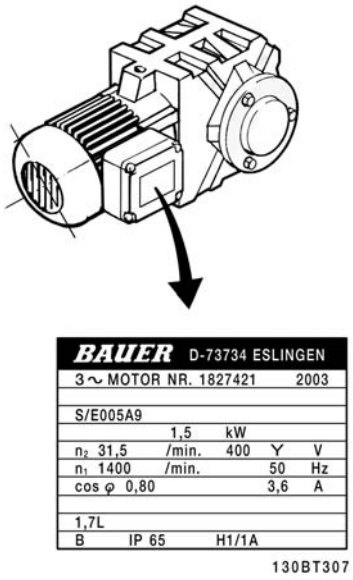

Figure 4.51: Motor nameplate example

Step 2. Enter motor nameplate data in following parameter list

To access the list, first press [QUICK MENU] key, then select "Q2 Quick Set-up".

1.	par.1-20 *Motor Power [kW]* par.1-21 *Motor Power [HP]*
2.	par.1-22 *Motor Voltage*
3.	par.1-23 *Motor Frequency*
4.	par.1-24 *Motor Current*
5.	par.1-25 *Motor Nominal Speed*

Table 4.19: Motor related parameters

Step 3. Activate Automatic Motor Adaptation (AMA) Activate Auto-tune

Performing AMA ensures the best possible performance. AMA automatically takes measurements from the specific motor connected and compensates for installation variances.

1. Connect terminal 27 to terminal 12 or use [QUICK MENU] and "Q2 Quick Set-up" and set Terminal 27 par. 5-12 *Terminal 27 Digital Input* Terminal 27 Digital Input to *No function [0]*
2. Press [QUICK MENU], select "Q3 Function Set-ups", select "Q3-1 General Settings", select "Q3-10 Adv. Motor Settings" and scroll down to par. 1-29 *Automatic Motor Adaptation (AMA)* Automatic Motor Adaption.
3. Press [OK] to activate the AMA par.1-29 *Automatic Motor Adaptation (AMA)*.
4. Choose between complete or reduced AMA. If a sine-wave filter is mounted, only run a reduced AMA, or remove the sine-wave filter during the AMA procedure.
5. Press the [OK] key. Display should show "Press [Hand on] to start".
6. Press [Hand on] key. A progress bar indicates if AMA is in progress.

Stop the AMA during operation

1. Press the [OFF] key - the adjustable frequency drive enters into alarm mode and the display shows that the AMA was terminated by the user.

Successful AMA

1. The display shows "Press [OK] to finish AMA".
2. Press the [OK] key to exit the AMA state.

Unsuccessful AMA

1. The adjustable frequency drive enters into alarm mode. A description of the alarm can be found in the *Troubleshooting* section.
2. "Report Value" in the [Alarm Log] shows the last measuring sequence carried out by the AMA, before the adjustable frequency drive entered alarm mode. This number, along with the description of the alarm, will assist in troubleshooting. If contacting Danfoss Service, make sure to mention number and alarm description.



NOTE!
Unsuccessful AMA is often caused by incorrectly entered motor nameplate data or too big difference between the motor power size and the adjustable frequency drive power size.

Step 4. Set speed limit and ramp time

Set up the desired limits for speed and ramp time.

par.3-02 *Minimum Reference*
par.3-03 *Maximum Reference*

par.4-11 *Motor Speed Low Limit [RPM]* or par.4-12 *Motor Speed Low Limit [Hz]*
par.4-13 *Motor Speed High Limit [RPM]* or par.4-14 *Motor Speed High Limit [Hz]*

par.3-41 *Ramp 1 Ramp-up Time* Ramp-up Time 1 [s]
par.3-42 *Ramp 1 Ramp-down Time* Ramp-down Time 1 [s]

See the section *How to program the adjustable frequency drive, Quick Menu Mode* for easy set-up of these parameters.

MG.11.A9.22 - VLT® is a registered Danfoss trademark

5 How to operate the adjustable frequency drive

5.1 Three ways of operating

5.1.1 Three ways of operating

The adjustable frequency drive can be operated in 3 ways:

1. Graphical Local Control Panel (GLCP), see 5.1.2
2. Numeric Local Control Panel (NLCP), see 5.1.3
3. RS-485 serial communication or USB, both for PC connection, see 5.1.4

If the adjustable frequency drive is fitted with a serial communication bus option, please refer to relevant documentation.

5.1.2 How to operate the numeric LCP (NLCP)

The following instructions are valid for the NLCP (LCP 101).

The control panel is divided into four functional groups:

1. Numeric display.
2. Menu key and LEDs - changing parameters and switching between display functions.
3. Navigation keys and LEDs.
4. Operation keys and LEDs.

NOTE!
Parameter copy is not possible with the Numeric Local Control Panel (LCP101).

Select one of the following modes:
Status Mode: Displays the status of the adjustable frequency drive or the motor.
If an alarm occurs, the NLCP automatically switches to status mode.
A number of alarms can be displayed.

Quick Set-up or Main Menu Mode: Display parameters and parameter settings.

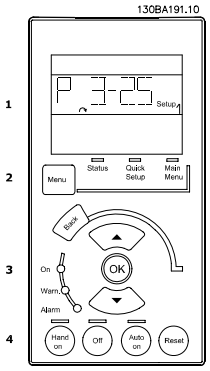

Figure 5.1: Numerical LCP (NLCP)



Figure 5.2: Status display example



Figure 5.3: Alarm display example

LEDs:

- Green LED/On: Indicates whether control section is on.
- Yellow LED/Wrn.: Indicates a warning.
- Flashing red LED/Alarm: Indicates an alarm.

Menu key

[Menu] Select one of the following modes:

- Status
- Quick Set-up
- Main Menu

Main Menu

is used for programming all parameters.

The parameters can be accessed immediately unless a password has been created via par. 0-60 *Main Menu Password*, par. 0-61 *Access to Main Menu w/o Password*, par. 0-65 *Personal Menu Password* or par. 0-66 *Access to Personal Menu w/o Password*.

Quick Set-up is used to set up the adjustable frequency drive using only the most essential parameters.

The parameter values can be changed using the up/down arrows when the value is flashing.

Select the main menu by pressing the [Menu] key a number of times until the main menu LED is lit.

Select the parameter group [xx-__] and press [OK].

Select the parameter [__-xx] and press [OK].

If the parameter is an array parameter, select the array number and press [OK].

Select the desired data value and press [OK].

Navigation Keys

[Back]

for stepping backwards

Arrow [▲] [▼]

keys are used for navigating between parameter groups, parameters and within parameters.

[OK]

is used for choosing a parameter marked by the cursor and for enabling the change of a parameter.



Figure 5.4: Display example

Operation Keys

Keys for local control are found at the bottom of the control panel.



Figure 5.5: Operation keys of the numerical LCP (NLCP)

[Hand on]

enables control of the adjustable frequency drive via the LCP. [Hand on] also starts the motor and makes it possible to enter the motor speed data by means of the arrow keys. The key can be *Enabled* [1] or *Disabled* [0] via par. 0-40 *[Hand on] Key on LCP*.

External stop signals activated by means of control signals or a serial bus will override a 'start' command via the LCP.

The following control signals will still be active when [Hand on] is activated:

- [Hand on] - [Off] - [Auto on]
- Reset
- Coasting stop inverse
- Reversing
- Set-up select lsb - Set-up select msb

- Stop command from serial communication
- Quick stop
- DC brake

[Off]
stops the connected motor. The key can be *Enabled* [1] or *Disabled* [0] via par. 0-41 *[Off] Key on LCP*.

If no external stop function is selected and the [Off] key is inactive, the motor can be stopped by disconnecting the line power supply.

[Auto on]
enables the adjustable frequency drive to be controlled via the control terminals and/or serial communication. When a start signal is applied to the control terminals and/or the bus, the adjustable frequency drive will start. The key can be *Enabled* [1] or *Disabled* [0] via par. 0-42 *[Auto on] Key on LCP*.

NOTE!
An active HAND-OFF-AUTO signal via the digital inputs has higher priority than the control keys [Hand on] [Auto on].

[Reset]
is used for resetting the adjustable frequency drive after an alarm (trip). The key can be *Enabled* [1] or *Disabled* [0] via par. 0-43 *[Reset] Key on LCP*.

5.1.3 RS-485 Bus Connection

One or more adjustable frequency drives can be connected to a controller (or master) using the standard RS-485 interface. Terminal 68 is connected to the P signal (TX+, RX+), while terminal 69 is connected to the N signal (TX-, RX-).

If more than one adjustable frequency drive is connected to a master, use parallel connections.

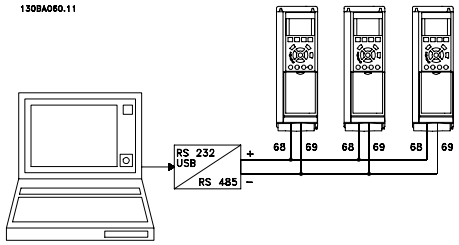

Figure 5.6: Connection example.

In order to avoid potential equalizing currents in the screen, ground the cable screen via terminal 61, which is connected to the frame via an RC link.

Bus termination
The RS-485 bus must be terminated by a resistor network at both ends. If the drive is the first or the last device in the RS-485 loop, set the switch S801 on the control card to ON.
For more information, see the paragraph *Switches S201, S202, and S801*.

5.1.4 How to Connect a PC to the Adjustable Frequency Drive

To control or program the adjustable frequency drive from a PC, install the PC-based Configuration Tool MCT 10.
The PC is connected via a standard (host/device) USB cable, or via the RS-485 interface as shown in the VLT HVAC Drive *Design Guide, chapter How to Install > Installation of misc. connections*.

NOTE!
The USB connection is galvanically isolated from the supply voltage (PELV) and other high-voltage terminals. The USB connection is connected to protection ground on the adjustable frequency drive. Use only isolated laptop for PC connection to the USB connector on the adjustable frequency drive.

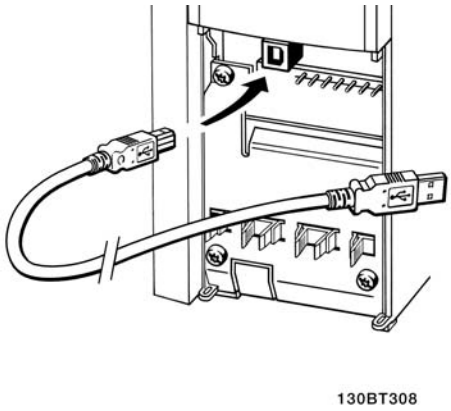

Figure 5.7: For control cable connections, see section on *Control Terminals*.

5

5.1.5 PC Software tools

PC-based Configuration Tool MCT 10

All adjustable frequency drives are equipped with a serial communication port. Danfoss provides a PC tool for communication between the PC and the adjustable frequency drive, PC-based Configuration Tool MCT 10. Please check the section on *Available Literature* for detailed information on this tool.

MCT 10 Set-up Software

MCT 10 has been designed as an easy to use interactive tool for setting parameters in our adjustable frequency drives. The software can be downloaded from the Danfoss internet site *http://www.*Danfoss*.com/BusinessAreas/DrivesSolutions/Softwaredownload/DDPC+Software+Program.htm*.
The xMCT 10 Set-up software will be useful for:

- Planning a communication network off-line. MCT 10 contains a complete adjustable frequency drive database
- Commissioning adjustable frequency drives on-line.
- Saving settings for all adjustable frequency drives.
- Replacing an adjustable frequency drive in a network.
- Simple and accurate documentation of adjustable frequency drive settings after commissioning.
- Expanding an existing network.
- Adjustable frequency drives developed in the future will be fully supported.

MCT 10 set-up software supports Profibus DP-V1 via a master class 2 connection. This makes it possible to access on-line read/write parameters in an adjustable frequency drive via the Profibus network. This will eliminate the need for an extra communication network.

Save Adjustable Frequency Drive Settings:

1. Connect a PC to the unit via the USB COM port. (Note: Use a PC that is isolated from the line power, in conjunction with the USB port. Failure to do so may damage equipment.)
2. Open MCT 10 Set-up Software
3. Choose "Read from drive".
4. Choose "Save as".

All parameters are now stored on the PC.

Load Adjustable Frequency Drive Settings:

1. Connect a PC to the adjustable frequency drive via the USB com port
2. Open MCT 10 Set-up software
3. Choose "Open"– stored files will be shown.
4. Open the appropriate file.
5. Choose "Write to drive."

All parameter settings are now transferred to the adjustable frequency drive.

A separate manual forMCT 10 Set-up Software is available: *MG.10.Rx.yy*.

The MCT 10 Set-up Software Modules

The following modules are included in the software package:

	MCT Set-up 10 Software Setting parameters Copy to and from adjustable frequency drives Documentation and print-out of parameter settings incl. diagrams
	Ext. User Interface Preventive Maintenance Schedule Clock settings Timed Action Programming Smart Logic Controller Set-up

Ordering number:

Please order the CD containing the MCT 10 Set-up software using code number 130B1000.

MCT 10 can also be downloaded from the Danfoss Internet: *WWW.DANFOSS.COM, Business Area: Motion Controls*.

5.1.6 Tips and tricks

*	For the majority of HVAC applications, the Quick Menu, Quick Set-up and Function Set-up provide the simplest and quickest access to all the typical parameters required.
*	Whenever possible, performing an AMA will ensure best shaft performance
*	The contrast of the display can be adjusted by pressing [Status] and [▲] for a darker display or by pressing [Status] and [▼] for a brighter display
*	Under [Quick Menu] and [Changes Made] all parameters that have been changed from the factory settings are displayed
*	Press and hold the [Main Menu] key for 3 seconds to access any parameter.
*	For service purposes, it is recommended to copy all parameters to the LCP, see par. 0-50 *LCP Copy* for further information.

Table 5.1: Tips and tricks

5.1.7 Quick Transfer of Parameter Settings when using GLCP

Once the set-up of an adjustable frequency drive is complete, it is recommended to store (backup) the parameter settings in the GLCP or on a PC via MCT 10 Set-up Software Tool.

NOTE!
Stop the motor before performing any of these operations.

Data storage in LCP:

1. Go to par. 0-50 *LCP Copy*
2. Press the [OK] key.
3. Select "All to LCP"
4. Press the [OK] key.

All parameter settings are now stored in the GLCP indicated by the progress bar. When 100% is reached, press [OK].

5

The GLCP can now be connected to another adjustable frequency drive and the parameter settings copied to this adjustable frequency drive.

Data transfer from LCP to adjustable frequency drive:

1. Go to par. 0-50 *LCP Copy*
2. Press the [OK] key.
3. Select "All from LCP"
4. Press the [OK] key.

The parameter settings stored in the GLCP are now transferred to the adjustable frequency drive, as indicated by the progress bar. When 100% is reached, press [OK].

5.1.8 Initialization to Default Settings

There are two ways to initialize the adjustable frequency drive to default: Recommended initialization and manual initialization.
Please be aware that they have different impacts according to the below description.

Recommended initialization (via par. 14-22 *Operation Mode*)

1. Select par. 14-22 *Operation Mode*
2. Press [OK]
3. Select "Initialization" (for NLCP select "2")
4. Press [OK]
5. Disconnect the power from the unit and wait for the display to turn off.
6. Reconnecting the power resets the adjustable frequency drive. Please note that the first start-up takes a few more seconds.
7. Press [Reset]

par. 14-22 *Operation Mode* initializes all except:
par. 14-50 *RFI 1*
par. 8-30 *Protocol*
par. 8-31 *Address*
par. 8-32 *Baud Rate*
par. 8-35 *Minimum Response Delay*
par. 8-36 *Max Response Delay*
par. 8-37 *Max Inter-Char Delay*
par. 15-00 *Operating Hours* to par. 15-05 *Over Volts*
par. 15-20 *Historic Log: Event* to par. 15-22 *Historic Log: Time*
par. 15-30 *Alarm Log: Error Code* to par. 15-32 *Alarm Log: Time*

NOTE!
Parameters selected in par. 0-25 *My Personal Menu* will remain present with the default factory setting.

Manual initialization

NOTE!
When carrying out manual initialization, serial communication, RFI filter settings and fault log settings are reset.
Removes parameters selected in par. 0-25 *My Personal Menu*

1. Disconnect from the line power and wait until the display turns off.

2a. Press [Status] - [Main Menu] - [OK] at the same time as powering up the Graphical LCP (GLCP).

2b. Press [Menu] while the LCP 101, Numerical Display is powering up.

3. Release the keys after 5 s.

4. The adjustable frequency drive is now programmed according to default settings.

This parameter initializes all except:
par. 15-00 *Operating Hours*
par. 15-03 *Power-ups*
par. 15-04 *Over Temps*
par. 15-05 *Over Volts*

MG.11.A9.22 - VLT® is a registered Danfoss trademark

6 How to program the adjustable frequency drive

6.1 How to program

6.1.1 Quick Menu Mode

Parameter Data

The graphical display (GLCP) provides access to all parameters listed under the quick menus. The numeric display (NLCP) only provides access to the quick set-up parameters. To set parameters using the [Quick Menu] button - enter or change parameter data or settings in accordance with the following procedure:

1. Press Quick Menu button
2. Use the [▲] and [▼] buttons to find the parameter you want to change
3. Press [OK].
4. Use [▲] and [▼] buttons to select the correct parameter setting
5. Press [OK].
6. To move to a different digit within a parameter setting, use the [◄] and [►] buttons
7. Highlighted area indicates digit selected for change
8. Press [Cancel] button to disregard change, or press [OK] to accept change and enter the new setting

Example of Changing Parameter Data

Assume parameter 22-60 is set to [Off]. However, you want to monitor the fan belt condition - non-broken or broken - according to the following procedure:

1. Press Quick Menu key
2. Choose Function Set-ups with the [▼] button
3. Press [OK].
4. Choose Application Settings with the [▼] button
5. Press [OK].
6. Press [OK] again for Fan Functions
7. Choose Broken Belt Function by pressing [OK]
8. With [▼] button, choose [2] Trip

The adjustable frequency drive will now trip if a broken fan belt is detected.

Select [My Personal Menu] to display personal parameters:

Select [My Personal Menu] to display only the parameters, which have been pre-selected and programmed as personal parameters. For example, an AHU or pump OEM may have pre-programmed personal parameters to be in My Personal Menu during factory commissioning to make on-site commissioning/ fine tuning simpler. These parameters are selected in par. 0-25 *My Personal Menu*. Up to 20 different parameters can be programmed in this menu.

Select [Changes Made] to get information about:

- the last 10 changes. Use the up/down navigation keys to scroll between the last 10 changed parameters.
- the changes made since default setting.

Select [Loggings]:

to get information about the display line readouts. The information is shown as graphs.

Only display parameters selected in par.0-20 *Display Line 1.1 Small* and par. 0-24 *Display Line 3 Large* can be viewed. It is possible to store up to 120 samples in the memory for later reference.

Efficient Parameter Set-up for VLT HVAC Drive Applications:

The parameters can easily be set up for the vast majority of the VLT HVAC Drive applications only by using the [Quick Set-up] option.

After pressing [Quick Menu], the different choices in the quick menu are listed. See also illustration 6.1 below and tables Q3-1 to Q3-4 in the following *Function Set-ups* section.

Example of using the Quick Set-up option:

Assume you want to set the ramp-down time to 100 seconds!

1. Select [Quick Setup]. The first par.0-01 *Language* in Quick Set-up appears
2. Press [▼] repeatedly until par.3-42 *Ramp 1 Ramp-down Time* appears with the default setting of 20 seconds
3. Press [OK].
4. Use the [◄] button to highlight the third digit before the comma.
5. Change '0' to '1' by using the [▲] button.
6. Use the [►] button to highlight the digit '2'.
7. Change '2' to '0' with the [▼] button.
8. Press [OK].

The new ramp-down time is now set to 100 seconds.

It is recommended to do the set-up in the order listed.

6

NOTE!

A complete description of the function is found in the parameter sections of this manual.

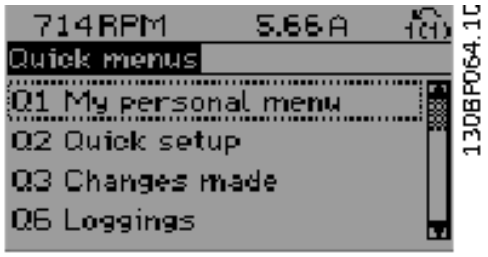

Figure 6.1: Quick Menu view

The Quick Set-up menu gives access to the 13 most important setup parameters of the adjustable frequency drive. After programming the adjustable frequency drive will, in most cases, be ready for operation. The 13 (see footnote) Quick Set-up parameters are shown in the table below. A complete description of the function is given in the parameter description sections of this manual.

Par.	[Units]
par.0-01 *Language*	
par.1-20 *Motor Power [kW]*	[kW]
par.1-21 *Motor Power [HP]*	[HP]
par.1-22 *Motor Voltage*	[V]
par.1-23 *Motor Frequency*	[Hz]
par.1-24 *Motor Current*	[A]
par.1-25 *Motor Nominal Speed*	[RPM]
par.1-28 *Motor Rotation Check*	[Hz]
par.3-41 *Ramp 1 Ramp-up Time*	[s]
par.3-42 *Ramp 1 Ramp-down Time*	[s]
par.4-11 *Motor Speed Low Limit [RPM]*	[RPM]
par.4-12 *Motor Speed Low Limit [Hz]*	[Hz]
par.4-13 *Motor Speed High Limit [RPM]*	[RPM]
par.4-14 *Motor Speed High Limit [Hz]*	[Hz]
par. 3-19 *Jog Speed [RPM]*	[RPM]
par.3-11 *Jog Speed [Hz]*	[Hz]
par. 5-12 *Terminal 27 Digital Input*	
par.5-40 *Function Relay*	

Table 6.1: Quick Set-up parameters

*The display showing depends on choices made in par. 0-02 *Motor Speed Unit* and par. 0-03 *Regional Settings*. The default settings of par. 0-02 *Motor Speed Unit* and par. 0-03 *Regional Settings* depend on which region of the world the adjustable frequency drive is supplied to but can be re-programmed as required.

** par.5-40 *Function Relay*, is an array, where one may choose between Relay1 [0] or Relay2 [1]. The standard setting is Relay1 [0] with the default choice Alarm [9].

See the parameter description later in this chapter under Function Set-up parameters.

For detailed information about settings and programming, see the *VLT HVAC Drive Programming Guide, MG.11.CX.YY*

x=version number y=language

NOTE!

If [No Operation] is selected in par. 5-12 *Terminal 27 Digital Input*, no connection to +24 V on terminal 27 is necessary to enable start.

If [Coast Inverse] (factory default value) is selected in par. 5-12 *Terminal 27 Digital Input*, a connection to +24 V is necessary to enable start.

6.1.2 Quick Set-up parameters

Parameters for Quick Set-up

0-01 Language		
Option:		Function:
		Defines the language to be used in the display. The adjustable frequency drive can be delivered with 2 different language packages. English and German are included in both packages. The English cannot be erased or manipulated.
[0] *	English	Part of Language packages 1 - 2
[1]	Deutsch	Part of Language packages 1 - 2
[2]	Francais	Part of Language package 1
[3]	Dansk	Part of Language package 1
[4]	Spanish	Part of Language package 1
[5]	Italiano	Part of Language package 1
[6]	Svenska	Part of Language package 1
[7]	Nederlands	Part of Language package 1
[10]	Chinese	Language package 2
[20]	Suomi	Part of Language package 1
[22]	English US	Part of Language package 1
[27]	Greek	Part of Language package 1
[28]	Bras.port	Part of Language package 1
[36]	Slovenian	Part of Language package 1
[39]	Korean	Part of Language package 2
[40]	Japanese	Part of Language package 2
[41]	Turkish	Part of Language package 1
[42]	Trad.Chinese	Part of Language package 2
[43]	Bulgarian	Part of Language package 1
[44]	Srpski	Part of Language package 1
[45]	Romanian	Part of Language package 1
[46]	Magyar	Part of Language package 1
[47]	Czech	Part of Language package 1
[48]	Polski	Part of Language package 1
[49]	Russian	Part of Language package 1
[50]	Thai	Part of Language package 2
[51]	Bahasa Indonesia	Part of Language package 2

1-20 Motor Power [kW]

Range:		Function:
4.00 kW*	[0.09 - 3000.00 kW]	Enter the nominal motor power (in kW) according to the motor nameplate data. The default value corresponds to the nominal rated output of the unit. This parameter cannot be adjusted while the motor is running. Depending on the choices made in par. 0-03 *Regional Settings*, either par.1-20 *Motor Power [kW]* or par.1-21 *Motor Power [HP]* is made invisible.

1-21 Motor Power [HP]

Range:		Function:
4.00 hp*	[0.09 - 3000.00 hp]	Enter the nominal motor power in HP according to the motor nameplate data. The default value corresponds to the nominal rated output of the unit. This parameter cannot be adjusted while the motor is running. Depending on the choices made in par. 0-03 *Regional Settings*, either par.1-20 *Motor Power [kW]* or par.1-21 *Motor Power [HP]* is made invisible.

1-22 Motor Voltage

Range:		Function:
400. V*	[10. - 1000. V]	Enter the nominal motor voltage according to the motor nameplate data. The default value corresponds to the nominal rated output of the unit. This parameter cannot be adjusted while the motor is running.

1-23 Motor Frequency

Range:		Function:
50. Hz*	[20 - 1000 Hz]	Select the motor frequency value from the motor nameplate data.For 87 Hz operation with 230/400 V motors, set the nameplate data for 230 V/50 Hz. Adapt par.4-13 *Motor Speed High Limit [RPM]* and par.3-03 *Maximum Reference* to the 87 Hz application.



NOTE!
This parameter cannot be adjusted while the motor is running.

1-24 Motor Current

Range:		Function:
7.20 A*	[0.10 - 10000.00 A]	Enter the nominal motor current value from the motor nameplate data. This data is used for calculating motor torque, motor thermal protection, etc.



NOTE!
This parameter cannot be adjusted while the motor is running.

1-25 Motor Nominal Speed

Range:		Function:
1420. RPM*	[100 - 60000 RPM]	

NOTE!
This parameter cannot be changed while the motor is running.

1-28 Motor Rotation Check

Option:		Function:
		Following installation and connection of the motor, this function allows the correct motor rotation direction to be verified. Enabling this function overrides any bus commands or digital inputs, except External Interlock and Safe Stop (if included).
[0] *	OFF	Motor Rotation Check is not active.
[1]	Enabled	Motor Rotation Check is enabled. Once enabled, display shows: "Please Note! Motor may run in wrong direction".

Pressing [OK], [Back] or [Cancel] will dismiss the message and display a new message: "Press [Hand on] to start the motor. Press [Cancel] to abort". Pressing [Hand on] starts the motor at 5 Hz in forward direction and the display shows: "Motor is running. Check if motor rotation direction is correct. Press [Off] to stop the motor". Pressing [Off] stops the motor and resets par.1-28 *Motor Rotation Check*. If motor rotation direction is incorrect, two motor phase cables should be interchanged. IMPORTANT:

Line power must be removed before disconnecting motor phase cables.

3-41 Ramp 1 Ramp-up Time

Range:		Function:
10.00 s*	[1.00 - 3600.00 s]	Enter the ramp-up time, i.e., the acceleration time from 0 RPM to par.1-25 *Motor Nominal Speed*. Choose a ramp-up time such that the output current does not exceed the current limit in par. 4-18 *Current Limit* during ramping. See ramp-down time in par.3-42 *Ramp 1 Ramp-down Time*. $par.3-41 = \frac{tacc \times nnorm\,[par.1-25]}{ref\,[rpm]}[s]$

3-42 Ramp 1 Ramp-down Time

Range:		Function:
20.00 s*	[1.00 - 3600.00 s]	Enter the ramp-down time, i.e., the deceleration time from par.1-25 *Motor Nominal Speed* to 0 RPM. Choose a ramp-down time such that no overvoltage arises in the inverter due to regenerative operation of the motor, and such that the generated current does not exceed the current limit set in par. 4-18 *Current Limit*. See ramp-up time in par.3-41 *Ramp 1 Ramp-up Time*. $par.3-42 = \frac{tdec \times nnorm\,[par.1-25]}{ref\,[rpm]}[s]$

4-11 Motor Speed Low Limit [RPM]

Range:		Function:
0 RPM*	[0 - par. 4-13 RPM]	Enter the minimum limit for motor speed. The Motor Speed Low Limit can be set to correspond to the manufacturer's recommended minimum motor speed. The Motor Speed Low Limit must not exceed the setting in par.4-13 *Motor Speed High Limit [RPM]*.

4-12 Motor Speed Low Limit [Hz]

Range:		Function:
0 Hz*	[0 - par. 4-14 Hz]	Enter the minimum limit for motor speed. The motor speed low limit can be set to correspond to the minimum output frequency of the motor shaft. The Speed Low Limit must not exceed the setting in par.4-14 *Motor Speed High Limit [Hz]*.

4-13 Motor Speed High Limit [RPM]

Range:		Function:
1500. RPM*	[par. 4-11 - 60000. RPM]	Enter the maximum limit for motor speed. The Motor Speed High Limit can be set to correspond to the manufacturer's maximum rated motor. The Motor Speed High Limit must exceed the setting in par.4-11 *Motor Speed Low Limit [RPM]*. Only par.4-11 *Motor Speed Low Limit [RPM]* or par. 4-12 *Motor Speed Low Limit [Hz]* will be displayed, depending on other parameters in the main menu, and depending on default settings dependant on global location.



NOTE!
The output frequency value of the adjustable frequency drive must not exceed a value higher than 1/10 of the switching frequency.



NOTE!
Any changes in par.4-13 *Motor Speed High Limit [RPM]* will reset the value in par.4-53 *Warning Speed High* to the same value as set in par.4-13 *Motor Speed High Limit [RPM]*.

4-14 Motor Speed High Limit [Hz]

Range:		Function:
50/60.0 Hz*	[par. 4-12 - par. 4-19 Hz]	Enter the maximum limit for motor speed. The Motor Speed High Limit can be set to correspond to the manufacturer's recommended maximum of the motor shaft. The Motor Speed High Limit must exceed the in par.4-12 *Motor Speed Low Limit [Hz]*. Only par.4-11 *Motor Speed Low Limit [RPM]* or par.4-12 *Motor Speed Low Limit [Hz]* will be displayed, depending on other parameters in the main menu, and depending on default settings dependant on global location.



NOTE!
Max. output frequency cannot exceed 10% of the inverter switching frequency (par.14-01 *Switching Frequency*).

3-11 Jog Speed [Hz]

Range:		Function:
10.0 Hz*	[0.0 - par. 4-14 Hz]	The jog speed is a fixed output speed at which the adjustable frequency drive is running when the jog function is activated. See also par. 3-80 *Jog Ramp Time*.

5-12 Terminal 27 Digital Input

Option:		Function:
[0] *	No operation	Same options and functions as par. 5-1*, except for *Pulse input*.

5-40 Function Relay

Array [8]
(Relay 1 [0], Relay 2 [1]
Option MCB 105: Relay 7 [6], Relay 8 [7] and Relay 9 [8])

Option:		Function:
[0] *	No operation	Select options to define the function of the relays. The selection of each mechanical relay is realized in an array parameter.
[1]	Control ready	
[2]	Drive ready	
[3]	Drive rdy/rem ctrl	
[4]	Stand-by / no warning	
[5]	Running	
[6]	Running / no warning	
[8]	Run on ref/no warn	
[9]	Alarm	
[10]	Alarm or warning	
[11]	At torque limit	
[12]	Out of current range	
[13]	Below current, low	
[14]	Above current, high	
[15]	Out of speed range	
[16]	Below speed, low	
[17]	Above speed, high	
[18]	Out of feedb. range	
[19]	Below feedback, low	
[20]	Above feedback, high	
[21]	Thermal warning	
[25]	Reverse	
[26]	Bus OK	
[27]	Torque limit stop	
[28]	Brake: No Brake War	
[29]	Brake ready, no fault	
[30]	Brake fault (IGBT)	
[35]	External Interlock	
[36]	Control word bit 11	
[37]	Control word bit 12	
[40]	Out of ref range	
[41]	Below reference, low	
[42]	Above ref, high	
[45]	Bus ctrl.	
[46]	Bus ctrl, 1 if timeout	
[47]	Bus ctrl, 0 if timeout	
[60]	Comparator 0	
[61]	Comparator 1	

[62]	Comparator 2
[63]	Comparator 3
[64]	Comparator 4
[65]	Comparator 5
[70]	Logic rule 0
[71]	Logic rule 1
[72]	Logic rule 2
[73]	Logic rule 3
[74]	Logic rule 4
[75]	Logic rule 5
[80]	SL digital output A
[81]	SL digital output B
[82]	SL digital output C
[83]	SL digital output D
[84]	SL digital output E
[85]	SL digital output F
[160]	No alarm
[161]	Running reverse
[165]	Local ref active
[166]	Remote ref active
[167]	Start cmd. active
[168]	Hand mode
[169]	Auto mode
[180]	Clock Fault
[181]	Prev. Maintenance
[190]	No-Flow
[191]	Dry Pump
[192]	End Of Curve
[193]	Sleep Mode
[194]	Broken Belt
[195]	Bypass Valve Control
[196]	Fire Mode Active
[197]	Fire Mode Was Active
[198]	Bypass Mode Active
[211]	Cascade Pump 1
[212]	Cascade Pump 2
[213]	Cascade Pump 3

6.1.3 Function Set-ups

The Function set-up provides quick and easy access to all parameters required for the majority of VLT HVAC Drive applications including most VAV and CAV supply and return fans, cooling tower fans, primary, secondary and condenser water pumps and other pump, fan and compressor applications.

How to access Function set-up - example

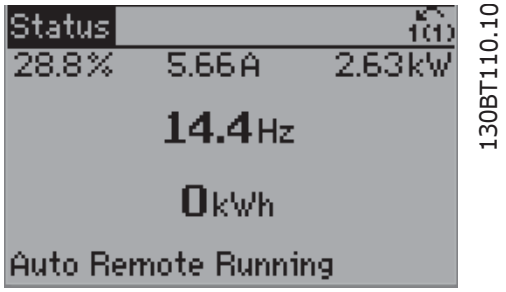

Figure 6.2: Step 1: Turn on the adjustable frequency drive (yellow LED lights)



Figure 6.3: Step 2: Press the [Quick Menus] button (quick menu choices appear).

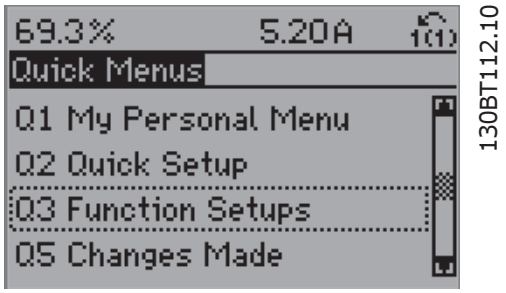

Figure 6.4: Step 3: Use the up/down navigation keys to scroll down to Function set-ups. Press [OK].

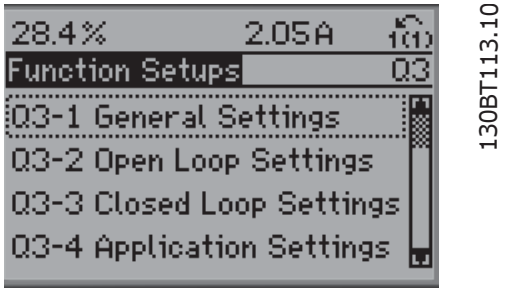

Figure 6.5: Step 4: Function set-ups choices appear. Choose 03-1 *General Settings*. Press [OK].

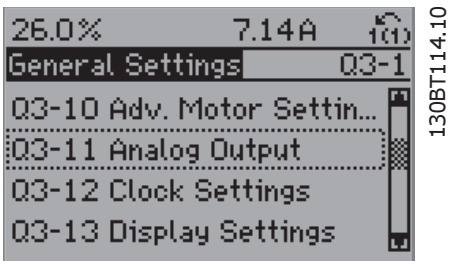

Figure 6.6: Step 5: Use the up/down navigation keys to scroll down to , e.g., 03-11 *Analog Outputs*. Press [OK].

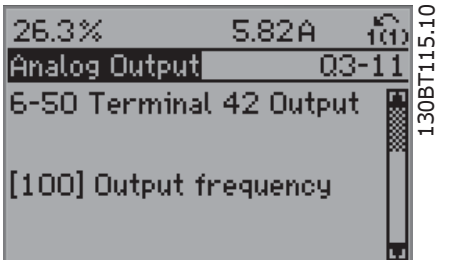

Figure 6.7: Step 6: Choose par. 6-50. Press [OK].

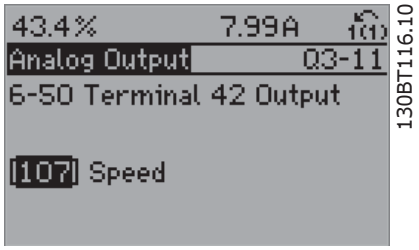

Figure 6.8: Step 7: Use the up/down navigation keys to navigate between the different choices. Press [OK].

Function Set-ups parameters

The Function Set-ups parameters are grouped in the following way:

Q3-1 General Settings			
Q3-10 Adv. Motor Settings	Q3-11 Analog Output	Q3-12 Clock Settings	Q3-13 Display Settings
par.1-90 *Motor Thermal Protection*	par.6-50 *Terminal 42 Output*	par.0-70 *Set Date and Time*	par.0-20 *Display Line 1.1 Small*
par.1-93 *Thermistor Source*	par.6-51 *Terminal 42 Output Min Scale*	par.0-71 *Date Format*	par.0-21 *Display Line 1.2 Small*
par.1-29 *Automatic Motor Adaptation (AMA)*	par.6-52 *Terminal 42 Output Max Scale*	par.0-72 *Time Format*	par. 0-22 *Display Line 1.3 Small*
par.14-01 *Switching Frequency*		par.0-74 *DST/Summertime*	par. 0-23 *Display Line 2 Large*
par.4-53 *Warning Speed High*		par.0-76 *DST/Summertime Start*	par. 0-24 *Display Line 3 Large*
		par.0-77 *DST/Summertime End*	par.0-37 *Display Text 1*
			par.0-38 *Display Text 2*
			par.0-39 *Display Text 3*

Q3-2 Open-loop Settings	
Q3-20 Digital Reference	Q3-21 Analog Reference
par.3-02 *Minimum Reference*	par.3-02 *Minimum Reference*
par.3-03 *Maximum Reference*	par.3-03 *Maximum Reference*
par.3-10 *Preset Reference*	par.6-10 *Terminal 53 Low Voltage*
par. 5-13 *Terminal 29 Digital Input*	par.6-11 *Terminal 53 High Voltage*
par.5-14 *Terminal 32 Digital Input*	par. 6-12 *Terminal 53 Low Current*
par. 5-15 *Terminal 33 Digital Input*	par. 6-13 *Terminal 53 High Current*
	par.6-14 *Terminal 53 Low Ref./Feedb. Value*
	par.6-15 *Terminal 53 High Ref./Feedb. Value*

Q3-3 Closed-loop Settings		
Q3-30 Single Zone Int. Setpoint	Q3-31 Single Zone Ext. Setpoint	Q3-32 Multi Zone / Adv
par.1-00 *Configuration Mode*	par.1-00 *Configuration Mode*	par.1-00 *Configuration Mode*
par. 20-12 *Reference/Feedback Unit*	par. 20-12 *Reference/Feedback Unit*	par.3-15 *Reference 1 Source*
par. 20-13 *Minimum Reference/Feedb.*	par. 20-13 *Minimum Reference/Feedb.*	par.3-16 *Reference 2 Source*
par. 20-14 *Maximum Reference/Feedb.*	par. 20-14 *Maximum Reference/Feedb.*	par.20-00 *Feedback 1 Source*
par. 6-22 *Terminal 54 Low Current*	par.6-10 *Terminal 53 Low Voltage*	par.20-01 *Feedback 1 Conversion*
par.6-24 *Terminal 54 Low Ref./Feedb. Value*	par.6-11 *Terminal 53 High Voltage*	par. 20-02 *Feedback 1 Source Unit*
par.6-25 *Terminal 54 High Ref./Feedb. Value*	par. 6-12 *Terminal 53 Low Current*	par.20-03 *Feedback 2 Source*
par.6-26 *Terminal 54 Filter Time Constant*	par. 6-13 *Terminal 53 High Current*	par.20-04 *Feedback 2 Conversion*
par.6-27 *Terminal 54 Live Zero*	par.6-14 *Terminal 53 Low Ref./Feedb. Value*	par. 20-05 *Feedback 2 Source Unit*
par.6-00 *Live Zero Timeout Time*	par.6-15 *Terminal 53 High Ref./Feedb. Value*	par.20-06 *Feedback 3 Source*
par.6-01 *Live Zero Timeout Function*	par. 6-22 *Terminal 54 Low Current*	par.20-07 *Feedback 3 Conversion*
par.20-21 *Setpoint 1*	par.6-24 *Terminal 54 Low Ref./Feedb. Value*	par. 20-08 *Feedback 3 Source Unit*
par.20-81 *PID Normal/ Inverse Control*	par.6-25 *Terminal 54 High Ref./Feedb. Value*	par. 20-12 *Reference/Feedback Unit*
par. 20-82 *PID Start Speed [RPM]*	par.6-26 *Terminal 54 Filter Time Constant*	par. 20-13 *Minimum Reference/Feedb.*
par. 20-83 *PID Start Speed [Hz]*	par.6-27 *Terminal 54 Live Zero*	par. 20-14 *Maximum Reference/Feedb.*
par.20-93 *PID Proportional Gain*	par.6-00 *Live Zero Timeout Time*	par.6-10 *Terminal 53 Low Voltage*
par.20-94 *PID Integral Time*	par.6-01 *Live Zero Timeout Function*	par.6-11 *Terminal 53 High Voltage*
par. 20-70 *Closed-loop Type*	par.20-81 *PID Normal/ Inverse Control*	par. 6-12 *Terminal 53 Low Current*
par. 20-71 *Tuning Mode*	par. 20-82 *PID Start Speed [RPM]*	par. 6-13 *Terminal 53 High Current*
par. 20-72 *PID Output Change*	par. 20-83 *PID Start Speed [Hz]*	par.6-14 *Terminal 53 Low Ref./Feedb. Value*
par. 20-73 *Minimum Feedback Level*	par.20-93 *PID Proportional Gain*	par.6-15 *Terminal 53 High Ref./Feedb. Value*
par. 20-74 *Maximum Feedback Level*	par.20-94 *PID Integral Time*	par.6-16 *Terminal 53 Filter Time Constant*
par. 20-79 *PID Auto Tuning*	par. 20-70 *Closed-loop Type*	par.6-17 *Terminal 53 Live Zero*
	par. 20-71 *Tuning Mode*	par.6-20 *Terminal 54 Low Voltage*
	par. 20-72 *PID Output Change*	par.6-21 *Terminal 54 High Voltage*
	par. 20-73 *Minimum Feedback Level*	par. 6-22 *Terminal 54 Low Current*
	par. 20-74 *Maximum Feedback Level*	par. 6-23 *Terminal 54 High Current*
	par. 20-79 *PID Auto Tuning*	par.6-24 *Terminal 54 Low Ref./Feedb. Value*
		par.6-25 *Terminal 54 High Ref./Feedb. Value*
		par.6-26 *Terminal 54 Filter Time Constant*
		par.6-27 *Terminal 54 Live Zero*
		par.6-00 *Live Zero Timeout Time*
		par.6-01 *Live Zero Timeout Function*
		par.4-56 *Warning Feedback Low*
		par.4-57 *Warning Feedback High*
		par.20-20 *Feedback Function*
		par.20-21 *Setpoint 1*
		par.20-22 *Setpoint 2*
		par.20-81 *PID Normal/ Inverse Control*
		par. 20-82 *PID Start Speed [RPM]*
		par. 20-83 *PID Start Speed [Hz]*
		par.20-93 *PID Proportional Gain*
		par.20-94 *PID Integral Time*

		par. 20-70 *Closed-loop Type*
		par. 20-71 *Tuning Mode*
		par. 20-72 *PID Output Change*
		par. 20-73 *Minimum Feedback Level*
		par. 20-74 *Maximum Feedback Level*
		par. 20-79 *PID Auto Tuning*

Q3-4 Application Settings

Q3-40 Fan Functions	Q3-41 Pump Functions	Q3-42 Compressor Functions
par.22-60 *Broken Belt Function*	par. 22-20 *Low Power Auto Set-up*	par.1-03 *Torque Characteristics*
par.22-61 *Broken Belt Torque*	par.22-21 *Low Power Detection*	par.1-71 *Start Delay*
par.22-62 *Broken Belt Delay*	par.22-22 *Low Speed Detection*	par.22-75 *Short Cycle Protection*
par.4-64 *Semi-Auto Bypass Set-up*	par.22-23 *No-Flow Function*	par.22-76 *Interval between Starts*
par.1-03 *Torque Characteristics*	par.22-24 *No-Flow Delay*	par.22-77 *Minimum Run Time*
par.22-22 *Low Speed Detection*	par.22-40 *Minimum Run Time*	par.5-01 *Terminal 27 Mode*
par.22-23 *No-Flow Function*	par.22-41 *Minimum Sleep Time*	par.5-02 *Terminal 29 Mode*
par.22-24 *No-Flow Delay*	par.22-42 *Wake-up Speed [RPM]*	par. 5-12 *Terminal 27 Digital Input*
par.22-40 *Minimum Run Time*	par. 22-43 *Wake-up Speed [Hz]*	par. 5-13 *Terminal 29 Digital Input*
par.22-41 *Minimum Sleep Time*	par. 22-44 *Wake-up Ref./FB Difference*	par.5-40 *Function Relay*
par.22-42 *Wake-up Speed [RPM]*	par. 22-45 *Setpoint Boost*	par.1-73 *Flying Start*
par. 22-43 *Wake-up Speed [Hz]*	par. 22-46 *Maximum Boost Time*	par. 1-86 *Trip Speed Low [RPM]*
par. 22-44 *Wake-up Ref./FB Difference*	par.22-26 *Dry Pump Function*	par. 1-87 *Trip Speed Low [Hz]*
par. 22-45 *Setpoint Boost*	par. 22-27 *Dry Pump Delay*	
par. 22-46 *Maximum Boost Time*	par. 22-80 *Flow Compensation*	
par.2-10 *Brake Function*	par. 22-81 *Square-linear Curve Approximation*	
par. 2-16 *AC Brake Max. Current*	par. 22-82 *Work Point Calculation*	
par.2-17 *Over-voltage Control*	par. 22-83 *Speed at No-Flow [RPM]*	
par.1-73 *Flying Start*	par. 22-84 *Speed at No-Flow [Hz]*	
par.1-71 *Start Delay*	par. 22-85 *Speed at Design Point [RPM]*	
par.1-80 *Function at Stop*	par. 22-86 *Speed at Design Point [Hz]*	
par.2-00 *DC Hold/Preheat Current*	par. 22-87 *Pressure at No-Flow Speed*	
par.4-10 *Motor Speed Direction*	par. 22-88 *Pressure at Rated Speed*	
	par. 22-89 *Flow at Design Point*	
	par. 22-90 *Flow at Rated Speed*	
	par.1-03 *Torque Characteristics*	
	par.1-73 *Flying Start*	

See also *VLT HVAC Drive Programming Guide* for a detailed description of the Function Set-ups parameter groups.

0-20 Display Line 1.1 Small

Option:		Function:
		Select a variable for display in line 1, left position.
[0] *	None	No display value selected
[37]	Display Text 1	Enables an individual text string to be written, for display in the LCP or to be read via serial communication.
[38]	Display Text 2	Enables an individual text string to be written, for display in the LCP or to be read via serial communication.
[39]	Display Text 3	Enables an individual text string to be written, for display in the LCP or to be read via serial communication.
[89]	Date and Time Readout	Displays the current date and time.
[953]	Profibus Warning Word	Displays Profibus communication warnings.
[1005]	Readout Transmit Error Counter	View the number of CAN control transmission errors since the last power-up.
[1006]	Readout Receive Error Counter	View the number of CAN control receipt errors since the last power-up.
[1007]	Readout Bus Off Counter	View the number of bus-off events since the last power-up.
[1013]	Warning Parameter	View a DeviceNet-specific warning word. One separate bit is assigned to every warning.
[1115]	LON Warning Word	Shows the LON-specific warnings.

[1117]	XIF Revision	Shows the version of the external interface file of the Neuron C chip on the LON option.
[1118]	LonWorks Revision	
[1501]	Running Hours	View the number of running hours of the motor.
[1502]	kWh Counter	View the line power consumption in kWh.
[1600]	Control Word	View the control word sent from the adjustable frequency drive via the serial communication port in hex code.
[1601]	Reference [Unit]	Total reference (sum of digital/analog/preset/bus/freeze ref./catch up and slow-down) in selected unit.
[1602] *	Reference %	Total reference (sum of digital/analog/preset/bus/freeze ref./catch up and slow-down) in percent.
[1603]	Status Word	Present status word
[1605]	Main Actual Value [%]	View the two-byte word sent with the status word to the bus master reporting the main actual value.
[1609]	Custom Readout	View the user-defined readouts as defined in par. 0-30 *Custom Readout Unit*, par. 0-31 *Custom Readout Min Value* and par. 0-32 *Custom Readout Max Value*.
[1610]	Power [kW]	Actual power consumed by the motor in kW.
[1611]	Power [hp]	Actual power consumed by the motor in HP.
[1612]	Motor voltage	Voltage supplied to the motor.
[1613]	Frequency	
[1614]	Motor Current	Phase current of the motor measured as effective value.
[1615]	Frequency [%]	Motor frequency, i.e., the output frequency from the adjustable frequency drive in percent.
[1616]	Torque [Nm]	Present motor load as a percentage of the rated motor torque.
[1617]	Speed [RPM]	Motor speed reference. Actual speed will depend on slip compensation being used (compensation set in par. 1-62 *Slip Compensation*). If not used, actual speed will be the value read in the display minus motor slip.
[1618]	Motor Thermal	Thermal load on the motor, calculated by the ETR function. See also parameter group 1-9* Motor Temperature.
[1622]	Torque [%]	Shows the actual torque produced, in percentage.
[1626]		
[1627]		
[1630]	DC Link Voltage	Intermediate circuit voltage in the adjustable frequency drive.
[1632]	Brake Energy /s	
[1633]	Brake Energy /2 min	
[1634]	Heatsink Temp.	Present heatsink temperature of the adjustable frequency drive. The cut-out limit is 203° ± 9°F [95° ± 5° C]; cutting back in occurs at 158° ± 9°F [70° ± 5°C].
[1635]	Inverter Thermal	
[1636]	Inv. Nom. Current	Nominal current of the adjustable frequency drive
[1637]	Inv. Max. Current	Maximum current of the adjustable frequency drive
[1638]	SL Controller State	
[1639]	Control Card Temp.	Temperature of the control card.
[1650]	External Reference	Sum of the external reference as a percentage, i.e., the sum of analog/pulse/bus.

[1652]	Feedback [Unit]	Reference value from programmed digital input(s).
[1653]	Digi Pot Reference	View the contribution of the digital potentiometer to the actual reference Feedback.
[1654]	Feedback 1 [Unit]	View the value of Feedback 1. See also par. 20-0*.
[1655]	Feedback 2 [Unit]	View the value of Feedback 2. See also par. 20-0*.
[1656]	Feedback 3 [Unit]	View the value of Feedback 3. See also par. 20-0*.
[1658]	PID Output [%]	Returns the drive closed loop PID controller output value in percent.
[1660]	Digital Input	Displays the status of the digital inputs. Signal low = 0; Signal high = 1. Regarding order, see par. 16-60 *Digital Input*. Bit 0 is at the extreme right.
[1661]	Terminal 53 Switch Setting	Setting of input terminal 53. Current = 0; Voltage = 1.
[1662]	Analog Input 53	Actual value at input 53 either as a reference or protection value.
[1663]	Terminal 54 Switch Setting	Setting of input terminal 54. Current = 0; Voltage = 1.
[1664]	Analog Input 54	Actual value at input 54 either as reference or protection value.
[1665]	Analog Output 42 [mA]	Actual value at output 42 in mA. Use par.6-50 *Terminal 42 Output* to select the variable to be represented by output 42.
[1666]	Digital Output [bin]	Binary value of all digital outputs.
[1667]	Pulse Input #29 [Hz]	
[1668]	Pulse Input #33 [Hz]	
[1669]	Pulse Output #27 [Hz]	Actual value of pulses applied to terminal 27 in digital output mode.
[1670]	Pulse Output #29 [Hz]	Actual value of pulses applied to terminal 29 in digital output mode.
[1671]	Relay Output [bin]	View the setting of all relays.
[1672]	Counter A	View the present value of Counter A.
[1673]	Counter B	View the present value of Counter B.
[1675]	Analog In X30/11	
[1676]	Analog In X30/12	
[1677]	Analog Out X30/8 [mA]	
[1680]	Fieldbus CTW 1	Control word (CTW) received from the bus master.
[1682]	Fieldbus REF 1	Main reference value sent with control word via the serial communications network, e.g., from the BMS, PLC or other master controller.
[1684]	Comm. Option Status	Extended serial communication bus option status word.
[1685]	FC Port CTW 1	Control word (CTW) received from the bus master.
[1686]	FC Port REF 1	Status word (STW) sent to the bus master.
[1690]	Alarm Word	One or more alarms in a Hex code (used for serial communications)
[1691]	Alarm word 2	One or more alarms in a Hex code (used for serial communications)
[1692]	Warning Word	One or more warnings in a Hex code (used for serial communications)
[1693]	Warning word 2	One or more warnings in a Hex code (used for serial communications)
[1694]	Ext. Status Word	One or more status conditions in a Hex code (used for serial communications)
[1695]	Ext. Status Word 2	One or more status conditions in a Hex code (used for serial communications)

[1696]	Maintenance Word	The bits reflect the status for the programmed preventive maintenance events in parameter group 23-1*
[1830]	Analog Input X42/1	Shows the value of the signal applied to terminal X42/1 on the Analog I/O card.
[1831]	Analog Input X42/3	Shows the value of the signal applied to terminal X42/3 on the Analog I/O card.
[1832]	Analog Input X42/5	Shows the value of the signal applied to terminal X42/5 on the Analog I/O card.
[1833]	Analog Out X42/7 [V]	Shows the value of the signal applied to terminal X42/7 on the Analog I/O card.
[1834]	Analog Out X42/9 [V]	Shows the value of the signal applied to terminal X42/9 on the Analog I/O card.
[1835]	Analog Out X42/11 [V]	Shows the value of the signal applied to terminal X42/11 on the Analog I/O card.
[1850]		
[2117]	Ext. 1 Reference [Unit]	The value of the reference for extended Closed-loop Controller 1
[2118]	Ext. 1 Feedback [Unit]	The value of the feedback signal for extended Closed-loop Controller 1
[2119]	Ext. 1 Output [%]	The value of the output from extended Closed-loop Controller 1
[2137]	Ext. 2 Reference [Unit]	The value of the reference for extended Closed-loop Controller 2
[2138]	Ext. 2 Feedback [Unit]	The value of the feedback signal for extended Closed-loop Controller 2
[2139]	Ext. 2 Output [%]	The value of the output from extended Closed-loop Controller 2
[2157]	Ext. 3 Reference [Unit]	The value of the reference for extended Closed-loop Controller 3
[2158]	Ext. 3 Feedback [Unit]	The value of the feedback signal for extended Closed-loop Controller 3
[2159]	Ext. 3 Output [%]	The value of the output from extended Closed-loop Controller 3
[2230]	No-Flow Power	The calculated No-Flow Power for the actual operating speed
[2316]	Maintenance Text	
[2580]	Cascade Status	Status for the operation of the cascade controller
[2581]	Pump Status	Status for the operation of each individual pump controlled by the cascade controller
[3110]	Bypass Status Word	
[3111]	Bypass Running Hours	
[9913]	Idle time	
[9914]	Paramdb requests in queue	
[9920]	HS Temp. (PC1)	
[9921]	HS Temp. (PC2)	
[9922]	HS Temp. (PC3	
[9923]	HS Temp. (PC4)	
[9924]	HS Temp. (PC5)	
[9925]	HS Temp. (PC6)	
[9926]	HS Temp. (PC7)	
[9927]	HS Temp. (PC8)	



NOTE!

Consult the *VLT HVAC Drive Programming Guide, MG.11.CX.YY* for detailed information.

0-21 Display Line 1.2 Small		
Option:		Function:
		Select a variable for display in line 1, middle position.
[0]	None	
[37]	Display Text 1	
[38]	Display Text 2	
[39]	Display Text 3	
[89]	Date and Time Readout	
[953]	Profibus Warning Word	
[1005]	Readout Transmit Error Counter	
[1006]	Readout Receive Error Counter	
[1007]	Readout Bus Off Counter	
[1013]	Warning Parameter	
[1115]	LON Warning Word	
[1117]	XIF Revision	
[1118]	LonWorks Revision	
[1501]	Running Hours	
[1502]	kWh Counter	
[1600]	Control Word	
[1601]	Reference [Unit]	
[1602]	Reference %	
[1603]	Status Word	
[1605]	Main Actual Value [%]	
[1609]	Custom Readout	
[1610]	Power [kW]	
[1611]	Power [hp]	
[1612]	Motor voltage	
[1613]	Frequency	
[1614] *	Motor Current	
[1615]	Frequency [%]	
[1616]	Torque [Nm]	
[1617]	Speed [RPM]	
[1618]	Motor Thermal	
[1622]	Torque [%]	
[1626]		
[1627]		
[1630]	DC Link Voltage	
[1632]	Brake Energy /s	
[1633]	Brake Energy /2 min	
[1634]	Heatsink Temp.	
[1635]	Inverter Thermal	
[1636]	Inv. Nom. Current	
[1637]	Inv. Max. Current	

[1638]	SL Controller State
[1639]	Control Card Temp.
[1650]	External Reference
[1652]	Feedback [Unit]
[1653]	Digi Pot Reference
[1654]	Feedback 1 [Unit]
[1655]	Feedback 2 [Unit]
[1656]	Feedback 3 [Unit]
[1658]	PID Output [%]
[1660]	Digital Input
[1661]	Terminal 53 Switch Setting
[1662]	Analog Input 53
[1663]	Terminal 54 Switch Setting
[1664]	Analog Input 54
[1665]	Analog Output 42 [mA]
[1666]	Digital Output [bin]
[1667]	Pulse Input #29 [Hz]
[1668]	Pulse Input #33 [Hz]
[1669]	Pulse Output #27 [Hz]
[1670]	Pulse Output #29 [Hz]
[1671]	Relay Output [bin]
[1672]	Counter A
[1673]	Counter B
[1675]	Analog In X30/11
[1676]	Analog In X30/12
[1677]	Analog Out X30/8 [mA]
[1680]	Fieldbus CTW 1
[1682]	Fieldbus REF 1
[1684]	Comm. Option Status
[1685]	FC Port CTW 1
[1686]	FC Port REF 1
[1690]	Alarm Word
[1691]	Alarm word 2
[1692]	Warning Word
[1693]	Warning word 2
[1694]	Ext. Status Word
[1695]	Ext. Status Word 2
[1696]	Maintenance Word
[1830]	Analog Input X42/1
[1831]	Analog Input X42/3
[1832]	Analog Input X42/5
[1833]	Analog Out X42/7 [V]
[1834]	Analog Out X42/9 [V]

MG.11.A9.22 - VLT® is a registered Danfoss trademark

[1835]	Analog Out X42/11 [V]
[1850]	
[2117]	Ext. 1 Reference [Unit]
[2118]	Ext. 1 Feedback [Unit]
[2119]	Ext. 1 Output [%]
[2137]	Ext. 2 Reference [Unit]
[2138]	Ext. 2 Feedback [Unit]
[2139]	Ext. 2 Output [%]
[2157]	Ext. 3 Reference [Unit]
[2158]	Ext. 3 Feedback [Unit]
[2159]	Ext. 3 Output [%]
[2230]	No-Flow Power
[2316]	Maintenance Text
[2580]	Cascade Status
[2581]	Pump Status
[3110]	Bypass Status Word
[3111]	Bypass Running Hours
[9913]	Idle time
[9914]	Paramdb requests in queue
[9920]	HS Temp. (PC1)
[9921]	HS Temp. (PC2)
[9922]	HS Temp. (PC3
[9923]	HS Temp. (PC4)
[9924]	HS Temp. (PC5)
[9925]	HS Temp. (PC6)
[9926]	HS Temp. (PC7)
[9927]	HS Temp. (PC8)

0-22 Display Line 1.3 Small

Option:		Function:
		Select a variable for display in line 1, right position.
[1610] *	Power [kW]	
		The options are the same as those listed for par. 0-20 *Display Line 1.1 Small*.

0-23 Display Line 2 Large

Option:		Function:
		Select a variable for display in line 2.
[1613] *	Frequency [Hz]	
		The options are the same as those listed for par. 0-20 *Display Line 1.1 Small*.

0-24 Display Line 3 Large

Option:		Function:
[1602] *	Reference %	Select a variable for display in line 3. The options are the same as listed for par. 0-20.

0-37 Display Text 1

Range:		Function:
0 N/A*	[0 - 0 N/A]	In this parameter, it is possible to write an individual text string for display in the LCP or to be read via serial communication. If it is to be displayed permanently, select Display Text 1 in par. 0-20 *Display Line 1.1 Small*, par.0-21 *Display Line 1.2 Small*, par. 0-22 *Display Line 1.3 Small*, par. 0-23 *Display Line 2 Large* or par. 0-24 *Display Line 3 Large*. Use the ▲ or ▼ buttons on the LCP to change a character. Use the ◄ and ► buttons to move the cursor. When a character is highlighted by the cursor, it can be changed. Use the ▲ or ▼ buttons on the LCP to change a character. A character can be inserted by placing the cursor between two characters and pressing ▲ or ▼.

0-38 Display Text 2

Range:		Function:
0 N/A*	[0 - 0 N/A]	In this parameter, it is possible to write an individual text string for display in the LCP or to be read via serial communication. If it is to be displayed permanently, select Display Text 2 in par. 0-20 *Display Line 1.1 Small*, par.0-21 *Display Line 1.2 Small*, par. 0-22 *Display Line 1.3 Small*, par. 0-23 *Display Line 2 Large* or par. 0-24 *Display Line 3 Large*. Use the ▲ or ▼ buttons on the LCP to change a character. Use the ◄ and ► buttons to move the cursor. When a character is highlighted by the cursor, this character can be changed. A character can be inserted by placing the cursor between two characters and pressing ▲ or ▼.

0-39 Display Text 3

Range:		Function:
0 N/A*	[0 - 0 N/A]	In this parameter, it is possible to write an individual text string for display in the LCP or to be read via serial communication. If it is to be displayed permanently, select Display Text 3 in par. 0-20 *Display Line 1.1 Small*,par.0-21 *Display Line 1.2 Small*, par. 0-22 *Display Line 1.3 Small*, par. 0-23 *Display Line 2 Large* or par. 0-24 *Display Line 3 Large*. Use the ▲ or ▼ buttons on the LCP to change a character. Use the ◄ and ► buttons to move the cursor. When a character is highlighted by the cursor, this character can be changed. A character can be inserted by placing the cursor between two characters and pressing ▲ or ▼.

0-70 Set Date and Time

Range:		Function:
0 N/A*	[0 - 0 N/A]	Sets the date and time of the internal clock. The format to be used is set in par.0-71 *Date Format* and par.0-72 *Time Format*.

0-71 Date Format

Option:		Function:
		Sets the date format to be used in the LCP.
[0] *	YYYY-MM-DD	
[1] *	DD-MM-YYYY	
[2]	MM/DD/YYYY	

0-72 Time Format

Option:		Function:
		Sets the time format to be used in the LCP.
[0] *	24 h	
[1]	12 h	

0-74 DST/ Summertime

Option:		Function:
		Choose how Daylight Saving Time/Summertime should be handled. For manual DST/Summertime enter the start date and end date in par.0-76 *DST/Summertime Start* and par.0-77 *DST/Summertime End*.
[0] *	OFF	
[2]	Manual	

0-76 DST/ Summertime Start

Range:		Function:
0 N/A*	[0 - 0 N/A]	Sets the date and time when summertime/DST starts. The date is programmed in the format selected in par.0-71 *Date Format*.

0-77 DST/ Summertime End

Range:		Function:
0 N/A*	[0 - 0 N/A]	Sets the date and time when summertime/DST ends. The date is programmed in the format selected in par.0-71 *Date Format*.

1-00 Configuration Mode

Option:		Function:
[0] *	Open-loop	Motor speed is determined by applying a speed reference or by setting desired speed when in hand mode. Open-loop is also used if the adjustable frequency drive is part of a closed-loop control system based on an external PID controller providing a speed reference signal as output.
[3]	Closed-loop	Motor speed will be determined by a reference from the built-in PID controller varying the motor speed as part of a closed-loop control process (e.g., constant pressure or flow). The PID controller must be configured in par. 20-** or via the function set-ups accessed by pressing the [Quick Menu] button.



NOTE!
This parameter cannot be changed when the motor is running.



NOTE!
When set for closed-loop, the commands reversing and start reversing will not reverse the direction of the motor.

1-03 Torque Characteristics		
Option:		Function:
[0]	Compressor torque	*Compressor* [0]: For speed control of screw and scroll compressors. Provides a voltage which is optimized for a constant torque load characteristic of the motor in the entire range down to 10 Hz.
[1]	Variable torque	*Variable Torque* [1]: For speed control of centrifugal pumps and fans. Also to be used when controlling more than one motor from the same adjustable frequency drive (e.g., multiple condenser fans or cooling tower fans). Provides a voltage which is optimized for a squared torque load characteristic of the motor.
[2]	Auto Energy Optim. CT	*Auto Energy Optimization Compressor* [2]: For optimum energy efficient speed control of screw and scroll compressors. Provides a voltage which is optimized for a constant torque load characteristic of the motor in the entire range down to 15Hz, but in addition, the AEO feature will adapt the voltage exactly to the current load situation, thereby reducing energy consumption and audible noise from the motor. To obtain optimal performance, the motor power factor cos phi must be set correctly. This value is set in par. 14-43 *Motor Cos-Phi*. The parameter has a default value which is automatically adjusted when the motor data is programmed. These settings will typically ensure optimum motor voltage but if the motor power factor cos phi requires tuning, an AMA function can be carried out using par.1-29 *Automatic Motor Adaptation (AMA)*. It is very rarely necessary to adjust the motor power factor parameter manually.
[3] *	Auto Energy Optim. VT	*Auto Energy Optimization VT* [3]: For optimum energy efficient speed control of centrifugal pumps and fans. Provides a voltage which is optimized for a squared torque load characteristic of the motor but in addition the AEO feature will adapt the voltage exactly to the current load situation, thereby reducing energy consumption and audible noise from the motor. To obtain optimal performance, the motor power factor cos phi must be set correctly. This value is set in par. 14-43 *Motor Cos-Phi*. The parameter has a default value and is automatically adjusted when the motor data is programmed. These settings will typically ensure optimum motor voltage but if the motor power factor cos phi requires tuning, an AMA function can be carried out using par.1-29 *Automatic Motor Adaptation (AMA)*. It is very rarely necessary to adjust the motor power factor parameter manually.

1-29 Automatic Motor Adaptation (AMA)		
Option:		Function:
		The AMA function optimizes dynamic motor performance by automatically optimizing the advanced motor parameters par. 1-30 *Stator Resistance (Rs)* to par. 1-35 *Main Reactance (Xh)*) while the motor is stationary.
[0] *	Off	No function
[1]	Enable complete AMA	performs AMA of the stator resistance R_S, the rotor resistance R_r, the stator leakage reactance X_1, the rotor leakage reactance X_2 and the main reactance X_h.
[2]	Enable reduced AMA	performs a reduced AMA of the stator resistance R_s in the system only. Select this option if an LC filter is used between the adjustable frequency drive and the motor.

Activate the AMA function by pressing [Hand on] after selecting [1] or [2]. See also the section *Automatic Motor Adaptation*. After a normal sequence, the display will read: "Press [OK] to finish AMA". After pressing the [OK] key, the adjustable frequency drive is ready for operation.

Note:

- For the best adaptation of the adjustable frequency drive, run AMA on a cold motor
- AMA cannot be performed while the motor is running.



NOTE!
It is important to set motor par. 1-2* Motor Data correctly, since these form part of the AMA algorithm. An AMA must be performed to achieve optimum dynamic motor performance. It may take up to 10 min., depending on the motor power rating.



NOTE!
Avoid generating external torque during AMA



NOTE!
If one of the settings in par. 1-2* Motor Data is changed, par. 1-30 *Stator Resistance (Rs)* to par. 1-39 *Motor Poles*, the advanced motor parameters, will return to the default setting.
This parameter cannot be adjusted while the motor is running.



NOTE!
Full AMA should be run without filter only while reduced AMA should be run with filter.

See section *Automatic Motor Adaptation* - application example.

1-71 Start Delay

Range:		Function:
0.0 s*	[0.0 - 120.0 s]	The function selected in par.1-80 *Function at Stop* is active in the delay period. Enter the time delay required before commencing acceleration.

1-73 Flying Start

Option:		Function:
		This function makes it possible to catch a motor that is spinning freely due to a line drop-out. When par.1-73 *Flying Start* is enabled, par.1-71 *Start Delay* has no function. Search direction for flying start is linked to the setting in par.4-10 *Motor Speed Direction*. *Clockwise* [0]: Flying start search in clockwise direction. If not successful, a DC brake is carried out. *Both Directions* [2]: The flying start will first make a search in the direction determined by the last reference (direction). If unable to find the speed, it will search in the other direction. If not successful, a DC brake will be activated in the time set in par. 2-02 *DC Braking Time*. Start will then take place from 0 Hz.
[0] *	Disabled	Select *Disable* [0] if this function is not required
[1]	Enabled	Select *Enable* [1] to enable the adjustable frequency drive to "catch" and control a spinning motor.

1-80 Function at Stop

Option:		Function:
		Select the adjustable frequency drive function after a stop command or after the speed is ramped down to the settings in par. 1-81 *Min Speed for Function at Stop [RPM]*.
[0] *	Coast	Leaves motor in free mode.
[1]	DC Hold/Motor Preheat	Energizes motor with a DC holding current (see par.2-00 *DC Hold/Preheat Current*).

1-90 Motor Thermal Protection		
Option:		Function:
		The adjustable frequency drive determines the motor temperature for motor protection in two different ways: • Via a thermistor sensor connected to one of the analog or digital inputs (par.1-93 *Thermistor Source*). • Via calculation (ETR = Electronic Thermal Relay) of the thermal load, based on the actual load and time. The calculated thermal load is compared with the rated motor current $I_{M,N}$ and the rated motor frequency $f_{M,N}$. The calculations estimate the need for a lower load at lower speed due to less cooling from the fan incorporated in the motor.
[0]	No protection	If the motor is continuously overloaded and no warning or trip of adjustable frequency drive is wanted.
[1]	Thermistor warning	Activates a warning when the connected thermistor in the motor reacts in the event of motor overtemperature.
[2]	Thermistor trip	Stops (trips) the adjustable frequency drive when the connected thermistor in the motor reacts in the event of motor overtemperature.
[3]	ETR warning 1	
[4] *	ETR trip 1	
[5]	ETR warning 2	
[6]	ETR trip 2	
[7]	ETR warning 3	
[8]	ETR trip 3	
[9]	ETR warning 4	
[10]	ETR trip 4	

ETR (Electronic Thermal Relay) functions 1-4 will calculate the load when the set-up where they were selected is active. For example, ETR-3 starts calculating when Set-up 3 is selected. For the North American market: The ETR functions provide class 20 motor overload protection in accordance with NEC.

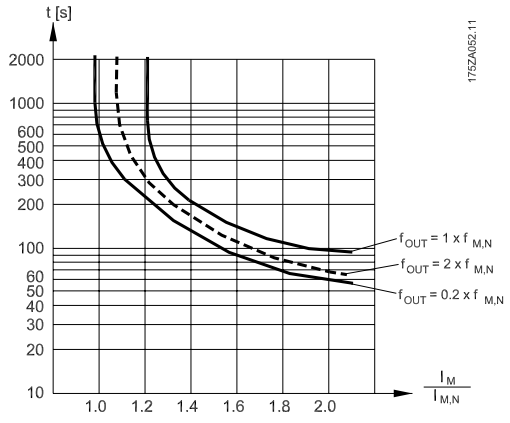



NOTE!
Danfoss recommends using 24 V DC as the thermistor supply voltage.

1-93 Thermistor Source

Option:		Function:
		Select the input to which the thermistor (PTC sensor) should be connected. An analog input option [1] or [2] cannot be selected if the analog input is already in use as a reference source (selected in par.3-15 *Reference 1 Source*, par.3-16 *Reference 2 Source* or par. 3-17 *Reference 3 Source*). When using MCB112, choice [0] *None* must always be selected.
[0] *	None	
[1]	Analog input 53	
[2]	Analog input 54	
[3]	Digital input 18	
[4]	Digital input 19	
[5]	Digital input 32	
[6]	Digital input 33	



NOTE!
This parameter cannot be adjusted while the motor is running.



NOTE!
Digital inputs should be set to "No operation" - see par. 5-1*.

2-00 DC Hold/ Preheat Current

Range:		Function:
50 %*	[0 - 160. %]	Enter a value for holding current as a percentage of the rated motor current $I_{M,N}$ set in par. 1-24 *Motor Current*. 100% DC holding current corresponds to $I_{M,N}$. This parameter holds the motor (holding torque) or pre-heats the motor. This parameter is active if [1] DC hold/Preheat is selected in par.1-80 *Function at Stop*.



NOTE!
The maximum value depends on the rated motor current.
NOTE!
Avoid 100% current for too long, as it may damage the motor. It may damage the motor.

2-10 Brake Function

Option:		Function:
[0] *	Off	No brake resistor installed.
[1]	Resistor brake	Brake resistor incorporated in the system, for dissipation of surplus braking energy as heat. Connecting a brake resistor allows a higher DC link voltage during braking (generating operation). The resistor brake function is only active in adjustable frequency drives with an integral dynamic brake.
[2]	AC brake	

2-17 Over-voltage Control

Option:		Function:
		Overvoltage control (OVC) reduces the risk of the adjustable frequency drive tripping due to overvoltage on the DC link caused by generative power from the load.
[0]	Disabled	No OVC required.
[2] *	Enabled	Activates OVC.



NOTE!
The ramp time is automatically adjusted to avoid tripping of the adjustable frequency drive.

3-02 Minimum Reference

Range:	Function:
0.000 Ref- [-999999.999 - par. 3-03 ReferenerenceFeed-ceFeedbackUnit] backUnit*	Enter the Minimum Reference. The minimum reference is the lowest value obtainable by summing all references. The minimum reference value and unit matches the configuration choice made in par.1-00 *Configuration Mode* and par. 20-12 *Reference/Feedback Unit*, respectively.



NOTE!
This parameter is used in open-loop only.

3-03 Maximum Reference

Range:	Function:
50.000 Ref- [par. 3-02 - 999999.999 ReferenerenceFeed-ceFeedbackUnit] backUnit*	Enter the maximum acceptable value for the remote reference. The Maximum Reference value and unit matches the configuration choice made in par.1-00 *Configuration Mode* and par. 20-12 *Reference/Feedback Unit*, respectively.



NOTE!
If operating with par. 1-00, Configuration Mode set for Closed-loop [3], par. 20-14, Maximum Reference/Feedb. must be used.

3-10 Preset Reference

Array [8]

Range:		Function:
0.00 %*	[-100.00 - 100.00 %]	Enter up to eight different preset references (0–7) in this parameter, using array programming. The preset reference is stated as a percentage of the value Ref_{MAX} (par.3-03 *Maximum Reference*, for closed-loop see par. 20-14 *Maximum Reference/Feedb.*). When using preset references, select Preset ref. bit 0 / 1 / 2 [16], [17] or [18] for the corresponding digital inputs in parameter group 5-1* Digital Inputs.

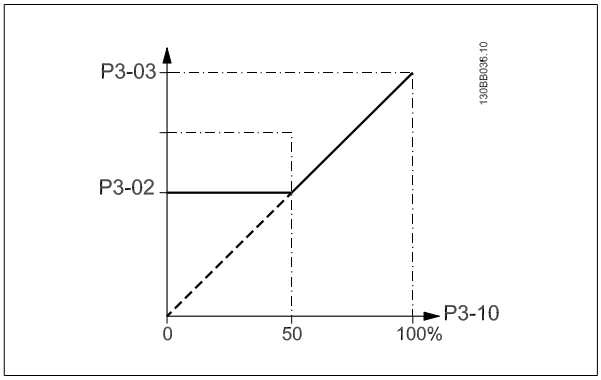

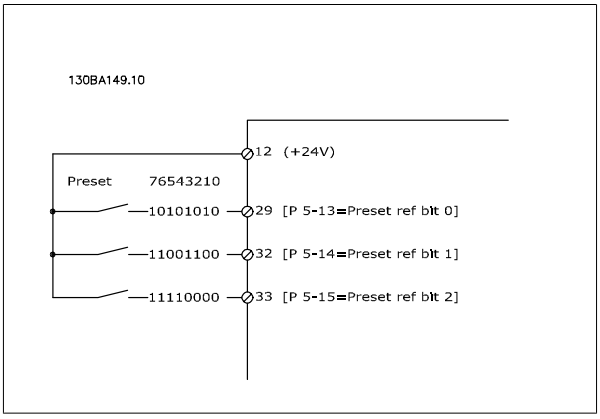

3-15 Reference 1 Source

Option:		Function:
		Select the reference input to be used for the first reference signal. par.3-15 *Reference 1 Source*, par.3-16 *Reference 2 Source* and par. 3-17 *Reference 3 Source* define up to three different reference signals. The sum of these reference signals defines the actual reference. This parameter cannot be adjusted while the motor is running.
[0]	No function	
[1] *	Analog input 53	
[2]	Analog input 54	
[7]	Pulse input 29	
[8]	Pulse input 33	
[20]	Digital pot.meter	
[21]	Analog input X30/11	
[22]	Analog input X30/12	
[23]	Analog Input X42/1	
[24]	Analog Input X42/3	
[25]	Analog Input X42/5	
[30]	Ext. Closed-loop 1	
[31]	Ext. Closed-loop 2	
[32]	Ext. Closed-loop 3	

3-16 Reference 2 Source

Option:		Function:
		Select the reference input to be used for the second reference signal. par.3-15 *Reference 1 Source*, par.3-16 *Reference 2 Source* and par. 3-17 *Reference 3 Source* define up to three different reference signals. The sum of these reference signals defines the actual reference. This parameter cannot be adjusted while the motor is running.
[0]	No function	
[1]	Analog input 53	
[2]	Analog input 54	
[7]	Pulse input 29	
[8]	Pulse input 33	
[20] *	Digital pot.meter	
[21]	Analog input X30/11	
[22]	Analog input X30/12	
[23]	Analog Input X42/1	
[24]	Analog Input X42/3	
[25]	Analog Input X42/5	
[30]	Ext. Closed-loop 1	
[31]	Ext. Closed-loop 2	
[32]	Ext. Closed-loop 3	

4-10 Motor Speed Direction

Option:		Function:
		Selects the motor speed direction required. Use this parameter to prevent unwanted reversing.
[0]	Clockwise	Only operation in a clockwise direction will be allowed.
[2] *	Both directions	Operation in both a clockwise and anti-clockwise direction will be allowed.

NOTE!
The setting in par.4-10 *Motor Speed Direction* has impact on the Flying Start in par.1-73 *Flying Start*.

4-53 Warning Speed High

Range:		Function:
par. 4-13 RPM*	[par. 4-52 - par. 4-13 RPM]	Enter the n_{HIGH} value. When the motor speed exceeds this limit (n_{HIGH}), the display reads SPEED HIGH. The signal outputs can be programmed to produce a status signal on terminal 27 or 29, and on relay output 01 or 02. Program the upper signal limit of the motor speed, n_{HIGH}, within the normal working range of the adjustable frequency drive. Refer to the drawing in this section.

NOTE!
Any changes in par.4-13 *Motor Speed High Limit [RPM]* will reset the value in par.4-53 *Warning Speed High* to the same value as set in par.4-13 *Motor Speed High Limit [RPM]*.
If a different value is needed in par.4-53 *Warning Speed High*, it must be set after programming of par.4-13 *Motor Speed High Limit [RPM]*.

4-56 Warning Feedback Low

Range:	Function:
-999999.99 [-999999.999 - par. 4-57 ProcessCtrlUnit] 9 ProcessCtrlUnit*	Enter the lower feedback limit. When the feedback falls below this limit, the display reads Feedb Low. The signal outputs can be programmed to produce a status signal on terminal 27 or 29 and on relay output 01 or 02.

4-57 Warning Feedback High

Range:	Function:
999999.999 [par. 4-56 - 999999.999 ProcessCtrlUnit] ProcessCtrlUnit*	Enter the upper feedback limit. When the feedback exceeds this limit, the display reads Feedb High. The signal outputs can be programmed to produce a status signal on terminal 27 or 29 and on relay output 01 or 02.

4-64 Semi-Auto Bypass Set-up

Option:		Function:
[0] *	OFF	No function
[1]	Enabled	Starts the semi-automatic bypass set-up and continue with the procedure described above.

5-01 Terminal 27 Mode

Option:		Function:
[0] *	Input	Defines terminal 27 as a digital input.
[1]	Output	Defines terminal 27 as a digital output.

Please note that this parameter cannot be adjusted while the motor is running.

5-02 Terminal 29 Mode

Option:		Function:
[0] *	Input	Defines terminal 29 as a digital input.
[1]	Output	Defines terminal 29 as a digital output.

This parameter cannot be adjusted while the motor is running.

6.1.4 5-1* Digital Inputs

Parameters for configuring the input functions for the input terminals.

The digital inputs are used for selecting various functions in the adjustable frequency drive. All digital inputs can be set to the following functions:

Digital input function	Select	Terminal
No operation	[0]	All *terminal 19, 32, 33
Reset	[1]	All
Coast inverse	[2]	27
Coast and reset inverse	[3]	All
DC brake inverse	[5]	All
Stop inverse	[6]	All
External interlock	[7]	All
Start	[8]	All *terminal 18
Latched start	[9]	All
Reversing	[10]	All
Start reversing	[11]	All
Jog	[14]	All *terminal 29
Preset reference on	[15]	All
Preset ref bit 0	[16]	All
Preset ref bit 1	[17]	All
Preset ref bit 2	[18]	All
Freeze reference	[19]	All
Freeze output	[20]	All
Speed up	[21]	All
Slow	[22]	All
Set-up select bit 0	[23]	All
Set-up select bit 1	[24]	All
Pulse input	[32]	terminal 29, 33
Ramp bit 0	[34]	All
Line failure inverse	[36]	All
Fire mode	[37]	All
Run Permissive	[52]	All
Hand start	[53]	All
Auto-start	[54]	All
DigiPot Increase	[55]	All
DigiPot Decrease	[56]	All
DigiPot Clear	[57]	All
Counter A (up)	[60]	29, 33
Counter A (down)	[61]	29, 33
Reset Counter A	[62]	All
Counter B (up)	[63]	29, 33
Counter B (down)	[64]	29, 33
Reset Counter B	[65]	All
Sleep Mode	[66]	All
Reset Maintenance Word	[78]	All
Lead Pump Start	[120]	All
Lead Pump Alternation	[121]	All
Pump 1 Interlock	[130]	All
Pump 2 Interlock	[131]	All
Pump 3 Interlock	[132]	All

6.1.5 Digital Inputs, 5-1* continued

All = Terminals 18, 19, 27, 29, 32, 33, X30/2, X30/3, X30/4. X30/ are the terminals on MCB 101.

Functions dedicated to only one digital input are stated in the associated parameter.

All digital inputs can be programmed to these functions:

[0]	No operation	No reaction to signals transmitted to terminal.
[1]	Reset	Resets adjustable frequency drive after a TRIP/ALARM. Not all alarms can be reset.
[2]	Coast inverse	Leaves motor in free mode. Logic '0' => coasting stop. (Default Digital input 27): Coasting stop, inverted input (NC).

[3]	Coast and reset inverse	Reset and coasting stop Inverted input (NC). Leaves motor in free mode and resets the adjustable frequency drive. Logic '0' => coasting stop and reset.
[5]	DC brake inverse	Inverted input for DC braking (NC). Stops motor by energizing it with a DC current for a certain time period. See par. 2-01 *DC Brake Current* to par. 2-03 *DC Brake Cut-in Speed [RPM]*. The function is only active when the value in par. 2-02 *DC Braking Time* is different from 0. Logic '0' => DC braking.
[6]	Stop inverse	Stop Inverted function. Generates a stop function when the selected terminal goes from logical level '1' to '0'. The stop is performed according to the selected ramp time (par.3-42 *Ramp 1 Ramp-down Time*, par. 3-52 *Ramp 2 Ramp-down Time*, par. 3-62, par. 3-72). NOTE! When the adjustable frequency drive is at the torque limit and has received a stop command, it may not stop by itself. To ensure that the adjustable frequency drive stops, configure a digital output to *Torque limit & stop* [27] and connect this digital output to a digital input that is configured as coast.
[7]	External Interlock	Same function as Coasting stop, inverse, but External Interlock generates the alarm message 'external fault' on the display when the terminal which is programmed for Coast Inverse is logic '0'. The alarm message will also be active via digital outputs and relay outputs, if programmed for External Interlock. The alarm can be reset using a digital input or the [RESET] key if the cause for the External Interlock has been removed. A delay can be programmed in par. 22-00 *External Interlock Delay*, External Interlock Time. After applying a signal to the input, the reaction described above will be delayed with the time set in par. 22-00 *External Interlock Delay*.
[8]	Start	Select start for a start/stop command. Logic '1' = start, logic '0' = stop. (Default Digital input 18)
[9]	Latched start	Motor starts, if a pulse is applied for min. 2 ms. Motor stops when Stop inverse is activated
[10]	Reversing	Changes direction of motor shaft rotation. Select Logic '1' to reverse. The reversing signal only changes the direction of rotation. It does not activate the start function. Select both directions in par.4-10 *Motor Speed Direction*. (Default Digital input 19).
[11]	Start reversing	Used for start/stop and for reversing on the same wire. Signals on start are not allowed at the same time.
[14]	Jog	Used for activating jog speed. See par.3-11 *Jog Speed [Hz]*. (Default Digital input 29)
[15]	Preset reference on	Used for shifting between external reference and preset reference. It is assumed that *External/preset* [1] has been selected in par. 3-04 *Reference Function*. Logic '0' = external reference active; logic '1' = one of the eight preset references is active.
[16]	Preset ref bit 0	Enables a choice between one of the eight preset references according to the table below.
[17]	Preset ref bit 1	Enables a choice between one of the eight preset references according to the table below.
[18]	Preset ref bit 2	Enables a choice between one of the eight preset references according to the table below.

Preset ref. bit	2	1	0
Preset ref. 0	0	0	0
Preset ref. 1	0	0	1
Preset ref. 2	0	1	0
Preset ref. 3	0	1	1
Preset ref. 4	1	0	0
Preset ref. 5	1	0	1
Preset ref. 6	1	1	0
Preset ref. 7	1	1	1

[19]	Freeze ref	Freezes actual reference. The frozen reference is now the point of enable/condition for Speed up and Slow to be used. If Speed up/down is used, the speed change always follows ramp 2 (par. 3-51 *Ramp 2 Ramp-up Time* and par. 3-52 *Ramp 2 Ramp-down Time*) in the range 0 - par. 3-03 *Maximum Reference*. (For closed-loop, see par. 20-14 *Maximum Reference/Feedb.*).
[20]	Freeze output	Freezes actual motor frequency (Hz). The frozen motor frequency is now the point of enable/condition for Speed up and Slow to be used. If Speed up/down is used, the speed change always follows ramp 2 (par. 3-51 *Ramp 2 Ramp-up Time* and par. 3-52 *Ramp 2 Ramp-down Time*) in the range 0 - par.1-23 *Motor Frequency*.  NOTE! When Freeze output is active, the adjustable frequency drive cannot be stopped via a low 'start [13]' signal. Stop the adjustable frequency drive via a terminal programmed for Coasting inverse [2] or Coast and reset, inverse [3].
[21]	Speed up	For digital control of the up/down speed is desired (motor potentiometer). Activate this function by selecting either Freeze reference or Freeze output. When Speed up is activated for less than 400 msec., the resulting reference will be increased by 0.1%. If Speed up is activated for more than 400 msec., the resulting reference will ramp according to Ramp 1 in par.3-41 *Ramp 1 Ramp-up Time*.
[22]	Slow	Same as Speed up [21].
[23]	Set-up select bit 0	Selects one of the four set-ups. Set par. 0-10 to Multi Set-up.
[24]	Set-up select bit 1	Same as Set-up select bit 0 [23]. (Default Digital input 32)
[32]	Pulse input	Select Pulse input when using a pulse sequence as either reference or feedback. Scaling is done in par. group 5-5*.
[34]	Ramp bit 0	Select which ramp to use. Logic "0" will select ramp 1 while logic "1" will select ramp 2.
[36]	Line failure inverse	Select to activate function selected in par. 14-10 *Line Failure*. Line failure is active in the Logic "0" situation.
[37]	Fire mode	A signal applied will put the adjustable frequency drive into fire mode and all other commands will be disregarded. See 24-0* *Fire Mode*.
[52]	Run Permissive	The input terminal, for which the Run permissive has been programmed must be logic "1" before a start command can be accepted. Run permissive has a logic 'AND' function related to the terminal which is programmed for *START* [8], *Jog* [14] or *Freeze Output* [20], which means that in order to start running the motor, both conditions must be fulfilled. If Run Permissive is programmed on multiple terminals, Run permissive needs only be logic '1' on one of the terminals for the function to be carried out. The digital output signal for Run Request (*Start* [8], *Jog* [14] or *Freeze output* [20]) programmed in par. 5-3*, or par. 5-4*, will not be affected by Run Permissive.
[53]	Hand start	A signal applied will put the adjustable frequency drive into hand mode as if button *Hand On* on the LCP has been pressed and a normal stop command will be overridden. If disconnecting the signal, the motor will stop. To make any other start commands valid, another digital input must be assigned to *Auto-Start* and a signal applied to this. The *Hand On* and *Auto On* buttons on the LCP has no impact. The *Off* button on the LCP will override *Hand Start* and *Auto-Start*. Press either the *Hand On* or *Auto On* button to make *Hand Start* and *Auto Start* active again. If no signal on neither *Hand Start* nor *Auto-Start*, the motor will stop regardless of any normal Start command applied. If signal applied to both *Hand Start* and *Auto-Start*, the function will be *Auto-Start*. If pressing the *Off* button on the LCP the motor will stop regardless of signals on *Hand Start* and *Auto-Start*.
[54]	Auto-start	A signal applied will put the adjustable frequency drive into auto mode as if the LCP button *Auto On* has been pressed. See also *Hand Start* [53]
[55]	DigiPot Increase	Uses the input as an INCREASE signal to the Digital Potentiometer function described in parameter group 3-9*
[56]	DigiPot Decrease	Uses the input as a DECREASE signal to the Digital Potentiometer function described in parameter group 3-9*

MG.11.A9.22 - VLT® is a registered Danfoss trademark

[57]	DigiPot Clear	Uses the input to CLEAR the Digital Potentiometer reference described in parameter group 3-9*
[60]	Counter A (up)	(Terminal 29 or 33 only) Input for increment counting in the SLC counter.
[61]	Counter A (down)	(Terminal 29 or 33 only) Input for decrement counting in the SLC counter.
[62]	Reset Counter A	Input for reset of counter A.
[63]	Counter B (up)	(Terminal 29 and 33 only) Input for increment counting in the SLC counter.
[64]	Counter B (down)	(Terminal 29 and 33 only) Input for decrement counting in the SLC counter.
[65]	Reset Counter B	Input for reset of counter B.
[66]	Sleep Mode	Forces the adjustable frequency drive into sleep mode (see par. 22-4*). Reacts on the rising edge of signal applied!
[78]	Reset Preventive Maintenance Word	Resets all data in par. 16-96 *Maintenance Word* to 0.

The below setting options are all related to the cascade controller. Wiring diagrams and settings for parameter, see group 25-** for more details.

[120]	Lead Pump Start	Starts/stops the lead pump (controlled by the adjustable frequency drive). A start requires that also a System Start signal has been applied, e.g., to one of the digital inputs set for *Start* [8]!
[121]	Lead Pump Alternation	Forces alternation of the lead pump in a cascade controller. par. 25-50 *Lead Pump Alternation*, must be set to either *At Command* [2] or *At Staging or At Command* [3]. par. 25-51 *Alternation Event*, can be set to any of the four options.
[130 - 138]	Pump1 Interlock - Pump9 Interlock	For the above 9 setting options, par. 25-10 must be set to *On* [1]. The function will also depend on the setting in par. 25-05 *Fixed Lead Pump*. If set to *No* [0], then Pump1 refers to the pump controlled by relay RELAY1, etc. If set to *Yes* [1], Pump1 refers to the pump controlled by the adjustable frequency drive only (without any of the built-in relays involved) and Pump2 to the pump controlled by the relay RELAY1. Variable speed pump (lead) cannot be interlocked. See below table:

Setting in Par. 5-1*	Setting in par. 25-06 *Number Of Pumps*	
	[0] No	[1] Yes
[130] Pump1 Interlock	Controlled by RELAY1 (only if not lead pump)	Adjustable frequency drive controlled (cannot be interlocked)
[131] Pump2 Interlock	Controlled by RELAY2	Controlled by RELAY1
[132] Pump3 Interlock	Controlled by RELAY3	Controlled by RELAY2
[133] Pump4 Interlock	Controlled by RELAY4	Controlled by RELAY3
[134] Pump5 Interlock	Controlled by RELAY5	Controlled by RELAY4
[135] Pump6 Interlock	Controlled by RELAY6	Controlled by RELAY5
[136] Pump7 Interlock	Controlled by RELAY7	Controlled by RELAY6
[137] Pump8 Interlock	Controlled by RELAY8	Controlled by RELAY7
[138] Pump9 Interlock	Controlled by RELAY9	Controlled by RELAY8

5-12 Terminal 27 Digital Input

Option:		Function:
[0] *	No operation	Same options and functions as par. 5-1*, except for *Pulse input*.

5-13 Terminal 29 Digital Input

Option:		Function:
[14] *	Jog	Same options and functions as par. 5-1*.

5-14 Terminal 32 Digital Input		
Option:		Function:
[0] *	No operation	Same options and functions as par. 5-1*, except for *Pulse input*.
[1]	Reset	
[2]	Coast inverse	
[3]	Coast and Reset Inv	
[5]	DC brake inverse	
[6]	Stop inverse	
[7]	External interlock	
[8]	Start	
[9]	Latched start	
[10]	Reverse	
[11]	Start reverse	
[14]	Jog	
[15]	Preset reference on	
[16]	Preset ref bit 0	
[17]	Preset ref bit 1	
[18]	Preset ref bit 2	
[19]	Freeze reference	
[20]	Freeze output	
[21]	Speed up	
[22]	Slow	
[23]	Set-up select bit 0	
[24]	Set-up select bit 1	
[34]	Ramp bit 0	
[36]	Mains failure inverse	
[37]	Fire Mode	
[52]	Run permissive	
[53]	Hand start	
[54]	Auto-start	
[55]	DigiPot increase	
[56]	DigiPot decrease	
[57]	DigiPot clear	
[62]	Reset Counter A	
[65]	Reset Counter B	
[66]	Sleep Mode	
[78]	Reset Preventive Maintenance Word	
[120]	Lead Pump Start	
[121]	Lead Pump Alternation	
[130]	Pump 1 Interlock	
[131]	Pump 2 Interlock	
[132]	Pump 3 Interlock	

MG.11.A9.22 - VLT® is a registered Danfoss trademark

5-15 Terminal 33 Digital Input

Option:		Function:
[0] *	No operation	Same options and functions as par. 5-1* Digital Inputs.

5-40 Function Relay

Array [8]
(Relay 1 [0], Relay 2 [1]
Option MCB 105: Relay 7 [6], Relay 8 [7] and Relay 9 [8])

Option:		Function:
[0] *	No operation	Select options to define the function of the relays. The selection of each mechanical relay is realized in an array parameter.
[1]	Control ready	
[2]	Drive ready	
[3]	Drive rdy/rem ctrl	
[4]	Stand-by / no warning	
[5]	Running	
[6]	Running / no warning	
[8]	Run on ref/no warn	
[9]	Alarm	
[10]	Alarm or warning	
[11]	At torque limit	
[12]	Out of current range	
[13]	Below current, low	
[14]	Above current, high	
[15]	Out of speed range	
[16]	Below speed, low	
[17]	Above speed, high	
[18]	Out of feedb. range	
[19]	Below feedback, low	
[20]	Above feedback, high	
[21]	Thermal warning	
[25]	Reverse	
[26]	Bus OK	
[27]	Torque limit stop	
[28]	Brake: No Brake War	
[29]	Brake ready, no fault	
[30]	Brake fault (IGBT)	
[35]	External Interlock	
[36]	Control word bit 11	
[37]	Control word bit 12	
[40]	Out of ref range	
[41]	Below reference, low	
[42]	Above ref, high	
[45]	Bus ctrl.	

[46]	Bus ctrl, 1 if timeout
[47]	Bus ctrl, 0 if timeout
[60]	Comparator 0
[61]	Comparator 1
[62]	Comparator 2
[63]	Comparator 3
[64]	Comparator 4
[65]	Comparator 5
[70]	Logic rule 0
[71]	Logic rule 1
[72]	Logic rule 2
[73]	Logic rule 3
[74]	Logic rule 4
[75]	Logic rule 5
[80]	SL digital output A
[81]	SL digital output B
[82]	SL digital output C
[83]	SL digital output D
[84]	SL digital output E
[85]	SL digital output F
[160]	No alarm
[161]	Running reverse
[165]	Local ref active
[166]	Remote ref active
[167]	Start cmd. active
[168]	Hand mode
[169]	Auto mode
[180]	Clock Fault
[181]	Prev. Maintenance
[190]	No-Flow
[191]	Dry Pump
[192]	End Of Curve
[193]	Sleep Mode
[194]	Broken Belt
[195]	Bypass Valve Control
[196]	Fire Mode Active
[197]	Fire Mode Was Active
[198]	Bypass Mode Active
[211]	Cascade Pump 1
[212]	Cascade Pump 2
[213]	Cascade Pump 3

MG.11.A9.22 - VLT® is a registered Danfoss trademark

6-00 Live Zero Timeout Time	
Range:	Function:
10 s* [1 - 99 s]	Enter the Live Zero Timeout time period. Live Zero Timeout Time is active for analog inputs, (i.e., terminal 53 or terminal 54), allocated to current and used as reference or feedback sources. If the reference signal value associated with the selected current input falls below 50% of the value set in par.6-10 *Terminal 53 Low Voltage*, par. 6-12 *Terminal 53 Low Current*, par.6-20 *Terminal 54 Low Voltage* or par. 6-22 *Terminal 54 Low Current* for a time period longer than the time set in par. 6-00 *Live Zero Timeout Time*, the function selected in par.6-01 *Live Zero Timeout Function* will be activated.

6-01 Live Zero Timeout Function	
Option:	Function:
	Select the timeout function. The function set in par.6-01 *Live Zero Timeout Function* will be activated if the input signal on terminal 53 or 54 is below 50% of the value in par.6-10 *Terminal 53 Low Voltage*, par. 6-12 *Terminal 53 Low Current*, par.6-20 *Terminal 54 Low Voltage* or par. 6-22 *Terminal 54 Low Current* for a time period defined in par.6-00 *Live Zero Timeout Time*. If several timeouts occur simultaneously, the adjustable frequency drive prioritizes the timeout functions as follows: 1. par.6-01 *Live Zero Timeout Function* 2. par. 8-04 *Control Timeout Function* The output frequency of the adjustable frequency drive can be: • [1] frozen at the present value • [2] overruled to stop • [3] overruled to jog speed • [4] overruled to max. speed • [5] overruled to stop with subsequent trip
[0] *	Off
[1]	Freeze output
[2]	Stop
[3]	Jogging
[4]	Max. speed
[5]	Stop and trip

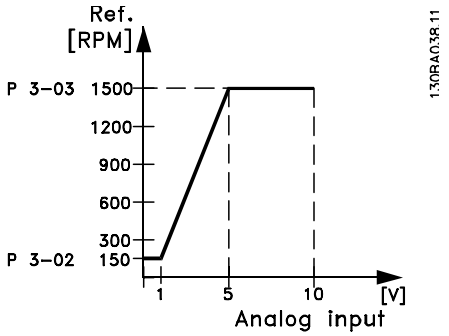

6-10 Terminal 53 Low Voltage

Range:		Function:
0.07 V*	[0.00 - par. 6-11 V]	Enter the low voltage value. This analog input scaling value should correspond to the low reference/feedback value set in par.6-14 *Terminal 53 Low Ref./Feedb. Value*.

6-11 Terminal 53 High Voltage

Range:		Function:
10.00 V*	[par. 6-10 - 10.00 V]	Enter the high voltage value. This analog input scaling value should correspond to the high reference/feedback value set in par.6-15 *Terminal 53 High Ref./Feedb. Value*.

6-14 Terminal 53 Low Ref./ Feedb. Value

Range:		Function:
0.000 N/A*	[-999999.999 - 999999.999 N/A]	Enter the analog input scaling value that corresponds to the low voltage/low current set in par. 6-10 *Terminal 53 Low Voltage* and par. 6-12 *Terminal 53 Low Current*.

6-15 Terminal 53 High Ref./ Feedb. Value

Range:		Function:
50.000 N/A*	[-999999.999 - 999999.999 N/A]	Enter the analog input scaling value that corresponds to the high voltage/high current value set in par.6-11 *Terminal 53 High Voltage* and par. 6-13 *Terminal 53 High Current*.

6-16 Terminal 53 Filter Time Constant

Range:		Function:
0.001 s*	[0.001 - 10.000 s]	Enter the time constant. This is a first-order digital low pass filter time constant for suppressing electrical noise in terminal 53. A high time constant value improves damping, but also increases the time delay through the filter. This parameter cannot be adjusted while the motor is running.

6-17 Terminal 53 Live Zero

Option:		Function:
		This parameter makes it possible to disable the Live Zero monitoring. For example, this is to be used if the analog outputs are used as part of a de-central I/O system (e.g., when not used as part of any adjustable frequency drive related control functions, but for feeding a building management system with data).
[0]	Disabled	
[1] *	Enabled	

6-20 Terminal 54 Low Voltage

Range:		Function:
0.07 V*	[0.00 - par. 6-21 V]	Enter the low voltage value. This analog input scaling value should correspond to the low reference/feedback value, set in par.6-24 *Terminal 54 Low Ref./Feedb. Value*.

6-21 Terminal 54 High Voltage

Range:		Function:
10.00 V*	[par. 6-20 - 10.00 V]	Enter the high voltage value. This analog input scaling value should correspond to the high reference/feedback value set in par.6-25 *Terminal 54 High Ref./Feedb. Value*.

6-24 Terminal 54 Low Ref./ Feedb. Value

Range:	Function:
0.000 N/A* [-999999.999 - 999999.999 N/A]	Enter the analog input scaling value that corresponds to the low voltage/low current value set in par.6-20 *Terminal 54 Low Voltage* and par. 6-22 *Terminal 54 Low Current*.

6-25 Terminal 54 High Ref./ Feedb. Value

Range:	Function:
100.000 N/A* [-999999.999 - 999999.999 N/A]	Enter the analog input scaling value that corresponds to the high voltage/high current value set in par.6-21 *Terminal 54 High Voltage* and par. 6-23 *Terminal 54 High Current*.

6-26 Terminal 54 Filter Time Constant

Range:	Function:
0.001 s* [0.001 - 10.000 s]	Enter the time constant. This is a first-order digital low pass filter time constant for suppressing electrical noise in terminal 54. A high time constant value improves damping, but also increases the time delay through the filter. This parameter cannot be adjusted while the motor is running.

6-27 Terminal 54 Live Zero

Option:		Function:
		This parameter makes it possible to disable the Live Zero monitoring. For example, this to be used if the analog outputs are used as part of a de-central I/O system (e.g., when used not as part of any adjustable frequency drive related control functions, but for feeding a building management system with data).
[0]	Disabled	
[1] *	Enabled	

6-50 Terminal 42 Output

Option:		Function:
		Select the function of Terminal 42 as an analog current output. A motor current of 20 mA corresponds to I_{max}.
[0] *	No operation	
[100]	Output frequency	: 0–100 Hz, (0–20 mA)
[101]	Reference	: Minimum reference - Maximum reference, (0–20 mA)
[102]	Feedback	: -200% to +200% of par. 20-14 *Maximum Reference/Feedb.*, (0–20 mA)
[103]	Motor current	: 0 - Inverter Max. Current (par. 16-37), (0–20 mA)
[104]	Torque rel to limit	: 0 - Torque limit (par. 4-16 *Torque Limit Motor Mode*), (0–20 mA)
[105]	Torq relate to rated	: 0 - Motor rated torque, (0–20 mA)
[106]	Power	: 0 - Motor rated power, (0–20 mA)
[107]	Speed	: 0 - Speed High Limit (par.4-13 *Motor Speed High Limit [RPM]* and par.4-14 *Motor Speed High Limit [Hz]*), (0–20 mA)
[113]	Ext. Closed-loop 1	: 0–100%, (0–20 mA)
[114]	Ext. Closed-loop 2	: 0–100%, (0–20 mA)
[115]	Ext. Closed-loop 3	: 0–100%, (0–20 mA)
[130]	Output freq. 4-20mA	: 0–100 Hz

[131]	Reference 4-20mA	: Minimum Reference - Maximum Reference
[132]	Feedback 4-20mA	: -200% to +200% of par. 20-14 *Maximum Reference/Feedb.*
[133]	Motor cur. 4-20mA	: 0 - Inverter Max. Current (par. 16-37 *Inv. Max. Current*)
[134]	Torq.% lim 4-20 mA	: 0 - Torque limit (par. 4-16 *Torque Limit Motor Mode*)
[135]	Torq.% nom 4-20 mA	: 0 - Motor rated torque
[136]	Power 4-20mA	: 0 - Motor rated power
[137]	Speed 4-20mA	: 0 - Speed High Limit (4-13 and 4-14)
[139]	Bus ctrl.	: 0–100%, (0–20 mA)
[140]	Bus ctrl. 4-20 mA	: 0 - 100%
[141]	Bus ctrl t.o.	: 0–100%, (0–20 mA)
[142]	Bus ctrl 4-20mA t.o.	: 0 - 100%
[143]	Ext. Closed-loop 1 4-20 mA	: 0 - 100%
[144]	Ext. Closed-loop 2 4-20 mA	: 0 - 100%
[145]	Ext. Closed-loop 3 4-20 mA	: 0 - 100%

NOTE!
Values for setting the minimum reference is found in open-loop par.3-02 *Minimum Reference* and for closed-loop par. 20-13 *Minimum Reference/ Feedb.* - values for maximum reference for open-loop is found in par.3-03 *Maximum Reference* and for closed-loop par. 20-14 *Maximum Reference/ Feedb.*.

6-51 Terminal 42 Output Min Scale

Range:		Function:
0.00 %*	[0.00 - 200.00 %]	Scale for the minimum output (0 or 4 mA) of the analog signal at terminal 42. Set the value to be the percentage of the full range of the variable selected in par.6-50 *Terminal 42 Output*.

6-52 Terminal 42 Output Max Scale

Range:	Function:
100.00 %* [0.00 - 200.00 %]	Scale for the maximum output (20 mA) of the analog signal at terminal 42. Set the value to be the percentage of the full range of the variable selected in par.6-50 *Terminal 42 Output*.

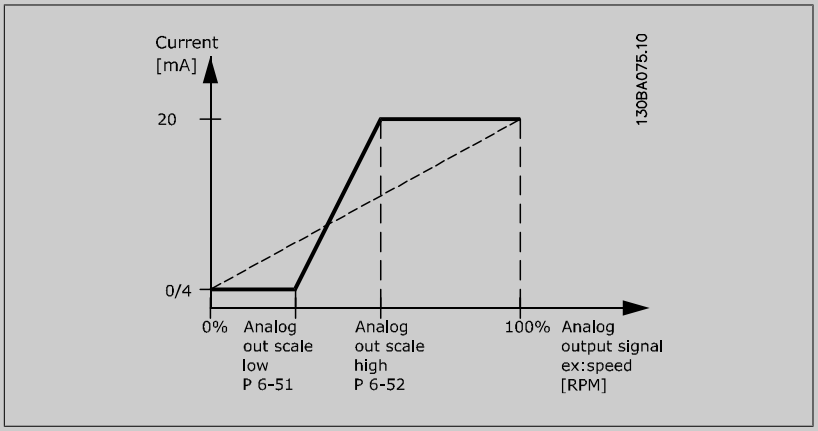

It is possible to get a value lower than 20 mA at full scale by programming values >100% by using a formula as follows:

$20\ mA / desired\ maximum\ current \times 100\ \%$

$i.e.\ 10 mA: \frac{20\ mA}{10\ mA} \times 100\ \% = 200\ \%$

EXAMPLE 1:

Variable value= OUTPUT FREQUENCY, range = 0–100 Hz

Range needed for output = 0–50 Hz

Output signal 0 or 4 mA is needed at 0 Hz (0% of range) - set par.6-51 *Terminal 42 Output Min Scale* to 0%

Output signal 20 mA is needed at 50 Hz (50% of range) - set par.6-52 *Terminal 42 Output Max Scale* to 50%

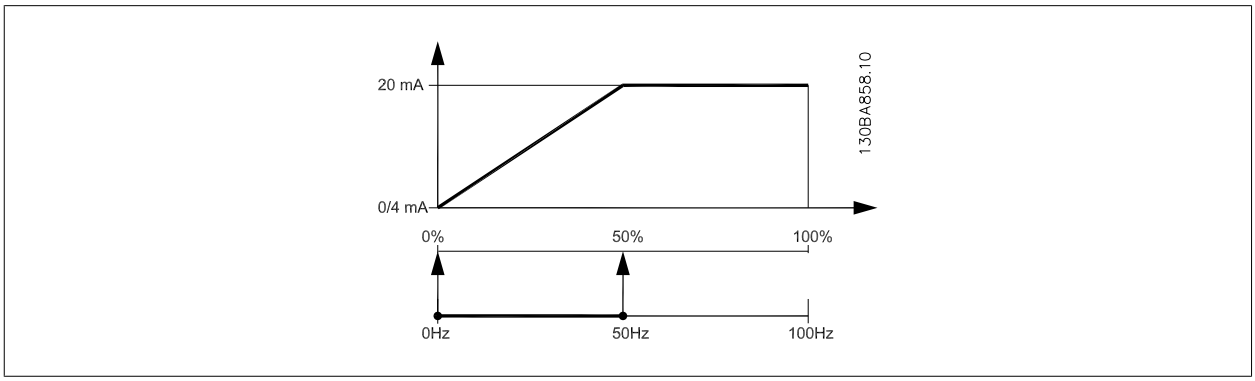

EXAMPLE 2:

Variable= FEEDBACK, range= -200% to +200%

Range needed for output= 0–100%

Output signal 0 or 4 mA is needed at 0% (50% of range) - set par.6-51 *Terminal 42 Output Min Scale* to 50%

Output signal 20 mA is needed at 100% (75% of range) - set par.6-52 *Terminal 42 Output Max Scale* to 75%

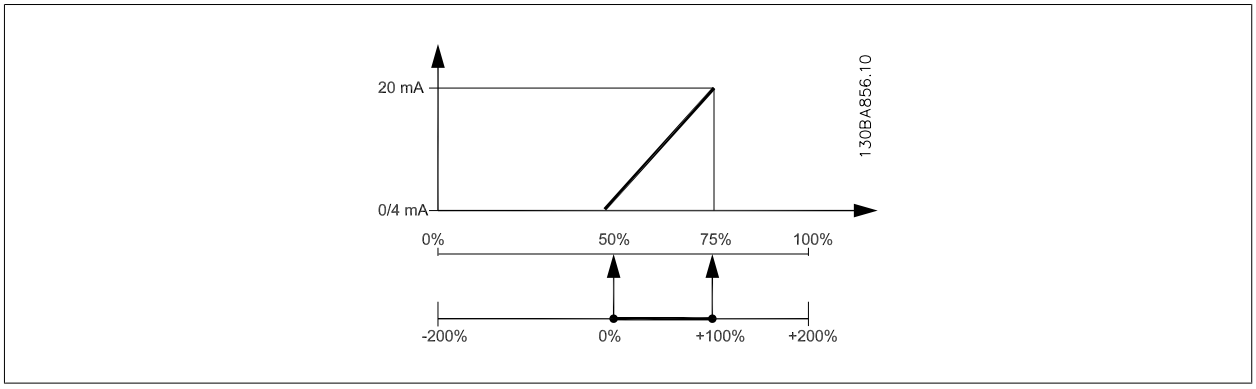

EXAMPLE 3:

Variable value= REFERENCE, range= Min ref - Max ref

Range needed for output= Min ref (0%) - Max ref (100%), 0–10 mA

Output signal 0 or 4 mA is needed at Min ref - set par.6-51 *Terminal 42 Output Min Scale* to 0%

Output signal 10 mA is needed at Max ref (100% of range) - set par.6-52 *Terminal 42 Output Max Scale* to 200%

(20 mA / 10 mA x 100%=200%).

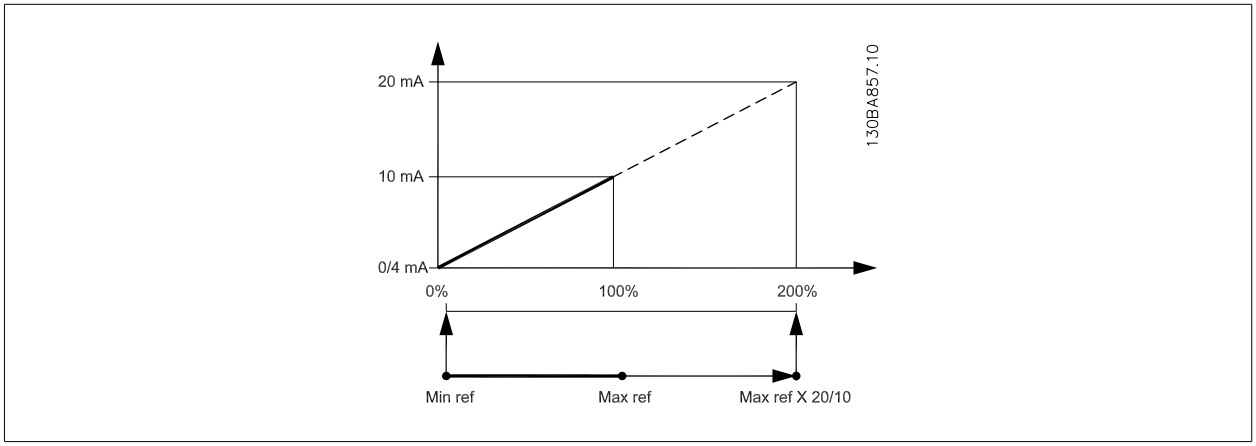

14-01 Switching Frequency

Option:		Function:
		Select the inverter switching frequency. Changing the switching frequency can help to reduce acoustic noise from the motor. NOTE! The output frequency value of the adjustable frequency drive must never exceed 1/10 of the switching frequency. When the motor is running, adjust the switching frequency in par.14-01 *Switching Frequency* until the motor is as noiseless as possible. See also par. 14-00 *Switching Pattern* and the section *Derating*.
[0]	1.0 kHz	
[1]	1.5 kHz	
[2]	2.0 kHz	
[3]	2.5 kHz	
[4]	3.0 kHz	
[5]	3.5 kHz	
[6]	4.0 kHz	
[7] *	5.0 kHz	
[8]	6.0 kHz	
[9]	7.0 kHz	
[10]	8.0 kHz	
[11]	10.0 kHz	
[12]	12.0 kHz	
[13]	14.0 kHz	
[14]	16.0 kHz	

14-03 Overmodulation

Option:		Function:
[0]	Off	Selects no overmodulation of the output voltage in order to avoid torque ripple on the motor shaft.
[1] *	On	The overmodulation function generates an extra voltage of up to 8% of U_{max} output voltage without overmodulation, which results in an extra torque of 10–12% in the middle of the oversyncronous range (from 0% at nominal speed rising to approximately 12% at double nominal speed).

20-00 Feedback 1 Source

Option:		Function:
		Up to three different feedback signals can be used to provide the feedback signal for the adjustable frequency drive's PID controller. This parameter defines which input will be used as the source of the first feedback signal. Analog input X30/11 and Analog input X30/12 refer to inputs on the optional general purpose I/O board.
[0]	No function	
[1]	Analog input 53	
[2] *	Analog input 54	
[3]	Pulse input 29	
[4]	Pulse input 33	
[7]	Analog input X30/11	

[8]	Analog input X30/12
[9]	Analog Input X42/1
[10]	Analog Input X42/3
[11]	Analog Input X42/5
[100]	Bus feedback 1
[101]	Bus feedback 2
[102]	Bus feedback 3
[104]	
[105]	



NOTE!
If a feedback is not used, its source must be set to *No Function* [0]. par.20-20 *Feedback Function* determines how the three possible feedbacks will be used by the PID controller.

20-01 Feedback 1 Conversion

Option:		Function:
		This parameter allows a conversion function to be applied to Feedback 1.
[0] *	Linear	*Linear* [0] has no effect on the feedback.
[1]	Square root	*Square root* [1] is commonly used when a pressure sensor is used to provide flow feedback (($flow \propto \sqrt{pressure}$)).
[2]	Pressure to temperature	*Pressure to temperature* [2] is used in compressor applications to provide temperature feedback using a pressure sensor. The temperature of the refrigerant is calculated using the following formula: $Temperature = \frac{A2}{(ln(Pe+1) - A1)} - A3$, where A1, A2 and A3 are refrigerant-specific constants. The refrigerant must be selected in par. 20-30 *Refrigerant*. par.20-21 *Setpoint 1* through par. 20-23 *Setpoint 3* allow the values of A1, A2 and A3 to be entered for a refrigerant that is not listed in par. 20-30 *Refrigerant*.

20-03 Feedback 2 Source

Option:		Function:
		See par.20-00 *Feedback 1 Source* for details.
[0] *	No function	
[1]	Analog input 53	
[2]	Analog input 54	
[3]	Pulse input 29	
[4]	Pulse input 33	
[7]	Analog input X30/11	
[8]	Analog input X30/12	
[9]	Analog Input X42/1	
[10]	Analog Input X42/3	
[11]	Analog Input X42/5	
[100]	Bus feedback 1	
[101]	Bus feedback 2	
[102]	Bus feedback 3	

MG.11.A9.22 - VLT® is a registered Danfoss trademark

20-04 Feedback 2 Conversion

Option:		Function:
		See par.20-01 *Feedback 1 Conversion* for details.
[0] *	Linear	
[1]	Square root	
[2]	Pressure to temperature	

20-06 Feedback 3 Source

Option:		Function:
		See par.20-00 *Feedback 1 Source* for details.
[0] *	No function	
[1]	Analog input 53	
[2]	Analog input 54	
[3]	Pulse input 29	
[4]	Pulse input 33	
[7]	Analog input X30/11	
[8]	Analog input X30/12	
[9]	Analog Input X42/1	
[10]	Analog Input X42/3	
[11]	Analog Input X42/5	
[100]	Bus feedback 1	
[101]	Bus feedback 2	
[102]	Bus feedback 3	

20-07 Feedback 3 Conversion

Option:		Function:
		See par.20-01 *Feedback 1 Conversion* for details.
[0] *	Linear	
[1]	Square root	
[2]	Pressure to temperature	

20-20 Feedback Function

Option:		Function:
		This parameter determines how the three possible feedbacks will be used to control the output frequency of the adjustable frequency drive.
[0]	Sum	*Sum* [0] sets up the PID controller to use the sum of Feedback 1, Feedback 2 and Feedback 3 as the feedback.

NOTE!
Any unused feedbacks must be set to *No Function* in par.20-00 *Feedback 1 Source*, par.20-03 *Feedback 2 Source*, or par.20-06 *Feedback 3 Source*.

The sum of Setpoint 1 and any other references that are enabled (see par. group 3-1*) will be used as the PID controller's setpoint reference.

[1]	Difference	*Difference* [1] sets up the PID controller to use the difference between Feedback 1 and Feedback 2 as the feedback. Feedback 3 will not be used with this selection. Only Setpoint 1 will be used. The sum of Setpoint 1 and any other references that are enabled (see par. group 3-1*) will be used as the PID controller's setpoint reference.
[2]	Average	*Average* [2] sets up the PID controller to use the average of Feedback 1, Feedback 2 and Feedback 3 as the feedback. NOTE! Any unused feedbacks must be set to *No Function* in par.20-00 *Feedback 1 Source*, par.20-03 *Feedback 2 Source*, or par.20-06 *Feedback 3 Source*. The sum of Setpoint 1 and any other references that are enabled (see par. group 3-1*) will be used as the PID Controller's setpoint reference.
[3] *	Minimum	*Minimum* [3] sets up the PID controller to compare Feedback 1, Feedback 2 and Feedback 3 and use the lowest value as the feedback. NOTE! Any unused feedbacks must be set to *No Function* in par.20-00 *Feedback 1 Source*, par.20-03 *Feedback 2 Source*, or par.20-06 *Feedback 3 Source*. Only setpoint 1 will be used. The sum of Setpoint 1 and any other references that are enabled (see par. group 3-1*) will be used as the PID controller's setpoint reference.
[4]	Maximum	*Maximum* [4] sets up the PID controller to compare Feedback 1, Feedback 2 and Feedback 3 and use the highest value as the feedback. NOTE! Any unused feedbacks must be set to *No Function* in par.20-00 *Feedback 1 Source*, par.20-03 *Feedback 2 Source*, or par.20-06 *Feedback 3 Source*. Only Setpoint 1 will be used. The sum of Setpoint 1 and any other references that are enabled (see par. group 3-1*) will be used as the PID controller's setpoint reference.
[5]	Multi Setpoint Min	*Multi-setpoint minimum* [5] sets up the PID controller to calculate the difference between Feedback 1 and Setpoint 1, Feedback 2 and Setpoint 2, and Feedback 3 and Setpoint 3. It will use the feedback/setpoint pair in which the feedback is the farthest below its corresponding setpoint reference. If all feedback signals are above their corresponding setpoints, the PID controller will use the feedback/setpoint pair in which the difference between the feedback and setpoint is the least. NOTE! If only two feedback signals are used, the feedback that is not to be used must be set to *No Function* in par.20-00 *Feedback 1 Source*, par.20-03 *Feedback 2 Source* or par.20-06 *Feedback 3 Source*. Note that each setpoint reference will be the sum of its respective parameter value (par.20-21 *Setpoint 1*, par. 20-22 *Setpoint 2* and par. 20-23 *Setpoint 3*) and any other references that are enabled (see par. group 3-1*).
[6]	Multi Setpoint Max	*Multi-setpoint maximum* [6] sets up the PID controller to calculate the difference between Feedback 1 and Setpoint 1, Feedback 2 and Setpoint 2, and Feedback 3 and Setpoint 3. It will use the feedback/setpoint pair in which the feedback is farthest above its corresponding setpoint reference. If all feedback signals are below their corresponding setpoints, the PID controller will use the feedback/setpoint pair in which the difference between the feedback and the setpoint reference is the least.

NOTE!
If only two feedback signals are used, the feedback that is not to be used must be set to *No Function* in par.20-00 *Feedback 1 Source*, par.20-03 *Feedback 2 Source* or par.20-06 *Feedback 3 Source*. Note that each setpoint reference will be the sum of its respective parameter value (par.20-21 *Setpoint 1*, par. 20-22 *Setpoint 2* and par. 20-23 *Setpoint 3*) and any other references that are enabled (see par. group 3-1*).

NOTE!
Any unused feedback must be set to "No function" in its Feedback Source parameter: par.20-00 *Feedback 1 Source*, par.20-03 *Feedback 2 Source* or par.20-06 *Feedback 3 Source*.

The feedback resulting from the function selected in par.20-20 *Feedback Function* will be used by the PID controller to control the output frequency of the adjustable frequency drive. This feedback can also: be shown on the adjustable frequency drive's display, be used to control an adjustable frequency drive's analog output, and be transmitted over various serial communication protocols.

The adjustable frequency drive can be configured to handle multi-zone applications. Two different multi-zone applications are supported:

- Multi-zone, single setpoint
- Multi-zone, multi setpoint

The difference between the two is illustrated by the following examples:

Example 1: Multi-zone, single setpoint
In an office building, a VAV (variable air volume) VLT HVAC Drive system must ensure a minimum pressure at selected VAV boxes. Due to the varying pressure losses in each duct, the pressure at each VAV box cannot be assumed to be the same. The minimum pressure required is the same for all VAV boxes. This control method can be set up by setting par.20-20 *Feedback Function* to option [3], Minimum, and entering the desired pressure in par. 20-21 *Setpoint 1*. The PID controller will increase the speed of the fan if any one feedback is below the setpoint, and decrease the speed of the fan if all feedbacks are above the setpoint.

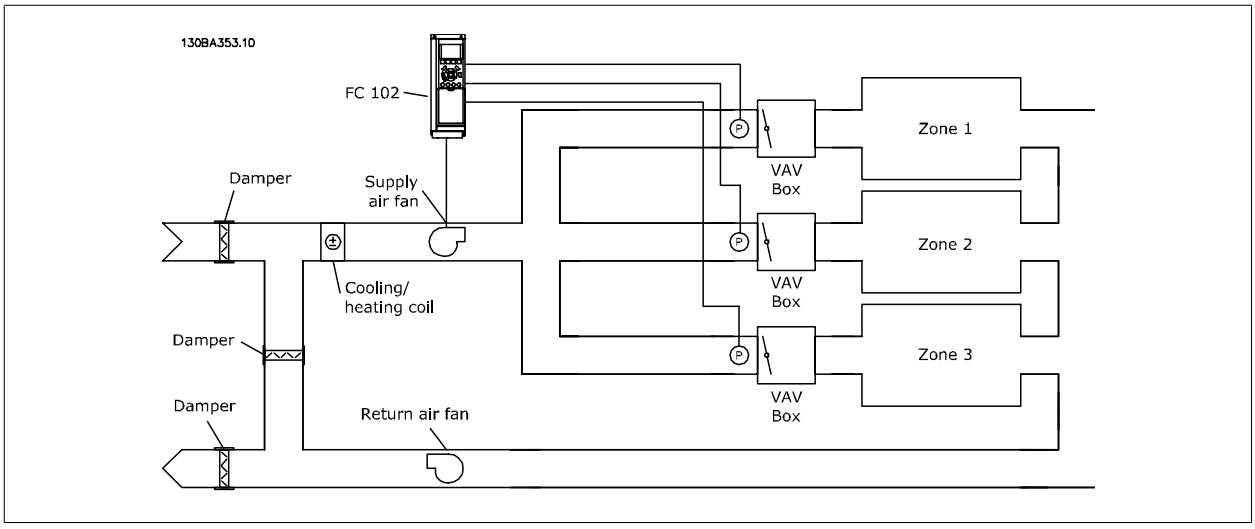

Example 2: Multi-zone, multi setpoint
The previous example can be used to illustrate the use of multi-zone, multi-setpoint control. If the zones require different pressures for each VAV box, each setpoint may be specified in par.20-21 *Setpoint 1*, par.20-22 *Setpoint 2* and par. 20-23 *Setpoint 3*. By selecting *Multi-setpoint minimum*, [5], in par. 20-20 *Feedback Function*, the PID controller will increase the speed of the fan if any one of the feedbacks is below its setpoint and decrease the speed of the fan if all feedbacks are above their individual setpoints.

20-21 Setpoint 1

Range:	Function:
0.000 ProcessCtrlUnit* [-999999.999 - 999999.999 ProcessCtrlUnit]	Setpoint 1 is used in closed-loop mode to enter a setpoint reference that is used by the adjustable frequency drive's PID controller. See the description of par.20-20 *Feedback Function*.



NOTE!
Setpoint reference entered here is added to any other references that are enabled (see par. group 3-1*).

20-22 Setpoint 2

Range:	Function:
0.000 ProcessCtrlUnit* [-999999.999 - 999999.999 ProcessCtrlUnit]	Setpoint 2 is used in closed-loop mode to enter a setpoint reference that may be used by the adjustable frequency drive's PID controller. See the description of *Feedback Function*, par. 20-20 *Feedback Function*.

6



NOTE!
The setpoint reference entered here is added to any other references that are enabled (see par. group 3-1*).

20-81 PID Normal/ Inverse Control

Option:		Function:
[0] *	Normal	*Normal* [0] causes the adjustable frequency drive's output frequency to decrease when the feedback is greater than the setpoint reference. This is common for pressure-controlled supply fan and pump applications.
[1]	Inverse	*Inverse* [1] causes the adjustable frequency drive's output frequency to increase when the feedback is greater than the setpoint reference. This is common for temperature-controlled cooling applications, such as cooling towers.

20-93 PID Proportional Gain

Range:	Function:
0.50 N/A* [0.00 - 10.00 N/A]	

If (Error x Gain) jumps with a value equal to what is set in par. 20-14 *Maximum Reference/Feedb.*, the PID controller will try to change the output speed equal to what is set in par.4-13 *Motor Speed High Limit [RPM]* par.4-14 *Motor Speed High Limit [Hz]* but in practice of course limited by this setting. The proportional band (error causing output to change from 0%–100%) can be calculated by means of the formula:

$$\left(\frac{1}{Proportional\ Gain}\right) \times (Max\ \ Reference)$$

NOTE!
Always set the desired for par. 20-14 *Maximum Reference/Feedb.* before setting the values for the PID controller in par. group 20-9*.

MG.11.A9.22 - VLT® is a registered Danfoss trademark

20-94 PID Integral Time

Range:		Function:
20.00 s*	[0.01 - 10000.00 s]	Over time, the integrator accumulates a contribution to the output from the PID controller as long as there is a deviation between the reference/setpoint and feedback signals. The contribution is proportional to the size of the deviation. This ensures that the deviation (error) approaches zero. Quick response on any deviation is obtained when the integral time is set to a low value. Setting it too low, however, may cause the control to become unstable. The value set, is the time needed for the integrator to add the same contribution as the proportional part for a certain deviation. If the value is set to 10,000, the controller will act as a pure proportional controller with a P-band based on the value set in par.20-93 *PID Proportional Gain*. When no deviation is present, the output from the proportional controller will be 0.

22-21 Low Power Detection

Option:		Function:
[0] *	Disabled	
[1]	Enabled	If selecting Enabled, the low power detection commissioning must be carried out in order to set the parameters in group 22-3* for proper operation!

22-22 Low Speed Detection

Option:		Function:
[0] *	Disabled	
[1]	Enabled	Select Enabled for detecting when the motor operates with a speed as set in par.4-11 *Motor Speed Low Limit [RPM]* or par.4-12 *Motor Speed Low Limit [Hz]*.

22-23 No-Flow Function

Option:		Function:
		Common actions for low power detection and low speed detection (Individual selections not possible).
[0] *	OFF	
[1]	Sleep Mode	
[2]	Warning	Messages in the Local Control Panel display (if mounted) and/or signal via a relay or a digital output.
[3]	Alarm	The adjustable frequency drive trips and the motor stays stopped until reset.

22-24 No-Flow Delay

Range:		Function:
10 s*	[1 - 600 s]	Set the time. Low Power/Low Speed must remain detected to activate signal for actions. If detection disappears before the timer runs out, the timer will be reset.

22-26 Dry Pump Function

Option:		Function:
		Low Power Detection must be Enabled (par.22-21 *Low Power Detection*) and commissioned (using either par. 22-3*, *No Flow Power Tuning*, or par. 22-20 *Low Power Auto Set-up*) in order to use dry pump detection.
[0] *	OFF	
[1]	Warning	Messages in the Local Control Panel display (if mounted) and/or signal via a relay or a digital output.
[2]	Alarm	The adjustable frequency drive trips and the motor stays stopped until reset.

22-40 Minimum Run Time

Range:		Function:
10 s*	[0 - 600 s]	Set the desired minimum running time for the motor after a start command (digital input or bus) before entering sleep mode.

22-41 Minimum Sleep Time

Range:		Function:
10 s*	[0 - 600 s]	Set the desired minimum time for staying in sleep mode. This will override any wake-up conditions.

22-42 Wake-up Speed [RPM]

Range:		Function:
0 RPM*	[par. 4-11 - par. 4-13 RPM]	To be used if par. 0-02 *Motor Speed Unit* has been set for RPM (parameter not visible if Hz selected). Only to be used if par.1-00 *Configuration Mode* is set for open-loop and speed reference is applied by an external controller. Set the reference speed at which sleep mode should be canceled.

22-60 Broken Belt Function

Option:		Function:
		Selects the action to be performed if the broken belt condition is detected.
[0] *	OFF	
[1]	Warning	
[2]	Trip	

22-61 Broken Belt Torque

Range:		Function:
10 %*	[0 - 100 %]	Sets the broken belt torque as a percentage of the rated motor torque.

22-62 Broken Belt Delay

Range:		Function:
10 s	[0 - 600 s]	Sets the time for which the broken belt conditions must be active before carrying out the action selected in par.22-60 *Broken Belt Function*.

22-75 Short Cycle Protection

Option:		Function:
[0] *	Disabled	Timer set in par.22-76 *Interval between Starts* is disabled.
[1]	Enabled	Timer set in par.22-76 *Interval between Starts* is enabled.

22-76 Interval between Starts

Range:		Function:
par. 22-77 s*	[par. 22-77 - 3600 s]	Sets the time desired as minimum time between two starts. Any normal start command (Start/Jog/Freeze) will be disregarded until the timer has expired.

22-77 Minimum Run Time

Range:		Function:
0 s*	[0 - par. 22-76 s]	Sets the time desired as minimum run time after a normal start command (Start/Jog/Freeze). Any normal stop command will be disregarded until the set time has expired. The timer will start counting following a normal start command (Start/Jog/Freeze). The timer will be overridden by a Coast (Inverse) or an External Interlock command.

NOTE!
Does not work in cascade mode.

6.1.6 Parameter Set-up

Group	Title	Function
0-	Operation and Display	Parameters used to program the fundamental functions of the adjustable frequency drive and the LCP including: selection of language; selection of which variables are displayed at each position in the display (e.g., static duct pressure or condenser water return temperature can be displayed with the setpoint in small digits in the top row and feedback in large digits in the center of the display); enabling/disabling of the LCP keys/buttons; passwords for the LCP; upload and download of commissioned parameters to/ from the LCP and setting the built-in clock.
1-	Load / Motor	Parameters used to configure the adjustable frequency drive for the specific application and motor including: open-loop or closed-loop operation; type of application such as compressor, fan or centrifugal pump; motor nameplate data; auto-tuning of the drive to the motor for optimum performance; flying start (typically used for fan applications) and motor thermal protection.
2-	Brakes	Parameters used to configure braking functions of the adjustable frequency drive which although not common in many HVAC applications, can be useful on special fan applications. Parameters including: DC braking; dynamic/resistor braking and overvoltage control (which provides automatic adjustment of the deceleration rate (auto-ramping) to avoid tripping when decelerating large inertia fans)
3-	Reference/Ramps	Parameters used to program the minimum and maximum reference limits of speed (RPM/Hz) in open-loop or in actual units when operating in closed-loop); digital/preset references; jog speed; definition of the source of each reference (e.g., which analog input the reference signal is connected to); ramp-up and ramp-down times and digital potentiometer settings.
4-	Limits/Warnings	Parameters used to program limits and warnings of operation including: allowable motor direction; minimum and maximum motor speeds (e.g., in pump applications it is typical to program a minimum speed to approx 30–40% to ensure pump seals are adequately lubricated at all times, avoid cavitation and ensure adequate head is produced at all times to create flow); torque and current limits to protect the pump, fan or compressor driven by the motor; warnings for low/high current, speed, reference, and feedback; missing motor phase protection; speed bypass frequencies including semi-automatic set-up of these frequencies (e.g., to avoid resonance conditions on cooling towers and other fans).
5-	Digital In / Out	Parameters used to program the functions of all digital inputs, digital outputs, relay outputs, pulse inputs and pulse outputs for terminals on the control card and all option cards.
6-	Analog In / Out	Parameters used to program the functions associated with all analog inputs and analog outputs for the terminals on the control card and General Purpose I/O option (MCB101) (note: NOT Analog I/O option MCB109, see parameter group 26-00) including: analog input live zero timeout function (which, for example, can be used to command a cooling tower fan to operate at full speed if the condenser water return sensor fails); scaling of the analog input signals (for example, to match the analog input to the mA and pressure range of a static duct pressure sensor); filter time constant to filter out electrical noise on the analog signal which can sometimes occur when long cables are installed; function and scaling of the analog outputs (for example, to provide an analog output representing motor current or kW to an analog input of a DDC controller) and to configure the analog outputs to be controlled by the BMS via a high level interface (HLI) (e.g., to control a chilled water valve) including the ability to define a default value of these outputs in the event of the HLI failing.
8-	Communication and Options	Parameters used for configuring and monitoring functions associated with the serial communications / high level interface to the adjustable frequency drive.
9-	Profibus	Parameters only applicable when a Profibus option is installed.
10-	CAN Ser. Com. Bus	Parameters only applicable when a DeviceNet option is installed.
11-	LonWorks	Parameters only applicable when a Lonworks option is installed.
13-	Smart Logic Controller	Parameters used to configure the built in Smart Logic Controller (SLC), which can be used for simple functions such as comparators (e.g., if running above xHz, activate output relay), timers (e.g., when a start signal is applied, first activate output relay to open supply air damper and wait x seconds before ramping up) or a more complex sequence of user defined actions executed by the SLC when the associated user defined event is evaluated as TRUE by the SLC. (For example, initiate an economizer mode in a simple AHU cooling application control scheme where there is no BMS. For such an application, the SLC can monitor the relative humidity of the outside air, and if it is below a defined value, the supply air temperature setpoint could be automatically increased. With the adjustable frequency drive monitoring the relative humidity of the outside air and supply air temperature via its analog inputs and controlling the chilled water valve via one of the extended PI(D) loops and an analog output, it would then modulate that valve to maintain a higher supply air temperature). The SLC can often replace the need for other external control equipment.

Table 6.2: Parameter Groups

Group	Title	Function
14-	Special Functions	Parameters used to configure special functions of the adjustable frequency drive including: setting of the switching frequency to reduce audible noise from the motor (sometimes required for fan applications); kinetic back-up function (especially useful for critical applications in semi-conductor installations where performance under line power dip/line power loss is important); line imbalance protection; automatic reset (to avoid the need for a manual reset of alarms); energy optimization parameters (which typically do not need changing but enable fine tuning of this automatic function (if necessary) ensuring the adjustable frequency drive and motor combination operate at their optimum efficiency at full and partial load conditions) and auto-derating functions (which enable the adjustable frequency drive to continue operation at reduced performance under extreme operating conditions ensuring maximum up time).
15-	FC Information	Parameters providing operating data and other drive information including: operating and running hour counters; kWh counter; resetting of the running and kWh counters; alarm/fault log (where the past 10 alarms are logged along with any associated value and time) and drive and option card indentification parameters such as code number and software version.
16-	Data Readouts	Read only parameters which display the status/value of many operating variables which can be displayed on the LCP or viewed in this parameter group. These parameters can be particularly useful during commissioning when interfacing with a BMS via a high level interface.
18-	Info & Readouts	Read-only parameters which display the last 10 preventative maintenance log items, actions and time and the value of analog inputs and outputs on the analog I/O option card which can be particularly useful during commissioning when interfacing with a BMS via a high level interface.
20-	FC Closed-loop	Parameters used to configure the closed-loop PI(D) controller which controls the speed of the pump, fan or compressor in closed-loop mode including: defining where each of the three possible feedback signals come from (e.g., which analog input or the BMS HLI); conversion factor for each of the feedback signals (e.g., where a pressure signal is used for indication of flow in an AHU or converting from pressure to temperature in a compressor application); engineering unit for the reference and feedback (e.g., Pa, kPa, m Wg, in Wg, bar, m3/s, m3/h, °C, °F, etc.); the function (e.g., sum, difference, average, minimum or maximum) used to calculate the resulting feedback for single zone applications or the control philosophy for multi-zone applications; programming of the setpoint(s) and manual or auto-tuning of the PI(D) loop.
21-	Extended Closed-loop	Parameters used to configure the three extended closed-loop PI(D) controllers which, for example, can be used to control external servos (e.g., chilled water valve to maintain supply air temperature in a VAV system) including: engineering unit for the reference and feedback of each controller (e.g., °C, °F, etc.); defining the range of the reference/setpoint for each controller; defining where each of the references/setpoints and feedback signals come from (e.g., which analog input or the BMS HLI); programming of the setpoint and manual or auto-tuning of each of the PI(D) controllers.
22-	Application Functions	Parameters used to monitor, protect and control pumps, fans and compressors including: no flow detection and protection of pumps (including auto-setup of this function); dry pump protection; end of curve detection and protection of pumps; sleep mode (especially useful for cooling tower and booster pump sets); broken belt detection (typically used for fan applications to detect no air flow instead of using a Δp switch installed across the fan); short cycle protection of compressors and pump flow compensation of setpoint (especially useful for secondary chilled water pump applications where the Δp sensor has been installed close to the pump and not across the furthest most significant load(s) in the system; using this function can compensate for the sensor installation and help to achieve maximum energy savings).
23-	Time-based Functions	Time based parameters including: those used to initiate daily or weekly actions based on the built-in real time clock (e.g., change of setpoint for night set back mode or start/stop of the pump/fan/compressor start/stop of a external equipment); preventative maintenance functions which can be based on running or operating hour time intervals or on specific dates and times; energy log (especially useful in retrofit applications or where information of the actual historical load (kW) on the pump/fan/compressor is of interest); trending (especially useful in retrofit or other applications where there is an interest to log operating power, current, frequency or speed of the pump/fan/compressor for analysis and a payback counter.
24-	Application Functions 2	Parameters used to set up fire mode and/or to control a bypass contactor/starter if designed into the system.
25-	Cascade Controller	Parameters used to configure and monitor the built-in pump cascade controller (typically used for pump booster sets).
26-	Analog I/O Option MCB 109	Parameters used to configure the Analog I/O option (MCB109) including: definition of the analog input types (e.g., voltage, Pt1000 or Ni1000) and scaling and definition of the analog output functions and scaling.

Parameter descriptions and selections are displayed on the graphic (GLCP) or numeric (NLCP) display. (See the relevant section for details.) Access the parameters by pressing the [Quick Menu] or [Main Menu] button on the control panel. The quick menu is used primarily for commissioning the unit at start-up by providing the parameters necessary to start operation. The main menu provides access to all the parameters for detailed application programming.

All digital input/output and analog input/output terminals are multifunctional. All terminals have factory default functions suitable for the majority of HVAC applications but if other special functions are required, they must be programmed as explained in parameter group 5 or 6.

6.1.7 Main Menu Mode

Both the GLCP and NLCP provide access to main menu mode. Select main menu mode by pressing the [Main Menu] key. Illustration 6.2 shows the resulting readout, which appears on the display of the GLCP.
Lines 2 through 5 on the display show a list of parameter groups which can be chosen by toggling the up and down buttons.

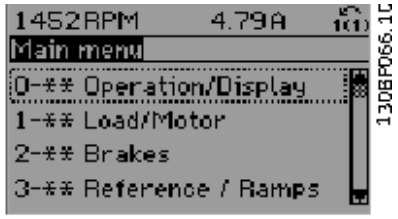

Figure 6.9: Display example.

Each parameter has a name and number which remain the same regardless of the programming mode. In main menu mode, the parameters are divided into groups. The first digit of the parameter number (from the left) indicates the parameter group number.

All parameters can be changed in the main menu. The configuration of the unit (par.1-00 *Configuration Mode*) will determine other parameters available for programming. For example, selecting Closed-loop enables additional parameters related to closed-loop operation. Option cards added to the unit enable additional parameters associated with the option device.

6

6.1.8 Changing Data

1. Press the [Quick Menu] or [Main Menu] key.
2. Use [▲] and [▼] keys to find parameter group to edit.
3. Press the [OK] key.
4. Use [▲] and [▼] keys to find parameter to edit.
5. Press the [OK] key.
6. Use the [▲] and [▼] keys to select the correct parameter setting. Or, to move to digits within a number, use the keys. The cursor indicates the digit selected to be changed. The [▲] key increases the value, the [▼] key decreases the value.
7. Press the [Cancel] key to disregard the change, or press the [OK] key to accept the change and enter the new setting.

6.1.9 Changing a Text Value

If the selected parameter is a text value, it can be changed by using the up/down navigation keys.
The up key increases the value, and the down key decreases the value. Place the cursor on the value to be saved and press [OK].



Figure 6.10: Display example.

6.1.10 Changing a Group of Numeric Data Values

If the chosen parameter represents a numeric data value, change the chosen data value using the <> navigation keys as well as the up/down navigation keys. Use the <> navigation keys to move the cursor horizontally.

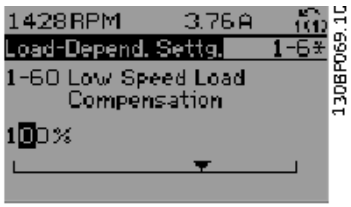

Figure 6.11: Display example.

Use the up/down navigation keys to change the data value. The up key increases the data value, while the down key reduces it. Place the cursor on the value to be saved and press [OK].

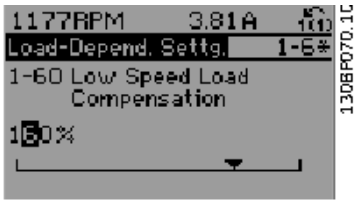

Figure 6.12: Display example.

6

6.1.11 Changing Data Values, Step-by-Step

Certain parameters can be changed step-by-step or by an infinite number of variables. This applies to par.1-20 *Motor Power [kW]*, par.1-22 *Motor Voltage* and par.1-23 *Motor Frequency*.
The parameters are changed both as a group of numeric data values, and as numeric data values using an infinite number of variables.

6.1.12 Readout and Programming of Indexed Parameters

Parameters are indexed when placed in a rolling stack.
par. 15-30 *Alarm Log: Error Code* to par. 15-32 *Alarm Log: Time* contain a fault log which can be read out. Choose a parameter, press [OK], and use the up/down navigation keys to scroll through the value log.

Use par.3-10 *Preset Reference* as another example:
Choose the parameter, press [OK], and use the up/down navigation keys to scroll through the indexed values. To change the parameter value, select the indexed value and press [OK]. Change the value by using the up/down keys. Press [OK] to accept the new setting. Press [Cancel] to abort. Press [Back] to leave the parameter.

6.2 Parameter list

6.2.1 Main Menu Structure

Parameters for the adjustable frequency drive are grouped into various parameter groups for easy selection of the correct parameters for optimized operation of the adjustable frequency drive.
The vast majority of VLT HVAC Drive applications can be programmed using the Quick Menu button and selecting the parameters under Quick Set-up and Function Set-ups.
Descriptions and default settings of parameters may be found under the section Parameter Lists at the back of this manual.

0-xx Operation/Display	10-xx CAN Serial Communication Bus
1-xx Load/Motor	11-xx LonWorks
2-xx Brakes	13-xx Smart Logic Controller
3-xx Reference/Ramps	14-xx Special Functions
4-xx Limits/ Warnings	15-xx Adjustable Frequency Drive Information
5-xx Digital In/Out	16-xx Data Readouts
6-xx Analog In/Out	18-xx Info & Readouts
8-xx Comm. and Options	20-xx Adjustable Frequency Drive Closed-loop
9-xx Profibus	21-xx Ext. Closed-loop
	22-xx Application Functions
	23-xx Time Based Functions
	24-xx Application Functions 2
	25-xx Cascade Controller
	26-xx Analog I/O Option MCB 109

6.2.2 0-** Operation and Display

Par. No. #	Parameter description	Default value (SR = Size related)	4 set-up	Change during operation	Conversion index	Type
0-0* Basic Settings						
0-01	Language	[0] English	1 set-up	TRUE	-	Uint8
0-02	Motor Speed Unit	[1] Hz	2 set-ups	FALSE	-	Uint8
0-03	Regional Settings	[0] International	2 set-ups	FALSE	-	Uint8
0-04	Operating State at Power-up	[0] Resume	All set-ups	TRUE	-	Uint8
0-05	Local Mode Unit	[0] As Motor Speed Unit	2 set-ups	FALSE	-	Uint8
0-1* Set-up Operations						
0-10	Active Set-up	[1] Set-up 1	1 set-up	TRUE	-	Uint8
0-11	Programming Set-up	[9] Active Set-up	All set-ups	TRUE	-	Uint8
0-12	This Set-up Linked to	[0] Not linked	All set-ups	FALSE	-	Uint8
0-13	Readout: Linked Set-ups	0 N/A	All set-ups	FALSE	0	Uint16
0-14	Readout: Prog. Set-ups / Channel	0 N/A	All set-ups	TRUE	0	Int32
0-2* LCP Display						
0-20	Display Line 1.1 Small	1602	All set-ups	TRUE	-	Uint16
0-21	Display Line 1.2 Small	1614	All set-ups	TRUE	-	Uint16
0-22	Display Line 1.3 Small	1610	All set-ups	TRUE	-	Uint16
0-23	Display Line 2 Large	1613	All set-ups	TRUE	-	Uint16
0-24	Display Line 3 Large	1502	All set-ups	TRUE	-	Uint16
0-25	My Personal Menu	ExpressionLimit	1 set-up	TRUE	0	Uint16
0-3* LCP Cust. Readout						
0-30	Custom Readout Unit	[1] %	All set-ups	TRUE	-	Uint8
0-31	Custom Readout Min Value	ExpressionLimit	All set-ups	TRUE	-2	Int32
0-32	Custom Readout Max Value	100.00 CustomReadoutUnit	All set-ups	TRUE	-2	Int32
0-37	Display Text 1	0 N/A	1 set-up	TRUE	0	VisStr[25]
0-38	Display Text 2	0 N/A	1 set-up	TRUE	0	VisStr[25]
0-39	Display Text 3	0 N/A	1 set-up	TRUE	0	VisStr[25]
0-4* LCP Keypad						
0-40	[Hand on] Key on LCP	[1] Enabled	All set-ups	TRUE	-	Uint8
0-41	[Off] Key on LCP	[1] Enabled	All set-ups	TRUE	-	Uint8
0-42	[Auto on] Key on LCP	[1] Enabled	All set-ups	TRUE	-	Uint8
0-43	[Reset] Key on LCP	[1] Enabled	All set-ups	TRUE	-	Uint8
0-44	[Off/Reset] Key on LCP	[1] Enabled	All set-ups	TRUE	-	Uint8
0-45	[Drive Bypass] Key on LCP	[1] Enabled	All set-ups	TRUE	-	Uint8
0-5* Copy/ Save						
0-50	LCP Copy	[0] No copy	All set-ups	FALSE	-	Uint8
0-51	Set-up Copy	[0] No copy	All set-ups	FALSE	-	Uint8

MG.11.A9.22 - VLT® is a registered Danfoss trademark

Par. No. #	Parameter description	Default value (SR = Size related)	4 set-up	Change during operation	Conversion index	Type
0-6*	Password					
0-60	Main Menu Password	100 N/A	1 set-up	TRUE	0	Int16
0-61	Access to Main Menu w/o Password	[0] Full access	1 set-up	TRUE	-	Uint8
0-65	Personal Menu Password	200 N/A	1 set-up	TRUE	0	Int16
0-66	Access to Personal Menu w/o Password	[0] Full access	1 set-up	TRUE	-	Uint8
0-7*	Clock Settings					
0-70	Set Date and Time	ExpressionLimit	All set-ups	TRUE	0	TimeOfDay
0-71	Date Format	null	1 set-up	TRUE	-	Uint8
0-72	Time Format	null	1 set-up	TRUE	-	Uint8
0-74	DST/Summertime	[0] OFF	1 set-up	TRUE	-	Uint8
0-76	DST/Summertime Start	ExpressionLimit	1 set-up	TRUE	0	TimeOfDay
0-77	DST/Summertime End	ExpressionLimit	1 set-up	TRUE	0	TimeOfDay
0-79	Clock Fault	null	1 set-up	TRUE	-	Uint8
0-81	Working Days	null	1 set-up	TRUE	-	Uint8
0-82	Additional Working Days	ExpressionLimit	1 set-up	TRUE	0	TimeOfDay
0-83	Additional Non-Working Days	ExpressionLimit	1 set-up	TRUE	0	TimeOfDay
0-89	Date and Time Readout	0 N/A	All set-ups	TRUE	0	VisStr[25]

6

6.2.3 1-** Load / Motor

Par. No. #	Parameter description	Default value (SR = Size related)	4 set-up	Change during operation	Conversion index	Type
1-0*	General Settings					
1-00	Configuration Mode	null	All set-ups	TRUE	-	Uint8
1-03	Torque Characteristics	[3] Auto Energy Optim. VT	All set-ups	TRUE	-	Uint8
1-2*	Motor Data					
1-20	Motor Power [kW]	ExpressionLimit	All set-ups	FALSE	1	Uint32
1-21	Motor Power [HP]	ExpressionLimit	All set-ups	FALSE	-2	Uint32
1-22	Motor Voltage	ExpressionLimit	All set-ups	FALSE	0	Uint16
1-23	Motor Frequency	ExpressionLimit	All set-ups	FALSE	0	Uint16
1-24	Motor Current	ExpressionLimit	All set-ups	FALSE	-2	Uint32
1-25	Motor Nominal Speed	ExpressionLimit	All set-ups	FALSE	67	Uint16
1-28	Motor Rotation Check	[0] OFF	All set-ups	FALSE	-	Uint8
1-29	Automatic Motor Adaptation (AMA)	[0] Off	All set-ups	FALSE	-	Uint8
1-3*	Addl. Motor Data					
1-30	Stator Resistance (Rs)	ExpressionLimit	All set-ups	FALSE	-4	Uint32
1-31	Rotor Resistance (Rr)	ExpressionLimit	All set-ups	FALSE	-4	Uint32
1-35	Main Reactance (Xh)	ExpressionLimit	All set-ups	FALSE	-4	Uint32
1-36	Iron Loss Resistance (Rfe)	ExpressionLimit	All set-ups	FALSE	-3	Uint32
1-39	Motor Poles	ExpressionLimit	All set-ups	FALSE	0	Uint8
1-5*	Load-Indep. Setting					
1-50	Motor Magnetization at Zero Speed	100 %	All set-ups	TRUE	0	Uint16
1-51	Min Speed Normal Magnetizing [RPM]	ExpressionLimit	All set-ups	TRUE	67	Uint16
1-52	Min Speed Normal Magnetizing [Hz]	ExpressionLimit	All set-ups	TRUE	-1	Uint16
1-6*	Load-Depend. Settg.					
1-60	Low Speed Load Compensation	100 %	All set-ups	TRUE	0	Int16
1-61	High Speed Load Compensation	100 %	All set-ups	TRUE	0	Int16
1-62	Slip Compensation	0 %	All set-ups	TRUE	0	Int16
1-63	Slip Compensation Time Constant	ExpressionLimit	All set-ups	TRUE	-2	Uint16
1-64	Resonance Dampening	100 %	All set-ups	TRUE	0	Uint16
1-65	Resonance Dampening Time Constant	5 ms	All set-ups	TRUE	-3	Uint8
1-7*	Start Adjustments					
1-71	Start Delay	0.0 s	All set-ups	TRUE	-1	Uint16
1-73	Flying Start	[0] Disabled	All set-ups	FALSE	-	Uint8
1-8*	Stop Adjustments					
1-80	Function at Stop	[0] Coast	All set-ups	TRUE	-	Uint8
1-81	Min Speed for Function at Stop [RPM]	ExpressionLimit	All set-ups	TRUE	67	Uint16
1-82	Min Speed for Function at Stop [Hz]	ExpressionLimit	All set-ups	TRUE	-1	Uint16
1-86	Trip Speed Low [RPM]	0 RPM	All set-ups	TRUE	67	Uint16
1-87	Trip Speed Low [Hz]	0.0 Hz	All set-ups	TRUE	-1	Uint16
1-9*	Motor Temperature					
1-90	Motor Thermal Protection	[4] ETR trip 1	All set-ups	TRUE	-	Uint8
1-91	Motor External Fan	[0] No	All set-ups	TRUE	-	Uint16
1-93	Thermistor Source	[0] None	All set-ups	TRUE	-	Uint8

MG.11.A9.22 - VLT® is a registered Danfoss trademark

6.2.4 2-** Brakes

Par. No. #	Parameter description	Default value (SR = Size related)	4 set-up	Change during operation	Conversion index	Type
2-0* DC Brake						
2-00	DC Hold/Preheat Current	50 %	All set-ups	TRUE	0	Uint8
2-01	DC Brake Current	50 %	All set-ups	TRUE	0	Uint16
2-02	DC Braking Time	10.0 s	All set-ups	TRUE	-1	Uint16
2-03	DC Brake Cut-in Speed [RPM]	ExpressionLimit	All set-ups	TRUE	67	Uint16
2-04	DC Brake Cut-in Speed [Hz]	ExpressionLimit	All set-ups	TRUE	-1	Uint16
2-1* Brake Energy Funct.						
2-10	Brake Function	[0] Off	All set-ups	TRUE	-	Uint8
2-11	Brake Resistor (ohm)	ExpressionLimit	All set-ups	TRUE	-2	Uint32
2-12	Brake Power Limit (kW)	ExpressionLimit	All set-ups	TRUE	0	Uint32
2-13	Brake Power Monitoring	[0] Off	All set-ups	TRUE	-	Uint8
2-15	Brake Check	[0] Off	All set-ups	TRUE	-	Uint8
2-16	AC Brake Max. Current	100.0 %	All set-ups	TRUE	-1	Uint32
2-17	Over-voltage Control	[2] Enabled	All set-ups	TRUE	-	Uint8

MG.11.A9.22 - VLT® is a registered Danfoss trademark

6.2.5 3-** Reference / Ramps

Par. No. #	Parameter description	Default value	4-set-up	Change during operation	Conversion index	Type
3-0*	Reference Limits					
3-02	Minimum Reference	ExpressionLimit	All set-ups	TRUE	-3	Int32
3-03	Maximum Reference	ExpressionLimit	All set-ups	TRUE	-3	Int32
3-04	Reference Function	null	All set-ups	TRUE	-	Uint8
3-1*	References					
3-10	Preset Reference	0.00 %	All set-ups	TRUE	-2	Int16
3-11	Jog Speed [Hz]	ExpressionLimit	All set-ups	TRUE	-1	Uint16
3-13	Reference Site	[0] Linked to Hand / Auto	All set-ups	TRUE	-	Uint8
3-14	Preset Relative Reference	0.00 %	All set-ups	TRUE	-2	Int32
3-15	Reference 1 Source	[1] Analog input 53	All set-ups	TRUE	-	Uint8
3-16	Reference 2 Source	[20] Digital pot.meter	All set-ups	TRUE	-	Uint8
3-17	Reference 3 Source	[0] No function	All set-ups	TRUE	-	Uint8
3-19	Jog Speed [RPM]	ExpressionLimit	All set-ups	TRUE	67	Uint16
3-4*	Ramp 1					
3-41	Ramp 1 Ramp-up Time	ExpressionLimit	All set-ups	TRUE	-2	Uint32
3-42	Ramp 1 Ramp-down Time	ExpressionLimit	All set-ups	TRUE	-2	Uint32
3-5*	Ramp 2					
3-51	Ramp 2 Ramp-up Time	ExpressionLimit	All set-ups	TRUE	-2	Uint32
3-52	Ramp 2 Ramp-down Time	ExpressionLimit	All set-ups	TRUE	-2	Uint32
3-8*	Other Ramps					
3-80	Jog Ramp Time	ExpressionLimit	All set-ups	TRUE	-2	Uint32
3-81	Quick Stop Ramp Time	ExpressionLimit	2 set-ups	TRUE	-2	Uint32
3-9*	Digital Pot. meter					
3-90	Step Size	0.10 %	All set-ups	TRUE	-2	Uint16
3-91	Ramp Time	1.00 s	All set-ups	TRUE	-2	Uint32
3-92	Power Restore	[0] Off	All set-ups	TRUE	-	Uint8
3-93	Maximum Limit	100 %	All set-ups	TRUE	0	Int16
3-94	Minimum Limit	0 %	All set-ups	TRUE	0	Int16
3-95	Ramp Delay	ExpressionLimit	All set-ups	TRUE	-3	TimD

MG.11.A9.22 - VLT® is a registered Danfoss trademark

6.2.6 4-** Limits / Warnings

Par. No. #	Parameter description	Default value (SR = Size related)	4 set-up	Change during operation	Conversion index	Type
4-1* Motor Limits						
4-10	Motor Speed Direction	[2] Both directions	All set-ups	FALSE	-	Uint8
4-11	Motor Speed Low Limit [RPM]	ExpressionLimit	All set-ups	TRUE	67	Uint16
4-12	Motor Speed Low Limit [Hz]	ExpressionLimit	All set-ups	TRUE	-1	Uint16
4-13	Motor Speed High Limit [RPM]	ExpressionLimit	All set-ups	TRUE	67	Uint16
4-14	Motor Speed High Limit [Hz]	ExpressionLimit	All set-ups	TRUE	-1	Uint16
4-16	Torque Limit Motor Mode	ExpressionLimit	All set-ups	TRUE	-1	Uint16
4-17	Torque Limit Generator Mode	100.0 %	All set-ups	TRUE	-1	Uint16
4-18	Current Limit	ExpressionLimit	All set-ups	TRUE	-1	Uint32
4-19	Max Output Frequency	ExpressionLimit	All set-ups	FALSE	-1	Uint16
4-5* Adj. Warnings						
4-50	Warning Current Low	0.00 A	All set-ups	TRUE	-2	Uint32
4-51	Warning Current High	ImaxVLT (P1637)	All set-ups	TRUE	-2	Uint32
4-52	Warning Speed Low	0 RPM	All set-ups	TRUE	67	Uint16
4-53	Warning Speed High	outputSpeedHighLimit (P413)	All set-ups	TRUE	67	Uint16
4-54	Warning Reference Low	-999999.999 N/A	All set-ups	TRUE	-3	Int32
4-55	Warning Reference High	999999.999 N/A	All set-ups	TRUE	-3	Int32
4-56	Warning Feedback Low	-999999.999 ProcessCtrlUnit	All set-ups	TRUE	-3	Int32
4-57	Warning Feedback High	999999.999 ProcessCtrlUnit	All set-ups	TRUE	-3	Int32
4-58	Missing Motor Phase Function	[2] Trip 1000 ms	All set-ups	TRUE	-	Uint8
4-6* Speed Bypass						
4-60	Bypass Speed From [RPM]	ExpressionLimit	All set-ups	TRUE	67	Uint16
4-61	Bypass Speed From [Hz]	ExpressionLimit	All set-ups	TRUE	-1	Uint16
4-62	Bypass Speed to [RPM]	ExpressionLimit	All set-ups	TRUE	67	Uint16
4-63	Bypass Speed To [Hz]	ExpressionLimit	All set-ups	TRUE	-1	Uint16
4-64	Semi-Auto Bypass Set-up	[0] OFF	All set-ups	FALSE	-	Uint8

MG.11.A9.22 - VLT® is a registered Danfoss trademark

6.2.7 5-** Digital In / Out

Par. No. #	Parameter description	Default value (SR = Size related)	4 set-up	Change during operation	Conversion index	Type
5-0*	Digital I/O mode					
5-00	Digital I/O Mode	[0] PNP - Active at 24 V	All set-ups	FALSE	-	Uint8
5-01	Terminal 27 Mode	[0] Input	All set-ups	TRUE	-	Uint8
5-02	Terminal 29 Mode	[0] Input	All set-ups	TRUE	-	Uint8
5-1*	Digital Inputs					
5-10	Terminal 18 Digital Input	[8] Start	All set-ups	TRUE	-	Uint8
5-11	Terminal 19 Digital Input	[0] No operation	All set-ups	TRUE	-	Uint8
5-12	Terminal 27 Digital Input	null	All set-ups	TRUE	-	Uint8
5-13	Terminal 29 Digital Input	[14] Jog	All set-ups	TRUE	-	Uint8
5-14	Terminal 32 Digital Input	[0] No operation	All set-ups	TRUE	-	Uint8
5-15	Terminal 33 Digital Input	[0] No operation	All set-ups	TRUE	-	Uint8
5-16	Terminal X30/2 Digital Input	[0] No operation	All set-ups	TRUE	-	Uint8
5-17	Terminal X30/3 Digital Input	[0] No operation	All set-ups	TRUE	-	Uint8
5-18	Terminal X30/4 Digital Input	[0] No operation	All set-ups	TRUE	-	Uint8
5-3*	Digital Outputs					
5-30	Terminal 27 Digital Output	[0] No operation	All set-ups	TRUE	-	Uint8
5-31	Terminal 29 digital Output	[0] No operation	All set-ups	TRUE	-	Uint8
5-32	Term X30/6 Digi Out (MCB 101)	[0] No operation	All set-ups	TRUE	-	Uint8
5-33	Term X30/7 Digi Out (MCB 101)	[0] No operation	All set-ups	TRUE	-	Uint8
5-4*	Relays					
5-40	Function Relay	null	All set-ups	TRUE	-	Uint8
5-41	On Delay, Relay	0.01 s	All set-ups	TRUE	-2	Uint16
5-42	Off Delay, Relay	0.01 s	All set-ups	TRUE	-2	Uint16
5-5*	Pulse Input					
5-50	Term. 29 Low Frequency	100 Hz	All set-ups	TRUE	0	Uint32
5-51	Term. 29 High Frequency	100 Hz	All set-ups	TRUE	0	Uint32
5-52	Term. 29 Low Ref./Feedb. Value	0.000 N/A	All set-ups	TRUE	-3	Int32
5-53	Term. 29 High Ref./Feedb. Value	100.000 N/A	All set-ups	TRUE	-3	Int32
5-54	Pulse Filter Time Constant #29	100 ms	All set-ups	FALSE	-3	Uint16
5-55	Term. 33 Low Frequency	100 Hz	All set-ups	TRUE	0	Uint32
5-56	Term. 33 High Frequency	100 Hz	All set-ups	TRUE	0	Uint32
5-57	Term. 33 Low Ref./Feedb. Value	0.000 N/A	All set-ups	TRUE	-3	Int32
5-58	Term. 33 High Ref./Feedb. Value	100.000 N/A	All set-ups	TRUE	-3	Int32
5-59	Pulse Filter Time Constant #33	100 ms	All set-ups	FALSE	-3	Uint16

MG.11.A9.22 - VLT® is a registered Danfoss trademark

Par. No. #	Parameter description	Default value (SR = Size related)	4 set-up	Change during operation	Conversion index	Type
5-6*	Pulse Output					
5-60	Terminal 27 Pulse Output Variable	[0] No operation	All set-ups	TRUE	-	Uint8
5-62	Pulse Output Max Freq #27	5000 Hz	All set-ups	TRUE	0	Uint32
5-63	Terminal 29 Pulse Output Variable	[0] No operation	All set-ups	TRUE	-	Uint8
5-65	Pulse Output Max Freq #29	5000 Hz	All set-ups	TRUE	0	Uint32
5-66	Terminal X30/6 Pulse Output Variable	[0] No operation	All set-ups	TRUE	-	Uint8
5-68	Pulse Output Max Freq #X30/6	5000 Hz	All set-ups	TRUE	0	Uint32
5-9*	Bus Controlled					
5-90	Digital & Relay Bus Control	0 N/A	All set-ups	TRUE	0	Uint32
5-93	Pulse Out #27 Bus Control	0.00 %	All set-ups	TRUE	-2	N2
5-94	Pulse Out #27 Timeout Preset	0.00 %	1 set-up	TRUE	-2	Uint16
5-95	Pulse Out #29 Bus Control	0.00 %	All set-ups	TRUE	-2	N2
5-96	Pulse Out #29 Timeout Preset	0.00 %	1 set-up	TRUE	-2	Uint16
5-97	Pulse Out #X30/6 Bus Control	0.00 %	All set-ups	TRUE	-2	N2
5-98	Pulse Out #X30/6 Timeout Preset	0.00 %	1 set-up	TRUE	-2	Uint16

6.2.8 6-** Analog In / Out

Par. No. #	Parameter description	Default value (SR = Size related)	4 set-up	Change during operation	Conversion index	Type
6-0* Analog I/O Mode						
6-00	Live Zero Timeout Time	10 s	All set-ups	TRUE	0	Uint8
6-01	Live Zero Timeout Function	[0] Off	All set-ups	TRUE	-	Uint8
6-02	Fire Mode Live Zero Timeout Function	[0] Off	All set-ups	TRUE	-	Uint8
6-1* Analog Input 53						
6-10	Terminal 53 Low Voltage	0.07 V	All set-ups	TRUE	-2	Int16
6-11	Terminal 53 High Voltage	10.00 V	All set-ups	TRUE	-2	Int16
6-12	Terminal 53 Low Current	4.00 mA	All set-ups	TRUE	-5	Int16
6-13	Terminal 53 High Current	20.00 mA	All set-ups	TRUE	-5	Int16
6-14	Terminal 53 Low Ref./Feedb. Value	0.000 N/A	All set-ups	TRUE	-3	Int32
6-15	Terminal 53 High Ref./Feedb. Value	ExpressionLimit	All set-ups	TRUE	-3	Int32
6-16	Terminal 53 Filter Time Constant	0.001 s	All set-ups	TRUE	-3	Uint16
6-17	Terminal 53 Live Zero	[1] Enabled	All set-ups	TRUE	-	Uint8
6-2* Analog Input 54						
6-20	Terminal 54 Low Voltage	0.07 V	All set-ups	TRUE	-2	Int16
6-21	Terminal 54 High Voltage	10.00 V	All set-ups	TRUE	-2	Int16
6-22	Terminal 54 Low Current	4.00 mA	All set-ups	TRUE	-5	Int16
6-23	Terminal 54 High Current	20.00 mA	All set-ups	TRUE	-5	Int16
6-24	Terminal 54 Low Ref./Feedb. Value	0.000 N/A	All set-ups	TRUE	-3	Int32
6-25	Terminal 54 High Ref./Feedb. Value	100.000 N/A	All set-ups	TRUE	-3	Int32
6-26	Terminal 54 Filter Time Constant	0.001 s	All set-ups	TRUE	-3	Uint16
6-27	Terminal 54 Live Zero	[1] Enabled	All set-ups	TRUE	-	Uint8
6-3* Analog Input X30/11						
6-30	Terminal X30/11 Low Voltage	0.07 V	All set-ups	TRUE	-2	Int16
6-31	Terminal X30/11 High Voltage	10.00 V	All set-ups	TRUE	-2	Int16
6-34	Term. X30/11 Low Ref./Feedb. Value	0.000 N/A	All set-ups	TRUE	-3	Int32
6-35	Term. X30/11 High Ref./Feedb. Value	100.000 N/A	All set-ups	TRUE	-3	Int32
6-36	Term. X30/11 Filter Time Constant	0.001 s	All set-ups	TRUE	-3	Uint16
6-37	Term. X30/11 Live Zero	[1] Enabled	All set-ups	TRUE	-	Uint8
6-4* Analog Input X30/12						
6-40	Terminal X30/12 Low Voltage	0.07 V	All set-ups	TRUE	-2	Int16
6-41	Terminal X30/12 High Voltage	10.00 V	All set-ups	TRUE	-2	Int16
6-44	Term. X30/12 Low Ref./Feedb. Value	0.000 N/A	All set-ups	TRUE	-3	Int32
6-45	Term. X30/12 High Ref./Feedb. Value	100.000 N/A	All set-ups	TRUE	-3	Int32
6-46	Term. X30/12 Filter Time Constant	0.001 s	All set-ups	TRUE	-3	Uint16
6-47	Term. X30/12 Live Zero	[1] Enabled	All set-ups	TRUE	-	Uint8

MG.11.A9.22 - VLT® is a registered Danfoss trademark

Par. No. #	Parameter description	Default value (SR = Size related)	4 set-up	Change during operation	Conversion index	Type
6-5*	Analog Output 42					
6-50	Terminal 42 Output	null	All set-ups	TRUE	-	Uint8
6-51	Terminal 42 Output Min Scale	0.00 %	All set-ups	TRUE	-2	Int16
6-52	Terminal 42 Output Max Scale	100.00 %	All set-ups	TRUE	-2	Int16
6-53	Terminal 42 Output Bus Control	0.00 %	All set-ups	TRUE	-2	N2
6-54	Terminal 42 Output Timeout Preset	0.00 %	1 set-up	TRUE	-2	Uint16
6-6*	Analog Output X30/8					
6-60	Terminal X30/8 Output	[0] No operation	All set-ups	TRUE	-	Uint8
6-61	Terminal X30/8 Min. Scale	0.00 %	All set-ups	TRUE	-2	Int16
6-62	Terminal X30/8 Max. Scale	100.00 %	All set-ups	TRUE	-2	Int16
6-63	Terminal X30/8 Output Bus Control	0.00 %	All set-ups	TRUE	-2	N2
6-64	Terminal X30/8 Output Timeout Preset	0.00 %	1 set-up	TRUE	-2	Uint16

6.2.9 8-** Communication and Options

Par. No. #	Parameter description	Default value (SR = Size related)	4 set-up	Change during operation	Conversion index	Type
8-0*	General Settings					
8-01	Control Site	null	All set-ups	TRUE	-	Uint8
8-02	Control Source	null	All set-ups	TRUE	-	Uint8
8-03	Control Timeout Time	ExpressionLimit	1 set-up	TRUE	-1	Uint32
8-04	Control Timeout Function	[0] Off	1 set-up	TRUE	-	Uint8
8-05	End-of-Timeout Function	[1] Resume set-up	1 set-up	TRUE	-	Uint8
8-06	Reset Control Timeout	[0] Do not reset	All set-ups	TRUE	-	Uint8
8-07	Diagnosis Trigger	[0] Disable	2 set-ups	TRUE	-	Uint8
8-1*	Control Settings					
8-10	Control Profile	[0] FC profile	All set-ups	TRUE	-	Uint8
8-13	Configurable Status Word STW	[1] Profile Default	All set-ups	TRUE	-	Uint8
8-3*	FC Port Settings					
8-30	Protocol	null	1 set-up	TRUE	-	Uint8
8-31	Address	ExpressionLimit	1 set-up	TRUE	0	Uint8
8-32	Baud Rate	null	1 set-up	TRUE	-	Uint8
8-33	Parity / Stop Bits	null	1 set-up	TRUE	-	Uint8
8-35	Minimum Response Delay	ExpressionLimit	1 set-up	TRUE	-3	Uint16
8-36	Max Response Delay	ExpressionLimit	1 set-up	TRUE	-3	Uint16
8-37	Max Inter-Char Delay	ExpressionLimit	1 set-up	TRUE	-5	Uint16
8-4*	FC MC protocol set					
8-40	Telegram selection	[1] Standard telegram 1	2 set-ups	TRUE	-	Uint8
8-5*	Digital/ Bus					
8-50	Coasting Select	[3] Logic OR	All set-ups	TRUE	-	Uint8
8-52	DC Brake Select	[3] Logic OR	All set-ups	TRUE	-	Uint8
8-53	Start Select	[3] Logic OR	All set-ups	TRUE	-	Uint8
8-54	Reverse Select	null	All set-ups	TRUE	-	Uint8
8-55	Set-up Select	[3] Logic OR	All set-ups	TRUE	-	Uint8
8-56	Preset Reference Select	[3] Logic OR	All set-ups	TRUE	-	Uint8
8-7*	BACnet					
8-70	BACnet Device Instance	1 N/A	1 set-up	TRUE	0	Uint32
8-72	MS/TP Max Masters	127 N/A	1 set-up	TRUE	0	Uint8
8-73	MS/TP Max Info Frames	1 N/A	1 set-up	TRUE	0	Uint16
8-74	"Startup I am"	[0] Send at power-up	1 set-up	TRUE	-	Uint8
8-75	Initialization Password	ExpressionLimit	1 set-up	TRUE	0	VisStr[20]
8-8*	FC Port Diagnostics					
8-80	Bus Message Count	0 N/A	All set-ups	TRUE	0	Uint32
8-81	Bus Error Count	0 N/A	All set-ups	TRUE	0	Uint32
8-82	Slave Message Count	0 N/A	All set-ups	TRUE	0	Uint32
8-83	Slave Error Count	0 N/A	All set-ups	TRUE	0	Uint32
8-84	Slave Messages Sent	0 N/A	All set-ups	TRUE	0	Uint32
8-85	Slave Timeout Errors	0 N/A	All set-ups	TRUE	0	Uint32
8-89	Diagnostics Count	0 N/A	1 set-up	TRUE	0	Int32
8-9*	Bus Jog					
8-90	Bus Jog 1 Speed	100 RPM	All set-ups	TRUE	67	Uint16
8-91	Bus Jog 2 Speed	200 RPM	All set-ups	TRUE	67	Uint16
8-94	Bus Feedback 1	0 N/A	1 set-up	TRUE	0	N2
8-95	Bus Feedback 2	0 N/A	1 set-up	TRUE	0	N2
8-96	Bus Feedback 3	0 N/A	1 set-up	TRUE	0	N2

MG.11.A9.22 - VLT® is a registered Danfoss trademark

6.2.10 9-** Profibus

Par. No. #	Parameter description	Default value (SR = Size related)	4 set-up	Change during operation	Conversion index	Type
9-00	Setpoint	0 N/A	All set-ups	TRUE	0	Uint16
9-07	Actual Value	0 N/A	All set-ups	FALSE	0	Uint16
9-15	PCD Write Configuration	ExpressionLimit	2 set-ups	TRUE	-	Uint16
9-16	PCD Read Configuration	ExpressionLimit	2 set-ups	TRUE	-	Uint16
9-18	Node Address	126 N/A	1 set-up	TRUE	0	Uint8
9-22	Telegram Selection	[108] PPO 8	1 set-up	TRUE	-	Uint8
9-23	Parameters for Signals	0	All set-ups	TRUE	-	Uint16
9-27	Parameter Edit	[1] Enabled	2 set-ups	FALSE	-	Uint16
9-28	Process Control	[1] Enable cyclic master	2 set-ups	FALSE	-	Uint8
9-44	Fault Message Counter	0 N/A	All set-ups	TRUE	0	Uint16
9-45	Fault Code	0 N/A	All set-ups	TRUE	0	Uint16
9-47	Fault Number	0 N/A	All set-ups	TRUE	0	Uint16
9-52	Fault Situation Counter	0 N/A	All set-ups	TRUE	0	Uint16
9-53	Profibus Warning Word	0 N/A	All set-ups	TRUE	0	V2
9-63	Actual Baud Rate	[255] No baud rate found	All set-ups	TRUE	-	Uint8
9-64	Device Identification	0 N/A	All set-ups	TRUE	0	Uint16
9-65	Profile Number	0 N/A	All set-ups	TRUE	0	OctStr[2]
9-67	Control Word 1	0 N/A	All set-ups	TRUE	0	V2
9-68	Status Word 1	0 N/A	All set-ups	TRUE	0	V2
9-71	Profibus Save Data Values	[0] Off	All set-ups	TRUE	-	Uint8
9-72	ProfibusDriveReset	[0] No action	1 set-up	FALSE	-	Uint8
9-80	Defined Parameters (1)	0 N/A	All set-ups	FALSE	0	Uint16
9-81	Defined Parameters (2)	0 N/A	All set-ups	FALSE	0	Uint16
9-82	Defined Parameters (3)	0 N/A	All set-ups	FALSE	0	Uint16
9-83	Defined Parameters (4)	0 N/A	All set-ups	FALSE	0	Uint16
9-84	Defined Parameters (5)	0 N/A	All set-ups	FALSE	0	Uint16
9-90	Changed Parameters (1)	0 N/A	All set-ups	FALSE	0	Uint16
9-91	Changed Parameters (2)	0 N/A	All set-ups	FALSE	0	Uint16
9-92	Changed Parameters (3)	0 N/A	All set-ups	FALSE	0	Uint16
9-93	Changed Parameters (4)	0 N/A	All set-ups	FALSE	0	Uint16
9-94	Changed parameters (5)	0 N/A	All set-ups	FALSE	0	Uint16

MG.11.A9.22 - VLT® is a registered Danfoss trademark

6.2.11 10-** CAN Fieldbus

Par. No. #	Parameter description	Default value (SR = Size related)	4 set-up	Change during operation	Conversion index	Type
10-0*	Common Settings					
10-00	CAN Protocol	null	2 set-ups	FALSE	-	Uint8
10-01	Baud Rate Select	null	2 set-ups	TRUE	-	Uint8
10-02	MAC ID	ExpressionLimit	2 set-ups	TRUE	0	Uint8
10-05	Readout Transmit Error Counter	0 N/A	All set-ups	TRUE	0	Uint8
10-06	Readout Receive Error Counter	0 N/A	All set-ups	TRUE	0	Uint8
10-07	Readout Bus Off Counter	0 N/A	All set-ups	TRUE	0	Uint8
10-1*	DeviceNet					
10-10	Process Data Type Selection	null	All set-ups	TRUE	-	Uint8
10-11	Process Data Config Write	ExpressionLimit	2 set-ups	TRUE	-	Uint16
10-12	Process Data Config Read	ExpressionLimit	2 set-ups	TRUE	-	Uint16
10-13	Warning Parameter	0 N/A	All set-ups	TRUE	0	Uint16
10-14	Net Reference	[0] Off	2 set-ups	TRUE	-	Uint8
10-15	Net Control	[0] Off	2 set-ups	TRUE	-	Uint8
10-2*	COS Filters					
10-20	COS Filter 1	0 N/A	All set-ups	FALSE	0	Uint16
10-21	COS Filter 2	0 N/A	All set-ups	FALSE	0	Uint16
10-22	COS Filter 3	0 N/A	All set-ups	FALSE	0	Uint16
10-23	COS Filter 4	0 N/A	All set-ups	FALSE	0	Uint16
10-3*	Parameter Access					
10-30	Array Index	0 N/A	2 set-ups	TRUE	0	Uint8
10-31	Store Data Values	[0] Off	All set-ups	TRUE	-	Uint8
10-32	Devicenet Revision	0 N/A	All set-ups	TRUE	0	Uint16
10-33	Store Always	[0] Off	1 set-up	TRUE	-	Uint8
10-34	DeviceNet Product Code	120 N/A	1 set-up	TRUE	0	Uint16
10-39	Devicenet F Parameters	0 N/A	All set-ups	TRUE	0	Uint32

MG.11.A9.22 - VLT® is a registered Danfoss trademark

6.2.12 11-** LonWorks

Par. No. #	Parameter description	Default value (SR = Size related)	4 set-up	Change during operation	Conversion index	Type
11-0*	LonWorks ID					
11-00	Neuron ID	0 N/A	All set-ups	TRUE	0	OctStr[6]
11-1*	LON Functions					
11-10	Drive Profile	[0] VSD profile	All set-ups	TRUE	-	Uint8
11-15	LON Warning Word	0 N/A	All set-ups	TRUE	0	Uint16
11-17	XIF Revision	0 N/A	All set-ups	TRUE	0	VisStr[5]
11-18	LonWorks Revision	0 N/A	All set-ups	TRUE	0	VisStr[5]
11-2*	LON Param. Access					
11-21	Store Data Values	[0] Off	All set-ups	TRUE	-	Uint8

MG.11.A9.22 - VLT® is a registered Danfoss trademark

6.2.13 13-** Smart Logic Controller

Par. No. #	Parameter description	Default value (SR = Size related)	4 set-up	Change during operation	Conversion index	Type
13-0*	SLC Settings					
13-00	SL Controller Mode	null	2 set-ups	TRUE	-	Uint8
13-01	Start Event	null	2 set-ups	TRUE	-	Uint8
13-02	Stop Event	null	2 set-ups	TRUE	-	Uint8
13-03	Reset SLC	[0] Do not reset SLC	All set-ups	TRUE	-	Uint8
13-1*	Comparators					
13-10	Comparator Operand	null	2 set-ups	TRUE	-	Uint8
13-11	Comparator Operator	null	2 set-ups	TRUE	-	Uint8
13-12	Comparator Value	ExpressionLimit	2 set-ups	TRUE	-3	Int32
13-2*	Timers					
13-20	SL Controller Timer	ExpressionLimit	1 set-up	TRUE	-3	TimD
13-4*	Logic Rules					
13-40	Logic Rule Boolean 1	null	2 set-ups	TRUE	-	Uint8
13-41	Logic Rule Operator 1	null	2 set-ups	TRUE	-	Uint8
13-42	Logic Rule Boolean 2	null	2 set-ups	TRUE	-	Uint8
13-43	Logic Rule Operator 2	null	2 set-ups	TRUE	-	Uint8
13-44	Logic Rule Boolean 3	null	2 set-ups	TRUE	-	Uint8
13-5*	States					
13-51	SL Controller Event	null	2 set-ups	TRUE	-	Uint8
13-52	SL Controller Action	null	2 set-ups	TRUE	-	Uint8

MG.11.A9.22 - VLT® is a registered Danfoss trademark

6.2.14 14-** Special Functions

Par. No. #	Parameter description	Default value (SR = Size related)	4 set-up	Change during operation	Conversion index	Type
14-0*	Inverter Switching					
14-00	Switching Pattern	[0] 60 AVM	All set-ups	TRUE	-	Uint8
14-01	Switching Frequency	null	All set-ups	TRUE	-	Uint8
14-03	Overmodulation	[1] On	All set-ups	FALSE	-	Uint8
14-04	PWM Random	[0] Off	All set-ups	TRUE	-	Uint8
14-1*	Mains On/ Off					
14-10	Line Failure	[0] No function	All set-ups	FALSE	-	Uint8
14-11	Line Voltage at Line Fault	ExpressionLimit	All set-ups	TRUE	0	Uint16
14-12	Function at Mains Imbalance	[0] Trip	All set-ups	TRUE	-	Uint8
14-2*	Reset Functions					
14-20	Reset Mode	null	All set-ups	TRUE	-	Uint8
14-21	Automatic Restart Time	10 s	All set-ups	TRUE	0	Uint16
14-22	Operation Mode	[0] Normal operation	All set-ups	TRUE	-	Uint8
14-23	Typecode Setting	null	2 set-ups	FALSE	-	Uint8
14-25	Trip Delay at Torque Limit	60 s	All set-ups	TRUE	0	Uint8
14-26	Trip Delay at Inverter Fault	ExpressionLimit	All set-ups	TRUE	0	Uint8
14-28	Production Settings	[0] No action	All set-ups	TRUE	-	Uint8
14-29	Service Code	0 N/A	All set-ups	TRUE	0	Int32
14-3*	Current Limit Ctrl.					
14-30	Current Lim Cont, Proportional Gain	100 %	All set-ups	FALSE	0	Uint16
14-31	Current Lim Contr, Integration Time	0.020 s	All set-ups	FALSE	-3	Uint16
14-32	Current Lim Ctrl, Filter Time	26.0 ms	All set-ups	TRUE	-4	Uint16
14-4*	Energy Optimizing					
14-40	VT Level	66 %	All set-ups	FALSE	0	Uint8
14-41	AEO Minimum Magnetization	ExpressionLimit	All set-ups	TRUE	0	Uint8
14-42	Minimum AEO Frequency	10 Hz	All set-ups	TRUE	0	Uint8
14-43	Motor Cos-Phi	ExpressionLimit	All set-ups	TRUE	-2	Uint16
14-5*	Environment					
14-50	RFI 1	[1] On	1 set-up	FALSE	-	Uint8
14-52	Fan Control	[0] Auto	All set-ups	TRUE	-	Uint8
14-53	Fan Monitor	[1] Warning	All set-ups	TRUE	-	Uint8
14-59	Actual Number of Inverter Units	ExpressionLimit	1 set-up	FALSE	0	Uint8
14-6*	Auto Derate					
14-60	Function at Overtemperature	[0] Trip	All set-ups	TRUE	-	Uint8
14-61	Function at Inverter Overload	[0] Trip	All set-ups	TRUE	-	Uint8
14-62	Inv. Overload Derate Current	95 %	All set-ups	TRUE	0	Uint16

MG.11.A9.22 - VLT® is a registered Danfoss trademark

6.2.15 15-** FC Information

Par. No. #	Parameter description	Default value (SR = Size related)	4 set-up	Change during operation	Conversion index	Type
15-0*	Operating Data					
15-00	Operating Hours	0 h	All set-ups	FALSE	74	Uint32
15-01	Running Hours	0 h	All set-ups	FALSE	74	Uint32
15-02	kWh Counter	0 kWh	All set-ups	FALSE	75	Uint32
15-03	Power-ups	0 N/A	All set-ups	FALSE	0	Uint32
15-04	Over Temps	0 N/A	All set-ups	FALSE	0	Uint16
15-05	Over Volts	0 N/A	All set-ups	FALSE	0	Uint16
15-06	Reset kWh Counter	[0] Do not reset	All set-ups	TRUE	-	Uint8
15-07	Reset Running Hours Counter	[0] Do not reset	All set-ups	TRUE	-	Uint8
15-08	Number of Starts	0 N/A	All set-ups	FALSE	0	Uint32
15-1*	Data Log Settings					
15-10	Logging Source	0	2 set-ups	TRUE	-	Uint16
15-11	Logging Interval	ExpressionLimit	2 set-ups	TRUE	-3	TimD
15-12	Trigger Event	[0] FALSE	1 set-up	TRUE	-	Uint8
15-13	Logging Mode	[0] Log always	2 set-ups	TRUE	-	Uint8
15-14	Samples Before Trigger	50 N/A	2 set-ups	TRUE	0	Uint8
15-2*	Historic Log					
15-20	Historic Log: Event	0 N/A	All set-ups	FALSE	0	Uint8
15-21	Historic Log: Value	0 N/A	All set-ups	FALSE	0	Uint32
15-22	Historic Log: Time	0 ms	All set-ups	FALSE	-3	Uint32
15-23	Historic Log: Date and Time	ExpressionLimit	All set-ups	FALSE	0	TimeOfDay
15-3*	Alarm Log					
15-30	Alarm Log: Error Code	0 N/A	All set-ups	FALSE	0	Uint8
15-31	Alarm Log: Value	0 N/A	All set-ups	FALSE	0	Int16
15-32	Alarm Log: Time	0 s	All set-ups	FALSE	0	Uint32
15-33	Alarm Log: Date and Time	ExpressionLimit	All set-ups	FALSE	0	TimeOfDay
15-4*	Drive Identification					
15-40	FC Type	0 N/A	All set-ups	FALSE	0	VisStr[6]
15-41	Power Section	0 N/A	All set-ups	FALSE	0	VisStr[20]
15-42	Voltage	0 N/A	All set-ups	FALSE	0	VisStr[20]
15-43	Software Version	0 N/A	All set-ups	FALSE	0	VisStr[5]
15-44	Ordered Typecode String	0 N/A	All set-ups	FALSE	0	VisStr[40]
15-45	Actual Typecode String	0 N/A	All set-ups	FALSE	0	VisStr[40]
15-46	Adj Freq Dr Ordering No.	0 N/A	All set-ups	FALSE	0	VisStr[8]
15-47	Power Card Ordering No.	0 N/A	All set-ups	FALSE	0	VisStr[8]
15-48	LCP ID Num.	0 N/A	All set-ups	FALSE	0	VisStr[20]
15-49	SW ID Control Card	0 N/A	All set-ups	FALSE	0	VisStr[20]
15-50	SW ID Power Card	0 N/A	All set-ups	FALSE	0	VisStr[20]
15-51	Adj Freq Dr Serial No.	0 N/A	All set-ups	FALSE	0	VisStr[10]
15-53	Power Card Serial Number	0 N/A	All set-ups	FALSE	0	VisStr[19]

MG.11.A9.22 - VLT® is a registered Danfoss trademark

Par. No. #	Parameter description	Default value (SR = Size related)	4 set-up	Change during operation	Conversion index	Type
15-6*	Option Ident					
15-60	Option Mounted	0 N/A	All set-ups	FALSE	0	VisStr[30]
15-61	Option SW Version	0 N/A	All set-ups	FALSE	0	VisStr[20]
15-62	Option Ordering No	0 N/A	All set-ups	FALSE	0	VisStr[8]
15-63	Option Serial No	0 N/A	All set-ups	FALSE	0	VisStr[18]
15-70	Option in Slot A	0 N/A	All set-ups	FALSE	0	VisStr[30]
15-71	Slot A Option SW Version	0 N/A	All set-ups	FALSE	0	VisStr[20]
15-72	Option in Slot B	0 N/A	All set-ups	FALSE	0	VisStr[30]
15-73	Slot B Option SW Version	0 N/A	All set-ups	FALSE	0	VisStr[20]
15-74	Option in Slot C0	0 N/A	All set-ups	FALSE	0	VisStr[30]
15-75	Slot C0 Option SW Version	0 N/A	All set-ups	FALSE	0	VisStr[20]
15-76	Option in Slot C1	0 N/A	All set-ups	FALSE	0	VisStr[30]
15-77	Slot C1 Option SW Version	0 N/A	All set-ups	FALSE	0	VisStr[20]
15-9*	Parameter Info					
15-92	Defined Parameters	0 N/A	All set-ups	FALSE	0	Uint16
15-93	Modified Parameters	0 N/A	All set-ups	FALSE	0	Uint16
15-98	Drive Identification	0 N/A	All set-ups	FALSE	0	VisStr[40]
15-99	Parameter Metadata	0 N/A	All set-ups	FALSE	0	Uint16

6.2.16 16-** Data Readouts

Par. No. #	Parameter description	Default value (SR = Size related)	4 set-up	Change during operation	Conversion index	Type
16-0*	General Status					
16-00	Control Word	0 N/A	All set-ups	FALSE	0	V2
16-01	Reference [Unit]	0.000 ReferenceFeedbackUnit	All set-ups	FALSE	-3	Int32
16-02	Reference %	0.0 %	All set-ups	FALSE	-1	Int16
16-03	Status Word	0 N/A	All set-ups	FALSE	0	V2
16-05	Main Actual Value [%]	0.00 %	All set-ups	FALSE	-2	N2
16-09	Custom Readout	0.00 CustomReadoutUnit	All set-ups	FALSE	-2	Int32
16-1*	Motor Status					
16-10	Power [kW]	0.00 kW	All set-ups	FALSE	1	Int32
16-11	Power [hp]	0.00 hp	All set-ups	FALSE	-2	Int32
16-12	Motor voltage	0.0 V	All set-ups	FALSE	-1	Uint16
16-13	Frequency	0.0 Hz	All set-ups	FALSE	-1	Uint16
16-14	Motor Current	0.00 A	All set-ups	FALSE	-2	Int32
16-15	Frequency [%]	0.00 %	All set-ups	FALSE	-2	N2
16-16	Torque [Nm]	0.0 Nm	All set-ups	FALSE	-1	Int32
16-17	Speed [RPM]	0 RPM	All set-ups	FALSE	67	Int32
16-18	Motor Thermal	0 %	All set-ups	FALSE	0	Uint8
16-22	Torque [%]	0 %	All set-ups	FALSE	0	Int16
16-26	Power Filtered [kW]	0.000 kW	All set-ups	FALSE	0	Int32
16-27	Power Filtered [hp]	0.000 hp	All set-ups	FALSE	-3	Int32
16-3*	Drive Status					
16-30	DC Link Voltage	0 V	All set-ups	FALSE	0	Uint16
16-32	Brake Energy /s	0.000 kW	All set-ups	FALSE	0	Uint32
16-33	Brake Energy /2 min	0.000 kW	All set-ups	FALSE	0	Uint32
16-34	Heatsink Temp.	0 °C	All set-ups	FALSE	100	Uint8
16-35	Inverter Thermal	0 %	All set-ups	FALSE	0	Uint8
16-36	Inv. Nom. Current	ExpressionLimit	All set-ups	FALSE	-2	Uint32
16-37	Inv. Max. Current	ExpressionLimit	All set-ups	FALSE	-2	Uint32
16-38	SL Controller State	0 N/A	All set-ups	FALSE	0	Uint8
16-39	Control Card Temp.	0 °C	All set-ups	FALSE	100	Uint8
16-40	Logging Buffer Full	[0] No	All set-ups	TRUE	-	Uint8
16-5*	Ref. & Feedb.					
16-50	External Reference	0.0 N/A	All set-ups	FALSE	-1	Int16
16-52	Feedback [Unit]	0.000 ProcessCtrlUnit	All set-ups	FALSE	-3	Int32
16-53	Digi Pot Reference	0.00 N/A	All set-ups	FALSE	-2	Int16
16-54	Feedback 1 [Unit]	0.000 ProcessCtrlUnit	All set-ups	FALSE	-3	Int32
16-55	Feedback 2 [Unit]	0.000 ProcessCtrlUnit	All set-ups	FALSE	-3	Int32
16-56	Feedback 3 [Unit]	0.000 ProcessCtrlUnit	All set-ups	FALSE	-3	Int32
16-58	PID Output [%]	0.0 %	All set-ups	TRUE	-1	Int16

MG.11.A9.22 - VLT® is a registered Danfoss trademark

Par. No. #	Parameter description	Default value (SR = Size related)	4 set-up	Change during operation	Conversion index	Type
16-6*	Inputs & Outputs					
16-60	Digital Input	0 N/A	All set-ups	FALSE	0	Uint16
16-61	Terminal 53 Switch Setting	[0] Current	All set-ups	FALSE	-	Uint8
16-62	Analog Input 53	0.000 N/A	All set-ups	FALSE	-3	Int32
16-63	Terminal 54 Switch Setting	[0] Current	All set-ups	FALSE	-	Uint8
16-64	Analog Input 54	0.000 N/A	All set-ups	FALSE	-3	Int32
16-65	Analog Output 42 [mA]	0.000 N/A	All set-ups	FALSE	-3	Int16
16-66	Digital Output [bin]	0 N/A	All set-ups	FALSE	0	Int16
16-67	Pulse Input #29 [Hz]	0 N/A	All set-ups	FALSE	0	Int32
16-68	Pulse Input #33 [Hz]	0 N/A	All set-ups	FALSE	0	Int32
16-69	Pulse Output #27 [Hz]	0 N/A	All set-ups	FALSE	0	Int32
16-70	Pulse Output #29 [Hz]	0 N/A	All set-ups	FALSE	0	Int32
16-71	Relay Output [bin]	0 N/A	All set-ups	FALSE	0	Int16
16-72	Counter A	0 N/A	All set-ups	TRUE	0	Int32
16-73	Counter B	0 N/A	All set-ups	TRUE	0	Int32
16-75	Analog In X30/11	0.000 N/A	All set-ups	FALSE	-3	Int32
16-76	Analog In X30/12	0.000 N/A	All set-ups	FALSE	-3	Int32
16-77	Analog Out X30/8 [mA]	0.000 N/A	All set-ups	FALSE	-3	Int16
16-8*	Fieldbus & FC Port					
16-80	Fieldbus CTW 1	0 N/A	All set-ups	FALSE	0	V2
16-82	Fieldbus REF 1	0 N/A	All set-ups	FALSE	0	N2
16-84	Comm. Option Status	0 N/A	All set-ups	FALSE	0	V2
16-85	FC Port CTW 1	0 N/A	All set-ups	FALSE	0	V2
16-86	FC Port REF 1	0 N/A	All set-ups	FALSE	0	N2
16-9*	Diagnosis Readouts					
16-90	Alarm Word	0 N/A	All set-ups	FALSE	0	Uint32
16-91	Alarm word 2	0 N/A	All set-ups	FALSE	0	Uint32
16-92	Warning Word	0 N/A	All set-ups	FALSE	0	Uint32
16-93	Warning word 2	0 N/A	All set-ups	FALSE	0	Uint32
16-94	Ext. Status Word	0 N/A	All set-ups	FALSE	0	Uint32
16-95	Ext. Status Word 2	0 N/A	All set-ups	FALSE	0	Uint32
16-96	Maintenance Word	0 N/A	All set-ups	FALSE	0	Uint32

MG.11.A9.22 - VLT® is a registered Danfoss trademark

6.2.17 18-** Info & Readouts

Par. No. #	Parameter description	Default value (SR = Size related)	4 set-up	Change during operation	Conversion index	Type
18-0* Maintenance Log						
18-00	Maintenance Log: Item	0 N/A	All set-ups	FALSE	0	Uint8
18-01	Maintenance Log: Action	0 N/A	All set-ups	FALSE	0	Uint8
18-02	Maintenance Log: Time	0 s	All set-ups	FALSE	0	Uint32
18-03	Maintenance Log: Date and Time	ExpressionLimit	All set-ups	FALSE	0	TimeOfDay
18-1* Fire Mode Log						
18-10	Fire Mode Log: Event	0 N/A	All set-ups	FALSE	0	Uint8
18-11	Fire Mode Log: Time	0 s	All set-ups	FALSE	0	Uint32
18-12	Fire Mode Log: Date and Time	ExpressionLimit	All set-ups	FALSE	0	TimeOfDay
18-3* Inputs & Outputs						
18-30	Analog Input X42/1	0.000 N/A	All set-ups	FALSE	-3	Int32
18-31	Analog Input X42/3	0.000 N/A	All set-ups	FALSE	-3	Int32
18-32	Analog Input X42/5	0.000 N/A	All set-ups	FALSE	-3	Int32
18-33	Analog Out X42/7 [V]	0.000 N/A	All set-ups	FALSE	-3	Int16
18-34	Analog Out X42/9 [V]	0.000 N/A	All set-ups	FALSE	-3	Int16
18-35	Analog Out X42/11 [V]	0.000 N/A	All set-ups	FALSE	-3	Int16
18-5* Ref. & Feedb.						
18-50	Sensorless Readout [unit]	0.000 SensorlessUnit	All set-ups	FALSE	-3	Int32

MG.11.A9.22 - VLT® is a registered Danfoss trademark

6.2.18 20-** FC Closed-loop

Par. No. #	Parameter description	Default value (SR = Size related)	4 set-up	Change during operation	Conversion index	Type
20-0*	Feedback					
20-00	Feedback 1 Source	[2] Analog input 54	All set-ups	TRUE	-	Uint8
20-01	Feedback 1 Conversion	[0] Linear	All set-ups	FALSE	-	Uint8
20-02	Feedback 1 Source Unit	null	All set-ups	TRUE	-	Uint8
20-03	Feedback 2 Source	[0] No function	All set-ups	TRUE	-	Uint8
20-04	Feedback 2 Conversion	[0] Linear	All set-ups	FALSE	-	Uint8
20-05	Feedback 2 Source Unit	null	All set-ups	TRUE	-	Uint8
20-06	Feedback 3 Source	[0] No function	All set-ups	TRUE	-	Uint8
20-07	Feedback 3 Conversion	[0] Linear	All set-ups	FALSE	-	Uint8
20-08	Feedback 3 Source Unit	null	All set-ups	TRUE	-	Uint8
20-12	Reference/Feedback Unit	null	All set-ups	TRUE	-	Uint8
20-13	Minimum Reference/Feedb.	0.000 ProcessCtrlUnit	All set-ups	TRUE	-3	Int32
20-14	Maximum Reference/Feedb.	100.000 ProcessCtrlUnit	All set-ups	TRUE	-3	Int32
20-2*	Feedback & Setpoint					
20-20	Feedback Function	[3] Minimum	All set-ups	TRUE	-	Uint8
20-21	Setpoint 1	0.000 ProcessCtrlUnit	All set-ups	TRUE	-3	Int32
20-22	Setpoint 2	0.000 ProcessCtrlUnit	All set-ups	TRUE	-3	Int32
20-23	Setpoint 3	0.000 ProcessCtrlUnit	All set-ups	TRUE	-3	Int32
20-3*	Feedback Adv. Conv.					
20-30	Refrigerant	[0] R22	All set-ups	TRUE	-	Uint8
20-31	User-defined Refrigerant A1	10.0000 N/A	All set-ups	TRUE	-4	Uint32
20-32	User-defined Refrigerant A2	-2250.00 N/A	All set-ups	TRUE	-2	Int32
20-33	User-defined Refrigerant A3	250.000 N/A	All set-ups	TRUE	-3	Uint32
20-6*	Sensorless					
20-60	Sensorless Unit	null	All set-ups	TRUE	-	Uint8
20-69	Sensorless Information	0 N/A	All set-ups	TRUE	0	VisStr[25]
20-7*	PID Auto Tuning					
20-70	Closed-loop Type	[0] Auto	2 set-ups	TRUE	-	Uint8
20-71	Tuning Mode	[0] Normal	2 set-ups	TRUE	-	Uint8
20-72	PID Output Change	0.10 N/A	2 set-ups	TRUE	-2	Uint16
20-73	Minimum Feedback Level	-999999.000 ProcessCtrlUnit	2 set-ups	TRUE	-3	Int32
20-74	Maximum Feedback Level	999999.000 ProcessCtrlUnit	2 set-ups	TRUE	-3	Int32
20-79	PID Auto Tuning	[0] Disabled	All set-ups	TRUE	-	Uint8
20-8*	PID Basic Settings					
20-81	PID Normal/ Inverse Control	[0] Normal	All set-ups	TRUE	-	Uint8
20-82	PID Start Speed [RPM]	ExpressionLimit	All set-ups	TRUE	67	Uint16
20-83	PID Start Speed [Hz]	ExpressionLimit	All set-ups	TRUE	-1	Uint16
20-84	On Reference Bandwidth	5 %	All set-ups	TRUE	0	Uint8
20-9*	PID Controller					
20-91	PID Anti Windup	[1] On	All set-ups	TRUE	-	Uint8
20-93	PID Proportional Gain	0.50 N/A	All set-ups	TRUE	-2	Uint16
20-94	PID Integral Time	20.00 s	All set-ups	TRUE	-2	Uint32
20-95	PID Differentiation Time	0.00 s	All set-ups	TRUE	-2	Uint16
20-96	PID Diff. Gain Limit	5.0 N/A	All set-ups	TRUE	-1	Uint16

MG.11.A9.22 - VLT® is a registered Danfoss trademark

6.2.19 21-** Ext. Closed-loop

Par. No. #	Parameter description	Default value (SR = Size related)	4 set-up	Change during operation	Conversion index	Type
21-0*	Ext. PID Auto-tuning					
21-00	Closed-loop Type	[0] Auto	2 set-ups	TRUE	-	Uint8
21-01	Tuning Mode	[0] Normal	2 set-ups	TRUE	-	Uint8
21-02	PID Output Change	0.10 N/A	2 set-ups	TRUE	-2	Uint16
21-03	Minimum Feedback Level	-999999.000 N/A	2 set-ups	TRUE	-3	Int32
21-04	Maximum Feedback Level	999999.000 N/A	2 set-ups	TRUE	-3	Int32
21-09	PID Auto Tuning	[0] Disabled	All set-ups	TRUE	-	Uint8
21-1*	Ext. CL 1 Ref./ Fb.					
21-10	Ext. 1 Ref./Feedback Unit	[1] %	All set-ups	TRUE	-	Uint8
21-11	Ext. 1 Minimum Reference	0.000 ExtPID1Unit	All set-ups	TRUE	-3	Int32
21-12	Ext. 1 Maximum Reference	100.000 ExtPID1Unit	All set-ups	TRUE	-3	Int32
21-13	Ext. 1 Reference Source	[0] No function	All set-ups	TRUE	-	Uint8
21-14	Ext. 1 Feedback Source	[0] No function	All set-ups	TRUE	-	Uint8
21-15	Ext. 1 Setpoint	0.000 ExtPID1Unit	All set-ups	TRUE	-3	Int32
21-17	Ext. 1 Reference [Unit]	0.000 ExtPID1Unit	All set-ups	TRUE	-3	Int32
21-18	Ext. 1 Feedback [Unit]	0.000 ExtPID1Unit	All set-ups	TRUE	-3	Int32
21-19	Ext. 1 Output [%]	0 %	All set-ups	TRUE	0	Int32
21-2*	Ext. CL 1 PID					
21-20	Ext. 1 Normal/Inverse Control	[0] Normal	All set-ups	TRUE	-	Uint8
21-21	Ext. 1 Proportional Gain	0.01 N/A	All set-ups	TRUE	-2	Uint16
21-22	Ext. 1 Integral Time	10000.00 s	All set-ups	TRUE	-2	Uint32
21-23	Ext. 1 Differentation Time	0.00 s	All set-ups	TRUE	-2	Uint16
21-24	Ext. 1 Dif. Gain Limit	5.0 N/A	All set-ups	TRUE	-1	Uint16
21-3*	Ext. CL 2 Ref./ Fb.					
21-30	Ext. 2 Ref./Feedback Unit	[1] %	All set-ups	TRUE	-	Uint8
21-31	Ext. 2 Minimum Reference	0.000 ExtPID2Unit	All set-ups	TRUE	-3	Int32
21-32	Ext. 2 Maximum Reference	100.000 ExtPID2Unit	All set-ups	TRUE	-3	Int32
21-33	Ext. 2 Reference Source	[0] No function	All set-ups	TRUE	-	Uint8
21-34	Ext. 2 Feedback Source	[0] No function	All set-ups	TRUE	-	Uint8
21-35	Ext. 2 Setpoint	0.000 ExtPID2Unit	All set-ups	TRUE	-3	Int32
21-37	Ext. 2 Reference [Unit]	0.000 ExtPID2Unit	All set-ups	TRUE	-3	Int32
21-38	Ext. 2 Feedback [Unit]	0.000 ExtPID2Unit	All set-ups	TRUE	-3	Int32
21-39	Ext. 2 Output [%]	0 %	All set-ups	TRUE	0	Int32
21-4*	Ext. CL 2 PID					
21-40	Ext. 2 Normal/Inverse Control	[0] Normal	All set-ups	TRUE	-	Uint8
21-41	Ext. 2 Proportional Gain	0.01 N/A	All set-ups	TRUE	-2	Uint16
21-42	Ext. 2 Integral Time	10000.00 s	All set-ups	TRUE	-2	Uint32
21-43	Ext. 2 Differentation Time	0.00 s	All set-ups	TRUE	-2	Uint16
21-44	Ext. 2 Dif. Gain Limit	5.0 N/A	All set-ups	TRUE	-1	Uint16

MG.11.A9.22 - VLT® is a registered Danfoss trademark

Par. No. #	Parameter description	Default value (SR = Size related)	4 set-up	Change during operation	Conversion index	Type
21-5*	Ext. CL 3 Ref./ Fb.					
21-50	Ext. 3 Ref./Feedback Unit	[1] %	All set-ups	TRUE	-	Uint8
21-51	Ext. 3 Minimum Reference	0.000 ExtPID3Unit	All set-ups	TRUE	-3	Int32
21-52	Ext. 3 Maximum Reference	100.000 ExtPID3Unit	All set-ups	TRUE	-3	Int32
21-53	Ext. 3 Reference Source	[0] No function	All set-ups	TRUE	-	Uint8
21-54	Ext. 3 Feedback Source	[0] No function	All set-ups	TRUE	-	Uint8
21-55	Ext. 3 Setpoint	0.000 ExtPID3Unit	All set-ups	TRUE	-3	Int32
21-57	Ext. 3 Reference [Unit]	0.000 ExtPID3Unit	All set-ups	TRUE	-3	Int32
21-58	Ext. 3 Feedback [Unit]	0.000 ExtPID3Unit	All set-ups	TRUE	-3	Int32
21-59	Ext. 3 Output [%]	0 %	All set-ups	TRUE	0	Int32
21-6*	Ext. CL 3 PID					
21-60	Ext. 3 Normal/Inverse Control	[0] Normal	All set-ups	TRUE	-	Uint8
21-61	Ext. 3 Proportional Gain	0.01 N/A	All set-ups	TRUE	-2	Uint16
21-62	Ext. 3 Integral Time	10000.00 s	All set-ups	TRUE	-2	Uint32
21-63	Ext. 3 Differentation Time	0.00 s	All set-ups	TRUE	-2	Uint16
21-64	Ext. 3 Dif. Gain Limit	5.0 N/A	All set-ups	TRUE	-1	Uint16

6.2.20 22-** Application Functions

Par. No. #	Parameter description	Default value (SR = Size related)	4 set-up	Change during operation	Conversion index	Type
22-0*	Miscellaneous					
22-00	External Interlock Delay	0 s	All set-ups	TRUE	0	Uint16
22-01	Power Filter Time	0.50 s	2 set-ups	TRUE	-2	Uint16
22-2*	No-Flow Detection					
22-20	Low Power Auto Set-up	[0] OFF	All set-ups	FALSE	-	Uint8
22-21	Low Power Detection	[0] Disabled	All set-ups	TRUE	-	Uint8
22-22	Low Speed Detection	[0] Disabled	All set-ups	TRUE	-	Uint8
22-23	No-Flow Function	[0] OFF	All set-ups	TRUE	-	Uint8
22-24	No-Flow Delay	10 s	All set-ups	TRUE	0	Uint16
22-26	Dry Pump Function	[0] OFF	All set-ups	TRUE	-	Uint8
22-27	Dry Pump Delay	10 s	All set-ups	TRUE	0	Uint16
22-3*	No-Flow Power Tuning					
22-30	No-Flow Power	0.00 kW	All set-ups	TRUE	1	Uint32
22-31	Power Correction Factor	100 %	All set-ups	TRUE	0	Uint16
22-32	Low Speed [RPM]	ExpressionLimit	All set-ups	TRUE	67	Uint16
22-33	Low Speed [Hz]	ExpressionLimit	All set-ups	TRUE	-1	Uint16
22-34	Low Speed Power [kW]	ExpressionLimit	All set-ups	TRUE	1	Uint32
22-35	Low Speed Power [HP]	ExpressionLimit	All set-ups	TRUE	-2	Uint32
22-36	High Speed [RPM]	ExpressionLimit	All set-ups	TRUE	67	Uint16
22-37	High Speed [Hz]	ExpressionLimit	All set-ups	TRUE	-1	Uint16
22-38	High Speed Power [kW]	ExpressionLimit	All set-ups	TRUE	1	Uint32
22-39	High Speed Power [HP]	ExpressionLimit	All set-ups	TRUE	-2	Uint32
22-4*	Sleep Mode					
22-40	Minimum Run Time	10 s	All set-ups	TRUE	0	Uint16
22-41	Minimum Sleep Time	10 s	All set-ups	TRUE	0	Uint16
22-42	Wake-up Speed [RPM]	ExpressionLimit	All set-ups	TRUE	67	Uint16
22-43	Wake-up Speed [Hz]	ExpressionLimit	All set-ups	TRUE	-1	Uint16
22-44	Wake-up Ref./FB Difference	10 %	All set-ups	TRUE	0	Int8
22-45	Setpoint Boost	0 %	All set-ups	TRUE	0	Int8
22-46	Maximum Boost Time	60 s	All set-ups	TRUE	0	Uint16
22-5*	End of Curve					
22-50	End of Curve Function	[0] OFF	All set-ups	TRUE	-	Uint8
22-51	End of Curve Delay	10 s	All set-ups	TRUE	0	Uint16
22-6*	Broken Belt Detection					
22-60	Broken Belt Function	[0] OFF	All set-ups	TRUE	-	Uint8
22-61	Broken Belt Torque	10 %	All set-ups	TRUE	0	Uint8
22-62	Broken Belt Delay	10 s	All set-ups	TRUE	0	Uint16
22-7*	Short Cycle Protection					
22-75	Short Cycle Protection	[0] Disabled	All set-ups	TRUE	-	Uint8
22-76	Interval between Starts	start_to_start_min_on_time (P2277)	All set-ups	TRUE	0	Uint16
22-77	Minimum Run Time	0 s	All set-ups	TRUE	0	Uint16

MG.11.A9.22 - VLT® is a registered Danfoss trademark

Par. No. #	Parameter description	Default value (SR = Size related)	4 set-up	Change during operation	Conversion index	Type
22-8*	Flow Compensation					
22-80	Flow Compensation	[0] Disabled	All set-ups	TRUE	-	Uint8
22-81	Square-linear Curve Approximation	100 %	All set-ups	TRUE	0	Uint8
22-82	Work Point Calculation	[0] Disabled	All set-ups	TRUE	-	Uint8
22-83	Speed at No-Flow [RPM]	SR	All set-ups	TRUE	67	Uint16
22-84	Speed at No-Flow [Hz]	SR	All set-ups	TRUE	-1	Uint16
22-85	Speed at Design Point [RPM]	SR	All set-ups	TRUE	67	Uint16
22-86	Speed at Design Point [Hz]	SR	All set-ups	TRUE	-1	Uint16
22-87	Pressure at No-Flow Speed	0.000 N/A	All set-ups	TRUE	-3	Int32
22-88	Pressure at Rated Speed	999999.999 N/A	All set-ups	TRUE	-3	Int32
22-89	Flow at Design Point	0.000 N/A	All set-ups	TRUE	-3	Int32
22-90	Flow at Rated Speed	0.000 N/A	All set-ups	TRUE	-3	Int32

6.2.21 23-** Time-based Funtions

Par. No. #	Parameter description	Default value (SR = Size related)	4 set-up	Change during operation	Conversion index	Type
23-0*	Timed Actions					
23-00	ON Time	ExpressionLimit	2 set-ups	TRUE	0	TimeOfDay-WoDate
23-01	ON Action	[0] DISABLED	2 set-ups	TRUE	-	Uint8
23-02	OFF Time	ExpressionLimit	2 set-ups	TRUE	0	TimeOfDay-WoDate
23-03	OFF Action	[0] DISABLED	2 set-ups	TRUE	-	Uint8
23-04	Occurrence	[0] All days	2 set-ups	TRUE	-	Uint8
23-1*	Maintenance					
23-10	Maintenance Item	[1] Motor bearings	1 set-up	TRUE	-	Uint8
23-11	Maintenance Action	[1] Lubricate	1 set-up	TRUE	-	Uint8
23-12	Maintenance Time Base	[0] Disabled	1 set-up	TRUE	-	Uint8
23-13	Maintenance Time Interval	1 h	1 set-up	TRUE	74	Uint32
23-14	Maintenance Date and Time	ExpressionLimit	1 set-up	TRUE	0	TimeOfDay
23-1*	Maintenance Reset					
23-15	Reset Maintenance Word	[0] Do not reset	All set-ups	TRUE	-	Uint8
23-16	Maintenance Text	0 N/A	1 set-up	TRUE	0	VisStr[20]
23-5*	Energy Log					
23-50	Energy Log Resolution	[5] Last 24 Hours	2 set-ups	TRUE	-	Uint8
23-51	Period Start	ExpressionLimit	2 set-ups	TRUE	0	TimeOfDay
23-53	Energy Log	0 N/A	All set-ups	TRUE	0	Uint32
23-54	Reset Energy Log	[0] Do not reset	All set-ups	TRUE	-	Uint8
23-6*	Trending					
23-60	Trend Variable	[0] Power [kW]	2 set-ups	TRUE	-	Uint8
23-61	Continuous Bin Data	0 N/A	All set-ups	TRUE	0	Uint32
23-62	Timed Bin Data	0 N/A	All set-ups	TRUE	0	Uint32
23-63	Timed Period Start	ExpressionLimit	2 set-ups	TRUE	0	TimeOfDay
23-64	Timed Period Stop	ExpressionLimit	2 set-ups	TRUE	0	TimeOfDay
23-65	Minimum Bin Value	ExpressionLimit	2 set-ups	TRUE	0	Uint8
23-66	Reset Continuous Bin Data	[0] Do not reset	All set-ups	TRUE	-	Uint8
23-67	Reset Timed Bin Data	[0] Do not reset	All set-ups	TRUE	-	Uint8
23-8*	Payback Counter					
23-80	Power Reference Factor	100 %	2 set-ups	TRUE	0	Uint8
23-81	Energy Cost	1.00 N/A	2 set-ups	TRUE	-2	Uint32
23-82	Investment	0 N/A	2 set-ups	TRUE	0	Uint32
23-83	Energy Savings	0 kWh	All set-ups	TRUE	75	Int32
23-84	Cost Savings	0 N/A	All set-ups	TRUE	0	Int32

MG.11.A9.22 - VLT® is a registered Danfoss trademark

6.2.22 24-** Application Functions 2

Par. No. #	Parameter description	Default value (SR = Size related)	4 set-up	Change during operation	Conversion index	Type
24-0* Fire Mode						
24-00	Fire Mode Function	[0] Disabled	2 set-ups	TRUE	-	Uint8
24-01	Fire Mode Configuration	[0] Open-loop	All set-ups	TRUE	-	Uint8
24-02	Fire Mode Unit	null	All set-ups	TRUE	-	Uint8
24-03	Fire Mode Min Reference	ExpressionLimit	All set-ups	TRUE	-3	Int32
24-04	Fire Mode Max Reference	ExpressionLimit	All set-ups	TRUE	-3	Int32
24-05	Fire Mode Preset Reference	0.00 %	All set-ups	TRUE	-2	Int16
24-06	Fire Mode Reference Source	[0] No function	All set-ups	TRUE	-	Uint8
24-07	Fire Mode Feedback Source	[0] No function	All set-ups	TRUE	-	Uint8
24-09	Fire Mode Alarm Handling	[1] Trip at Critical Alarms	2 set-ups	FALSE	-	Uint8
24-1* Drive Bypass						
24-10	Bypass Function	[0] Disabled	2 set-ups	TRUE	-	Uint8
24-11	Bypass Delay Time	0 s	2 set-ups	TRUE	0	Uint16
24-9* Multi-Motor Funct.						
24-90	Missing Motor Function	[0] Off	All set-ups	TRUE	-	Uint8
24-91	Missing Motor Coefficient 1	0.0000 N/A	All set-ups	TRUE	-4	Int32
24-92	Missing Motor Coefficient 2	0.0000 N/A	All set-ups	TRUE	-4	Int32
24-93	Missing Motor Coefficient 3	0.0000 N/A	All set-ups	TRUE	-4	Int32
24-94	Missing Motor Coefficient 4	0.000 N/A	All set-ups	TRUE	-3	Int32
24-95	Locked Rotor Function	[0] Off	All set-ups	TRUE	-	Uint8
24-96	Locked Rotor Coefficient 1	0.0000 N/A	All set-ups	TRUE	-4	Int32
24-97	Locked Rotor Coefficient 2	0.0000 N/A	All set-ups	TRUE	-4	Int32
24-98	Locked Rotor Coefficient 3	0.0000 N/A	All set-ups	TRUE	-4	Int32
24-99	Locked Rotor Coefficient 4	0.000 N/A	All set-ups	TRUE	-3	Int32

6.2.23 25-** Cascade Controller

Par. No. #	Parameter description	Default value (SR = Size related)	4 set-up	Change during operation	Conversion index	Type
25-0*	System Settings					
25-00	Cascade Controller	[0] Disabled	2 set-ups	FALSE	-	Uint8
25-02	Motor Start	[0] Direct on Line	2 set-ups	FALSE	-	Uint8
25-04	Pump Cycling	[0] Disabled	All set-ups	TRUE	-	Uint8
25-05	Fixed Lead Pump	[1] Yes	2 set-ups	FALSE	-	Uint8
25-06	Number Of Pumps	2 N/A	2 set-ups	FALSE	0	Uint8
25-2*	Bandwidth Settings					
25-20	Staging Bandwidth	10 %	All set-ups	TRUE	0	Uint8
25-21	Override Bandwidth	100 %	All set-ups	TRUE	0	Uint8
25-22	Fixed Speed Bandwidth	casco_staging_bandwidth (P2520)	All set-ups	TRUE	0	Uint8
25-23	SBW Staging Delay	15 s	All set-ups	TRUE	0	Uint16
25-24	SBW De-staging Delay	15 s	All set-ups	TRUE	0	Uint16
25-25	OBW Time	10 s	All set-ups	TRUE	0	Uint16
25-26	Destage At No-Flow	[0] Disabled	All set-ups	TRUE	-	Uint8
25-27	Stage Function	[1] Enabled	All set-ups	TRUE	-	Uint8
25-28	Stage Function Time	15 s	All set-ups	TRUE	0	Uint16
25-29	Destage Function	[1] Enabled	All set-ups	TRUE	-	Uint8
25-30	Destage Function Time	15 s	All set-ups	TRUE	0	Uint16
25-4*	Staging Settings					
25-40	Ramp-down Delay	10.0 s	All set-ups	TRUE	-1	Uint16
25-41	Ramp-up Delay	2.0 s	All set-ups	TRUE	-1	Uint16
25-42	Staging Threshold	ExpressionLimit	All set-ups	TRUE	0	Uint8
25-43	De-staging Threshold	ExpressionLimit	All set-ups	TRUE	0	Uint8
25-44	Staging Speed [RPM]	0 RPM	All set-ups	TRUE	67	Uint16
25-45	Staging Speed [Hz]	0.0 Hz	All set-ups	TRUE	-1	Uint16
25-46	De-staging Speed [RPM]	0 RPM	All set-ups	TRUE	67	Uint16
25-47	De-staging Speed [Hz]	0.0 Hz	All set-ups	TRUE	-1	Uint16
25-5*	Alternation Settings					
25-50	Lead Pump Alternation	[0] OFF	All set-ups	TRUE	-	Uint8
25-51	Alternation Event	[0] External	All set-ups	TRUE	-	Uint8
25-52	Alternation Time Interval	24 h	All set-ups	TRUE	74	Uint16
25-53	Alternation Timer Value	0 N/A	All set-ups	TRUE	0	VisStr[7]
25-54	Alternation Predefined Time	ExpressionLimit	All set-ups	TRUE	0	TimeOfDay-WoDate
25-55	Alternate if Load < 50%	[1] Enabled	All set-ups	TRUE	-	Uint8
25-56	Staging Mode at Alternation	[0] Slow	All set-ups	TRUE	-	Uint8
25-58	Run Next Pump Delay	0.1 s	All set-ups	TRUE	-1	Uint16
25-59	Run-on Line Delay	0.5 s	All set-ups	TRUE	-1	Uint16

MG.11.A9.22 - VLT® is a registered Danfoss trademark

Par. No. #	Parameter description	Default value (SR = Size related)	4 set-up	Change during operation	Conversion index	Type
25-8*	Status					
25-80	Cascade Status	0 N/A	All set-ups	TRUE	0	VisStr[25]
25-81	Pump Status	0 N/A	All set-ups	TRUE	0	VisStr[25]
25-82	Lead Pump	0 N/A	All set-ups	TRUE	0	Uint8
25-83	Relay Status	0 N/A	All set-ups	TRUE	0	VisStr[4]
25-84	Pump ON Time	0 h	All set-ups	TRUE	74	Uint32
25-85	Relay ON Time	0 h	All set-ups	TRUE	74	Uint32
25-86	Reset Relay Counters	[0] Do not reset	All set-ups	TRUE	-	Uint8
25-9*	Service					
25-90	Pump Interlock	[0] Off	All set-ups	TRUE	-	Uint8
25-91	Manual Alternation	0 N/A	All set-ups	TRUE	0	Uint8

MG.11.A9.22 - VLT® is a registered Danfoss trademark

6.2.24 26-** Analog I / O Option MCB 109

Par. No. #	Parameter description	Default value (SR = Size related)	4 set-up	Change during operation	Conversion index	Type
26-0*	Analog I/O Mode					
26-00	Terminal X42/1 Mode	[1] Voltage	All set-ups	TRUE	-	Uint8
26-01	Terminal X42/3 Mode	[1] Voltage	All set-ups	TRUE	-	Uint8
26-02	Terminal X42/5 Mode	[1] Voltage	All set-ups	TRUE	-	Uint8
26-1*	Analog Input X42/1					
26-10	Terminal X42/1 Low Voltage	0.07 V	All set-ups	TRUE	-2	Int16
26-11	Terminal X42/1 High Voltage	10.00 V	All set-ups	TRUE	-2	Int16
26-14	Term. X42/1 Low Ref./Feedb. Value	0.000 N/A	All set-ups	TRUE	-3	Int32
26-15	Term. X42/1 High Ref./Feedb. Value	100.000 N/A	All set-ups	TRUE	-3	Int32
26-16	Term. X42/1 Filter Time Constant	0.001 s	All set-ups	TRUE	-3	Uint16
26-17	Term. X42/1 Live Zero	[1] Enabled	All set-ups	TRUE	-	Uint8
26-2*	Analog Input X42/3					
26-20	Terminal X42/3 Low Voltage	0.07 V	All set-ups	TRUE	-2	Int16
26-21	Terminal X42/3 High Voltage	10.00 V	All set-ups	TRUE	-2	Int16
26-24	Term. X42/3 Low Ref./Feedb. Value	0.000 N/A	All set-ups	TRUE	-3	Int32
26-25	Term. X42/3 High Ref./Feedb. Value	100.000 N/A	All set-ups	TRUE	-3	Int32
26-26	Term. X42/3 Filter Time Constant	0.001 s	All set-ups	TRUE	-3	Uint16
26-27	Term. X42/3 Live Zero	[1] Enabled	All set-ups	TRUE	-	Uint8
26-3*	Analog Input X42/5					
26-30	Terminal X42/5 Low Voltage	0.07 V	All set-ups	TRUE	-2	Int16
26-31	Terminal X42/5 High Voltage	10.00 V	All set-ups	TRUE	-2	Int16
26-34	Term. X42/5 Low Ref./Feedb. Value	0.000 N/A	All set-ups	TRUE	-3	Int32
26-35	Term. X42/5 High Ref./Feedb. Value	100.000 N/A	All set-ups	TRUE	-3	Int32
26-36	Term. X42/5 Filter Time Constant	0.001 s	All set-ups	TRUE	-3	Uint16
26-37	Term. X42/5 Live Zero	[1] Enabled	All set-ups	TRUE	-	Uint8
26-4*	Analog Output X42/7					
26-40	Terminal X42/7 Output	[0] No operation	All set-ups	TRUE	-	Uint8
26-41	Terminal X42/7 Min. Scale	0.00 %	All set-ups	TRUE	-2	Int16
26-42	Terminal X42/7 Max. Scale	100.00 %	All set-ups	TRUE	-2	Int16
26-43	Terminal X42/7 Output Bus Control	0.00 %	All set-ups	TRUE	-2	N2
26-44	Terminal X42/7 Output Timeout Preset	0.00 %	1 set-up	TRUE	-2	Uint16
26-5*	Analog Output X42/9					
26-50	Terminal X42/9 Output	[0] No operation	All set-ups	TRUE	-	Uint8
26-51	Terminal X42/9 Min. Scale	0.00 %	All set-ups	TRUE	-2	Int16
26-52	Terminal X42/9 Max. Scale	100.00 %	All set-ups	TRUE	-2	Int16
26-53	Terminal X42/9 Output Bus Control	0.00 %	All set-ups	TRUE	-2	N2
26-54	Terminal X42/9 Output Timeout Preset	0.00 %	1 set-up	TRUE	-2	Uint16
26-6*	Analog Output X42/11					
26-60	Terminal X42/11 Output	[0] No operation	All set-ups	TRUE	-	Uint8
26-61	Terminal X42/11 Min. Scale	0.00 %	All set-ups	TRUE	-2	Int16
26-62	Terminal X42/11 Max. Scale	100.00 %	All set-ups	TRUE	-2	Int16
26-63	Terminal X42/11 Output Bus Control	0.00 %	All set-ups	TRUE	-2	N2
26-64	Terminal X42/11 Output Timeout Preset	0.00 %	1 set-up	TRUE	-2	Uint16

MG.11.A9.22 - VLT® is a registered Danfoss trademark

7 Troubleshooting

7.1 Alarms and warnings

7.1.1 Alarms and warnings

A warning or an alarm is signaled by the relevant LED on the front of the adjustable frequency drive, indicated by a code on the display.

A warning remains active until its cause is no longer present. Under certain circumstances, operation of the motor may still be continued. Warning messages may be critical, but are not necessarily so.

In the event of an alarm, the adjustable frequency drive will have tripped. Alarms must be reset to restart operation once their cause has been rectified. This may be done in four ways:

1. By using the [RESET] control button on the LCP control panel.
2. Via a digital input with the "Reset" function.
3. Via serial communication/optional serial communication bus.
4. By resetting automatically using the [Auto Reset] function, which is a default setting for the adjustable frequency drive, see par. 14-20 *Reset Mode* in *VLT HVAC Drive Programming Guide, MG.11.Cx.yy*



NOTE!
After a manual reset using the [RESET] button on the LCP, the [AUTO ON] button must be pressed to restart the motor.

If an alarm cannot be reset, the reason may be that its cause has not been rectified, or the alarm is trip-locked (see also table on following page).

Alarms that are trip-locked offer additional protection; this means that the line power supply must be switched off before the alarm can be reset. After being switched back on, the adjustable frequency drive is no longer blocked and may be reset as described above, once the cause has been rectified.

Alarms that are not trip-locked can also be reset using the automatic reset function in par. 14-20 *Reset Mode* (Warning: automatic wake-up is possible!)

If a warning and alarm is marked against a code in the table on the following page, this means that either a warning occurs before an alarm, or that it can be specified whether it is a warning or an alarm that is to be displayed for a given fault.

This is possible, for instance, in par.1-90 *Motor Thermal Protection*. After an alarm or trip, the motor carries on coasting, and the alarm and warning flash on the adjustable frequency drive. Once the problem has been rectified, only the alarm continues flashing.

No.	Description	Warning	Alarm/Trip	Alarm/Trip Lock	Parameter Reference
1	10 Volts low	X			
2	Live zero error	(X)	(X)		par.6-01 *Live Zero Time-out Function*
3	No motor	(X)			par.1-80 *Function at Stop*
4	Line phase loss	(X)	(X)	(X)	par. 14-12 *Function at Mains Imbalance*
5	DC link voltage high	X			
6	DC link voltage low	X			
7	DC overvoltage	X	X		
8	DC undervoltage	X	X		
9	Inverter overloaded	X	X		
10	Motor ETR overtemperature	(X)	(X)		par.1-90 *Motor Thermal Protection*
11	Motor thermistor overtemperature	(X)	(X)		par.1-90 *Motor Thermal Protection*
12	Torque limit	X	X		
13	Overcurrent	X	X	X	
14	Ground fault	X	X	X	
15	Incomp. HW		X	X	
16	Short Circuit		X	X	
17	Control word timeout	(X)	(X)		par. 8-04 *Control Time-out Function*
22	Hoist mech. brake	X			
23	Internal fans				
24	External fans				
25	Brake resistor short-circuited	X			
26	Brake resistor power limit	(X)	(X)		par. 2-13 *Brake Power Monitoring*
27	Brake chopper short-circuited	X	X		
28	Brake check	(X)	(X)		par. 2-15 *Brake Check*
29	Power board overtemp.	X	X	X	
30	Motor phase U missing	(X)	(X)	(X)	par. 4-58 *Missing Motor Phase Function*
31	Motor phase V missing	(X)	(X)	(X)	par. 4-58 *Missing Motor Phase Function*
32	Motor phase W missing	(X)	(X)	(X)	par. 4-58 *Missing Motor Phase Function*
33	Soft-charge fault		X	X	
34	Serial communication bus fault	X	X		
36	Line failure				
37	Phase imbalance	X	X		
38	Internal fault		X	X	
39	Heatsink sensor		X		
40	Overload T27				
41	Overload T29				
42	Overload X30/6-7				
46	Pwr. card supply		X		
47	24 V supply low	X	X	X	
48	1.8 V supply low		X	X	
49	Speed limit				
50	AMA calibration failed		X		
51	AMA check U_{nom} and I_{nom}		X		
52	AMA low I_{nom}		X		
53	AMA motor too big		X		
54	AMA motor too small		X		
55	AMA parameter out of range		X		
56	AMA interrupted by user		X		
57	AMA timeout		X		
58	AMA internal fault	X	X		
59	Current limit	X			
60	External interlock				
61	Tracking error	X	X		
62	Output Frequency at Maximum Limit	X			
64	Voltage Limit	X			
65	Control Board Overtemperature	X	X	X	
66	Heatsink Temperature Low	X			
67	Option Configuration Has Changed		X		
68	Safe Stop Activated		X		
69	Pwr. card temp.		X		
70	Illegal FC configuration				

Table 7.1: Alarm/Warning code list 1/2

No.	Description	Warning	Alarm/Trip	Alarm/Trip Lock	Parameter Reference
90	Feedback mon.		X		
91	Analog input 54 wrong settings		X		
92	No-Flow	X	X		Par. 22-2*
93	Dry Pump	X	X		Par. 22-2*
94	End of Curve	X	X		Par. 22-5*
95	Broken Belt	X	X		Par. 22-6*
96	Start Delayed	X			Par. 22-7*
250	New spare part		X		
251	New type code		X		

Table 7.2: Alarm/Warning code list 2/2

(X) Dependent on parameter

	LED indication
Warning	yellow
Alarm	flashing red
Trip-locked	yellow and red

Alarm Word and Extended Status Word

Bit	Hex	Dec	Alarm Word	Warning Word	Extended Status Word
0	00000001	1	Brake Check	Brake Check	Ramping
1	00000002	2	Pwr. Card Temp	Pwr. Card Temp	AMA Running
2	00000004	4	Ground Fault	Ground Fault	Start CW/CCW
3	00000008	8	Ctrl.Card Temp	Ctrl.Card Temp	Slow Down
4	00000010	16	Ctrl. Word TO	Ctrl. Word TO	Catch Up
5	00000020	32	Overcurrent	Overcurrent	Feedback High
6	00000040	64	Torque Limit	Torque Limit	Feedback Low
7	00000080	128	Motor Th Over	Motor Th Over	Output Current High
8	00000100	256	Motor ETR Over	Motor ETR Over	Output Current Low
9	00000200	512	Inverter Overld.	Inverter Overld.	Output Freq High
10	00000400	1024	DC Undervolt	DC Undervolt	Output Freq Low
11	00000800	2048	DC Overvolt	DC Overvolt	Brake Check OK
12	00001000	4096	Short Circuit	DC Voltage Low	Braking Max
13	00002000	8192	Soft-charge fault	DC Voltage High	Braking
14	00004000	16384	Line ph. Loss	Line ph. Loss	Out of Speed Range
15	00008000	32768	AMA Not OK	No Motor	OVC Active
16	00010000	65536	Live Zero Error	Live Zero Error	
17	00020000	131072	Internal Fault	10 V Low	
18	00040000	262144	Brake Overload	Brake Overload	
19	00080000	524288	U-phase Loss	Brake Resistor	
20	00100000	1048576	V-phase Loss	Brake IGBT	
21	00200000	2097152	W-phase Loss	Speed Limit	
22	00400000	4194304	Ser. Com. Bus Fault	Ser. Com. Bus Fault	
23	00800000	8388608	24 V Supply Low	24 V Supply Low	
24	01000000	16777216	Line Failure	Line Failure	
25	02000000	33554432	1.8 V Supply Low	Current Limit	
26	04000000	67108864	Brake Resistor	Low Temp	
27	08000000	134217728	Brake IGBT	Voltage Limit	
28	10000000	268435456	Option Change	Unused	
29	20000000	536870912	Drive Initialized	Unused	
30	40000000	1073741824	Safe Stop	Unused	

Table 7.3: Description of Alarm Word, Warning Word and Extended Status Word

The alarm words, warning words and extended status words can be read out for diagnosis via serial bus or optional serial communication bus. See also par. 16-90 *Alarm Word*, par. 16-92 *Warning Word* and par. 16-94 *Ext. Status Word*.

7.1.2 Fault messages

WARNING 1, 10 Volts low:
The 10 V voltage from terminal 50 on the control card is below 10 V. Remove some of the load from terminal 50, as the 10 V supply is overloaded. Max. 15 mA or minimum 590 Ω.

WARNING/ ALARM 2, Live zero error:
The signal on terminal 53 or 54 is less than 50% of the value set in par. 6-10 *Terminal 53 Low Voltage*, par. 6-12 *Terminal 53 Low Current*, par. 6-20 *Terminal 54 Low Voltage*, or par. 6-22 *Terminal 54 Low Current* respectively.

WARNING/ ALARM 3, No motor:
No motor has been connected to the output of the adjustable frequency drive.

WARNING/ ALARM 4, Mains phase loss:
A phase is missing on the supply side, or the line voltage imbalance is too high.
This message also appears in case of a fault in the input rectifier on the adjustable frequency drive.
Check the supply voltage and supply currents to the adjustable frequency drive.

WARNING 5, DC link voltage high:
The intermediate circuit voltage (DC) is higher than the overvoltage limit of the control system. The adjustable frequency drive is still active.

WARNING 6, DC-link voltage low:
The intermediate circuit voltage (DC) is below the undervoltage limit of the control system. The adjustable frequency drive is still active.

WARNING/ ALARM 7, DC overvoltage:
If the intermediate circuit voltage exceeds the limit, the adjustable frequency drive trips after a time.

Possible corrections:

Select Over Voltage Control function in par.2-17 *Over-voltage Control*

Connect a brake resistor

Extend the ramp time

Activate functions in par.2-10 *Brake Function*

Increase par. 14-26 *Trip Delay at Inverter Fault*

Selecting OVC function will extend the ramp times.

Alarm/warning limits:

Voltage Range	3 x 200–240 V AC [VDC]	3 x 380–500 V AC [VDC]	3 x 550–600 V AC [VDC]
Undervoltage	185	373	532
Voltage warning low	205	410	585
Voltage warning high (w/o brake - w/ brake)	390/405	810/840	943/965
Overvoltage	410	855	975

The voltages stated are the intermediate circuit voltage of the adjustable frequency drive with a tolerance of ± 5%. The corresponding AC line voltage is the intermediate circuit voltage (DC link) divided by 1.35.

WARNING/ ALARM 8, DC undervoltage:
If the intermediate circuit voltage (DC) drops below the "voltage warning low" limit (see table above), the adjustable frequency drive checks if 24 V backup supply is connected.
If no 24 V backup supply is connected, the adjustable frequency drive trips after a given time depending on the unit.
To check whether the supply voltage matches the adjustable frequency drive, see the section *General Specifications*.

WARNING/ ALARM 9, Inverter overloaded:
The adjustable frequency drive is about to cut out because of an overload (too high current for too long). The counter for electronic, thermal inverter protection gives a warning at 98% and trips at 100%, while giving an alarm. You cannot reset the adjustable frequency drive until the counter is below 90%.
The fault is that the adjustable frequency drive is overloaded by more than nominal current for too long.

WARNING/ ALARM 10, Motor ETR overtemperature:
According to the electronic thermal protection (ETR), the motor is too hot. You can choose if you want the adjustable frequency drive to give a warning or an alarm when the counter reaches 100% in par.1-90 *Motor Thermal Protection*. The fault is that the motor is overloaded by more than nominal current for too long. Make sure that the motor par. 1-24 *Motor Current* is set correctly.

WARNING/ ALARM 11, Motor thermistor overtemp:
The thermistor or the thermistor connection is disconnected. You can choose if you want the adjustable frequency drive to give a warning or an alarm in par.1-90 *Motor Thermal Protection*. Check that the thermistor is connected correctly between terminal 53 or 54 (analog voltage input) and terminal 50 (+ 10 Volts supply), or between terminal 18 or 19 (digital input PNP only) and terminal 50. If a KTY sensor is used, check for correct connection between terminal 54 and 55.

WARNING/ ALARM 12, Torque limit:
The torque is higher than the value in par. 4-16 *Torque Limit Motor Mode* (in motor operation) or the torque is higher than the value in par. 4-17 *Torque Limit Generator Mode* (in regenerative operation).

WARNING/ ALARM 13, Overcurrent:
The inverter peak current limit (approx. 200% of the rated current) is exceeded. The warning will last approx. 8-12 sec., then the adjustable frequency drive trips and issues an alarm. Turn off the adjustable frequency drive and check if the motor shaft can be turned and if the motor size matches the adjustable frequency drive.

ALARM 14, Ground fault:
There is a discharge from the output phases to ground, either in the cable between the adjustable frequency drive and the motor or in the motor itself.
Turn off the adjustable frequency drive and remove the ground fault.

ALARM 15, Incomplete hardware:
A fitted option is not handled by the present control board (hardware or software).

ALARM 16, Short circuit:
There is short-circuiting in the motor or on the motor terminals.
Turn off the adjustable frequency drive and remove the short circuit.

WARNING/ ALARM 17, Control word timeout:
There is no communication to the adjustable frequency drive.
The warning will only be active when par. 8-04 *Control Timeout Function* is NOT set to *OFF*.
If par. 8-04 *Control Timeout Function* is set to *Stop* and *Trip*, a warning appears and the adjustable frequency drive ramps down to zero speed, while giving an alarm.
par. 8-03 *Control Timeout Time* could possibly be increased.

WARNING 22, Hoist Mech. Brake:
The report value will show what kind it is.

0 = The torque ref. was not reached before timeout

1 = There was no brake feedback before timeout

WARNING 23, Internal fans:
External fans have failed due to defect hardware or fans not mounted.

WARNING 24, External fan fault:
The fan warning function is an extra protective function that checks if the fan is running/mounted. The fan warning can be disabled in par. 14-53 *Fan Monitor*, [0] Disabled.

WARNING 25, Brake resistor short-circuited:
The brake resistor is monitored during operation. If it short-circuits, the brake function is disconnected and the warning appears. The adjustable frequency drive still works, but without the brake function. Turn off the adjustable frequency drive and replace the brake resistor (see par. 2-15 *Brake Check*).

ALARM/ WARNING 26, Brake resistor power limit:
The power transmitted to the brake resistor is calculated as a percentage, as a mean value over the last 120 s, on the basis of the resistance value of the brake resistor (par. 2-11 *Brake Resistor (ohm)*) and the intermediate circuit voltage. The warning is active when the dissipated braking energy is higher than 90%. If *Trip* [2] has been selected in par. 2-13 *Brake Power Monitoring*, the adjustable frequency drive cuts out and issues this alarm, when the dissipated braking energy is higher than 100%.

WARNING/ ALARM 27, Brake chopper fault:
The brake transistor is monitored during operation and if it short-circuits, the brake function disconnects and the warning comes up. The adjustable frequency drive is still able to run, but since the brake transistor has short-circuited, substantial power is transmitted to the brake resistor, even if it is inactive.
Turn off the adjustable frequency drive and remove the brake resistor.



Warning: There is a risk of substantial power being transmitted to the brake resistor if the brake transistor is short-circuited.

ALARM/ WARNING 28, Brake check failed:
Brake resistor fault: the brake resistor is not connected/working.

WARNING/ ALARM 29, Drive overtemperature:
If the enclosure is IP00, IP20/Nema1 or IP21/TYPE 1, the cut-out temperature of the heatsink is 203° ± 41°F [95° ± 5°C]. The temperature fault cannot be reset, until the temperature of the heatsink is below 158°F [70°C].

The fault could be:

- Ambient temperature too high
- Too long motor cable

ALARM 30, Motor phase U missing:
Motor phase U between the adjustable frequency drive and the motor is missing.
Turn off the adjustable frequency drive and check motor phase U.

ALARM 31, Motor phase V missing:
Motor phase V between the adjustable frequency drive and the motor is missing.
Turn off the adjustable frequency drive and check motor phase V.

ALARM 32, Motor phase W missing:
Motor phase W between the adjustable frequency drive and the motor is missing.
Turn off the adjustable frequency drive and check motor phase W.

ALARM 33, Soft-charge fault:
Too many power-ups have occured within a short time period. See the chapter *General Specifications* for the allowed number of power-ups within one minute.

WARNING/ ALARM 34, Fieldbus communication fault:
The serial communication bus on the communication option card is not working.

WARNING/ ALARM 36, Mains failure:
This warning/alarm is only active if the supply voltage to the adjustable frequency drive is lost and par. 14-10 *Line Failure* is NOT set to OFF. Possible correction: check the fuses to the adjustable frequency drive

WARNING/ ALARM 37, Phase Imbalance:
There is a current imbalance between the power units.

ALARM 38, Internal fault:
Contact your local Danfoss supplier.

ALARM 39, Heatsink Sensor:
No feedback from the heatsink sensor.

WARNING 40, Overload of Digital Output Terminal 27
Check the load connected to terminal 27 or remove the short-circuit connection. Check par. 5-00 *Digital I/O Mode* and par.5-01 *Terminal 27 Mode*.

WARNING 41, Overload of Digital Output Terminal 29:
Check the load connected to terminal 29 or remove the short-circuit connection. Check par. 5-00 *Digital I/O Mode* and par.5-02 *Terminal 29 Mode*.

WARNING 42, Overload of Digital Output On X30/ 6:
Check the load connected to X30/6 or remove short circuit connection. Check par. 5-32 *Term X30/6 Digi Out (MCB 101)*.

WARNING 42, Overload of Digital Output On X30/7:
Check the load connected to X30/7 or remove short circuit connection. Check par. 5-33 *Term X30/7 Digi Out (MCB 101)*.

ALARM 46, Pwr. card supply:
The supply on the power card is out of range.

WARNING 47, 24 V supply low:
The external 24 V DC backup power supply may be overloaded, otherwise contact your Danfoss supplier.

ALARM 48, 1.8 V supply low:
Contact your Danfoss supplier.

WARNING 49, Speed limit:
The speed has been limited by range in par.4-11 *Motor Speed Low Limit [RPM]* and par.4-13 *Motor Speed High Limit [RPM]*.

ALARM 50, AMA calibration failed:
Contact your Danfoss supplier.

ALARM 51, AMA check Unom and Inom:
The setting of motor voltage, motor current, and motor power is presumably wrong. Check the settings.

ALARM 52, AMA low Inom:
The motor current is too low. Check the settings.

ALARM 53, AMA motor too big:
The motor is too big for the AMA to be carried out.

ALARM 54, AMA motor too small:
The motor is too small for the AMA to be carried out.

ALARM 55, AMA par. out of range:
The par. values found from the motor are outside acceptable range.

ALARM 56, AMA interrupted by user:
The AMA has been interrupted by the user.

ALARM 57, AMA timeout:
Try to start the AMA again a number of times, until the AMA is carried out. Please note that repeated runs may heat the motor to a level where the resistances Rs and Rr are increased. In most cases, however, this is not critical.

WARNING/ ALARM 58, AMA internal fault:
Contact your Danfoss supplier.

WARNING 59, Current limit:
The current is higher than the value in par. 4-18 *Current Limit*.

WARNING 60, External Interlock:
External Interlock has been activated. To resume normal operation, apply 24 V DC to the terminal programmed for external interlock and reset the adjustable frequency drive (via bus, digital I/O or by pressing [Reset]).

WARNING/ ALARM 61, Tracking Error:
Tracking error. Contact your supplier.

WARNING 62, Output Frequency at Maximum Limit:
The output frequency is limited by the value set in par. 4-19 *Max Output Frequency*

WARNING 64, Voltage Limit:
The load and speed combination demands a motor voltage higher than the actual DC-link voltage.

WARNING/ ALARM/ TRIP 65, Control Card Overtemperature:
Control card overtemperature: The cut-out temperature of the control card is 176°F [80°C].

WARNING 66, Heatsink Temperature Low:
The heatsink temperature is measured as 32°F [0°C]. This could indicate that the temperature sensor is defective and thus the fan speed is increased to the maximum in case the power part or control card is very hot.
If the temperature is below 59°F [15°C], the warning will be present.

ALARM 67, Option Configuration has Changed:
One or more options has either been added or removed since the last power-down.

ALARM 68, Safe Stop:
Safe Stop has been activated. To resume normal operation, apply 24 V DC to terminal 37 then send a reset signal (via bus, digital I/O or by pressing [Reset]).

ALARM 69, Pwr. Card Temp:
Power card overtemperature.

ALARM 70, Illegal FC Configuration:
The current control board and power board combination is illegal.

ALARM 90, Feedback Mon.:
ALARM 91, Analog Input 54 Wrong Settings:
Switch S202 must be set in position OFF (voltage input) when a KTY sensor is connected to analog input terminal 54.

ALARM 92, No-Flow:
A no load situation has been detected for the system. See parameter group 22-2*.

ALARM 93, Dry Pump:
A no-flow situation and high speed indicates that the pump has run dry. See parameter group 22-2*.

ALARM 94, End of Curve:
Feedback stays lower than the setpoint, which may indicate a leakage in the pipe system. See parameter group 22-5*.

ALARM 95, Broken Belt:
Torque is below the torque level set for no load indicating a broken belt. See parameter group 22-6*.

ALARM 96, Start Delayed:
Start of the motor has been delayed due to short cycle protection being active. See parameter group 22-7*.

ALARM 250, New Spare Part:
The power or switch mode power supply has been exchanged. The adjustable frequency drive type code must be restored in EEPROM. Select the correct type code in par. 14-23 *Typecode Setting* according to the label on unit. Remember to select 'Save to EEPROM' to complete.

ALARM 251, New Type Code:
The adjustable frequency drive has a new type code.

7.2 Acoustic noise or vibration

If the motor or the equipment driven by the motor, e.g., a fan blade, is making noise or vibrations at certain frequencies, try the following:

- Speed Bypass, parameters 4-6*
- Overmodulation, parameter 14-03 set to off
- Switching pattern and frequency parameters 14-0*
- Resonance Dampening, parameter 1-64

8 Specifications

8.1 General Specifications

Normal overload 110% for 1 minute						
Line power supply 200–240 V AC Adjustable frequency drive Typical Shaft Output [kW]		P1K1 1.1	P1K5 1.5	P2K2 2.2	P3K0 3	P3K7 3.7
IP 20 / Chassis		A2	A2	A2	A3	A3
IP 21 / NEMA 1		A2	A2	A2	A3	A3
IP 55 / NEMA 12		A5	A5	A5	A5	A5
IP 66 / NEMA 12		A5	A5	A5	A5	A5
Typical Shaft Output [HP] at 208 V		1.5	2.0	2.9	4.0	4.9
Output current						
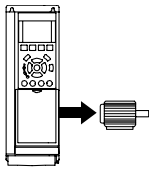	Continuous (3 x 200–240 V) [A]	6.6	7.5	10.6	12.5	16.7
	Intermittent (3 x 200–240 V) [A]	7.3	8.3	11.7	13.8	18.4
	Continuous kVA (208 V AC) [kVA]	2.38	2.70	3.82	4.50	6.00
	Max. cable size:					
	(line power, motor, brake) [mm² /AWG] [2]			4/10		
Max. input current						
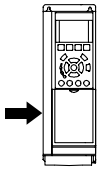	Continuous (3 x 200–240 V) [A]	5.9	6.8	9.5	11.3	15.0
	Intermittent (3 x 200–240 V) [A]	6.5	7.5	10.5	12.4	16.5
	Max. pre-fuses[1] [A]	20	20	20	32	32
	Environment					
	Estimated power loss at rated max. load [W] [4]	63	82	116	155	185
	Weight enclosure IP20 [kg]	4.9	4.9	4.9	6.6	6.6
	Weight enclosure IP21 [kg]	5.5	5.5	5.5	7.5	7.5
	Weight enclosure IP55 [kg]	13.5	13.5	13.5	13.5	13.5
	Weight enclosure IP66 [kg]	13.5	13.5	13.5	13.5	13.5
	Efficiency [3]	0.96	0.96	0.96	0.96	0.96

8

Line power supply 3 x 200–240 V AC - Normal overload 110% for 1 minute

IP 20 / Chassis (B3+4 and C3+4 may be converted to IP21 using a conversion kit (Please contact Danfoss)	B3	B3	B3	B4	B4	C3	C3	C4	C4
IP 21 / NEMA 1	B1	B1	B1	B2	C1	C1	C1	C2	C2
IP 55 / NEMA 12	B1	B1	B1	B2	C1	C1	C1	C2	C2
IP 66 / NEMA 12	B1	B1	B1	B2	C1	C1	C1	C2	C2
Adjustable frequency drive	P5K5	P7K5	P11K	P15K	P18K	P22K	P30K	P37K	P45K
Typical Shaft Output [kW]	5.5	7.5	11	15	18.5	22	30	37	45
Typical Shaft Output [HP] at 208 V	7.5	10	15	20	25	30	40	50	60
Output current									
Continuous (3 x 200–240 V) [A]	24.2	30.8	46.2	59.4	74.8	88.0	115	143	170
Intermittent (3 x 200–240 V) [A]	26.6	33.9	50.8	65.3	82.3	96.8	127	157	187
Continuous kVA (208 V AC) [kVA]	8.7	11.1	16.6	21.4	26.9	31.7	41.4	51.5	61.2
Max. cable size:									
(line power, motor, brake) [mm² /AWG] [2]		10/7		35/2		50/1/0 (B4=35/2)		95/4/0	120/250 MCM
With line power disconnect switch included:		16/6		35/2		35/2		70/3/0	185/ kcmil350
Max. input current									
Continuous (3 x 200–240 V) [A]	22.0	28.0	42.0	54.0	68.0	80.0	104.0	130.0	154.0
Intermittent (3 x 200–240 V) [A]	24.2	30.8	46.2	59.4	74.8	88.0	114.0	143.0	169.0
Max. pre-fuses[1] [A]	63	63	63	80	125	125	160	200	250
Environment:									
Estimated power loss at rated max. load [W] [4]	269	310	447	602	737	845	1140	1353	1636
Weight enclosure IP20 [kg]	12	12	12	23.5	23.5	35	35	50	50
Weight enclosure IP21 [kg]	23	23	23	27	45	45	45	65	65
Weight enclosure IP55 [kg]	23	23	23	27	45	45	45	65	65
Weight enclosure IP 66 [kg]	23	23	23	27	45	45	45	65	65
Efficiency [3]	0.96	0.96	0.96	0.96	0.96	0.97	0.97	0.97	0.97

MG.11.A9.22 - VLT® is a registered Danfoss trademark

Line Power Supply 3 x 380–480 V AC - Normal overload 110% for 1 minute

Adjustable frequency drive		P1K1	P1K5	P2K2	P3K0	P4K0	P5K5	P7K5
Typical Shaft Output [kW]		1.1	1.5	2.2	3	4	5.5	7.5
Typical Shaft Output [HP] at 460 V		1.5	2.0	2.9	4.0	5.0	7.5	10
IP 20 / Chassis		A2	A2	A2	A2	A2	A3	A3
IP 21 / NEMA 1								
IP 55 / NEMA 12		A5	A5	A5	A5	A5	A5	A5
IP 66 / NEMA 12		A5	A5	A5	A5	A5	A5	A5
Output current								
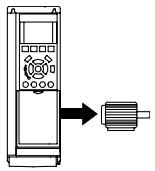	Continuous (3 x 380–440 V) [A]	3	4.1	5.6	7.2	10	13	16
	Intermittent (3 x 380–440 V) [A]	3.3	4.5	6.2	7.9	11	14.3	17.6
	Continuous (3 x 441–480 V) [A]	2.7	3.4	4.8	6.3	8.2	11	14.5
	Intermittent (3 x 441–480 V) [A]	3.0	3.7	5.3	6.9	9.0	12.1	15.4
	Continuous kVA (400 V AC) [kVA]	2.1	2.8	3.9	5.0	6.9	9.0	11.0
	Continuous kVA (460 V AC) [kVA]	2.4	2.7	3.8	5.0	6.5	8.8	11.6
	Max. cable size: (line power, motor, brake) [[mm²/ AWG] [2)]				4/ 10			
Max. input current								
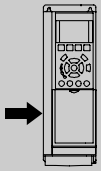	Continuous (3 x 380–440 V) [A]	2.7	3.7	5.0	6.5	9.0	11.7	14.4
	Intermittent (3 x 380–440 V) [A]	3.0	4.1	5.5	7.2	9.9	12.9	15.8
	Continuous (3 x 441–480 V) [A]	2.7	3.1	4.3	5.7	7.4	9.9	13.0
	Intermittent (3 x 441–480 V) [A]	3.0	3.4	4.7	6.3	8.1	10.9	14.3
	Max. pre-fuses[1)] [A]	10	10	20	20	20	32	32
	Environment							
	Estimated power loss at rated max. load [W] [4)]	58	62	88	116	124	187	255
	Weight enclosure IP20 [kg]	4.8	4.9	4.9	4.9	4.9	6.6	6.6
	Weight enclosure IP21 [kg]							
	Weight enclosure IP 55 [kg]	13.5	13.5	13.5	13.5	13.5	14.2	14.2
	Weight enclosure IP 66 [kg]	13.5	13.5	13.5	13.5	13.5	14.2	14.2
	Efficiency [3)]	0.96	0.97	0.97	0.97	0.97	0.97	0.97

Line Power Supply 3 x 380–480 V AC - Normal overload 110% for 1 minute

adjustable frequency drive	P11K	P15K	P18K	P22K	P30K	P37K	P45K	P55K	P75K	P90K
Typical Shaft Output [kW]	11	15	18.5	22	30	37	45	55	75	90
Typical Shaft Output [HP] at 460 V	15	20	25	30	40	50	60	75	100	125
IP 20 / Chassis (B3+4 and C3+4 may be converted to IP21 using a conversion kit (Please contact Danfoss)	B3	B3	B3	B4	B4	B4	C3	C3	C4	C4
IP 21 / NEMA 1	B1	B1	B1	B2	B2	C1	C1	C1	C2	C2
IP 55 / NEMA 12	B1	B1	B1	B2	B2	C1	C1	C1	C2	C2
IP 66 / NEMA 12	B1	B1	B1	B2	B2	C1	C1	C1	C2	C2
Output current										
Continuous (3 x 380–439 V) [A]	24	32	37.5	44	61	73	90	106	147	177
Intermittent (3 x 380–439 V) [A]	26.4	35.2	41.3	48.4	67.1	80.3	99	117	162	195
Continuous (3 x 440–480 V) [A]	21	27	34	40	52	65	80	105	130	160
Intermittent (3 x 440–480 V) [A]	23.1	29.7	37.4	44	61.6	71.5	88	116	143	176
Continuous kVA (400 V AC) [kVA]	16.6	22.2	26	30.5	42.3	50.6	62.4	73.4	102	123
Continuous kVA (460 V AC) [kVA]	16.7	21.5	27.1	31.9	41.4	51.8	63.7	83.7	104	128
Max. cable size: (line power, motor, brake) [[mm^2/ AWG] [2)]	10/7			35/2		50/1/0 (B4=35/2)			95/ 4/0	120/ MCM250
With line power disconnect switch included:			16/6			35/2		35/2	70/3/0	185/ kcmil350
Max. input current										
Continuous (3 x 380–439 V) [A]	22	29	34	40	55	66	82	96	133	161
Intermittent (3 x 380–439 V) [A]	24.2	31.9	37.4	44	60.5	72.6	90.2	106	146	177
Continuous (3 x 440–480 V) [A]	19	25	31	36	47	59	73	95	118	145
Intermittent (3 x 440–480 V) [A]	20.9	27.5	34.1	39.6	51.7	64.9	80.3	105	130	160
Max. pre-fuses[1)][A]	63	63	63	63	80	100	125	160	250	250
Environment										
Estimated power loss at rated max. load [W] [4)]	278	392	465	525	698	739	843	1083	1384	1474
Weight enclosure IP20 [kg]	12	12	12	23.5	23.5	23.5	35	35	50	50
Weight enclosure IP21 [kg]	23	23	23	27	27	45	45	45	65	65
Weight enclosure IP 55 [kg]	23	23	23	27	27	45	45	45	65	65
Weight enclosure IP 66 [kg]	23	23	23	27	27	45	45	45	65	65
Efficiency [3)]	0.98	0.98	0.98	0.98	0.98	0.98	0.98	0.98	0.98	0.99

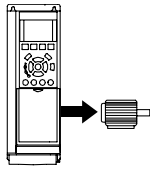

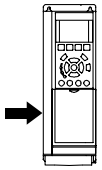

MG.11.A9.22 - VLT® is a registered Danfoss trademark

Line Power Supply 3 x 380–480 V AC						
		P110	P132	P160	P200	P250
	Typical Shaft output at 400 V [kW]	110	132	160	200	250
	Typical Shaft output at 460 V [HP]	150	200	250	300	350
	Enclosure IP21	D1	D1	D2	D2	D2
	Enclosure IP54	D1	D1	D2	D2	D2
	Enclosure IP00	D3	D3	D4	D4	D4
	Output current					
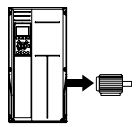	Continuous (at 400 V) [A]	212	260	315	395	480
	Intermittent (60 sec overload) (at 400 V) [A]	233	286	347	435	528
	Continuous (at 460/480 V) [A]	190	240	302	361	443
	Intermittent (60 sec overload) (at 460/480 V) [A]	209	264	332	397	487
	Continuous KVA (at 400 V) [KVA]	147	180	218	274	333
	Continuous KVA (at 460 V) [KVA]	151	191	241	288	353
Max. input current						
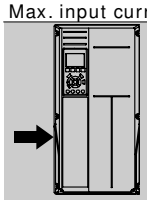	Continuous (at 400 V) [A]	204	251	304	381	463
	Continuous (at 460/480 V) [A]	183	231	291	348	427
	Max. cable size, line power motor, brake and load share [mm² (AWG[2)])]	2 x 70 (2 x 2/0)	2 x 70 (2 x 2/0)	2 x 185 (2 x 350 mcm)	2 x 185 (2 x 350 mcm)	2 x 185 (2 x 350 mcm)
	Max. external pre-fuses [A] [1]	300	350	400	500	600
	Estimated power loss at rated max. load [W] [4)], 400 V	3234	3782	4213	5119	5893
	Estimated power loss at rated max. load [W] [4)], 460 V	2947	3665	4063	4652	5634
	Weight, enclosure IP21, IP 54 [kg]	96	104	125	136	151
	Weight, enclosure IP00 [kg]	82	91	112	123	138
	Efficiency[4)]	0.98				
	Output frequency	0–800 Hz				
	Heatsink overtemp. trip	185°F [85°C]	194°F [90°C]	221°F [105°C]	221°F [105°C]	239°F [115°C]
	Power card ambient trip	140°F [60°C]				

8

Line Power Supply 3 x 380–480 V AC					
		P315	P355	P400	P450
	Typical Shaft output at 400 V [kW]	315	355	400	450
	Typical Shaft output at 460 V [HP]	450	500	600	600
	Enclosure IP21	E1	E1	E1	E1
	EnclosureIP54	E1	E1	E1	E1
	Enclosure IP00	E2	E2	E2	E2
	Output current				
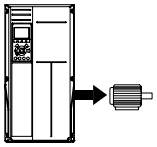	Continuous (at 400 V) [A]	600	658	745	800
	Intermittent (60 sec overload) (at 400 V) [A]	660	724	820	880
	Continuous (at 460/ 480 V) [A]	540	590	678	730
	Intermittent (60 sec overload) (at 460/480 V) [A]	594	649	746	803
	Continuous KVA (at 400 V) [KVA]	416	456	516	554
	Continuous KVA (at 460 V) [KVA]	430	470	540	582
Max. input current					
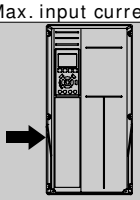	Continuous (at 400 V) [A]	590	647	733	787
	Continuous (at 460/480 V) [A]	531	580	667	718
	Max. cable size, line power, motor and load share [mm² (AWG[2)])]	4x240 (4x500 mcm)	4x240 (4x500 mcm)	4x240 (4x500 mcm)	4x240 (4x500 mcm)
	Max. cable size, brake [mm² (AWG[2)])	2 x 185 (2 x 350 mcm)	2 x 185 (2 x 350 mcm)	2 x 185 (2 x 350 mcm)	2 x 185 (2 x 350 mcm)
	Max. external pre-fuses [A] [1]	700	900	900	900
	Estimated power loss at rated max. load [W] [4)], 400 V	6790	7701	8879	9670
	Estimated power loss at rated max. load [W] [4)], 460 V	6082	6953	8089	8803
	Weight, enclosure IP21, IP 54 [kg]	263	270	272	313
	Weight, enclosure IP00 [kg]	221	234	236	277
	Efficiency[4)]	0.98			
	Output frequency	0–600 Hz			
	Heatsink overtemp. trip	203°F [95°C]			
	Power card ambient trip	154°F [68°C]			

8

Line Power Supply 3 x 380–480 V AC

		P500	P560	P630	P710	P800	P1M0
	Typical Shaft output at 400 V [kW]	500	560	630	710	800	1000
	Typical Shaft output at 460 V [HP]	650	750	900	1000	1200	1350
	Enclosure IP21, 54 without / with options cabinet	F1/F3	F1/F3	F1/F3	F1/F3	F2/F4	F2/F4
	Output current						
	Continuous (at 400 V) [A]	880	990	1120	1260	1460	1720
	Intermittent (60 sec overload) (at 400 V) [A]	968	1089	1232	1386	1606	1892
	Continuous (at 460/480 V) [A]	780	890	1050	1160	1380	1530
	Intermittent (60 sec overload) (at 460/480 V) [A]	858	979	1155	1276	1518	1683
	Continuous KVA (at 400 V) [KVA]	610	686	776	873	1012	1192
	Continuous KVA (at 460 V) [KVA]	621	709	837	924	1100	1219
	Max. input current						
	Continuous (at 400 V) [A]	857	964	1090	1227	1422	1675
	Continuous (at 460/480 V) [A]	759	867	1022	1129	1344	1490
	Max. cable size,motor [mm² (AWG[2])]	8x150 (8x300 mcm)				12x150 (12x300 mcm)	
	Max. cable size, line power [mm² (AWG[2])]	8x240 (8x500 mcm)					
	Max. cable size, loadsharing [mm² (AWG[2])]	4x120 (4x250 mcm)					
	Max. cable size, brake [mm² (AWG[2])]	4x185 (4x350 mcm)				6x185 (6x350 mcm)	
	Max. external prefuses [A] [1]	1600		2000		2500	
	Est. power loss at rated max. load [W][4], 400 V, F1 & F2	10647	12338	13201	15436	18084	20358
	Est. power loss at rated max. load [W] [4], 460 V, F1 & F2	9414	11006	12353	14041	17137	17752
	Max. added losses of A1 RFI, Circuit Breaker or Disconnect, & Contactor, F3 & F4	963	1054	1093	1230	2280	2541
	Max Panel Options Losses	400					
	Weight, enclosure IP21, IP 54 [kg]	1004/ 1299	1004/ 1299	1004/ 1299	1004/ 1299	1246/ 1541	1246/ 1541
	Weight Rectifier Module [kg]	102	102	102	102	136	136
	Weight Inverter Module [kg]	102	102	102	136	102	102
	Efficiency[4]	0.98					
	Output frequency	0–600 Hz					
	Heatsink overtemp. trip	203°F [95°C]					
	Power card ambient trip	154°F [68°C]					

8

8.1.1 Line Power Supply 3 x 525–600 V AC

Normal overload 110% for 1 minute

Size:	P1K1	P1K5	P2K2	P3K0	P3K7	P4K0	P5K5	P7K5	P11K	P15K	P18K	P22K	P30K	P37K	P45K	P55K	P75K	P90K
Typical Shaft Output [kW]	1.1	1.5	2.2	3	3.7	4	5.5	7.5	11	15	18.5	22	30	37	45	55	75	90
Output current																		
IP 20 / Chassis	A2	A2	A2	A2	A2	A2	A3	A3	B3	B3	B3	B4	B4	B4	C3	C3	C4	C4
IP 21 / NEMA 1	A2	A2	A2	A2	A2	A2	A3	A3	B1	B1	B1	B2	B2	C1	C1	C1	C2	C2
IP 55 / NEMA 12	A5	A5	A5	A5	A5	A5	A5	A5	B1	B1	B1	B2	B2	C1	C1	C1	C2	C2
IP 66 / NEMA 12	A5	A5	A5	A5	A5	A5	A5	A5	B1	B1	B1	B2	B2	C1	C1	C1	C2	C2
Continuous (3 x 525–550 V) [A]	2.6	2.9	4.1	5.2	-	6.4	9.5	11.5	19	23	28	36	43	54	65	87	105	137
Intermittent (3 x 525–550 V) [A]	2.9	3.2	4.5	5.7	-	7.0	10.5	12.7	21	25	31	40	47	59	72	96	116	151
Continuous (3 x 525–600 V) [A]	2.4	2.7	3.9	4.9	-	6.1	9.0	11.0	18	22	27	34	41	52	62	83	100	131
Intermittent (3 x 525–600 V) [A]	2.6	3.0	4.3	5.4	-	6.7	9.9	12.1	20	24	30	37	45	57	68	91	110	144
Continuous kVA (525 V AC) [kVA]	2.5	2.8	3.9	5.0	-	6.1	9.0	11.0	18.1	21.9	26.7	34.3	41	51.4	61.9	82.9	100	130.5
Continuous kVA (575 V AC) [kVA]	2.4	2.7	3.9	4.9	-	6.1	9.0	11.0	17.9	21.9	26.9	33.9	40.8	51.8	61.7	82.7	99.6	130.5
Max. cable size, IP 21/55/66 (line power, motor, brake) [mm²]/[AWG] [2]	4/ 10								10/ 7			25/ 4			50/ 1/0		95/ 4/0	120/ MCM250
Max. cable size, IP 20 (line power, motor, brake) [mm²]/[AWG] [2]	4/ 10								16/ 6			35/ 2			50/ 1/0		95/ 4/0	150/ MCM250 [5]
Max. input current																		
Continuous (3 x 525–600 V) [A]	2.4	2.7	4.1	5.2	-	5.8	8.6	10.4	17.2	20.9	25.4	32.7	39	49	59	78.9	95.3	124.3
Intermittent (3 x 525–600 V) [A]	2.7	3.0	4.5	5.7	-	6.4	9.5	11.5	19	23	28	36	43	54	65	87	105	137
Max. pre-fuses[1] [A]	10	10	20	20	-	20	32	32	63	63	63	63	80	100	125	160	250	250
Environment:																		
Estimated power loss at rated max. load [W] [4]	50	65	92	122	-	145	195	261	300	400	475	525	700	750	850	1100	1400	1500
Weight enclosure IP20 [kg]	6.5	6.5	6.5	6.5	-	6.5	6.6	6.6	12	12	12	23.5	23.5	23.5	35	35	50	50
Weight enclosure IP21/55 [kg]	13.5	13.5	13.5	13.5	13.5	13.5	14.2	14.2	23	23	23	27	27	27	45	45	65	65
Efficiency [4]	0.97	0.97	0.97	0.97	-	0.97	0.97	0.97	0.98	0.98	0.98	0.98	0.98	0.98	0.98	0.98	0.98	0.98

Table 8.1: [5] Brake and load sharing 95/ 4/0

MG.11.A9.22 - VLT® is a registered Danfoss trademark

Line Power Supply 3 x 525–690 V AC						
		P45K	P55K	P75K	P90K	P110
	Typical Shaft output at 550 V [kW]	37	45	55	75	90
	Typical Shaft output at 575 V [HP]	50	60	75	100	125
	Typical Shaft output at 690 V [kW]	45	55	75	90	110
	Enclosure IP21	D1	D1	D1	D1	D1
	Enclosure IP54	D1	D1	D1	D1	D1
	Enclosure IP00	D2	D2	D2	D2	D2
Output current						
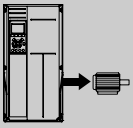	Continuous (at 550 V) [A]	56	76	90	113	137
	Intermittent (60 sec overload) (at 550 V) [A]	62	84	99	124	151
	Continuous (at 575/690 V) [A]	54	73	86	108	131
	Intermittent (60 sec overload) (at 575/690 V) [A]	59	80	95	119	144
	Continuous KVA (at 550 V) [KVA]	53	72	86	108	131
	Continuous KVA (at 575 V) [KVA]	54	73	86	108	130
	Continuous KVA (at 690 V) [KVA]	65	87	103	129	157
Max. input current						
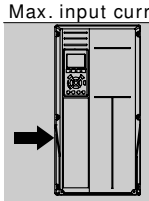	Continuous (at 550 V) [A]	60	77	89	110	130
	Continuous (at 575 V) [A]	58	74	85	106	124
	Continuous (at 690 V) [A]	58	77	87	109	128
	Max. cable size, line power, motor, load share and brake [mm^2 (AWG)]	2x70 (2x2/0)				
	Max. external pre-fuses [A] [1]	125	160	200	200	250
	Estimated power loss at rated max. load [W] [4], 575 V	1398	1645	1827	2157	2533
	Estimated power loss at rated max. load [W] [4], 690 V	1458	1717	1913	2262	2662
	Weight, enclosure IP21, IP 54 [kg]	96				
	Weight, enclosure IP00 [kg]	82				
	Efficiency[4]	0.97	0.97	0.98	0.98	0.98
	Output frequency	0–600 Hz				
	Heatsink overtemp. trip	185°F [85°C]				
	Power card ambient trip	140°F [60°C]				

8

Line Power Supply 3 x 525–690 V AC		P132	P160	P200	P250
	Typical Shaft output at 550 V [kW]	110	132	160	200
	Typical Shaft output at 575 V [HP]	150	200	250	300
	Typical Shaft output at 690 V [kW]	132	160	200	250
	Enclosure IP21	D1	D1	D2	D2
	Enclosure IP54	D1	D1	D2	D2
	Enclosure IP00	D3	D3	D4	D4
	Output current				
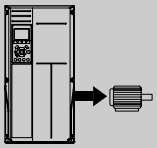	Continuous (at 550 V) [A]	162	201	253	303
	Intermittent (60 sec overload) (at 550 V) [A]	178	221	278	333
	Continuous (at 575/690 V) [A]	155	192	242	290
	Intermittent (60 sec overload) (at 575/690 V) [A]	171	211	266	319
	Continuous KVA (at 550 V) [KVA]	154	191	241	289
	Continuous KVA (at 575 V) [KVA]	154	191	241	289
	Continuous KVA (at 690 V) [KVA]	185	229	289	347
Max. input current					
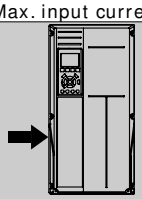	Continuous (at 550 V) [A]	158	198	245	299
	Continuous (at 575 V) [A]	151	189	234	286
	Continuous (at 690 V) [A]	155	197	240	296
	Max. cable size, line power motor, load share and brake [mm^2 (AWG)]	2 x 70 (2 x 2/0)	2 x 70 (2 x 2/0)	2 x 185 (2 x 350 mcm)	2 x 185 (2 x 350 mcm)
	Max. external pre-fuses [A] [1]	315	350	350	400
	Estimated power loss at rated max. load [W] [4], 575 V	2963	3430	4051	4867
	Estimated power loss at rated max. load [W] [4], 690 V	3430	3612	4292	5156
	Weight, Enclosure IP21, IP 54 [kg]	96	104	125	136
	Weight, Enclosure IP00 [kg]	82	91	112	123
	Efficiency[4]	0.98			
	Output frequency	0–600 Hz			
	Heatsink overtemp. trip	185°F [85°C]	194°F [90°C]	230°F [110°C]	230°F [110°C]
	Power card ambient trip	140°F [60°C]			

8

Line Power Supply 3 x 525–690 V AC

		P315	P400	P450
	Typical Shaft output at 550 V [kW]	250	315	355
	Typical Shaft output at 575 V [HP]	350	400	450
	Typical Shaft output at 690 V [kW]	315	400	450
	Enclosure IP21	D2	D2	E1
	Enclosure IP54	D2	D2	E1
	Enclosure IP00	D4	D4	E2
	Output current			
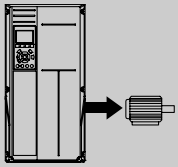	Continuous (at 550 V) [A]	360	418	470
	Intermittent (60 sec overload) (at 550 V) [A]	396	460	517
	Continuous (at 575/690 V) [A]	344	400	450
	Intermittent (60 sec overload) (at 575/ 690V) [A]	378	440	495
	Continuous KVA (at 550 V) [KVA]	343	398	448
	Continuous KVA (at 575 V) [KVA]	343	398	448
	Continuous KVA (at 690 V) [KVA]	411	478	538
Max. input current				
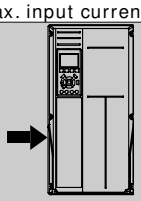	Continuous (at 550 V) [A]	355	408	453
	Continuous (at 575 V) [A]	339	390	434
	Continuous (at 690 V) [A]	352	400	434
	Max. cable size, line power, motor and load share [mm² (AWG)]	2 x 185 (2 x 350 mcm)	2 x 185 (2 x 350 mcm)	4 x 240 (4 x 500 mcm)
	Max. cable size, brake [mm² (AWG)]	2 x 185 (2 x 350 mcm)	2 x 185 (2 x 350 mcm)	2 x 185 (2 x 350 mcm)
	Max. external pre-fuses [A] [1]	500	550	700
	Estimated power loss at rated max. load [W] [4], 575 V	5493	5852	6132
	Estimated power loss at rated max. load [W] [4], 690 V	5821	6149	6440
	Weight, enclosure IP21, IP 54 [kg]	151	165	263
	Weight, enclosure IP00 [kg]	138	151	221
	Efficiency[4]	0.98		
	Output frequency	0–600 Hz	0–500 Hz	0–500 Hz
	Heatsink overtemp. trip	230°F [110°C]	230°F [110°C]	185°F [85°C]
	Power card ambient trip	140°F [60°C]	140°F [60°C]	154°F [68°C]

8

Line Power Supply 3 x 525–690 V AC

		P500	P560	P630
	Typical Shaft output at 550 V [kW]	400	450	500
	Typical Shaft output at 575 V [HP]	500	600	650
	Typical Shaft output at 690 V [kW]	500	560	630
	Enclosure IP21	E1	E1	E1
	Enclosure IP54	E1	E1	E1
	Enclosure IP00	E2	E2	E2
	Output current			
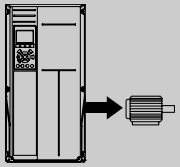	Continuous (at 550 V) [A]	523	596	630
	Intermittent (60 sec overload) (at 550 V) [A]	575	656	693
	Continuous (at 575/690 V) [A]	500	570	630
	Intermittent (60 sec overload) (at 575/690 V) [A]	550	627	693
	Continuous KVA (at 550 V) [KVA]	498	568	600
	Continuous KVA (at 575 V) [KVA]	498	568	627
	Continuous KVA (at 690 V) [KVA]	598	681	753
Max. input current				
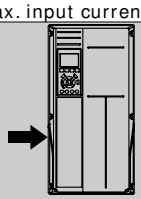	Continuous (at 550 V) [A]	504	574	607
	Continuous (at 575 V) [A]	482	549	607
	Continuous (at 690 V) [A]	482	549	607
	Max. cable size, line power, motor and load share [mm² (AWG)]	4x240 (4x500 mcm)	4x240 (4x500 mcm)	4x240 (4x500 mcm)
	Max. cable size, brake [mm² (AWG)]	2 x 185 (2 x 350 mcm)	2 x 185 (2 x 350 mcm)	2 x 185 (2 x 350 mcm)
	Max. external pre-fuses [A] [1]	700	900	900
	Estimated power loss at rated max. load [W] [4], 575 V	6903	8343	9244
	Estimated power loss at rated max. load [W] [4], 690 V	7249	8727	9673
	Weight, enclosure IP21, IP 54 [kg]	263	272	313
	Weight, enclosure IP00 [kg]	221	236	277
	Efficiency[4]	0.98		
	Output frequency	0–500 Hz		
	Heatsink overtemp. trip	185°F [85°C]		
	Power card ambient trip	154°F [68°C]		

8

Line Power Supply 3 x 525–690 V AC						
		P710	P800	P900	P1M0	P1M2
	Typical Shaft output at 550 V [kW]	560	670	750	850	1000
	Typical Shaft output at 575 V [HP]	750	950	1050	1150	1350
	Typical Shaft output at 690 V [kW]	710	800	900	1000	1200
	Enclosure IP21, 54 without / with options cabinet	F1/ F3	F1/ F3	F1/ F3	F2/ F4	F2/ F4
	Output current					
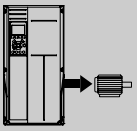	Continuous (at 550 V) [A]	763	889	988	1108	1317
	Intermittent (60 s overload, at 550 V) [A]	839	978	1087	1219	1449
	Continuous (at 575/690 V) [A]	730	850	945	1060	1260
	Intermittent (60 s overload, at 575/690 V) [A]	803	935	1040	1166	1386
	Continuous KVA (at 550 V) [KVA]	727	847	941	1056	1255
	Continuous KVA (at 575 V) [KVA]	727	847	941	1056	1255
	Continuous KVA (at 690 V) [KVA]	872	1016	1129	1267	1506
Max. input current						
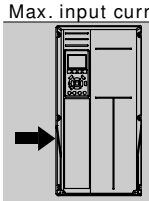	Continuous (at 550 V) [A]	743	866	962	1079	1282
	Continuous (at 575 V) [A]	711	828	920	1032	1227
	Continuous (at 690 V) [A]	711	828	920	1032	1227
	Max. cable size,motor [mm² (AWG[2])]		8x150 (8x300 mcm)		12x150 (12x300 mcm)	
	Max. cable size, line power [mm² (AWG[2])]			8x240 (8x500 mcm)		
	Max. cable size, load-sharing [mm² (AWG[2])]			4x120 (4x250 mcm)		
	Max. cable size, brake [mm² (AWG[2])]		4x185 (4x350 mcm)		6x185 (6x350 mcm)	
	Max. external pre-fuses [A] [1]		1600			2000
	Est. power loss at rated max. load [W] [4], 575 V, F1 & F2	10771	12272	13835	15592	18281
	Est. power loss at rated max. load [W] [4], 690 V, F1 & F2	11315	12903	14533	16375	19207
	Max. added losses of Circuit Breaker or Disconnect & Contactor, F3 & F4	422	526	610	658	855
	Max Panel Options Losses			400		
	Weight,enclosure IP21, IP 54 [kg]	1004/ 1299	1004/ 1299	1004/ 1299	1246/ 1541	1246/ 1541
	Weight, Rectifier Module [kg]	102	102	102	136	136
	Weight, Inverter Module [kg]	102	102	136	102	102
	Efficiency[4]			0.98		
	Output frequency			0–500 Hz		
	Heatsink overtemp. trip			185°F [85°C]		
	Power card amb. trip			154°F [68°C]		

1) For type of fuse, see the section *Fuses*.

2) American Wire Gauge.

3) Measured using 16.4 ft [5 m] shielded motor cables at rated load and rated frequency.

4) The typical power loss is at nominal load conditions and expected to be within +/-15% (tolerance relates to variety in voltage and cable conditions). Values are based on a typical motor efficiency (eff2/eff3 border line). Motors with lower efficiency will also add to the power loss

in the adjustable frequency drive and opposite. If the switching frequency is increased compared to the default setting, the power losses may rise significantly.LCP and typical control card power consumptions are included. Further options and customer load may add up to 30W to the losses. (Though typical only 4W extra for a fully loaded control card, or options for slot A or slot B, each).
Although measurements are made with state of the art equipment, some measurement inaccuracy must be allowed for (+/-5%).

8.1.2 General specifications:

Line power supply (L1, L2, L3):	
Supply voltage	380–480 V ±10%
Supply voltage	525–600 V ±10%
Supply frequency	50/60 Hz ±5%
Max. imbalance temporary between line phases	3.0% of rated supply voltage
True Power Factor ()	≥ 0.9 nominal at rated load
Displacement Power Factor (cos) near unity	(> 0.98)
Switching on input supply L1, L2, L3 (power-ups) ≤ enclosure type A	maximum twice/min.
Switching on input supply L1, L2, L3 (power-ups) ≥ enclosure type B, C	maximum once/min.
Switching on input supply L1, L2, L3 (power-ups) ≥ enclosure type D, E	maximum once/2 min.
Environment according to EN60664-1	overvoltage category III / pollution degree 2

The unit is suitable for use on a circuit capable of delivering not more than 100.000 RMS symmetrical Amperes, 480/600 V maximum.

Motor output (U, V, W):	
Output voltage	0–100% of supply voltage
Output frequency	0–1,000 Hz
Switching on output	Unlimited
Ramp times	1-3,600 sec.
Torque characteristics:	
Starting torque (Constant torque)	maximum 110% for 1 min.*
Starting torque	maximum 135% up to 0.5 sec.*
Overload torque (Constant torque)	maximum 110% for 1 min.*

**Percentage relates to the adjustable frequency drive's nominal torque.*

Cable lengths and cross-sections:	
Max. motor cable length, shielded/armored	VLT HVAC Drive: 492 ft [150 m]
Max. motor cable length, unshielded/unarmored	VLT HVAC Drive: 984 ft [300 m]
Max. cross-section to motor, line power, load sharing and brake *	
Maximum cross-section to control terminals, rigid wire	0.0023 in^2 [1.5 mm^2]/16 AWG (2 x 0.00112^2 in [0.75 mm^2])
Maximum cross-section to control terminals, flexible cable	0.0016 in^2 [1 mm^2]/18 AWG
Maximum cross-section to control terminals, cable with enclosed core	0.0008 in^2 [0.5 mm^2]/20 AWG
Minimum cross-section to control terminals	0.00039 in^2 [0.25 mm^2]

** See Line Power Supply tables for more information!*

Digital inputs:	
Programmable digital inputs	4 (6)
Terminal number	18, 19, 27 [1)], 29 [1)], 32, 33,
Logic	PNP or NPN
Voltage level	0–24 V DC
Voltage level, logic'0' PNP	< 5 V DC
Voltage level, logic'1' PNP	> 10 V DC
Voltage level, logic '0' NPN	> 19 V DC
Voltage level, logic '1' NPN	< 14 V DC
Maximum voltage on input	28 V DC
Input resistance, R_i	approx. 4 k

All digital inputs are galvanically isolated from the supply voltage (PELV) and other high-voltage terminals.

1) Terminals 27 and 29 can also be programmed as output.

Analog inputs:	
Number of analog inputs	2
Terminal number	53, 54
Modes	Voltage or current
Mode select	Switch S201 and switch S202
Voltage mode	Switch S201/switch S202 = OFF (U)
Voltage level	: 0 to + 10 V (scaleable)
Input resistance, R_i	approx. 10 kΩ
Max. voltage	± 20 V
Current mode	Switch S201/switch S202 = ON (I)
Current level	0/4 to 20 mA (scaleable)
Input resistance, R_i	approx. 200 Ω
Max. current	30 mA
Resolution for analog inputs	10 bit (+ sign)
Accuracy of analog inputs	Max. error 0.5% of full scale
Bandwidth	: 200 Hz

The analog inputs are galvanically isolated from the supply voltage (PELV) and other high-voltage terminals.

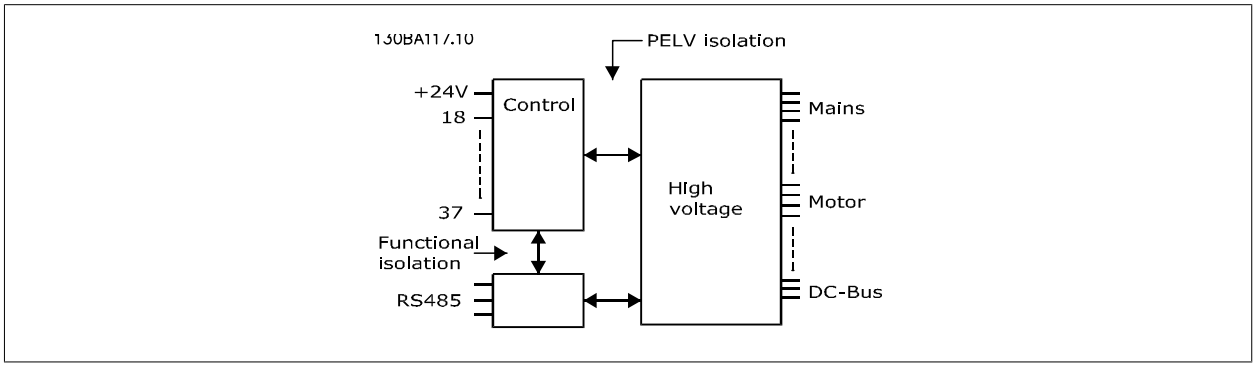

Pulse inputs:	
Programmable pulse inputs	2
Terminal number pulse	29, 33
Max. frequency at terminal, 29, 33	110 kHz (push-pull driven)
Max. frequency at terminal, 29, 33	5 kHz (open collector)
Min. frequency at terminal 29, 33	4 Hz
Voltage level	see section on Digital input
Maximum voltage on input	28 V DC
Input resistance, R_i	approx. 4 kΩ
Pulse input accuracy (0.1-1 kHz)	Max. error: 0.1% of full scale
Analog output:	
Number of programmable analog outputs	1
Terminal number	42
Current range at analog output	0/4–20 mA
Max. resistor load to common at analog output	500 Ω
Accuracy on analog output	Max. error: 0.8% of full scale
Resolution on analog output	8 bit

The analog output is galvanically isolated from the supply voltage (PELV) and other high-voltage terminals.

Control card, RS-485 serial communication:	
Terminal number	68 (P,TX+, RX+), 69 (N,TX-, RX-)
Terminal number 61	Common for terminals 68 and 69

The RS-485 serial communication circuit is functionally separated from other central circuits and galvanically isolated from the supply voltage (PELV).

Digital output:	
Programmable digital/pulse outputs	2
Terminal number	27, 29 [1)]
Voltage level at digital/frequency output	0–24 V
Max. output current (sink or source)	40 mA
Max. load at frequency output	1 kΩ
Max. capacitive load at frequency output	10 nF
Minimum output frequency at frequency output	0 Hz
Maximum output frequency at frequency output	32 kHz
Accuracy of frequency output	Max. error: 0.1% of full scale
Resolution of frequency outputs	12 bit

1) Terminal 27 and 29 can also be programmed as input.

The digital output is galvanically isolated from the supply voltage (PELV) and other high-voltage terminals.

Control card, 24 V DC output:	
Terminal number	12, 13
Max. load	: 200 mA

The 24 V DC supply is galvanically isolated from the supply voltage (PELV), but has the same potential as the analog and digital inputs and outputs.

Relay outputs:	
Programmable relay outputs	2
Relay 01 Terminal number	1-3 (break), 1-2 (make)
Max. terminal load (AC-1)[1)] on 1-3 (NC), 1-2 (NO) (Resistive load)	240 V AC, 2 A
Max. terminal load (AC-15)[1)] (Inductive load @ cosφ 0.4)	240 V AC, 0.2 A
Max. terminal load (DC-1)[1)] on 1-2 (NO), 1-3 (NC) (Resistive load)	60 V DC, 1A
Max. terminal load (DC-13)[1)] (Inductive load)	24 V DC, 0.1A
Relay 02 Terminal number	4-6 (break), 4-5 (make)
Max. terminal load (AC-1)[1)] on 4-5 (NO) (Resistive load)[2)3)]	400 V AC, 2 A
Max. terminal load (AC-15)[1)] on 4-5 (NO) (Inductive load @ cosφ 0.4)	240 V AC, 0.2 A
Max. terminal load (DC-1)[1)] on 4-5 (NO) (Resistive load)	80 V DC, 2 A
Max. terminal load (DC-13)[1)] on 4-5 (NO) (Inductive load)	24 V DC, 0.1A
Max. terminal load (AC-1)[1)] on 4-6 (NC) (Resistive load)	240 V AC, 2 A
Max. terminal load (AC-15)[1)] on 4-6 (NC) (Inductive load @ cosφ 0.4)	240 V AC, 0.2 A
Max. terminal load (DC-1)[1)] on 4-6 (NC) (Resistive load)	50 V DC, 2 A
Max. terminal load (DC-13)[1)] on 4-6 (NC) (Inductive load)	24 V DC, 0.1 A
Min. terminal load on 1-3 (NC), 1-2 (NO), 4-6 (NC), 4-5 (NO)	24 V DC 10 mA, 24 V AC 20 mA
Environment according to EN 60664-1	overvoltage category III/pollution degree 2

1) IEC 60947 part 4 and 5

The relay contacts are galvanically isolated from the rest of the circuit by reinforced isolation (PELV).

2) Overvoltage Category II

3) UL applications 300 V AC 2A

Control card, 10 V DC output:	
Terminal number	50
Output voltage	10.5 V ±0.5 V
Max. load	25 mA

The 10 V DC supply is galvanically isolated from the supply voltage (PELV) and other high-voltage terminals.

Control characteristics:	
Resolution of output frequency at 0–1000 Hz	: +/- 0.003 Hz
System response time (terminals 18, 19, 27, 29, 32, 33)	: ≤ 2 ms
Speed control range (open-loop)	1:100 of synchronous speed
Speed accuracy (open-loop)	30–4000 rpm: Maximum error of ±8 rpm

All control characteristics are based on a 4-pole asynchronous motor

Surroundings:	
Enclosure type A	IP 20/Chassis, IP 21kit/Type 1, IP55/Type12, IP 66/Type12
Enclosure type B1/B2	IP 21/Type 1, IP55/Type12, IP 66/12
Enclosure type B3/B4	IP20/Chassis
Enclosure type C1/C2	IP 21/Type 1, IP55/Type 12, IP66/12
Enclosure type C3/C4	IP20/Chassis
Enclosure type D1/D2/E1	IP21/Type 1, IP54/Type12
Enclosure type D3/D4/E2	IP00/Chassis
Enclosure kit available ≤ enclosure type D	IP21/NEMA 1/IP 4_X on top of enclosure
Vibration test	1.0 g
Relative humidity	5%–95%(IEC 721-3-3; Class 3K3 (non-condensing) during operation
Aggressive environment (IEC 60068-2-43) H_2S test	class Kd
Test method according to IEC 60068-2-43 H2S (10 days)	
Ambient temperature (at 60 AVM switching mode)	
- with derating	max. 55° C[1)]
- with full output power of typical EFF2 motors (up to 90% output current)	max. 50 ° C[1)]
- at full continuous FC output current	max. 45 ° C[1)]

[1)] For more information on derating, see the Design Guide, section on Special Conditions.

Minimum ambient temperature during full-scale operation	32°F [0°C]
Minimum ambient temperature at reduced performance	14°F [-10°C]
Temperature during storage/transport	-13°–+°149/°158°F [-25°–+65°/70°C]
Maximum altitude above sea level without derating	3280 ft [1000 m]
Maximum altitude above sea level with derating	9842 ft [3000 m]

Derating for high altitude, see section on special conditions.

EMC standards, Emission	EN 61800-3, EN 61000-6-3/4, EN 55011, IEC 61800-3
EMC standards, Immunity	EN 61800-3, EN 61000-6-1/2, EN 61000-4-2, EN 61000-4-3, EN 61000-4-4, EN 61000-4-5, EN 61000-4-6

See section on special conditions!

Control card performance:	
Scan interval	: 5 ms
Control card, USB serial communication:	
USB standard	1.1 (Full speed)
USB plug	USB type B "device" plug



Connection to a PC is done via a standard host/device USB cable.
The USB connection is galvanically isolated from the supply voltage (PELV) and other high-voltage terminals.
The USB connection is not galvanically isolated from protection ground. Use only an isolated laptop/PC as the connection to the USB connector on the adjustable frequency drive or an isolated USB cable/drive.

Protection and Features:

- Electronic thermal motor protection against overload.
- Temperature monitoring of the heatsink ensures that the adjustable frequency drive trips if the temperature reaches 203°F ± 41°F [95°C ± 5°C]. An overload temperature cannot be reset until the temperature of the heatsink is below 158°F ± 41°F [70°C ± 5°C] (Guideline - these temperatures may vary for different power sizes, enclosures, etc.). The adjustable frequency drive has an auto derating function to avoid its heatsink reaching 203°F [95°C].
- The adjustable frequency drive is protected against short-circuits on motor terminals U, V, W.
- If a line phase is missing, the adjustable frequency drive trips or issues a warning (depending on the load).

- Monitoring of the intermediate circuit voltage ensures that the adjustable frequency drive trips if the intermediate circuit voltage is too low or too high.
- The adjustable frequency drive is protected against ground faults on motor terminals U, V, W.

8.2 Special Conditions

8.2.1 Purpose of derating

Derating must be taken into account when using the adjustable frequency drive at low air pressure (high elevations), at low speeds, with long motor cables, cables with a large cross-section or at high ambient temperature. The required action is described in this section.

8.2.2 Derating for Ambient Temperature

90% adjustable frequency drive output current can be maintained up to a max. of 122°F [50°C] ambient temperature.

With a typical full load current of EFF 2 motors, full output shaft power can be maintained up to 122°F [50°C].
For more specific data and/or derating information for other motors or conditions, please contact Danfoss.

8.2.3 Automatic adaptations to ensure performance

The adjustable frequency drive constantly checks for critical internal temperature levels, load current, high voltage on the intermediate circuit and low motor speeds. As a response to a critical level, the adjustable frequency drive can adjust the switching frequency and / or change the switching pattern in order to ensure the performance of the adjustable frequency drive. The capability to automatically reduce the output current extends the acceptable operating conditions even further.

8

8.2.4 Derating for Low Air Pressure

The cooling capability of air is decreased at a lower air pressure.

At altitudes higher than 6,600 feet [2 km], please contact Danfoss regarding PELV.

At an altitude lower than 3,280 ft [1,000 m], no derating is necessary, but above 3,280 ft [1,000 m], the ambient temperature (T_{AMB}) or max. output current (I_{out}) should be derated in accordance with the diagram shown.

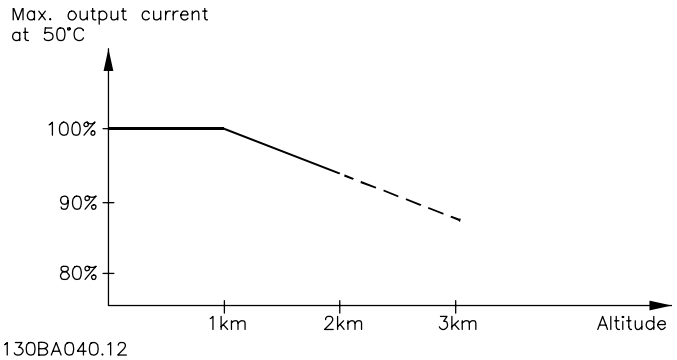

Figure 8.1: Derating of output current versus altitude at $T_{AMB, MAX}$. At altitudes above 6,600 feet [2 km], please contact Danfoss regarding PELV.

An alternative is to lower the ambient temperature at high altitudes and thereby ensure 100% output current at high altitudes.

8.2.5 Derating for Running at Low Speed

When a motor is connected to an adjustable frequency drive, it is necessary to check that the cooling of the motor is adequate.
The level of heating depends on the load on the motor as well as the operating speed and time.

Constant torque applications (CT mode)

A problem may occur at low RPM values in constant torque applications. In a constant torque application, a motor may overheat at low speeds due to less cooling air from the motor integral fan.
Therefore, if the motor is to be run continuously at an RPM value lower than half of the rated value, the motor must be supplied with additional air-cooling (or a motor designed for this type of operation may be used).

An alternative is to reduce the load level of the motor by choosing a larger motor. However, the design of the adjustable frequency drive limits the motor size.

Variable (quadratic) torque applications (VT)

In VT applications such as centrifugal pumps and fans, where the torque is proportional to the square of the speed and the power is proportional to the cube of the speed, there is no need for additional cooling or de-rating of the motor.

In the graphs shown below, the typical VT curve is below the maximum torque with de-rating and maximum torque with forced cooling at all speeds.

Maximum Load for a Standard Motor at 104°F [40°C] driven by an adjustable frequency drive type VLT FCxxx

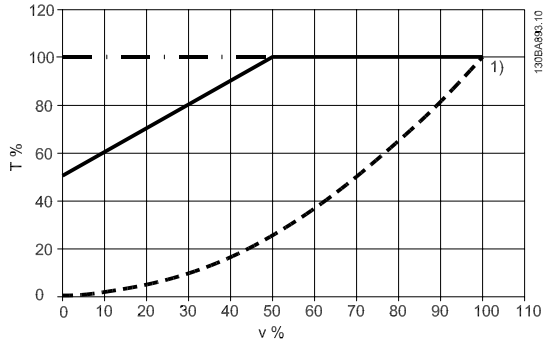

Legend: – – – –Typical torque at VT load –•–•–•–Max torque with forced cooling ———Max torque
Note 1) Oversyncronous speed operation will result in the available motor torque decreasing inversely proportional to the increase in speed. This must be considered during the design phase to avoid overloading the motor.

8.2.6 Derating for Installing Long Motor Cables or Cables with Larger Cross-Section

The maximum cable length for this adjustable frequency drive is 984 ft [300 m] for unshielded cable, and 492 ft [150 m] for shielded cable.

The adjustable frequency drive has been designed to work using a motor cable with a rated cross-section. If a cable with a larger cross-section is used, reduce the output current by 5% for every step the cross-section is increased.
(Increased cable cross-section leads to increased capacity to ground, and thus an increased ground leakage current).

Index

5

5-1* Digital Inputs 6-30

A

Abbreviations And Standards 2-4
Ac Line Input Connections For A2 And A3 4-7
Ac Line Input Connections For B1, B2 And B3 4-10
Ac Line Input Connections For B4, C1 And C2 4-11
Ac Line Input Connections For C3 And C4 4-11
Acceleration Time 6-6
Access To Control Terminals 4-26
Accessory Bags 3-4
Adjustable Frequency Drive 4-29
Adjustable Frequency Drive Identification 2-2
Alarms And Warnings 7-1
Ama 5-5
Analog Inputs 8-16
Analog Output 8-16
Auto Energy Optimization Compressor 6-22
Auto Energy Optimization Vt 6-22
Automatic Adaptations To Ensure Performance 8-20
Automatic Motor Adaptation (ama) 4-30, 6-22
Auto-tune 4-30
Awg 8-1

B

Brake Connection Option 4-18
Brake Function 2-10 6-26
Branch Circuit Protection 4-1
Broken Belt Delay 22-62 6-50
Broken Belt Function 22-60 6-50
Broken Belt Torque 22-61 6-50

C

Cable Lengths And Cross-sections 8-15
Changes Made 6-1
Changing A Group Of Numeric Data Values 6-54
Changing A Text Value 6-53
Changing Data 6-53
Changing Data Values 6-54
Changing Parameter Data 6-1
Checklist 3-1
Coast Inverse 6-3
Communication Option 7-5
Configuration Mode 1-00 6-21
Constant Torque Applications (ct Mode) 8-21
Control Cables 4-28
Control Cables 4-27
Control Card Performance 8-18
Control Card, 10 V Dc Output 8-17
Control Card, 24 V Dc Output 8-17
Control Card, Rs-485 Serial Communication: 8-16
Control Card, Usb Serial Communication: 8-18
Control Characteristics 8-17
Control Terminals 4-27
Cooling 6-24, 8-21
Cooling Conditions 3-5

D

Date Format 0-71 6-20
Dc Bus Connection 4-17
Dc Hold/preheat Current 2-00 6-25
Dc Link 7-4
Default Settings 5-6
Derating For Ambient Temperature 8-20
Derating For Installing Long Motor Cables Or Cables With Larger Cross-section 8-21
Derating For Low Air Pressure 8-20
Derating For Running At Low Speed 8-21
Digital Inputs, 5-1* Continued 6-30
Digital Inputs: 8-15
Digital Output 8-17
Display Line 1.1 Small 0-20 6-13
Display Line 1.2 Small 0-21 6-17
Display Line 1.3 Small, 0-22 6-19
Display Line 2 Large, 0-23 6-19
Display Text 1 0-37 6-20
Display Text 2 0-38 6-20
Display Text 3 0-39 6-20
Disposal Instructions 1-5
Dry Pump Function 22-26 6-49
Dst/summertime 0-74 6-21
Dst/summertime End 0-77 6-21
Dst/summertime Start 0-76 6-21

E

Electrical Installation 4-27
Electrical Ratings 1-2
Electronic Waste 1-5
Etr 7-4
Example Of Changing Parameter Data 6-1

F

Fault Messages 7-4
Feedback 1 Conversion 20-01 6-44
Feedback 1 Source 20-00 6-43
Feedback 2 Conversion 20-04 6-45
Feedback 2 Source 20-03 6-44
Feedback 3 Conversion 20-07 6-45
Feedback 3 Source 20-06 6-45
Feedback Function 20-20 6-45
Final Optimization And Test 4-29
Flying Start 1-73 6-23
Function At Stop 1-80 6-23
Function Relay 5-40 6-8, 6-35
Function Set-ups 6-10
Fuses 4-1

G

General Specifications 8-15
General Warning. 1-1
Glcp 5-5
Ground Leakage Current 1-2
Grounding And It Line Power 4-5

H

High Power Series Line Power And Motor Connections 4-1

High-voltage Warning 1-1
How To Connect A Pc To The Adjustable Frequency Drive 5-3
How To Connect The Motor - Foreword 4-11
How To Connect To Line Power And Grounding For B1 And B2 4-10

I

Indexed Parameters 6-54
Initialization 5-6
Installation At High Altitudes (pelv) 1-3
Intermediate Circuit 7-4
Interval Between Starts 22-76 6-50

J

[Jog Speed Hz] 3-11 6-7

K

Kty Sensor 7-4

L

Language 0-01 6-4
Language Package 1 6-4
Language Package 2 6-4
Line Power Supply 8-1, 8-8
Line Power Supply 3 X 525–690 V Ac 8-8
Line Power Wiring Overview 4-6
Literature 2-1
Live Zero Timeout Function 6-01 6-37
Live Zero Timeout Time 6-00 6-37
Loggings 6-1
Low Power Detection 22-21 6-49
Low Speed Detection 22-22 6-49

M

Main Menu 6-52
Main Menu Mode 6-53
Main Menu Structure 6-55
Main Reactance 6-22
Maximum Reference 3-03 6-26
Mct 10 5-4
Mechanical Dimensions 3-3
Mechanical Mounting 3-5
Minimum Reference 3-02 6-26
Minimum Run Time 22-40 6-50
Minimum Sleep Time 22-41 6-50
Motor Connection For C3 And C4 4-17
Motor Current 1-24 6-5
Motor Frequency 1-23 6-5
Motor Nameplate 4-29
Motor Nominal Speed 1-25 6-5
Motor Output 8-15
[Motor Power Hp] 1-21 6-5
[Motor Power Kw] 1-20 6-5
Motor Protection 6-24, 8-18
Motor Rotation Check 1-28 6-6
Motor Speed Direction 4-10 6-28
[Motor Speed High Limit Hz] 4-14 6-7
[Motor Speed High Limit Rpm] 4-13 6-7
[Motor Speed Low Limit Hz] 4-12 6-7
[Motor Speed Low Limit Rpm] 4-11 6-6
Motor Thermal Protection 1-90 6-24

Motor Voltage 1-22 6-5
Motor Wiring Overview 4-13
My Personal Menu 6-1

N

Nameplate Data 4-30
Nameplate Data. 4-29
Nlcp 5-1
No Operation 6-3
No-flow Delay 22-24 6-49
No-flow Function 22-23 6-49
Non-ul Compliance 4-2
Non-ul Fuses 200 V To 480 V 4-2

O

Output Performance (u, V, W) 8-15
Overcurrent Protection 4-2
Overmodulation 14-03 6-43
Over-voltage Control 2-17 6-26

P

Panel Through Mounting 3-6
Parameter Data 6-1
Parameter Set-up 6-51
Parameters For Quick Set-up 6-4
Pc Software Tools 5-4
Pelv 1-3
Pid Integral Time 20-94 6-49
Pid Normal/ Inverse Control 20-81 6-48
Pid Proportional Gain 20-93 6-48
Preset Reference 3-10 6-27
Profibus Dp-v1 5-4
Protection And Features 8-18
Pulse Inputs 8-16

Q

Quick Menu 6-52
Quick Menu Mode 6-1
Quick Set-up Parameters 6-4
Quick Transfer Of Parameter Settings When Using Glcp 5-5

R

Ramp 1 Ramp-down Time 3-42 6-6
Ramp 1 Ramp-up Time 3-41 6-6
Reference 1 Source 3-15 6-27
Reference 2 Source 3-16 6-28
Relay Connection 4-20
Relay Output 4-23
Relay Outputs 8-17
Rs-485 Bus Connection 5-3

S

Safety Requirements For Mechanical Installation 3-6
Semi-auto Bypass Set-up 4-64 6-29
Serial Communication 8-18
Set Date And Time 0-70 6-20
Setpoint 1 20-21 6-48
Setpoint 2 20-22 6-48
Shielded/armored. 4-28

Short Circuit Protection 4-1
Short Cycle Protection 22-75 6-50
Side-by-side Installation 3-5
Sine-wave Filter 4-12
Start Delay 1-71 6-23
Stator Leakage Reactance 6-22
Step-by-step 6-54
Surroundings: 8-18
Switches S201, S202, And S801 4-28
Switching Frequency 14-01 6-43

T

Terminal 27 Mode 5-01 6-29
Terminal 29 Mode 5-02 6-29
Terminal 32 Digital Input 5-14 6-34
Terminal 42 Output 6-50 6-39
Terminal 42 Output Max Scale 6-52 6-41
Terminal 42 Output Min Scale 6-51 6-40
Terminal 53 Filter Time Constant 6-16 6-38
Terminal 53 High Ref./feedb. Value 6-15 6-38
Terminal 53 High Voltage 6-11 6-38
Terminal 53 Live Zero 6-17 6-38
Terminal 53 Low Ref./feedb. Value 6-14 6-38
Terminal 53 Low Voltage 6-10 6-38
Terminal 54 Filter Time Constant 6-26 6-39
Terminal 54 High Ref./feedb. Value 6-25 6-39
Terminal 54 High Voltage 6-21 6-38
Terminal 54 Live Zero 6-27 6-39
Terminal 54 Low Ref./feedb. Value 6-24 6-39
Terminal 54 Low Voltage 6-20 6-38
Thermistor 6-24
Thermistor Source 1-93 6-25
Three Ways Of Operating 5-1
Tightening Of Terminals 4-1
Time Format 0-72 6-21
Torque Characteristics 8-15
Torque Characteristics 1-03 6-22
Type Code String 2-3
Type Code String (t/c) 2-2

U

Ul Fuses 200–240 V 4-3
Usb Connection. 4-27

V

Variable (quadratic) Torque Applications (vt) 8-21
Voltage Level 8-15

W

[Wake-up Speed Rpm] 22-42 6-50
Warning Feedback High 4-57 6-29
Warning Feedback Low 4-56 6-29
Warning Speed High 4-53 6-28
Wiring Example And Testing 4-17