ENGINEERING TOMORROW

Design Guide

VLT® AutomationDrive FC 302
315–1200 kW

vlt-drives.danfoss.com

Contents

1 Introduction 5

1.1 Purpose of the Design Guide 5
1.2 Additional Resources 5
1.3 Document and Software Version 5
1.4 Conventions 5

2 Safety 6

2.1 Safety Symbols 6
2.2 Qualified Personnel 6
2.3 Safety Precautions 6

3 Approvals and Certifications 8

3.1 Regulatory/Compliance Approvals 8
3.2 Enclosure Protection Ratings 10

4 Product Overview 12

4.1 VLT® High-power Drives 12
4.2 Enclosure Size by Power Rating 12
4.3 Overview of Enclosures, 380–500 V 13
4.4 Overview of Enclosures, 525–690 V 16
4.5 Kit Availability 19

5 Product Features 20

5.1 Automated Operational Features 20
5.2 Custom Application Features 22
5.3 Dynamic Braking Overview 26
5.4 Mechanical Holding Brake Overview 27
5.5 Load Share Overview 30
5.6 Regen Overview 31

6 Options and Accessories Overview 32

6.1 Fieldbus Devices 32
6.2 Functional Extensions 33
6.3 Motion Control and Relay Cards 35
6.4 Brake Resistors 35
6.5 Sine-wave Filters 36
6.6 dU/dt Filters 36
6.7 Common-mode Filters 36
6.8 Harmonic Filters 36
6.9 Enclosure Built-in Options 36
6.10 High-power Kits 38

 Danfoss A/S © 11/2017 All rights reserved.

7 Specifications 39
7.1 Electrical Data, 380–500 V 39
7.2 Electrical Data, 525–690 V 45
7.3 Mains Supply 51
7.4 Motor Output and Motor Data 51
7.5 Ambient Conditions 51
7.6 Cable Specifications 52
7.7 Control Input/Output and Control Data 52
7.8 Enclosure Weights 55
7.9 Airflow for Enclosures E1–E2 and F1–F13 56

8 Exterior and Terminal Dimensions 58
8.1 E1 Exterior and Terminal Dimensions 58
8.2 E2 Exterior and Terminal Dimensions 66
8.3 F1 Exterior and Terminal Dimensions 74
8.4 F2 Exterior and Terminal Dimensions 81
8.5 F3 Exterior and Terminal Dimensions 88
8.6 F4 Exterior and Terminal Dimensions 100
8.7 F8 Exterior and Terminal Dimensions 111
8.8 F9 Exterior and Terminal Dimensions 115
8.9 F10 Exterior and Terminal Dimensions 121
8.10 F11 Exterior and Terminal Dimensions 127
8.11 F12 Exterior and Terminal Dimensions 135
8.12 F13 Exterior and Terminal Dimensions 141

9 Mechanical Installation Considerations 149
9.1 Storage 149
9.2 Lifting the Unit 149
9.3 Operating Environment 150
9.4 Mounting Configurations 151
9.5 Cooling 152
9.6 Derating 153

10 Electrical Installation Considerations 156
10.1 Safety Instructions 156
10.2 Wiring Schematic 157
10.3 Connections 158
10.4 Control Wiring and Terminals 162
10.5 Fuses and Circuit Breakers 169
10.6 Disconnects and Contactors 173
10.7 Motor 174

Danfoss A/S © 11/2017 All rights reserved.

10.8 Braking 177
10.9 Residual Current Devices (RCD) and Insulation Resistance Monitor (IRM) 179
10.10 Leakage Current 179
10.11 IT Grid 180
10.12 Efficiency 180
10.13 Acoustic Noise 181
10.14 dU/dt Conditions 181
10.15 Electromagnetic Compatibility (EMC) Overview 182
10.16 EMC-compliant Installation 186
10.17 Harmonics Overview 189

11 Basic Operating Principles of a Drive 192
11.1 Description of Operation 192
11.2 Drive Controls 192

12 Application Examples 201
12.1 Programming a Closed-loop Drive System 201
12.2 Wiring Configurations for Automatic Motor Adaptation (AMA) 201
12.3 Wiring Configurations for Analog Speed Reference 202
12.4 Wiring Configurations for Start/Stop 202
12.5 Wiring Configuration for an External Alarm Reset 204
12.6 Wiring Configuration for Speed Reference Using a Manual Potentiometer 204
12.7 Wiring Configuration for Speed Up/Speed Down 204
12.8 Wiring Configuration for RS485 Network Connection 205
12.9 Wiring Configuration for a Motor Thermistor 205
12.10 Wiring Configuration for a Relay Set-up with Smart Logic Control 206
12.11 Wiring Configuration for Mechanical Brake Control 206
12.12 Wiring Configuration for the Encoder 207
12.13 Wiring Configuration for Torque and Stop Limit 208

13 How to Order a Drive 209
13.1 Drive Configurator 209
13.2 Ordering Numbers for Options/Kits 213
13.3 Ordering Numbers for Filters and Brake Resistors 216
13.4 Spare Parts 216

14 Appendix 217
14.1 Abbreviations and Symbols 217
14.2 Definitions 218
14.3 RS485 Installation and Set-up 219
14.4 RS485: FC Protocol Overview 220
14.5 RS485: FC Protocol Telegram Structure 220

 Danfoss A/S © 11/2017 All rights reserved.

14.6 RS485: FC Protocol Parameter Examples 225
14.7 RS485: Modbus RTU Overview 225
14.8 RS485: Modbus RTU Telegram Structure 226
14.9 RS485: Modbus RTU Message Function Codes 229
14.10 RS485: Modbus RTU Parameters 229
14.11 RS485: FC Control Profile 230

Index 237

Danfoss A/S © 11/2017 All rights reserved.

1 Introduction

1.1 Purpose of the Design Guide

This design guide is intended for:

- Project and systems engineers.
- Design consultants.
- Application and product specialists.

The design guide provides technical information to understand the capabilities of the drive for integration into motor control and monitoring systems.

VLT® is a registered trademark.

1.2 Additional Resources

Other resources are available to understand advanced drive operation, programming, and directives compliance.

- The *operating guide* provides detailed information for the installation and start-up of the drive.
- The *programming guide* provides greater detail on how to work with parameters and includes many application examples.
- The *VLT® Safe Torque Off Operating Guide* describes how to use Danfoss drives in functional safety applications. This manual is supplied with the drive when the Safe Torque Off option is present.
- The *VLT® Brake Resistor MCE 101 Design Guide* describes how to select the optimal brake resistor.
- The *VLT® Advanced Harmonic Filters AHF 005/AHF 010 Design Guide* describes harmonics, various mitigation methods, and the operating principle of the advanced harmonics filter. This guide also describes how to select the correct advanced harmonics filter for a particular application.
- The *Output Filters Design Guide* explains why it is necessary to use output filters for certain applications, and how to select the optimal dU/dt or sine-wave filter.
- Optional equipment is available that can change some of the information described in these publications. For specific requirements, see the instructions supplied with the options.

Supplementary publications and manuals are available from Danfoss. See *drives.danfoss.com/downloads/portal/#/* for listings.

1.3 Document and Software Version

This manual is regularly reviewed and updated. All suggestions for improvement are welcome. *Table 1.1* shows the document version and the corresponding software version.

Edition	Remarks	Software version
MG34S3xx	Removed D1h–D8h content and implemented new structure.	8.03

Table 1.1 Document and Software Version

1.4 Conventions

- Numbered lists indicate procedures.
- Bullet lists indicate other information and description of illustrations.
- Italicized text indicates:
  - Cross-reference.
  - Link.
  - Footnote.
  - Parameter name, parameter group name, parameter option.
- All dimensions in drawings are in mm (in).
- An asterisk (*) indicates a default setting of a parameter.

 Danfoss A/S © 11/2017 All rights reserved.

2 Safety

2

2.1 Safety Symbols

The following symbols are used in this guide:

⚠WARNING

Indicates a potentially hazardous situation that could result in death or serious injury.

⚠CAUTION

Indicates a potentially hazardous situation that could result in minor or moderate injury. It can also be used to alert against unsafe practices.

NOTICE

Indicates important information, including situations that can result in damage to equipment or property.

2.2 Qualified Personnel

Only qualified personnel are allowed to install or operate this equipment.

Qualified personnel are defined as trained staff, who are authorized to install, commission, and maintain equipment, systems, and circuits in accordance with pertinent laws and regulations. Also, the personnel must be familiar with the instructions and safety measures described in this manual.

2.3 Safety Precautions

⚠WARNING

HIGH VOLTAGE

Drives contain high voltage when connected to AC mains input, DC supply, load sharing, or permanent motors. Failure to use qualified personnel to install, start up, and maintain the drive can result in death or serious injury.

- **Only qualified personnel must install, start up, and maintain the drive.**

⚠WARNING

LEAKAGE CURRENT HAZARD

Leakage currents exceed 3.5 mA. Failure to ground the drive properly can result in death or serious injury.

- **Ensure the correct grounding of the equipment by a certified electrical installer.**

⚠WARNING

DISCHARGE TIME

The drive contains DC-link capacitors, which can remain charged even when the drive is not powered. High voltage can be present even when the warning LED indicator lights are off. Failure to wait 40 minutes after power has been removed before performing service or repair work can result in death or serious injury.

1. **Stop the motor.**
2. **Disconnect AC mains and remote DC-link supplies, including battery back-ups, UPS, and DC-link connections to other drives.**
3. **Disconnect or lock motor.**
4. **Wait 40 minutes for the capacitors to discharge fully.**
5. **Before performing any service or repair work, use an appropriate voltage measuring device to make sure that the capacitors are fully discharged.**

⚠WARNING

FIRE HAZARD

Brake resistors get hot during and after braking. Failure to place the brake resistor in a secure area can result in property damage and/or serious injury.

- **Ensure that the brake resistor is placed in a secure environment to avoid fire risk.**
- **Do not touch the brake resistor during or after braking to avoid serious burns.**

NOTICE

MAINS SHIELD SAFETY OPTION

A mains shield option is available for enclosures with a protection rating of IP21/IP54 (Type 1/Type 12). The mains shield is a cover installed inside the enclosure to protect against the accidental touch of the power terminals, according to BGV A2, VBG 4.

2.3.1 ADN-compliant Installation

To prevent spark formation in accordance with the European Agreement concerning International Carriage of Dangerous Goods by Inland Waterways (ADN), take precautions for drives with protection rating of IP00 (Chassis), IP20 (Chassis), IP21 (Type 1), or IP54 (Type 12).

Danfoss A/S © 11/2017 All rights reserved.

- Do not install a mains switch.
- Ensure that *parameter 14-50 RFI Filter* is set to *[1] On*.
- Remove all relay plugs marked *RELAY*. See *Illustration 2.1*.
- Check which relay options are installed, if any. The only allowed relay option is VLT® Extended Relay Card MCB 113.

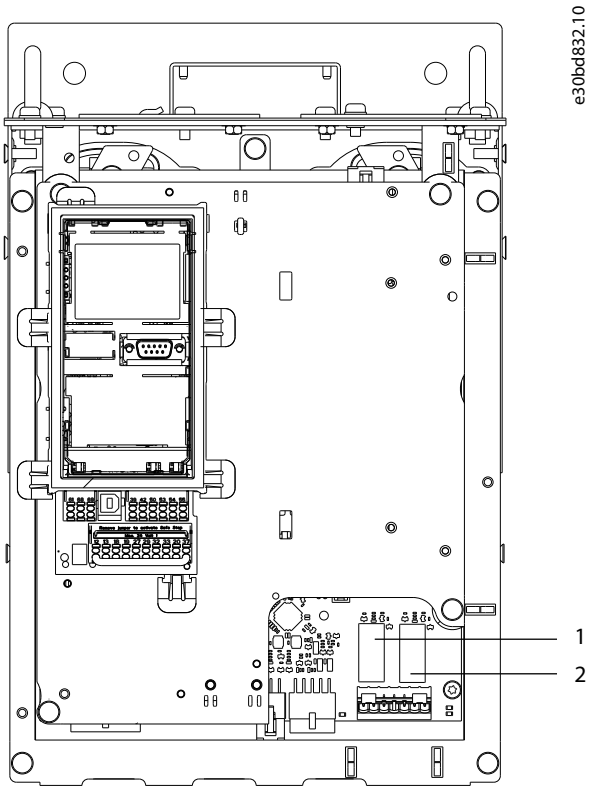

1, 2	Relay plugs

Illustration 2.1 Location of Relay Plugs

 Danfoss A/S © 11/2017 All rights reserved.

3 Approvals and Certifications

This section provides a brief description of the various approvals and certifications that are found on Danfoss drives. Not all approvals are found on all drives.

3.1 Regulatory/Compliance Approvals

NOTICE

IMPOSED LIMITATIONS ON THE OUTPUT FREQUENCY

From software version 6.72 onwards, the output frequency of the drive is limited to 590 Hz due to export control regulations. Software versions 6.xx also limit the maximum output frequency to 590 Hz, but these versions cannot be flashed, that is, neither downgraded nor upgraded.

3.1.1.1 CE Mark

The CE mark (Communauté Européenne) indicates that the product manufacturer conforms to all applicable EU directives. The EU directives applicable to the design and manufacture of drives are listed in *Table 3.1*.

NOTICE

The CE mark does not regulate the quality of the product. Technical specifications cannot be deduced from the CE mark.

EU Directive	Version
Low Voltage Directive	2014/35/EU
EMC Directive	2014/30/EU
Machinery Directive[1)]	2014/32/EU
ErP Directive	2009/125/EC
ATEX Directive	2014/34/EU
RoHS Directive	2002/95/EC

Table 3.1 EU Directives Applicable to Drives

1) Machinery Directive conformance is only required for drives with an integrated safety function.

NOTICE

Drives with an integrated safety function, such as Safe Torque Off (STO), must comply with the Machinery Directive.

Declarations of conformity are available on request.

Low Voltage Directive
Drives must be CE-labeled in accordance with the Low Voltage Directive of January 1, 2014. The Low Voltage Directive applies to all electrical equipment in the 50–1000 V AC and the 75–1500 V DC voltage ranges.

The aim of the directive is to ensure personal safety and avoid property damage when operating electrical equipment that is installed, maintained, and used as intended.

EMC Directive
The purpose of the EMC (electromagnetic compatibility) Directive is to reduce electromagnetic interference and enhance immunity of electrical equipment and installations. The basic protection requirement of the EMC Directive is that devices that generate electromagnetic interference (EMI), or whose operation can be affected by EMI, must be designed to limit the generation of electromagnetic interference. The devices must have a suitable degree of immunity to EMI when properly installed, maintained, and used as intended.

Electrical equipment devices used alone or as part of a system must bear the CE mark. Systems do not require the CE mark, but must comply with the basic protection requirements of the EMC Directive.

Machinery Directive
The aim of the Machinery Directive is to ensure personal safety and avoid property damage to mechanical equipment used in its intended application. The Machinery Directive applies to a machine consisting of an aggregate of interconnected components or devices of which at least 1 is capable of mechanical movement.

Drives with an integrated safety function must comply with the Machinery Directive. Drives without a safety function do not fall under the Machinery Directive. If a drive is integrated into a machinery system, Danfoss can provide information on safety aspects relating to the drive.

When drives are used in machines with at least 1 moving part, the machine manufacturer must provide a declaration stating compliance with all relevant statutes and safety measures.

3.1.1.2 ErP Directive

The ErP Directive is the European Ecodesign Directive for energy-related products, including drives. The aim of the directive is to increase energy efficiency and the level of protection of the environment, while increasing the security of the energy supply. Environmental impact of energy-related products includes energy consumption throughout the entire product life cycle.

Danfoss A/S © 11/2017 All rights reserved.

3.1.1.3 UL Listing

The Underwriters Laboratory (UL) mark certifies the safety of products and their environmental claims based on standardized testing. Drives of voltage T7 (525–690 V) are UL-certified for only 525–600 V.

3.1.1.4 CSA/cUL

The CSA/cUL approval is for AC drives of voltage rated at 600 V or lower. The standard ensures that, when the drive is installed according to the provided operating/installation guide, the equipment meets the UL standards for electrical and thermal safety. This mark certifies that the product performs to all required engineering specifications and testing. A certificate of compliance is provided on request.

3.1.1.5 EAC

The EurAsian Conformity (EAC) mark indicates that the product conforms to all requirements and technical regulations applicable to the product per the EurAsian Customs Union, which is composed of the member states of the EurAsian Economic Union.

The EAC logo must be both on the product label and on the packaging label. All products used within the EAC area, must be bought at Danfoss inside the EAC area.

3.1.1.6 UKrSEPRO

UKrSEPRO certificate ensures quality and safety of both products and services, in addition to manufacturing stability according to Ukrainian regulatory standards. The UkrSepro certificate is a required document to clear customs for any products coming into and out of the territory of Ukraine.

3.1.1.7 TÜV

TÜV SÜD is a European safety organization which certifies the functional safety of the drive in accordance to EN/IEC 61800-5-2. The TÜV SÜD both tests products and monitors their production to ensure that companies stay compliant with their regulations.

3.1.1.8 RCM

The Regulatory Compliance Mark (RCM) indicates compliance with telecommunications and EMC/radio-communications equipment per the Australian Communications and Media Authorities EMC labeling notice. RCM is now a single compliance mark covering both the A-Tick and the C-Tick compliance marks. RCM compliance is required for placing electrical and electronic devices on the market in Australia and New Zealand.

3.1.1.9 Marine

In order for ships and oil/gas platforms to receive a regulatory license and insurance, 1 or more marine certification societies must certify these applications. Up to 12 different marine classification societies have certified Danfoss drive series.

To view or print marine approvals and certificates, go to the download area at *drives.danfoss.com/industries/marine-and-offshore/marine-type-approvals/#/*.

3.1.2 Export Control Regulations

Drives can be subject to regional and/or national export control regulations.

An ECCN number is used to classify all drives that are subject to export control regulations. The ECCN number is provided in the documents accompanying the drive.

In case of re-export, it is the responsibility of the exporter to ensure compliance with the relevant export control regulations.

 Danfoss A/S © 11/2017 All rights reserved.

3

3.2 Enclosure Protection Ratings

The VLT® drive series are available in various enclosure protection to accommodate the needs of the application. Enclosure protection ratings are provided based on 2 international standards:

- UL type validates that the enclosures meet NEMA (National Electrical Manufacturers Association) standards. The construction and testing requirements for enclosures are provided in NEMA Standards Publication 250-2003 and UL 50, Eleventh Edition.
- IP (Ingress Protection) ratings outlined by IEC (International Electrotechnical Commission) in the rest of the world.

Standard Danfoss VLT® drive series are available in various enclosure protections to meet the requirements of IP00 (Chassis), IP20 (Protected chassis) or IP21 (UL Type 1), or IP54 (UL Type 12). In this manual, UL Type is written as Type. For example, IP21/Type 1.

UL type standard

Type 1 – Enclosures constructed for indoor use to provide a degree of protection to personnel against incidental contact with the enclosed units and to provide a degree of protection against falling dirt.

Type 12 – General-purpose enclosures are intended for use indoors to protect the enclosed units against the following:

- Fibers
- Lint
- Dust and dirt
- Light splashing
- Seepage
- Dripping and external condensation of noncorrosive liquids

There can be no holes through the enclosure and no conduit knockouts or conduit openings, except when used with oil-resistant gaskets to mount oil-tight or dust-tight mechanisms. Doors are also provided with oil-resistant gaskets. In addition, enclosures for combination controllers have hinged doors, which swing horizontally and require a tool to open.

IP standard

Table 3.2 provides a cross-reference between the 2 standards. *Table 3.3* demonstrates how to read the IP number and then defines the levels of protection. The drives meet the requirements of both.

NEMA and UL	IP
Chassis	IP00
Protected chassis	IP20
Type 1	IP21
Type 12	IP54

Table 3.2 NEMA and IP Number Cross-reference

Danfoss A/S © 11/2017 All rights reserved.

1st digit	2nd digit	Level of protection
0	–	No protection.
1	–	Protected to 50 mm (2.0 in). No hands would be able to get into the enclosure.
2	–	Protected to 12.5 mm (0.5 in). No fingers would be able to get into the enclosure.
3	–	Protected to 2.5 mm (0.1 in). No tools would be able to get into the enclosure.
4	–	Protected to 1.0 mm (0.04 in). No wires would be able to get into the enclosure.
5	–	Protected against dust – limited entry.
6	–	Protected totally against dust.
–	0	No protection.
–	1	Protected from vertical dripping water.
–	2	Protected from dripping water at 15° angle.
–	3	Protected from water at 60° angle.
–	4	Protected from splashing water.
–	5	Protected from water jets.
–	6	Protected from strong water jets.
–	7	Protected from temporary immersion.
–	8	Protected from permanent immersion.

Table 3.3 IP Number Breakdown

 Danfoss A/S © 11/2017 All rights reserved.

4 Product Overview

4.1 VLT® High-power Drives

The Danfoss VLT® drives described in this manual are available as free-standing, wall-mounted, or cabinet-mounted units. Each VLT® drive is configurable, compatible, and efficiency-optimized for all standard motor types, which avoids the restrictions of motor-drive package deals. These drives come in 2 front-end configurations: 6-pulse and 12-pulse.

Benefits of VLT® 6-pulse drives

- Available in various enclosure sizes and protection ratings.
- 98% efficiency reduces operating costs.
- Unique back-channel cooling design reduces the need for more cooling equipment, resulting in lower installation and recurring costs.
- Lower power consumption for control room cooling equipment.
- Reduced ownership costs.
- Consistent user interface across the entire range of Danfoss drives.
- Application-oriented start-up wizards.
- Multi-language user interface.

Benefits of VLT® 12-pulse drives

The VLT® 12-pulse is a high efficiency AC drive that provides harmonic reduction without adding capacitive or inductive components, which often require network analysis to avoid potential system resonance problems. The 12-pulse is built with the same modular design as the popular 6-pulse VLT® drive. For more harmonic reduction methods, see the *VLT® Advanced Harmonic Filter AHF 005/AHF 010 Design Guide*.

The 12-pulse drives provide the same benefits as the 6-pulse drives in addition to being:

- Robust and highly stable in all network and operating conditions.
- Ideal for applications where stepping down from medium voltage is required or where isolation from the grid is needed.
- Excellent input transient immunity.

4.2 Enclosure Size by Power Rating

		Available enclosures	
kW[1)]	Hp[1)]	6-pulse	12-pulse
250	350	–	F8–F9
315	450	E1–E2	F8–F9
355	500	E1–E2	F8–F9
400	550	E1–E2	F8–F9
450	600	F1–F3	F10–F11
500	650	F1–F3	F10–F11
560	750	F1–F3	F10–F11
630	900	F1–F3	F10–F11
710	1000	F2–F4	F12–F13
800	1200	F2–F4	F12–F13

Table 4.1 Enclosure Power Ratings, 380–500 V

1) All power ratings are taken at high overload.
Output is measured at 400 V (kW) and 460 V (hp).

		Available enclosures	
kW[1)]	Hp[1)]	6-pulse	12-pulse
355	400	E1–E2	F8–F9
400	400	E1–E2	F8–F9
500	500	E1–E2	F8–F9
560	600	E1–E2	F8–F9
630	650	F1–F3	F10–F11
710	750	F1–F3	F10–F11
800	950	F1–F3	F10–F11
900	1050	F2–F4	F12–F13
1000	1150	F2–F4	F12–F13
1200	1350	F2–F4	F12–F13

Table 4.2 Enclosure Power Ratings, 525–690 V

1) All power ratings are taken at high overload.
Output is measured at 690 V (kW) and 575 V (hp).

 Danfoss A/S © 11/2017 All rights reserved.

4.3 Overview of Enclosures, 380–500 V

Enclosure size	E1	E2
Power rating[1)]		
Output at 400 V (kW)	315–400	315–400
Output at 460 V (hp)	450–550	450–550
Front-end configuration		
6-pulse	S	S
12-pulse	–	–
Protection rating		
IP	IP21/54	IP00
UL type	Type 1/12	Chassis
Hardware options[3)]		
Stainless steel back channel	–	O
Mains shielding	O	–
Space heater and thermostat	–	–
Cabinet light with power outlet	–	–
RFI filter (Class A1)	O	O
NAMUR terminals	–	–
Insulation resistance monitor (IRM)	–	–
Residual current monitor (RCM)	–	–
Brake chopper (IGBTs)	O	O
Safe Torque Off	S	S
Regen terminals	O	O
Common motor terminals	–	–
Emergency stop with Pilz safety relay	–	–
Safe Torque Off with Pilz safety relay	–	–
No LCP	–	–
Graphical LCP	S	S
Numerical LCP	O	O
Fuses	O	O
Load share terminals	O	O
Fuses + load share terminals	O	O
Disconnect	O	O
Circuit breakers	–	–
Contactors	–	–
Manual motor starters	–	–
30 A, fuse-protected terminals	–	–
24 V DC supply (SMPS, 5 A)	O	O
External temperature monitoring	–	–
Dimensions		
Height, mm (in)	2000 (78.8)	1547 (60.9)
Width, mm (in)	600 (23.6)	585 (23.0)
Depth, mm (in)	494 (19.4)	498 (19.5)
Weight, kg (lb)	270–313 (595–690)	234–277 (516–611)

Table 4.3 E1–E2 Drives, 380–500 V

1) All power ratings are taken at high overload. Output is measured at 400 V (kW) and 460 V (hp).

2) If the enclosure is configured with load share or regen terminals, the protection rating is IP00, otherwise the protection rating is IP20.

3) S = standard, O = optional, and a dash indicates that the option is unavailable.

 Danfoss A/S © 11/2017 All rights reserved.

4

Enclosure size	F1	F2	F3	F4
Power rating[1)]				
Output at 400 V (kW)	315–400	450–500	315–400	450–500
Output at 460 V (hp)	450–550	600–650	450–550	600–650
Front-end configuration				
6-pulse	S	S	S	S
12-pulse	–	–	–	–
Protection rating				
IP	IP21/54	IP21/54	IP21/54	IP21/54
UL type	Type 1/12	Type 1/12	Type 1/12	Type 1/12
Hardware options[3)]				
Stainless steel back channel	O	O	O	O
Mains shielding	–	–	–	–
Space heater and thermostat	O	O	O	O
Cabinet light with power outlet	O	O	O	O
RFI filter (Class A1)	–	–	O	O
NAMUR terminals	O	O	O	O
Insulation resistance monitor (IRM)	–	–	O	O
Residual current monitor (RCM)	–	–	O	O
Brake chopper (IGBTs)	O	O	O	O
Safe Torque Off	S	S	S	S
Regen terminals	O	O	O	O
Common motor terminals	O	O	O	O
Emergency stop with Pilz safety relay	–	–	O	O
Safe Torque Off with Pilz safety relay	O	O	O	O
No LCP	–	–	–	–
Graphical LCP	S	S	S	S
Numerical LCP	–	–	–	–
Fuses	O	O	O	O
Load share terminals	O	O	O	O
Fuses + load share terminals	O	O	O	O
Disconnect	–	–	O	O
Circuit breakers	–	–	O	O
Contactors	–	–	O	O
Manual motor starters	O	O	O	O
30 A, fuse-protected terminals	O	O	O	O
24 V DC supply (SMPS, 5 A)	O	O	O	O
External temperature monitoring	O	O	O	O
Dimensions				
Height, mm (in)	2204 (86.8)	2204 (86.8)	2204 (86.8)	2204 (86.8)
Width, mm (in)	1400 (55.1)	1800 (70.9)	2000 (78.7)	2400 (94.5)
Depth, mm (in)	606 (23.9)	606 (23.9)	606 (23.9)	606 (23.9)
Weight, kg (lb)	1017 (2242.1)	1260 (2777.9)	1318 (2905.7)	1561 (3441.5)

Table 4.4 F1–F4 Drives, 380–500 V

1) All power ratings are taken at high overload. Output is measured at 400 V (kW) and 460 V (hp).

2) If the enclosure is configured with load share or regen terminals, the protection rating is IP00, otherwise the protection rating is IP20.

3) S = standard, O = optional, and a dash indicates that the option is unavailable.

Danfoss A/S © 11/2017 All rights reserved.

Enclosure size	F8	F9	F10	F11	F12	F13
Power rating[1]						
Output at 400 V (kW)	90–132	160–250	450–630	450–630	710–800	710–800
Output at 460 V (hp)	125–200	250–350	600–900	600–900	1000–1200	1000–1200
Front-end configuration						
6-pulse	–	–	–	–	–	–
12-pulse	S	S	S	S	S	S
Protection rating						
IP	IP21/54	IP21/54	IP21/54	IP21/54	IP21/54	IP21/54
NEMA	Type 1/12	Type 1/12	Type 1/12	Type 1/12	Type 1/12	Type 1/12
Hardware options[2]						
Stainless steel back channel	–	–	–	–	–	–
Mains shielding	–	–	–	–	–	–
Space heater and thermostat	–	–	O	O	O	O
Cabinet light with power outlet	–	–	O	O	O	O
RFI filter (Class A1)	–	O	–	–	O	O
NAMUR terminals	O	O	O	O	O	O
Insulation resistance monitor (IRM)	–	O	–	–	O	O
Residual current monitor (RCM)	–	O	–	–	O	O
Brake chopper (IGBTs)	O	O	O	O	O	O
Safe Torque Off	S	S	S	S	S	S
Regen terminals	–	–	–	–	–	–
Common motor terminals	–	–	O	O	O	O
Emergency stop with Pilz safety relay	–	–	–	–	–	–
Safe Torque Off with Pilz safety relay	O	O	O	O	O	O
No LCP	–	–	–	–	–	–
Graphical LCP	S	S	S	S	S	S
Numerical LCP	–	–	–	–	–	–
Fuses	O	O	O	O	O	O
Load share terminals	–	–	–	–	–	–
Fuses + load share terminals	–	–	–	–	–	–
Disconnect	–	O	O	O	O	O
Circuit breakers	–	–	–	–	–	–
Contactors	–	–	–	–	–	–
Manual motor starters	–	–	O	O	O	O
30 A, fuse-protected terminals	–	–	O	O	O	O
24 V DC supply (SMPS, 5 A)	O	O	O	O	O	O
External temperature monitoring	–	–	O	O	O	O
Dimensions						
Height, mm (in)	2204 (86.8)	2204 (86.8)	2204 (86.8)	2204 (86.8)	2204 (86.8)	2204 (86.8)
Width, mm (in)	800 (31.5)	1400 (55.2)	1600 (63.0)	2400 (94.5)	2000 (78.7)	2800 (110.2)
Depth, mm (in)	606 (23.9)	606 (23.9)	606 (23.9)	606 (23.9)	606 (23.9)	606 (23.9)
Weight, kg (lb)	447 (985.5)	669 (1474.9)	893 (1968.8)	1116 (2460.4)	1037 (2286.4)	1259 (2775.7)

Table 4.5 F8–F13 Drives, 380–500 V

1) All power ratings are taken at high overload. Output is measured at 400 V (kW) and 460 V (hp).

2) S = standard, O = optional, and a dash indicates that the option is unavailable.

 Danfoss A/S © 11/2017 All rights reserved.

4

4.4 Overview of Enclosures, 525–690 V

Enclosure size	E1	E2
Power rating[1)]		
Output at 690 V (kW)	355–560	355–560
Output at 575 V (hp)	400–600	400–600
Front-end configuration		
6-pulse	S	S
12-pulse	–	–
Protection rating		
IP	IP21/54	IP00
UL type	Type 1/12	Chassis
Hardware options[3)]		
Stainless steel back channel	–	O
Mains shielding	O	–
Space heater and thermostat	–	–
Cabinet light with power outlet	–	–
RFI filter (Class A1)	O	O
NAMUR terminals	–	–
Insulation resistance monitor (IRM)	–	–
Residual current monitor (RCM)	–	–
Brake chopper (IGBTs)	O	O
Safe Torque Off	S	S
Regen terminals	O	O
Common motor terminals	–	–
Emergency stop with Pilz safety relay	–	–
Safe Torque Off with Pilz safety relay	–	–
No LCP	–	–
Graphical LCP	S	S
Numerical LCP	O	O
Fuses	O	O
Load share terminals	O	O
Fuses + load share terminals	O	O
Disconnect	O	O
Circuit breakers	–	–
Contactors	–	–
Manual motor starters	–	–
30 A, fuse-protected terminals	–	–
24 V DC supply (SMPS, 5 A)	O	O
External temperature monitoring	–	–
Dimensions		
Height, mm (in)	2000 (78.8)	1547 (60.9)
Width, mm (in)	600 (23.6)	585 (23.0)
Depth, mm (in)	494 (19.4)	498 (19.5)
Weight, kg (lb)	263–313 (580–690)	221–277 (487–611)

Table 4.6 E1–E2 Drives, 525–690 V

1) All power ratings are taken at high overload. Output is measured at 690 V (kW) and 575 V (hp).

2) If the enclosure is configured with load share or regen terminals, the protection rating is IP00, otherwise the protection rating is IP20.

3) S = standard, O = optional, and a dash indicates that the option is unavailable.

Danfoss A/S © 11/2017 All rights reserved.

Enclosure size	F1	F2	F3	F4
Power rating[1)]				
Output at 690 V (kW)	630–800	900–1200	630–800	900–1200
Output at 575 V (hp)	650–950	1050–1350	650–950	1050–1350
Front-end configuration				
6-pulse	S	S	S	S
12-pulse	–	–	–	–
Protection rating				
IP	IP21/54	IP21/54	IP21/54	IP21/54
UL type	Type 1/12	Type 1/12	Type 1/12	Type 1/12
Hardware options[3)]				
Stainless steel back channel	O	O	O	O
Mains shielding	–	–	–	–
Space heater and thermostat	O	O	O	O
Cabinet light with power outlet	O	O	O	O
RFI filter (Class A1)	–	–	O	O
NAMUR terminals	O	O	O	O
Insulation resistance monitor (IRM)	–	–	O	O
Residual current monitor (RCM)	–	–	O	O
Brake chopper (IGBTs)	O	O	O	O
Safe Torque Off	S	S	S	S
Regen terminals	O	O	O	O
Common motor terminals	O	O	O	O
Emergency stop with Pilz safety relay	–	–	O	O
Safe Torque Off with Pilz safety relay	O	O	O	O
No LCP	–	–	–	–
Graphical LCP	S	S	S	S
Numerical LCP	–	–	–	–
Fuses	O	O	O	O
Load share terminals	O	O	O	O
Fuses + load share terminals	O	O	O	O
Disconnect	–	–	O	O
Circuit breakers	–	–	O	O
Contactors	–	–	O	O
Manual motor starters	O	O	O	O
30 A, fuse-protected terminals	O	O	O	O
24 V DC supply (SMPS, 5 A)	O	O	O	O
External temperature monitoring	O	O	O	O
Dimensions				
Height, mm (in)	2204 (86.8)	2204 (86.8)	2204 (86.8)	2204 (86.8)
Width, mm (in)	1400 (55.1)	1800 (70.9)	2000 (78.7)	2400 (94.5)
Depth, mm (in)	606 (23.9)	606 (23.9)	606 (23.9)	606 (23.9)
Weight, kg (lb)	1017 (2242.1)	1260 (2777.9)	1318 (2905.7)	1561 (3441.5)

Table 4.7 F1–F4 Drives, 525–690 V

1) All power ratings are taken at high overload. Output is measured at 690 V (kW) and 575 V (hp).

2) If the enclosure is configured with load share or regen terminals, the protection rating is IP00, otherwise the protection rating is IP20.

3) S = standard, O = optional, and a dash indicates that the option is unavailable.

 Danfoss A/S © 11/2017 All rights reserved.

4

Enclosure size	F8	F9	F10	F11	F12	F13
Power rating[1)]						
Output at 690 V (kW)	355–560	355–560	630–800	630–800	900–1200	900–1200
Output at 575 V (hp)	400–600	400–600	650–950	650–950	1050–1350	1050–1350
Front-end configuration						
6-pulse	–	–	–	–	–	–
12-pulse	S	S	S	S	S	S
Protection rating						
IP	IP21/54	IP21/54	IP21/54	IP21/54	IP21/54	IP21/54
NEMA	Type 1/12	Type 1/12	Type 1/12	Type 1/12	Type 1/12	Type 1/12
Hardware options[2)]						
Stainless steel back channel	–	–	–	–	–	–
Mains shielding	–	–	–	–	–	–
Space heater and thermostat	–	–	O	O	O	O
Cabinet light with power outlet	–	–	O	O	O	O
RFI filter (Class A1)	–	O	–	–	O	O
NAMUR terminals	O	O	O	O	O	O
Insulation resistance monitor (IRM)	–	O	–	–	O	O
Residual current monitor (RCM)	–	O	–	–	O	O
Brake chopper (IGBTs)	O	O	O	O	O	O
Safe Torque Off	S	S	S	S	S	S
Regen terminals	–	–	–	–	–	–
Common motor terminals	–	–	O	O	O	O
Emergency stop with Pilz safety relay	–	–	–	–	–	–
Safe Torque Off with Pilz safety relay	O	O	O	O	O	O
No LCP	–	–	–	–	–	–
Graphical LCP	S	S	S	S	S	S
Numerical LCP	–	–	–	–	–	–
Fuses	O	O	O	O	O	O
Load share terminals	–	–	–	–	–	–
Fuses + load share terminals	–	–	–	–	–	–
Disconnect	–	O	O	O	O	O
Circuit breakers	–	–	–	–	–	–
Contactors	–	–	–	–	–	–
Manual motor starters	–	–	O	O	O	O
30 A, fuse-protected terminals	–	–	O	O	O	O
24 V DC supply (SMPS, 5 A)	O	O	O	O	O	O
External temperature monitoring	–	–	O	O	O	O
Dimensions						
Height, mm (in)	2204 (86.8)	2204 (86.8)	2204 (86.8)	2204 (86.8)	2204 (86.8)	2204 (86.8)
Width, mm (in)	800 (31.5)	1400 (55.1)	1600 (63.0)	2400 (94.5)	2000 (78.7)	2800 (110.2)
Depth, mm (in)	606 (23.9)	606 (23.9)	606 (23.9)	606 (23.9)	606 (23.9)	606 (23.9)
Weight, kg (lb)	447 (985.5)	669 (1474.9)	893 (1968.8)	1116 (2460.4)	1037 (2286.4)	1259 (2775.7)

Table 4.8 F8–F13 Drives, 525–690 V

1) All power ratings are taken at high overload. Output is measured at 690 V (kW) and 575 V (hp).

2) S = standard, O = optional, and a dash indicates that the option is unavailable.

Danfoss A/S © 11/2017 All rights reserved.

4.5 Kit Availability

Kit description[1)]	E1	E2	F1	F2	F3	F4	F8	F9	F10	F11	F12	F13
USB in door	O	–	O	O	O	O	O	O	O	O	O	O
LCP, numerical	O	O	O	O	O	O	O	O	O	O	O	O
LCP, graphical[2)]	O	O	O	O	O	O	O	O	O	O	O	O
LCP cable, 3 m (9 ft)	O	O	O	O	O	O	O	O	O	O	O	O
Mounting kit for numerical LCP (LCP, fasteners, gasket, and cable)	O	O	O	O	O	O	O	O	O	O	O	O
Mounting kit for graphical LCP (LCP, fasteners, gasket, and cable)	O	O	O	O	O	O	O	O	O	O	O	O
Mounting kit for all LCPs (fasteners, gasket, and cable)	O	O	O	O	O	O	O	O	O	O	O	O
Top entry for motor cables	–	–	O	O	O	O	O	O	O	O	O	O
Top entry for mains cables	–	–	O	O	O	O	O	O	O	O	O	O
Top entry for mains cables with disconnect	–	–	–	–	O	O	–	–	–	–	–	–
Top entry for fieldbus cables	–	O	–	–	–	–	–	–	–	–	–	–
Common motor terminals	–	–	O	O	O	O	–	–	–	–	–	–
NEMA 3R enclosure	–	O	–	–	–	–	–	–	–	–	–	–
Pedestal	O	O	–	–	–	–	–	–	–	–	–	–
Input options plate	O	O	–	–	–	–	–	–	–	–	–	–
IP20 conversion	–	O	–	–	–	–	–	–	–	–	–	–
Out top (only) cooling	–	O	–	–	–	–	–	–	–	–	–	–
Back-channel cooling (in-back/out-back)	O	O	O	O	O	O	O	O	O	O	O	O
Back-channel cooling (in-bottom/out-top)	–	O	–	–	–	–	–	–	–	–	–	–

Table 4.9 Available Kits for Enclosures E1–E2, F1–F4, and F8–F13

1) S = standard, O = optional, and a dash indicates that the kit is unavailable for that enclosure. For kit descriptions and part numbers, see chapter 13.2 Ordering Numbers for Options/Kits.

2) The graphical LCP comes standard with enclosures E1–E2, F1–F4, and F8–F13. If more than 1 graphical LCP is required, the kit is available for purchase.

 Danfoss A/S © 11/2017 All rights reserved.

5 Product Features

5.1 Automated Operational Features

Automated operational features are active when the drive is operating. Most of them require no programming or set-up. The drive has a range of built-in protection functions to protect itself and the motor when it runs.

For details of any set-up required, in particular motor parameters, refer to the *programming guide*.

5.1.1 Short-circuit Protection

Motor (phase-to-phase)
The drive is protected against short circuits on the motor side by current measurement in each of the 3 motor phases. A short circuit between 2 output phases causes an overcurrent in the inverter. The inverter is turned off when the short circuit current exceeds the allowed value (*Alarm 16, Trip Lock*).

Mains side
A drive that works correctly limits the current it can draw from the supply. Still, it is recommended to use fuses and/or circuit breakers on the supply side as protection if there is component break-down inside the drive (1st fault). Mains side fuses are mandatory for UL compliance.

NOTICE

To ensure compliance with IEC 60364 for CE or NEC 2009 for UL, it is mandatory to use fuses and/or circuit breakers.

Brake resistor
The drive is protected from a short circuit in the brake resistor.

Load sharing
To protect the DC bus against short circuits and the drives from overload, install DC fuses in series with the load sharing terminals of all connected units.

5.1.2 Overvoltage Protection

Motor-generated overvoltage
The voltage in the DC link is increased when the motor acts as a generator. This situation occurs in following cases:

- The load rotates the motor at constant output frequency from the drive, that is, the load generates energy.
- During deceleration (ramp-down) if the inertia moment is high, the friction is low, and the ramp-down time is too short for the energy to be dissipated as a loss throughout the drive system.
- Incorrect slip compensation setting causing higher DC-link voltage.
- Back EMF from PM motor operation. If coasted at high RPM, the PM motor back EMF can potentially exceed the maximum voltage tolerance of the drive and cause damage. To help prevent this situation, the value of *parameter 4-19 Max Output Frequency* is automatically limited based on an internal calculation based on the value of *parameter 1-40 Back EMF at 1000 RPM*, *parameter 1-25 Motor Nominal Speed*, and *parameter 1-39 Motor Poles*.

NOTICE

To avoid motor overspeeds (for example, due to excessive windmilling effects), equip the drive with a brake resistor.

The overvoltage can be handled either using a brake function (*parameter 2-10 Brake Function*) and/or using overvoltage control (*parameter 2-17 Over-voltage Control*).

Brake functions
Connect a brake resistor for dissipation of surplus brake energy. Connecting a brake resistor allows a higher DC-link voltage during braking.

AC brake is an alternative to improving braking without using a brake resistor. This function controls an over-magnetization of the motor when the motor is acting as a generator. Increasing the electrical losses in the motor allows the OVC function to increase the braking torque without exceeding the overvoltage limit.

NOTICE

AC brake is not as effective as dynamic braking with a resistor.

Overvoltage control (OVC)
By automatically extending the ramp-down time, OVC reduces the risk of the drive tripping due to an overvoltage on the DC-link.

NOTICE

OVC can be activated for a PM motor with all control core, PM VVC+, Flux OL, and Flux CL for PM Motors.

NOTICE

Do not enable OVC in hoisting applications.

Danfoss A/S © 11/2017 All rights reserved.

5.1.3 Missing Motor Phase Detection

The missing motor phase function (*parameter 4-58 Missing Motor Phase Function*) is enabled by default to avoid motor damage if a motor phase is missing. The default setting is 1000 ms, but it can be adjusted for faster detection.

5.1.4 Supply Voltage Imbalance Detection

Operation under severe supply voltage imbalance reduces the lifetime of the motor and drive. If the motor is operated continuously near nominal load, conditions are considered severe. The default setting trips the drive if there is supply voltage imbalance (*parameter 14-12 Function at Mains Imbalance*).

5.1.5 Switching on the Output

Adding a switch to the output between the motor and the drive is allowed, however fault messages can appear. Danfoss does not recommend using this feature for 525–690 V drives connected to an IT mains network.

5.1.6 Overload Protection

Torque limit
The torque limit feature protects the motor against overload, independent of the speed. Torque limit is controlled in *parameter 4-16 Torque Limit Motor Mode* and *parameter 4-17 Torque Limit Generator Mode*. The time before the torque limit warning trips is controlled in *parameter 14-25 Trip Delay at Torque Limit*.

Current limit
The current limit is controlled in *parameter 4-18 Current Limit*, and the time before the drive trips is controlled in *parameter 14-24 Trip Delay at Current Limit*.

Speed limit
Minimum speed limit: *Parameter 4-11 Motor Speed Low Limit [RPM]* or *parameter 4-12 Motor Speed Low Limit [Hz]* limit the minimum operating speed range of the drive. Maximum speed limit: *Parameter 4-13 Motor Speed High Limit [RPM]* or *parameter 4-19 Max Output Frequency* limit the maximum output speed the drive can provide.

Electronic thermal relay (ETR)
ETR is an electronic feature that simulates a bimetal relay based on internal measurements. The characteristic is shown in *Illustration 5.1*.

Voltage limit
The inverter turns off to protect the transistors and the DC link capacitors when a certain hard-coded voltage level is reached.

Overtemperature
The drive has built-in temperature sensors and reacts immediately to critical values via hard-coded limits.

5.1.7 Locked Rotor Protection

There can be situations when the rotor is locked due to excessive load or other factors. The locked rotor cannot produce enough cooling, which in turn can overheat the motor winding. The drive is able to detect the locked rotor situation with open-loop PM flux control and PM VVC$^+$ control (*parameter 30-22 Locked Rotor Protection*).

5.1.8 Automatic Derating

The drive constantly checks for the following critical levels:

- High temperature on the control card or heat sink.
- High motor load.
- High DC-link voltage.
- Low motor speed.

As a response to a critical level, the drive adjusts the switching frequency. For high internal temperatures and low motor speed, the drives can also force the PWM pattern to SFAVM.

NOTICE

The automatic derating is different when *parameter 14-55 Output Filter* is set to *[2] Sine-Wave Filter Fixed*.

5.1.9 Automatic Energy Optimization

Automatic energy optimization (AEO) directs the drive to monitor the load on the motor continuously and adjust the output voltage to maximize efficiency. Under light load, the voltage is reduced and the motor current is minimized. The motor benefits from:

- Increased efficiency.
- Reduced heating.
- Quieter operation.

There is no need to select a V/Hz curve because the drive automatically adjusts motor voltage.

5.1.10 Automatic Switching Frequency Modulation

The drive generates short electrical pulses to form an AC wave pattern. The switching frequency is the rate of these pulses. A low switching frequency (slow pulsing rate) causes audible noise in the motor, making a higher switching frequency preferable. A high switching frequency, however, generates heat in the drive that can limit the amount of current available to the motor.

Automatic switching frequency modulation regulates these conditions automatically to provide the highest switching

 Danfoss A/S © 11/2017 All rights reserved.

frequency without overheating the drive. By providing a regulated high switching frequency, it quiets motor operating noise at slow speeds, when audible noise control is critical, and produces full output power to the motor when required.

5.1.11 Automatic Derating for High Switching Frequency

The drive is designed for continuous, full-load operation at switching frequencies between 1.5–2 kHz for 380–500 V, and 1–1.5 kHz for 525–690 V. The frequency range depends on power size and voltage rating. A switching frequency exceeding the maximum allowed range generates increased heat in the drive and requires the output current to be derated.

An automatic feature of the drive is load-dependent switching frequency control. This feature allows the motor to benefit from as high a switching frequency as the load allows.

5.1.12 Power Fluctuation Performance

The drive withstands mains fluctuations such as:

- Transients.
- Momentary drop-outs.
- Short voltage drops.
- Surges.

The drive automatically compensates for input voltages ±10% from the nominal to provide full rated motor voltage and torque. With auto restart selected, the drive automatically powers up after a voltage trip. With flying start, the drive synchronizes to motor rotation before start.

5.1.13 Resonance Damping

Resonance damping eliminates the high-frequency motor resonance noise. Automatic or manually selected frequency damping is available.

5.1.14 Temperature-controlled Fans

Sensors in the drive regulate the operation of the internal cooling fans. Often, the cooling fans do not run during low load operation, or when in sleep mode or standby. These sensors reduce noise, increase efficiency, and extend the operating life of the fan.

5.1.15 EMC Compliance

Electromagnetic interference (EMI) and radio frequency interference (RFI) are disturbances that can affect an electrical circuit due to electromagnetic induction or radiation from an external source. The drive is designed to comply with the EMC product standard for drives IEC 61800-3 and the European standard EN 55011. Motor cables must be shielded and properly terminated to comply with the emission levels in EN 55011. For more information regarding EMC performance, see *chapter 10.15.1 EMC Test Results*.

5.1.16 Galvanic Isolation of Control Terminals

All control terminals and output relay terminals are galvanically isolated from mains power, which completely protects the controller circuitry from the input current. The output relay terminals require their own grounding. This isolation meets the stringent protective extra-low voltage (PELV) requirements for isolation.

The components that make up the galvanic isolation are:

- Supply, including signal isolation.
- Gatedrive for the IGBTs, trigger transformers, and optocouplers.
- The output current Hall effect transducers.

5.2 Custom Application Features

Custom application functions are the most common features programmed in the drive for enhanced system performance. They require minimum programming or set-up. See the *programming guide* for instructions on activating these functions.

5.2.1 Automatic Motor Adaptation

Automatic motor adaptation (AMA) is an automated test procedure used to measure the electrical characteristics of the motor. AMA provides an accurate electronic model of the motor, allowing the drive to calculate optimal performance and efficiency. Running the AMA procedure also maximizes the automatic energy optimization feature of the drive. AMA is performed without the motor rotating and without uncoupling the load from the motor.

5.2.2 Built-in PID Controller

The built-in proportional, integral, derivative (PID) controller eliminates the need for auxiliary control devices. The PID controller maintains constant control of closed-loop systems where regulated pressure, flow, temperature, or other system requirements must be maintained.

The drive can use 2 feedback signals from 2 different devices, allowing the system to be regulated with different feedback requirements. The drive makes control decisions

Danfoss A/S © 11/2017 All rights reserved.

by comparing the 2 signals to optimize system performance.

5.2.3 Motor Thermal Protection

Motor thermal protection can be provided via:

- Direct temperature sensing using a
  - PTC- or KTY sensor in the motor windings and connected on a standard AI or DI.
  - PT100 or PT1000 in the motor windings and motor bearings, connected on VLT® Sensor Input Card MCB 114.
  - PTC Thermistor input on VLT® PTC Thermistor Card MCB 112 (ATEX approved).
- Mechanical thermal switch (Klixon type) on a DI.
- Built-in electronic thermal relay (ETR).

ETR calculates motor temperature by measuring current, frequency, and operating time. The drive shows the thermal load on the motor in percentage and can issue a warning at a programmable overload setpoint. Programmable options at the overload allow the drive to stop the motor, reduce output, or ignore the condition. Even at low speeds, the drive meets I2t Class 20 electronic motor overload standards.

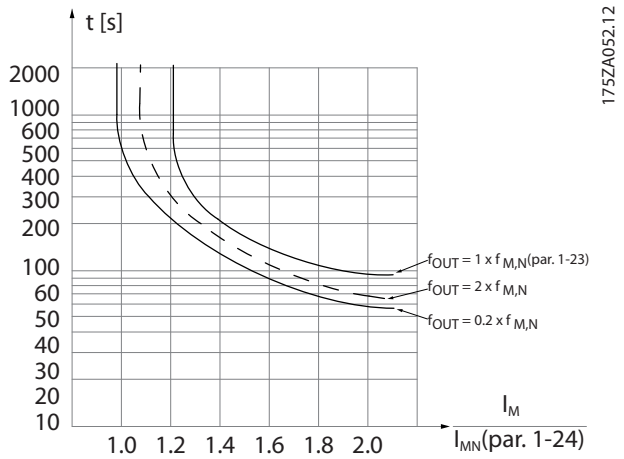

Illustration 5.1 ETR Characteristics

The X-axis shows the ratio between I_{motor} and I_{motor} nominal. The Y-axis shows the time in seconds before the ETR cuts off and trips the drive. The curves show the characteristic nominal speed, at twice the nominal speed and at 0.2 x the nominal speed.
At lower speed, the ETR cuts off at lower heat due to less cooling of the motor. In that way, the motor is protected from being overheated even at low speed. The ETR feature calculates the motor temperature based on actual current and speed. The calculated temperature is visible as a readout parameter in *parameter 16-18 Motor Thermal*.
A special version of the ETR is also available for EX-e motors in ATEX areas. This function makes it possible to enter a specific curve to protect the Ex-e motor. See the *programming guide* for set-up instructions.

5.2.4 Motor Thermal Protection for Ex-e Motors

The drive is equipped with an ATEX ETR thermal monitoring function for operation of Ex-e motors according to EN-60079-7. When combined with an ATEX approved PTC monitoring device such as the VLT® PTC Thermistor Card MCB 112 option or an external device, the installation does not require an individual approval from an approbated organization.

The ATEX ETR thermal monitoring function enables use of an Ex-e motor instead of a more expensive, larger, and heavier Ex-d motor. The function ensures that the drive limits motor current to prevent overheating.

Requirements related to the Ex-e motor

- Ensure that the Ex-e motor is approved for operation in hazardous zones (ATEX zone 1/21, ATEX zone 2/22) with drives. The motor must be certified for the specific hazardous zone.
- Install the Ex-e motor in zone 1/21 or 2/22 of the hazardous zone, according to motor approval.

NOTICE

Install the drive outside the hazardous zone.

- Ensure that the Ex-e motor is equipped with an ATEX-approved motor overload protection device. This device monitors the temperature in the motor windings. If there is a critical temperature level or a malfunction, the device switches off the motor.
  - The VLT® PTC Thermistor Card MCB 112 option provides ATEX-approved monitoring of motor temperature. It is a prerequisite that the drive is equipped with 3–6 PTC thermistors in series according to DIN 44081 or 44082.
  - Alternatively, an external ATEX-approved PTC protection device can be used.
- Sine-wave filter is required when
  - Long cables (voltage peaks) or increased mains voltage produce voltages

 Danfoss A/S © 11/2017 All rights reserved.

exceeding the maximum allowable voltage at motor terminals.

- Minimum switching frequency of the drive does not meet the requirement stated by the motor manufacturer. The minimum switching frequency of the drive is shown as the default value in *parameter 14-01 Switching Frequency*.

Compatibility of motor and drive
For motors certified according to EN-60079-7, a data list including limits and rules is supplied by the motor manufacturer as a data sheet, or on the motor nameplate. During planning, installation, commissioning, operation, and service, follow the limits and rules supplied by the manufacturer for:

- Minimum switching frequency.
- Maximum current.
- Minimum motor frequency.
- Maximum motor frequency.

Illustration 5.2 shows where the requirements are indicated on the motor nameplate.

When matching drive and motor, Danfoss specifies the following extra requirements to ensure adequate motor thermal protection:

- Do not exceed the maximum allowed ratio between drive size and motor size. The typical value is $I_{VLT,n} \leq 2xI_{m,n}$
- Consider all voltage drops from drive to motor. If the motor runs with lower voltage than listed in the U/f characteristics, current can increase, triggering an alarm.

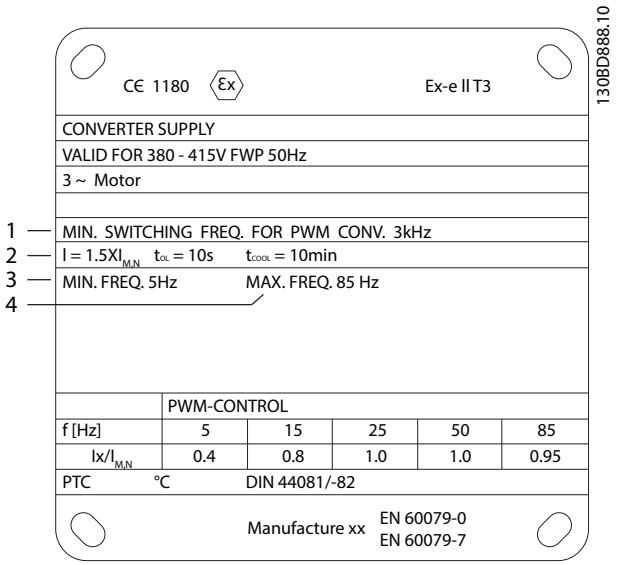

1	Minimum switching frequency
2	Maximum current
3	Minimum motor frequency
4	Maximum motor frequency

Illustration 5.2 Motor Nameplate showing Drive Requirements

For further information, see the application example in *chapter 12 Application Examples*.

5.2.5 Mains Drop-out

During a mains drop-out, the drive keeps running until the DC-link voltage drops below the minimum stop level. The minimum stop level is typically 15% below the lowest rated supply voltage. The mains voltage before the drop-out and the motor load determines how long it takes for the drive to coast.

The drive can be configured (*parameter 14-10 Mains Failure*) to different types of behavior during mains drop-out:

- Trip lock once the DC link is exhausted.
- Coast with flying start whenever mains return (*parameter 1-73 Flying Start*).
- Kinetic back-up.
- Controlled ramp down.

Flying start
This selection makes it possible to catch a motor that is spinning freely due to a mains drop-out. This option is relevant for centrifuges and fans.

Kinetic back-up
This selection ensures that the drive runs as long as there is energy in the system. For short mains drop-out, the operation is restored after mains return, without bringing

Danfoss A/S © 11/2017 All rights reserved.

the application to a stop or losing control at any time. Several variants of kinetic back-up can be selected.

Configure the behavior of the drive at mains drop-out, in *parameter 14-10 Mains Failure* and *parameter 1-73 Flying Start*.

5.2.6 Automatic Restart

The drive can be programmed to restart the motor automatically after a minor trip, such as momentary power loss or fluctuation. This feature eliminates the need for manual resetting, and enhances automated operation for remotely controlled systems. The number of restart attempts and the duration between attempts can be limited.

5.2.7 Full Torque at Reduced Speed

The drive follows a variable V/Hz curve to provide full motor torque even at reduced speeds. Full output torque can coincide with the maximum designed operating speed of the motor. This drive differs from variable torque drives and constant torque drives. Variable torque drives provide reduced motor torque at low speed. Constant torque drives provide excess voltage, heat, and motor noise at less than full speed.

5.2.8 Frequency Bypass

In some applications, the system can have operational speeds that create a mechanical resonance. This mechanical resonance can generate excessive noise and possibly damage mechanical components in the system. The drive has 4 programmable bypass-frequency bandwidths. The bandwidths allow the motor to step over speeds that induce system resonance.

5.2.9 Motor Preheat

To preheat a motor in a cold or damp environment, a small amount of DC current can be trickled continuously into the motor to protect it from condensation and cold starts. This function can eliminate the need for a space heater.

5.2.10 Programmable Set-ups

The drive has 4 set-ups that can be independently programmed. Using multi-setup, it is possible to switch between independently programmed functions activated by digital inputs or a serial command. Independent set-ups are used, for example, to change references, or for day/night or summer/winter operation, or to control multiple motors. The LCP shows the active set-up.

Set-up data can be copied from drive to drive by downloading the information from the removable LCP.

5.2.11 Smart Logic Control (SLC)

Smart logic control (SLC) is a sequence of user-defined actions (see *parameter 13-52 SL Controller Action* [x]) executed by the SLC when the associated user-defined event (see *parameter 13-51 SL Controller Event* [x]) is evaluated as TRUE by the SLC.
The condition for an event can be a particular status, or that the output from a logic rule or a comparator operand becomes TRUE. The condition leads to an associated action as shown in *Illustration 5.3*.

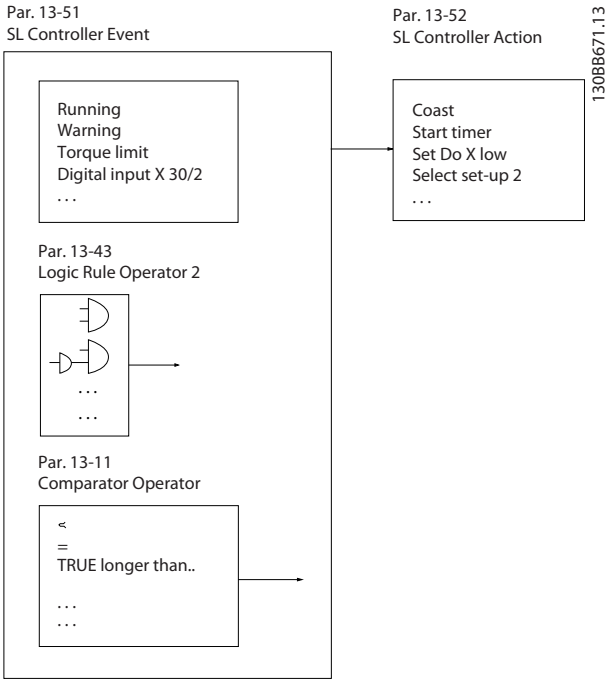

Illustration 5.3 SLC Event and Action

Events and actions are each numbered and linked in pairs (states), which means that when event [0] is fulfilled (attains the value TRUE), action [0] is executed. After the 1st action is executed, the conditions of the next event are evaluated. If this event is evaluated as true, then the corresponding action is executed. Only 1 event is evaluated at any time. If an event is evaluated as false, nothing happens in the SLC during the current scan interval and no other events are evaluated. When the SLC starts, it only evaluates event [0] during each scan interval. Only when event [0] is evaluated as true, the SLC executes action [0] and starts evaluating the next event. It is possible to program 1–20 events and actions.
When the last event/action has been executed, the sequence starts over again from event [0]/action [0].
Illustration 5.4 shows an example with 4 event/actions:

 Danfoss A/S © 11/2017 All rights reserved.

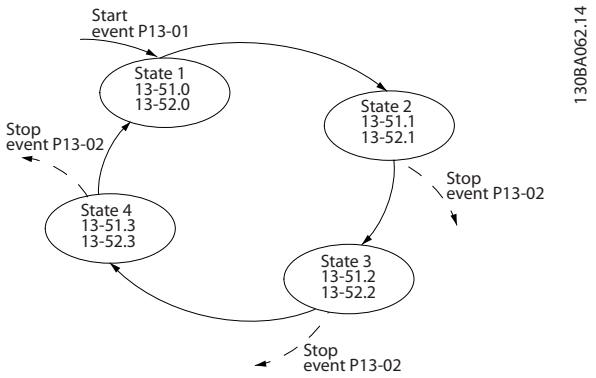

Illustration 5.4 Order of Execution when 4 Events/Actions are Programmed

Comparators
Comparators are used for comparing continuous variables (output frequency, output current, analog input, and so on) to fixed preset values.

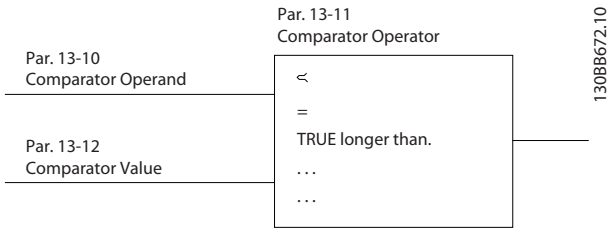

Illustration 5.5 Comparators

Logic rules
Combine up to 3 boolean inputs (TRUE/FALSE inputs) from timers, comparators, digital inputs, status bits, and events using the logical operators AND, OR, and NOT.

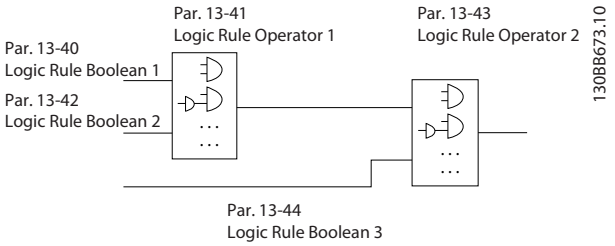

Illustration 5.6 Logic Rules

5.2.12 Safe Torque Off

The Safe Torque Off (STO) function is used to stop the drive in emergency stop situations.

For more information about Safe Torque Off, including installation and commissioning, refer to the *Safe Torque Off Operating Guide*.

Liability conditions
The customer is responsible for ensuring that personnel know how to install and operate the safe torque off function by:

- Reading and understanding the safety regulations concerning health, safety, and accident prevention.
- Understanding the generic and safety guidelines provided in the *Safe Torque Off Operating Guide*.
- Having a good knowledge of the generic and safety standards for the specific application.

5.3 Dynamic Braking Overview

Dynamic braking slows the motor using 1 of the following methods:

- AC brake
  The brake energy is distributed in the motor by changing the loss conditions in the motor (*parameter 2-10 Brake Function* = [2]). The AC brake function cannot be used in applications with high cycling frequency since this situation overheats the motor.
- DC brake
  An overmodulated DC current added to the AC current works as an eddy current brake (*parameter 2-02 DC Braking Time* ≠ 0 s).
- Resistor brake
  A brake IGBT keeps the overvoltage under a certain threshold by directing the brake energy from the motor to the connected brake resistor (*parameter 2-10 Brake Function* = [1]). For more information on selecting a brake resistor, see *VLT® Brake Resistor MCE 101 Design Guide*.

For drives equipped with the brake option, a brake IGBT along with terminals 81(R-) and 82(R+) are included for connecting an external brake resistor.

The function of the brake IGBT is to limit the voltage in the DC link whenever the maximum voltage limit is exceeded. It limits the voltage by switching the externally mounted resistor across the DC bus to remove excess DC voltage present on the bus capacitors.

External brake resistor placement has the advantages of selecting the resistor based on application need, dissipating the energy outside of the control panel, and protecting the drive from overheating if the brake resistor is overloaded.

The brake IGBT gate signal originates on the control card and is delivered to the brake IGBT via the power card and gatedrive card. Also, the power and control cards monitor the brake IGBT for a short circuit. The power card also monitors the brake resistor for overloads.

Danfoss A/S © 11/2017 All rights reserved.

5.4 Mechanical Holding Brake Overview

A mechanical holding brake is an external piece of equipment mounted directly on the motor shaft that performs static braking. Static braking is when a brake is used to clamp down on the motor after the load has been stopped. A holding brake is either controlled by a PLC or directly by a digital output from the drive.

NOTICE

A drive cannot provide a safe control of a mechanical brake. A redundancy circuitry for the brake control must be included in the installation.

5.4.1 Mechanical Brake Using Open-loop Control

For hoisting applications, typically it is necessary to control an electromagnetic brake. A relay output (relay 1 or relay 2) or a programmed digital output (terminal 27 or 29) is required. Normally, this output must be closed for as long as the drive is unable to hold the motor. In *parameter 5-40 Function Relay* (array parameter), *parameter 5-30 Terminal 27 Digital Output*, or *parameter 5-31 Terminal 29 Digital Output*, select *[32] mechanical brake control* for applications with an electromagnetic brake.

When *[32] mechanical brake control* is selected, the mechanical brake relay remains closed during start until the output current is above the level selected in *parameter 2-20 Release Brake Current*. During stop, the mechanical brake closes when the speed is below the level selected in *parameter 2-21 Activate Brake Speed [RPM]*. If the drive is brought into an alarm condition, such as an overvoltage situation, the mechanical brake immediately cuts in. The mechanical brake also cuts in during safe torque off.

Consider the following when using the electromagnetic brake:

- Use any relay output or digital output (terminal 27 or 29). If necessary, use a contactor.
- Ensure that the output is switched off as long as the drive is unable to rotate the motor. Examples include the load being too heavy or the motor not being mounted.
- Before connecting the mechanical brake, select *[32] Mechanical brake control* in *parameter group 5-4* Relays* (or in *parameter group 5-3* Digital Outputs*).
- The brake is released when the motor current exceeds the preset value in *parameter 2-20 Release Brake Current*.
- The brake is engaged when the output frequency is less than the frequency set in *parameter 2-21 Activate Brake Speed [RPM]* or *parameter 2-22 Activate Brake Speed [Hz]* and only if the drive carries out a stop command.

NOTICE

For vertical lifting or hoisting applications, ensure that the load can be stopped if there is an emergency or a malfunction. If the drive is in alarm mode or in an overvoltage situation, the mechanical brake cuts in.

For hoisting applications, make sure that the torque limits in *parameter 4-16 Torque Limit Motor Mode* and *parameter 4-17 Torque Limit Generator Mode* are set lower than the current limit in *parameter 4-18 Current Limit*. It is also recommended to set *parameter 14-25 Trip Delay at Torque Limit* to 0, *parameter 14-26 Trip Delay at Inverter Fault* to 0, and *parameter 14-10 Mains Failure* to *[3] Coasting*.

 Danfoss A/S © 11/2017 All rights reserved.

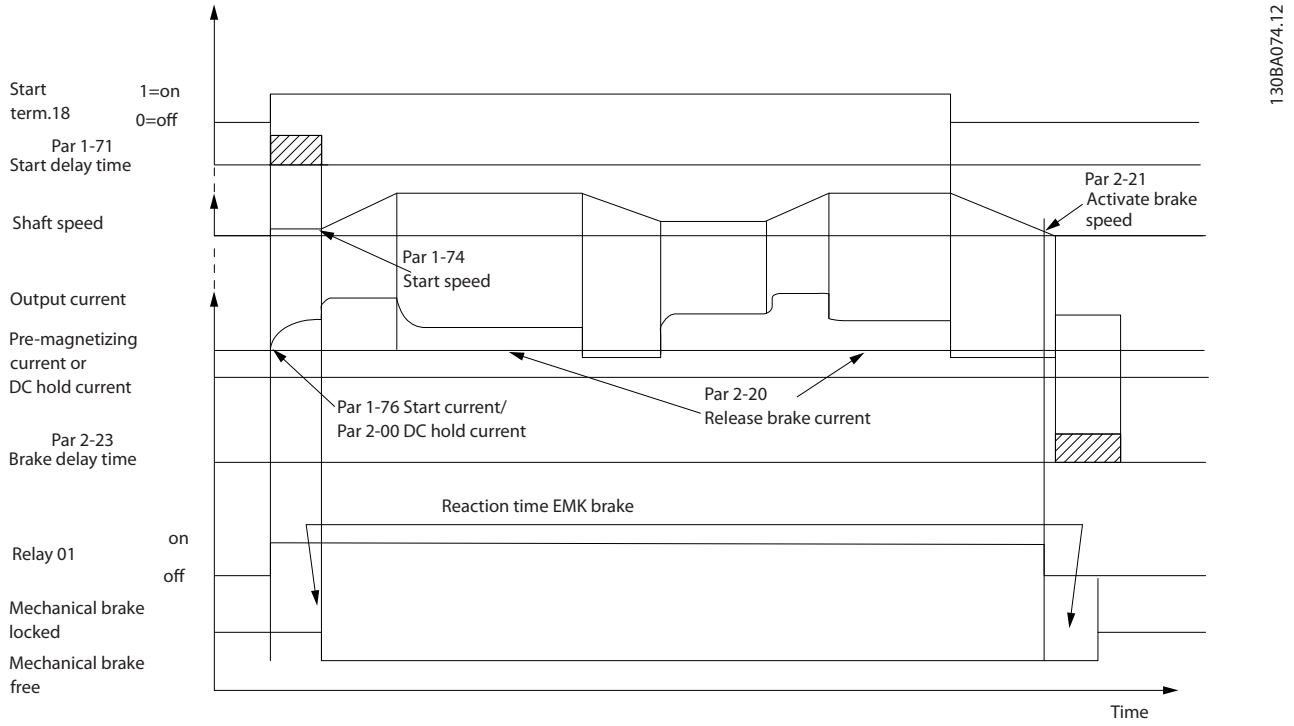

Illustration 5.7 Mechanical Brake Control in Open Loop

5.4.2 Mechanical Brake Using Closed-loop Control

The VLT® AutomationDrive FC 302 features a mechanical brake control designed for hoisting applications and supports the following functions:

- 2 channels for mechanical brake feedback, offering protection against unintended behavior resulting from a broken cable.
- Monitoring the mechanical brake feedback throughout the complete cycle. Monitoring helps protect the mechanical brake - especially if more drives are connected to the same shaft.
- No ramp up until feedback confirms that the mechanical brake is open.
- Improved load control at stop.
- The transition when motor takes over the load from the brake can be configured.

Parameter 1-72 Start Function [6] Hoist Mech. Brake Rel activates the hoist mechanical brake. The main difference compared to the regular mechanical brake control is that the hoist mechanical brake function has direct control over the brake relay. Instead of setting a current to release the brake, the torque applied against the closed brake before release is defined. Because the torque is defined directly, the set-up is more straightforward for hoisting applications.

The hoist mechanical brake strategy is based on the following 3-step sequence, where motor control and brake release are synchronized to obtain the smoothest possible brake release.

1. Pre-magnetize the motor.
   To ensure that there is a hold on the motor and to verify that it is mounted correctly, the motor is first pre-magnetized.
2. Apply torque against the closed brake.

Danfoss A/S © 11/2017 All rights reserved.

When the load is held by the mechanical brake, its size cannot be determined, only its direction. The moment the brake opens, the motor must take over the load. To facilitate the takeover, a user-defined torque (*parameter 2-26 Torque Ref*) is applied in the hoisting direction. This process is used to initialize the speed controller that finally takes over the load. To reduce wear on the gearbox due to backlash, the torque is ramped up.

3. Release the brake.
   When the torque reaches the value set in *parameter 2-26 Torque Ref*, the brake is released. The value set in *parameter 2-25 Brake Release Time* determines the delay before the load is released. To react as quickly as possible on the load-step that follows after brake release, the speed-PID control can be boosted by increasing the proportional gain.

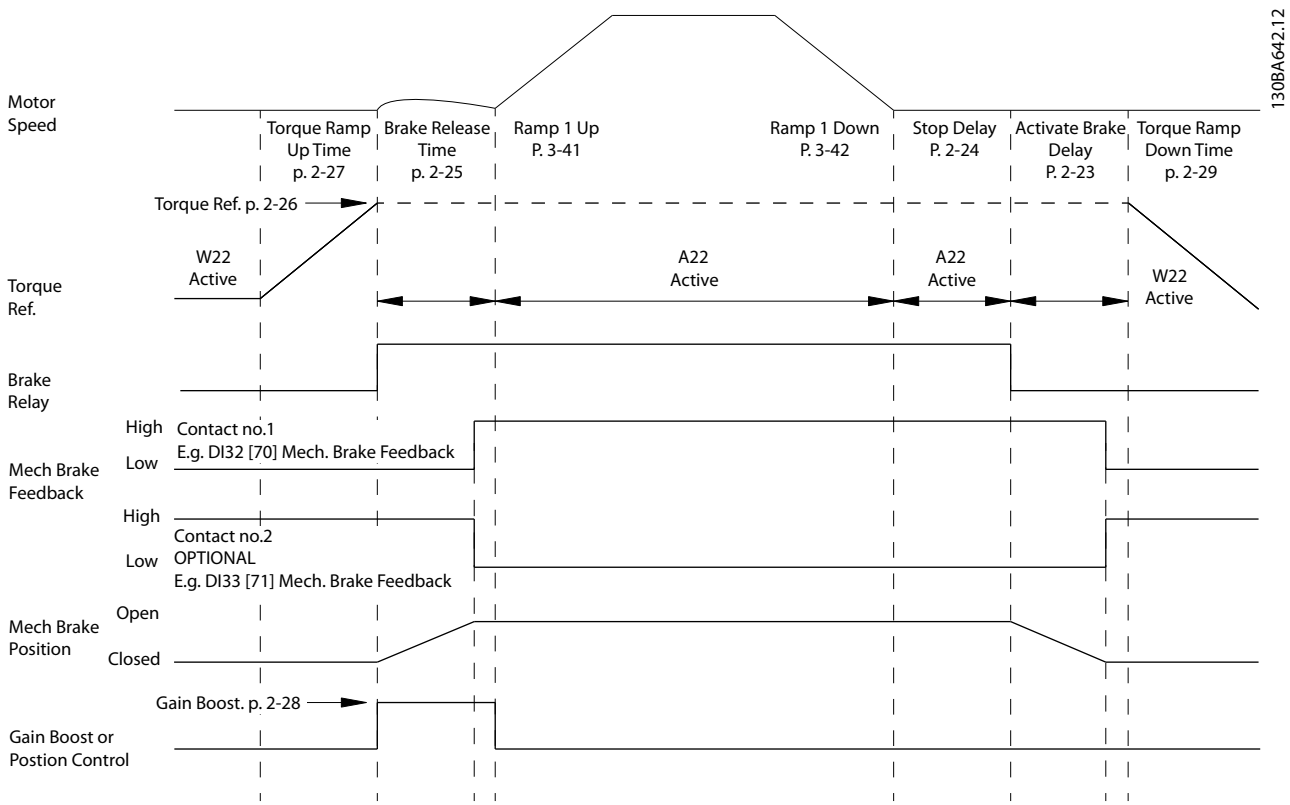

Illustration 5.8 Brake Release Sequence for Hoist Mechanical Brake Control

Parameter 2-26 Torque Ref to *parameter 2-33 Speed PID Start Lowpass Filter Time* are only available for the hoist mechanical brake control (flux with motor feedback). *Parameter 2-30 Position P Start Proportional Gain* to *parameter 2-33 Speed PID Start Lowpass Filter Time* can be set up for smooth transition change from speed control to position control during *parameter 2-25 Brake Release Time* - the time when the load is transferred from the mechanical brake to the drive. *Parameter 2-30 Position P Start Proportional Gain* to *parameter 2-33 Speed PID Start Lowpass Filter Time* are activated when *parameter 2-28 Gain Boost Factor* is set to 0. See *Illustration 5.8* for more information.

NOTICE

For an example of advanced mechanical brake control for hoisting applications, see *chapter 12 Application Examples*.

 Danfoss A/S © 11/2017 All rights reserved.

5.5 Load Share Overview

Load share is a feature that allows the connection of DC circuits of several drives, creating a multiple-drive system to run 1 mechanical load. Load share provides the following benefits:

Energy savings
A motor running in regenerative mode can supply drives that are running in motoring mode.

Reduced need for spare parts
Usually, only 1 brake resistor is needed for the entire drive system instead of 1 brake resistor for per drive.

Power back-up
If there is mains failure, all linked drives can be supplied through the DC link from a back-up. The application can continue running or go though a controlled shutdown process.

Preconditions
The following preconditions must be met before load sharing is considered:

- The drive must be equipped with load sharing terminals.
- Product series must be the same. Only VLT® AutomationDrive FC 302 drives used with other VLT® AutomationDrive FC 302 drives.
- Drives must be placed physically close to one another to allow the wiring between them to be no longer than 25 m (82 ft).
- Drives must have the same voltage rating.
- When adding a brake resistor in a load sharing configuration, all drives must be equipped with a brake chopper.
- Fuses must be added to load share terminals.

For a diagram of a load share application in which best practices are applied, see *Illustration 5.9*.

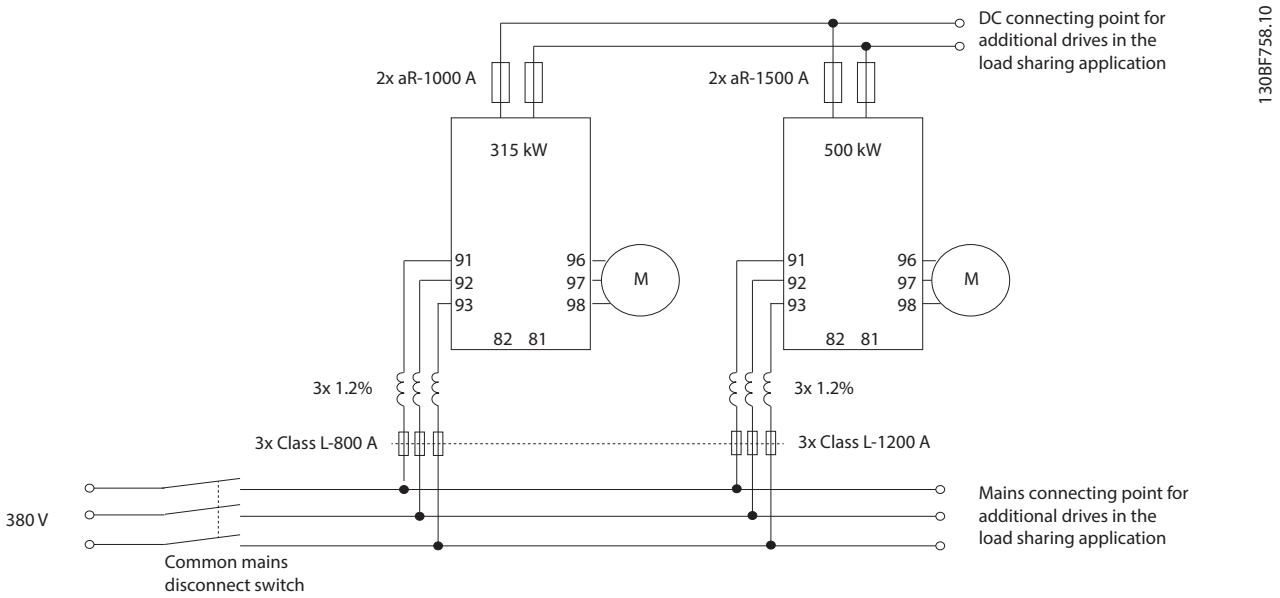

Illustration 5.9 Diagram of a Load Share Application Where Best Practices are Applied

Danfoss A/S © 11/2017 All rights reserved.

Load sharing

Units with the built-in load sharing option contain terminals (+) 89 DC and (–) 88 DC. Within the drive, these terminals connect to the DC bus in front of the DC-link reactor and bus capacitors.

The load sharing terminals can connect in 2 different configurations.

- Terminals tie the DC-bus circuits of multiple drives together. This configuration allows a unit that is in a regenerative mode to share its excess bus voltage with another unit that is running a motor. Load sharing in this manner can reduce the need for external dynamic brake resistors, while also saving energy. The number of units that can be connected in this way is infinite, as long as each unit has the same voltage rating. In addition, depending on the size and number of units, it may be necessary to install DC reactors and DC fuses in the DC-link connections, and AC reactors on the mains. Attempting such a configuration requires specific considerations.
- The drive is powered exclusively from a DC source. This configuration requires:
  - A DC source.
  - A means to soft charge the DC bus at power-up.

5.6 Regen Overview

Regen typically occurs in applications with continuous braking such as cranes/hoists, downhill conveyors, and centrifuges where energy is pulled out of a decelerated motor.

The excess energy is removed from the drive using 1 of the following options:

- Brake chopper allows the excess energy to be dissipated in the form of heat within the brake resistor coils.
- Regen terminals allow a third-party regen unit to be connected to the drive, allowing the excess energy to be returned to the power grid.

Returning excess energy back to the power grid is the most efficient use of regenerated energy in applications using continuous braking.

 Danfoss A/S © 11/2017 All rights reserved.

6 Options and Accessories Overview

6.1 Fieldbus Devices

This section describes the fieldbus devices that are available with the VLT® AutomationDrive FC 302 series. Using a fieldbus device reduces system cost, delivers faster and more efficient communication, and provides an easier user interface. For ordering numbers, refer to *chapter 13.2 Ordering Numbers for Options/Kits*.

6.1.1 VLT® PROFIBUS DP-V1 MCA 101

The MCA 101 provides:

- Wide compatibility, a high level of availability, support for all major PLC vendors, and compatibility with future versions.
- Fast, efficient communication, transparent installation, advanced diagnosis, and parameterization and auto-configuration of process data via a GSD file.
- Acyclic parameterization using PROFIBUS DP-V1, PROFIdrive, or Danfoss FC profile state machines.

6.1.2 VLT® DeviceNet MCA 104

The MCA 104 provides:

- Support of the ODVA AC drive profile supported via I/O instance 20/70 and 21/71 secures compatibility to existing systems.
- Benefits from ODVA's strong conformance testing policies that ensure products are interoperable.

6.1.3 VLT® CAN Open MCA 105

The MCA 105 option provides:

- Standardized handling.
- Interoperability.
- Low cost.

This option is fully equipped with both high-priority access to control the drive (PDO communication) and to access all parameters through acyclic data (SDO communication).

For interoperability, the option uses the DSP 402 AC drive profile.

6.1.4 VLT® PROFIBUS Converter MCA 113

The MCA 113 option is a special version of the PROFIBUS options that emulates the VLT® 3000 commands in the VLT® AutomationDrive FC 302.

The VLT® 3000 can be replaced by the VLT® AutomationDrive FC 302, or an existing system can be expanded without costly change of the PLC program. For upgrade to a different fieldbus, the installed converter can be removed and replaced with a new option. The MCA 113 option secures the investment without losing flexibility.

6.1.5 VLT® PROFIBUS Converter MCA 114

The MCA 114 option is a special version of the PROFIBUS options that emulates the VLT® 5000 commands in the VLT® AutomationDrive FC 302. This option supports DP-V1.

The VLT® 5000 can be replaced by the VLT® AutomationDrive FC 302, or an existing system can be expanded without costly change of the PLC program. For upgrade to a different fieldbus, the installed converter can be removed and replaced with a new option. The MCA 114 option secures the investment without losing flexibility.

6.1.6 VLT® PROFINET MCA 120

The MCA 120 option combines the highest performance with the highest degree of openness. The option is designed so that many of the features from the VLT® PROFIBUS MCA 101 can be reused, minimizing user effort to migrate PROFINET and securing the investment in a PLC program.

- Same PPO types as the VLT® PROFIBUS DP V1 MCA 101 for easy migration to PROFINET.
- Built-in web server for remote diagnosis and reading out of basic drive parameters.
- Supports MRP.
- Supports DP-V1. Diagnostic allows easy, fast, and standardized handling of warning and fault information into the PLC, improving bandwidth in the system.
- Supports PROFIsafe when combined with VLT® Safety Option MCB 152.
- Implementation in accordance with Conformance Class B.

6.1.7 VLT® EtherNet/IP MCA 121

Ethernet is the future standard for communication at the factory floor. The VLT® EtherNet/IP MCA 121 option is based on the newest technology available for industrial use and handles even the most demanding requirements.

Danfoss A/S © 11/2017 All rights reserved.

EtherNet/IP™ extends standard commercial Ethernet to the Common Industrial Protocol (CIP™) – the same upper-layer protocol and object model found in DeviceNet.

MCA 121 offers advanced features such as:

- Built-in, high-performance switch enabling line-topology, which eliminates the need for external switches.
- DLR Ring (from October 2015).
- Advanced switch and diagnosis functions.
- Built-in web server.
- E-mail client for service notification.
- Unicast and Multicast communication.

6.1.8 VLT® Modbus TCP MCA 122

The MCA 122 option connects to Modbus TCP-based networks. It handles connection intervals down to 5 ms in both directions, positioning it among the fastest performing Modbus TCP devices in the market. For master redundancy, it features hot swapping between 2 masters.

Other features include:

- Built-in web-server for remote diagnosis and reading out basic drive parameters.
- Email notification that can be configured to send an email message to 1 or more recipients when certain alarms or warnings occur, or when they are cleared.
- Dual master PLC connection for redundancy.

6.1.9 VLT® POWERLINK MCA 123

The MCA 123 option represents the 2nd generation of fieldbus. The high bit rate of industrial Ethernet can now be used to make the full power of IT technologies used in the automation world available for the factory world.

This fieldbus option provides high performance, real-time, and time synchronization features. Due to its CANopen-based communication models, network management, and device description model, it offers a fast communication network and the following features:

- Dynamic motion control applications.
- Material handling.
- Synchronization and positioning applications.

6.1.10 VLT® EtherCAT MCA 124

The MCA 124 option offers connectivity to EtherCAT® based networks via the EtherCAT Protocol.

The option handles the EtherCAT line communication in full speed, and connection towards the drive with an interval down to 4 ms in both directions, allowing the MCA 124 to participate in networks ranging from low performance up to servo applications.

- EoE Ethernet over EtherCAT support.
- HTTP (hypertext transfer protocol) for diagnosis via built-in web server.
- CoE (CAN over Ethernet) for access to drive parameters.
- SMTP (simple mail transfer protocol) for e-mail notification.
- TCP/IP for easy access to drive configuration data from MCT 10.

6.2 Functional Extensions

This section describes the functional extension options that are available with the VLT® AutomationDrive FC 302 series. For ordering numbers, refer to *chapter 13.2 Ordering Numbers for Options/Kits*.

6.2.1 VLT® General Purpose I/O Module MCB 101

The MCB 101 option offers an extended number of control inputs and outputs:

- 3 digital inputs 0–24 V: Logic 0 < 5 V; Logic 1 > 10 V.
- 2 analog inputs 0–10 V: Resolution 10 bits plus sign.
- 2 digital outputs NPN/PNP push-pull.
- 1 analog output 0/4–20 mA.
- Spring-loaded connection.

6.2.2 VLT® Encoder Input MCB 102

The MCB 102 option offers the possibility to connect various types of incremental and absolute encoders. The connected encoder can be used for closed-loop speed control and closed-loop flux motor control.

The following encoder types are supported:

- 5 V TTL (RS 422)
- 1VPP SinCos
- SSI
- HIPERFACE
- EnDat

 Danfoss A/S © 11/2017 All rights reserved.

6.2.3 VLT® Resolver Option MCB 103

The MCB 103 option enables connection of a resolver to provide speed feedback from the motor.

- Primary voltage: 2–8 V_{rms}
- Primary frequency: 2.0–15 kHz
- Primary maximum current: 50 mA rms
- Secondary input voltage: 4 V_{rms}
- Spring-loaded connection

6.2.4 VLT® Relay Card MCB 105

The MCB 105 option extends relay functions with 3 more relay outputs.

- Protects control cable connection.
- Spring-loaded control wire connection.

Maximum switch rate (rated load/minimum load)
6 $minutes^{-1}$/20 s^{-1}.

Maximum terminal load
AC-1 resistive load: 240 V AC, 2 A.

6.2.5 VLT® Safe PLC Interface Option MCB 108

The MCB 108 option provides a safety input based on a single-pole 24 V DC input. For most applications, this input provides a way to implement safety in a cost-effective way.

For applications that work with more advanced products like Safety PLC and light curtains, the fail-safe PLC interface enables the connection of a 2-wire safety link. The PLC Interface allows the fail-safe PLC to interrupt on the plus or the minus link without interfering with the sense signal of the fail-safe PLC.

6.2.6 VLT® PTC Thermistor Card MCB 112

The MCB 112 option provides extra motor monitoring compared to the built-in ETR function and thermistor terminal.

- Protects the motor from overheating.
- ATEX-approved for use with Ex-d and Ex-e motors (EX-e only FC 302).
- Uses Safe Torque Off function, which is approved in accordance with SIL 2 IEC 61508.

6.2.7 VLT® Sensor Input Option MCB 114

The MCB 114 option protects the motor from being overheated by monitoring the temperature of motor bearings and windings.

- 3 self-detecting sensor inputs for 2 or 3-wire PT100/PT1000 sensors.
- 1 extra analog input 4–20 mA.

6.2.8 VLT® Safety Option MCB 150 and MCB 151

MCB 150 and MCB 151 options expand the Safe Torque Off functions, which are integrated in a standard VLT® AutomationDrive FC 302. Use the Safe Stop 1 (SS1) function to perform a controlled stop before removing torque. Use the Safety-Limited Speed (SLS) function to monitor whether a specified speed is exceeded.

These options can be used up to PL d according to ISO 13849-1 and SIL 2 according to IEC 61508.

- Extra standard-compliant safety functions.
- Replacement of external safety equipment.
- Reduced space requirements.
- 2 safe programmable inputs.
- 1 safe output (for T37).
- Easier machine certification.
- Drive can be powered continuously.
- Safe LCP copy.
- Dynamic commissioning report.
- TTL (MCB 150) or HTL (MCB 151) encoder as speed feedback.

6.2.9 VLT® Safety Option MCB 152

The MCB 152 option activates Safe Torque Off via the PROFIsafe fieldbus with VLT® PROFINET MCA 120 fieldbus option. It improves flexibility by connecting safety devices within a plant.

The safety functions of the MCB 152 are implemented according to EN IEC 61800-5-2. The MCB 152 supports PROFIsafe functionality to activate integrated safety functions of the VLT® AutomationDrive FC 302 from any PROFIsafe host, up to Safety Integrity Level SIL 2 according to EN IEC 61508 and EN IEC 62061, and Performance Level PL d, Category 3 according to EN ISO 13849-1.

- PROFIsafe device (with MCA 120).
- Replacement of external safety equipment.

Danfoss A/S © 11/2017 All rights reserved.

- 2 safe programmable inputs.
- Safe LCP copy.
- Dynamic commissioning report.

6.3 Motion Control and Relay Cards

This section describes the motion control and relay card options that are available with the VLT® AutomationDrive FC 302 series. For ordering numbers, refer to *chapter 13.2 Ordering Numbers for Options/Kits*.

6.3.1 VLT® Motion Control Option MCO 305

The MCO 305 option is an integrated programmable motion controller that adds extra functionality for VLT® AutomationDrive FC 302.

The MCO 305 option offers easy-to-use motion functions combined with programmability – an ideal solution for positioning and synchronizing applications.

- Synchronization (electronic shaft), positioning, and electronic cam control.
- 2 separate interfaces supporting both incremental and absolute encoders.
- 1 encoder output (virtual master function).
- 10 digital inputs.
- 8 digital outputs.
- Supports CANopen motion bus, encoders, and I/O modules.
- Sends and receives data via fieldbus interface (requires fieldbus option).
- PC software tools for debugging and commissioning: Program and cam editor.
- Structured programming language with both cyclic and event-driven execution.

6.3.2 VLT® Synchronizing Controller MCO 350

The MCO 350 option for VLT® AutomationDrive FC 302 expands the functional properties of the AC drive in synchronizing applications and replaces traditional mechanical solutions.

- Speed synchronizing.
- Position (angle) synchronizing with or without marker correction.
- On-line adjustable gear ratio.
- On-line adjustable position (angle) offset.
- Encoder output with virtual master function for synchronization of multiple slaves.
- Control via I/Os or fieldbus.
- Home function.
- Configuration and readout of status and data via the LCP.

6.3.3 VLT® Positioning Controller MCO 351

The MCO 351 option offers a host of user-friendly benefits for positioning applications in many industries.

- Relative positioning.
- Absolute positioning.
- Touch-probe positioning.
- End-limit handling (software and hardware).
- Control via I/Os or fieldbus.
- Mechanical brake handling (programmable hold delay).
- Error handling.
- Jog speed/manual operation.
- Marker-related positioning.
- Home function.
- Configuration and readout of status and data via the LCP.

6.3.4 VLT® Extended Relay Card MCB 113

The MCB 113 option adds inputs/outputs for increased flexibility.

- 7 digital inputs.
- 2 analog outputs.
- 4 SPDT relays.
- Meets NAMUR recommendations.
- Galvanic isolation capability.

6.4 Brake Resistors

In applications where the motor is used as a brake, energy is generated in the motor and sent back into the drive. If the energy cannot be transported back to the motor, it increases the voltage in the drive DC line. In applications with frequent braking and/or high inertia loads, this increase can lead to an overvoltage trip in the drive and, finally, a shutdown. Brake resistors are used to dissipate the excess energy resulting from the regenerative braking. The resistor is selected based on its ohmic value, its power dissipation rate, and its physical size. Danfoss offers a wide variety of different resistors that are specially designed to Danfoss drives. For ordering numbers and more information on how to dimension brake resistors, refer to the *VLT® Brake Resistor MCE 101 Design Guide*.

 Danfoss A/S © 11/2017 All rights reserved.

6.5 Sine-wave Filters

When a drive controls a motor, resonance noise is heard from the motor. This noise, which is the result of the motor design, occurs every time an inverter switch in the drive is activated. The frequency of the resonance noise thus corresponds to the switching frequency of the drive.

Danfoss supplies a sine-wave filter to dampen the acoustic motor noise. The filter reduces the ramp-up time of the voltage, the peak load voltage (U_{PEAK}), and the ripple current (ΔI) to the motor, which means that current and voltage become almost sinusoidal. The acoustic motor noise is reduced to a minimum.

The ripple current in the sine-wave filter coils also causes some noise. Solve the problem by integrating the filter in a cabinet or enclosure.

For ordering numbers and more information on sine-wave filters, refer to the *Output Filters Design Guide*.

6.6 dU/dt Filters

Danfoss supplies dU/dt filters which are differential mode, low-pass filters that reduce motor terminal phase-to-phase peak voltages and reduce the rise time to a level that lowers the stress on the insulation at the motor windings. This is a typical issue with set-ups using short motor cables.

Compared to sine-wave filters, the dU/dt filters have a cut-off frequency above the switching frequency.

For ordering numbers and more information on dU/dt filters, refer to the *Output Filters Design Guide*.

6.7 Common-mode Filters

High-frequency common-mode cores (HF-CM cores) reduce electromagnetic interference and eliminate bearing damage by electrical discharge. They are special nanocrystalline magnetic cores that have superior filtering performance compared to regular ferrite cores. The HF-CM core acts like a common-mode inductor between phases and ground.

Installed around the 3 motor phases (U, V, W), the common mode filters reduce high-frequency common-mode currents. As a result, high-frequency electromagnetic interference from the motor cable is reduced.

For ordering numbers refer to the *Output Filters Design Guide*.

6.8 Harmonic Filters

The *VLT® Advanced Harmonic Filters AHF 005 & AHF 010* should not be compared with traditional harmonic trap filters. The Danfoss harmonic filters have been specially designed to match the Danfoss drives.

By connecting the AHF 005 or AHF 010 in front of a Danfoss drive, the total harmonic current distortion generated back to the mains is reduced to 5% and 10%.

For ordering numbers and more information on how to dimension brake resistors, refer to the *VLT® Advanced Harmonic Filters AHF 005/AHF 010 Design Guide*.

6.9 Enclosure Built-in Options

The following built-in options are specified in the type code when ordering the drive.

Enclosure with corrosion-resistant back channel
For extra protection from corrosion in harsh environments, units can be ordered in an enclosure that includes a stainless steel back channel, heavier plated heat sinks, and an upgraded fan. This option is recommended in salt-air environments, such as those near the ocean.

Mains shielding
Lexan® shielding can be mounted in front of incoming power terminals and input plate to protect against physical contact when the enclosure door is open.

Space heaters and thermostat
Mounted in the cabinet interior of enclosure size F drives and controlled via an automatic thermostat, space heaters controlled via an automatic thermostat prevent condensation inside the enclosure.

The thermostat default settings turn on the heaters at 10 °C (50 °F) and turn them off at 15.6 °C (60 °F).

Cabinet light with power outlet
To increase visibility during servicing and maintenance, a light can be mounted on the cabinet interior of enclosure F drives. The light housing includes a power outlet for temporarily powering laptop computers or other devices.

Available in 2 voltages:

- 230 V, 50 Hz, 2.5 A, CE/ENEC
- 120 V, 60 Hz, 5 A, UL/cUL

RFI filters
VLT® drive series feature integrated Class A2 RFI filters as standard. If extra levels of RFI/EMC protection are required, they can be obtained using optional Class A1 RFI filters, which provide suppression of radio frequency interference and electromagnetic radiation in accordance with EN 55011. Marine use RFI filters are also available.

On enclosure size F drives, the Class A1 RFI filter requires the addition of the options cabinet.

Danfoss A/S © 11/2017 All rights reserved.

NAMUR terminals
Selection of this option provides standardized terminal connection and associated functionality as defined by NAMUR NE37. NAMUR is an international association of automation technology users in the process industries, primarily chemical, and pharmaceutical industries in Germany.

Requires the selection of VLT® Extended Relay Card MCB 113 and the VLT® PTC Thermistor Card MCB 112.

Insulation resistance monitor (IRM)
Monitors the insulation resistance in ungrounded systems (IT systems in IEC terminology) between the system phase conductors and ground. There is an ohmic pre-warning and a main alarm setpoint for the insulation level. Associated with each setpoint is an SPDT alarm relay for external use. Only 1 insulation resistance monitor can be connected to each ungrounded (IT) system.

- Integrated into the safe-stop circuit.
- LCD display of insulation resistance.
- Fault memory.
- Info, test, and reset key.

Residual current device (RCD)
Uses the core balance method to monitor ground fault currents in grounded and high-resistance grounded systems (TN and TT systems in IEC terminology). There is a pre-warning (50% of main alarm setpoint) and a main alarm setpoint. Associated with each setpoint is an SPDT alarm relay for external use. Requires an external "window-type" current transformer (supplied and installed by customer).

- Integrated into the safe-stop circuit.
- IEC 60755 Type B device monitors, pulsed DC, and pure DC ground fault currents.
- LED bar graph indicator of the ground fault current level from 10–100% of the setpoint.
- Fault memory.
- Test and reset key.

Safe Torque Off with Pilz safety relay
Available for drives with enclosure size F. Enables the Pilz relay to fit in the enclosure without requiring an options cabinet. The relay is used in the external temperature monitoring option. If PTC monitoring is required, VLT® PTC Thermistor Card MCB 112 must be ordered.

Emergency stop with Pilz safety relay
Includes a redundant 4-wire emergency stop push button mounted on the front of the enclosure, and a Pilz relay that monitors it along with the safe-stop circuit and contactor position. Requires a contactor and the options cabinet for drives with enclosure size F.

Brake chopper (IGBTs)
Brake terminals with an IGBT brake chopper circuit allow for the connection of external brake resistors. For detailed data on brake resistors, see the VLT® Brake Resistor MCE 101 Design Guide, available at *drives.danfoss.com/downloads/portal/#/*.

Regen terminals
Allow connection of regen units to the DC bus on the capacitor bank side of the DC-link reactors for regenerative braking. The enclosure size F regen terminals are sized for approximately 50% the power rating of the drive. Consult the factory for regen power limits based on the specific drive size and voltage.

Load sharing terminals
These terminals connect to the DC-bus on the rectifier side of the DC-link reactor and allow for the sharing of DC bus power between multiple drives. For drives with enclosure size F, the load sharing terminals are sized for approximately 33% of the power rating of the drive. Consult the factory for load sharing limits based on the specific drive size and voltage.

Disconnect
A door-mounted handle allows for the manual operation of a power disconnect switch to enable and disable power to the drive, increasing safety during servicing. The disconnect is interlocked with the cabinet doors to prevent them from being opened while power is still applied.

Circuit breakers
A circuit breaker can be remotely tripped, but must be manually reset. Circuit breakers are interlocked with the cabinet doors to prevent them from being opened while power is still applied. When a circuit breaker is ordered as an option, fuses are also included for fast-acting current overload protection of the AC drive.

Contactors
An electrically-controlled contactor switch allows for the remote enabling and disabling of power to the drive. If the IEC emergency stop option is ordered, the Pilz relay monitors the auxiliary contact on the contactor.

Manual motor starters
Provide 3-phase power for electric cooling blowers that are often required for larger motors. Power for the starters is provided from the load side of any supplied contactor, circuit breaker, or disconnect switch. If a Class 1 RFI filter option is ordered, the input side of the RFI provides the power to the starter. Power is fused before each motor starter and is off when the incoming power to the drive is off. Up to 2 starters are allowed. If a 30 A fuse-protected circuit is ordered, then only 1 starter is allowed. Starters are integrated into the safe-stop circuit.

Features include:

- Operation switch (on/off).
- Short circuit and overload protection with test function.

 Danfoss A/S © 11/2017 All rights reserved.

- Manual reset function.

30 A, fuse-protected terminals

- 3-phase power matching incoming mains voltage for powering auxiliary customer equipment.
- Not available if 2 manual motor starters are selected.
- Terminals are off when the incoming power to the drive is off.
- Power for the terminals is provided from the load side of any supplied contactor, circuit breaker, or disconnect switch. If a Class 1 RFI filter option is ordered, the input side of the RFI provides the power to the starter.

Common motor terminals
The common motor terminal option provides the busbars and hardware required to connect the motor terminals from the paralleled inverters to a single terminal (per phase) to accommodate the installation of the motor-side top entry kit.

This option is also recommended to connect the output of a drive to an output filter or output contactor. The common motor terminals eliminate the need for equal cable lengths from each inverter to the common point of the output filter (or motor).

24 V DC supply

- 5 A, 120 W, 24 V DC.
- Protected against output overcurrent, overload, short circuits, and overtemperature.
- For powering customer-supplied accessory devices such as sensors, PLC I/O, contactors, temperature probes, indicator lights, and/or other electronic hardware.
- Diagnostics include a dry DC-ok contact, a green DC-ok LED, and a red overload LED.

External temperature monitoring
Designed for monitoring temperatures of external system components, such as the motor windings and/or bearings. Includes 8 universal input modules plus 2 dedicated thermistor input modules. All 10 modules are integrated into the safe-stop circuit and can be monitored via a fieldbus network, which requires the purchase of a separate module/bus coupler. A safe torque off brake option must be ordered when selecting external temperature monitoring.

Signal types:

- RTD inputs (including Pt100) – 3-wire or 4-wire.
- Thermocouple.
- Analog current or analog voltage.

More features:

- 1 universal output – configurable for analog voltage or analog current.
- 2 output relays (NO).
- Dual-line LC display and LED diagnostics.
- Sensor lead wire break, short circuit, and incorrect polarity detection.
- Sensor lead wire break, short circuit, and incorrect polarity detection.
- Interface set-up software.
- If 3 PTC are required, the VLT® PTC Thermistor Card MCB 112 option must be added.

For ordering numbers for enclosure built-in options, refer to *chapter 13.1 Drive Configurator*.

6.10 High-power Kits

High-power kits, such as back-wall cooling, space heater, mains shield, are available. See *chapter 13.2 Ordering Numbers for Options/Kits* for a brief description and ordering numbers for all available kits.

Danfoss A/S © 11/2017 All rights reserved.

7 Specifications

7.1 Electrical Data, 380–500 V

VLT® AutomationDrive FC 302	P315		P355		P400	
High/normal overload (High overload=150% current during 60 s, normal overload=110% current during 60 s)	**HO**	**NO**	**HO**	**NO**	**HO**	**NO**
Typical shaft output at 400 V [kW]	315	355	355	400	400	450
Typical shaft output at 460 V [hp]	450	500	500	600	550	600
Typical shaft output at 500 V [kW]	355	400	400	500	500	530
Enclosure size	**E1/E2**		**E1/E2**		**E1/E2**	
Output current (3-phase)						
Continuous (at 400 V) [A]	600	658	658	745	695	800
Intermittent (60 s overload) (at 400 V) [A]	900	724	987	820	1043	880
Continuous (at 460/500 V) [A]	540	590	590	678	678	730
Intermittent (60 s overload) (at 460/500 V) [A]	810	649	885	746	1017	803
Continuous kVA (at 400 V) [kVA]	416	456	456	516	482	554
Continuous kVA (at 460 V) [kVA]	430	470	470	540	540	582
Continuous kVA (at 500 V) [kVA]	468	511	511	587	587	632
Maximum input current						
Continuous (at 400 V) [A]	578	634	634	718	670	771
Continuous (at 460/500 V) [A]	520	569	569	653	653	704
Maximum number and size of cables per phase						
Mains and motor [mm^2 (AWG)]	4x240 (4x500 mcm)		4x240 (4x500 mcm)		4x240 (4x500 mcm)	
Brake [mm^2 (AWG)]	2x185 (2x350 mcm)		2x185 (2x350 mcm)		2x185 (2x350 mcm)	
Load share [mm^2 (AWG)]	4x240 (4x500 mcm)		4x240 (4x500 mcm)		4x240 (4x500 mcm)	
Maximum external mains fuses [A][1)]	900		900		900	
Estimated power loss at 400 V [W][2), 3)]	6794	7532	7498	8677	7976	9473
Estimated power loss at 460 V [W][2), 3)]	6118	6724	6672	7819	7814	8527
Efficiency[3)]	0.98		0.98		0.98	
Output frequency [Hz]	0–590		0–590		0–590	
Control card overtemperature trip [°C (°F)]	85 (185)		85 (185)		85 (185)	

Table 7.1 Electrical Data for Enclosures E1/E2, Mains Supply 3x380–500 V AC

1) For fuse ratings, see chapter 10.5 Fuses and Circuit Breakers.

2) Typical power loss is at normal conditions and expected to be within ±15% (tolerance relates to variety in voltage and cable conditions). These values are based on a typical motor efficiency (IE/IE3 border line). Lower efficiency motors add to the power loss in the drive. Applies for dimensioning of drive cooling. If the switching frequency is higher than the default setting, the power losses can increase. LCP and typical control card power consumptions are included. For power loss data according to EN 50598-2, refer to drives.danfoss.com/knowledge-center/energy-efficiency-directive/#/. Options and customer load can add up to 30 W to the losses, though usually a fully loaded control card and options for slots A and B each add only 4 W.

3) Measured using 5 m (16.5 ft) shielded motor cables at rated load and rated frequency. Efficiency measured at nominal current. For energy efficiency class, see chapter 10.12 Efficiency. For part load losses, see drives.danfoss.com/knowledge-center/energy-efficiency-directive/#/.

 Danfoss A/S © 11/2017 All rights reserved.

VLT® AutomationDrive FC 302	P450		P500		P560		P630	
High/normal overload (High overload=150% current during 60 s, normal overload=110% current during 60 s)	**HO**	**NO**	**HO**	**NO**	**HO**	**NO**	**HO**	**NO**
Typical shaft output at 400 V [kW]	450	500	500	560	560	630	630	710
Typical shaft output at 460 V [hp]	600	650	650	750	750	900	1000	1000
Typical shaft output at 500 V [kW]	530	560	560	630	630	710	800	800
Enclosure size	**F1/F3**		**F1/F3**		**F1/F3**		**F1/F3**	
Output current (3-phase)								
Continuous (at 400 V) [A]	800	880	880	990	990	1120	1120	1260
Intermittent (60 s overload) (at 400 V) [A]	1200	968	1320	1089	1485	1680	1386	1890
Continuous (at 460/500 V) [A]	730	780	780	890	890	1050	1050	1160
Intermittent (60 s overload) (at 460/500 V) [A]	1095	858	1170	979	1335	1155	1575	1276
Continuous kVA (at 400 V) [kVA]	554	610	610	686	686	776	776	873
Continuous kVA (at 460 V) [kVA]	582	621	621	709	709	837	837	924
Continuous kVA (at 500 V) [kVA]	632	675	675	771	771	909	909	1005
Maximum input current								
Continuous (at 400 V) [A]	771	848	848	954	954	1079	1079	1214
Continuous (at 460/500 V) [A]	704	752	752	858	858	1012	1012	1118
Maximum number and size of cables per phase								
- Motor [mm^2 (AWG)]	8x150 (8x300 mcm)		8x150 (8x300 mcm)		8x150 (8x300 mcm)		8x150 (8x300 mcm)	
- Mains [mm^2 (AWG)] (F1)	8x240 (8x500 mcm)		8x240 (8x500 mcm)		8x240 (8x500 mcm)		8x240 (8x500 mcm)	
- Mains [mm^2 (AWG)] (F3)	8x456 (8x900 mcm)		8x456 (8x900 mcm)		8x456 (8x900 mcm)		8x456 (8x900 mcm)	
- Load share [mm^2 (AWG)]	4x120 (4x250 mcm)		4x120 (4x250 mcm)		4x120 (4x250 mcm)		4x120 (4x250 mcm)	
- Brake [mm^2 (AWG)]	4x185 (4x350 mcm)		4x185 (4x350 mcm)		4x185 (4x350 mcm)		4x185 (4x350 mcm)	
Maximum external mains fuses [A][1)]	1600		1600		2000		2000	
Estimated power loss at 400 V [W][2), 3)]	9031	10162	10146	11822	10649	12512	12490	14674
Estimated power loss at 460 V [W][2), 3)]	8212	8876	8860	10424	9414	11595	11581	13213
Maximum added losses A1 RFI, circuit breaker or disconnect, and contactor [W], (F3 only)	893	963	951	1054	978	1093	1092	1230
Maximum panel options losses [W]	400	400	400	400	400	400	400	400
Efficiency[3)]	0.98		0.98		0.98		0.98	
Output frequency [Hz]	0–590		0–590		0–590		0–590	
Control card overtemperature trip [°C (°F)]	85 (185)		85 (185)		85 (185)		85 (185)	

Table 7.2 Electrical Data for Enclosures F1/F3, Mains Supply 3x380–500 V AC

1) For fuse ratings, see chapter 10.5 Fuses and Circuit Breakers.

2) Typical power loss is at normal conditions and expected to be within ±15% (tolerance relates to variety in voltage and cable conditions). These values are based on a typical motor efficiency (IE/IE3 border line). Lower efficiency motors add to the power loss in the drive. Applies for dimensioning of drive cooling. If the switching frequency is higher than the default setting, the power losses can increase. LCP and typical control card power consumptions are included. For power loss data according to EN 50598-2, refer to drives.danfoss.com/knowledge-center/energy-efficiency-directive/#/. Options and customer load can add up to 30 W to the losses, though usually a fully loaded control card and options for slots A and B each add only 4 W.

3) Measured using 5 m (16.5 ft) shielded motor cables at rated load and rated frequency. Efficiency measured at nominal current. For energy efficiency class, see chapter 10.12 Efficiency. For part load losses, see drives.danfoss.com/knowledge-center/energy-efficiency-directive/#/.

Danfoss A/S © 11/2017 All rights reserved.

VLT® AutomationDrive FC 302	P710		P800	
High/normal overload (High overload=150% current during 60 s, normal overload=110% current during 60 s)	**HO**	**NO**	**HO**	**NO**
Typical shaft output at 400 V [kW]	710	800	800	1000
Typical shaft output at 460 V [hp]	1000	1200	1200	1350
Typical shaft output at 500 V [kW]	800	1000	1000	1100
Enclosure size	**F2/F4**		**F2/F4**	
Output current (3-phase)				
Continuous (at 400 V) [A]	1260	1460	1460	1720
Intermittent (60 s overload) (at 400 V) [A]	1890	1606	2190	1892
Continuous (at 460/500 V) [A]	1160	1380	1380	1530
Intermittent (60 s overload)(at 460/500 V) [A]	1740	1518	2070	1683
Continuous kVA (at 400 V) [kVA]	873	1012	1012	1192
Continuous kVA (at 460 V) [kVA]	924	1100	1100	1219
Continuous kVA (at 500 V) [kVA]	1005	1195	1195	1325
Maximum input current				
Continuous (at 400 V) [A]	1214	1407	1407	1658
Continuous (at 460/500 V) [A]	1118	1330	1330	1474
Maximum number and size of cables per phase				
- Motor [mm^2 (AWG)]	12x150 (12x300 mcm)		12x150 (12x300 mcm)	
- Mains [mm^2 (AWG)] (F2)	8x240 (8x500 mcm)		8x240 (8x500 mcm)	
- Mains [mm^2 (AWG)] (F4)	8x456 (8x900 mcm)		8x456 (8x900 mcm)	
- Load share [mm^2 (AWG)]	4x120 (4x250 mcm)		4x120 (4x250 mcm)	
- Brake [mm^2 (AWG)]	6x185 (6x350 mcm)		6x185 (6x350 mcm)	
Maximum external mains fuses [A][1)]	2500		2500	
Estimated power loss at 400 V [W][2), 3)]	14244	17293	15466	19278
Estimated power loss at 460 V [W][2), 3)]	13005	16229	14556	16624
Maximum added losses A1 RFI, circuit breaker or disconnect, and contactor [W], (F4 only)	2067	2280	2236	2541
Maximum panel options losses [W]	400	400	400	400
Efficiency[3)]	0.98		0.98	
Output frequency [Hz]	0–590		0–590	
Control card overtemperature trip [°C (°F)]	85 (185)		85 (185)	

Table 7.3 Electrical Data for Enclosures F2/F4, Mains Supply 3x380–500 V AC

1) For fuse ratings, see chapter 10.5 Fuses and Circuit Breakers.

2) Typical power loss is at normal conditions and expected to be within ±15% (tolerance relates to variety in voltage and cable conditions). These values are based on a typical motor efficiency (IE/IE3 border line). Lower efficiency motors add to the power loss in the drive. Applies for dimensioning of drive cooling. If the switching frequency is higher than the default setting, the power losses can increase. LCP and typical control card power consumptions are included. For power loss data according to EN 50598-2, refer to drives.danfoss.com/knowledge-center/energy-efficiency-directive/#/. Options and customer load can add up to 30 W to the losses, though usually a fully loaded control card and options for slots A and B each add only 4 W.

3) Measured using 5 m (16.5 ft) shielded motor cables at rated load and rated frequency. Efficiency measured at nominal current. For energy efficiency class, see chapter 10.12 Efficiency. For part load losses, see drives.danfoss.com/knowledge-center/energy-efficiency-directive/#/.

 Danfoss A/S © 11/2017 All rights reserved.

VLT® AutomationDrive FC 302	P250		P315		P355		P400	
High/normal overload (High overload=150% current during 60 s, normal overload=110% current during 60 s)	**HO**	**NO**	**HO**	**NO**	**HO**	**NO**	**HO**	**NO**
Typical shaft output at 400 V [kW]	250	315	315	355	355	400	400	450
Typical shaft output at 460 V [hp]	350	450	450	500	500	600	550	600
Typical shaft output at 500 V [kW]	315	355	355	400	400	500	500	530
Enclosure size	**F8/F9**		**F8/F9**		**F8/F9**		**F8/F9**	
Output current (3-phase)								
Continuous (at 400 V) [A]	480	600	600	658	658	745	695	800
Intermittent (60 s overload) (at 400 V) [A]	720	660	900	724	987	820	1043	880
Continuous (at 460/500 V) [A]	443	540	540	590	590	678	678	730
Intermittent (60 s overload) (at 460/500 V) [A]	665	594	810	649	885	746	1017	803
Continuous kVA (at 400 V) [kVA]	333	416	416	456	456	516	482	554
Continuous kVA (at 460 V) [kVA]	353	430	430	470	470	540	540	582
Continuous kVA (at 500 V) [kVA]	384	468	468	511	511	587	587	632
Maximum input current								
Continuous (at 400 V) [A]	463	578	578	634	634	718	670	771
Continuous (at 460/500 V) [A]	427	520	520	569	569	653	653	704
Maximum number and size of cables per phase								
- Motor [mm^2 (AWG)]	4x240 (4x500 mcm)		4x240 (4x500 mcm)		4x240 (4x500 mcm)		4x240 (4x500 mcm)	
- Mains [mm^2 (AWG)]	4x90 (4x3/0 mcm)		4x90 (4x3/0 mcm)		4x240 (4x500 mcm)		4x240 (4x500 mcm)	
- Brake [mm^2 (AWG)]	2x185 (2x350 mcm)		2x185 (2x350 mcm)		2x185 (2x350 mcm)		2x185 (2x350 mcm)	
Maximum external mains fuses [A][1)]	700		700		700		700	
Estimated power loss at 400 V [W][2), 3)]	5164	6790	6960	7701	7691	8879	8178	9670
Estimated power loss at 460 V [W][2), 3)]	4822	6082	6345	6953	6944	8089	8085	8803
Efficiency[3)]	0.98		0.98		0.98		0.98	
Output frequency [Hz]	0–590		0–590		0–590		0–590	
Control card overtemperature trip [°C (°F)]	85 (185)		85 (185)		85 (185)		85 (185)	

Table 7.4 Electrical Data for Enclosures F8/F9, Mains Supply 6x380–500 V AC

1) For fuse ratings, see chapter 10.5 Fuses and Circuit Breakers.

2) Typical power loss is at normal conditions and expected to be within ±15% (tolerance relates to variety in voltage and cable conditions). These values are based on a typical motor efficiency (IE/IE3 border line). Lower efficiency motors add to the power loss in the drive. Applies for dimensioning of drive cooling. If the switching frequency is higher than the default setting, the power losses can increase. LCP and typical control card power consumptions are included. For power loss data according to EN 50598-2, refer to drives.danfoss.com/knowledge-center/energy-efficiency-directive/#/. Options and customer load can add up to 30 W to the losses, though usually a fully loaded control card and options for slots A and B each add only 4 W.

3) Measured using 5 m (16.5 ft) shielded motor cables at rated load and rated frequency. Efficiency measured at nominal current. For energy efficiency class, see chapter 10.12 Efficiency. For part load losses, see drives.danfoss.com/knowledge-center/energy-efficiency-directive/#/.

Danfoss A/S © 11/2017 All rights reserved.

VLT® AutomationDrive FC 302	P450		P500		P560		P630	
High/normal overload (High overload=150% current during 60 s, normal overload=110% current during 60 s)	**HO**	**NO**	**HO**	**NO**	**HO**	**NO**	**HO**	**NO**
Typical shaft output at 400 V [kW]	450	500	500	560	560	630	630	710
Typical shaft output at 460 V [hp]	600	650	650	750	750	900	900	1000
Typical shaft output at 500 V [kW]	530	560	560	630	630	710	710	800
Enclosure size	**F10/F11**		**F10/F11**		**F10/F11**		**F10/F11**	
Output current (3-phase)								
Continuous (at 400 V) [A]	800	880	880	990	990	1120	1120	1260
Intermittent (60 s overload) (at 400 V) [A]	1200	968	1320	1089	1485	1232	1680	1386
Continuous (at 460/500 V) [A]	730	780	780	890	890	1050	1050	1160
Intermittent (60 s overload) (at 460/500 V) [A]	1095	858	1170	979	1335	1155	1575	1276
Continuous kVA (at 400 V) [kVA]	554	610	610	686	686	776	776	873
Continuous kVA (at 460 V) [kVA]	582	621	621	709	709	837	837	924
Continuous kVA (at 500 V) [kVA]	632	675	675	771	771	909	909	1005
Maximum input current								
Continuous (at 400 V) [A]	771	848	848	954	954	1079	1079	1214
Continuous (at 460/500 V) [A]	704	752	752	858	858	1012	1012	1118
Maximum number and size of cables per phase								
- Motor [mm^2 (AWG)]	8x150 (8x300 mcm)		8x150 (8x300 mcm)		8x150 (8x300 mcm)		8x150 (8x300 mcm)	
- Mains [mm^2 (AWG)]	6x120 (6x250 mcm)		6x120 (6x250 mcm)		6x120 (6x250 mcm)		6x120 (6x250 mcm)	
- Brake [mm^2 (AWG)]	4x185 (4x350 mcm)		4x185 (4x350 mcm)		4x185 (4x350 mcm)		4x185 (4x350 mcm)	
Maximum external mains fuses [A][1)]	900		900		900		1500	
Estimated power loss at 400 V [W][2), 3)]	9492	10647	10631	12338	11263	13201	13172	15436
Estimated power loss at 460 V [W][2), 3)]	8730	9414	9398	11006	10063	12353	12332	14041
Maximum added losses A1 RFI, circuit breaker or disconnect, and contactor [W], (F11 only)	893	963	951	1054	978	1093	1092	1230
Maximum panel options losses [W]	400	400	400	400	400	400	400	400
Efficiency[3)]	0.98		0.98		0.98		0.98	
Output frequency [Hz]	0–590		0–590		0–590		0–590	
Control card overtemperature trip [°C (°F)]	85 (185)		85 (185)		85 (185)		85 (185)	

Table 7.5 Electrical Data for Enclosures F10/F11, Mains Supply 6x380–500 V AC

1) For fuse ratings, see chapter 10.5 Fuses and Circuit Breakers.

2) Typical power loss is at normal conditions and expected to be within ±15% (tolerance relates to variety in voltage and cable conditions). These values are based on a typical motor efficiency (IE/IE3 border line). Lower efficiency motors add to the power loss in the drive. Applies for dimensioning of drive cooling. If the switching frequency is higher than the default setting, the power losses can increase. LCP and typical control card power consumptions are included. For power loss data according to EN 50598-2, refer to drives.danfoss.com/knowledge-center/energy-efficiency-directive/#/. Options and customer load can add up to 30 W to the losses, though usually a fully loaded control card and options for slots A and B each add only 4 W.

3) Measured using 5 m (16.5 ft) shielded motor cables at rated load and rated frequency. Efficiency measured at nominal current. For energy efficiency class, see chapter 10.12 Efficiency. For part load losses, see drives.danfoss.com/knowledge-center/energy-efficiency-directive/#/.

 Danfoss A/S © 11/2017 All rights reserved.

VLT® AutomationDrive FC 302	P710		P800	
High/normal overload (High overload=150% current during 60 s, normal overload=110% current during 60 s)	**HO**	**NO**	**HO**	**NO**
Typical shaft output at 400 V [kW]	710	800	800	1000
Typical shaft output at 460 V [hp]	1000	1200	1200	1350
Typical shaft output at 500 V [kW]	800	1000	1000	1100
Enclosure size	**F12/F13**		**F12/F13**	
Output current (3-phase)				
Continuous (at 400 V) [A]	1260	1460	1460	1720
Intermittent (60 s overload) (at 400 V) [A]	1890	1606	2190	1892
Continuous (at 460/500 V) [A]	1160	1380	1380	1530
Intermittent (60 s overload)(at 460/500 V) [A]	1740	1518	2070	1683
Continuous kVA (at 400 V) [kVA]	873	1012	1012	1192
Continuous kVA (at 460 V) [kVA]	924	1100	1100	1219
Continuous kVA (at 500 V) [kVA]	1005	1195	1195	1325
Maximum input current				
Continuous (at 400 V) [A]	1214	1407	1407	1658
Continuous (at 460/500 V) [A]	1118	1330	1330	1474
Maximum number and size of cables per phase				
- Motor [mm^2 (AWG)]	12x150 (12x300 mcm)		12x150 (12x300 mcm)	
- Mains [mm^2 (AWG)]	6x120 (6x250 mcm)		6x120 (6x250 mcm)	
- Brake [mm^2 (AWG)]	6x185 (6x350 mcm)		6x185 (6x350 mcm)	
Maximum external mains fuses [A][1)]	1500		1500	
Estimated power loss at 400 V [W][2), 3)]	14967	18084	16392	20358
Estimated power loss at 460 V [W][2), 3)]	13819	17137	15577	17752
Maximum added losses A1 RFI, circuit breaker or disconnect, and contactor [W], (F13 only)	2067	2280	2236	2541
Maximum panel options losses [W]	400	400	400	400
Efficiency[3)]	0.98		0.98	
Output frequency [Hz]	0–590		0–590	
Control card overtemperature trip [°C (°F)]	85 (185)		85 (185)	

Table 7.6 Electrical Data for Enclosures F12/F13, Mains Supply 6x380–500 V AC

1) For fuse ratings, see chapter 10.5 Fuses and Circuit Breakers.

2) Typical power loss is at normal conditions and expected to be within ±15% (tolerance relates to variety in voltage and cable conditions). These values are based on a typical motor efficiency (IE/IE3 border line). Lower efficiency motors add to the power loss in the drive. Applies for dimensioning of drive cooling. If the switching frequency is higher than the default setting, the power losses can increase. LCP and typical control card power consumptions are included. For power loss data according to EN 50598-2, refer to drives.danfoss.com/knowledge-center/energy-efficiency-directive/#/. Options and customer load can add up to 30 W to the losses, though usually a fully loaded control card and options for slots A and B each add only 4 W.

3) Measured using 5 m (16.5 ft) shielded motor cables at rated load and rated frequency. Efficiency measured at nominal current. For energy efficiency class, see chapter 10.12 Efficiency. For part load losses, see drives.danfoss.com/knowledge-center/energy-efficiency-directive/#/.

Danfoss A/S © 11/2017 All rights reserved.

7.2 Electrical Data, 525–690 V

VLT® AutomationDrive FC 302	P355		P400		P500		P560	
High/normal overload (High overload=150% current during 60 s, normal overload=110% current during 60 s)	HO	NO	HO	NO	HO	NO	HO	NO
Typical shaft output at 550 V [kW]	315	355	315	400	400	450	450	500
Typical shaft output at 575 V [hp]	400	450	400	500	500	600	600	650
Typical shaft output at 690 V [kW]	355	450	400	500	500	560	560	630
Enclosure size	E1/E2		E1/E2		E1/E2		E1/E2	
Output current (3-phase)								
Continuous (at 550 V) [A]	395	470	429	523	523	596	596	630
Intermittent (60 s overload) (at 550 V) [A]	593	517	644	575	785	656	894	693
Continuous (at 575/690 V) [A]	380	450	410	500	500	570	570	630
Intermittent (60 s overload) (at 575/690 V) [A]	570	495	615	550	750	627	855	693
Continuous kVA (at 550 V) [kVA]	376	448	409	498	498	568	568	600
Continuous kVA (at 575 V) [kVA]	378	448	408	498	498	568	568	627
Continuous kVA (at 690 V) [kVA]	454	538	490	598	598	681	681	753
Maximum input current								
Continuous (at 550 V) [A]	381	453	413	504	504	574	574	607
Continuous (at 575 V) [A]	366	434	395	482	482	549	549	607
Continuous (at 690 V)	366	434	395	482	482	549	549	607
Maximum number and size of cables per phase								
- Mains, motor, and load share [mm^2 (AWG)]	4x240 (4x500 mcm)		4x240 (4x500 mcm)		4x240 (4x500 mcm)		4x240 (4x500 mcm)	
- Brake [mm^2 (AWG)]	2x185 (2x350 mcm)		2x185 (2x350 mcm)		2x185 (2x350 mcm)		2x185 (2x350 mcm)	
Maximum external mains fuses [A][1)]	700		700		900		900	
Estimated power loss at 600 V [W][2), 3)]	4424	5323	4795	6010	6493	7395	7383	8209
Estimated power loss at 690 V [W][2), 3)]	4589	5529	4970	6239	6707	7653	7633	8495
Efficiency[3)]	0.98		0.98		0.98		0.98	
Output frequency [Hz]	0–500		0–500		0–500		0–500	
Control card overtemperature trip [°C (°F)]	85 (185)		85 (185)		85 (185)		85 (185)	

Table 7.7 Electrical Data for Enclosures E1/E2, Mains Supply 3x525–690 V AC

1) For fuse ratings, see chapter 10.5 Fuses and Circuit Breakers.

2) Typical power loss is at normal conditions and expected to be within ±15% (tolerance relates to variety in voltage and cable conditions). These values are based on a typical motor efficiency (IE/IE3 border line). Lower efficiency motors add to the power loss in the drive. Applies for dimensioning of drive cooling. If the switching frequency is higher than the default setting, the power losses can increase. LCP and typical control card power consumptions are included. For power loss data according to EN 50598-2, refer to drives.danfoss.com/knowledge-center/energy-efficiency-directive/#/. Options and customer load can add up to 30 W to the losses, though usually a fully loaded control card and options for slots A and B each add only 4 W.

3) Measured using 5 m (16.5 ft) shielded motor cables at rated load and rated frequency. Efficiency measured at nominal current. For energy efficiency class, see chapter 10.12 Efficiency. For part load losses, see drives.danfoss.com/knowledge-center/energy-efficiency-directive/#/.

 Danfoss A/S © 11/2017 All rights reserved.

VLT® AutomationDrive FC 302	P630		P710		P800	
High/normal overload (High overload=150% current during 60 s, normal overload=110% current during 60 s)	**HO**	**NO**	**HO**	**NO**	**HO**	**NO**
Typical shaft output at 550 V [kW]	500	560	560	670	670	750
Typical shaft output at 575 V [hp]	650	750	750	950	950	1050
Typical shaft output at 690 V [kW]	630	710	710	800	800	900
Enclosure size	**F1/F3**		**F1/F3**		**F1/F3**	
Output current (3-phase)						
Continuous (at 550 V) [A]	659	763	763	889	889	988
Intermittent (60 s overload) (at 550 V) [A]	989	839	1145	978	1334	1087
Continuous (at 575/690 V) [A]	630	730	730	850	850	945
Intermittent (60 s overload) (at 575/690 V) [A]	945	803	1095	935	1275	1040
Continuous kVA (at 550 V) [kVA]	628	727	727	847	847	941
Continuous kVA (at 575 V) [kVA]	627	727	727	847	847	941
Continuous kVA (at 690 V) [kVA]	753	872	872	1016	1016	1129
Maximum input current						
Continuous (at 550 V) [A]	635	735	735	857	857	952
Continuous (at 575 V) [A]	607	704	704	819	819	911
Continuous (at 690 V) [A]	607	704	704	819	819	911
Maximum number and size of cables per phase						
- Motor [mm^2 (AWG)]	8x150 (8x300 mcm)		8x150 (8x300 mcm)		8x150 (8x300 mcm)	
- Mains [mm^2 (AWG)] (F1)	8x240 (8x500 mcm)		8x240 (8x500 mcm)		8x240 (8x500 mcm)	
- Mains [mm^2 (AWG)] (F3)	8x456 (4x900 mcm)		8x456 (4x900 mcm)		8x456 (4x900 mcm)	
- Load share [mm^2 (AWG)]	4x120 (4x250 mcm)		4x120 (4x250 mcm)		4x120 (4x250 mcm)	
- Brake [mm^2 (AWG)]	4x185 (4x350 mcm)		4x185 (4x350 mcm)		4x185 (4x350 mcm)	
Maximum external mains fuses [A][1)]	1600		1600		1600	
Estimated power loss at 600 V [W][2), 3)]	8075	9500	9165	10872	10860	12316
Estimated power loss at 690 V [W][2), 3)]	8388	9863	9537	11304	11291	12798
Maximum added losses for circuit breaker or disconnect and contactor [W], (F3 only)	342	427	419	532	519	615
Maximum panel options losses [W]	400	400	400	400	400	400
Efficiency[3)]	0.98		0.98		0.98	
Output frequency [Hz]	0–500		0–500		0–500	
Control card overtemperature trip [°C (°F)]	85 (185)		85 (185)		85 (185)	

Table 7.8 Electrical Data for Enclosures F1/F3, Mains Supply 3x525–690 V AC

1) For fuse ratings, see chapter 10.5 Fuses and Circuit Breakers.

2) Typical power loss is at normal conditions and expected to be within ±15% (tolerance relates to variety in voltage and cable conditions). These values are based on a typical motor efficiency (IE/IE3 border line). Lower efficiency motors add to the power loss in the drive. Applies for dimensioning of drive cooling. If the switching frequency is higher than the default setting, the power losses can increase. LCP and typical control card power consumptions are included. For power loss data according to EN 50598-2, refer to drives.danfoss.com/knowledge-center/energy-efficiency-directive/#/. Options and customer load can add up to 30 W to the losses, though usually a fully loaded control card and options for slots A and B each add only 4 W.

3) Measured using 5 m (16.5 ft) shielded motor cables at rated load and rated frequency. Efficiency measured at nominal current. For energy efficiency class, see chapter 10.12 Efficiency. For part load losses, see drives.danfoss.com/knowledge-center/energy-efficiency-directive/#/.

Danfoss A/S © 11/2017 All rights reserved.

VLT® AutomationDrive FC 302	P900		P1M0		P1M2	
High/normal overload (High overload=150% current during 60 s, normal overload=110% current during 60 s)	**HO**	**NO**	**HO**	**NO**	**HO**	**NO**
Typical shaft output at 550 V [kW]	750	850	850	1000	1000	1100
Typical shaft output at 575 V [hp]	1050	1150	1150	1350	1350	1550
Typical shaft output at 690 V [kW]	900	1000	1000	1200	1200	1400
Enclosure size	**F2/F4**		**F2/F4**		**F2/F4**	
Output current (3-phase)						
Continuous (at 550 V) [A]	988	1108	1108	1317	1317	1479
Intermittent (60 s overload) (at 550 V) [A]	1482	1219	1662	1449	1976	1627
Continuous (at 575/690 V) [A]	945	1060	1060	1260	1260	1415
Intermittent (60 s overload) (at 575/690 V) [A]	1418	1166	1590	1386	1890	1557
Continuous kVA (at 550 V) [kVA]	941	1056	1056	1255	1255	1409
Continuous kVA (at 575 V) [kVA]	941	1056	1056	1255	1255	1409
Continuous kVA (at 690 V) [kVA]	1129	1267	1267	1506	1506	1691
Maximum input current						
Continuous (at 550 V) [A]	952	1068	1068	1269	1269	1425
Continuous (at 575 V) [A]	911	1022	1022	1214	1214	1364
Continuous (at 690 V) [A]	911	1022	1022	1214	1214	1364
Maximum number and size of cables per phase						
- Motor [mm^2 (AWG)]	12x150 (12x300 mcm)		12x150 (12x300 mcm)		12x150 (12x300 mcm)	
- Mains [mm^2 (AWG)] (F2)	8x240 (8x500 mcm)		8x240 (8x500 mcm)		8x240 (8x500 mcm)	
- Mains [mm^2 (AWG)] (F4)	8x456 (8x900 mcm)		8x456 (8x900 mcm)		8x456 (8x900 mcm)	
- Load share [mm^2 (AWG)]	4x120 (4x250 mcm)		4x120 (4x250 mcm)		4x120 (4x250 mcm)	
- Brake [mm^2 (AWG)]	6x185 (6x350 mcm)		6x185 (6x350 mcm)		6x185 (6x350 mcm)	
Maximum external mains fuses [A][1)]	1600		2000		2500	
Estimated power loss at 600 V [W][2), 3)]	12062	13731	13269	16190	16089	18536
Estimated power loss at 690 V [W][2), 3)]	12524	14250	13801	16821	16719	19247
Maximum added losses for circuit breaker or disconnect and contactor [W], (F4 only)	556	665	634	863	861	1044
Maximum panel options losses [W]	400	400	400	400	400	400
Efficiency[3)]	0.98		0.98		0.98	
Output frequency [Hz]	0–500		0–500		0–500	
Control card overtemperature trip [°C (°F)]	85 (185)		85 (185)		85 (185)	

Table 7.9 Electrical Data for Enclosures F2/F4, Mains Supply 3x525–690 V AC

1) For fuse ratings, see chapter 10.5 Fuses and Circuit Breakers.

2) Typical power loss is at normal conditions and expected to be within ±15% (tolerance relates to variety in voltage and cable conditions). These values are based on a typical motor efficiency (IE/IE3 border line). Lower efficiency motors add to the power loss in the drive. Applies for dimensioning of drive cooling. If the switching frequency is higher than the default setting, the power losses can increase. LCP and typical control card power consumptions are included. For power loss data according to EN 50598-2, refer to drives.danfoss.com/knowledge-center/energy-efficiency-directive/#/. Options and customer load can add up to 30 W to the losses, though usually a fully loaded control card and options for slots A and B each add only 4 W.

3) Measured using 5 m (16.5 ft) shielded motor cables at rated load and rated frequency. Efficiency measured at nominal current. For energy efficiency class, see chapter 10.12 Efficiency. For part load losses, see drives.danfoss.com/knowledge-center/energy-efficiency-directive/#/.

 Danfoss A/S © 11/2017 All rights reserved.

VLT® AutomationDrive FC 302	P355		P400		P500		P560	
High/normal overload (High overload=150% current during 60 s, normal overload=110% current during 60 s)	**HO**	**NO**	**HO**	**NO**	**HO**	**NO**	**HO**	**NO**
Typical shaft output at 550 V [kW]	315	355	315	400	400	450	450	500
Typical shaft output at 575 V [hp]	400	450	400	500	500	600	600	650
Typical shaft output at 690 V [kW]	355	450	400	500	500	560	560	630
Enclosure size	**F8/F9**		**F8/F9**		**F8/F9**		**F8/F9**	
Output current (3-phase)								
Continuous (at 550 V) [A]	395	470	429	523	523	596	596	630
Intermittent (60 s overload) (at 550 V) [A]	593	517	644	575	785	656	894	693
Continuous (at 575/690 V) [A]	380	450	410	500	500	570	570	630
Intermittent (60 s overload) (at 575/690 V) [A]	570	495	615	550	750	627	855	693
Continuous kVA (at 550 V) [kVA]	376	448	409	498	498	568	568	600
Continuous kVA (at 575 V) [kVA]	378	448	408	498	498	568	568	627
Continuous kVA (at 690 V) [kVA]	454	538	490	598	598	681	681	753
Maximum input current								
Continuous (at 550 V) [A]	381	453	413	504	504	574	574	607
Continuous (at 575 V) [A]	366	434	395	482	482	549	549	607
Continuous (at 690 V)	366	434	395	482	482	549	549	607
Maximum number and size of cables per phase								
- Motor [mm^2 (AWG)]	4x240 (4x500 mcm)		4x240 (4x500 mcm)		4x240 (4x500 mcm)		4x240 (4x500 mcm)	
- Mains [mm^2 (AWG)]	4x85 (4x3/0 mcm)		4x85 (4x3/0 mcm)		4x85 (4x3/0 mcm)		4x85 (4x3/0 mcm)	
- Brake [mm^2 (AWG)]	2x185 (2x350 mcm)		2x185 (2x350 mcm)		2x185 (2x350 mcm)		2x185 (2x350 mcm)	
Maximum external mains fuses [A][1)]	630		630		630		630	
Estimated power loss at 600 V [W][2), 3)]	4424	5323	4795	6010	6493	7395	7383	8209
Estimated power loss at 690 V [W][2), 3)]	4589	5529	4970	6239	6707	7653	7633	8495
Efficiency[3)]	0.98		0.98		0.98		0.98	
Output frequency [Hz]	0–500		0–500		0–500		0–500	
Control card overtemperature trip [°C (°F)]	85 (185)		85 (185)		85 (185)		85 (185)	

Table 7.10 Electrical Data for Enclosures F8/F9, Mains Supply 6x525–690 V AC

1) For fuse ratings, see chapter 10.5 Fuses and Circuit Breakers.

2) Typical power loss is at normal conditions and expected to be within ±15% (tolerance relates to variety in voltage and cable conditions). These values are based on a typical motor efficiency (IE/IE3 border line). Lower efficiency motors add to the power loss in the drive. Applies for dimensioning of drive cooling. If the switching frequency is higher than the default setting, the power losses can increase. LCP and typical control card power consumptions are included. For power loss data according to EN 50598-2, refer to drives.danfoss.com/knowledge-center/energy-efficiency-directive/#/. Options and customer load can add up to 30 W to the losses, though usually a fully loaded control card and options for slots A and B each add only 4 W.

3) Measured using 5 m (16.5 ft) shielded motor cables at rated load and rated frequency. Efficiency measured at nominal current. For energy efficiency class, see chapter 10.12 Efficiency. For part load losses, see drives.danfoss.com/knowledge-center/energy-efficiency-directive/#/.

Danfoss A/S © 11/2017 All rights reserved.

VLT® AutomationDrive FC 302	P630		P710		P800	
High/normal overload (High overload=150% current during 60 s, normal overload=110% current during 60 s)	**HO**	**NO**	**HO**	**NO**	**HO**	**NO**
Typical shaft output at 550 V [kW]	500	560	560	670	670	750
Typical shaft output at 575 V [hp]	650	750	750	950	950	1050
Typical shaft output at 690 V [kW]	630	710	710	800	800	900
Enclosure size	**F10/F11**		**F10/F11**		**F10/F11**	
Output current (3-phase)						
Continuous (at 550 V) [A]	659	763	763	889	889	988
Intermittent (60 s overload) (at 550 V) [A]	989	839	1145	978	1334	1087
Continuous (at 575/690 V) [A]	630	730	730	850	850	945
Intermittent (60 s overload) (at 575/690 V) [A]	945	803	1095	935	1275	1040
Continuous kVA (at 550 V) [kVA]	628	727	727	847	847	941
Continuous kVA (at 575 V) [kVA]	627	727	727	847	847	941
Continuous kVA (at 690 V) [kVA]	753	872	872	1016	1016	1129
Maximum input current						
Continuous (at 550 V) [A]	635	735	735	857	857	952
Continuous (at 575 V) [A]	607	704	704	819	819	911
Continuous (at 690 V) [A]	607	704	704	819	819	911
Maximum number and size of cables per phase						
- Motor [mm^2 (AWG)]	8x150 (8x300 mcm)		8x150 (8x300 mcm)		8x150 (8x300 mcm)	
- Mains [mm^2 (AWG)]	6x120 (4x900 mcm)		6x120 (4x900 mcm)		6x120 (4x900 mcm)	
- Brake [mm^2 (AWG)]	4x185 (4x350 mcm)		4x185 (4x350 mcm)		4x185 (4x350 mcm)	
Maximum external mains fuses [A][1)]	900		900		900	
Estimated power loss at 600 V [W][2), 3)]	8075	9500	9165	10872	10860	12316
Estimated power loss at 690 V [W][2), 3)]	8388	9863	9537	11304	11291	12798
Maximum added losses for circuit breaker or disconnect and contactor [W], (F11 only)	342	427	419	532	519	615
Maximum panel options losses [W]	400	400	400	400	400	400
Efficiency[3)]	0.98		0.98		0.98	
Output frequency [Hz]	0–500		0–500		0–500	
Control card overtemperature trip [°C (°F)]	85 (185)		85 (185)		85 (185)	

Table 7.11 Electrical Data for Enclosures F10/F11, Mains Supply 6x525–690 V AC

1) For fuse ratings, see chapter 10.5 Fuses and Circuit Breakers.

2) Typical power loss is at normal conditions and expected to be within ±15% (tolerance relates to variety in voltage and cable conditions). These values are based on a typical motor efficiency (IE/IE3 border line). Lower efficiency motors add to the power loss in the drive. Applies for dimensioning of drive cooling. If the switching frequency is higher than the default setting, the power losses can increase. LCP and typical control card power consumptions are included. For power loss data according to EN 50598-2, refer to drives.danfoss.com/knowledge-center/energy-efficiency-directive/#/. Options and customer load can add up to 30 W to the losses, though usually a fully loaded control card and options for slots A and B each add only 4 W.

3) Measured using 5 m (16.5 ft) shielded motor cables at rated load and rated frequency. Efficiency measured at nominal current. For energy efficiency class, see chapter 10.12 Efficiency. For part load losses, see drives.danfoss.com/knowledge-center/energy-efficiency-directive/#/.

 Danfoss A/S © 11/2017 All rights reserved.

VLT® AutomationDrive FC 302	P900		P1M0		P1M2	
High/normal overload (High overload=150% current during 60 s, normal overload=110% current during 60 s)	**HO**	**NO**	**HO**	**NO**	**HO**	**NO**
Typical shaft output at 550 V [kW]	750	850	850	1000	1000	1100
Typical shaft output at 575 V [hp]	1050	1150	1150	1350	1350	1550
Typical shaft output at 690 V [kW]	900	1000	1000	1200	1200	1400
Enclosure size	**F12/F13**		**F12/F13**		**F12/F13**	
Output current (3-phase)						
Continuous (at 550 V) [A]	988	1108	1108	1317	1317	1479
Intermittent (60 s overload) (at 550 V) [A]	1482	1219	1219	1449	1976	1627
Continuous (at 575/690 V) [A]	945	1060	1060	1260	1260	1415
Intermittent (60 s overload) (at 575/690 V) [A]	1418	1166	1590	1386	1890	1557
Continuous kVA (at 550 V) [kVA]	941	1056	1056	1255	1255	1409
Continuous kVA (at 575 V) [kVA]	941	1056	1056	1255	1255	1409
Continuous kVA (at 690 V) [kVA]	1129	1267	1267	1506	1506	1691
Maximum input current						
Continuous (at 550 V) [A]	952	1068	1068	1269	1269	1425
Continuous (at 575 V) [A]	911	1022	1022	1214	1214	1364
Continuous (at 690 V) [A]	911	1022	1022	1214	1214	1364
Maximum number and size of cables per phase						
- Motor [mm^2 (AWG)]	12x150 (12x300 mcm)		12x150 (12x300 mcm)		12x150 (12x300 mcm)	
- Mains [mm^2 (AWG)] (F12)	8x240 (8x500 mcm)		8x240 (8x500 mcm)		8x240 (8x500 mcm)	
- Mains [mm^2 (AWG)] (F13)	8x456 (8x900 mcm)		8x456 (8x900 mcm)		8x456 (8x900 mcm)	
- Brake [mm^2 (AWG)]	6x185 (6x350 mcm)		6x185 (6x350 mcm)		6x185 (6x350 mcm)	
Maximum external mains fuses [A][1)]	1600		2000		2500	
Estimated power loss at 600 V [W][2), 3)]	12062	13731	13269	16190	16089	18536
Estimated power loss at 690 V [W][2), 3)]	12524	14250	13801	16821	16719	19247
Maximum added losses for circuit breaker or disconnect and contactor [W], (F13 only)	556	665	634	863	861	1044
Maximum panel options losses [W]	400	400	400	400	400	400
Efficiency[3)]	0.98		0.98		0.98	
Output frequency [Hz]	0–500		0–500		0–500	
Control card overtemperature trip [°C (°F)]	85 (185)		85 (185)		85 (185)	

Table 7.12 Electrical Data for Enclosures F12/F13, Mains Supply 6x525–690 V AC

1) For fuse ratings, see chapter 10.5 Fuses and Circuit Breakers.

2) Typical power loss is at normal conditions and expected to be within ±15% (tolerance relates to variety in voltage and cable conditions). These values are based on a typical motor efficiency (IE/IE3 border line). Lower efficiency motors add to the power loss in the drive. Applies for dimensioning of drive cooling. If the switching frequency is higher than the default setting, the power losses can increase. LCP and typical control card power consumptions are included. For power loss data according to EN 50598-2, refer to drives.danfoss.com/knowledge-center/energy-efficiency-directive/#/. Options and customer load can add up to 30 W to the losses, though usually a fully loaded control card and options for slots A and B each add only 4 W.

3) Measured using 5 m (16.5 ft) shielded motor cables at rated load and rated frequency. Efficiency measured at nominal current. For energy efficiency class, see chapter 10.12 Efficiency. For part load losses, see drives.danfoss.com/knowledge-center/energy-efficiency-directive/#/.

Danfoss A/S © 11/2017 All rights reserved.

7.3 Mains Supply

Mains supply	
Supply terminals (6-pulse)	L1, L2, L3
Supply terminals (12-pulse)	L1-1, L2-1, L3-1, L1-2, L2-2, L3-2
Supply voltage	380–480 V ±10%, 525–690 V ±10%

Mains voltage low/mains voltage drop-out:
During low mains voltage or a mains drop-out, the drive continues until the DC-link voltage drops below the minimum stop level, which corresponds typically to 15% below the lowest rated supply voltage of the drive. Power-up and full torque cannot be expected at mains voltage lower than 10% below the lowest rated supply voltage of the drive.

Supply frequency	50/60 Hz ±5%
Maximum imbalance temporary between mains phases	3.0% of rated supply voltage[1)]
True power factor (λ)	≥0.9 nominal at rated load
Displacement power factor (cos Φ) near unity	(>0.98)
Switching on input supply L1, L2, L3 (power ups)	Maximum 1 time/2 minute
Environment according to EN60664-1	Overvoltage category III/pollution degree 2

The drive is suitable for use on a circuit capable of delivering up to 100 kA short-circuit current rating (SCCR) at 480/600 V.
1) Calculations based on UL/IEC61800-3.

7

7.4 Motor Output and Motor Data

Motor output (U, V, W)	
Output voltage	0–100% of supply voltage
Output frequency	0–590 Hz[1)]
Output frequency in flux mode	0–300 Hz
Switching on output	Unlimited
Ramp times	0.01–3600 s

1) Dependent on voltage and power.

Torque characteristics	
Starting torque (constant torque)	Maximum 150% for 60 s[1), 2)]
Overload torque (constant torque)	Maximum 150% for 60 s[1), 2)]

1) Percentage relates to the nominal current of the drive.
2) Once every 10 minutes.

7.5 Ambient Conditions

Environment	
E1/F1/F2/F3/F4/F8/F9/F10/F11/F12/F13 enclosures	IP21/Type 1, IP54/Type 12
E2 enclosure	IP00/Chassis
Vibration test	1.0 g
Relative humidity	5–95% (IEC 721-3-3; Class 3K3 (non-condensing) during operation)
Aggressive environment (IEC 60068-2-43) H_2S test	Class Kd
Aggressive gases (IEC 60721-3-3)	Class 3C3
Test method according to IEC 60068-2-43	H2S (10 days)
Ambient temperature (at SFAVM switching mode)	
- with derating	Maximum 55 °C (131 °F)[1)]
- with full output power of typical EFF2 motors (up to 90% output current)	Maximum 50 °C (122 °F)[1)]
- at full continuous FC output current	Maximum 45 °C (113 °F)[1)]
Minimum ambient temperature during full-scale operation	0 °C (32 °F)
Minimum ambient temperature at reduced performance	-10 °C (14 °F)
Temperature during storage/transport	-25 to +65/70 °C (13 to 149/158 °F)
Maximum altitude above sea level without derating	1000 m (3281 ft)

 Danfoss A/S © 11/2017 All rights reserved.

Maximum altitude above sea level with derating	3000 m (9842 ft)

1) For more information on derating, see chapter 9.6 Derating.

EMC standards, Emission	EN 61800-3
EMC standards, Immunity	EN 61800-3
Energy efficiency class[1)]	IE2

1) Determined according to EN 50598-2 at:

- *Rated load.*
- *90% rated frequency.*
- *Switching frequency factory setting.*
- *Switching pattern factory setting.*

7.6 Cable Specifications

Cable lengths and cross-sections for control cables	
Maximum motor cable length, shielded	150 m (492 ft)
Maximum motor cable length, unshielded	300 m (984 ft)
Maximum cross-section to motor, mains, load sharing, and brake	See *chapter 7 Specifications*[1)]
Maximum cross-section to control terminals, rigid wire	1.5 mm^2/16 AWG (2x0.75 mm^2)
Maximum cross-section to control terminals, flexible cable	1 mm^2/18 AWG
Maximum cross-section to control terminals, cable with enclosed core	0.5 mm^2/20 AWG
Minimum cross-section to control terminals	0.25 mm^2/23 AWG

1) For power cables, see electrical data in chapter 7.1 Electrical Data, 380–500 V and chapter 7.2 Electrical Data, 525–690 V.

7.7 Control Input/Output and Control Data

Digital inputs	
Programmable digital inputs	4 (6)
Terminal number	18, 19, 27[1)], 29[1)], 32, 33
Logic	PNP or NPN
Voltage level	0–24 V DC
Voltage level, logic 0 PNP	<5 V DC
Voltage level, logic 1 PNP	>10 V DC
Voltage level, logic 0 NPN	>19 V DC
Voltage level, logic 1 NPN	<14 V DC
Maximum voltage on input	28 V DC
Input resistance, R_i	Approximately 4 kΩ

All digital inputs are galvanically isolated from the supply voltage (PELV) and other high-voltage terminals.
1) Terminals 27 and 29 can also be programmed as outputs.

Analog inputs	
Number of analog inputs	2
Terminal number	53, 54
Modes	Voltage or current
Mode select	Switches A53 and A54
Voltage mode	Switch A53/A54=(U)
Voltage level	-10 V to +10 V (scaleable)
Input resistance, R_i	Approximately 10 kΩ
Maximum voltage	±20 V
Current mode	Switch A53/A54=(I)
Current level	0/4 to 20 mA (scaleable)
Input resistance, R_i	Approximately 200 Ω
Maximum current	30 mA
Resolution for analog inputs	10 bit (+ sign)
Accuracy of analog inputs	Maximum error 0.5% of full scale

 Danfoss A/S © 11/2017 All rights reserved.

Bandwidth	100 Hz

The analog inputs are galvanically isolated from the supply voltage (PELV) and other high-voltage terminals.

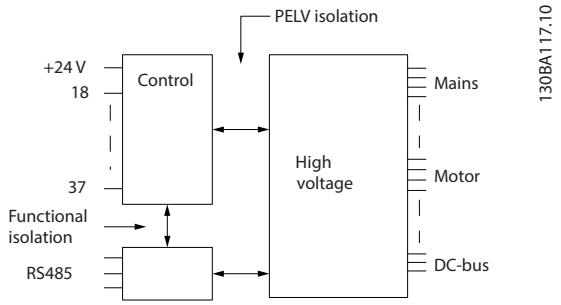

Illustration 7.1 PELV Isolation

Pulse inputs	
Programmable pulse inputs	2
Terminal number pulse	29, 33
Maximum frequency at terminal 29, 33 (push-pull driven)	110 kHz
Maximum frequency at terminal 29, 33 (open collector)	5 kHz
Minimum frequency at terminal 29, 33	4 Hz
Voltage level	See *Digital Inputs* in *chapter 7.7 Control Input/Output and Control Data*
Maximum voltage on input	28 V DC
Input resistance, R_i	Approximately 4 kΩ
Pulse input accuracy (0.1–1 kHz)	Maximum error: 0.1% of full scale

Analog output	
Number of programmable analog outputs	1
Terminal number	42
Current range at analog output	0/4–20 mA
Maximum resistor load to common at analog output	500 Ω
Accuracy on analog output	Maximum error: 0.8% of full scale
Resolution on analog output	8 bit

The analog output is galvanically isolated from the supply voltage (PELV) and other high-voltage terminals.

Control card, RS485 serial communication	
Terminal number	68 (P, TX+, RX+), 69 (N, TX-, RX-)
Terminal number 61	Common for terminals 68 and 69

The RS485 serial communication circuit is functionally separated from other central circuits and galvanically isolated from the supply voltage (PELV).

Digital output	
Programmable digital/pulse outputs	2
Terminal number	27, 29[1)]
Voltage level at digital/frequency output	0–24 V
Maximum output current (sink or source)	40 mA
Maximum load at frequency output	1 kΩ
Maximum capacitive load at frequency output	10 nF
Minimum output frequency at frequency output	0 Hz
Maximum output frequency at frequency output	32 kHz
Accuracy of frequency output	Maximum error: 0.1% of full scale
Resolution of frequency outputs	12 bit

1) Terminals 27 and 29 can also be programmed as inputs.

The digital output is galvanically isolated from the supply voltage (PELV) and other high-voltage terminals.

 Danfoss A/S © 11/2017 All rights reserved.

Control card, 24 V DC output	
Terminal number	12, 13
Maximum load	200 mA

The 24 V DC supply is galvanically isolated from the supply voltage (PELV), but has the same potential as the analog and digital inputs and outputs.

Relay outputs	
Programmable relay outputs	2
Maximum cross-section to relay terminals	2.5 mm^2 (12 AWG)
Minimum cross-section to relay terminals	0.2 mm^2 (30 AWG)
Length of stripped wire	8 mm (0.3 in)
Relay 01 terminal number	1–3 (break), 1–2 (make)
Maximum terminal load (AC-1)[1] on 1–2 (NO) (Resistive load)[2, 3]	400 V AC, 2 A
Maximum terminal load (AC-15)[1] on 1–2 (NO) (Inductive load @ cosφ 0.4)	240 V AC, 0.2 A
Maximum terminal load (DC-1)[1] on 1–2 (NO) (Resistive load)	80 V DC, 2 A
Maximum terminal load (DC-13)[1] on 1–2 (NO) (Inductive load)	24 V DC, 0.1 A
Maximum terminal load (AC-1)[1] on 1–3 (NC) (Resistive load)	240 V AC, 2 A
Maximum terminal load (AC-15)[1] on 1–3 (NC) (Inductive load @ cosφ 0.4)	240 V AC, 0.2 A
Maximum terminal load (DC-1)[1] on 1–3 (NC) (Resistive load)	50 V DC, 2 A
Maximum terminal load (DC-13)[1] on 1–3 (NC) (Inductive load)	24 V DC, 0.1 A
Minimum terminal load on 1–3 (NC), 1–2 (NO)	24 V DC 10 mA, 24 V AC 2 mA
Environment according to EN 60664-1	Overvoltage category III/pollution degree 2
Relay 02 terminal number	4–6 (break), 4–5 (make)
Maximum terminal load (AC-1)[1] on 4–5 (NO) (Resistive load)[2, 3]	400 V AC, 2 A
Maximum terminal load (AC-15)[1] on 4–5 (NO) (Inductive load @ cosφ 0.4)	240 V AC, 0.2 A
Maximum terminal load (DC-1)[1] on 4–5 (NO) (Resistive load)	80 V DC, 2 A
Maximum terminal load (DC-13)[1] on 4–5 (NO) (Inductive load)	24 V DC, 0.1 A
Maximum terminal load (AC-1)[1] on 4–6 (NC) (Resistive load)	240 V AC, 2 A
Maximum terminal load (AC-15)[1] on 4–6 (NC) (Inductive load @ cosφ 0.4)	240 V AC, 0.2 A
Maximum terminal load (DC-1)[1] on 4–6 (NC) (Resistive load)	50 V DC, 2 A
Maximum terminal load (DC-13)[1] on 4–6 (NC) (Inductive load)	24 V DC, 0.1 A
Minimum terminal load on 4–6 (NC), 4–5 (NO)	24 V DC 10 mA, 24 V AC 2 mA
Environment according to EN 60664-1	Overvoltage category III/pollution degree 2

The relay contacts are galvanically isolated from the rest of the circuit by reinforced isolation (PELV).
1) IEC 60947 part 4 and 5.
2) Overvoltage Category II.
3) UL applications 300 V AC 2 A.

Control card, +10 V DC output	
Terminal number	50
Output voltage	10.5 V ±0.5 V
Maximum load	25 mA

The 10 V DC supply is galvanically isolated from the supply voltage (PELV) and other high-voltage terminals.

Control characteristics	
Resolution of output frequency at 0–1000 Hz	±0.003 Hz
System response time (terminals 18, 19, 27, 29, 32, 33)	≤2 m/s
Speed control range (open loop)	1:100 of synchronous speed
Speed accuracy (open loop)	30–4000 RPM: Maximum error of ±8 RPM

All control characteristics are based on a 4-pole asynchronous motor.

Control card performance	
Scan interval	5 M/S

Danfoss A/S © 11/2017 All rights reserved.

Control card, USB serial communication	
USB standard	1.1 (full speed)
USB plug	USB type B device plug

NOTICE

Connection to PC is carried out via a standard host/device USB cable.
The USB connection is galvanically isolated from the supply voltage (PELV) and other high-voltage terminals.
The USB connection is not galvanically isolated from ground. Use only isolated laptop/PC as connection to the USB connector on the drive or an isolated USB cable/converter.

7.8 Enclosure Weights

Enclosure	380–480/500 V	525–690 V
E1	270–313 kg (595–690 lb)	263–313 kg (580–690 lb)
E2	234–277 kg (516–611 lb)	221–277 kg (487–611 lb)

Table 7.13 Enclosure E1–E2 Weights, kg (lb)

Enclosure	380–480/500 V	525–690 V
F1	1017 kg (2242.1 lb)	1017 kg (2242.1 lb)
F2	1260 kg (2777.9 lb)	1260 kg (2777.9 lb)
F3	1318 kg (2905.7 lb)	1318 kg (2905.7 lb)
F4	1561 kg (3441.5 lb)	1561 kg (3441.5 lb)
F8	447 kg (985.5 lb)	447 kg (985.5 lb)
F9	669 kg (1474.9 lb)	669 kg (1474.9 lb)
F10	893 kg (1968.8 lb)	893 kg (1968.8 lb)
F11	1116 kg (2460.4 lb)	1116 kg (2460.4 lb)
F12	1037 kg (2286.4 lb)	1037 kg (2286.4 lb)
F13	1259 kg (2775.7 lb)	1259 kg (2775.7 lb)

Table 7.14 Enclosure F1–F13 Weights, kg (lb)

 Danfoss A/S © 11/2017 All rights reserved.

7.9 Airflow for Enclosures E1–E2 and F1–F13

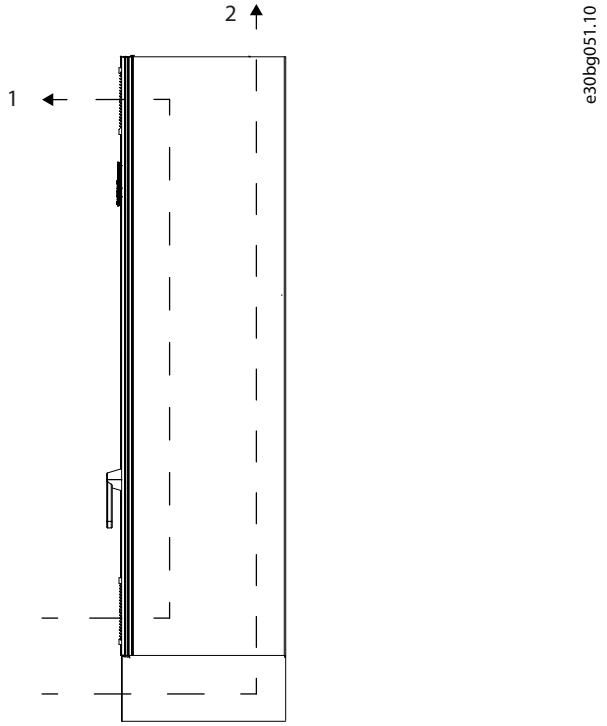

1	Front channel airflow, 340 m^3/hr (200 cfm)
2	Back-channel airflow, 1105 m^3/hr (650 cfm) or 1444 m^3/hr (850 cfm)

Illustration 7.2 Airflow for Enclosure E1

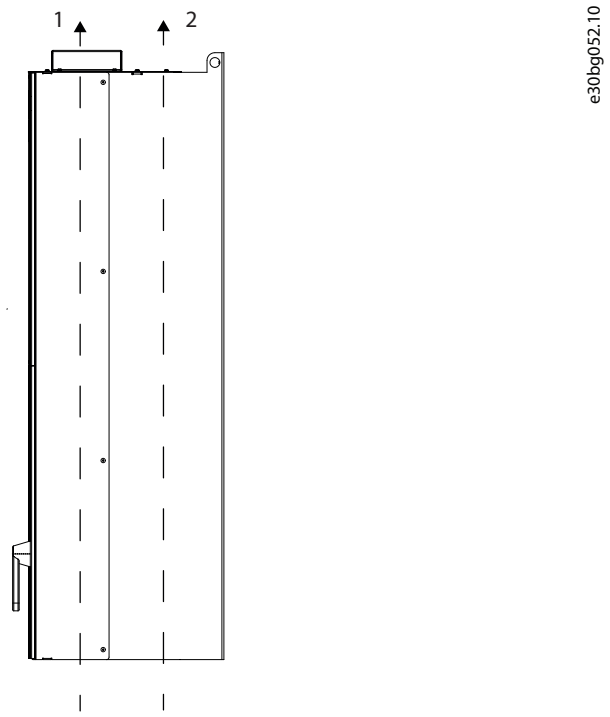

1	Front channel airflow, 255 m^3/hr (150 cfm)
2	Back-channel airflow, 1105 m^3/hr (650 cfm) or 1444 m^3/hr (850 cfm)

Illustration 7.3 Airflow for Enclosure E2

Danfoss A/S © 11/2017 All rights reserved.

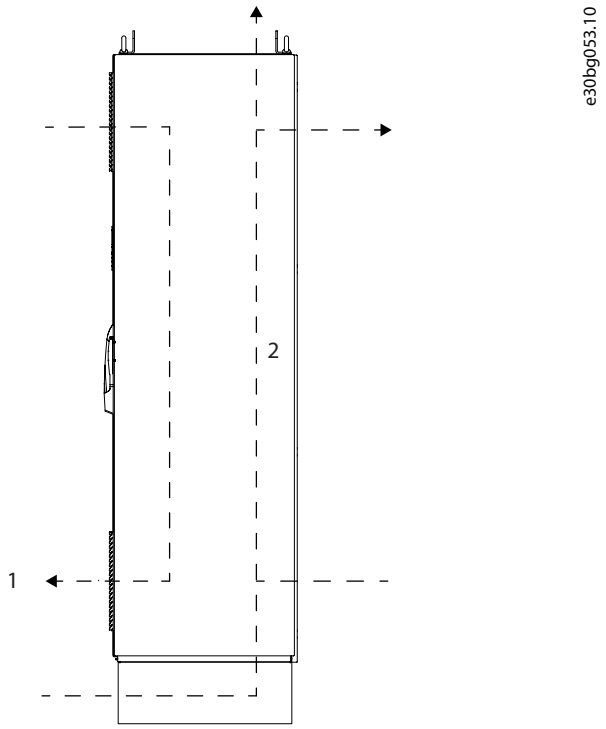

1	Front channel airflow - IP21/Type 1, 700 m^3/hr (412 cfm) - IP54/Type 12, 525 m^3/hr (309 cfm)
2	Back-channel airflow, 985 m^3/hr (580 cfm)

Illustration 7.4 Airflow for Enclosure F1–13

 Danfoss A/S © 11/2017 All rights reserved.

8 Exterior and Terminal Dimensions

8.1 E1 Exterior and Terminal Dimensions

8.1.1 E1 Exterior Dimensions

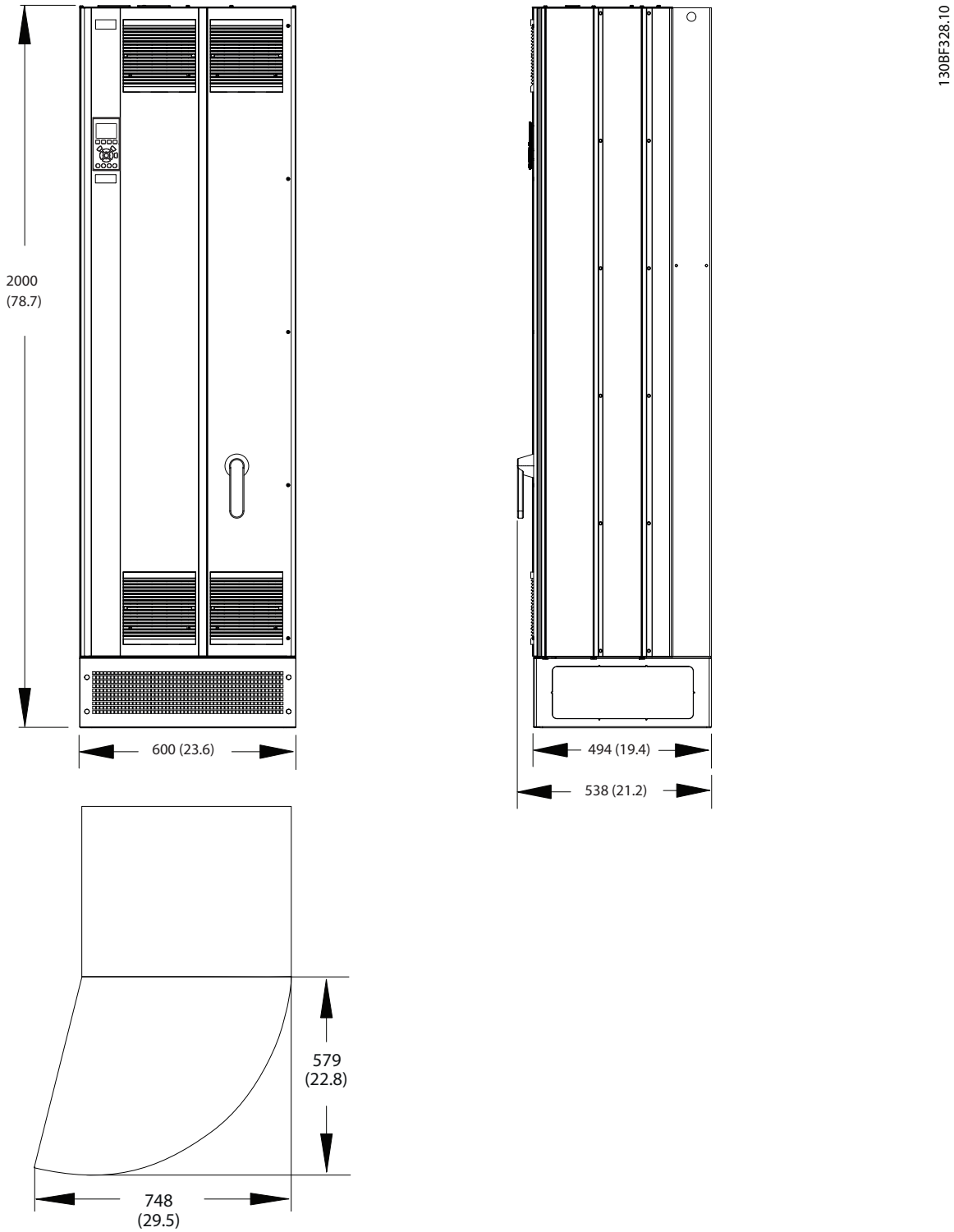

Illustration 8.1 Front, Side, and Door Clearance Dimensions for E1

Danfoss A/S © 11/2017 All rights reserved.

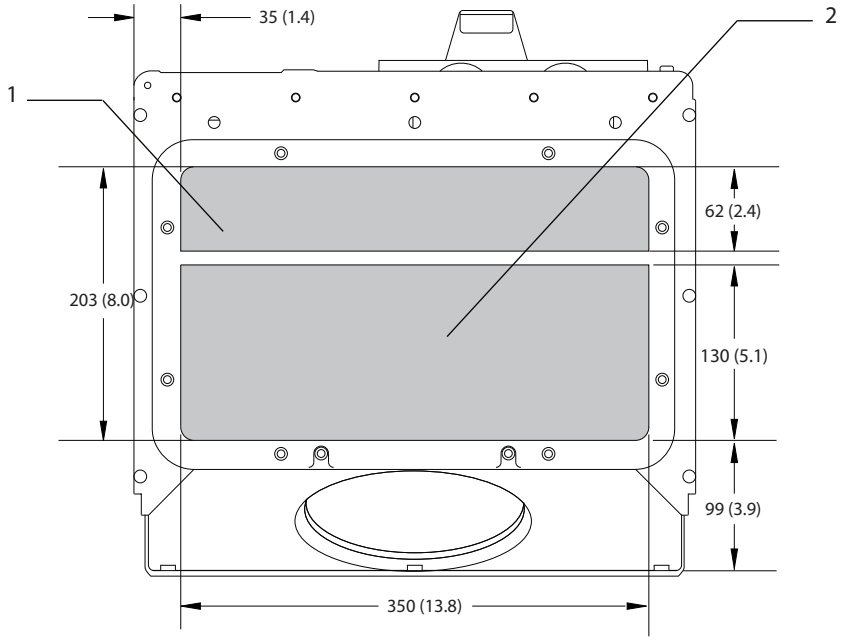

1	Mains side	2	Motor side

Illustration 8.2 Gland Plate Dimensions for E1/E2

8.1.2 E1 Terminal Dimensions

Power cables are heavy and hard to bend. To ensure easy installation of the cables, consider the optimum placement of the drive. Each terminal allows up to 4 cables with cable lugs or a standard box lug. Ground is connected to a relevant termination point in the drive.

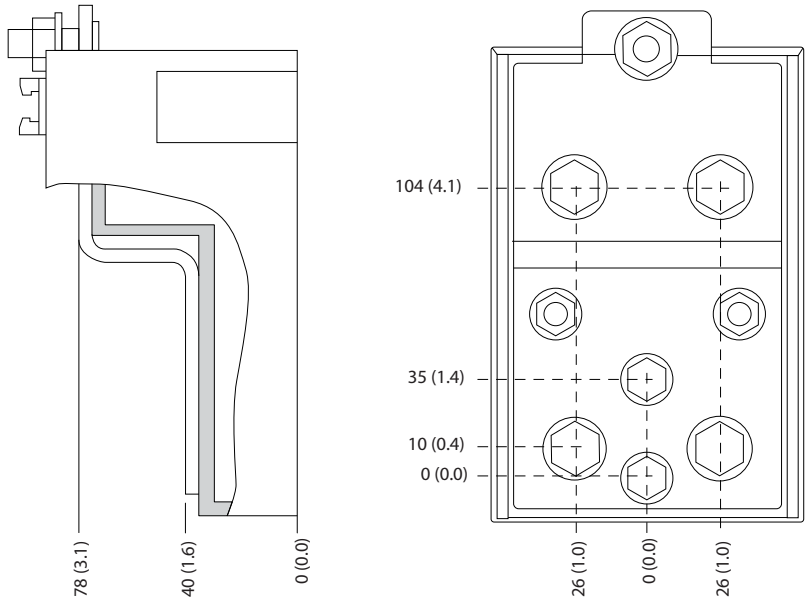

Illustration 8.3 Detailed Terminal Dimensions for E1/E2

 Danfoss A/S © 11/2017 All rights reserved.

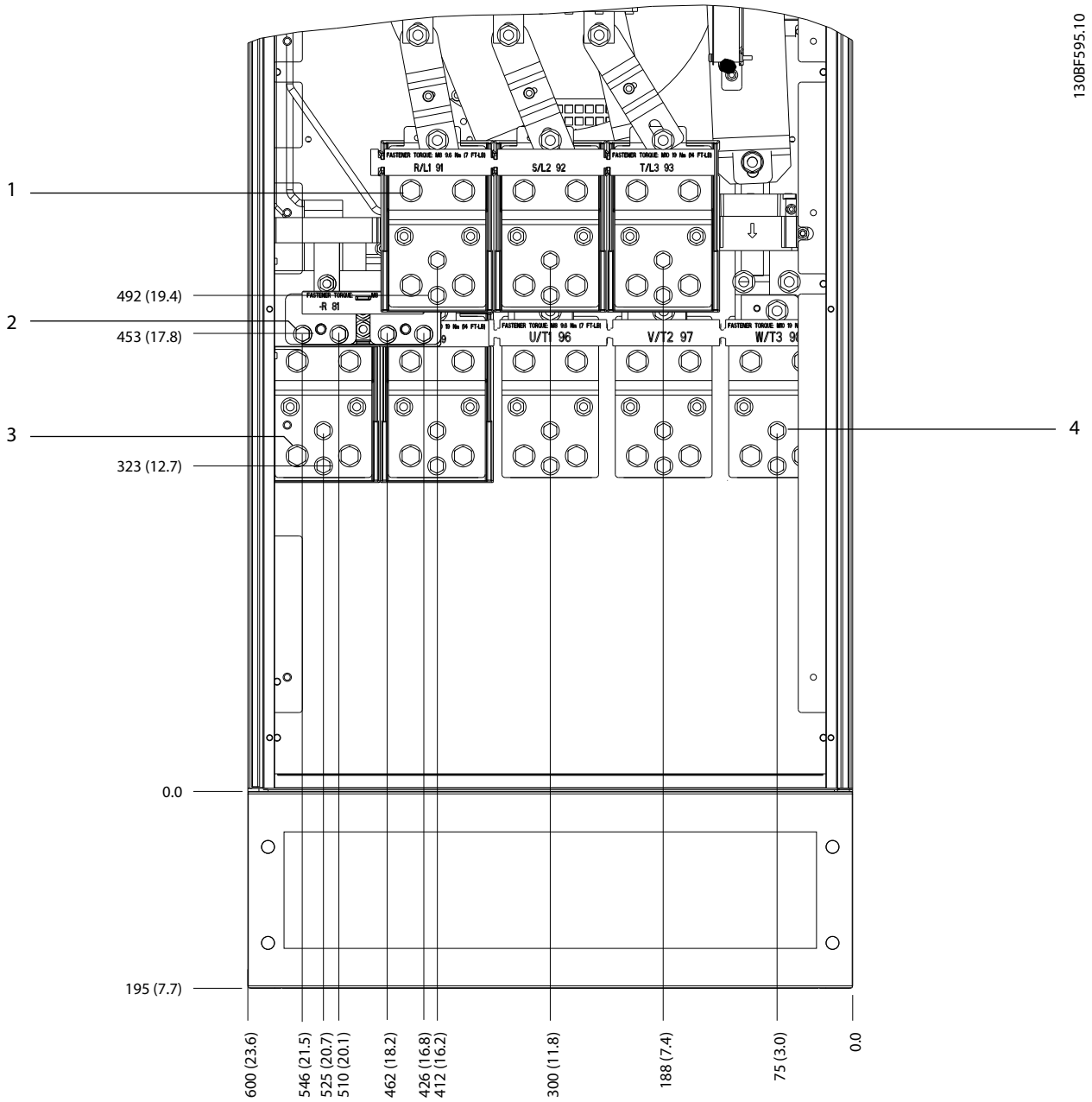

1	Mains terminals	3	Regen/load share terminals
2	Brake terminals	4	Motor terminals

Illustration 8.4 Terminal Dimensions for E1, Front View

Danfoss A/S © 11/2017 All rights reserved.

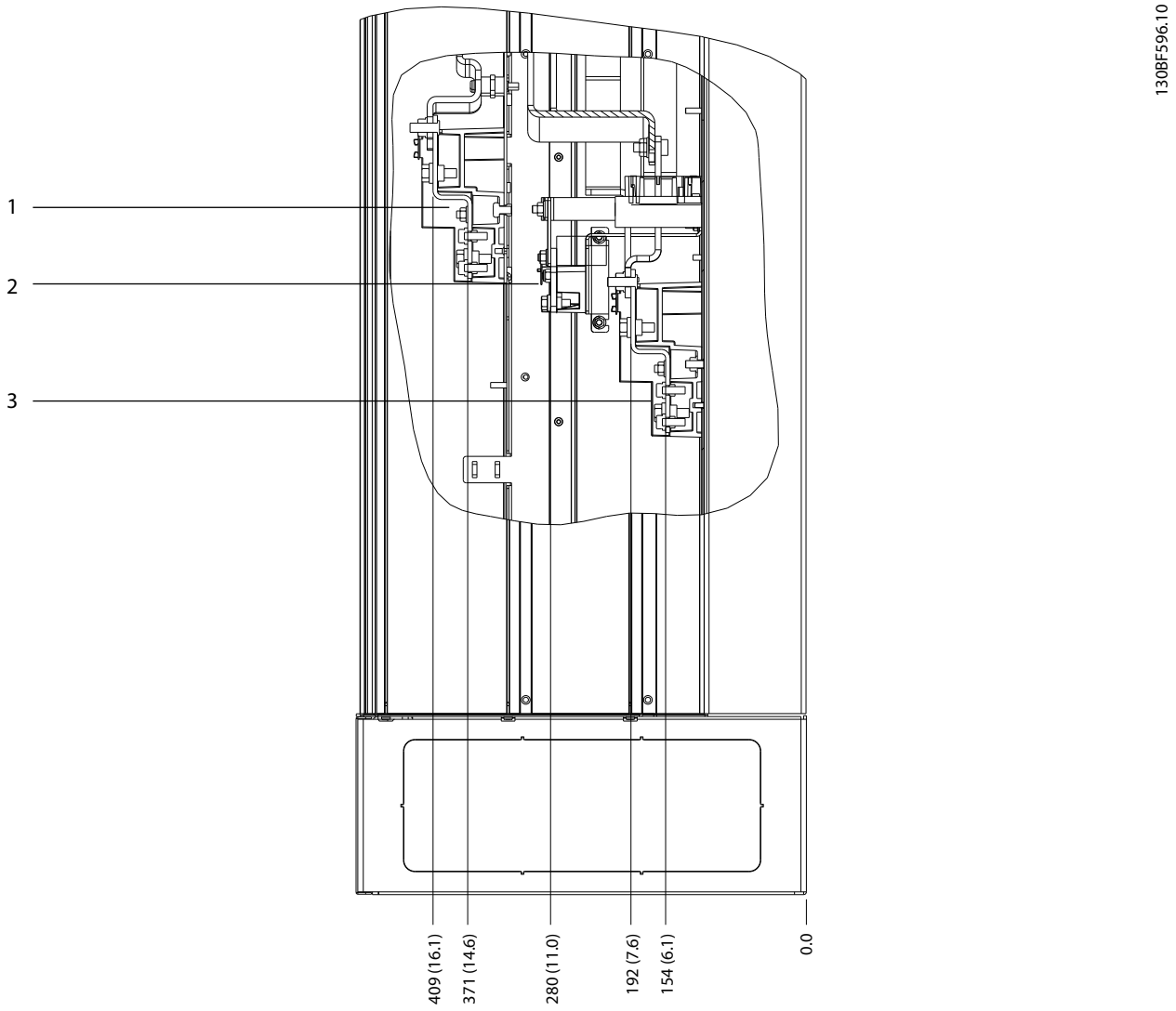

1	Mains terminals	2	Brake terminals
3	Motor terminals	–	–

Illustration 8.5 Terminal Dimensions for E1, Side View

 Danfoss A/S © 11/2017 All rights reserved.

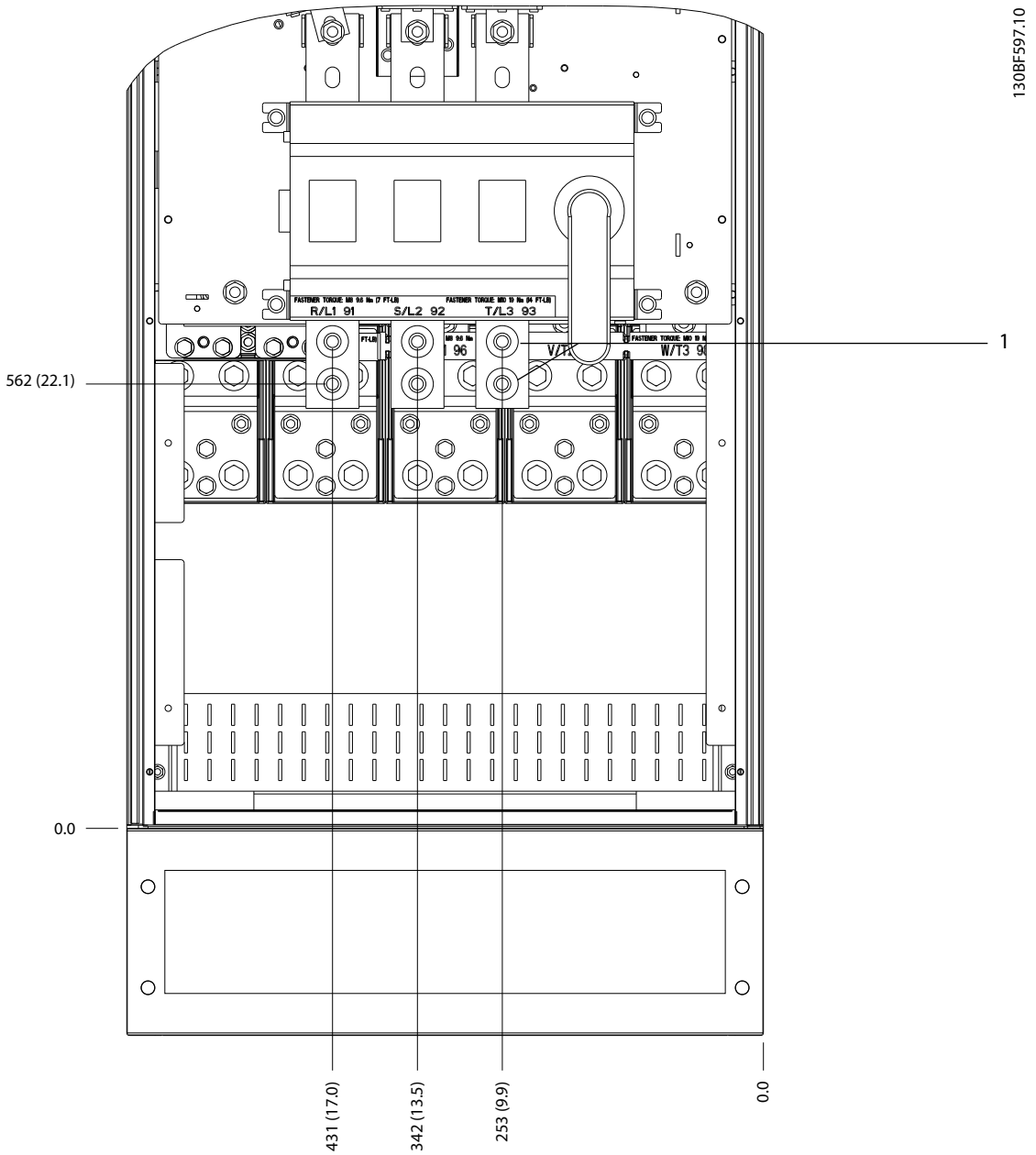

1	Mains terminals	–	–

Illustration 8.6 Terminal Dimensions for E1 with Disconnect (380–480/500 V Models: P315; 525–690 V Models: P355–P560), Front View

Danfoss A/S © 11/2017 All rights reserved.

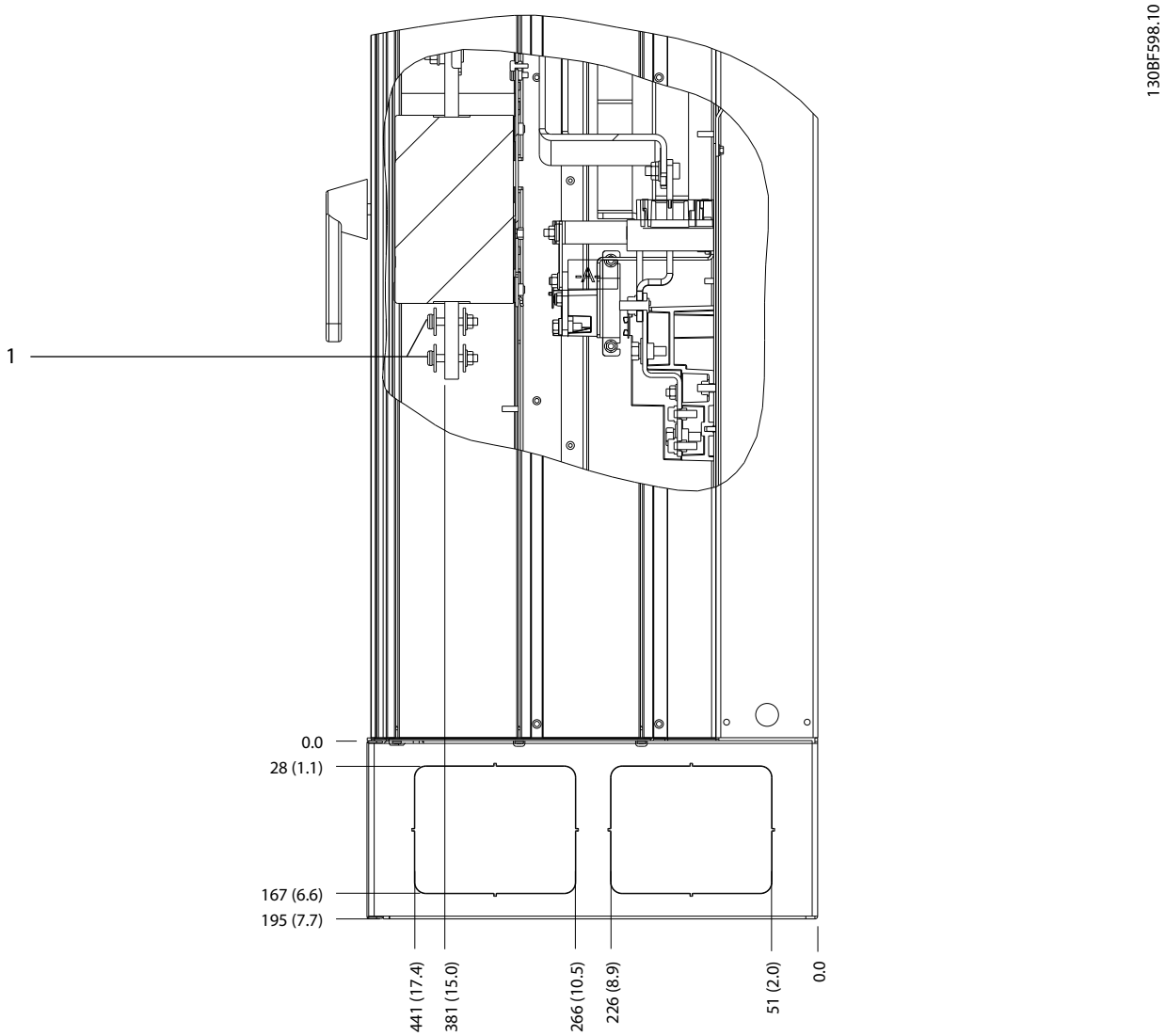

1	Mains terminals	–	–

Illustration 8.7 Terminal Dimensions for E1 with Disconnect (380–480/500 V Models: P315; 525–690 V Models: P355–P560), Side View

 Danfoss A/S © 11/2017 All rights reserved.

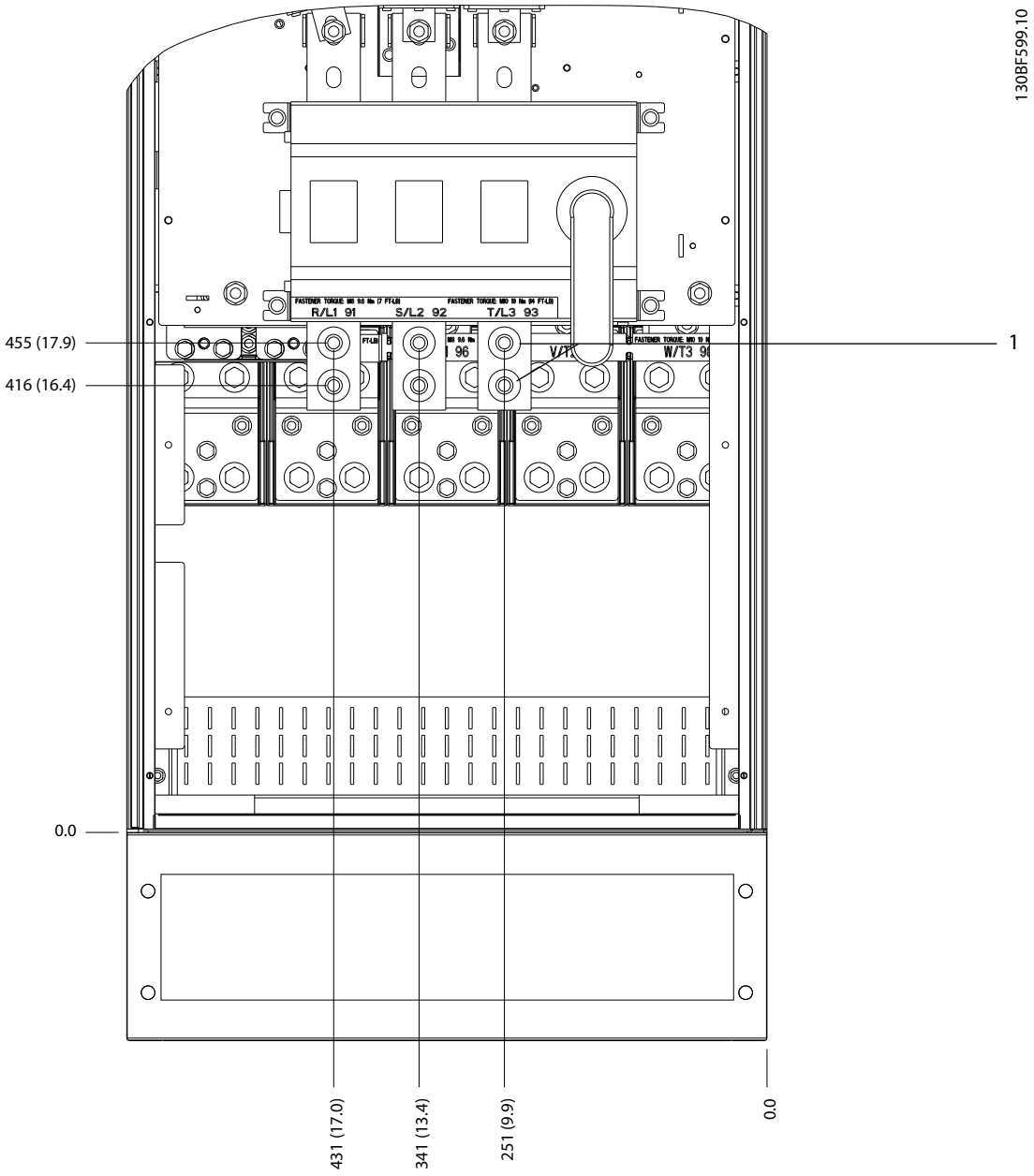

1	Mains terminals	–	–

Illustration 8.8 Terminal Dimensions for E1 with Disconnect (380–480/500 V Models: P355–P400), Front View

Danfoss A/S © 11/2017 All rights reserved.

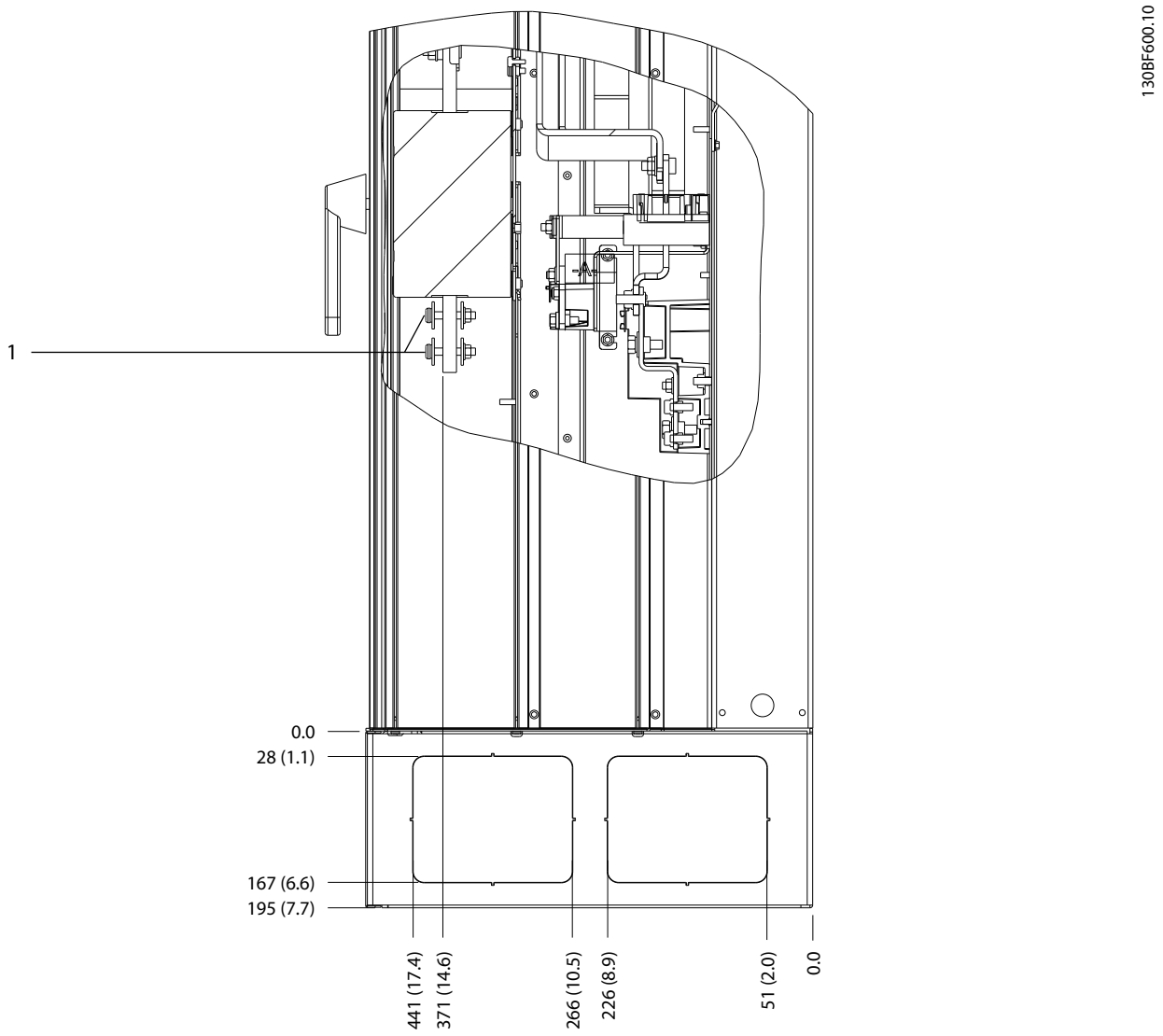

1	Mains terminals	–	–

Illustration 8.9 Terminal Dimensions for E1 with Disconnect (380–480/500 V Models: P355–P400), Side View

 Danfoss A/S © 11/2017 All rights reserved.

8.2 E2 Exterior and Terminal Dimensions

8.2.1 E2 Exterior Dimensions

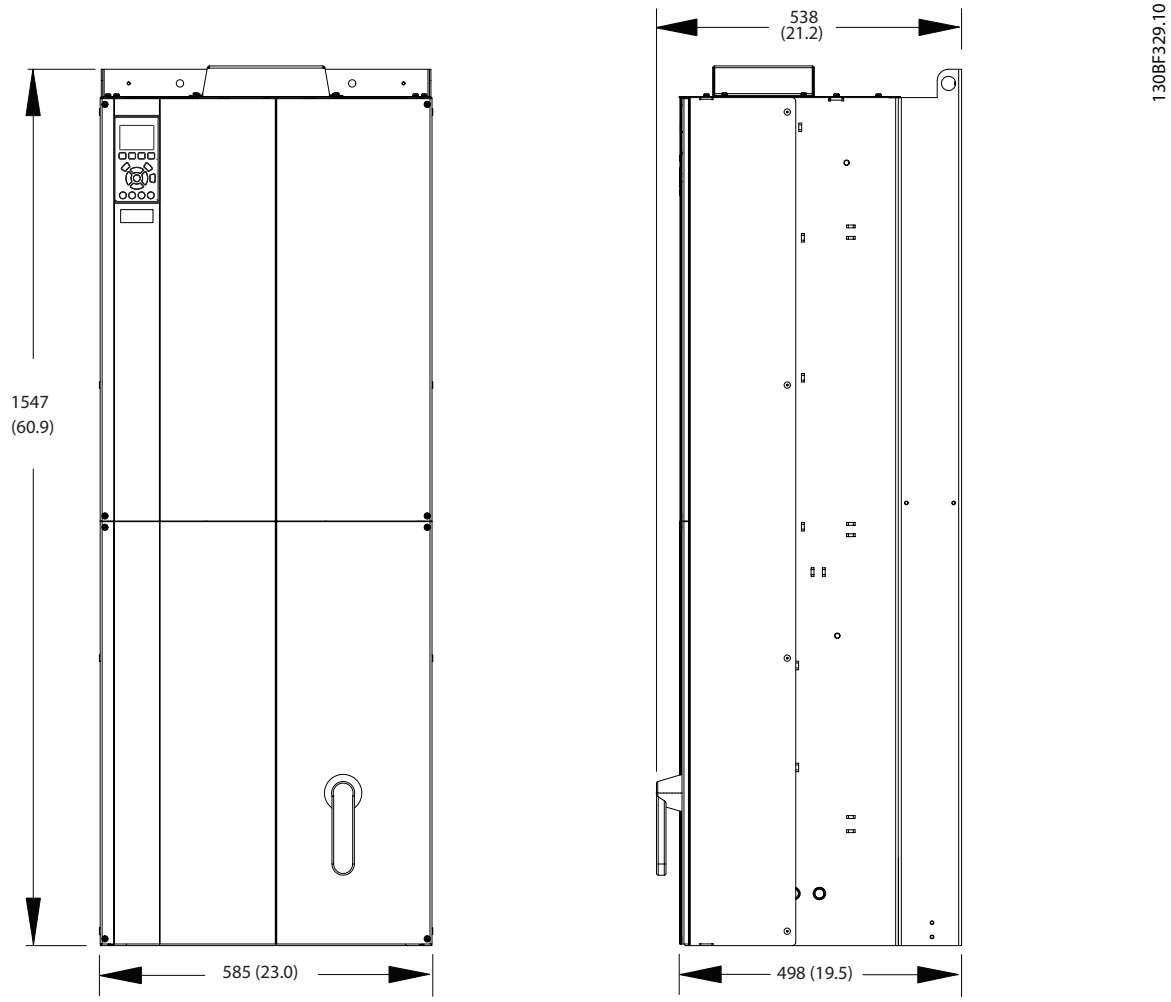

Illustration 8.10 Front, Side, and Door Clearance Dimensions for E2

Danfoss A/S © 11/2017 All rights reserved.

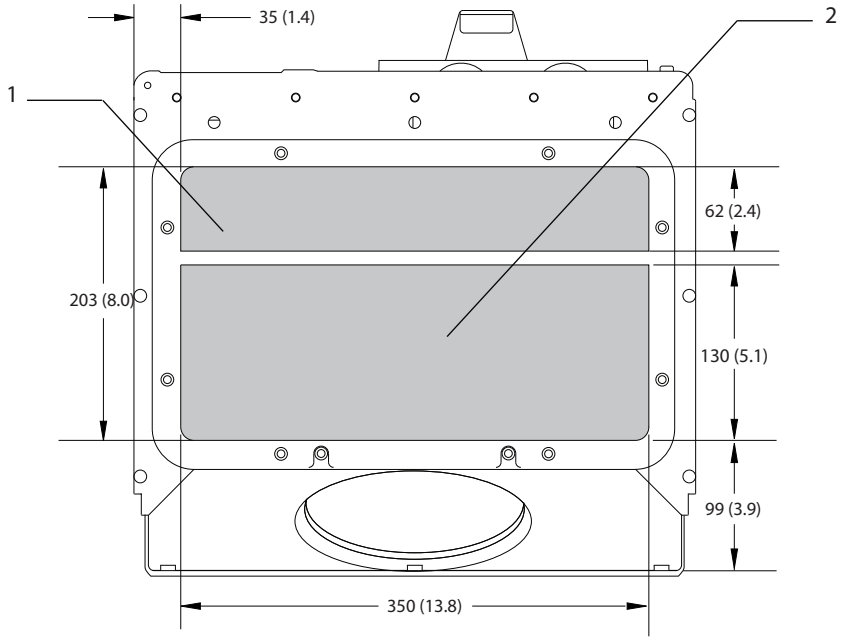

1	Mains side	2	Motor side

Illustration 8.11 Gland Plate Dimensions for E1/E2

8.2.2 E2 Terminal Dimensions

Power cables are heavy and hard to bend. To ensure easy installation of the cables, consider the optimum placement of the drive. Each terminal allows up to 4 cables with cable lugs or a standard box lug. Ground is connected to a relevant termination point in the drive.

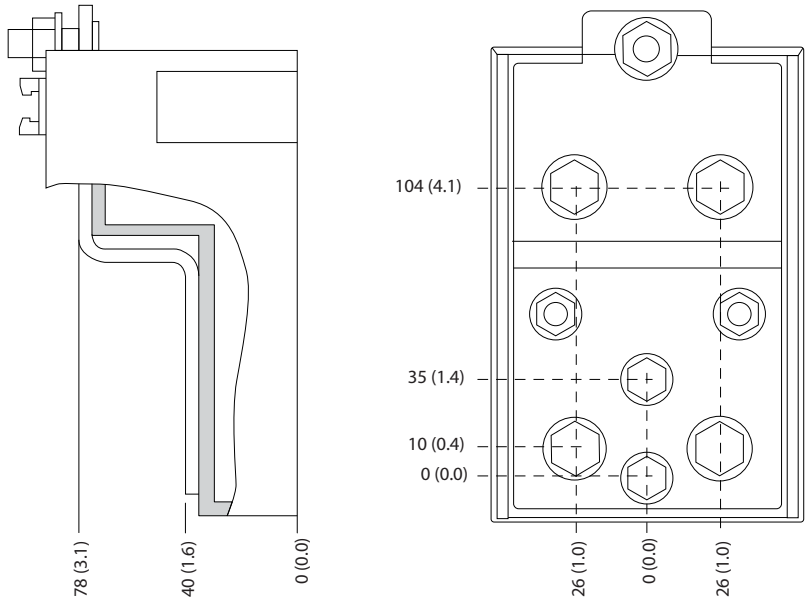

Illustration 8.12 Detailed Terminal Dimensions for E1/E2

 Danfoss A/S © 11/2017 All rights reserved.

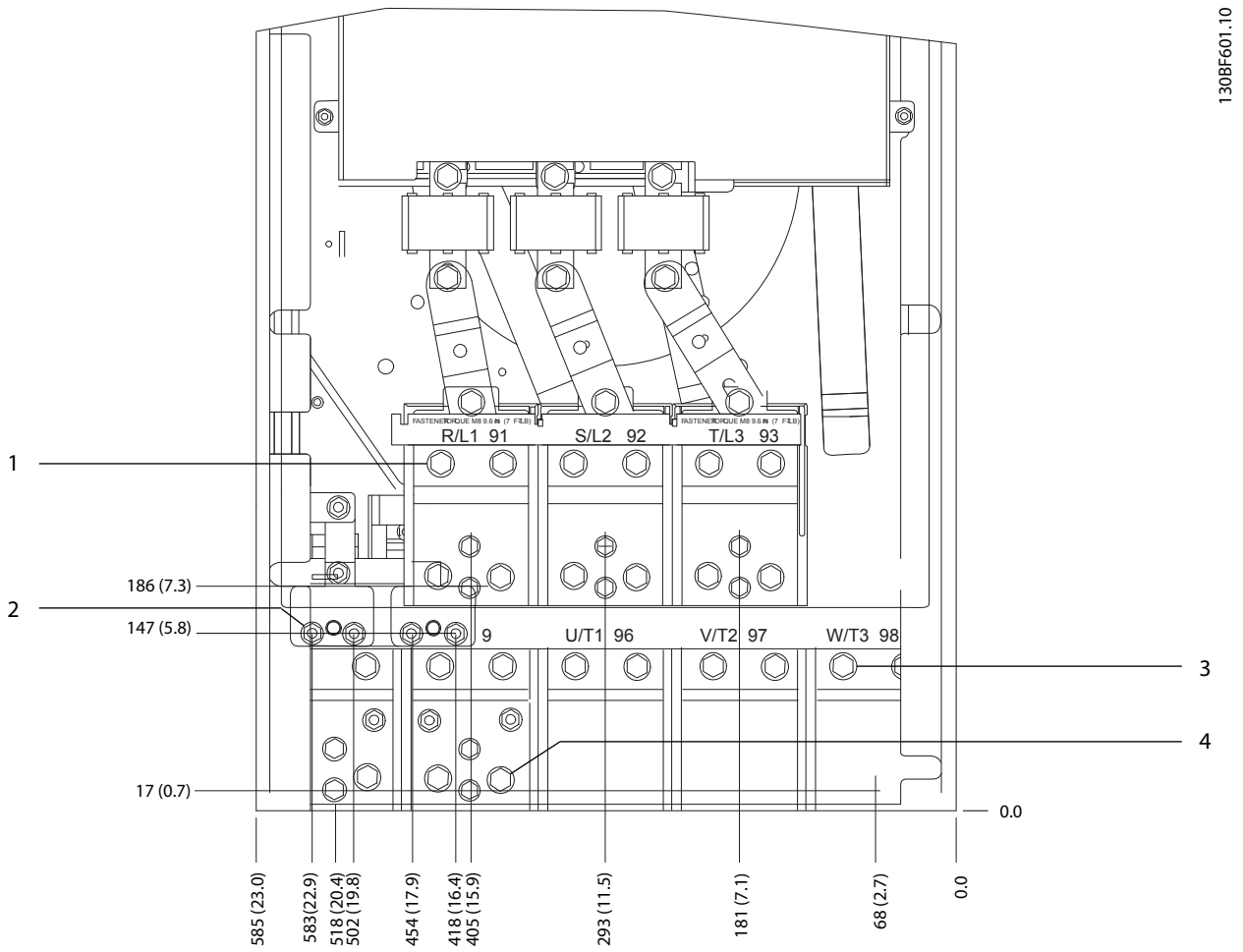

1	Mains terminals	3	Motor terminals
2	Brake terminals	4	Regen/load share terminals

Illustration 8.13 Terminal Dimensions for E2, Front View

Danfoss A/S © 11/2017 All rights reserved.

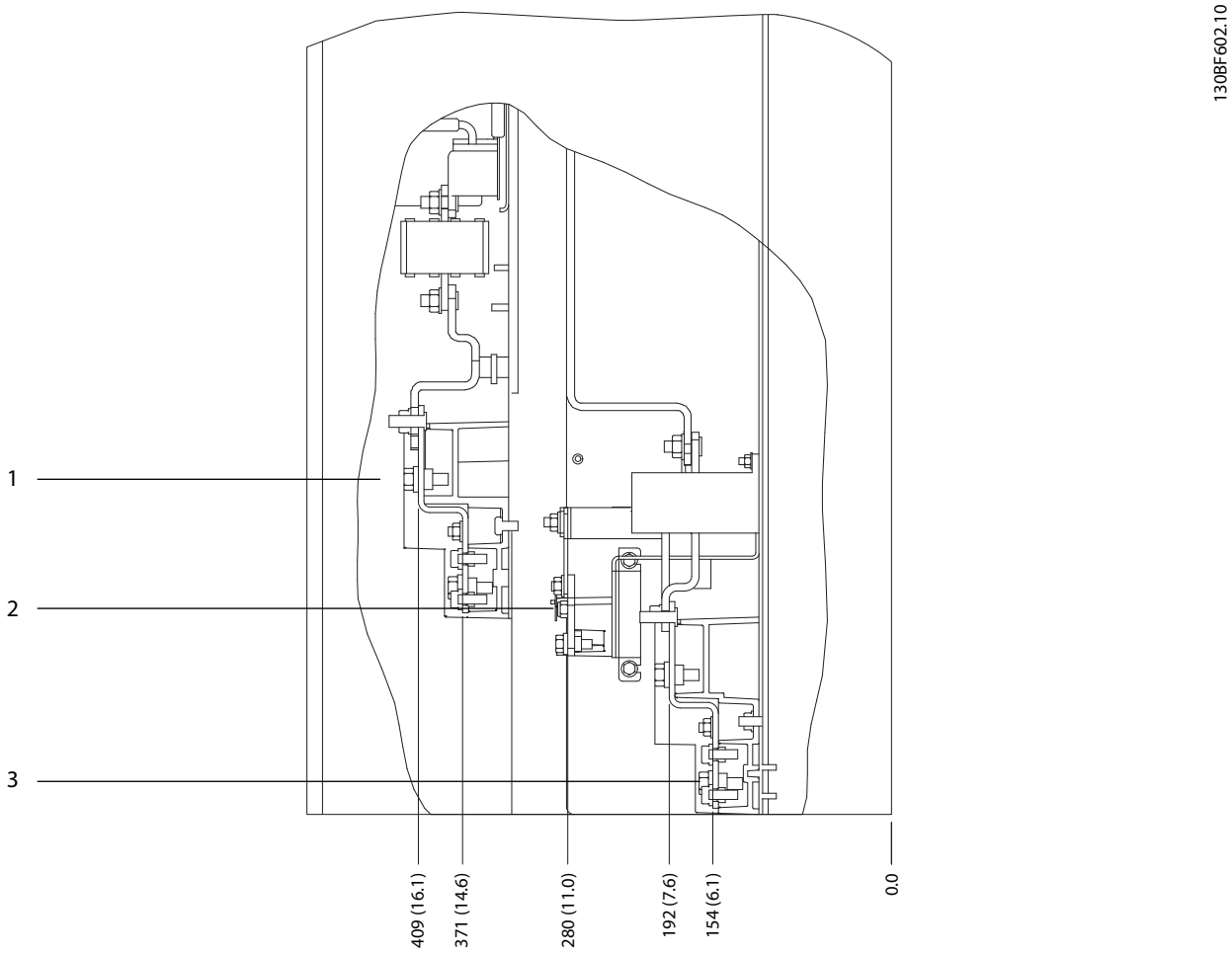

1	Mains terminals	2	Brake terminals
3	Motor terminals	–	–

Illustration 8.14 Terminal Dimensions for E2, Side View

 Danfoss A/S © 11/2017 All rights reserved.

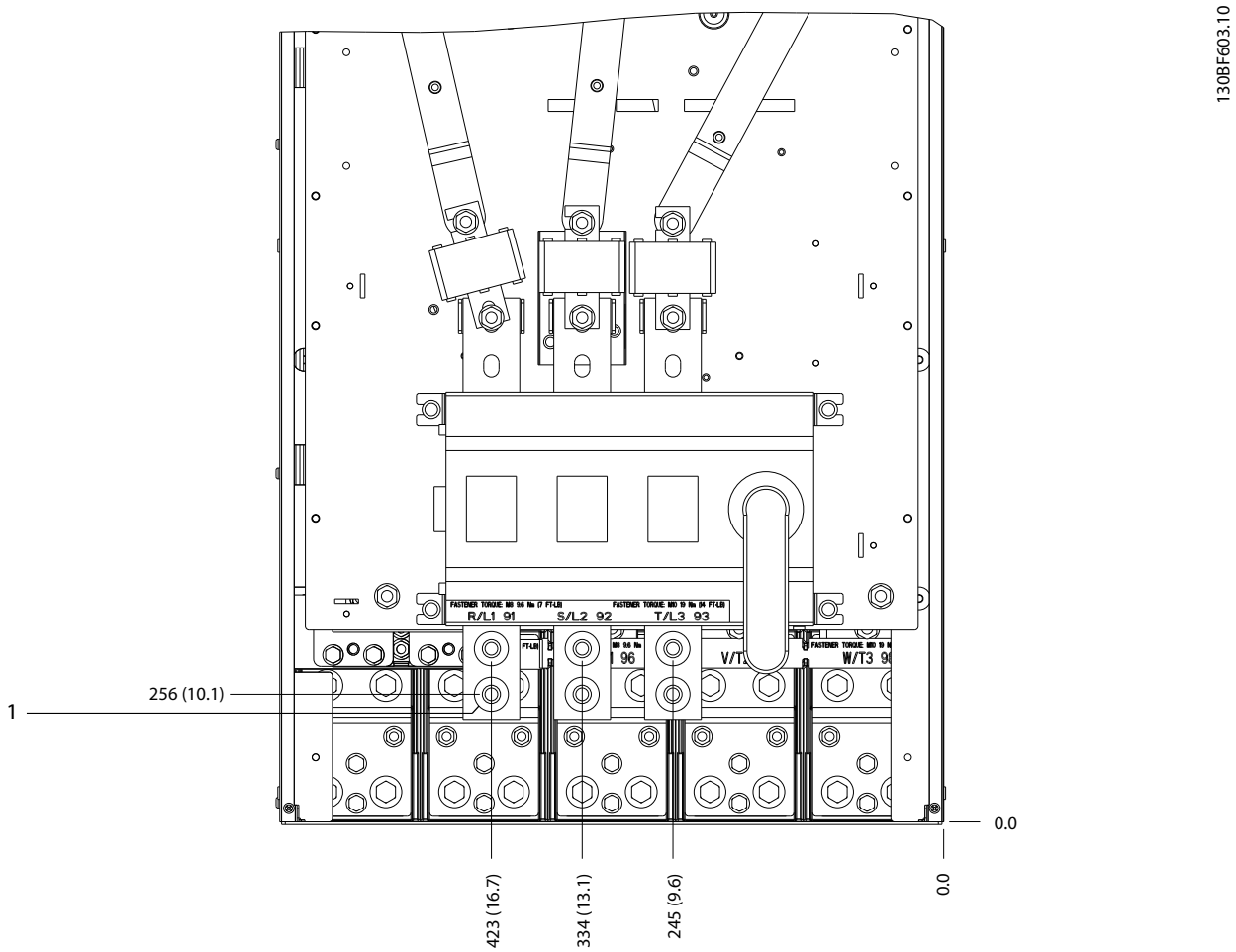

1	Mains terminals	–	–

Illustration 8.15 Terminal Dimensions for E2 with Disconnect (380–480/500 V Models: P315; 525–690 V Models: P355–P560), Front View

Danfoss A/S © 11/2017 All rights reserved.

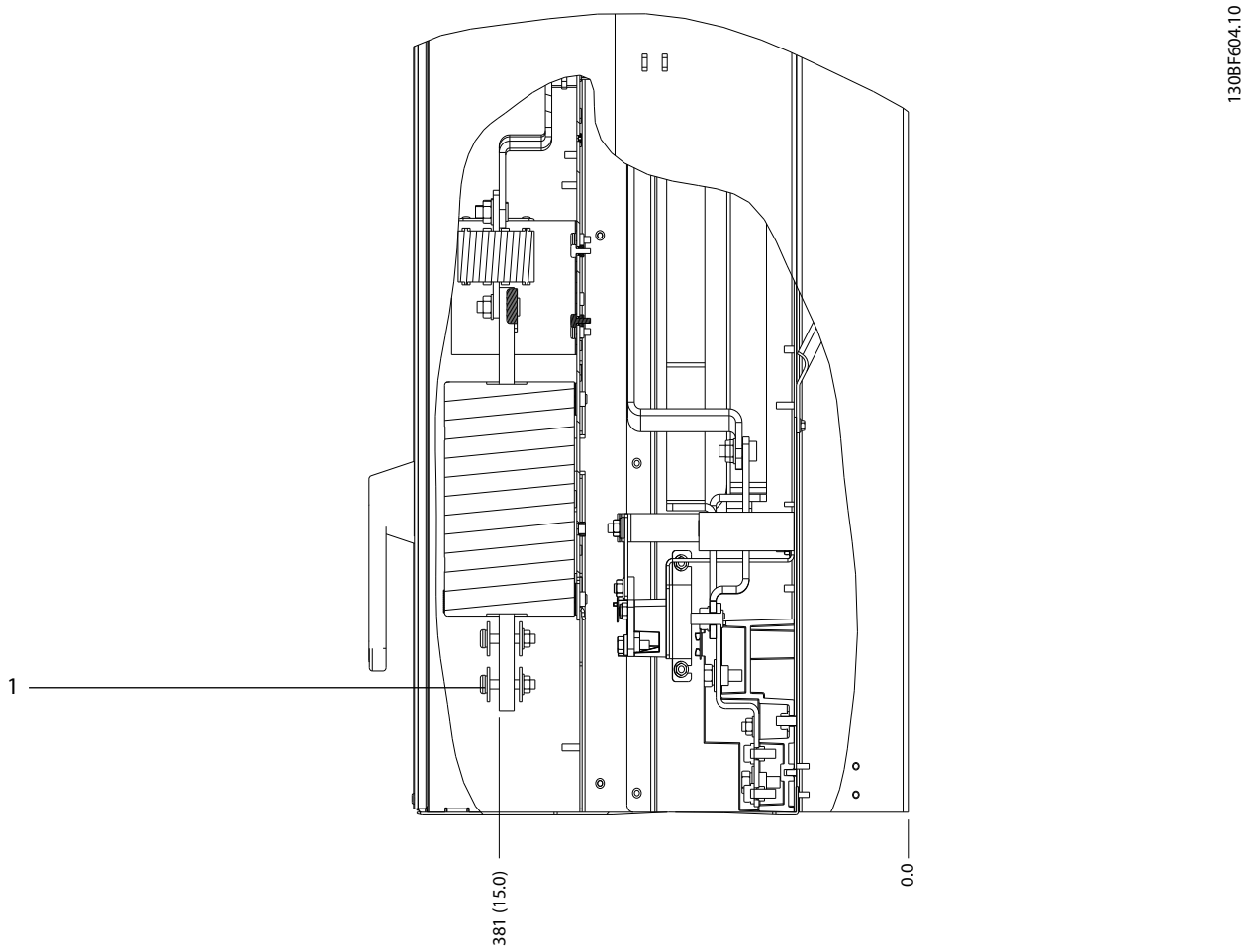

1	Mains terminals	–	–

Illustration 8.16 Terminal Dimensions for E2 with Disconnect (380–480/500 V Models: P315; 525–690 V Models: P355–P560), Side View

 Danfoss A/S © 11/2017 All rights reserved.

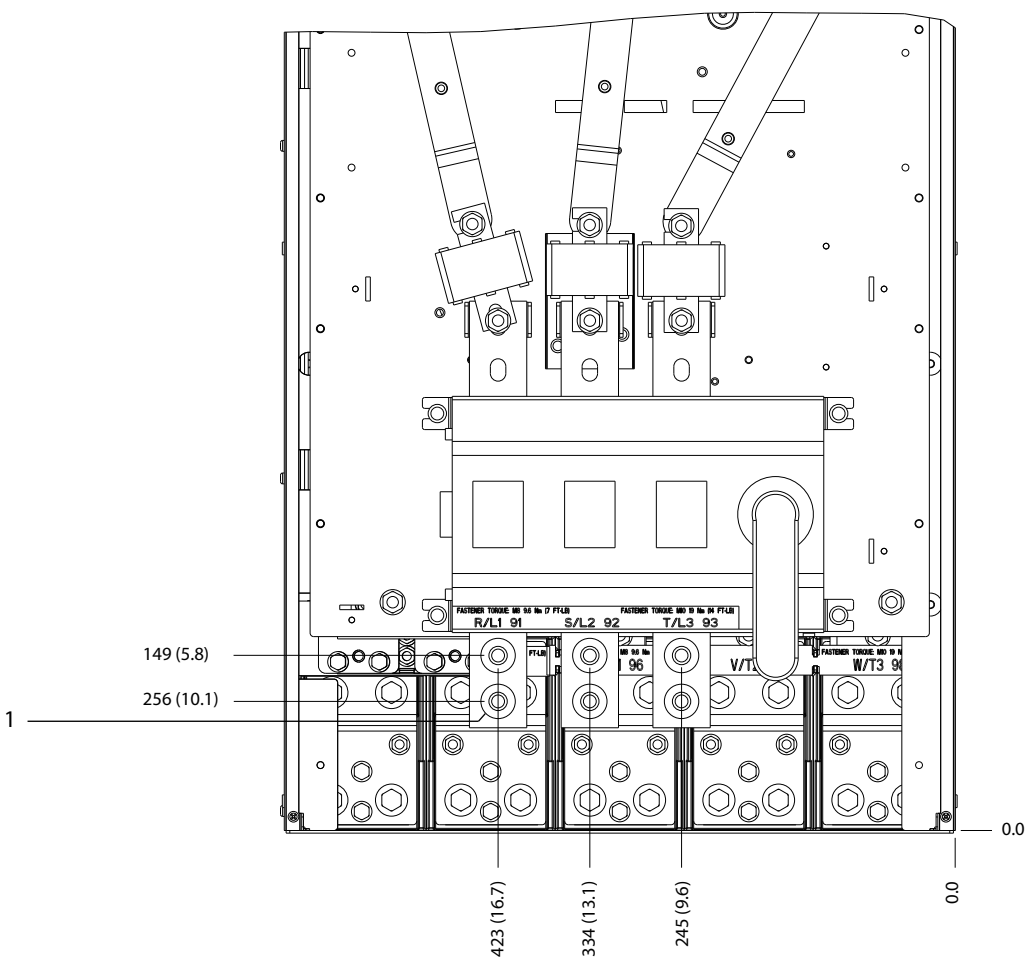

1	Mains terminals	–	–

Illustration 8.17 Terminal Dimensions for E2 with Disconnect (380–480/500 V Models: P355–P400), Front View

Danfoss A/S © 11/2017 All rights reserved.

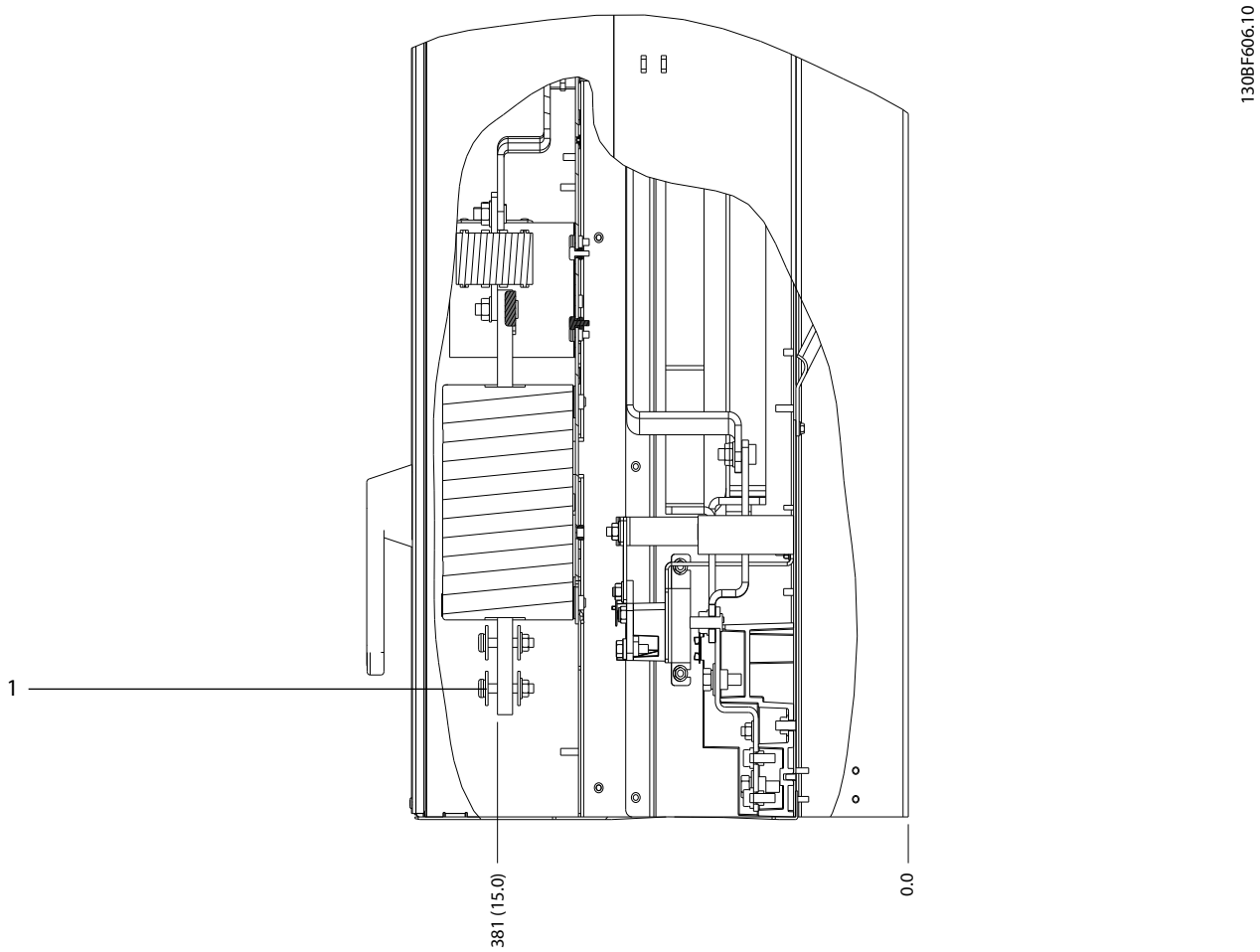

1	Mains terminals	–	–

Illustration 8.18 Terminal Dimensions for E2 with Disconnect (380–480/500 V Models: P355–P400), Side View

 Danfoss A/S © 11/2017 All rights reserved.

8.3 F1 Exterior and Terminal Dimensions

8.3.1 F1 Exterior Dimensions

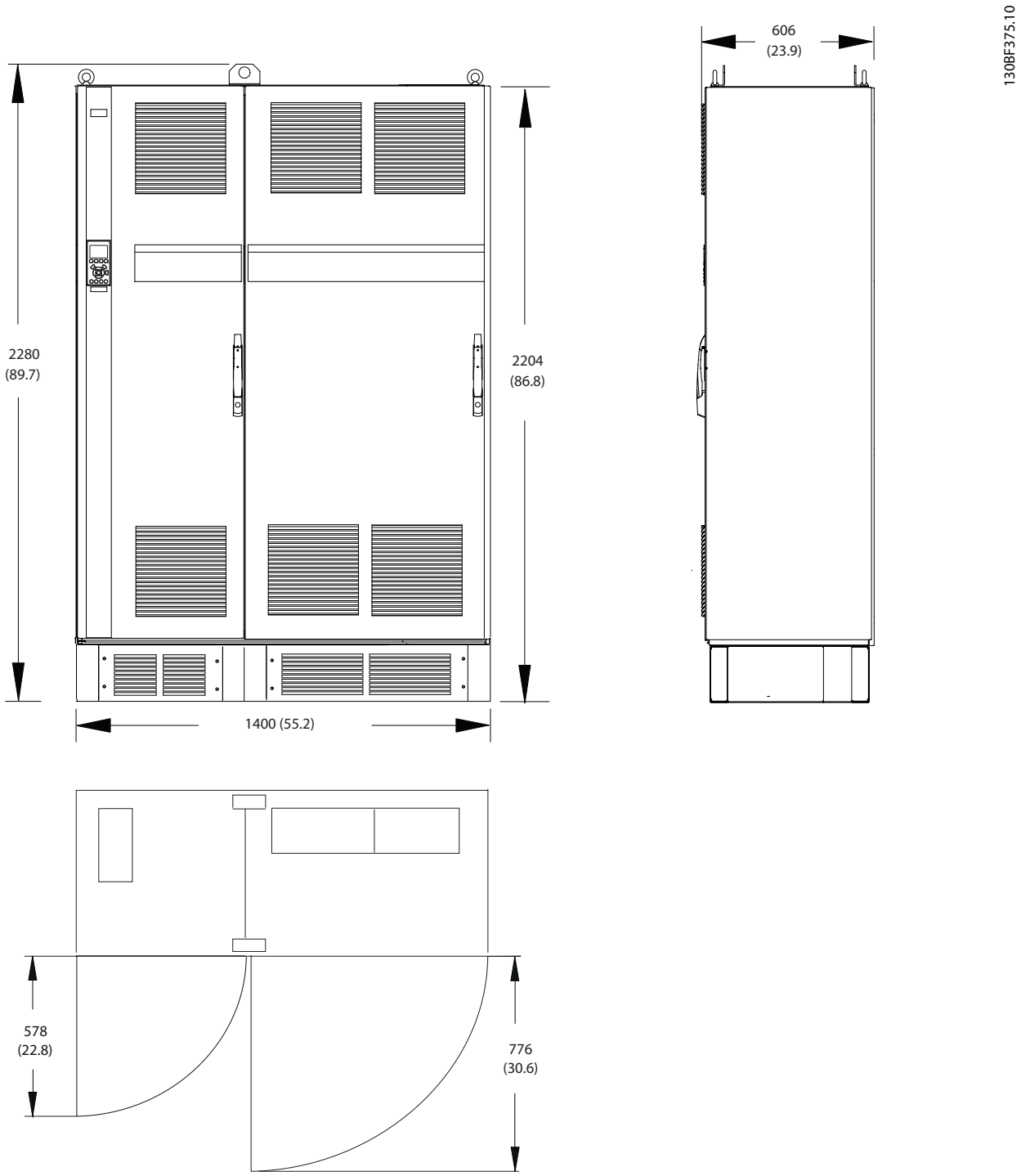

Illustration 8.19 Front, Side, and Door Clearance Dimensions for F1

Danfoss A/S © 11/2017 All rights reserved.

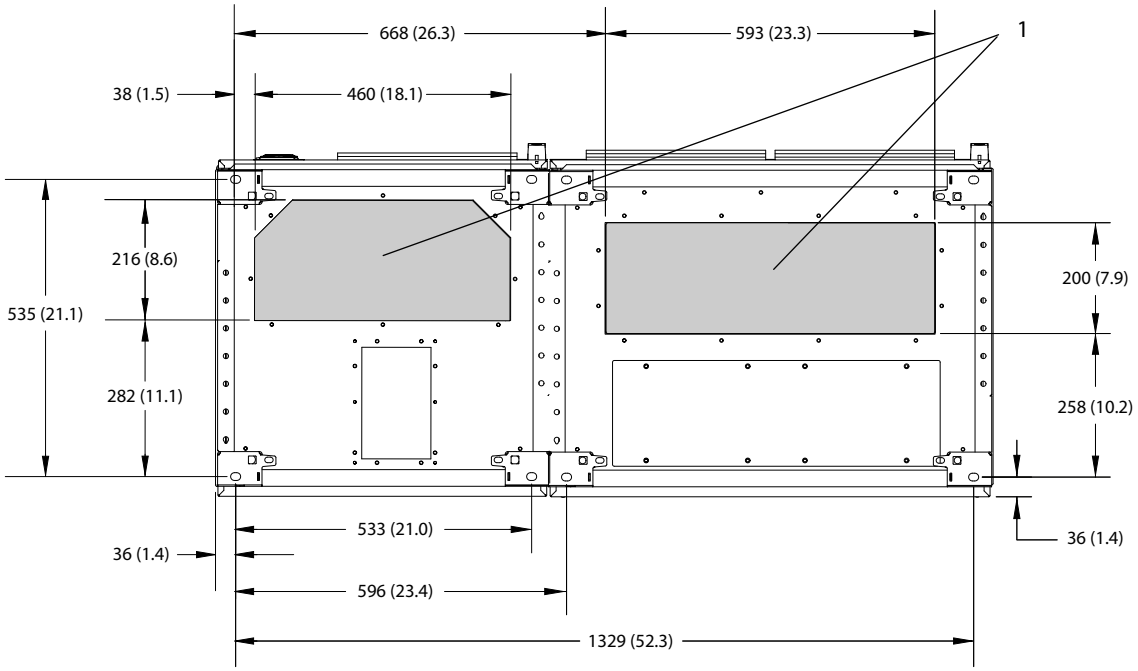

1	Mains side	2	Motor side

Illustration 8.20 Gland Plate Dimensions for F1

8

 Danfoss A/S © 11/2017 All rights reserved.

8.3.2 F1 Terminal Dimensions

Power cables are heavy and hard to bend. To ensure easy installation of the cables, consider the optimum placement of the drive. Each terminal allows up to 4 cables with cable lugs or a standard box lug. Ground is connected to a relevant termination point in the drive.

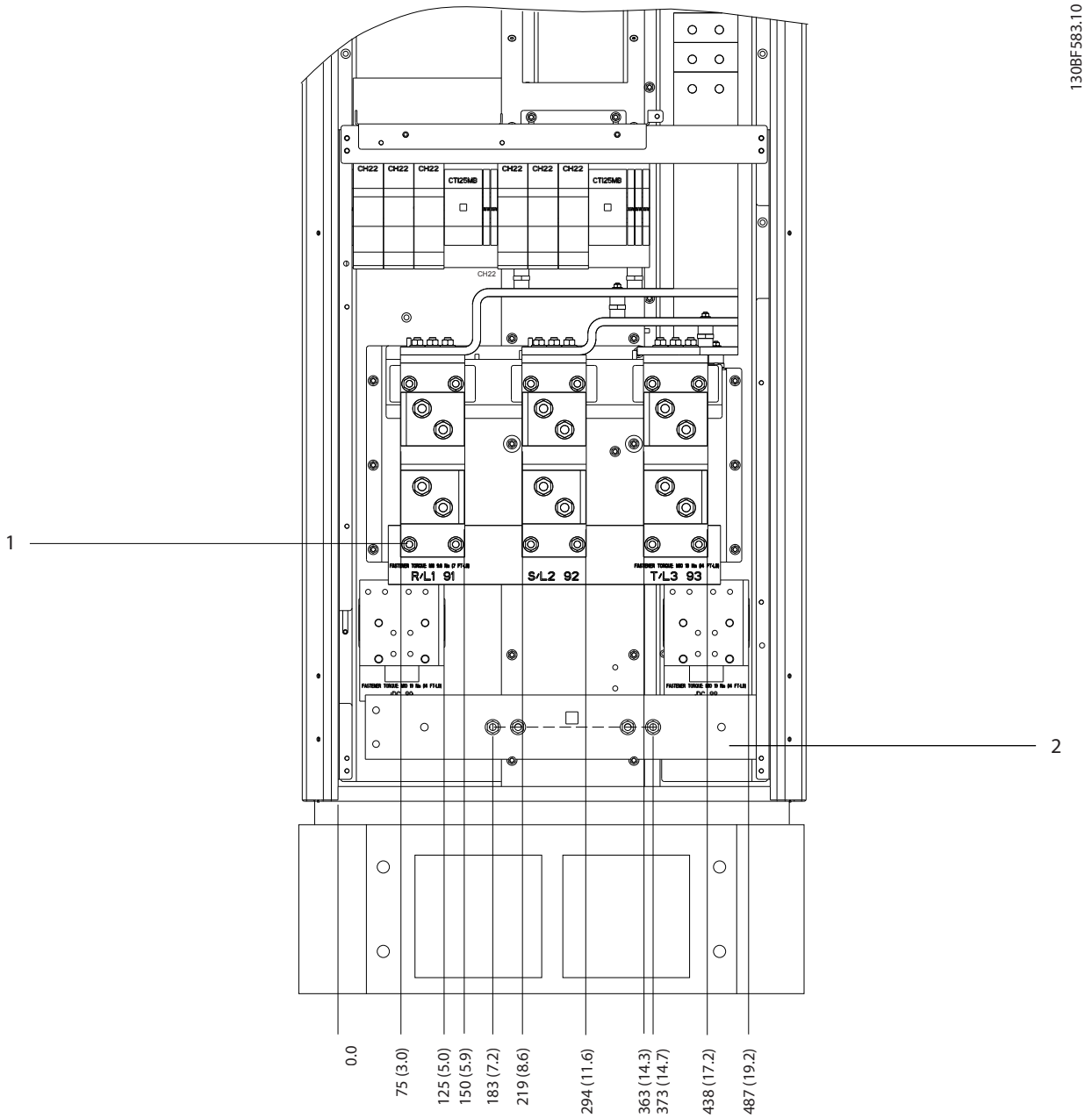

1	Mains terminals	2	Ground bar

Illustration 8.21 Terminal Dimensions for F1–F4 Rectifier Cabinet, Front View

Danfoss A/S © 11/2017 All rights reserved.

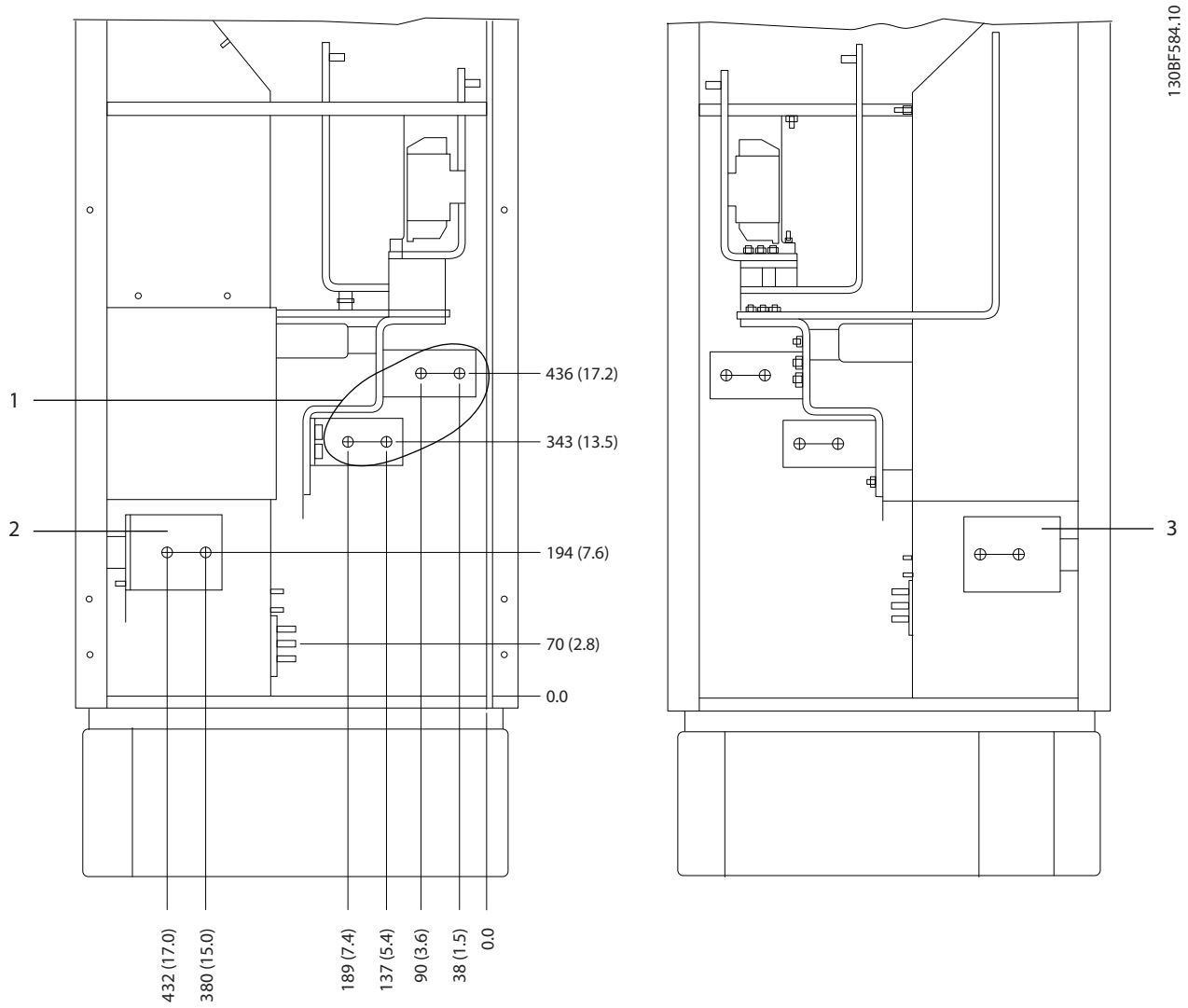

1	Mains terminals	3	Load share terminals (–)
2	Load share terminals (+)	–	–

Illustration 8.22 Terminal Dimensions for F1–F2 Rectifier Cabinet, Side View

 Danfoss A/S © 11/2017 All rights reserved.

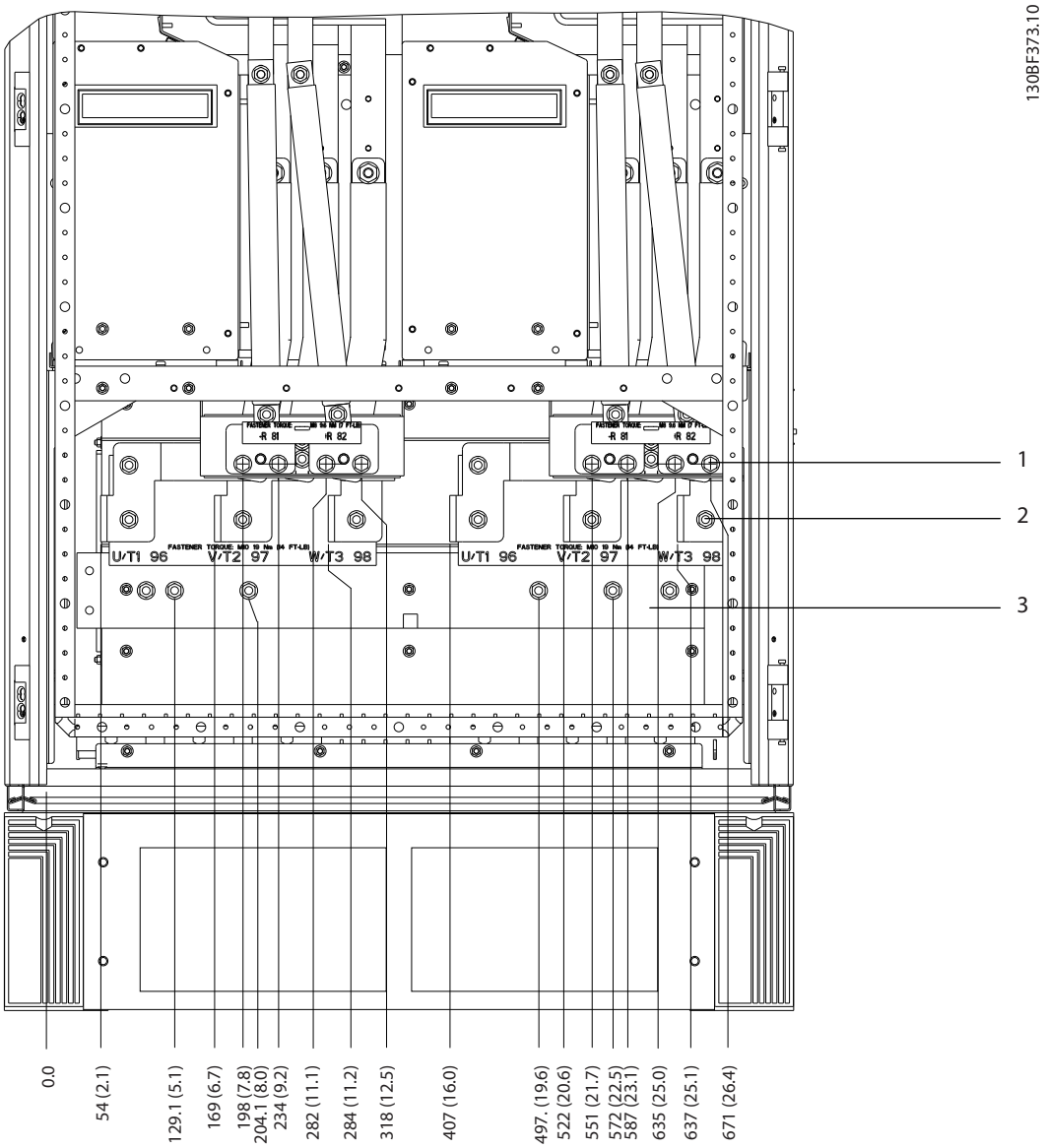

1	Brake terminals	3	Ground bar
2	Motor terminals	–	–

Illustration 8.23 Terminal Dimensions for F1/F3 Inverter Cabinet, Front View

Danfoss A/S © 11/2017 All rights reserved.

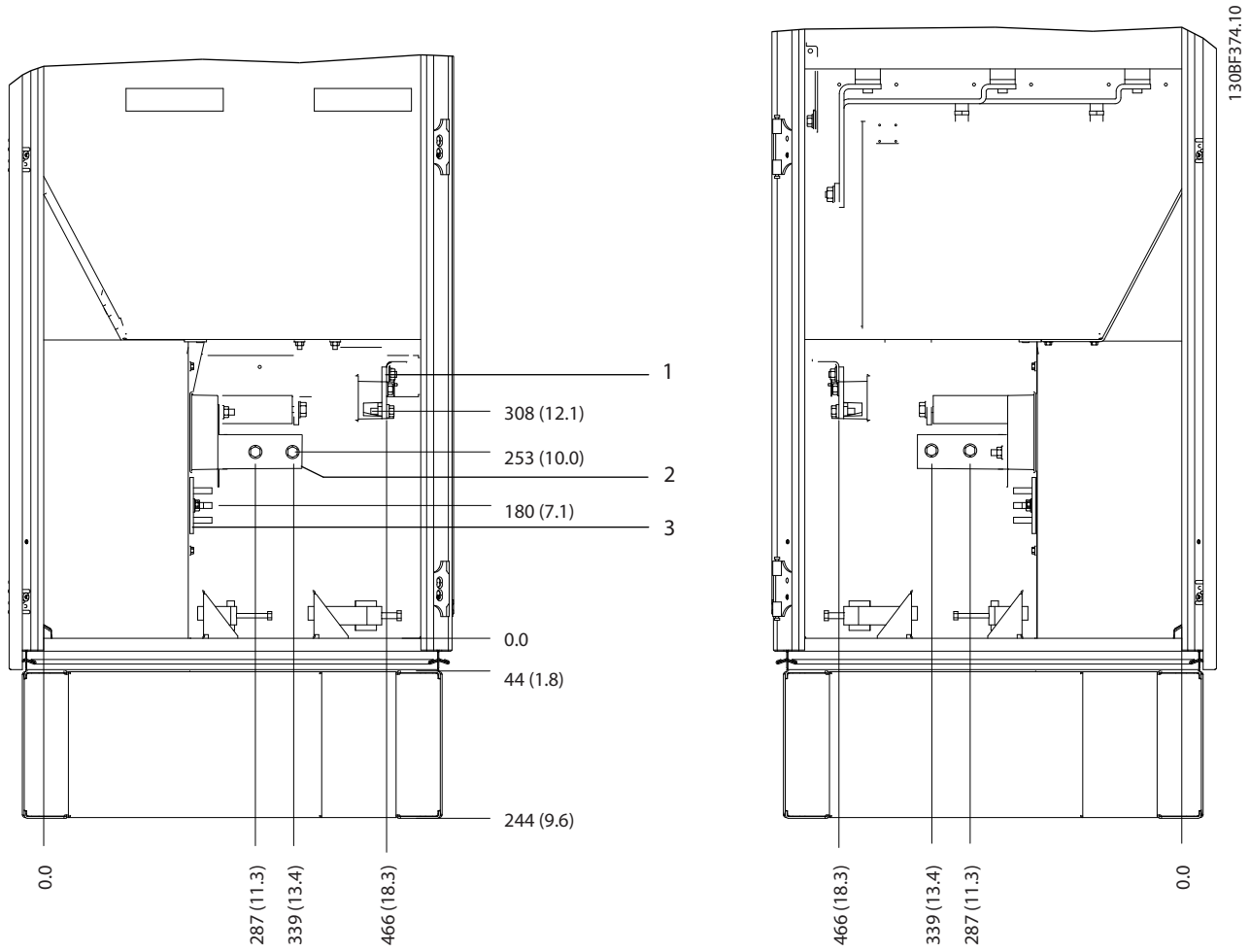

1	Brake terminals	3	Ground bar
2	Motor terminals	–	–

Illustration 8.24 Terminal Dimensions for F1/F3 Inverter Cabinet, Side View

 Danfoss A/S © 11/2017 All rights reserved.

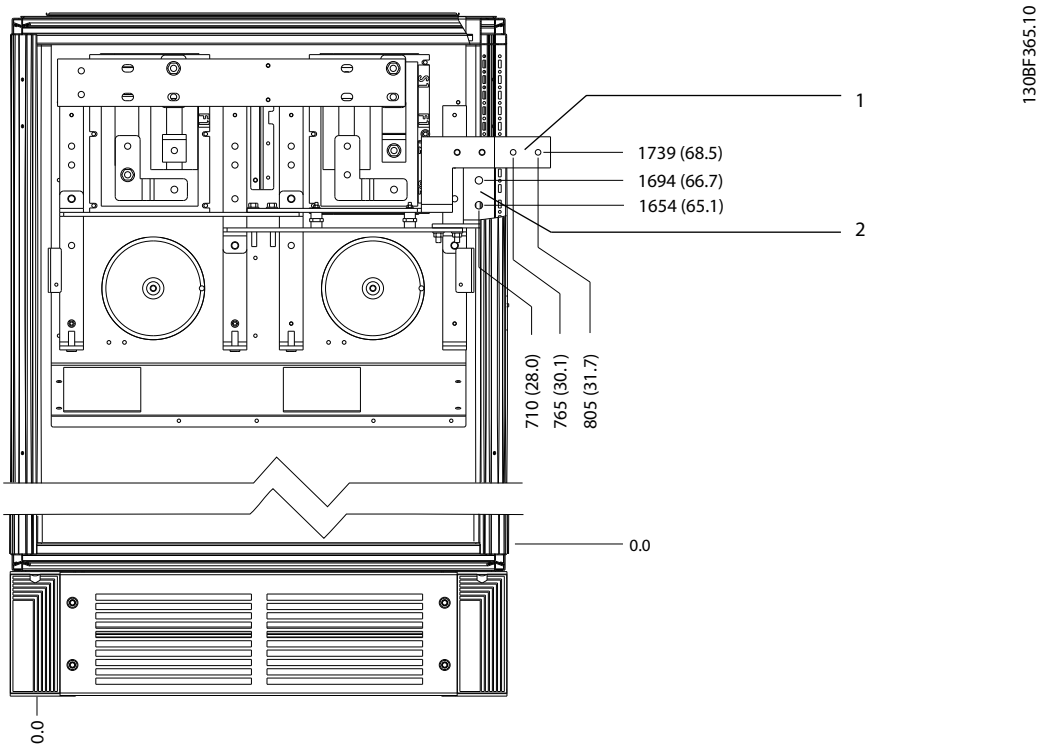

1	DC –	2	DC +

Illustration 8.25 Terminal Dimensions for F1/F3 Regeneration Terminals, Front View

Danfoss A/S © 11/2017 All rights reserved.

8.4 F2 Exterior and Terminal Dimensions

8.4.1 F2 Exterior Dimensions

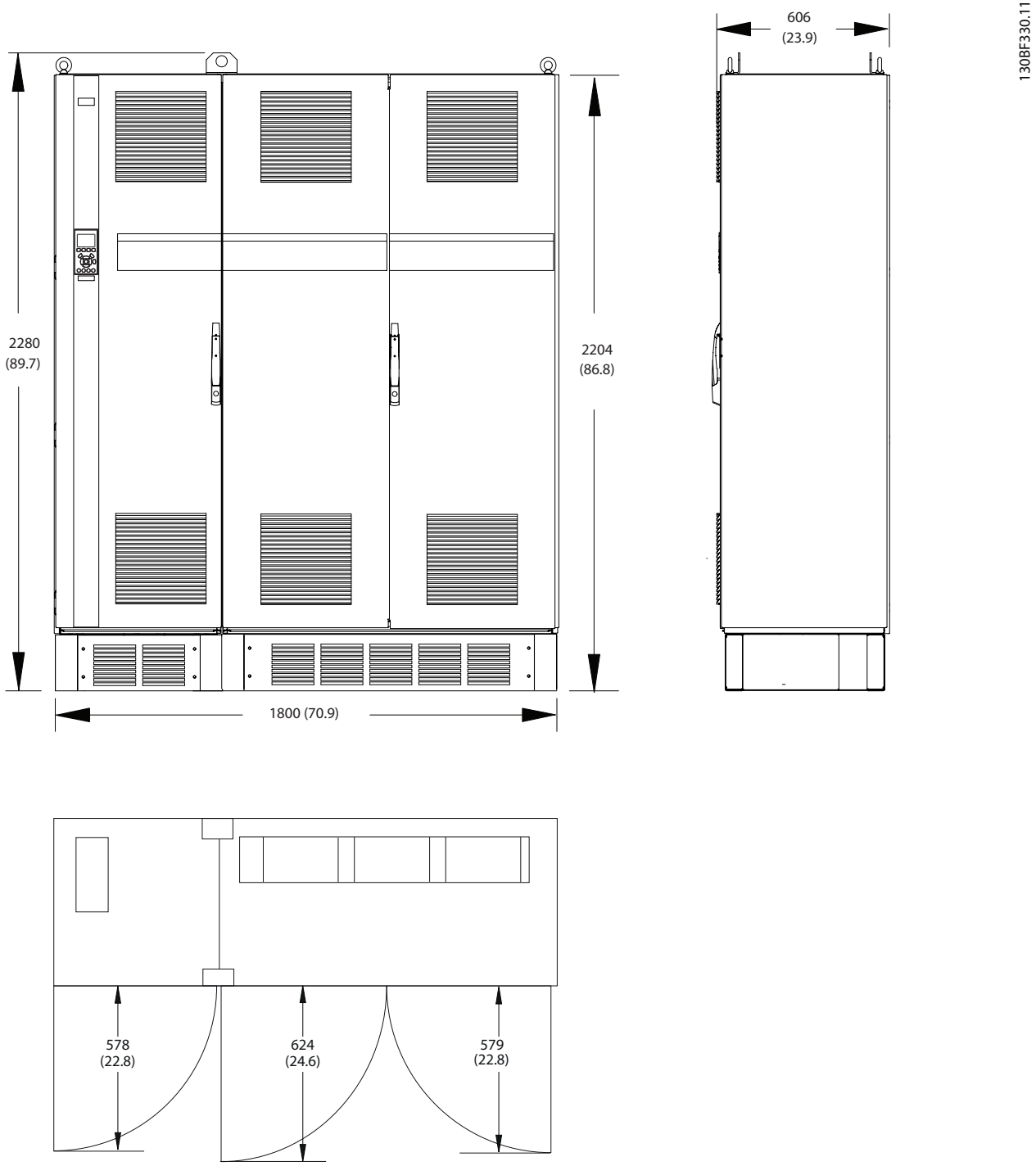

Illustration 8.26 Front, Side, and Door Clearance Dimensions for F2

 Danfoss A/S © 11/2017 All rights reserved.

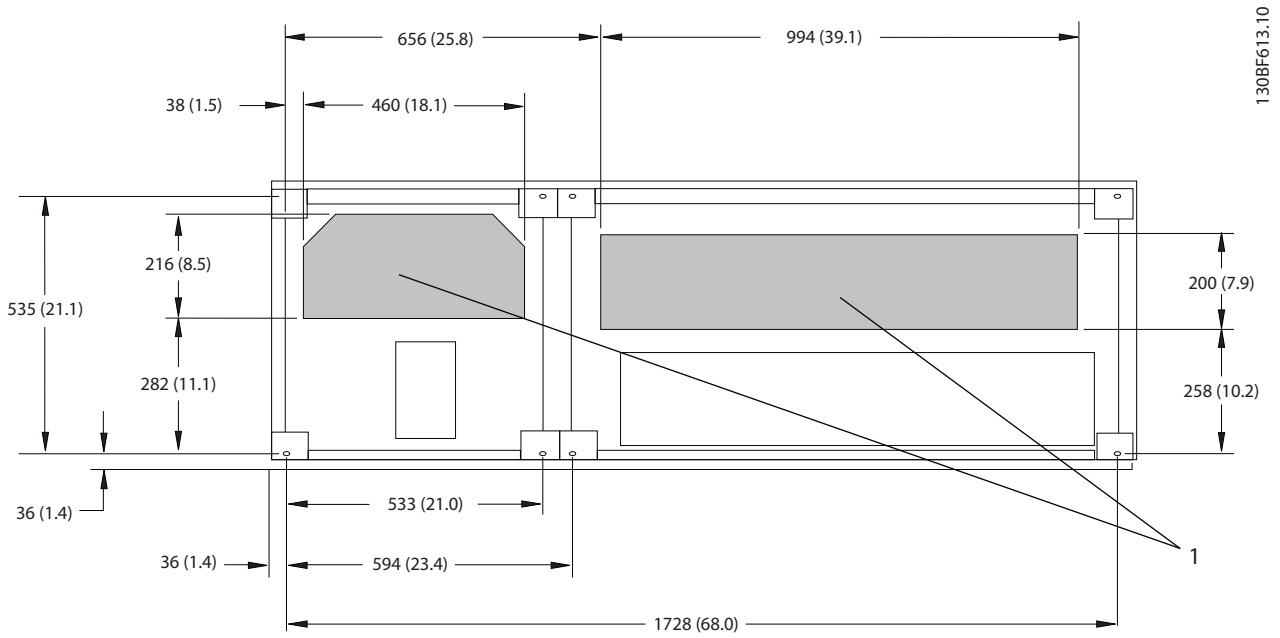

1	Mains side	2	Motor side

Illustration 8.27 Gland Plate Dimensions for F2

Danfoss A/S © 11/2017 All rights reserved.

8.4.2 F2 Terminal Dimensions

Power cables are heavy and hard to bend. To ensure easy installation of the cables, consider the optimum placement of the drive. Each terminal allows up to 4 cables with cable lugs or a standard box lug. Ground is connected to a relevant termination point in the drive.

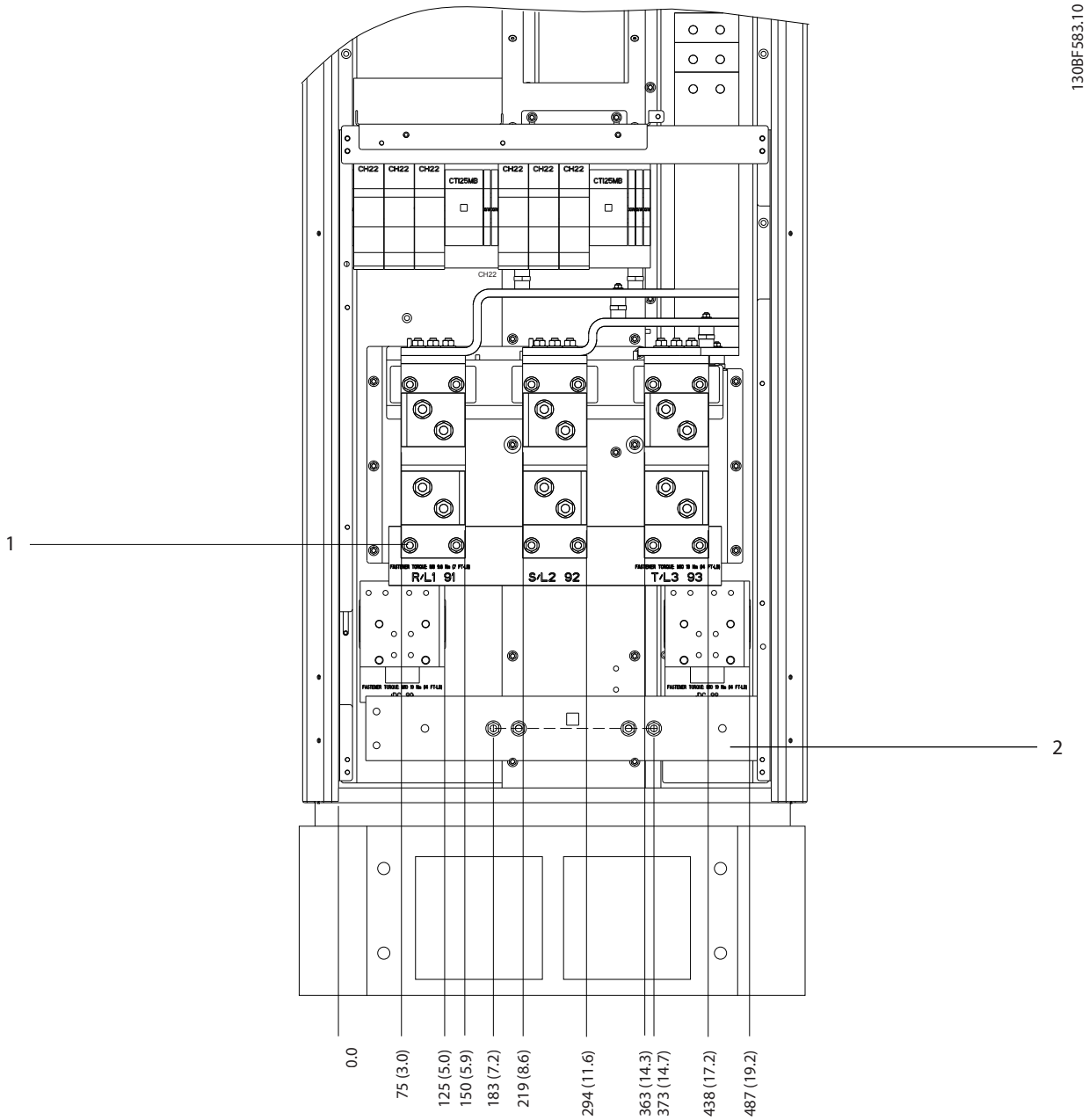

1	Mains terminals	2	Ground bar

Illustration 8.28 Terminal Dimensions for F1–F4 Rectifier Cabinet, Front View

 Danfoss A/S © 11/2017 All rights reserved.

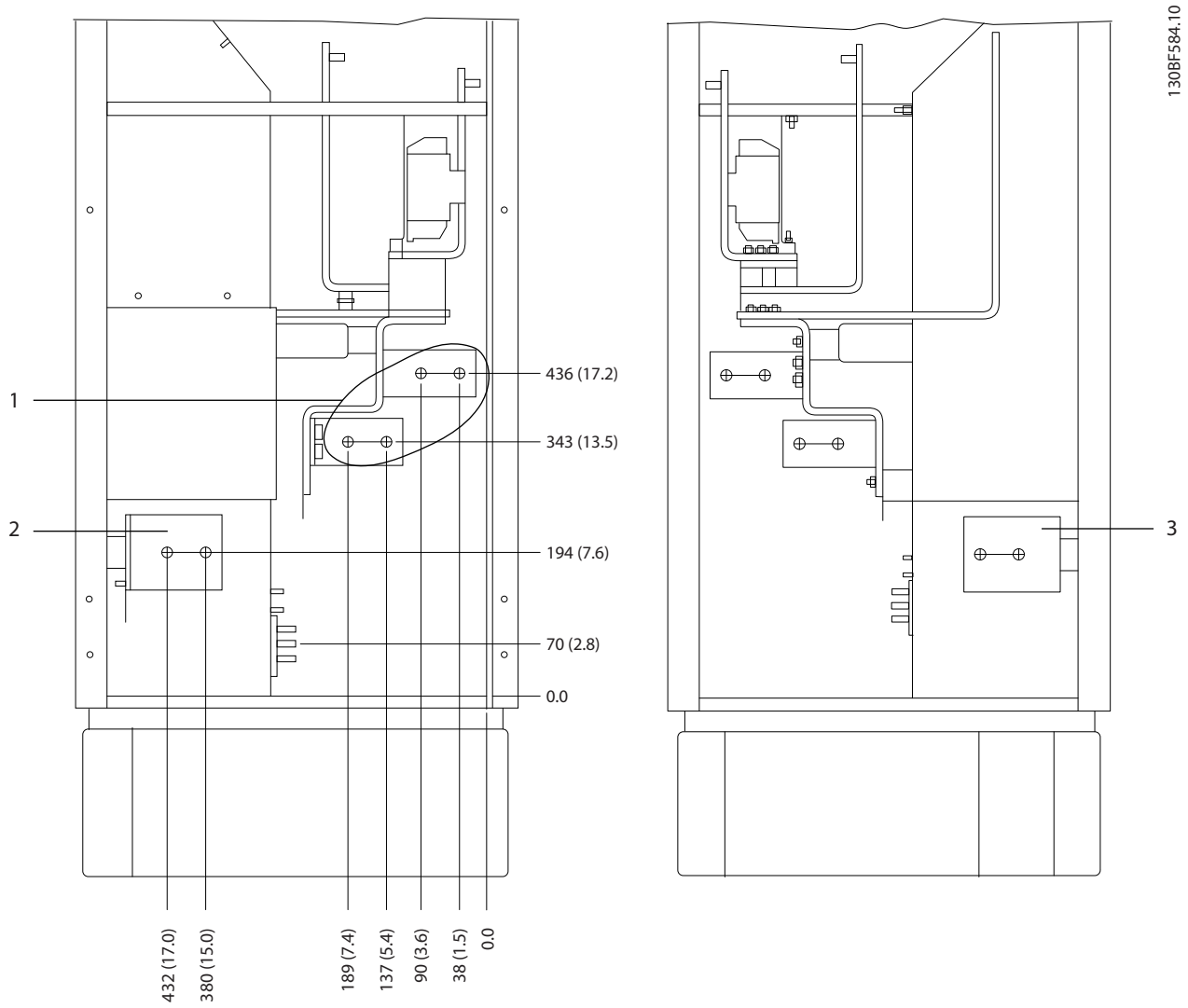

1	Mains terminals	3	Load share terminals (–)
2	Load share terminals (+)	–	–

Illustration 8.29 Terminal Dimensions for F1–F2 Rectifier Cabinet, Side View

Danfoss A/S © 11/2017 All rights reserved.

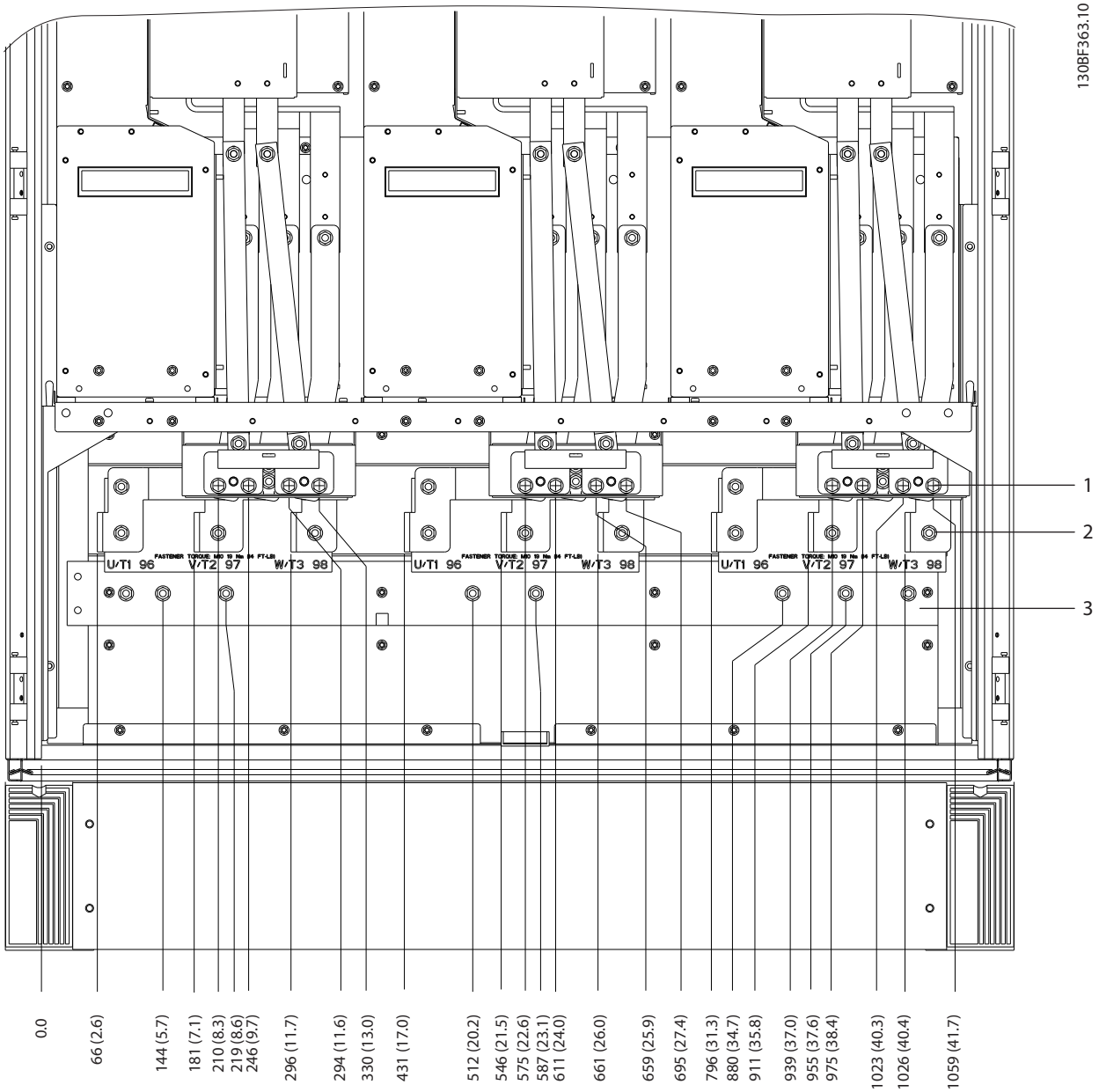

1	Brake terminals	3	Ground bar
2	Motor terminals	–	–

Illustration 8.30 Terminal Dimensions for F2/F4 Inverter Cabinet, Front View

 Danfoss A/S © 11/2017 All rights reserved.

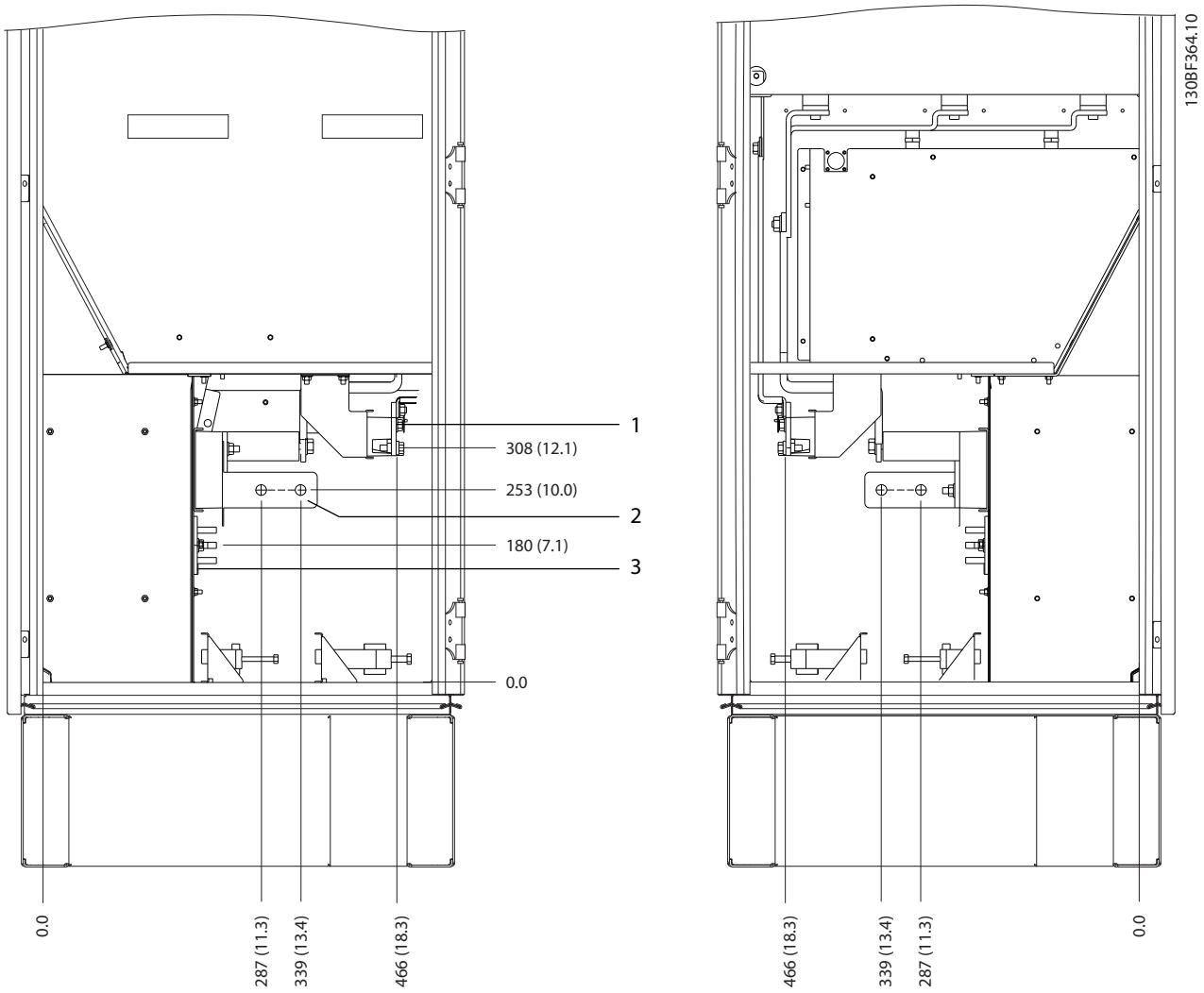

1	Brake terminals	3	Ground bar
2	Motor terminals	–	–

Illustration 8.31 Terminal Dimensions for F2/F4 Inverter Cabinet, Side View

Danfoss A/S © 11/2017 All rights reserved.

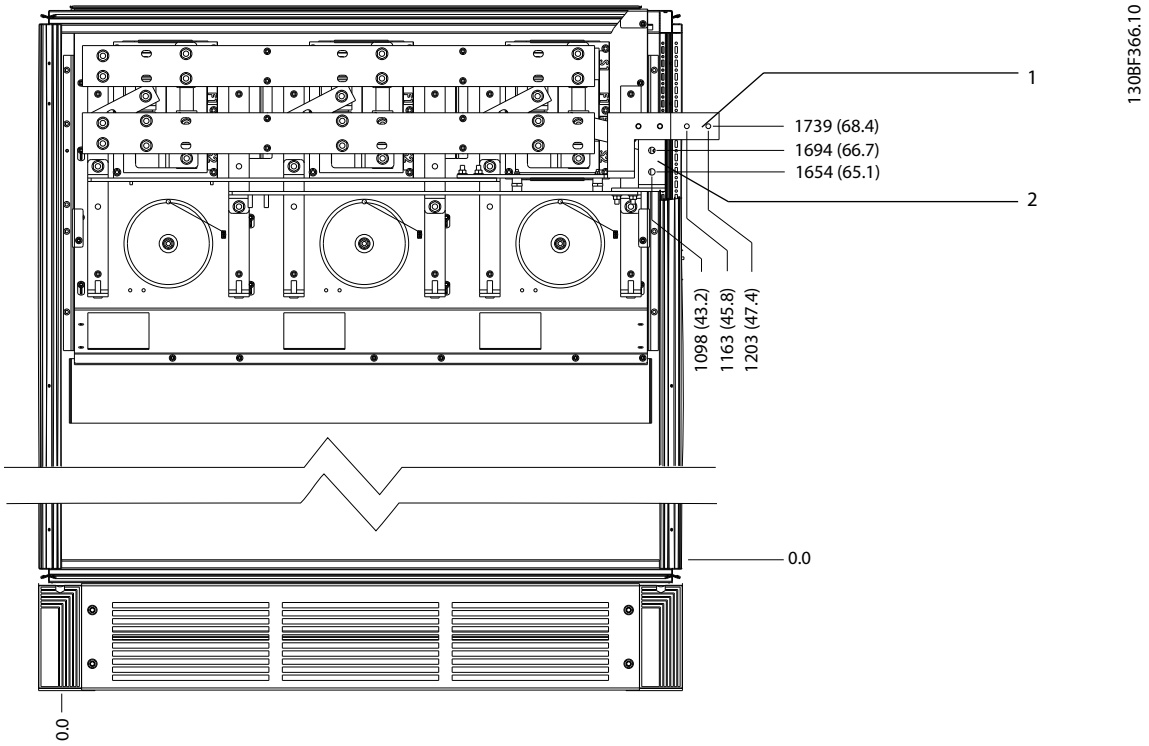

1	DC –	2	DC +

Illustration 8.32 Terminal Dimensions for F2/F4 Regeneration Terminals, Front View

 Danfoss A/S © 11/2017 All rights reserved.

8.5 F3 Exterior and Terminal Dimensions

8.5.1 F3 Exterior Dimensions

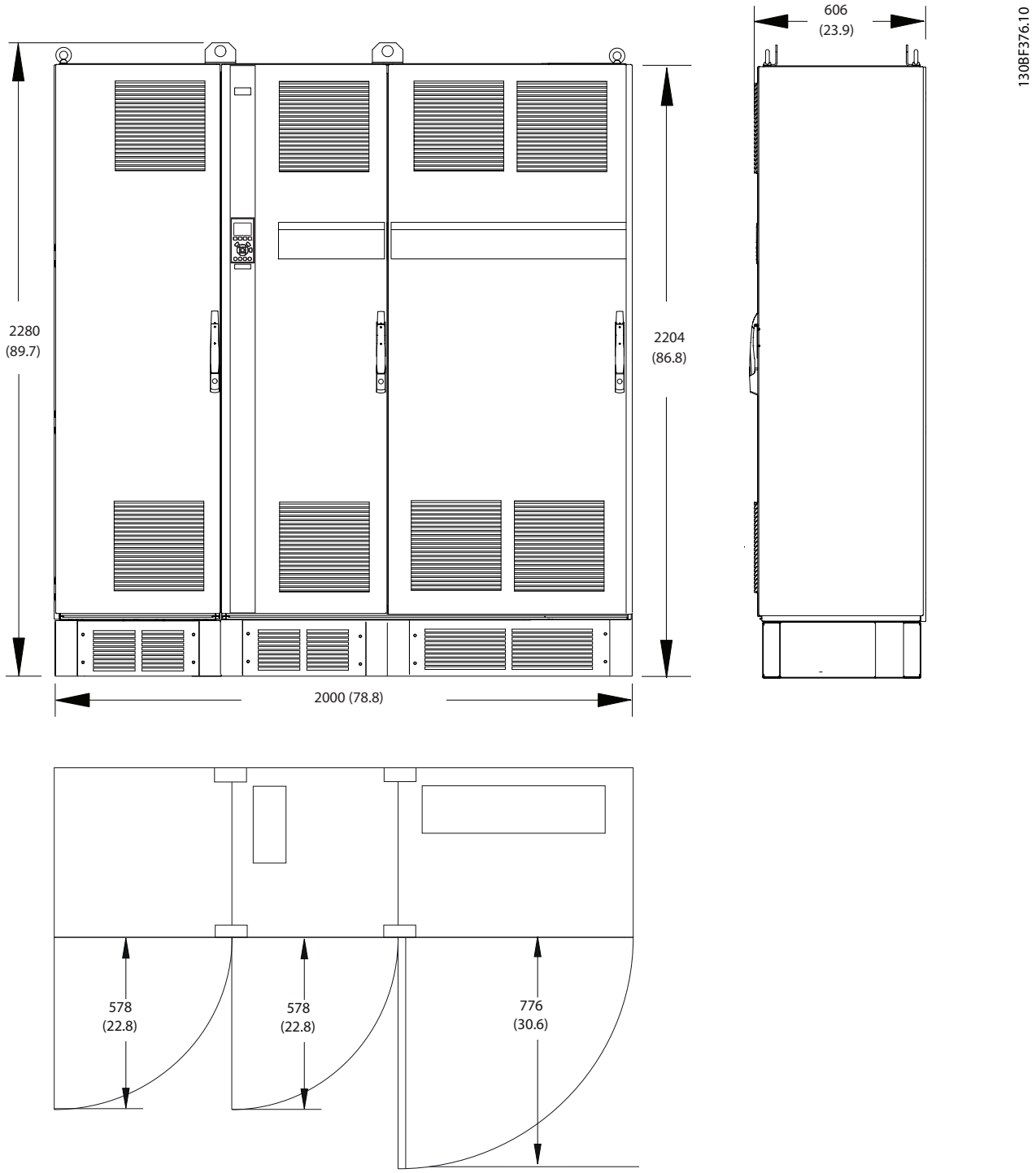

Illustration 8.33 Front, Side, and Door Clearance Dimensions for F3

Danfoss A/S © 11/2017 All rights reserved.

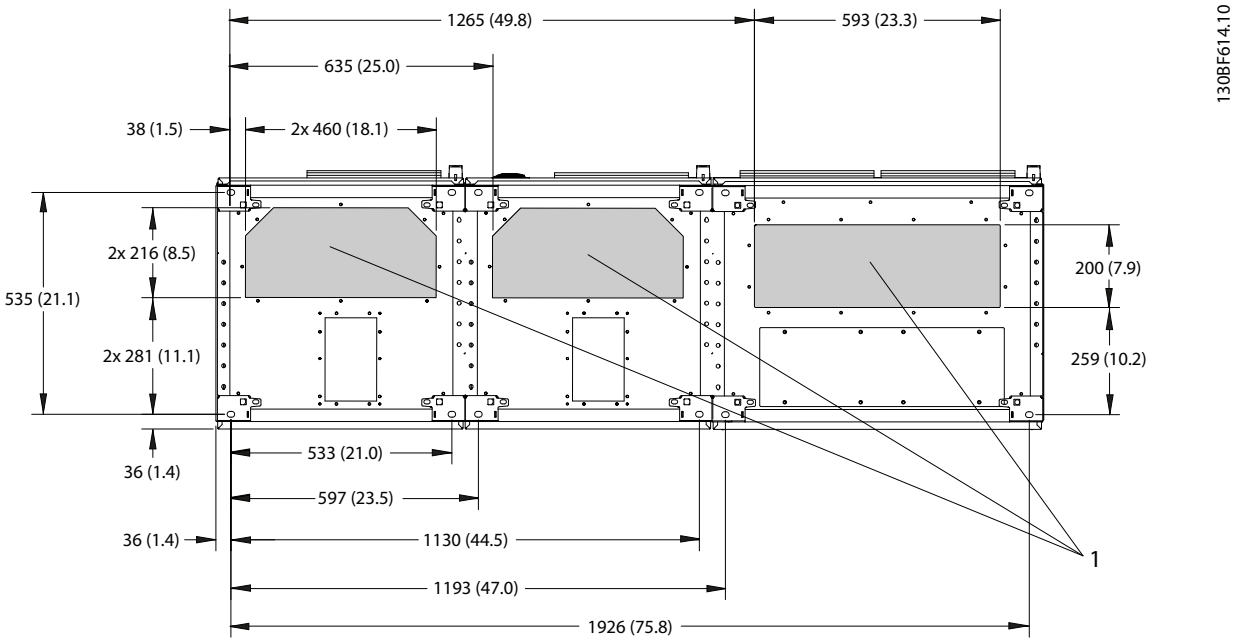

1	Mains side	2	Motor side

Illustration 8.34 Gland Plate Dimensions for F3

8

 Danfoss A/S © 11/2017 All rights reserved.

8.5.2 F3 Terminal Dimensions

Power cables are heavy and hard to bend. To ensure easy installation of the cables, consider the optimum placement of the drive. Each terminal allows up to 4 cables with cable lugs or a standard box lug. Ground is connected to a relevant termination point in the drive.

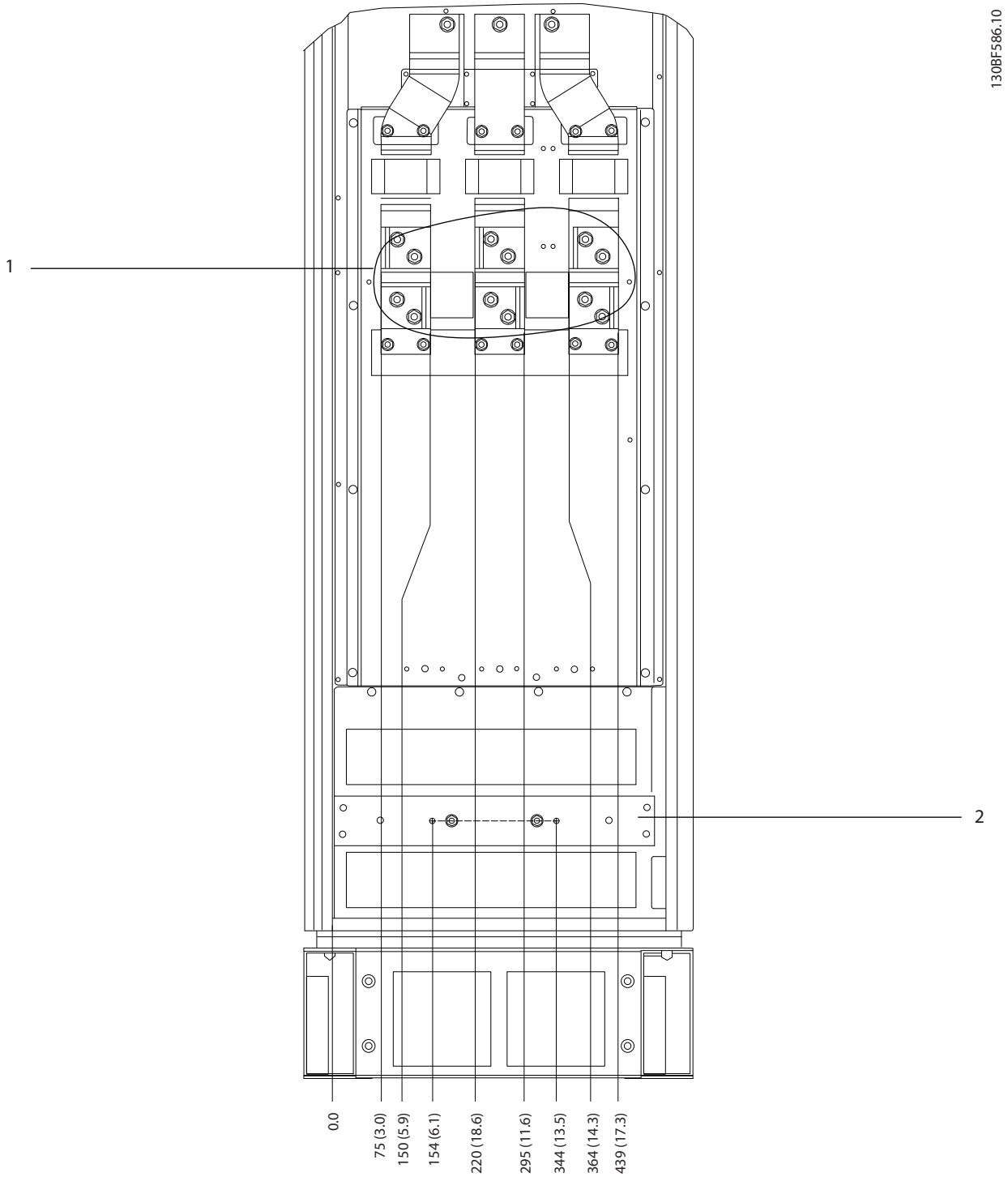

1	Mains terminals	2	Ground bar

Illustration 8.35 Terminal Dimensions for F3–F4 Options Cabinet, Front View

Danfoss A/S © 11/2017 All rights reserved.

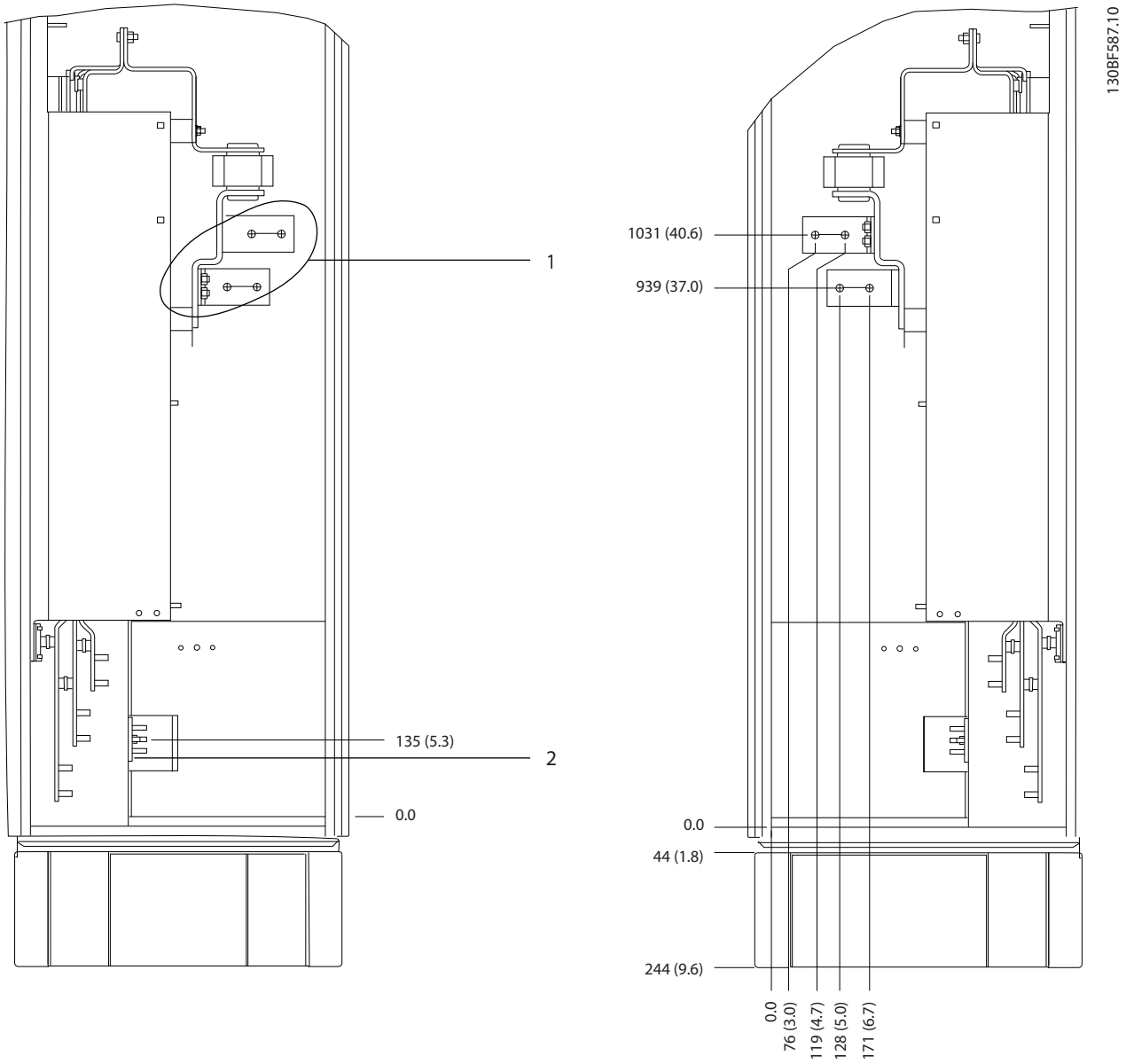

1	Mains terminals	2	Ground bar

Illustration 8.36 Terminal Dimensions for F3–F4 Options Cabinet, Side View

 Danfoss A/S © 11/2017 All rights reserved.

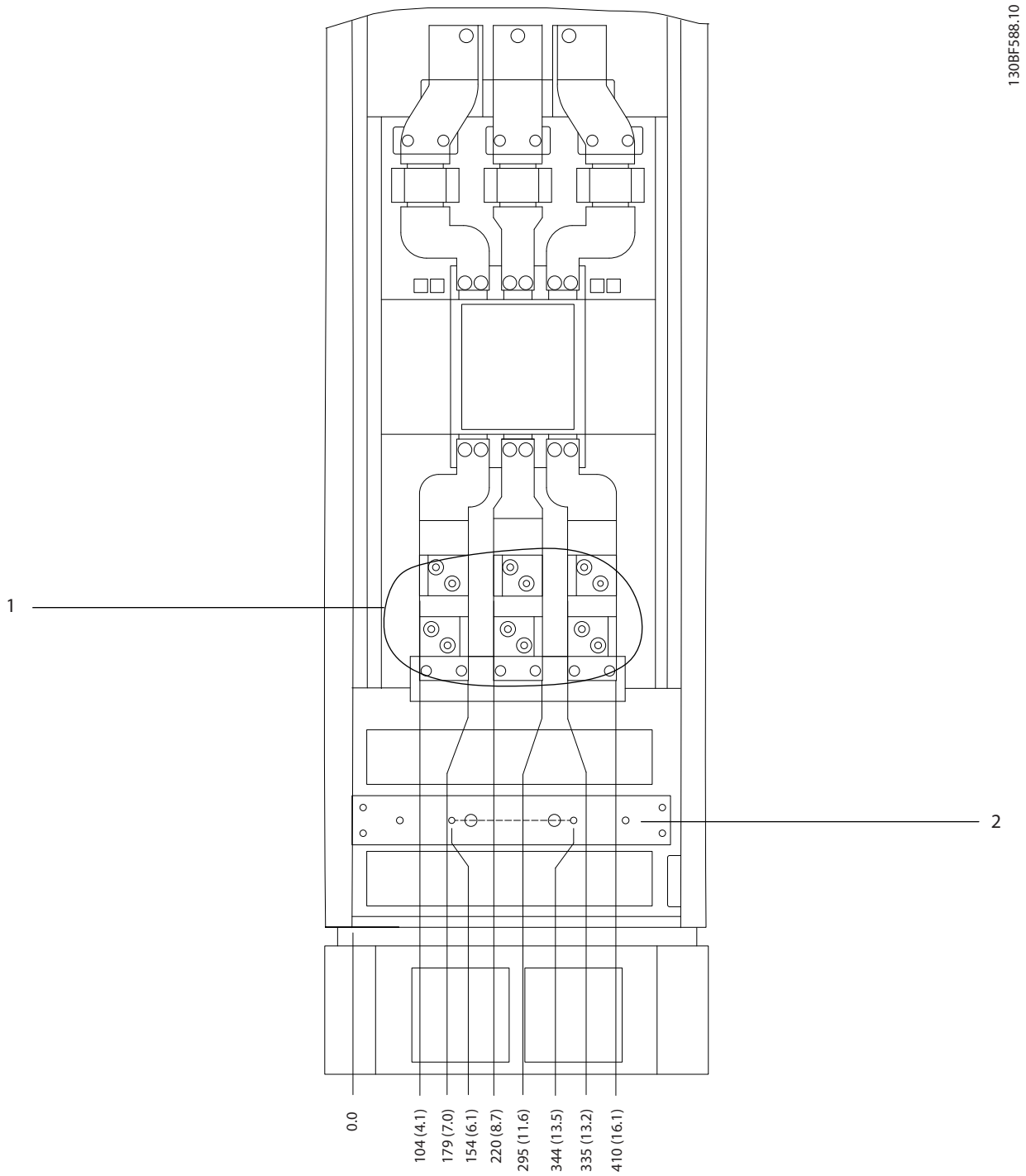

1	Mains terminals	2	Ground bar

Illustration 8.37 Terminal Dimensions for F3–F4 Options Cabinet with Circuit Breaker/Molded Case Switch, Front View

Danfoss A/S © 11/2017 All rights reserved.

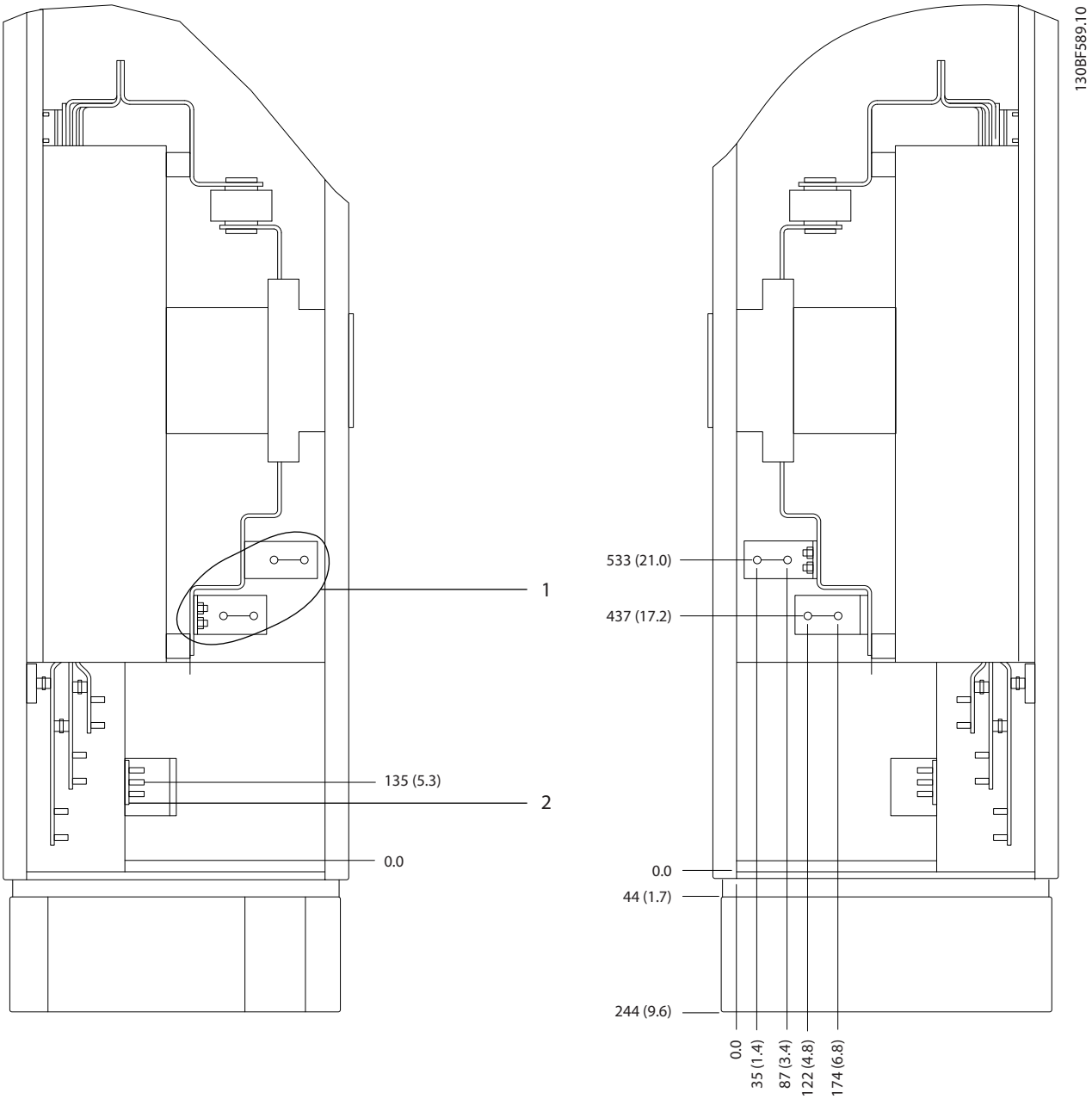

1	Mains terminals	2	Ground bar

Illustration 8.38 Terminal Dimensions for F3–F4 Options Cabinet with Circuit Breaker/Molded Case Switch (380–480/500 V Models: P450; 525–690 V Models: P630–P710), Side View

 Danfoss A/S © 11/2017 All rights reserved.

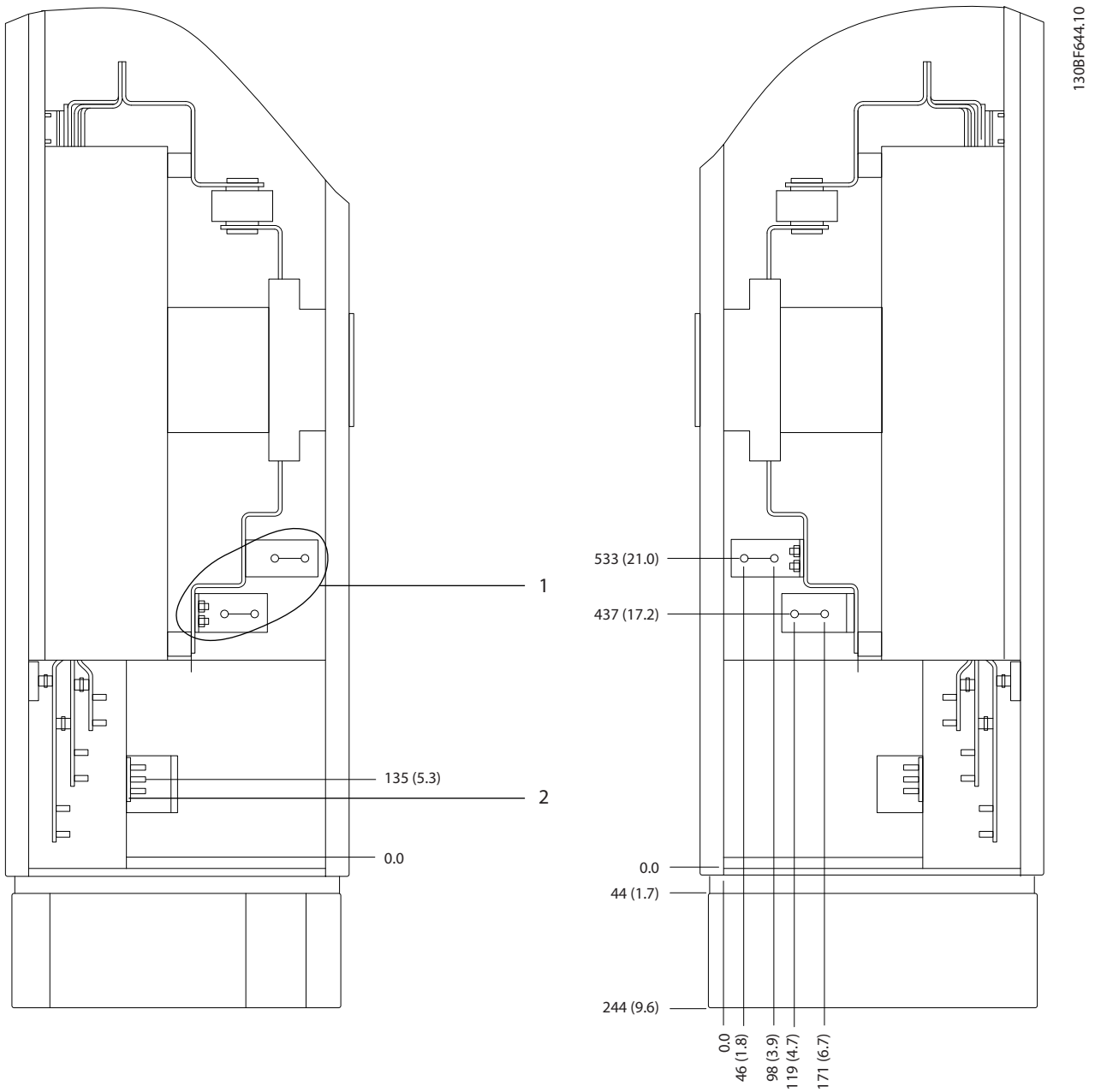

1	Mains terminals	2	Ground bar

Illustration 8.39 Terminal Dimensions for F3–F4 Options Cabinet with Circuit Breaker/Molded Case Switch (380–480/500 V Models: P500–P630; 525–690 V Models: P800), Side View

Danfoss A/S © 11/2017 All rights reserved.

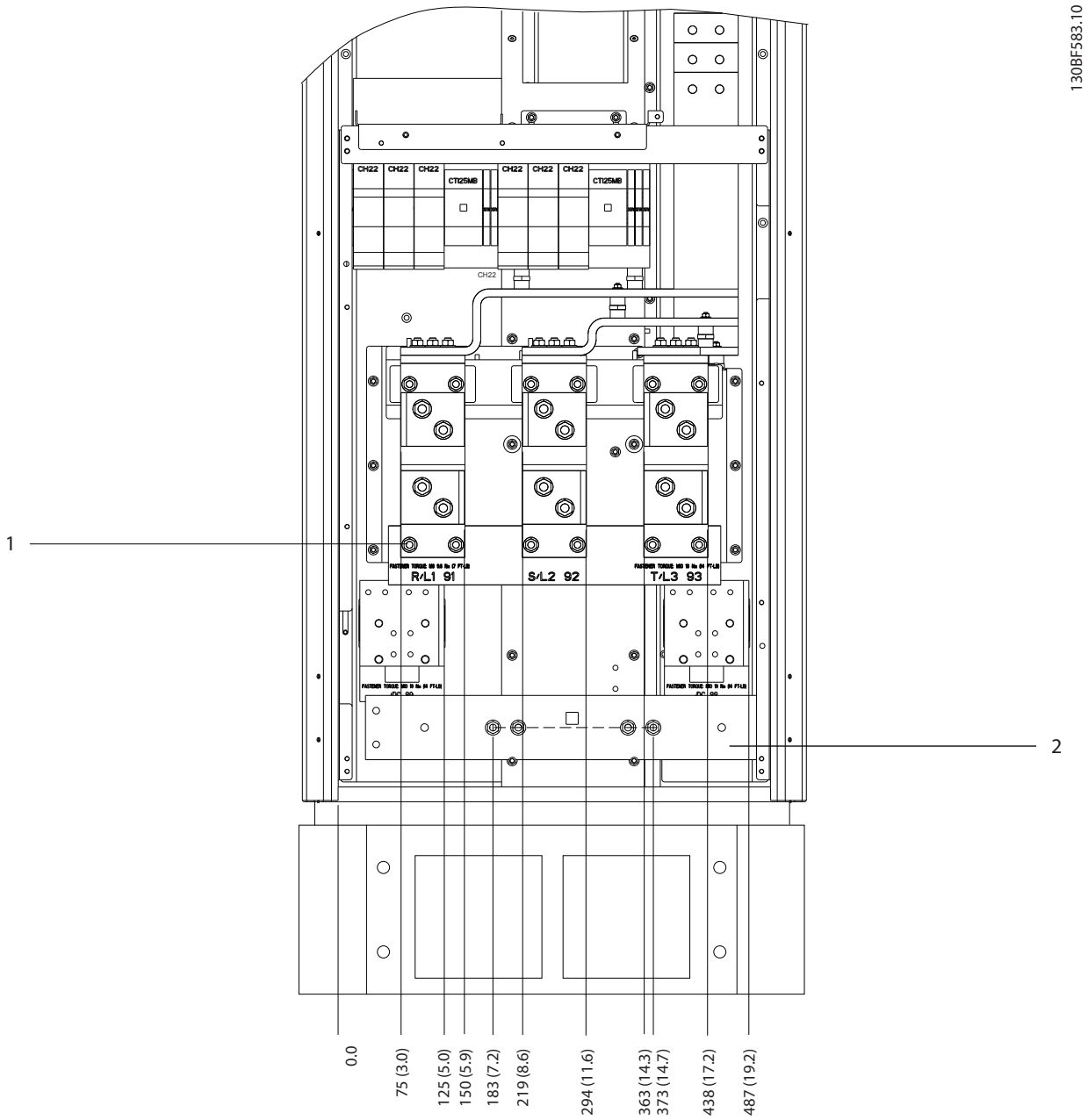

1	Mains terminals	2	Ground bar

Illustration 8.40 Terminal Dimensions for F1–F4 Rectifier Cabinet, Front View

 Danfoss A/S © 11/2017 All rights reserved.

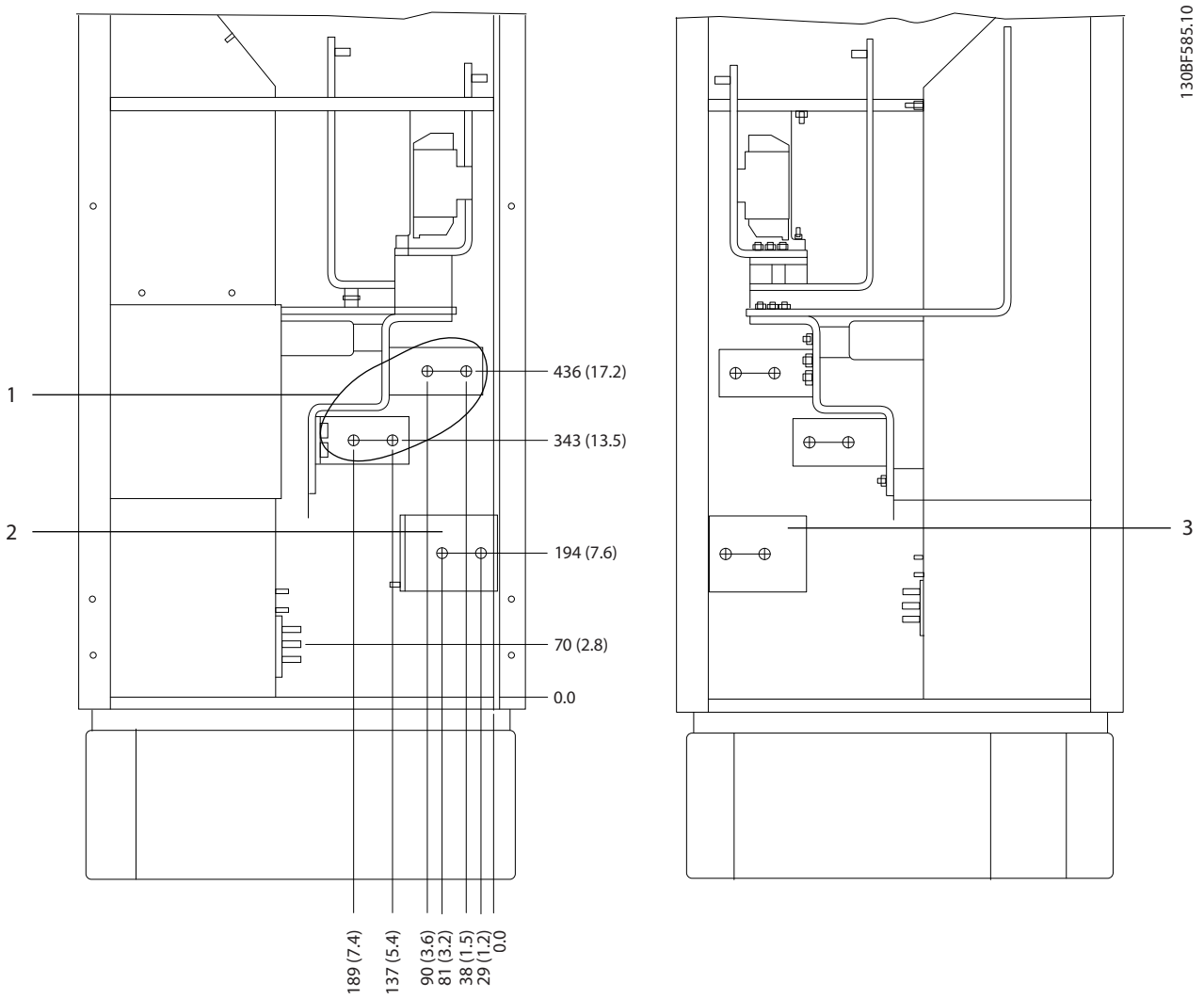

1	Mains terminals	3	Load share terminals (–)
2	Load share terminals (+)	–	–

Illustration 8.41 Terminal Dimensions for F3–F4 Rectifier Cabinet, Side View

Danfoss A/S © 11/2017 All rights reserved.

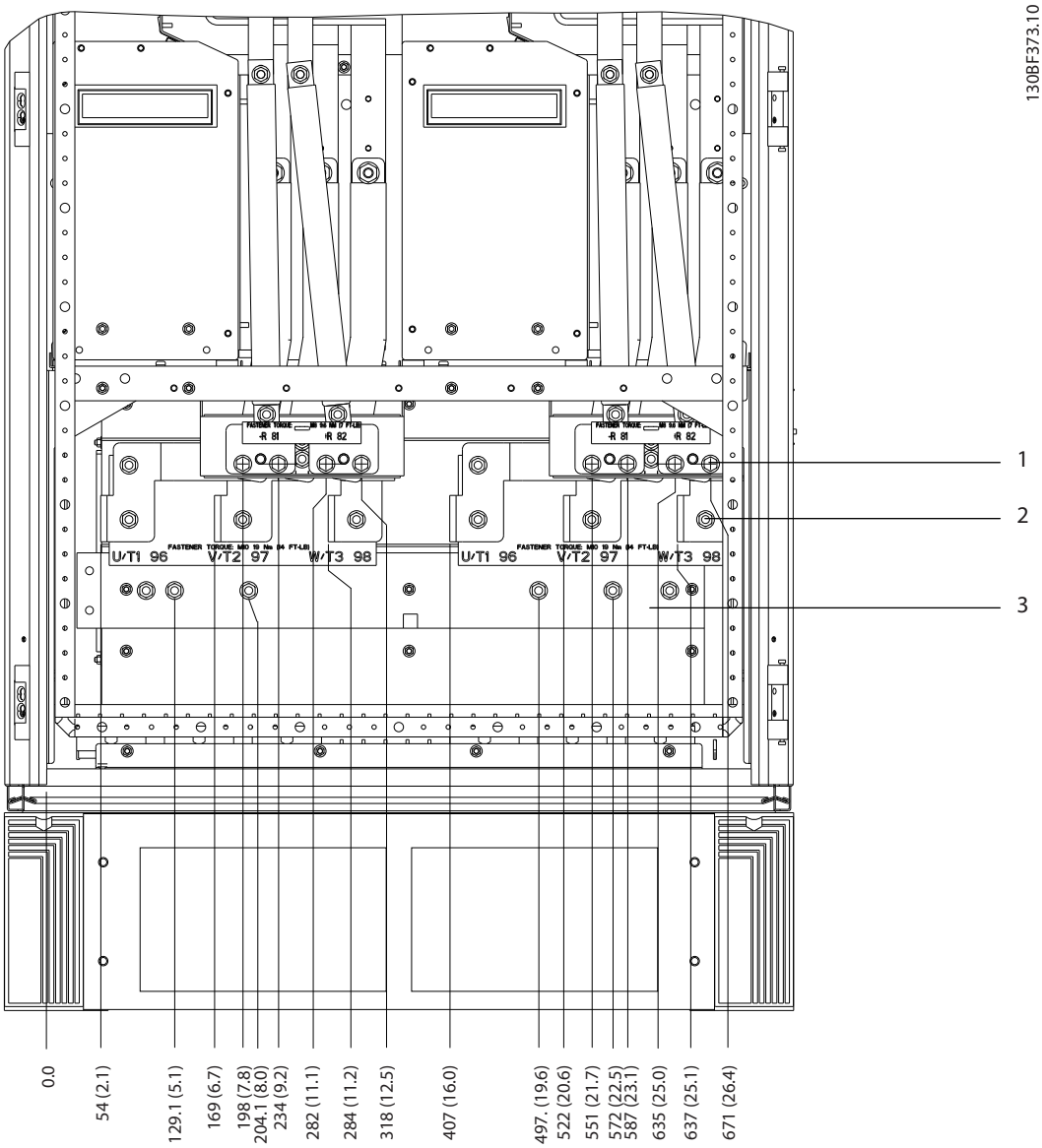

1	Brake terminals	3	Ground bar
2	Motor terminals	–	–

Illustration 8.42 Terminal Dimensions for F1/F3 Inverter Cabinet, Front View

 Danfoss A/S © 11/2017 All rights reserved.

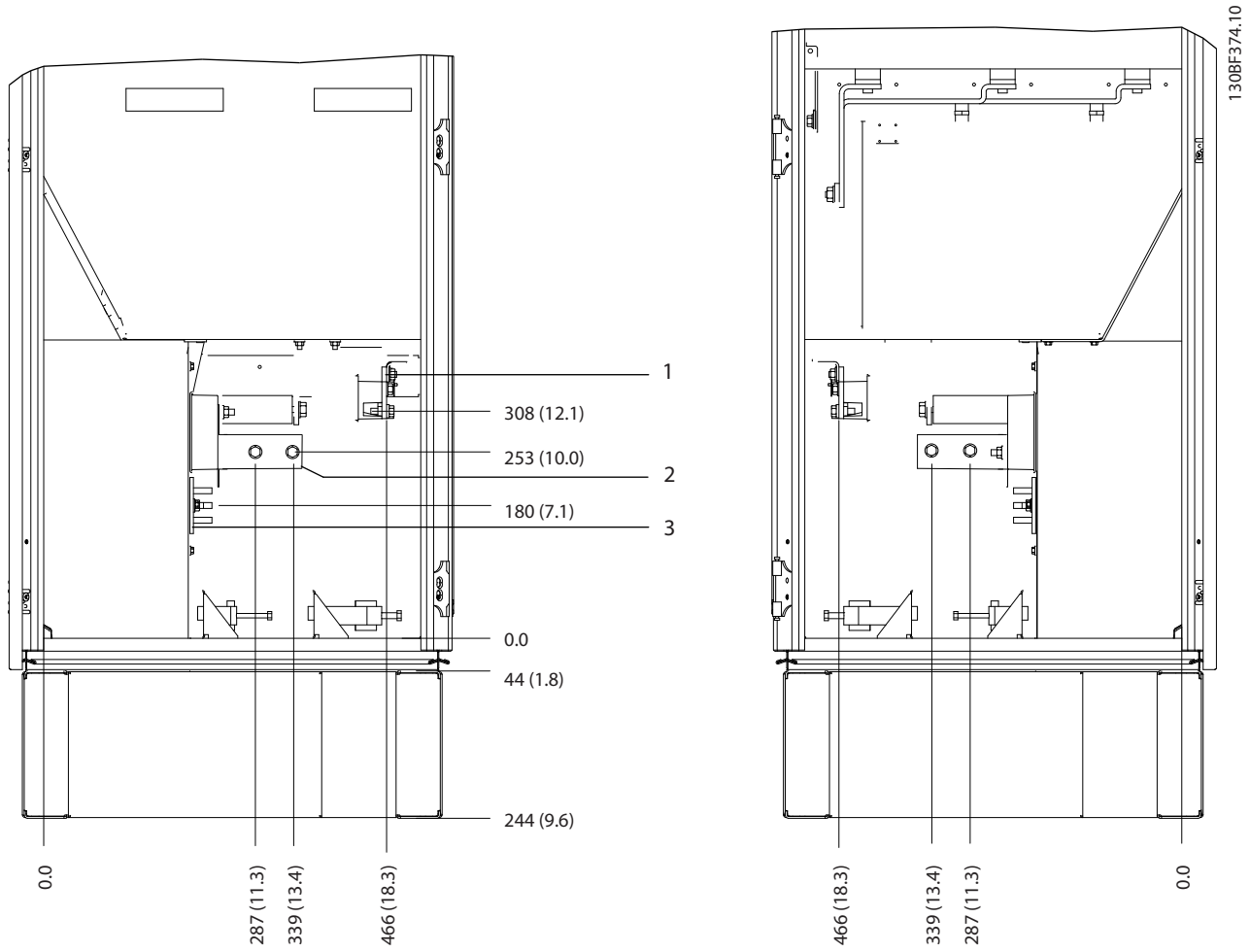

1	Brake terminals	3	Ground bar
2	Motor terminals	–	–

Illustration 8.43 Terminal Dimensions for F1/F3 Inverter Cabinet, Side View

Danfoss A/S © 11/2017 All rights reserved.

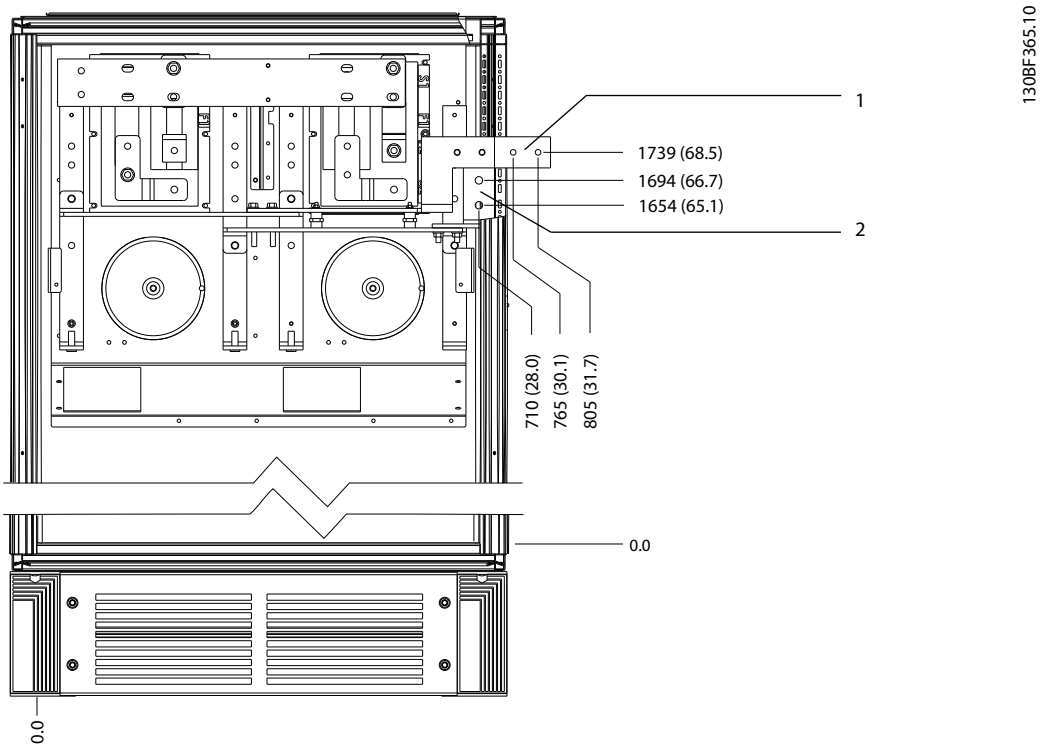

1	DC –	2	DC +

Illustration 8.44 Terminal Dimensions for F1/F3 Regeneration Terminals, Front View

 Danfoss A/S © 11/2017 All rights reserved.

8.6 F4 Exterior and Terminal Dimensions

8.6.1 F4 Exterior Dimensions

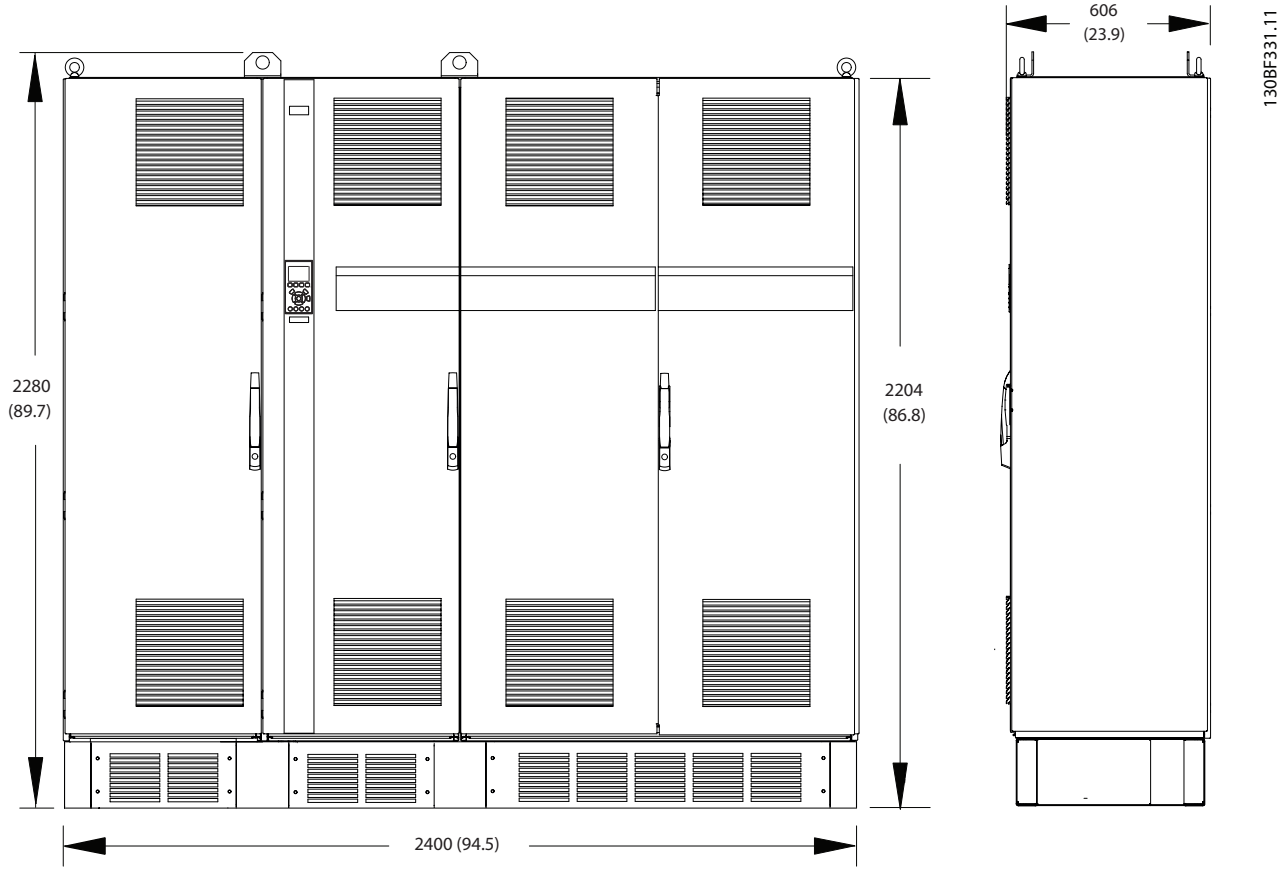

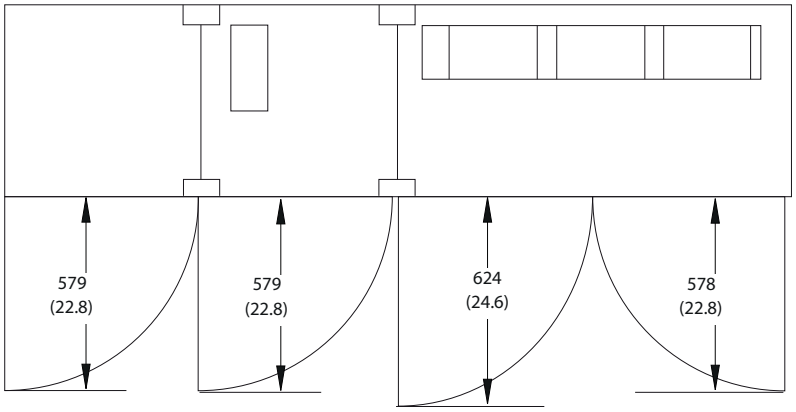

Illustration 8.45 Front, Side, and Door Clearance Dimensions for F4

Danfoss A/S © 11/2017 All rights reserved.

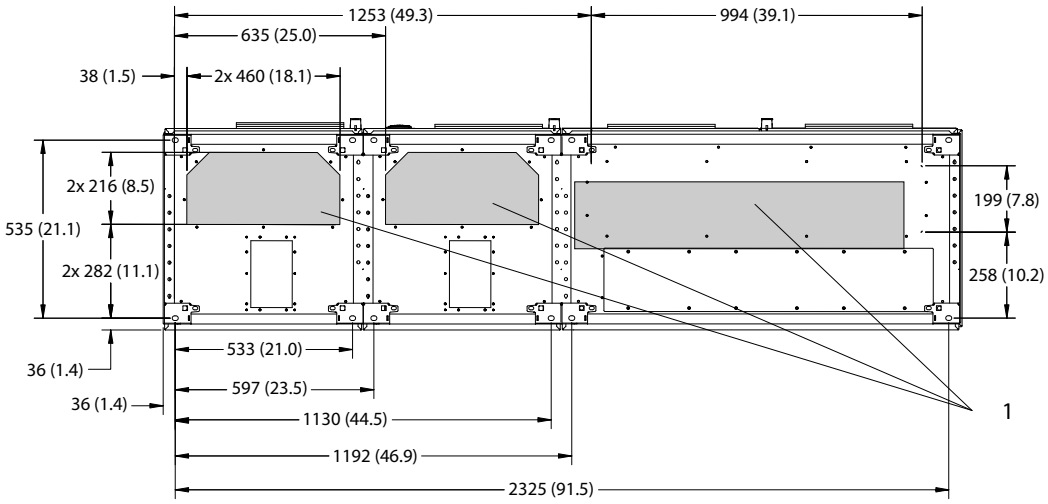

1	Mains side	2	Motor side

Illustration 8.46 Gland Plate Dimensions for F4

8

 Danfoss A/S © 11/2017 All rights reserved.

8.6.2 F4 Terminal Dimensions

Power cables are heavy and hard to bend. To ensure easy installation of the cables, consider the optimum placement of the drive. Each terminal allows up to 4 cables with cable lugs or a standard box lug. Ground is connected to a relevant termination point in the drive.

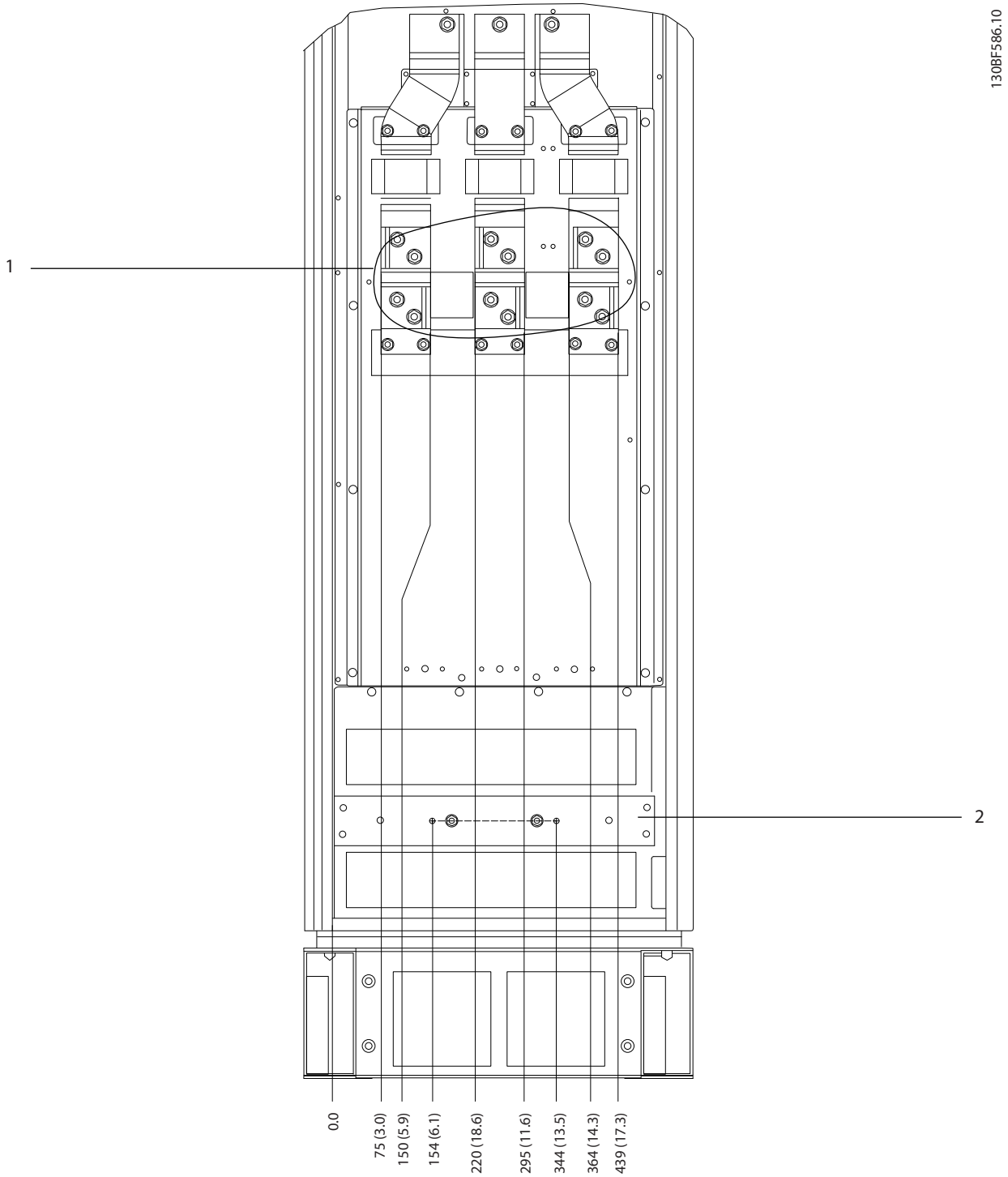

1	Mains terminals	2	Ground bar

Illustration 8.47 Terminal Dimensions for F3–F4 Options Cabinet, Front View

Danfoss A/S © 11/2017 All rights reserved.

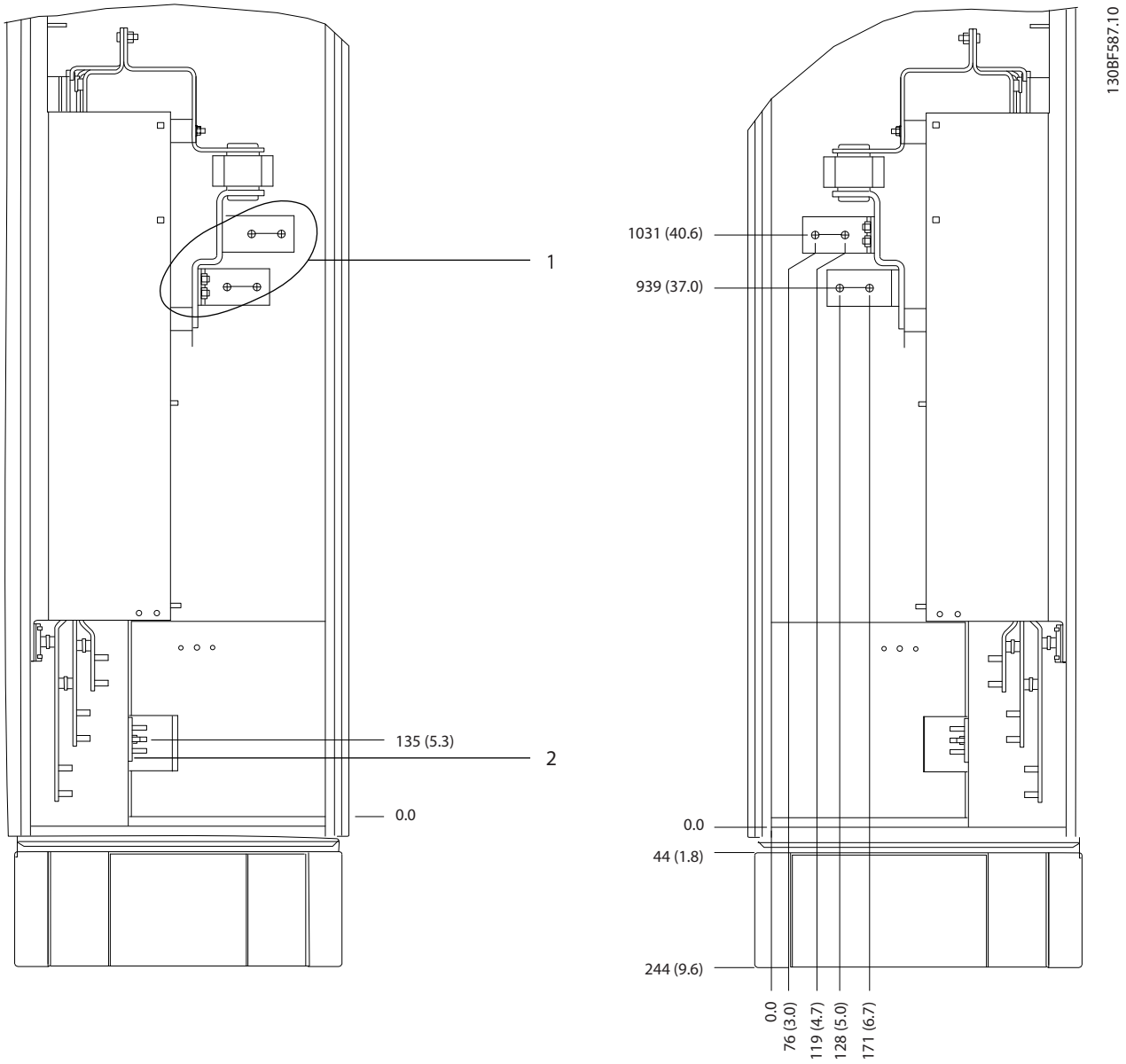

1	Mains terminals	2	Ground bar

Illustration 8.48 Terminal Dimensions for F3–F4 Options Cabinet, Side View

 Danfoss A/S © 11/2017 All rights reserved.

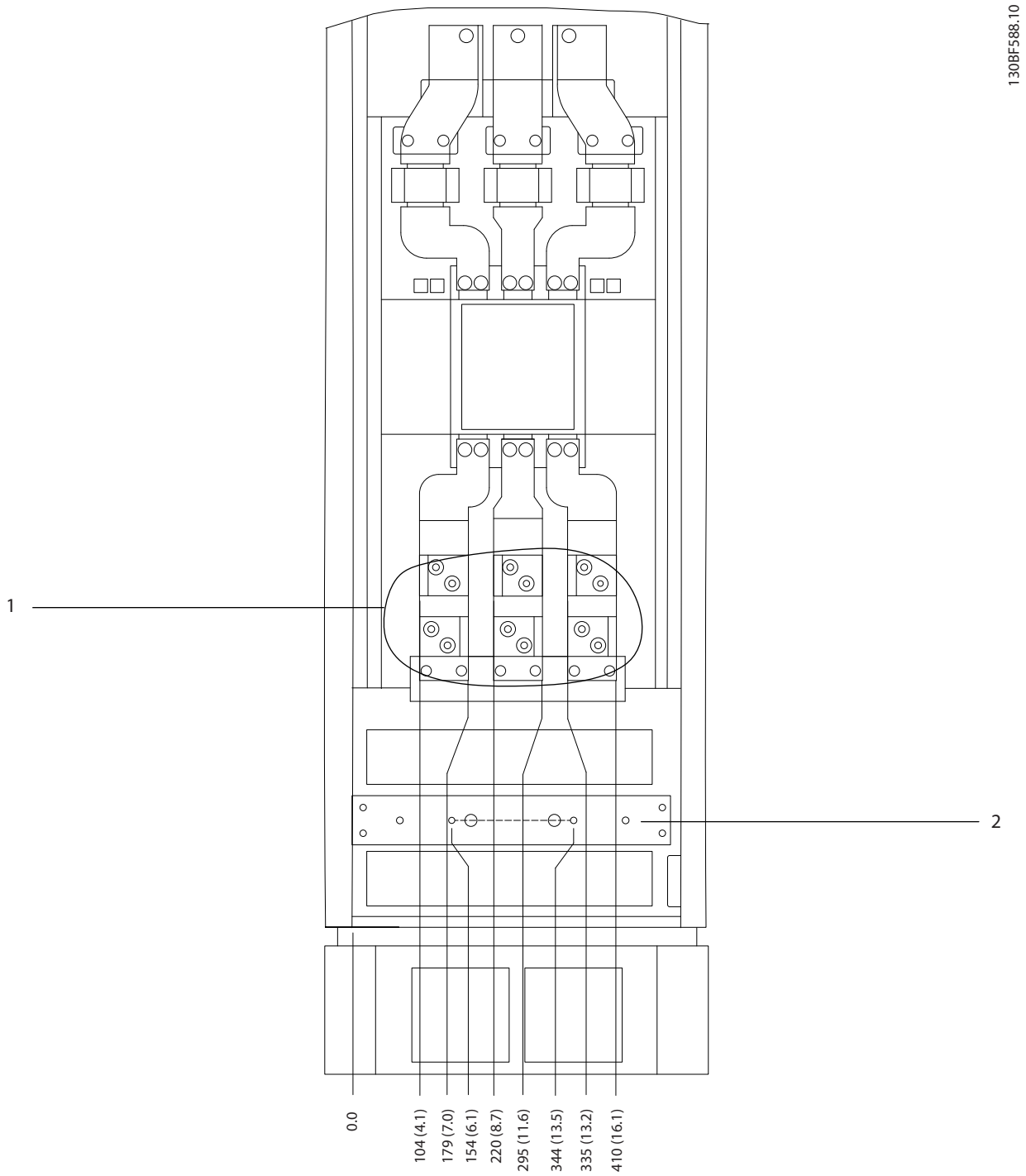

1	Mains terminals	2	Ground bar

Illustration 8.49 Terminal Dimensions for F3–F4 Options Cabinet with Circuit Breaker/Molded Case Switch, Front View

Danfoss A/S © 11/2017 All rights reserved.

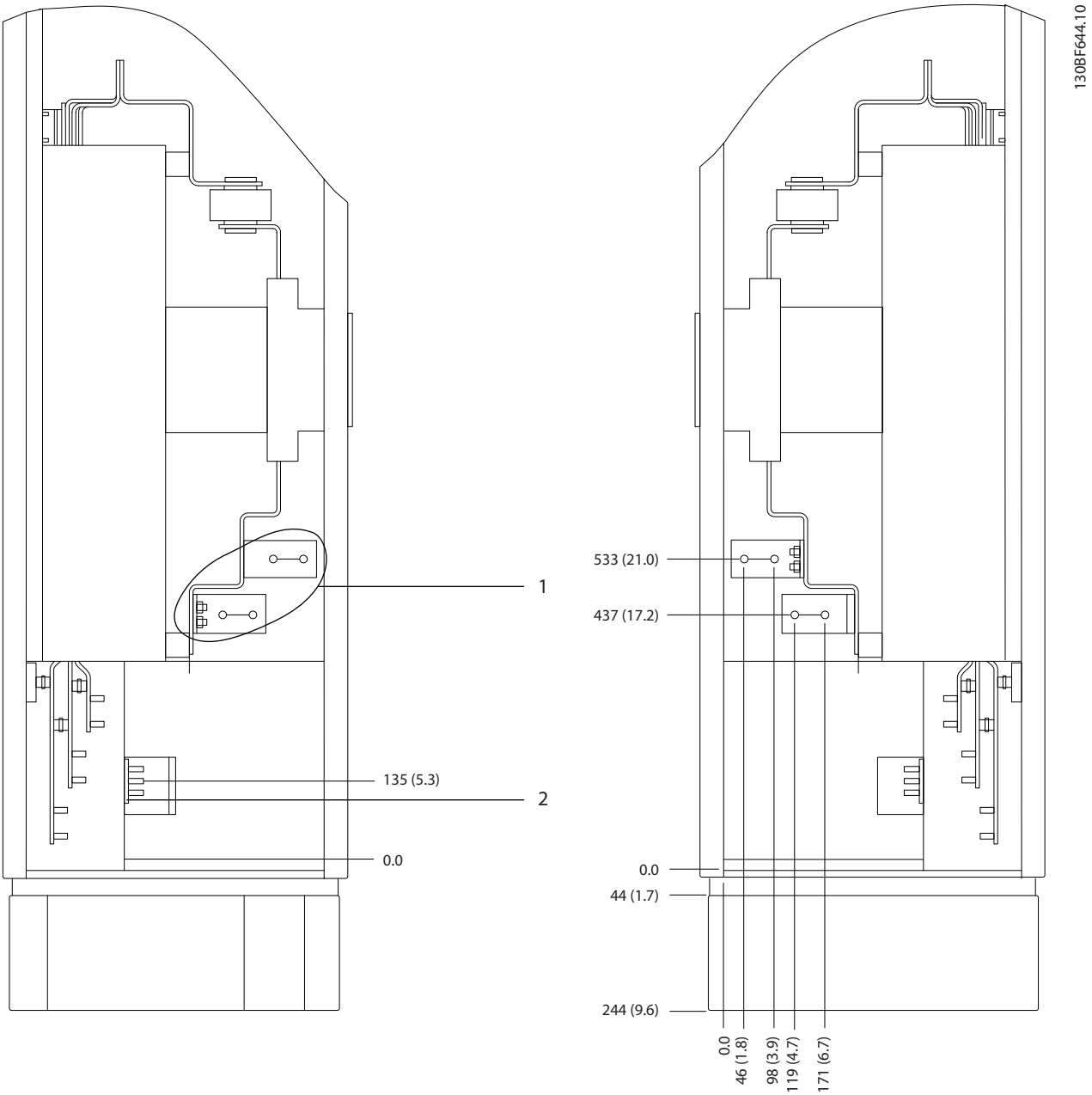

1	Mains terminals	2	Ground bar

Illustration 8.50 Terminal Dimensions for F3–F4 Options Cabinet with Circuit Breaker/Molded Case Switch, Side View

 Danfoss A/S © 11/2017 All rights reserved.

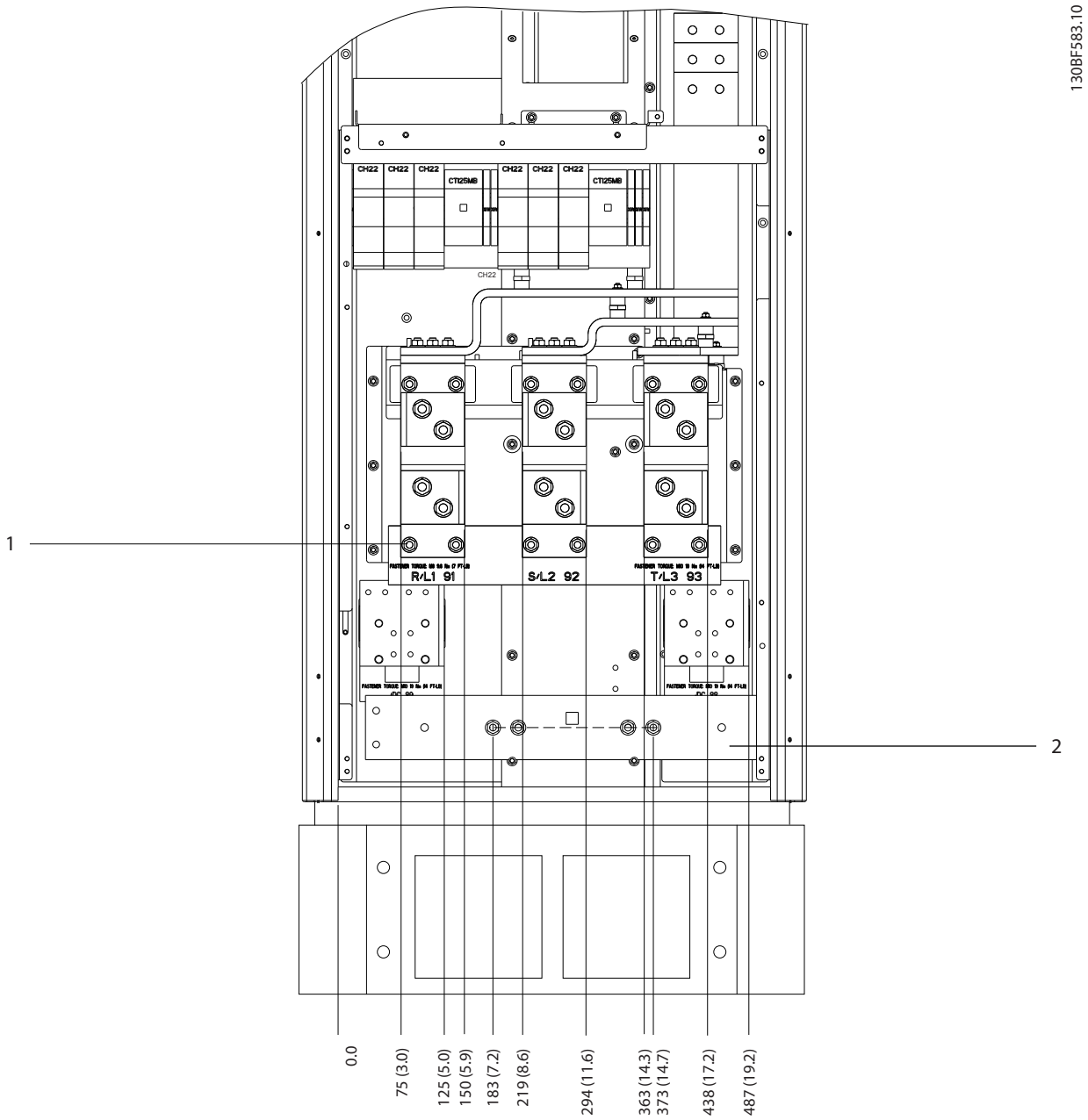

1	Mains terminals	2	Ground bar

Illustration 8.51 Terminal Dimensions for F1–F4 Rectifier Cabinet, Front View

Danfoss A/S © 11/2017 All rights reserved.

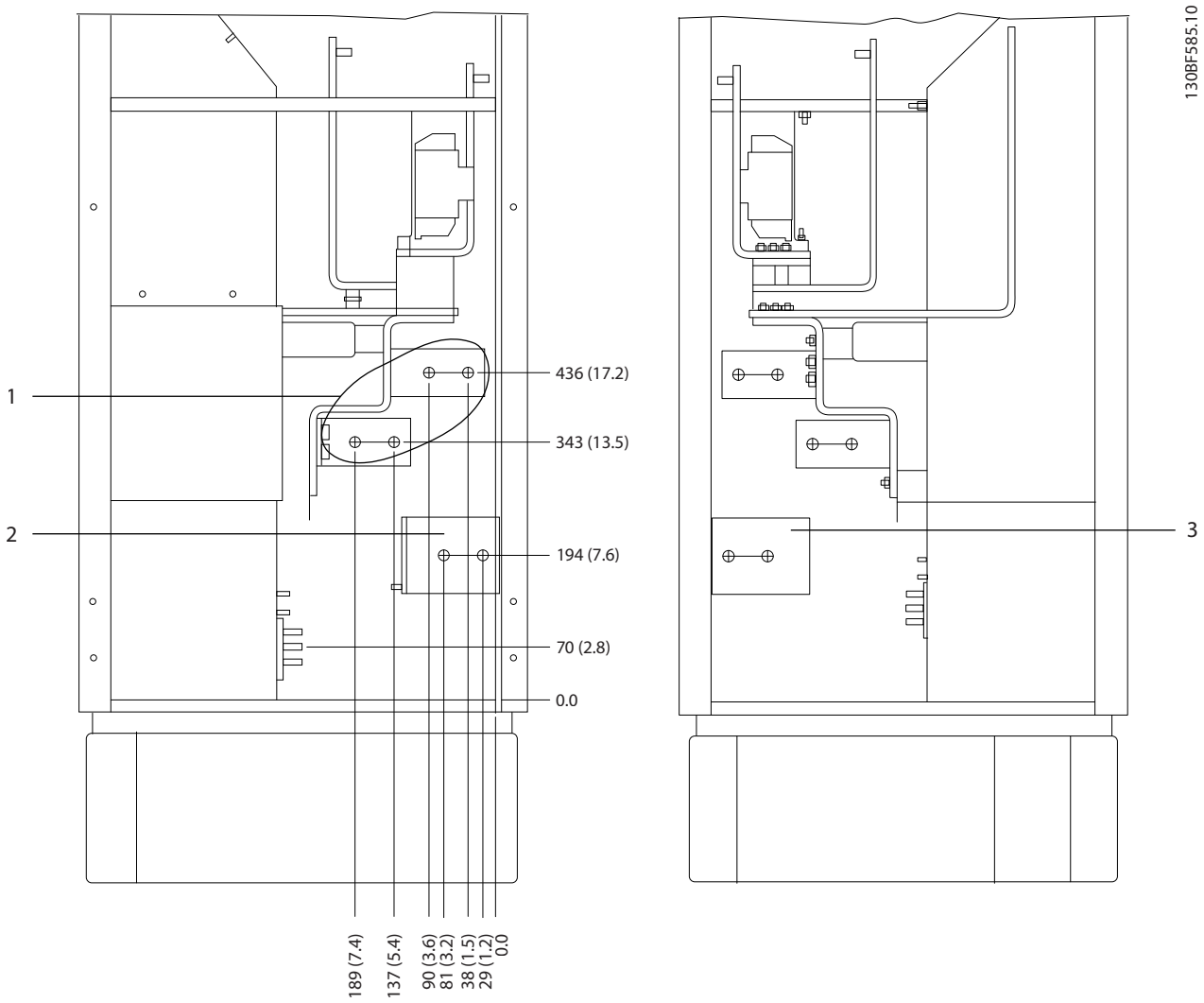

1	Mains terminals	3	Load share terminals (–)
2	Load share terminals (+)	–	–

Illustration 8.52 Terminal Dimensions for F3–F4 Rectifier Cabinet, Side View

 Danfoss A/S © 11/2017 All rights reserved.

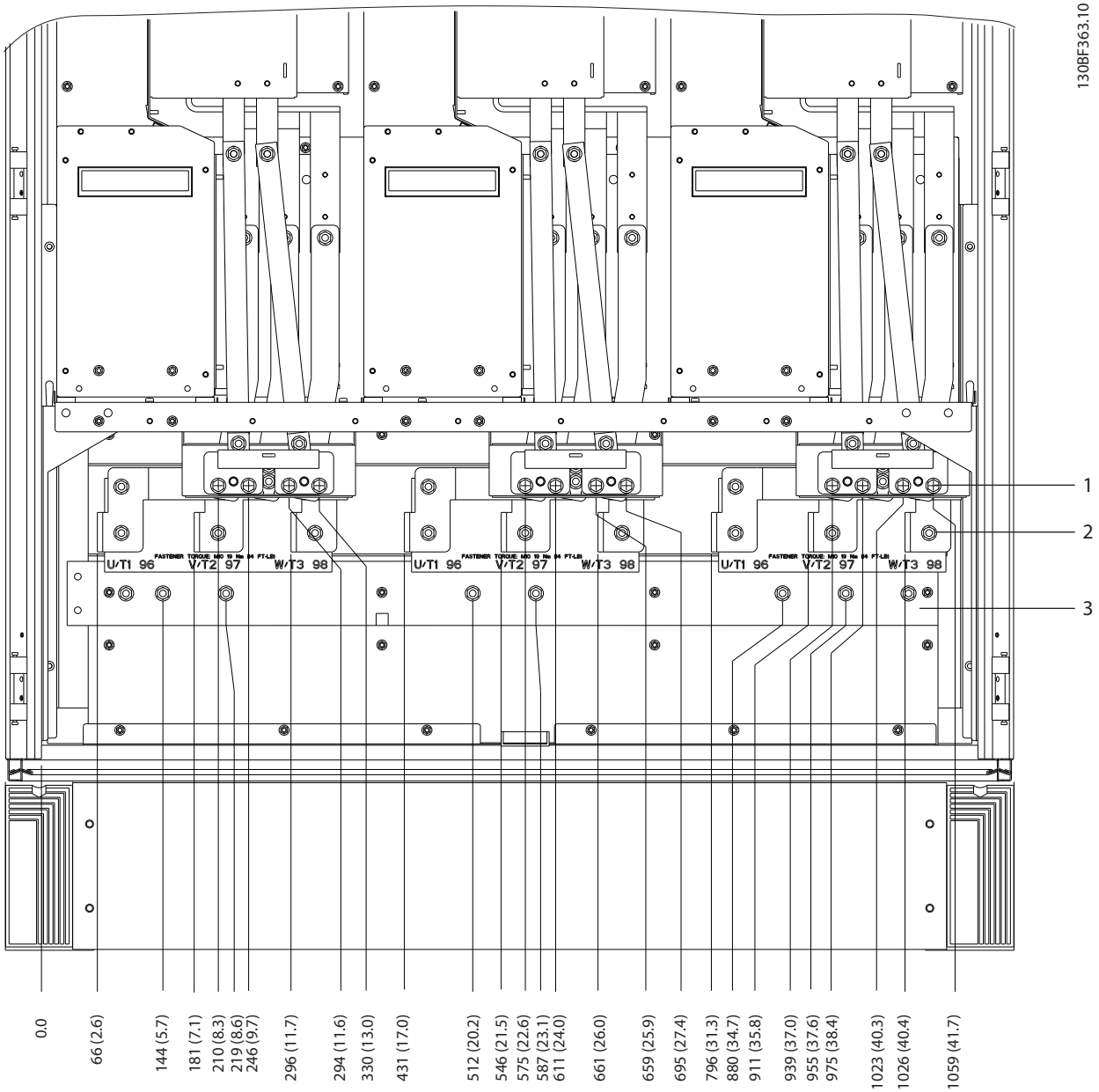

1	Brake terminals	3	Ground bar
2	Motor terminals	–	–

Illustration 8.53 Terminal Dimensions for F2/F4 Inverter Cabinet, Front View

Danfoss A/S © 11/2017 All rights reserved.

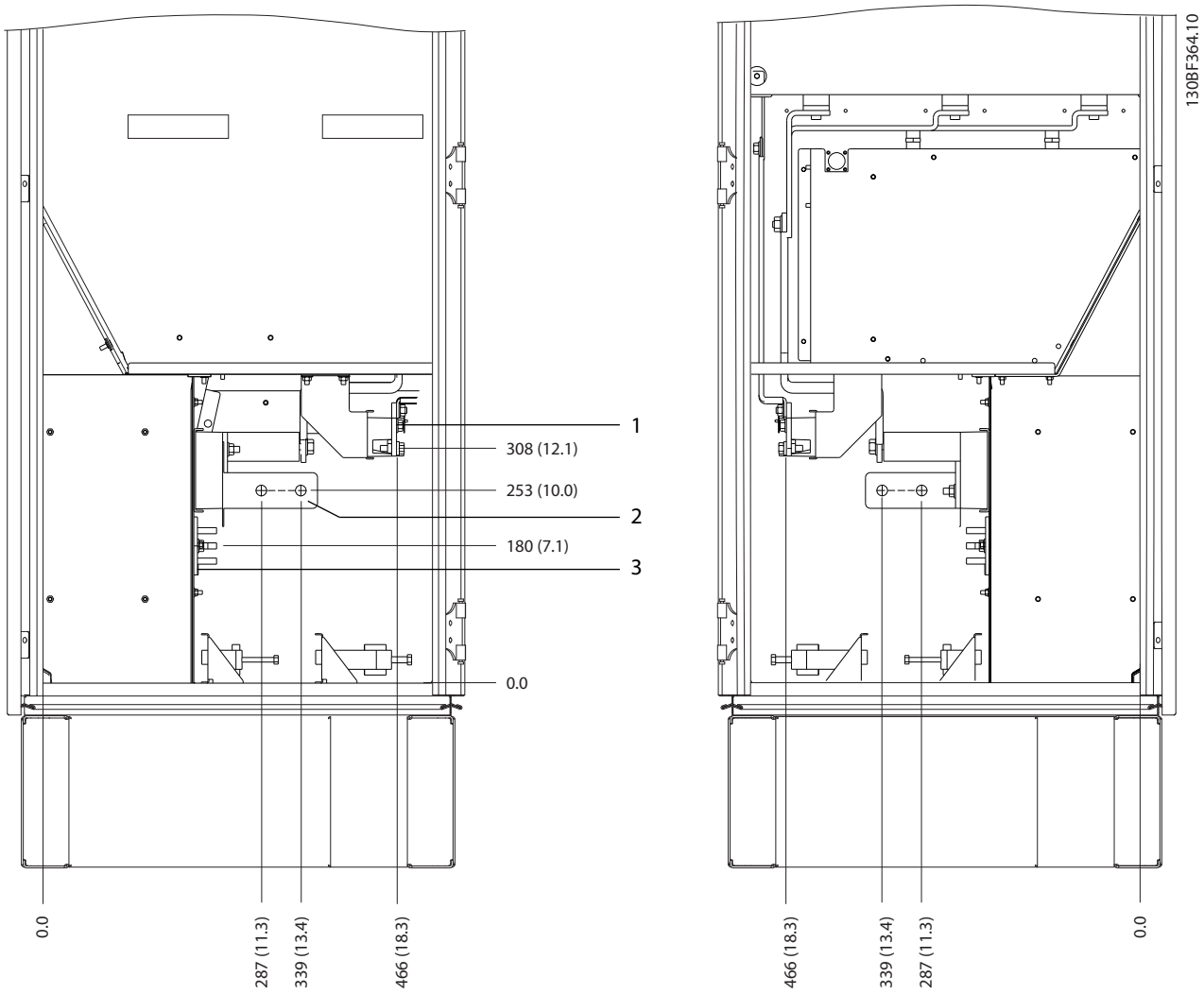

1	Brake terminals	3	Ground bar
2	Motor terminals	–	–

Illustration 8.54 Terminal Dimensions for F2/F4 Inverter Cabinet, Side View

 Danfoss A/S © 11/2017 All rights reserved.

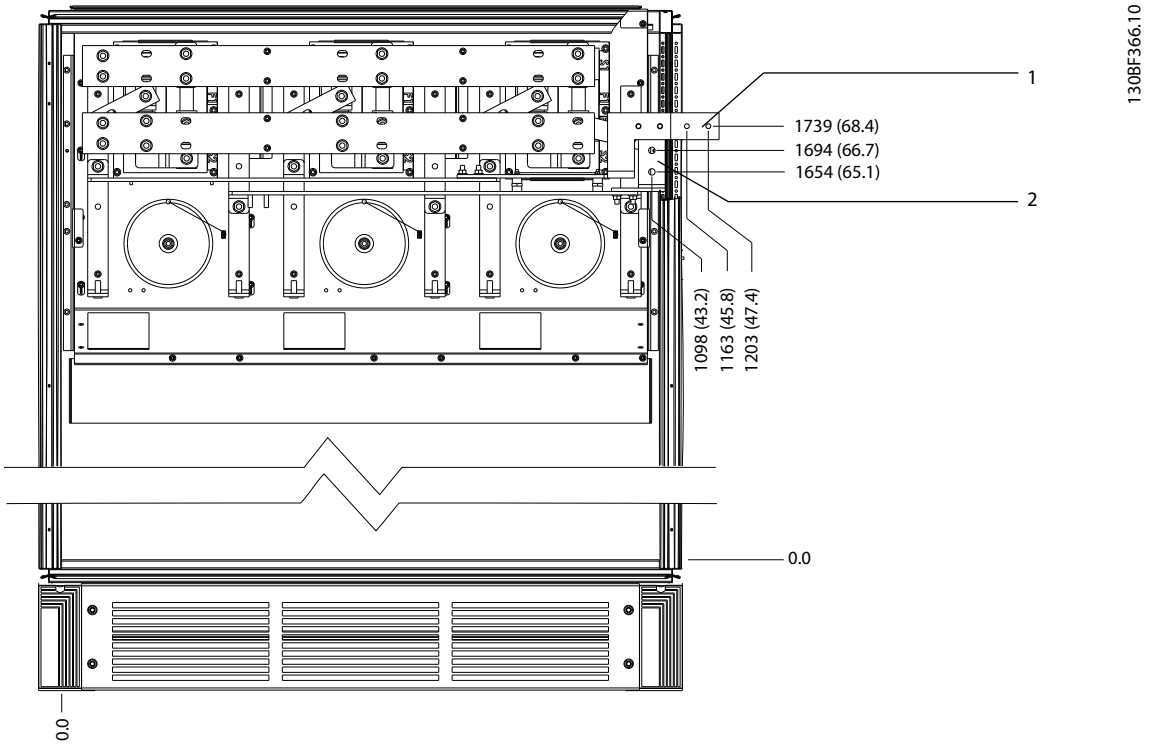

1	DC –	2	DC +

Illustration 8.55 Terminal Dimensions for F2/F4 Regeneration Terminals, Front View

Danfoss A/S © 11/2017 All rights reserved.

8.7 F8 Exterior and Terminal Dimensions

8.7.1 F8 Exterior Dimensions

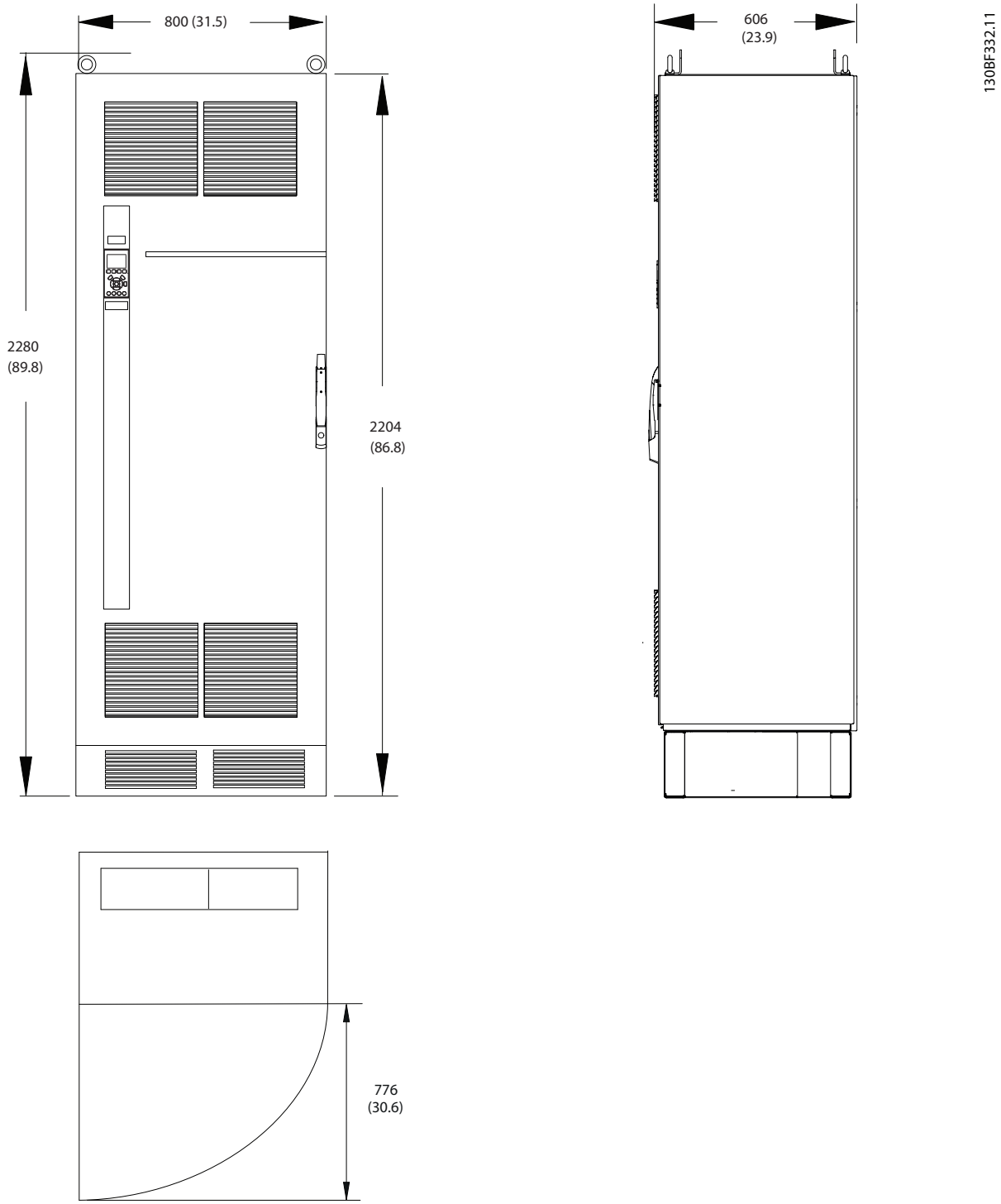

Illustration 8.56 Front, Side, and Door Clearance Dimensions for F8

 Danfoss A/S © 11/2017 All rights reserved.

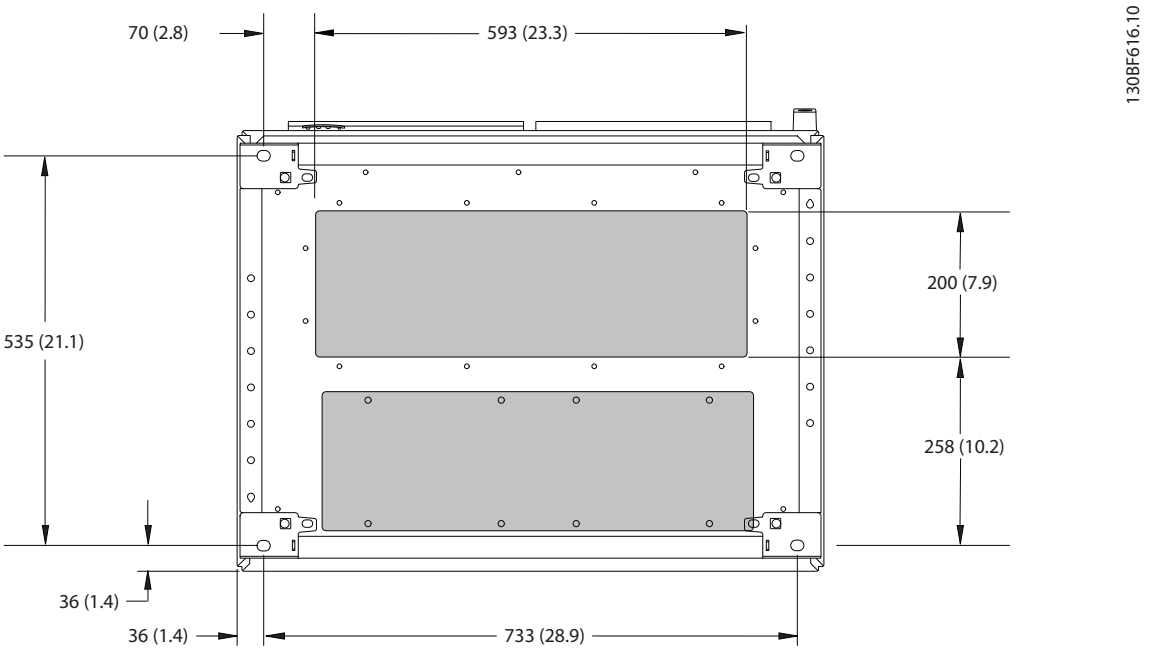

1	Mains side	2	Motor side

Illustration 8.57 Gland Plate Dimensions for F8

Danfoss A/S © 11/2017 All rights reserved.

8.7.2 F8 Terminal Dimensions

Power cables are heavy and hard to bend. To ensure easy installation of the cables, consider the optimum placement of the drive. Each terminal allows up to 4 cables with cable lugs or a standard box lug. Ground is connected to a relevant termination point in the drive.

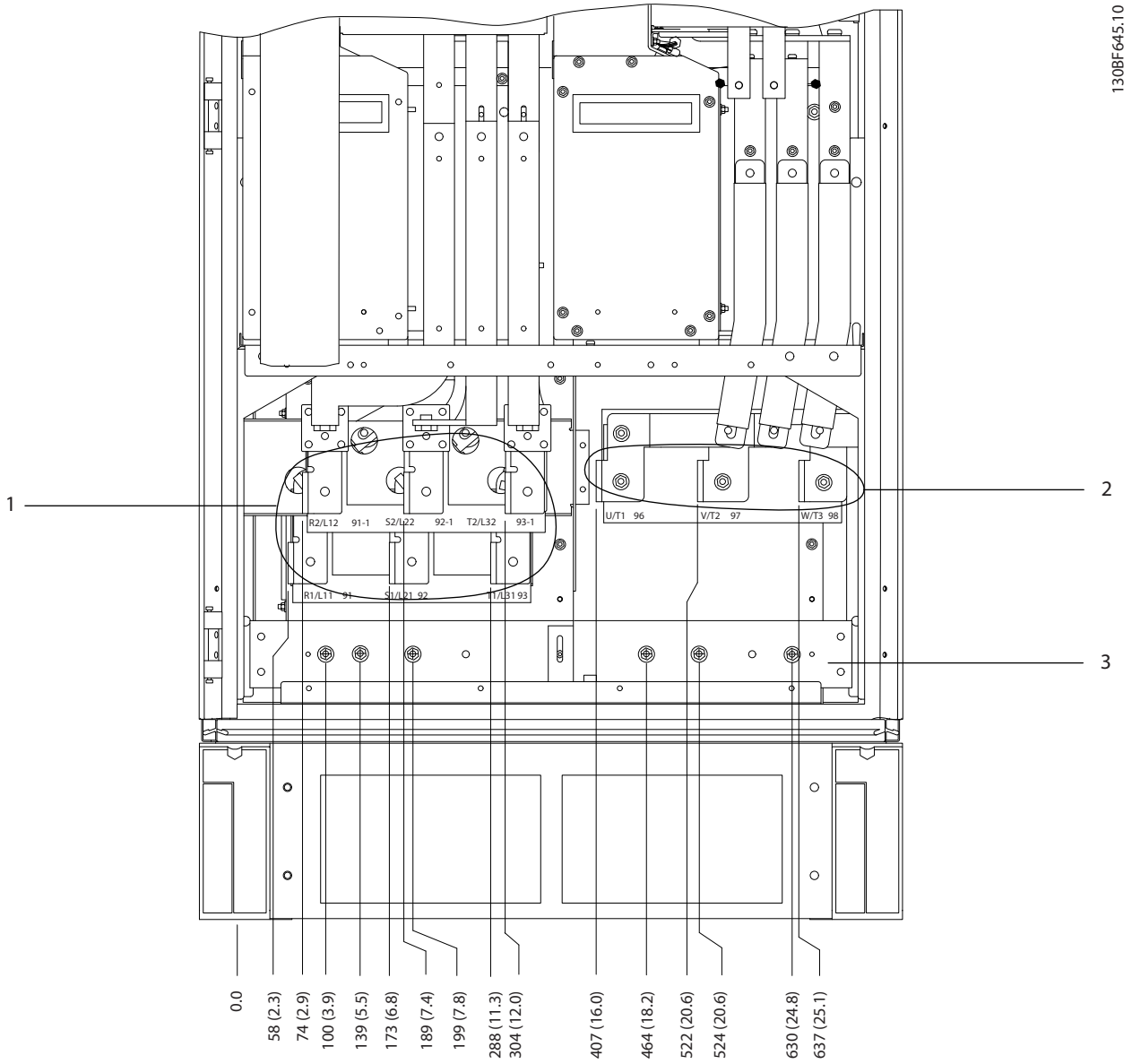

1	Mains terminals	3	Ground bar
2	Motor terminals	–	–

Illustration 8.58 Terminal Dimensions for F8–F9 Rectifier/Inverter Cabinet, Front View

 Danfoss A/S © 11/2017 All rights reserved.

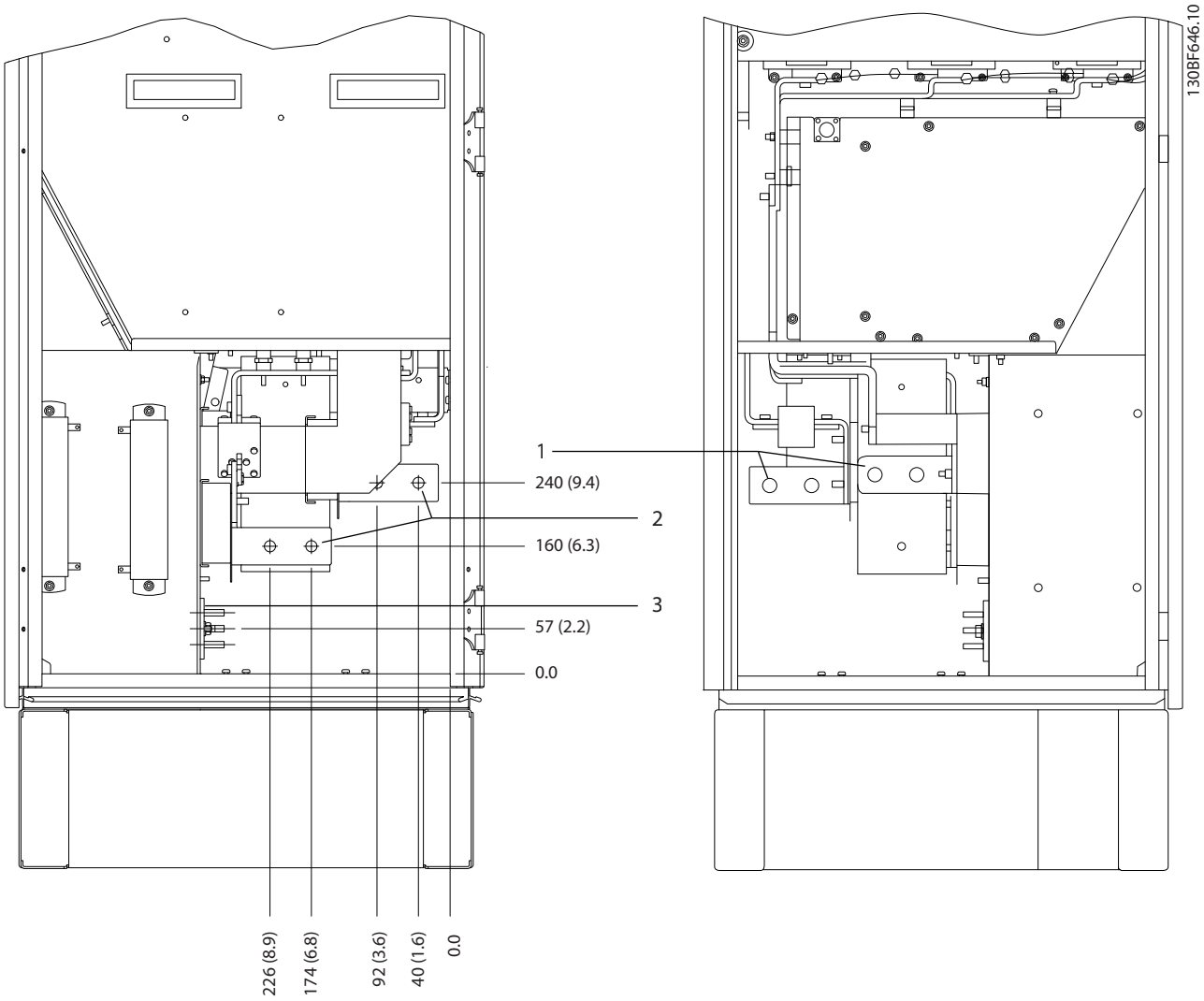

1	Mains terminals	3	Ground bar
2	Motor terminals	–	–

Illustration 8.59 Terminal Dimensions for F8–F9 Rectifier/Inverter Cabinet, Side View

Danfoss A/S © 11/2017 All rights reserved.

8.8 F9 Exterior and Terminal Dimensions

8.8.1 F9 Exterior Dimensions

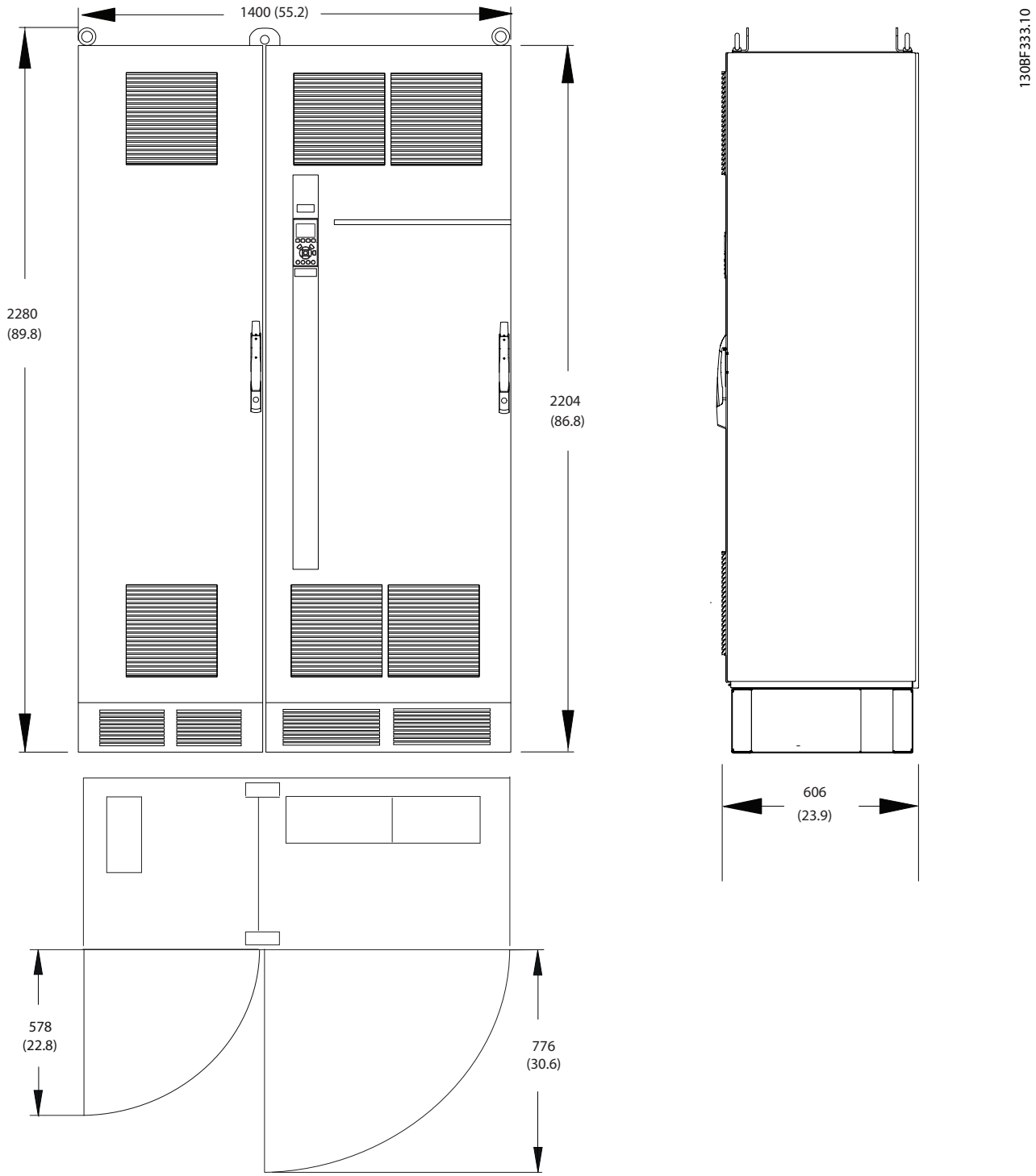

Illustration 8.60 Front, Side, and Door Clearance Dimensions for F9

 Danfoss A/S © 11/2017 All rights reserved.

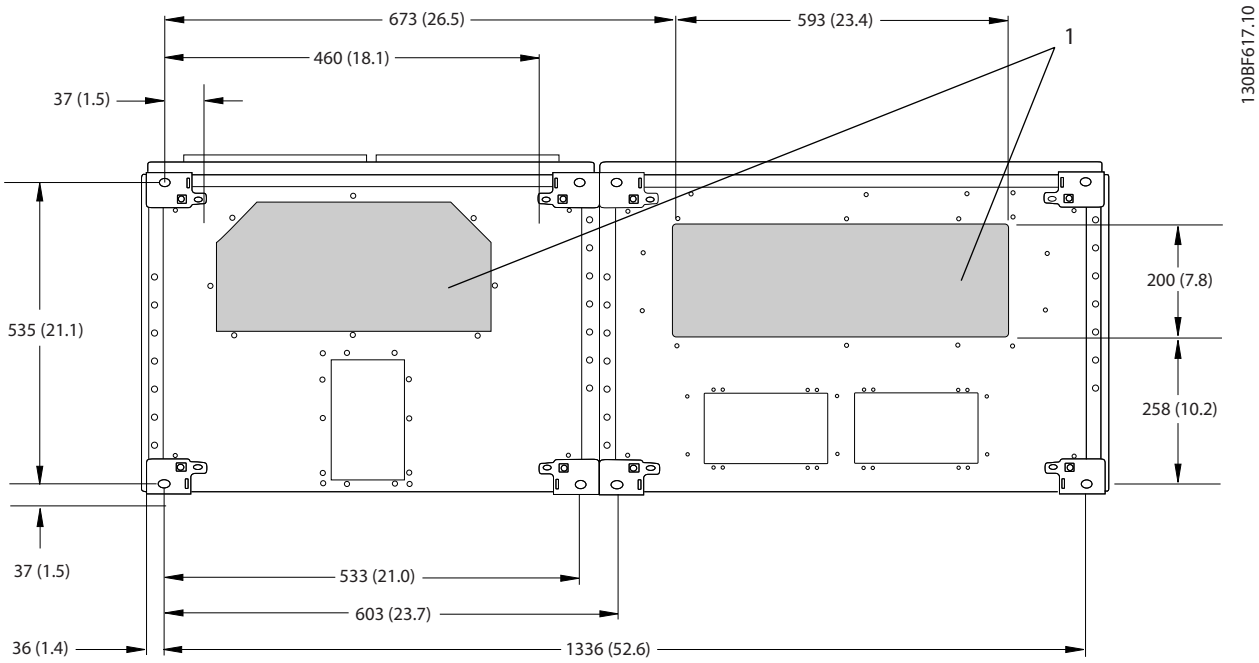

1	Mains side	2	Motor side

Illustration 8.61 Gland Plate Dimensions for F9

Danfoss A/S © 11/2017 All rights reserved.

8.8.2 F9 Terminal Dimensions

Power cables are heavy and hard to bend. To ensure easy installation of the cables, consider the optimum placement of the drive. Each terminal allows up to 4 cables with cable lugs or a standard box lug. Ground is connected to a relevant termination point in the drive.

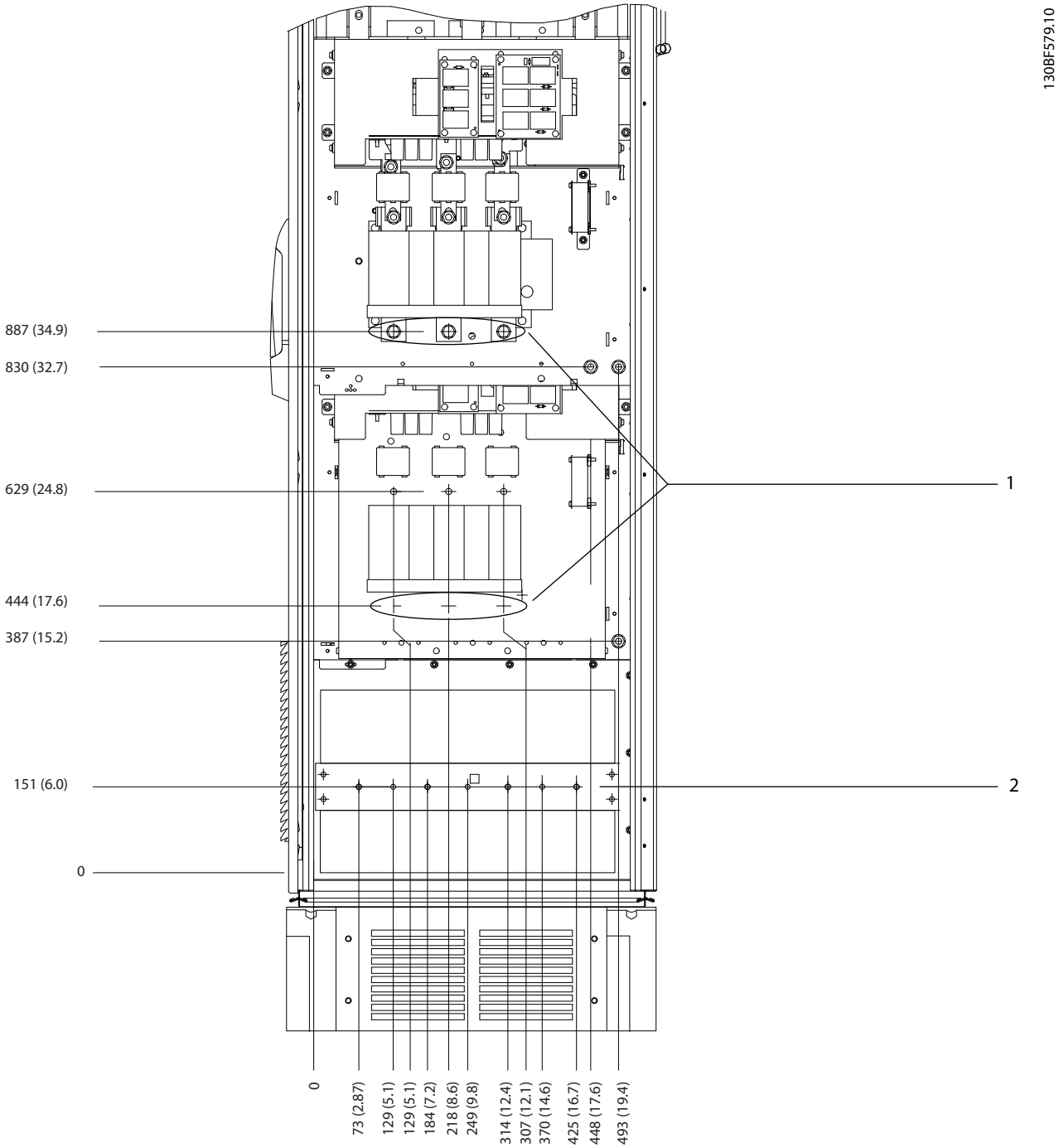

1	Mains terminals	2	Ground bar

Illustration 8.62 Terminal Dimensions for F9 Options Cabinet, Front View

 Danfoss A/S © 11/2017 All rights reserved.

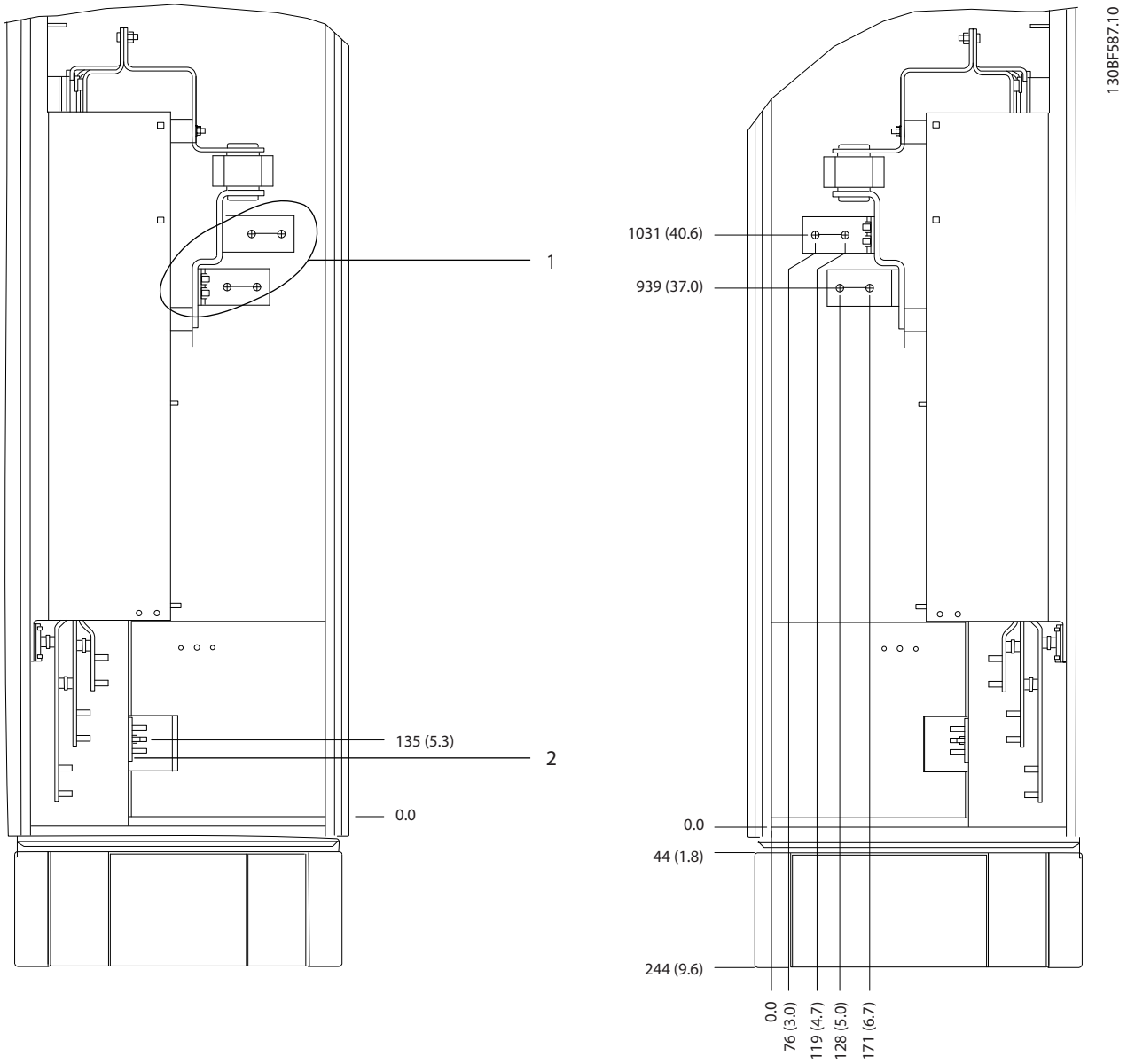

1	Mains terminals	2	Ground bar

Illustration 8.63 Terminal Dimensions for F9 Options Cabinet, Side View

Danfoss A/S © 11/2017 All rights reserved.

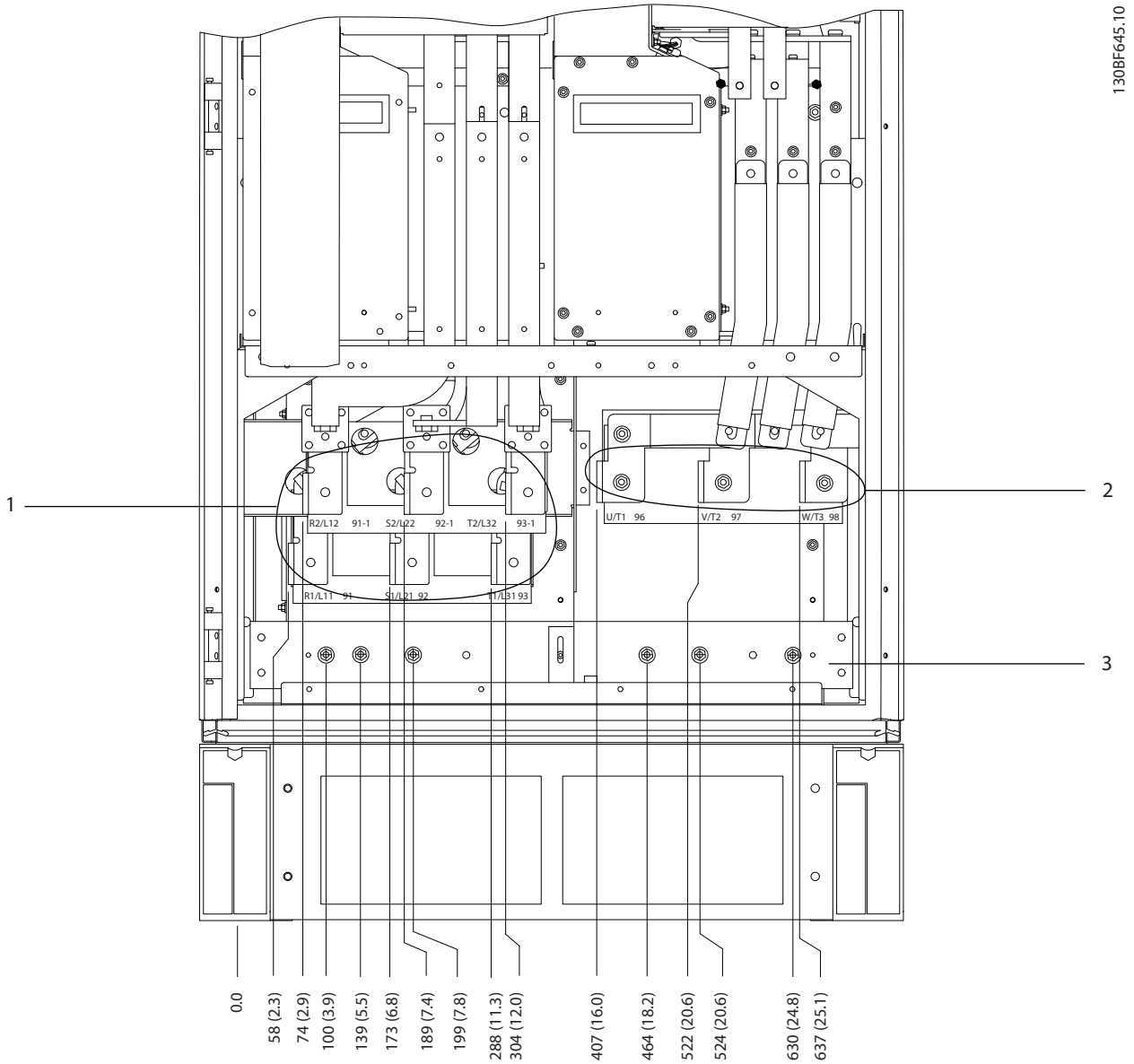

1	Mains terminals	3	Ground bar
2	Motor terminals	–	–

Illustration 8.64 Terminal Dimensions for F8–F9 Rectifier/Inverter Cabinet, Front View

 Danfoss A/S © 11/2017 All rights reserved.

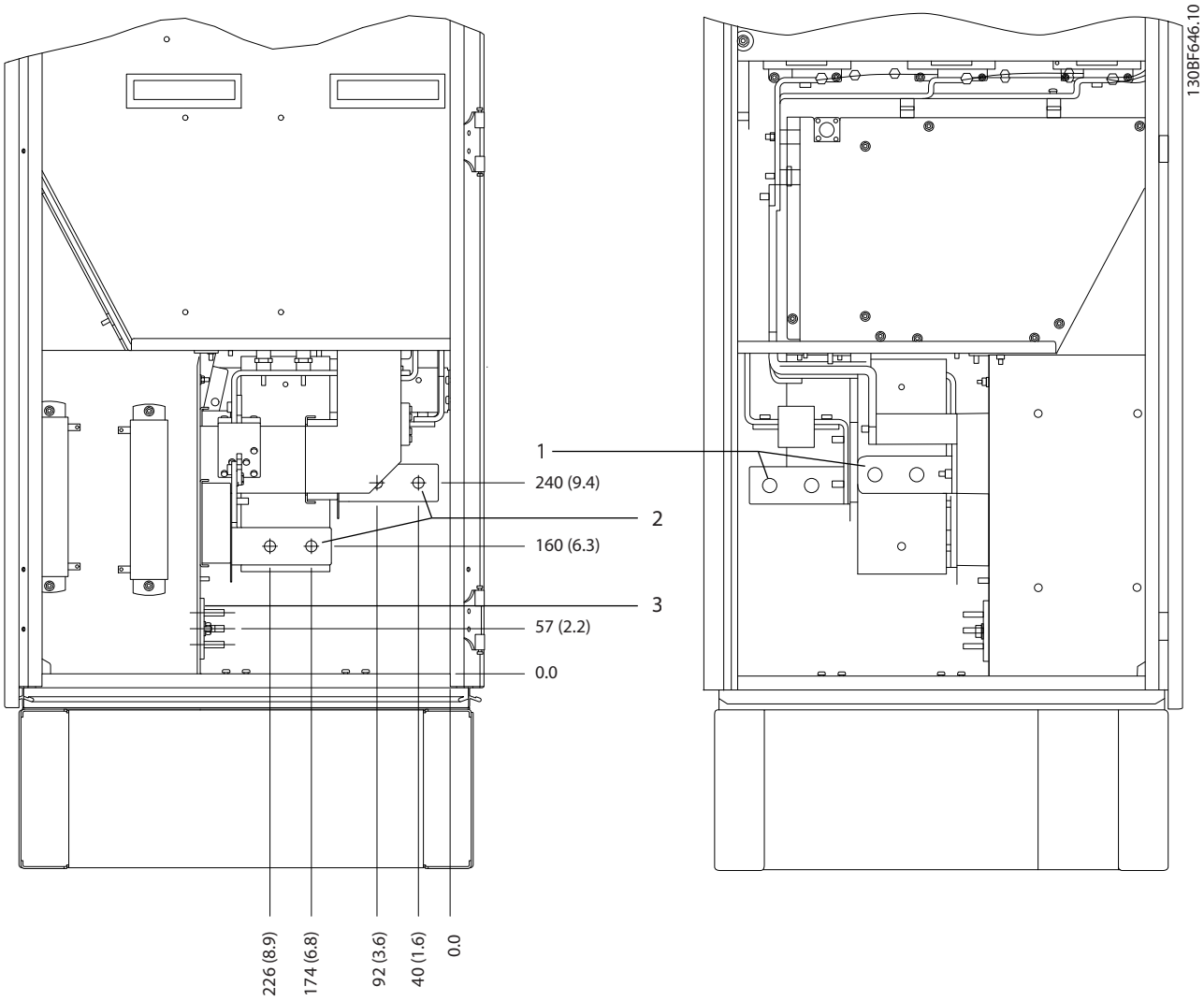

1	Mains terminals	3	Ground bar
2	Motor terminals	–	–

Illustration 8.65 Terminal Dimensions for F8–F9 Rectifier/Inverter Cabinet, Side View

Danfoss A/S © 11/2017 All rights reserved.

8.9 F10 Exterior and Terminal Dimensions

8.9.1 F10 Exterior Dimensions

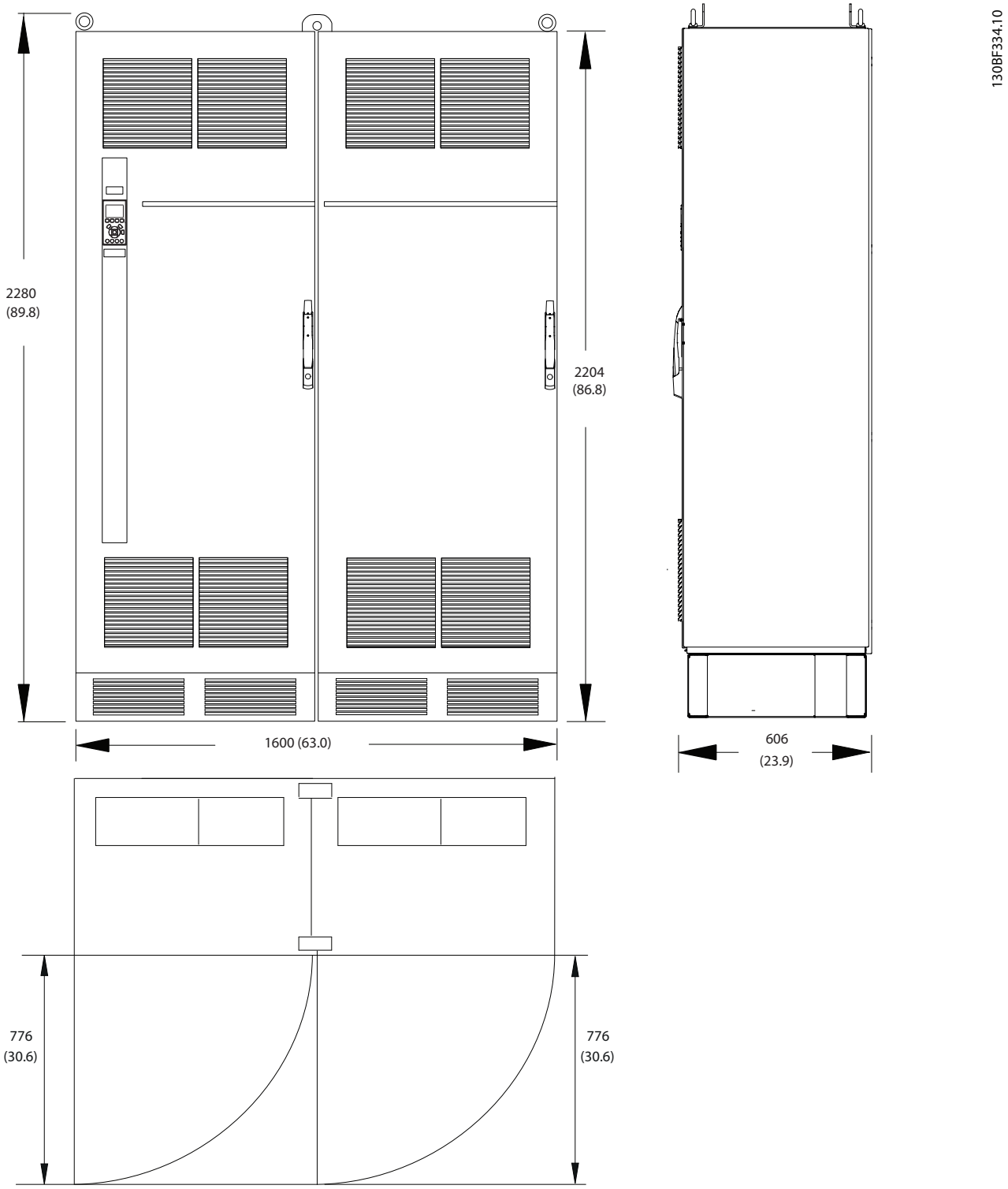

Illustration 8.66 Front, Side, and Door Clearance Dimensions for F10

 Danfoss A/S © 11/2017 All rights reserved.

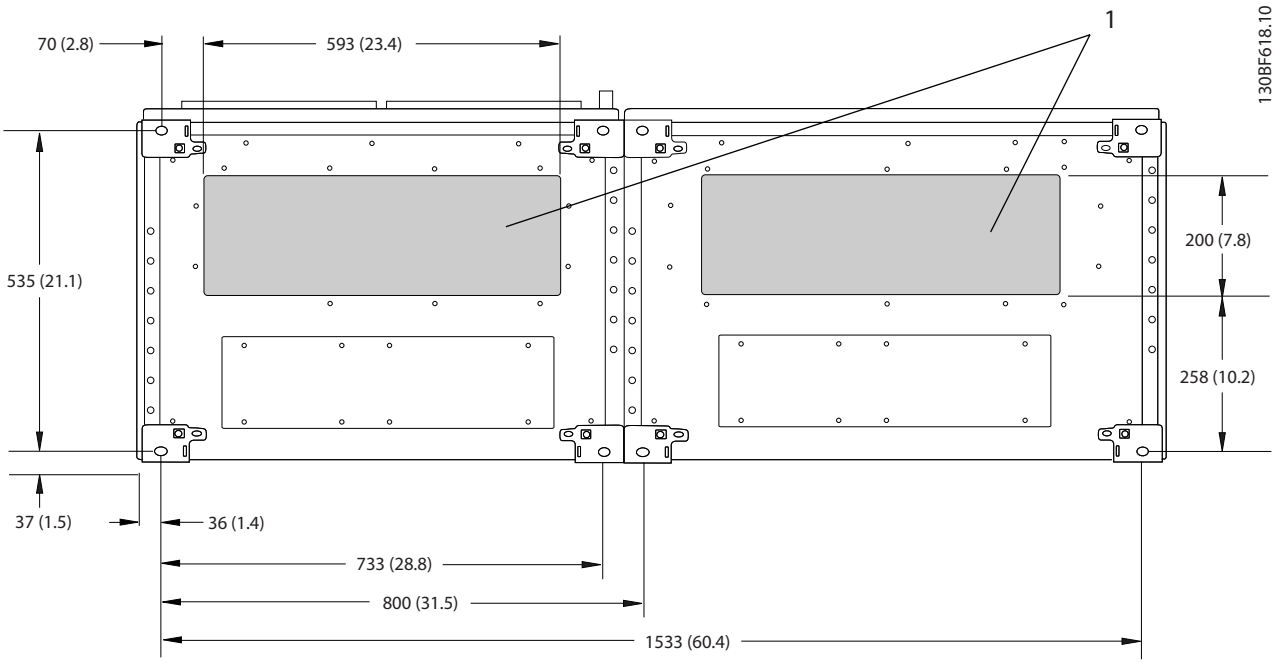

1	Mains side	2	Motor side

Illustration 8.67 Gland Plate Dimensions for F10

 Danfoss A/S © 11/2017 All rights reserved.

8.9.2 F10 Terminal Dimensions

Power cables are heavy and hard to bend. To ensure easy installation of the cables, consider the optimum placement of the drive. Each terminal allows up to 4 cables with cable lugs or a standard box lug. Ground is connected to a relevant termination point in the drive.

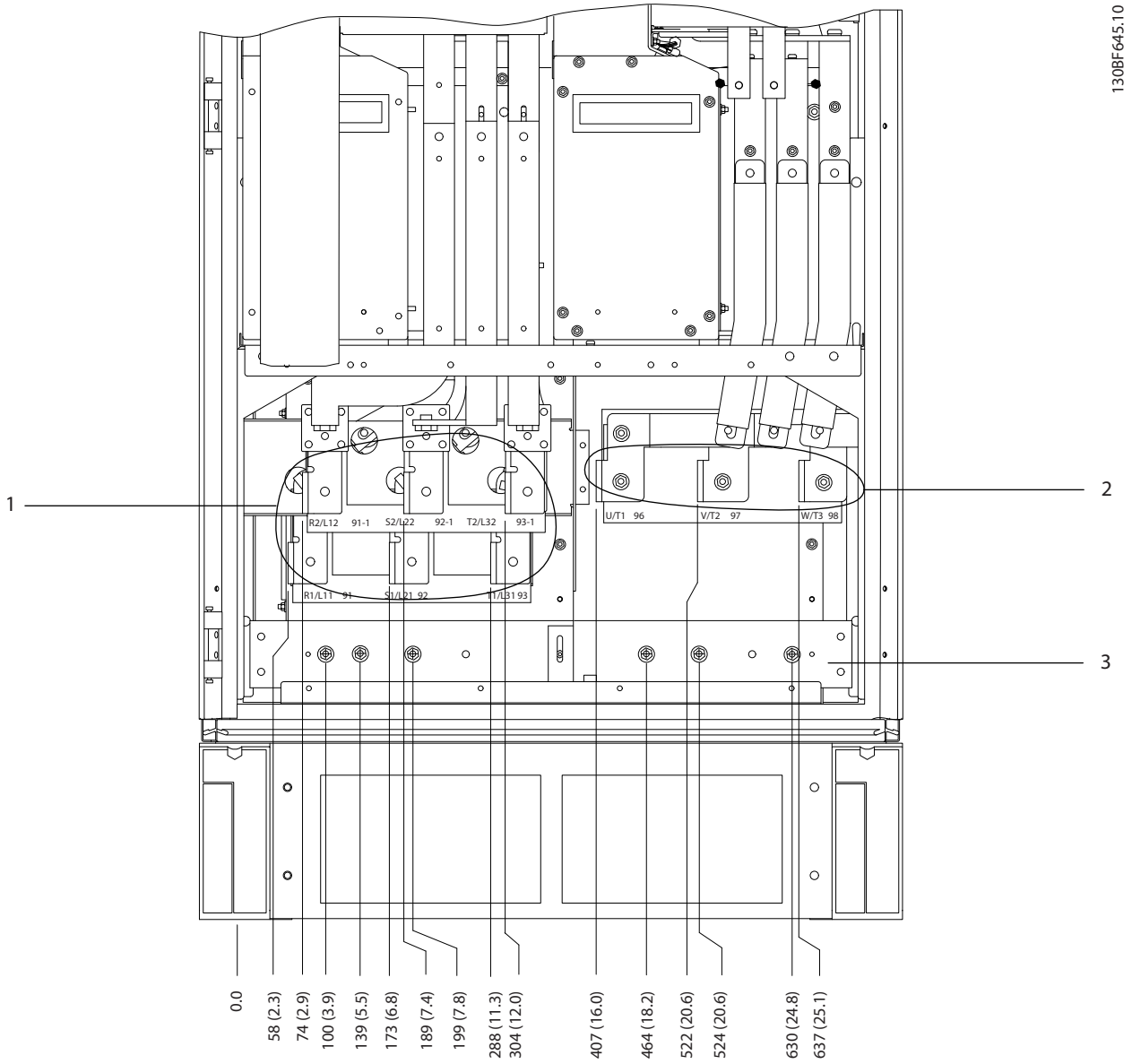

1	Mains terminals	2	Ground bar

Illustration 8.68 Terminal Dimensions for F10–F13 Rectifier Cabinet, Front View

 Danfoss A/S © 11/2017 All rights reserved.

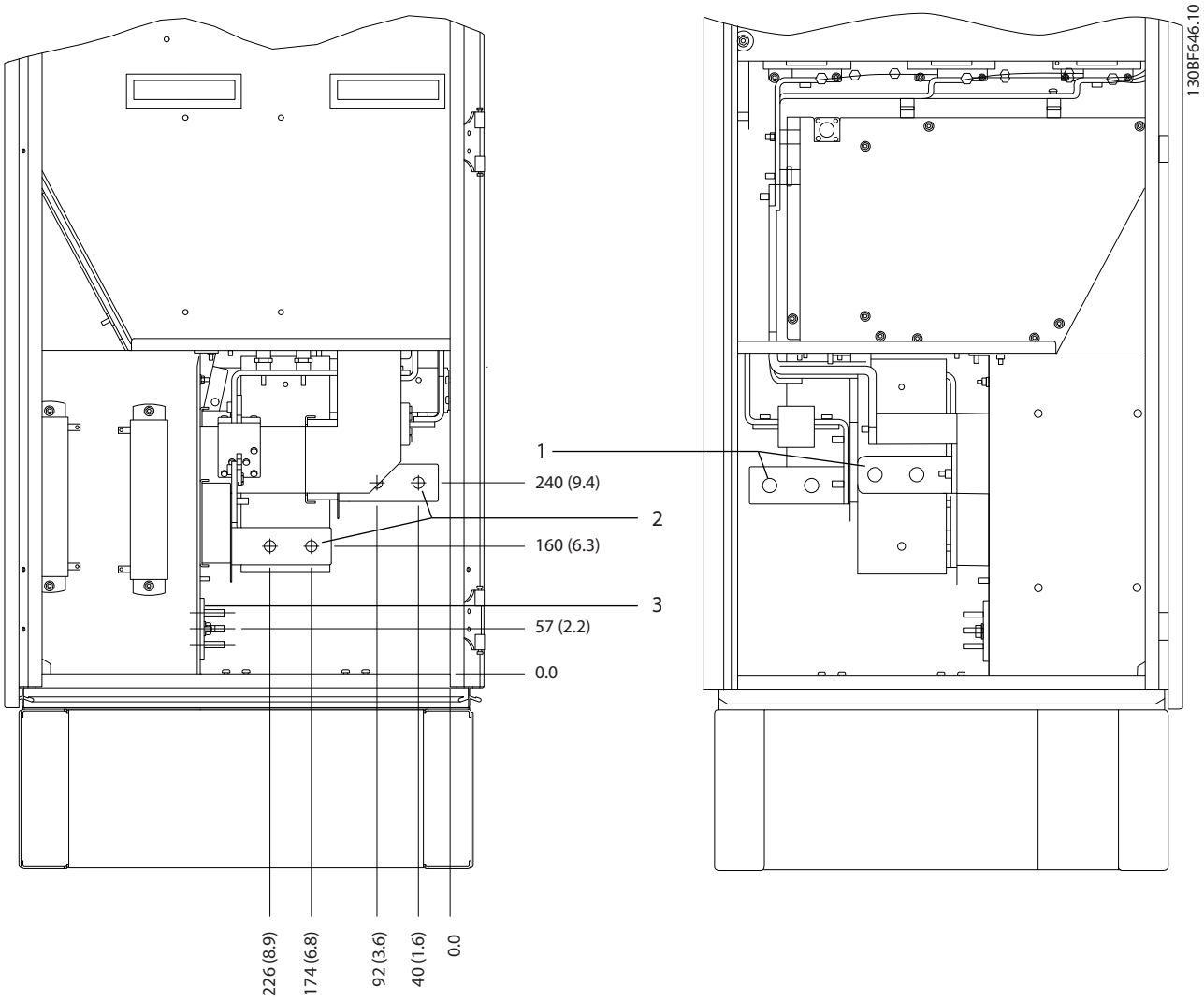

1	Mains terminals	2	Ground bar

Illustration 8.69 Terminal Dimensions for F10–F13 Rectifier Cabinet, Side View

Danfoss A/S © 11/2017 All rights reserved.

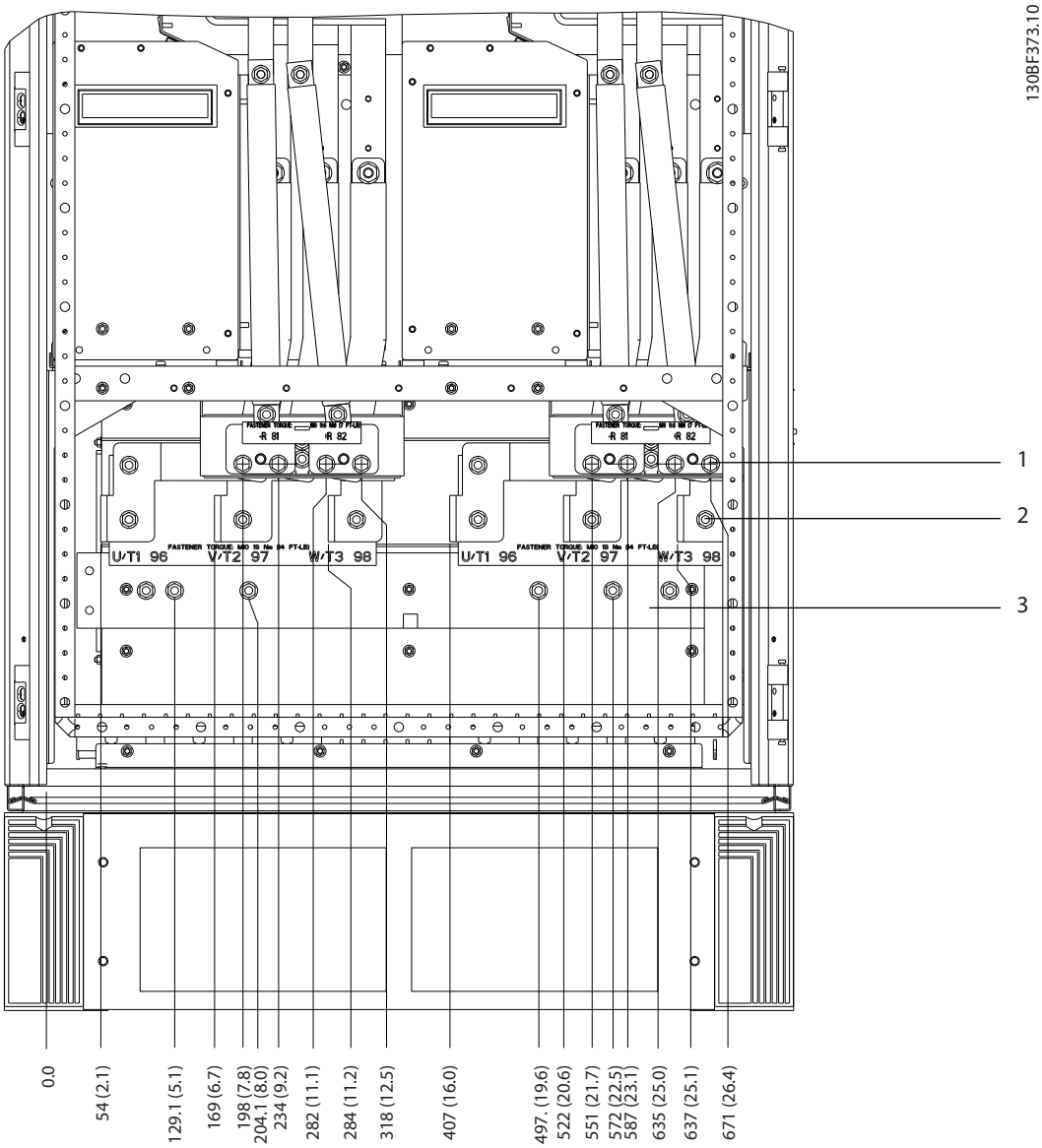

1	Brake terminals	3	Ground bar
2	Motor terminals	–	–

Illustration 8.70 Terminal Dimensions for F10–F11 Inverter Cabinet, Front View

 Danfoss A/S © 11/2017 All rights reserved.

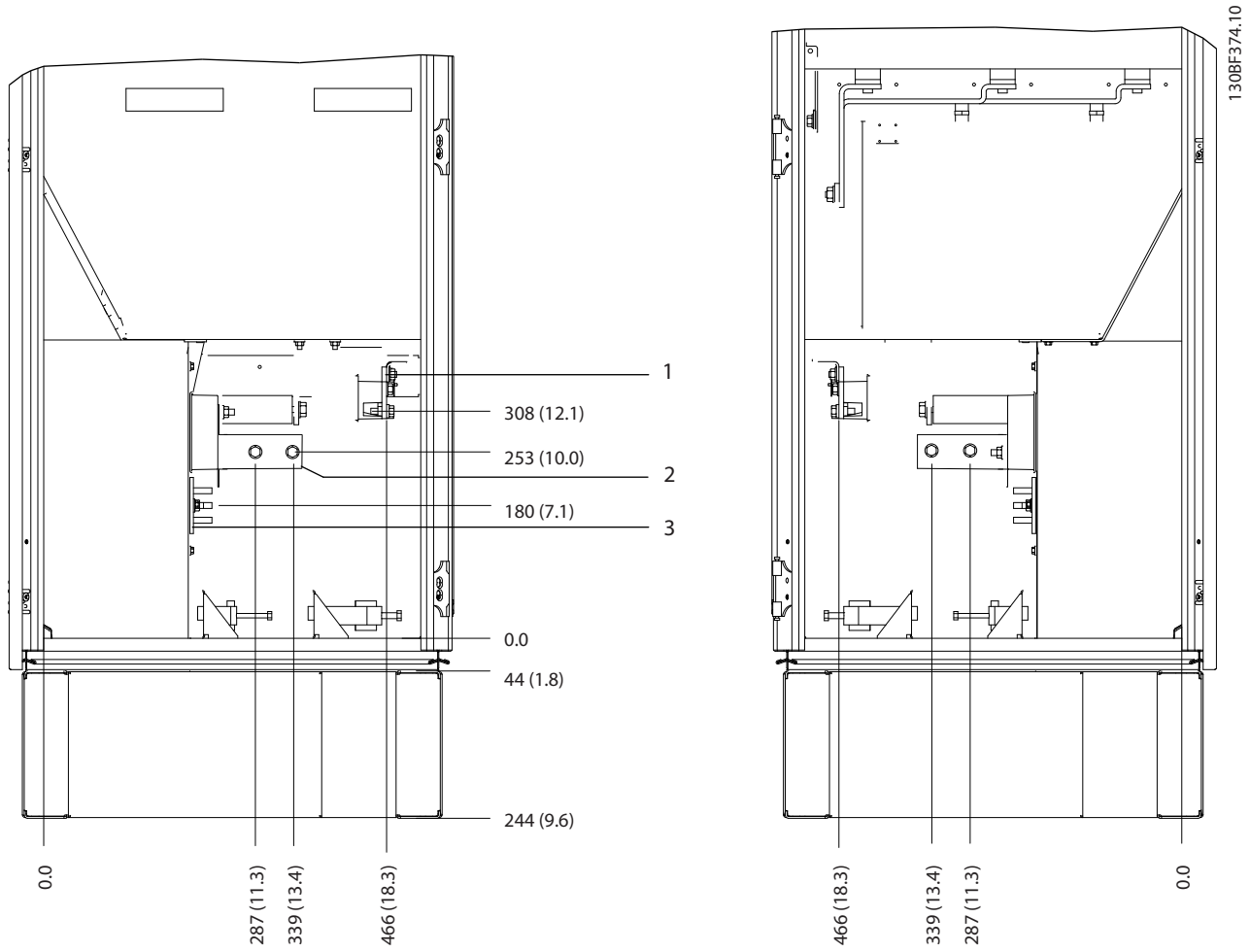

1	Brake terminals	3	Ground bar
2	Motor terminals	–	–

Illustration 8.71 Terminal Dimensions for F10–F11 Inverter Cabinet, Side View

Danfoss A/S © 11/2017 All rights reserved.

8.10 F11 Exterior and Terminal Dimensions

8.10.1 F11 Exterior Dimensions

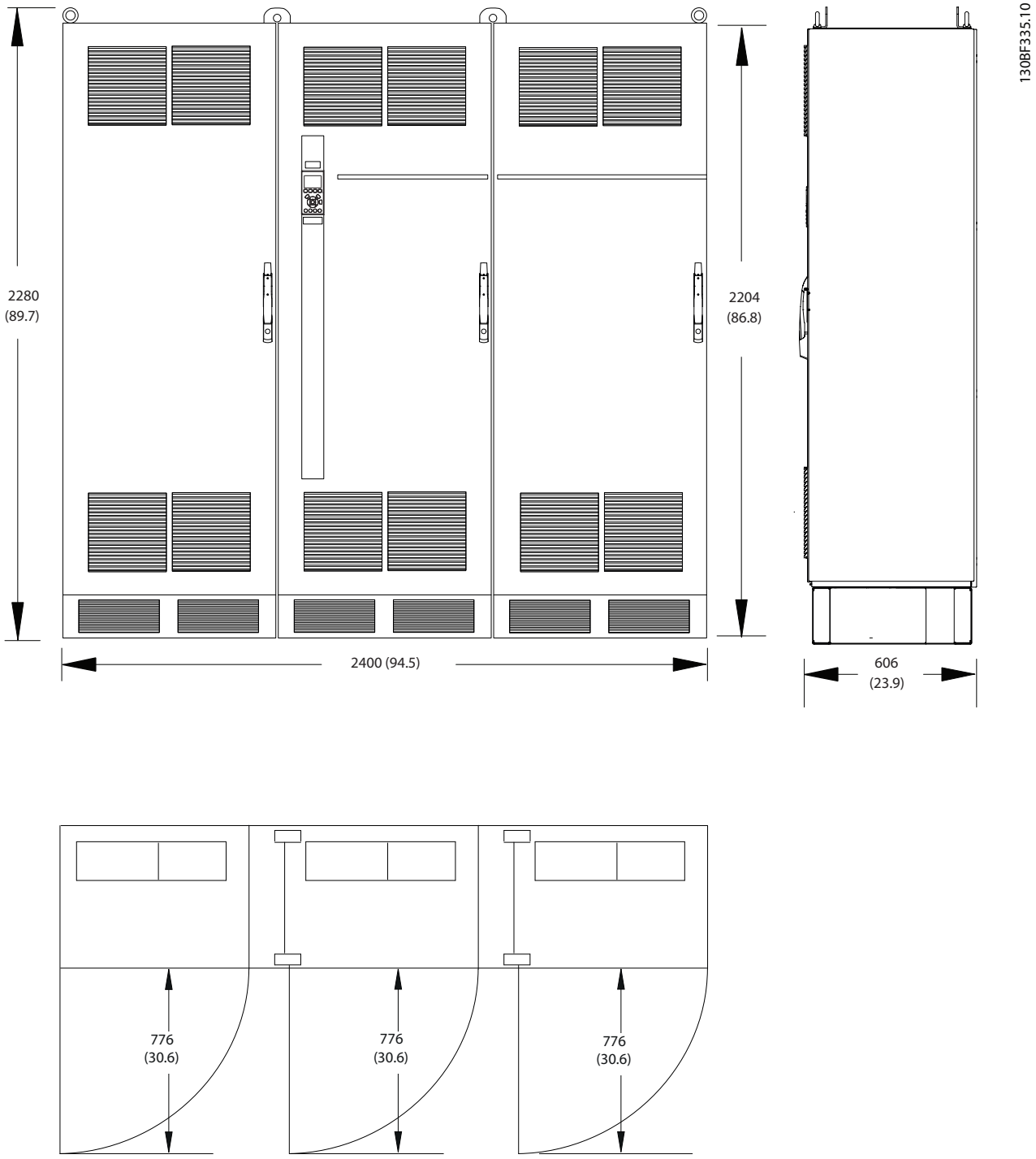

Illustration 8.72 Front, Side, and Door Clearance Dimensions for F11

 Danfoss A/S © 11/2017 All rights reserved.

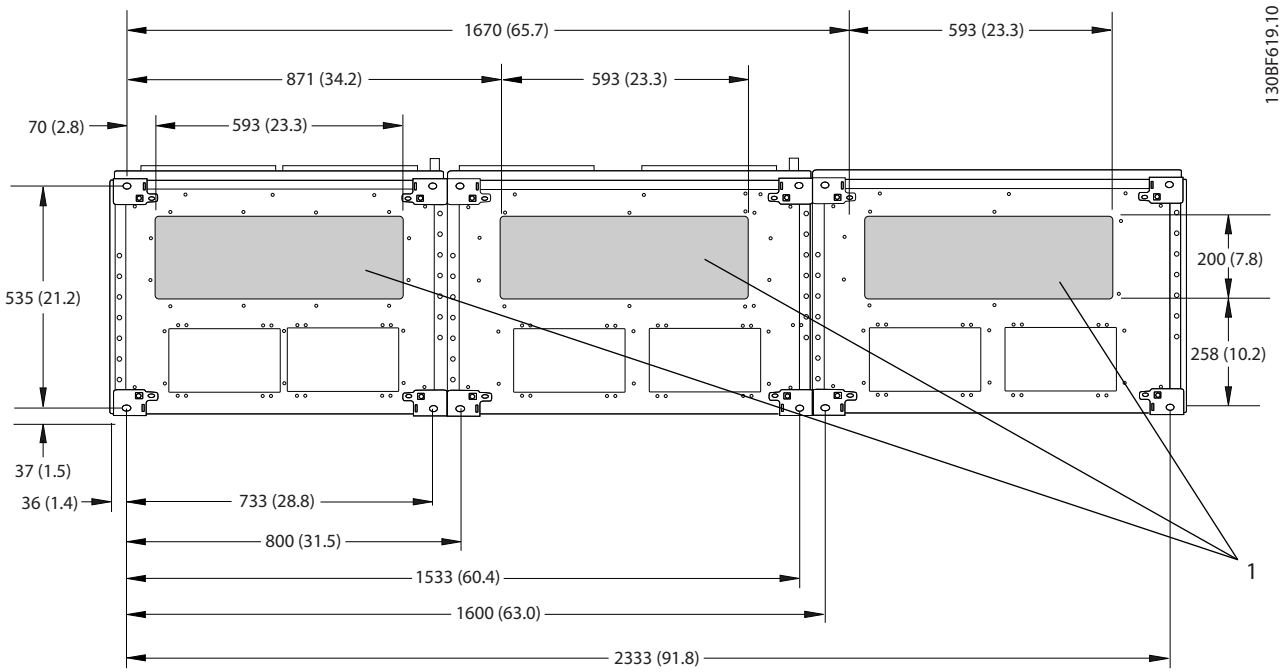

1	Mains side	2	Motor side

Illustration 8.73 Gland Plate Dimensions for F11

8

Danfoss A/S © 11/2017 All rights reserved.

8.10.2 F11 Terminal Dimensions

Power cables are heavy and hard to bend. To ensure easy installation of the cables, consider the optimum placement of the drive. Each terminal allows up to 4 cables with cable lugs or a standard box lug. Ground is connected to a relevant termination point in the drive.

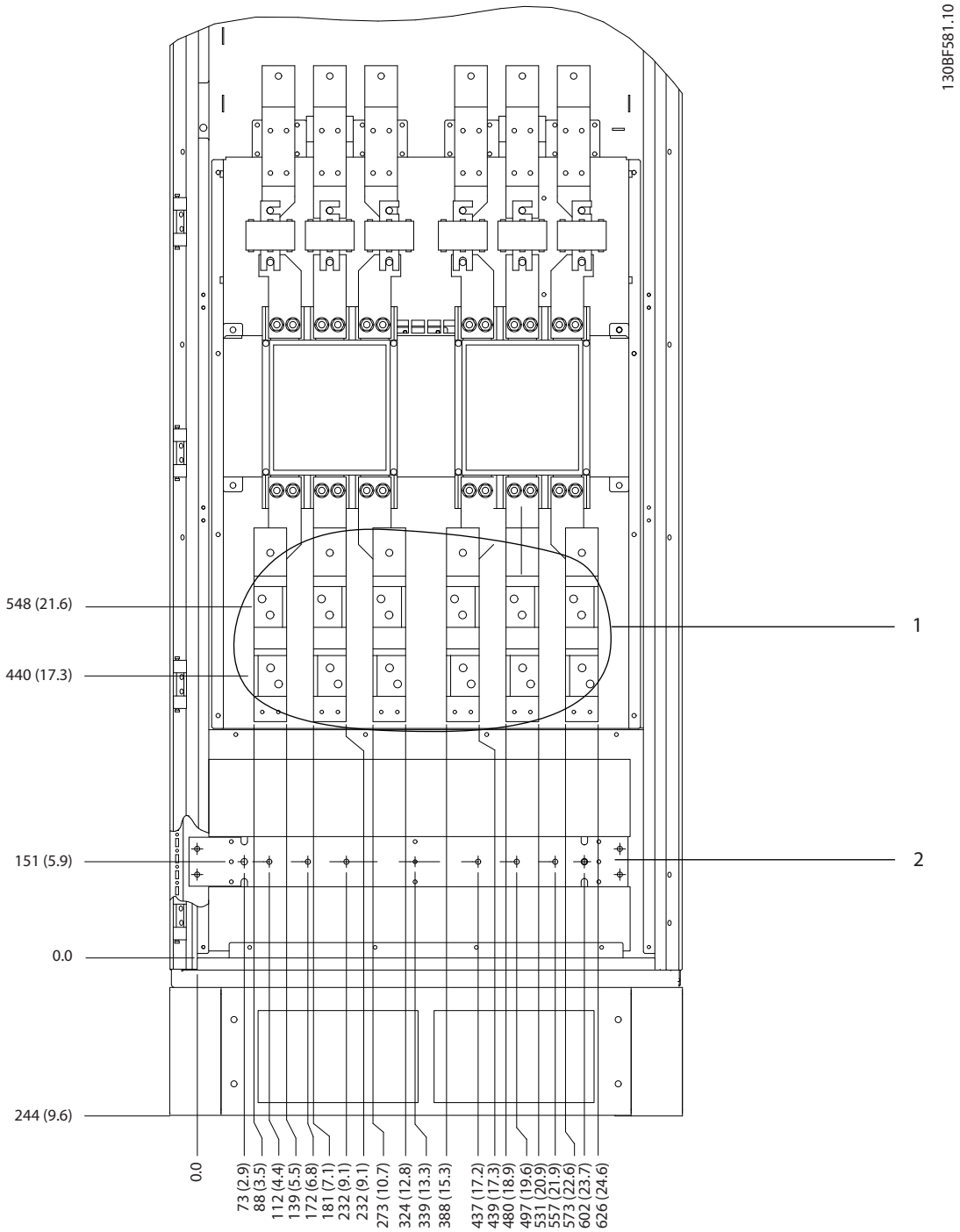

1	Mains terminals	2	Ground bar

Illustration 8.74 Terminal Dimensions for F11/F13 Options Cabinet, Front View

 Danfoss A/S © 11/2017 All rights reserved.

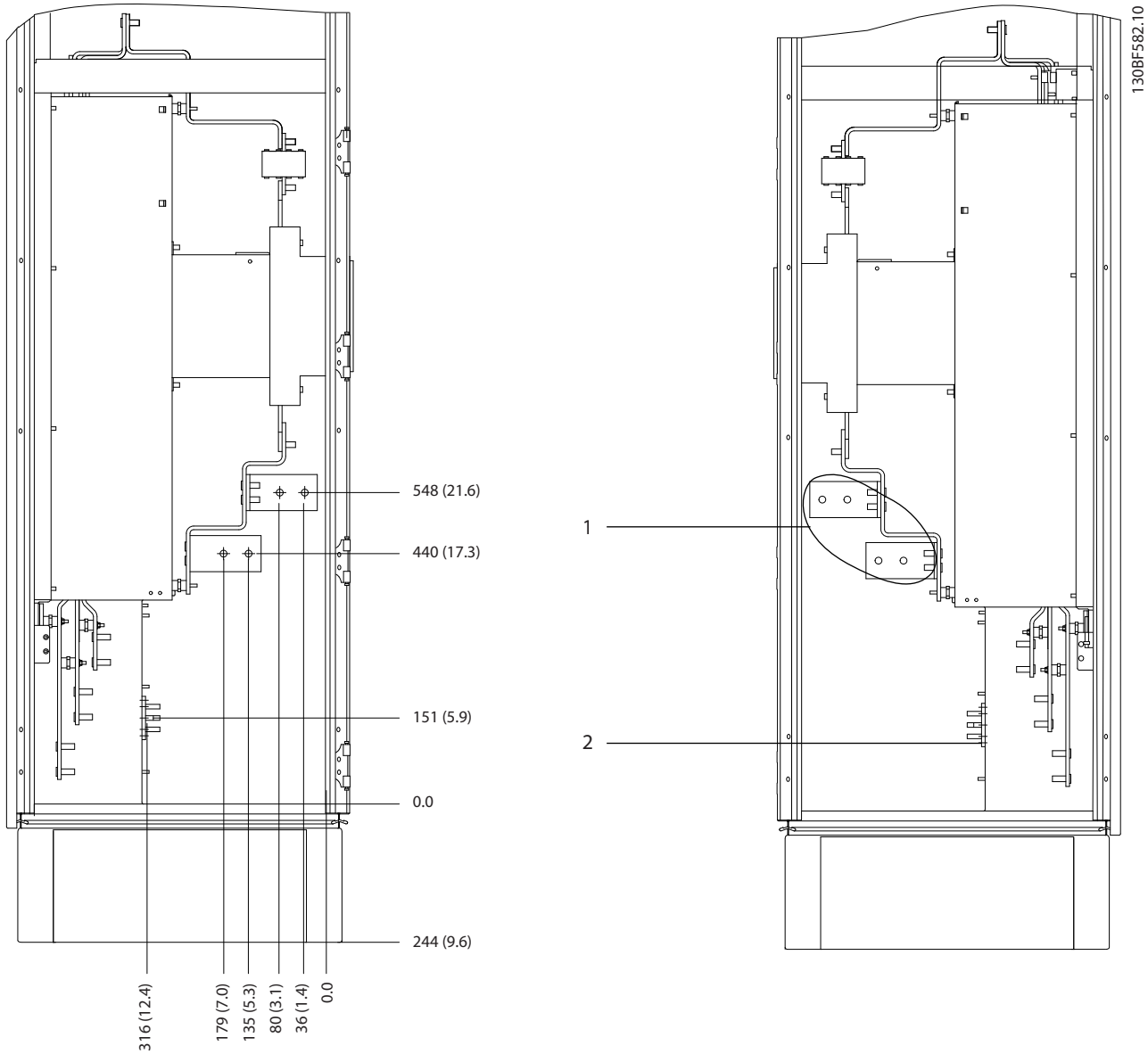

1	Mains terminals	2	Ground bar

Illustration 8.75 Terminal Dimensions for F11/F13 Options Cabinet, Side View

Danfoss A/S © 11/2017 All rights reserved.

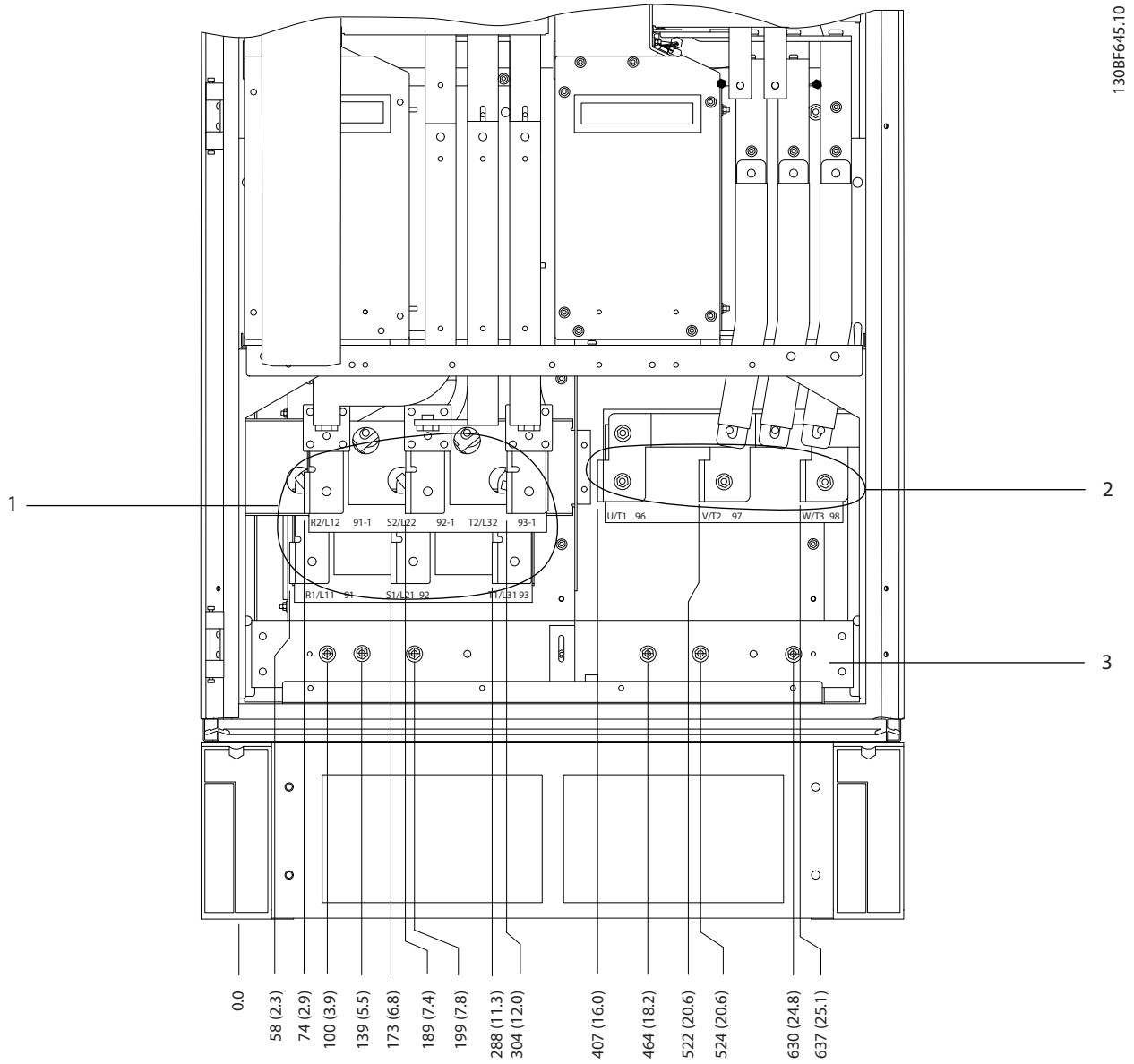

1	Mains terminals	2	Ground bar

Illustration 8.76 Terminal Dimensions for F10–F13 Rectifier Cabinet, Front View

 Danfoss A/S © 11/2017 All rights reserved.

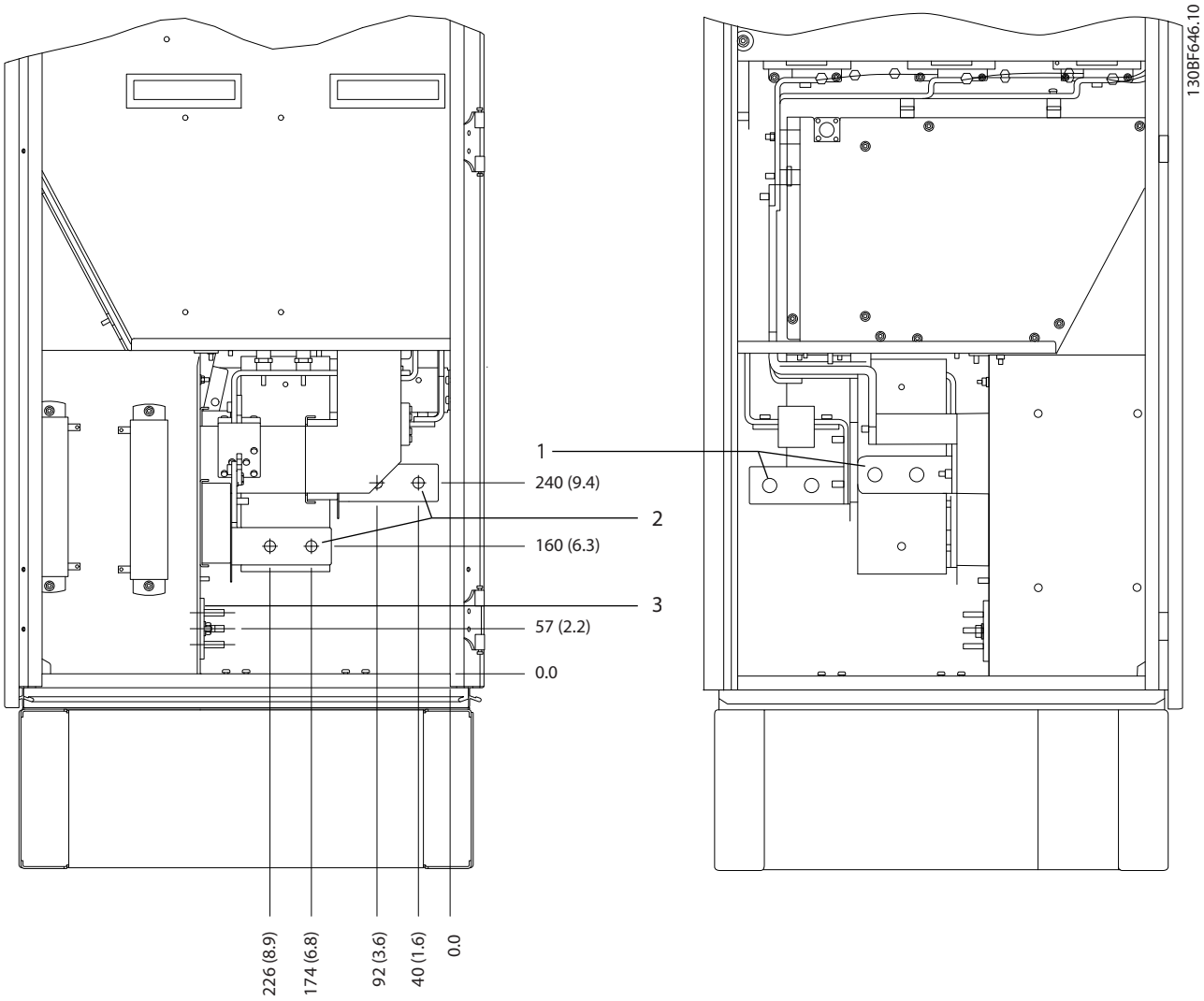

1	Mains terminals	2	Ground bar

Illustration 8.77 Terminal Dimensions for F10–F13 Rectifier Cabinet, Side View

Danfoss A/S © 11/2017 All rights reserved.

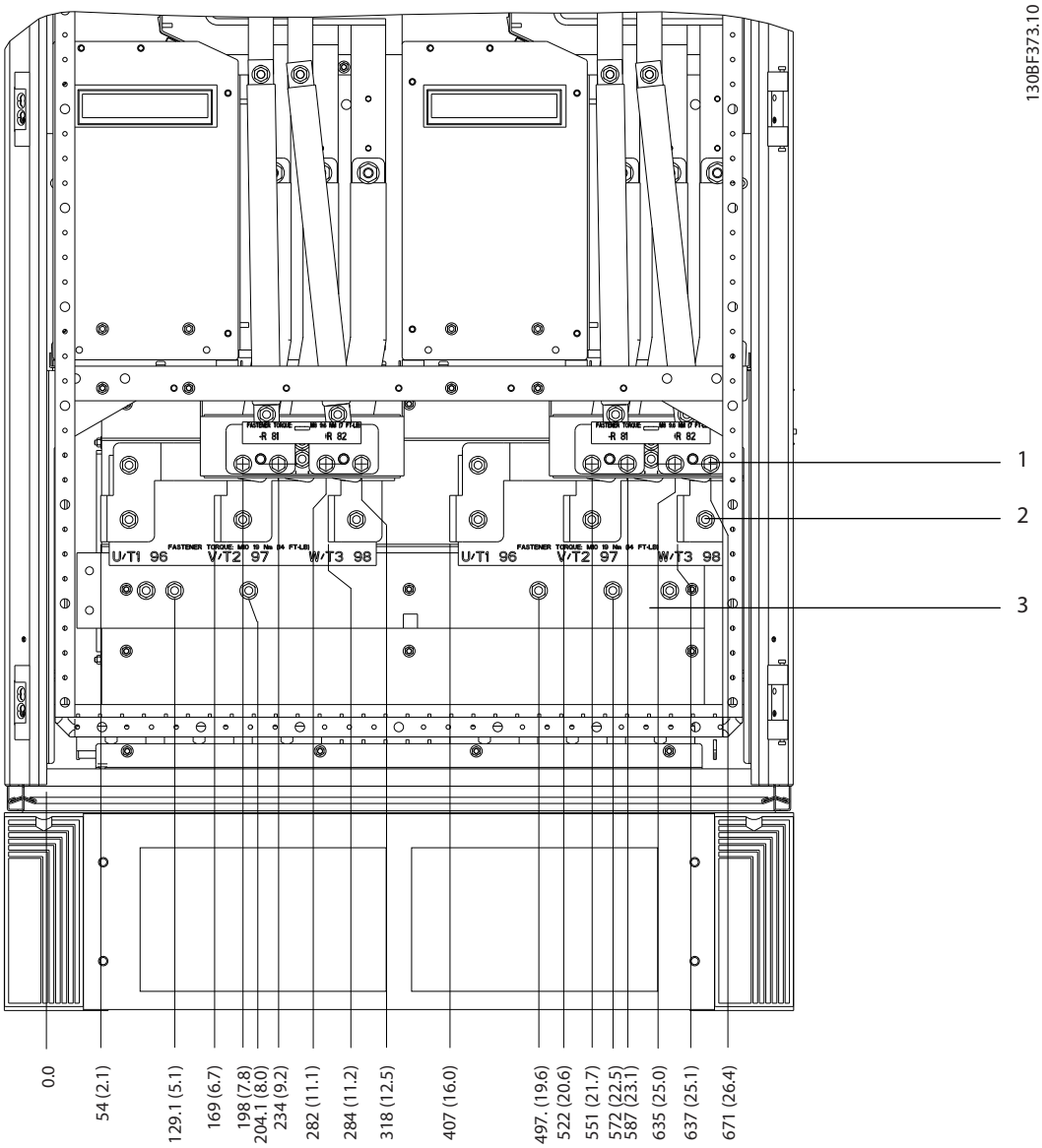

1	Brake terminals	3	Ground bar
2	Motor terminals	–	–

Illustration 8.78 Terminal Dimensions for F10–F11 Inverter Cabinet, Front View

 Danfoss A/S © 11/2017 All rights reserved.

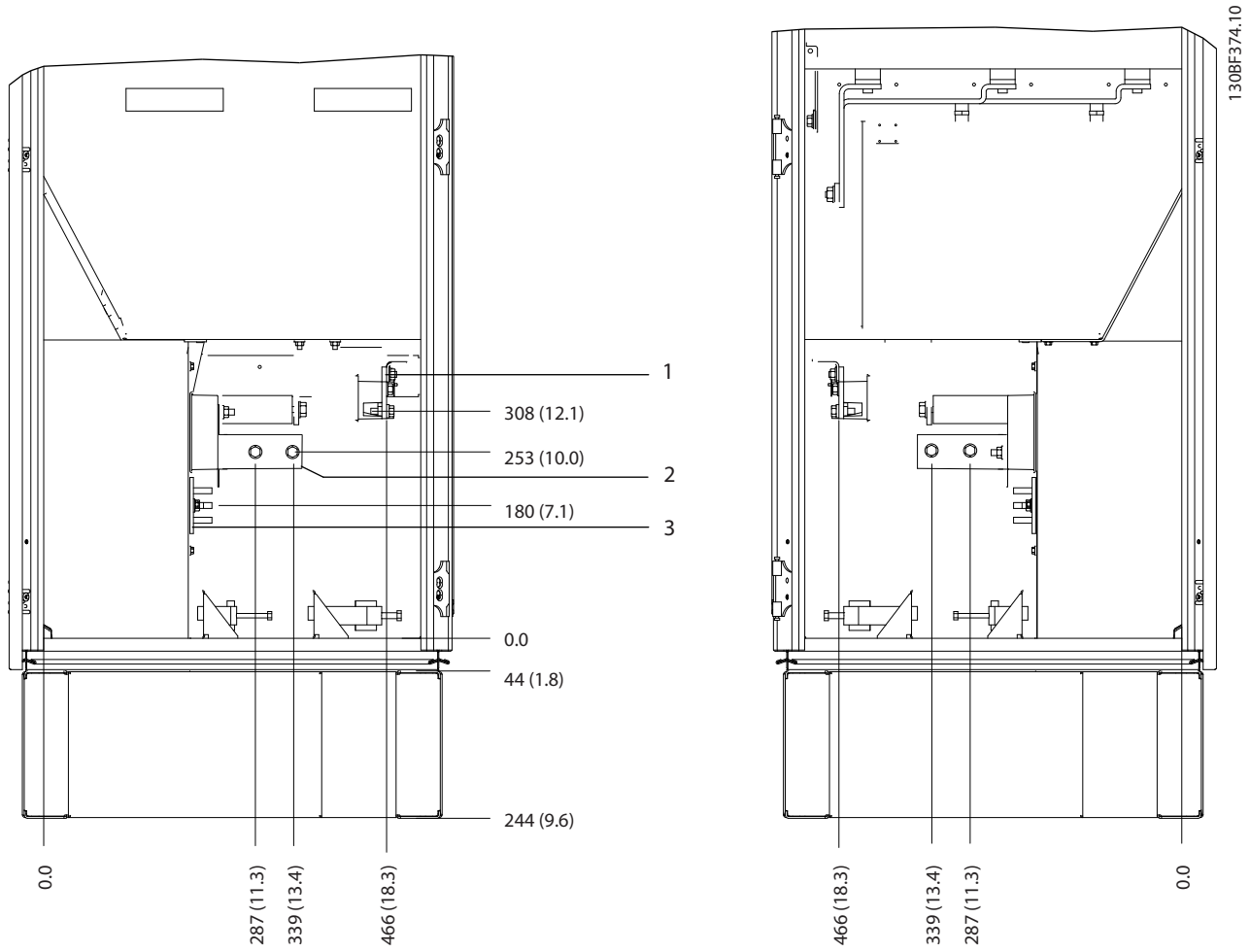

1	Brake terminals	3	Ground bar
2	Motor terminals	–	–

Illustration 8.79 Terminal Dimensions for F10–F11 Inverter Cabinet, Side View

Danfoss A/S © 11/2017 All rights reserved.

8.11 F12 Exterior and Terminal Dimensions

8.11.1 F12 Exterior Dimensions

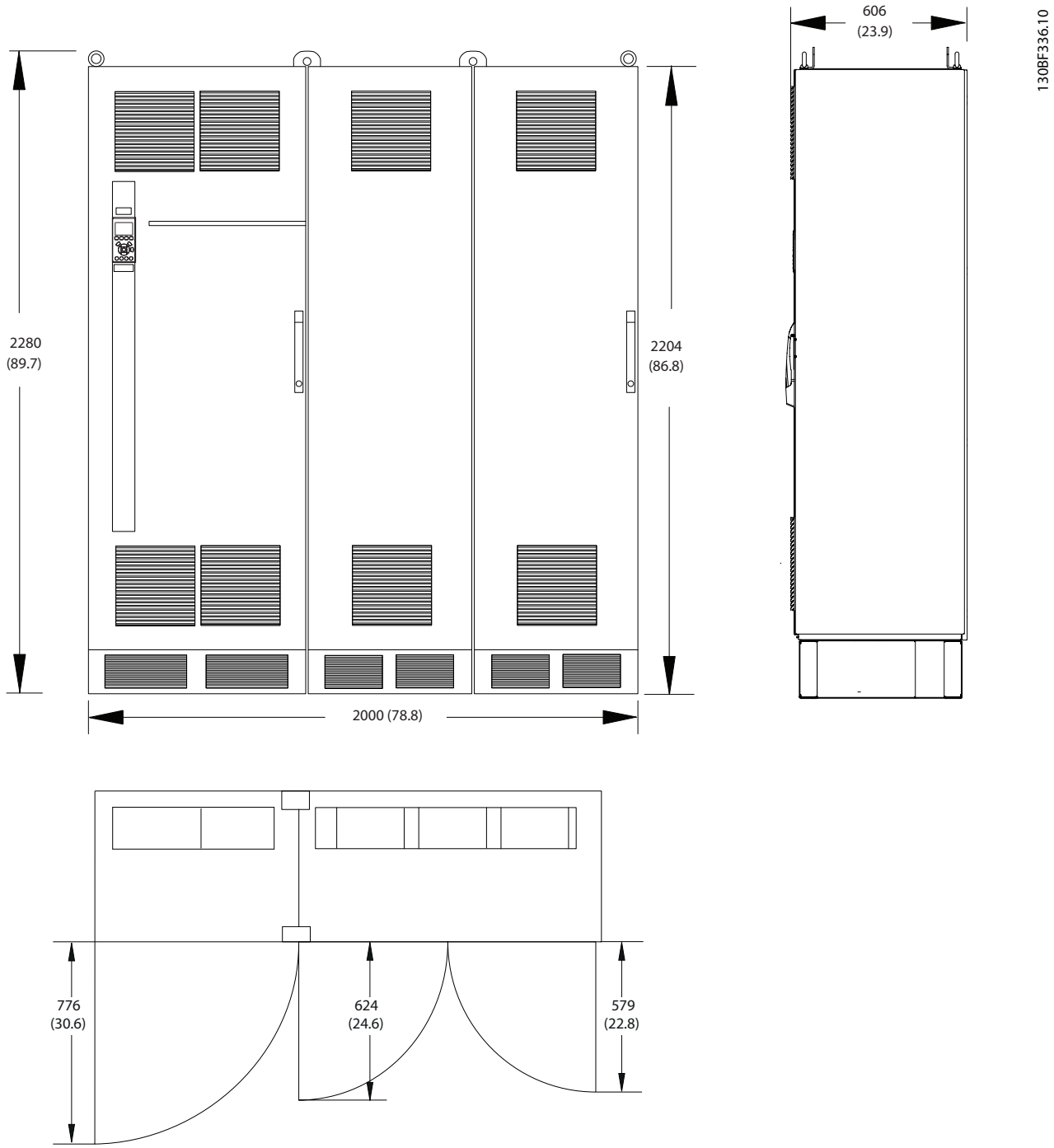

Illustration 8.80 Front, Side, and Door Clearance Dimensions for F12

 Danfoss A/S © 11/2017 All rights reserved.

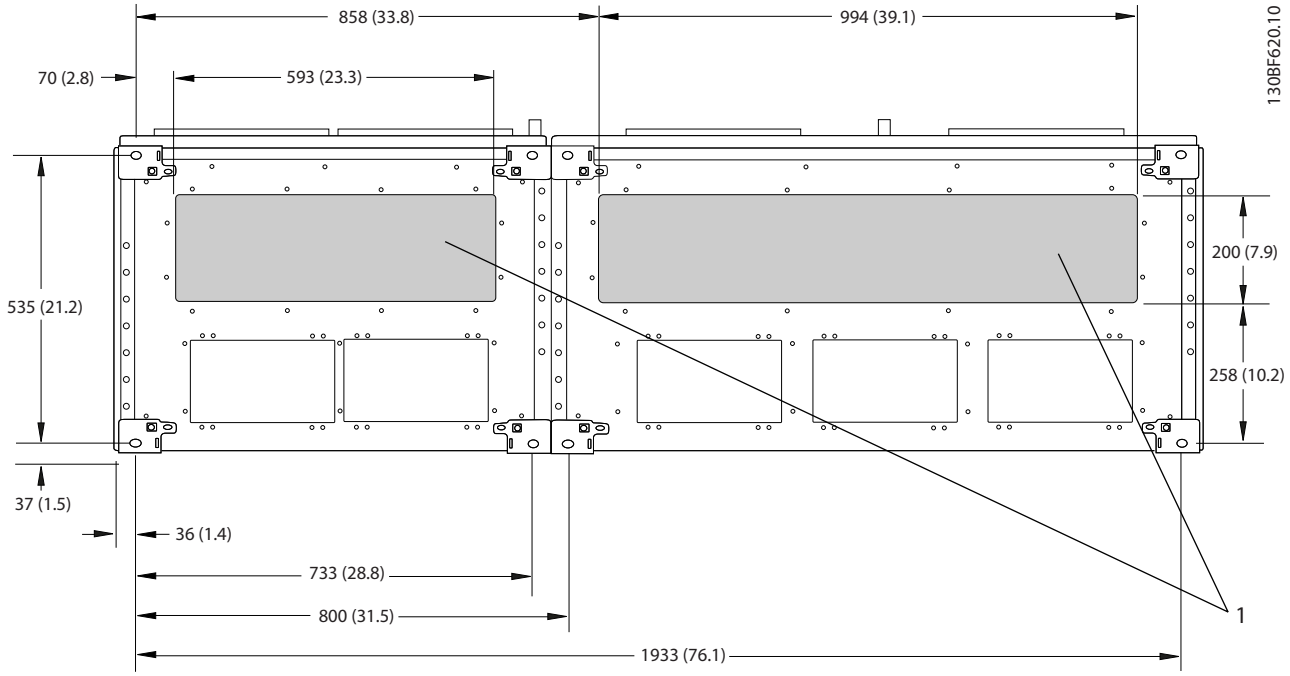

1	Mains side	2	Motor side

Illustration 8.81 Gland Plate Dimensions for F12

Danfoss A/S © 11/2017 All rights reserved.

8.11.2 F12 Terminal Dimensions

Power cables are heavy and hard to bend. To ensure easy installation of the cables, consider the optimum placement of the drive. Each terminal allows up to 4 cables with cable lugs or a standard box lug. Ground is connected to a relevant termination point in the drive.

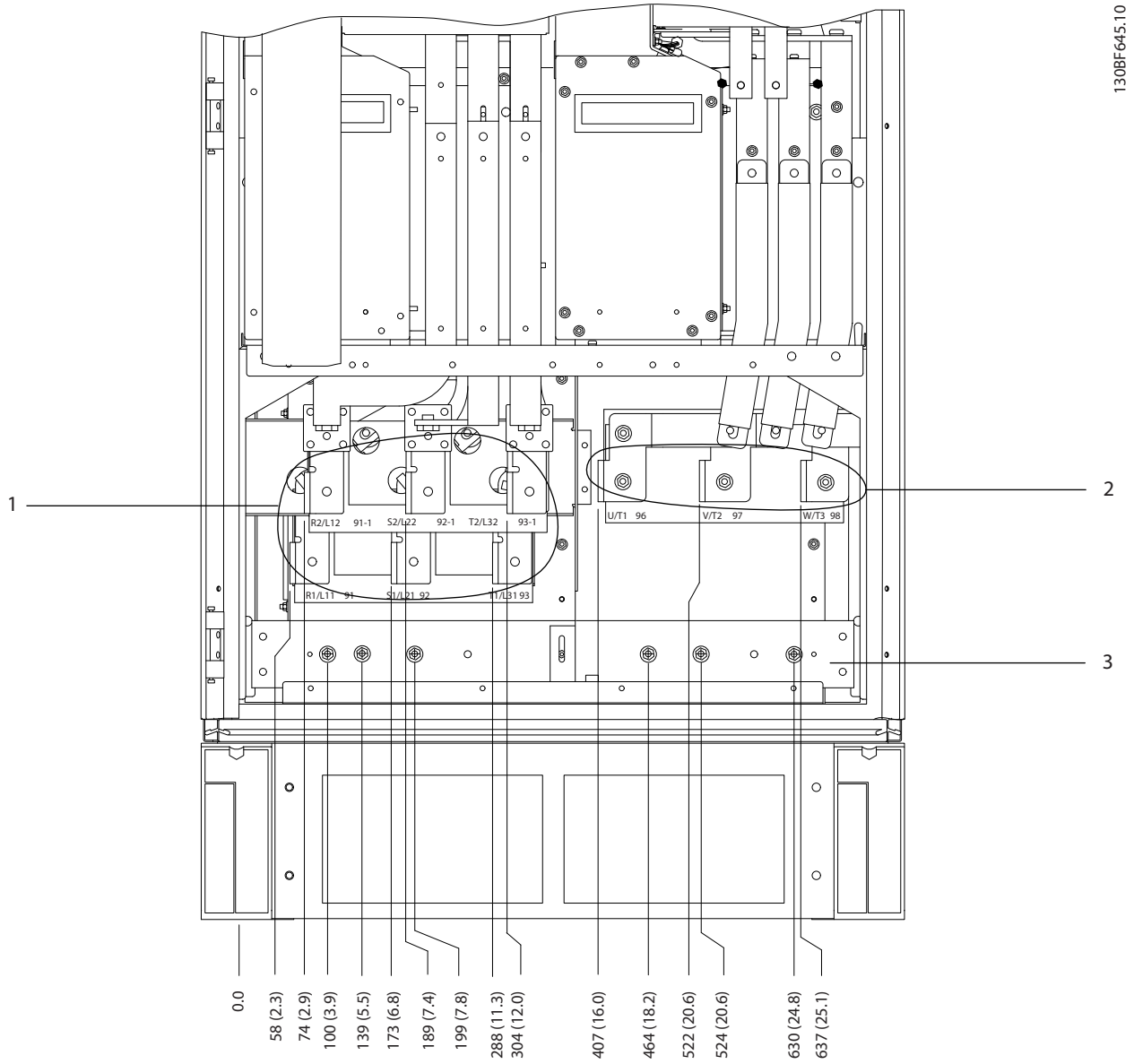

1	Mains terminals	2	Ground bar

Illustration 8.82 Terminal Dimensions for F10–F13 Rectifier Cabinet, Front View

 Danfoss A/S © 11/2017 All rights reserved.

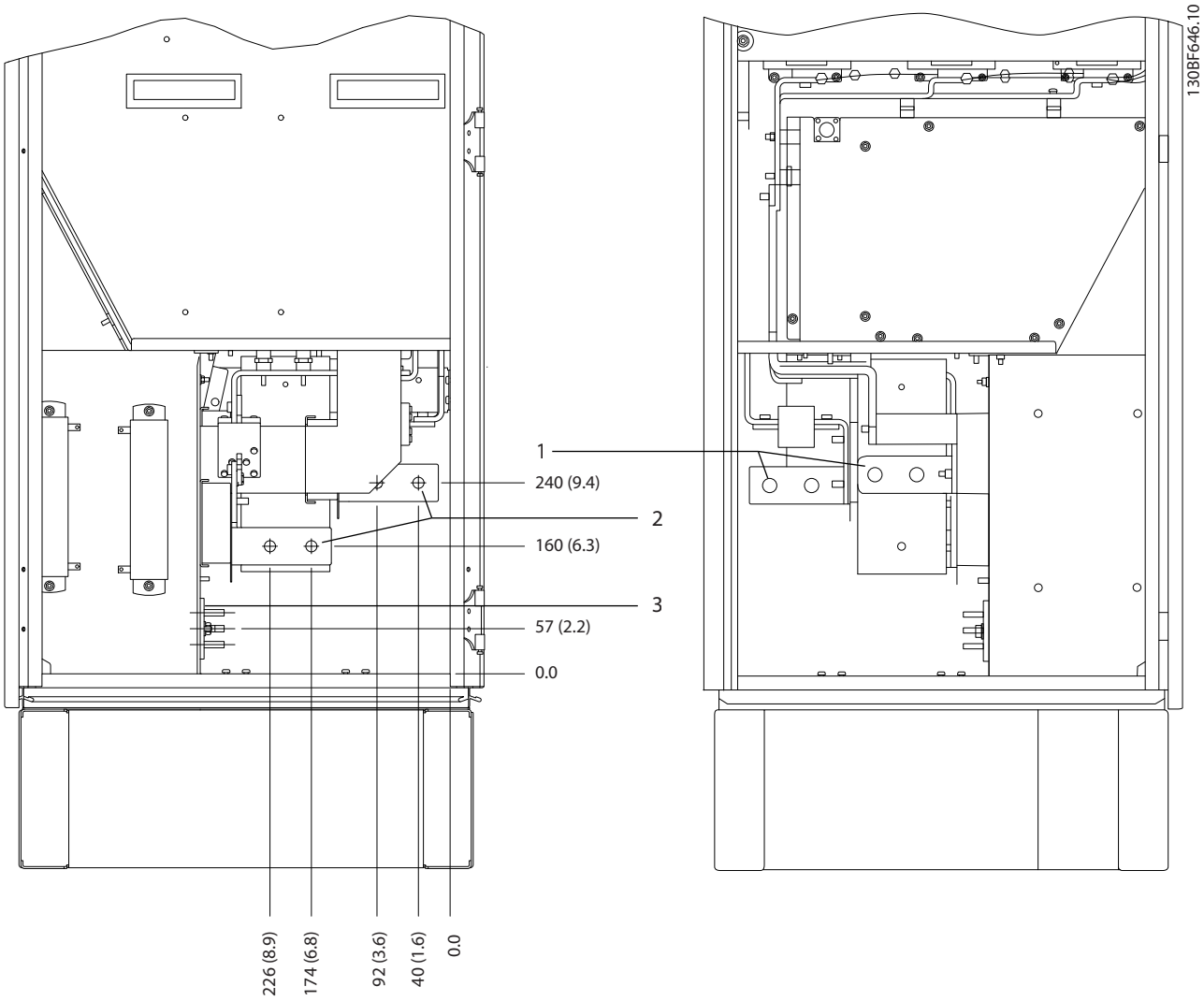

1	Mains terminals	2	Ground bar

Illustration 8.83 Terminal Dimensions for F10–F13 Rectifier Cabinet, Side View

Danfoss A/S © 11/2017 All rights reserved.

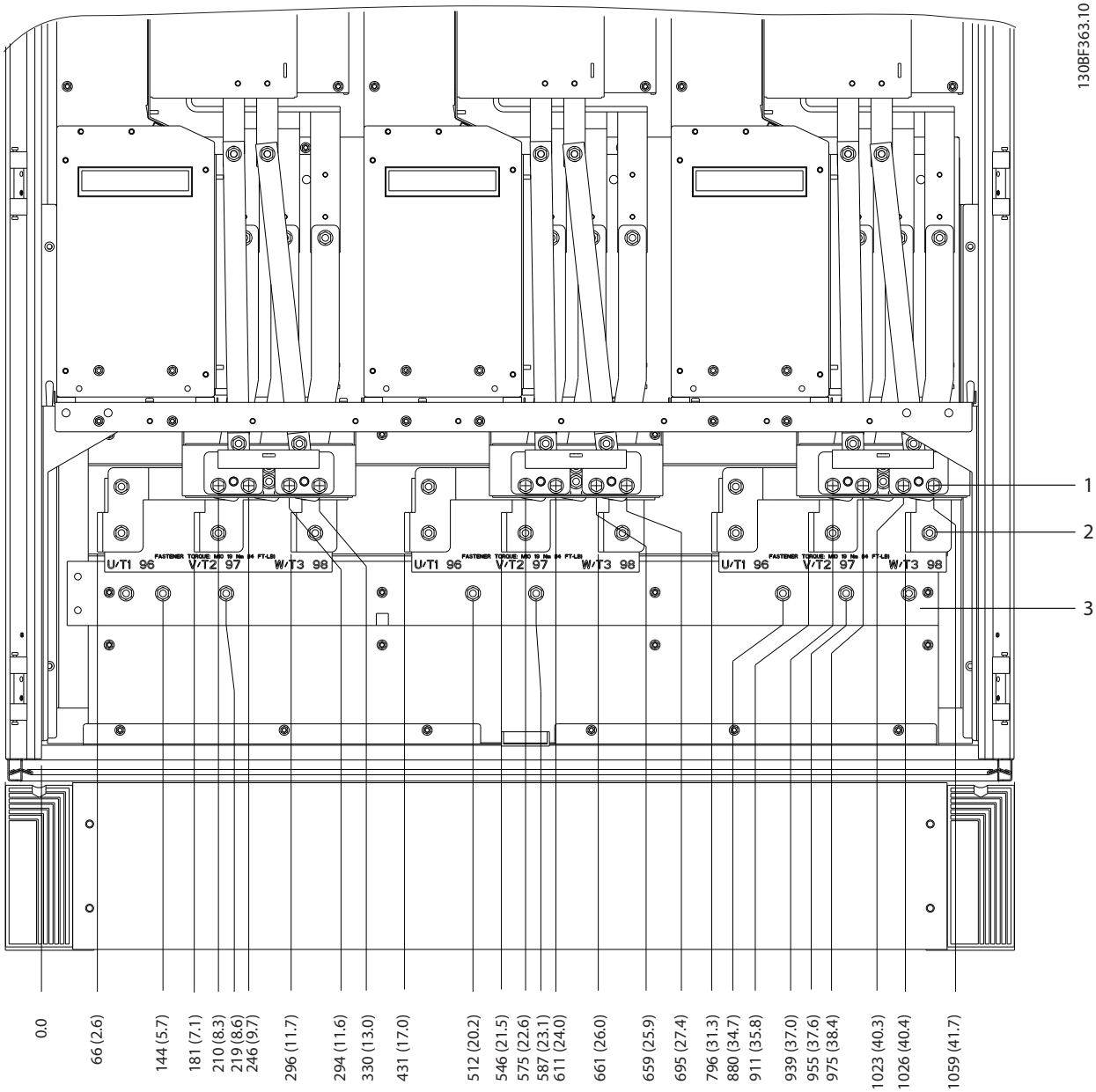

1	Brake terminals	3	Ground bar
2	Motor terminals	–	–

Illustration 8.84 Terminal Dimensions for F12–F13 Inverter Cabinet, Front View

 Danfoss A/S © 11/2017 All rights reserved.

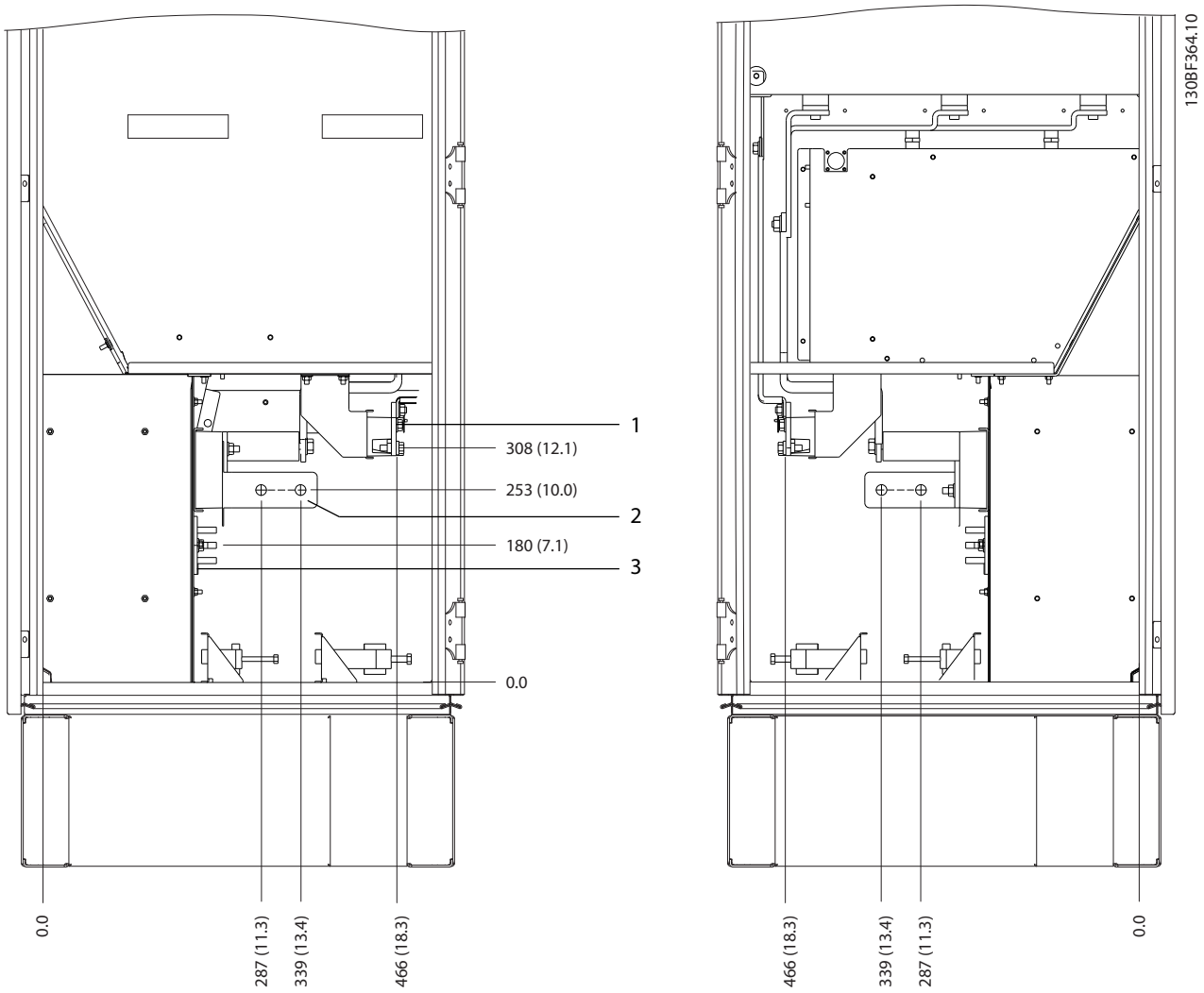

1	Brake terminals	3	Ground bar
2	Motor terminals	–	–

Illustration 8.85 Terminal Dimensions for F12–F13 Inverter Cabinet, Side View

Danfoss A/S © 11/2017 All rights reserved.

8.12 F13 Exterior and Terminal Dimensions

8.12.1 F13 Exterior Dimensions

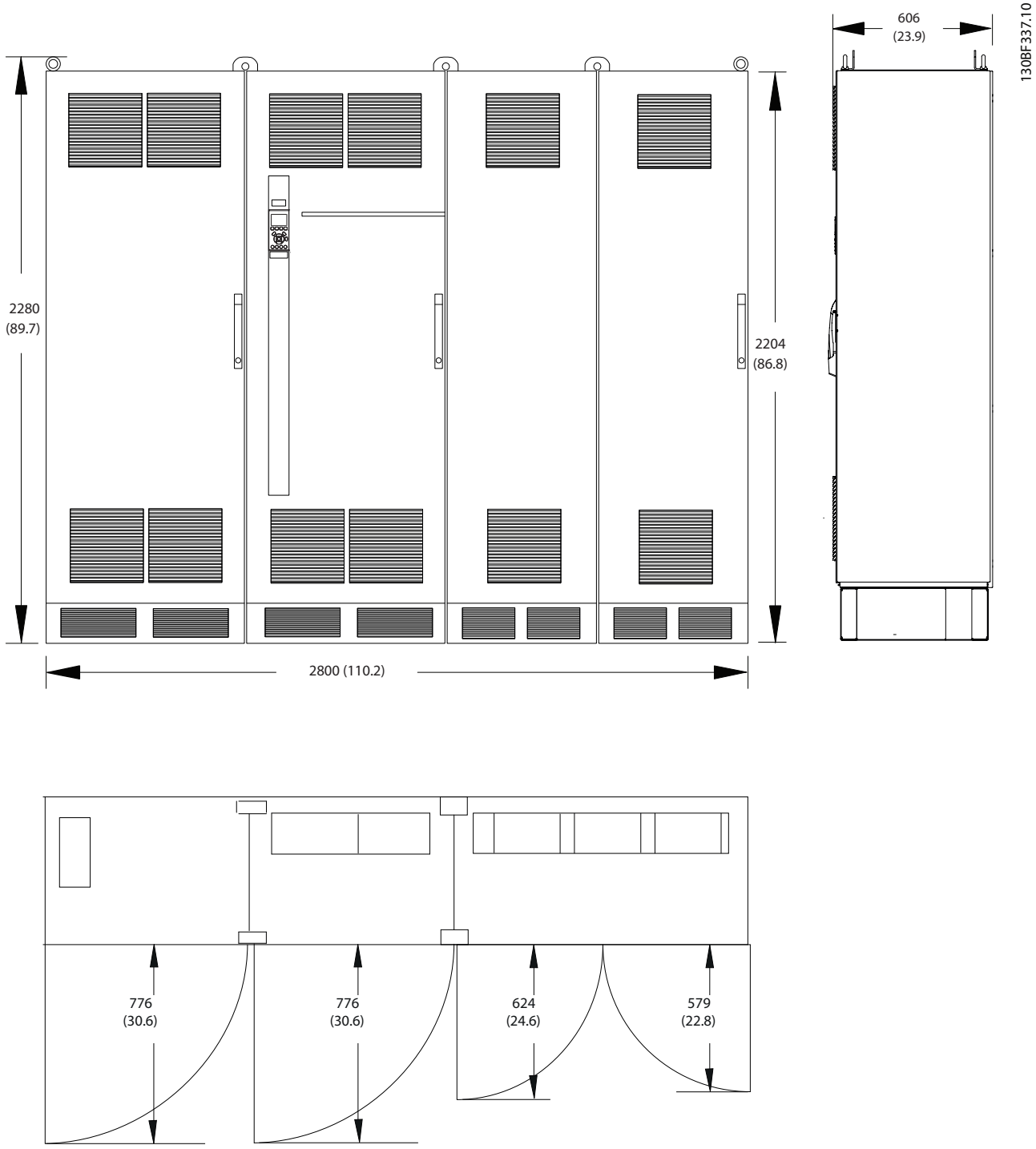

Illustration 8.86 Front, Side, and Door Clearance Dimensions for F13

 Danfoss A/S © 11/2017 All rights reserved.

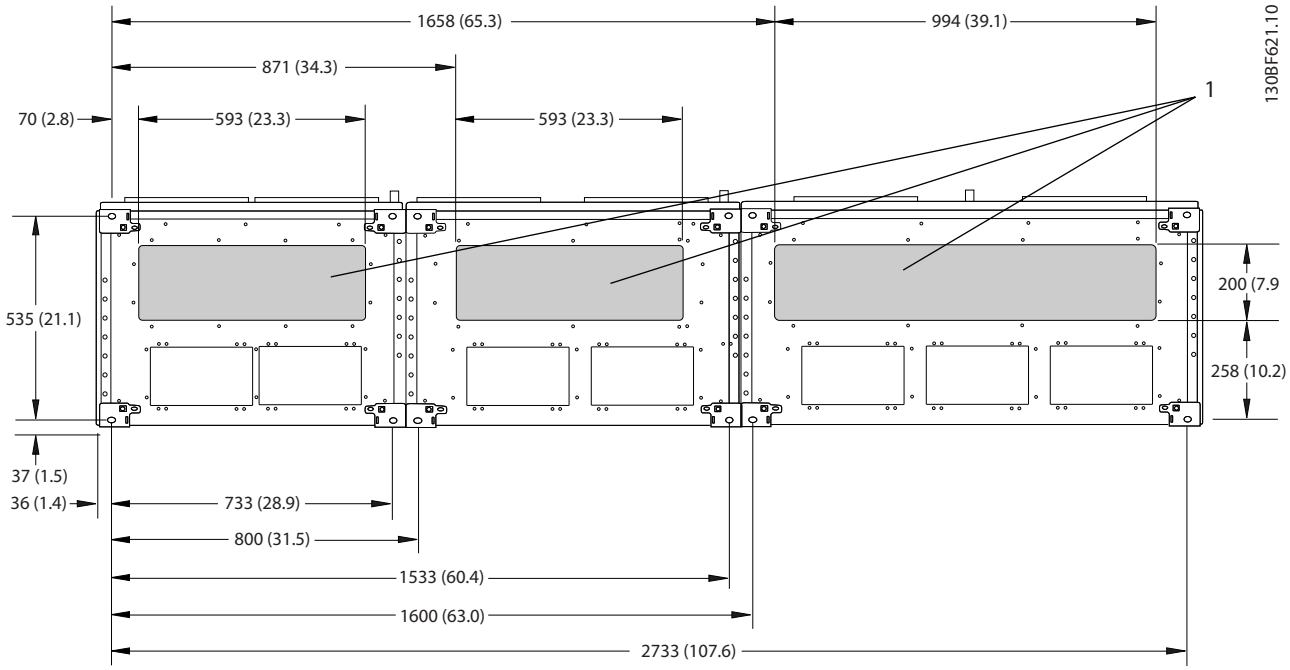

1	Mains side	2	Motor side

Illustration 8.87 Gland Plate Dimensions for F13

8

Danfoss A/S © 11/2017 All rights reserved.

8.12.2 F13 Terminal Dimensions

Power cables are heavy and hard to bend. To ensure easy installation of the cables, consider the optimum placement of the drive. Each terminal allows up to 4 cables with cable lugs or a standard box lug. Ground is connected to a relevant termination point in the drive.

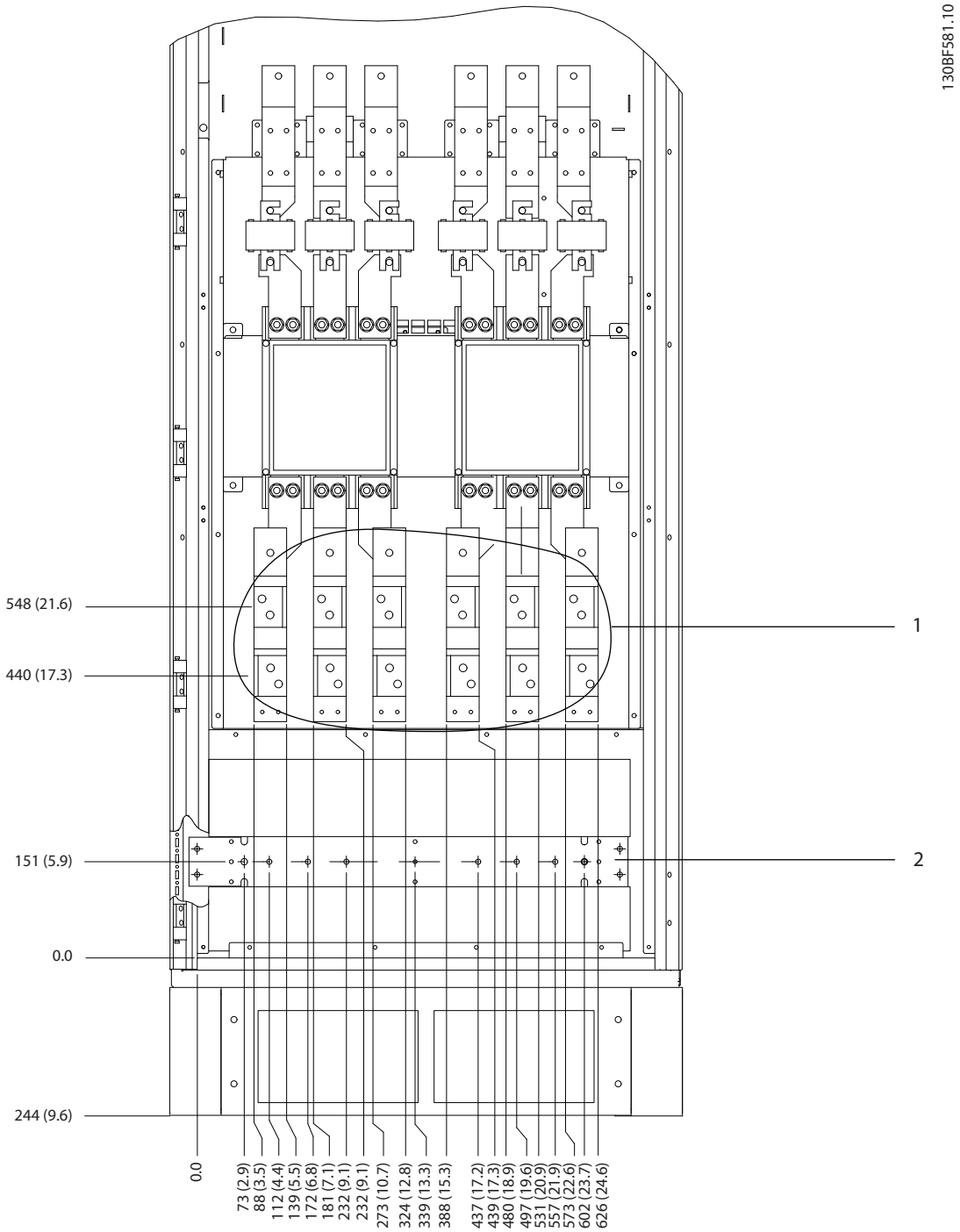

1	Mains terminals	2	Ground bar

Illustration 8.88 Terminal Dimensions for F11/F13 Options Cabinet, Front View

 Danfoss A/S © 11/2017 All rights reserved.

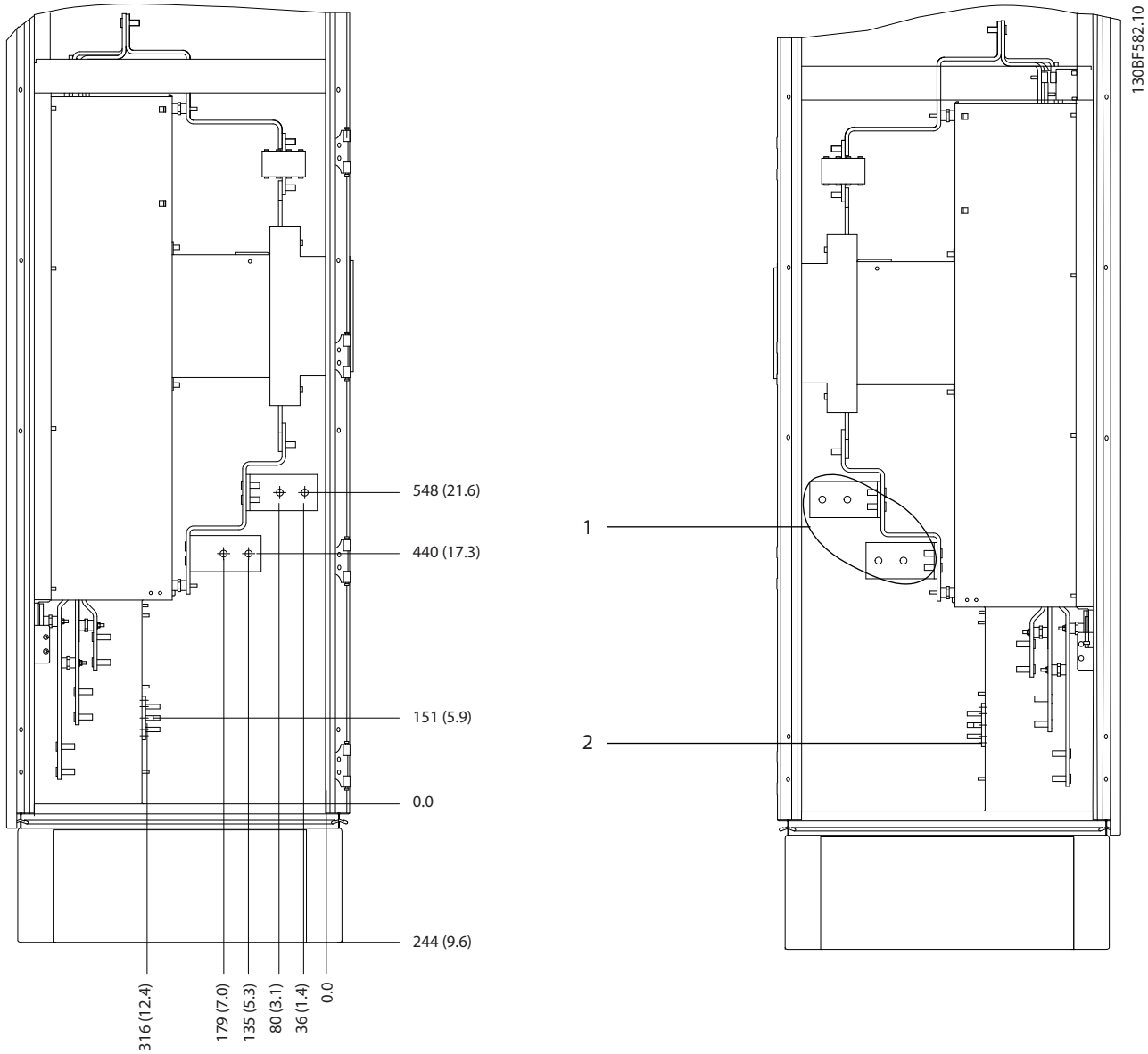

1	Mains terminals	2	Ground bar

Illustration 8.89 Terminal Dimensions for F11/F13 Options Cabinet, Side View

Danfoss A/S © 11/2017 All rights reserved.

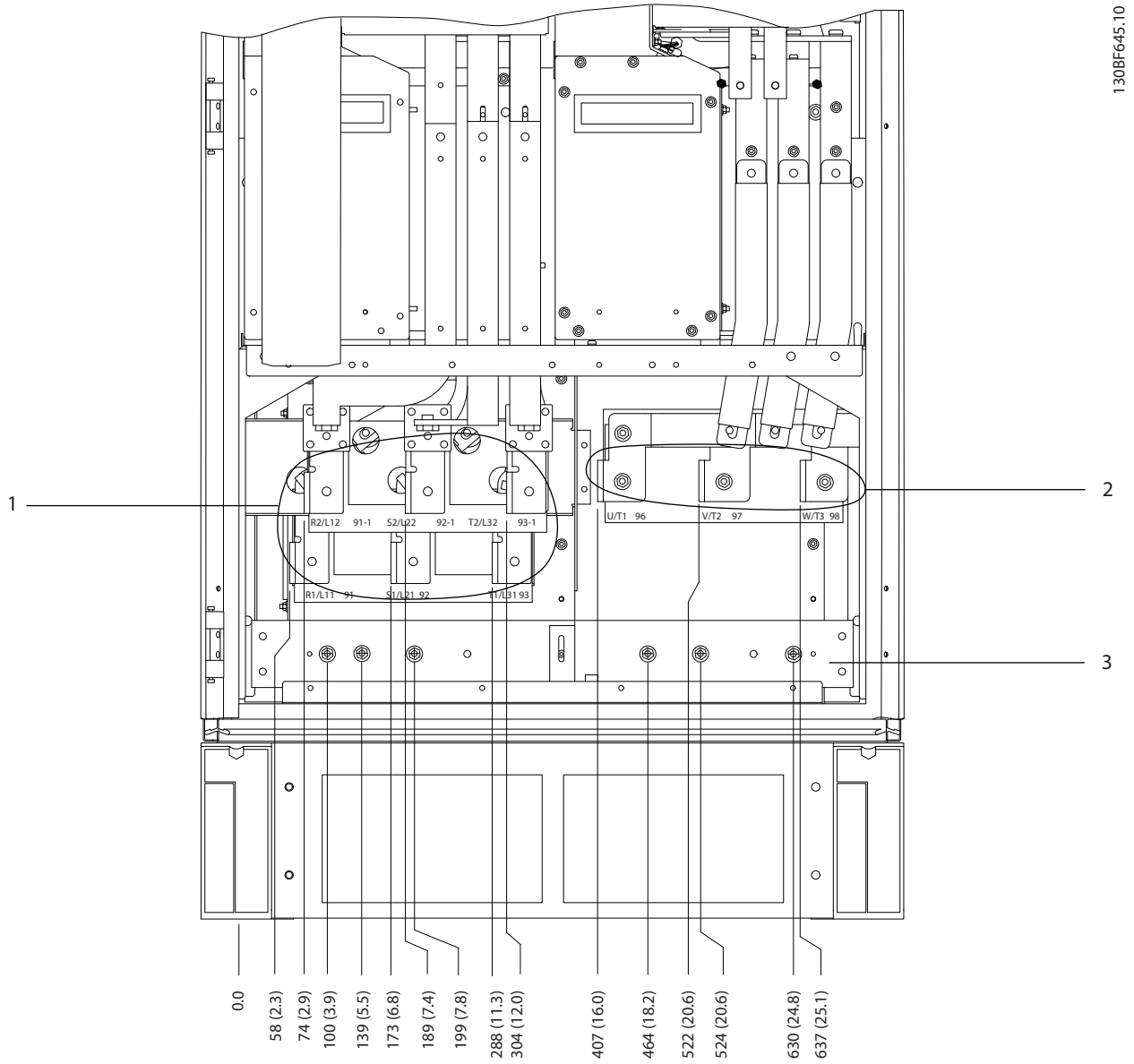

1	Mains terminals	2	Ground bar

Illustration 8.90 Terminal Dimensions for F10–F13 Rectifier Cabinet, Front View

 Danfoss A/S © 11/2017 All rights reserved.

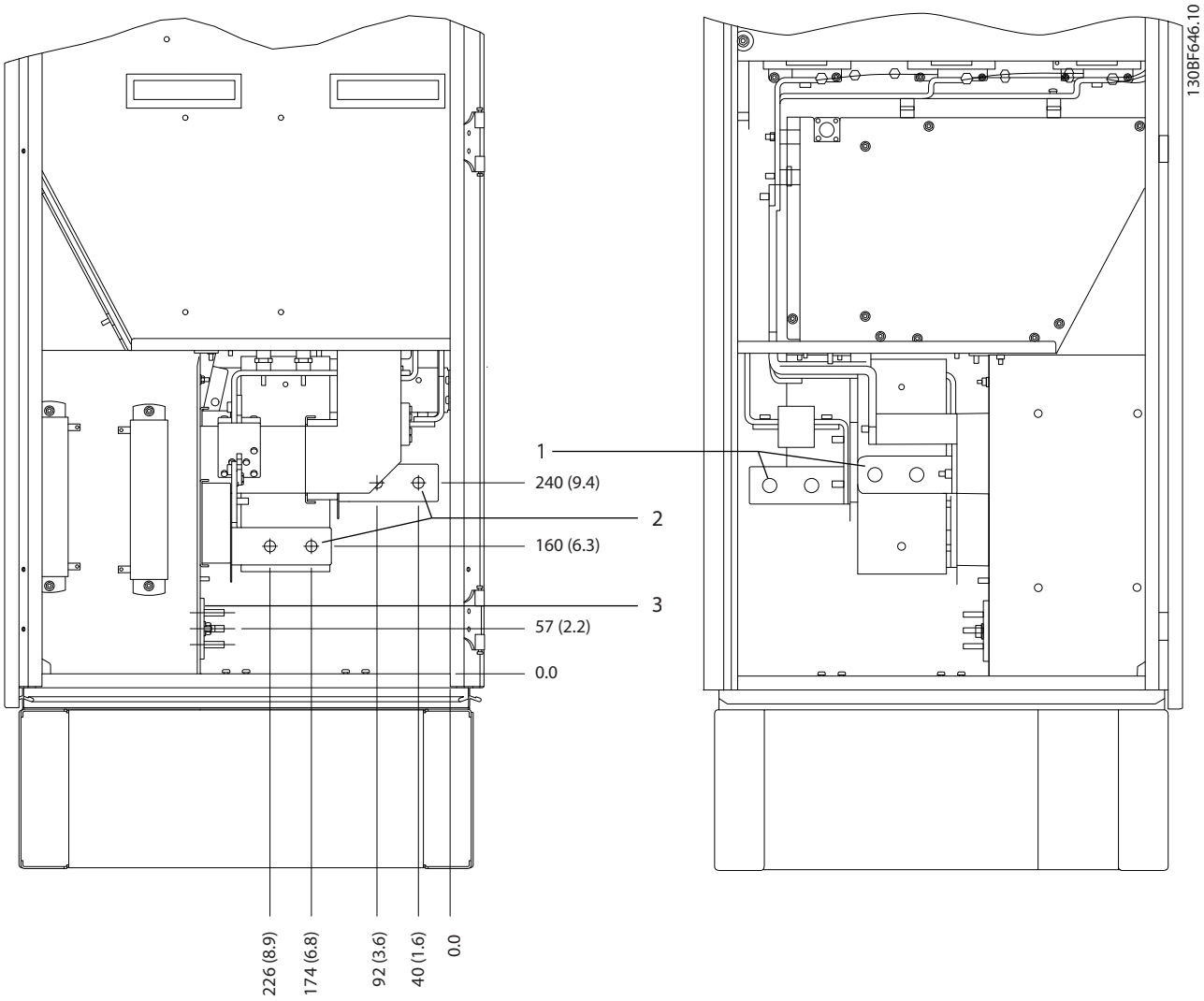

1	Mains terminals	2	Ground bar

Illustration 8.91 Terminal Dimensions for F10–F13 Rectifier Cabinet, Side View

Danfoss A/S © 11/2017 All rights reserved.

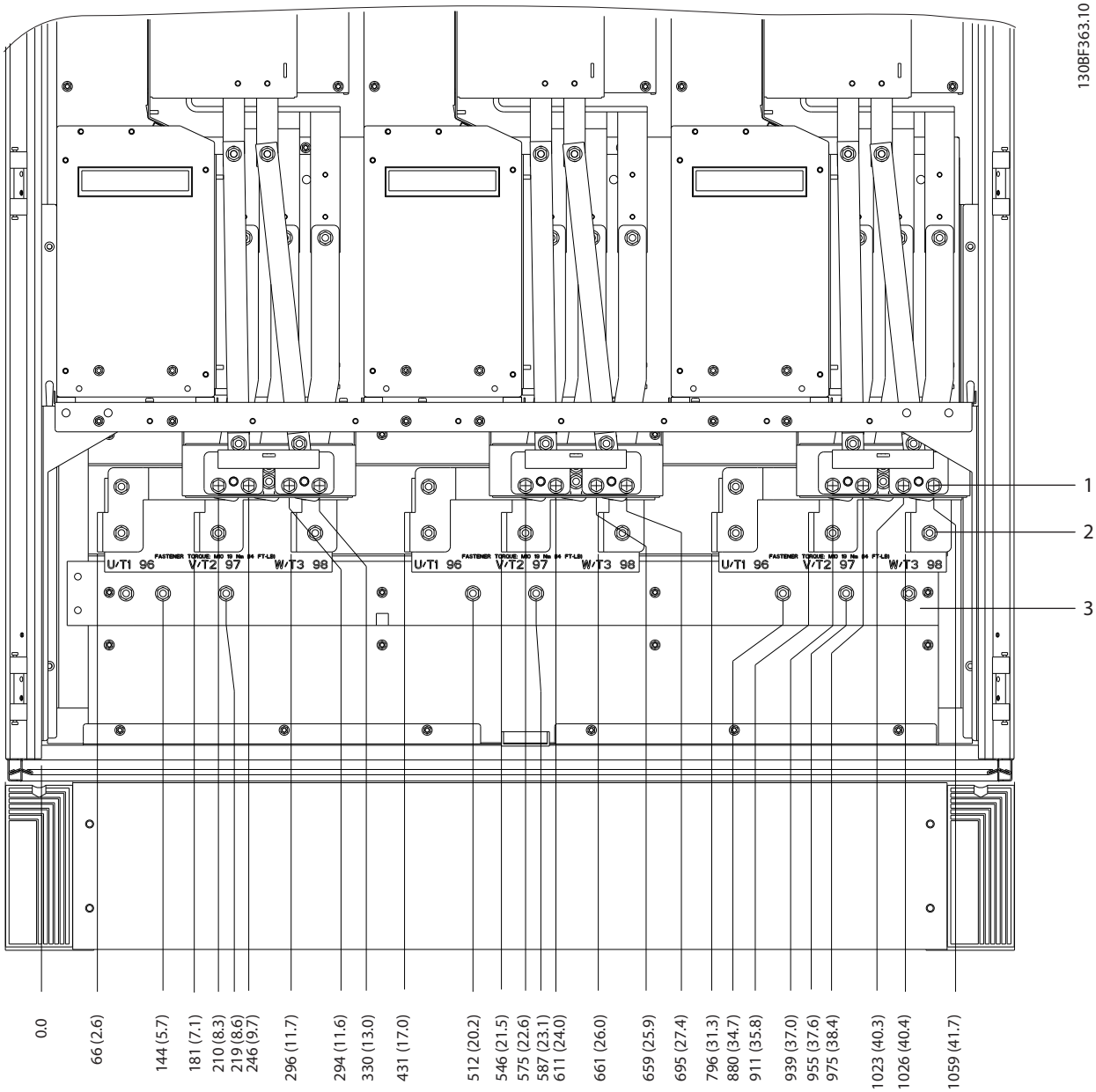

1	Brake terminals	3	Ground bar
2	Motor terminals	–	–

Illustration 8.92 Terminal Dimensions for F12–F13 Inverter Cabinet, Front View

 Danfoss A/S © 11/2017 All rights reserved.

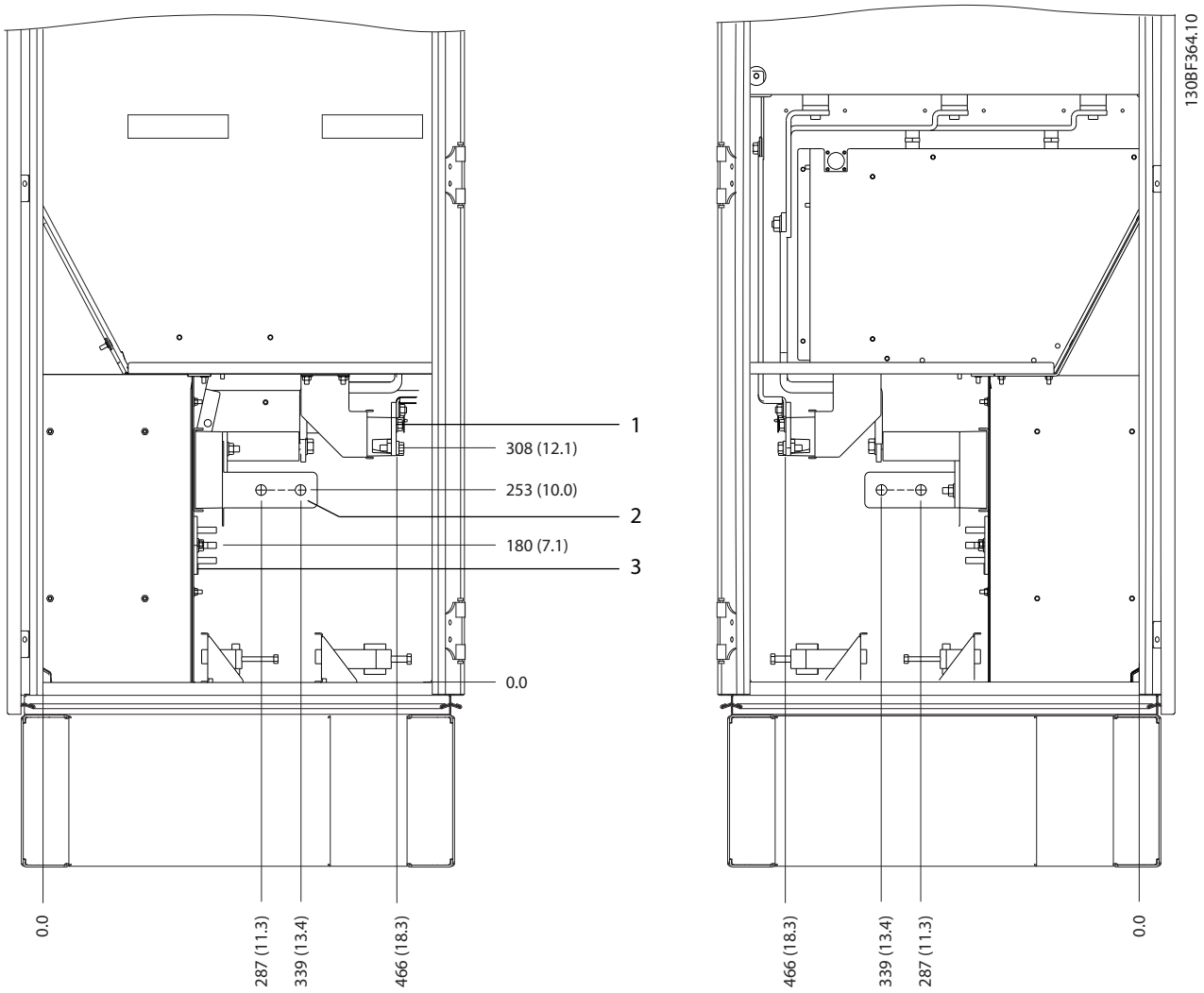

1	Brake terminals	3	Ground bar
2	Motor terminals	–	–

Illustration 8.93 Terminal Dimensions for F12–F13 Inverter Cabinet, Side View

Danfoss A/S © 11/2017 All rights reserved.

9 Mechanical Installation Considerations

9.1 Storage

Store the drive in a dry location. Keep the equipment sealed in its packaging until installation. Refer to *chapter 7.5.1 Ambient Conditions* for recommended ambient temperature.

Periodic forming (capacitor charging) is not necessary during storage unless storage exceeds 12 months.

9.2 Lifting the Unit

Always lift the drive using the dedicated lifting eyes. To avoid bending the lifting holes, use a bar.

⚠WARNING

RISK OF INJURY OR DEATH

Follow local safety regulations for lifting heavy weights. Failure to follow recommendations and local safety regulations can result in death or serious injury.

- **Ensure that the lifting equipment is in proper working condition.**
- **See *chapter 4 Product Overview* for the weight of the different enclosure sizes.**
- **Maximum diameter for bar: 20 mm (0.8 in).**
- **The angle from the top of the drive to the lifting cable: 60° or greater.**

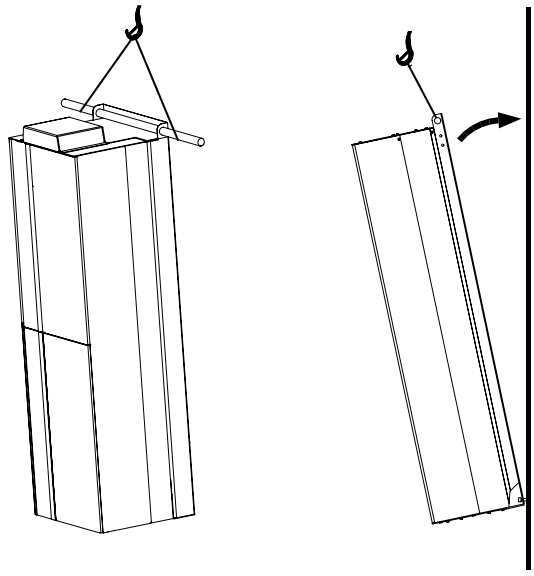

Illustration 9.1 Recommended Lifting Method for E1–E2 Enclosures

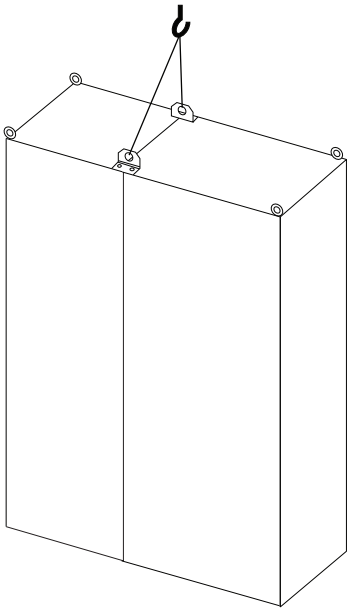

Illustration 9.2 Recommended Lifting Method for F1/F2/F9/F10 Enclosures

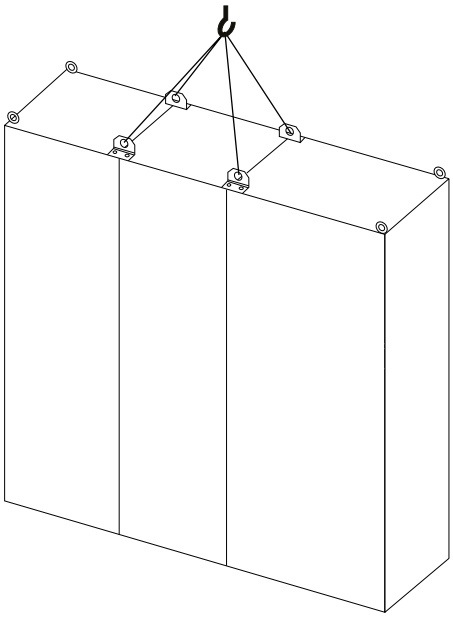

Illustration 9.3 Recommended Lifting Method for F3/F4/F11/F12/F13 Enclosures

9

 Danfoss A/S © 11/2017 All rights reserved.

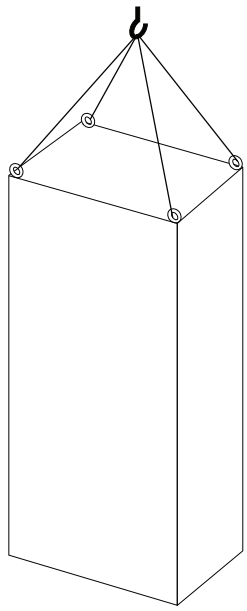

Illustration 9.4 Recommended Lifting Method for F8 Enclosure

9.3 Operating Environment

In environments with airborne liquids, particles, or corrosive gases, ensure that the IP/Type rating of the equipment matches the installation environment. For specifications regarding ambient conditions, see *chapter 7.5 Ambient Conditions*.

NOTICE

CONDENSATION

Moisture can condense on the electronic components and cause short circuits. Avoid installation in areas subject to frost. Install an optional space heater when the drive is colder than the ambient air. Operating in standby mode reduces the risk of condensation as long as the power dissipation keeps the circuitry free of moisture.

NOTICE

EXTREME AMBIENT CONDITIONS

Hot or cold temperatures compromise unit performance and longevity.

- **Do not operate in environments where the ambient temperature exceeds 55 °C (131 °F).**
- **The drive can operate at temperatures down to -10 °C (14 °F). However, proper operation at rated load is only guaranteed at 0 °C (32 °F) or higher.**
- **If temperature exceeds ambient temperature limits, extra air conditioning of the cabinet or installation site is required.**

9.3.1 Gases

Aggressive gases, such as hydrogen sulphide, chlorine, or ammonia can damage the electrical and mechanical components. The unit uses conformal-coated circuit boards to reduce the effects of aggressive gases. For conformal-coating class specifications and ratings, see *chapter 7.5 Ambient Conditions*.

9.3.2 Dust

When installing the drive in dusty environments, pay attention to the following:

Periodic maintenance
When dust accumulates on electronic components, it acts as a layer of insulation. This layer reduces the cooling capacity of the components, and the components become warmer. The hotter environment decreases the life of the electronic components.

Keep the heat sink and fans free from dust build-up. For more service and maintenance information, refer to the *operating guide*.

Cooling fans
Fans provide airflow to cool the drive. When fans are exposed to dusty environments, the dust can damage the fan bearings and cause premature fan failure. Also, dust can accumulate on fan blades causing an imbalance which prevents the fans from properly cooling the unit.

9.3.3 Potentially Explosive Atmospheres

⚠WARNING

EXPLOSIVE ATMOSPHERE

Do not install the drive in a potentially explosive atmosphere. Install the unit in a cabinet outside of this area. Failure to follow this guideline increases risk of death or serious injury.

Systems operated in potentially explosive atmospheres must fulfill special conditions. EU Directive 94/9/EC (ATEX 95) classifies the operation of electronic devices in potentially explosive atmospheres.

- Class d specifies that if a spark occurs, it is contained in a protected area.
- Class e prohibits any occurrence of a spark.

Motors with class d protection
Does not require approval. Special wiring and containment are required.

Danfoss A/S © 11/2017 All rights reserved.

Motors with class e protection
When combined with an ATEX approved PTC monitoring device like the VLT® PTC Thermistor Card MCB 112, installation does not need an individual approval from an approbated organization.

Motors with class d/e protection
The motor itself has an e ignition protection class, while the motor cabling and connection environment is in compliance with the d classification. To attenuate the high peak voltage, use a sine-wave filter at the drive output.

When using a drive in a potentially explosive atmosphere, use the following:

- Motors with ignition protection class d or e.
- PTC temperature sensor to monitor the motor temperature.
- Short motor cables.
- Sine-wave output filters when shielded motor cables are not used.

NOTICE

MOTOR THERMISTOR SENSOR MONITORING

Drives with the VLT® PTC Thermistor Card MCB 112 option are PTB-certified for potentially explosive atmospheres.

9.4 Mounting Configurations

Table 9.1 lists the available mounting configurations for each enclosure. For specific panel/wall mounting or pedestal mounting installation instructions, see the *operating guide*. See also *chapter 8 Exterior and Terminal Dimensions*.

NOTICE

Improper mounting can result in overheating and reduced performance.

Enclosure	Panel/wall mounting	Pedestal mounting (Standalone)
E1	–	X
E2	X	–
F1	–	X
F2	–	X
F3	–	X
F4	–	X
F8	–	X
F9	–	X
F10	–	X
F11	–	X
F12	–	X
F13	–	X

Table 9.1 Mounting Configurations

Mounting considerations:[1)]

- Locate the unit as near to the motor as possible. See *chapter 7.6 Cable Specifications* for the maximum motor cable length.
- Ensure unit stability by mounting the unit to a solid surface.
- Ensure that the strength of the mounting location supports the unit weight.
- Ensure that there is enough space around the unit for proper cooling. Refer to *chapter 9.5 Cooling*.
- Ensure enough access to open the door.
- Ensure cable entry from the bottom.

1) For non-typical installation, contact the factory.

 Danfoss A/S © 11/2017 All rights reserved.

9.5 Cooling

NOTICE

Improper mounting can result in overheating and reduced performance. For proper mounting, refer to *chapter 9.4 Mounting Configurations*.

- Ensure that top and bottom clearance for air cooling is provided. Clearance requirement: 225 mm (9 in).
- Provide sufficient airflow flow rate. See *Table 9.2*.
- Consider derating for temperatures starting between 45 °C (113 °F) and 50 °C (122 °F) and elevation 1000 m (3300 ft) above sea level. See *chapter 9.6 Derating* for detailed information on derating.

The drive utilizes a back-channel cooling concept that removes heat sink cooling air. The heat sink cooling air carries approximately 90% of the heat out of the back channel of the drive. Redirect the back-channel air from the panel or room by using:

- **Duct cooling**
  Back-channel cooling kits are available to direct the heat sink cooling air out of the panel when IP20/Chassis drives are installed in Rittal enclosures. Use of these kits reduce the heat in the panel and smaller door fans can be specified.
- **Back-wall cooling**
  Installing top and base covers to the unit allows the back-channel cooling air to be ventilated out of the room.

NOTICE

A door fan is required on the enclosure to remove the heat losses not contained in the back channel of the drive and those losses generated from other components installed inside the enclosure. The total required airflow must be calculated so that the appropriate fan is selected. Some enclosure manufacturers offer software for performing airflow calculations.

Secure the necessary airflow over the heat sink.

Enclosure	Models		Door fan/top fan [m³/hr (cfm)]	Heat sink fan [m³/hr (cfm)]
	380–500 V	525–690 V		
E1	–	P450–P500	340 (200)	1105 (650)
E2			255 (150)	1105 (650)
E1	P355–P450	P560–P630	340 (200)	1445 (850)
E2			255 (150)	1445 (850)

Table 9.2 E1–E2 Airflow Rate

Enclosure	Protection type	Door fan/top fan [m³/hr (cfm)]	Heat sink fan [m³/hr (cfm)]
F1–F4	IP21/Type 1	700 (412)	985 (580)
	IP54/Type 12	525 (309)	985 (580)
F8–F13	IP21/Type 1	700 (412)	985 (580)
	IP54/Type 12	525 (309)	985 (580)

Table 9.3 F1–F4 and F8–F13 Airflow Rates

Danfoss A/S © 11/2017 All rights reserved.

9.5.1 External Ducting and Derating

If more duct work is added externally to the Rittal cabinet, the pressure drop in the ducting must be calculated using *Illustration 9.5 – Illustration 9.7*.

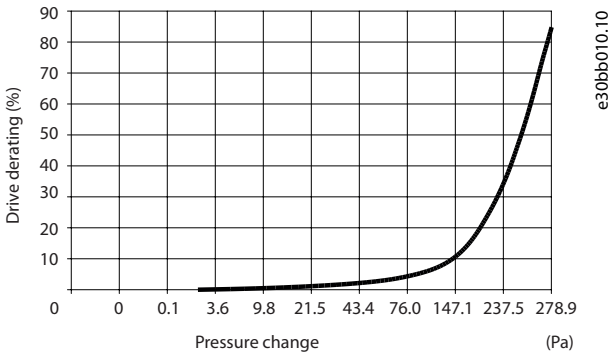

Illustration 9.5 Derating vs. Pressure Change for E1–E2 Enclosures, 380–500 V Models: P250 and 525–690 V Models: P355–P400. Airflow: 650 cfm (1105 m³/h)

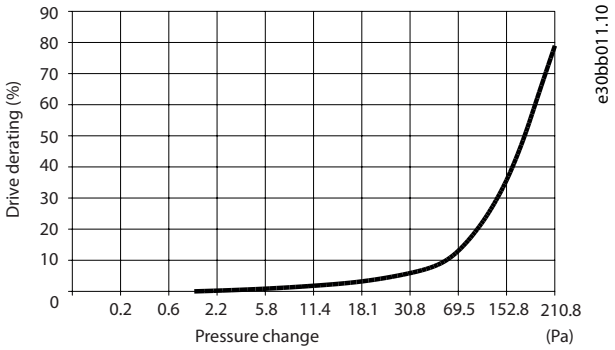

Illustration 9.6 Derating vs. Pressure Change for E1–E2 Enclosures, 380–500 V Models: P315–P400 and 525–690 V Models: P500–P560. Airflow: 850 cfm (1445 m³/h)

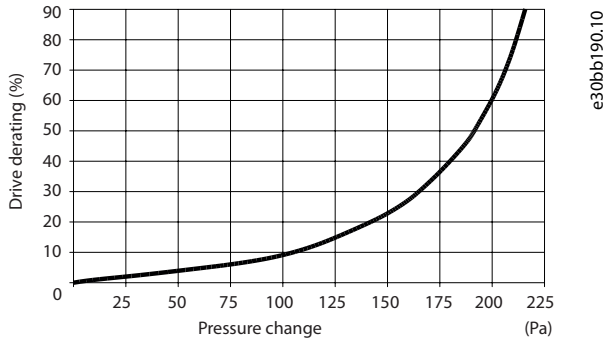

Illustration 9.7 Derating vs. Pressure Change for Enclosures F1–F4. Airflow: 580 cfm (985 m³/h)

9.6 Derating

Derating is a method used to reduce output current to avoid tripping the drive when high temperatures are reached within the enclosure. If certain extreme operating conditions are expected, a higher-powered drive can be selected to eliminate the need for derating. This is called manual derating. Otherwise, the drive automatically derates the output current to eliminate the excessive heat generated by extreme conditions.

Manual derating

When the following conditions are present, Danfoss recommends selecting a drive 1 power size higher (for example P710 instead of P630):

- Low-speed – continuous operation at low RPM in constant torque applications.
- Low air pressure – operating at altitudes above 1000 m (3281 ft).
- High ambient temperature – operating at ambient temperatures of 10 °C (50 °F).
- High switching frequency.
- Long motor cables.
- Cables with a large cross-section.

Automatic derating

If the following operating conditions are found, the drive automatically changes switching frequency or switching pattern (PWM to SFAVM) to reduce excessive heat within the enclosure:

- High temperature on the control card or heat sink.
- High motor load or low motor speed.
- High DC-link voltage.

NOTICE

Automatic derating is different when *parameter 14-55 Output Filter* is set to *[2] Sine-Wave Filter Fixed*.

9.6.1 Derating for Low-Speed Operation

When a motor is connected to a drive, it is necessary to check that the cooling of the motor is adequate. The level of cooling required depends on the following:

- Load on the motor.
- Operating speed.
- Length of operating time.

Constant torque applications

A problem can occur at low RPM values in constant torque applications. In a constant torque application, a motor can overheat at low speeds because less cooling air is being provided by the fan within the motor.

9

 Danfoss A/S © 11/2017 All rights reserved.

If the motor is run continuously at an RPM value lower than half of the rated value, the motor must be supplied with extra air cooling. If extra air cooling cannot be provided, a motor designed for low RPM/constant torque applications can be used instead.

Variable (quadratic) torque applications
Extra cooling or derating of the motor is not required in variable torque applications where the torque is proportional to the square of the speed, and the power is proportional to the cube of the speed. Centrifugal pumps and fans are common variable torque applications.

9.6.2 Derating for Altitude

The cooling capability of air is decreased at lower air pressure. No derating is necessary at or below 1000 m (3281 ft). Above 1000 m (3281 ft), the ambient temperature (T_{AMB}) or maximum output current (I_{MAX}) should be derated. Refer to *Illustration 9.8*.

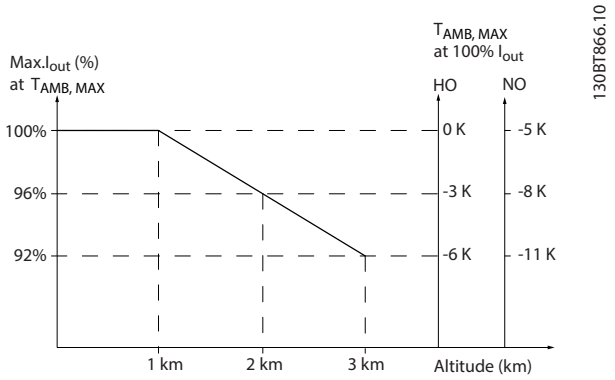

Illustration 9.8 Derating of Output Current Based on Altitude at $T_{AMB,MAX}$

Illustration 9.8 shows that at 41.7 °C (107 °F), 100% of the rated output current is available. At 45 °C (113 °F) (T_{AMB}, MAX-3 K), 91% of the rated output current is available.

9.6.3 Derating for Ambient Temperature

Graphs are presented individually for 60° AVM and SFAVM. 60° AVM only switches 2/3 of the time, whereas SFAVM switches throughout the whole period. The maximum switching frequency is 16 kHz for 60° AVM and 10 kHz for SFAVM. The discrete switching frequencies are presented in *Table 9.4* and *Table 9.5*.

Danfoss A/S © 11/2017 All rights reserved.

Model	Switching pattern	High overload HO, 150%	Normal overload NO, 110%
P315 to P1M2 380–500 V	60 AVM	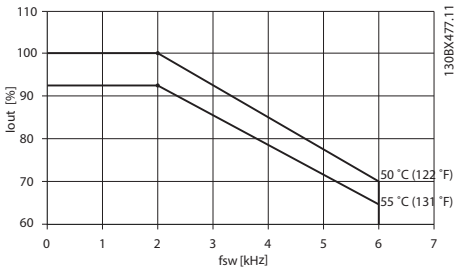	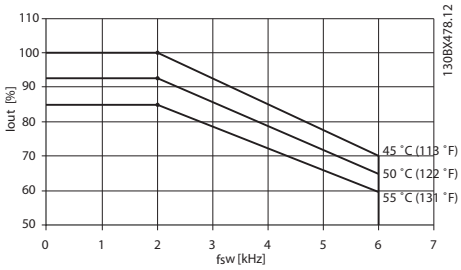
	SFAVM	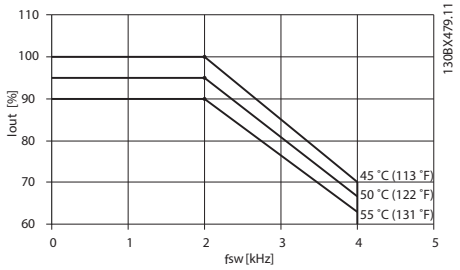	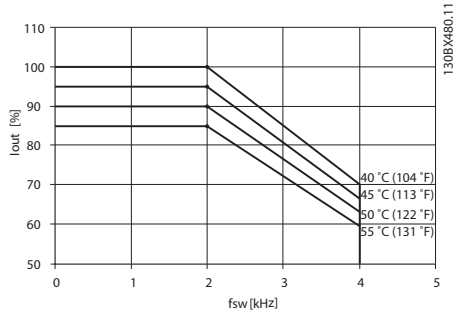

Table 9.4 Ambient Temperature Derating Tables for E1–E2, F1–F4, and F8–F13 Enclosures, 380–500 V

Model	Switching pattern	High overload HO, 150%	Normal overload NO, 110%
P355 to P1M2 525–690 V	60 AVM	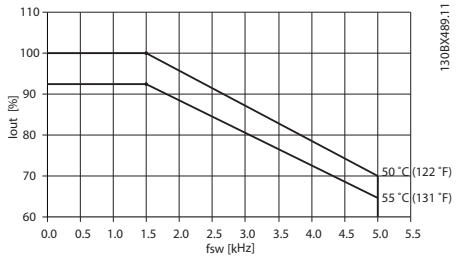	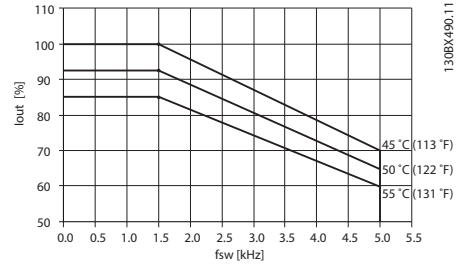
	SFAVM	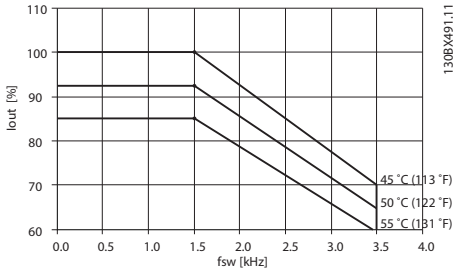	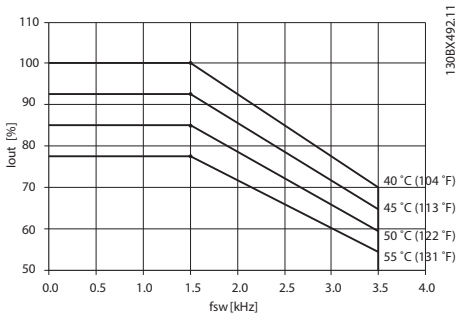

Table 9.5 Ambient Temperature Derating Tables for E1–E2, F1–F4, and F8–F13 Enclosures, 525–690 V

 Danfoss A/S © 11/2017 All rights reserved.

10 Electrical Installation Considerations

10.1 Safety Instructions

See *chapter 2 Safety* for general safety instructions.

⚠WARNING

INDUCED VOLTAGE

Induced voltage from output motor cables from different drives that are run together can charge equipment capacitors even with the equipment turned off and locked out. Failure to run output motor cables separately or use shielded cables could result in death or serious injury.

- **Run output motor cables separately or use shielded cables.**
- **Simultaneously lock out all the drives.**

⚠WARNING

SHOCK HAZARD

The drive can cause a DC current in the ground conductor and thus result in death or serious injury.

- **When a residual current-operated protective device (RCD) is used for protection against electrical shock, only an RCD of Type B is allowed on the supply side.**

Failure to follow the recommendation means that the RCD cannot provide the intended protection.

Overcurrent protection

- Extra protective equipment such as short-circuit protection or motor thermal protection between drive and motor is required for applications with multiple motors.
- Input fusing is required to provide short circuit and overcurrent protection. If fuses are not factory-supplied, the installer must provide them. See maximum fuse ratings in *chapter 10.5 Fuses and Circuit Breakers*.

Wire type and ratings

- All wiring must comply with local and national regulations regarding cross-section and ambient temperature requirements.
- Power connection wire recommendation: Minimum 75 °C (167 °F) rated copper wire.

See *chapter 7.6 Cable Specifications* for recommended wire sizes and types.

⚠CAUTION

PROPERTY DAMAGE

Protection against motor overload is not included in the default setting. To add this function, set *parameter 1-90 Motor Thermal Protection* to *[ETR trip]* or *[ETR warning]*. For the North American market, the ETR function provides class 20 motor overload protection in accordance with NEC. Failure to set *parameter 1-90 Motor Thermal Protection* to *[ETR trip]* or *[ETR warning]* means that motor overload protection is not provided and, if the motor overheats, property damage can occur.

Danfoss A/S © 11/2017 All rights reserved.

10.2 Wiring Schematic

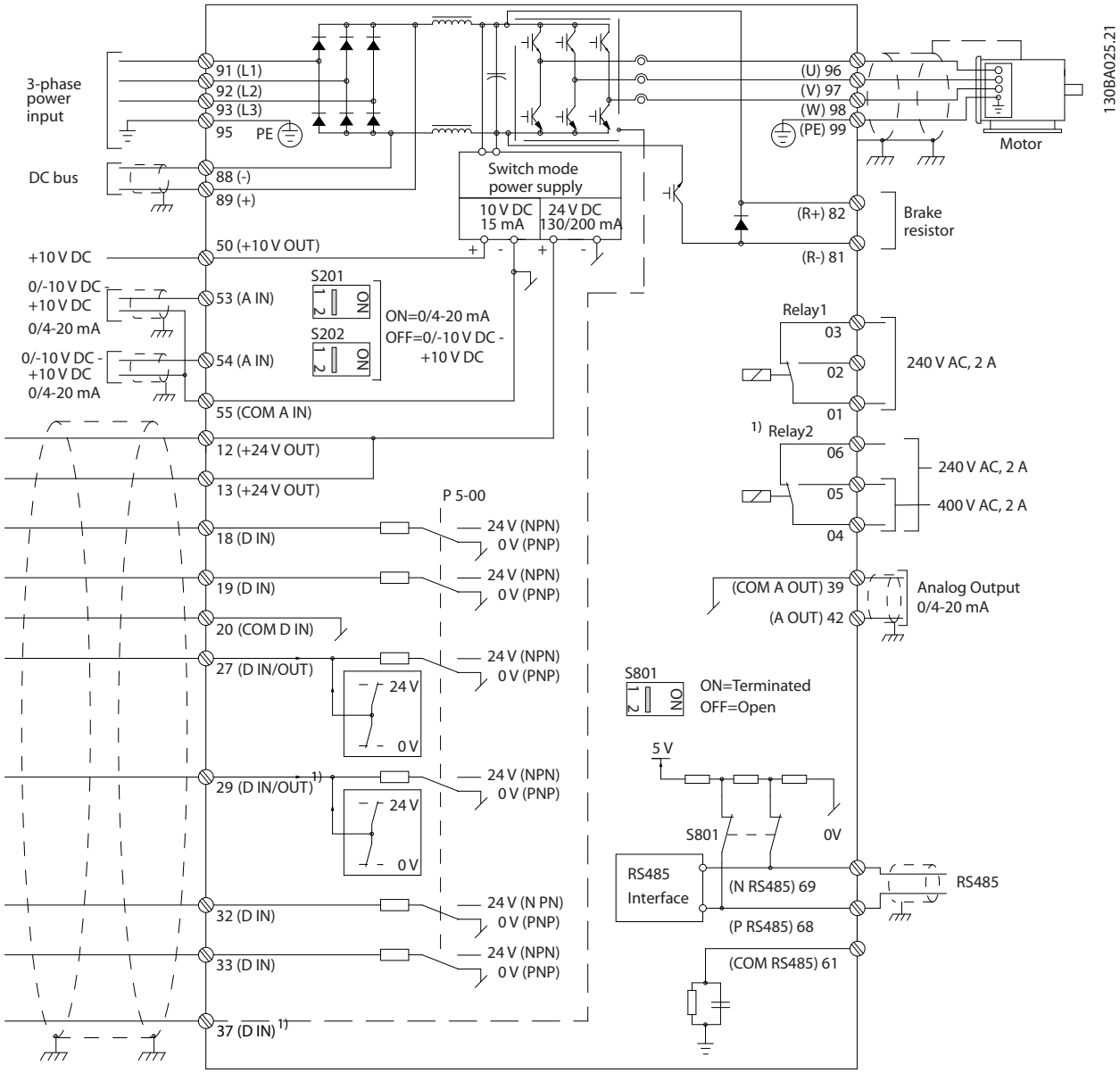

Illustration 10.1 Basic Wiring Schematic

A=Analog, D=Digital

1) Terminal 37 (optional) is used for Safe Torque Off. For Safe Torque Off installation instructions, refer to the Safe Torque Off Operating Guide.

 Danfoss A/S © 11/2017 All rights reserved.

10.3 Connections

10.3.1 Power Connections

NOTICE

All cabling must comply with national and local regulations on cable cross-sections and ambient temperature. UL applications require 75 °C (167 °F) copper conductors. Non-UL applications can use 75 °C (167 °F) and 90 °C (194 °F) copper conductors.

The power cable connections are located as shown in *Illustration 10.2*. See *chapter 7.6 Cable Specifications* for correct dimensioning of motor cable cross-section and length.

For protection of the drive, use the recommended fuses unless the unit has built-in fuses. Recommended fuses are listed in *chapter 10.5 Fuses and Circuit Breakers*. Ensure that proper fusing complies with local regulations.

The connection of mains is fitted to the mains switch if included.

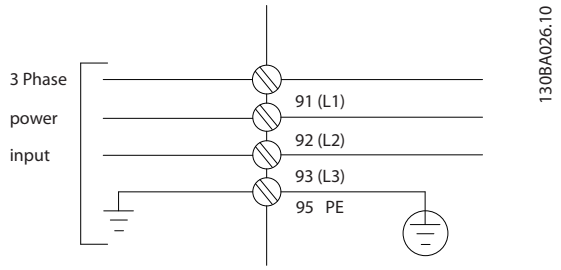

Illustration 10.2 Connection of Mains, Enclosures E1–E2 and F1–F4

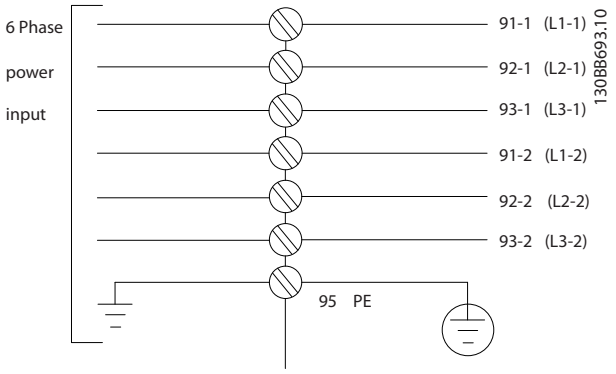

Illustration 10.3 Connection of Mains, Enclosures F8–F13

Danfoss A/S © 11/2017 All rights reserved.

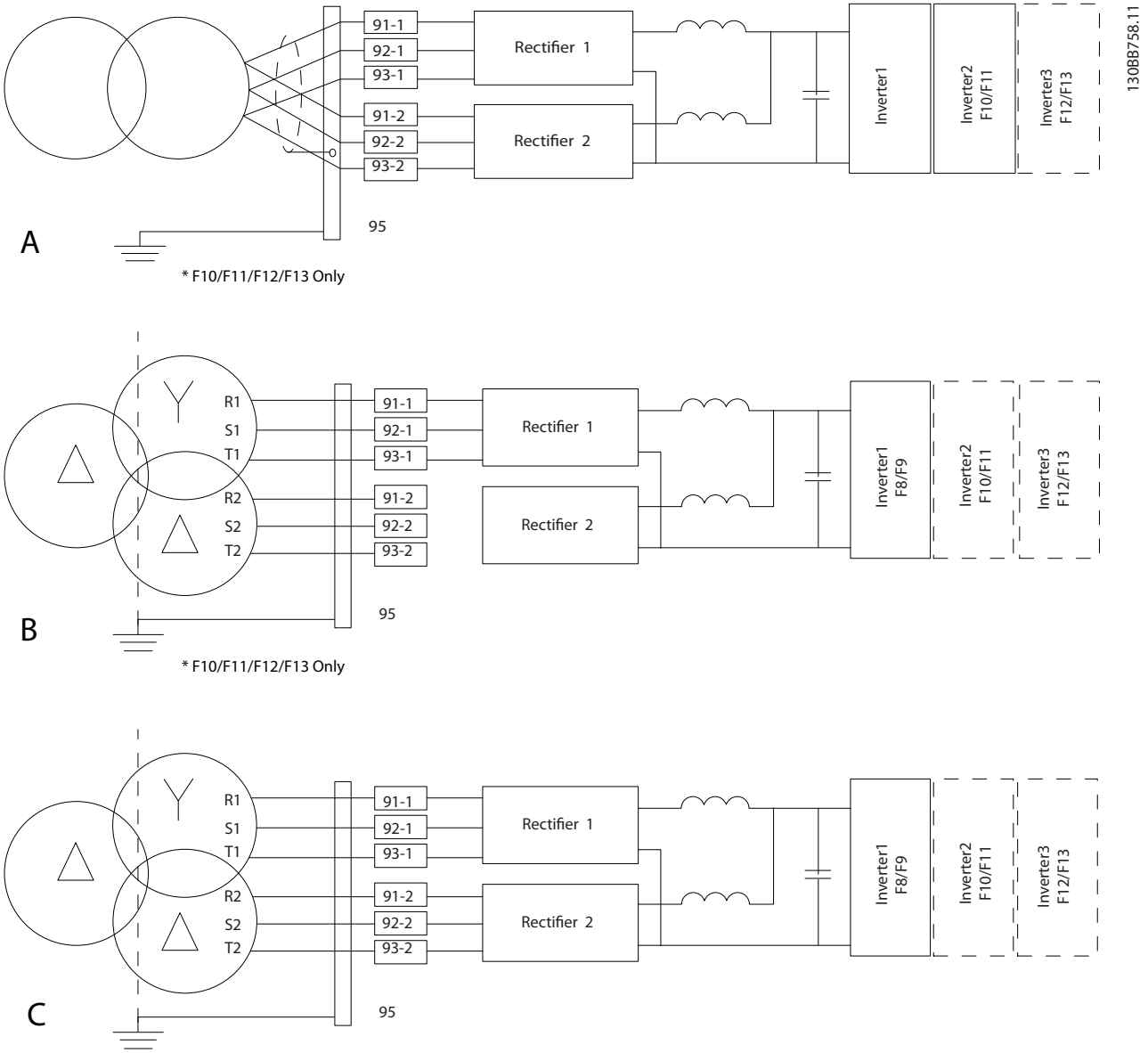

A	6-pulse connection[1), 2), 3)]
B	Modified 6-pulse connection[2), 3), 4)]
C	12-pulse connection[3), 5)]

Illustration 10.4 Connection of Mains Options for 12-pulse Drives

1) Parallel connection shown. A single 3-phase cable can be used with sufficient carrying capability. Install shorting busbars.
2) 6-pulse connection eliminates the harmonics reduction benefits of the 12-pulse rectifier.
3) Suitable for IT and TN connection of mains.
4) If 1 of the 6-pulse modular rectifiers becomes inoperable, it is possible to operate the drive at reduced load with a single 6-pulse rectifier. Contact Danfoss for reconnection details.
5) No paralleling of mains cabling is shown here. A 12-pulse drive used as a 6-pulse should have mains cables of equal numbers and lengths.

 Danfoss A/S © 11/2017 All rights reserved.

Shielding of cables

NOTICE

The motor cable must be shielded. If an unshielded cable is used, some EMC requirements are not complied with. Use a shielded motor cable to comply with EMC emission specifications. For more information, see *chapter 10.16 EMC-compliant Installation*.

Avoid installation with twisted shield ends (pigtails). They spoil the shielding effect at higher frequencies. If it is necessary to break the shield, continue the shield at the lowest possible HF impedance.

Connect the motor cable shield to both the decoupling plate of the drive and the metal housing of the motor. Make the shield connections with the largest possible surface area (cable clamp) by using the installation devices within the drive.

Cable length and cross-section

The drive has been EMC tested with a given length of cable. Keep the motor cable as short as possible to reduce the noise level and leakage currents.

Switching frequency

When drives are used together with sine-wave filters to reduce the acoustic noise from a motor, the switching frequency must be set according to the instructions in *parameter 14-01 Switching Frequency*.

Terminals				Connection type
96	97	98	99	
U	V	W	PE[1)]	Motor voltage 0–100% of mains voltage. 3 wires out of motor.
U1	V1	W1	PE[1)]	Delta-connected.
W2	U2	V2		6 wires out of motor.
U1	V1	W1	PE[1)]	Star-connected U2, V2, W2. U2, V2, and W2 to be interconnected separately.

Table 10.1 Motor Cable Connections, Enclosures E1–E2 and F1–F4

1) Protected ground connection

Terminals				Connection type
96	97	98	99	
U	V	W	PE[1)]	Motor voltage 0–100% of mains voltage. 3 wires out of motor.
U1	V1	W1	PE[1)]	Delta-connected.
W2	U2	V2		6 wires out of motor.
U1	V1	W1	PE[1)]	Star-connected U2, V2, W2. U2, V2, and W2 to be interconnected separately.

Table 10.2 Motor Cable Connections, Enclosures F8–F13

1) Protective ground connection

NOTICE

In motors without phase insulation, paper, or other insulation reinforcement suitable for operation with voltage supply, use a sine-wave filter on the output of the drive.

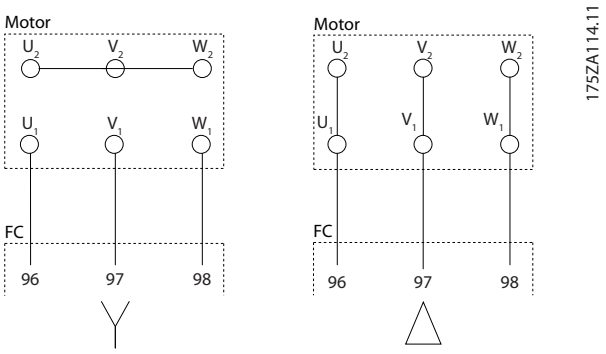

Illustration 10.5 Motor Cable Connection

10.3.2 DC Bus Connection

The DC bus terminal is used for DC back-up, with the DC link being supplied from an external source.

Terminal	Function
88, 89	DC Bus

Table 10.3 DC Bus Terminals

10.3.3 Load Sharing Connection

Load sharing links together the DC intermediate circuits of several drives. For an overview, see *chapter 5.5 Load Share Overview*.

The load sharing feature requires extra equipment and safety considerations. Consult Danfoss for ordering and installation recommendations.

Terminal	Function
88, 89	Load sharing

Table 10.4 Load Sharing Terminals

The connection cable must be shielded and the maximum length from the drive to the DC bar is limited to 25 m (82 ft).

Danfoss A/S © 11/2017 All rights reserved.

10.3.4 Brake Cable Connection

The connection cable to the brake resistor must be shielded and the maximum length from the drive to the DC bar is limited to 25 m (82 ft).

- Use cable clamps to connect the shield to the conductive backplate on the drive and to the metal cabinet of the brake resistor.
- Size the brake cable cross-section to match the brake torque.

Terminal	Function
81, 82	Brake resistor terminals

Table 10.5 Brake Resistor Terminals

See the *VLT® Brake Resistor MCE 101 Design Guide* for more details.

NOTICE

If a short circuit in the brake module occurs, prevent excessive power dissipation in the brake resistor by using a mains switch or contactor to disconnect the mains from the drive.

10.3.5 Transformer Connection

Transformers used along with 12-pulse drives (F8–F13) must conform to the following specifications.
Loading is based on 12-pulse K-4 rated transformer with 0.5% voltage and impedance balance between secondary windings.
Leads from the transformer to the input terminals on the drive are required to be equal length within 10%.

Connection	Dy11 d0 or Dyn 11d0
Phase shift between secondaries	30°
Voltage difference between secondaries	<0.5%
Short-circuit impedance of secondaries	>5%
Short-circuit impedance difference between secondaries	<5% of short-circuit impedance
Other	No grounding of the secondaries allowed. Static shield recommended

10

10.3.6 External Fan Supply Connection

In case the drive is supplied by DC or the fan must run independently of the mains supply, an external supply can be connected via the power card.

The connector, which is on the power card, connects the mains voltage to the cooling fans. The fans are configured at the factory to connect to a common AC line. Use jumpers between terminals 100–102 and 101–103. If external supply is needed, the jumpers are removed and the supply is connected to terminals 100 and 101. Use a 5 A fuse for protection. In UL applications, use a Littelfuse KLK-5 or equivalent.

Terminal	Function
100, 101	Auxiliary supply S, T
102, 103	Internal supply S, T

Table 10.6 External Supply

 Danfoss A/S © 11/2017 All rights reserved.

10.3.7 Personal Computer Connection

To control the drive from a PC, install the MCT 10 Set-up Software. The PC is connected via a standard (host/device) USB cable, or via the RS485 interface as shown in the section *Bus Connection* in the *programming guide*.

USB is a universal serial bus utilizing 4 shielded wires with ground pin 4 connected to the shield in the PC USB port. All standard PCs are manufactured without galvanic isolation in the USB port.
To prevent damage to the USB host controller through the shield of the USB cable, follow the ground recommendations described in the *operating guide*.
When connecting the PC to the drive through a USB cable, Danfoss recommends using a USB isolator with galvanic isolation to protect the PC USB host controller from ground potential differences. It is also recommended not to use a PC power cable with a ground plug when the PC is connected to the drive through a USB cable. These recommendations reduce the ground potential difference, but does not eliminate all potential differences due to the ground and shield connected in the PC USB port.

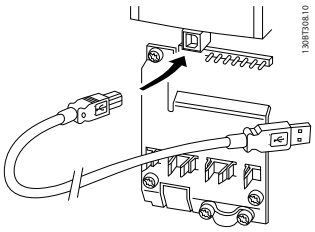

Illustration 10.6 USB Connection

10.4 Control Wiring and Terminals

Control cables must be shielded and the shield must be connected with a cable clamp at both ends to the metal cabinet of the unit.

For correct grounding of control cables, see *Illustration 10.7*.

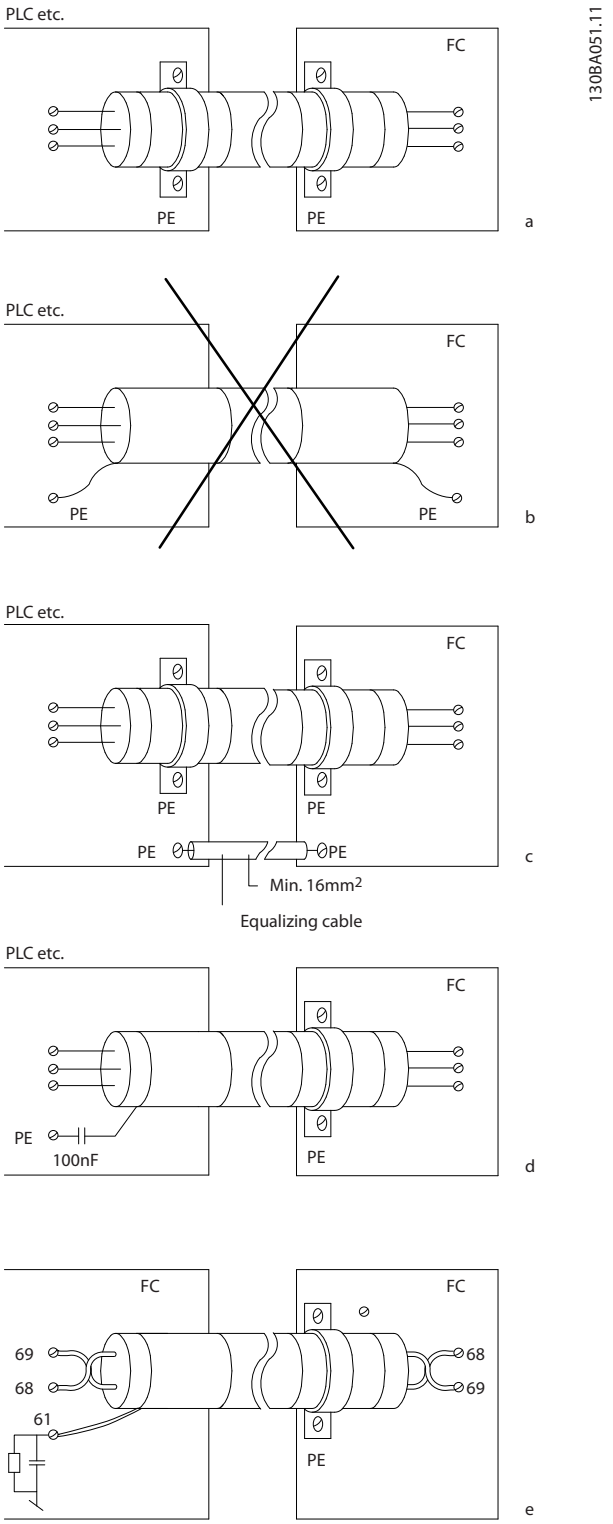

a	Control cables and serial communication cables must be fitted with cable clamps at both ends to ensure the best possible electrical contact.
b	Do not use twisted cable ends (pigtails). They increase the shield impedance at high frequencies.

Danfoss A/S © 11/2017 All rights reserved.

c	If the ground potential between the drive and the PLC is different, electric noise can occur that disturbs the entire system. Fit an equalizing cable next to the control cable. Minimum cable cross-section: 16 mm^2 (6 AWG).
d	If long control cables are used, 50/60 Hz ground loops are possible. Connect 1 end of the shield to ground via a 100 nF capacitor (keeping leads short).
e	When using cables for serial communication, eliminate low-frequency noise currents between 2 drives by connecting 1 end of the shield to terminal 61. This terminal is connected to ground via an internal RC link. Use twisted-pair cables for reducing the differential mode interference between the conductors.

Illustration 10.7 Grounding Examples

10.4.1 Control Cable Routing

Tie down and route all control wires as shown in *Illustration 10.8* and *Illustration 10.9*. Remember to connect the shields in a proper way to ensure optimum electrical immunity.

- Isolate control wiring from high-power cables.
- When the drive is connected to a thermistor, ensure that the thermistor control wiring is shielded and reinforced/double insulated. A 24 V DC supply voltage is recommended.

Fieldbus connection
Connections are made to the relevant options on the control card. See the relevant fieldbus instruction. The cable must be tied down and routed along with other control wires inside the unit. See *Illustration 10.8* and *Illustration 10.9*.

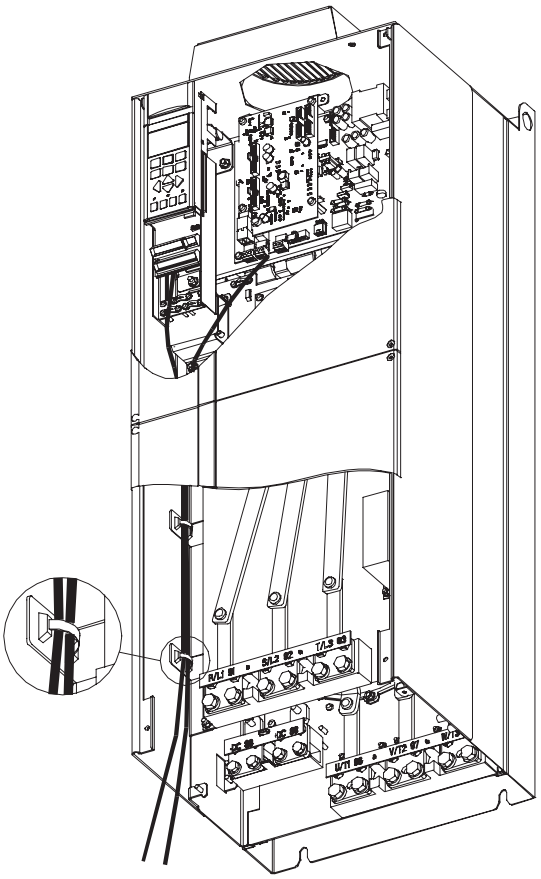

Illustration 10.8 Control Card Wiring Path for the E1 and E2 Enclosures

10

 Danfoss A/S © 11/2017 All rights reserved.

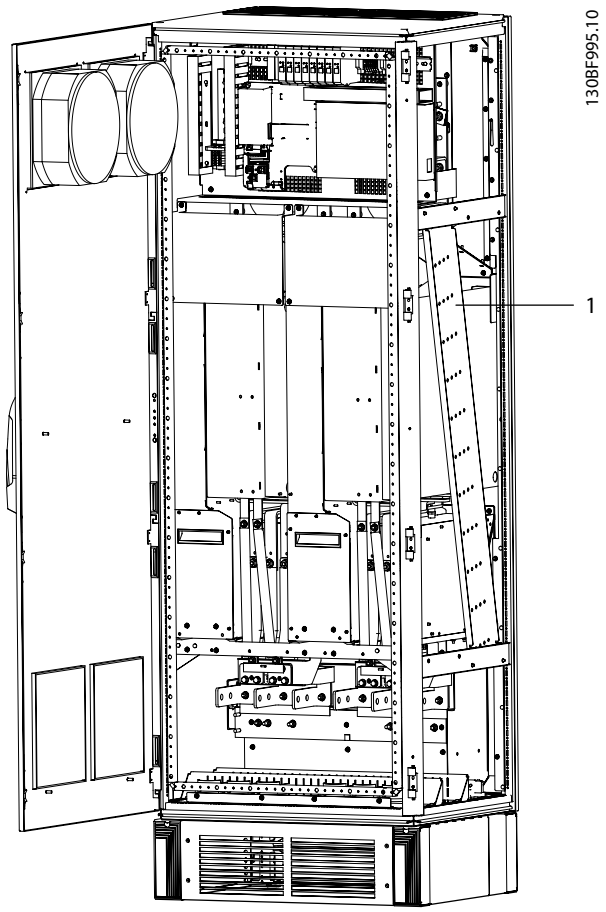

1	Cable tray for routing control cables in F1–F13 enclosures

Illustration 10.9 Control Card Wiring Path for the F1/F3. Control Card Wiring for the F2/F4 and F8–F13 Use the Same Path

In the enclosure E drives, it is possible to connect the fieldbus from the top of the unit, as shown in the following illustrations. On the IP21/54 (NEMA-1/NEMA-12) unit, a cover plate must be removed.
The kit number for the fieldbus top connection is 176F1742.

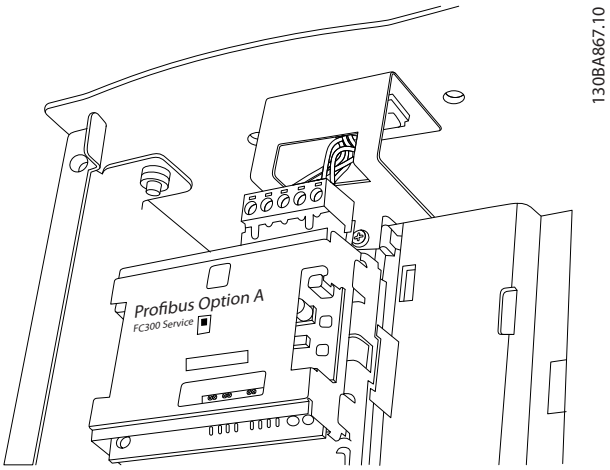

Illustration 10.10 Top Connection for Fieldbus

10.4.2 Control Terminals

Illustration 10.11 shows the removable drive connectors. Terminal functions and default settings are summarized in *Table 10.7 – Table 10.9*.

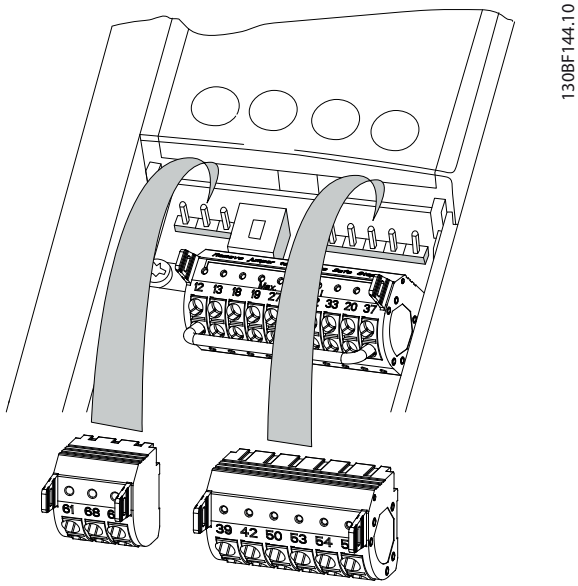

Illustration 10.11 Control Terminal Locations

Danfoss A/S © 11/2017 All rights reserved.

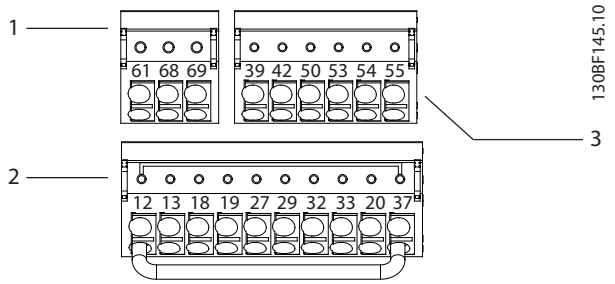

1	Serial communication terminals
2	Digital input/output terminals
3	Analog input/output terminals

Illustration 10.12 Terminal Numbers Located on the Connectors

Terminal	Parameter	Default setting	Description
61	–	–	Integrated RC-filter for cable shield. ONLY for connecting the shield if there are EMC problems.
68 (+)	*Parameter group 8-3* FC Port Settings*	–	RS485 interface. A switch (BUS TER.) is provided on the control card for bus termination resistance.
69 (-)	*Parameter group 8-3* FC Port Settings*	–	
Relays			
01, 02, 03	*Parameter 5-40 Function Relay* [0]	*[0] No operation*	Form C relay output. For AC or DC voltage and resistive or inductive loads.
04, 05, 06	*Parameter 5-40 Function Relay* [1]	*[0] No operation*	

Table 10.7 Serial Communication Terminal Descriptions

Terminal	Parameter	Default setting	Description
12, 13	–	+24 V DC	24 V DC supply voltage for digital inputs and external transducers. Maximum output current 200 mA for all 24 V loads.
18	*Parameter 5-10 Terminal 18 Digital Input*	*[8] Start*	Digital inputs.
19	*Parameter 5-11 Terminal 19 Digital Input*	*[10] Reversing*	
32	*Parameter 5-14 Terminal 32 Digital Input*	*[0] No operation*	
33	*Parameter 5-15 Terminal 33 Digital Input*	*[0] No operation*	
27	*Parameter 5-12 Terminal 27 Digital Input*	*[2] Coast inverse*	For digital input or output. Default setting is input.
29	*Parameter 5-13 Terminal 29 Digital Input*	*[14] JOG*	
20	–	–	Common for digital inputs and 0 V potential for 24 V supply.
37	–	STO	When not using the optional STO feature, a jumper wire is required between terminal 12 (or 13) and terminal 37. This set-up allows the drive to operate with factory default programming values.

Table 10.8 Digital Input/Output Terminal Descriptions

Terminal	Parameter	Default setting	Description
39	–	–	Common for analog output.
42	*Parameter 6-50 Terminal 42 Output*	*[0] No operation*	Programmable analog output. 0–20 mA or 4–20 mA at a maximum of 500 Ω.
50	–	+10 V DC	10 V DC analog supply voltage for potentiometer or thermistor. 15 mA maximum.
53	*Parameter group 6-1* Analog Input 1*	Reference	Analog input. For voltage or current. Switches A53 and A54 select mA or V.
54	*Parameter group 6-2* Analog Input 2*	Feedback	

10

 Danfoss A/S © 11/2017 All rights reserved.

Terminal	Parameter	Default setting	Description
55	–	–	Common for analog input.

Table 10.9 Analog Input/Output Terminal Descriptions

Relay terminals

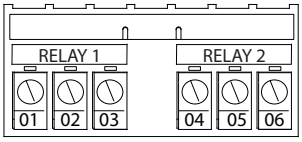

Illustration 10.13 Relay 1 and Relay 2 Terminals

- Relay 1 and relay 2. The location of the outputs depends on the drive configuration. See the *operating guide*.
- Terminals on built-in optional equipment. See the instructions provided with the equipment option.

10.4.3 Input Polarity of Control Cables

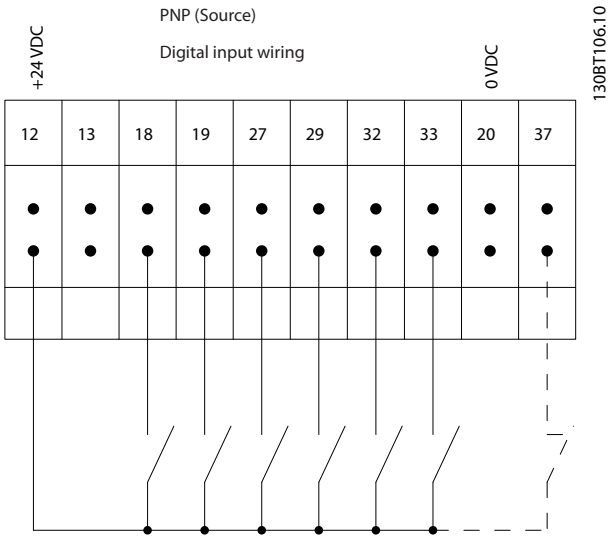

Illustration 10.14 Input Polarity of Control Terminals (PNP Source)

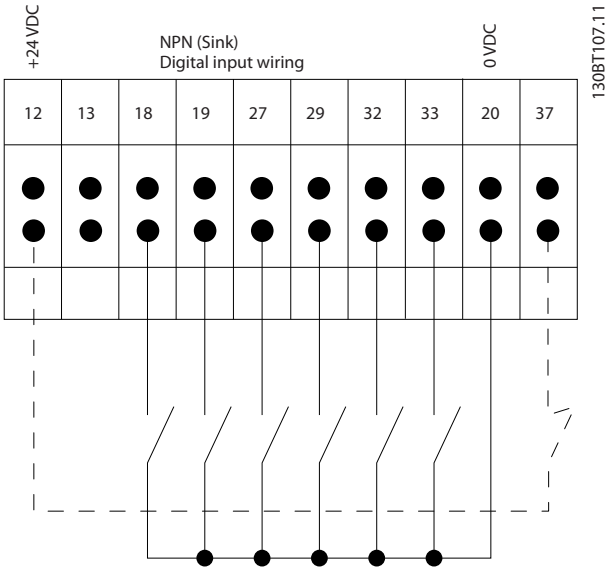

Illustration 10.15 Input Polarity of Control Terminals (NPN Sink)

NOTICE

Use shielded cables to comply with EMC emission specifications. For more information, see *chapter 10.16 EMC-compliant Installation*.

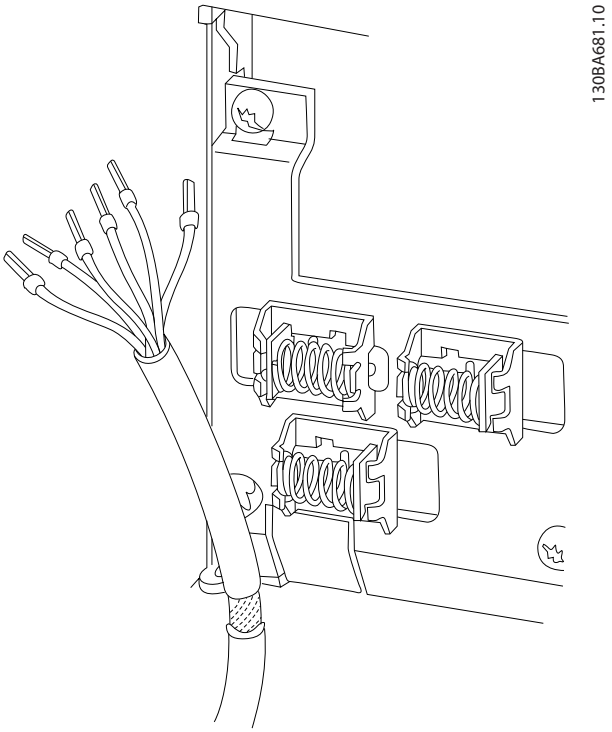

Illustration 10.16 Shield Termination and Strain Relief of Control Cable

Danfoss A/S © 11/2017 All rights reserved.

10.4.4 12-pulse Control Terminals

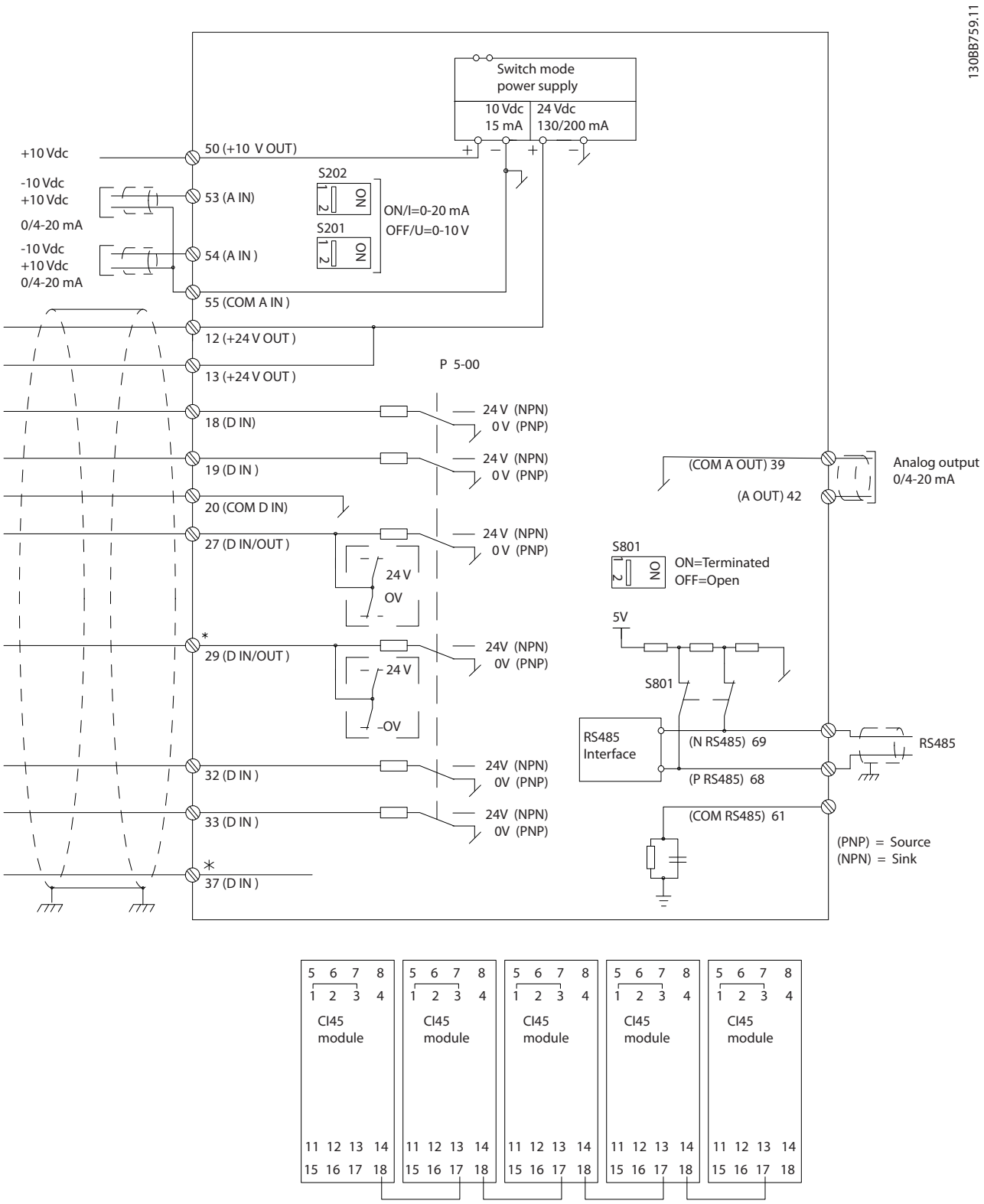

Illustration 10.17 12-pulse Control Terminals

Danfoss A/S © 11/2017 All rights reserved.

10.4.5 NAMUR Control Terminals

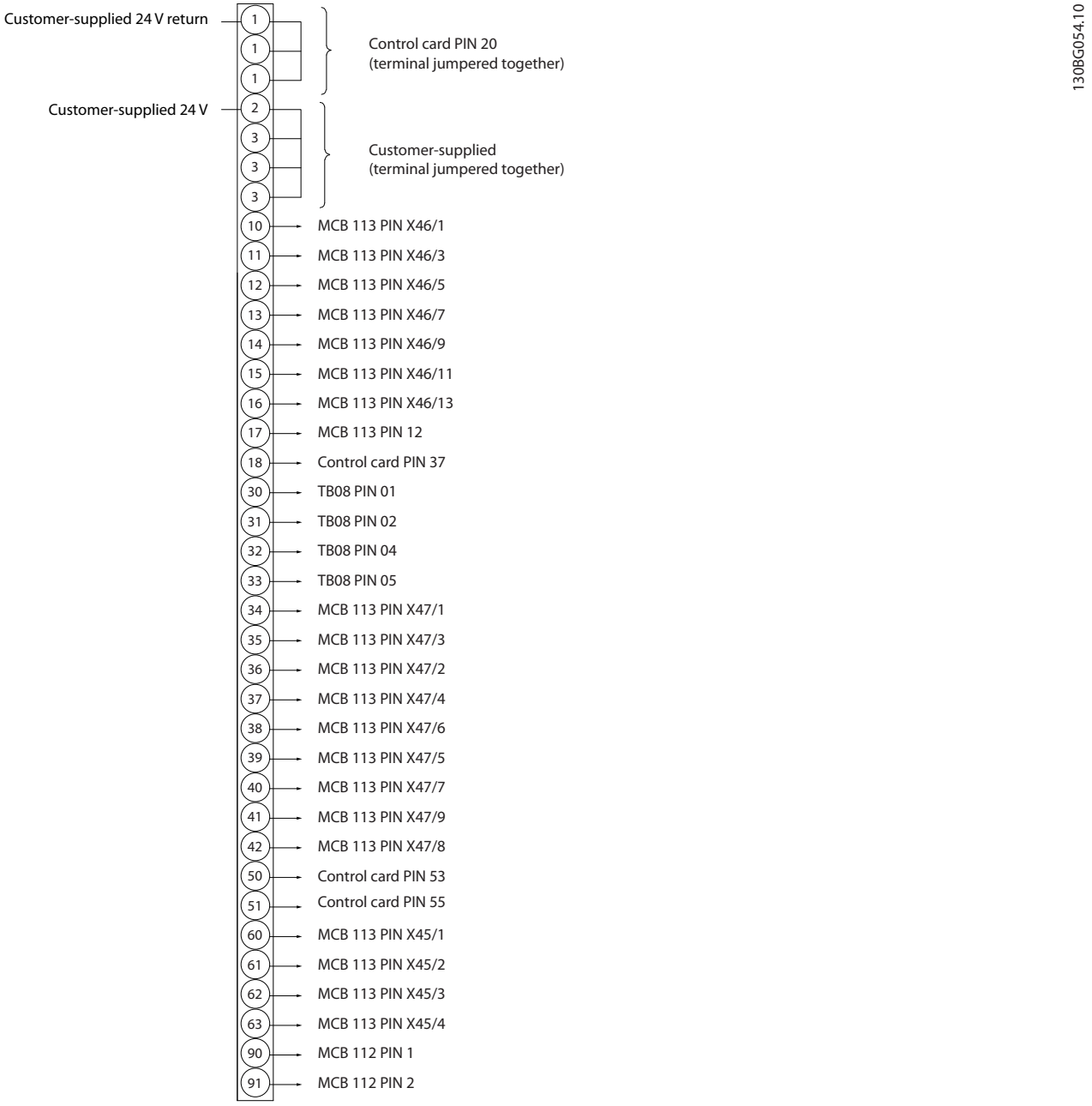

Illustration 10.18 NAMUR Control Terminals

Danfoss A/S © 11/2017 All rights reserved.

10.5 Fuses and Circuit Breakers

Fuses ensure that possible damage to the drive is limited to damages inside the drive. To ensure compliance with EN 50178, use the recommended fuses as replacements. Use of fuses on the supply side is mandatory for IEC 60364 (EC) and NEC 2009 (UL) compliant installations.

Branch circuit protection
To protect the installation against electrical and fire hazard, all branch circuits in an installation, such as those branch circuits found in switchgear and machines, must be protected against short circuit and overcurrent according to national/international regulations.

Fuses or circuit breakers are mandatory to comply with IEC 60364.

Enclosure	FC 300 model	Recommended fuse size	Recommended maximum fuse
E	P315	aR-900	aR-900
	P355	aR-900	aR-900
	P400	aR-900	aR-900
F	P450	aR-1600	aR-1600
	P500	aR-2000	aR-2000
	P560	aR-2500	aR-2500
	P630	aR-2500	aR-2500
	P710	aR-2500	aR-2500
	P800	aR-2500	aR-2500

Table 10.10 Recommended Fuses for CE Compliance, 380–500 V

Enclosure	FC 300 model	Recommended fuse size	Recommended maximum fuse
E	P355	aR-700	aR-700
	P400	aR-900	aR-900
	P500		
	P560		
F	P630	aR-1600	aR-1600
	P710	aR-2000	aR-2000
	P800	aR-2500	aR-2500
	P900		
	P1M0		

Table 10.11 Recommended Fuses for CE Compliance, 525–690 V

10.5.1 Power/semiconductor Fuse Options

Model	Recommended drive external fuse Bussmann PN	Rating	Drive internal option Bussmann PN	Alternate external Siba PN	Alternate external Ferraz Shawmut PN
P315	170M6013	900 A, 700 V	170M6013	22 610 32.900	6.9URD33D08A0900
P355	170M6013	900 A, 700 V	170M6013	22 610 32.900	6.9URD33D08A0900
P400	170M6013	900 A, 700 V	170M6013	22 610 32.900	6.9URD33D08A0900

Table 10.12 380–480/500 V, Enclosure E, Mains Fuse Options for UL Compliance

 Danfoss A/S © 11/2017 All rights reserved.

Model	Recommended drive external fuse Bussmann PN	Rating	Drive internal option Bussmann PN	Alternate Siba PN
P450	170M7081	1600 A, 700 V	170M7082	20 695 32.1600
P500	170M7081	1600 A, 700 V	170M7082	20 695 32.1600
P560	170M7082	2000 A, 700 V	170M7082	20 695 32.2000
P630	170M7082	2000 A, 700 V	170M7082	20 695 32.2000
P710	170M7083	2500 A, 700 V	170M7083	20 695 32.2500
P800	170M7083	2500 A, 700 V	170M7083	20 695 32.2500

Table 10.13 380–480/500 V, Enclosure F, Mains Fuse Options for UL Compliance

Model	Drive internal Bussmann PN	Rating	Alternate Siba PN
P450	170M8611	1100 A, 1000 V	20 781 32.1000
P500	170M8611	1100 A, 1000 V	20 781 32.1000
P560	170M6467	1400 A, 700 V	20 681 32.1400
P630	170M6467	1400 A, 700 V	20 681 32.1400
P710	170M8611	1100 A, 1000 V	20 781 32.1000
P800	170M6467	1400 A, 700 V	20 681 32.1400

Table 10.14 380-480/500 V, Enclosure F, Inverter Module DC Link Fuses

NOTICE

For UL Compliance, the Bussmann 170M series fuses must be used for units supplied without a contactor-only option. For units supplied with a contactor-only option, see *Table 10.32* for SCCR ratings and UL fuse criteria.

10

Model	Recommended drive external fuse Bussmann PN	Rating	Drive internal option Bussmann PN	Alternate external Siba PN	Alternate external Ferraz Shawmut PN
P355	170M4017	700 A, 700 V	170M4017	20 610 32.700	6.9URD31D08A0700
P400	170M4017	700 A, 700 V	170M4017	20 610 32.700	6.9URD31D08A0700
P500	170M6013	900 A, 700 V	170M6013	22 610 32.900	6.9URD33D08A0900
P560	170M6013	900 A, 700 V	170M6013	22 610 32.900	6.9URD33D08A0900

Table 10.15 525–690 V, Enclosure E, Mains Fuse Options for UL Compliance

Model	Recommended drive external fuse Bussmann PN	Rating	Drive internal option Bussmann PN	Alternate Siba PN
P630	170M7081	1600 A, 700 V	170M7082	20 695 32.1600
P710	170M7081	1600 A, 700 V	170M7082	20 695 32.1600
P800	170M7081	1600 A, 700 V	170M7082	20 695 32.1600
P900	170M7081	1600 A, 700 V	170M7082	20 695 32.1600
P1000	170M7082	2000 A, 700 V	170M7082	20 695 32.2000
P1200	170M7083	2500 A, 700 V	170M7083	20 695 32.2500

Table 10.16 525–690 V, Enclosure F, Mains Fuse Options for UL Compliance

Danfoss A/S © 11/2017 All rights reserved.

Model	Drive internal Bussmann PN	Rating	Alternate Siba PN
P630	170M8611	1100 A, 1000 V	20 781 32.1000
P710	170M8611	1100 A, 1000 V	20 781 32.1000
P800	170M8611	1100 A, 1000 V	20 781 32.1000
P900	170M8611	1100 A, 1000 V	20 781 32.1000
P1000	170M8611	1100 A, 1000 V	20 781 32.1000
P1200	170M8611	1100 A, 1000 V	20 781 32.1000

Table 10.17 525–690 V, Enclosure F, Inverter Module DC Link Fuses

The 170M fuses from Bussmann shown use the -/80 visual indicator. -TN/80 Type T, -/110, or TN/110 Type T indicator fuses of the same size and amperage can be substituted for external use. To meet UL requirements, use any minimum 500 V UL listed fuse with associated current rating.

10.5.2 Supplementary Fuses

Supplementary Fuses

Enclosure	Bussmann PN	Rating
E and F	KTK-4	4 A, 600 V

Table 10.18 SMPS Fuse

Size/type	Bussmann PN	Littelfuse	Rating
P355–P400, 525–690 V	KTK-4	–	4 A, 600 V
P315-P800, 380–500 V	–	KLK-15	15 A, 600 V
P500–P1M2, 525–690 V	–	KLK-15	15 A, 600 V

Table 10.19 Fan Fuses

Fuse	Size/Type	Bussmann PN	Rating	Alternative fuses
2.5–4.0 A	P450–P800, 380–500 V	LPJ-6 SP or SPI	6 A, 600 V	Any listed Class J Dual Element, Time Delay, 6 A
	P630–P1M2, 525–690 V	LPJ-10 SP or SPI	10 A, 600 V	Any listed Class J Dual Element, Time Delay, 10 A
4.0–6.3 A	P450–P800, 380–500 V	LPJ-10 SP or SPI	10 A, 600 V	Any listed Class J Dual Element, Time Delay, 10 A
	P630–P1M2, 525–690 V	LPJ-15 SP or SPI	15 A, 600 V	Any listed Class J Dual Element, Time Delay, 15 A
6.3–10 A	P450–P800600–1200 hp, 380–500 V	LPJ-15 SP or SPI	15 A, 600 V	Any listed Class J Dual Element, Time Delay, 15 A
	P630–P1M2, 525–690 V	LPJ-20 SP or SPI	20 A, 600 V	Any listed Class J Dual Element, Time Delay, 20 A
10–16 A	P450–P800, 380–500 V	LPJ-25 SP or SPI	25 A, 600 V	Any listed Class J Dual Element, Time Delay, 25 A
	P630–P1M2, 525–690 V	LPJ-20 SP or SPI	20 A, 600 V	Any listed Class J Dual Element, Time Delay, 20 A

Table 10.20 Manual Motor Controller Fuses

Enclosure	Bussmann PN	Rating	Alternative fuses
F	LPJ-30 SP or SPI	30 A, 600 V	Any listed Class J Dual Element, Time Delay, 30 A

Table 10.21 30 A Protected Terminal Fuse

 Danfoss A/S © 11/2017 All rights reserved.

Enclosure	Bussmann PN	Rating	Alternative fuses
F	LPJ-6 SP or SPI	6 A, 600 V	Any listed Class J Dual Element, Time Delay, 6 A

Table 10.22 Control Transformer Fuse

Enclosure	Bussmann PN	Rating
F	GMC-800 mA	800 mA, 250 V

Table 10.23 NAMUR Fuse

Enclosure	Bussmann PN	Rating	Alternative fuses
F	LP-CC-6	6 A, 600 V	Any listed Class CC, 6 A

Table 10.24 Safety Relay Coil Fuse with Pilz Relay

10.5.3 Mains Fuses, F8–F13

The following fuses are suitable for use on a circuit capable of delivering 100000 A_{rms} (symmetrical), 240 V, or 480 V, or 500 V, or 600 V depending on the drive voltage rating. With the proper fusing, the drive short-circuit current rating (SCCR) is 100000 A_{rms}.

Model	Enclosure size	Rating		Bussmann P/N	Spare Bussmann P/N	Estimated fuse power loss [W]	
		[V] (UL)	[A]			400 V	460 V
P250	F8–F9	700	700	170M4017	176F8591	25	19
P315	F8–F9	700	700	170M4017	176F8591	30	22
P355	F8–F9	700	700	170M4017	176F8591	38	29
P400	F8–F9	700	700	170M4017	176F8591	3500	2800
P450	F10–F11	700	900	170M6013	176F8592	3940	4925
P500	F10–F11	700	900	170M6013	176F8592	2625	2100
P560	F10–F11	700	900	170M6013	176F8592	3940	4925
P630	F10–F11	700	1500	170M6018	176F8592	45	34
P710	F12–F13	700	1500	170M6018	176F9181	60	45
P800	F12–F13	700	1500	170M6018	176F9181	83	63

Table 10.25 Mains Fuses, 380–500 V

Model	Enclosure size	Rating		Bussmann P/N	Spare Bussmann P/N	Estimated fuse power loss [W]	
		[V] (UL)	[A]			600 V	690 V
P355	F8–F9	700	630	170M4016	176F8335	13	10
P400	F8–F9	700	630	170M4016	176F8335	17	13
P500	F8–F9	700	630	170M4016	176F8335	22	16
P560	F8–F9	700	630	170M4016	176F8335	24	18
P630	F10–F11	700	900	170M6013	176F8592	26	20
P710	F10–F11	700	900	170M6013	176F8592	35	27
P800	F10–F11	700	900	170M6013	176F8592	44	33
P900	F12–F13	700	1500	170M6018	176F9181	26	20
P1M0	F12–F13	700	1500	170M6018	176F9181	37	28
P1M2	F12–F13	700	1500	170M6018	176F9181	47	36

Table 10.26 Mains Fuses, 525–690 V

Danfoss A/S © 11/2017 All rights reserved.

Model	Bussmann PN[1)]	Rating	Siba
P450	170M8611	1100 A, 1000 V	20 781 32.1000
P500	170M8611	1100 A, 1000 V	20 781 32.1000
P560	170M6467	1400 A, 700 V	20 681 32.1400
P630	170M6467	1400 A, 700 V	20 681 32.1400
P710	170M8611	1100 A, 1000 V	20 781 32.1000
P800	170M6467	1400 A, 700 V	20 681 32.1400

Table 10.27 Inverter Module DC Link Fuses, 380–500 V

Model	Bussmann PN[1)]	Rating	Siba
P630	170M8611	1100 A, 1000 V	20 781 32.1000
P710	170M8611	1100 A, 1000 V	20 781 32.1000
P800	170M8611	1100 A, 1000 V	20 781 32.1000
P900	170M8611	1100 A, 1000 V	20 781 32.1000
P1M0	170M8611	1100 A, 1000 V	20 781 32.1000
P1M2	170M8611	1100 A, 1000 V	20 781 32.1000

Table 10.28 Inverter Module DC Link Fuses, 525–690 V

1) The 170M fuses from Bussmann shown use the -/80 visual indicator. -TN/80 Type T, -/110, or TN/110 Type T indicator fuses of the same size and amperage can be substituted for external use. To meet UL requirements, use any minimum 500 V UL listed fuse with associated current rating.

Enclosure	Models	Type	Default breaker settings	
			Trip level [A]	Time [s]
F3	380–500 V, Model: P450 525–690 V, Model: P630–P710	Merlin Gerin NPJF36120U31AABSCYP	1200	0.5
F3	380–500 V, Model: P500–P630 525–690 V, Model: P800	Merlin Gerin NRJF36200U31AABSCYP	2000	0.5
F4	380–500 V, Model: P710 525–690 V, Model: P900–P1M2	Merlin Gerin NRJF36200U31AABSCYP	2000	0.5
F4	380–500 V, Model: P800	Merlin Gerin NRJF36250U31AABSCYP	2500	0.5

Table 10.29 Circuit Breakers, F3–F4

10.6 Disconnects and Contactors

10.6.1 Mains Disconnects, E1–E2 and F3–F4

Enclosure size	Model	Type
380–500 V		
E1–E2	P315–P400	ABB OETL-NF800A
F3	P450	Merlin Gerin NPJF36000S12AAYP
F3	P500–P630	Merlin Gerin NRKF36000S20AAYP
F4	P710–P800	Merlin Gerin NRKF36000S20AAYP
525–690 V		
E1–E2	P355–P560	ABB OETL-NF600A
F3	P630–P710	Merlin Gerin NPJF36000S12AAYP
F3	P800	Merlin Gerin NRKF36000S20AAYP
F4	P900–P1M2	Merlin Gerin NRKF36000S20AAYP

Table 10.30 Mains Disconnects, Enclosures E1–E2 and F3–F4

 Danfoss A/S © 11/2017 All rights reserved.

10.6.2 Mains Disconnects, F9/F11/F13

Enclosure size	Model	Type
380–500 V		
F9	P250	ABB OETL-NF600A
F9	P315	ABB OETL-NF600A
F9	P355	ABB OETL-NF600A
F9	P400	ABB OETL-NF600A
F11	P450	ABB OETL-NF800A
F11	P500	ABB OETL-NF800A
F11	P560	ABB OETL-NF800A
F11	P630	ABB OT800U21
F13	P710	Merlin Gerin NPJF36000S12AAYP
F13	P800	Merlin Gerin NPJF36000S12AAYP
525–690 V		
F9	P355	ABB OT400U12-121
F9	P400	ABB OT400U12-121
F9	P500	ABB OT400U12-121
F9	P560	ABB OT400U12-121
F11	P630	ABB OETL-NF600A
F11	P710	ABB OETL-NF600A
F11	P800	ABB OT800U21
F13	P900	ABB OT800U21
F13	P1M0	Merlin Gerin NPJF36000S12AAYP
F13	P1M2	Merlin Gerin NPJF36000S12AAYP

Table 10.31 Mains Disconnects, Enclosures F9/F11/F13

10.6.3 Mains Contactors, F3–F4

Enclosure size	Model and voltage	Contactor
F3	P450–P500, 380–500 V P630–P800, 525–690 V	Eaton XTCE650N22A
F3	P560, 380–500 V	Eaton XTCE820N22A
F3	P630. 380–500 V	Eaton XTCEC14P22B
F4	P900. 525–690 V	Eaton XTCE820N22A
F4	P710–P800. 380–500 V P1M2, 525–690 V	Eaton XTCEC14P22B

Table 10.32 Mains Contactors, Enclosures F3–F4

NOTICE

Customer-supplied 230 V supply is required for mains contactors.

10.7 Motor

Any 3-phase asynchronous standard motor can be used with a drive.

Terminal	Function
96	U/T1
97	V/T2
98	W/T3
99	Ground

Table 10.33 Motor Cable Terminals Providing Clockwise Rotation (Factory Default)

Danfoss A/S © 11/2017 All rights reserved.

The direction of rotation can be changed by switching 2 phases in the motor cable, or by changing the setting of *parameter 4-10 Motor Speed Direction*.

Motor rotation check can be performed using *parameter 1-28 Motor Rotation Check* and following the configuration shown in *Illustration 10.19*.

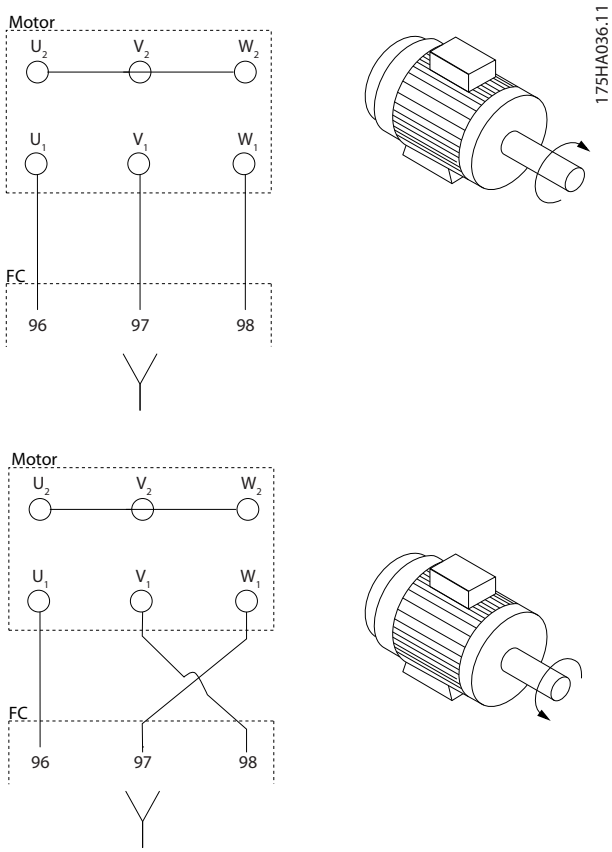

Illustration 10.19 Changing Motor Rotation

Requirements for enclosures F1/F3
Each inverter module must have the same number of motor phase cables and they must be in quantities of 2 (for example, 2, 4, 6, or 8). 1 cable is not allowed. The cables are required to be equal length or within 10% between the inverter module terminals and the first common point of a phase. The recommended common point is the motor terminals. For example, if inverter module A used a 100 m (328 ft) cable, then subsequent inverter modules could use a cable between 90–110 m (295–360 ft) in length.

Requirements for enclosures F2/F4
Each inverter module must have the same number of motor phase cables and they must be in quantities of 3 (for example, 3, 6, 9, or 12). 1 or 2 cables are not allowed. The cables are required to be equal length or within 10% between the inverter module terminals and the first common point of a phase. The recommended common point is the motor terminals. For example, if inverter module A used a 100 m (328 ft) cable, then subsequent inverter modules could use a cable between 90–110 m (295–360 ft) in length.

10.7.1 Motor Thermal Protection

The electronic thermal relay in the drive has received UL approval for single motor overload protection, when *parameter 1-90 Motor Thermal Protection* is set for *ETR Trip* and *parameter 1-24 Motor Current* is set to the rated motor current (see the motor nameplate).
For motor thermal protection, it is also possible to use the VLT® PTC Thermistor Card MCB 112 option. This card provides ATEX certification to protect motors in explosion hazardous areas Zone 1/21 and Zone 2/22. When *parameter 1-90 Motor Thermal Protection*, set to *[20] ATEX ETR*, is combined with the use of MCB 112, it is possible to control an Ex-e motor in explosion hazardous areas. Consult the *programming guide* for details on how to set up the drive for safe operation of Ex-e motors.

10.7.2 Parallel Connection of Motors

The drive can control several parallel-connected motors. For different configurations of parallel-connected motors, see *Illustration 10.20*.

When using parallel motor connection, observe the following points:

- Run applications with parallel motors in U/F mode (volts per hertz).
- VVC+ mode can be used in some applications.
- Total current consumption of motors must not exceed the rated output current I_{INV} for the drive.
- Problems can occur at start and at low RPM if motor sizes are widely different because the relatively high ohmic resistance in the stator of a small motor demands a higher voltage at start and at low RPM.
- The electronic thermal relay (ETR) of the drive cannot be used as motor overload protection. Provide further motor overload protection by including thermistors in each motor winding or individual thermal relays.
- When motors are connected in parallel, *parameter 1-02 Flux Motor Feedback Source* cannot be used, and *parameter 1-01 Motor Control Principle* must be set to *[0] U/f*.

 Danfoss A/S © 11/2017 All rights reserved.

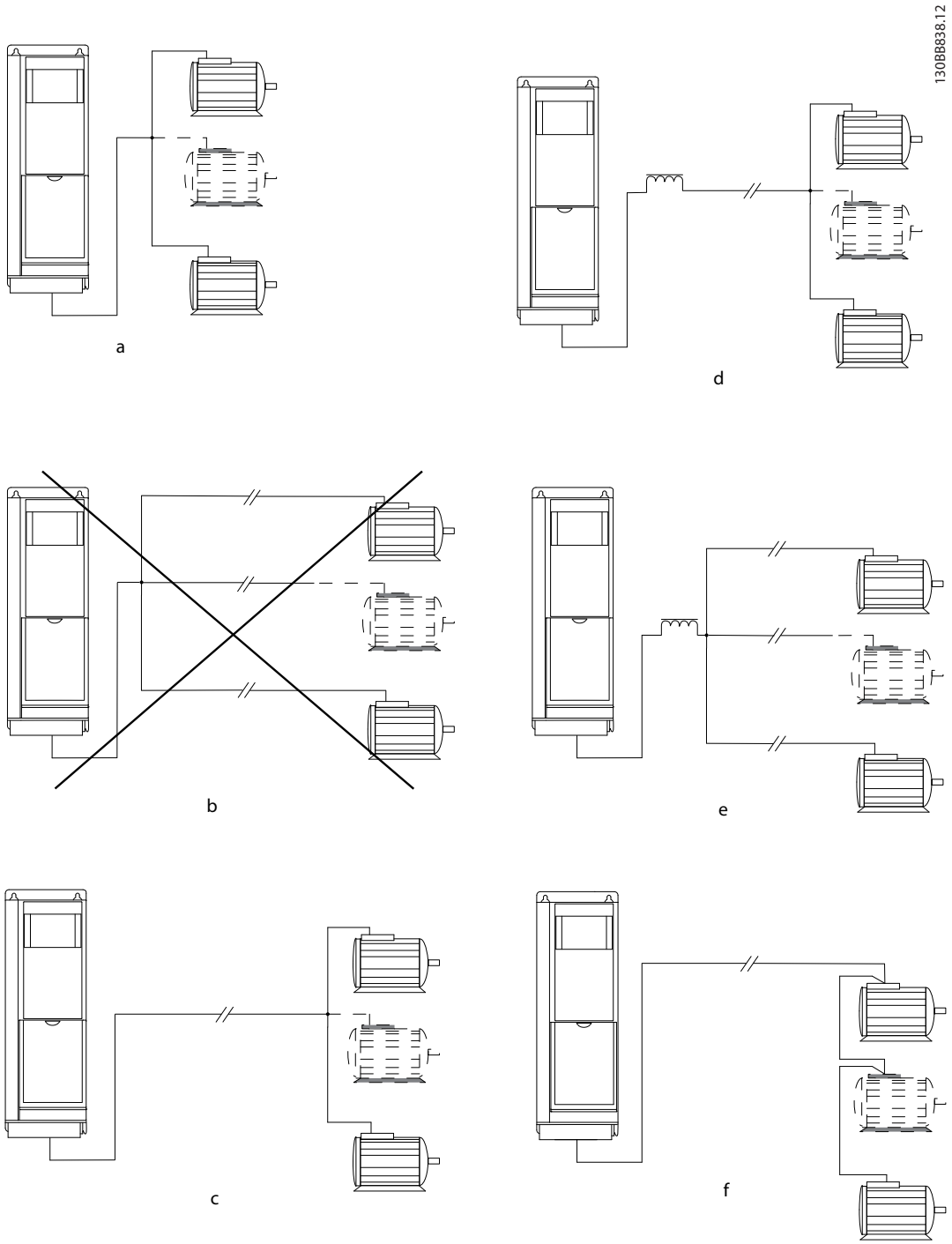

A	Installations with cables connected in a common joint as shown in A and B are only recommended for short cable lengths.
B	Be aware of the maximum motor cable length specified in *chapter 7.6 Cable Specifications*.
C	The total motor cable length specified in *chapter 7.6 Cable Specifications* is valid as long as the parallel cables are kept short less than 10 m (32 ft) each.
D	Consider voltage drop across the motor cables.
E	Consider voltage drop across the motor cables.
F	The total motor cable length specified in *chapter 7.6 Cable Specifications* is valid as long as the parallel cables are kept less than 10 m (32 ft) each.

Illustration 10.20 Different Parallel Connections of Motors

Danfoss A/S © 11/2017 All rights reserved.

10.7.3 Motor Insulation

For motor cable lengths that are less than or equal to the maximum cable length listed in *chapter 7.6 Cable Specifications*, use the motor insulation ratings shown in *Table 10.34*. If a motor has lower insulation rating, Danfoss recommends using a dU/dt or sine-wave filter.

Nominal mains voltage	Motor insulation
$U_N \leq 420$ V	Standard U_{LL}=1300 V
420 V<$U_N \leq 500$ V	Reinforced U_{LL}=1600 V
500 V<$U_N \leq 600$ V	Reinforced U_{LL}=1800 V
600 V<$U_N \leq 690$ V	Reinforced U_{LL}=2000 V

Table 10.34 Motor Insulation Ratings

10.7.4 Motor Bearing Currents

To eliminate circulating bearing currents in all motors installed with the drive, install NDE (non-drive end) insulated bearings. To minimize DE (drive end) bearing and shaft currents, ensure proper grounding of the drive, motor, driven machine, and motor to the driven machine.

Standard mitigation strategies:

- Use an insulated bearing.
- Follow proper installation procedures.
  - Ensure that the motor and load motor are aligned.
  - Follow the EMC Installation guideline.
  - Reinforce the PE so the high frequency impedance is lower in the PE than the input power leads.
  - Provide a good high frequency connection between the motor and the drive. Use a shielded cable that has a 360° connection in the motor and the drive.
  - Ensure that the impedance from the drive to building ground is lower than the grounding impedance of the machine. This procedure can be difficult for pumps.
  - Make a direct ground connection between the motor and load motor.
- Lower the IGBT switching frequency.
- Modify the inverter waveform, 60° AVM vs. SFAVM.
- Install a shaft grounding system or use an isolating coupling.
- Apply conductive lubrication.
- Use minimum speed settings if possible.
- Try to ensure that the mains voltage is balanced to ground. This procedure can be difficult for IT, TT, TN-CS, or grounded leg systems.
- Use a dU/dt or sine-wave filter.

10.8 Braking

10.8.1 Brake Resistor Selection

To handle the higher demands of resistor braking, a brake resistor is necessary. The brake resistor absorbs the energy instead of the drive. For more information, see the *VLT® Brake Resistor MCE 101 Design Guide*.

If the amount of kinetic energy transferred to the resistor in each braking period is not known, the average power can be calculated based on the cycle time and braking time (intermittent duty cycle). The resistor intermittent duty cycle indicates the duty cycle at which the resistor is active. *Illustration 10.21* shows a typical braking cycle.

Motor suppliers often use S5 when stating the allowed load, which is an expression of intermittent duty cycle. The intermittent duty cycle for the resistor is calculated as follows:

Duty cycle$=t_b/T$

T=cycle time in s
t_b is the braking time in s (of the cycle time)

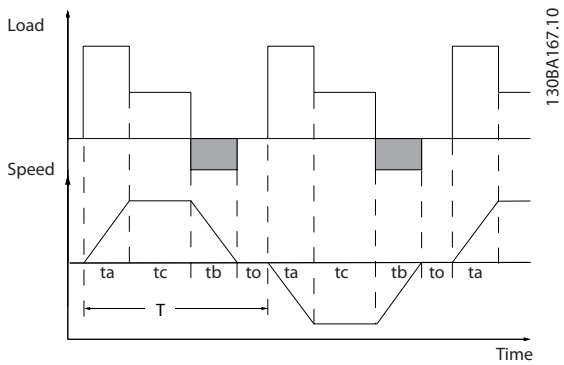

Illustration 10.21 Typical Braking Cycle

 Danfoss A/S © 11/2017 All rights reserved.

380–500 V model	Cycle time (s)	Braking duty cycle at 100% torque	Braking duty cycle at over torque (150/160%)
P315–P800	600	40%	10%
525–690 model	Cycle time (s)	Braking duty cycle at 100% torque	Braking duty cycle at over torque (150/160%)
P500–P560	600	40%	10%
P630–P1M2	600	40%	10%

Table 10.35 Braking at High Overload Torque Level

Danfoss offers brake resistors with duty cycle of 5%, 10%, and 40%. If a 10% duty cycle is applied, the brake resistors are able to absorb brake power for 10% of the cycle time. The remaining 90% of the cycle time is used to dissipate excess heat.

NOTICE

Make sure that the resistor is designed to handle the required braking time.

The maximum allowed load on the brake resistor is stated as a peak power at a given intermittent duty cycle. The brake resistance is calculated as shown:

$$R_{br}\,[\Omega] = \frac{U_{dc}^2}{P_{peak}}$$

where

$P_{peak}=P_{motor} x M_{br}\,[\%] x \eta_{motor} x \eta_{VLT} [W]$

As can be seen, the brake resistance depends on the DC-link voltage (U_{dc}).

Size	Brake active	Warning before cut out	Cut out (trip)
380–500 V[1)]	810 V	828 V	855 V
525–690 V	1084 V	1109 V	1130 V

Table 10.36 FC 302 Brake Limits

1) Power size dependent

NOTICE

Check that the brake resistor can handle a voltage of 410 V, 820 V, 850 V, 975 V, or 1130 V. Danfoss brake resistors are rated for use on all Danfoss drives.

Danfoss recommends the brake resistance R_{rec}. This calculation guarantees that the drive is able to brake at the highest brake power ($M_{br(\%)}$) of 150%. The formula can be written as:

$$R_{rec}\,[\Omega] = \frac{U_{dc}^2\, x\, 100}{P_{motor}\, x\, M_{br\,(\%)}\, x \eta_{VLT}\, x\, \eta_{motor}}$$

η_{motor} is typically at 0.90

η_{VLT} is typically at 0.98

For 200 V, 480 V, 500 V, and 600 V drives, R_{rec} at 160% brake power is written as:

$$200V : R_{rec} = \frac{107780}{P_{motor}}\,[\Omega]$$

$$500V : R_{rec} = \frac{464923}{P_{motor}}\,[\Omega]$$

$$600V : R_{rec} = \frac{630137}{P_{motor}}\,[\Omega]$$

$$690V : R_{rec} = \frac{832664}{P_{motor}}\,[\Omega]$$

NOTICE

The resistor brake circuit resistance selected should not be higher than what Danfoss recommends.

NOTICE

If a short circuit occurs in the brake transistor, power dissipation in the brake resistor is prevented only by using a mains switch or contactor to disconnect the mains from the drive, or a contact in the brake circuit. Uninterrupted power dissipation in the brake resistor can cause overheating, damage, or a fire.

⚠WARNING

FIRE HAZARD

Brake resistors get hot during and after braking. Failure to place the brake resistor in a secure area can result in property damage and/or serious injury.

- **Ensure that the brake resistor is placed in a secure environment to avoid fire risk.**
- **Do not touch the brake resistor during or after braking to avoid serious burns.**

10.8.2 Control with Brake Function

A relay/digital output can be used to protect the brake resistor against overloading or overheating by generating a fault in the drive. If the brake IGBT is overloaded or overheated, the relay/digital signal from the brake to the drive turns off the brake IGBT. This relay/digital signal does not protect against a short circuit in the brake IGBT or a ground fault in the brake module or wiring. If a short circuit occurs in the brake IGBT, Danfoss recommends a means to disconnect the brake.

In addition, the brake makes it possible to read out the momentary power and the average power for the latest 120 s. The brake can monitor the power energizing and make sure that it does not exceed the limit selected in *parameter 2-12 Brake Power Limit (kW)*. *Parameter 2-13 Brake Power Monitoring* selects what function occurs when the power transmitted to the brake resistor exceeds the limit set in *parameter 2-12 Brake Power Limit (kW)*.

Danfoss A/S © 11/2017 All rights reserved.

NOTICE

Monitoring the brake power is not a safety function; a thermal switch connected to an external contactor is required for that purpose. The brake resistor circuit is not ground leakage protected.

Overvoltage control (OVC) can be selected as an alternative brake function in *parameter 2-17 Over-voltage Control*. This function is active for all units and ensures that if the DC-link voltage increases, the output frequency also increases to limit the voltage from the DC link, which avoids a trip.

NOTICE

OVC cannot be activated when running a PM motor, while *parameter 1-10 Motor Construction* is set to *[1] PM non-salient SPM*.

10.9 Residual Current Devices (RCD) and Insulation Resistance Monitor (IRM)

Use RCD relays, multiple protective grounding, or grounding as extra protection, provided they comply with local safety regulations.
If a ground fault appears, a DC current can develop in the faulty current. If RCD relays are used, local regulations must be observed. Relays must be suitable for protection of 3-phase equipment with a bridge rectifier and for a brief discharge on power-up. See *chapter 10.10 Leakage Current* for more details.

10.10 Leakage Current

Follow national and local codes regarding protective grounding of equipment where leakage current exceeds 3.5 mA.
Drive technology implies high-frequency switching at high power. This high-frequency switching generates a leakage current in the ground connection.

The ground leakage current is made up of several contributions and depends on various system configurations, including:

- RFI filtering.
- Motor cable length.
- Motor cable shielding.
- Drive power.

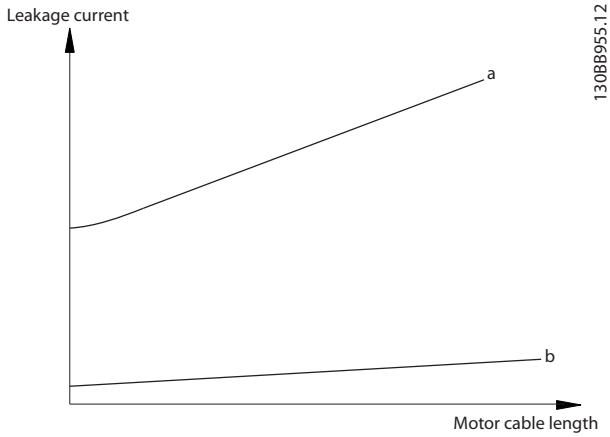

Illustration 10.22 Motor Cable Length and Power Size Influence the Leakage Current. Power Size a > Power Size b.

The leakage current also depends on the line distortion.

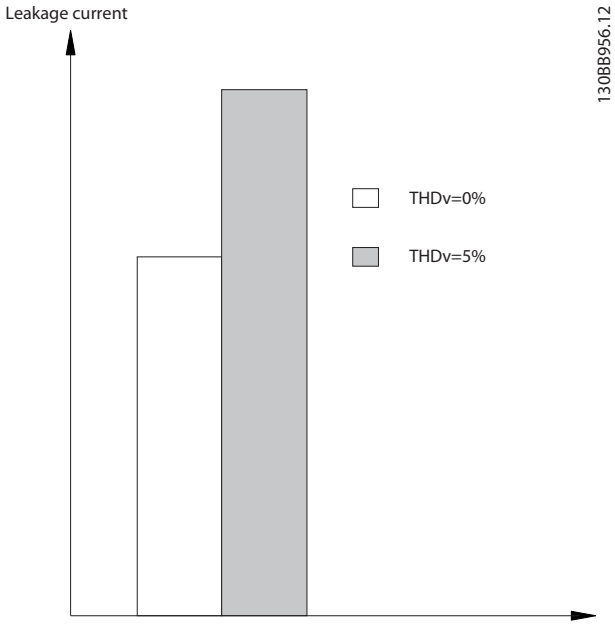

Illustration 10.23 Line Distortion Influences Leakage Current

If the leakage current exceeds 3.5 mA, compliance with EN/IEC61800-5-1 (power drive system product standard) requires special care.

Reinforce grounding with the following protective ground connection requirements:

- Ground wire (terminal 95) of at least 10 mm^2 (8 AWG) cross-section.
- 2 separate ground wires both complying with the dimensioning rules.

See EN/IEC61800-5-1 and EN 50178 for further information.

 Danfoss A/S © 11/2017 All rights reserved.

Using RCDs

Where residual current devices (RCDs), also known as ground leakage circuit breakers, are used, comply with the following:

- Use RCDs of type B only as they can detect AC and DC currents.
- Use RCDs with a delay to prevent faults due to transient ground currents.
- Dimension RCDs according to the system configuration and environmental considerations.

The leakage current includes several frequencies originating from both the mains frequency and the switching frequency. Whether the switching frequency is detected depends on the type of RCD used.

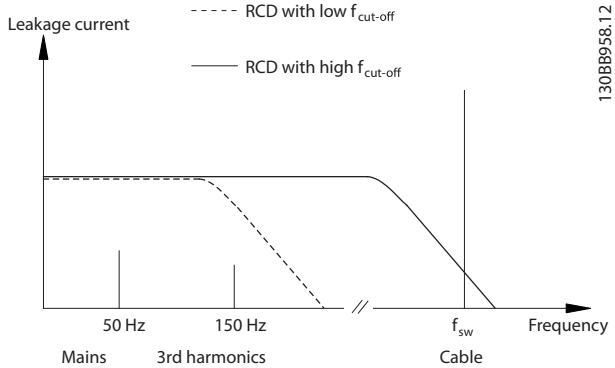

Illustration 10.24 Main Contributions to Leakage Current

The amount of leakage current detected by the RCD depends on the cut-off frequency of the RCD.

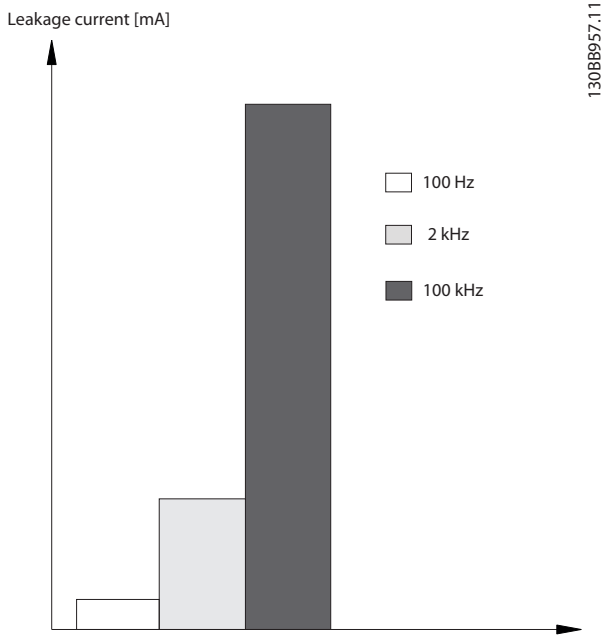

Illustration 10.25 Influence of the RCD Cut-off Frequency on Leakage Current

10.11 IT Grid

Mains supply isolated from ground

If the drive is supplied from an isolated mains source (IT mains, floating delta, or grounded delta) or TT/TN-S mains with grounded leg, the RFI switch is recommended to be turned off via *parameter 14-50 RFI Filter* on the drive and *parameter 14-50 RFI Filter* on the filter. For more detail, see IEC 364-3. In the off position, the filter capacitors between the chassis and the DC link are cut off to avoid damage to the DC link and to reduce the ground capacity currents, according to IEC 61800-3.

If optimum EMC performance is needed, or parallel motors are connected, or the motor cable length is above 25 m (82 ft), Danfoss recommends setting *parameter 14-50 RFI Filter* to [ON]. Refer also to the *Application Note, VLT on IT Mains*. It is important to use isolation monitors that are rated for use together with power electronics (IEC 61557-8).

Danfoss does not recommend using an output contactor for 525–690 V drives connected to an IT mains network.

10.12 Efficiency

Efficiency of the drive (η_{VLT})

The load on the drive has little effect on its efficiency. In general, the efficiency is the same at the rated motor frequency $f_{M,N}$, whether the motor supplies 100% of the rated shaft torque or only 75%, in case of part loads.

The efficiency of the drive does not change even if other U/f characteristics are selected. However, the U/f characteristics influence the efficiency of the motor.

The efficiency declines slightly when the switching frequency is set to a value of above 5 kHz. The efficiency is slightly reduced when the mains voltage is 480 V, or if the motor cable is longer than 30 m (98 ft).

Drive efficiency calculation

Calculate the efficiency of the drive at different speeds and loads based on *Illustration 10.26*. The factor in this graph must be multiplied by the specific efficiency factor listed in the specification tables in *chapter 7.1 Electrical Data, 380–500 V* and *chapter 7.2 Electrical Data, 525–690 V*.

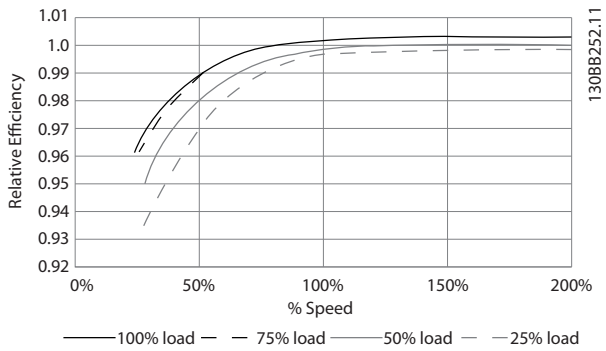

Illustration 10.26 Typical Efficiency Curves

Danfoss A/S © 11/2017 All rights reserved.

Example: Assume a 160 kW, 380–480/500 V AC drive at 25% load at 50% speed. *Illustration 10.26* shows 0.97 - rated efficiency for a 160 kW drive is 0.98. The actual efficiency is then: 0.97x 0.98=0.95.

Efficiency of the motor (η_{MOTOR})
The efficiency of a motor connected to the drive depends on magnetizing level. In general, the efficiency is as good as with mains operation. The efficiency of the motor depends on the type of motor.

In the range of 75–100% of the rated torque, the efficiency of the motor is practically constant, both when the drive controls it and when it runs directly on the mains.

In small motors, the influence from the U/f characteristic on efficiency is marginal. However, in motors from 11 kW (15 hp) and up, the advantages are significant.

Typically the switching frequency does not affect the efficiency of small motors. Motors from 11 kW (15 hp) and up have their efficiency improved (1–2%) because the shape of the motor current sine-wave is almost perfect at high switching frequency.

Efficiency of the system (η_{SYSTEM})
To calculate system efficiency, the efficiency of the drive (η_{VLT}) is multiplied by the efficiency of the motor (η_{MOTOR}):
$\eta_{SYSTEM}=\eta_{VLT} \times \eta_{MOTOR}$

10.13 Acoustic Noise

The acoustic noise from the drive comes from 3 sources:

- DC link coils.
- Internal fans.
- RFI filter choke.

Table 10.37 lists the typical acoustic noise values measured at a distance of 1 m (9 ft) from the unit.

Enclosure size	dBA at full fan speed
E1–E2[1)]	74
E1–E2[2)]	83
F1–F4 and F8–F13	80

Table 10.37 Acoustic Noise

1) P355–P400, 525–690 V only.

2) All other enclosure E models.

Test results performed according to ISO 3744 for audible noise magnitude in a controlled environment. Noise tone has been quantified for engineering data record of hardware performance per ISO 1996-2 Annex D.

10.14 dU/dt Conditions

NOTICE

To avoid the premature aging of motors that are not designed to be used with drives, such as those motors without phase insulation paper or other insulation reinforcement, Danfoss strongly recommends a dU/dt filter or a sine-wave filter fitted on the output of the drive. For further information about dU/dt and sine-wave filters, see the *Output Filters Design Guide*.

When a transistor in the inverter bridge switches, the voltage across the motor increases by a dU/dt ratio depending on:

- The motor cable (type, cross-section, length shielded or unshielded).
- Inductance.

The natural induction causes an overshoot U_{PEAK} in the motor voltage before it stabilizes itself at a level depending on the voltage in the DC link. The rise time and the peak voltage U_{PEAK} affect the service life of the motor. In particular, motors without phase coil insulation are affected if the peak voltage is too high. Motor cable length affects the rise time and peak voltage. For example, if the motor cable is short (a few meters), the rise time and peak voltage are lower. If the motor cable is long (100 m (328 ft)), the rise time and peak voltage are higher.

The switching of the IGBTs causes the peak voltage on the motor terminals. The drive complies with the demands of IEC 60034-25 regarding motors designed to be controlled by drives. The drive also complies with IEC 60034-17 regarding normal motors controlled by drives.

High-power range
The power sizes in *Table 10.38* and *Table 10.39* at the appropriate mains voltages comply with the requirements of IEC 60034-17 regarding normal motors controlled by drives, IEC 60034-25 regarding motors designed to be controlled by drives, and NEMA MG 1-1998 Part 31.4.4.2 for inverter-fed motors. The power sizes in *Table 10.38* and *Table 10.39* do not comply with NEMA MG 1-1998 Part 30.2.2.8 for general-purpose motors.

 Danfoss A/S © 11/2017 All rights reserved.

380–500 V

Model	Cable length [m (ft)]	Mains voltage [V]	Rise time [µs]	Peak voltage [V]	dU/dt [V/µs]
P250–P800 (380–500 V)	30 (98.5)	500	0.71	1165	1389
	30 (98.5)	500[1)]	0.80	906	904
	30 (98.5)	400	0.61	942	1233
	30 (98.5)	400[1)]	0.82	760	743

Table 10.38 dU/dt Enclosures E1–E2 and F1–F13, 380–500 V

1) With Danfoss dU/dt filter

525–690 V

Model	Cable length [m (ft)]	Mains voltage [V]	Rise time [µs]	Peak voltage [V]	dU/dt [V/µs]
P355–P1M2 (525–690 V)	30 (98.5)	690	0.57	1611	2261
	30 (98.5)	575	0.25	–	2510
	30 (98.5)	690[1)]	1.13	1629	1150

Table 10.39 dU/dt Enclosures E1–E2 and F1–F13, 525–690 V

1) With Danfoss dU/dt filter.

10.15 Electromagnetic Compatibility (EMC) Overview

10

Electrical devices both generate interference and are affected by interference from other generated sources. The electromagnetic compatibility (EMC) of these effects depends on the power and the harmonic characteristics of the devices.

Uncontrolled interaction between electrical devices in a system can degrade compatibility and impair reliable operation. Interference takes the form of the following:

- Electrostatic discharges
- Rapid voltage fluctuations
- High-frequency interference

Electrical interference is most commonly found at frequencies in the range 150 kHz to 30 MHz. Airborne interference from the drive system in the range 30 MHz to 1 GHz is generated from the inverter, motor cable, and the motor.

Capacitive currents in the motor cable, coupled with a high dU/dt from the motor voltage, generate leakage currents. See *Illustration 10.27*. Shielded motor cables have higher capacitance between the phase wires and the shield, and again between the shield and ground. This added cable capacitance, along with other parasitic capacitance and motor inductance, changes the electromagnetic emission signature produced by the unit. The change in electromagnetic emission signature occurs mainly in emissions less than 5 MHz. Most of the leakage current (I1) is carried back to the unit through the PE (I3), leaving only a small electromagnetic field (I4) from the shielded motor cable. The shield reduces the radiated interference but increases the low-frequency interference on the mains.

Danfoss A/S © 11/2017 All rights reserved.

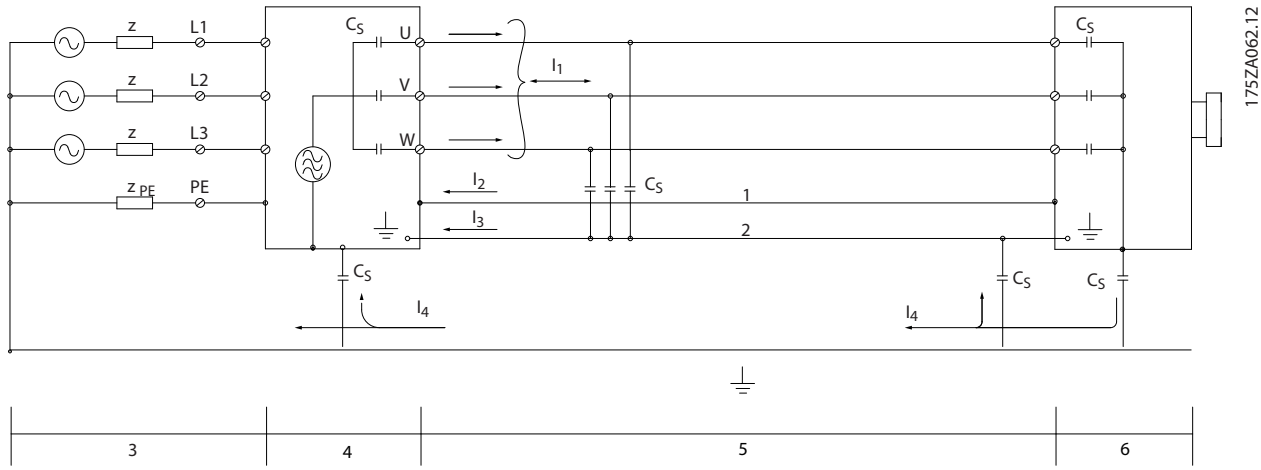

1	Ground wire	Cs	Possible shunt parasitic capacitance paths (varies with different installations)
2	Shield	I_1	Common-mode leakage current
3	AC mains supply	I_2	Shielded motor cable
4	Drive	I_3	Safety ground (4th conductor in motor cables)
5	Shielded motor cable	I_4	Unintended common-mode current
6	Motor	–	–

Illustration 10.27 Electric Model Showing Possible Leakage Currents

10.15.1 EMC Test Results

The following test results have been obtained using a drive (with options if relevant), a shielded control cable, a control box with potentiometer, a motor, and motor shielded cable.

RFI filter type		**Conducted emission**			**Radiated emission**		
Standards and requirements	**EN 55011**	**Class B** Housing, trades, and light industries	**Class A group 1** Industrial environment	**Class A group 2** Industrial environment	**Class B** Housing, trades, and light industries	**Class A group 1** Industrial environment	**Class A group 2** Industrial environment
	EN/IEC 61800-3	**Category C1** First environment Home and office	**Category C2** First environment Home and office	**Category C3** Second environment Industrial	**Category C1** First environment Home and office	**Category C2** First environment Home and office	**Category C3** First environment Home and office
H2							
FC 302	90–500 kW 380–500 V	No	No	150 m (492 ft)	No	No	Yes
	90–710 kW 525–690 V	No	No	150 m (492 ft)	No	No	Yes
H4							
FC 302	90–500 kW 380–500 V	No	150 m (492 ft)	150 m (492 ft)	No	Yes	Yes
	90–710 kW 525–690 V	–	–	–	–	–	–

Table 10.40 EMC Test Results (Emission and Immunity)

 Danfoss A/S © 11/2017 All rights reserved.

10.15.2 Emission Requirements

According to the EMC product standard for adjustable speed drives EN/IEC 61800-3:2004, the EMC requirements depend on the environment in which the drive is installed. These environments along with the mains voltage supply requirements are defined in *Table 10.41*.

The drives comply with EMC requirements described in IEC/EN 61800-3 (2004)+AM1 (2011), category C3, for equipment having greater than 100 A per-phase current draw, installed in the second environment. Compliance testing is performed with a 150 m (492 ft) shielded motor cable.

Category (EN 61800-3)	Definition	Conducted emission (EN 55011)
C1	First environment (home and office) with a supply voltage less than 1000 V.	Class B
C2	First environment (home and office) with a supply voltage less than 1000 V, which is not plug-in or movable and where a professional is intended to be used to install or commission the system.	Class A Group 1
C3	Second environment (industrial) with a supply voltage lower than 1000 V.	Class A Group 2
C4	Second environment with the following: • Supply voltage equal to or above 1000 V. • Rated current equal to or above 400 A. • Intended for use in complex systems.	No limit line. An EMC plan must be made.

Table 10.41 Emission Requirements

When the generic emission standards are used, the drives are required to comply with *Table 10.42*.

10

Environment	Generic standard	Conducted emission requirement according to EN 55011 limits
First environment (home and office)	EN/IEC 61000-6-3 Emission standard for residential, commercial, and light industrial environments.	Class B
Second environment (industrial environment)	EN/IEC 61000-6-4 Emission standard for industrial environments.	Class A Group 1

Table 10.42 Generic Emission Standard Limits

Danfoss A/S © 11/2017 All rights reserved.

10.15.3 Immunity Requirements

The immunity requirements for drives depend on the installation environment. The requirements for the industrial environment are higher than the requirements for the home and office environment. All Danfoss drives comply with the requirements for both the industrial and the home/office environment.

To document immunity against burst transient, the following immunity tests have been performed on a drive (with options if relevant), a shielded control cable, and a control box with potentiometer, motor cable, and motor. The tests were performed in accordance with the following basic standards. For more details, see *Table 10.43*.

- **EN 61000-4-2 (IEC 61000-4-2):** Electrostatic discharges (ESD): Simulation of electrostatic discharges from human beings.
- **EN 61000-4-3 (IEC 61000-4-3):** Incoming electromagnetic field radiation, amplitude modulated simulation of the effects of radar, radio communication equipment, and mobile communications equipment.
- **EN 61000-4-4 (IEC 61000-4-4):** Burst transients: Simulation of interference brought about by switching a contactor, relay, or similar devices.
- **EN 61000-4-5 (IEC 61000-4-5):** Surge transients: Simulation of transients brought about by lightning strikes near installations.
- **EN 61000-4-6 (IEC 61000-4-6):** RF common mode: Simulation of the effect from radio-transmission equipment joined by connection cables.

Basic standard	**Burst IEC 61000-4-4**	**Surge IEC 61000-4-5**	**ESD IEC 61000-4-2**	**Radiated electro-magnetic field IEC 61000-4-3**	**RF common mode voltage IEC 61000-4-6**
Acceptance criterion	**B**	**B**	**B**	**A**	**A**
Line	4 kV CM	2 kV/2 Ω DM 4 kV/12 Ω CM	–	–	10 V_{RMS}
Motor	4 kV CM	4 kV/2 Ω[1)]	–	–	10 V_{RMS}
Brake	4 kV CM	4 kV/2 Ω[1)]	–	–	10 V_{RMS}
Load sharing	4 kV CM	4 kV/2 Ω[1)]	–	–	10 V_{RMS}
Control wires	2 kV CM	2 kV/2 Ω[1)]	–	–	10 V_{RMS}
Standard bus	2 kV CM	2 kV/2 Ω[1)]	–	–	10 V_{RMS}
Relay wires	2 kV CM	2 kV/2 Ω[1)]	–	–	10 V_{RMS}
Application/fieldbus options	2 kV CM	2 kV/2 Ω[1)]	–	–	10 V_{RMS}
LCP cable	2 kV CM	2 kV/2 Ω[1)]	–	–	10 V_{RMS}
External 24 V DC	2 V CM	0.5 kV/2 Ω DM 1 kV/12 Ω CM	–	–	10 V_{RMS}
Enclosure	–	–	8 kV AD 6 kV CD	10 V/m	–

Table 10.43 EMC Immunity Form, Voltage Range: 380–480/500 V, 525–600 V, 525–690 V

1) Injection on cable shield.

AD: air discharge; CD: contact discharge; CM: common mode; DM: differential mode.

 Danfoss A/S © 11/2017 All rights reserved.

10.15.4 EMC Compatibility

NOTICE

OPERATOR RESPONSIBILITY

According to the EN 61800–3 standard for variable-speed drive systems, the operator is responsible for ensuring EMC compliance. Manufacturers can offer solutions for operation conforming to the standard. Operators are responsible for applying these solutions, and for paying the associated costs.

There are 2 options for ensuring electromagnetic compatibility.

- Eliminate or minimize interference at the source of emitted interference.
- Increase the immunity to interference in devices affected by its reception.

RFI filters

The goal is to obtain systems that operate stably without radio frequency interference between components. To achieve a high level of immunity, use drives with high-quality RFI filters.

NOTICE

RADIO INTERFERENCE

In a residential environment, this product can cause radio interference, in which case supplementary mitigation measures may be required.

PELV and galvanic isolation compliance

All E1h–E4h drives control and relay terminals comply with PELV (excluding grounded Delta leg above 400 V).

Galvanic (ensured) isolation is obtained by fulfilling requirements for higher isolation and by providing the relevant creepage/clearance distances. These requirements are described in the EN 61800–5–1 standard.

Electrical isolation is provided as shown (see *Illustration 10.28*). The components described comply with both PELV and the galvanic isolation requirements.

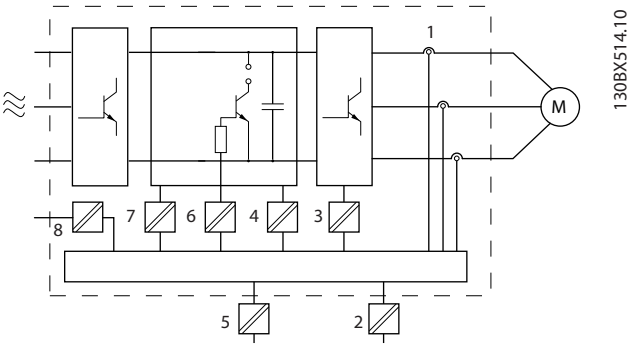

1	Current transducers
2	Galvanic isolation for the RS485 standard bus interface
3	Gate drive for the IGBTs
4	Supply (SMPS) including signal isolation of V DC, indicating the intermediate current voltage
5	Galvanic isolation for the 24 V back-up option
6	Opto-coupler, brake module (optional)
7	Internal inrush, RFI, and temperature measurement circuits
8	Customer relays

Illustration 10.28 Galvanic Isolation

10.16 EMC-compliant Installation

To obtain an EMC-compliant installation, follow the instructions provided in the *operating guide*. For an example of proper EMC installation, see *Illustration 10.29*.

NOTICE

TWISTED SHIELD ENDS (PIGTAILS)

Twisted shield ends increase the shield impedance at higher frequencies, which reduces the shield effect and increases the leakage current. Avoid twisted shield ends by using integrated shield clamps.

- For use with relays, control cables, a signal interface, fieldbus, or brake, connect the shield to the enclosure at both ends. If the ground path has high impedance, is noisy, or is carrying current, break the shield connection on 1 end to avoid ground current loops.
- Convey the currents back to the unit using a metal mounting plate. Ensure good electrical contact from the mounting plate through the mounting screws to the drive chassis.
- Use shielded cables for motor output cables. An alternative is unshielded motor cables within metal conduit.

NOTICE

SHIELDED CABLES

If shielded cables or metal conduits are not used, the unit and the installation do not meet regulatory limits on radio frequency (RF) emission levels.

Danfoss A/S © 11/2017 All rights reserved.

- Ensure that motor and brake cables are as short as possible to reduce the interference level from the entire system.
- Avoid placing cables with a sensitive signal level alongside motor and brake cables.
- For communication and command/control lines, follow the particular communication protocol standards. For example, USB must use shielded cables, but RS485/ethernet can use shielded UTP or unshielded UTP cables.
- Ensure that all control terminal connections are PELV.

NOTICE

EMC INTERFERENCE

Use shielded cables for motor and control wiring. Make sure to separate mains input, motor, and control cables from one another. Failure to isolate these cables can result in unintended behavior or reduced performance. Minimum 200 mm (7.9 in) clearance between mains input, motor, and control cables are required.

NOTICE

INSTALLATION AT HIGH ALTITUDE

There is a risk for overvoltage. Isolation between components and critical parts could be insufficient, and not comply with PELV requirements. Reduce the risk for overvoltage by using external protective devices or galvanic isolation.
For installations above 2000 m (6500 ft) altitude, contact Danfoss regarding PELV compliance.

NOTICE

PELV COMPLIANCE

Prevent electric shock by using protective extra low voltage (PELV) electrical supply and complying with local and national PELV regulations.

 Danfoss A/S © 11/2017 All rights reserved.

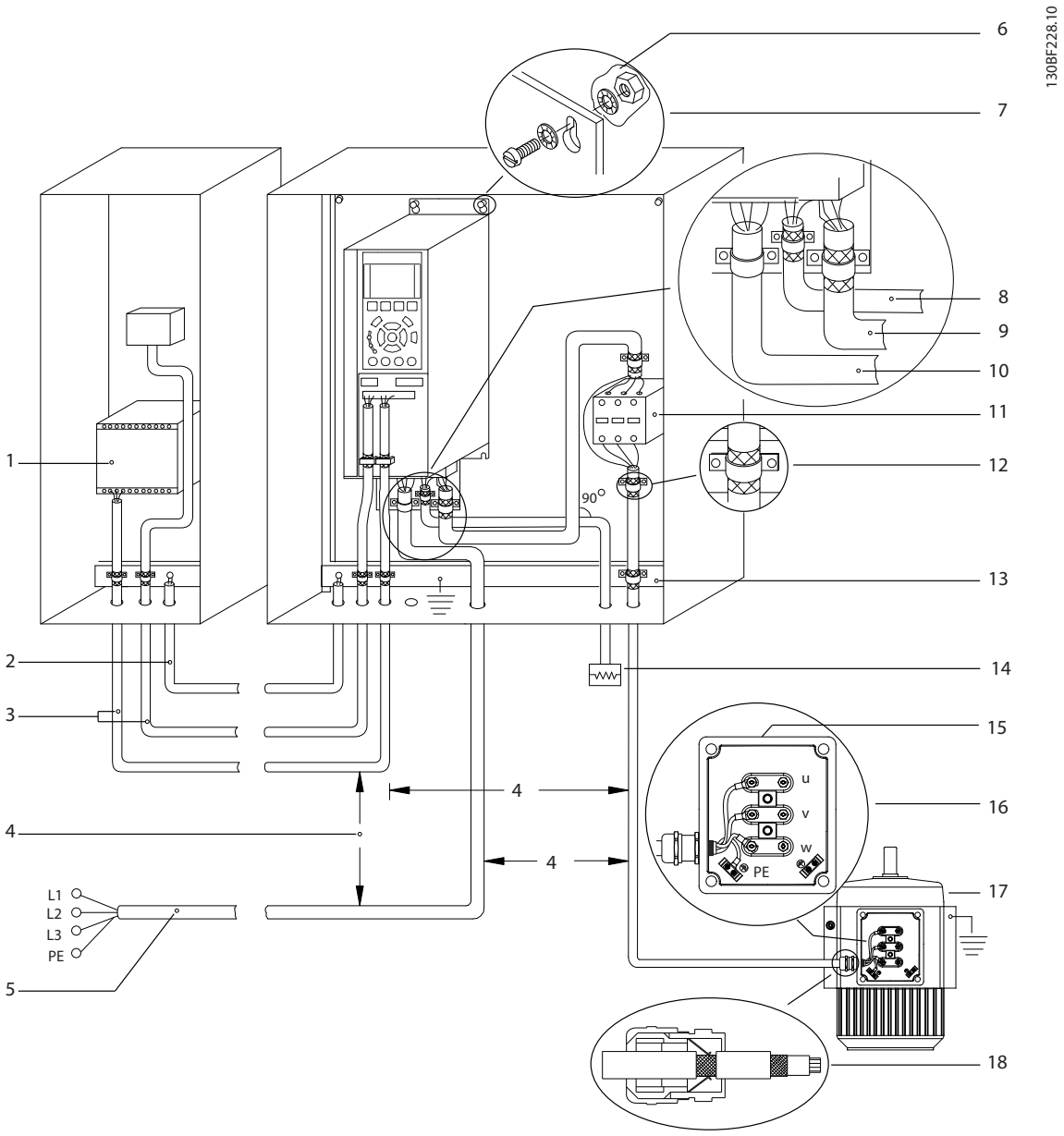

1	PLC	10	Mains cable (unshielded)
2	Minimum 16 mm^2 (6 AWG) equalizing cable	11	Output contactor
3	Control cables	12	Cable insulation stripped
4	Minimum 200 mm (7.9 in) between control cables, motor cables, and mains cables.	13	Common ground busbar. Follow local and national requirements for cabinet grounding.
5	Mains supply	14	Brake resistor
6	Bare (unpainted) surface	15	Metal box
7	Star washers	16	Connection to motor
8	Brake cable (shielded)	17	Motor
9	Motor cable (shielded)	18	EMC cable gland

Illustration 10.29 Example of Proper EMC Installation

Danfoss A/S © 11/2017 All rights reserved.

10.17 Harmonics Overview

Non-linear loads such as found with drives do not draw current uniformly from the power line. This non-sinusoidal current has components which are multiples of the basic current frequency. These components are referred to as harmonics. It is important to control the total harmonic distortion on the mains supply. Although the harmonic currents do not directly affect electrical energy consumption, they generate heat in wiring and transformers that can affect other devices on the same power line.

10.17.1 Harmonic Analysis

Since harmonics increase heat losses, it is important to design systems with harmonics in mind to prevent overloading the transformer, inductors, and wiring. When necessary, perform an analysis of the system harmonics to determine equipment effects.

A non-sinusoidal current is transformed with a Fourier series analysis into sine-wave currents at different frequencies, that is, different harmonic currents I_N with 50 Hz or 60 Hz as the basic frequency.

Abbreviation	Description
f_1	Basic frequency (50 Hz or 60 Hz)
I_1	Current at the basic frequency
U_1	Voltage at the basic frequency
I_n	Current at the nth harmonic frequency
U_n	Voltage at the nth harmonic frequency
n	Harmonic order

Table 10.44 Harmonics-related Abbreviations

	Basic current (I_1)	Harmonic current (I_n)		
Current	I_1	I_5	I_7	I_{11}
Frequency	50 Hz	250 Hz	350 Hz	550 Hz

Table 10.45 Basic Currents and Harmonic Currents

Current	Harmonic current				
	I_{RMS}	I_1	I_5	I_7	I_{11-49}
Input current	1.0	0.9	0.5	0.2	<0.1

Table 10.46 Harmonic Currents vs. RMS Input Current

The voltage distortion on the mains supply voltage depends on the size of the harmonic currents multiplied by the mains impedance for the frequency in question. The total voltage distortion (THDi) is calculated based on the individual voltage harmonics using this formula:

$$THDi = \frac{\sqrt{U25 + U27 + ... + U2n}}{U}$$

10.17.2 Effect of Harmonics in a Power Distribution System

In *Illustration 10.30*, a transformer is connected on the primary side to a point of common coupling PCC1, on the medium voltage supply. The transformer has an impedance Z_{xfr} and feeds several loads. The point of common coupling where all loads are connected is PCC2. Each load connects through cables that have an impedance Z_1, Z_2, Z_3.

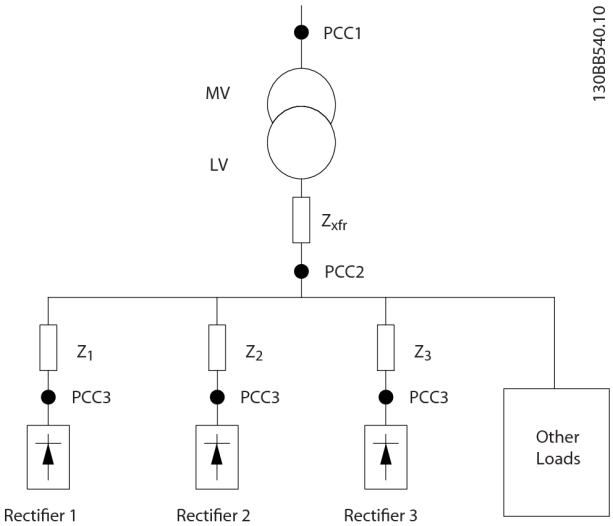

PCC	Point of common coupling
MV	Medium voltage
LV	Low voltage
Z_{xfr}	Transformer impedance
$Z_{\#}$	Modeling resistance and inductance in the wiring

Illustration 10.30 Small Distribution System

Harmonic currents drawn by non-linear loads cause distortion of the voltage because of the voltage drop on the impedances of the distribution system. Higher impedances result in higher levels of voltage distortion.

Current distortion relates to apparatus performance and it relates to the individual load. Voltage distortion relates to system performance. It is not possible to determine the voltage distortion in the PCC knowing only the harmonic performance of the load. To predict the distortion in the PCC, the configuration of the distribution system and relevant impedances must be known.

 Danfoss A/S © 11/2017 All rights reserved.

A commonly used term for describing the impedance of a grid is the short circuit ratio R_{sce}, where R_{sce} is defined as the ratio between the short circuit apparent power of the supply at the PCC (S_{sc}) and the rated apparent power of the load.

$$(S_{equ}).R_{sce} = \frac{S_{sc}}{S_{equ}}$$

where $S_{sc} = \frac{U^2}{Z_{supply}}$ and $S_{equ} = U \times I_{equ}$

Negative effects of harmonics

- Harmonic currents contribute to system losses (in cabling and transformer).
- Harmonic voltage distortion causes disturbance to other loads and increases losses in other loads.

10.17.3 IEC Harmonic Standards

In most of Europe, the basis for the objective assessment of the quality of mains power is the Electromagnetic Compatibility of Devices Act (EMVG). Compliance with these regulations ensures that all devices and networks connected to electrical distribution systems fulfill their intended purpose without generating problems.

Standard	Definition
EN 61000-2-2, EN 61000-2-4, EN 50160	Define the mains voltage limits required for public and industrial power grids.
EN 61000-3-2, 61000-3-12	Regulate mains interference generated by connected devices in lower current products.
EN 50178	Monitors electronic equipment for use in power installations.

Table 10.47 EN Design Standards for Mains Power Quality

There are 2 European standards that address harmonics in the frequency range from 0 Hz to 9 kHz:

10

EN 61000–2–2 (Compatibility Levels for Low-Frequency Conducted Disturbances and Signaling in Public Low-Voltage Power Supply Systems
The EN 61000–2–2 standard states the requirements for compatibility levels for PCC (point of common coupling) of low-voltage AC systems on a public supply network. Limits are specified only for harmonic voltage and total harmonic distortion of the voltage. EN 61000–2–2 does not define limits for harmonic currents. In situations where the total harmonic distortion THD(V)=8%, PCC limits are identical to those limits specified in the EN 61000–2–4 Class 2.

EN 61000–2–4 (Compatibility Levels for Low-Frequency Conducted Disturbances and Signaling in Industrial Plants)
The EN 61000–2–4 standard states the requirements for compatibility levels in industrial and private networks. The standard further defines the following 3 classes of electromagnetic environments:

- Class 1 relates to compatibility levels that are less than the public supply network, which affects equipment sensitive to disturbances (lab equipment, some automation equipment, and certain protection devices).
- Class 2 relates to compatibility levels that are equal to the public supply network. The class applies to PCCs on the public supply network and to IPCs (internal points of coupling) on industrial or other private supply networks. Any equipment designed for operation on a public supply network is allowed in this class.
- Class 3 relates to compatibility levels greater than the public supply network. This class applies only to IPCs in industrial environments. Use this class where the following equipment is found:
    - Large drives.
    - Welding machines.
    - Large motors starting frequently.
    - Loads that change quickly.

Typically, a class cannot be defined ahead of time without considering the intended equipment and processes to be used in the environment. VLT® high-power drives observe the limits of Class 3 under typical supply system conditions (R_{SC}>10 or $V_{k\ Line}$<10%).

Danfoss A/S © 11/2017 All rights reserved.

Harmonic order (h)	Class 1 (V_h%)	Class 2 (V_h%)	Class 3 (V_h%)
5	3	6	8
7	3	5	7
11	3	3.5	5
13	3	3	4.5
17	2	2	4
17<h≤49	2.27 x (17/h) − 0.27	2.27 x (17/h) − 0.27	4.5 x (17/h) − 0.5

Table 10.48 Compatibility Levels for Harmonics

	Class 1	Class 2	Class 3
THDv	5%	8%	10%

Table 10.49 Compatibility Levels for the Total Harmonic Voltage Distortion THDv

10.17.4 Harmonic Compliance

Danfoss drives comply with the following standards:

- IEC61000-2-4
- IEC61000-3-4
- G5/4

10.17.5 Harmonic Mitigation

In cases where extra harmonic suppression is required, Danfoss offers the following mitigation equipment:

- VLT® 12-pulse drives
- VLT® Low harmonic drives
- VLT® Advanced harmonic filters
- VLT® Advanced active filters

Selecting the right solution depends on several factors:

- The grid (background distortion, mains unbalance, resonance, and type of supply (transformer/generator).
- Application (load profile, number of loads, and load size).
- Local/national requirements/regulations (such as IEEE 519, IEC, and G5/4).
- Total cost of ownership (initial cost, efficiency, and maintenance).

10.17.6 Harmonic Calculation

Use the free Danfoss MCT 31 calculation software to determine the degree of voltage pollution on the grid and needed precaution. The *VLT® Harmonic Calculation MCT 31* is available at *www.danfoss.com*.

 Danfoss A/S © 11/2017 All rights reserved.

11 Basic Operating Principles of a Drive

This chapter provides an overview of the primary assemblies and circuitry of a Danfoss drive. It describes the internal electrical and signal processing functions. A description of the internal control structure is also included.

11.1 Description of Operation

A drive is an electronic controller that supplies a regulated amount of AC power to a 3-phase inductive motor. By supplying variable frequency and voltage to the motor, the drive varies the motor speed or maintains a constant speed as the load on the motor changes. Also, the drive can stop and start a motor without the mechanical stress associated with a line start.

In its basic form, the drive can be divided into the following 4 main areas:

Rectifier
The rectifier consists of SCRs or diodes that convert 3-phase AC voltage to pulsating DC voltage.

DC link (DC bus)
The DC link consists of inductors and capacitor banks that stabilize the pulsating DC voltage.

Inverter
The inverter uses IGBTs to convert the DC voltage to variable voltage and variable frequency AC.

Control
The control area consists of software that runs the hardware to produce the variable voltage that controls and regulates the AC motor.

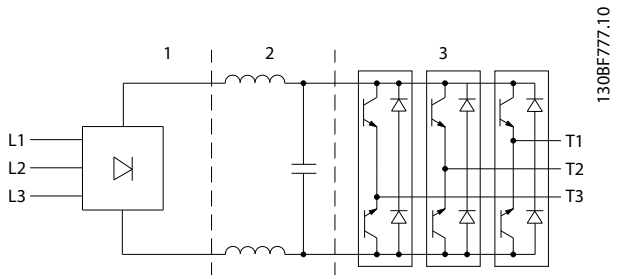

1	Rectifier (SCR/diodes)
2	DC link (DC bus)
3	Inverter (IGBTs)

Illustration 11.1 Internal Processing

11.2 Drive Controls

The following processes are used to control and regulate the motor:

- User input/reference.
- Feedback handling.
- User-defined control structure.
  - Open loop/closed-loop mode.
  - Motor control (speed, torque, or process).
- Control algorithms (VVC+, flux sensorless, flux with motor feedback, and internal current control VVC+).

11.2.1 User Inputs/References

The drive uses an input source (also called reference) to control and regulate the motor. The drive receives this input either:

- Manually via the LCP. This method is referred to as local (Hand On).
- Remotely via analog/digital inputs and various serial interfaces (RS485, USB, or an optional fieldbus). This method is referred to as remote (Auto On) and is the default input setting.

Active reference
The term active reference refers to the active input source. The active reference is configured in *parameter 3-13 Reference Site*. See *Illustration 11.2* and *Table 11.1*.

For more information, see the *programming guide*.

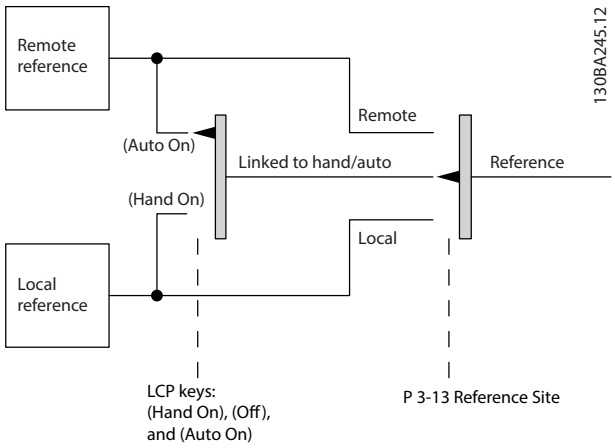

Illustration 11.2 Selecting Active Reference

Danfoss A/S © 11/2017 All rights reserved.

LCP keys	*Parameter 3-13 Reference Site*	Active Reference
[Hand On]	Linked to hand/auto	Local
[Hand On]⇒(Off)	Linked to hand/auto	Local
[Auto On]	Linked to hand/auto	Remote
[Auto On]⇒(Off)	Linked to hand/auto	Remote
All keys	Local	Local
All keys	Remote	Remote

Table 11.1 Local and Remote Reference Configurations

11.2.2 Remote Handling of References

Remote handling of reference applies to both open-loop and closed-loop operation. See *Illustration 11.3*.

Up to 8 internal preset references can be programmed into the drive. The active internal preset reference can be selected externally through digital control inputs or through the serial communications bus.

External references can also be supplied to the drive, most commonly through an analog control input. All reference sources and the bus reference are added to produce the total external reference.

The active reference can be selected from the following:

- External reference
- Preset reference
- Setpoint
- Sum of the external reference, preset reference, and setpoint

The active reference can be scaled. The scaled reference is calculated as follows:

$$Reference = X + X \times \left(\frac{Y}{100}\right)$$

Where X is the external reference, the preset reference, or the sum of these references, and Y is *parameter 3-14 Preset Relative Reference* in [%].

If Y, *parameter 3-14 Preset Relative Reference*, is set to 0%, the scaling does not affect the reference.

 Danfoss A/S © 11/2017 All rights reserved.

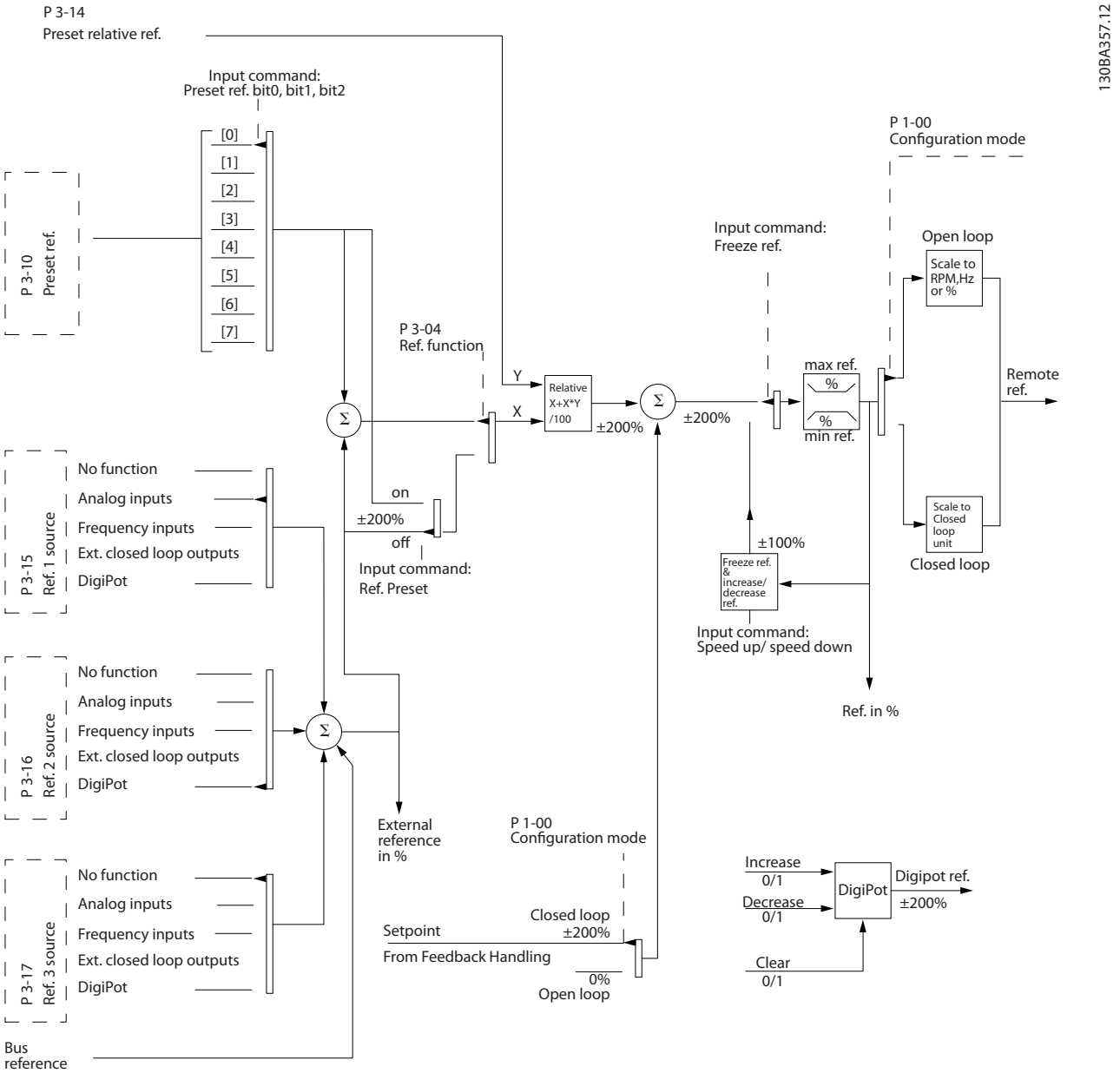

Illustration 11.3 Remote Handling of Reference

 Danfoss A/S © 11/2017 All rights reserved.

11.2.3 Feedback Handling

Feedback handling can be configured to work with applications requiring advanced control, such as multiple setpoints and multiple types of feedback. See *Illustration 11.4*. Three types of control are common:

Single zone (single setpoint)
This control type is a basic feedback configuration. Setpoint 1 is added to any other reference (if any) and the feedback signal is selected.

Multi-zone (single setpoint)
This control type uses 2 or 3 feedback sensors but only 1 setpoint. The feedback can be added, subtracted, or averaged. In addition, the maximum or minimum value can be used. Setpoint 1 is used exclusively in this configuration.

Multi-zone (setpoint/feedback)
The setpoint/feedback pair with the largest difference controls the speed of the drive. The maximum value attempts to keep all zones at or below their respective setpoints, while the minimum value attempts to keep all zones at or above their respective setpoints.

Example
A 2-zone, 2-setpoint application. Zone 1 setpoint is 15 bar, and the feedback is 5.5 bar. Zone 2 setpoint is 4.4 bar, and the feedback is 4.6 bar. If maximum is selected, the zone 2 setpoint and feedback are sent to the PID controller, since it has the smaller difference (feedback is higher than setpoint, resulting in a negative difference). If minimum is selected, the zone 1 setpoint and feedback is sent to the PID controller, since it has the larger difference (feedback is lower than setpoint, resulting in a positive difference).

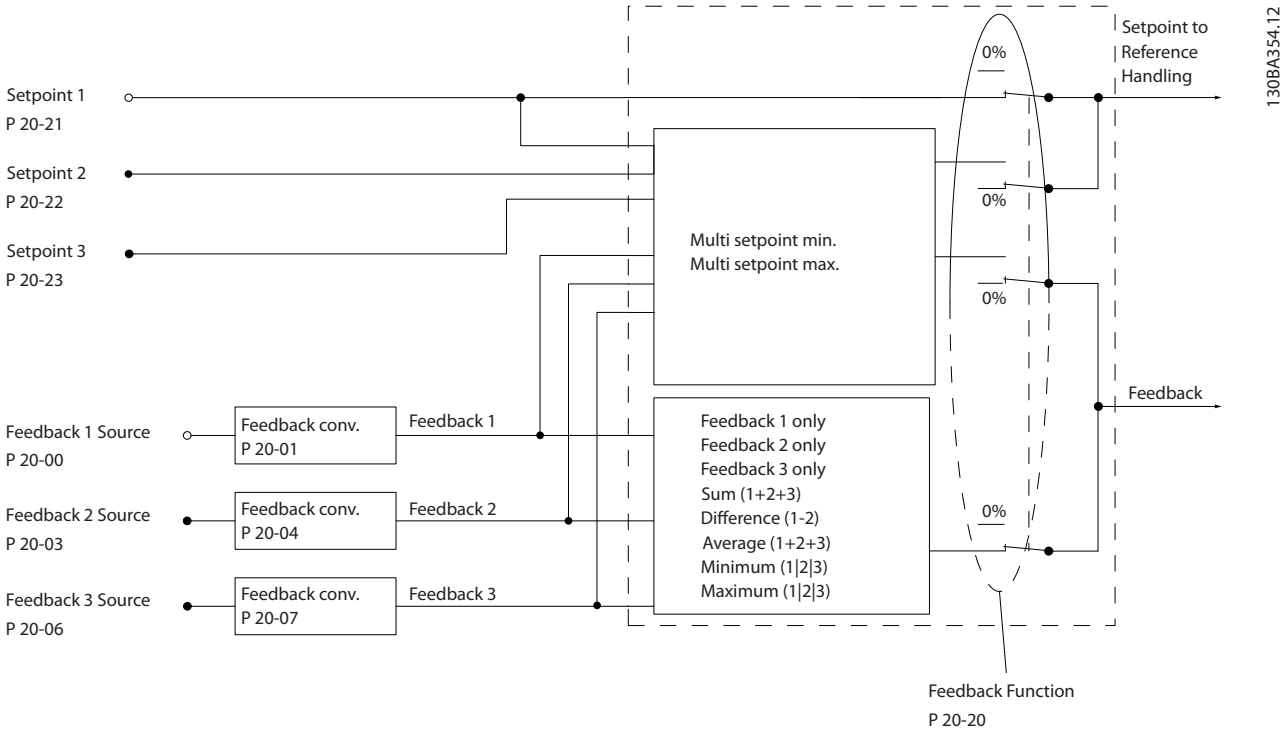

Illustration 11.4 Block Diagram of Feedback Signal Processing

 Danfoss A/S © 11/2017 All rights reserved.

Feedback conversion

In some applications, it is useful to convert the feedback signal. One example is using a pressure signal to provide flow feedback. Since the square root of pressure is proportional to flow, the square root of the pressure signal yields a value proportional to the flow, see *Illustration 11.5*.

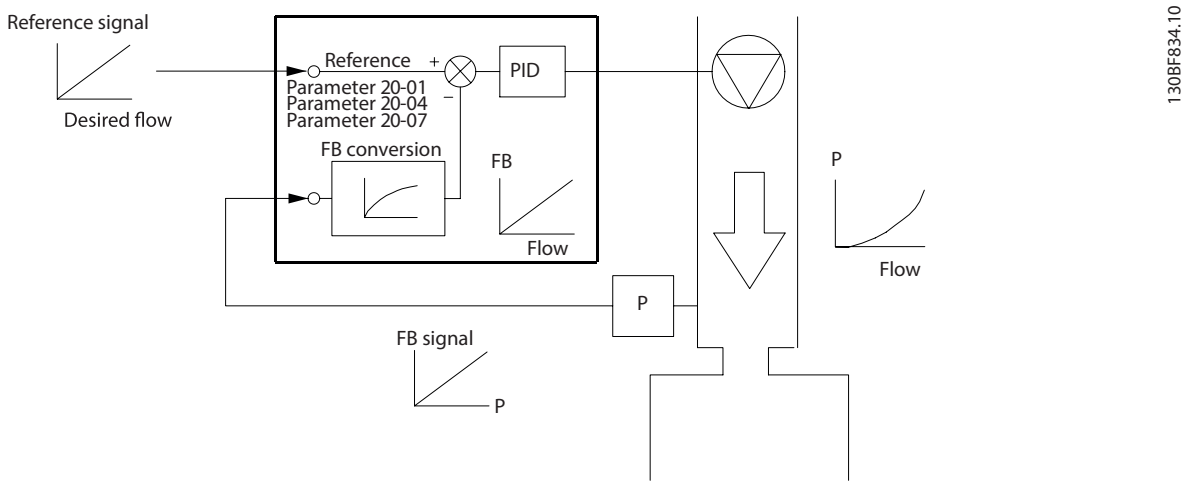

Illustration 11.5 Feedback Conversion

11.2.4 Control Structure Overview

The control structure is a software process that controls the motor based on user-defined references (for example, RPM) and whether feedback is used/not used (closed loop/open loop). The operator defines the control in *parameter 1-00 Configuration Mode*.

11

The control structures are as follows:

Open-loop control structure

- Speed (RPM)
- Torque (Nm)

Closed-loop control structure

- Speed (RPM)
- Torque (Nm)
- Process (user-defined units, for example, feet, lpm, psi, %, bar)

11.2.5 Open-loop Control Structure

In open-loop mode, the drive uses 1 or more references (local or remote) to control the speed or torque of the motor. There are 2 types of open-loop control:

- Speed control. No feedback from the motor.
- Torque control. Used in VVC+ mode. The function is used in mechanically robust applications, but its accuracy is limited. Open-loop torque function works only in 1 speed direction. The torque is calculated based on current measurement within the drive. See *chapter 12 Application Examples*.

In the configuration shown in *Illustration 11.6*, the drive operates in open-loop mode. It receives input from either the LCP (hand-on mode) or via a remote signal (auto-on mode).

Danfoss A/S © 11/2017 All rights reserved.

The signal (speed reference) is received and conditioned with the following:

- Programmed minimum and maximum motor speed limits (in RPM and Hz).
- Ramp-up and ramp-down times.
- Motor rotation direction.

The reference is then passed on to control the motor.

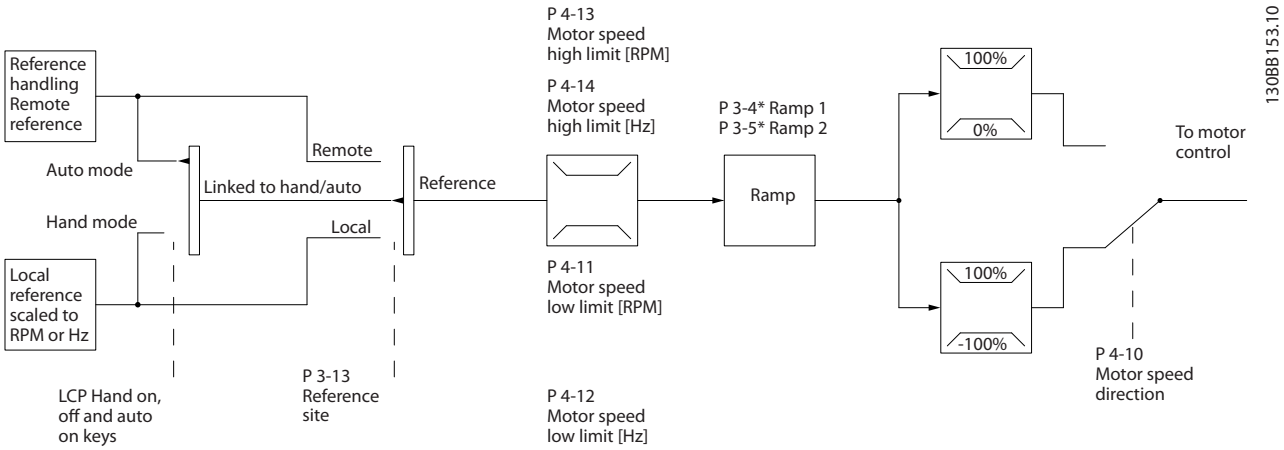

Illustration 11.6 Block Diagram of an Open-loop Control Structure

11.2.6 Closed-loop Control Structure

In closed-loop mode, the drive uses 1 or more references (local or remote) and feedback sensors to control the motor. The drive receives a feedback signal from a sensor in the system. It then compares this feedback to a setpoint reference value and determines if there is any discrepancy between these 2 signals. The drive then adjusts the speed of the motor to correct the discrepancy.

For example, consider a pump application in which the speed of the pump is controlled so that the static pressure in a pipe is constant (see *Illustration 11.7*). The drive receives a feedback signal from a sensor in the system. It compares this feedback to a setpoint reference value and determines the discrepancy if any, between these 2 signals. It then adjusts the speed of the motor to compensate for the discrepancy.

The static pressure setpoint is the reference signal to the drive. A static pressure sensor measures the actual static pressure in the pipe and provides this information to the drive as a feedback signal. If the feedback signal exceeds the setpoint reference, the drive ramps down to reduce the pressure. Similarly, if the pipe pressure is lower than the setpoint reference, the drive ramps up to increase the pump pressure.

There are 3 types of closed-loop control:

- Speed control. This type of control requires a speed PID feedback for an input. A properly optimized speed closed-loop control has higher accuracy than a speed open-loop control. Speed control is only used in the VLT® AutomationDrive FC 302.
- Torque control. Used in flux mode with encoder feedback, this control offers superior performance in all 4 quadrants and at all motor speeds. Torque control is only used in the VLT® AutomationDrive FC 302.
  The torque control function is used in applications where the torque on the motor output shaft is controlling the application as tension control. Torque setting is done by setting an analog, digital, or bus-controlled reference. When running torque control, it is recommended to make a full AMA procedure since the correct motor data is essential for optimal performance.
- Process control. Used to control application parameters that are measured by different sensors (pressure, temperature, and flow) and are affected by the connected motor through a pump or fan.

 Danfoss A/S © 11/2017 All rights reserved.

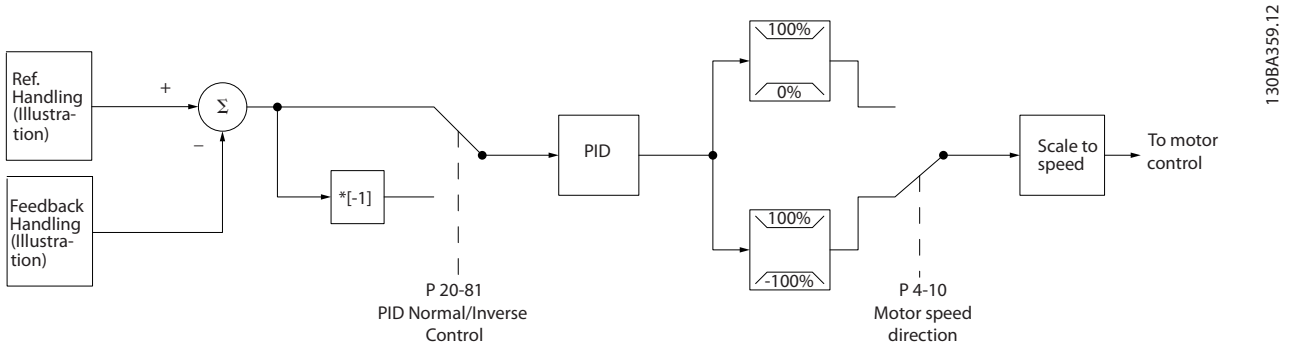

Illustration 11.7 Block Diagram of Closed-loop Controller

Programmable features

While the default values for the drive in closed loop often provide satisfactory performance, system control can often be optimized by tuning the PID parameters. *Auto tuning* is provided for this optimization.

- Inverse regulation - motor speed increases when a feedback signal is high.
- Start-up frequency - lets the system quickly reach an operating status before the PID controller takes over.
- Built-in lowpass filter - reduces feedback signal noise.

11.2.7 Control Processing

See *Active/Inactive Parameters in Different Drive Control Modes* in the *programming guide* for an overview of which control configuration is available for your application, depending on selection of AC motor or PM non-salient motor.

11.2.7.1 Control Structure in VVC+

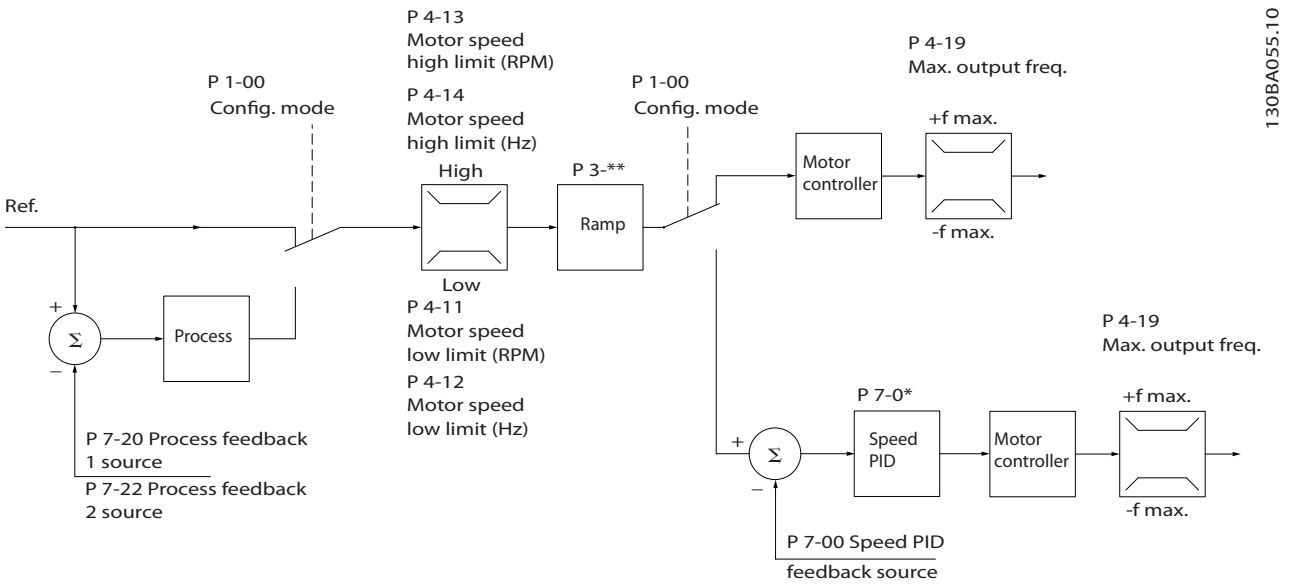

Illustration 11.8 Control Structure in VVC+ Open Loop and Closed-loop Configurations

In *Illustration 11.8*, the resulting reference from the reference handling system is received and fed through the ramp limitation and speed limitation before being sent to the motor control. The output of the motor control is then limited by the maximum frequency limit.

Danfoss A/S © 11/2017 All rights reserved.

Parameter 1-01 Motor Control Principle is set to *[1] VVC+* and *parameter 1-00 Configuration Mode* is set to *[0] Speed open loop*. If *parameter 1-00 Configuration Mode* is set to *[1] Speed closed loop*, the resulting reference is passed from the ramp limitation and speed limitation into a speed PID control. The speed PID control parameters are located in *parameter group 7-0* Speed PID Ctrl*. The resulting reference from the speed PID control is sent to the motor control limited by the frequency limit.

Select *[3] Process* in *parameter 1-00 Configuration Mode* to use the process PID control for closed-loop control of, for example, speed or pressure in the controlled application. The process PID parameters are in *parameter groups 7-2* Process Ctrl. Feedb* and *7-3* Process PID Ctrl*.

11.2.7.2 Control Structure in Flux Sensorless

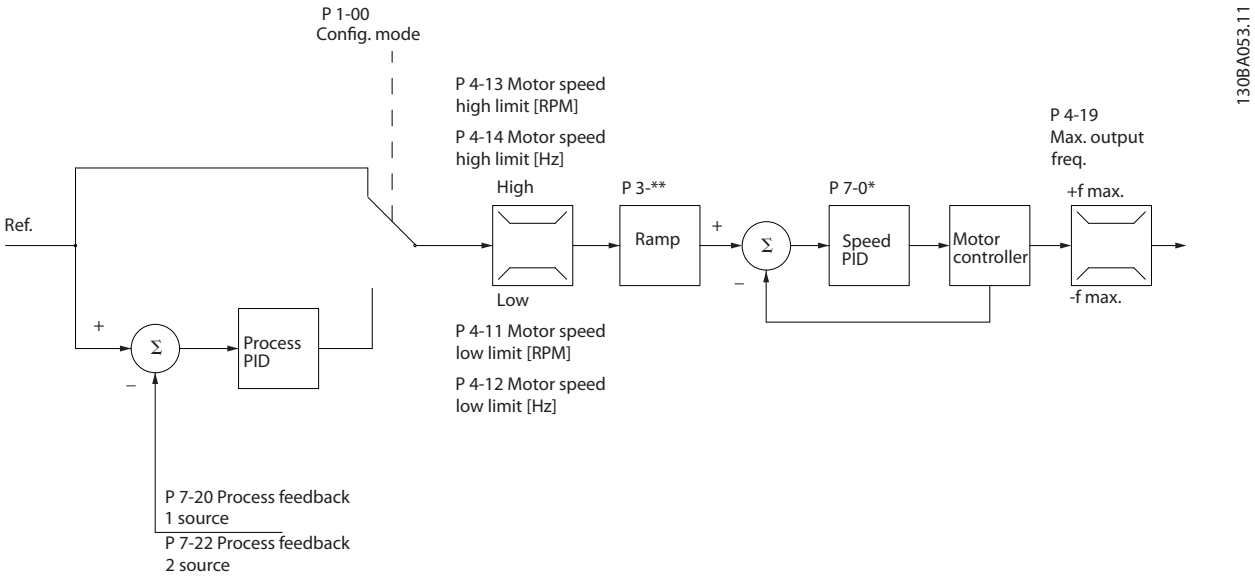

Illustration 11.9 Control Structure in Flux Sensorless Open Loop and Closed-loop Configurations

11

In *Illustration 11.9*, the resulting reference from the reference handling system is fed through the ramp and speed limitations as determined by the parameter settings indicated.

Parameter 1-01 Motor Control Principle is set to *[2] Flux Sensorless* and *parameter 1-00 Configuration Mode* is set to *[0] Speed open loop*. An estimated speed feedback is generated to the speed PID to control the output frequency. The speed PID must be set with its P, I, and D parameters (*parameter group 7-0* Speed PID control*).

Select *[3] Process* in *parameter 1-00 Configuration Mode* to use the process PID control for closed-loop control of the controlled application. The process PID parameters are found in *parameter groups 7-2* Process Ctrl. Feedb* and *7-3* Process PID Ctrl*.

 Danfoss A/S © 11/2017 All rights reserved.

11.2.7.3 Control Structure in Flux with Motor Feedback

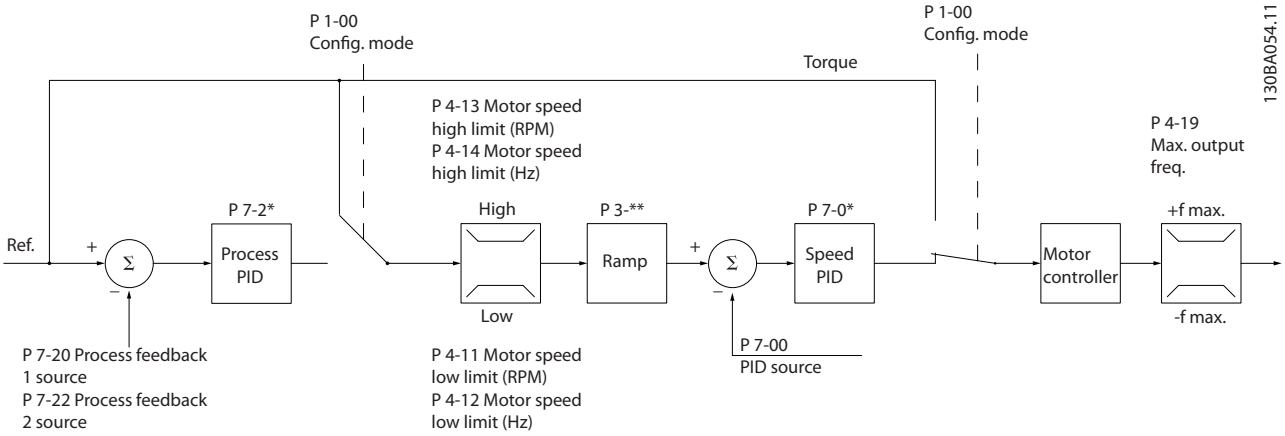

Illustration 11.10 Control Structure in Flux with Motor Feedback Configuration

In *Illustration 11.10*, the motor control in this configuration relies on a feedback signal from an encoder or resolver mounted directly on the motor (set in *parameter 1-02 Flux Motor Feedback Source*). The resulting reference can be used as input for the speed PID control, or directly as a torque reference.

Parameter 1-01 Motor Control Principle is set to *[3] Flux w motor feedb* and *parameter 1-00 Configuration Mode* is set to *[1] Speed closed loop*. The speed PID control parameters are in *parameter group 7-0* Speed PID Control*.

Torque control can only be selected in the *Flux with motor feedback* (*parameter 1-01 Motor Control Principle*) configuration. When this mode has been selected, the reference uses the Nm unit. It requires no torque feedback, since the actual torque is calculated based on the current measurement of the drive.

Process PID control can be used for closed-loop control of speed or pressure in the controlled application. The process PID parameters are in *parameter groups 7-2* Process Ctrl. Feedb* and *7-3* Process PID Ctrl*.

11

11.2.7.4 Internal Current Control in VVC+ Mode

When the motor torque exceeds the torque limits set in *parameter 4-16 Torque Limit Motor Mode*, *parameter 4-17 Torque Limit Generator Mode*, and *parameter 4-18 Current Limit*, the integral current limit control is activated.
When the drive is at the current limit during motor operation or regenerative operation, it tries to get below the preset torque limits as quickly as possible without losing control of the motor.

Danfoss A/S © 11/2017 All rights reserved.

12 Application Examples

The examples in this section are intended as a quick reference for common applications.

- Parameter settings are the regional default values unless otherwise indicated (selected in *parameter 0-03 Regional Settings*).
- Parameters associated with the terminals and their settings are shown next to the drawings.
- Switch settings for analog terminals A53 or A54 are shown where required.
- For STO, a jumper wire may be required between terminal 12 and terminal 37 when using factory default programming values.

12.1 Programming a Closed-loop Drive System

A closed-loop drive system usually consists of the following:

- Motor
- Drive
- Encoder as feedback system
- Mechanical brake
- Brake resistor for dynamic braking
- Transmission
- Gear box
- Load

Applications demanding mechanical brake control typically need a brake resistor.

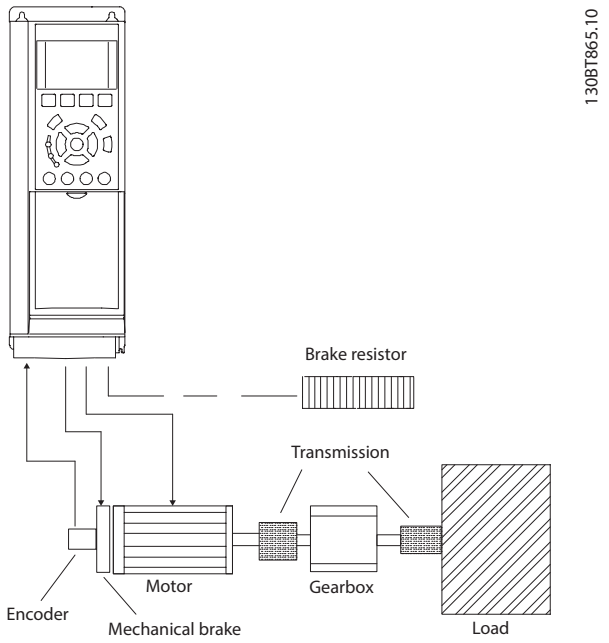

Illustration 12.1 Basic Set-up for FC 302 Closed-loop Speed Control

12.2 Wiring Configurations for Automatic Motor Adaptation (AMA)

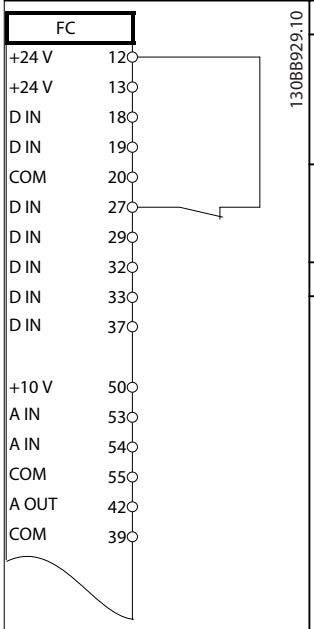

	Parameters	
	Function	**Setting**
	Parameter 1-29 Automatic Motor Adaptation (AMA)	*[1] Enable complete AMA*
	Parameter 5-12 Terminal 27 Digital Input	*[2]* Coast inverse*
	*=Default value	
	Notes/comments: Set *parameter group 1-2* Motor Data* according to motor nameplate.	

Table 12.1 Wiring Configuration for AMA with T27 Connected

 Danfoss A/S © 11/2017 All rights reserved.

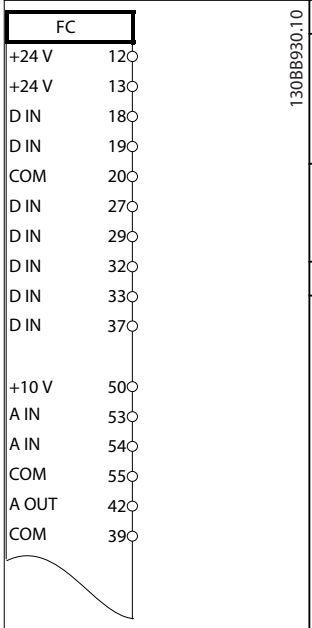

Parameters	
Function	**Setting**
Parameter 1-29 Automatic Motor Adaptation (AMA)	*[1] Enable complete AMA*
Parameter 5-12 Terminal 27 Digital Input	*[0] No operation*
*=Default value	
Notes/comments: Set *parameter group 1-2* Motor Data* according to motor nameplate.	

Table 12.2 Wiring Configuration for AMA without T27 Connected

12.3 Wiring Configurations for Analog Speed Reference

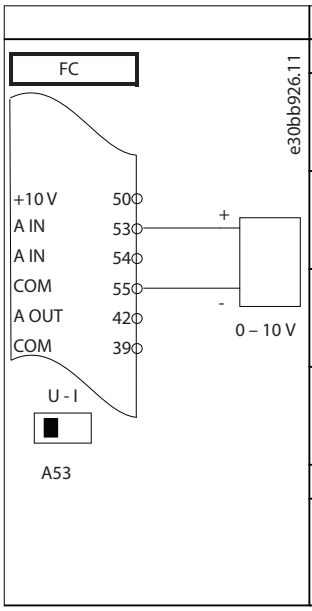

Parameters	
Function	**Setting**
Parameter 6-10 Terminal 53 Low Voltage	0.07 V*
Parameter 6-11 Terminal 53 High Voltage	10 V*
Parameter 6-14 Terminal 53 Low Ref./Feedb. Value	0 RPM
Parameter 6-15 Terminal 53 High Ref./Feedb. Value	1500 RPM
*=Default value	
Notes/comments:	

Table 12.3 Wiring Configuration for Analog Speed Reference (Voltage)

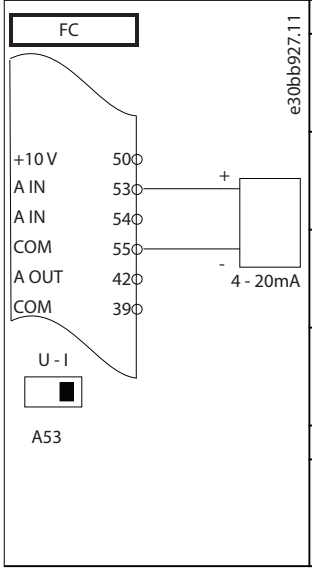

Parameters	
Function	**Setting**
Parameter 6-12 Terminal 53 Low Current	4 mA*
Parameter 6-13 Terminal 53 High Current	20 mA*
Parameter 6-14 Terminal 53 Low Ref./Feedb. Value	0 RPM
Parameter 6-15 Terminal 53 High Ref./Feedb. Value	1500 RPM
*=Default value	
Notes/comments:	

Table 12.4 Wiring Configuration for Analog Speed Reference (Current)

12.4 Wiring Configurations for Start/Stop

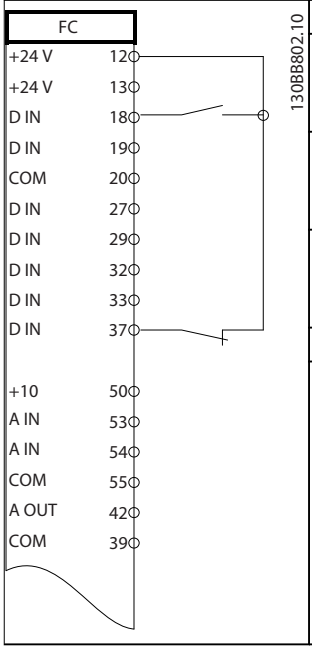

Parameters	
Function	**Setting**
Parameter 5-10 Terminal 18 Digital Input	*[8] Start**
Parameter 5-12 Terminal 27 Digital Input	*[0] No operation*
Parameter 5-19 Terminal 37 Safe Stop	*[1] Safe Torque Off Alarm*
*=Default value	
Notes/comments: If *parameter 5-12 Terminal 27 Digital Input* is set to *[0] No operation*, a jumper wire to terminal 27 is not needed.	

Table 12.5 Wiring Configuration for Start/Stop Command with Safe Torque Off

 Danfoss A/S © 11/2017 All rights reserved.

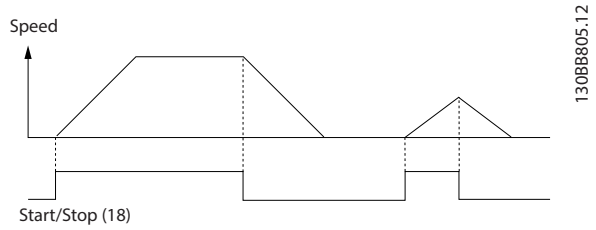

Illustration 12.2 Start/Stop with Safe Torque Off

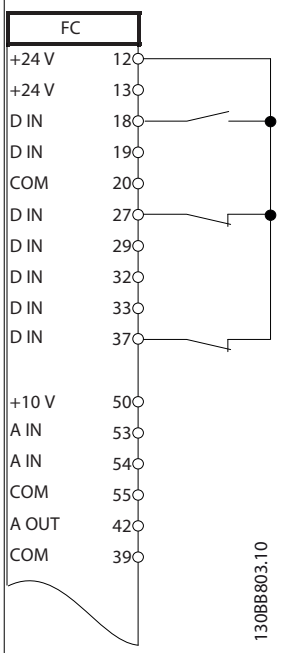

	Parameters	
	Function	**Setting**
	Parameter 5-10 Terminal 18 Digital Input	*[9] Latched Start*
	Parameter 5-12 Terminal 27 Digital Input	*[6] Stop Inverse*
	*=Default value	
	Notes/comments: If *parameter 5-12 Terminal 27 Digital Input* is set to *[0] No operation*, a jumper wire to terminal 27 is not needed.	

Table 12.6 Wiring Configuration for Pulse Start/Stop

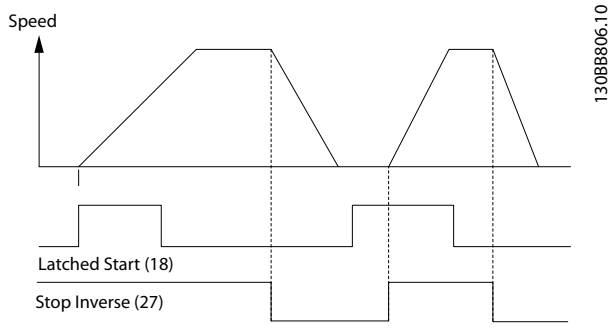

Illustration 12.3 Latched Start/Stop Inverse

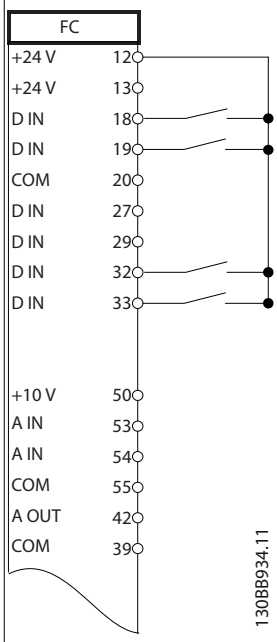

	Parameters	
	Function	**Setting**
	Parameter 5-10 Terminal 18 Digital Input	*[8] Start*
	Parameter 5-11 Terminal 19 Digital Input	*[10] Reversing**
	Parameter 5-12 Terminal 27 Digital Input	*[0] No operation*
	Parameter 5-14 Terminal 32 Digital Input	*[16] Preset ref bit 0*
	Parameter 5-15 Terminal 33 Digital Input	*[17] Preset ref bit 1*
	Parameter 3-10 Preset Reference	
	Preset ref. 0	25%
	Preset ref. 1	50%
	Preset ref. 2	75%
	Preset ref. 3	100%
	*=Default value	
	Notes/comments:	

Table 12.7 Wiring Configuration for Start/Stop with Reversing and 4 Preset Speeds

12

 Danfoss A/S © 11/2017 All rights reserved.

12.5 Wiring Configuration for an External Alarm Reset

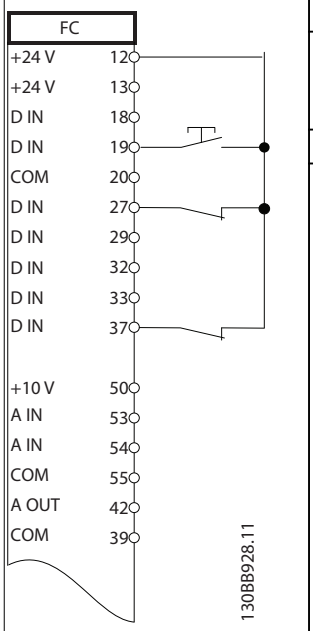

Parameters	
Function	**Setting**
Parameter 5-11 Terminal 19 Digital Input	*[1] Reset*
*=Default value	
Notes/comments:	

Table 12.8 Wiring Configuration for an External Alarm Reset

12.6 Wiring Configuration for Speed Reference Using a Manual Potentiometer

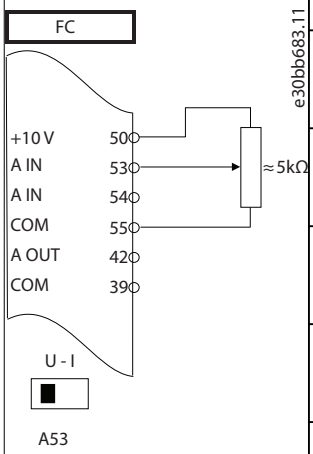

Parameters	
Function	**Setting**
Parameter 6-10 Terminal 53 Low Voltage	0.07 V*
Parameter 6-11 Terminal 53 High Voltage	10 V*
Parameter 6-14 Terminal 53 Low Ref./Feedb. Value	0 RPM
Parameter 6-15 Terminal 53 High Ref./Feedb. Value	1500 RPM
*=Default value	
Notes/comments:	

Table 12.9 Wiring Configuration for Speed Reference (Using a Manual Potentiometer)

12.7 Wiring Configuration for Speed Up/ Speed Down

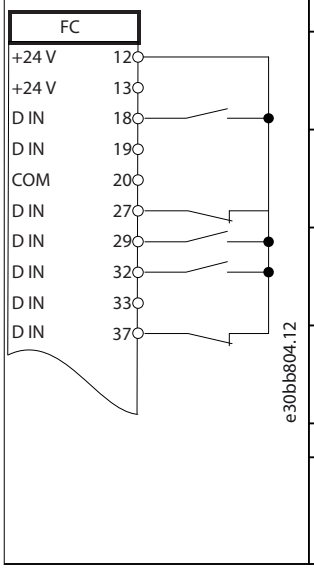

Parameters	
Function	**Setting**
Parameter 5-10 Terminal 18 Digital Input	*[8] Start**
Parameter 5-12 Terminal 27 Digital Input	*[19] Freeze Reference*
Parameter 5-13 Terminal 29 Digital Input	*[21] Speed Up*
Parameter 5-14 Terminal 32 Digital Input	*[22] Speed Down*
*=Default value	
Notes/comments:	

Table 12.10 Wiring Configuration for Speed Up/Speed Down

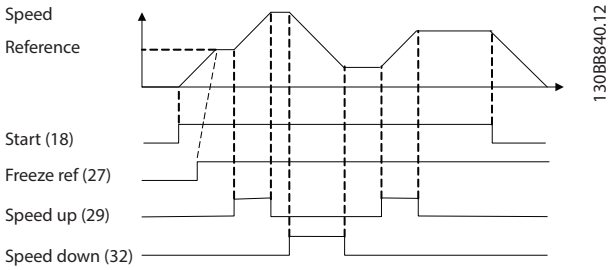

Illustration 12.4 Speed Up/Speed Down

12

Danfoss A/S © 11/2017 All rights reserved.

12.8 Wiring Configuration for RS485 Network Connection

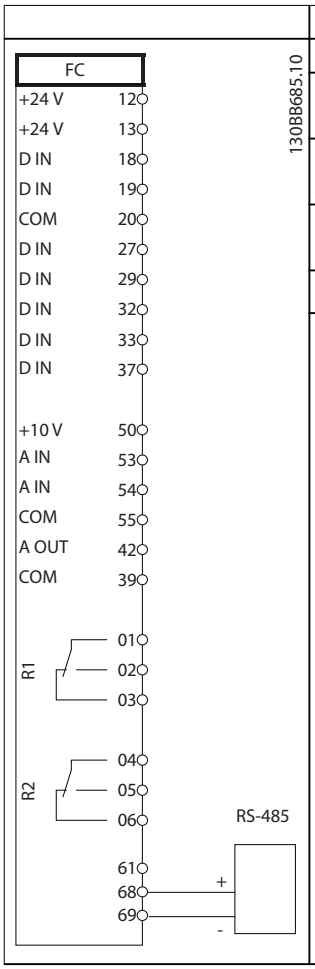

Parameters	
Function	**Setting**
Parameter 8-30 Protocol	FC*
Parameter 8-31 Address	1*
Parameter 8-32 Baud Rate	9600*
*=Default value	
Notes/comments: Select protocol, address, and baud rate in the parameters.	

Table 12.11 Wiring Configuration for RS485 Network Connection

12.9 Wiring Configuration for a Motor Thermistor

NOTICE

Thermistors must use reinforced or double insulation to meet PELV insulation requirements.

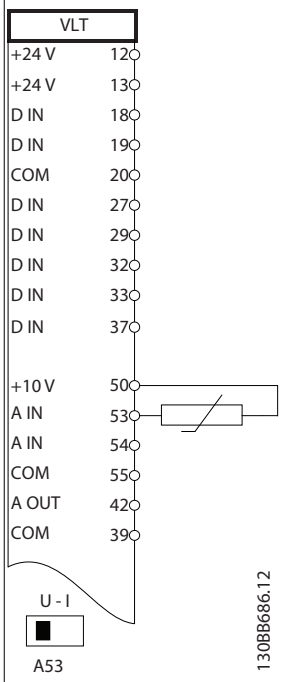

Parameters	
Function	**Setting**
Parameter 1-90 Motor Thermal Protection	*[2] Thermistor trip*
Parameter 1-93 Thermistor Source	*[1] analog input 53*
*=Default value	
Notes/comments: If only a warning is wanted, set *parameter 1-90 Motor Thermal Protection* to *[1] Thermistor warning*.	

Table 12.12 Wiring Configuration for a Motor Thermistor

12

 Danfoss A/S © 11/2017 All rights reserved.

12.10 Wiring Configuration for a Relay Set-up with Smart Logic Control

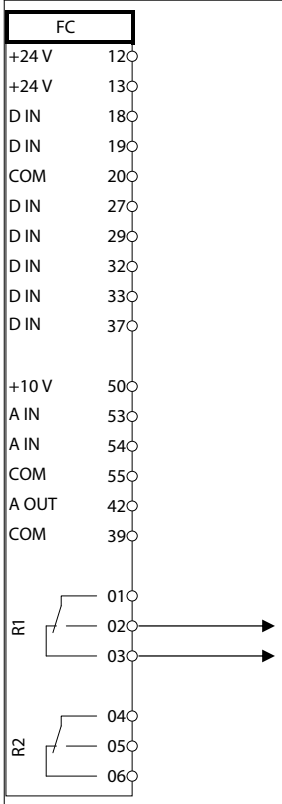

Parameters	
Function	**Setting**
Parameter 4-30 Motor Feedback Loss Function	*[1] Warning*
Parameter 4-31 Motor Feedback Speed Error	100 RPM
Parameter 4-32 Motor Feedback Loss Timeout	5 s
Parameter 7-00 Speed PID Feedback Source	*[2] MCB 102*
Parameter 17-11 Resolution (PPR)	1024*
Parameter 13-00 SL Controller Mode	*[1] On*
Parameter 13-01 Start Event	*[19] Warning*
Parameter 13-02 Stop Event	*[44] Reset key*
Parameter 13-10 Comparator Operand	*[21] Warning no.*
Parameter 13-11 Comparator Operator	*[1] ≈ (equal)**
Parameter 13-12 Comparator Value	90
Parameter 13-51 SL Controller Event	*[22] Comparator 0*
Parameter 13-52 SL Controller Action	*[32] Set digital out A low*
Parameter 5-40 Function Relay	*[80] SL digital output A*
*=Default value	

Notes/comments:
If the limit in the feedback monitor is exceeded, *warning 90, Feedback Mon.* is issued. The SLC monitors *warning 90, Feedback Mon.* and if the warning becomes true, relay 1 is triggered. External equipment may require service. If the feedback error goes below the limit again within 5 s, the drive continues and the warning disappears. Reset relay 1 by pressing [Reset] on the LCP.

Table 12.13 Wiring Configuration for a Relay Set-up with Smart Logic Control

12.11 Wiring Configuration for Mechanical Brake Control

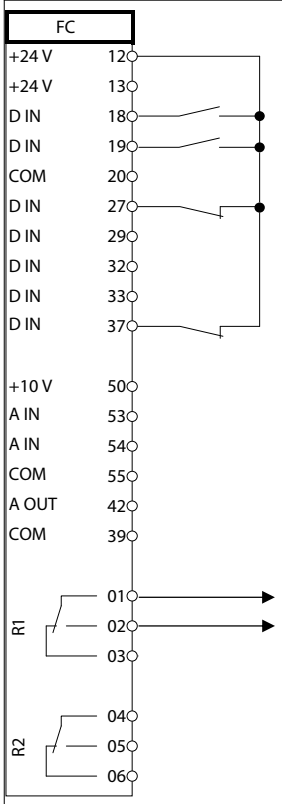

Parameters	
Function	**Setting**
Parameter 5-40 Function Relay	*[32] Mech. brake ctrl.*
Parameter 5-10 Terminal 18 Digital Input	*[8] Start**
Parameter 5-11 Terminal 19 Digital Input	*[11] Start reversing*
Parameter 1-71 Start Delay	0.2
Parameter 1-72 Start Function	*[5] VVC+/ FLUX Clockwise*
Parameter 1-76 Start Current	$I_{m,n}$
Parameter 2-20 Release Brake Current	Application dependent
Parameter 2-21 Activate Brake Speed [RPM]	Half of nominal slip of the motor
*=Default value	
Notes/comments:	

Table 12.14 Wiring Configuration for Mechanical Brake Control

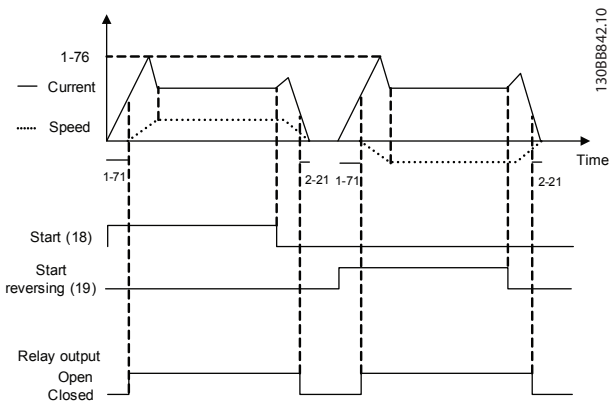

Illustration 12.5 Mechanical Brake Control

Danfoss A/S © 11/2017 All rights reserved.

12.12 Wiring Configuration for the Encoder

The direction of the encoder, identified by looking into the shaft end, is determined by which order the pulses enter the drive. See *Illustration 12.6*.

- Clockwise (CW) direction means channel A is 90 electrical degrees before channel B.
- Counterclockwise (CCW) direction means channel B is 90 electrical degrees before A.

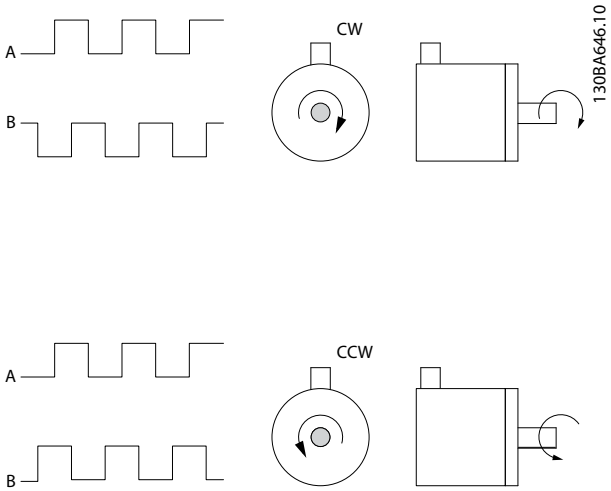

Illustration 12.6 Determining Encoder Direction

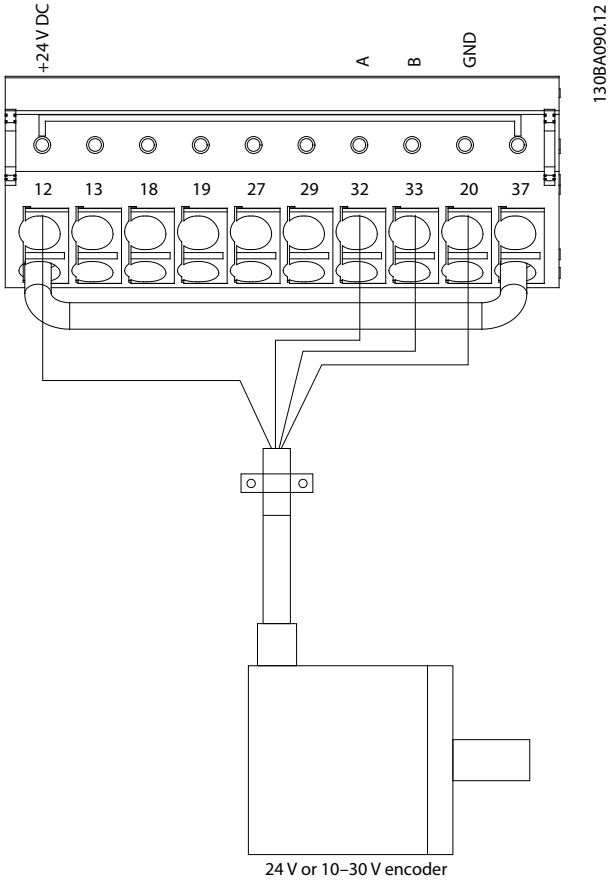

Illustration 12.7 Wire Configuration for the Encoder

NOTICE

Maximum cable length 5 m (16 ft).

12

 Danfoss A/S © 11/2017 All rights reserved.

12.13 Wiring Configuration for Torque and Stop Limit

In applications with an external electro-mechanical brake, such as hoisting applications, it is possible to stop the drive via a standard stop command and simultaneously activate the external electro-mechanical brake. *Illustration 12.8* shows the programming of these drive connections.

If a stop command is active via terminal 18 and the drive is not at the torque limit, the motor ramps down to 0 Hz. If the drive is at the torque limit and a stop command is activated, the system activates terminal 29 output (programmed to *[27] Torque limit & stop*). The signal to terminal 27 changes from logic 1 to logic 0 and the motor starts to coast. This process ensures that the hoist stops even if the drive itself cannot handle the required torque, for example due to excessive overload.

To program the stop and torque limit, connect to the following terminals:

- Start/stop via terminal 18
  (*Parameter 5-10 Terminal 18 Digital Input [8] Start*).
- Quick stop via terminal 27
  (*Parameter 5-12 Terminal 27 Digital Input [2] Coasting Stop, Inverse*).
- Terminal 29 output
  (*Parameter 5-02 Terminal 29 Mode [1] Terminal 29 Mode Output* and *parameter 5-31 Terminal 29 Digital Output [27] Torque limit & stop*).
- Relay output [0] (Relay 1)
  (*Parameter 5-40 Function Relay [32] Mechanical Brake Control*).

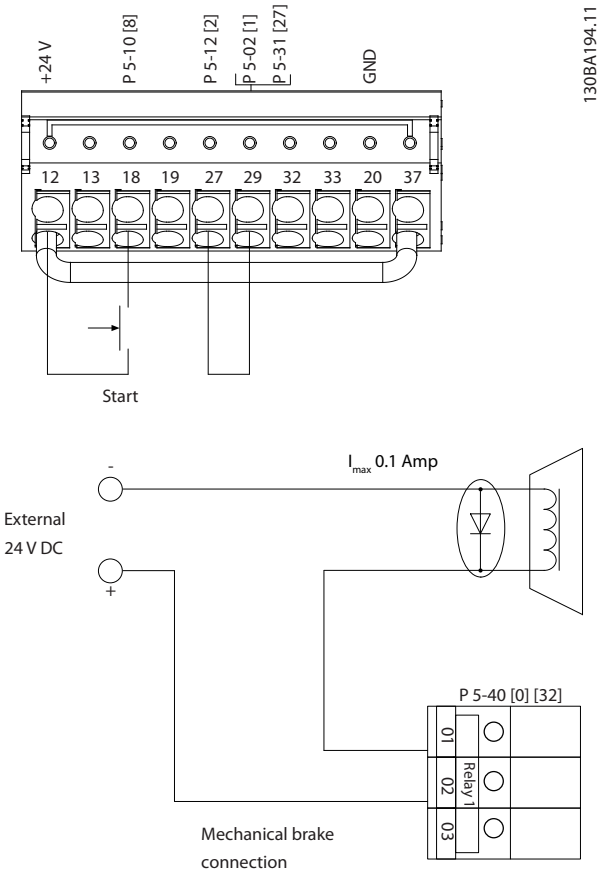

Illustration 12.8 Wire Configuration for Torque and Stop Limit

12

Danfoss A/S © 11/2017 All rights reserved.

13 How to Order a Drive

13.1 Drive Configurator

1	2	3	4	5	6	7	8	9	10	11	12	13	14	15	16	17	18	19	20	21	22	23	24	25	26	27	28	29	30	31	32	33	34	35	36	37	38	39
F	C	-								T											X	X	S	X	X	X	X	A		B		C					D	

130BC530.10

Table 13.1 Type Code String

Product group	1–6	
Model	7–10	
Mains Voltage	11–12	
Enclosure	13–15	
Hardware configuration	16–23	
RFI filter/low harmonic drive/ 12-pulse	16–17	
Brake	18	
Display (LCP)	19	
PCB coating	20	
Mains option	21	
Adaptation A	22	
Adaptation B	23	
Software release	24–27	
Software language	28	
A options	29–30	
B options	31–32	
C0 options, MCO	33–34	
C1 options	35	
C option software	36–37	
D options	38–39	

Table 13.2 Type Code Example for Ordering a Drive

Configure the correct drive for the proper application by using the internet-based drive configurator. The drive configurator is found on the global internet site: *www.danfoss.com/drives*. The configurator creates a type code string and an 8-digit sales number, which can be delivered to the local sales office. It is also possible to build a project list with several products and send it to a Danfoss sales representative.

An example of a type code string is:

FC-302P450T5E54H4CGCXXXSXXXXA0BXCXXXXD0

The meaning of the characters in the string is defined in this chapter. In the example above, an F3 drive is configured with the following options:

- RFI filter
- Safe Torque Off with Pilz relay
- Coated PCB
- PROFIBUS DP-V1

Drives are delivered automatically with a language package relevant to the region from which they are ordered. Four regional language packages cover the following languages:

Language package 1
English, German, French, Danish, Dutch, Spanish, Swedish, Italian, and Finnish.

Language package 2
English, German, Chinese, Korean, Japanese, Thai, Traditional Chinese, and Bahasa Indonesian.

Language package 3
English, German, Slovenian, Bulgarian, Serbian, Romanian, Hungarian, Czech, and Russian.

Language package 4
English, German, Spanish, English US, Greek, Brazilian Portuguese, Turkish, and Polish.

To order drives with a different language package, contact the local Danfoss sales office.

 Danfoss A/S © 11/2017 All rights reserved.

13.1.1 Ordering Type Code for Enclosures E1–E2

Description	Pos	Possible option
Product group	1–6	FC-302
Model	7–10	P315–P560
Mains voltage	11–12	T5: 380–500 V AC T7: 525–690 V AC
Enclosure	13–15	E00: IP00 (chassis - for installation in an external enclosure) C00: IP00/Chassis with stainless steel back channel E21: IP21 (NEMA 1) E54: IP54 (NEMA 12) E2M: IP21 (NEMA 1) with mains shield E5M: IP54 (NEMA 12) with mains shield
RFI filter	16–17	H2: RFI filter, class A2 (standard) H4: RFI filter class A1[1)] B2: 12-pulse drive with RFI filter, class A2 B4: 12-pulse drive with RFI filter, class A1 N2: LHD with RFI filter, class A2 N4: LHD with RFI filter, class A1
Brake	18	B: Brake IGBT mounted X: No brake IGBT R: Regen terminals S: Brake + regen
Display	19	G: Graphical local control panel LCP N: Numerical local control panel (LCP) X: No local control panel
PCB coating	20	C: Coated PCB
Mains option	21	X: No mains option 3: Mains disconnect and fuse 5: Mains disconnect, fuse, and load sharing 7: Fuse A: Fuse and load sharing D: Load sharing
Adaptation	22	X: Standard cable entries
Adaptation	23	X: No adaptation
Software release	24–27	Actual software
Software language	28	X: Standard language pack

Table 13.3 Ordering Type Code for Enclosures E1–E2[2)]

1) Available for 380–500 V only.

2) Consult the factory for applications requiring maritime certification.

Danfoss A/S © 11/2017 All rights reserved.

13.1.2 Ordering Type Code for Enclosures F1–F4 and F8–F13

Description	Pos	Possible option
Product group	1–6	FC-302
Power rating	7–10	P250–P1200 kW
Mains voltage	11–12	T5: 380–500 V AC T7: 525–690 V AC
Enclosure	13–15	C21: IP21/NEMA Type 1 with stainless steel back channel C54: IP54/Type 12 stainless steel back channel E21: IP 21/ NEMA Type 1 E54: IP 54/ NEMA Type 12 L2X: IP21/NEMA 1 with cabinet light, and IEC 230 V power outlet L5X: IP54/NEMA 12 with cabinet light, and IEC 230 V power outlet L2A: IP21/NEMA 1 with cabinet light, and NAM 115 V power outlet L5A: IP54/NEMA 12 with cabinet light, and NAM 115 V power outlet H21: IP21 with space heater and thermostat H54: IP54 with space heater and thermostat R2X: IP21/NEMA1 with space heater, thermostat, light, and IEC 230 V outlet R5X: IP54/NEMA12 with space heater, thermostat, light, and IEC 230 V outlet R2A: IP21/NEMA1 with space heater, thermostat, light, and NAM 115 V outlet R5A: IP54/NEMA12 with space heater, thermostat, light, and NAM 115 V outlet
RFI filter	16–17	H2: RFI filter, class A2 (standard) H4: RFI filter, class A1 HE: RCD with class A2 RFI filter HF: RCD with class A1 RFI filter HG: IRM with class A2 RFI filter HH: IRM with class A1 RFI filter HJ: NAMUR terminals and class A2 RFI filter HK: NAMUR terminals with class A1 RFI filter HL: RCD with NAMUR terminals and class A2 RFI filter HM: RCD with NAMUR terminals and class A1 RFI filter HN: IRM with NAMUR terminals and class A2 RFI filter HP: IRM with NAMUR terminals and class A1 RFI filter N2: Low harmonic drive with RFI filter, class A2 N4: Low harmonic drive with RFI filter, class A1 B2: 12-pulse drive with RFI filter, class A2 B4: 12-pulse drive with RFI filter, class A1 BE: 12-pulse + RCD for TN/TT mains + class A2 RFI BF: 12-pulse + RCD for TN/TT mains + class A1 RFI BG: 12-pulse + IRM for IT mains + class A2 RFI BH: 12-pulse + IRM for IT mains + class A1 RFI BM: 12-pulse + RCD for TN/TT mains + NAMUR terminals + class A1 RFI[1)]
Brake	18	B: Brake IGBT mounted X: No brake IGBT C: Safe Torque Off with Pilz safety relay D: Safe Torque Off with Pilz safety relay, and brake IGBT R: Regen terminals M: IEC emergency stop push button (with Pilz safety relay) N: IEC emergency stop push button with brake IGBT and brake terminals P: IEC emergency stop push button with regen terminals
Display	19	G: Graphical Local Control Panel LCP
PCB coating	20	C: Coated PCB

 Danfoss A/S © 11/2017 All rights reserved.

Description	Pos	Possible option
Mains option	21	X: No mains option 3: Mains disconnect and fuse 5: Mains disconnect, fuse, and load sharing 7: Fuse A: Fuse and load sharing D: Load sharing E: Mains disconnect, contactor, and fuses F: Mains circuit breaker, contactor, and fuses G: Mains disconnect, contactor, load sharing terminals, and fuses H: Mains circuit breaker, contactor, load sharing terminals, and fuses J: Mains circuit breaker and fuses K: Mains circuit breaker, load sharing terminals, and fuses
Power terminals & motor starters	22	X: No option E 30 A, fuse-protected power terminals F: 30 A, fuse-protected power terminals and 2.5–4 A manual motor starter G: 30 A, fuse-protected power terminals and 4–6.3 A manual motor starter H: 30 A, fuse-protected power terminals and 6.3–10 A manual motor starter J: 30 A, fuse-protected power terminals and 10–16 A manual motor starter K: Two 2.5–4 A manual motor starters L: Two 4–6.3 A manual motor starters M: Two 6.3–10 A manual motor starters N: Two 10–16 A manual motor starters
Auxiliary 24 V supply & external temperature monitoring	23	X: No option H: 5 A, 24 V supply (customer use) J: External temperature monitoring G: 5 A, 24 V supply (customer use) and external temperature monitoring
Software release	24–27	Actual software
Software language	28	X: Standard language pack

Table 13.4 Ordering Type Code for Enclosures F1–F4 and F8–F13[2)]

1) Requires VLT® PTC Thermistor Card MCB 112 and VLT® Extended Relay Card MCB 113.

13

13.1.3 Ordering Options for All VLT® AutomationDrive FC 302 Enclosures

Description	Pos	Possible option
A options	29–30	AX: No A option A0: VLT® PROFIBUS DP MCA 101 (standard) A4: VLT® DeviceNet MCA 104 (standard) A6: VLT® CANopen MCA 105 (standard) A8: VLT® EtherCAT MCA 124 AT: VLT® PROFIBUS Converter MCA 113 AU: VLT® PROFIBUS Converter MCA 114 AL: VLT® PROFINET MCA 120 AN: VLT® EtherNet/IP MCA 121 AQ: VLT® Modbus TCP MCA 122 AY: VLT® Powerlink MCA 123

Danfoss A/S © 11/2017 All rights reserved.

Description	Pos	Possible option
B options	31–32	BX: No option B2: VLT® PTC Thermistor Card MCB 112 B4: VLT® Sensor Input MCB 114 B6: VLT® Safety Option MCB 150 B7: VLT® Safety Option MCB 151 B8: VLT® Safety Option MCB 152 BK: VLT® General Purpose I/O MCB 101 BP: VLT® Relay Card MCB 105 BR: VLT® Encoder Input MCB 102 MCB 102 BU: VLT® Resolver Input MCB 103 BZ: VLT® Safe PLC I/O MCB 108
C options	33–34	CX: No option C4: VLT® Motion Control Option MCO 305
C1 options	35	X: No option R: VLT® Extended Relay Card MCB 113
C option software	36–37	XX: Standard controller 10: VLT® Synchronizing Controller MCO 350 (requires C4 option) 11: VLT® Position Controller MCO 351 (requires C4 option)
D options	38–39	DX: No option D0: VLT® 24 V DC Supply MCB 107

Table 13.5 Ordering Type Codes for FC 302 Options

13.2 Ordering Numbers for Options/Kits

13.2.1 Ordering Numbers for A Options: Fieldbuses

Description	Ordering number	
	Uncoated	Coated
VLT® PROFIBUS DP MCA 101	130B1100	130B1200
VLT® DeviceNet MCA 104	130B1102	130B1202
VLT® CANopen MCA 105	130B1103	130B1205
VLT® PROFIBUS Converter MCA 113	–	130B1245
VLT® PROFIBUS Converter MCA 114	–	130B1246
VLT® PROFINET MCA 120	130B1135	130B1235
VLT® EtherNet/IP MCA 121	130B1119	130B1219
VLT® Modbus TCP MCA 122	130B1196	130B1296
VLT® Powerlink MCA 123	130B1489	130B1490
VLT® EtherCAT MCA 124	130B5546	130B5646

Table 13.6 Ordering Numbers for A Options

For information on fieldbus and application option compatibility with older software versions, contact the Danfoss supplier.

 Danfoss A/S © 11/2017 All rights reserved.

13.2.2 Ordering Numbers for B Options: Functional Extensions

Description	Ordering number	
	Uncoated	Coated
VLT® General Purpose I/O MCB 101	130B1125	130B1212
VLT® Encoder Input MCB 102	130B1115	130B1203
VLT® Resolver Input MCB 103	130B1127	130B1227
VLT® Relay Card MCB 105	130B1110	130B1210
VLT® Safe PLC I/O MCB 108	130B1120	130B1220
VLT® PTC Thermistor Card MCB 112	–	130B1137
VLT® Sensor Input MCB 114	130B1172	130B1272
VLT® Safety Option MCB 150	–	130B3280
VLT® Safety Option MCB 151	–	130B3290
VLT® Safety Option MCB 152	–	130B9860

Table 13.7 Ordering Numbers for B Options

13.2.3 Ordering Numbers for C Options: Motion Control and Relay Card

Description	Ordering number	
	Uncoated	Coated
VLT® Motion Control Option MCO 305	130B1134	130B1234
VLT® Synchronizing Controller MCO 350	130B1152	130B1252
VLT® Position Controller MCO 351	130B1153	120B1253
VLT® Center Winder MCO 352	130B1165	130B1166
VLT® Extended Relay Card MCB 113	130B1164	130B1264

Table 13.8 Ordering Numbers for C Options

13.2.4 Ordering Numbers for D Option: 24 V Back-up Supply

Description	Ordering number	
	Uncoated	Coated
VLT® 24 V DC Supply MCB 107	130B1108	130B1208

Table 13.9 Ordering Numbers for D Option

13.2.5 Ordering Numbers for Software Options

Description	Ordering number
VLT® MCT 10 Set-up Software - 1 user.	130B1000
VLT® MCT 10 Set-up Software - 5 users.	130B1001
VLT® MCT 10 Set-up Software - 10 users.	130B1002
VLT® MCT 10 Set-up Software - 25 users.	130B1003
VLT® MCT 10 Set-up Software - 50 users.	130B1004
VLT® MCT 10 Set-up Software - 100 users.	130B1005
VLT® MCT 10 Set-up Software - unlimited users.	130B1006

Table 13.10 Ordering Numbers for Software Options

Danfoss A/S © 11/2017 All rights reserved.

13.2.6 Ordering Numbers for Kits

Type	Description	Ordering number
Miscellaneous hardware		
USB in door, E1 and F1–F13	USB extension cord kit to allow access to the drive controls via laptop computer without opening the drive.	E1–E2 – 130B1156 F1–F13 – 176F1784
Top entry - motor cables, F1/F3	Allows for the installation of motor cables through the top of the motor side cabinet. Must be used with the common motor terminals kit. Only for enclosures F1/F3.	400 mm (15.7 in) cabinet – 176F1838 600 mm (23.6 in) cabinet – 176F1839
Top entry - motor cables, F2/F4	Allows for the installation of motor cables through the top of the motor side cabinet. Must be used with the common motor terminals kit. Only for enclosures F2/F4.	400 mm (15.7 in) cabinet – 176F1840 600 mm (23.6 in) cabinet – 176F1841
Top entry - motor cables, F8–F13	Allows for the installation of motor cables through the top of the motor side cabinet. Must be used with the common motor terminals kit. Only for enclosures F8–F13.	Contact factory
Top entry - mains cables, F1–F2	Allows for the installation of mains cables through the top of the mains side cabinet. The kit must be ordered with the common motor terminals kit. Only for enclosures F1–F2.	400 mm (15.7 in) cabinet – 176F1832 600 mm (23.6 in) cabinet – 176F1833
Top entry - mains cables, F3–F4 with disconnect	Allows for the installation of mains cables through the top of the mains side cabinet. The kit must be ordered with the common motor terminals kit. Only for enclosures F3–F4 with disconnect.	400 mm (15.7 in) cabinet – 176F1834 600 mm (23.6 in) cabinet – 176F1835
Top entry - mains cables, F3–F4	Allows for the installation of mains cables through the top of the mains side cabinet. The kit must be ordered with the common motor terminals kit. Only for enclosures F3–F4.	400 mm (15.7 in) cabinet – 176F1836 600 mm (23.6 in) cabinet – 176F1837
Top entry - mains cables, F8–F13	Allows for the installation of mains cables through the top of the mains side cabinet. The kit must be ordered with the common motor terminals kit. Only for enclosures F8–F13.	Contact factory
Top entry - fieldbus cables, E2	Allows for the installation of fieldbus cables through the top of the drive. The kit is IP20/Chassis when installed, but a different mating connector can be used to increase the protection rating. Only for enclosure E2.	176F1742
Common motor terminals, F1–F4	Provides the busbars and hardware required to connect the motor terminals from the paralleled inverters to a single terminal (per phase) to accommodate the installation of the motor-side top entry kit. This kit is equivalent to the common motor terminal option of a drive. This kit is not required to install the motor-side top entry kit if the common motor terminal option was specified when the drive was ordered. Also recommended to connect the output of a drive to an output filter or output contactor. The common motor terminals eliminate the need for equal cable lengths from each inverter to the common point of the output filter (or motor).	400 mm (15.7 in) cabinet – 176F1845 600 mm (23.6 in) cabinet – 176F1846
NEMA 3R enclosure, E2	Designed to be used with the IP00/IP20/Chassis drives to achieve an ingress protection rating of NEMA 3R or NEMA 4. These enclosures are intended for outdoor use to provide a degree of protection against inclement weather. Only for enclosures E2.	Welded enclosure – 176F0298 Rittal enclosure – 176F1852
Pedestal, E1–E2	The pedestal kit is a 400 mm (15.8 in) high pedestal that allows the drive to be floor mounted. The front of the pedestal has openings for input air to cool the power components. Only for enclosures E1–E2.	176F6739
Input options plate, E1–E2	Allows fuses, disconnect/fuses, RFI, RFI/fuses, and RFI/disconnect/fuses to be added. Only for enclosures E1–E2.	Contact factory

 Danfoss A/S © 11/2017 All rights reserved.

Type	Description	Ordering number
IP20 conversion, E2	Provides the drive with an ingress protection rating of IP20/Protected Chassis. Only for E2 enclosure.	176F1884
Back-channel cooling kits		
In back/out back, E1	Allows the cooling air to be directed in and out through the back of the drive. Kit includes top and base covers for an E1 with protection rating of IP21/54 (Type1/12).	176F1946
In back/out back, E2	Allows the cooling air to be directed in and out through the back of the drive. Kit includes top and base covers for an E2 with a protection rating of IP00 (Chassis).	Welded enclosure – 176F1861 Rittal enclosure – 176F1783
In back/out back, F1–F13	Allows the cooling air to be directed in and out through the back of the drive. Plates are already included on drive. Contact factory for installation instructions.	Contact factory
In bottom/out top, E2	Allows the cooling air to be directed in through the bottom and out through the top of the drive. This kit used only for enclosure E2.	2000 mm (78.7 in) cabinet – 176F1850 2200 mm (86.6 in) cabinet – 176F0299
Out top, E2	Allows the cooling air to be directed out through the top of the drive. This kit used only for enclosure E2.	176F1776
LCP		
LCP 101	Numerical local control panel (NLCP)	130B1124
LCP 102	Graphical local control panel (GLCP)	130B1107
LCP cable	Separate LCP cable, 3 m (9 ft)	175Z0929
LCP kit, IP21	Panel mounting kit including graphical LCP, fasteners, 3 m (9 ft) cable, and gasket	130B1113
LCP kit, IP21	Panel mounting kit including numerical LCP, fasteners, and gasket	130B1114
LCP kit, IP21	Panel mounting kit for all LCPs including fasteners, 3 m (9 ft) cable, and gasket	130B1117

Table 13.11 Kits Available for Enclosures E1–E2 and F1–F13

13.3 Ordering Numbers for Filters and Brake Resistors

Refer to the following design guides for dimensioning specifications and ordering numbers for filters and brake resistors:

- *VLT® Brake Resistor MCE 101 Design Guide*.
- *VLT® Advanced Harmonic Filters AHF 005/AHF 010 Design Guide*.
- *Output Filters Design Guide*.

13.4 Spare Parts

Consult the VLT® Shop or the Drive Configurator (*www.danfoss.com/drives*) for the spare parts that are available for your application.

Danfoss A/S © 11/2017 All rights reserved.

14 Appendix

14.1 Abbreviations and Symbols

60° AVM	60° asynchronous vector modulation
A	Ampere/AMP
AC	Alternating current
AD	Air discharge
AEO	Automatic energy optimization
AI	Analog input
AIC	Ampere interrupting current
AMA	Automatic motor adaptation
AWG	American wire gauge
°C	Degrees Celsius
CB	Circuit breaker
CD	Constant discharge
CDM	Complete drive module: The drive, feeding section, and auxiliaries
CE	European conformity (European safety standards)
CM	Common mode
CT	Constant torque
DC	Direct current
DI	Digital input
DM	Differential mode
D-TYPE	Drive dependent
EMC	Electromagnetic compatibility
EMF	Electromotive force
ETR	Electronic thermal relay
°F	Degrees Fahrenheit
f_{JOG}	Motor frequency when jog function is activated
f_M	Motor frequency
f_{MAX}	Maximum output frequency that the drive applies on its output
f_{MIN}	Minimum motor frequency from the drive
$f_{M,N}$	Nominal motor frequency
FC	Frequency converter (drive)
HIPERFACE®	HIPERFACE® is a registered trademark by Stegmann
HO	High overload
Hp	Horse power
HTL	HTL encoder (10–30 V) pulses - High-voltage transistor logic
Hz	Hertz
I_{INV}	Rated inverter output current
I_{LIM}	Current limit
$I_{M,N}$	Nominal motor current
$I_{VLT,MAX}$	Maximum output current
$I_{VLT,N}$	Rated output current supplied by the drive
kHz	Kilohertz
LCP	Local control panel
Lsb	Least significant bit
m	Meter
mA	Milliampere
MCM	Mille circular mil
MCT	Motion control tool
mH	Inductance in milli Henry
mm	Millimeter
ms	Millisecond
Msb	Most significant bit
η_{VLT}	Efficiency of the drive defined as ratio between power output and power input
nF	Capacitance in nano Farad
NLCP	Numerical local control panel
Nm	Newton meter
NO	Normal overload
n_s	Synchronous motor speed
Online/ Offline Parameters	Changes to online parameters are activated immediately after the data value is changed
$P_{br,cont.}$	Rated power of the brake resistor (average power during continuous braking)
PCB	Printed circuit board
PCD	Process data
PDS	Power drive system: CDM and a motor
PELV	Protective extra low voltage
P_m	Drive nominal output power as high overload (HO)
$P_{M,N}$	Nominal motor power
PM motor	Permanent magnet motor
Process PID	PID (proportional integrated differential) regulator that maintains the speed, pressure, temperature, and so on
$R_{br,nom}$	Nominal resistor value that ensures a brake power on the motor shaft of 150/160% for 1 minute
RCD	Residual current device
Regen	Regenerative terminals
R_{min}	Minimum allowed brake resistor value by the drive
RMS	Root average square
RPM	Revolutions per minute
R_{rec}	Recommended brake resistor resistance of Danfoss brake resistors
s	Second
SCCR	Short-circuit current rating
SFAVM	Stator flux-oriented asynchronous vector modulation
STW	Status word
SMPS	Switch mode power supply
THD	Total harmonic distortion
T_{LIM}	Torque limit
TTL	TTL encoder (5 V) pulses - transistor logic
$U_{M,N}$	Nominal motor voltage

 Danfoss A/S © 11/2017 All rights reserved.

UL	Underwriters Laboratories (US organization for the safety certification)
V	Volts
VT	Variable torque
VVC+	Voltage vector control plus

Table 14.1 Abbreviations and Symbols

14.2 Definitions

Brake resistor
The brake resistor is a module capable of absorbing the brake power generated in regenerative braking. This regenerative brake power increases the DC-link voltage and a brake chopper ensures that the power is transmitted to the brake resistor.

Break-away torque

$$n_s = \frac{2 \times par.\ 1-23 \times 60\ s}{par.\ 1-39}$$

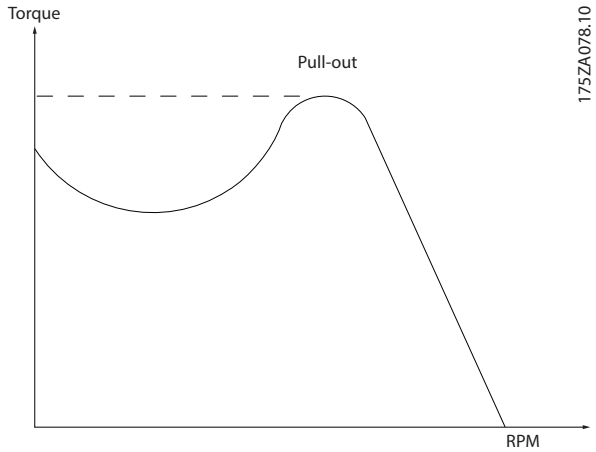

Illustration 14.1 Break-away Torque Chart

Coast
The motor shaft is in free mode. No torque on the motor.

CT characteristics
Constant torque characteristics used for all applications such as conveyor belts, displacement pumps, and cranes.

Initializing
If initializing is carried out (*parameter 14-22 Operation Mode*), the drive returns to the default setting.

Intermittent duty cycle
An intermittent duty rating refers to a sequence of duty cycles. Each cycle consists of an on-load and an off-load period. The operation can be either periodic duty or non-periodic duty.

Power factor
The true power factor (lambda) takes all the harmonics into consideration and is always smaller than the power factor (cos phi) that only considers the 1st harmonics of current and voltage.

$$\cos\phi = \frac{P\ (\mathrm{kW})}{P\ (\mathrm{kVA})} = \frac{U\lambda\ x\ I\lambda\ x\ \cos\phi}{U\lambda\ x\ I\lambda}$$

Cos phi is also known as displacement power factor.

Both lambda and cos phi are stated for Danfoss VLT® drives in *chapter 7.3 Mains Supply*.

The power factor indicates to which extent the drive imposes a load on the mains supply.
The lower the power factor, the higher the I_{RMS} for the same kW performance.

In addition, a high-power factor indicates that the harmonic currents are low.
All Danfoss drives have built-in DC coils in the DC link to have a high-power factor and reduce the THD on the main supply.

Pulse input/incremental encoder
An external digital sensor used for feedback information of motor speed and direction. Encoders are used for high-speed accuracy feedback and in high dynamic applications.

Set-up
Save parameter settings in 4 set-ups. Change between the 4 parameter set-ups and edit 1 set-up while another set-up is active.

Slip compensation
The drive compensates for the motor slip by giving the frequency a supplement that follows the measured motor load, keeping the motor speed almost constant.

Smart logic control (SLC)
The SLC is a sequence of user-defined actions executed when the associated user-defined events are evaluated as true by the SLC. (*Parameter group 13-** Smart Logic*).

FC standard bus
Includes RS485 bus with FC protocol or MC protocol. See *parameter 8-30 Protocol*.

Thermistor
A temperature-dependent resistor placed where the temperature is to be monitored (drive or motor).

Trip
A state entered in fault situations, such as when the drive is subject to an overtemperature or when it protects the motor, process, or mechanism. Restart is prevented until the cause of the fault has disappeared and the trip state is canceled.

Trip lock
A state entered in fault situations when the drive is protecting itself and requires physical intervention. A locked trip can only be canceled by cutting off mains, removing the cause of the fault, and reconnecting the drive. Restart is prevented until the trip state is canceled by activating reset.

VT characteristics
Variable torque characteristics for pumps and fans.

Danfoss A/S © 11/2017 All rights reserved.

14.3 RS485 Installation and Set-up

RS485 is a 2-wire bus interface compatible with multi-drop network topology. Nodes can be connected as a bus, or via drop cables from a common trunk line. A total of 32 nodes can be connected to 1 network segment.
Repeaters divide network segments. Note each repeater function as a node within the segment in which it is installed. Each node connected within a given network must have a unique node address, across all segments. Terminate each segment at both ends, using either the termination switch (S801) of the drives or a biased termination resistor network. Always use shielded twisted pair (STP) cable for bus cabling, and always follow good common installation practice.
Low-impedance ground connection of the shield at every node is important, including at high frequencies. Thus, connect a large surface of the shield to ground, for example, with a cable clamp or a conductive cable gland. If necessary, apply potential-equalizing cables to maintain the same ground potential throughout the network, particularly in installations with long cables.
To prevent impedance mismatch, always use the same type of cable throughout the entire network. When connecting a motor to the drive, always use shielded motor cable.

Cable	Shielded twisted pair (STP)
Impedance	120 Ω
Cable length	Maximum 1200 m (3937 ft), including drop lines. Maximum 500 m (1640.5 ft) station-to-station

Table 14.2 Motor Cable

One or more drives can be connected to a control (or master) using the RS485 standardized interface. Terminal 68 is connected to the P signal (TX+, RX+), while terminal 69 is connected to the N signal (TX-, RX-). See illustrations in *chapter 10.16 EMC-compliant Installation*.

If more than 1 drive is connected to a master, use parallel connections.

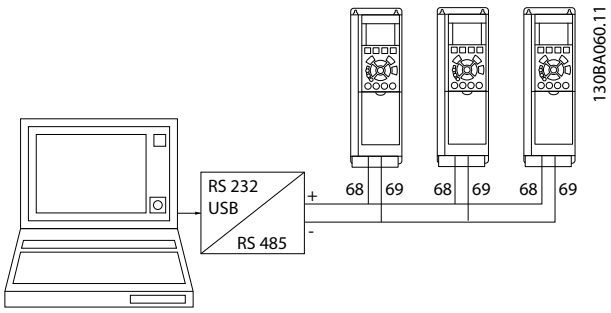

Illustration 14.2 Parallel Connections

To avoid potential equalizing currents in the shield, ground the cable shield via terminal 61, which is connected to the frame via an RC-link.

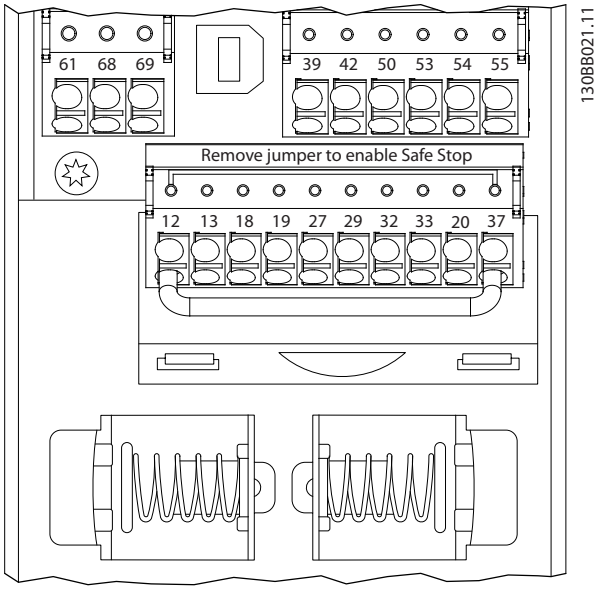

Illustration 14.3 Control Card Terminals

The RS485 bus must be terminated by using a resistor network at both ends. For this purpose, set switch S801 on the control card to "ON".
For more information, see *chapter 10.2 Wiring Schematic*.

Communication protocol must be set to *parameter 8-30 Protocol*.

 Danfoss A/S © 11/2017 All rights reserved.

14.3.1 EMC Precautions

To achieve interference-free operation of the RS485 network, the following EMC precautions are recommended.

Relevant national and local regulations, regarding protective ground connection, for example, must be observed. The RS485 communication cable must be kept away from motor and brake resistor cables to avoid coupling of high-frequency noise from one cable to another. Normally a distance of 200 mm (8 in) is sufficient. However, in situations where cables run in parallel over long distances, keeping the greatest possible distance between cables is recommended. When crossing is unavoidable, the RS485 cable must cross motor and brake resistor cables at an angle of 90°.

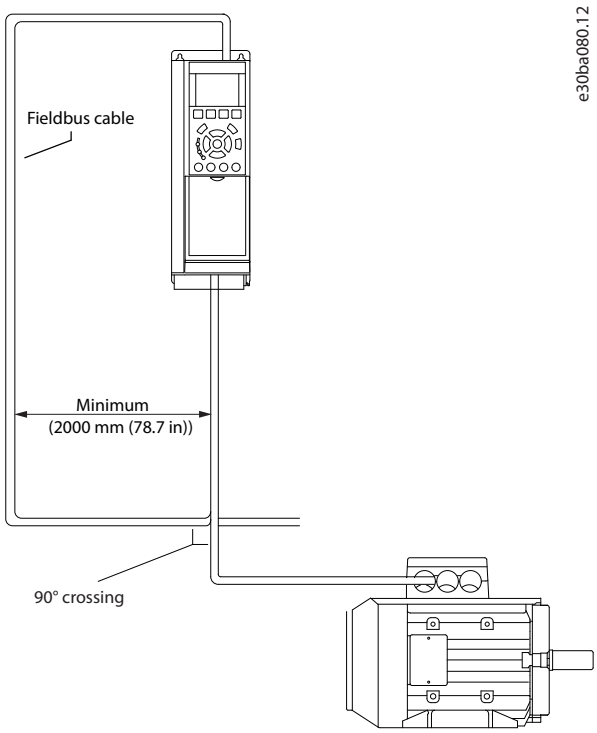

Illustration 14.4 EMC Precautions

14.4 RS485: FC Protocol Overview

14.4.1 FC Protocol Overview

The FC protocol, also referred to as FC bus or standard bus, is the Danfoss standard fieldbus. It defines an access technique according to the master/slave principle for communications via a field bus.
One master and a maximum of 126 slaves can be connected to the bus. The master selects the individual slaves via an address character in the telegram. A slave itself can never transmit without first being requested to do so, and direct message transfer between the individual slaves is not possible. Communications occur in the half-duplex mode.
The master function cannot be transferred to another node (single-master system).

The physical layer is RS485, thus utilizing the RS485 port built into the drive. The FC protocol supports different telegram formats:

- A short format of 8 bytes for process data.
- A long format of 16 bytes that also includes a parameter channel.
- A format used for texts.

14.4.2 Drive Set-up

Set the following parameters to enable the FC protocol for the drive.

Parameter number	Setting
Parameter 8-30 Protocol	FC
Parameter 8-31 Address	1–126
Parameter 8-32 FC Port Baud Rate	2400–115200
Parameter 8-33 Parity / Stop Bits	Even parity, 1 stop bit (default)

Table 14.3 FC Protocol Parameters

14.5 RS485: FC Protocol Telegram Structure

14.5.1 Content of a Character (Byte)

Each character transferred begins with a start bit. Then 8 data bits are transferred, each corresponding to a byte. Each character is secured via a parity bit. This bit is set at 1" when it reaches parity. Parity is when there is an equal number of 1 characters in the 8 data bits and the parity bit in total. A stop bit completes a character, thus consisting of 11 bits in all.

Illustration 14.5 Character (Byte)

14.5.2 Telegram Structure

Each telegram has the following structure:

- Start character (STX)=02 hex.
- A byte denoting the telegram length (LGE).
- A byte denoting the drive address (ADR).

Danfoss A/S © 11/2017 All rights reserved.

A number of data bytes (variable, depending on the type of telegram) follows.

A data control byte (BCC) completes the telegram.

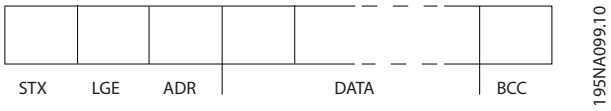

Illustration 14.6 Telegram Structure

14.5.3 Telegram Length (LGE)

The telegram length is the number of data bytes plus the address byte ADR and the data control byte BCC.

- The length of telegrams with 4 data bytes is LGE=4+1+1=6 bytes.
- The length of telegrams with 12 data bytes is LGE=12+1+1=14 bytes.
- The length of telegrams containing texts is 10[1)]+n bytes.

1) The 10 represents the fixed characters, while the n is variable (depending on the length of the text).

14.5.4 Drive Address (ADR)

Two different address formats are used.
The address range of the drive is either 1–31 or 1–126.

- Address format 1–31
  - Bit 7=0 (address format 1–31 active).
  - Bit 6 is not used.
  - Bit 5=1: Broadcast, address bits (0–4) are not used.
  - Bit 5=0: No broadcast.
  - Bit 0–4=drive address 1–31.
- Address format 1–126
  - Bit 7=1 (address format 1–126 active).
  - Bit 0–6=drive address 1–126.
  - Bit 0–6=0 broadcast.

The slave returns the address byte unchanged to the master in the response telegram.

14.5.5 Data Control Byte (BCC)

The checksum is calculated as an XOR-function. Before the first byte in the telegram is received, the calculated checksum is 0.

 Danfoss A/S © 11/2017 All rights reserved.

14.5.6 Data Field

The structure of data blocks depends on the type of telegram. There are 3 types, and the type applies for both control telegrams (master⇒slave) and response telegrams (slave⇒master).

The 3 types of telegram are:

Process block (PCD)
The PCD is made up of a data block of 4 bytes (2 words) and contains:

- Control word and reference value (from master-to-slave).
- Status word and present output frequency (from slave-to-master).

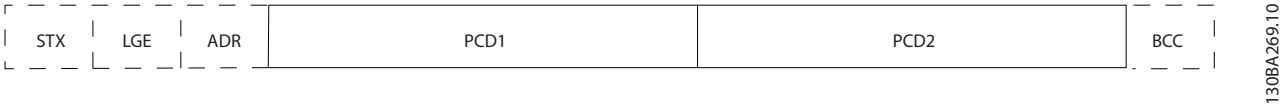

Illustration 14.7 PCD

Parameter block
The parameter block is used to transfer parameters between master and slave. The data block is made up of 12 bytes (6 words) and also contains the process block.

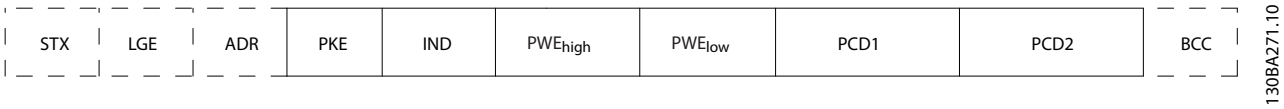

Illustration 14.8 Parameter Block

Text block
The text block is used to read or write texts via the data block.

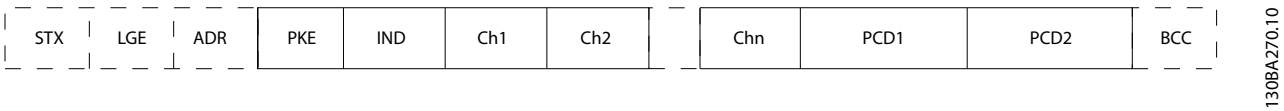

Illustration 14.9 Text Block

14

Danfoss A/S © 11/2017 All rights reserved.

14.5.7 PKE Field

The PKE field contains 2 sub fields:

- Parameter command and response AK.
- Parameter number PNU.

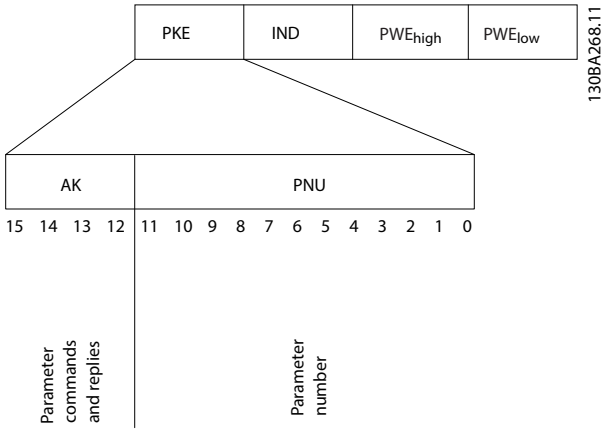

Illustration 14.10 PKE Field

Bits number 12–15 transfer parameter commands from master-to-slave and return processed slave responses to the master.

Bit number				Parameter command
15	**14**	**13**	**12**	
0	0	0	0	No command.
0	0	0	1	Read parameter value.
0	0	1	0	Write parameter value in RAM (word).
0	0	1	1	Write parameter value in RAM (double word).
1	1	0	1	Write parameter value in RAM and EEPROM (double word).
1	1	1	0	Write parameter value in RAM and EEPROM (word).
1	1	1	1	Read/write text.

Table 14.4 Parameter Commands Master⇒Slave

Bit number				Response
15	**14**	**13**	**12**	
0	0	0	0	No response.
0	0	0	1	Parameter value transferred (word).
0	0	1	0	Parameter value transferred (double word).
0	1	1	1	Command cannot be performed.
1	1	1	1	Text transferred.

Table 14.5 Response Slave⇒Master

If the command cannot be performed, the slave sends this response:
0111 Command cannot be performed
- and issues the following fault report in the parameter value (PWE):

PWE low (hex)	Fault report
0	The parameter number used does not exist.
1	There is no write access to the defined parameter.
2	Data value exceeds the parameter limits.
3	The sub-index used does not exist.
4	The parameter is not the array type.
5	The data type does not match the defined parameter.
11	Data change in the defined parameter is not possible in the present mode of the drive. Certain parameters can only be changed when the motor is turned off.
82	There is no bus access to the defined parameter.
83	Data change is not possible because factory set-up is selected.

Table 14.6 Fault Report

14.5.8 Parameter Number (PNU)

Bits number 0–11 transfer parameter numbers. The function of the relevant parameter is defined in the parameter description in the *programming guide*.

14.5.9 Index (IND)

The index is used together with the parameter number to read/write-access parameters with an index, for example, *parameter 15-30 Alarm Log: Error Code*. The index consists of a low byte and a high byte.

Only the low byte is used as an index.

14.5.10 Parameter Value (PWE)

The parameter value block consists of 2 words (4 bytes), and the value depends on the defined command (AK). The master prompts for a parameter value when the PWE block contains no value. To change a parameter value (write), write the new value in the PWE block and send from the master to the slave.

When a slave responds to a parameter request (read command), the present parameter value in the PWE block is transferred and returned to the master. If a parameter contains not a numerical value but several data options, for example, *parameter 0-01 Language [0] English*, and *[4] Danish*, select the data value by entering the value in the

 Danfoss A/S © 11/2017 All rights reserved.

PWE block. Serial communication is only capable of reading parameters containing data type 9 (text string).

Parameter 15-40 FC Type to *parameter 15-53 Power Card Serial Number* contain data type 9.
For example, read the unit size and mains voltage range in *parameter 15-40 FC Type*. When a text string is transferred (read), the length of the telegram is variable, and the texts are of different lengths. The telegram length is defined in the 2nd byte of the telegram, LGE. When using text transfer, the index character indicates whether it is a read or a write command.

To read a text via the PWE block, set the parameter command (AK) to F hex. The index character high-byte must be 4.

Some parameters contain text that can be written via the fieldbus. To write a text via the PWE block, set the parameter command (AK) to F hex. The index characters high-byte must be 5.

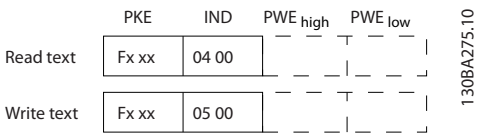

Illustration 14.11 PWE

14.5.11 Data Types Supported

Unsigned means that there is no operational sign in the telegram.

Data types	Description
3	Integer 16
4	Integer 32
5	Unsigned 8
6	Unsigned 16
7	Unsigned 32
9	Text string
10	Byte string
13	Time difference
33	Reserved
35	Bit sequence

Table 14.7 Data Types Supported

14.5.12 Conversion

The various attributes of each parameter are shown in the section factory settings. Parameter values are transferred as whole numbers only. Conversion factors are therefore used to transfer decimals.

Parameter 4-12 Motor Speed Low Limit [Hz] has a conversion factor of 0.1.
To preset the minimum frequency to 10 Hz, transfer the value 100. A conversion factor of 0.1 means that the value transferred is multiplied by 0.1. The value 100 is thus perceived as 10.0.

Examples:
0 s⇒conversion index 0
0.00 s⇒conversion index -2
0 M/S⇒conversion index -3
0.00 M/S⇒conversion index -5

Conversion index	Conversion factor
100	
75	
74	
67	
6	1000000
5	100000
4	10000
3	1000
2	100
1	10
0	1
-1	0.1
-2	0.01
-3	0.001
-4	0.0001
-5	0.00001
-6	0.000001
-7	0.0000001

Table 14.8 Conversion Table

14.5.13 Process Words (PCD)

The block of process words is divided into 2 blocks of 16 bits, which always occur in the defined sequence.

PCD 1	PCD 2
Control telegram (master⇒slave control word)	Reference-value
Control telegram (slave⇒master) status word	Present output frequency

Table 14.9 PCD Sequence

Danfoss A/S © 11/2017 All rights reserved.

14.6 RS485: FC Protocol Parameter Examples

14.6.1 Writing a Parameter Value

Change *parameter 4-14 Motor Speed High Limit [Hz]* to 100 Hz.
Write the data in EEPROM.

PKE=E19E hex - Write single word in *parameter 4-14 Motor Speed High Limit [Hz]*.
IND=0000 hex
PWE_{high}=0000 hex
PWE_{low}=03E8 hex - Data value 1000, corresponding to 100 Hz, see *chapter 14.5.12 Conversion*.

E19E H	0000 H	0000 H	03E8 H
PKE	IND	PWE_{high}	PWE_{low}

130BA092.10

Illustration 14.12 Telegram

NOTICE

***Parameter 4-14 Motor Speed High Limit [Hz]* is a single word, and the parameter command for write in EEPROM is E. Parameter number *parameter 4-14 Motor Speed High Limit [Hz]* is 19E in hexadecimal.**

119E H	0000 H	0000 H	03E8 H
PKE	IND	PWE_{high}	PWE_{low}

130BA093.10

Illustration 14.13 Response from Master-to-Slave

14.6.2 Reading a Parameter Value

Read the value in *parameter 3-41 Ramp 1 Ramp Up Time*.

PKE=1155 Hex - Read parameter value in *parameter 3-41 Ramp 1 Ramp Up Time*
IND=0000 hex
PWE_{high}=0000 hex
PWE_{low}=0000 hex

1155 H	0000 H	0000 H	0000 H
PKE	IND	PWE_{high}	PWE_{low}

130BA094.10

Illustration 14.14 Parameter Value

If the value in *parameter 3-41 Ramp 1 Ramp Up Time* is 10 s, the response from the slave to the master is:

1155 H	0000 H	0000 H	03E8 H
PKE	IND	PWE_{high}	PWE_{low}

130BA267.10

Illustration 14.15 Response from Slave-to-Master

3E8 hex corresponds to 1000 decimal. The conversion index for *parameter 3-41 Ramp 1 Ramp Up Time* is -2. *Parameter 3-41 Ramp 1 Ramp Up Time* is of the type *Unsigned 32*.

14.7 RS485: Modbus RTU Overview

14.7.1 Assumptions

Danfoss assumes that the installed controller supports the interfaces in this manual, and strictly observes all requirements and limitations stipulated in the controller and drive.

14.7.2 Prerequisite Knowledge

The Modbus RTU (Remote Terminal Unit) is designed to communicate with any controller that supports the interfaces defined in this manual. It is assumed that the reader has full knowledge of the capabilities and limitations of the controller.

14.7.3 Modbus RTU Overview

Regardless of the type of physical communication networks, the Modbus RTU Overview describes the process a controller uses to request access to another device. This process includes how the Modbus RTU responds to requests from another device, and how errors are detected and reported. It also establishes a common format for the layout and contents of message fields.

During communications over a Modbus RTU network, the protocol determines:

- How each controller learns its device address.
- Recognizes a message addressed to it.
- Determines which actions to take.
- Extracts any data or other information contained in the message.

If a reply is required, the controller constructs the reply message and sends it.
Controllers communicate using a master-slave technique in which only 1 device (the master) can initiate transactions (called queries). The other devices (slaves) respond by supplying the requested data to the master, or by responding to the query.
The master can address individual slaves, or can initiate a broadcast message to all slaves. Slaves return a message, called a response, to queries that are addressed to them

 Danfoss A/S © 11/2017 All rights reserved.

individually. No responses are returned to broadcast queries from the master. The Modbus RTU protocol establishes the format for the master query by placing into it the device (or broadcast) address, a function code defining the requested action, any data to send, and an error-checking field. The slave response message is also constructed using Modbus protocol. It contains fields confirming the action taken, any data to return, and an error-checking field. If an error occurs in receipt of the message, or if the slave is unable to perform the requested action, the slave constructs an error message which it sends in response, or a timeout occurs.

14.7.4 Drive with Modbus RTU

The drive communicates in Modbus RTU format over the built-in RS485 interface. Modbus RTU provides access to the control word and bus reference of the drive.

The control word allows the Modbus master to control several important functions of the drive:

- Start
- Stop of the drive in various ways:
  Coast stop
  Quick stop
  DC brake stop
  Normal (ramp) stop
- Reset after a fault trip.
- Run at various preset speeds.
- Run in reverse.
- Change the active set-up.
- Control the built-in relay of the drive.

The bus reference is commonly used for speed control. It is also possible to access the parameters, read their values, and, where possible, write values to them, allowing a range of control options, including controlling the setpoint of the drive when its internal PI controller is used.

14

14.7.5 Drive with Modbus RTU

To enable Modbus RTU on the drive, set the following parameters:

Parameter	Setting
Parameter 8-30 Protocol	Modbus RTU
Parameter 8-31 Address	1–247
Parameter 8-32 Baud Rate	2400–115200
Parameter 8-33 Parity / Stop Bits	Even parity, 1 stop bit (default)

14.7.6 Drive with Modbus RTU

The controllers are set up to communicate on the Modbus network using RTU mode, with each byte in a message containing 2 4-bit hexadecimal characters. The format for each byte is shown in *Table 14.10*.

Start bit	Data byte								Stop/ parity	Stop

Table 14.10 Example Format

Coding system	8-bit binary, hexadecimal 0–9, A–F. 2 hexadecimal characters contained in each 8-bit field of the message.
Bits per byte	1 start bit. 8 data bits, least significant bit sent first. 1 bit for even/odd parity; no bit for no parity. 1 stop bit if parity is used; 2 bits if no parity.
Error check field	CRC (cyclical redundancy check)

Table 14.11 Bit Detail

14.8 RS485: Modbus RTU Telegram Structure

14.8.1 Modbus RTU Telegram Structure

The transmitting device places a Modbus RTU message into a frame with a known beginning and ending point. Receiving devices are able to begin at the start of the message, read the address portion, determine which device is addressed (or all devices, if the message is broadcast), and to recognize when the message is completed. Partial messages are detected and errors set as a result. Characters for transmission must be in hexadecimal 00–FF format in each field. The drive continuously monitors the network bus, also during silent intervals. When the first field (the address field) is received, each drive or device decodes it to determine which device is being addressed. Modbus RTU messages addressed to 0 are broadcast messages. No response is allowed for broadcast messages. A typical message frame is shown in *Table 14.12*.

Start	Address	Function	Data	CRC check	End
T1-T2-T3-T4	8 bits	8 bits	N x 8 bits	16 bits	T1-T2-T3-T4

Table 14.12 Typical Modbus RTU Telegram Structure

Danfoss A/S © 11/2017 All rights reserved.

14.8.2 Start/Stop Field

Messages start with a silent period of at least 3.5 character intervals, implemented as a multiple of character intervals at the selected network baud rate (shown as start T1-T2-T3-T4). The first transmitted field is the device address. Following the last transmitted character, a similar period of at least 3.5 character intervals marks the end of the message. A new message can begin after this period. The entire message frame must be transmitted as a continuous stream. If a silent period of more than 1.5 character intervals occurs before completion of the frame, the receiving device flushes the incomplete message and assumes that the next byte is the address field of a new message. Similarly, if a new message begins before 3.5 character intervals after a previous message, the receiving device considers it a continuation of the previous message, causing a timeout (no response from the slave), since the value in the final CRC (cyclical redundancy check) field is not valid for the combined messages.

14.8.3 Address Field

The address field of a message frame contains 8 bits. Valid slave device addresses are in the range of 0–247 decimal. The individual slave devices are assigned addresses in the range of 1–247 (0 is reserved for broadcast mode, which all slaves recognize). A master addresses a slave by placing the slave address in the address field of the message. When the slave sends its response, it places its own address in this address field to let the master know which slave is responding.

14.8.4 Function Field

The function field of a message frame contains 8 bits. Valid codes are in the range of 1–FF. Function fields are used to send messages between master and slave. When a message is sent from a master to a slave device, the function code field tells the slave what action to perform. When the slave responds to the master, it uses the function code field to indicate either a normal (error-free) response, or that an error has occurred (called an exception response). For a normal response, the slave simply echoes the original function code. For an exception response, the slave returns a code that is equivalent to the original function code with its most significant bit set to logic 1. In addition, the slave places a unique code into the data field of the response message. This code tells the master what error occurred, or the reason for the exception. See *chapter 14.9.1 Function Codes Supported by Modbus RTU*.

14.8.5 Data Field

The data field is constructed using sets of 2 hexadecimal digits, in the range of 00–FF hexadecimal. These sequences are made up of 1 RTU character. The data field of messages sent from a master-to-slave device contains more information, which the slave must use to do what is defined by the function code. This information can include items such as coil or register addresses, the quantity of items, and the count of actual data bytes in the field.

14.8.6 CRC Check Field

Messages include an error-checking field, operating based on a CRC (cyclical redundancy check) method. The CRC field checks the contents of the entire message. It is applied regardless of any parity check method used for the individual characters of the message. The transmitting device calculates the CRC value then appends the CRC as the last field in the message. The receiving device recalculates a CRC during receipt of the message and compares the calculated value to the actual value received in the CRC field. If the 2 values are unequal, a bus timeout results. The error-checking field contains a 16-bit binary value implemented as 2 8-bit bytes. After error-checking, the low-order byte of the field is appended first, followed by the high-order byte. The CRC high-order byte is the last byte sent in the message.

14.8.7 Coil Register Addressing

In Modbus, all data are organized in coils and holding registers. Coils hold a single bit, whereas holding registers hold a 2 byte word (16 bits). All data addresses in Modbus messages are referenced to 0. The first occurrence of a data item is addressed as item number 0. For example: The coil known as coil 1 in a programmable controller is addressed as coil 0000 in the data address field of a Modbus message. Coil 127 decimal is addressed as coil 007Ehex (126 decimal).
Holding register 40001 is addressed as register 0000 in the data address field of the message. The function code field already specifies a holding register operation. Therefore, the 4XXXX reference is implicit. Holding register 40108 is addressed as register 006Bhex (107 decimal).

 Danfoss A/S © 11/2017 All rights reserved.

Coil number	Description	Signal direction
1–16	Drive control word (see *Table 14.14*).	Master-to-slave
17–32	Drive speed or setpoint reference range 0x0–0xFFFF (-200% ... ~200%).	Master-to-slave
33–48	Drive status word (see *Table 14.14*).	Master-to-slave
49–64	Open-loop mode: Drive output frequency. Closed-loop mode: Drive feedback signal.	Slave-to-master
65	Parameter write control (master-to-slave).	Master-to-slave
	0 = Parameter changes are written to the RAM of the drive.	
	1 =Parameter changes are written to the RAM and EEPROM of the drive.	
66–65536	Reserved.	

Table 14.13 Coils and Holding Registers

Coil	0	1
01	Preset reference LSB	
02	Preset reference MSB	
03	DC brake	No DC brake
04	Coast stop	No coast stop
05	Quick stop	No quick stop
06	Freeze frequency	No freeze frequency
07	Ramp stop	Start
08	No reset	Reset
09	No jog	Jog
10	Ramp 1	Ramp 2
11	Data not valid	Data valid
12	Relay 1 off	Relay 1 on
13	Relay 2 off	Relay 2 on
14	Set up LSB	
15	Set up MSB	
16	No reversing	Reversing

Table 14.14 Drive Control Word (FC Profile)

Coil	0	1
33	Control not ready	Control ready
34	Drive not ready	Drive ready
35	Coasting stop	Safety closed
36	No alarm	Alarm
37	Not used	Not used
38	Not used	Not used
39	Not used	Not used
40	No warning	Warning
41	Not at reference	At reference
42	Hand mode	Auto mode
43	Out of frequency range	In frequency range
44	Stopped	Running
45	Not used	Not used
46	No voltage warning	Voltage warning
47	Not in current limit	Current limit
48	No thermal warning	Thermal warning

Table 14.15 Drive Status Word (FC Profile)

Register number	Description
00001–00006	Reserved.
00007	Last fault code from an FC data object interface.
00008	Reserved.
00009	Parameter index[1)].
00010–00990	000 parameter group (parameters 001–099).
01000–01990	100 parameter group (parameters 100–199).
02000–02990	200 parameter group (parameters 200–299).
03000–03990	300 parameter group (parameters 300–399).
04000–04990	400 parameter group (parameters 400–499).
...	...
49000–49990	4900 parameter group (parameters 4900–4999).
50000	Input data: Drive control word register (CTW).
50010	Input data: Bus reference register (REF).
...	...
50200	Output data: Drive status word register (STW).
50210	Output data: Drive main actual value register (MAV).

Table 14.16 Holding Registers

1) Used to specify the index number used when accessing an indexed parameter.

Danfoss A/S © 11/2017 All rights reserved.

14.9 RS485: Modbus RTU Message Function Codes

14.9.1 Function Codes Supported by Modbus RTU

Modbus RTU supports use of the function codes in *Table 14.17* in the function field of a message.

Function	Function code
Read coils	1 hex
Read holding registers	3 hex
Write single coil	5 hex
Write single register	6 hex
Write multiple coils	F hex
Write multiple registers	10 hex
Get comm. event counter	B hex
Report slave ID	11 hex

Table 14.17 Function Codes

Function	Function code	Sub-function code	Sub-function
Diagnostics	8	1	Restart communication.
		2	Return diagnostic register.
		10	Clear counters and diagnostic register.
		11	Return bus message count.
		12	Return bus communication error count.
		13	Return bus exception error count.
		14	Return slave message count.

Table 14.18 Function Codes

14.9.2 Modbus Exception Codes

For a full explanation of the structure of an exception code response, refer to *chapter 14.8 RS485: Modbus RTU Telegram Structure*.

Code	Name	Meaning
1	Illegal function	The function code received in the query is not an allowable action for the server (or slave). This code can be because the function code is only applicable to newer devices, and was not implemented in the unit selected. It could also indicate that the server (or slave) is in the wrong state to process a request of this type, for example because it is not configured and is being asked to return register values.
2	Illegal data address	The data address received in the query is not an allowable address for the server (or slave). More specifically, the combination of reference number and transfer length is invalid. For a controller with 100 registers, a request with offset 96 and length 4 would succeed, a request with offset 96 and length 5 generates exception 02.
3	Illegal data value	A value contained in the query data field is not an allowable value for server (or slave). This code indicates a fault in the structure of the remainder of a complex request, such as that the implied length is incorrect. It specifically does NOT mean that a data item submitted for storage in a register has a value outside the expectation of the application program, since the Modbus protocol is unaware of the significance of any particular value of any particular register.
4	Slave device failure	An unrecoverable error occurred while the server (or slave) was attempting to perform the requested action.

Table 14.19 Modbus Exception Codes

14.10 RS485: Modbus RTU Parameters

14.10.1 Parameter Handling

The PNU (parameter number) is translated from the register address contained in the Modbus read or write message. The parameter number is translated to Modbus as (10xparameter number) DECIMAL.

14.10.2 Storage of Data

The coil 65 decimal determines whether data written to the drive is stored in EEPROM and RAM (coil 65=1) or only in RAM (coil 65=0).

14.10.3 IND

The array index is set in holding register 9 and used when accessing array parameters.

14.10.4 Text Blocks

Parameters stored as text strings are accessed in the same way as the other parameters. The maximum text block size is 20 characters. If a read request for a parameter is for more characters than the parameter stores, the response is truncated. If the read request for a parameter is for fewer characters than the parameter stores, the response is space filled.

 Danfoss A/S © 11/2017 All rights reserved.

14.10.5 Conversion Factor

Since a parameter value can only be transferred as a whole number, a conversion factor must be used to transfer decimals. See *chapter 14.6 RS485: FC Protocol Parameter Examples*.

14.10.6 Parameter Values

Standard data types
Standard data types are int16, int32, uint8, uint16, and uint32. They are stored as 4x registers (40001–4FFFF). The parameters are read using function 03 hex read holding registers. Parameters are written using the function 6 hex preset single register for 1 register (16 bits), and the function 10 hex preset multiple registers for 2 registers (32 bits). Readable sizes range from 1 register (16 bits) up to 10 registers (20 characters).

Non-standard data types
Non-standard data types are text strings and are stored as 4x registers (40001–4FFFF). The parameters are read using function 03 hex Read holding registers and written using function 10 hex Preset multiple registers. Readable sizes range from 1 register (2 characters) up to 10 registers (20 characters).

14.11 RS485: FC Control Profile

14.11.1 Control Word According to FC Profile

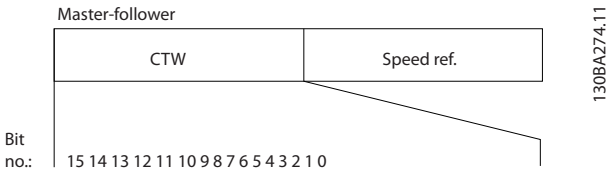

Illustration 14.16 CW Master-to-Slave

Bit	Bit value=0	Bit value=1
00	Reference value	External selection lsb
01	Reference value	External selection msb
02	DC brake	Ramp
03	Coasting	No coasting
04	Quick stop	Ramp
05	Hold output frequency	Use ramp
06	Ramp stop	Start
07	No function	Reset
08	No function	Jog
09	Ramp 1	Ramp 2
10	Data invalid	Data valid
11	No function	Relay 01 active
12	No function	Relay 02 active
13	Parameter set-up	Selection lsb
14	Parameter set-up	Selection msb
15	No function	Reverse

Explanation of the control bits
Bits 00/01
Bits 00 and 01 are used to select between the 4 reference values, which are pre-programmed in *parameter 3-10 Preset Reference* according to *Table 14.20*.

Programmed reference value	Parameter	Bit 01	Bit 00
1	[0] *parameter 3-10 Preset Reference*	0	0
2	[1] *parameter 3-10 Preset Reference*	0	1
3	[2] *parameter 3-10 Preset Reference*	1	0
4	[3] *parameter 3-10 Preset Reference*	1	1

Table 14.20 Control Bits

NOTICE

Make a selection in *parameter 8-56 Preset Reference Select* to define how bit 00/01 gates with the corresponding function on the digital inputs.

Bit 02, DC brake
Bit 02=0 leads to DC braking and stop. Set braking current and duration in *parameter 2-01 DC Brake Current* and *parameter 2-02 DC Braking Time*.
Bit 02=1 leads to ramping.

 Danfoss A/S © 11/2017 All rights reserved.

Bit 03, Coasting
Bit 03=0: The drive immediately shuts off the output transistors and the motor coasts to a standstill.
Bit 03=1: The drive starts the motor if the other starting conditions are met.

Make a selection in *parameter 8-50 Coasting Select* to define how bit 03 gates with the corresponding function on a digital input.

Bit 04, Quick stop
Bit 04=0: Makes the motor speed ramp down to stop (set in *parameter 3-81 Quick Stop Ramp Time*).

Bit 05, Hold output frequency
Bit 05=0: The present output frequency (in Hz) freezes. Change the frozen output frequency only with the digital inputs found in *parameter 5-10 Terminal 18 Digital Input – parameter 5-15 Terminal 33 Digital Input*.

NOTICE

If freeze output is active, only the following conditions can stop the drive:

- **Bit 03 Coasting stop.**
- **Bit 02 DC braking.**
- **Digital input (*parameter 5-10 Terminal 18 Digital Input – parameter 5-15 Terminal 33 Digital Input*) programmed to *DC braking*, *Coasting stop*, or *Reset* and *Coasting stop*.**

Bit 06, Ramp stop/start
Bit 06=0: Causes a stop and makes the motor speed ramp down to stop via the selected ramp down parameter.
Bit 06=1: Allows the drive to start the motor if the other starting conditions are met.

Make a selection in *parameter 8-53 Start Select* to define how bit 06 Ramp stop/start gates with the corresponding function on a digital input.

Bit 07, Reset
Bit 07=0: No reset.
Bit 07=1: Resets a trip. Reset is activated on the leading edge of the signal, that is, when changing from logic 0 to logic 1.

Bit 08, Jog
Bit 08=1: The output frequency depends on *parameter 3-19 Jog Speed [RPM]*.

Bit 09, Selection of ramp 1/2
Bit 09=0: Ramp 1 is active (*parameter 3-41 Ramp 1 Ramp Up Time – parameter 3-42 Ramp 1 Ramp Down Time*).
Bit 09=1: Ramp 2 (*parameter 3-51 Ramp 2 Ramp Up Time – parameter 3-52 Ramp 2 Ramp Down Time*) is active.

Bit 10, Data not valid/Data valid
Tell the drive whether to use or ignore the control word.
Bit 10=0: The control word is ignored.
Bit 10=1: The control word is used. This function is relevant because the telegram always contains the control word regardless of the telegram type. Thus, it is possible to turn off the control word if not in use when updating or reading parameters.

Bit 11, Relay 01
Bit 11=0: Relay not activated.
Bit 11=1: Relay 01 activated if *[36] Control word bit 11* is selected in *parameter 5-40 Function Relay*.

Bit 12, Relay 04
Bit 12=0: Relay 04 is not activated.
Bit 12=1: Relay 04 is activated if *[37] Control word bit 12* is selected in *parameter 5-40 Function Relay*.

Bit 13/14, Selection of set-up
Use bits 13 and 14 to select from the 4 menu set-ups according to *Table 14.21*.

Set-up	Bit 14	Bit 13
1	0	0
2	0	1
3	1	0
4	1	1

Table 14.21 Selection of Set-Up

The function is only possible when *[9] Multi Set-ups* is selected in *parameter 0-10 Active Set-up*.

Make a selection in *parameter 8-55 Set-up Select* to define how bit 13/14 gates with the corresponding function on the digital inputs.

Bit 15 Reverse
Bit 15=0: No reversing.
Bit 15=1: Reversing. In the default setting, reversing is set to *[0] Digital input* in *parameter 8-54 Reversing Select*. Bit 15 causes reversing only when the following is selected:

- Serial communication
- Logic or
- Logic and

 Danfoss A/S © 11/2017 All rights reserved.

14.11.2 Status Word According to FC Profile

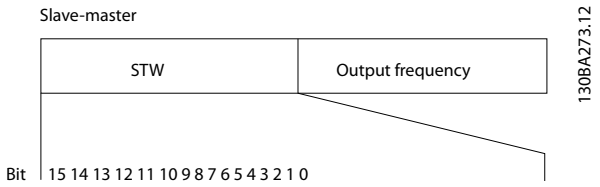

Illustration 14.17 STW Slave-to-Master

Bit	Bit=0	Bit=1
00	Control not ready	Control ready
01	Drive not ready	Drive ready
02	Coasting	Enable
03	No error	Trip
04	No error	Error (no trip)
05	Reserved	–
06	No error	Triplock
07	No warning	Warning
08	Speed≠reference	Speed=reference
09	Local operation	Bus control
10	Out of frequency limit	Frequency limit OK
11	No operation	In operation
12	Drive OK	Stopped, auto start
13	Voltage OK	Voltage exceeded
14	Torque OK	Torque exceeded
15	Timer OK	Timer exceeded

Bit 00, Control not ready/ready
Bit 00=0: The drive trips.
Bit 00=1: The drive controls are ready, but the power component does not necessarily receive any supply in the case of a 24 V external supply to the controls.

Bit 01, Drive ready
Bit 01=1: The drive is ready for operation but the coasting command is active via the digital inputs or via serial communication.

Bit 02, Coasting stop
Bit 02=0: The drive releases the motor.
Bit 02=1: The drive starts the motor with a start command.

Bit 03, No error/trip
Bit 03=0: The drive is not in fault mode.
Bit 03=1: The drive trips. To re-establish operation, press [Reset].

Bit 04, No error/error (no trip)
Bit 04=0: The drive is not in fault mode.
Bit 04=1: The drive shows an error but does not trip.

Bit 05, Not used
Bit 05 is not used in the status word.

Bit 06, No error/triplock
Bit 06=0: The drive is not in fault mode.
Bit 06=1: The drive is tripped and locked.

Bit 07, No warning/warning
Bit 07=0: There are no warnings.
Bit 07=1: A warning has occurred.

Bit 08, Speed≠ reference/speed=reference
Bit 08=0: The motor is running, but the present speed is different from the preset speed reference. For example, when the speed ramps up/down during start/stop.
Bit 08=1: The motor speed matches the preset speed reference.

Bit 09, Local operation/bus control
Bit 09=0: [Stop/reset] is activated on the control unit or *[2] Local* in *parameter 3-13 Reference Site* is selected. The drive cannot be controlled via serial communication.
Bit 09=1 It is possible to control the drive via the fieldbus/serial communication.

Bit 10, Out of frequency limit
Bit 10=0: The output frequency has reached the value in *parameter 4-11 Motor Speed Low Limit [RPM]* or *parameter 4-13 Motor Speed High Limit [RPM]*.
Bit 10=1: The output frequency is within the defined limits.

Bit 11, No operation/in operation
Bit 11=0: The motor is not running.
Bit 11=1: The drive has a start signal or the output frequency is greater than 0 Hz.

Bit 12, Drive OK/stopped, autostart
Bit 12=0: There is no temporary overtemperature on the inverter.
Bit 12=1: The inverter stops because of overtemperature but the unit does not trip and resumes operation once the overtemperature stops.

Bit 13, Voltage OK/limit exceeded
Bit 13=0: There are no voltage warnings.
Bit 13=1: The DC voltage in the DC link is too low or too high.

Bit 14, Torque OK/limit exceeded
Bit 14=0: The motor current is lower than the torque limit selected in *parameter 4-18 Current Limit*.
Bit 14=1: The torque limit in *parameter 4-18 Current Limit* is exceeded.

Bit 15, Timer OK/limit exceeded
Bit 15=0: The timers for motor thermal protection and thermal protection are not exceeded 100%.
Bit 15=1: One of the timers exceeds 100%.

If the connection between the InterBus option and the drive is lost, or an internal communication problem has occurred, all bits in the STW are set to 0.

Danfoss A/S © 11/2017 All rights reserved.

14.11.3 Bus Speed Reference Value

Speed reference value is transmitted to the drive in a relative value in %. The value is transmitted in the form of a 16-bit word; in integers (0–32767) the value 16384 (4000 hex) corresponds to 100%. Negative figures are formatted with 2's complement. The actual output frequency (MAV) is scaled in the same way as the bus reference.

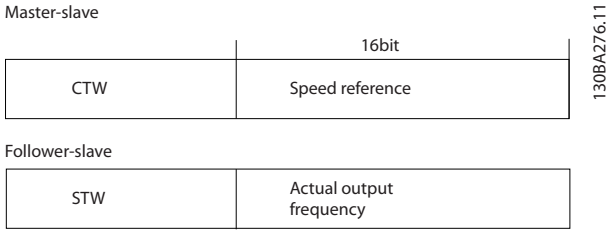

Illustration 14.18 Bus Speed Reference Value

The reference and MAV are scaled as shown in *Illustration 14.19*.

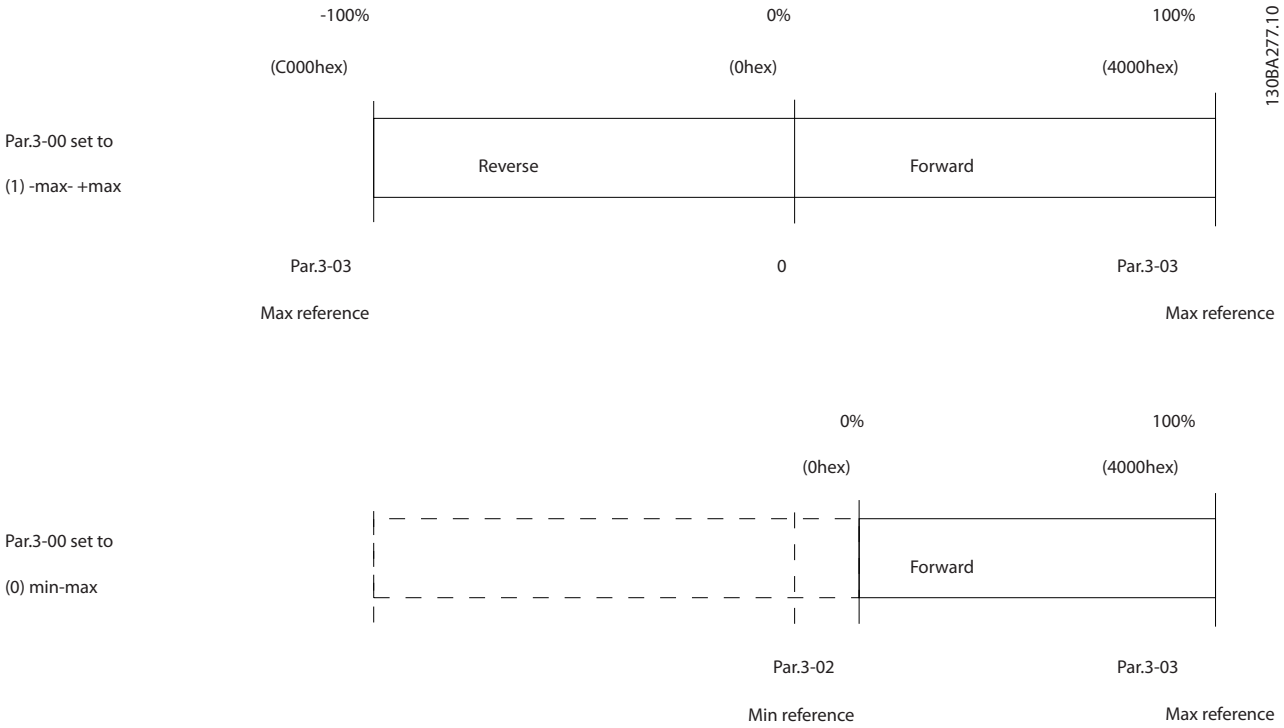

Illustration 14.19 Reference and MAV

14

 Danfoss A/S © 11/2017 All rights reserved.

14.11.4 Control Word According to PROFIdrive Profile (CTW)

The control word is used to send commands from a master to a slave.

Bit	Bit=0	Bit=1
00	OFF 1	ON 1
01	OFF 2	ON 2
02	OFF 3	ON 3
03	Coasting	No coasting
04	Quick stop	Ramp
05	Hold frequency output	Use ramp
06	Ramp stop	Start
07	No function	Reset
08	Jog 1 OFF	Jog 1 ON
09	Jog 2 OFF	Jog 2 ON
10	Data invalid	Data valid
11	No function	Slow down
12	No function	Catch up
13	Parameter set-up	Selection lsb
14	Parameter set-up	Selection msb
15	No function	Reverse

Table 14.22 Bit Values for Control Word, PROFIdrive Profile

Explanation of the control bits

Bit 00, OFF 1/ON 1
Normal ramp stops using the ramp times of the actual selected ramp.
Bit 00=0 leads to the stop and activation of the output relay 1 or 2 if the output frequency is 0 Hz and if *[31] Relay 123* has been selected in *parameter 5-40 Function Relay*.
When bit 00=1, the drive is in State 1: Switching on inhibited.

Bit 01, OFF 2/ON 2
Coasting stop
When bit 01=0, a coasting stop and activation of the output relay 1 or 2 occurs if the output frequency is 0 Hz and if *[31] Relay 123* has been selected in *parameter 5-40 Function Relay*.
When bit 01=1, the drive is in State 1: on inhibited. Refer to *Table 14.23*, at the end of this section.

Bit 02, OFF 3/ON 3
Quick stop using the ramp time of *parameter 3-81 Quick Stop Ramp Time*.
When bit 02=0, a quick stop and activation of the output relay 1 or 2 occurs if the output frequency is 0 Hz and if *[31] Relay 123* has been selected in *parameter 5-40 Function Relay*.
When bit 02=1, the drive is in State 1: Switching on inhibited.

Bit 03, Coasting/No coasting
Coasting stop bit 03=0 leads to a stop.
When bit 03=1, the drive can start if the other start conditions are satisfied.

NOTICE

The selection in *parameter 8-50 Coasting Select* determines how bit 03 is linked with the corresponding function of the digital inputs.

Bit 04, Quick stop/Ramp
Quick stop using the ramp time of *parameter 3-81 Quick Stop Ramp Time*.
When bit 04=0, a quick stop occurs.
When bit 04=1, the drive can start if the other start conditions are satisfied.

NOTICE

The selection in *parameter 8-51 Quick Stop Select* determines how bit 04 is linked with the corresponding function of the digital inputs.

Bit 05, Hold frequency output/Use ramp
When bit 05=0, the current output frequency is being maintained even if the reference value is modified.
When bit 05=1, the drive can perform its regulating function again; operation occurs according to the respective reference value.

Bit 06, Ramp stop/Start
Normal ramp stop using the ramp times of the actual ramp as selected. In addition, activation of the output relay 01 or 04 if the output frequency is 0 Hz if *[31] Relay 123* has been selected in *parameter 5-40 Function Relay*.
Bit 06=0 leads to a stop.
When bit 06=1, the drive can start if the other start conditions are fulfilled.

NOTICE

The selection in *parameter 8-53 Start Select* determines how bit 06 is linked with the corresponding function of the digital inputs.

Bit 07, No function/Reset
Reset after switching off.
Acknowledges event in fault buffer.
When bit 07=0, no reset occurs.
When there is a slope change of bit 07 to 1, a reset occurs after switching off.

Bit 08, Jog 1 OFF/ON
Activates the pre-programmed speed in *parameter 8-90 Bus Jog 1 Speed*. JOG 1 is only possible if bit 04=0 and bit 00–03=1.

Bit 09, Jog 2 OFF/ON
Activates the pre-programmed speed in *parameter 8-91 Bus Jog 2 Speed*. JOG 2 is only possible if bit 04=0 and bit 00–03=1.

Danfoss A/S © 11/2017 All rights reserved.

Bit 10, Data invalid/valid
Tells the drive whether the control word should be used or ignored.
Bit 10=0 causes the control word to be ignored.
Bit 10=1 causes the control word to be used. This function is relevant because the control word is always contained in the telegram, regardless of which type of telegram is used. For example, it is possible to turn off the control word if it is not intended to be used with updating or reading parameters.

Bit 11, No function/slow down
Reduces the speed reference value by the amount given in *parameter 3-12 Catch up/slow Down Value* value.
When bit 11=0, no modification of the reference value occurs. When bit 11=1, the reference value is reduced.

Bit 12, No function/catch up
Increases the speed reference value by the amount given in *parameter 3-12 Catch up/slow Down Value*.
When bit 12=0, no modification of the reference value occurs.
When bit 12=1, the reference value is increased.
If both slowing down and accelerating are activated (bits 11 and 12=1), slowing down has priority, for example the speed reference value is reduced.

Bits 13/14, Set-up selection
Selects between the 4 parameter set-ups according to *Table 14.23*.

The function is only possible if *[9] Multi Set-up* has been selected in *parameter 0-10 Active Set-up*. The selection in *parameter 8-55 Set-up Select* determines how bits 13 and 14 are linked with the corresponding function of the digital inputs. Changing set-up while running is only possible if the set-ups have been linked in *parameter 0-12 This Set-up Linked to*.

Set-up	Bit 13	Bit 14
1	0	0
2	1	0
3	0	1
4	1	1

Table 14.23 Bits 13/14 set up Options

Bit 15, No function/Reverse
Bit 15=0 causes no reversing.
Bit 15=1 causes reversing.
Note: In the factory setting, reversing is set to *[0] Digital input* in *parameter 8-54 Reversing Select*.

NOTICE

Bit 15 causes reversing only when the following is selected:

- **Serial communication**
- **Logic or**
- **Logic and**

14.11.5 Status Word According to PROFIdrive Profile (STW)

The status word notifies a master about the status of a slave.

Bit	Bit=0	Bit=1
00	Control not ready	Control ready
01	Drive not ready	Drive ready
02	Coasting	Enable
03	No error	Trip
04	OFF 2	ON 2
05	OFF 3	ON 3
06	Start possible	Start not possible
07	No warning	Warning
08	Speed≠reference	Speed=reference
09	Local operation	Bus control
10	Out of frequency limit	Frequency limit ok
11	No operation	In operation
12	Drive OK	Stopped, auto start
13	Voltage OK	Voltage exceeded
14	Torque OK	Torque exceeded
15	Timer OK	Timer exceeded

Table 14.24 Bit Values for Status Word, PROFIdrive Profile

Explanation of the status bits

Bit 00, Control not ready/ready
When bit 00=0, bit 00, 01 or 02 of the control word is 0 (OFF 1, OFF 2 or OFF 3) - or the drive is switched off (trip).
When bit 00=1, the drive control is ready, but there is not necessarily supply to the unit present (in the event of 24 V external supply to the control system).

Bit 01, VLT not ready/ready
Same significance as bit 00, however, there is a supply of the power unit. The drive is ready when it receives the necessary start signals.

Bit 02, Coasting/enable
When bit 02=0, bit 00, 01, or 02 of the control word is 0 (OFF 1, OFF 2 or OFF 3 or coasting) - or the drive is switched off (trip).
When bit 02=1, bit 00, 01, or 02 of the control word is 1; the drive has not tripped.

Bit 03, No error/trip
When bit 03=0, no error condition of the drive exists.
When bit 03=1, the drive has tripped and requires a reset signal before it can start.

Bit 04, ON 2/OFF 2
When bit 01 of the control word is 0, then bit 04=0.
When bit 01 of the control word is 1, then bit 04=1.

Bit 05, ON 3/OFF 3
When bit 02 of the control word is 0, then bit 05=0.
When bit 02 of the control word is 1, then bit 05=1.

 Danfoss A/S © 11/2017 All rights reserved.

Bit 06, Start possible/start not possible
If *[1] PROFIdrive profile* is selected in *parameter 8-10 Control Word Profile*, bit 06 is 1 after a switch-off acknowledgement, after activation of OFF2 or OFF3, and after switching on the mains voltage. Start not possible is reset with bit 00 of the control word being set to 0 and bit 01, 02, and 10 being set to 1.

Bit 07, No warning/Warning
Bit 07=0 means that there are no warnings.
Bit 07=1 means that a warning has occurred.

Bit 08, Speed ≠ reference/speed=reference
When bit 08=0, the current speed of the motor deviates from the set speed reference value. This scenario can occur, for example, when the speed is being changed during start/stop through ramp up/down.
When bit 08=1, the current speed of the motor corresponds to the set speed reference value.

Bit 09, Local operation/bus control
Bit 09=0 indicates that the drive is stopped with the [Stop] key on the LCP, or that option [2] *Linked to Hand/Auto* or [0] *Local* is selected in *parameter 3-13 Reference Site*.
When bit 09=1, the drive can be controlled through the serial interface.

Bit 10, Out of frequency limit/frequency limit OK
When bit 10=0, the output frequency is outside the limits set in *parameter 4-52 Warning Speed Low* and *parameter 4-53 Warning Speed High*.
When bit 10=1, the output frequency is within the indicated limits.

Bit 11, No operation/operation
When bit 11=0, the motor does not turn.
When bit 11=1, the drive has a start signal, or the output frequency is higher than 0 Hz.

Bit 12, Drive OK/stopped, auto start
When bit 12=0, there is no temporary overloading of the inverter.
When bit 12=1, the inverter has stopped due to overloading. However, the drive has not switched off (trip) and will start again after the overloading has ended.

Bit 13, Voltage OK/voltage exceeded
When bit 13=0, the voltage limits of the drive are not exceeded.
When bit 13=1, the direct voltage in the intermediate circuit of the drive is too low or too high.

Bit 14, Torque OK/torque exceeded
When bit 14=0, the motor torque is below the limit selected in *parameter 4-16 Torque Limit Motor Mode* and *parameter 4-17 Torque Limit Generator Mode*.
When bit 14=1, the limit selected in *parameter 4-16 Torque Limit Motor Mode* or *parameter 4-17 Torque Limit Generator Mode* is exceeded.

Bit 15, Timer OK/timer exceeded
When bit 15=0, the timers for the motor thermal protection and thermal drive protection have not exceeded 100%.
When bit 15=1, 1 of the timers has exceeded 100%.

Danfoss A/S © 11/2017 All rights reserved.

Index

A

Abbreviations 218
AC brake 26
Acoustic noise 181
Active reference 192
Airflow
- Back-channel 56, 57
- Enclosure 56, 57
- External ducting 153
- Required 152

Alarm reset 204
Altitude 154
Ambient conditions
- Overview 150
- Specifications 51

Analog
- Input specifications 52
- Input/output descriptions and default settings 166
- Output specifications 53
- Wiring configuration for speed reference 202

ATEX monitoring 23, 151
Auto on 192
Automatic energy optimization (AEO) 21
Automatic motor adaptation (AMA)
- Overview 22
- Wiring configuration 201

Automatic switching frequency modulation 21

B

Back-channel cooling 152
Brake resistor
- Definition 218
- Design guide 5
- Formula for rated power 217
- Ordering 216
- Overview 35
- Safety 6, 178
- Selecting 177
- Terminals 161
- Wiring schematic 157

Braking
- Control with brake function 178
- Dynamic braking 26
- Electro-magnetic brake 27
- Electro-mechanical brake 208
- Limits 178
- Mechanical holding brake 27
- Static braking 27
- Use as an alternative brake function 179
- Wiring configuration for mechanical brake 206

Branch circuit protection 169
Break-away torque 218

C

Cable clamp 162
Cables
- Brake 161
- Control 162
- Equalizing 163
- Maximum number and size per phase 39, 45
- Motor cables 174
- Opening 58
- Power connections 158
- Routing 163
- Shielding 160, 186
- Specifications 39, 45, 52
- Type and ratings 156

Calculations
- Brake resistance 178
- Braking torque 178
- Harmonic software 191
- Resistor duty cycle 177
- Scaled reference 193
- Short-circuit ratio 190
- THDi 189

CANOpen 32
Capacitor storage 149
CE mark 8
Circuit breaker 169, 173, 180
Closed loop 196, 197, 201
Coasting 231
Commercial environment 184
Common-mode filter 36
Compliance
- Directives 8
- With ADN 6

Condensation 150
Conducted emission 183
Control
- Characteristics 54
- Description of operation 192
- Structures 196
- Types of 197

Control cables 162, 166
Control card
- Overtemperature trip point 39, 45
- RS485 specifications 53
- Specifications 54

Control terminals 164
Controller 35
Conventions 5
Cooling
- Dust warning 150
- Enclosure airflow rates 152
- Overview of back-channel cooling 152
- Requirements 152

CSA/cUL approval 9

 Danfoss A/S © 11/2017 All rights reserved.

Current
Distortion 189
Formula for current limit 217
Fundamental current 189
Harmonic current 189
Internal current control 200
Leakage current 179
Mitigating motor 177
Rated output current 217
Transient ground 180

D

DC brake 26, 230

DC bus
Description of operation 192
Terminals 160

Derating
Altitude 154
Automatic feature 21
External ducting 153
Low-speed operation 153
Overview and causes 153
Specifications 52, 152
Tables 155

DeviceNet 32, 213

Digital
Input specifications 52
Input/output descriptions and default settings 165
Output specifications 53

Dimensions
E1 enclosure 58
E2 enclosure 66
F1 enclosure 74
F10 enclosure 121
F11 enclosure 127
F12 enclosure 135
F13 enclosure 141
F2 enclosure 81
F3 enclosure 88
F4 enclosure 100
F8 enclosure 111
F9 enclosure 115
Table 13, 14

Discharge time 6

Door clearance 58

Drive
Clearance requirements 152
Configurator 209
Ordering 209
Overview 13, 14
Power ratings 13, 14

DU/dt 181

Duct cooling 152

Duty cycle
Calculation 177
Definition 218

E

E1 enclosure
Exterior dimensions 58
Gland plate 59
Terminal dimensions 60

E2 enclosure
Exterior dimensions 66
Gland plate 67
Terminal dimensions 67

EAC mark 9

Efficiency
Calculation 180
Formula for drive efficiency 217
Specifications 39, 45
Using AMA 22

Electrical installation 166

Electromagnetic interference 22

Electro-mechanical brake 208

Electronic thermal overload 23

Electronic thermal relay (ETR) 156

EMC
Compatibility 186
Directive 8
General aspects 182
Installation 188
Interference 187
RS485 installation precautions 220
Test results 183

Emission requirements 184

Enclosure protection 10

Encoder
Configuration 207
Definition 218
Determining encoder direction 207
VLT® Encoder Input MCB 102 33

Energy
Efficiency class 51

Environment 51, 150

ErP directive 8

EtherCAT 33

EtherNet/IP 32

Explosive atmosphere 150

Export control regulations 9

Extended relay card 35

Exterior dimensions (illustrations) 58

External alarm reset wiring configuration 204

F

F1 enclosure
Exterior dimensions 74
Gland plate 75
Terminal dimensions 76

 Danfoss A/S © 11/2017 All rights reserved.

F10 enclosure
Exterior dimensions 121
Gland plate 122
Terminal dimensions 123

F11 enclosure
Exterior dimensions 127
Gland plate 128
Terminal dimensions 129

F12 enclosure
Exterior dimensions 135
Gland plate 136
Terminal dimensions 137

F13 enclosure
Exterior dimensions 141
Gland plate 142
Terminal dimensions 143

F2 enclosure
Exterior dimensions 81
Gland plate 82
Terminal dimensions 83

F3 enclosure
Exterior dimensions 88
Gland plate 89
Terminal dimensions 90

F4 enclosure
Exterior dimensions 100
Gland plate 101
Terminal dimensions 102

F8 enclosure
Exterior dimensions 111
Gland plate 112
Terminal dimensions 113

F9 enclosure
Exterior dimensions 115
Gland plate 116
Terminal dimensions 117

Fans
External supply 161
Required airflow 152
Temperature-controlled fans 22

FC profile 230

Feedback
Conversion 196
Handling 195
Signal 197

Fieldbus 32, 163

Filters
Common-mode filter 36
DU/dt filter 36
Harmonic filter 36
Ordering 216
RFI filter 186
Sine-wave filter 36, 160

Flux
Control structure in flux sensorless 199
Control structure in flux with motor feedback 200

Flying start 24

Formula
Current limit 217
Drive efficiency 217
Output current 217
Rated power of the brake resistor 217

Fourier series analysis 189

Frequency bypass 25

Fuses
Compliance 169
Control transformer 172
Fan 171
For use with power connections 158
Mains 172
Mains contactor 174
Mains disconnect 173
Manual motor controller 171
NAMUR 172
Options 169
Overcurrent protection warning 156
Pilz relay 172
Power/semiconductor 169
Specifications for 380–500 V 39
Specifications for 525–690 V 45
Supplementary 171

G

Galvanic isolation 22, 53, 186

Gases 150

General purpose I/O module 33

Gland plate 58

Grounding 22, 162, 179

H

Hand on 192

Harmonics
Definition of power factor 218
EN standards 190
Filter 36
IEC standards 190
Mitigation 191
Overview 189

Heat sink
Cleaning 150
Overtemperature trip point 39, 45
Required airflow 152

Heater
Usage 150
Wiring schematic 157

High voltage warning 6

High-altitude installation 187

Hoisting 27, 28

Humidity 150

I

Immunity requirements 185

 Danfoss A/S © 11/2017 All rights reserved.

Input specifications.... 52

Installation
- Electrical.... 156
- Qualified personnel.... 6
- Requirements.... 151

Insulation.... 177

Inverter.... 192

IP rating.... 10

IT grid.... 180

K

Kinetic back-up.... 24

Kits
- Descriptions.... 216
- Enclosure availability.... 19
- Ordering numbers.... 216

L

Language packages.... 209

Leakage current.... 6, 179

Lifting.... 27, 149
- see also *Hoisting*

Load share
- Overview.... 30
- Short-circuit protection.... 20
- Terminals.... 31, 160
- Warning.... 6
- Wiring schematic.... 157

Low voltage
- Directive.... 8

Low-speed operation.... 153

M

Machinery directive.... 8

Mains
- Contactor.... 174
- Disconnect.... 173
- Drop-out.... 24
- Fluctuations.... 22
- Shield.... 6
- Specifications.... 51

Maintenance.... 150

Marine certification.... 9

Mechanical brake
- Using closed-loop control.... 28
- Using open-loop control.... 27
- Wiring configuration.... 206

Modbus
- Message structure.... 226
- Option.... 33
- RTU message function codes.... 229
- RTU overview.... 225

Modulation.... 21, 217

Motion control option.... 35

Motor
- Break-away torque.... 218
- Cables.... 160, 174, 179
- Class protection.... 150
- Ex-e.... 23, 34
- Feedback.... 200
- Full torque.... 25
- Insulation.... 177
- Leakage current.... 179
- Missing phase detection.... 21
- Mitigating bearing currents.... 177
- Nameplate.... 24
- Output specifications.... 51
- Parallel connection.... 175
- Rotation.... 175
- Thermal protection.... 23, 175
- Thermistor wiring configuration.... 205
- Wiring schematic.... 157

Mounting configurations.... 151

N

NAMUR terminals.... 168

NEMA protection rating.... 10

Network connection.... 219

O

Open loop.... 196

Operating guide.... 5

Options
- Enclosure availability.... 13, 14
- Fieldbus.... 32
- Functional extensions.... 33
- Fuses.... 169
- Motion control.... 35
- Ordering.... 36, 213, 214
- Relay cards.... 35

Ordering form type code.... 209

Output
- Contactor.... 180, 188
- Specifications.... 53
- Switch.... 21

Overcurrent protection.... 156

Overload
- Electronic thermal overload.... 23
- Issue with harmonics.... 189
- Limits.... 21

Overtemperature.... 218

Overvoltage
- Alternative brake function.... 179
- Braking.... 35
- Protection.... 20

P

PC connection.... 162

PELV.... 22, 53, 186

Danfoss A/S © 11/2017 All rights reserved.

Periodic forming 149
Personal computer 162
PID
Controller 23, 195, 198
Pigtails 186
PLC 163
Point of common coupling 189
Positioning controller 35
Potentiometer 165, 204
Power
Connections 158
Factor 218
Losses 39, 45
Ratings 12, 39, 45
POWERLINK 33
Preheat 25
Process control 197
PROFIBUS 32, 213
PROFINET 32
Programming guide 5
Protection
Brake function 20
Enclosure rating 13, 14
Motor thermal 23
Overcurrent 156
Overload 21
Overvoltage 20
Rating 10
Short circuit 20
Supply voltage imbalance 21
Protocol overview 220
PTC thermistor card 34
Pulse
Input specifications 53
Wiring configuration for start/stop 203

Q

Qualified personnel 6

R

Radiated emission 183
Radio frequency interference 22
RCM mark 9
Rectifier 192
Reference
Active reference 192
Remote handling of 193
Remote reference 193
Speed input 202
Regen
Availability 13, 14
Overview 31
Terminals 80, 87, 99, 110, 210
Relay
ADN-compliant installation 7
Card 35
Extended relay card option 35
Option 34
Specifications 54
Terminals 166
Remote reference 193
Residential environment 184
Residual current device 179, 180
Resistor brake 26
Resolver option 34
Resonance damping 22
Restart 25
RFI
Filter 186
Using switch with IT grid 180
Rise time 181
Rotor 21
RS485
Installation 219
Overview 219
Parameter values 230
Terminals 165
Wiring configuration 205
Wiring schematic 157

S

Safe PLC interface option 34
Safe Torque Off
Machinery directive compliance 8
Operating guide 5
Overview 26
Terminal location 165
Wiring configuration 202
Wiring schematic 157
Safety
Instructions 6, 156
Options 34
Scaled reference 193
Sensor input option 34
Serial communication 165
Shielded 166
Shielding
Cables 160, 162
Mains 6
Twisted ends 186

 Danfoss A/S © 11/2017 All rights reserved.

Short circuit
Braking 26, 178
Definition 218
Protection 20, 169
Ratio calculation 190
SCCR rating 170

Sine-wave filter 36, 160

Slip compensation 218

Smart logic control
Overview 25
Wiring configuration 206

Software versions 213

Spare parts 216

Speed
Control 197
PID feedback 197
Wiring configuration for speed reference 204
Wiring configuration for speed up/down 204

Start/stop wiring configuration 202, 203

STO 5
see also *Safe Torque Off*

Storage 149

Switch
A53 and A54 52, 165
Disconnect 37

Switching frequency
Derating 21
Power connections 160
Sine-wave filter 36, 160
Use with RCDs 180

Synchronizing controller 35

T

Telegram length (LGE) 221

Temperature 150

Terminals
Analog input/output 166
Brake resistor 161
Control descriptions and default settings 164
Digital input/output 165
Dimensions for E1 enclosure 60
Dimensions for E2 enclosure 67
Dimensions for F1 enclosure 76
Dimensions for F10 enclosure 123
Dimensions for F11 enclosure 129
Dimensions for F12 enclosure 137
Dimensions for F13 enclosure 143
Dimensions for F2 enclosure 83
Dimensions for F3 enclosure 90
Dimensions for F4 enclosure 102
Dimensions for F8 enclosure 113
Dimensions for F9 enclosure 117
Load share 160
NAMUR 168
Relay terminals 166
RS485 165
Serial communication 165
Terminal 37 165

Thermistor
Cable routing 163
Definition 218
Terminal location 165
Wiring configuration 205

Torque
Characteristic 51
Control 197
Wiring configuration for torque and stop limit 208

Transducer 165

Transformer
Connection 161
Effects of harmonics 189

Trip
Definition 218
Points for 380–500 V drives 39
Points for 525–690 V drives 45

TÜV certificate 9

Type code 209

U

UKrSEPRO certificate 9

UL
Enclosure protection rating 10
Listing mark 9

USB specifications 55

User input 192

V

Voltage imbalance 21

VVC+ 198, 200

Danfoss A/S © 11/2017 All rights reserved.

W

Warnings..... 6, 156

Wires..... 156
see also *Cables*

Wiring schematic
Drive..... 157
NAMUR terminals..... 168
Power connections..... 158
Typical application examples..... 201

 Danfoss A/S © 11/2017 All rights reserved.

Danfoss can accept no responsibility for possible errors in catalogues, brochures and other printed material. Danfoss reserves the right to alter its products without notice. This also applies to products already on order provided that such alterations can be made without subsequential changes being necessary in specifications already agreed. All trademarks in this material are property of the respective companies. Danfoss and the Danfoss logotype are trademarks of Danfoss A/S. All rights reserved.

Danfoss A/S
Ulsnaes 1
DK-6300 Graasten
vlt-drives.danfoss.com

130R0280 MG34S302 11/2017