ENGINEERING
TOMORROW

Parts Manual

Variable Displacement Pump
H1P 89 and 100cc

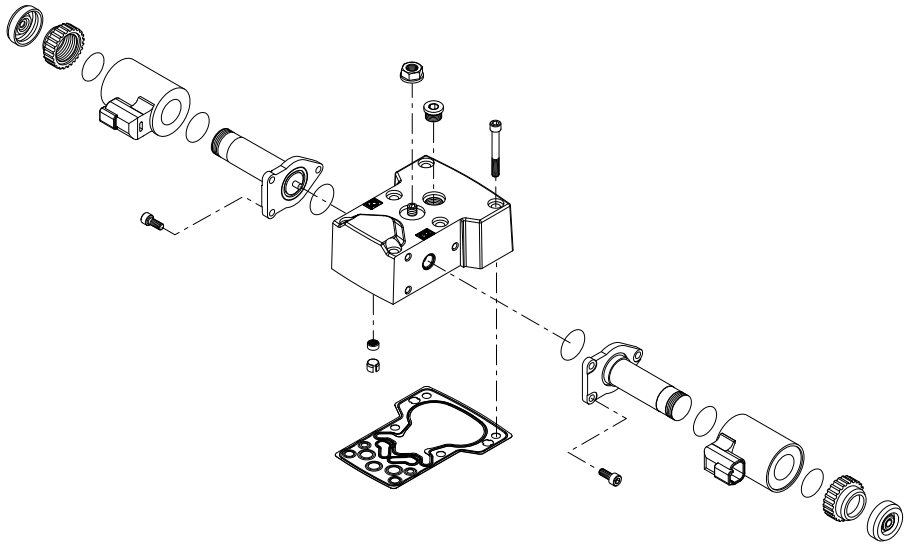

www.danfoss.com

Revision history

Table of revisions

Date	Changed	Rev
January 2024	Updated coil kit number on E8/G6, replaced 327007 with 9005110-4400, removed reference to 9004100-0260, Updated AC part numbers	1002
August 2023	Added new M6 Auxiliary mounting option, updated valve plate numbers, updated displacement limitation common parts number	1001
May 2023	Updated HPRV part numbers options	0902
March 2022	Updated H1 and H2 auxiliary mounting part numbers	0901
August 2021	Added new options; updated automotive controls part numbers	0801
February 2021	Added part numbers to overhaul seal kit	0702
December 2020	Moved pressure limiter screens and retainers from housing kits to pressure limiter kits	0701
May 2020	Changed document number from 'AX00000048' to 'AX152886483309' and corrected CCO part numbers	0607
January 2020	Updated control gasket part numbers	0505
June 2019	Updated part numbers; added new options	0504
February 2019	Added various new options	0503
November 2018	Updated to Engineering Tomorrow	0502

Contents

General information

Service parts identification 5
Nameplate 5
Date code 6
About service bulletins 6
Procedure to identify a part 7
Adobe Acrobat 2-page viewing 8
Order code 9

Special hardware

Special hardware H1, M1, P1 10
Special hardware M2, N2, P2 12
Special hardware P4, NN, PN 14

Control

Control A2, A3 16
Control A4, A5 18
Control A6 20
Control A7 22
Control A8 24
Control A9, B1 26
Control B5 28
Control B7 30
Control B8 32
Control B9 34
Control C1 36
Control C2 38
Control C3 40
Control C9, D1 42
Control E2 44
Control E5 46
Control E6, E7 48
Control E8 50
Control F1, F2 52
Control F4 54
Control H2, H3 56
Control H6, H7 58
Control H8, H9 60
Control M1, M2 62
Control M3, M4 64
Control M5, M6 66
Control N1, N2 68
Control N3, N4 70
Control N5, N6 72
Control N7, N8 74
Control ND, NN 76
Control P5 78
Control P6, P7 80
Control P8, P9 82
Control R1, R2 84
Control R3 86
Control R4 88
Control S2 90
Control S6 92
Control S7 94
Control T6, T7 96
Control T8, T9 98

Displacement limitation

Displacement limitation B-N 101

Contents

Orifice

Orifice C-D 103

End cap

End cap D3, D6 107
End cap D8 109
End cap F4, F5, F6 110
End cap G9, J2 111

Housing

Housing H-M 113

Shaft

Shaft A1-G9 115

Auxiliary mounting

Auxiliary mounting E9-S1 117
Aux mounting H6 121
H1P 89/100 aux mounting J3 123

High pressure setting

Port A 125
- High pressure setting F01-F08 (port A) 125
- High pressure setting K18-K48 (port A) 127
- High pressure setting L15-L48 (port A) 131

Port B 137
- High pressure setting F01-F08 (port B) 137
- High pressure setting K18-K48 (port B) 139
- High pressure setting L15-L48 (port B) 143

Charge pump and filtration

Charge pump D-N 149
Filtration C 151
Filtration E-P 153

Charge pressure relief

Charge pressure relief 18-34 155

Overhaul seal kit

H1P 89/100 seal kit 157

Service bulletin

SB-2006-030 158
SB-2008-038 159
SB-2007-052 160
SB-2012-009 162
SB-2012-014 163
SB-2013-003 164
SB-2013-019 166
SB-2015-035 167
SB-2016-033 169
SB-2017-018 170
SB-2018-005 171
SB-2018-025 173
SB-2020-03A 174
SB-2020-004 175
SB-2020-04A 177
SB-2020-029 178
SB-2021-014 179

General information

Service parts identification

The following information and procedure is used to identify the module group, item number, manufacture date, part number, and part name of the parts included in the H1P 89 and 100cc.

The parts listed include all parts which may be used when performing either “Minor Repairs”, “Major Repairs” or “Conversions” on the .

Nameplate

Each unit will have a nameplate affixed to the housing. The nameplate of the will include the following information:

Model code

The Danfoss model code completely defines the specific unit and must be used when ordering parts to service this product.

Model/material number

The Danfoss model number (also known as material number) is used by the factory in manufacturing. On repeat orders, a complete unit can be ordered by the model number.

Serial number

The Danfoss serial number is used to identify the manufacture date and the unit sequence in the build. The serial number is also used to identify the units warranty time period.

The letter code indicates the location of original manufacture (assembly).

The first number (2 digits) indicates the year of manufacture. The second number (2 digits) indicates the calendar week of manufacture.

The third number (5 digits) is a sequential number used to identify a specific unit.

General information

Date code

The date code is defined as the year and week of manufacture. The same item number may list more than one part number. This indicates that there is more than one configuration for that item number. You will see that there are different date codes for the different part numbers. Find the date code of your unit from the nameplate to determine which service part number you need to order.

Example: The service part desired is item G30

Order Code	Item	Date Begin	Date End	Part Number	Part Name	Qty. per Model/Kit
80	G30	89-17		8000243	End cap gasket	1
	G30		89-16	8000151	End cap gasket (SB-1995-006)	1

All units using this order code with a date code prior to 89-17 must use part number “8000151.” All units with a date code of 89-17 and newer must use part number “8000243.”

About service bulletins

A Service Bulletin Number (SB-_ _ _ _ - _ _ _) may follow the “Part Name” of the part you desire. You must read that Service Bulletin prior to ordering that part. The information contained in these Service Bulletins, as of the print date of this bulletin, are included at the end of this manual. Service Bulletins contain more detailed information such as interchangeability, what additional parts are involved, etc. It is suggested that you add additional Service Bulletins to this manual as you receive them.

General information

Procedure to identify a part

The modular design of this product results in a simplified service parts list and part number identification procedure.

The same item numbers are used for same part names on all units within a product type. A part number that has another number following it in parentheses is done to make this a world wide manual.

Regional part numbers

Some part numbers are region specific and should be ordered accordingly.

As an example, the part number (example: 314583 (9008000-0118) will be used. The first number is sold in Germany. The number in parentheses is sold in the United States. Customers would order 9008000-0118 if ordering the part in the United States.

Example of a part identification (H1P 89)

The nameplate on an H1 pump has an Order Code of H1P89R A A2 C2 N D8 H G9 H2 L 45 L 45 M P 24 PN NNN NNN. Use the following procedures to determine the part number of the drive shaft used on this pump.

1. Refer to the input shaft module in the *Order code* on page 9and find the shaft option for this pump. The shaft option is identified by the code"G9". (H1P89R A A2 C2 N D8 H **G9**H2 L 45 L 45 M P 24 PN NNN NNN)
2. Refer to the service parts list and find the shaft group and the shaft order code (G9).

The shaft is found to be item J100 and part number 11112180.

General information

Adobe Acrobat 2-page viewing

While viewing manual in Adobe Acrobat, the following settings need to be applied to ensure proper page display.

1. Select “View” → “Page Display” → “Two Page View”
2. Select “View” → “Page Display” → “Show Cover Page in Two Page View”

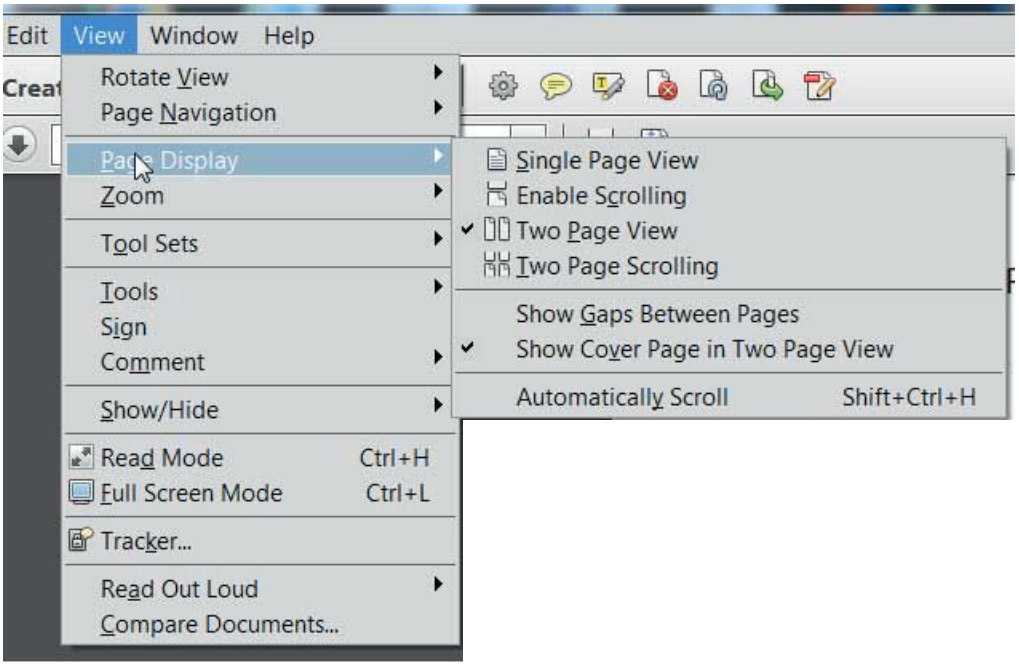

General information

Order code

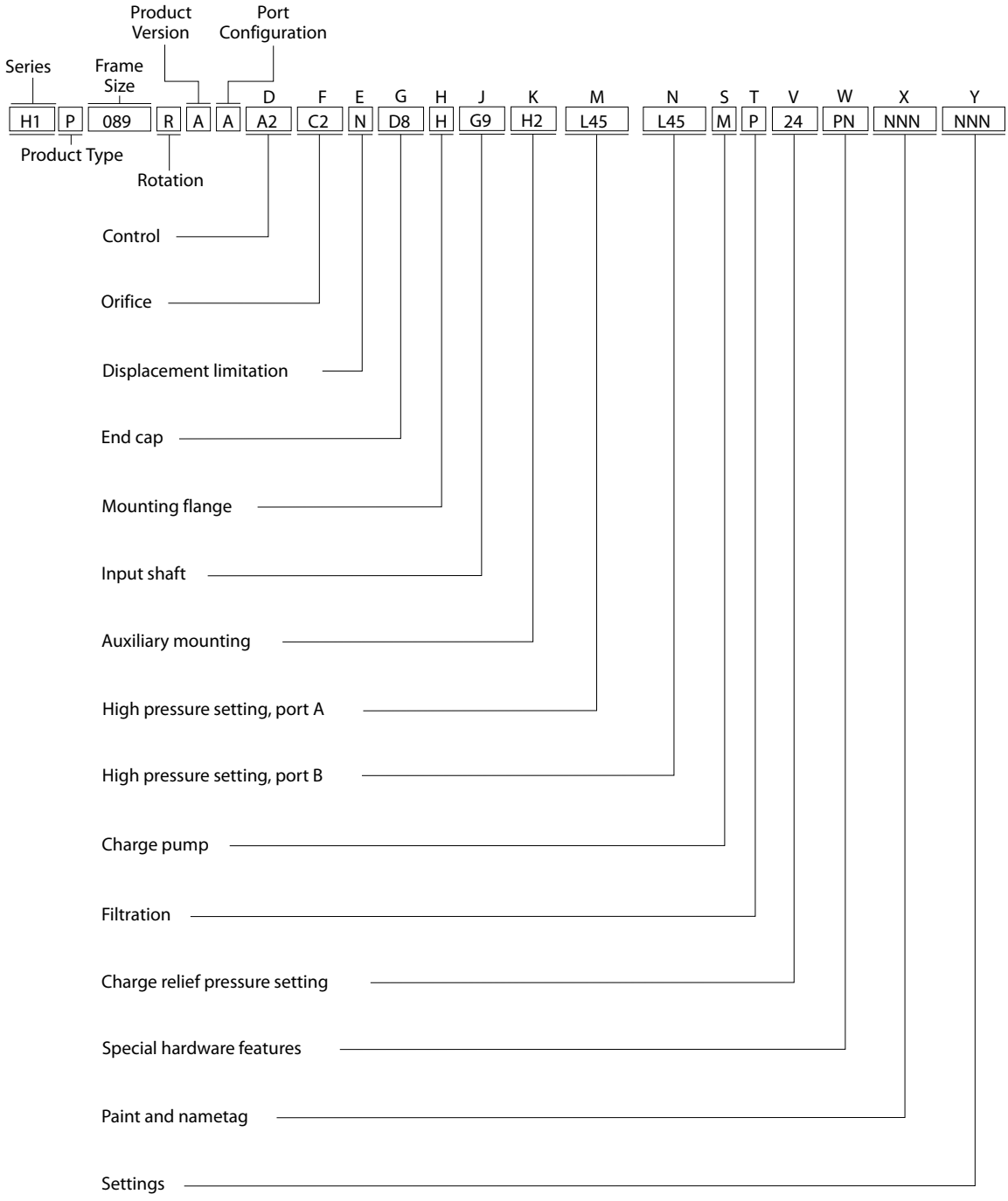

Special hardware

H1P 89/100 special hardware H1, M1, P1

Parts configuration

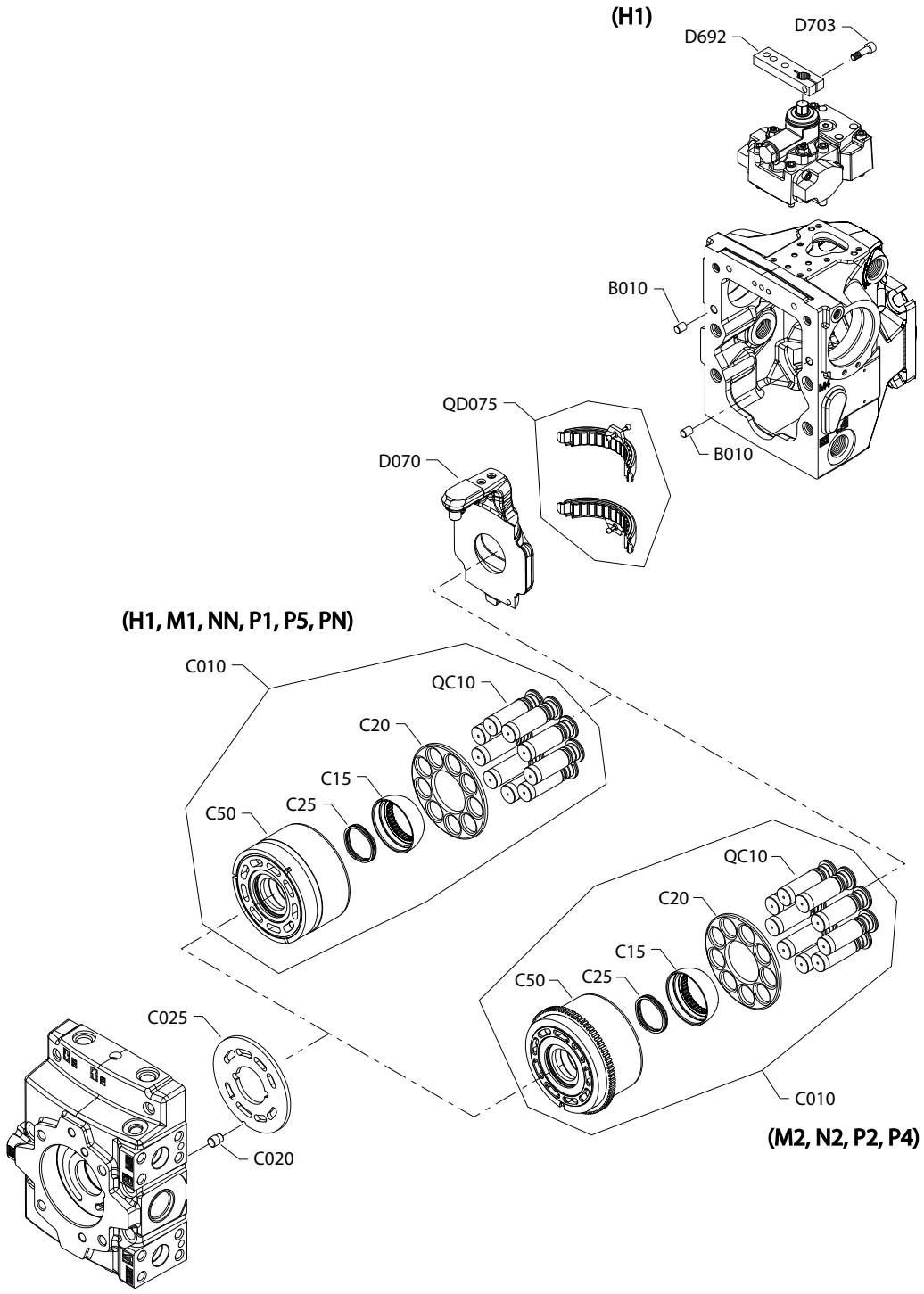

Generic control and housing used to show part location only. Option M5 was replaced with option PN (for pumps with EDC or FNR controls) and P1 (for pumps with NFPE controls).

Special hardware

Common parts

Item	Date Begin	Date End	Part Number	Part Name	Qty. per Model/Kit
B010	09-27		9004800-3708	Dowel pin	2
C020	09-27		141128	Valve plate pin, CCW	1
C020	09-27		141126	Valve plate pin, CW	1
C15	17-47		11148926	Slipper retainer ball guide (*SB-2018-005* on page 171)	1
C20	09-27		11008582	Slipper retainer	1
C25	09-27		11175203	Spring washer	1
D070	09-27		11250901	Swashplate	1
QC10	09-27		11039954	Slipper/piston kit, 89 cc	1
QC10	09-27		11039961	Slipper/piston kit, 100 cc	1
QD075	09-27		11039955	Swashplate bearing kit	1

Order code: H1

C010	17-47		11189991	Cylinder block kit, 89 cc (*SB-2018-005* on page 171)	1
C010	17-47		11190002	Cylinder block kit, 100 cc (*SB-2018-005* on page 171)	1
C025	13-28		11275134	Valve plate, CCW	1
C025	13-28		11273358	Valve plate, CW	1
C50	13-28		11124486	Cylinder block, 89 cc	1
C50	13-28		11124488	Cylinder block, 100 cc	1
D692	13-28		11185938	Control handle	1
D703	13-28		11173701	Screw, M6 x 20	1

Order code: M1 and P1

C010	17-47		11189991	Cylinder block kit, 89 cc (*SB-2018-005* on page 171)	1
C010	17-47		11190002	Cylinder block kit, 100 cc (*SB-2018-005* on page 171)	1
C025	09-51		11275135	Valve plate, CCW (*SB-2013-003* on page 164)	1
C025	09-51		11275132	Valve plate, CW (*SB-2013-003* on page 164)	1
C50	09-51		11124486	Cylinder block, 89 cc	1
C50	09-51		11124488	Cylinder block, 100 cc	1

Special hardware

H1P 89/100 special hardware M2, N2, P2

Parts configuration

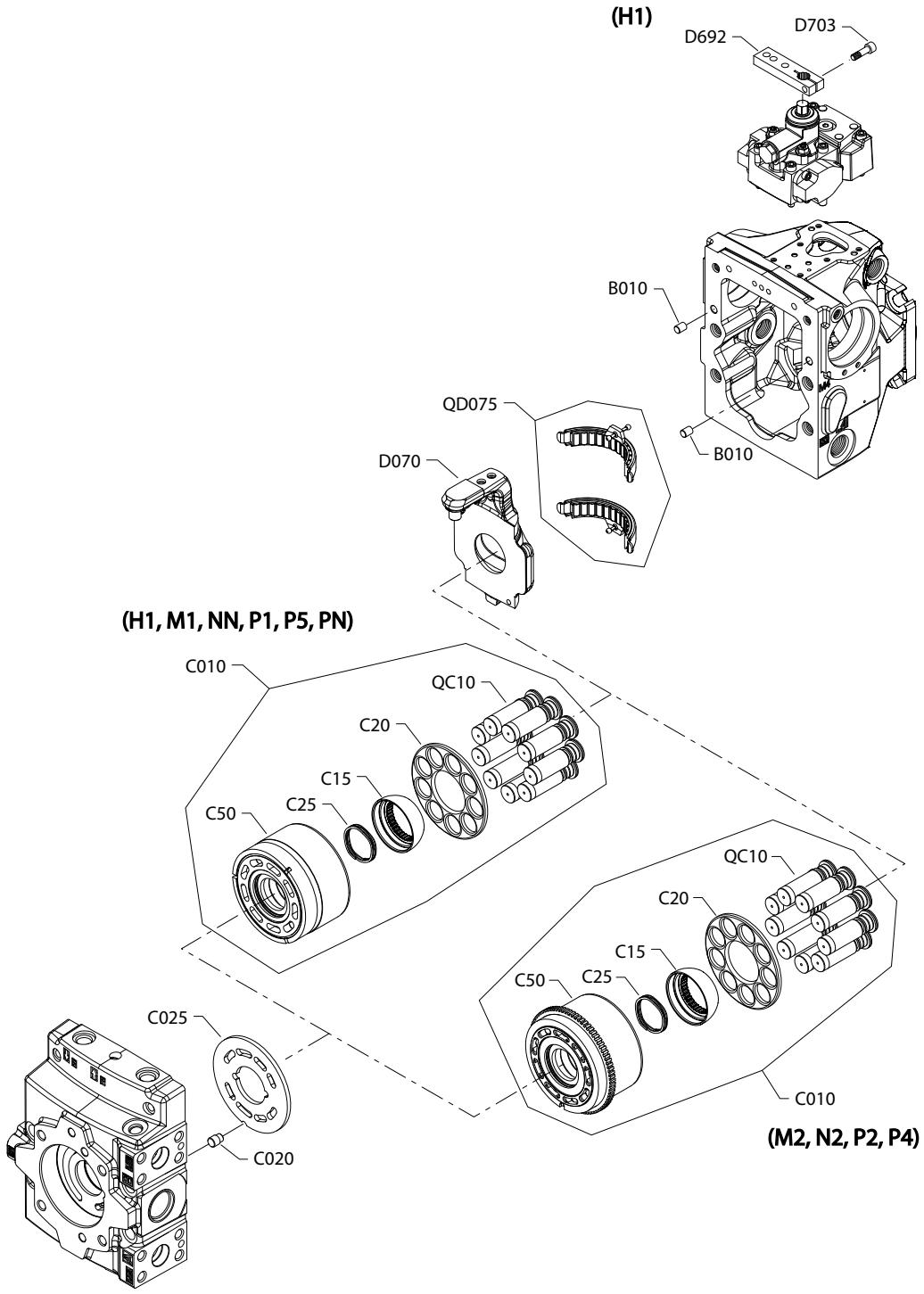

Generic control and housing used to show part location only. Option M5 was replaced with option PN (for pumps with EDC or FNR controls) and P1 (for pumps with NFPE controls).

Special hardware

Common parts

Item	Date Begin	Date End	Part Number	Part Name	Qty. per Model/Kit
B010	09-27		9004800-3708	Dowel pin	2
C020	09-27		141128	Valve plate pin, CCW	1
C020	09-27		141126	Valve plate pin, CW	1
C15	17-47		11148926	Slipper retainer ball guide (*SB-2018-005* on page 171)	1
C20	09-27		11008582	Slipper retainer	1
C25	09-27		11175203	Spring washer	1
D070	09-27		11250901	Swashplate	1
QC10	09-27		11039954	Slipper/piston kit, 89 cc	1
QC10	09-27		11039961	Slipper/piston kit, 100 cc	1
QD075	09-27		11039955	Swashplate bearing kit	1

Order code: M2, N2, P2

C010	17-47		11191003	Cylinder block kit with speed ring, 89 cc (*SB-2018-005* on page 171)	1
C010	17-47		11191004	Cylinder block kit with speed ring, 100 cc (*SB-2018-005* on page 171)	1
C025	09-51		11275135	Valve plate, CCW (*SB-2013-003* on page 164)	1
C025	09-51		11275132	Valve plate, CW (*SB-2013-003* on page 164)	1
C50	09-51		11124487	Cylinder block with speed ring, 89 cc	1
C50	09-51		11124489	Cylinder block with speed ring, 100 cc	1

Special hardware

H1P 89/100 special hardware P4, NN, PN

Parts configuration

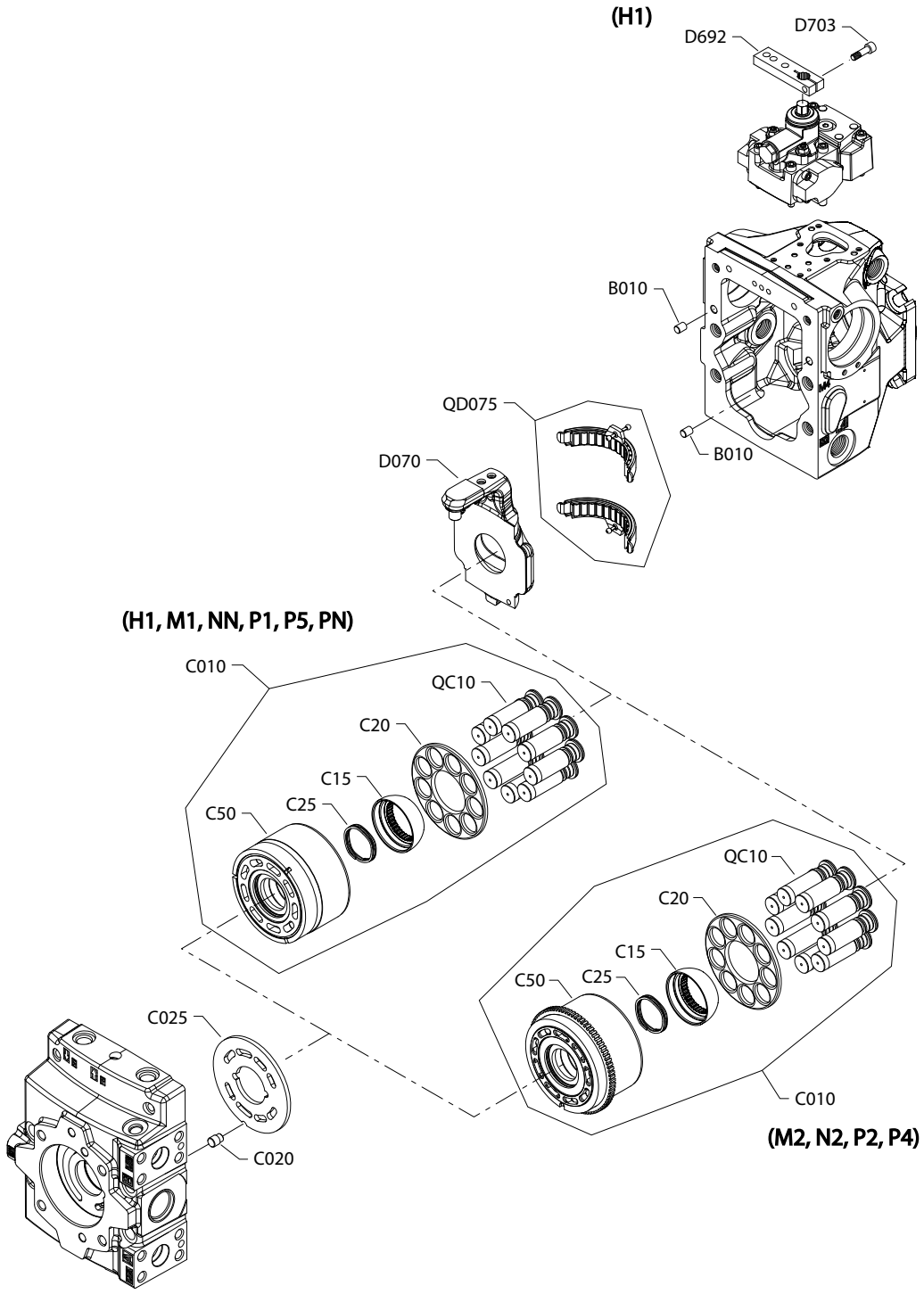

Generic control and housing used to show part location only. Option M5 was replaced with option PN (for pumps with EDC or FNR controls) and P1 (for pumps with NFPE controls).

Special hardware

Common parts

Item	Date Begin	Date End	Part Number	Part Name	Qty. per Model/Kit
B010	09-27		9004800-3708	Dowel pin	2
C020	09-27		141128	Valve plate pin, CCW	1
C020	09-27		141126	Valve plate pin, CW	1
C15	17-47		11148926	Slipper retainer ball guide (*SB-2018-005* on page 171)	1
C20	09-27		11008582	Slipper retainer	1
C25	09-27		11175203	Spring washer	1
D070	09-27		11250901	Swashplate	1
QC10	09-27		11039954	Slipper/piston kit, 89 cc	1
QC10	09-27		11039961	Slipper/piston kit, 100 cc	1
QD075	09-27		11039955	Swashplate bearing kit	1

Order code: P4

C010	17-47		11191003	Cylinder block kit with speed ring, 89 cc (*SB-2018-005* on page 171)	1
C010	17-47		11191004	Cylinder block kit with speed ring, 100 cc (*SB-2018-005* on page 171)	1
C025	09-51		11275134	Valve plate, CCW (*SB-2013-003* on page 164)	1
C025	09-51		11273358	Valve plate, CW (*SB-2013-003* on page 164)	1
C50	09-51		11124487	Cylinder block with speed ring, 89 cc	1
C50	09-51		11124489	Cylinder block with speed ring, 100 cc	1

Order code: NN, PN

C010	17-47		11189991	Cylinder block kit, 89 cc (*SB-2018-005* on page 171)	1
C010	17-47		11190002	Cylinder block kit, 100 cc (*SB-2018-005* on page 171)	1
C025	09-51		11275134	Valve plate, CCW (*SB-2013-003* on page 164)	1
C025	09-51		11273358	Valve plate, CW (*SB-2013-003* on page 164)	1
C50	09-51		11124486	Cylinder block, 89 cc	1
C50	09-51		11124488	Cylinder block, 100 cc	1

Control

H1P control A2, A3

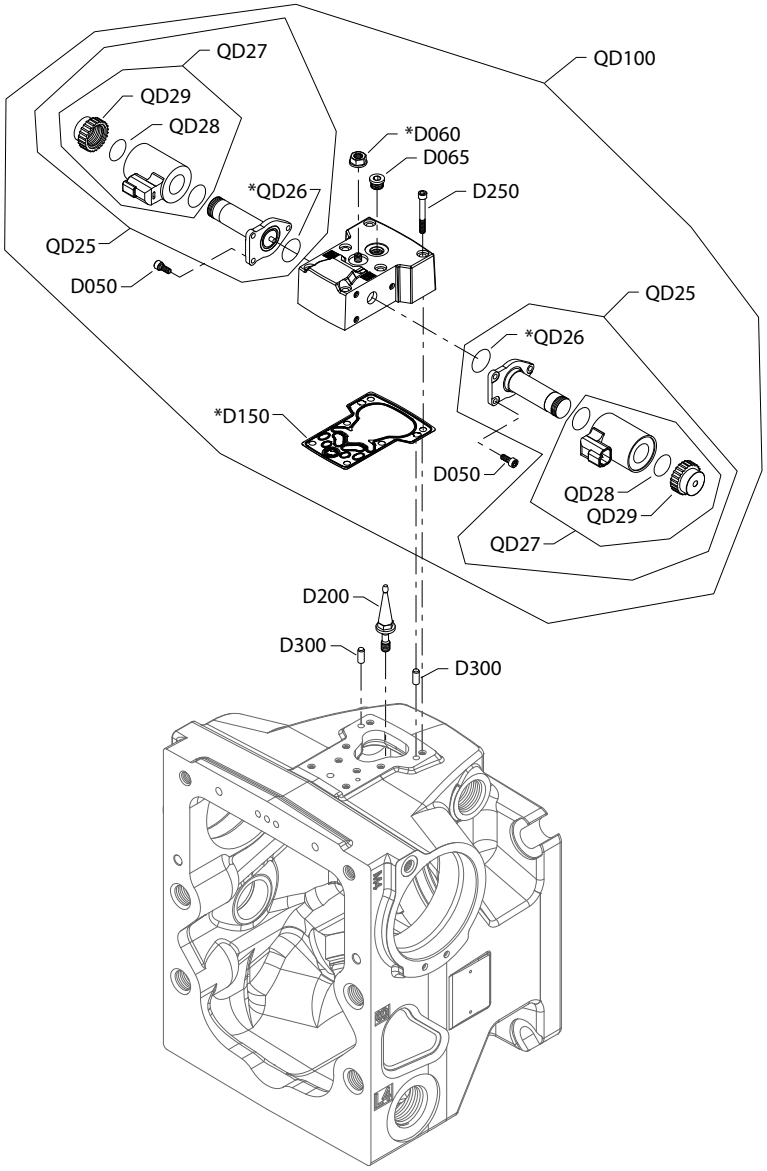

E100 912E

Generic housing shown.

Option A2 is available in SAE and metric configurations. Please order accordingly.

* Included in overhaul seal kit Q210

Control

Common parts

Item	Date Begin	Date End	Part Number	Part Name	Qty. per Model/Kit
D050	09-27		716860	Screw, M5 x 12	6
D060	09-27		612291 (9003508-0008)	Seal nut, M8	1
D065	09-27		9005110-4400	Plug assembly (SAE)	1
D150	09-27		11227209	Control gasket (*SB-2016-033* on page 169)	1
D200	09-27		11202172	Swash plate feedback link (*SB-2018-025* on page 173)	1
D250	09-27		505038	Screw, M6 x 45	6
D300	09-27		310979	Dowel pin	2
QD26	09-27		11001952	O-ring	2
QD28	09-27		063172	O-ring	2

Order code: A2

D065	16-09		5000572	Plug assembly, M12 (metric)	1
QD25	09-27		11012457	Proportional solenoid, 12v	2
QD27	09-27		11028018	Coil kit, 12v, DEUTSCH connector	2
QD29	09-27		11027046	Coil nut	2
QD100	09-27		11019680	EDC kit, 12v, DEUTSCH connector, fast	1
QD100	16-09		11173918	EDC kit, 12v DEUTSCH connector, fast (metric)	1

Order code: A3

QD25	09-27		11012459	Proportional solenoid, 24v	2
QD27	09-27		11028019	Coil kit, 24v, DEUTSCH connector	2
QD29	09-27		11028024	Coil nut	2
QD100	09-27		11019681	EDC kit, 24v, DEUTSCH connector, fast	1

Control

H1P control A4, A5

A4 and A5 configuration

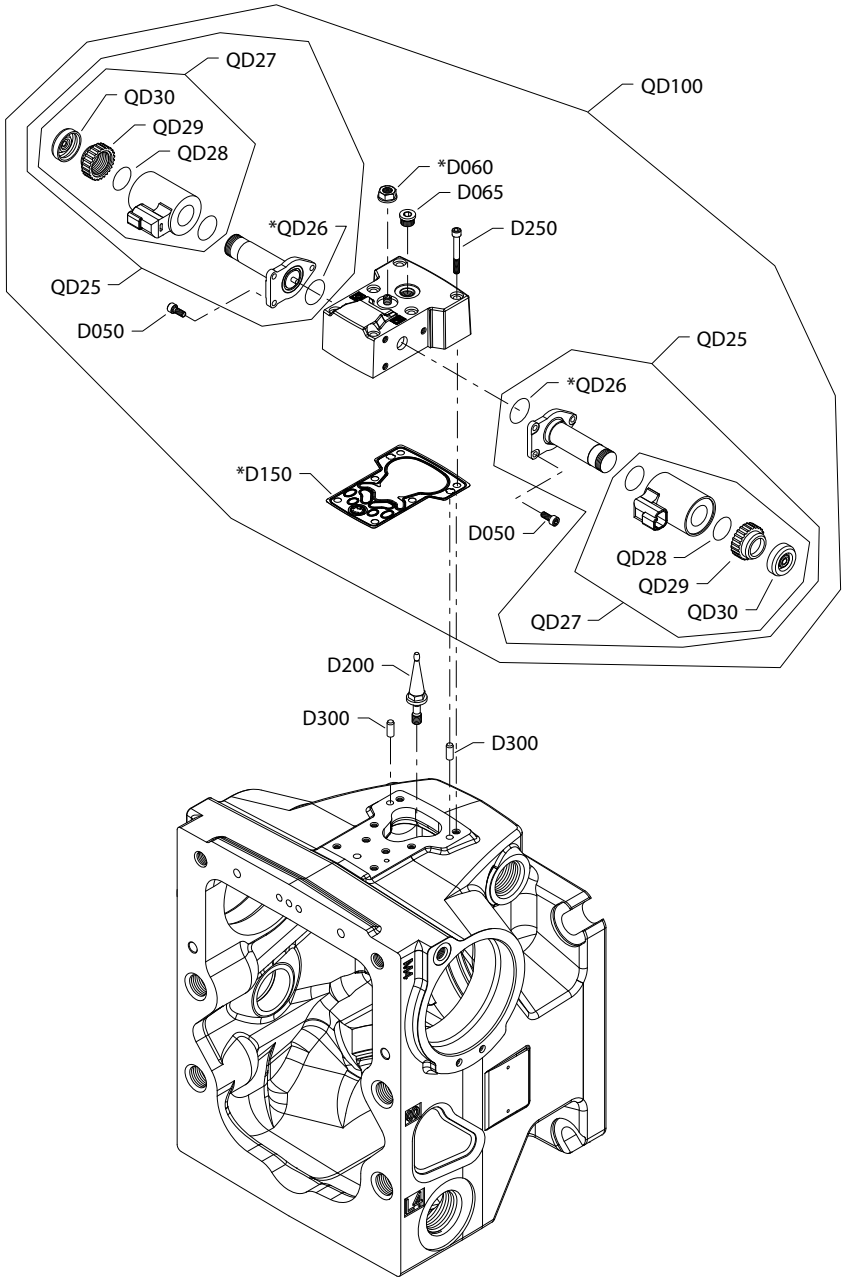

Generic housing shown.

* Included in overhaul seal kit Q210

Control

Common parts

Item	Date Begin	Date End	Part Number	Part Name	Qty. per Model/Kit
D050	09-27		716860	Screw, M5 x 12	6
D060	09-27		612291 (9003508-0008)	Seal nut, M8	1
D065	09-27		9005110-4400	Plug assembly	1
D150	09-27		11227209	Control gasket (*SB-2016-033* on page 169)	1
D200	09-27		11202172	Swash plate feedback link (*SB-2018-025* on page 173)	1
D250	09-27		505038	Screw, M6 x 45	6
D300	09-27		310979	Dowel pin	2
QD26	09-27		11001952	O-ring	2
QD28	09-27		063172	O-ring	2
QD30	09-27		11027883	Cap	2

Order code: A4

QD25	09-27		140750	Proportional solenoid, 12v	2
QD27	09-27		11004698	Coil kit, 12v, DEUTSCH connector	2
QD29	09-27		11004749	Coil nut	2
QD100	09-27		11019732	EDC kit, 12v, DEUTSCH connector, fast, manual override	1

Order code: A5

QD25	09-27		140751	Proportional solenoid, 24v	2
QD27	09-27		11004700	Coil kit, 24v, DEUTSCH connector	2
QD29	09-27		11004750	Coil nut	2
QD100	09-27		11019733	EDC kit, 24v, DEUTSCH connector, fast, manual override	1

Control

H1P control A6

Parts configuration

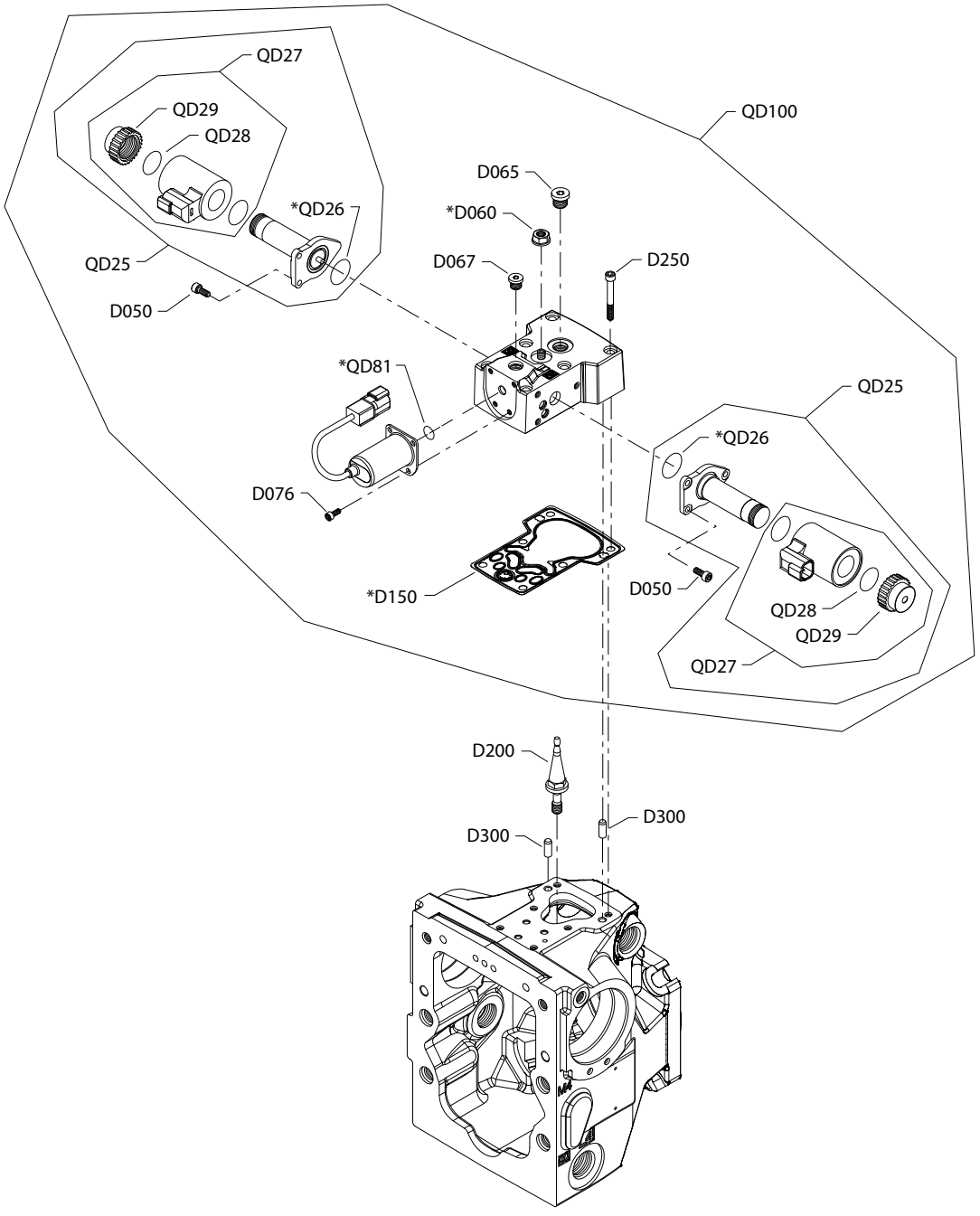

Generic housing shown.

* Included in overhaul seal kit Q210

Control

Order code: A6

Item	Date Begin	Date End	Part Number	Part Name	Qty. per Model/Kit
D050	09-27	12-52	716860	Screw, M5 x 12	6
D060	09-27	12-52	612291 (9003508-0008)	Seal nut, M8	1
D065	09-27	12-52	9005110-4400	Plug assembly	1
D067	09-27	12-52	11040532	Plug assembly	1
D076	09-27	12-52	346957	Screw, M4 x 8	4
D150	09-27	12-52	11227209	Control gasket (*SB-2016-033* on page 169)	1
D200	09-27	12-52	11202172	Swashplate feedback link (*SB-2018-025* on page 173)	1
D250	09-27	12-52	505038	Screw, M6 x 45	6
D300	09-27	12-52	310979	Dowel pin	2
QD25	09-27	12-52	11012457	Proportional solenoid, 12V	2
QD26	09-27	12-52	11001952	O-ring	2
QD27	09-27	12-52	11028018	Coil kit, 12V, DEUTSCH connector	2
QD28	09-27	12-52	063172	O-ring	2
QD29	09-27	12-52	11027046	Coil nut	2
QD081	09-27	12-52	11059551	O-ring	1
QD100	09-27	12-52	11152574	EDC kit, 12V, high gain spool, control override (*SB-2015-035* on page 167)	1

Control

H1P control A7

Parts configuration

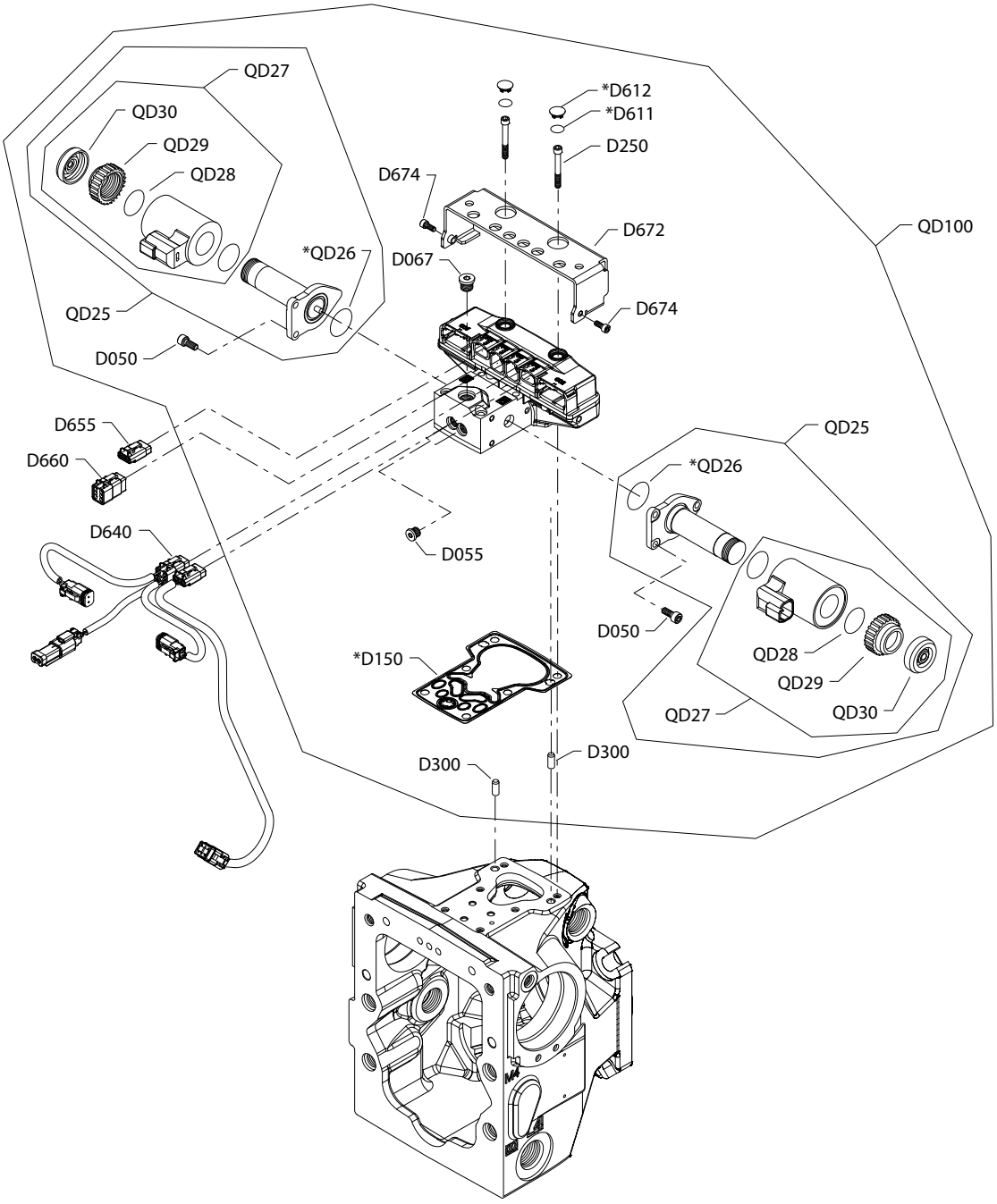

Generic housing shown

* Included in overhaul seal kit

Control

Order code: A7

Item	Date Begin	Date End	Part Number	Part Name	Qty. per Model/Kit
D050	10-14		716860	Screw, M5 x 12	6
D055	10-14		11040532	Plug assembly	2
D067	10-14		9005110-4400	Plug assembly	1
D150	10-14		11227209	Control gasket (*SB-2016-033* on page 169)	1
D250	10-14		505038	Screw, M6 x 45	6
D300	10-14		11036469	Dowel pin	2
D612	10-14	21-12	11003126	Plug (*SB-2021-014* on page 179)	2
D612	21-13		11223708	Plug	2
D611	10-14	21-12	11066774	O-ring (*SB-2021-014* on page 179)	2
D611	21-13		11225703	O-ring	2
D640	10-14		11023348	AC wiring harness	1
D655	10-14		11084827	Connector DTM 06-3S	1
D660	10-14		11084822	Connector DTM 06-6S	1
D672	10-14		11151875	Protection	1
D674	10-14		716860	Screw, M5 x 12	2
QD25	10-14		140750	Proportional solenoid, 12 volt	2
QD26	10-14		11001952	O-ring	2
QD27	10-14		11004698	Coil kit, 12v, DEUTSCH connector	2
QD28	10-14		063172	O-ring	2
QD29	10-14		11004749	Coil nut	2
QD30	10-14		11027883	Cap	2
QD100	10-14		11232544	Automotive control kit, 12v, manual override	1

Control

H1P control A8

Parts configuration

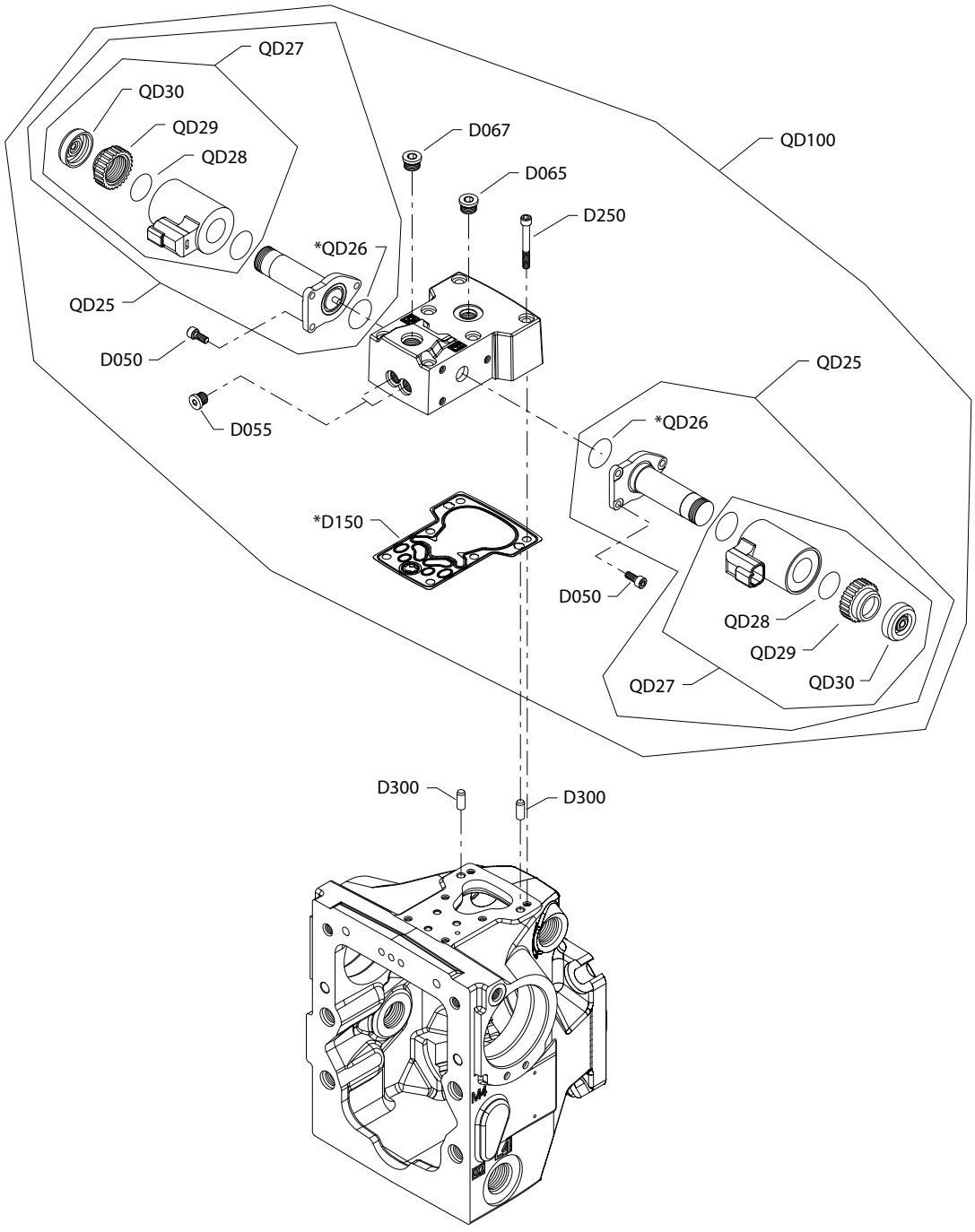

Generic housing shown.

* Included in overhaul seal kit Q210

Control

Order code: A8

Item	Date Begin	Date End	Part Number	Part Name	Qty. per Model/Kit
D050	09-27		716860	Screw, M5 x 12	6
D055	09-27		11040532	Plug assembly	2
D065	09-27		9005110-4400	Plug assembly	1
D067	09-27		9005110-4400	Plug assembly	1
D150	09-27		11227209	Control gasket (*SB-2016-033* on page 169)	1
D250	09-27		505038	Screw, M6 x 45	6
D300	09-27		310979	Dowel pin	2
QD25	09-27		140750	Proportional solenoid, 12v, DEUTSCH connector	2
QD26	09-27		11001952	O-ring	2
QD27	09-27		11004698	Coil kit, 12v, DEUTSCH connector	2
QD28	09-27		063172	O-ring	2
QD29	09-27		11004749	Coil nut	2
QD30	09-27		11027883	Cap	2
QD100	09-27		11015803	NFPE control kit, 12V, manual override, DEUTSCH connector	1

Control

H1P control A9, B1

Parts configuration

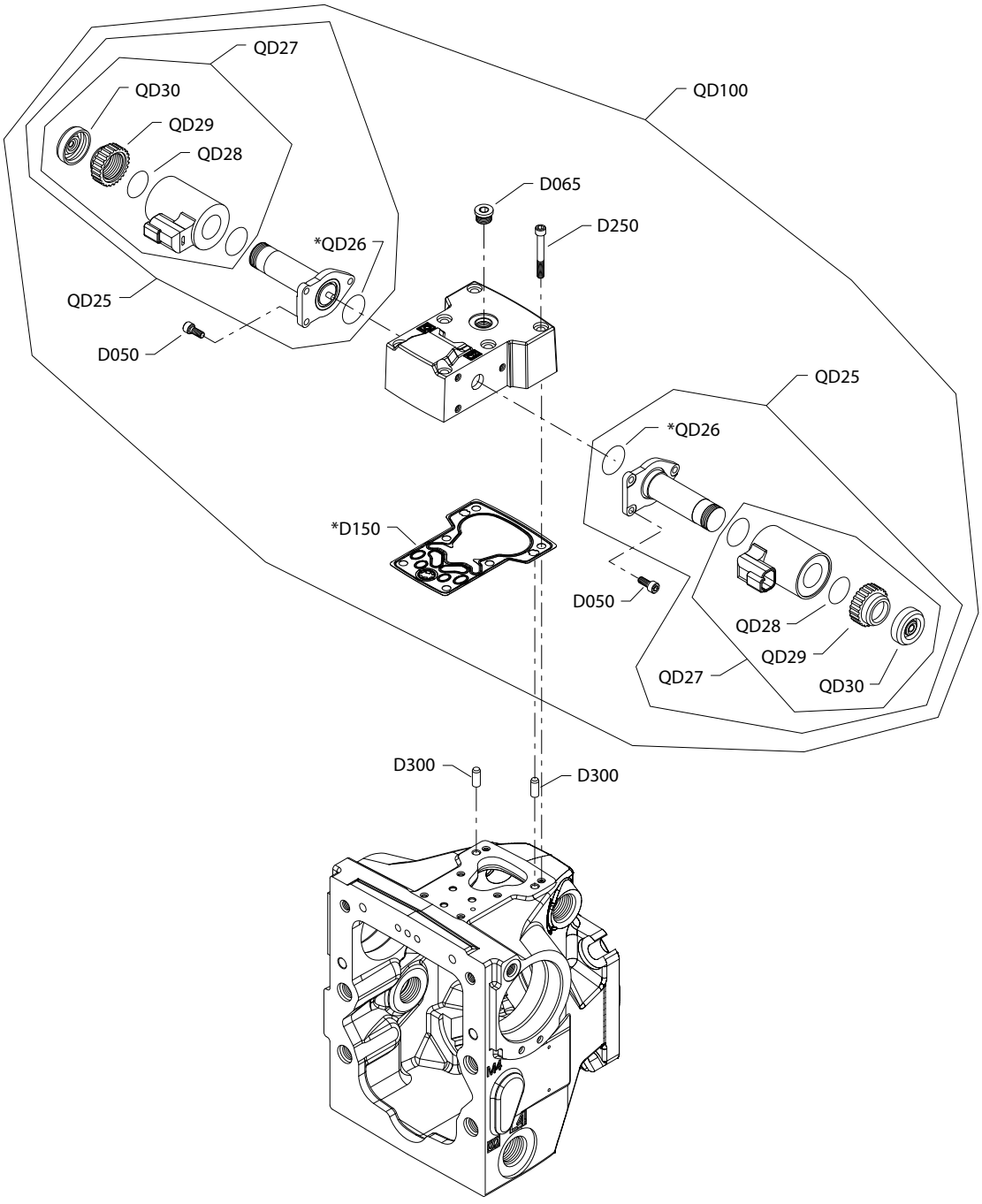

Generic housing shown

* Included in overhaul seal kit Q210

Control

Common parts

Item	Date Begin	Date End	Part Number	Part Name	Qty. per Model/Kit
D050	09-27		716860	Screw, M5 x 12	6
D065	09-27		9005110-4400	Plug assembly	1
D150	09-27		11227209	Control gasket	1
D250	09-27		505038	Screw, M6 x 45	6
D300	09-27		310979	Dowel pin	2
QD26	09-27		11001952	O-ring	2
QD28	09-27		063172	O-ring	2
QD30	09-27		11027883	Cap	2

Order code: A9

QD25	09-27		141301	Proportional solenoid, 12v, DEUTSCH connector	2
QD27	09-27		11005222	Coil kit, 12v, DEUTSCH connector	2
QD29	09-27		11004749	Coil nut	2
QD100	09-27		11025905	FNR control kit, 12v, manual override, DEUTSCH connector	1

Order code: B1

QD25	09-27		141313	Proportional solenoid, 24v, DEUTSCH connector	2
QD27	09-27		11005223	Coil kit, 24v, DEUTSCH connector	2
QD29	09-27		11004750	Coil nut	2
QD100	09-27		11025906	FNR control kit, 24v, manual override, DEUTSCH connector	1

Control

H1P control B5

Parts configuration

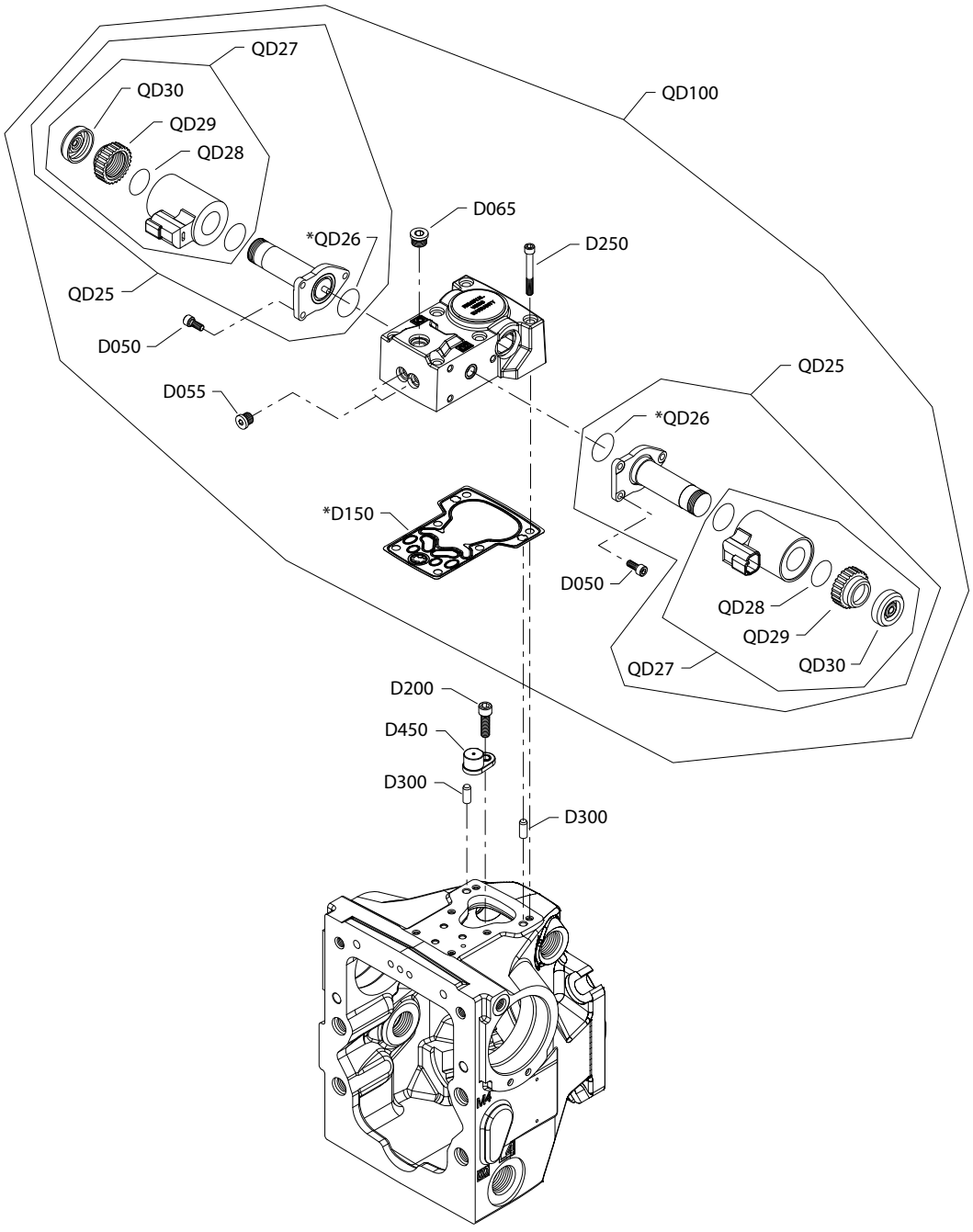

Generic housing shown

* Included in overhaul seal kit Q210

Control

Order code: B5

Item	Date Begin	Date End	Part Number	Part Name	Qty. per Model/Kit
D050	10-14		716860	Screw	6
D055	10-14		11040532	Plug assembly	2
D067	10-14		9005110-4400	Plug assembly	1
D150	10-14		11227209	Control gasket (*SB-2016-033* on page 169)	1
D200	10-14		141472	Screw	1
D250	10-14		505038	Screw	6
D300	10-14		310979	Dowel pin	2
D450	10-14		11003097	Magnet carrier	1
QD25	10-14		140750	Proportional solenoid, 12 volt	2
QD26	10-14		11001952	O-ring	2
QD27	10-14		11004698	Coil kit, 12V, DEUTSCH connector	2
QD28	10-14		063172	O-ring	2
QD29	10-14		11004749	Coil nut	2
QD30	10-14		11027883	Cap	2
QD100	10-14		11050138	NFPE control kit, 12V, manual override	1

Control

H1P control B7

Parts configuration

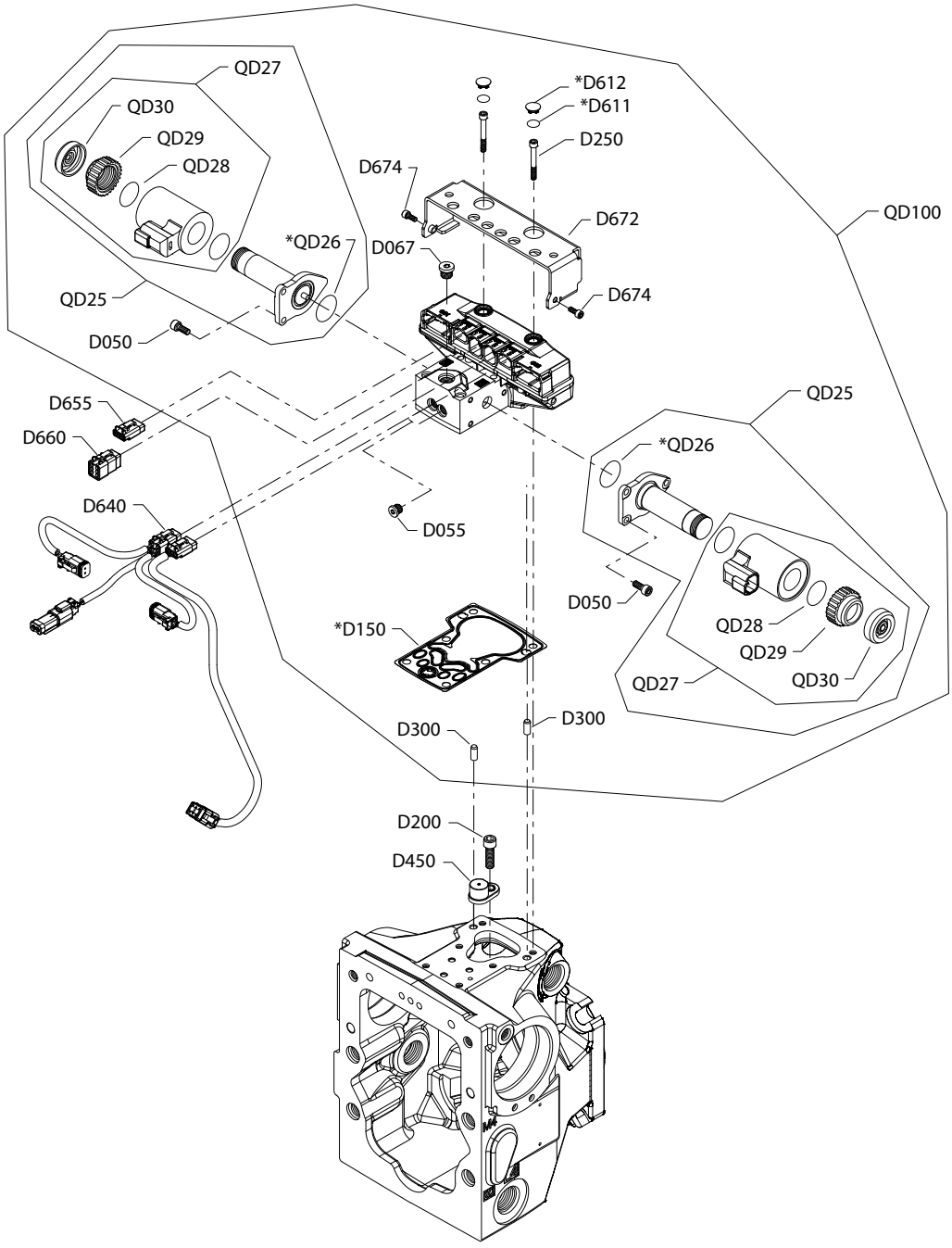

Generic housing shown.

* Included in overhaul seal kit Q210

Control

Order code: B7

Item	Date Begin	Date End	Part Number	Part Name	Qty. per Model/Kit
D050	10-14		716860	Screw, M5 x 12	6
D055	10-14		11040532	Plug assembly	2
D067	10-14		9005110-4400	Plug assembly	1
D150	10-14		11227209	Control gasket (*SB-2016-033* on page 169)	1
D200	10-14		141472	Screw, special	1
D250	10-14		505038	Screw, M6 x 45	6
D300	10-14		11036469	Dowel pin	2
D450	10-14		11003097	Magnet carrier	1
D611	10-14	21-12	11066774	O-ring (*SB-2021-014* on page 179)	2
D611	21-13		11225703	O-ring	2
D612	10-14	21-12	11003126	Plug (*SB-2021-014* on page 179)	2
D612	21-13		11223708	Plug	2
D640	10-14		11023348	AC wiring harness	1
D655	10-14		11084827	Connector DTM 06-3S	1
D660	10-14		11084822	Connector DTM 06-6S	1
D672	10-14		11151875	Protection	1
D674	10-14		716860	Screw, M5 x 12	2
QD25	10-14		140750	Proportional solenoid, 12 volt	2
QD26	10-14		11001952	O-ring	2
QD27	10-14		11004698	Coil kit, 12v, DEUTSCH connector	2
QD28	10-14		063172	O-ring	2
QD29	10-14		11004749	Coil nut	2
QD30	10-14		11027883	Cap	2
QD100	10-14		11232766	Automotive control kit, 12v, manual override	1

Control

H1P control B8

Parts configuration

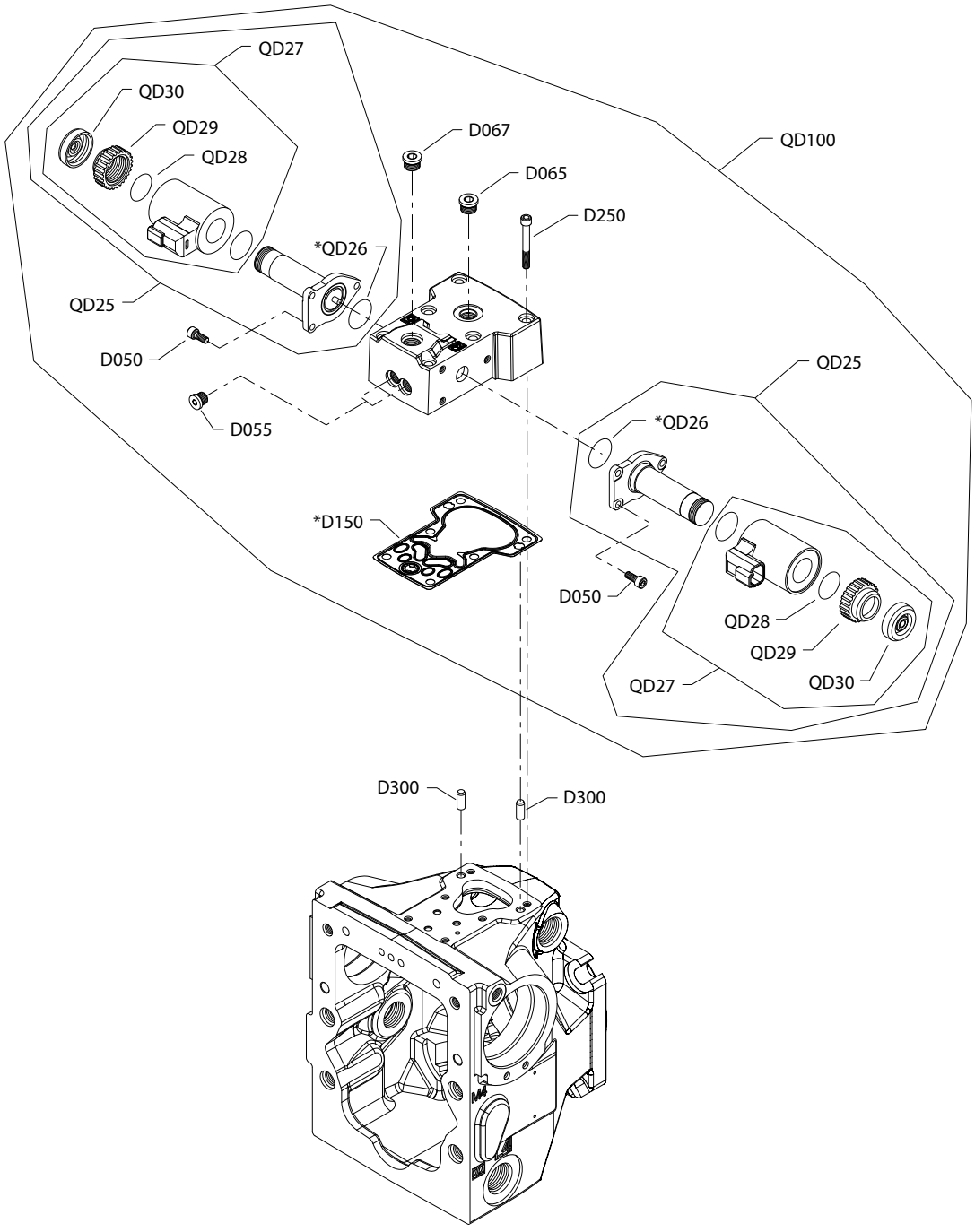

Generic housing shown.

* Included in overhaul seal kit Q210

Control

Order code: B8

Item	Date Begin	Date End	Part Number	Part Name	Qty. per Model/Kit
D050	09-27		716860	Screw, M5 x 12	6
D055	09-27		11040532	Plug assembly	2
D065	09-27		9005110-4400	Plug assembly	1
D067	09-27		9005110-4400	Plug assembly	1
D150	09-27		11227209	Control gasket (*SB-2016-033* on page 169)	1
D250	09-27		505038	Screw, M6 x 45	6
D300	09-27		310979	Dowel pin	2
QD25	09-27		140751	Proportional solenoid, 24v, DEUTSCH connector	2
QD26	09-27		11001952	O-ring	2
QD27	09-27		11004700	Coil kit, 24v, DEUTSCH connector	2
QD28	09-27		063172	O-ring	2
QD29	09-27		11004750	Coil nut	2
QD30	09-27		11027883	Cap	2
QD100	09-27		11025904	NFPE control kit, 24v, manual override, DEUTSCH connector	1

Control

H1P control B9

Parts configuration

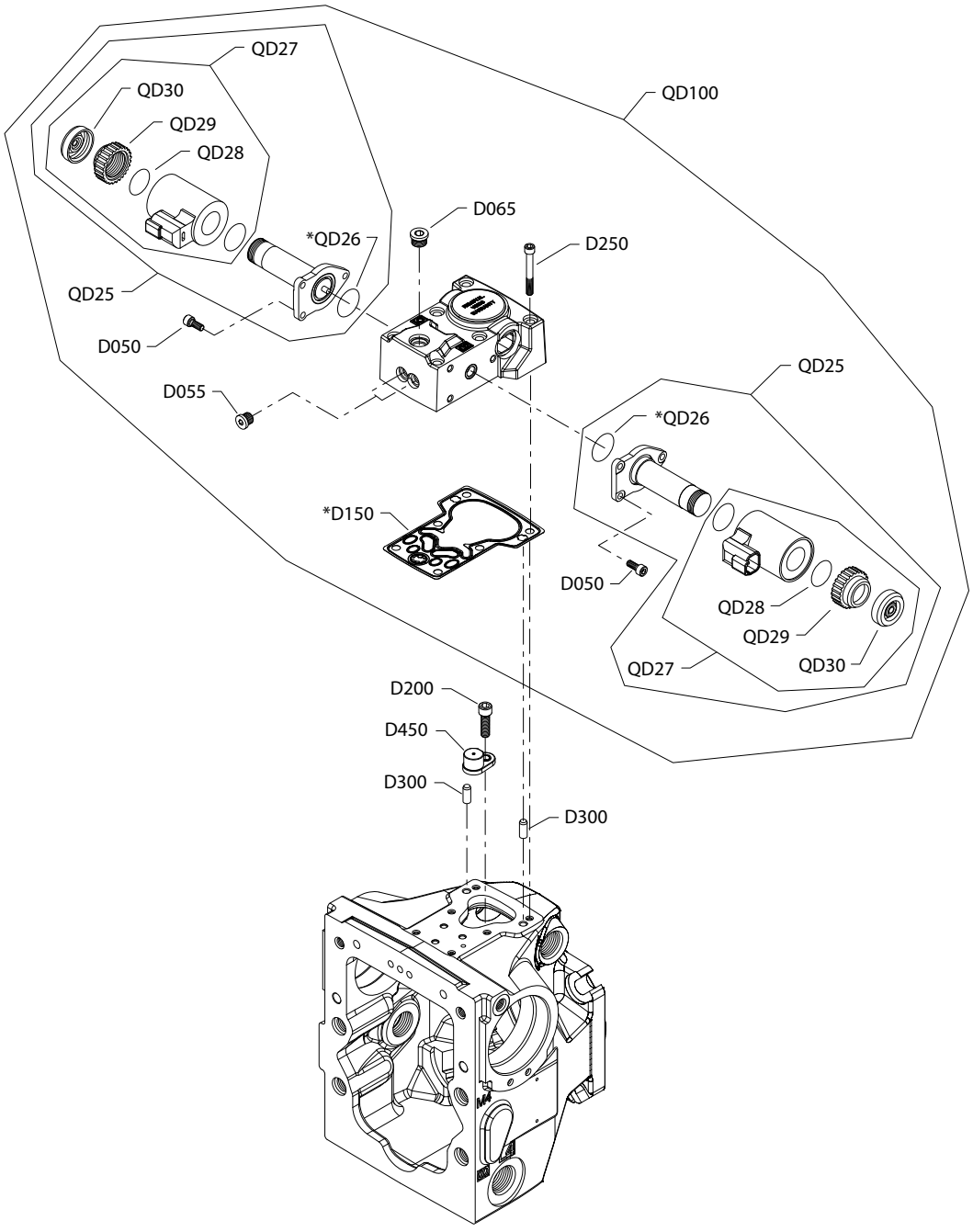

Generic housing shown.

* Included in overhaul seal kit Q210

Control

Order code: B9

Item	Date Begin	Date End	Part Number	Part Name	Qty. per Model/Kit
D050	09-27		716860	Screw	6
D055	09-27		11040532	Plug assembly	2
D067	09-27		9005110-4400	Plug assembly	1
D150	09-27		11227209	Control gasket (*SB-2016-033* on page 169)	1
D200	09-27		141472	Screw	1
D250	09-27		505038	Screw	6
D300	09-27		310979	Dowel pin	2
D450	09-27		11003097	Magnet carrier	1
QD25	09-27		140751	Proportional solenoid, 24v, DEUTSCH connector	2
QD26	09-27		11001952	O-ring	2
QD27	09-27		1104700	Coil kit, 24v, DEUTSCH connector	2
QD28	09-27		063172	O-ring	2
QD29	09-27		11004750	Coil nut	2
QD30	09-27		11027883	Cap	2
QD100	09-27		11050137	NFPE control kit,, 24V, manual override	1

Control

H1P control C1

Parts configuration

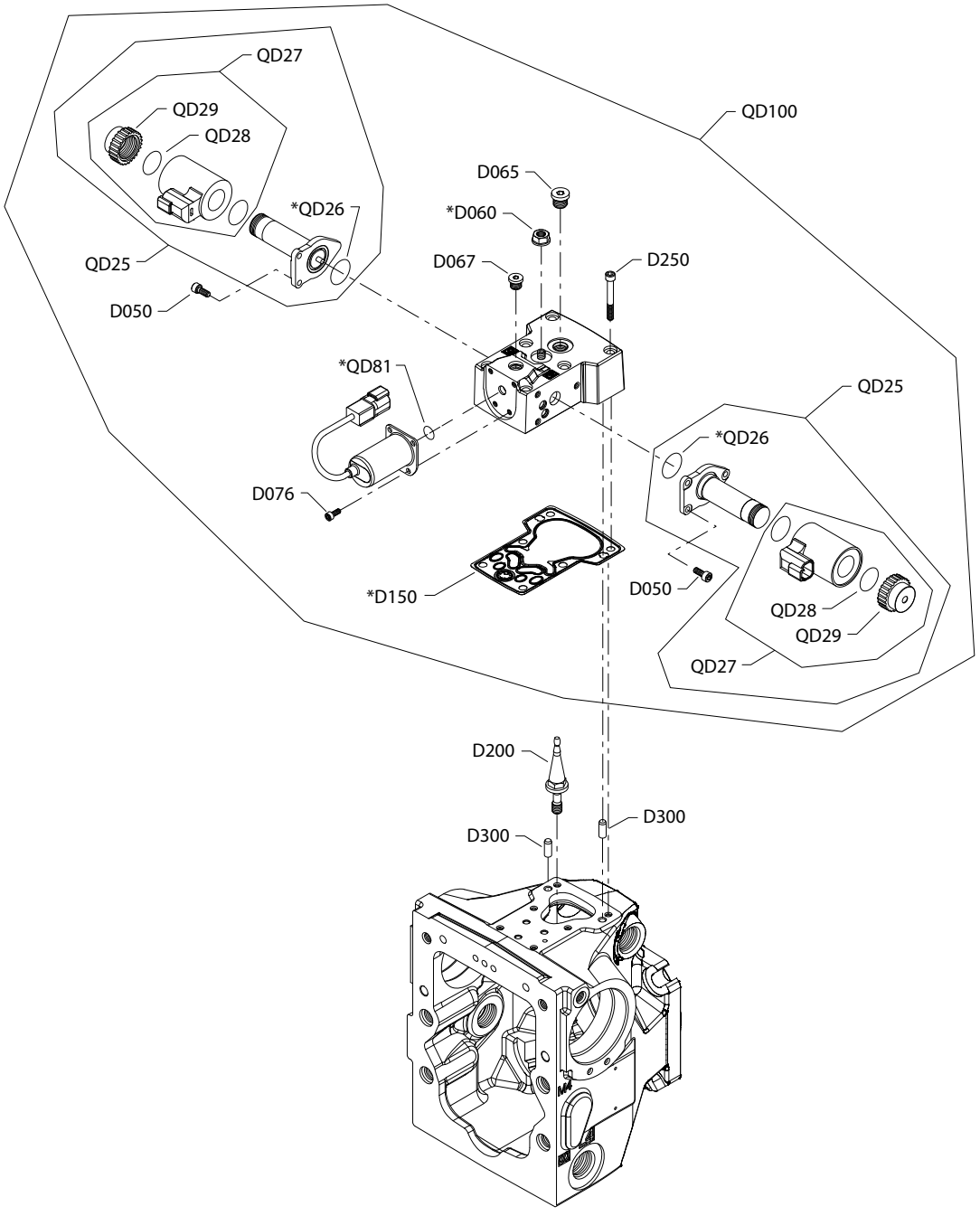

Generic housing shown.

* Included in overhaul seal kit Q210

Control

Order code: C1

Item	Date Begin	Date End	Part Number	Part Name	Qty. per Model/Kit
D050	09-27	12-52	716860	Screw	6
D060	09-27	12-52	612291 (9003508-0008)	Seal nut	1
D065	09-27	12-52	9005110-4400	Plug assembly	1
D067	09-27	12-52	11040532	Plug assembly	1
D076	09-27	12-52	346957	Screw, M4 x 8	4
D150	09-27	12-52	11227209	Control gasket (*SB-2016-033* on page 169)	1
D200	09-27	12-52	11202172	Swashplate feedback link (*SB-2018-025* on page 173)	1
D250	09-27	12-52	505038	Screw	6
D300	09-27	12-52	310979	Dowel pin	2
QD25	09-27	12-52	11012459	Proportional solenoid, 24V, DEUTSCH connector	2
QD26	09-27	12-52	11001952	O-ring	2
QD27	09-27	12-52	11028019	Coil kit, 24V, DEUTSCH connector	2
QD28	09-27	12-52	063172	O-ring	2
QD29	09-27	12-52	11028024	Coil nut	2
QD81	09-27	12-52	11059551	O-ring	1
QD100	09-27	12-52	11147472	EDC kit, 24V, high gain spool, control override (*SB-2015-035* on page 167)	1

Control

H1P control C2

Parts configuration

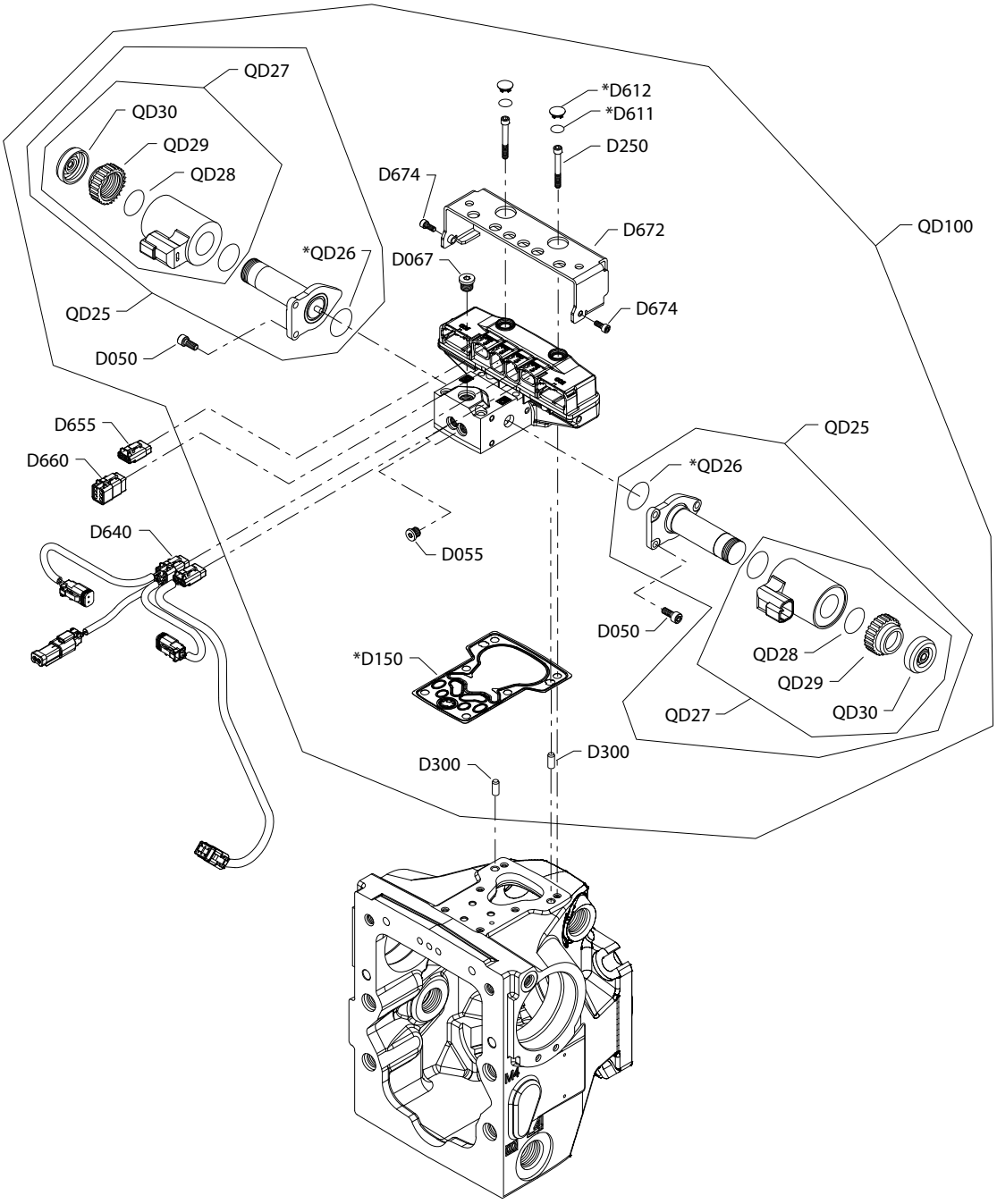

Generic housing shown.

* Included in overhaul seal kit Q210

Control

Order code: C2

Item	Date Begin	Date End	Part Number	Part Name	Qty. per Model/Kit
D050	10-14		716860	Screw, M5 x 12	6
D055	10-14		11040532	Plug assembly	2
D067	10-14		9005110-4400	Plug assembly	1
D150	10-14		11227209	Control gasket (*SB-2016-033* on page 169)	1
D250	10-14		505038	Screw, M6 x 45	6
D300	10-14		11036469	Dowel pin	2
D611	10-14	21-12	11066774	O-ring (*SB-2021-014* on page 179)	2
D611	21-13		11225703	O-ring	2
D612	10-14	21-12	11003126	Plug (*SB-2021-014* on page 179)	2
D612	21-13		11223708	Plug	2
D640	10-14		11023348	AC wiring harness	1
D655	10-14		11084827	Connector DTM 06-3S	1
D660	10-14		11084822	Connector DTM 06-6S	1
D672	10-14		11151875	Protection	1
D674	10-14		716860	Screw, M5 x 12	2
QD25	10-14		140751	Proportional solenoid, 24 volt	2
QD26	10-14		11001952	O-ring	2
QD27	10-14		11004700	Coil kit, 24v, DEUTSCH connector	2
QD28	10-14		063172	O-ring	2
QD29	10-14		11004750	Coil nut	2
QD30	10-14		11027883	Cap	2
QD100	10-14		11232765	Automotive control kit, 24v, manual override	1

Control

H1P control C3

Parts configuration

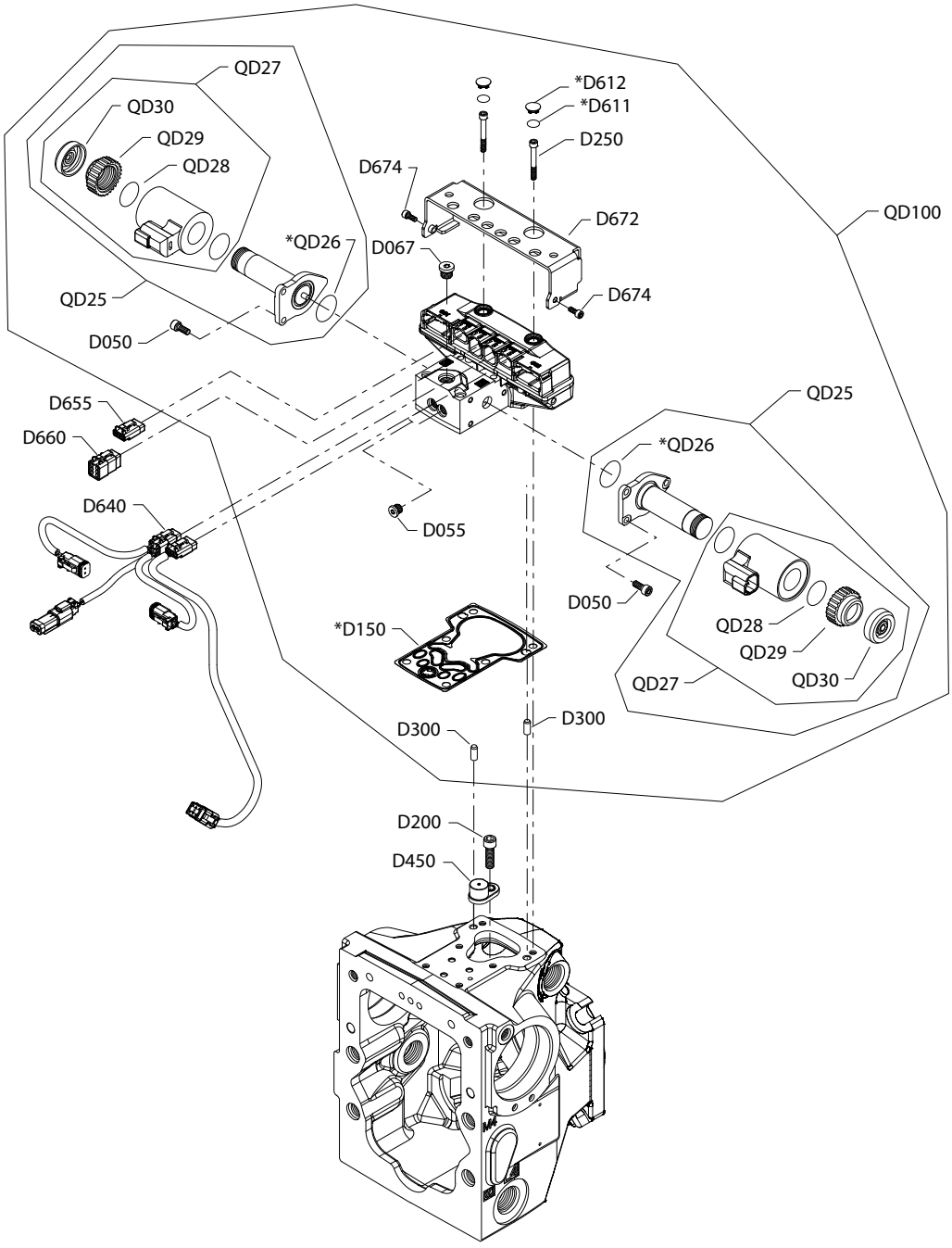

Generic housing shown.

* Included in overhaul seal kit Q210

Control

Order code: C3

Item	Date Begin	Date End	Part Number	Part Name	Qty. per Model/Kit
D050	10-14		716860	Screw, M5 x 12	6
D055	10-14		11040532	Plug assembly	2
D067	10-14		9005110-4400	Plug assembly	1
D150	10-14		11227209	Control gasket (*SB-2016-033* on page 169)	1
D200	10-14		141472	Screw, special	1
D250	10-14		505038	Screw, M6 x 45	6
D300	10-14		11036469	Dowel pin	2
D450	10-14		11003097	Magnet carrier	1
D611	10-14	21-12	11066774	O-ring (*SB-2021-014* on page 179)	2
D611	21-13		11225703	O-ring	2
D612	10-14	21-12	11003126	Plug (*SB-2021-014* on page 179)	2
D612	21-13		11223708	Plug	2
D640	10-14		11023348	AC wiring harness	1
D655	10-14		11084827	Connector DTM 06-3S	1
D660	10-14		11084822	Connector DTM 06-6S	1
D672	10-14		11151875	Protection	1
D674	10-14		716860	Screw, M5 x 12	2
QD25	10-14		140751	Proportional solenoid, 24 volt	2
QD26	10-14		11001952	O-ring	2
QD27	10-14		11004700	Coil kit, 24v, DEUTSCH connector	2
QD28	10-14		063172	O-ring	2
QD29	10-14		11004750	Coil nut	2
QD30	10-14		11027883	Cap	2
QD100	10-14		11232767	Automotive control kit, 24v, manual override	1

Control

H1P control C9, D1

Parts configuration

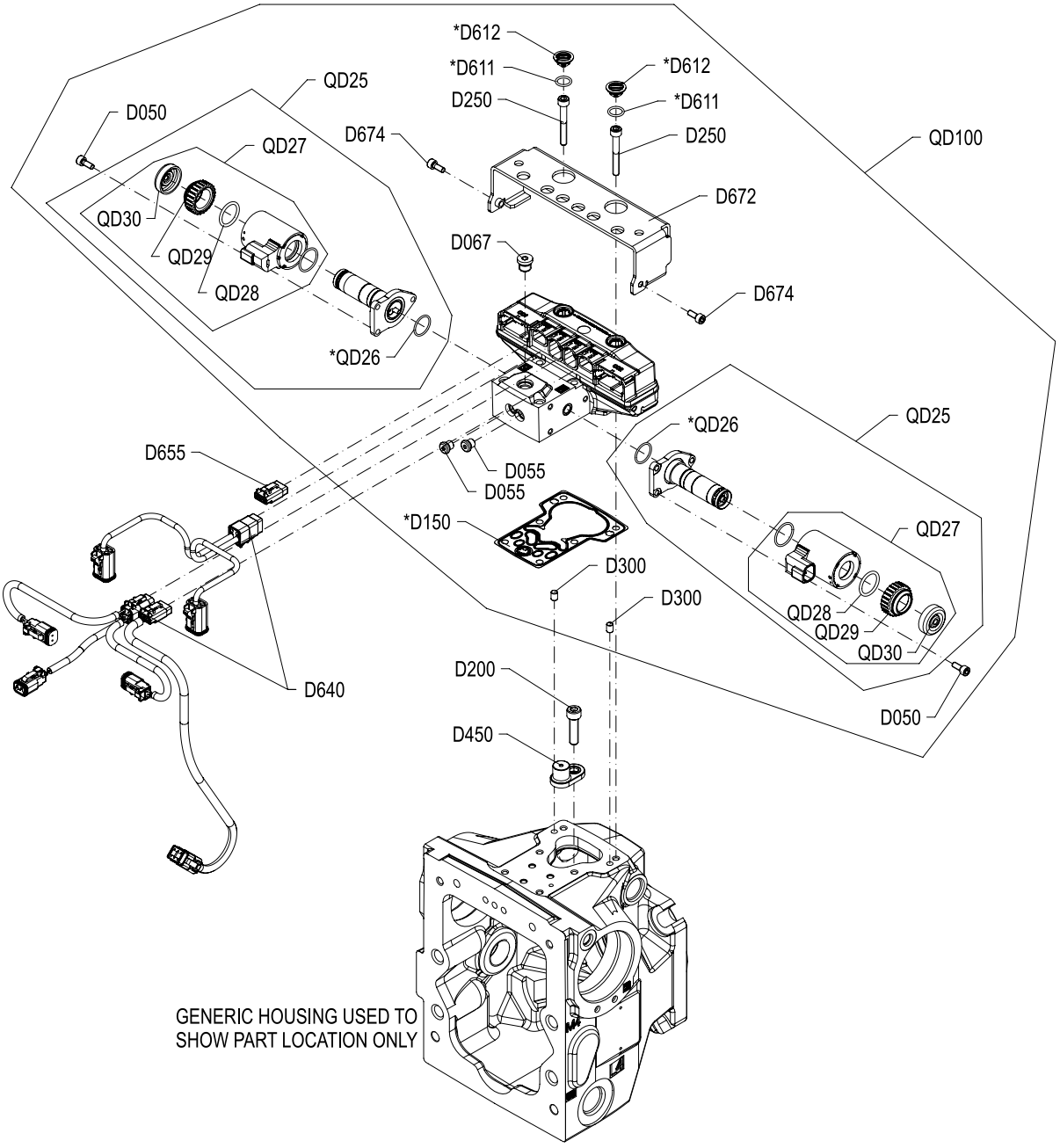

Generic housing shown.

* Included in overhaul seal kit Q210

Control

Common parts

Item	Date Begin	Date End	Part Number	Part Name	Qty. per Model/Kit
D050	12-22		716860	Screw, M5 x 12	6
D055	12-22		11040532	Plug assembly	2
D067	12-22		9005110-4400	Plug assembly	1
D150	12-22		11227209	Control gasket (*SB-2016-033* on page 169)	1
D200	12-22		141472	Screw, special	1
D250	12-22		505038	Screw, M6 x 45	6
D300	12-22		11036469	Dowel pin	2
D450	12-22		11003097	Magnet carrier	1
D611	12-22	21-12	11066774	O-ring (*SB-2021-014* on page 179)	2
D611	21-13		11225703	O-ring	2
D612	12-22	21-12	11003126	Plug (*SB-2021-014* on page 179)	2
D612	21-13		11223708	Plug	2
D640	12-22		11105876	AC wiring harness	1
D655	12-22		11084827	Connector DTM 06-3S	1
D672	12-22		11151875	Protection	1
D674	12-22		716860	Screw, M5 x 12	2
QD26	12-22		11001952	O-ring	2
QD28	12-22		063172	O-ring	2
QD30	12-22		11027883	Cap	2

Order code: C9

QD25	12-22		140751	Proportional solenoid, 24v	2
QD27	12-22		11004700	Coil kit, 24v, DEUTSCH connector	2
QD29	12-22		11004750	Coil nut	2
QD100	12-22		11232767	Automotive control kit, 24v, manual override	1

Order code: D1

QD25	12-22		140750	Proportional solenoid, 12v	2
QD27	12-22		11004698	Coil kit, 12v, DEUTSCH connector	2
QD29	12-22		11004749	Coil nut	2
QD100	12-22		11232766	Automotive control kit, 12v, manual override	1

Control

H1P control E2

Parts configuration

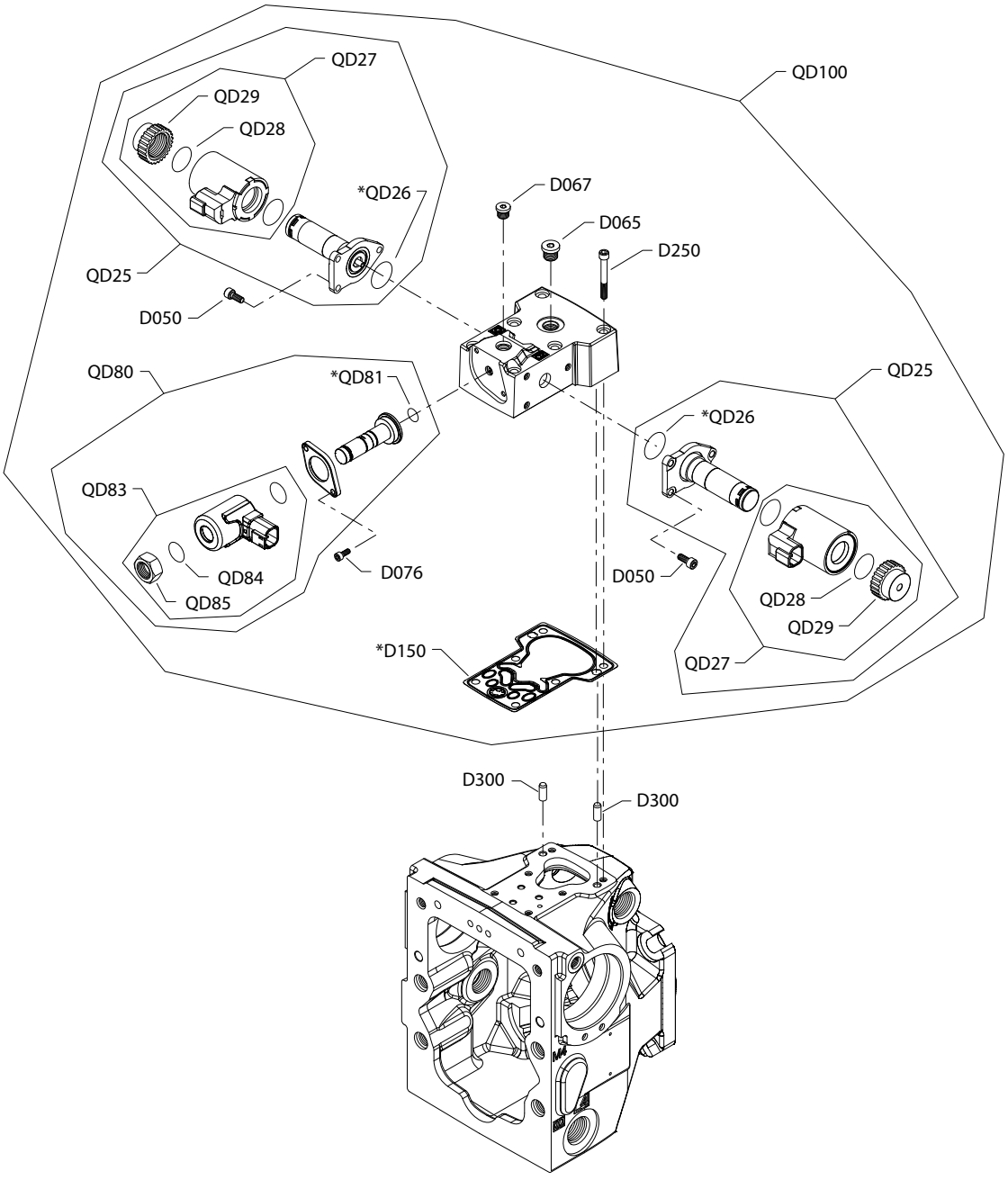

Generic housing shown.

* Included in overhaul seal kit Q210

Control

Order code: E2

Item	Date Begin	Date End	Part Number	Part Name	Qty. per Model/Kit
D050	13-45		716860	Screw M5 x 12	6
D065	13-45		9005110-4400	Plug assembly	2
D067	13-45		9005110-4400	Plug assembly	1
D076	13-45		067694	Screw, M4 x 10	2
D150	13-45		11227209	Control gasket (*SB-2016-033* on page 169)	1
D250	13-45		505038	Screw, M6 x45	6
D300	13-45		310979	Dowel pin	2
QD25	13-45		11012457	Proportional solenoid, 12V	2
QD26	13-45		11001952	O-ring	2
QD27	13-45		11028018	Coil kit, 12V, DEUTSCH connector	2
QD28	13-45		063172	O-ring	2
QD29	13-45		11027046	Coil nut	2
QD80	13-45		11231200	Solenoid, 12V, DEUTSCH connector	1
QD81	13-45		11152257	O-ring	1
QD83	13-45		11232757	Coil kit, 12V, DEUTSCH connector	1
QD84	13-45		11232752	O-ring	1
QD85	13-45		11140394	Nut	1
QD100	13-45		11145115	NFPE kit, 12V, high gain spool, control override	1

Control

H1P control E5

Parts configuration

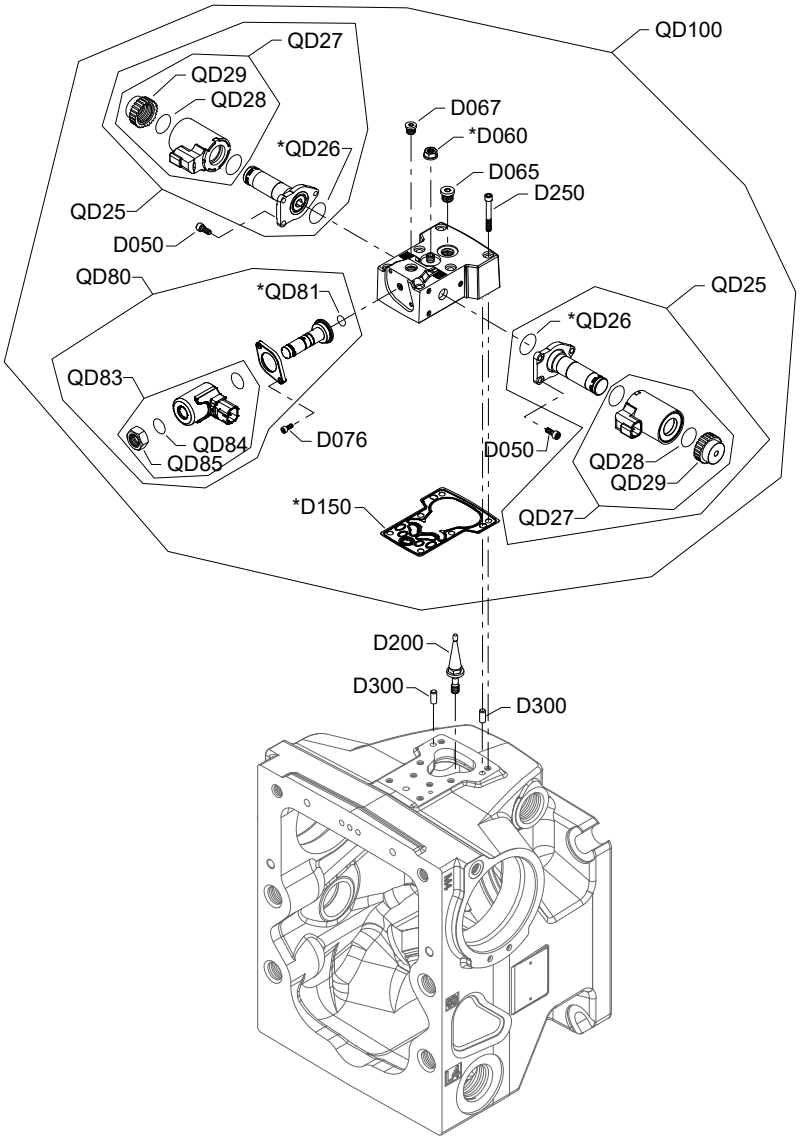

Generic housing shown.

* Included in overhaul seal kit Q210

Control

Order code: E5

Item	Date Begin	Date End	Part Number	Part Name	Qty. per Model/Kit
D050	14-25		716860	Screw M5 x 12	6
D060	14-25		612291	Seal nut	1
D065	14-25		9005110-4400	Plug assembly	2
D067	14-25		9005110-4400	Plug assembly	1
D076	14-25		067694	Screw, M4 x 10	2
D150	14-25		11227209	Control gasket (*SB-2016-033* on page 169)	1
D200	14-25		11202172	Swashplate feedback link (*SB-2018-025* on page 173)	1
D250	14-25		505038	Screw	6
D300	14-25		310979	Dowel pin	2
QD25	14-25		11012457	Proportional solenoid, 12V	2
QD26	14-25		11001952	O-ring	2
QD27	14-25		11028018	Coil kit, 12V, DEUTSCH connector	2
QD28	14-25		063172	O-ring	2
QD29	14-25		11027046	Coil nut	2
QD80	14-25		11231200	Solenoid, 12V, DEUTSCH connector	1
QD81	14-25		11152257	O-ring	1
QD83	14-25		11232757	Coil kit, 12V, DEUTSCH connector	1
QD84	14-25		11232752	O-ring	1
QD85	14-25		11140394	Nut	1
QD100	14-25		11147422	EDC kit, 12V, control override	1

Control

H1P control E6, E7

E6 and E7 configuration

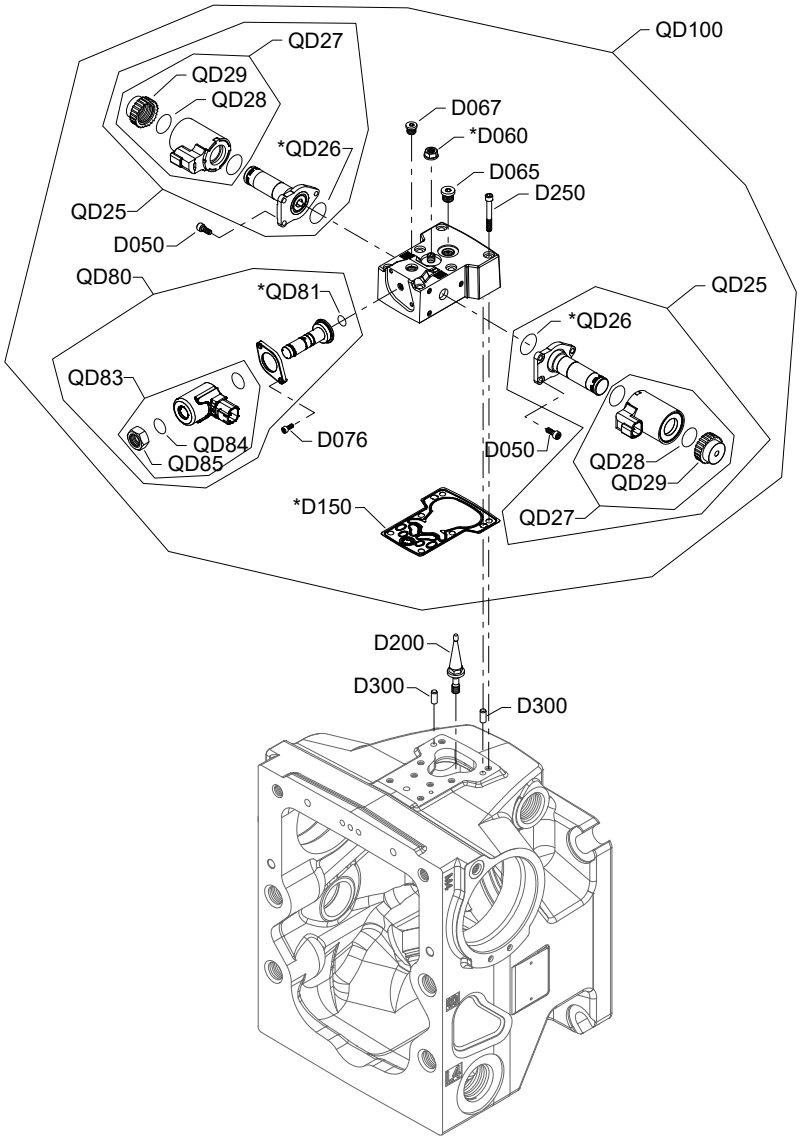

Generic housing shown.

* Included in overhaul seal kit Q210

Control

Common parts

Item	Date Begin	Date End	Part Number	Part Name	Qty. per Model/Kit
D050	14-25		716860	Screw, M5 x 12	6
D060	14-25		612291 (9003508-0008)	Seal nut, M8	1
D065	14-25		905110-4400	Plug assembly (SAE)	1
D067	14-25		905110-4400	Plug assembly (SAE)	1
D076	14-25		067694	Screw, M4 x 10	2
D150	14-25		11227209	Control gasket (*SB-2016-033* on page 169)	1
D200	14-25		11202172	Swash plate feedback link (*SB-2018-025* on page 173)	1
D250	14-25		505038	Screw, M6 x 45	6
D300	14-25		310979	Dowel pin	2
QD26	14-25		11001952	O-ring	2
QD28	14-25		063172	O-ring	2
QD81	14-25		11152257	O-ring	1
QD85	14-25		11140394	Coil nut	1

Order code: E6

QD25	14-25		11012459	Proportional solenoid, 24v	2
QD27	14-25		11028019	Coil kit, 24v, DEUTSCH connector	2
QD29	14-25		11028024	Coil nut	2
QD80	14-25		11231201	Solenoid valve, on/off, 24v	1
QD83	14-25		11232697	Coil kit, 24v	1
QD84	14-25		11232752	O-ring	1
QD100	14-25		11147423	EDC kit, 24v, CCO	1

Order code: E7

QD25	14-25		11012457	Proportional solenoid, 12v	2
QD27	14-25		11028018	Coil kit, 12v, DEUTSCH connector	2
QD29	14-25		11027046	Coil nut	2
QD80	14-25		11231200	Solenoid valve, on/off, 12v	1
QD83	14-25		11232757	Coil kit, 12v	1
QD84	14-25		11232752	O-ring	1
QD100	14-25		11147471	EDC kit, 12v, CCO (SAE)	1

Control

H1P control E8

Parts configuration

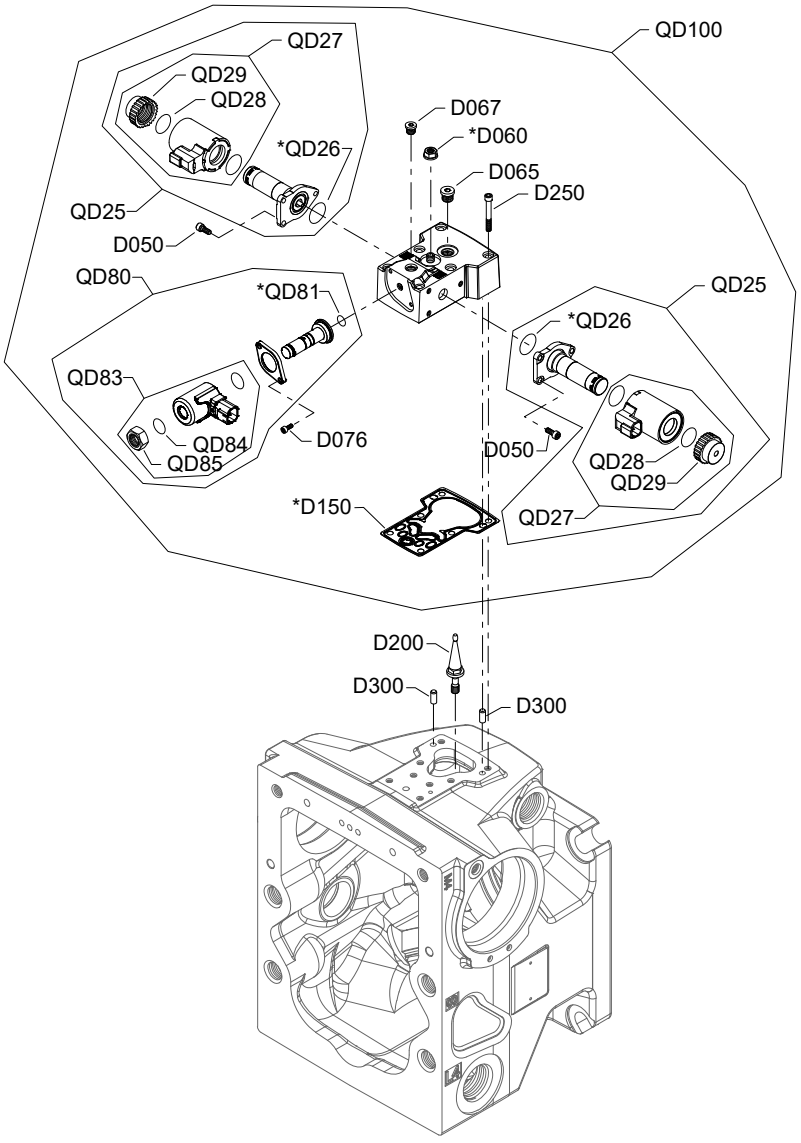

Generic housing shown.

* Included in overhaul seal kit Q210

Control

Order code: E8

Item	Date Begin	Date End	Part Number	Part Name	Qty. per Model/Kit
D050	14-25		716860	Screw, M5 x 12	6
D060	14-25		612291 (9003508-0008)	Seal nut, M8	1
D065	14-25		905110-4400	Plug assembly	1
D067	14-25		905110-4400	Plug assembly	1
D076	14-25		067694	Screw, M4 x 10	2
D150	14-25		11227209	Control gasket (*SB-2016-033* on page 169)	1
D200	14-25		11202172	Swashplate feedback link (*SB-2018-025* on page 173)	1
D250	14-25		505038	Screw, M6 x 45	6
D300	14-25		310979	Dowel pin	2
QD25	14-25		11012459	Proportional solenoid, 24v	2
QD26	14-25		11001952	O-ring	2
QD27	14-25		11028019	Coil kit, 24v, DEUTSCH connector	2
QD28	14-25		063172	O-ring	2
QD29	14-25		11028024	Coil nut	2
QD80	14-25		11231201	Solenoid vale, on/off, 24v	1
QD81	14-25		11152257	O-ring	1
QD83	14-25		11232697	Coil kit, 24v	1
QD84	14-25		11232752	O-ring	1
QD85	14-25		11140394	Coil nut	1
QD100	14-25		11147472	EDC kit, 24v, CCO	1

Control

H1P control F1, F2

F1 and F2 configuration

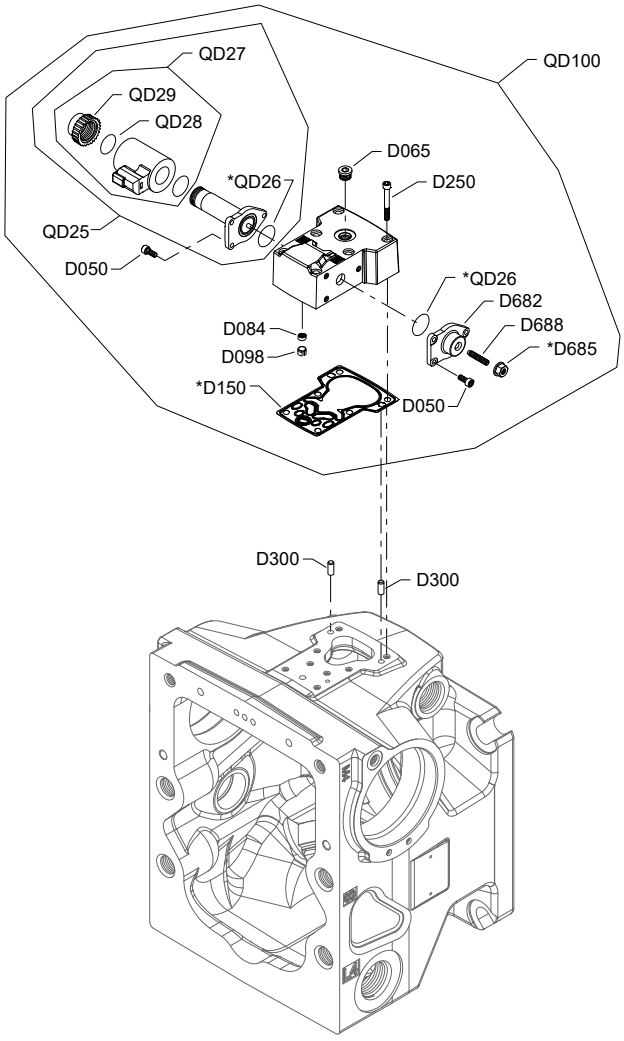

Generic housing shown.

Warning

This control is for Fan Drive systems only. Use in other systems could result in unintended movement of machine or its elements. Loss of the input signal to this control will cause the pump to produce maximum flow. Contact Danfoss or an authorized distributor with questions regarding the use of this product.

* Included in overhaul seal kit Q210

Control

Common parts

Item	Date Begin	Date End	Part Number	Part Name	Qty. per Model/Kit
D050	12-33		716860	Screw, M5 x 12	6
D065	12-33		9005110-4400	Plug assembly	1
D150	12-33		11227209	Control gasket (*SB-2016-033* on page 169)	1
D250	12-33		505038	Screw, M6 x 45	6
D300	12-33		310979	Dowel pin	2
D682	12-33		11079441	Flange	1
D685	12-33		612291 (9003508-0008)	Seal nut, M8	1
D688	12-33		11079453	Adjusting screw	1
QD26	12-33		11001952	O-ring	2
QD28	12-33		063172	O-ring	1

Order code: F1

QD25	12-33		11012457	Proportional solenoid, 12v	1
QD27	12-33		11028018	Coil kit, 12v, DEUTSCH connector	1
QD29	12-33		11027046	Coil nut	1
QD100	12-33		11081306	FDC kit, 12v, DEUTSCH connector	1

Order code: F2

QD25	12-33		11012459	Proportional solenoid, 24v	1
QD27	12-33		11028019	Coil kit, 24v, DEUTSCH connector	1
QD29	12-33		11028024	Coil nut	1
QD100	12-33		11081307	FDC kit, 24v, DEUTSCH connector	1

Control

H1P control F4

F4 configuration

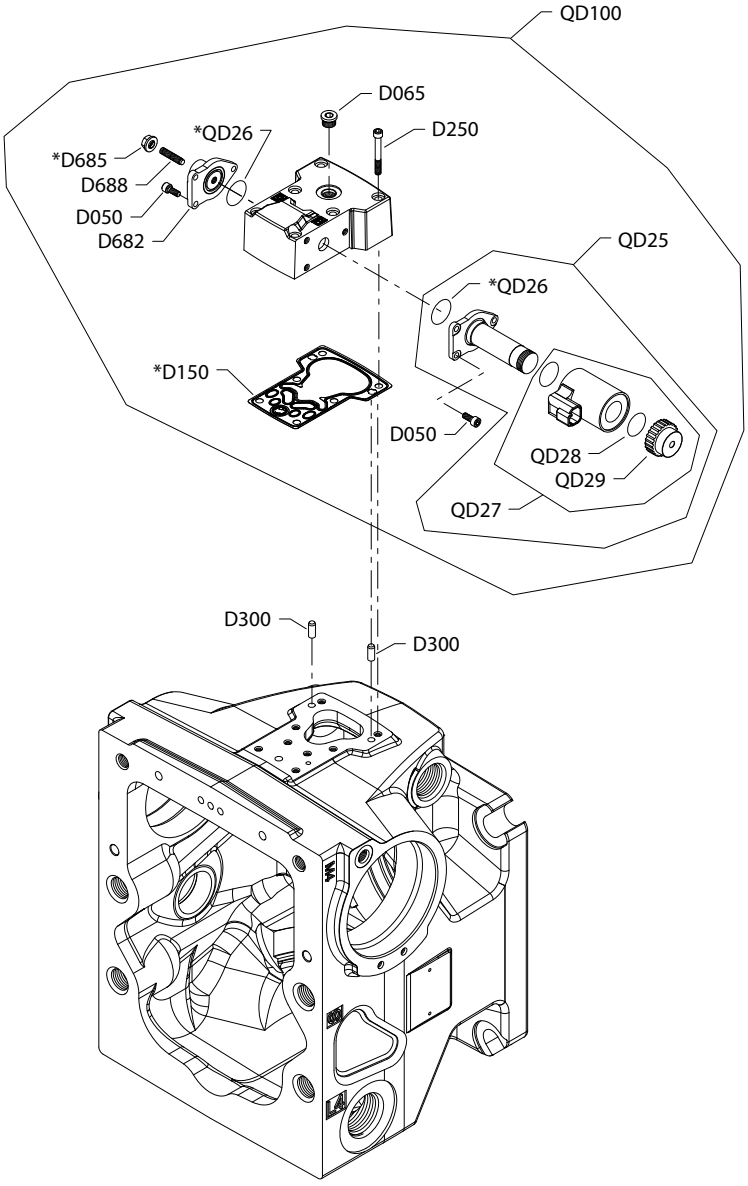

Generic housing shown.

* Included in overhaul seal kit

Control

Order code: F4

Item	Date Begin	Date End	Part Number	Part Name	Qty. per Model/Kit
D050	09-27		716860	Screw, M5 x 12	6
D065	09-27		9005110-4400	Plug assembly	1
D150	09-27		11227209	Control gasket (*SB-2016-033* on page 169)	1
D250	09-27		505038	Screw, M6 x 45	6
D300	09-27		310979	Dowel pin	2
D682	09-27		11079441	Flange	1
D685	09-27		612291 (9003508-0008)	Seal nut, M8	1
D688	09-27		11079453	Adjusting screw	1
QD25	09-27		11012459	Proportional solenoid, 24v	1
QD26	09-27		11001952	O-ring	2
QD27	09-27		11028019	Coil kit, 24v, DEUTSCH connector	1
QD28	09-27		063172	O-ring	1
QD29	09-27		11028024	Coil nut	1
QD100	09-27		11174982	FDC kit, 24v, DEUTSCH connector	1

Control

H1P control H2, H3

Parts configuration

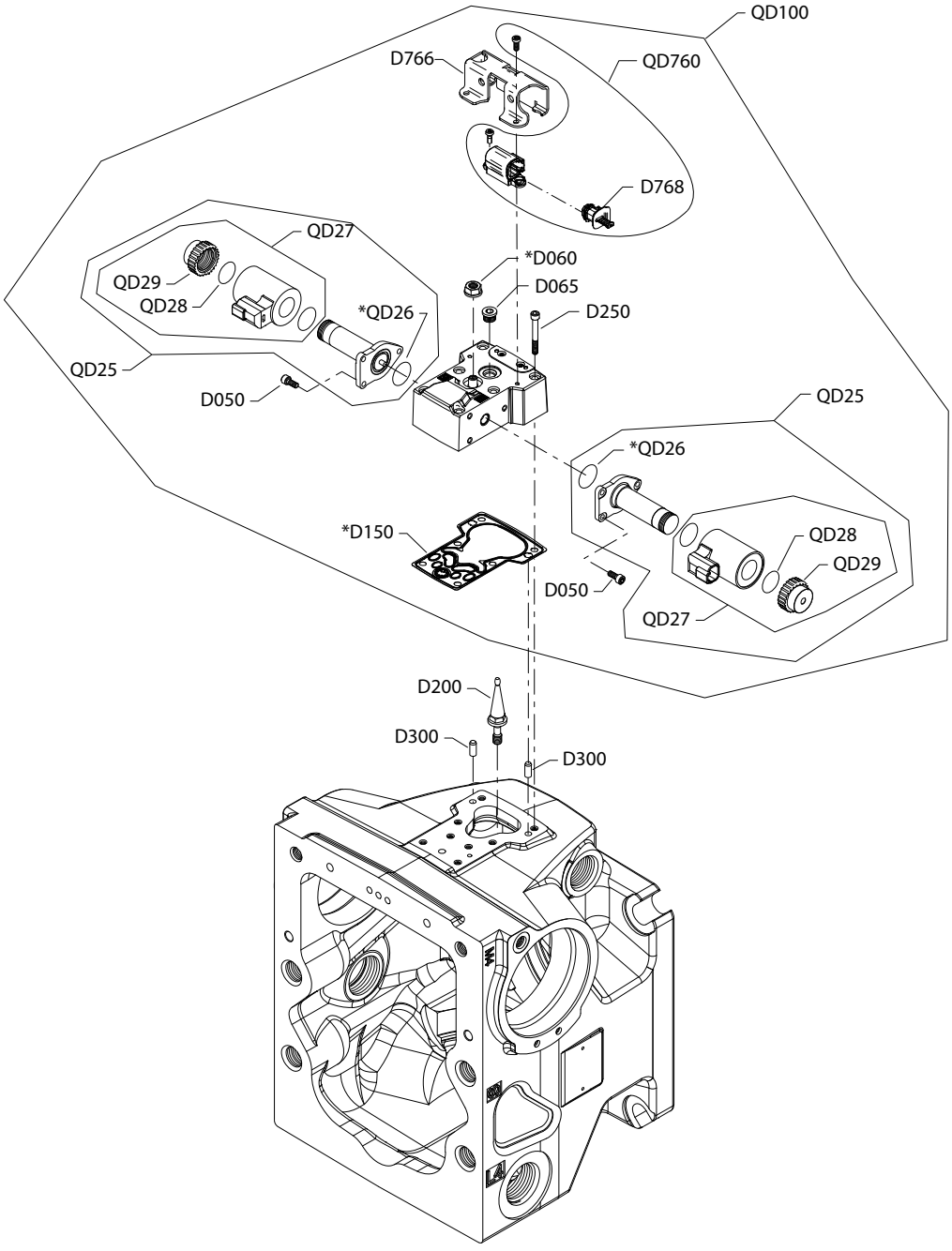

Generic housing shown

* Included in overhaul seal kit Q210

Control

Common parts

Item	Date Begin	Date End	Part Number	Part Name	Qty. per Model/Kit
D050	18-11		716860	Screw, M5 x 12	6
D060	18-11		612291	Seal nut	1
D065	18-11		9005110-4400	Plug assembly	1
D150	18-11		11227209	Control gasket	1
D200	18-11		11202172	Swashplate feedback link	1
D250	18-11		505038	Screw, M6 x 45	6
D300	18-11		310979	Dowel pin	2
D766	18-11		11187406	Protection cover	1
D768	18-11		11184617	Paint cover	1
QD26	18-11		11001952	O-ring	2
QD28	18-11		063172	O-ring	2
QD760	18-11		11290138	EDC sensor service kit	1

Order code: H2

QD100	18-11		11196619	EDC kit, 12v, ASNSR	1
QD25	18-11		11012457	Proportional solenoid, 12v	2
QD27	18-11		11028018	Coil kit, 12V, DEUTSCH connector	2
QD29	18-11		11027046	Nut	2

Order code: H3

QD100	18-11		11179280	EDC kit, 24v, ASNSR	1
QD25	18-11		11012459	Proportional solenoid, 24v	2
QD27	18-11		11028019	Coil kit, 24v DEUTSCH connector	2
QD29	18-11		11028024	Nut	2

Control

H1P control H6, H7

Parts configuration

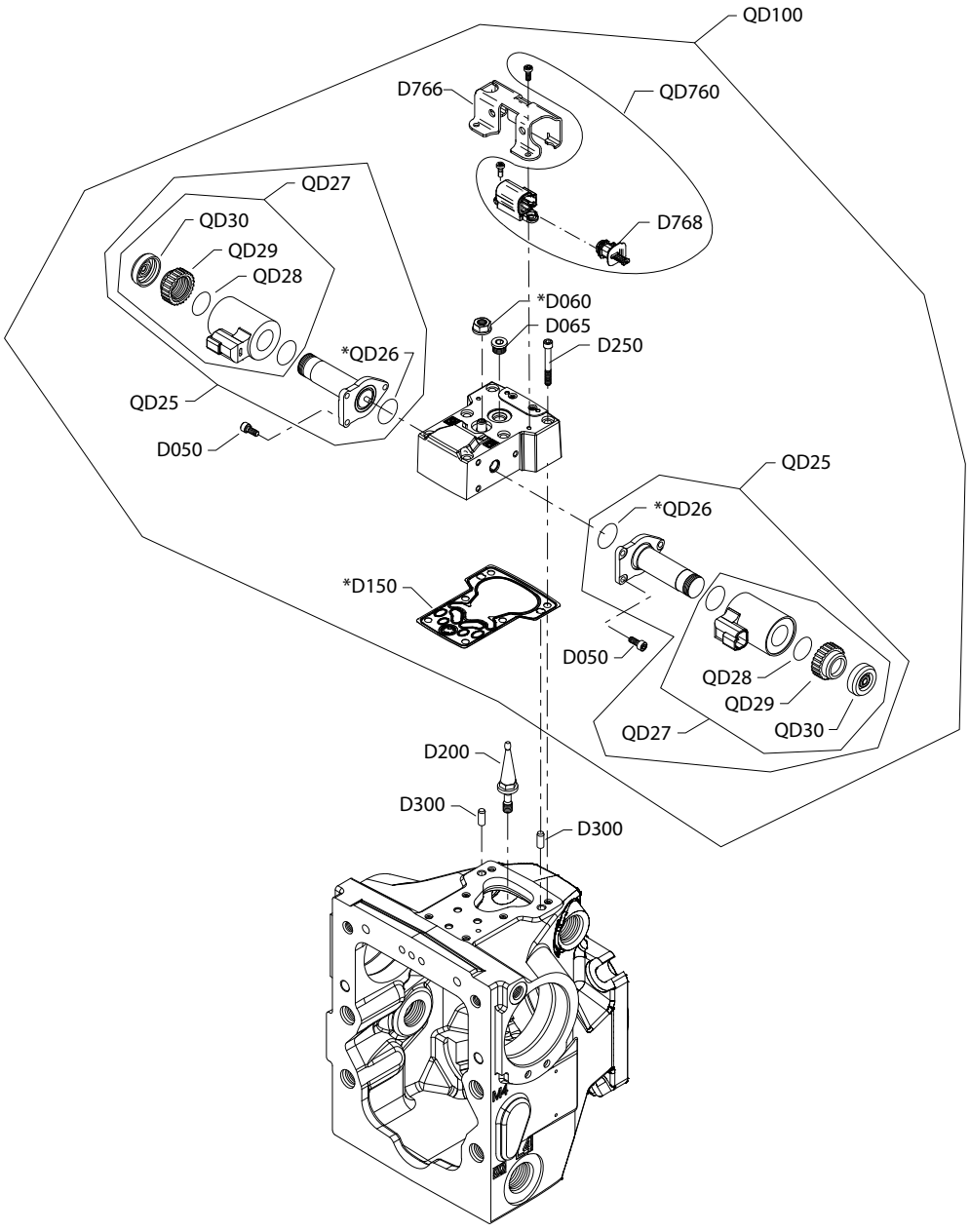

Generic housing shown

* Included in overhaul seal kit Q210

Control

Common parts

Item	Date Begin	Date End	Part Number	Part Name	Qty. per Model/Kit
D050	18-13		716860	Screw, M5 x 12	6
D060	18-13		612291	Seal nut	1
D065	18-13		9005110-4400	Plug assembly	1
D150	18-13		11227209	Control gasket	1
D200	18-13		11202172	Swashplate feedback link	1
D250	18-13		505038	Screw, M6 x 45	6
D300	18-13		310979	Dowel pin	2
D766	18-13		11187406	Protection cover	1
D768	18-13		11184617	Paint cover	1
QD26	18-13		11001952	O-ring	2
QD28	18-13		063172	O-ring	2
QD30	18-13		11027883	Cap	2
QD760	18-13		11290138	EDC sensor service kit	1

Order code: H6

QD100	18-13		11179281	EDC kit, 12V	1
QD25	18-13		140750	Proportional solenoid, 12V	2
QD27	18-13		11004698	Coil kit, 12V, DEUTSCH connector	2
QD29	18-13		11004749	Coil nut	2

Order code: H7

QD100	18-13		11179292	EDC kit, 24V	1
QD25	18-13		140751	Proportional solenoid, 24V	2
QD27	18-13		11004700	Coil kit, 24V, DEUTSCH connector	2
QD29	18-13		11004750	Coil nut	2

Control

H1P control H8, H9

Parts configuration

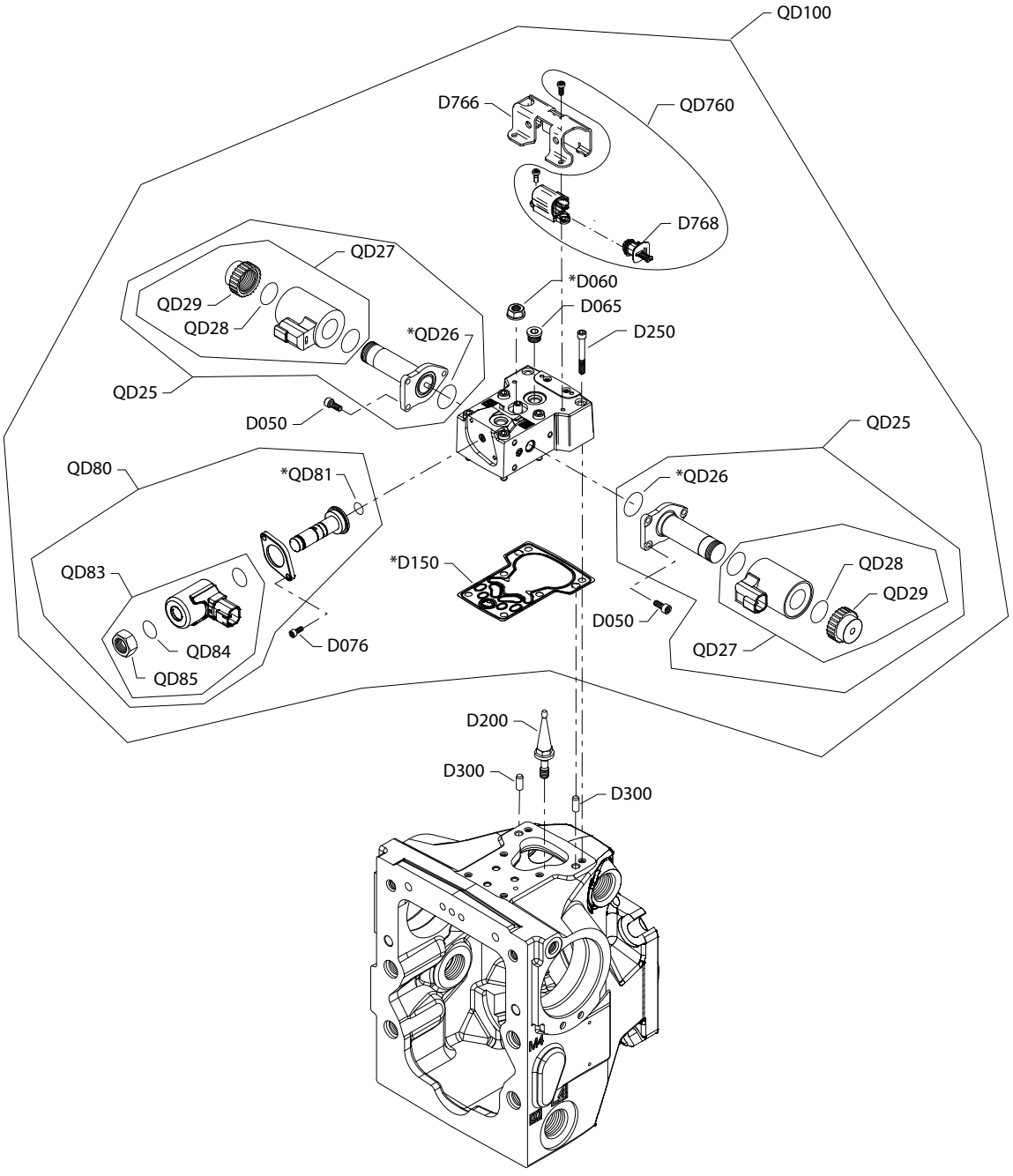

Generic housing shown

Option H8 is available in SAE and metric configurations. Please order accordingly.

* Included in overhaul seal kit Q210

Control

Common parts

Item	Date Begin	Date End	Part Number	Part Name	Qty. per Model/Kit
D050	18-13		716860	Screw, M5 x 12	6
D060	18-13		612291	Seal nut	1
D065	18-13		9005110-4400	Plug assembly	1
D067	18-13		9005110-4400	Plug assembly	1
D076	18-13		067694	Screw, M4 x 10	2
D150	18-13		11227209	Control gasket	1
D200	18-13		11202172	Swashplate feedback link	1
D250	18-13		505038	Screw, M6 x 45	6
D300	18-13		310979	Dowel pin	2
D766	18-13		11187406	Protection cover	1
D768	18-13		11184617	Paint cover	1
QD28	18-13		063172	O-ring	2
QD85	18-13		11140394	Nut	1
QD760	18-13		11290138	EDC sensor service kit	1

Order code: H8

QD100	18-13		11179293	EDC kit, 12V	1
QD100	16-30		11182566	EDC kit, 12v ASNSR (metric)	1
QD25	18-13		11012457	Proportional solenoid, 12V	2
QD27	18-13		11028018	Coil kit, 12V, DEUTSCH connector	2
QD29	18-13		11027046	Coil nut	2
QD80	18-13		11231200	Solenoid, 12V, DEUTSCH connector	1
QD83	18-13		11232757	Coil kit, 12V, DEUTSCH connector	1
QD84	18-13		11232752	O-ring	1

Order code: H9

QD100	18-13		11179296	EDC kit, 24V	1
QD25	18-13		11012459	Proportional solenoid, 24V	2
QD27	18-13		11028019	Coil kit, 24V, DEUTSCH connector	2
QD29	18-13		11028024	Coil nut	2
QD80	18-13		11231201	Solenoid, 24V, DEUTSCH connector	1
QD83	18-13		11232697	Coil kit, 24V, DEUTSCH connector	1
QD84	18-13		11232752	O-ring	1

Control

H1P control M1, M2

M1 and M2 configuration

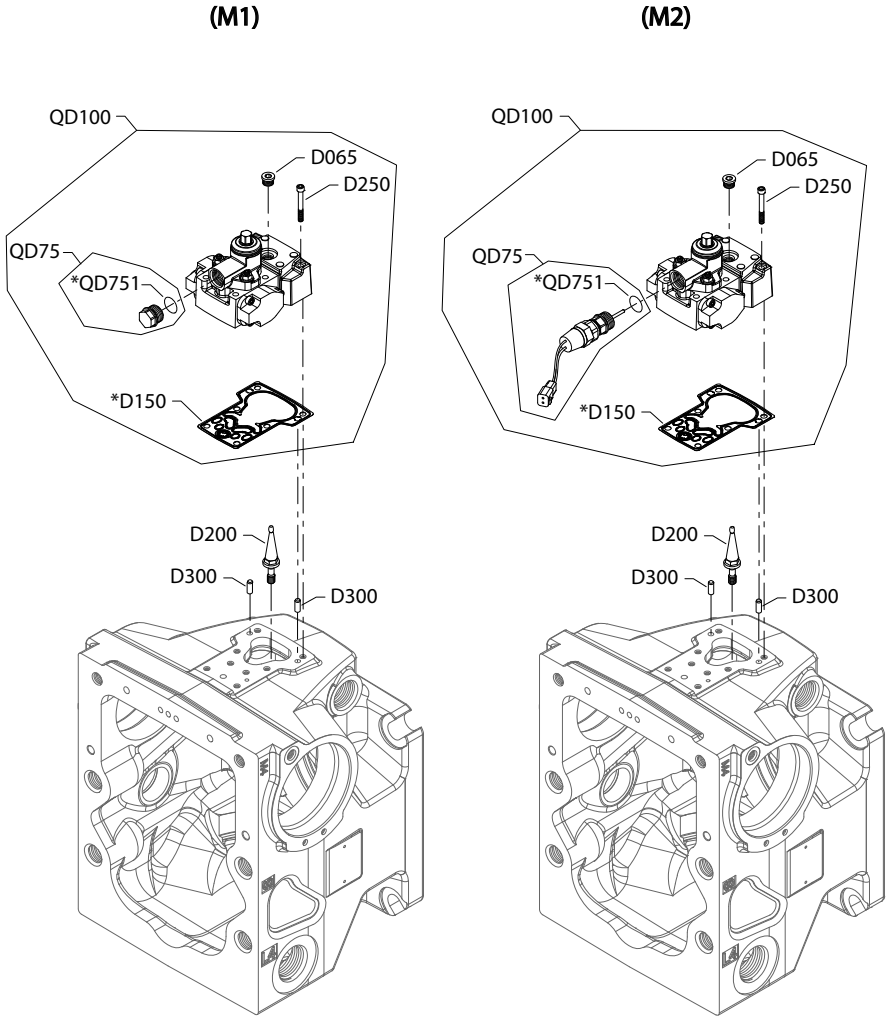

Generic housing shown

* Included in overhaul seal kit

Control

Common parts

Item	Date Begin	Date End	Part Number	Part Name	Qty. per Model/Kit
D065	14-01		9005110-4400	Plug assembly	1
D150	14-01		11227209	Control gasket (*SB-2016-033* on page 169)	1
D200	14-01		11202172	Swashplate feedback link (*SB-2018-025* on page 173)	1
D250	14-01		505038	Screw, M6 x 45	6
D300	14-01		310979	Dowel pin	2
QD751	14-01		001131 (9004201-5000)	O-ring	1

Order code: M1

QD75	14-01		11119332	Spring seat assembly	1
QD100	14-01		11141225	MDC kit	1

Order code: M2

QD75	14-01		11126847	Spring seat/neutral start switch assembly	1
QD100	14-01		11141236	MDC kit	1

Control

H1P control M3, M4

M3 and M4 configuration

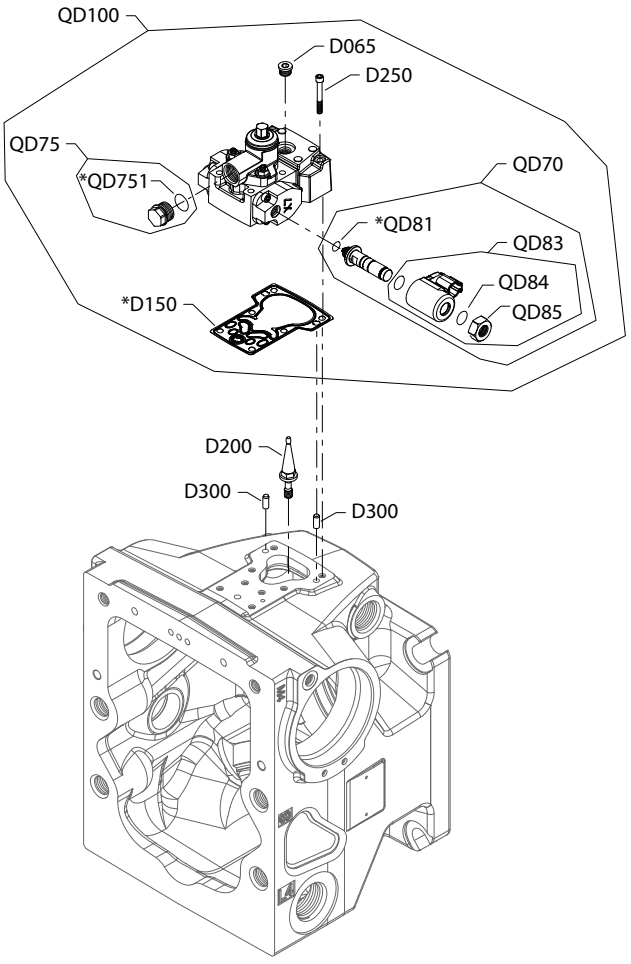

Generic housing shown

* Included in overhaul seal kit Q210

Control

Common parts

Item	Date Begin	Date End	Part Number	Part Name	Qty. per Model/Kit
D065	14-01		9005110-4400	Plug assembly	1
D150	14-01		11227209	Control gasket (*SB-2016-033* on page 169)	1
D200	14-01		11202172	Swashplate feedback link (*SB-2018-025* on page 173)	1
D250	14-01		505038	Screw, M6 x 45	6
D300	14-01		310979	Dowel pin	2
QD81	14-01		11152257	O-ring	1
QD84	14-01		11140393	O-ring	1
QD85	14-01		11140394	Coil nut	1
QD751	14-01		001131 (9004201-5000)	O-ring	1

Order code: M3

QD70	14-01		11129916	Solenoid valve, 12v	1
QD75	14-01		11119332	Spring seat assembly	1
QD83	14-01		11136347	Coil kit, 12v	1
QD100	14-01		11218976	MDC kit, 12v, CCO	1

Order code: M4

QD70	14-01		11129917	Solenoid valve, 24v	1
QD83	14-01		11136348	Coil kit, 24v, CCO	1
QD100	14-01		11218977	MDC kit, 24v	1

Control

H1P control M5, M6

M5 and M6 configuration

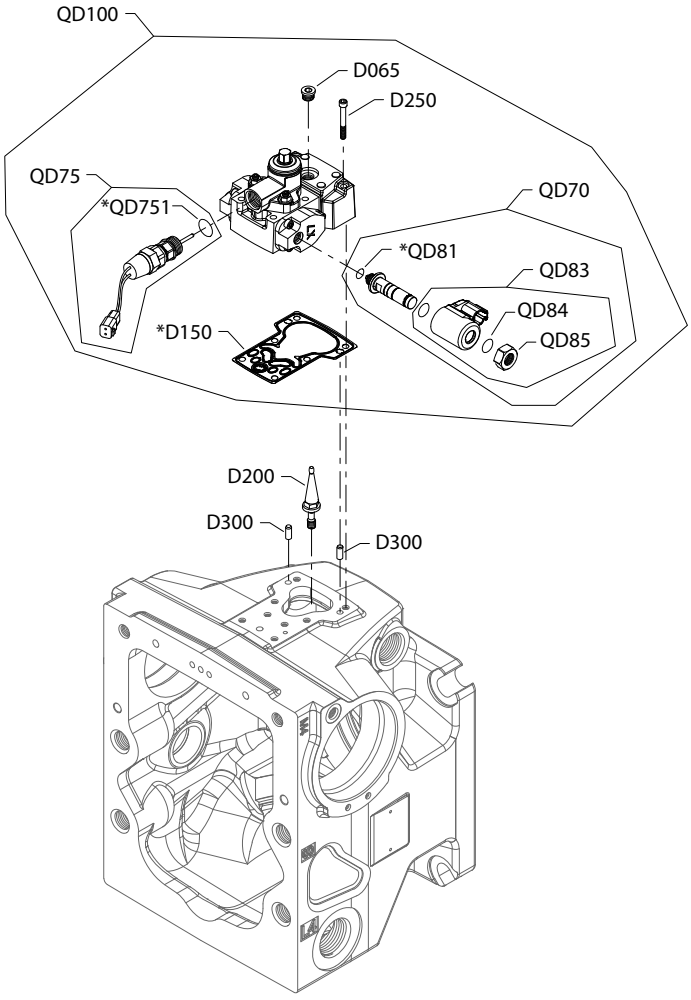

Generic housing shown

* Included in overhaul seal kit Q210

Control

Common parts

Item	Date Begin	Date End	Part Number	Part Name	Qty. per Model/Kit
D065	14-01		9005110-4400	Plug assembly	1
D150	14-01		11227209	Control gasket (*SB-2016-033* on page 169)	1
D200	14-01		11202172	Swashplate feedback link (*SB-2018-025* on page 173)	1
D250	14-01		505038	Screw, M6 x 45	6
D300	14-01		310979	Dowel pin	2
QD75	14-01		11126847	Spring seat/neutral start switch assembly	1
QD81	14-01		11152257	O-ring	1
QD84	14-01		11140393	O-ring	1
QD85	14-01		11140394	Coil nut	1
QD751	14-01		001131 (9004201-5000)	O-ring	1

Order code: M5

QD70	14-01		11129916	Solenoid valve, 12v	1
QD83	14-01		11136347	Coil kit, 12v	1
QD100	14-01		11218978	MDC kit, 12v, neutral start switch assembly, CCO	1

Order code: M6

QD70	14-01		11129917	Solenoid valve, 24v	1
QD83	14-01		11136348	Coil kit, 24v	1
QD100	14-01		11218979	MDC kit, 24v, neutral start switch assembly, CCO	1

Control

H1P control N1, N2

N1 and N2 configuration

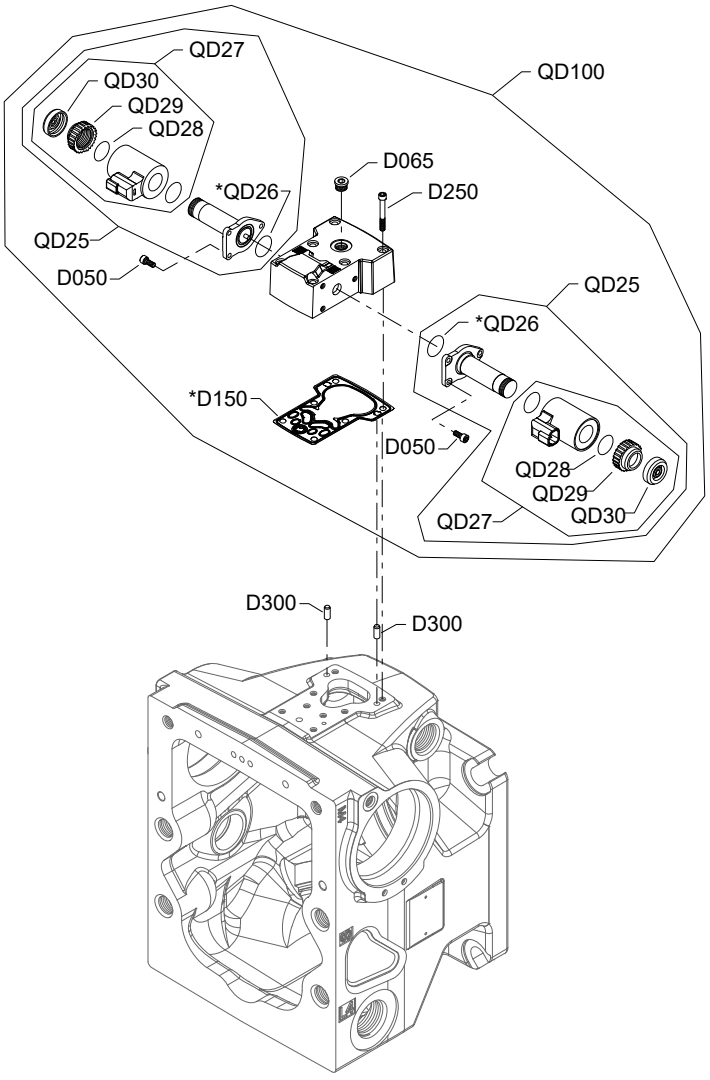

Generic housing shown

* Included in overhaul seal kit Q210

Control

Common parts

Item	Date Begin	Date End	Part Number	Part Name	Qty. per Model/Kit
D050	16-30		716860	Screw, M5 x 12	6
D065	16-30		9005110-4400	Plug assembly	1
D150	16-30		11227209	Control gasket	1
D250	16-30		505038	Screw, M6 x 45	6
D300	16-30		310979	Dowel pin	2
QD26	16-30		11001952	O-ring	2
QD28	16-30		063172	O-ring	2
QD30	16-30		11027883	Cap	2

Order code: N1

QD25	16-30		140750	Proportional solenoid, 12v, DEUTSCH connector	2
QD27	16-30		11004698	Coil kit, 12v, DEUTSCH connector	2
QD29	16-30		11004749	Coil nut	2
QD100	16-30		11147921	NFPE control kit, 12v, manual override, DEUTSCH connector	1

Order code: N2

QD25	16-30		140751	Proportional solenoid, 24v, DEUTSCH connector	2
QD27	16-30		11004700	Coil kit, 24v, DEUTSCH connector	2
QD29	16-30		11004750	Coil nut	2
QD100	16-30		11147925	NFPE control kit, 24v, manual override, DEUTSCH connector	1

Control

H1P control N3, N4

N3 and N4 configuration

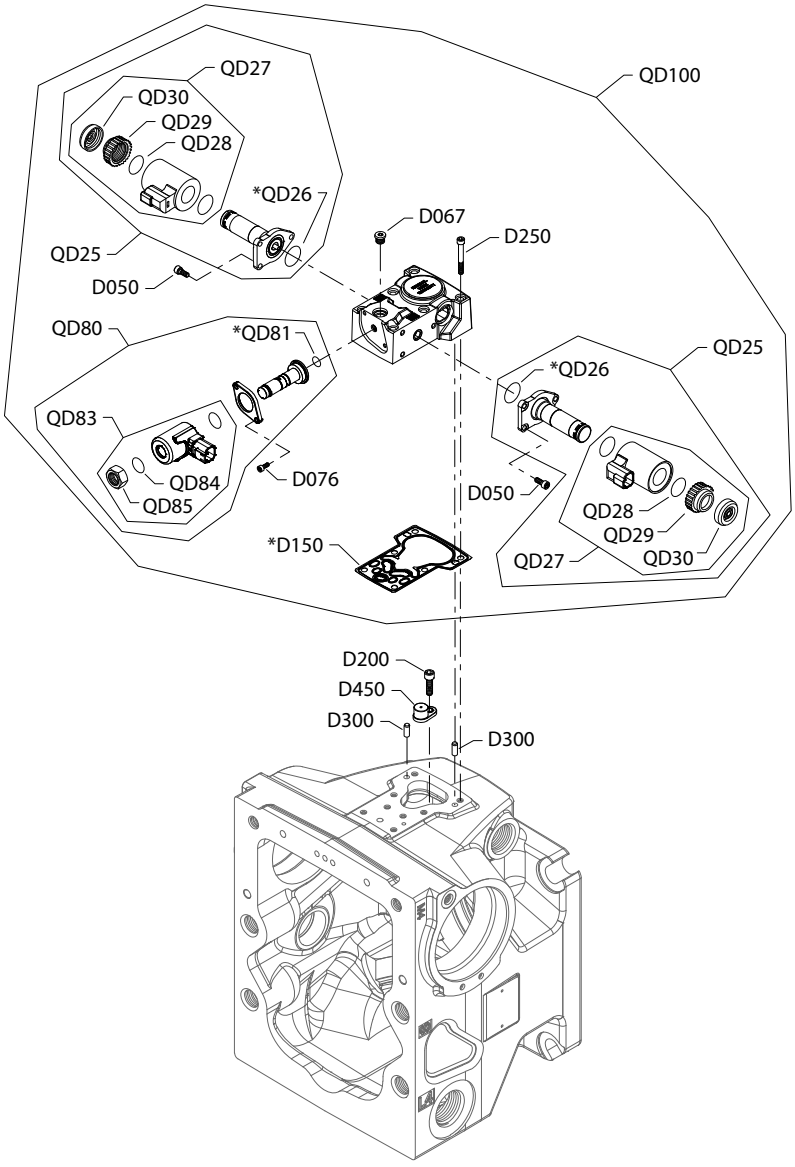

Generic housing shown

* Included in overhaul seal kit Q210

Control

Common parts

Item	Date Begin	Date End	Part Number	Part Name	Qty. per Model/Kit
D050	16-30		716860	Screw, M5 x 12	6
D067	16-30		9005110-4400	Plug assembly	1
D076	16-30		067694	Screw, M4 x 10	2
D150	16-30		11227209	Control gasket	1
D200	16-30		141472	Screw, special	1
D250	16-30		505038	Screw, M6 x 45	6
D300	16-30		310979	Dowel pin	2
D450	16-30		11003097	Magnetic carrier	1
QD26	16-30		11001952	O-ring	2
QD28	16-30		063172	O-ring	2
QD29	16-30		11004749	Coil nut	2
QD30	16-30		11027883	Cap	2
QD81	16-30		11152257	O-ring	1
QD85	16-30		11140394	Nut	1

Order code: N3

QD25	16-30		140750	Proportional solenoid, 12v	2
QD27	16-30		11004698	Coil kit, 12v, DEUTSCH connector	2
QD80	16-30		11231200	Solenoid, 12V, DEUTSCH connector	1
QD83	16-30		11232757	Coil kit, 12V, DEUTSCH connector	1
QD84	16-30		11232752	O-ring	1
QD100	16-30		11147920	NFPE control kit, 12v, CCO	1

Order code: N4

QD25	16-30		140751	Proportional solenoid, 24v	2
QD27	16-30		11004700	Coil kit, 24v, DEUTSCH connector	2
QD80	16-30		11231201	Solenoid, 24V, DEUTSCH connector	1
QD83	16-30		11232697	Coil kit, 24V, DEUTSCH connector	1
QD84	16-30		11232752	O-ring	1
QD100	16-30		11147924	NFPE control kit, 24v, CCO	1

Control

H1P control N5, N6

N5 and N6 configuration

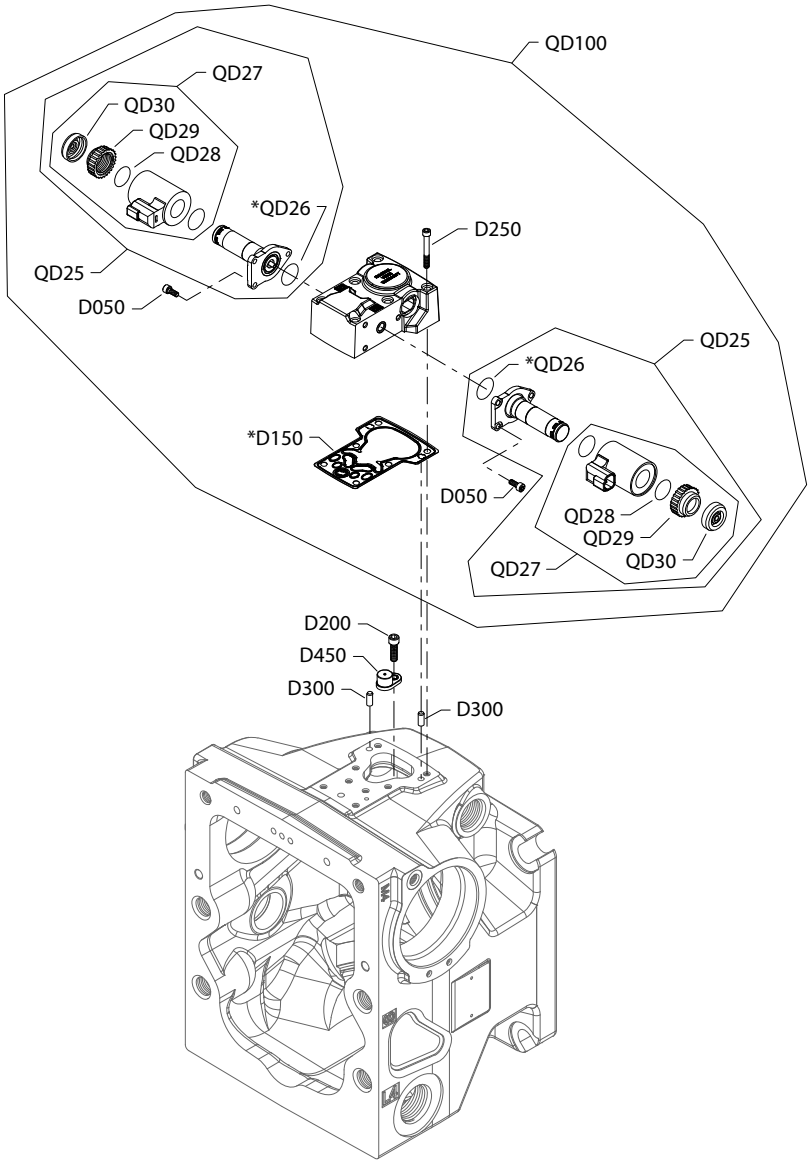

Generic housing shown

* Included in overhaul seal kit Q210

Control

Common parts

Item	Date Begin	Date End	Part Number	Part Name	Qty. per Model/Kit
D050	16-30		716860	Screw, M5 x 12	6
D150	16-30		11227209	Control gasket	1
D200	16-30		141472	Screw, special	1
D250	16-30		505038	Screw, M6 x 45	6
D300	16-30		310979	Dowel pin	2
D450	16-30		11003097	Magnetic carrier	1
QD26	16-30		11001952	O-ring	2
QD28	16-30		063172	O-ring	2
QD29	16-30		11004749	Coil nut	2
QD30	16-30		11027883	Cap	2

Order code: N5

QD25	16-30		140750	Proportional solenoid, 12v	2
QD27	16-30		11004698	Coil kit, 12v, DEUTSCH connector	2
QD100	16-30		11147918	NFPE control kit, 12v, manual override	1

Order code: N6

QD25	16-30		140751	Proportional solenoid, 24v	2
QD27	16-30		11004700	Coil kit, 24v, DEUTSCH connector	2
QD100	16-30		11147922	NFPE control kit, 24v, manual override	1

Control

H1P control N7, N8

N7 and N8 configuration

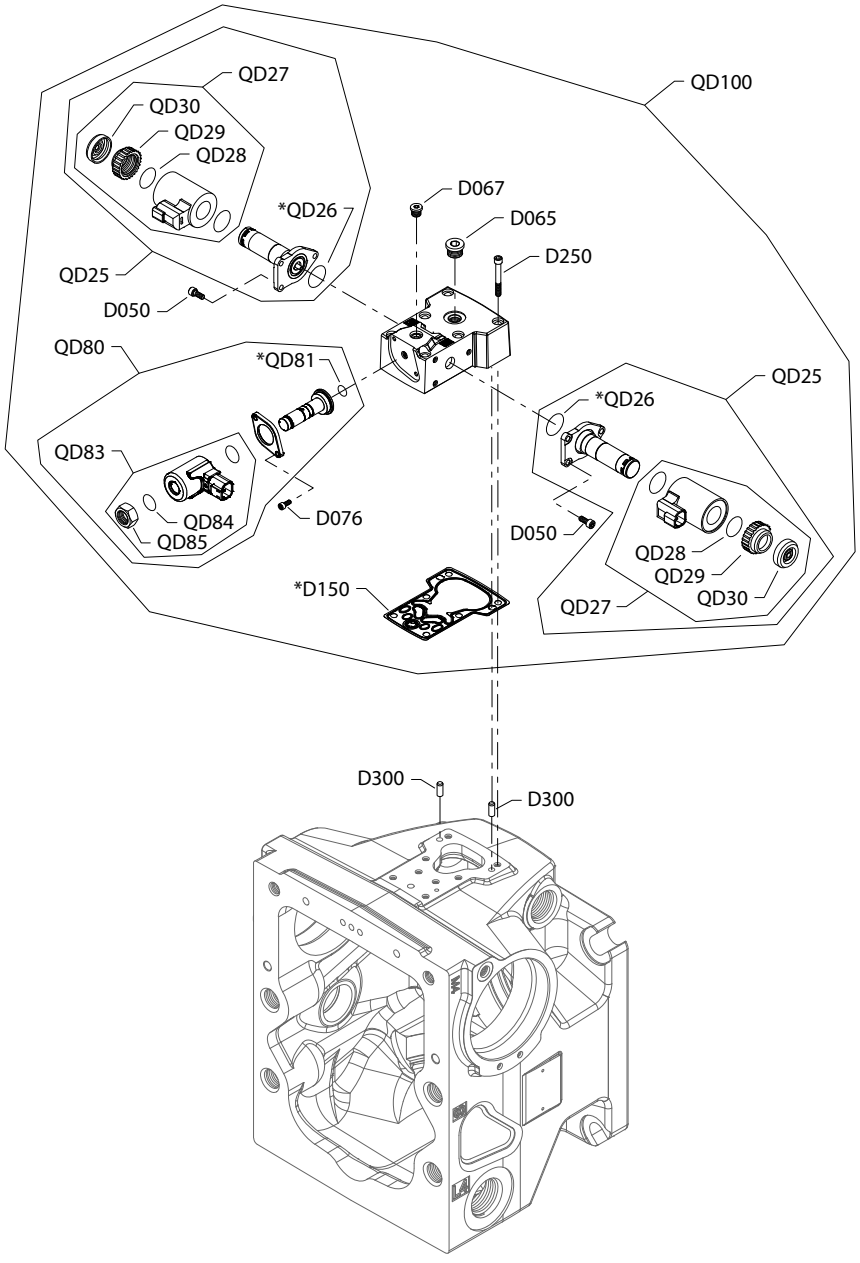

Generic housing shown

* Included in overhaul seal kit Q210

Control

Common parts

Item	Date Begin	Date End	Part Number	Part Name	Qty. per Model/Kit
D050	16-30		716860	Screw, M5 x 12	6
D067	16-30		9005110-4400	Plug assembly	1
D076	16-30		067694	Screw, M4 x 10	1
D150	16-30		11227209	Control gasket	1
D250	16-30		505038	Screw, M6 x 45	6
D300	16-30		310979	Dowel pin	2
QD26	16-30		11001952	O-ring	2
QD28	16-30		063172	O-ring	2
QD30	16-30		11027883	Cap	2
QD81	16-30		11152257	O-ring	1
QD85	16-30		11140394	Nut	1

Order code: N7

QD25	16-30		140750	Proportional solenoid, 12v	2
QD27	16-30		11004698	Coil kit, 12v, DEUTSCH connector	2
QD29	16-30		11004749	Coil nut	2
QD80	16-30		11231200	Solenoid, 12V, DEUTSCH connector	1
QD83	16-30		11232757	Coil kit, 12V, DEUTSCH connector	1
QD84	16-30		11232752	O-ring	1
QD100	16-30		11147919	NFPE control kit, 12v, CCO	1

Order code: N8

QD25	16-30		140751	Proportional solenoid, 24v	2
QD27	16-30		11004700	Coil kit, 24v, DEUTSCH connector	2
QD29	16-30		11004750	Coil nut	2
QD80	16-30		11231201	Solenoid, 24V, DEUTSCH connector	1
QD83	16-30		11232697	Coil kit, 24V, DEUTSCH connector	1
QD84	16-30		11232752	O-ring	1
QD100	16-30		11147923	NFPE control kit, 24v, CCO	1

Control

H1P control ND, NN

ND and NN configuration

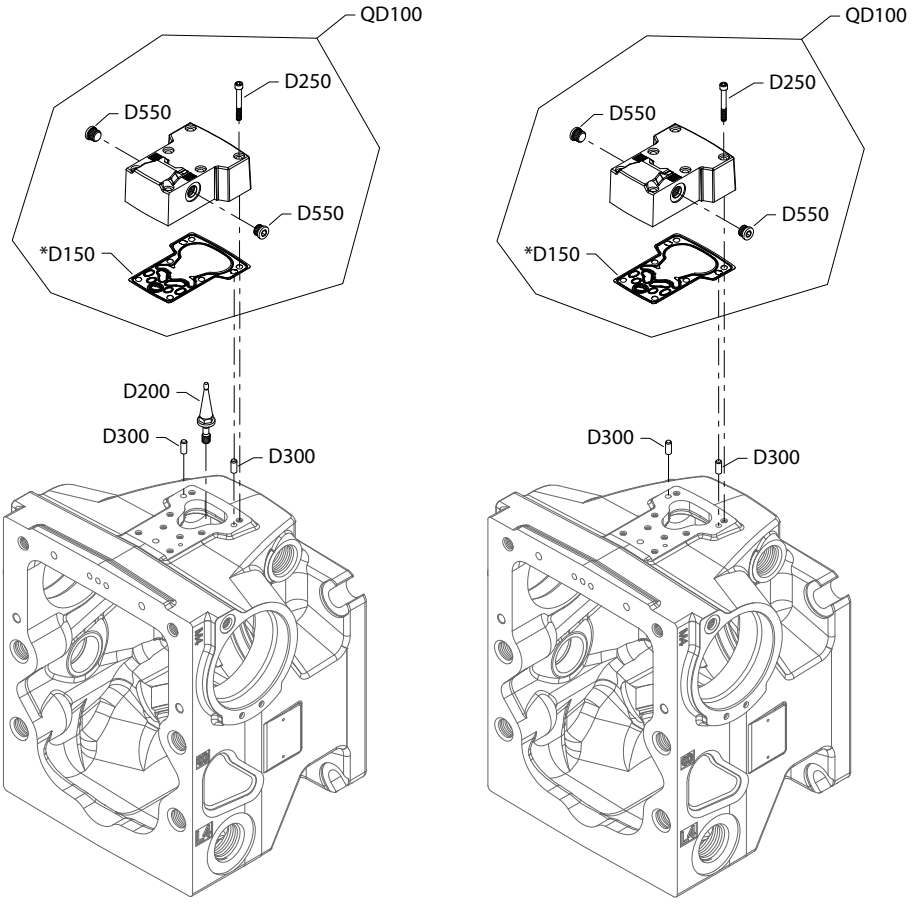

Generic housing shown

* Included in overhaul seal kit Q210

Control

Order code: ND

Item	Date Begin	Date End	Part Number	Part Name	Qty. per Model/Kit
D150	16-02		11227209	Control gasket	1
D200	16-02		11202172	Swashplate feedback link	1
D250	16-02		505038	Screw, M6 x 45	6
D300	16-02		310979	Dowel pin	2
D550	16-02		140644	Plug assembly	2
QD100	16-02		11121984	Control cover kit	1

Order code: NN

D150	14-01		11227209	Control gasket (*SB-2016-033* on page 169)	1
D250	14-01		505038	Screw, M6 x 45	6
D300	14-01		310979	Dowel pin	2
D550	14-01		140644	Plug assembly	2
QD100	14-01		11121984	Control cover kit	1

Control

H1P control P5

P5 configuration

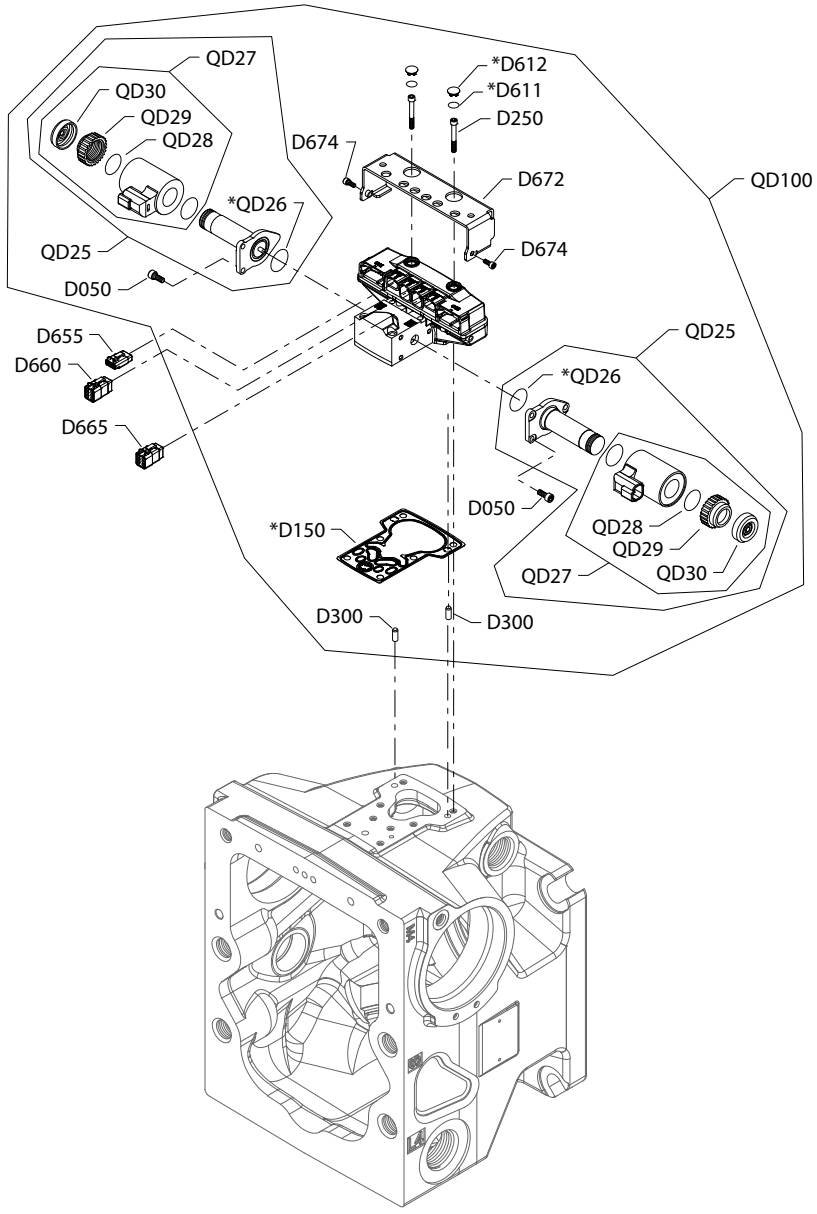

Generic housing shown

* Included in overhaul kit Q210

Control

Order code: P5

Item	Date Begin	Date End	Part Number	Part Name	Qty. per Model/Kit
D050	17-15		716860	Screw, M5 x 12	6
D150	17-15		11227209	Control gasket	1
D250	17-15		505038	Screw, M6 x 45	6
D300	17-15		11036469	Dowel pin	2
D611	17-15	21-12	11066774	O-ring (*SB-2021-014* on page 179)	2
D611	21-13		11225703	O-ring	2
D612	17-15	21-12	11003126	Plug (*SB-2021-014* on page 179)	2
D612	21-13		11223708	Plug	2
D655	17-15		11084827	Blank, connector DTM 06-3S	1
D660	17-15		11084822	Blank, connector DTM 06-6S	1
D665	17-15		11084827	Blank, connector DTM 06-3S	1
D672	17-15		11151875	Protection	1
D674	17-15		716860	Screw, M5 x 12	2
QD25	17-15		140750	Proportional solenoid, 12 volt	2
QD26	17-15		11001952	O-ring	2
QD27	17-15		11004698	Coil kit, 12v, DEUTSCH connector	2
QD28	17-15		063172	O-ring	2
QD29	17-15		11004749	Coil nut	2
QD30	17-15		11027883	Cap	2
QD100	17-15		11232768	Automotive control kit, 12v, manual override	1

Control

H1P control P6, P7

P6 and P7 configuration

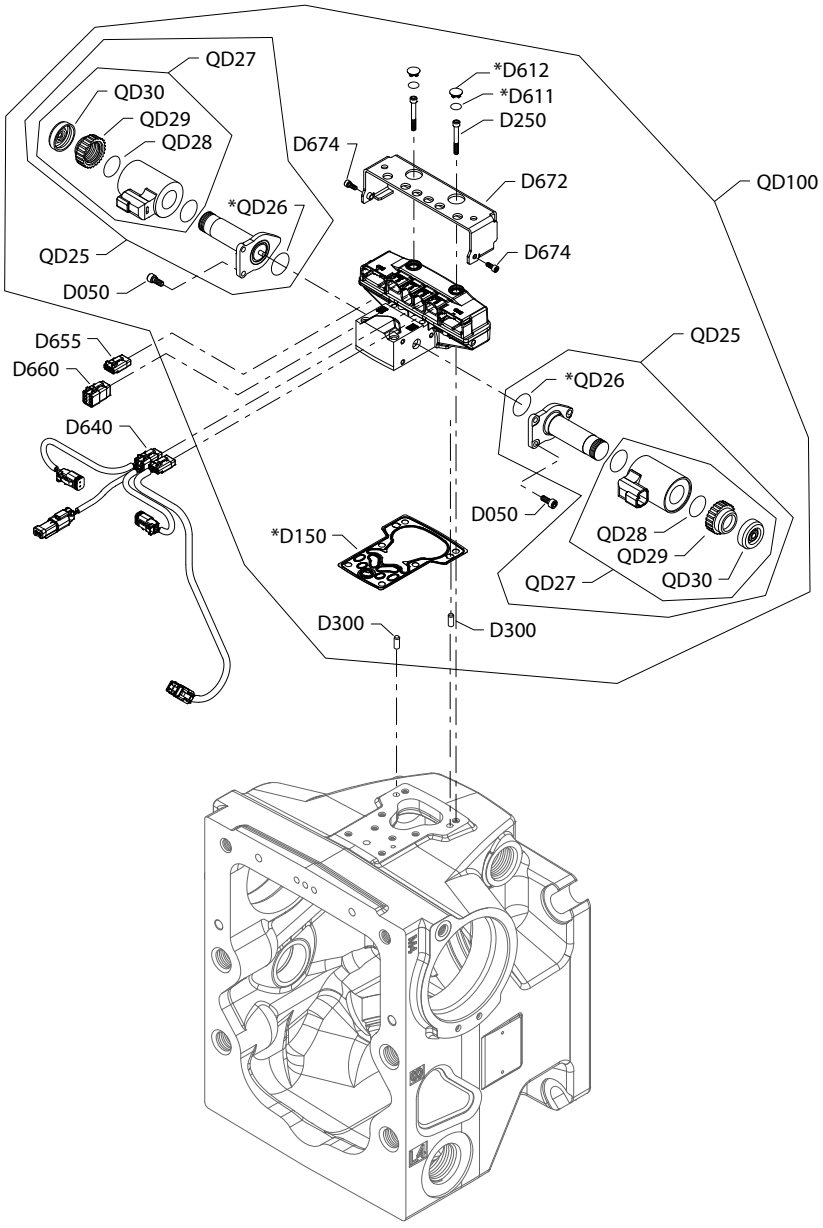

Generic housing shown

* Included in overhaul seal kit Q210

Control

Common parts

Item	Date Begin	Date End	Part Number	Part Name	Qty. per Model/Kit
D050	16-30		716860	Screw, M5 x 12	6
D150	16-30		11227209	Control gasket	1
D250	16-30		505038	Screw, M6 x 45	6
D300	16-30		11036469	Dowel pin	2
D611	16-30	21-12	11066774	O-ring (*SB-2021-014* on page 179)	2
D611	21-13		11225703	O-ring	2
D612	16-30	21-12	11003126	Plug (*SB-2021-014* on page 179)	2
D612	21-13		11223708	Plug	2
D640	16-30		11023348	AC wiring harness	1
D655	16-30		11084827	Blank, connector DTM 06-3S	1
D660	16-30		11084822	Blank, connector DTM 06-6S	1
D672	16-30		11151875	Protection	1
D674	16-30		716860	Screw, M5 x 12	2
QD26	16-30		11001952	O-ring	2
QD28	16-30		063172	O-ring	2
QD29	16-30		11004749	Coil nut	2
QD30	16-30		11027883	Cap	2

Order code: P6

QD25	16-30		140750	Proportional solenoid, 12 volt	2
QD27	16-30		11004698	Coil kit, 12v, DEUTSCH connector	2
QD100	16-30		11232768	Automotive control kit, 12v, manual override	1

Order code: P7

QD25	16-30		140751	Proportional solenoid, 24 volt	2
QD27	16-30		11004700	Coil kit, 24v, DEUTSCH connector	2
QD100	16-30		11232769	Automotive control kit, 24v, manual override	1

Control

H1P control P8, P9

P8 and P9 configuration

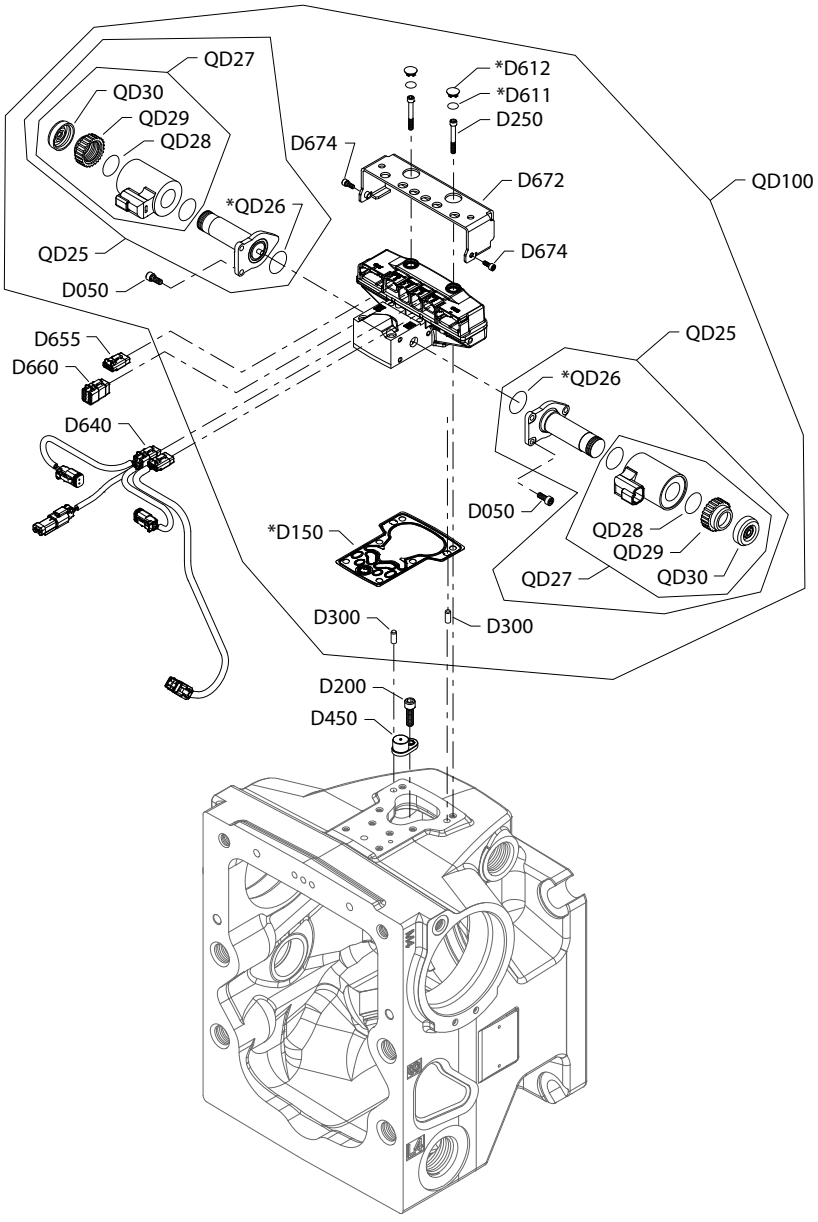

Generic housing shown

* Included in overhaul seal kit Q210

Control

Common parts

Item	Date Begin	Date End	Part Number	Part Name	Qty. per Model/Kit
D050	16-30		716860	Screw, M5 x 12	6
D150	16-30		11227209	Control gasket	1
D200	16-30		141472	Screw, special	1
D250	16-30		505038	Screw, M6 x 45	6
D300	16-30		11036469	Dowel pin	2
D450	16-30		11003097	Magnetic carrier	1
D611	16-30	21-12	11066774	O-ring (*SB-2021-014* on page 179)	2
D611	21-13		11225703	O-ring	2
D612	16-30	21-12	11003126	Plug (*SB-2021-014* on page 179)	2
D612	21-13		11223708	Plug	2
D640	16-30		11023348	AC wiring harness	1
D655	16-30		11084827	Blank, connector DTM 06-3S	1
D660	16-30		11084822	Blank, connector DTM 06-6S	1
D672	16-30		11151875	Protection	1
D674	16-30		716860	Screw, M5 x 12	2
QD26	16-30		11001952	O-ring	2
QD28	16-30		063172	O-ring	2
QD30	16-30		11027883	Cap	2

Order code: P8

QD25	16-30		140750	Proportional solenoid, 12 volt	2
QD27	16-30		11004698	Coil kit, 12v, DEUTSCH connector	2
QD29	16-30		11004749	Coil nut	2
QD100	16-30		11232770	Automotive control kit, 12v, manual override	1

Order code: P9

QD25	16-30		140751	Proportional solenoid, 24 volt	2
QD27	16-30		11004700	Coil kit, 24v, DEUTSCH connector	2
QD29	16-30		11004750	Coil nut	2
QD100	16-30		11232771	Automotive control kit, 24v, manual override	1

Control

H1P control R1, R2

R1 and R2 configuration

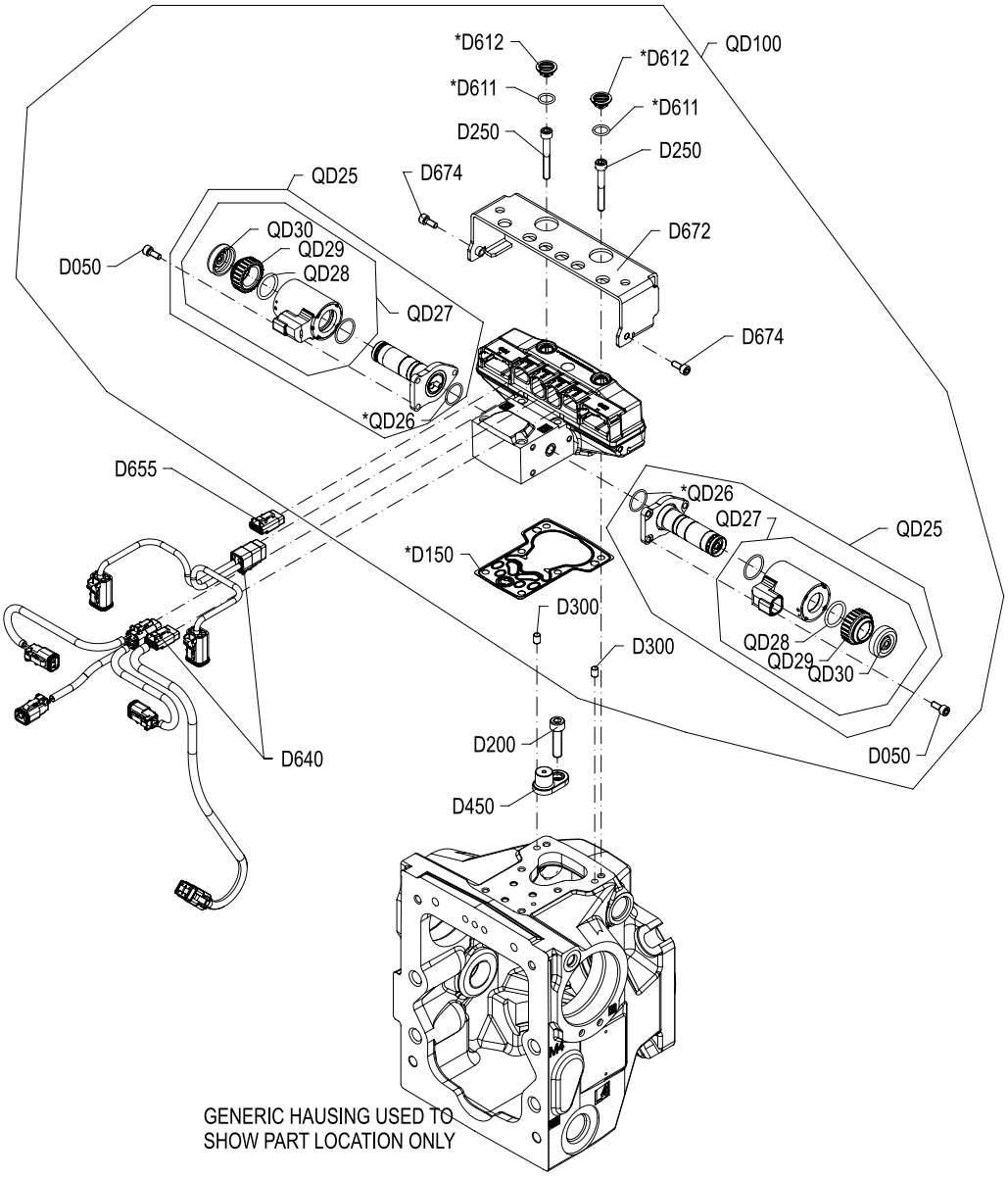

Generic housing shown

* Included in overhaul seal kit Q210

Control

Common parts

Item	Date Begin	Date End	Part Number	Part Name	Qty. per Model/Kit
D050	16-30		716860	Screw, M5 x 12	6
D150	16-30		11227209	Control gasket	1
D200	16-30		141472	Screw, special	1
D250	16-30		505038	Screw, M6 x 45	6
D300	16-30		11036469	Dowel pin	2
D450	16-30		11003097	Magnetic carrier	1
D611	16-30	21-12	11066774	O-ring (*SB-2021-014* on page 179)	2
D611	21-13		11225703	O-ring	2
D612	16-30	21-12	11003126	Plug (*SB-2021-014* on page 179)	2
D612	21-13		11223708	Plug	2
D640	16-30		11105876	AC wiring harness	1
D655	16-30		11084827	Blank, connector DTM 06-3S	1
D672	16-30		11151875	Protection	1
D674	16-30		716860	Screw, M5 x 12	2
QD26	16-30		11001952	O-ring	2
QD28	16-30		063172	O-ring	2
QD30	16-30		11027883	Cap	2

Order code: R1

QD25	16-30		140750	Proportional solenoid, 12 volt	2
QD27	16-30		11004698	Coil kit, 12v, DEUTSCH connector	2
QD29	16-30		11004749	Coil nut	2
QD100	16-30		11232770	Automotive control kit, 12v, manual override	1

Order code: R2

QD25	16-30		140751	Proportional solenoid, 24 volt	2
QD27	16-30		11004700	Coil kit, 24v, DEUTSCH connector	2
QD29	16-30		11004750	Coil nut	2
QD100	16-30		11232771	Automotive control kit, 24v, manual override	1

Control

H1P control R3

R3 configuration

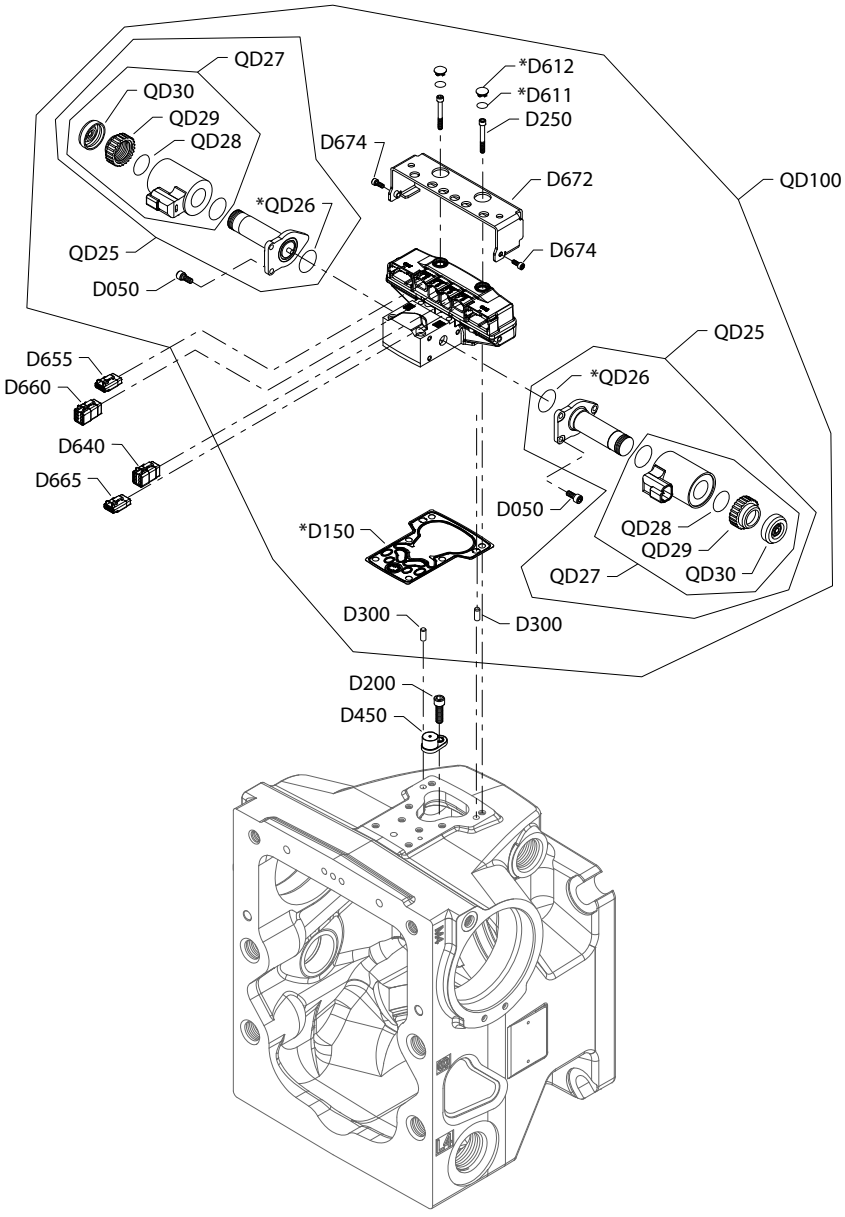

Generic housing shown

* Included in overhaul seal kit Q210

Control

Order code: R3

Item	Date Begin	Date End	Part Number	Part Name	Qty. per Model/Kit
D050	16-17		716860	Screw, M5 x 12	6
D150	16-17		11227209	Control gasket	1
D200	16-17		141472	Screw, special	1
D250	16-17		505038	Screw, M6 x 45	6
D300	16-17		11036469	Dowel pin	2
D450	16-17		11003097	Magnetic carrier	1
D611	16-17	21-12	11066774	O-ring (*SB-2021-014* on page 179)	2
D611	21-13		11225703	O-ring	2
D612	16-17	21-12	11003126	Plug (*SB-2021-014* on page 179)	2
D612	21-13		11223708	Plug	2
D640	16-17		11084822	Blank, connector DTM 06-6S	1
D655	16-17		11084827	Blank, connector DTM 06-3S	1
D660	16-17		11084822	Blank, connector DTM 06-6S	1
D665	16-17		11084827	Blank, connector DTM 06-3S	1
D672	16-17		11151875	Protection	1
D674	16-17		716860	Screw, M5 x 12	2
QD25	16-17		140751	Proportional solenoid, 24 volt	2
QD26	16-17		11001952	O-ring	2
QD27	16-17		11004700	Coil kit, 24v, DEUTSCH connector	2
QD28	16-17		063172	O-ring	2
QD29	16-17		11004750	Coil nut	2
QD30	16-17		11027883	Cap	2
QD100	16-17		11232769	Automotive control kit, 24v, manual override	1

Control

H1P control R4

R4 configuration

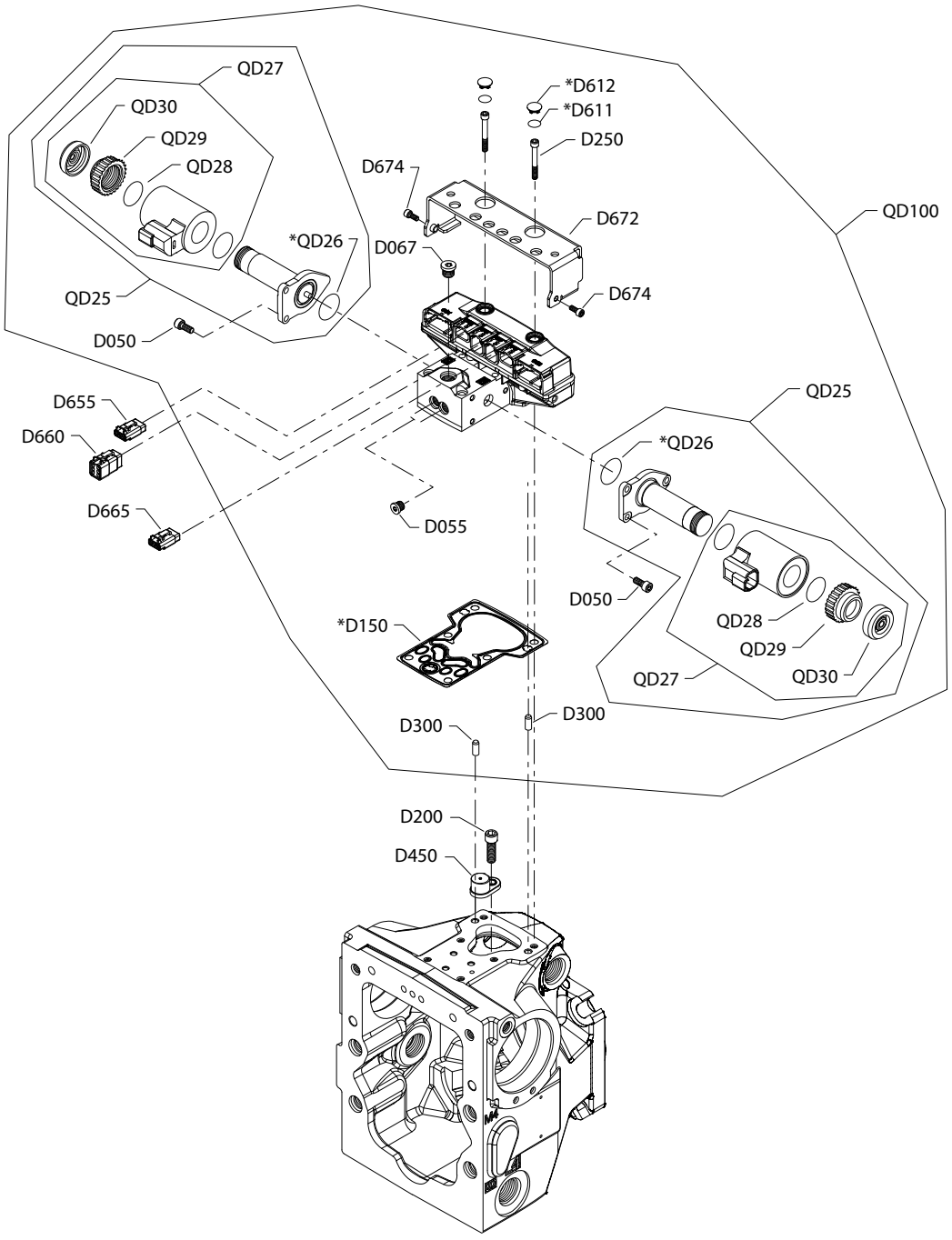

Generic housing shown

* Included in overhaul seal kit Q210

Control

Order code: R4

Item	Date Begin	Date End	Part Number	Part Name	Qty. per Model/Kit
D050	17-15		716860	Screw, M5 x 12	6
D150	17-15		11227209	Control gasket	1
D200	17-15		141472	Screw, special	1
D250	17-15		505038	Screw, M6 x 45	6
D300	17-15		11036469	Dowel pin	2
D450	17-15		11003097	Magnetic carrier	1
D611	17-15	21-12	11066774	O-ring (*SB-2021-014* on page 179)	2
D611	21-13		11225703	O-ring	2
D612	17-15	21-12	11003126	Plug (*SB-2021-014* on page 179)	2
D612	21-13		11223708	Plug	2
D655	17-15		11084827	Blank, connector DTM 06-3S	1
D660	17-15		11084822	Blank, connector DTM 06-6S	1
D665	17-15		11084827	Blank, connector DTM 06-3S	1
D672	17-15		11151875	Protection	1
D674	17-15		716860	Screw, M5 x 12	2
QD25	17-15		140750	Proportional solenoid, 12 volt	2
QD26	17-15		11001952	O-ring	2
QD27	17-15		11004698	Coil kit, 12v, DEUTSCH connector	2
QD28	17-15		063172	O-ring	2
QD29	17-15		11004749	Coil nut	2
QD30	17-15		11027883	Cap	2
QD100	17-15		11232770	Automotive control kit, 12v, manual override	1

Control

H1P control S2

Parts configuration

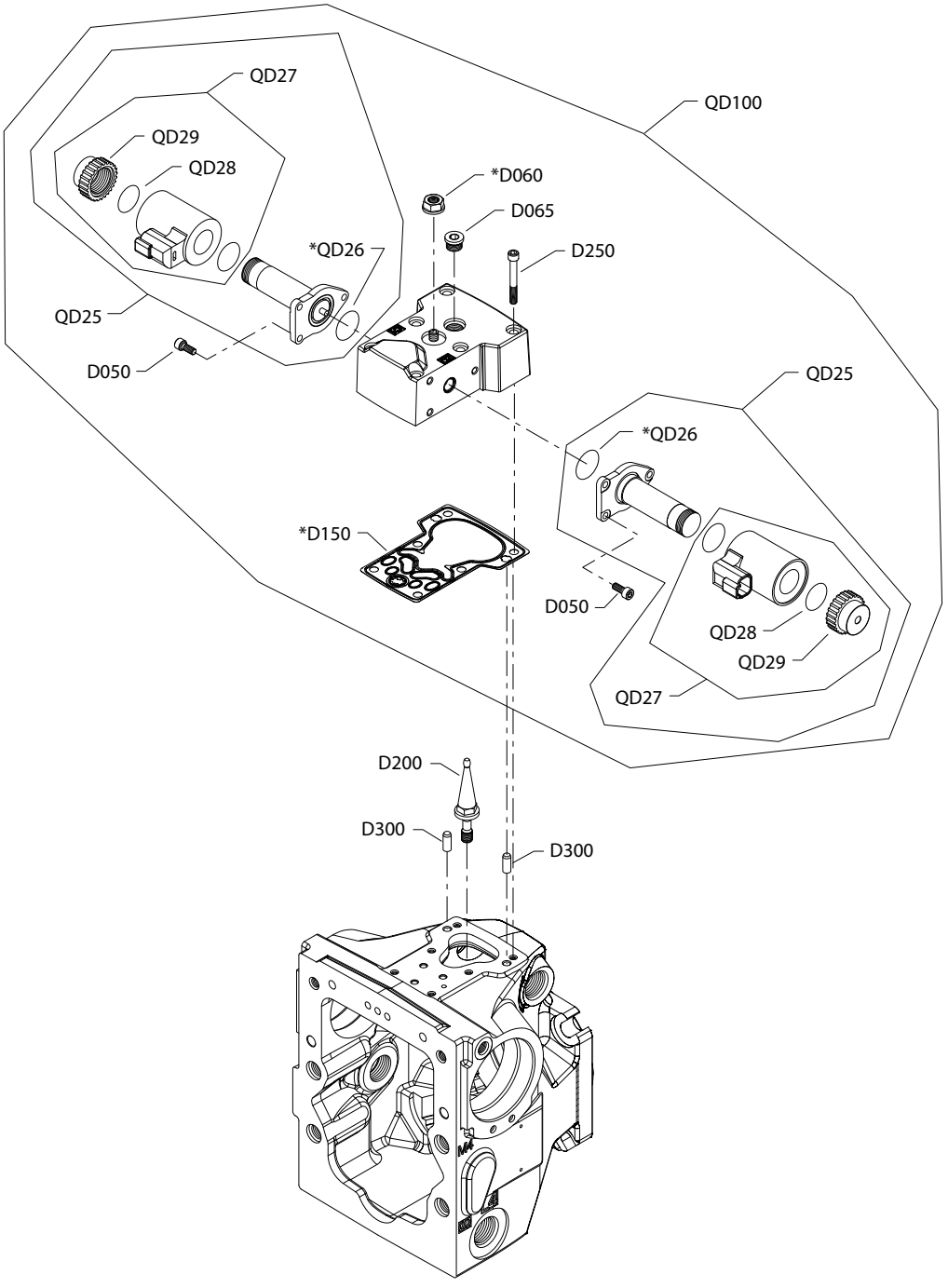

Generic housing shown

* Included in overhaul seal kit Q210

Control

Order code: S2

Item	Date Begin	Date End	Part Number	Part Name	Qty. per Model/Kit
D050	09-27		716860	Screw, M5 x 12	6
D060	09-27		612291 (9003508-0008)	Seal nut, M8	1
D065	09-27		9005110-4400	Plug assembly	1
D150	09-27		11227209	Control gasket (*SB-2016-033* on page 169)	1
D200	09-27		11202172	Swashplate feedback link (*SB-2018-025* on page 173)	1
D250	09-27		505038	Screw, M6 x 45	6
D300	09-27		310979	Dowel pin	2
QD25	09-27		11012457	Proportional solenoid, 12V	2
QD26	09-27		11001952	O-ring	2
QD27	09-27		11028018	Coil kit, 12V, DEUTSCH connector	2
QD28	09-27		063172	O-ring	2
QD29	09-27		11027046	Coil nut	2
QD100	09-27		11170371	EDC kit, 12V, DEUTSCH connector, fast	1

Control

H1P control S6

Parts configuration

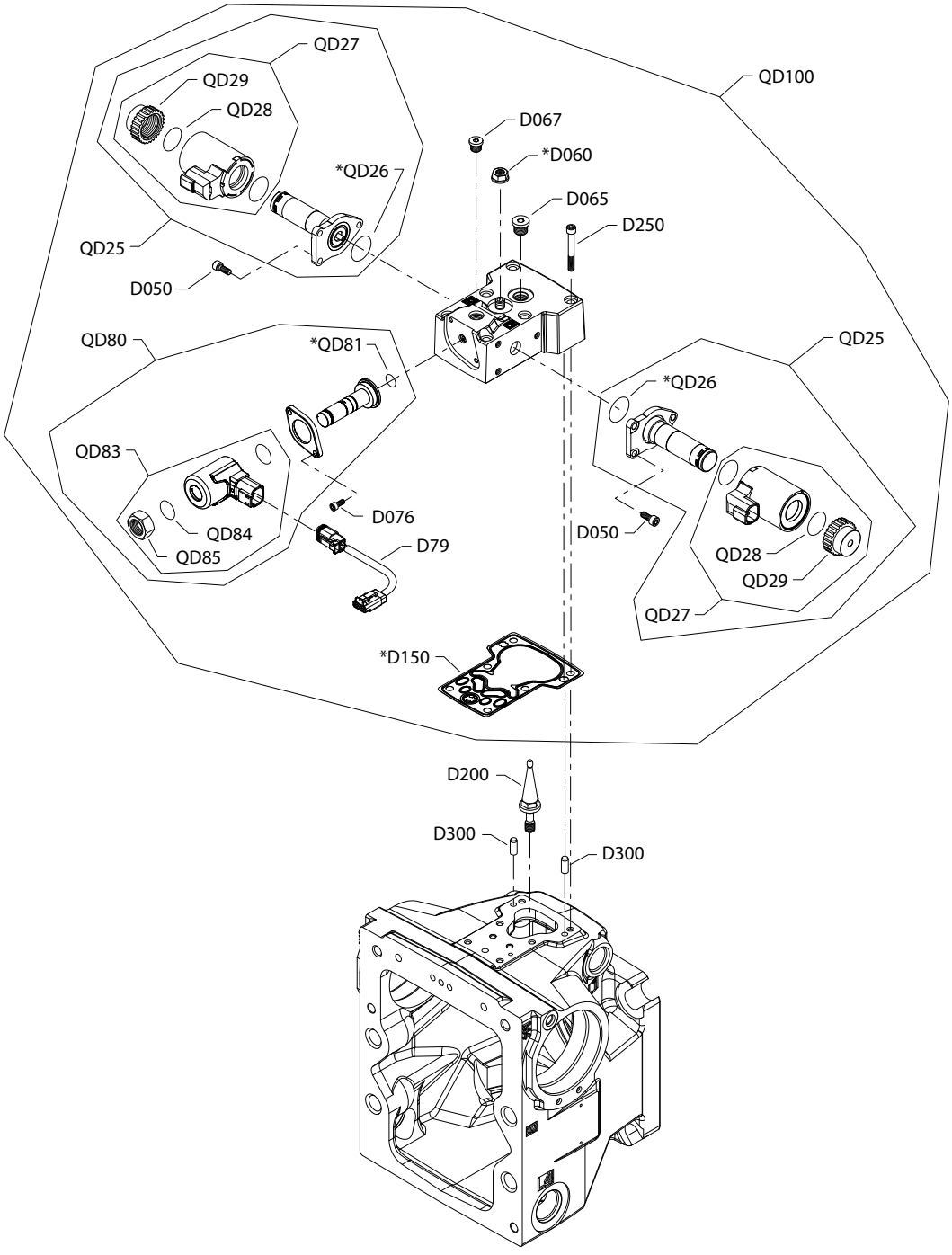

Generic housing shown.

* Included in overhaul seal kit Q210

Control

Order code: S6

Item	Date Begin	Date End	Part Number	Part Name	Qty. per Model/Kit
D79	14-25		11150437	Cable adapter	1
D050	14-25		716860	Screw, M5 x 12	6
D060	14-25		612291 (9003508-0008)	Seal nut, M8	1
D065	14-25		9005110-4400	Plug assembly	1
D067	14-25		11040532	Plug assembly	1
D076	14-25		067694	Screw, M4 x 10	2
D150	14-25		11227209	Control gasket (*SB-2016-033* on page 169)	1
D200	14-25		11202172	Swashplate feedback link (*SB-2018-025* on page 173)	1
D250	14-25		505038	Screw, M6 x 45	6
D300	14-25		310979	Dowel pin	2
QD25	14-25		11012457	Proportional solenoid, 12v	2
QD26	14-25		11001952	O-ring	2
QD27	14-25		11028018	Coil kit, 12v, DEUTSCH connector	2
QD28	14-25		063172	O-ring	2
QD29	14-25		11027046	Coil nut	2
QD80	14-25		11231200	Solenoid vale, on/off, 12v	1
QD81	14-25		11152257	O-ring	1
QD83	14-25		11232757	Coil kit, 12v	1
QD84	14-25		11232752	O-ring	1
QD85	14-25		11140394	Coil nut	1
QD100	14-25		11152574	EDC kit, 12v, CORF	1

Control

H1P control S7

Parts configuration

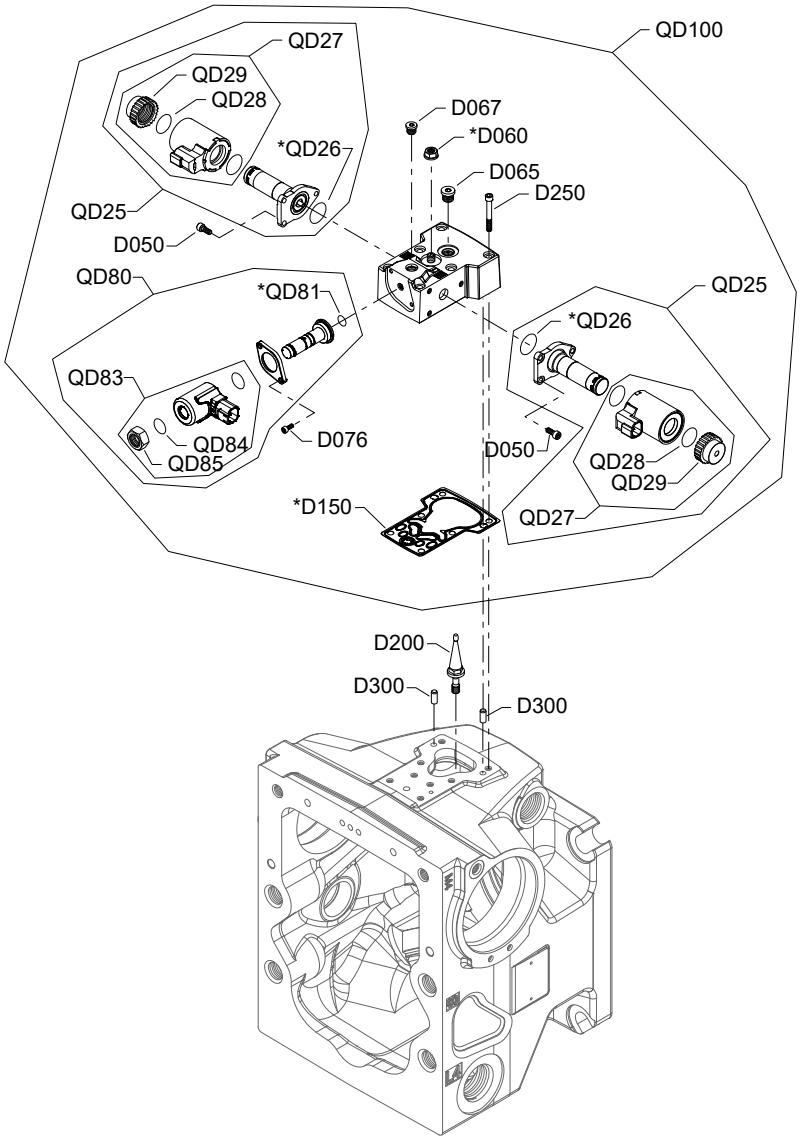

Generic housing shown.

* Included in overhaul seal kit Q210

Control

Order code: S7

Item	Date Begin	Date End	Part Number	Part Name	Qty. per Model/Kit
D050	14-31		716860	Screw, M5 x 12	6
D060	14-31		612291 (9003508-0008)	Seal nut, M8	1
D065	14-31		9005110-4400	Plug assembly	1
D067	14-31		11040532	Plug assembly	1
D076	14-25		067694	Screw, M4 x 10	2
D150	14-31		11227209	Control gasket (*SB-2016-033* on page 169)	1
D200	14-31		11202172	Swashplate feedback link (*SB-2018-025* on page 173)	1
D250	14-31		505038	Screw, M6 x 45	6
D300	14-31		310979	Dowel pin	2
QD25	14-31		11012457	Proportional solenoid, 12v	2
QD26	14-31		11001952	O-ring	2
QD27	14-31		11028018	Coil kit, 12v, DEUTSCH connector	2
QD28	14-31		063172	O-ring	2
QD29	14-31		11027046	Coil nut	2
QD80	14-31		11231200	Solenoid vale, on/off, 12v	1
QD81	14-31		11152257	O-ring	1
QD83	14-31		11232757	Coil kit, 12v	1
QD84	14-31		11232752	O-ring	1
QD85	14-31		11140394	Coil nut	1
QD100	14-31		11152574	EDC kit, 12v, CORF	1

Control

H1P control T6, T7

Parts configuration

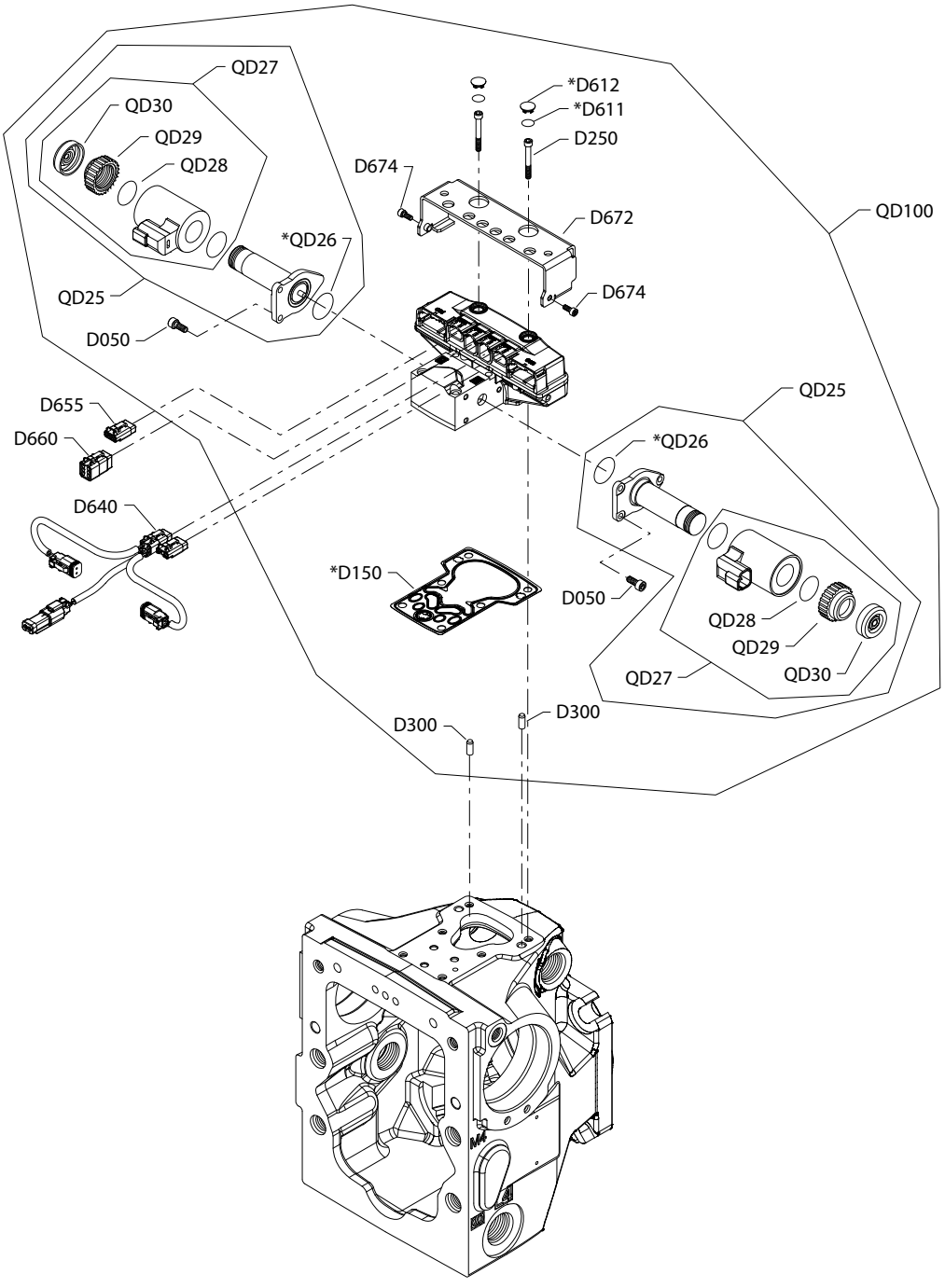

Generic housing shown

* Included in overhaul seal kit Q210

Control

Order code: T6

Item	Date Begin	Date End	Part Number	Part Name	Qty. per Model/Kit
D050	18-15		716860	Screw, M5 x 12	6
D150	18-15		11227209	Control Gasket	1
D250	18-15		505038	Screw, M6 x 45	6
D300	18-15		11036469	Dowel pin	2
D611	18-15	21-12	11066774	O-ring (*SB-2021-014* on page 179)	2
D611	21-13		11225703	O-ring	2
D612	18-15	21-12	11003126	Plug (*SB-2021-014* on page 179)	2
D612	21-13		11223708	Plug	2
D640	18-15		11197432	AC wiring harness	1
D655	18-15		11084827	Blank, connector DTM 06-3S	1
D660	18-15		11084822	Blank, connector DTM 06-6S	1
D665	18-15		11084827	Blank, connector DTM 06-3S	1
D672	18-15		11151875	Protection	1
D674	18-15		716860	Screw, M5 x 12	2
QD100	18-15		11232768	Automotive control kit, 12v, manual override	1
QD25	18-15		140750	Proportional solenoid, 12v	2
QD26	18-15		11001952	O-ring	2
QD27	18-15		11004698	Coil kit, 12v, DEUTSCH connector	2
QD28	18-15		063172	O-ring	2
QD29	18-15		11004749	Coil nut	2
QD30	18-15		11027883	Cap	2

Order code: T7

D050	18-15		716860	Screw, M5 x 12	6
D150	18-15		11227209	Control gasket	1
D250	18-15		505038	Screw, M6 x 45	6
D300	18-15		11036469	Dowel pin	2
D611	18-15	21-12	11066774	O-ring (*SB-2021-014* on page 179)	2
D611	21-13		11225703	O-ring	2
D612	18-15	21-12	11003126	Plug (*SB-2021-014* on page 179)	2
D612	21-13		11223708	Plug	2
D640	18-15		11197432	AC wiring harness	1
D655	18-15		11084827	Blank, connector DTM 06-3S	1
D660	18-15		11084822	Blank, connector DTM 06-6S	1
D665	18-15		11084827	Blank, connector DTM 06-3S	1
D672	18-15		11151875	Protection	1
D674	18-15		716860	Screw, M5 x 12	2
QD100	18-15		11232769	Automotive control kit, 24v, manual override	1
QD25	18-15		140751	Proportional solenoid, 24v	2
QD26	18-15		11001952	O-ring	2
QD27	18-15		11004700	Coil kit, 24v, DEUTSCH connector	2
QD28	18-15		063172	O-ring	2
QD29	18-15		11004750	Coil nut	2
QD30	18-15		11027883	Cap	2

Control

H1P control T8, T9

Parts configuration

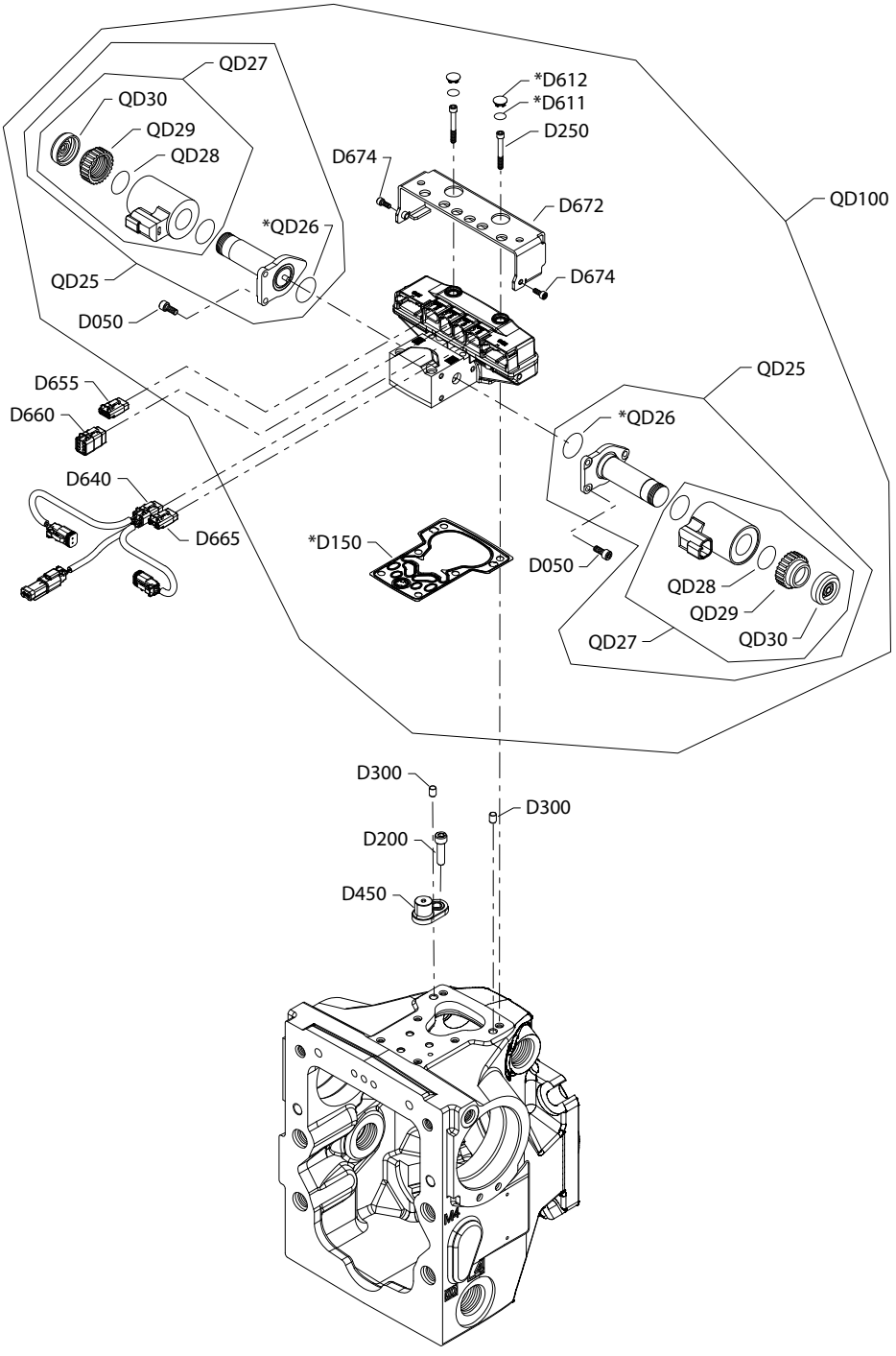

Generic housing shown

* Included in overhaul seal kit Q210

Control

Order code: T8

Item	Date Begin	Date End	Part Number	Part Name	Qty. per Model/Kit
D050	18-12		716860	Screw, M5 x 12	6
D150	18-12		11227209	Control gasket	1
D200	18-12		141472	Screw, special	1
D250	18-12		505038	Screw, M6 x 45	6
D300	18-12		11036469	Dowel pin	2
D450	18-12		11003097	Magnet carrier	1
D611	18-12	21-12	11066774	O-ring (*SB-2021-014* on page 179)	2
D611	21-13		11225703	O-ring	2
D612	18-12	21-12	11003126	Plug (*SB-2021-014* on page 179)	2
D612	21-13		11223708	Plug	2
D640	18-12		11197432	AC wiring harness	1
D655	18-12		11084827	Blank, connector DTM 06-3S	1
D660	18-12		11084822	Blank, connector DTM 06-6S	1
D665	18-12		11084827	Blank, connector DTM 06-3S	1
D672	18-12		11151875	Protection	1
D674	18-12		716860	Screw, M5 x 12	2
QD100	18-12		11232770	Automotive control kit, 12v, manual override	1
QD25	18-12		140750	Proportional solenoid, 12v	2
QD26	18-12		11001952	O-ring	2
QD27	18-12		11004698	Coil kit, 12v, DEUTSCH connector	2
QD28	18-12		063172	O-ring	2
QD29	18-12		11004749	Coil nut	2
QD30	18-12		11027883	Cap	2

Order code: T9

D150	18-12		11227209	Control gasket	1
D200	18-12		141472	Screw, special	1
D250	18-12		505038	Screw, M6 x 45	6
D450	18-12		11003097	Magnet carrier	1
D611	18-12	21-12	11066774	O-ring (*SB-2021-014* on page 179)	2
D611	21-13		11225703	O-ring	2
D612	18-12	21-12	11003126	Plug (*SB-2021-014* on page 179)	2
D612	21-13		11223708	Plug	2
D640	18-12		11197432	AC wiring harness	1
D655	18-12		11084827	Blank, connector DTM 06-3S	1
D660	18-12		11084822	Blank, connector DTM 06-6S	1
D665	18-15		11084827	Blank, connector DTM 06-3S	1
D672	18-12		11151875	Protection	1
D674	18-12		716860	Screw, M5 x 12	2
QD100	18-12		11232771	Automotive control kit, 24v, manual override	1
QD25	18-12		140751	Proportional solenoid, 24v	2
QD26	18-12		11001952	O-ring	2
QD27	18-12		11004700	Coil kit, 24v, DEUTSCH connector	2
QD28	18-12		063172	O-ring	2

Control

Order code: T9 (continued)

QD29	18-12		11004750	Coil nut	2
QD30	18-12		11027883	Cap	2

Displacement limitation

H1P 89/100 displacement limitation B-N

Parts configuration

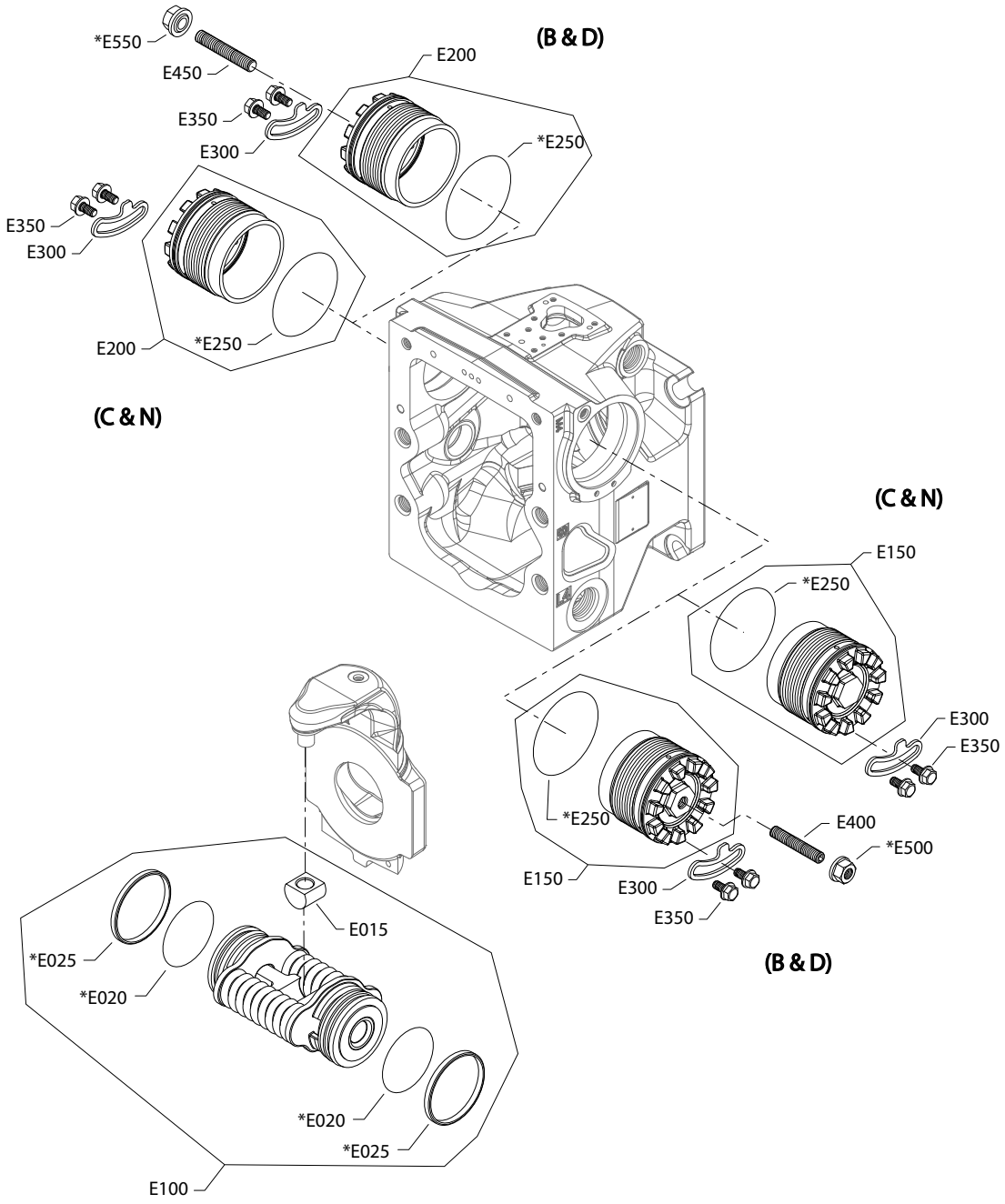

Generic housing shown

* Included in overhaul seal kit Q210

Displacement limitation

Common parts

Item	Date Begin	Date End	Part Number	Part Name	Qty. per Model/Kit
E015	09-27		11141990	Slider block	1
E020	09-27		11075555	O-ring	2
E025	09-27		11075554	Piston seal ring	2
E250	09-27		012187	O-ring	2
E300	09-27		11229549	Locking plate	2
E350	09-27		508438	Screw, M6 x 12	4

Order code: B

E100	09-27		11008551	Servo piston assembly	1
E150	09-27		11089750	Servo cylinder assembly	1
E200	09-27		11089750	Servo cylinder assembly	1
E400	09-27		749556	Set screw, M10 x 80	1
E450	09-27		749556	Set screw, M10 x 80	1
E500	09-27		042432	Seal nut, M10	1
E550	09-27		042432	Seal nut, M10	1

Order code: C

E100	09-27		11008614	Servo piston assembly, nested springs	1
E150	09-27		11089751	Servo cylinder assembly	1
E200	09-27		11089751	Servo cylinder assembly	1

Order code: D

E100	09-27		11008614	Servo piston assembly, nested springs	1
E150	09-27		11089750	Servo cylinder assembly	1
E200	09-27		11089750	Servo cylinder assembly	1
E400	09-27		749556	Set screw, M10 x 80	1
E450	09-27		749556	Set screw, M10 x 80	1
E500	09-27		042432	Seal nut, M10	1
E550	09-27		042432	Seal nut, M10	1

Order code: N

E100	09-27		11008551	Servo piston assembly	1
E150	09-27		11089751	Servo cylinder assembly	1
E200	09-27		11089751	Servo cylinder assembly	1

Orifice

H1P orifice C-D

Parts configuration

(C1, C2, C4, C5, D8, E1)

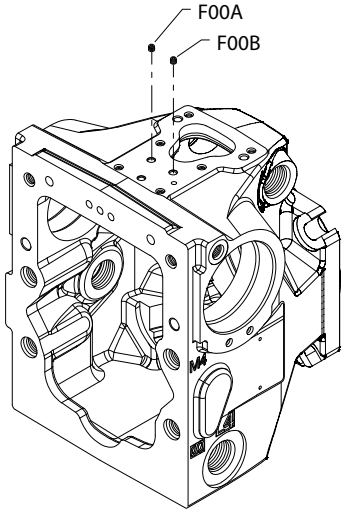

(C6, C7)

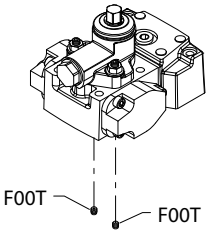

(C8, C9, D1, D2, D3, D6, E5)

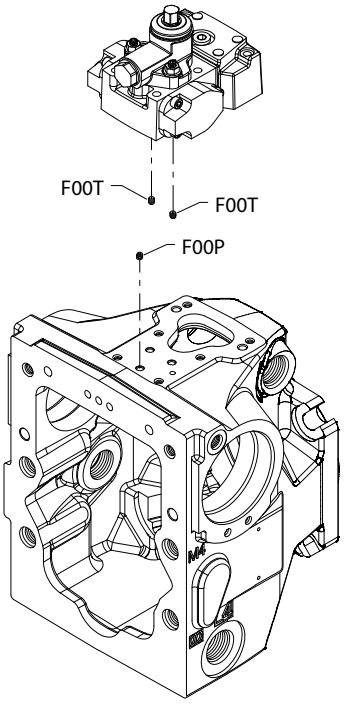

(D4, D5)

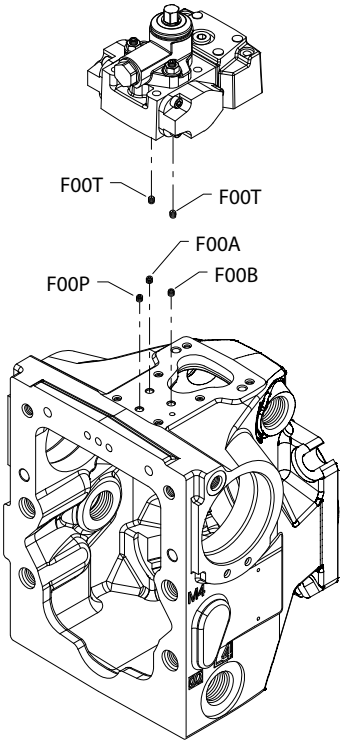

Generic controls and housings shown.

Orifice

Order code: C1

Item	Date Begin	Date End	Part Number	Part Name	Qty. per Model/Kit
F00A	09-27		140611	Orifice, 0.8, M6 x 0.75 mm	1
F00B	09-27		140611	Orifice, 0.8, M6 x 0.75 mm	1

Order code: C2

F00A	09-27		140754	Orifice, 1.3, M6 x 0.75 mm	1
F00B	09-27		140754	Orifice, 1.3, M6 x 0.75 mm	1

Order code: C3

No parts

Order code: C4

F00A	14-01		140757	Orifice, 1.8, M6 x 0.75 mm	1
F00B	14-01		140757	Orifice, 1.8, M6 x 0.75 mm	1

Order code: C5

F00A	18-01		140759	Orifice, 2.5, M6 x 0.75mm	1
F00B	18-01		140759	Orifice, 2.5, M6 x 0.75mm	1

Order code: C6

F00T	09-27		11151734	Orifice, 1.0, M6 x 0.75 mm	2

Order code: C7

F00T	09-27		140754	Orifice, 1.3, M6 x 0.75 mm	2

Order code: D1

F00P	09-27		11151734	Orifice, 1.0 M6 x 0.75 mm	1
F00T	09-27		140611	Orifice, 0.8 M6 x 0.75 mm	2

Order code: D2

F00P	09-27		140754	Orifice, 1.3, M6 x 0.75 mm	1
F00T	09-27		140611	Orifice, 0.8 M6 x 0.75 mm	2

Orifice

Parts configuration

(C1, C2, C4, C5, D8, E1)

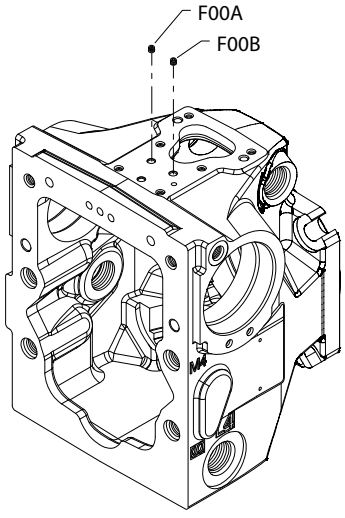

(C6, C7)

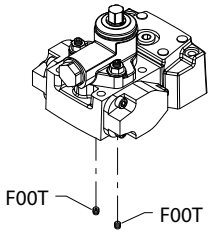

(C8, C9, D1, D2, D3, D6, E5)

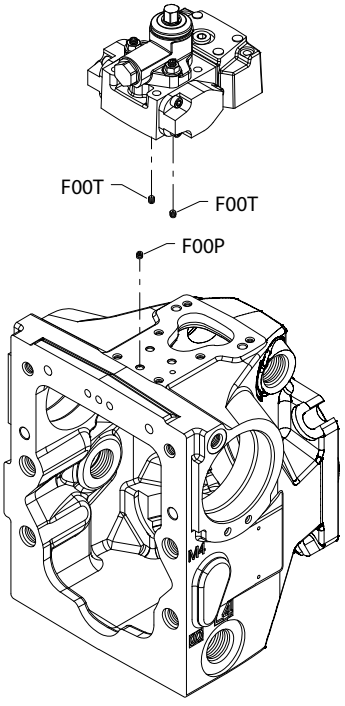

(D4, D5)

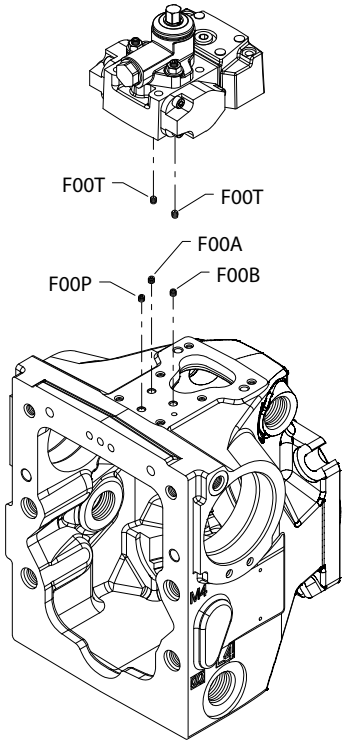

Generic controls and housings shown.

Orifice

Order code: D3

Item	Date Begin	Date End	Part Number	Part Name	Qty. per Model/Kit
F00P	09-27		140754	Orifice, 1.3, M6 x 0.75 mm	1
F00T	09-27		11151734	Orifice, 1.0 M6 x 0.75 mm	2

Order code: D4

F00A	09-27		140754	Orifice, 1.3, M6 x 0.75 mm	1
F00B	09-27		140754	Orifice, 1.3, M6 x 0.75 mm	1
F00P	09-27		140754	Orifice, 1.3, M6 x 0.75 mm	1
F00T	09-27		11151734	Orifice, 1.0 M6 x 0.75 mm	2

Order code: D6

F00P	14-01		140754	Orifice, 1.3, M6 x 0.75 mm	1
F00T	14-01		140754	Orifice, 1.3, M6 x 0.75 mm	2

Order code: D8

F00A	17-07		11189557	Orifice, 2.3, M6 x 0.75mm	1
F00B	17-07		11189557	Orifice, 2.3, M6 x 0.75mm	1

Order code: E1

F00A	17-09		11151734	Orifice, 1.0, M6 x 0.75	1
F00B	17-09		11151734	Orifice, 1.0, M6 x 0.75	1

Order code: E5

F00P	20-38		11151734	Orifice, 1.0, M6 x 0.75	1
F00T	20-38		140754	Orifice, 1.3, M6 x 0.75	2

End cap

H1P 89/100 end cap D3, D6

Parts configuration

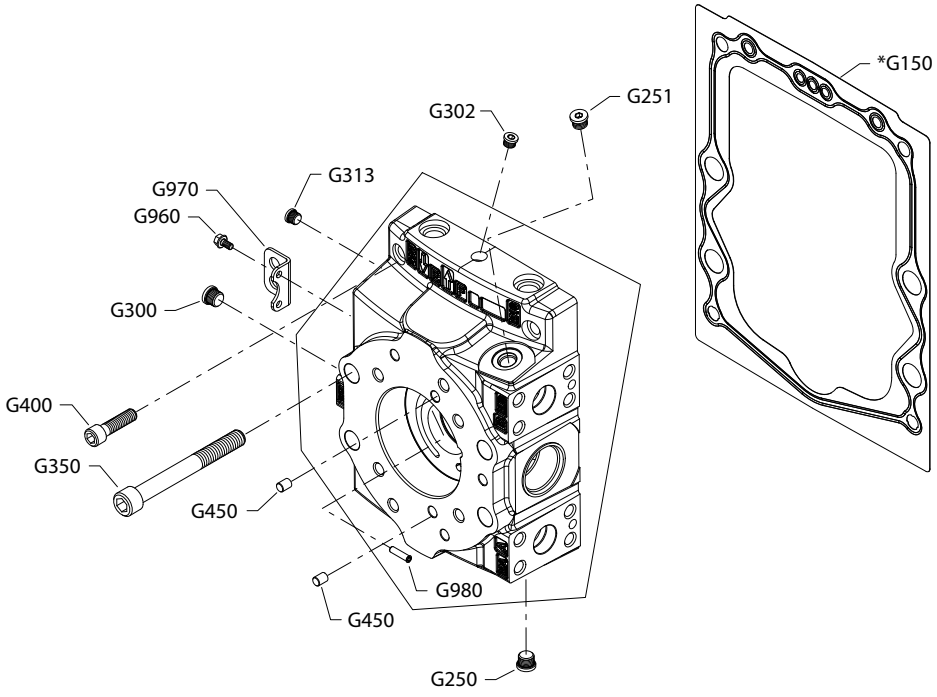

* Included in overhaul seal kit Q210

End cap

Order code: D3

Item	Date Begin	Date End	Part Number	Part Name	Qty. per Model/Kit
G125	09-27		11011634	End cap assembly, CW (*SB-2020-03A* on page 174)	1
G125	09-27		11011640	End cap assembly, CCW (*SB-2020-03A* on page 174)	1
G150	09-27		11011646	End cap gasket	1
G250	09-27		140644	Plug assembly	1
G251	09-27		140644	Plug assembly	1
G300	09-27		140644	Plug assembly	1
G302	09-27		11040532	Plug assembly	1
G310	09-27		11040532	Plug assembly	1
G350	19-13		5000676	Screw, M16 x 130	4
G350	09-27	19-12	519508	Screw, M16 x 100 (*SB-2020-03A* on page 174)	4
G400	09-27		147900	Screw	2
G450	09-27		9004800-3708	Dowel pin	2
G550	09-27		11087822	Journal bearing (*SB-2012-009* on page 162)	1
G650	09-27		8800565	Lifting bracket	1
G960	09-27		508438	Screw	2
G970	09-27		4460311	Lifting bracket	1
G980	09-27		11000229	Lubrication orifice	1

Order code: D6

G125	09-27		11011635	End cap assembly, CW (*SB-2020-03A* on page 174)	1
G125	09-27		11011641	End cap assembly, CCW (*SB-2020-03A* on page 174)	1
G150	09-27		11011646	End cap gasket	1
G250	09-27		140644	Plug assembly	1
G251	09-27		140644	Plug assembly	1
G300	09-27		140644	Plug assembly	1
G302	09-27		11040532	Plug assembly	1
G310	09-27		11040532	Plug assembly	1
G350	19-13		5000676	Screw, M16 x 130 (*SB-2020-03A* on page 174)	4
G350	09-27	19-12	519508	Screw, M16 x 100	4
G400	09-27		147900	Screw	2
G450	09-27		9004800-3708	Dowel pin	2
G550	09-27		11087822	Journal bearing (*SB-2012-009* on page 162)	1
G650	09-27		8800565	Lifting bracket	1
G960	09-27		508438	Screw	2
G970	09-27		4460311	Lifting bracket	1
G980	09-27		11000229	Lubrication orifice	1

End cap

H1P 89/100 end cap D8

Parts configuration

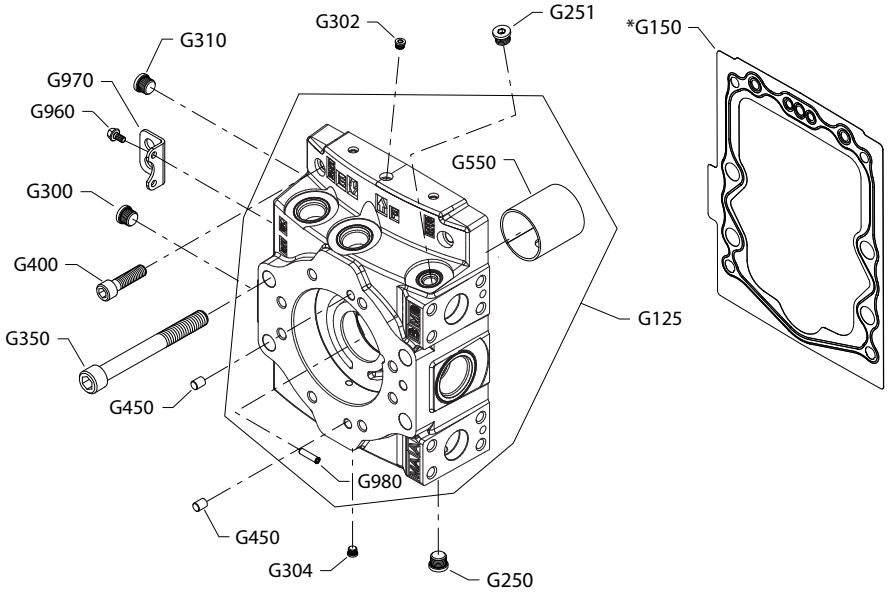

This option is available in both SAE and metric configurations and is noted in the **Part Name** column in the table below. Please order accordingly.

* Included in overhaul seal kit Q210

End cap

Order code: D8

Item	Date Begin	Date End	Part Number	Part Name	Qty. per Model/Kit
G125	09-27		11011636	End cap assembly, CW (*SB-2020-03A* on page 174)	1
G125	09-27		11011642	End cap assembly, CCW (SAE) (*SB-2020-03A* on page 174)	1
G125	09-27		11173913	End cap assembly, CCW (metric)	1
G150	09-27		11011646	End cap gasket	1
G250	09-27		140644	Plug assembly (SAE)	1
G250	09-27		11178808	Plug assembly, M14 (metric)	1
G251	09-27		140644	Plug assembly (SAE)	1
G251	09-27		11178808	Plug assembly, M14 (metric)	1
G300	09-27		140644	Plug assembly (SAE)	1
G300	09-27		11178808	Plug assembly, M14 (metric)	1
G302	09-27		11040532	Plug assembly	1
G304	09-27		11040532	Plug assembly	1
G310	09-27		11178808	Plug assembly	1
G350	19-13		5000676	Screw, M16 x 130 (SAE) (*SB-2020-03A* on page 174)	4
G350	09-27	19-12	519508	Screw, M16 x 100 (SAE)	4
G350	09-27		5000676	Screw M16 x 130 (metric)	4
G400	09-27		147900	Screw, M10 x 45	2
G450	09-27		9004800-3708	Dowel pin	2
G550	09-27		11087822	Journal bearing (*SB-2012-009* on page 162)	1
G960	09-27		508438	Screw	2
G970	09-27		4460311	Lifting bracket	1
G980	09-27		11000229	Lubrication orifice	1

H1P 89/100 end cap F4, F5, F6

Option F4 has been replaced by option D3 (*SB-2020-04A* on page 177).
Option F5 has been replaced by option D8 (*SB-2020-04A* on page 177).
Option F6 has been replaced by option D6 (*SB-2020-04A* on page 177).

End cap

H1P 89/100 end cap G9, J2

Parts configuration

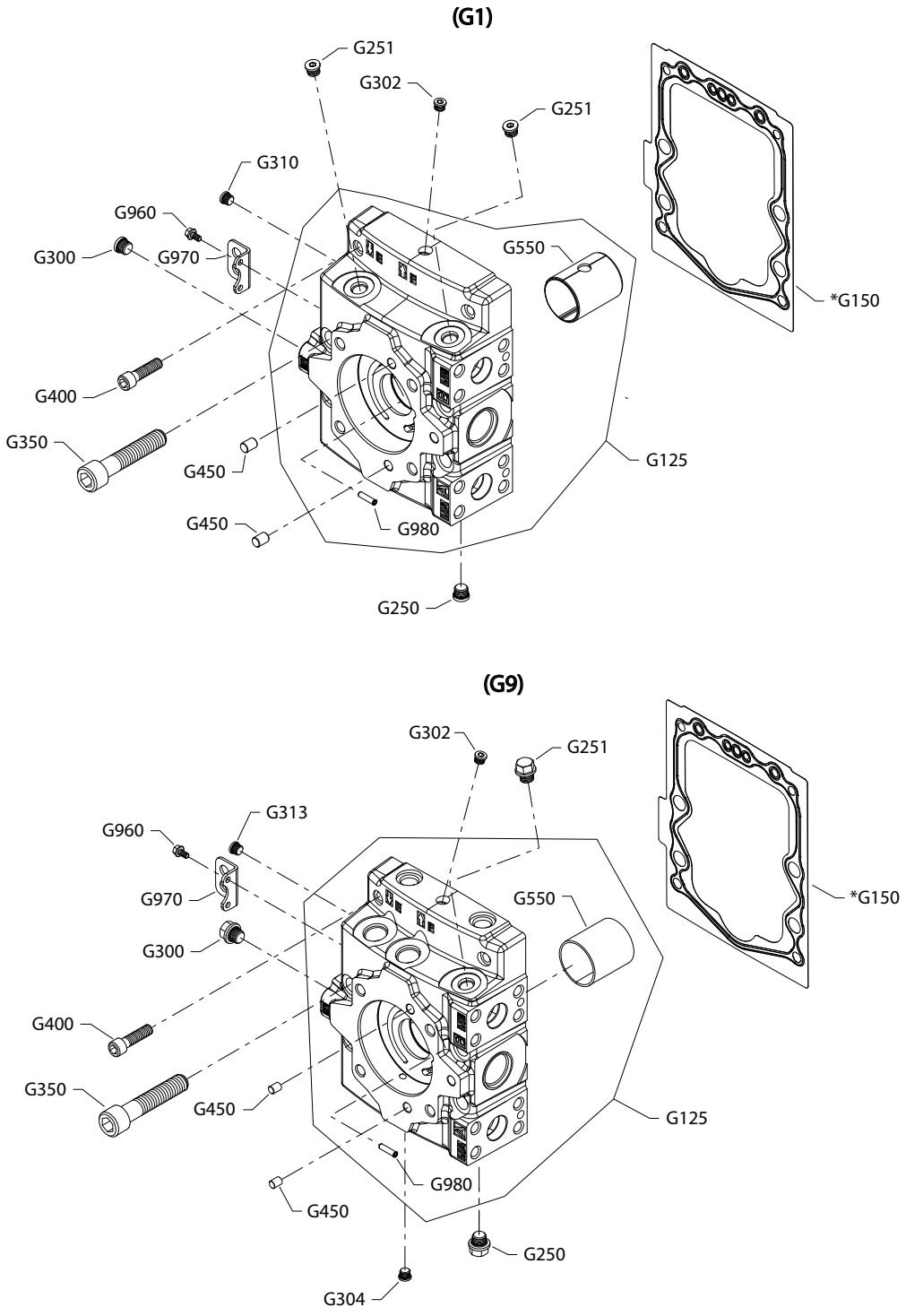

* Included in overhaul seal kit Q210

End cap

Order code: G9

Item	Date Begin	Date End	Part Number	Part name	Qty. per Model/Kit
QG125	09-27		11011636	End cap assembly, CW	1
G150	09-27		11011646	End cap gasket	1
G250	14-12		11147119	Plug assembly, special	1
G251	14-12		11147119	Plug assembly, special	1
G300	14-12		11147119	Plug assembly, special	1
G302	09-27		11040532	Plug assembly	1
G304	09-27		11040532	Plug assembly	1
G313	09-27		11040532	Plug assembly	1
G350	09-27		519508	Screw, M16 x 100	4
G400	09-27		147900	Screw, M10 x 45	2
G450	09-27		9004800-3708	Dowel pin	2
G550	09-27		11087822	Journal bearing (*SB-2012-009* on page 162)	1
G960	09-27		508438	Screw	2
G970	09-27		4460311	Lifting bracket	1
G980	09-27		11000229	Lubrication orifice	1

Order code: J2

G125	14-12		11130745	End cap assembly, CW	1
G150	14-12		11011646	End cap gasket	1
G250	14-12		11147119	Plug assembly, special	1
G251	14-12		11147119	Plug assembly, special	1
G300	14-12		11147119	Plug assembly, special	1
G302	14-12		11040532	Plug assembly	1
G304	14-12		11040532	Plug assembly	1
G313	14-12		140644	Plug assembly	1
G350	14-12		5000676	Screw, M16 x 130	4
G400	14-12		147900	Screw, M10 x 45	2
G450	14-12		9004800-3708	Pin	2
G550	14-12		11087822	Journal bearing	1
G960	14-12		508438	Screw, M6 x 12	2
G961	14-12		508438	Screw, M6 x 12	2
G970	14-12		4460311	Lifting bracket	1
G971	14-12		4800754	Lifting bracket	2
G980	14-12		11000229	Lubrication orifice	1

Housing

H1P 89/100 housing H-M

Parts configuration

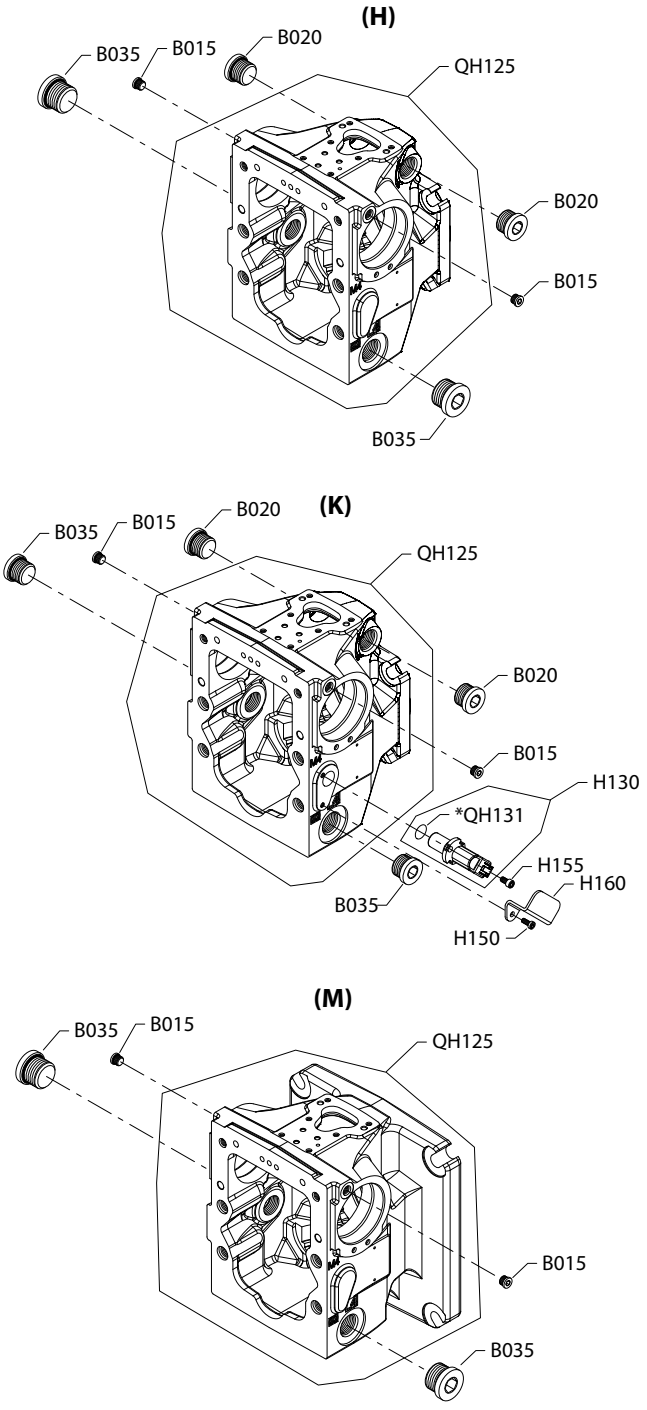

Option H is available in SAE and metric configurations and is noted under **Part Name** column in the table below. Please order accordingly.

* Included in overhaul seal kit Q210.

Housing

Order code: H

Item	Date Begin	Date End	Part Number	Part Name	Qty. per Model/Kit
B015	09-27		9005110-4400	Plug assembly (SAE)	2
B015	09-27		5000572	Plug assembly, M12 (metric)	2
B020	09-27		664524 (9005110-9000)	Plug assembly (SAE)	2
B020	09-27		11178807	Plug assembly, M12 (metric)	2
B035	09-27		664524 (9005110-9000)	Plug assembly	2
B035	09-27		11178807	Plug assembly, M12 (metric)	2
QH125	09-27		11008602	Housing assembly, H1P089-100 (SAE)	1
QH125	09-27		11173939	Housing assembly, H1P089-100 (metric)	1

Order code: K

B015	09-27		9005110-4400	Plug assembly	2
B020	09-27		664524 (9005110-9000)	Plug assembly	2
B035	09-27		664524 (9005110-9000)	Plug assembly	2
H130	09-27		149055	Speed sensor assembly	1
H150	09-27		508438	Screw, hex flange head	1
H155	09-27		376749	Screw, socket head	1
H160	09-27		11186383	Speed sensor protector	1
QH125	09-27		11036030	Housing assembly, H1P089-100, speed sensing	1
QH131	09-27		11013397	O-ring	1

Order code: M

B015	09-27		9005110-4400	Plug assembly	2
B035	09-27		664524 (9005110-9000)	Plug assembly	2
QH125	09-27		11131859	Housing assembly, H1P089-100	1

Shaft

H1P 89/100 shaft A1-G9

Parts configuration

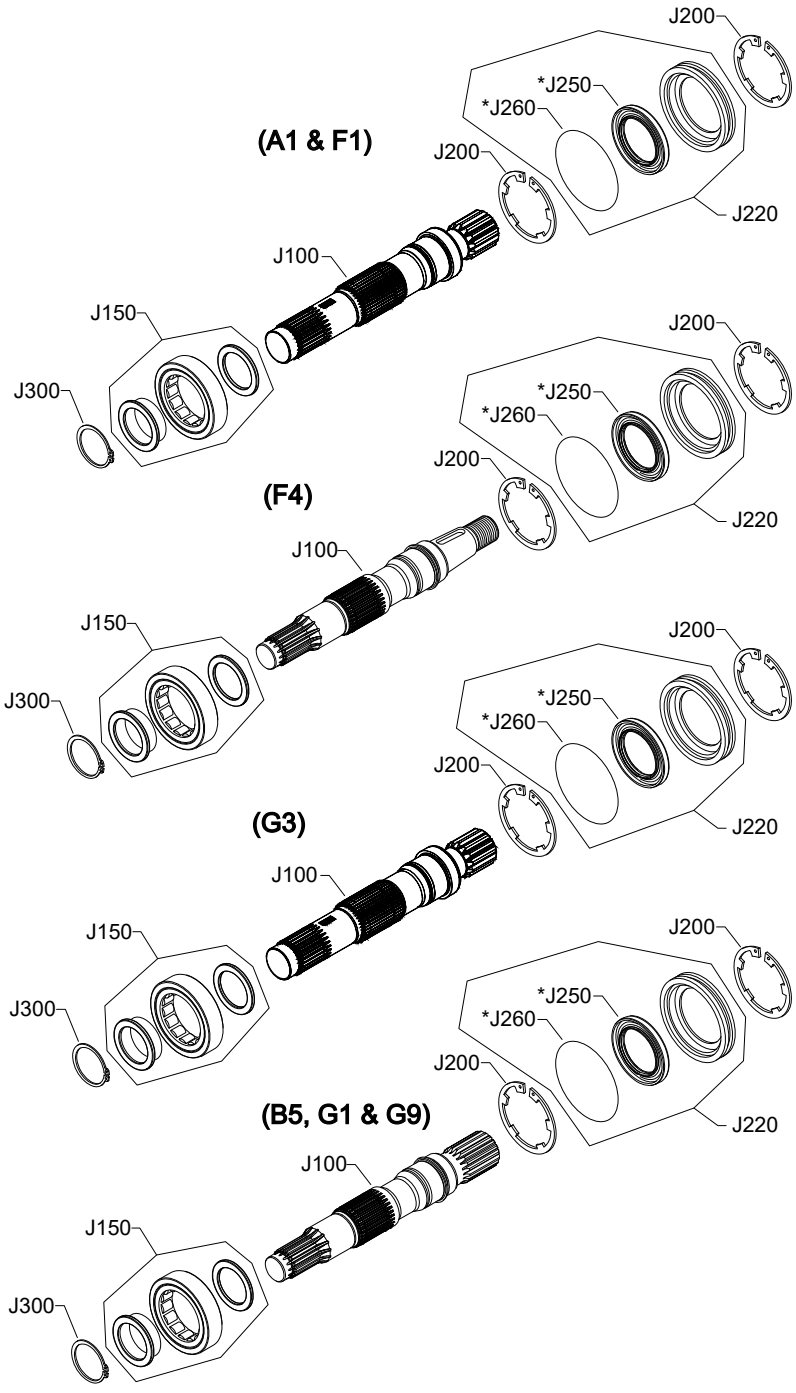

* Included in overhaul seal kit Q210.

Shaft

Common parts

Item	Date Begin	Date End	Part Number	Part Name	Qty. per Model/Kit
J150	13-13		11056147	Roller bearing	1
J200	13-13		11056148	Retaining ring	2
J220	13-13		11043910	Shaft seal carrier assembly	1
J250	13-13		140911	Lip seal	1
J260	13-13		11043926	O-ring	1
J300	13-13		11040337	Retaining ring	1

Order code: A1

J100	17-36		11179428	Shaft, 17 tooth spline, 12/24 pitch (*SB-2018-005* on page 171)	1

Order code: B5

J100	17-36		11191128	Shaft, 23 tooth spline, 16/32 pitch (*SB-2018-005* on page 171)	1

Order code: F1

J100	17-36		11179429	Shaft, 21 tooth spline, 16/32 pitch (*SB-2012-014* on page 163, *SB-2018-005* on page 171	1

Order code: F4

J100	17-36		11179424	Shaft, tapered (*SB-2012-014* on page 163, *SB-2018-005* on page 171)	1

Order code: G1

J100	17-36		11179430	Shaft, 14 tooth spline, 12/24 pitch (*SB-2012-014* on page 163, *SB-2018-005* on page 171)	1

Order code: G3

J100	17-36		11179431	Shaft, 13 tooth spline, 8/16 pitch (*SB-2018-005* on page 171)	1

Order code: G9

J100	17-36		11179432	Shaft, 23 tooth spline, 16/32 pitch (*SB-2012-014* on page 163, *SB-2018-005* on page 171)	1

Auxiliary mounting

H1P 89/100 aux mounting E9-S1

Parts configuration

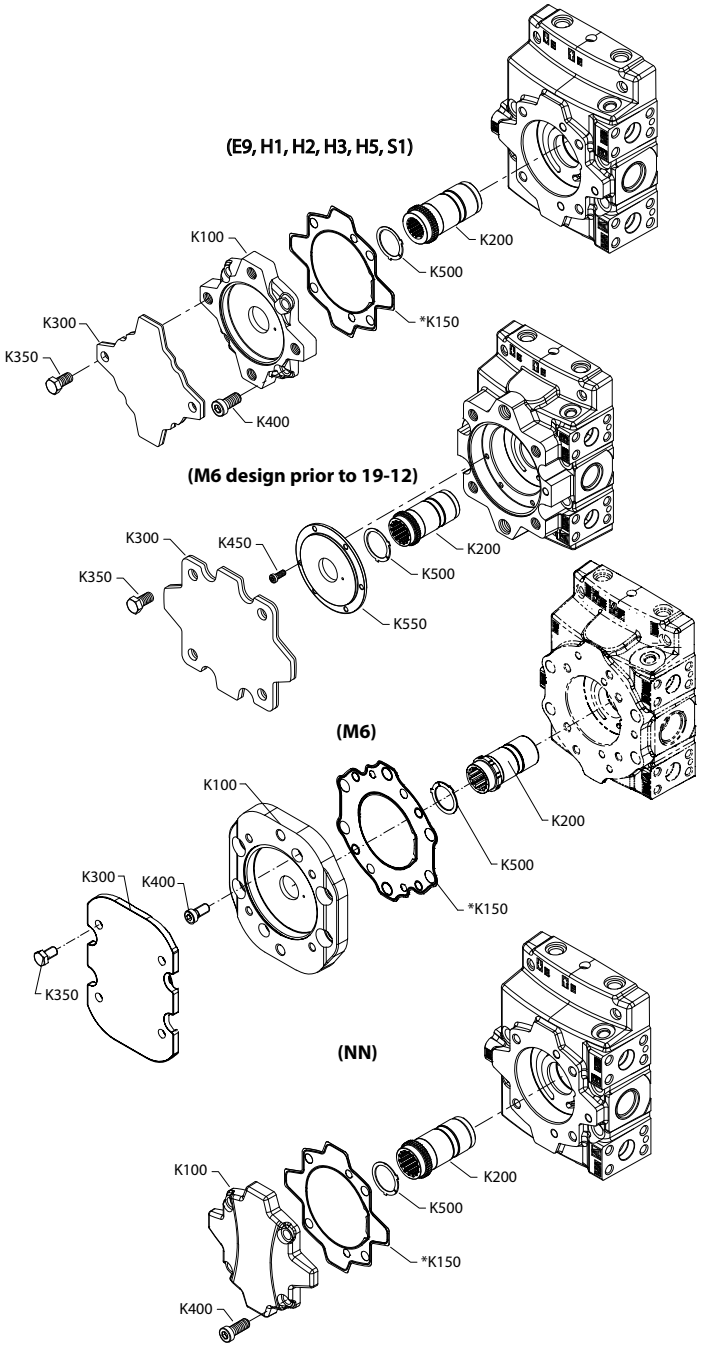

* Included in overhaul seal kit Q210

Auxiliary mounting

Order code: E9

Item	Date Begin	Date End	Part Number	Part Name	Qty. per Model/Kit
K100	15-26		141240	Adapter flange, SAE B	1
K150	15-26		11029873	Adapter seal	1
K200	15-26		11011458	Coupling, 11 tooth, 16/32 pitch	1
K300	15-26		11023746	Flange cover	1
K350	15-26		509528	Screw, M12 x 20	2
K400	15-26		11000819	Screw, M12 x 25	4
K500	15-26		141105	Thrust washer	1

Order code: H1

K100	07-14		140927	Adapter flange, SAE A	1
K150	07-14		11029873	Adapter seal	1
K200	07-14		11011458	Coupling, 11 tooth, 16/32 pitch	1
K300	07-14		11165482	Flange cover	1
K350	07-14		370247	Screw	2
K400	07-14		11000819	Screw	4
K500	07-14		141105	Thrust washer	1

Order code: H2

K100	07-14		140927	Adapter flange, SAE A	1
K150	07-14		11029873	Adapter seal	1
K200	07-14		11011460	Coupling, 9 tooth, 16/32 pitch	1
K300	07-14		11165482	Flange cover	1
K350	07-14		370247	Screw	2
K400	07-14		11000819	Screw	4
K500	07-14		141105	Thrust washer	1

Order code: H3

K100	07-14		141240	Adapter flange, SAE B	1
K150	07-14		11029873	Adapter seal	1
K200	07-14		11192328	Coupling, 13 tooth, 16/32 pitch	1
K250	07-14	08-35	327627 (9004104-1540)	O-ring (*SB-2008-038* on page 159)	1
K300	07-14		11023746	Flange cover (*SB-2008-038* on page 159)	1
K350	07-14		509528	Screw	2
K400	07-14		11000819	Screw	4
K500	07-14		141105	Thrust washer	1

Parts continue to the next 2 pages.

Auxiliary mounting

Parts configuration

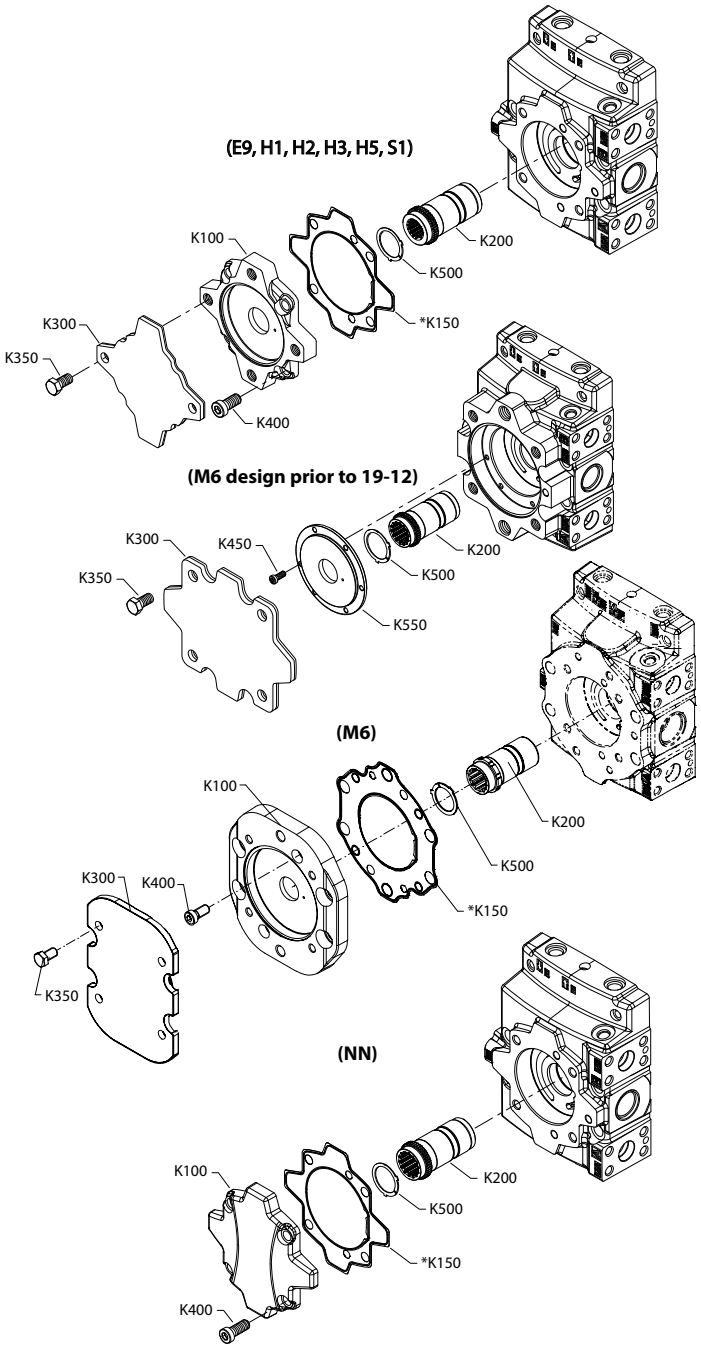

* Included in overhaul seal kit Q210

Auxiliary mounting

Order code H5

Item	Date Begin	Date End	Part Number	Part Name	Qty. per Model/Kit
K100	09-27		141240	Adapter flange, SAE B	1
K150	09-27		11029873	Adapter seal	1
K200	09-27		11011462	Charge pump shaft, 15 tooth, 16/32 pitch	1
K300	09-27		11023746	Flange cover	1
K350	09-27		509528	Screw, M12 x 20	2
K400	09-27		11000819	Screw, M12 x 25	4
K500	09-27		141105	Thrust washer	1

Order code: M6

K100	19-12		11133674	Adapter flange	1
K150	19-12		11167589	Adapter Seal	1
K200	18-02		11111952	Coupling, 14 tooth, 12/24 pitch	1
K300	19-12		11137046	Flange cover (SB-2020-004 on page 175)	1
K300	12-16	19-11	11023750	Flange cover (SB-2020-004 on page 175)	1
K350	12-16		509528	Screw, M12x20	4
K400	19-12		11000819	Screw, M12x25	2
K450	12-16		376749	Screw, M6x12	6
K500	12-16		141105	Thrust plate	1
K550	12-16		11149453	Charge pump cover	1

Order code: NN

K100	09-27		141249	Adapter flange, no pad	1
K150	09-27		11029873	Adapter seal	1
K200	09-27		11011457	Charge pump shaft, 14 tooth, 12/24 pitch	1
K400	09-27		11000819	Screw, M12 x 25	4
K500	09-27		141105	Thrust washer	1

Order code: S1

K100	11-17		141240	Adapter flange, SAE B	1
K150	11-17		11029873	Adapter seal	1
K200	11-17		11011457	Coupling, 14 tooth, 12/24 pitch	1
K300	11-17		11023746	Flange cover	1
K350	11-17		509528	Screw	2
K400	11-17		11000819	Screw	4
K500	11-17		141105	Thrust washer	1

Auxiliary mounting

H1P 89/100 Aux mounting H6

Parts configuration

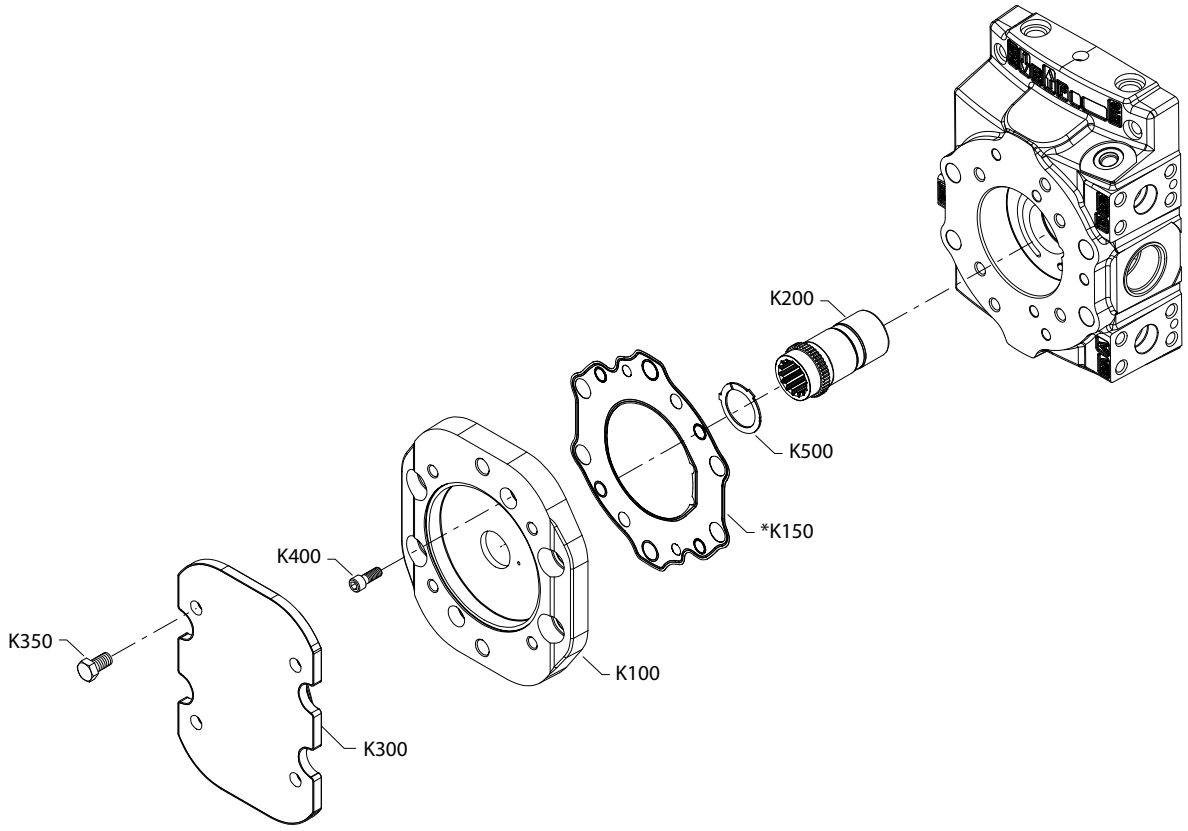

* Included in overhaul seal kit Q210

Auxiliary mounting

Order code: H6

Item	Date Begin	Date End	Part Number	Part Name	Qty. per Model/Kit
K100	17-40		11133674	Adapter	1
K150	17-40		11167589	Adapter seal	1
K200	17-40		11011457	Coupling, 14 tooth, 12/24 pitch	1
K300	17-40		11137046	Flange cover	1
K350	17-40		509528	Screw, M12 x 20	4
K400	17-40		11000819	Screw, M12 x 25	2
K500	17-40		141105	Thrust washer	1

Auxiliary mounting

H1P 89/100 aux mounting J3

Parts configuration

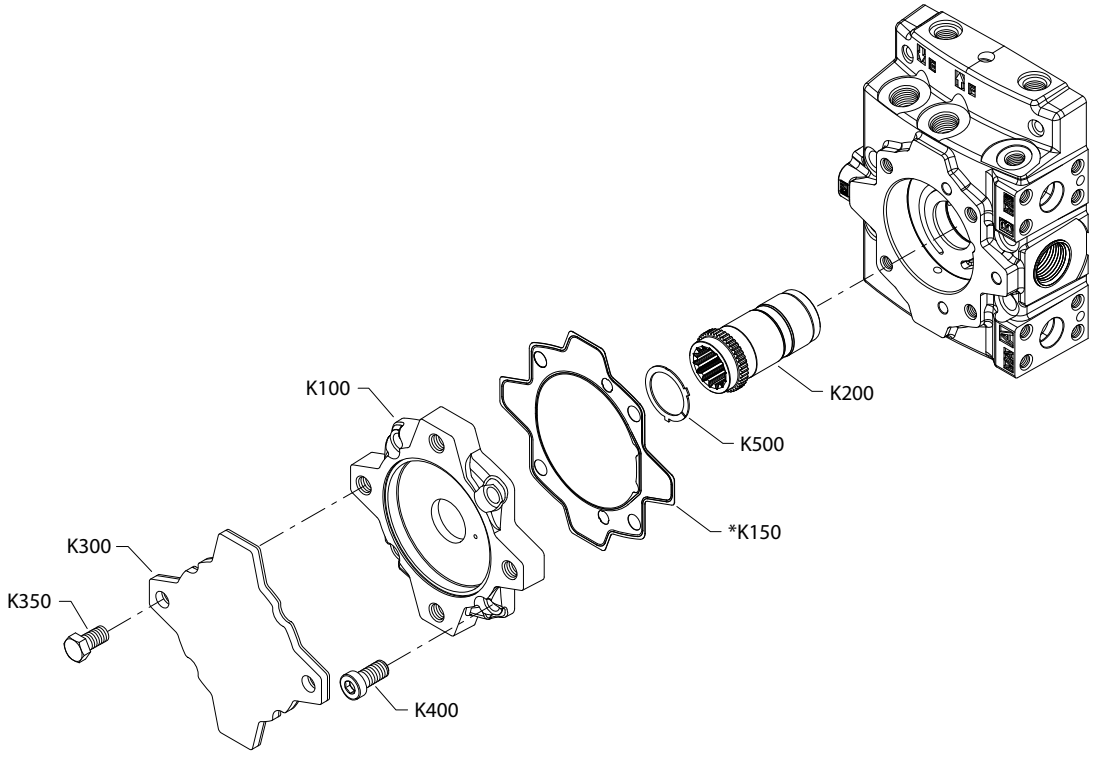

* Included in overhaul seal kit Q210

Auxiliary mounting

Order code: J3

Item	Date Begin	Date End	Part Number	Part Name	Qty. per Model/Kit
K100	19-28		141240	Adapter flange, SAE B	1
K150	19-28		11029873	Adapter seal	1
K200	19-28		11111950	Charge pump shaft, 13 tooth, 16/32 pitch	1
K300	19-28		11023746	Flange cover	1
K350	19-28		509528	Screw, M12 x 20	2
K400	19-28		11000819	Screw, M12 x 25	4
K500	19-28		141105	Thrust washer	1

High pressure setting

Port A

H1P 89/100 high pressure setting F01-F08

Parts configuration

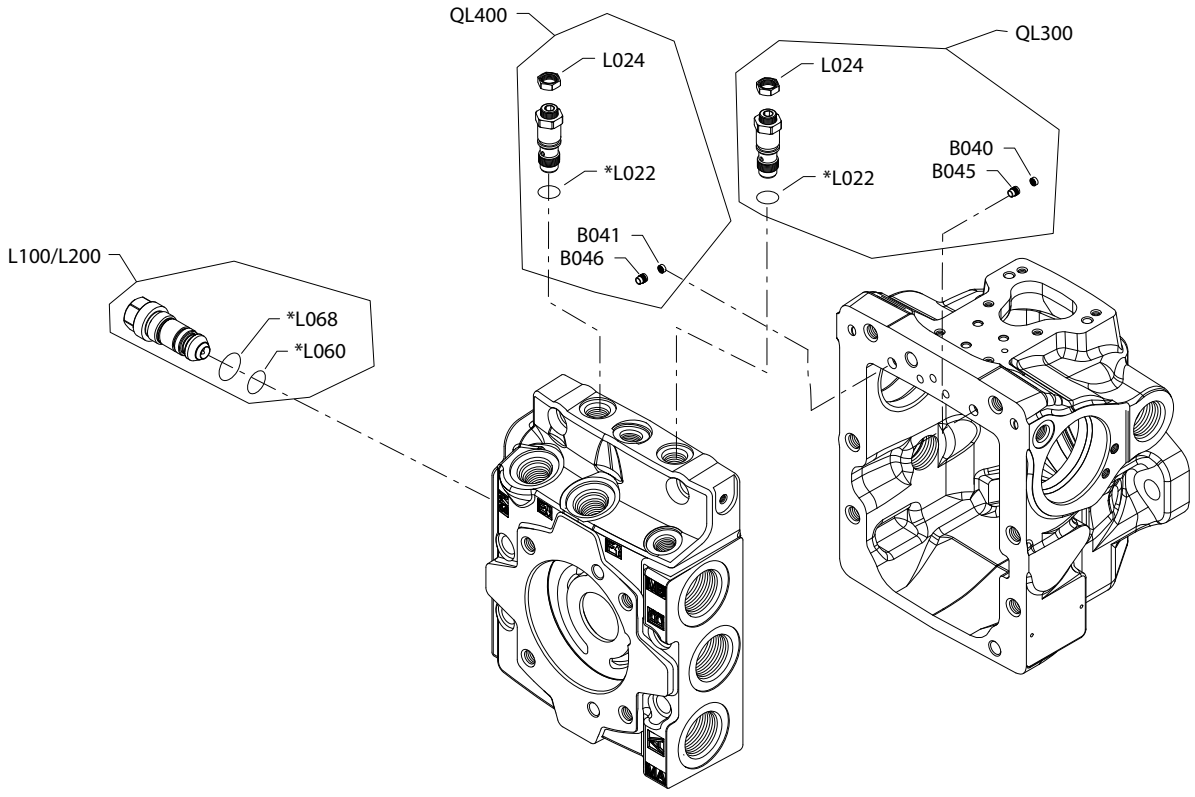

Generic end cap shown.

* Included in overhaul seal kit Q210

High pressure setting

Common parts

Item	Date Begin	Date End	Part Number	Part Name	Qty. per Model/Kit
B040	20-40		140967	Screen (*SB-2020-029* on page 178)	1
B041	20-40		140967	Screen (*SB-2020-029* on page 178)	1
B045	20-40		11062648	Screen retainer (*SB-2020-029* on page 178)	1
B046	20-40		11062648	Screen retainer (*SB-2020-029* on page 178)	1
L022	09-27		041152	O-ring	1
L024	13-14		11054668	Nut	1
L060	09-27		141109	O-ring	1
L068	09-27		11052215	O-ring	1
QL300	13-14		11050482	Pressure limiter kit, adjustable, CW rotation pump	1
QL400	13-14		11050482	Pressure limiter kit, adjustable, CCW rotation pump	1

Order code: F01

L100	13-14		11049123	High pressure relief valve, 250 bar	1

Order code: F02

L100	13-14		11049125	High pressure relief valve, 300 bar	1

Order code: F03

L100	13-14		11049127	High pressure relief valve, 350 bar	1

Order code: F04

L100	13-14		11252674	High pressure relief valve, 400 bar	1

Order code: F08

L100	13-14		11049127	High pressure relief valve, 350 bar	1

High pressure setting

H1P 89/100 high pressure setting K18-K48

Parts configuration

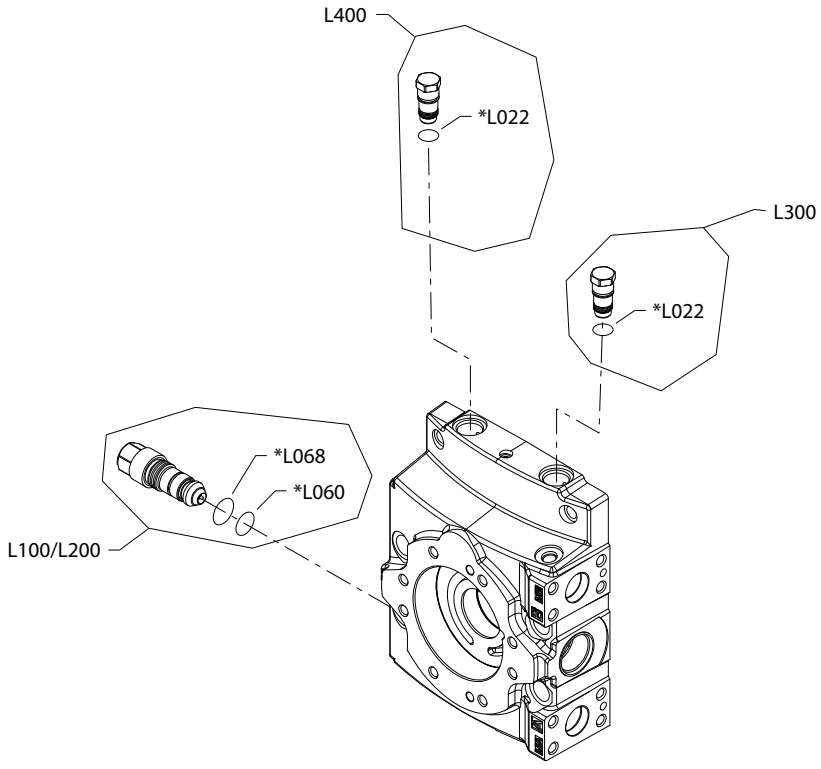

Generic end cap shown.

* Included in overhaul seal kit Q210

High pressure setting

Common parts

Item	Date Begin	Date End	Part Number	Part Name	Qty. per Model/Kit
L022	09-27		041152	O-ring	1
L060	09-27		141109	O-ring	1
L068	09-27		11052215	O-ring	1
L300	09-27		11002291	Pressure limiter plug assembly, CW rotation pump	1
L400	09-27		11002291	Pressure limiter plug assembly, CCW rotation pump	1

Order code: K18

L100	09-27		11049120	High pressure relief valve, 180 bar	1

Order code: K20

L100	09-27		11049121	High pressure relief valve, 200 bar	1

Order code: K23

L100	09-27		11049122	High pressure relief valve, 230 bar	1

Order code: K25

L100	09-27		11049123	High pressure relief valve, 250 bar	1

Order code: K28

L100	09-27		11049124	High pressure relief valve, 280 bar	1

Order code: K30

L100	09-27		11049125	High pressure relief valve, 300 bar	1

Order code: K33

L100	09-27		11049126	High pressure relief valve, 330 bar	1

Order code: K35

L100	09-27		11049127	High pressure relief valve, 350 bar	1

Order code: K38

L100	09-27		11049128	High pressure relief valve, 380 bar	1

Order code: K40

L100	09-27		11049129	High pressure relief valve, 400 bar	1

Parts continue to the next 2 pages.

High pressure setting

Parts configuration

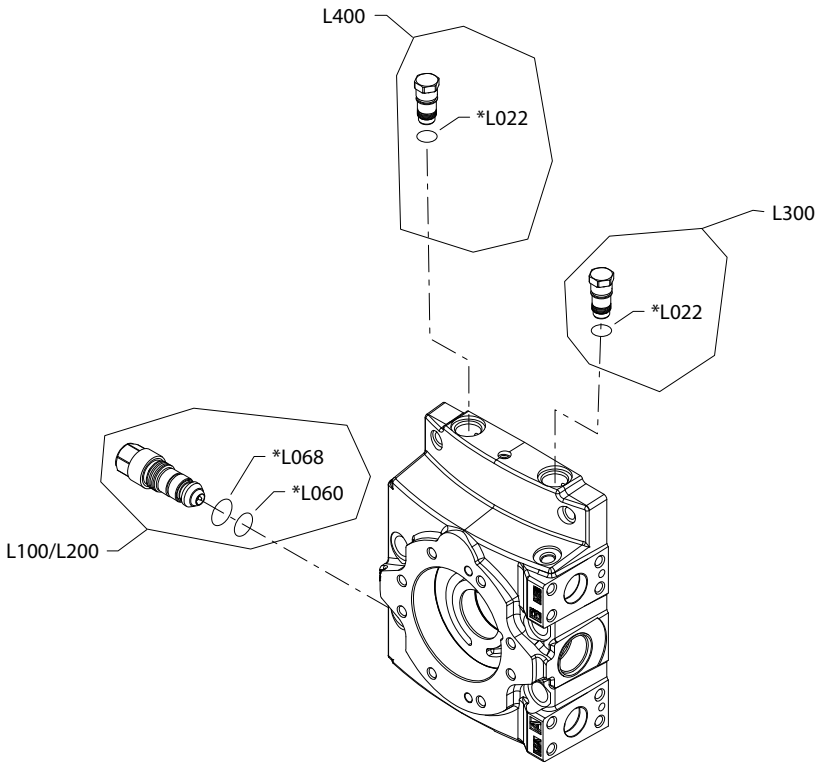

Generic end cap shown.

* Included in overhaul seal kit Q210

High pressure setting

Common parts

Item	Date Begin	Date End	Part Number	Part Name	Qty. per Model/Kit
L022	09-27		041152	O-ring	1
L060	09-27		141109	O-ring	1
L068	09-27		11052215	O-ring	1
L300	09-27		11002291	Pressure limiter plug assembly, CW rotation pump	1
L400	09-27		11002291	Pressure limiter plug assembly, CCW rotation pump	1

Order code: K42

L100	09-27		11049130	High pressure relief valve, 420 bar	1

Order code: K45

L100	09-27		11049131	High pressure relief valve, 450 bar	1

Order code: K48

L100	09-27		11049132	High pressure relief valve, 480 bar	1

High pressure setting

H1P 89/100 high pressure setting L15-L48

Parts configuration

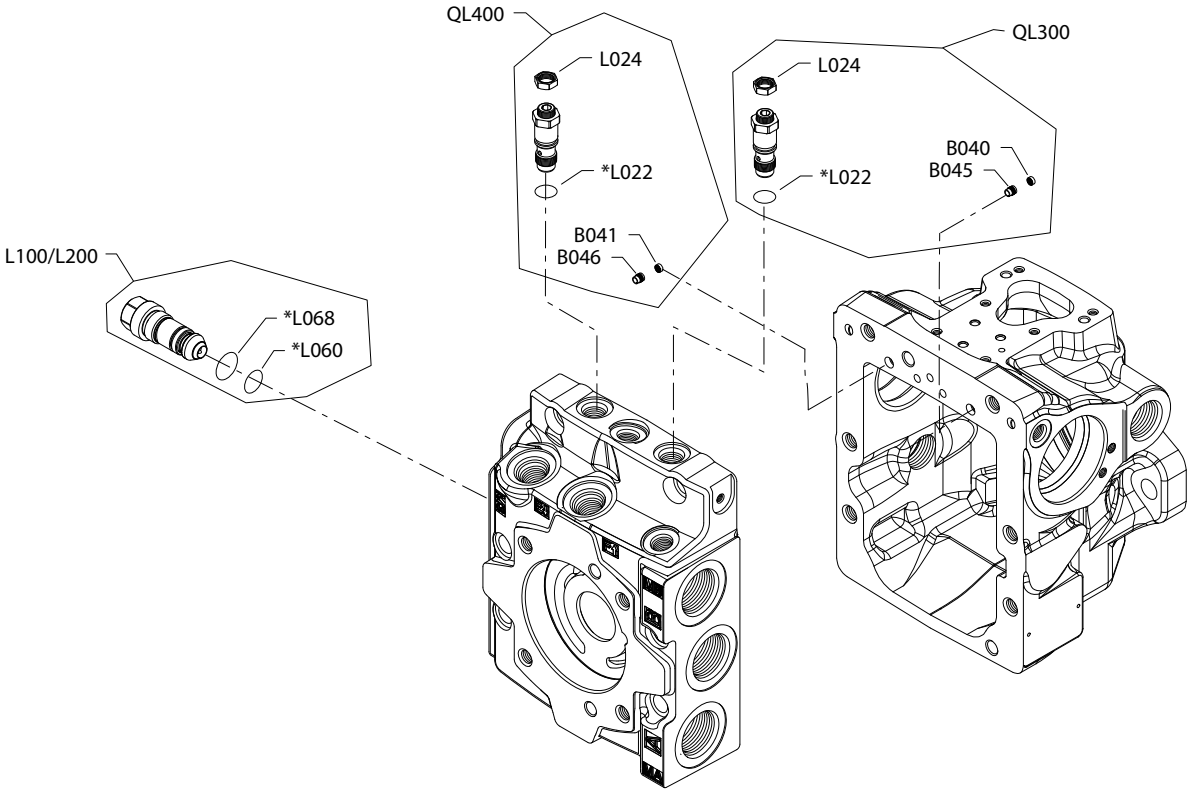

Generic end cap shown.

* Included in overhaul seal kit Q210

High pressure setting

Common parts

Item	Date Begin	Date End	Part Number	Part Name	Qty. per Model/Kit
B040	20-40		140967	Screen (*SB-2020-029* on page 178)	1
B041	20-40		140967	Screen (*SB-2020-029* on page 178)	1
B045	20-40		11062648	Screen retainer (*SB-2020-029* on page 178)	1
B046	20-40		11062648	Screen retainer (*SB-2020-029* on page 178)	1
L022	09-27		041152	O-ring	1
L024	09-27		11054668	Nut	1
L060	09-27		141109	O-ring	1
L068	09-27		11052215	O-ring	1
QL300	09-27		11050482	Pressure limiter kit, adjustable, CW rotation pump	1
QL400	09-27		11050482	Pressure limiter kit, adjustable, CCW rotation pump	1

Order code: L15

L100	09-27		11049121	High pressure relief valve, 200 bar	1

Order code: L18

L100	09-27		11049122	High pressure relief valve, 230 bar	1

Order code: L20

L100	09-27		11049123	High pressure relief valve, 250 bar	1

Order code: L23

L100	09-27		11049124	High pressure relief valve, 280 bar	1

Order code: L25

L100	09-27		11049125	High pressure relief valve, 300 bar	1

Order code: L28

L100	09-27		11049126	High pressure relief valve, 330 bar	1

Order code: L30

L100	09-27		11049127	High pressure relief valve, 350 bar	1

Order code: L33

L100	09-27		11252675	High pressure relief valve, 380 bar	1

Parts continue to the next 2 pages.

High pressure setting

Parts configuration

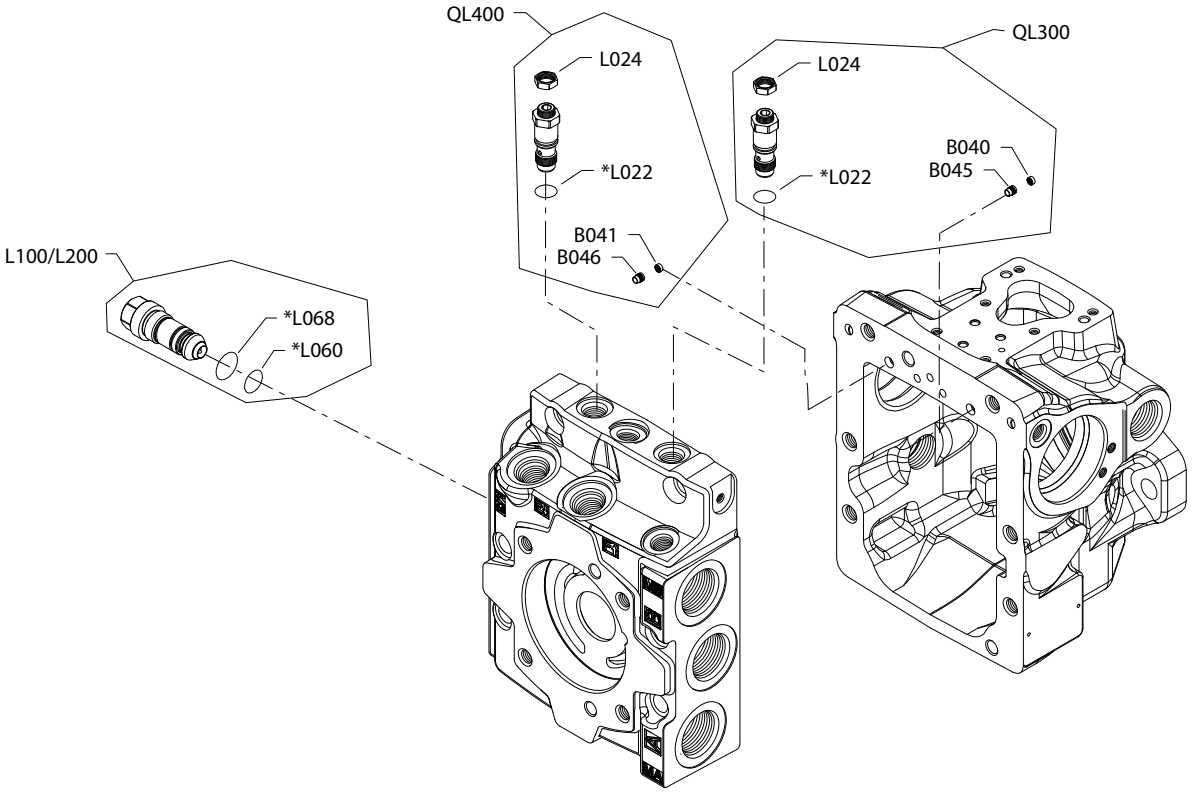

Generic end cap shown.

* Included in overhaul seal kit Q210

High pressure setting

Common parts

Item	Date Begin	Date End	Part Number	Part Name	Qty. per Model/Kit
B040	20-40		140967	Screen (*SB-2020-029* on page 178)	1
B041	20-40		140967	Screen (*SB-2020-029* on page 178)	1
B045	20-40		11062648	Screen retainer (*SB-2020-029* on page 178)	1
B046	20-40		11062648	Screen retainer (*SB-2020-029* on page 178)	1
L022	09-27		041152	O-ring	1
L024	09-27		11054668	Nut	1
L060	09-27		141109	O-ring	1
L068	09-27		11052215	O-ring	1
QL300	09-27		11050482	Pressure limiter kit, adjustable, CW rotation pump	1
QL400	09-27		11050482	Pressure limiter kit, adjustable, CCW rotation pump	1

Order code: L35

L100	09-27		11252674	High pressure relief valve, 400 bar	1

Order code: L38

L100	09-27		11252673	High pressure relief valve, 420 bar	1

Order codes: L3F, L40, L41, L42

L100	17-43		11252670	High pressure relief valve, 450 bar	1

Order code: L43

L100	09-27		11252668	High pressure relief valve, 480 bar	1

Order code: L44

L100	09-27		11252668	High pressure relief valve, 480 bar	1

Order code: L45

L100	09-27		11252668	High pressure relief valve, 480 bar	1

Order code: L46

L100	09-27		11252667	High pressure relief valve, 510 bar	1

Order code: L47

L100	09-27		11252667	High pressure relief valve, 510 bar	1

Parts continue to the next 2 pages.

High pressure setting

Parts configuration

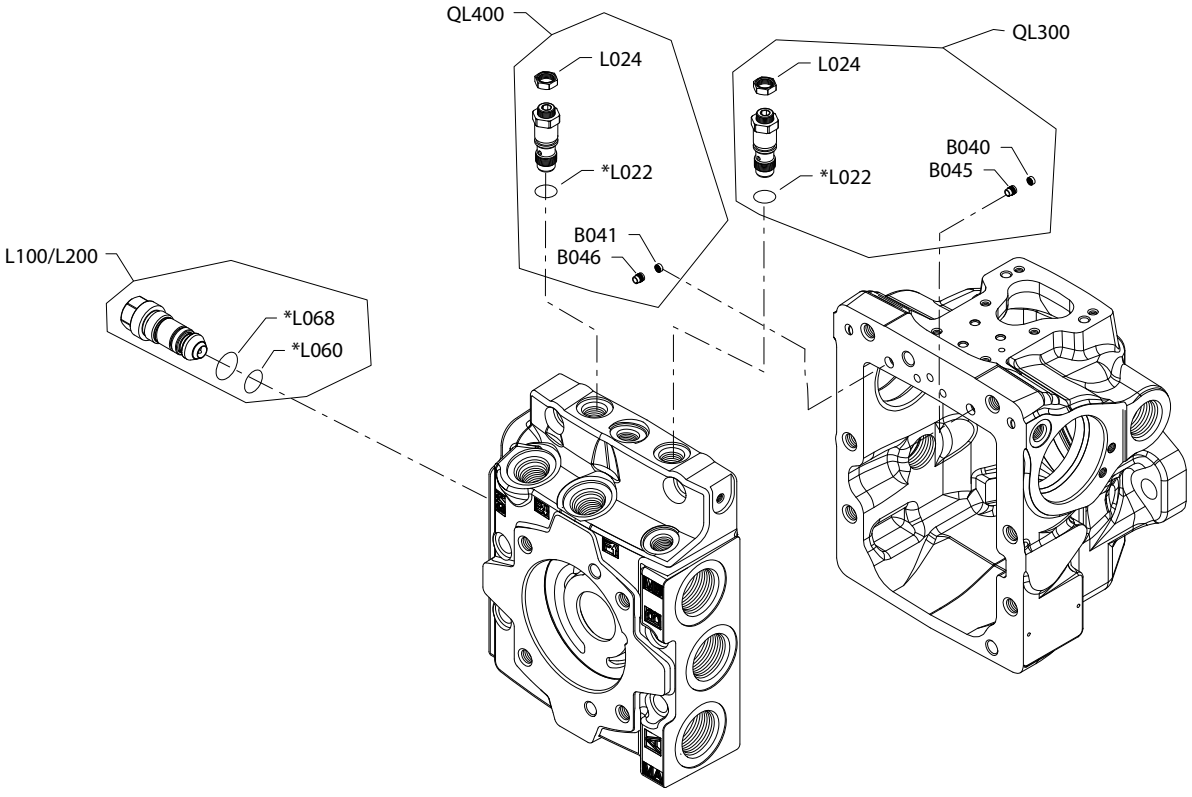

Generic end cap shown.

* Included in overhaul seal kit Q210

High pressure setting

Common parts

Item	Date Begin	Date End	Part Number	Part Name	Qty. per Model/Kit
B040	20-40		140967	Screen (*SB-2020-029* on page 178)	1
B041	20-40		140967	Screen (*SB-2020-029* on page 178)	1
B045	20-40		11062648	Screen retainer (*SB-2020-029* on page 178)	1
B046	20-40		11062648	Screen retainer (*SB-2020-029* on page 178)	1
L022	09-27		041152	O-ring	1
L024	09-27		11054668	Nut	1
L060	09-27		141109	O-ring	1
L068	09-27		11052215	O-ring	1
QL300	09-27		11050482	Pressure limiter kit, adjustable, CW rotation pump	1
QL400	09-27		11050482	Pressure limiter kit, adjustable, CCW rotation pump	1

Order code: L48

L100	09-27		11252667	High pressure relief valve, 510 bar	1

Order code: L4G

L100	14-15		11252668	High pressure relief valve, 480 bar	1

High pressure setting

Port B

H1P 89/100 high pressure setting F01-F08

Parts configuration

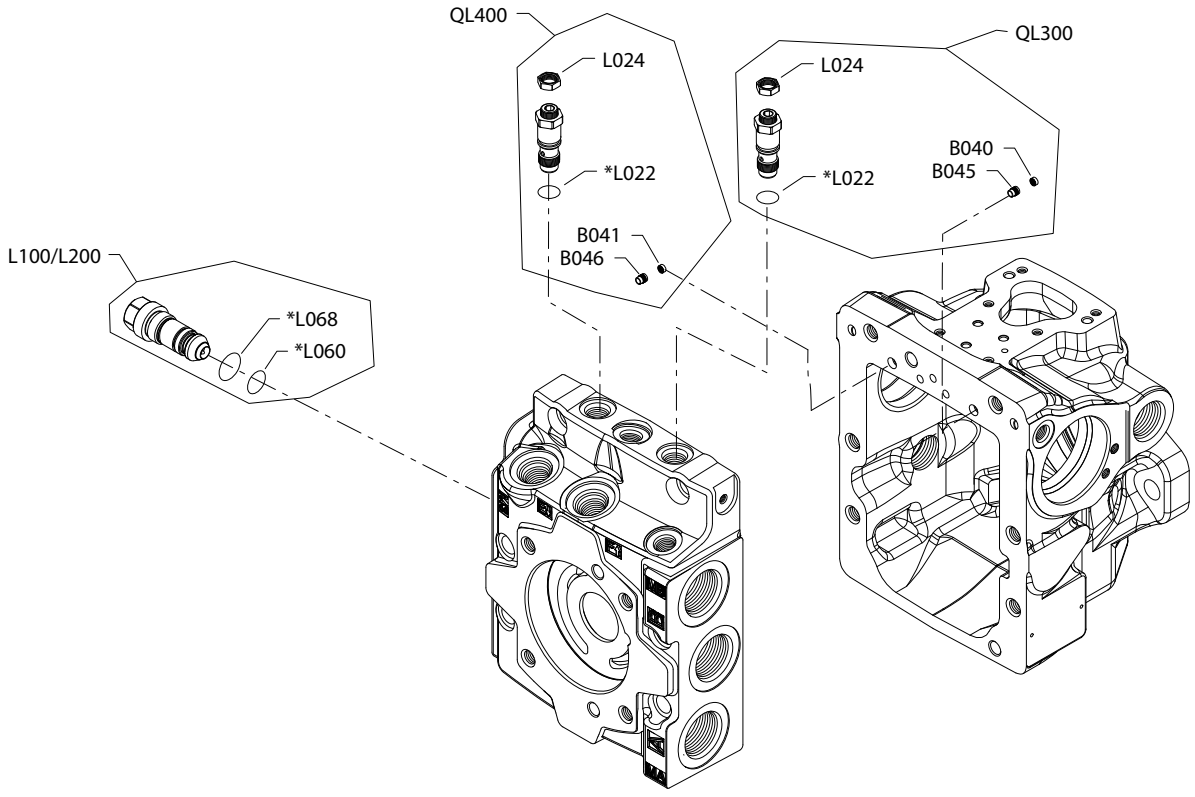

Generic end cap shown.

* Included in overhaul seal kit Q210

High pressure setting

Common parts

Item	Date Begin	Date End	Part Number	Part Name	Qty. per Model/Kit
B040	20-40		140967	Screen (*SB-2020-029* on page 178)	1
B041	20-40		140967	Screen (*SB-2020-029* on page 178)	1
B045	20-40		11062648	Screen retainer (*SB-2020-029* on page 178)	1
B046	20-40		11062648	Screen retainer (*SB-2020-029* on page 178)	1
L022	09-27		041152	O-ring	1
L024	13-14		11054668	Nut	1
L060	09-27		141109	O-ring	1
L068	09-27		11052215	O-ring	1
QL300	13-14		11050482	Pressure limiter kit, adjustable, CW rotation pump	1
QL400	13-14		11050482	Pressure limiter kit, adjustable, CCW rotation pump	1

Order code: F01

L200	13-14		11049123	High pressure relief valve, 250 bar	1

Order code: F02

L200	13-14		11049125	High pressure relief valve, 300 bar	1

Order code: F03

L200	13-14		11049127	High pressure relief valve, 350 bar	1

Order code: F04

L200	13-14		11252674	High pressure relief valve, 400 bar	1

Order code: F08

L200	13-14		11049127	High pressure relief valve, 350 bar	1

High pressure setting

H1P 89/100 high pressure setting K18-K48

Parts configuration

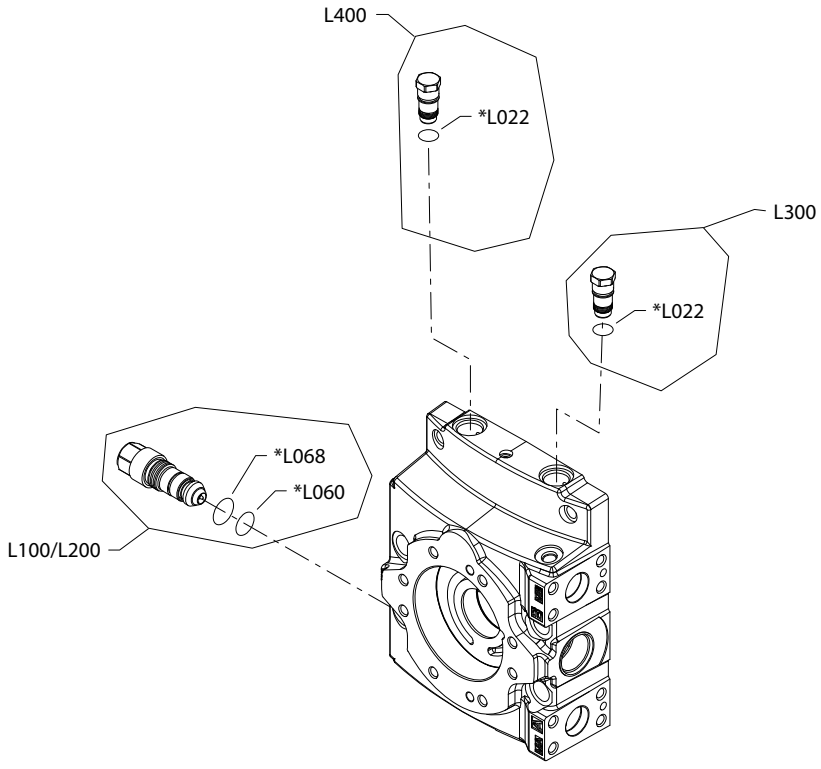

Generic end cap shown.

***** Included in overhaul seal kit Q210

High pressure setting

Common parts

Item	Date Begin	Date End	Part Number	Part Name	Qty. per Model/Kit
L022	09-27		041152	O-ring	1
L060	09-27		141109	O-ring	1
L068	09-27		11052215	O-ring	1
L300	09-27		11002291	Pressure limiter plug assembly, CW rotation pump	1
L400	09-27		11002291	Pressure limiter plug assembly, CCW rotation pump	1

Order code: K18

L200	09-27		11049120	High pressure relief valve, 180 bar	1

Order code: K20

L200	09-27		11049121	High pressure relief valve, 200 bar	1

Order code: K23

L200	09-27		11049122	High pressure relief valve, 230 bar	1

Order code: K25

L200	09-27		11049123	High pressure relief valve, 250 bar	1

Order code: K28

L200	09-27		11049124	High pressure relief valve, 280 bar	1

Order code: K30

L200	09-27		11049125	High pressure relief valve, 300 bar	1

Order code: K33

L200	09-27		11049126	High pressure relief valve, 330 bar	1

Order code: K35

L200	09-27		11049127	High pressure relief valve, 350 bar	1

Order code: K38

L200	09-27		11049128	High pressure relief valve, 380 bar	1

Order code: K40

L200	09-27		11049129	High pressure relief valve, 400 bar	1

Parts continue to the next 2 pages.

High pressure setting

Parts configuration

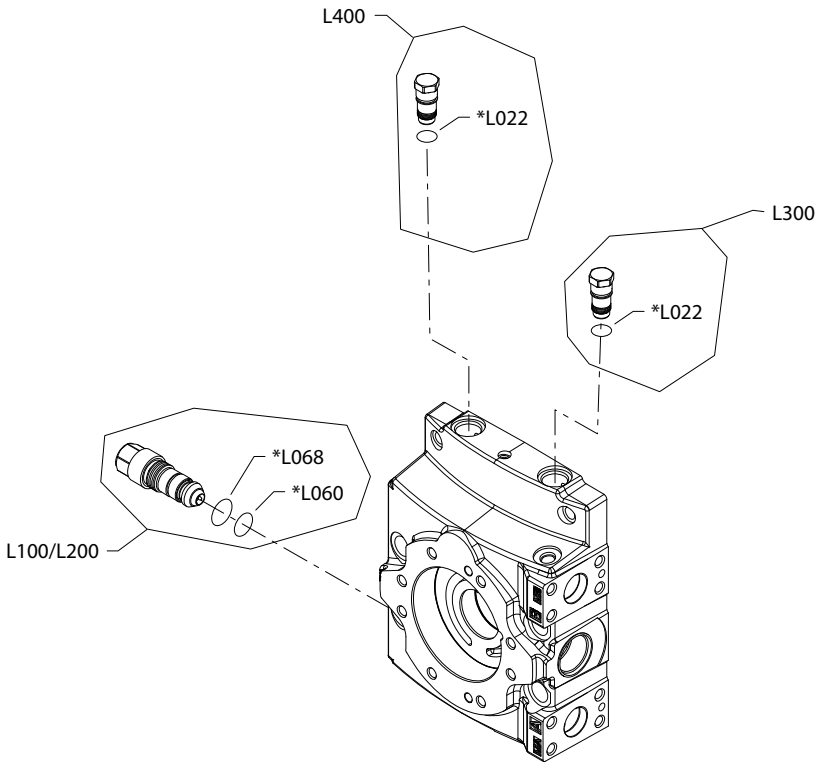

Generic end cap shown.

* Included in overhaul seal kit Q210

High pressure setting

Common parts

Item	Date Begin	Date End	Part Number	Part Name	Qty. per Model/Kit
L022	09-27		041152	O-ring	1
L060	09-27		141109	O-ring	1
L068	09-27		11052215	O-ring	1
L300	09-27		11002291	Pressure limiter plug assembly, CW rotation pump	1
L400	09-27		11002291	Pressure limiter plug assembly, CCW rotation pump	1

Order code: K42

L200	09-27		11049130	High pressure relief valve, 420 bar	1

Order code: K45

L200	09-27		11049131	High pressure relief valve, 450 bar	1

Order code: K48

L200	09-27		11049132	High pressure relief valve, 480 bar	1

High pressure setting

H1P 89/100 high pressure setting L15-L48

Parts configuration

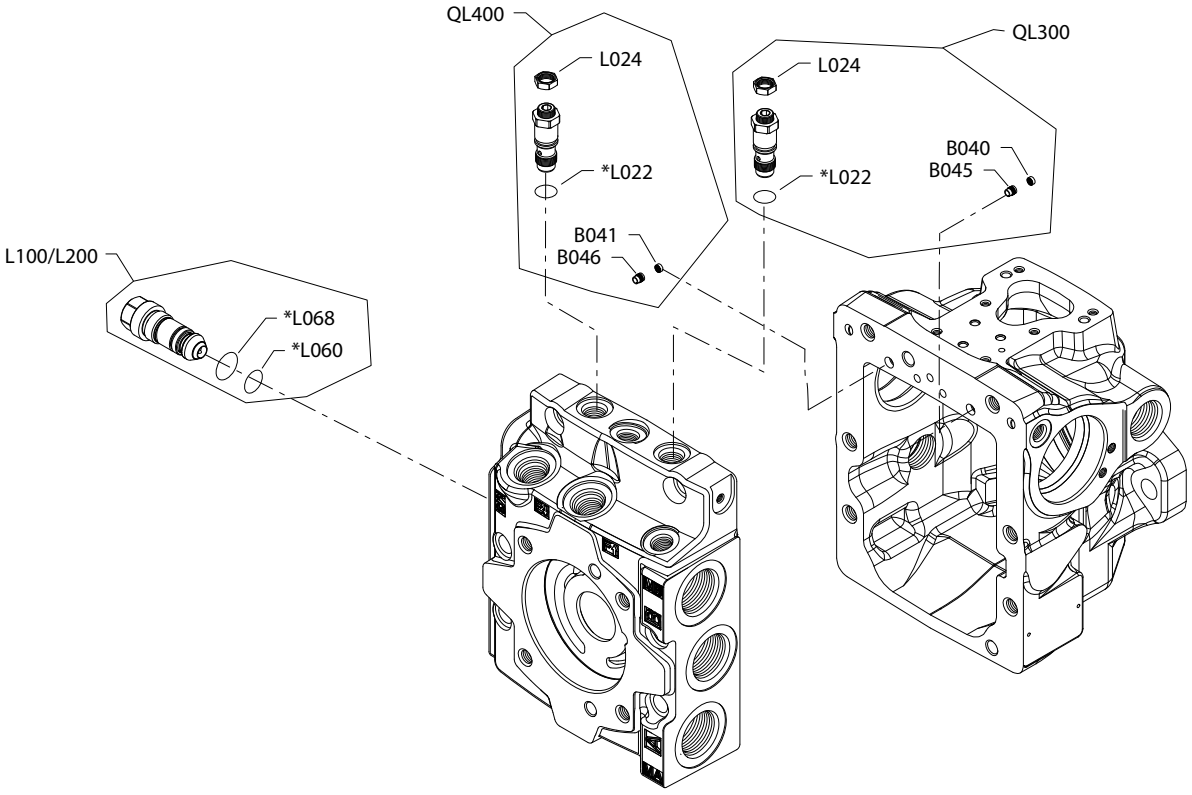

Generic end cap shown.

* Included in overhaul seal kit Q210

High pressure setting

Common parts

Item	Date Begin	Date End	Part Number	Part Name	Qty. per Model/Kit
B040	20-40		140967	Screen (*SB-2020-029* on page 178)	1
B041	20-40		140967	Screen (*SB-2020-029* on page 178)	1
B045	20-40		11062648	Screen retainer (*SB-2020-029* on page 178)	1
B046	20-40		11062648	Screen retainer (*SB-2020-029* on page 178)	1
L022	09-27		041152	O-ring	1
L024	09-27		11054668	Nut	1
L060	09-27		141109	O-ring	1
L068	09-27		11052215	O-ring	1
QL300	09-27		11050482	Pressure limiter kit, adjustable, CW rotation pump	1
QL400	09-27		11050482	Pressure limiter kit, adjustable, CCW rotation pump	1

Order code: L15

L200	09-27		11049121	High pressure relief valve, 200 bar	1

Order code: L18

L200	09-27		11049122	High pressure relief valve, 230 bar	1

Order code: L20

L200	09-27		11049123	High pressure relief valve, 250 bar	1

Order code: L23

L200	09-27		11049124	High pressure relief valve, 280 bar	1

Order code: L25

L200	09-27		11049125	High pressure relief valve, 300 bar	1

Order code: L28

L200	09-27		11049126	High pressure relief valve, 330 bar	1

Order code: L30

L200	09-27		11049127	High pressure relief valve, 350 bar	1

Order code: L33

L200	09-27		11252675	High pressure relief valve, 380 bar	1

Parts continue to the next 2 pages.

High pressure setting

Parts configuration

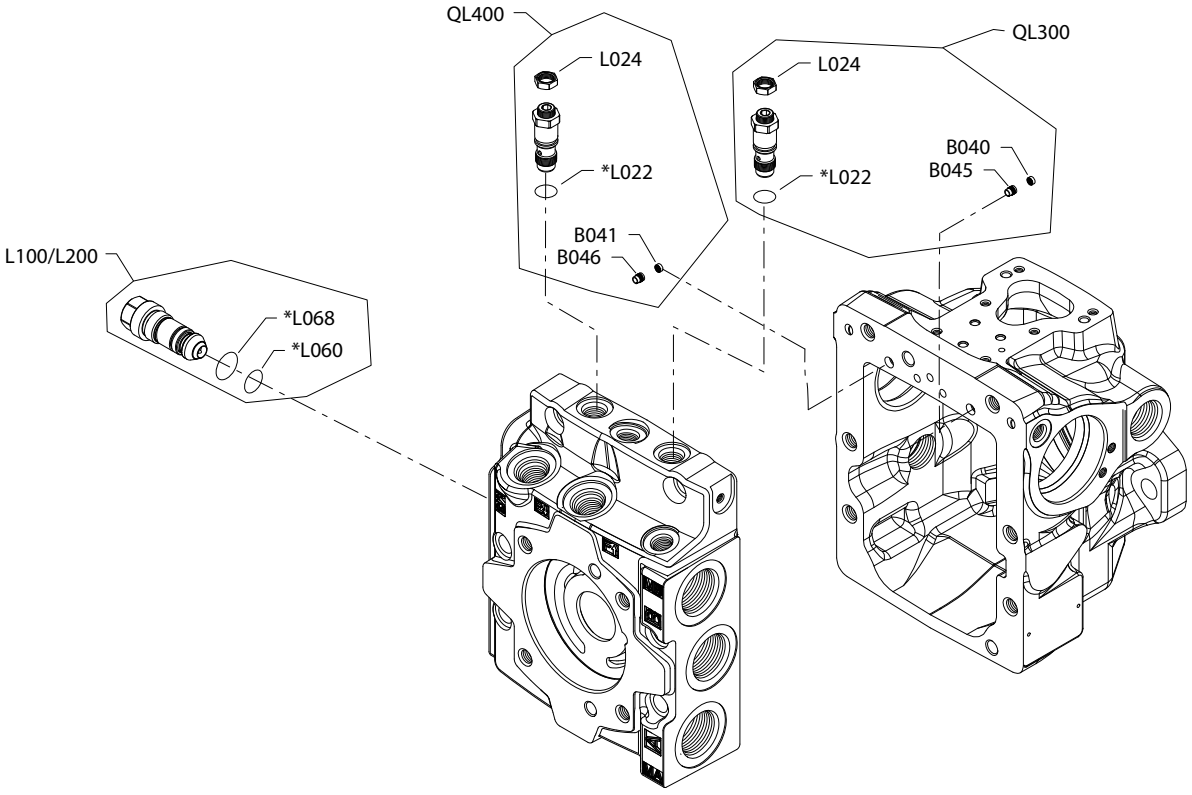

Generic end cap shown.

* Included in overhaul seal kit Q210

High pressure setting

Common parts

Item	Date Begin	Date End	Part Number	Part Name	Qty. per Model/Kit
B040	20-40		140967	Screen (*SB-2020-029* on page 178)	1
B041	20-40		140967	Screen (*SB-2020-029* on page 178)	1
B045	20-40		11062648	Screen retainer (*SB-2020-029* on page 178)	1
B046	20-40		11062648	Screen retainer (*SB-2020-029* on page 178)	1
L022	09-27		041152	O-ring	1
L024	09-27		11054668	Nut	1
L060	09-27		141109	O-ring	1
L068	09-27		11052215	O-ring	1
QL300	09-27		11050482	Pressure limiter kit, adjustable, CW rotation pump	1
QL400	09-27		11050482	Pressure limiter kit, adjustable, CCW rotation pump	1

Order code: L35

L200	09-27		11252674	High pressure relief valve, 400 bar	1

Order code: L38

L200	09-27		11252673	High pressure relief valve, 420 bar	1

Order codes: L3F, L40, L41, L42

L200	17-43		11252670	High pressure relief valve, 450 bar	1

Order code: L43

L200	09-27		11252668	High pressure relief valve, 480 bar	1

Order code: L44

L200	09-27		11252668	High pressure relief valve, 480 bar	1

Order code: L45

L200	09-27		11252668	High pressure relief valve, 480 bar	1

Order code: L46

L200	09-27		11252667	High pressure relief valve, 510 bar	1

Order code: L47

L200	09-27		11252667	High pressure relief valve, 510 bar	1

Parts continue to the next 2 pages.

High pressure setting

Parts configuration

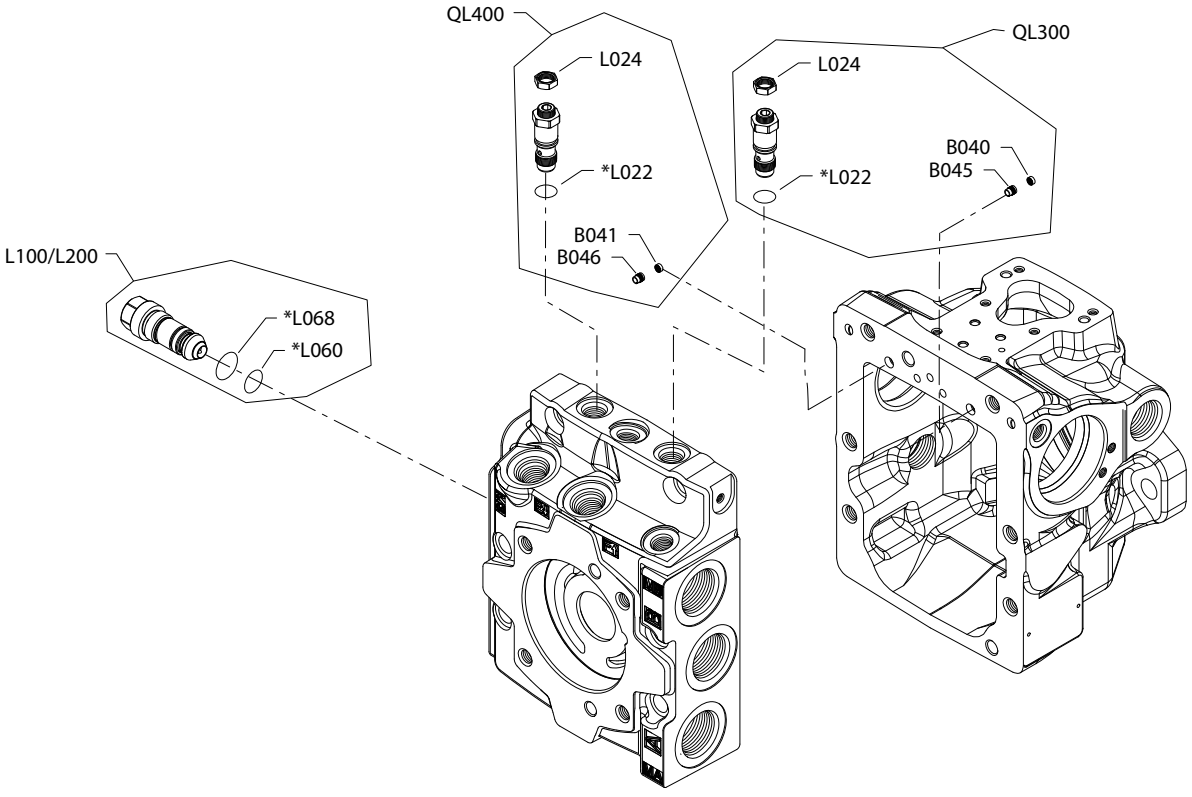

Generic end cap shown.

* Included in overhaul seal kit Q210

High pressure setting

Common parts

Item	Date Begin	Date End	Part Number	Part Name	Qty. per Model/Kit
B040	20-40		140967	Screen (*SB-2020-029* on page 178)	1
B041	20-40		140967	Screen (*SB-2020-029* on page 178)	1
B045	20-40		11062648	Screen retainer (*SB-2020-029* on page 178)	1
B046	20-40		11062648	Screen retainer (*SB-2020-029* on page 178)	1
L022	09-27		041152	O-ring	1
L024	09-27		11054668	Nut	1
L060	09-27		141109	O-ring	1
L068	09-27		11052215	O-ring	1
QL300	09-27		11050482	Pressure limiter kit, adjustable, CW rotation pump	1
QL400	09-27		11050482	Pressure limiter kit, adjustable, CCW rotation pump	1

Order code: L48

L200	09-27		11252667	High pressure relief valve, 510 bar	1

Order code: L4G

L200	14-15		11252668	High pressure relief valve, 480 bar	1

Charge pump and filtration

H1P 89/100 charge pump D-N

Parts configuration

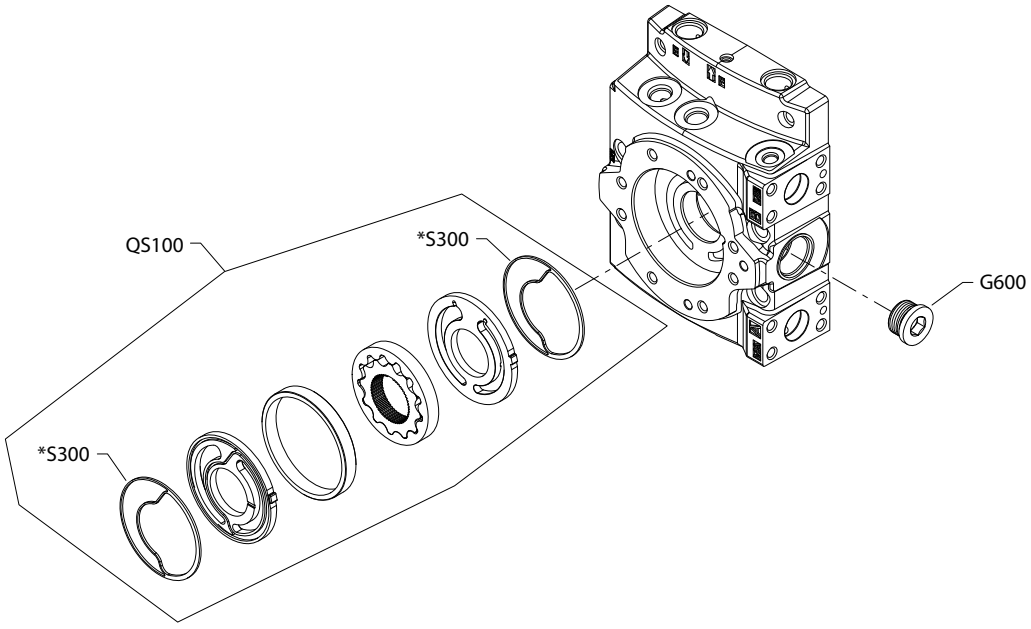

Generic end cap shown.

* Included in overhaul seal kit Q210

Charge pump and filtration

Order code: D

Item	Date Begin	Date End	Part Number	Part Name	Qty. per Model/Kit
QS100	09-27		11040272	Charge pump kit, 20 cc	1
S300	09-27		11126777	Seal ring (*SB-2013-019* on page 166)	2

Order code: M

QS100	09-27		11040273	Charge pump kit, 24 cc	1
S300	09-27		11126777	Seal ring (*SB-2013-019* on page 166)	2

Order code: N

G600	09-27		676734 (9005110-9500)	Plug assembly	1

Charge pump and filtration

H1P filtration C

Parts configuration

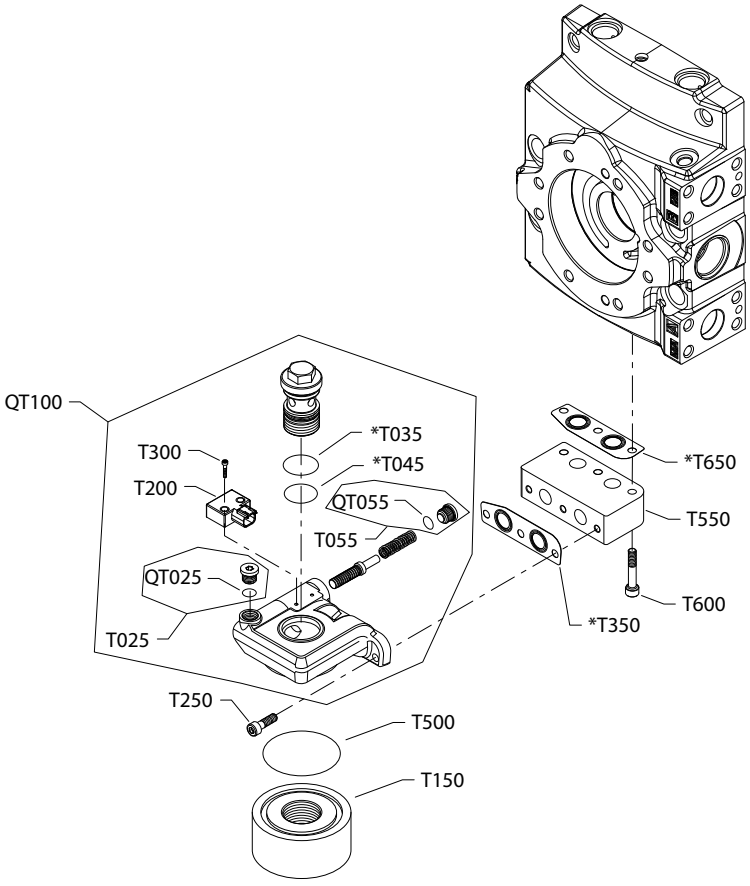

Generic end cap shown

* Included in overhaul seal kit Q210

Charge pump and filtration

Order code: C

Item	Date Begin	Date End	Part Number	Part Name	Qty. per Model/Kit
T025	09-27		141269	Plug assembly	1
T035	09-27		761148	O-ring	1
T045	09-27		314500 (9004100-1250)	O-ring	1
T055	09-27		141269	Plug assembly	1
QT100	09-27		11127352	Pressure filter adapter assembly	1
T150	09-27		11190584	Cover	1
T200	09-27		11031852	Filtration sensor (*SB-2007-052* on page 160)	1
T250	09-27		11128665	Screw, M8 x 25	3
T300	09-27		140560	Screw, M3 x 16	2
T350	09-27		140737	Filter adapter gasket	1
T500	09-27		000943 (9004100-2300)	O-ring	1
T550	09-27		11008273	Adapter plate	1
T600	09-27		376624	Screw, M8 x 45	3
T650	09-27		140737	Gasket	1

Charge pump and filtration

H1P 89/100 filtration E-P

Parts configuration

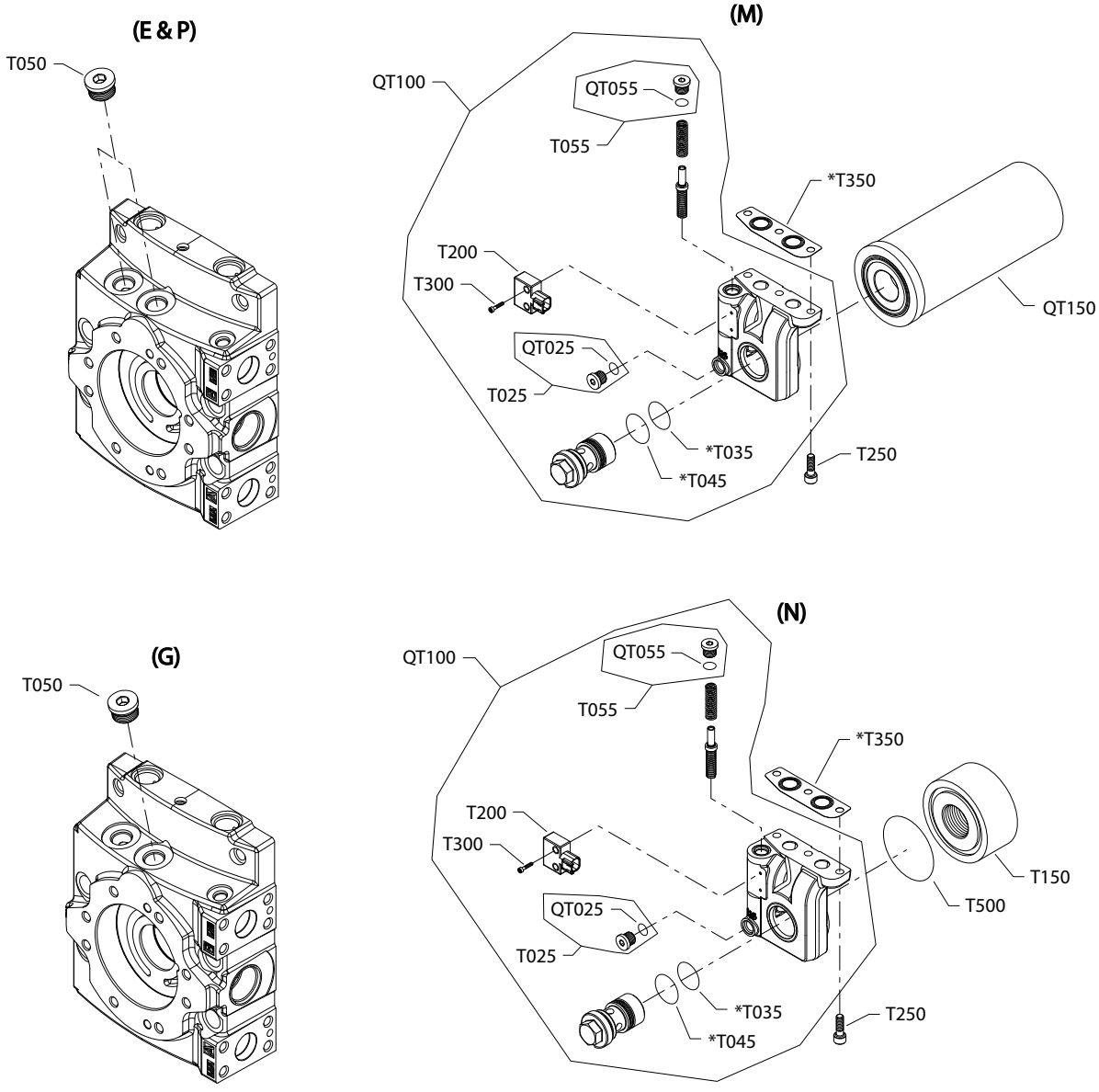

Generic end caps shown. Option P is available in SAE and metric configurations. Please order accordingly.

* Included in overhaul seal kit Q210

Charge pump and filtration

Order code: E

Item	Date Begin	Date End	Part Number	Part Name	Qty. per Model/Kit
T050	09-43		315325 (9005110-8700)	Plug assembly	2

Order code: G

T050	14-30		315325 (9005110-8700)	Plug assembly	1

Order code: L

No parts

Order code: M

QT150	09-27		11004918	Filter assembly	1
T025	09-27		141269	Plug assembly	1
T035	09-27		761148	O-ring	1
T045	09-27		314500 (9004100-1250)	O-ring	1
T055	09-27		141269	Plug assembly	1
QT100	09-27		11127352	Pressure filter adapter assembly	1
T200	09-27		11031852	Filtration sensor (*SB-2007-052* on page 160)	1
T250	09-27		11128665	Screw, M8 x 25	3
T300	09-27		140560	Screw, M3 x 16	2
T350	09-27		140737	Filter adapter gasket	1

Order code: N

T025	09-27		141269	Plug assembly	1
T035	09-27		761148	O-ring	1
T045	09-27		314500 (9004100-1250)	O-ring	1
T055	09-27		141269	Plug assembly	1
QT100	09-27		11127352	Pressure filter adapter assembly	1
T150	09-27		11008261	Cover	1
T200	09-27		11031852	Filtration sensor (*SB-2007-052* on page 160)	1
T250	09-27		11128665	Screw, M8 x 25	3
T300	09-27		140560	Screw, M3 x 16	2
T350	09-27		140737	Filter adapter gasket	1
T500	09-27		000943 (9004100-2300)	O-ring	1

Order code: P

T050	09-27		315325 (9005110-8700)	Plug assembly (SAE)	2
T050	16-08		11178809	Plug assembly, M22 (metric)	2

Charge pressure relief

H1P 89/100 charge pressure relief 18-34

Parts configuration

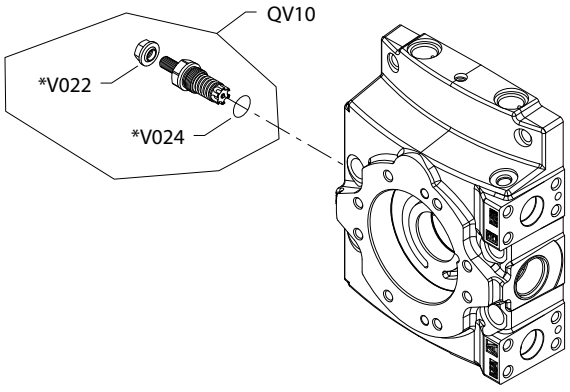

Generic end cap shown.

* Included in overhaul seal kit Q210

Charge pressure relief

Order code: 18-22

Item	Date Begin	Date End	Part Number	Part Name	Qty. per Model/Kit
QV10	16-33		11137578	Charge relief valve kit (*SB-2017-018* on page 170)	1
QV10	09-27	16-32	11004711	Charge relief valve kit	1
V022	16-33		066159	Seal nut, M12 (*SB-2017-018* on page 170)	1
V022	09-27	16-32	612291 (9003508-0008)	Seal nut	1
V024	09-27		001149 (9004201-6200)	O-ring	1

Order code: 24-34

QV10	16-33		11137579	Charge relief valve kit (*SB-2017-018* on page 170)	1
QV10	09-27	16-32	11017127	Charge relief valve kit	1
V022	16-33		066159	Seal nut, M12 (*SB-2017-018* on page 170)	1
V022	09-27	16-32	612291 (9003508-0008)	Seal nut	1
V024	09-27		001149 (9004201-6200)	O-ring	1

Overhaul seal kit

H1P 89/100 seal kit

Item	Date Begin	Date End	Part Number	Part Name	Qty. per Model/Kit
Q210	09-27		11178087	Overhaul seal kit, H1P089-100	1
D060	09-27		612291 (9003508-0008)	Seal nut	1
D150	09-27		11227209	Control gasket	1
D611	09-27	21-12	11066774	O-ring (*SB-2021-014* on page 179)	2
D611	21-13		11225703	O-ring	2
D612	09-27	21-12	11003126	Plug (*SB-2021-014* on page 179)	2
D612	21-13		11223708	Plug	2
E020	09-27		11075555	O-ring	2
E025	09-27		11075554	Piston seal ring	2
E250	09-27		012187	O-ring	2
E500	09-27		042432	Seal nut	1
E550	09-27		042432	Seal nut	1
G150	09-27		11011646	End cap gasket	1
J250	09-27		140911	Lip seal	1
J260	09-27		11043926	O-ring	1
K150	09-27		11029873	Adapter seal	1
K150	19-36		11158794	O-ring	1
K150	19-36		11167589	O-ring	1
L022	09-27		041152	O-ring	2
L060	09-27		141109	O-ring	2
L068	09-27		11052215	O-ring	2
QD26	09-27		11001952	O-ring	2
QD81	09-27		11059551	O-ring	1
QD81	09-27		11152257	O-ring	1
QD751	09-27		001131	O-ring	1
QH131	09-27		11013397	O-ring	1
S300	09-27		11126777	Seal ring	2
S680	19-36		9004201-7500	O-ring	1
T035	09-27		761148	O-ring	1
T045	09-27		314500 (9004100-1250)	O-ring	1
T350	09-27		140737	Filter adapter gasket	1
T650	09-27		140737	Filter adapter gasket	1
V022	16-33		066159	Seal nut	1
V022	09-27	16-32	612291 (9003508-0008)	Seal nut	1
V024	09-27		001149 (9004201-6200)	O-ringnitrile	1
V310	19-36		11162608	Control seal	1
V415	19-36		9004201-6200	O-ring	1
V425	19-36		589853	O-ring	1

Service bulletin

SB-2006-030

Products affected

Subject

Control, servo piston and housing

Description

As a product improvement, Danfoss made changes to the H1 147 and 165cc pumps. The following parts are affected by this change; control, servo piston, and pump housing.

Control: The old control had five mounting screws and the control pilot supply screen was between the pump housing and the end cap. The new control uses six mounting screws and has the supply screen integrated into the control. The new and old controls are not interchangeable. The old control will be available for a period of time.

Pump housing: The old pump housing was designed to accept the original five screw control. The old pump housing was also machined to have the control pilot supply screen in it. The new pump housing was designed to accept the new six mounting screw control. The supply screen has been moved to the control. Also, the new pump housing was changed slightly to accept the new servo piston assembly. The new and old pump housings are not interchangeable. The old pump housing is no longer available for service.

Servo piston assembly: The servo piston assembly has new spring seats. The new servo piston assembly can be used in the new and old housings. The old servo piston assembly can only be used in the old housings. The old servo piston assembly is obsolete and no longer available for service.

Service kit: A service kit has been created to service the older models requiring a new housing. This kit includes; the new control and screws, new pump housing, new servo piston assembly, and a pump overhaul seal kit.

Models affected

All H1 147 and 165cc pumps

Serial numbers

This change became effective at serial number N-07-01-xxxxx.

Part numbers affected

Description	Old part number	New part number	Servo piston type
Housing (Class)	11005477	11019991	Nested spring assembly
Housing (standard)	11005069	According to control	Standard assembly
EDC 12V (A2) Kit	11004693	11019987	Standard assembly
EDC 24V (A3) Kit	11004695	11019988	Standard assembly
EDC 12V Mor (A4) Kit	11004697	11019989	Standard assembly
EDC 24V Mor (A5) Kit	11004699	11019990	Standard assembly
EDC 12V Corf (A6) Kit	11004701	11019991	Nested spring assembly

Description	Old part number	New part number
Servo piston assembly (standard)	140500	11005250
Servo piston assembly (nested springs)	11000580	11005249

Service bulletin

Parts disposition

Interchangeable

SB-2008-038

Products affected

H1 pumps

Subject

Rubber coated auxiliary flange cover

Description

Danfoss has replaced the H1 pump auxiliary flange cover plate with a new rubber coated plate for all auxiliary flanges. The O-ring or donut style seal is no longer needed. The adapter flange interface to the auxiliary pump did not change, making this an interchangeable change. The new rubber coated cover plate can not be used as a running cover, if an auxiliary pump is not installed. The old cover and seal will need to be used for a running cover.

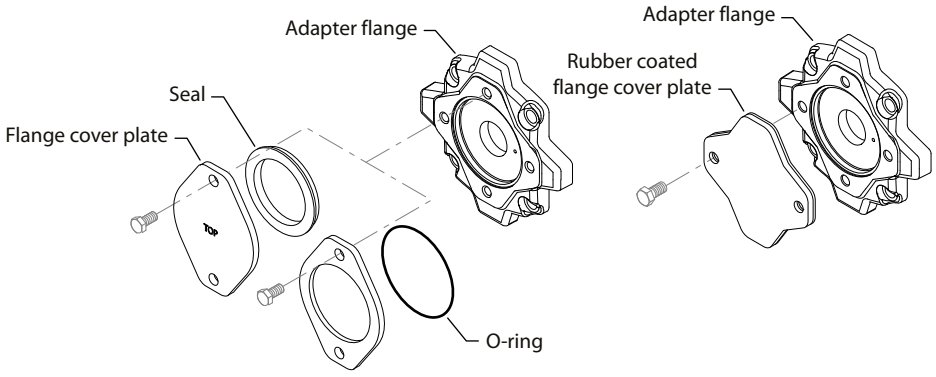

Models affected

All H1 pumps.

Serial numbers

Pad type	45/53cc	78cc	147/165cc
A	A-08-33-xxxxx	N-07-32-xxxxx	N-08-12-xxxxx
B	A-08-33-xxxxx	N-08-36-xxxxx	N-08-36-xxxxx
C	N/A	N-08-36-xxxxx	N-08-36-xxxxx
D	N/A	N/A	N-08-36-xxxxx

Part numbers affected

Pump size	Pad type	Description	Old part number	New part number
45 and 53cc	A	Cover plate	4460586	11017125
		Seal	4800482	
78cc	A	Cover plate	9802336	11017125
		O - ring	9004104-1520	

Service bulletin

Pump size	Pad type	Description	Old part number	New part number
147 and 165cc	A	Cover plate	9802336	11017125
		O-ring	9004104-1520	
45 and 53cc	B	Cover plate	8801059	11023746
		Seal	8801061	
78cc	B	Cover plate	4460370	11023746
		O-ring	9004104-1540	
147 and 165cc	B	Cover plate	4460370	11023747
		O-ring	9004104-1540	
45 and 53cc	C	Cover plate	8800406	11023750
		O-ring	9004104-1580	
78cc	C	Cover plate	8800406	11023748
		O-ring	9004104-1580	
147 and 165cc	D	Cover plate	338400	11023751
		O-ring	726927	

Parts disposition

Interchangeable

SB-2007-052

Products affected

H1 pumps

Subject

Filtration pressure sensor

Description

As a product improvement, Danfoss has changed the filtration pressure sensor. The new filtration pressure sensor is completely interchangeable with the old sensor. The old sensor will be obsoleted.

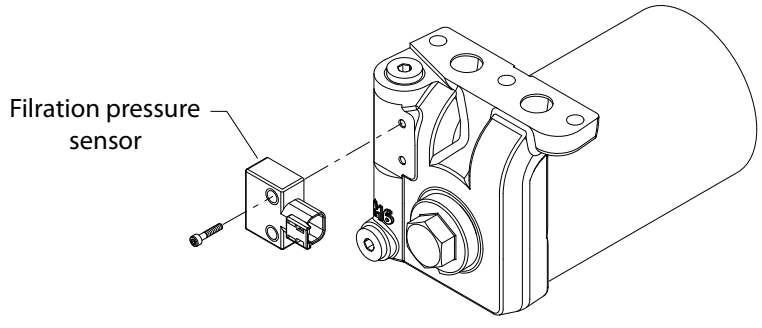

Models affected

All H1 pumps with an "M" or "S" filtration option

Serial numbers affected

This change became effective at serial number N-07-43-xxxxx

Service bulletin

Part numbers affected

Description	Old part number	new part number
Filtration sensor position	140355	11031852
Filtration sensor position	11000357	11031853

Parts disposition

Interchangeable, use parts in stock

Service bulletin

SB-2012-009

Products affected

H1069/078 and 089/100 cc pumps

Subject

Journal bearing design change

Description

As a product improvement and part commonality between models, Danfoss is changing the journal bearing design in 069/078cc and 089/100cc H1 pumps. The split line center line position moves to the position of the bore center line. The new Journal Bearing is completely interchangeable with the old one. A new part number has been issued for tracking purposes. The old part number is obsolete and no longer available for service.

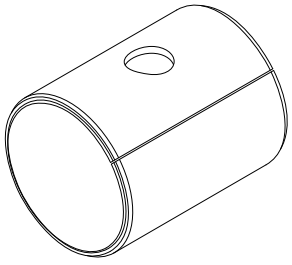

Old design

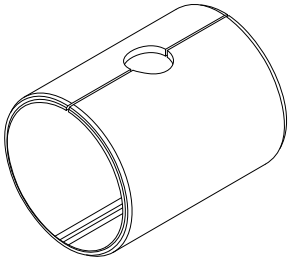

New design

Models affected

H1 069/078 and 089/100 cc pumps

Serial numbers

This change became effective at serial number N-12-21-08067 (20 May 2012)

Part numbers affected

Description	Old part number	New part number
Journal bearing	141102	11087822

Parts disposition

- Non-interchangeable
- Use parts in stock

Service bulletin

SB-2012-014

Products affected

H1 90-100cc pumps

Subject

Shaft change

Description

Danfoss has removed the bypass on the end of the shaft on H1 089/100cc pumps. The old shaft allowed unfiltered oil from the pump case into charge pump and the high pressure loop. The bypass feature is now in the end cap. This change is not interchangeable with EPF end caps that have external remote filtration. The old design shafts are obsolete and no longer available.

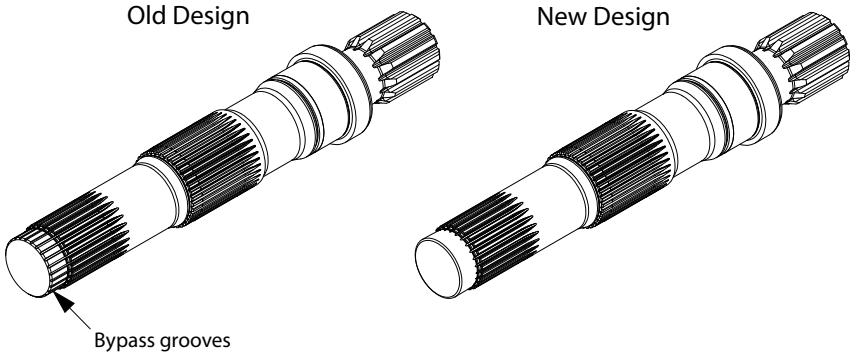

Models affected

H1 89-100cc pumps

Serial numbers

See below

Part numbers affected

Description	Old part number	New part number	Implement date
Shaft, 21T (F1)	11011436	11112179	N12-43-xxxxx (22 Oct 2012)
Shaft, tapered (F4)	11021928	11112181	N12-40-xxxxx (01 Oct 2012)
Shaft, 14T (G1)	11011437	11112178	N12-43-xxxxx (25 Oct 2012)
Shaft, 23T (G9)	11011438	11112180	N12-36-xxxxx (05 Sep 2012)

Parts disposition

Non-interchangeable; use parts in stock

Service bulletin

SB-2013-003

Products affected

H1 pumps

Subject

Valve plate change

Description

As part of continuing product improvement efforts, Danfoss is implementing a design change to the valve plates. The new valve plates are interchangeable with old valve plate. The new design reduces cavitation wear to the valve plate. The old valve plate will be become obsolete.

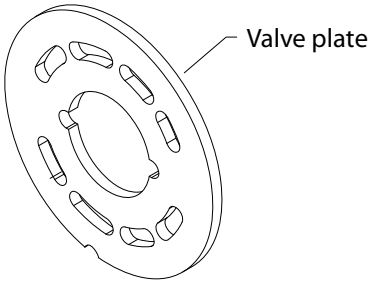

Models affected

H1 69 through 165cc pumps

Serial numbers

See below

Part numbers affected

Description	Old part number	New part number	Effective date
069/078 R CP17-1.5	11075607	11125564	N-13-05-xxxxx (31 Jan 2013)
069/078 R CP17+2.5	11076863	11125563	N-13-05-xxxxx (31 Jan 2013)
069/078 L CP17+2.5	11076865	11125551	N-13-05-xxxxx (31 Jan 2013)
069/078 L CP17-1.5	11076866	11125562	N-13-05-xxxxx (31 Jan 2013)
089/100 R CP17-1.5	11077025	11125566	N-13-05-xxxxx (31 Jan 2013)
089/100 R CP17+2.5	11077027	11125567	N-12-50-xxxxx (12 Dec 2012)
089/100 L CP17-1.5	11077026	11125568	N-13-05-xxxxx (31 Jan 2013)
089/100 L CP17+2.5	11077028	11125565	N-12-49-xxxxx (5 Dec 2012)
115/130 R CP17+2.5	11077029	11125572	N-13-05-xxxxx (25 Jan 2013)
115/130 R CP17-1.5	11077031	11123707	N-13-05-xxxxx (31 Jan 2013)

Service bulletin

Description	Old part number	New part number	Effective date
115/130 L CP17+2.5	11077030	11125569	N-13-05-xxxxx (31 Jan 2013)
115/130 L CP17-1.5	11077062	11125571	N-13-03-xxxxx (16 Jan 2013)
147/165 R CP17-1.5	11077063	11123708	N-13-05-xxxxx (31 Jan 2013)
147/165 R CP17+2.5	11077065	11125576	N-13-05-xxxxx (31 Jan 2013)
147/165 R (larger dia.)	11093335	11126989	N-13-05-xxxxx (31 Jan 2013)
147/165 L CP17-1.5	11077064	11125575	N-13-03-xxxxx (14 Jan 2013)
147/165 L CP17+2.5	11077066	11125574	N-13-05-xxxxx (31 Jan 2013)

Parts disposition

- Interchangeable
- Use parts in stock

Service bulletin

SB-2013-019

Products affected

H1 pumps

Subject

Charge pump seal

Description

As a product improvement, Danfoss has changed the material on the sealing ring in the charge pump port plates of H1 pumps. The part number was changed for tracking purposes because the parts look similar. The old part numbers will become obsolete and no longer available as service parts.

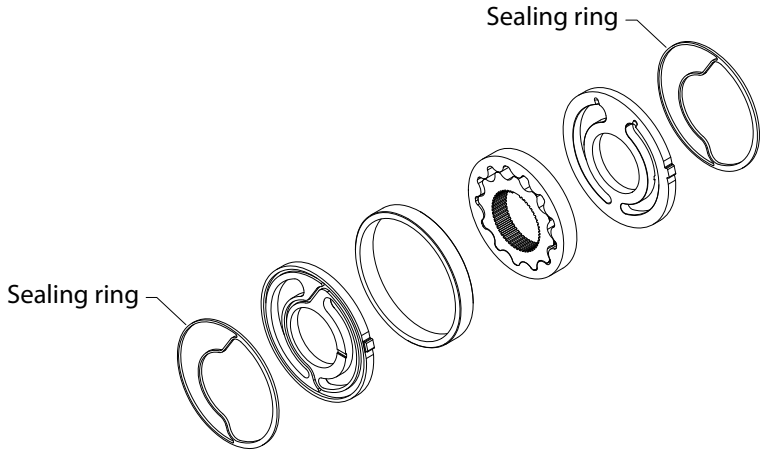

Models affected

H1 pumps

Serial numbers

Part 11126778 took effect at serial number: N-13-23-00773 (04June2013)

Part 11126777 took effect at serial number: N-13-22-25411 (28 May2013)

Part numbers affected

Description	Old part number	New part number
Seal Ring, H1P115-165 port plate	11008462	11126778
Seal Ring, H1P045-100 port plate	11009457	11126777

Parts disposition

Interchangeable

Scrap used parts

Service bulletin

SB-2015-035

Products affected

H1 pumps

Subject

Control override valve service kit change

Description

Service kits for Control Override Valves (CCO/COR) on H1 pumps have been reconfigured to include a new control option. There has been a connector change to the coil. The new connector is a DEUTSCH key-lock pin style (W2SC). The old solenoid has a wire lead with a standard DEUTSCH connector (W2P).

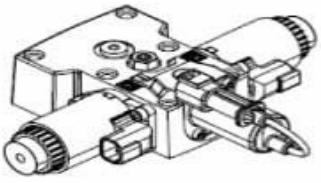

Old style control (W2P con nector)

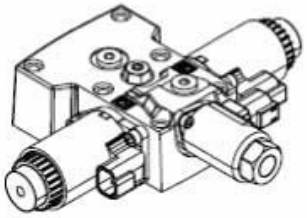

New style control (W2SC connector)

Each new service kit comes with an adapter cable which has a W2P and a W2SC on each end.

Adapter Cable

New service kit numbers have been issued for the new control option. The old service kits are no longer available. Reference PUB HY2014-175.

EDC, 12v DEUTSCH connector, COR	Before Change: H1-P-100-L-A-**A6**-C2-N-D8-H-F1-H5-L-42-L-42-D-P-24-PN-NNN-NNN
	After Change: H1-P-100-L-A-**S6**-C2-N-D8-H-F1-H5-L-42-L-42-D-P-24-PN-NNN-NNN
EDC, 24v DEUTSCH connector, CCO	Before Change: H1-P-100-R-A-**C1**-C2-N-D6-H-G9-H2-L-38-L-38-M-L-24-PN-NNN-NNN
	After Change: H1-P-100-R-A-**E8**-C2-N-D6-H-G9-H2-L-38-L-38-M-L-24-PN-NNN-NNN

Models affected

H1 pumps

Service bulletin

Serial numbers

No serial numbers affected. The new option began with the new part number.

Part numbers affected

Description	Old control option	Old number	New control option	New number
SVC KIT-EDC, H1P 12V DT04 FAST CORF	A6	11019736	S6	11152574
SVC KIT-EDC, H1P 12V DT04 CCO	C5	11086382	E7	11147471
SVC KIT-EDC, H1P 12V DT04 CCO KEY-C	D4	11131492	E7	11147471
SVC KIT-EDC, H1P 24V DT04 CCO	C6	11086383	E8	11147472
SVC KIT-EDC, H1P 24V DT04 FAST CORF	C1	11037176	E8	11147472
SVC KIT-EDC, H1P 095 12V CCO			E5	11147422
SVC KIT-EDC, H1P 095 24V CCO			E6	11147423
CABLE-ADAPTER (W2SC/ W2SC)				11153287
CABLE-ADAPTER (W2SC/ W2P)				11150437

Control options S6, E7 and E8 contain parts for the new style connector. The attached cable adaptor W2P / W2SC supplied in the service kit is necessary to replace the old control.

Parts disposition

Non-interchangeable

Service bulletin

SB-2016-033

Products affected

H1 pumps and tandems, MP1 and M46 control kits

Subject

Control Gasket

Description

Danfoss Power Solutions has made a two-part design change to the control gasket used on H1 pumps and tandems and in MP1 and M46 control kits. The electrical displacement controls (EDC) have changed from an 8mm port to 12mm with tabs on the pressure port. The interim gasket used in the manual displacement controls has changed from a 10mm port to 12mm with tabs in the pressure port.

The gasket is now a common part to all pump models and control service kits. The new part can be substituted for the old part, but the old part cannot be substituted for the new part.

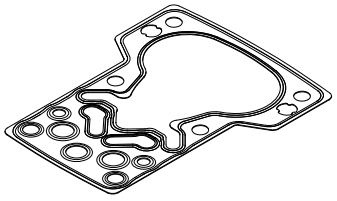

Old gasket

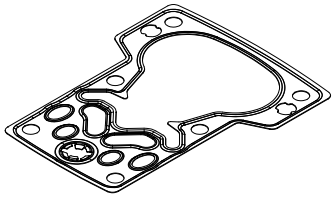

New gasket

Models affected

H1 pumps and tandems, MP1 control kits, M46 control kits

Serial numbers

H1 Pumps - This change became effective on N-16-36-30132

H1 Tandems - This change became effective on N-16-37-30132

MP1 Control Kits - This change became effective on N-16-32-xxxxx

M46 Control Kits - This change became effective on N-16-32-xxxxx

Part numbers affected

Description	Old part number	New part number
Electrical displacaement control gasket	140879	11173377
Manual displacaement control gasket	11159911	11173377

Parts disposition

Non-interchangeable - can substitute new for old

Service bulletin

SB-2017-018

Products affected

H1 89-100cc pumps

Subject

Charge relief valve

Description

A design change has been made to the charge pressure relief valve on all 89/100cc H1 pumps. The charge relief poppet drain hole has been relocated to the side and the adjusting set screw and seal lock nut have changed from M8 to M12 threading.

The charge relief valve cavity in the end caps changed July 1, 2016. As a result, the old charge relief can be used with old or new design end caps. The new charge relief valve can only be used with the new end cap design. Components within the assemblies are not interchangeable.

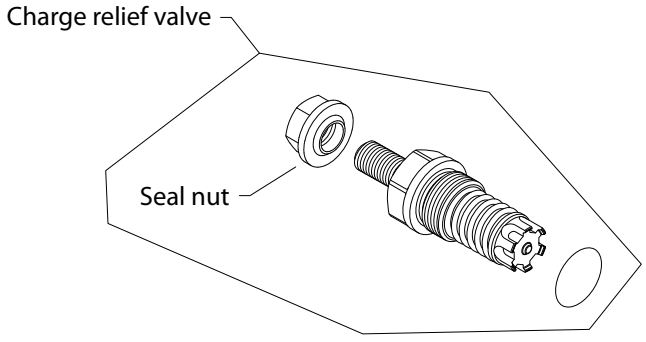

Models affected

H1 89-100cc pumps

Serial numbers

The standard end caps change became effective at serial number N-16-33-xxxxx (16 Aug 2016)

The charge relieve change became effective at serial number N-16-50-xxxxx (20 Dec 2016)

Part numbers affected

Description	Old part number	New part number
Charge pressure relief valve kit 18-22 bar	11004711	11137578
Charge pressure relief valve kit 24-34 bar	11017127	11137579
Seal nut	612291 (9003508-0008)	066159

Parts disposition

Non-interchangeable- refer to description of this bulletin

Scrap used parts

Service bulletin

SB-2018-005

Products affected

H1 89-100cc pumps

Subject

Shaft and cylinder block kit change

Description

Danfoss has made design changes to the main shaft and the slipper retainer ball guide in the H1 89/100cc pumps cylinder block kit. The internal block splines on the shaft are now machined longer and the slipper retainer ball guide is now splined.

The new shaft may be substituted for the old shaft, but the old shaft cannot be substituted for the new shaft. The old shaft will be obsoleted.

The slipper retainer ball guide design is changed from non-splined to splined due to the new shaft spline design change. The new splined ball guide can be used only with the new shaft design and it is not interchangeable. The old slipper retainer ball guide will be obsoleted.

Shaft Change:

Cylinder Block Kit Change:

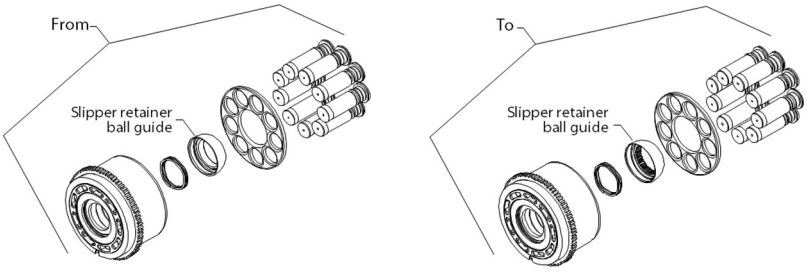

Models affected

H1 89-100cc pumps

Serial numbers

Shaft change became effective at 29 Aug 2017 (N1736xxxxx)

Cylinder block change became effective at 15 Nov 2017 (N1747xxxxx)

Part numbers affected

Description	Old Part Number	New Part Number
Shaft, T1P089-100 23T 16/32 M10	11154870	11179434
Shaft, T1P089-100 21T 16/32 M10	11154868	11179433
Shaft, H1P089-100 14T 12/24	11112178	11179430

Service bulletin

Description	Old Part Number	New Part Number
Shaft, H1P089-100 21T 16/32	11112179	11179429
Shaft, H1P089-100 23T 16/32	11112180	11179432
Shaft, H1P089-100 Taper 38-3 Keyway	11112181	11179424
Shaft, H1P089-100 17T 12/24	11129592	11179428
Shaft, H1P089-100 13T 8/16	11142964	11179431
Shaft, H1P089-100 23T 16/32 M12	11186768	11191128
Kit-Cylinder-Block H1P089 RIF	11179481	11189991
Kit-Cylinder-Block H1P089	11008816	11189991
Kit-Cylinder-Block H1P100	11008576	11190002
Kit-Cylinder-Block H1P089 Speed Sensor	11040198	11191003
Kit-Cylinder-Block H1P100 Speed Sensor	11040203	11191004
Guide-Slipper Retainer, H1P089-100	11121503	111489926

Parts disposition

Shaft is interchangeable from new to old

Cylinder block kit is non-interchangeable

Slipper retainer ball guide is non-interchangeable

Service bulletin

SB-2018-025

Products affected

H1 pumps

Subject

Swashplate feedback link

Description

Danfoss has made a design change to the swashplate feedback link on H1 pumps. To improve the compatibility of the controls that uses the angle sensor. The contact point on the feedback link, to the spring linkage on the angle sensor, has increased in width.

The new part can be substituted for the old part, but the old part cannot be substituted for the new. Old parts will be obsoleted.

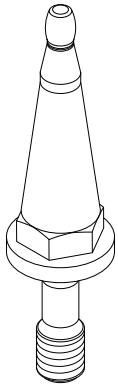

Old feedback link

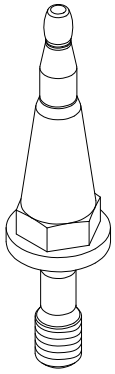

New feedback link

Models affected

H1 45/53cc, 60/68cc, 69/78cc, 89/100cc, 115/130cc, 147/165cc, 210/250cc Pumps and Tandems

Serial numbers

This change became effective in Ames A-18-09-xxxxx

This change became effective in Germany N-18-06-xxxxx

Part numbers affected

Description	Old Part Number	New Part Number
Link-Swashplate feedback, H1P	11167724	11202172
Link-Swashplate feedback, H1P	11148827	11202172

Parts disposition

Non-interchangeable

Service bulletin

SB-2020-03A

Products affected

H1 Pumps

Subject

Standard end cap design and part number changes

Description

This Service Bulletin completes the new part number assignments for the block point change to H1 89/100cc standard end caps communicated in SB-2020-003.

The design change described in SB-2020-003 affects older pump housings, charge pressure relief valves and mounting flanges (see PIB HY2018-350). The new design increases the end cap/mounting flange thickness and requires a longer bolt (130 mm) for SAE-A, SAE-B, and SAE-C mounting flanges. Older pumps with a housing built prior to Week 2 of 2016 will require a 115mm screw when using a new end cap with a NN or SAE-A or SAE-B mounting flange. For information about the SAE-C mounting flange see Service Bulletin *SB-2020-04A* on page 177.

It is important to use the proper end cap screw in any repair in order to prevent future service issues.

Part numbers for the end cap service kits did not change. The new and old end caps are not interchangeable due to the charge pressure relief and SAE-C mounting flange. The new end cap will also affect the charge pressure relief valve (see *SB-2017-018* on page 170).

Old End Cap Design ***New End Cap Design***

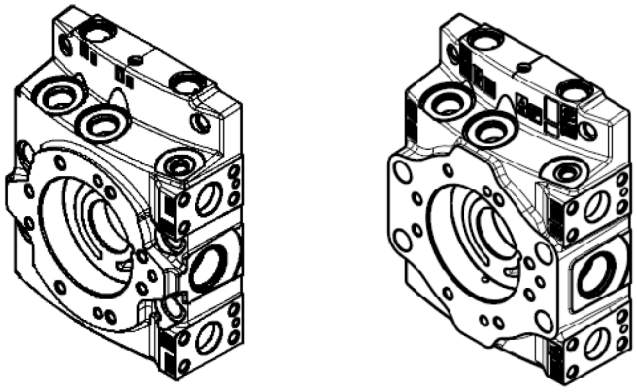

Models affected

H1 89/100cc pumps

Serial numbers affected

This change became effective at N-19-13-xxxx (21 March 2019)

Part numbers affected

Description	Old part number	New part number
Screw-SOC, ISO4762 M16x100 10.9	519508	
Screw-SOC, ISO4762 M16x115 10.9		11246320
Screw-SOC, ISO4762 M16x130 10.9		5000676

Service bulletin

Parts disposition

Non-interchangeable

SB-2020-004

Products affected

H1 pumps

Subject

SAE-C End Cap design change

Description

Danfoss Power Solutions has made a block point change to H1 89/100cc standard end caps. This change affects older pump housings, charge pressure relief valves and mounting flanges (see PIB HY2018-350). As part of this change, the SAE-C end cap has been changed to a standard end cap with a SAE-C flange adapter. The SAE-C flange is bolted to the standard end cap and requires a longer (130mm) bolt (see SB-2020-003). Older pumps with housings built prior to Week 2 of 2016 will require a 120mm screw when using a new end cap with a SAE-C mounting flange.

It is important to use the proper end cap screw in any repair in order to prevent future service issues.

The integrated SAE-C end caps have been oseleted. The pump model nomenclature will change from Revision A to B (see PIB HY2018-350). This change also includes a charge pressure relief change (see SB-2017-018).

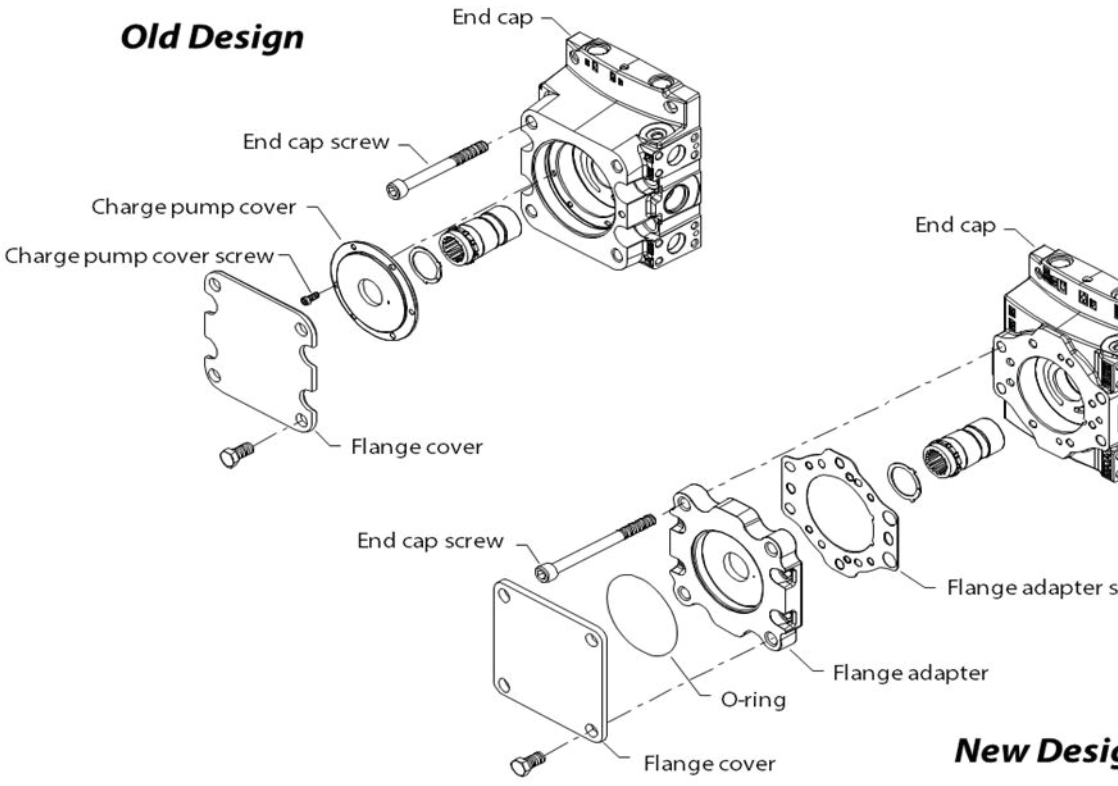

Service bulletin

Models affected:

H1 89/100cc pumps

Serial numbers affected:

This change became effective at N-19-13-xxxx (March 21, 2019)

Part numbers affected:

Description	Old Part Number	New Part Number
Screw-SOC, ISO4762 M16x100 10.9	519508	
Screw-SOC, ISO4762 M16x120 10.9		Pending
Screw-SOC, ISO4762 M16x130 10.9		5000676
Endcap w/BSHG H1P089-100R IPF SAE-C	11011637	11011634
Endcap w/BSHG H1P089-100R SF SAE-C	11011639	11011635
Endcap w/BSHG H1P089-100R EPF SAE-C	11011638	11011636
Endcap w/BSHG H1P089-100L EPF SAE-C	11011644	11011642
Endcap w/BSHG H1P089-100L SF SAE-C	11011645	11011641
Endcap w/BSHG H1P089-100L IPF SAE-C	11011643	11011640
Adapter, H1P089-100 127-2/-4	N/A	11133674
Seal-Adapter, H1P089-100	N/A	11167589
Screw-SOC, DIN7984 M12x 25 10.9	N/A	11000819
Cover-Running Adapter, H1P069-100 127-4	11023750	11137046

Parts disposition:

Non-interchangeable

Service bulletin

SB-2020-04A

Products affected

H1 Pumps

Subject

SAE-C end cap design and part number changes

Description

This Service Bulletin completes the new part number assignments for the block point change to H1 89/100cc standard end caps communicated in SB-2020-004.

The design change described in SB-2020-004 affects older pump housings, charge pressure relief valves and mounting flanges (see PIB HY2018-350). As part of this change, the SAE-C end cap has been changed to a standard end cap with a SAE-C flange adapter. The SAE-C flange is bolted to the standard end cap and requires a longer (130mm) bolt (see *SB-2020-03A* on page 174). Older pumps with housings built prior to Week 2 of 2016 will require a 120mm screw when using a new end cap with a SAE-C mounting flange.

It is important to use the proper end cap screw in any repair in order to prevent future service issues. The integrated SAE-C end caps have been obsoleted. The pump model nomenclature will change from Revision A to B (see PIB HY2018-350). This change also includes a charge pressure relief change (see *SB-2017-018* on page 170).

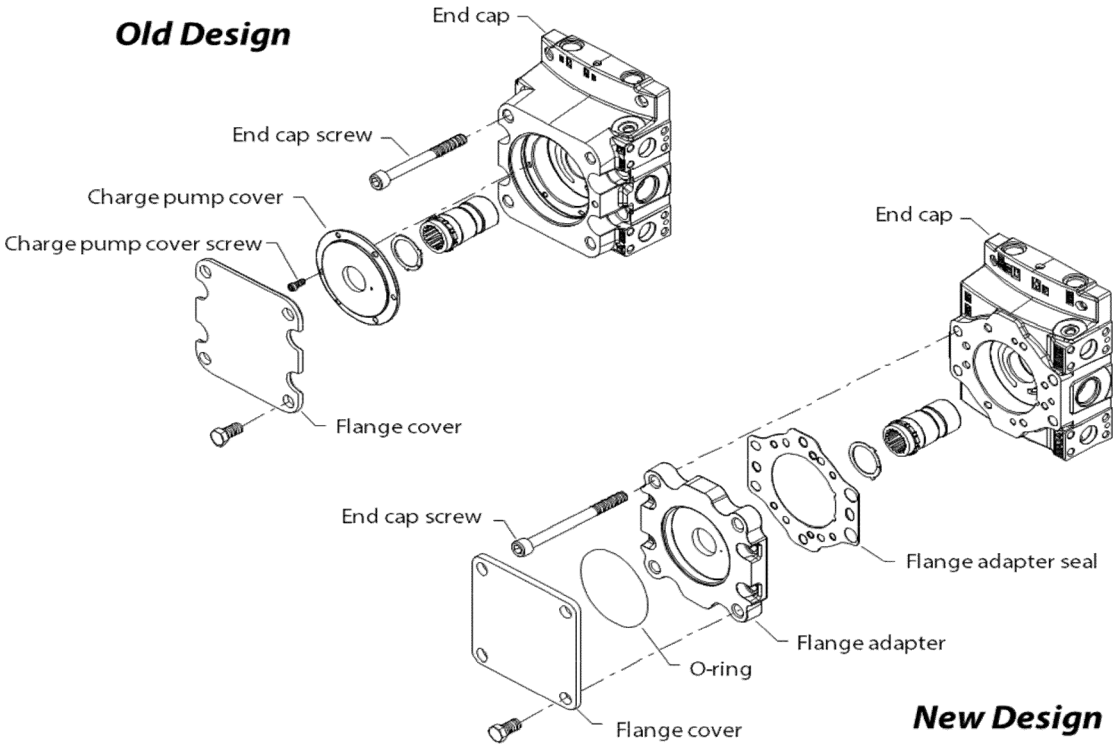

Models affected

H1 89/100cc pumps

Serial numbers affected

This change became effective at N-19-13-xxxx (21 March 21 2019)

Service bulletin

Part numbers affected

Description	Old part number	New part number
Screw-SOC, ISO4762 M16x100 10.9	519508	
Screw-SOC, ISO4762 M16x120 10.9		11246321
Screw-SOC, ISO4762 M16x130 10.9		5000676
End cap w/BSHG H1P089-100R IPF SAE-C	11011637	11011634
End cap w/BSHG H1P089-100R SF SAE-C	11011639	11011635
End cap w/BSHG H1P089-100R EPF SAE-C	11011638	11011636
End cap w/BSHG H1P089-100L EPF SAE-C	11011644	11011642
Endcap w/BSHG H1P089-100L SF SAE-C	11011645	11011641
Endcap w/BSHG H1P089-100L IPF SAE-C	11011643	11011640
Adapter, H1P089-100 127-2/-4	N/A	11133674
Seal-Adapter, H1P089-100	N/A	11167589
Screw-SOC, DIN7984 M12x 25 10.9	N/A	11000819
Cover-Running Adapter, H1P069-100 127-4	11023750	11137046

Parts disposition

Non-interchangeable

SB-2020-029

Products affected

H1 pumps and tandems

Subject

Pressure limiter kits

Description

Danfoss has changed to the pressure limiter service kit. The screens from the housing service kit have been moved to the pressure limiter service kit. The housing assembly (QH125) will continue to come with the screens (and retainers depending on the frame size) pre-assembled.

There is no part number change to the pressure limiter service kit or the housing service kits. In case of conversion of such pumps to those with PL-valves the end cap must be removed to install PL screens and retainers. Please refer to the Repair Instructions.

Service bulletin

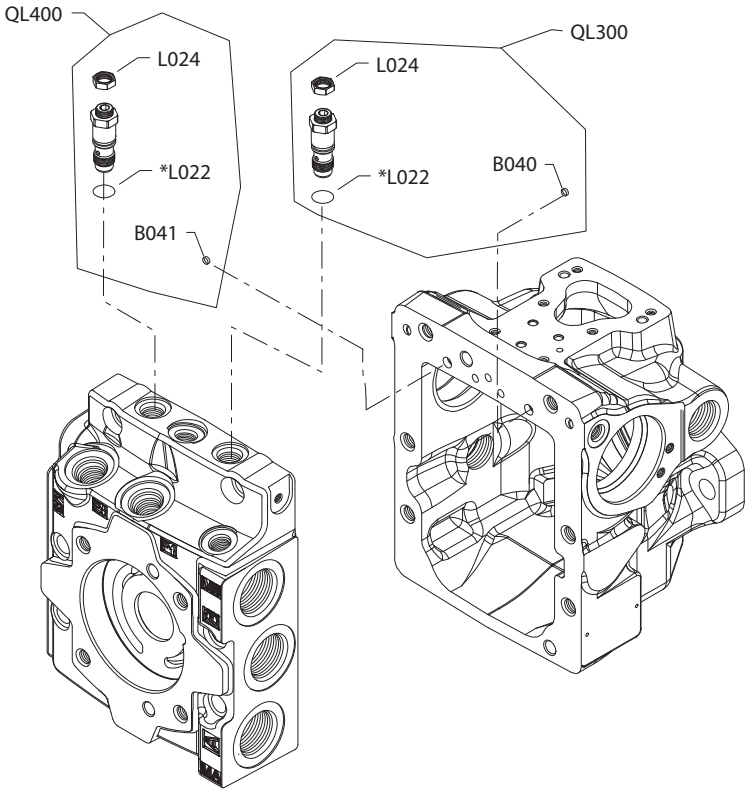

Generic end cap and housing used to show part location only.

Models affected

H1 pumps and tandems: 45/53cc; 60/68cc; 89/100cc; 115/130cc; 147/165cc; 210/250cc

Serial numbers affected

This change became effective at (01 October 2020)

Part numbers affected

None

Parts disposition

Not applicable

SB-2021-014

Products affected

H1 and MP1 pumps

Subject

Automotive control plug design change

Service bulletin

Description

Danfoss Power Solutions has made a design change to the Automotive Control (AC) plug on H1 and MP1 products. The new O-ring has an improved seal around the plug to the housing. This affects all automotive control service kits (AC).

The new and old plugs are not interchangeable. Overhaul seal kits will contain both the old and new plugs. Automotive Control (AC) service kit part numbers have been changed because the plug is non-interchangeable. The older service kits have been obsoleted.

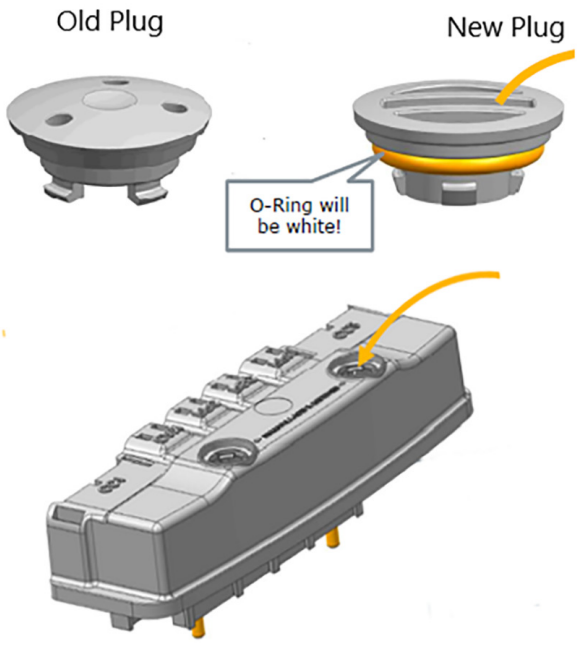

Models affected

H1, MP1 Automotive Control (AC)

Serial numbers affected

- This change became effective at N-21-13-xxxxx 01 April 2021
- This change became effective at S-21-17-xxxxx 28 May 2021
- This change became effective at A-21-18-xxxxx 03 May 2021

Part numbers affected

Description	Old Part Number	New Part Number
PLUG-HOUSING-CONTROLLER-AC H1P ASSY	11000467	11226992
SVC KIT-AC1, GEN1 12V GENERIC D3F	11065118	11232544
SVC KIT-AC2, GEN1 12V GENERIC D5F	11065119	11232766
SVC KIT-AC1, GEN1 24V GENERIC D4F	11065120	11232765
SVC KIT-AC2, GEN1 24V GENERIC D6F	11065121	11232767
SVC KIT-AC1, GEN3 12V GENERIC D3F	11147941	11232768
SVC KIT-AC2, GEN3 12V GENERIC D5F	11147940	11232770
SVC KIT-AC1, GEN3 24V GENERIC D4F	11147943	11232769

Service bulletin

Description	Old Part Number	New Part Number
SVC KIT-AC2, GEN3 24V GENERIC D6F	11147942	11232771
SVC KIT-AC1, GEN3 FLASH 12V GENERIC F1E	11180761	11232792
SVC KIT-AC1, GEN3 FLASH 24V GENERIC F1E	11180762	11232793
SVC KIT-AC2, GEN3 FLASH 12V GENERIC F2J	11180763	11232794
SVC KIT-AC2, GEN3 FLASH 24V GENERIC F2J	11180765	11232795
SVC KIT-AC1, GEN1 HG 12V GENERIC D3F	11082509	11234305
SVC KIT-AC2, GEN1 HG 12V GENERIC D5F	11082522	11234306
SVC KIT-AC1, GEN1 HG 24V GENERIC D4F	11082524	11234307
SVC KIT-AC2, GEN1 HG 24V GENERIC D6F	11052526	11234308
SVC KIT-AC1, H1P078 GEN1 12V CUST D33	11134620	11234311
SVC KIT-AC1, GEN1 12V CUST D57	11155464	11234317
SVC KIT-AC1, H1P078 GEN1 12V CUST D20	11160841	11234319
SVC KIT-AC1, GEN1 24V CUST D61	11193660	11234326
SVC KIT-AC2, GEN1 24V GENERIC D5J	11195129	11234327
SVC KIT-AC2, GEN1 24V CUST C90 C93	11195374	11234328
SVC KIT-AC1, GEN1 12V CUST D90	11193446	11234416
SVC KIT-AC1, GEN3 12V CUST D90	11198212	11234417
SVC KIT-AC1, GEN3 12V CUST D93	11201433	11234418
SVC KIT-AC1, GEN1 12V CUST D12	11201908	11234419
SVC KIT-AC, H1P 12V CUST (D92)	11235075	11235075
SVC KIT-AC1, GEN3 FLASH 12V FA1	11239052	11281634

Parts disposition

Non-interchangeable

ENGINEERING
TOMORROW

Products we offer:

- Cartridge valves
- DCV directional control valves
- Electric converters
- Electric machines
- Electric motors
- Gear motors
- Gear pumps
- Hydraulic integrated circuits (HICs)
- Hydrostatic motors
- Hydrostatic pumps
- Orbital motors
- PLUS+1® controllers
- PLUS+1® displays
- PLUS+1® joysticks and pedals
- PLUS+1® operator interfaces
- PLUS+1® sensors
- PLUS+1® software
- PLUS+1® software services, support and training
- Position controls and sensors
- PVG proportional valves
- Steering components and systems
- Telematics

Hydro-Gear
www.hydro-gear.com

Daikin-Sauer-Danfoss
www.daikin-sauer-danfoss.com

Danfoss Power Solutions is a global manufacturer and supplier of high-quality hydraulic and electric components. We specialize in providing state-of-the-art technology and solutions that excel in the harsh operating conditions of the mobile off-highway market as well as the marine sector. Building on our extensive applications expertise, we work closely with you to ensure exceptional performance for a broad range of applications. We help you and other customers around the world speed up system development, reduce costs and bring vehicles and vessels to market faster.

Danfoss Power Solutions – your strongest partner in mobile hydraulics and mobile electrification.

Go to www.danfoss.com for further product information.

We offer you expert worldwide support for ensuring the best possible solutions for outstanding performance. And with an extensive network of Global Service Partners, we also provide you with comprehensive global service for all of our components.

Local address:

Danfoss
Power Solutions (US) Company
2800 East 13th Street
Ames, IA 50010, USA
Phone: +1 515 239 6000

Danfoss
Power Solutions GmbH & Co. OHG
Krokamp 35
D-24539 Neumünster, Germany
Phone: +49 4321 871 0

Danfoss
Power Solutions ApS
Nordborgvej 81
DK-6430 Nordborg, Denmark
Phone: +45 7488 2222

Danfoss
Power Solutions Trading (Shanghai) Co., Ltd.
Building #22, No. 1000 Jin Hai Rd
Jin Qiao, Pudong New District
Shanghai, China 201206
Phone: +86 21 2080 6201

Danfoss can accept no responsibility for possible errors in catalogues, brochures and other printed material. Danfoss reserves the right to alter its products without notice. This also applies to products already on order provided that such alterations can be made without subsequent changes being necessary in specifications already agreed.
All trademarks in this material are property of the respective companies. Danfoss and the Danfoss logotype are trademarks of Danfoss A/S. All rights reserved.