ENGINEERING
TOMORROW

Data sheet

Shut-off valves
Types SVA-S and SVA-L

SVA shut-off valves are available in angleway and straightway versions and with Standard neck (SVA-S) and Long neck (SVA-L)

The shut-off valves are designed to meet all industrial refrigeration application requirements and are designed to give favourable flow characteristics and are easy to dismantle and repair when necessary.

The valve cone is designed to ensure perfect closing and withstand a high system pulsation and vibration, which can be present specifically in the discharge line.

Features

- Applicable to HCFC, HFC, R717 (Ammonia), R744 (CO_2) and all flammable refrigerants.
- Modular Concept:
  – Each valve housing is available with several different connection types and sizes.
  – Possible to convert SVA-S or SVA-L to any other product in the Flexline™ SVL family (hand operated regulating valve, check & stop valve, check valve or strainer) just by replacing the complete top part.
- Fast and easy valve overhaul service. It is easy to replace the top part and no welding is needed.
- Optional accessories:
  – Heavy duty industrial hand wheel for frequent operation.
  – Cap for infrequent operation.
- Available in angleway and straightway versions with Standard neck or Long neck (DN 15 to DN 40) for insulated systems.
- Each valve type is clearly marked with type, size and performance range.
- The valves and caps are prepared for sealing, to prevent operation by unauthorized persons, using a seal wire.
- Internal metal backseating:
  – DN 6 - 65 (¼ - 2½ in.)
  Internal PTFE backseating:
  – DN 80 - 200 (3 - 8 in.)
- Can accept flow in both directions.
- Housing and bonnet material is low temperature steel according to requirements of the Pressure Equipment Directive and other international classification authorities.
- Equipped with stainless steel bolts.
- Max. working pressure:
  52 bar g / 754 psi g
- Temperature range:
  -60 – 150 °C / -76 – 302 °F
- Classification: DNV, CRN, BV, EAC etc.
  To get an updated list of certification on the products please contact your local Danfoss Sales Company.

Design

Connections
Available with the following connections:

- Butt-weld DIN (EN 10220)
- Butt-weld ANSI (B 36.10 Schedule 80), DN 6 - 40 (¼ - 1½ in.)
- Butt-weld ANSI (B 36.10 Schedule 40), DN 50 - 200 (2 - 8 in.)
- Butt-weld GOST, (8734-75 and 8732-78) DN 10 - 150 (3/8 - 6 in.)
- Socket Weld (ANSI B 16.11), DN 15 - DN 50 (½ - 2 in.)
- Outside pipe thread G ½ in. - G 7/8 in. (ISO 228/1)
- FPT Female Pipe Thread, NPT (ANSI/ASME B 1.20.1), DN 15 - 32 (½ - 1¼ in.)
- Special combination (DN 20 only), Socket weld inlet, FPT ¾ in. outlet
- Special connections Butt-weld F, see (link to AI174086419766_SVL)

Housing
Made of special, cold resistant steel.

Valve cone
The valve cone can be turned on the spindle, thus there will be no friction between the cone and the seat when the valve is opened and closed and the special design will avoid cone spin due to pulsation and vibration when the valve is in open position. A teflon tightening ring provides perfect sealing with minimum closing force.

Spindle
Made of polished stainless steel, ideal for leap seal sealing.

Packing gland
The low temperature packing gland ensures a perfect tightness in the range: -60 – 150 °C / -76 – 302 °F. The packing glands are equipped with a scraper ring to prevent penetration of dirt and ice into the packing gland.

Pressure Equipment Directive (PED)
SVA valves are approved according to the European standard specified in the Pressure Equipment Directive and are CE marked.

For further details / restrictions - see Installation Instruction.

Installation
It is recommended that the valves be installed in the direction of flow indicated by the arrow on the valve body. The valve can be installed in the opposite direction but this slightly reduces the k_v-value (C_v-value).

The valve is designed to withstand high internal pressure. However, the piping system in general should be designed to avoid liquid traps and reduce the risk of hydraulic pressure caused by thermal expansion.

For further information refer to installation instructions for SVA.

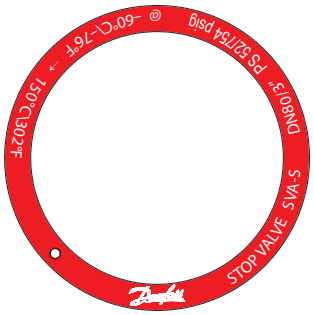

Example of Marking Ring

SVA			
Nominal bore	DN≤ 25 mm (1 in.)	DN32-80 mm (1¼ - 3 in.)	DN100 - 200 mm (4-8 in.)
Classified for	Fluid group I		
Category	Article 3, paragraph 3	II	III

© Danfoss | DCS (ms) | 2020.03

Technical data

- Refrigerants
  Applicable to HCFC, HFC, R717 (Ammonia), R744 (CO_2) and all flammable refrigerants.
- Temperature range
  -60 – 150 °C / -76 – 302 °F.
- Max. working pressure
  52 bar g / 754 psi g.

Connections

DIN

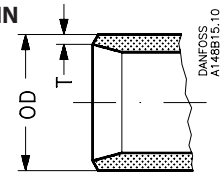

Butt-weld DIN (EN 10220)

Size mm	Size in.	OD mm	T mm	OD in.	T in.			k_v-angle m^3/h	k_v-straight m^3/h	C_v-angle USgal/min	C_v-straight USgal/min
6	¼	13.5	2.3	0.531	0.091			2.9	2.0	3.4	2.4
10	⅜	17.2	2.3	0.677	0.091			4.5	3.2	5.2	3.6
15	½	21.3	2.3	0.839	0.091			7.0	4.9	8.1	5.7
20	¾	26.9	2.3	1.059	0.091			14.6	10.2	16.9	11.8
25	1	33.7	2.6	1.327	0.103			24.8	17.4	28.8	20.2
32	1¼	42.4	2.6	1.669	0.102			42.6	29.8	49.4	34.6
40	1½	48.3	2.6	1.902	0.103			45.2	31.6	52.4	36.7
50	2	60.3	2.9	2.37	0.11			80	65	93	76
65	2½	76.1	2.9	3	0.11			120	97	140	113
80	3	88.9	3.2	3.50	0.13			182	152	211	176
100	4	114.3	3.6	4.50	0.14			313	278	363	323
125	5	139.7	4.0	5.50	0.16			514	470	596	545
150	6	168.3	4.5	6.63	0.18			785	597	911	693
200	8	219.1	6.3	8.63	0.25			1168	1024	1355	1188

ANSI

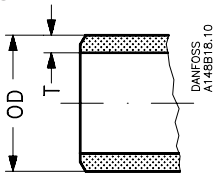

Butt-weld ANSI (B 36.10 Schedule 80)

Size mm	Size in.	OD mm	T mm	OD in.	T in.			k_v-angle m^3/h	k_v-straight m^3/h	C_v-angle USgal/min	C_v-straight USgal/min
6	¼	13.5	3.0	0.531	0.118			2.9	2.03	3.4	2.4
10	⅜	17.2	3.2	0.677	0.126			4.5	3.15	5.2	3.6
15	½	21.3	3.7	0.839	0.146			7.0	4.9	8.1	5.7
20	¾	26.9	4.0	1.059	0.158			14.6	10.2	16.9	11.8
25	1	33.7	4.6	1.327	0.181			24.8	17.4	28.8	20.2
32	1¼	42.4	4.9	1.669	0.193			42.6	29.8	49.4	34.6
40	1½	48.3	5.1	1.902	0.201			45.2	31.6	52.4	36.7

Butt-weld ANSI (B 36.10 Schedule 40)

Size mm	Size in.	OD mm	T mm	OD in.	T in.			k_v-angle m^3/h	k_v-straight m^3/h	C_v-angle USgal/min	C_v-straight USgal/min
50	2	60.3	3.9	2.37	0.15			80	65	93	76
65	2½	73.0	5.2	2.87	0.20			120	97	140	113
80	3	88.9	5.5	3.50	0.22			182	152	211	176
100	4	114.3	6.0	4.50	0.24			313	278	363	323
125	5	141.3	6.6	5.56	0.26			514	470	596	545
150	6	168.3	7.1	6.63	0.28			785	597	911	693
200	8	219.1	8.2	8.63	0.32			1168	1024	1355	1188

GOST

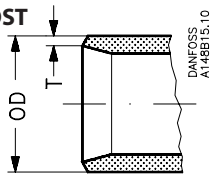

Butt-weld GOST (8734-75 and 8732-78)

Size mm	Size in.	OD mm	T mm	OD in.	T in.			k_v-angle m^3/h	k_v-straight m^3/h	C_v-angle USgal/min	C_v-straight USgal/min
10	⅜	14	2	0.551	0.079			4.5	3.2	5.2	3.6
15	½	18	2	0.709	0.079			7	4.9	8.1	5.7
20	¾	25	2.5	0.984	0.098			14.6	10.2	16.9	11.8
25	1	32	3	1.260	0.118			24.8	17.4	28.8	20.2
32	1¼	38	3	1.496	0.118			42.6	29.8	49.4	34.6
40	1½	45	3	1.772	0.118			45.2	31.6	52.4	36.7
50	2	57	3.5	2.244	0.138			80	65	93	76
65	2½	76.1	2.9	3	0.11			120	97	140	113
80	3	88.9	3.2	3.50	0.13			182	152	211	176
100	4	108	4	4.252	0.157			313	278	363	323
125	5	133	4	5.236	0.157			514	470	596	545
150	6	159	4.5	6.260	0.177			785	597	911	693

Connections

SOC

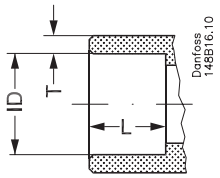

Socket welding ANSI (B 16.11)

Size mm	Size in.	ID mm	T mm	ID in.	T in.	L mm	L in.	k_v-angle m³/h	k_v-straight m³/h	C_v-angle USgal/min	C_v-straight USgal/min
15	½	21.8	6.0	0.858	0.235	10	0.39	7.0	4.9	8.1	5.7
20	¾	27.2	4.6	1.071	0.181	13	0.51	14.6	10.9	16.9	11.8
25	1	33.9	7.2	1.335	0.284	13	0.51	24.8	17.4	28.8	20.2
32	1¼	42.7	6.1	1.743	0.240	13	0.51	42.6	29.8	49.4	34.6
40	1½	48.8	6.6	1.921	0.260	13	0.51	45.2	31.6	52.4	36.7
50	2	61.2	6.2	2.41	0.24	16	0.63	80	65	93	76

FPT

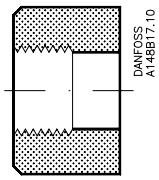

FPT inside pipe thread, NPT (ANSI/ASME B 1.20.1)

Size mm	Size in.	Inside pipe tread			k_v-angle m³/h	k_v-straight m³/h	C_v-angle USgal/min	C_v-straight USgal/min
15	½	(½ × 14 NPT)			8.5	6.0	9.9	7.0
20	¾	(¾ × 14 NPT)			10	7.0	11.6	8.1
25	1	(1 × 11.5 NPT)			32	22.4	37.1	26.0
32	1¼	(1¼ × 11.5 NPT)			36	25.2	41.8	29.3

Connections - SVA 6

T

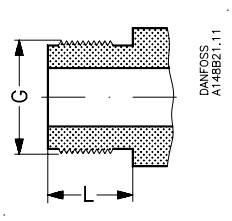

Size mm	Size in.	Outside pipe thread	L mm	L in.	K_v-angle m³/h	K_v-str. m³/h	C_v-angle USgal/min	C_v-str USgal/min

T outside pipe thread, (ISO 228/1)

6	¼	G ½	16	0.63	2.5	2.0	2.9	2.0

ND

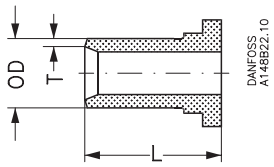

Nipples for T outside pipe thread, (ISO 228/1)

Size mm	Size in.	OD mm	T mm	OD in.	T in.	L mm	L in.	Inside pipe thread			

ND welding nipples, (DIN 2448)

6	¼	13.5	2.3	0.531	0.091	60	2.36	G½			

NA

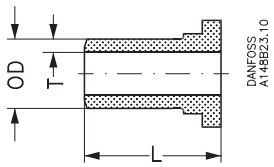

Size mm	Size in.	OD mm	T mm	OD in.	T in.	L mm	L in.	Inside pipe thread			

NA welding nipples, ANSI (B 36.10 Schedule 80)

6	¼	13.5	3.0	0.531	0.118	60	2.36	G½			

© Danfoss | DCS (ms) | 2020.03

Material specification

SVA-S 6-10 (1/4 - 3/8 in.)

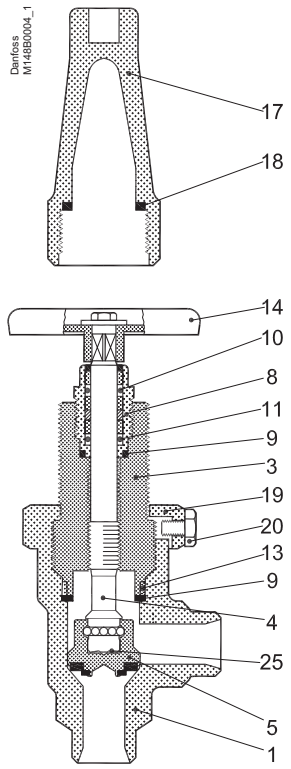

SVA-S 15-20 (1/2 - 3/4 in.)

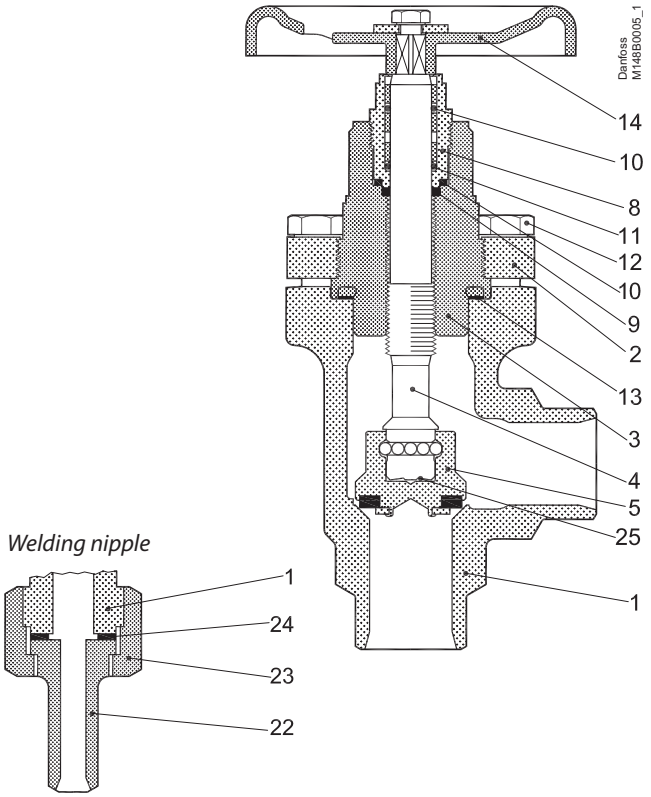

No.	Part	Material	EN	ISO	ASTM
1	Housing	Steel	G20Mn5QT, 10213-3 ---------- P285QH+QT, 10222-4		LCC, A352 ---------- LF2, A350
2	Bonnet, Flange	Steel	G20Mn5QT, 10213-3 ---------- P285QH+QT, 10222-4 ---------- P275NL, 10028-3		LCC, A352 ---------- LF2, A350
3	Bonnet, Insert	Steel	11SMn30 10087	Type 2 R 683/9	AISI 1213
4	Spindle	Stainless steel	X8CrNiS18-9 10088	Type 17 683/13	AISI 303
5	Cone	Steel	11SMn30 10087	Type 2 R 683/9	AISI 1213
8	Packing gland	Stainless steel	X8CrNiS18-9 10088	Type 17 683/13	AISI 303
9	Packing washer	Aluminium			
10	O-ring	Cloroprene (Neoprene)			
11	Spring loaded Teflon ring	PTFE			
12	Bolts	Stainless steel	A2-70	A2-70	Type 308
13	Gasket	Fiber, Non-asbestos			
14	Handwheel	Steel			
17	Cap	Aluminium			
18	Gasket for cap	Nylon			
19	Locking nut	Steel			
20	Screw	Steel			
22	Welding nipple	Steel	S235JRG2 10025	Fe260B, 630	Grade C, A 283
23	Nut	Steel	11SMn30 10087	Type 2 R 683/9	AISI 1213
24	Packing washer	Non-asbestos			
25	Disk spring	Steel			

Material specification

SVA-S 25-40 (1 - 1½ in.)

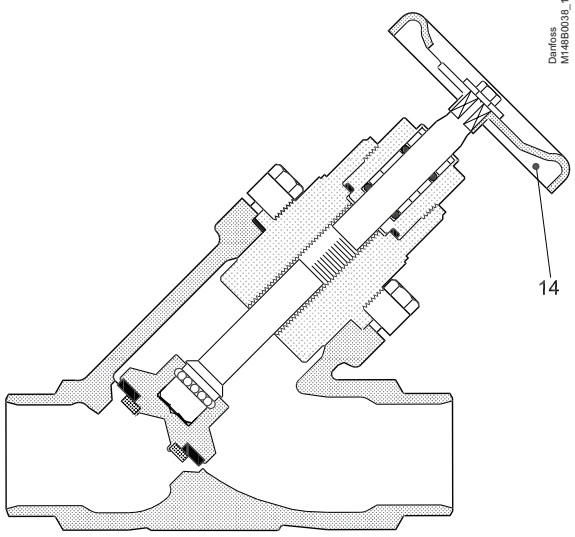

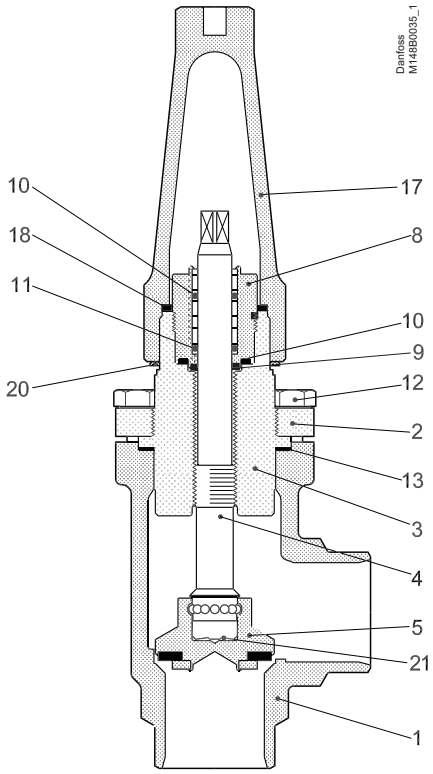

No.	Part	Material	EN	ISO	ASTM
1	Housing	Steel	G20Mn5QT, 10213-3 ---------- P285QH+QT, 10222-4		LCC, A352 ---------- LF2, A350
2	Bonnet, Flange	Steel	G20Mn5QT, 10213-3 ---------- P285QH+QT, 10222-4 ---------- P275NL, 10028-3		LCC, A352 ---------- LF2, A350
3	Bonnet, Insert	Steel	11SMn30 10087	Type 2 R 683/9	AISI 1213
4	Spindle	Stainless steel	X8CrNiS18-9 10088	Type 17 683/13	AISI 303
5	Cone	Steel	11SMn30 10087	Type 2 R 683/9	AISI 1213
8	Packing gland	Stainless steel	X8CrNiS18-9 10088	Type 17 683/13	AISI 303
9	Packing washer	Aluminium			
10	O-ring	Cloroprene (Neoprene)			
11	Spring loaded Teflon ring	PTFE			
12	Bolts	Stainless steel	A2-70	A2-70	Type 308
13	Gasket	Fiber, Non-asbestos			
14	Handwheel	Steel			
17	Cap	Aluminium			
18	Gasket for cap	Nylon			
20	Identification ring	Stainless steel			
21	Disk spring	Steel			

© Danfoss | DCS (ms) | 2020.03

Material specification

SVA-L 15 - 40 (½ - 1½ in.)

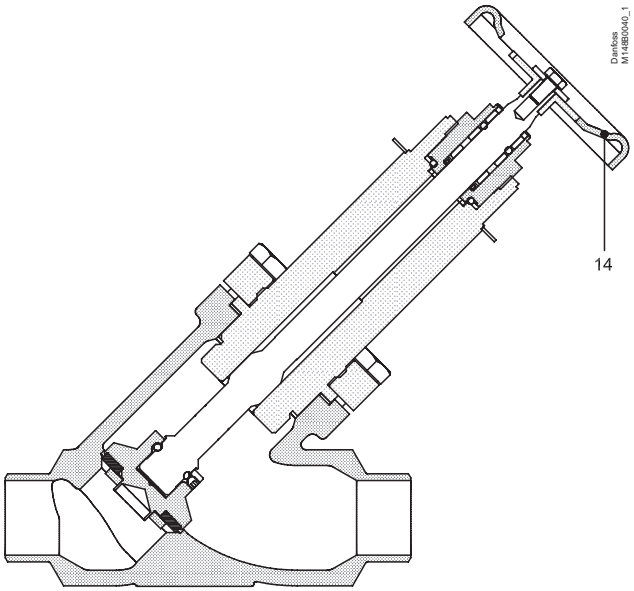

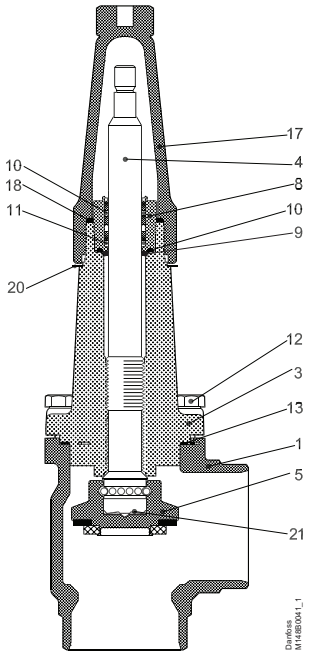

No.	Part	Material	EN	ISO	ASTM
1	Housing	Steel	G20Mn5QT, 10213-3 ---------- P285QH+QT, 10222-4		LCC, A352 ---------- LF2, A350
3	Valve bonnet	Steel	G20Mn5QT, 10213-3 ---------- P285QH+QT, 10222-4		LCC, A352 ---------- LF2, A350
4	Spindle	Stainless steel	X8CrNiS18-9 10088	Type 17 683/13	AISI 303
5	Cone	Steel	11SMn30 10087	Type 2 R 683/9	AISI 1213
8	Packing gland	Stainless steel	X8CrNiS18-9 10088	Type 17 683/13	AISI 303
9	Packing washer	Aluminium			
10	O-ring	Cloroprene (Neoprene)			
11	Spring loaded Teflon ring	PTFE			
12	Bolts	Stainless steel	A2-70	A2-70	Type 308
13	Gasket	Fiber, Non-asbestos			
14	Hand wheel	Steel			
17	Cap	Aluminium			
18	Gasket for cap	Nylon (PA6)			
20	Identification ring	Stainless steel			
21	Disk spring	Steel			

Material specification

SVA-S 50-65 (2 - 2½ in.)

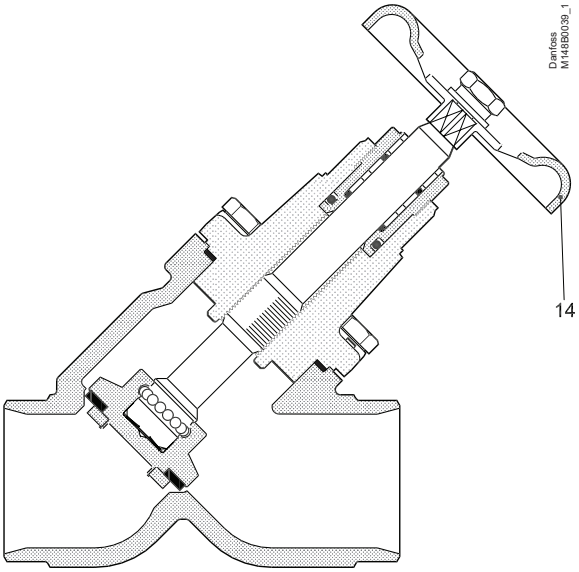

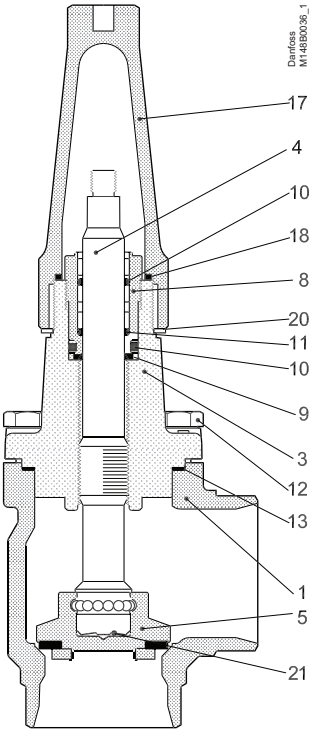

No.	Part	Material	EN	ISO	ASTM
1	Housing	Steel	G20Mn5QT, 10213-3 ---------- P285QH+QT, 10222-4		LCC, A352 ---------- LF2, A350
3	Valve bonnet	Steel	G20Mn5QT, 10213-3 ---------- P285QH+QT, 10222-4		LCC, A352 ---------- LF2, A350
4	Spindle	Stainless steel	X8CrNiS18-9 10088 DIN 17440 (SVA-SS only)	Type 17 683/13	AISI 303
5	Cone	Steel	11SMn30 10087	Type 2 R 683/9	AISI 1213
8	Packing gland	Stainless steel	X8CrNiS18-9 10088	Type 17 683/13	AISI 303
9	Packing washer	Aluminium			
10	O-ring	Cloroprene (Neoprene)			
11	Spring loaded Teflon ring	PTFE			
12	Bolts	Stainless steel	A2-70	A2-70	Type 308
13	Gasket	Fiber, Non-asbestos			
14	Handwheel	Steel			
17	Cap	Aluminium			
18	Gasket for cap	Nylon			
19	Locking nut	Steel			
20	Identification ring	Stainless steel			
21	Disk spring	Steel			

© Danfoss | DCS (ms) | 2020.03

Material specification

SVA-S 80 - 150 (3 - 6 in.)

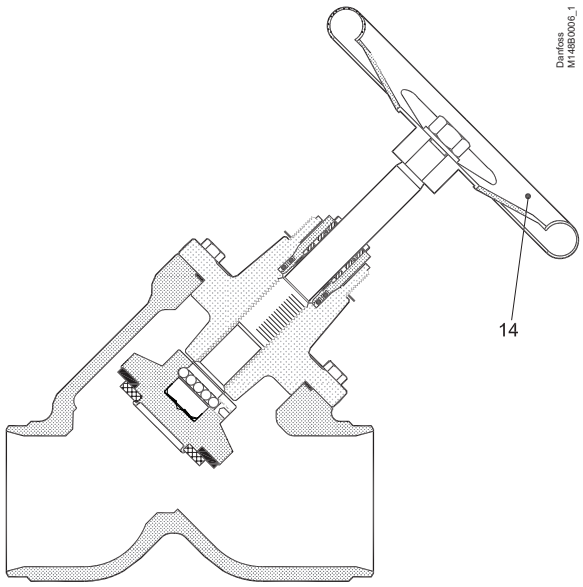

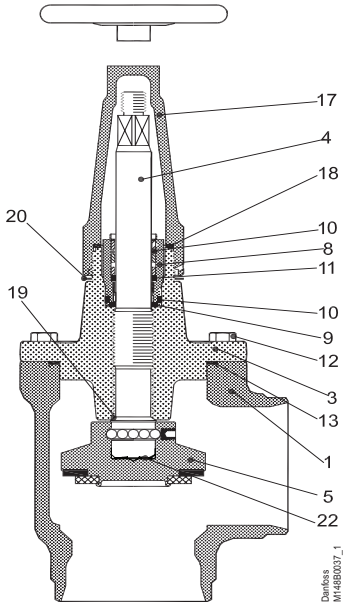

No.	Part	Material	EN	ISO	ASTM
1	Housing	Steel	G20Mn5QT 10213-3		LCC A352
3	Valve bonnet	Steel	SVA 80: G20Mn5QT SVA 100: P285QH+QT SVA 125: P285QH+QT SVA 150: P285QH+QT		SVA 80: LCC, A352 SVA 100: LF2, A350 SVA 125: LF2, A350 SVA 150: LF2, A350
4	Spindle	Stainless steel	X5CrNi18-10 10088	Type 11, R 683/13	AISI 304, A276
5	Cone Cone seal	Steel Teflon (PTFE)	11SMn30 10087	Type 2, R 683/9	AISI 1213
8	Packing gland	Stainless steel	X8CrNiS18-9 10088	Type 17 R 683/13	AISI 303
9	Packing washer	Aluminium			
10	O-ring	Cloroprene (Neoprene)			
11	Spring loaded Teflon ring	PTFE			
12	Bolts	Stainless steel	A2-70	A2-70	Type 308
13	Gasket	Fiber, Non-asbestos			
14	Hand wheel	Steel			
17	Cap	Aluminium			
18	Gasket for cap	Nylon (PA 6)			
19	Soft backseat	Teflon (PTFE)			
20	Identification ring	Stainless steel			
22	Disk spring	Steel			

Material specification

SVA-S 200 (8 in.)

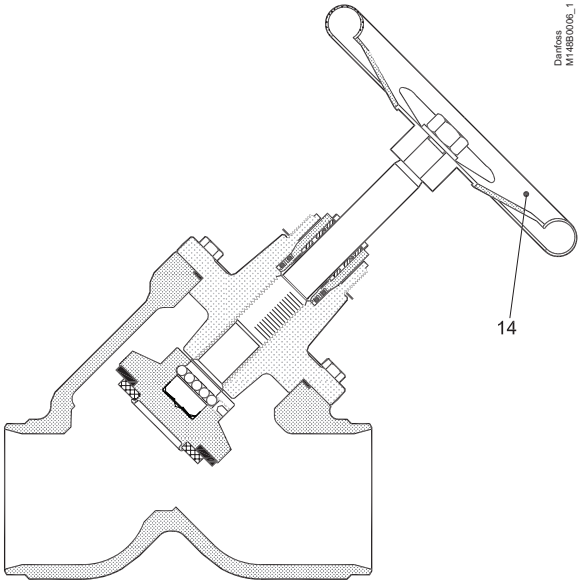

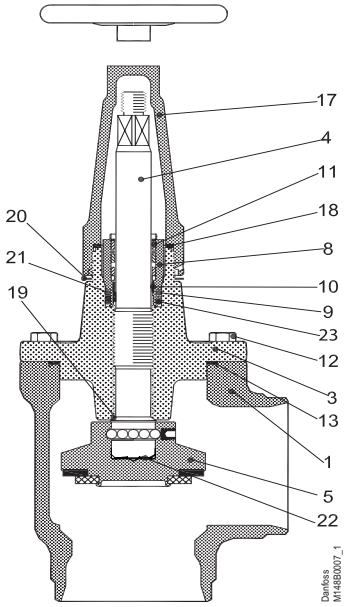

No.	Part	Material	EN	ISO	ASTM
1	Housing	Steel	G20Mn5QT 10213-3		LCC A352
3	Valve bonnet	Steel	G20Mn5QT, 10213-3 ---------- P285QH+QT, 10222-4		LCC, A352 ---------- LF2, A350
4	Spindle	Stainless steel	X5CrNi18-10 10088	Type 11, R 683/13	AISI 304, A276
5	Cone Cone seal	Steel Teflon (PTFE)	11SMn30 10087	Type 2, R 683/9	AISI 1213
8	Packing gland	Stainless steel	X8CrNiS18-9 10088	Type 17 R 683/13	AISI 303
9	O-ring	Cloroprene (Neoprene)			
10	Spring loaded Teflon ring	PTFE			
11	O-ring	Cloroprene (Neoprene)			
12	Bolts	Stainless steel	A2-70	A2-70	Type 308
13	Gasket	Fiber, Non-asbestos			
14	Hand wheel	Steel			
15	Washer	Stainless steel			
16	Nut	Stainless steel			
17	Cap	Aluminium			
18	Gasket for cap	Nylon (PA 6)			
19	Soft backseat	Teflon (PTFE)			
20	Identification ring	Stainless steel			
21	Wear ring	Teflon (PTFE)			
22	Disk spring	Steel			
23	O-ring	PTFE/Cloroprene (Neoprene)			

© Danfoss | DCS (ms) | 2020.03

Dimensions and weights

SVA 6 -10 in angle execution with handwheel

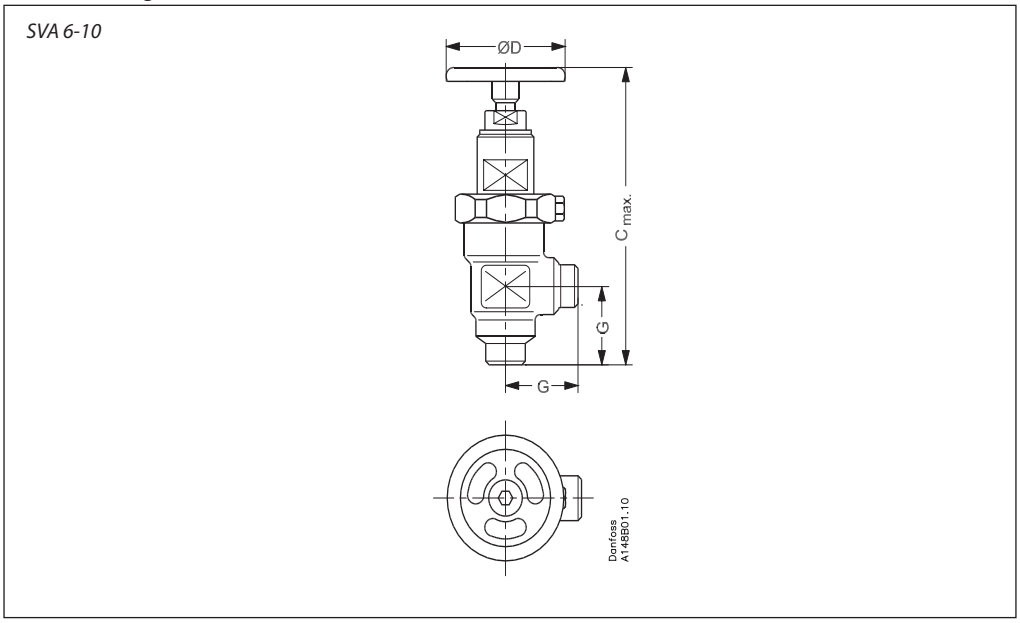

Valve size			$C_{max.}$		G		∅D		□H		Weight
SVA 6	mm in.		128 5.04		30 1.18		50 1.97				0.7 kg
SVA 10	mm in.		173 6.81		45 1.77		60 2.36		60 2.36		1.4 kg

SVA 6 - 10 in angle execution with cap

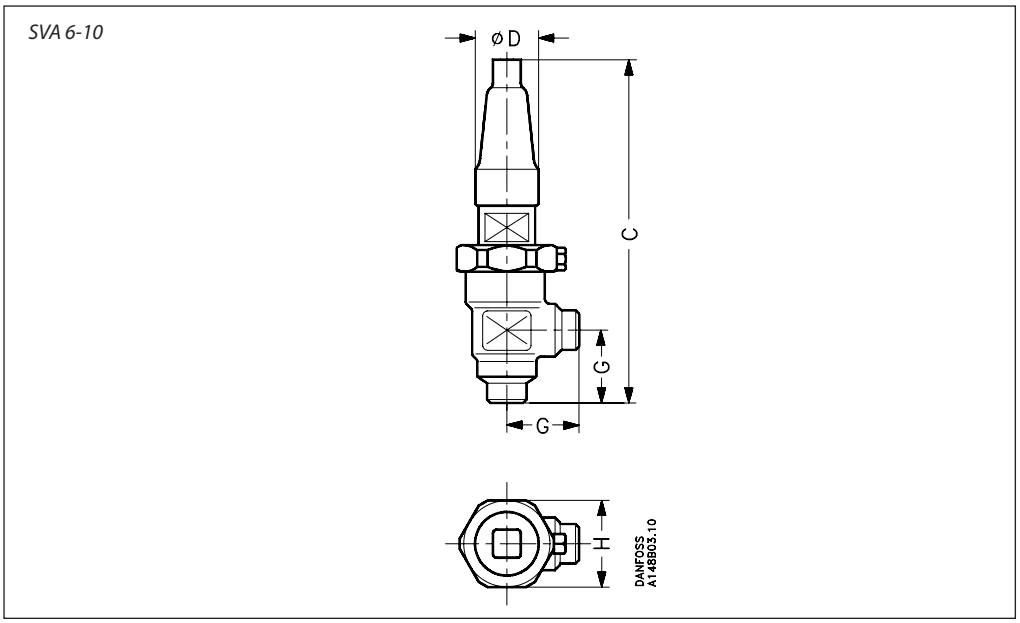

Valve size			C		G		∅D		□H		Weight
SVA 6	mm in.		139 5.47		30 1.18		30 1.18		48 1.89		0.8 kg
SVA 10	mm in.		182 7.17		45 1.77		38 1.50		60 2.36		1.4 kg

Specified weights are approximate values only.

Dimensions and weights

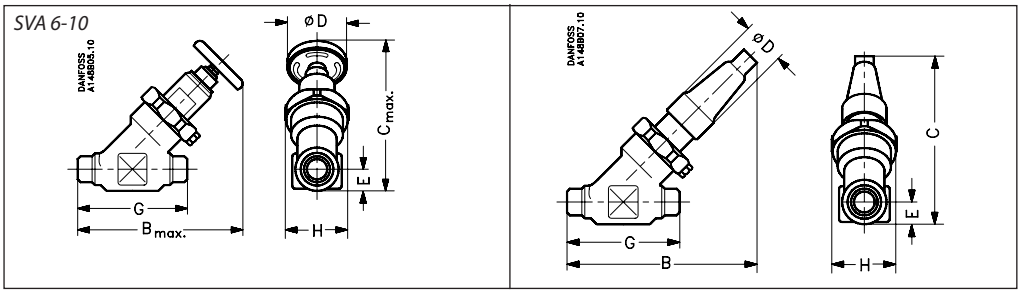

SVA 6 - 10 in straight-way execution with handwheel

Valve size			$C_{max.}$	$B_{max.}$	E	G	∅D		□H		Weight
SVA 6	mm		110	120	13	70	50		48		0.7 kg
	in.		4.33	4.72	0.49	2.76	1.97		1.89		
SVA 10	mm		145	160	20	120	60		60		2.0 kg
	in.		5.71	6.30	0.79	4.72	2.36		2.36		

SVA 6 - 10 in straight-way execution with cap

Valve size			C	B	E	G	∅D		□H		Weight
SVA 6	mm		110	120	13	70	30		48		0.8 kg
	in.		4.33	4.72	0.49	2.76	1.16		1.89		
SVA 10	mm		145	155	20	120	38		60		2.0 kg
	in.		5.71	6.10	0.79	4.72	1.50		2.36		

Specified weights are approximate values only.

SVA 15 - 40 (½ - 1½ in.) in angleway version with cap / hand wheel

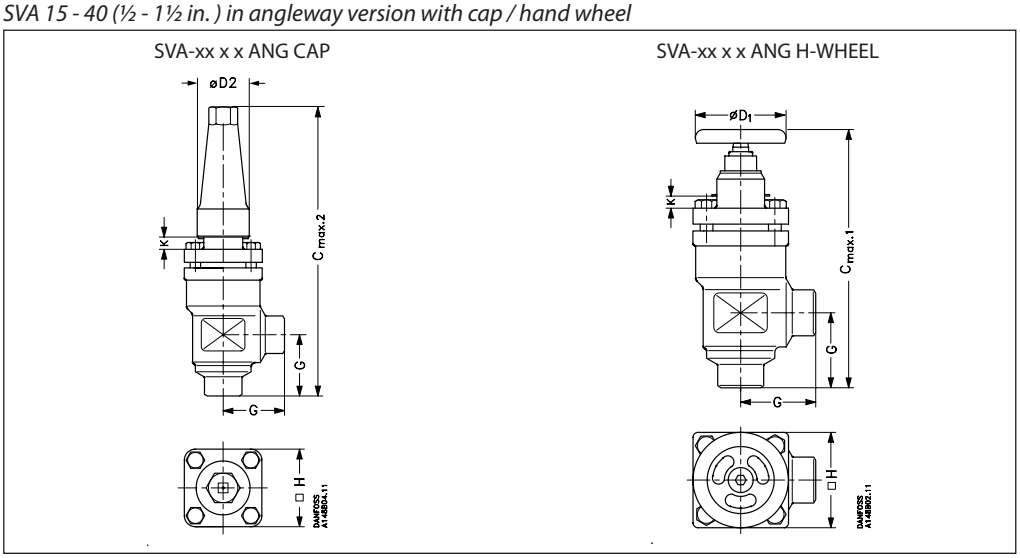

Valve size		K		$C_{max.1}$	$C_{max.2}$	G		$ØD_1$	$ØD_2$	□H		Weight
SVA-S												
SVA 15 - 20	mm	4		178	189	45		60	38	60		1.4 kg
SVA (½ - ¾)	in.	0.16		7.00	7.44	1.77		2.36	1.5	2.36		3.1 lb
SVA 25 - 40	mm	12		234	268	55		80	50	70		2.4 kg
SVA (1 - 1½)	in.	0.47		9.21	10.55	2.17		3.15	1.97	2.76		5.3 lb
SVA-S, Socket weld												
SVA 32 - 40	mm	12		241	275	62		80	50	70		2.9 kg
SVA (1¼ - 1½)	in.	0.47		9.49	10.83	2.44		3.15	1.97	2.76		6.4 lb
SVA-L												
SVA 15 - 20	mm	63		237	248	45		60	38	60		1.4 kg
SVA (½ - ¾)	in.	2.48		9.33	9.76	1.77		2.36	1.5	2.36		3.1 lb
SVA 25 - 40	mm	74		296	330	55		80	50	70		2.4 kg
SVA (1 - 1½)	in.	2.91		11.65	12.99	2.17		3.15	1.97	2.76		5.3 lb
SVA-L, Socket weld												
SVA 32 - 40	mm	74		303	337	62		80	50	70		2.9 kg
SVA (1¼ - 1½)	in.	2.91		11.93	13.27	2.44		3.15	1.97	2.76		6.4 lb

Specified weights are approximate values only.

© Danfoss | DCS (ms) | 2020.03

Dimensions and weights

SVA 15 - 40 (½ - 1½ in.) straightway version with cap / hand wheel

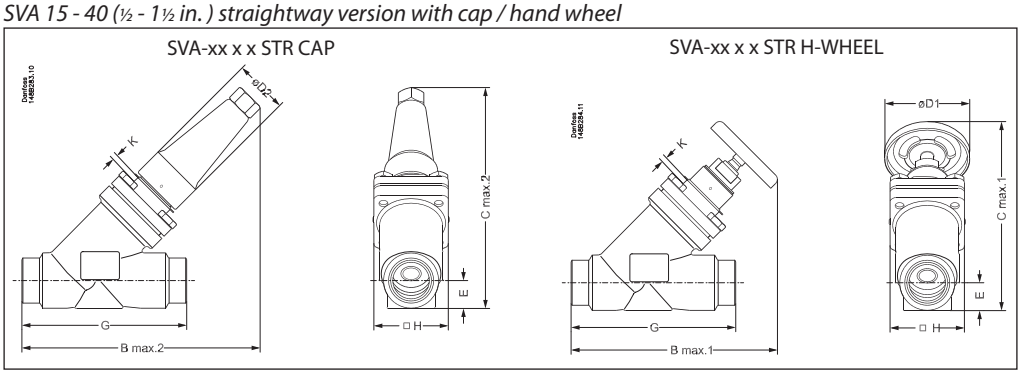

Valve size		K	$C_{max.1}$	$C_{max.2}$	$B_{max.1}$	$B_{max.2}$	E	G	$ØD_1$	$ØD_2$	□H	Weight
SVA-S												
SVA 15 - 20	mm	4	146	141	160	156	20	120	60	38	60	2.0 kg
SVA (½ - ¾)	in.	0.16	5.74	5.55	6.30	6.14	0.79	4.72	2.36	1.50	2.36	4.4 lb
SVA 25 - 40	mm	12	199	208	212	222	26	155	80	50	70	3.0 kg
SVA (1 - 1½)	in.	0.47	7.83	8.19	8.35	8.74	1.02	6.10	3.15	1.97	2.76	6.6 lb
SVA-S, Socket weld												
SVA 32	mm	12	200	209	212	222	27.4	155	80	50	70	3.0 kg
SVA (1¼)	in.	0.47	7.87	8.23	8.35	8.74	1.08	6.10	3.15	1.97	2.76	6.6 lb
SVA 40	mm	12	204	213	212	222	31.0	155	80	50	70	3.0 kg
SVA (1½)	in.	0.47	8.03	8.39	8.35	8.74	1.22	6.10	3.15	1.97	2.76	6.6 lb
SVA-L												
SVA 15 - 20	mm	63	188	184	202	198	20	120	60	38	60	2.0 kg
SVA (½ - ¾)	in.	2.48	7.40	7.24	7.95	7.80	0.79	4.72	2.36	1.50	2.36	4.4 lb
SVA 25 - 40	mm	74	243	252	256	265	26	155	80	50	70	3.0 kg
SVA (1 - 1½)	in.	2.91	9.57	9.92	10.08	10.43	1.02	6.10	3.15	1.97	2.76	6.6 lb
SVA-L, Socket weld												
SVA 32	mm	74	244	253	256	265	27.4	155	80	50	70	3.0 kg
SVA (1¼)	in.	2.91	9.61	9.96	10.08	10.43	1.08	6.10	3.15	1.97	2.76	6.6 lb
SVA 40	mm	74	248	257	256	265	31.0	155	80	50	70	3.0 kg
SVA (1½)	in.	2.91	9.76	10.12	10.08	10.43	1.22	6.10	3.15	1.97	2.76	6.6 lb

Specified weights are approximate values only.

Dimensions and weights

SVA 50 - 65 (2 - 2½ in.) in angleway version with cap / hand wheel

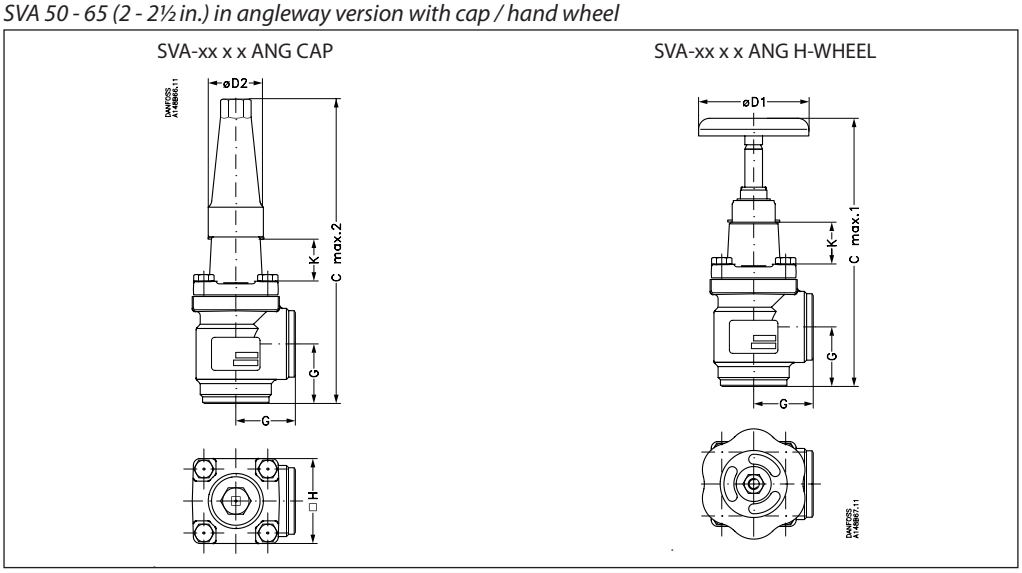

Valve size		K		$C_{max.1}$	$C_{max.2}$		G	$ØD_1$	$ØD_2$	□H		Weight
SVA-S												
SVA 50	mm	70		284	315		60	100	50	77		3.2 kg
SVA (2)	in.	2.76		11.18	12.40		2.36	3.94	1.97	3.03		7.1 lb
SVA 65	mm	70		310	335		70	100	50	90		4.8 kg
SVA (2½)	in.	2.76		12.20	13.19		2.76	3.94	1.97	3.54		10.6 lb
SVA-S, Socket weld												
SVA 50	mm	70		289	320		65	100	50	77		4.1 kg
SVA (2)	in.	2.76		11.38	12.60		2.56	3.94	1.97	3.03		9.0 lb

Specified weights are approximate values only.

Dimensions and weights

SVA 50 - 65 (2 - 2½ in.) in straightway version with cap / hand wheel

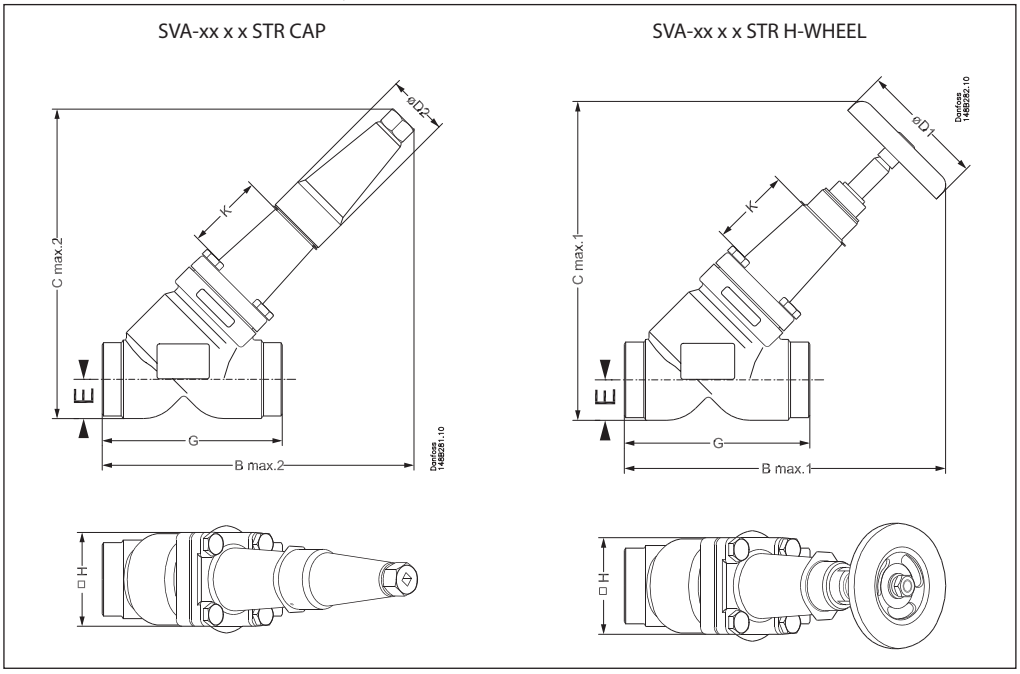

Valve size		K	$B_{max.1}$	$B_{max.2}$	$C_{max.1}$	$C_{max.2}$	E	G	$\varnothing D_1$	$\varnothing D_2$	□H	Weight
SVA-S												
SVA 50	mm	70	259	259	257	257	32	148	100	50	77	4.2 kg
SVA (2)	in.	2.76	10.20	10.20	10.12	10.12	1.26	5.83	3.94	1.97	3.03	9.3 lb
SVA 65	mm	70	284	280	284	280	40	176	100	50	90	6.3 kg
SVA (2½)	in.	2.76	11.18	11.02	11.18	11.02	1.57	6.93	3.94	1.97	3.54	13.9 lb
SVA-S, Socket weld												
SVA 50	mm	70	266	266	261	261	37	162	100	50	77	5.1 kg
SVA (2)	in.	2.76	10.47	10.47	10.28	10.28	1.26	6.38	3.94	1.97	3.03	11.2 lb

Specified weights are approximate values only.

© Danfoss | DCS (ms) | 2020.03

Dimensions and weights

SVA 80 - 200 (3 - 8 in.) angleway version with cap / hand wheel

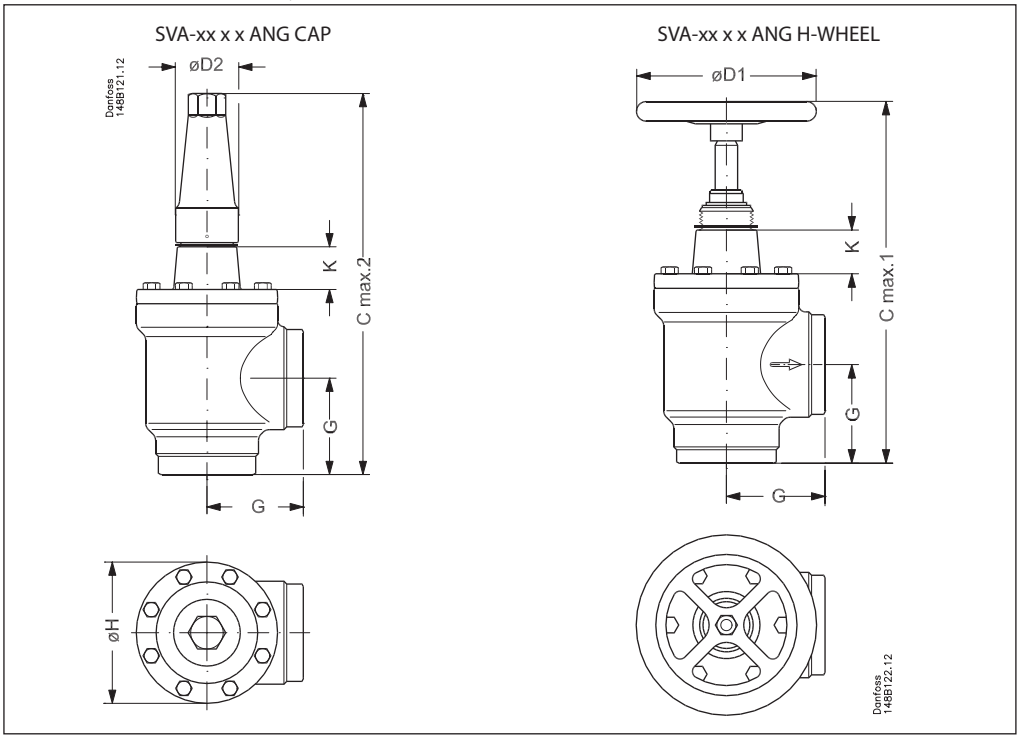

Valve size		K		$C_{max.1}$	$C_{max.2}$		G	$ØD_1$	$ØD_2$		ØH	Weight
SVA-S												
SVA 80	mm	76		373	388		90	200	58		129	9.7 kg
SVA (3)	in.	3.00		14.69	15.28		3.54	7.87	2.28		5.08	21.4 lb
SVA 100	mm	90		432	437		106	250	58		156	15.3 kg
SVA (4)	in.	3.54		17.00	17.20		4.17	9.84	2.28		6.14	33.7 lb
SVA 125	mm	90		517	533		128	315	74		193	28.1 kg
SVA (5)	in.	3.54		20.35	20.98		5.04	12.40	2.91		7.60	61.9 lb
SVA 150	mm	90		564	568		145	315	74		219	39.7 kg
SVA (6)	in.	3.54		22.20	22.36		5.71	12.40	2.91		8.62	87.5 lb
SVA 200	mm	90		677	678		180	400	86		276	79.5 kg
SVA (8)	in.	3.54		26.63	26.69		7.09	15.75	3.39		10.87	175.3 lb

Specified weights are approximate values only.

Dimensions and weights

SVA 80 - 200 (3 - 8 in.) straightway version with cap / hand wheel

SVA-xx x x STR CAP

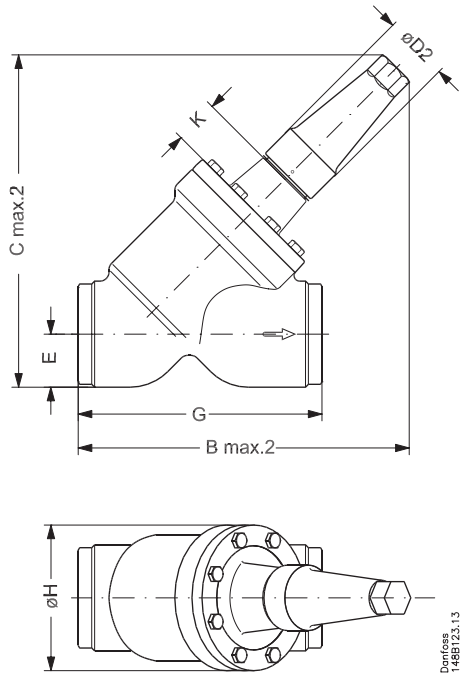

SVA-xx x x STR H-WHEEL

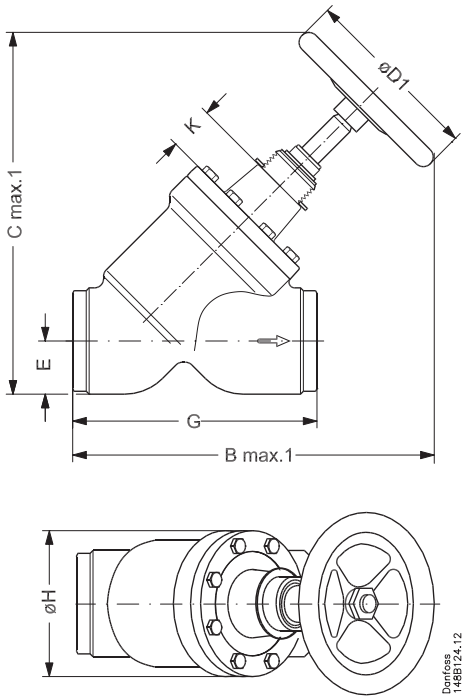

Valve size		K	$B_{max.1}$	$B_{max.2}$	$C_{max.1}$	$C_{max.2}$	E	G	$ØD_1$	$ØD_2$	ØH	Weight
SVA-S												
SVA 80	mm	76	365	321	367	322	48	216	200	58	129	10.9 kg
SVA (3)	in.	3.00	14.37	12.64	14.45	12.72	1.89	8.50	7.87	2.28	5.08	24.0 lb
SVA 100	mm	90	435	367	443	375	60	264	250	58	156	18.2 kg
SVA (4)	in.	3.54	17.13	14.45	17.44	14.76	2.36	10.39	9.84	2.28	6.14	40.1 lb
SVA 125	mm	90	526	444	538	456	74	322	315	74	193	32.8 kg
SVA (5)	in.	3.54	20.71	17.48	21.18	17.95	2.91	12.68	12.40	2.91	7.60	72.3 lb
SVA 150	mm	90	572	483	594	505	91	370	315	74	219	60.0 kg
SVA (6)	in.	3.54	22.52	19.02	23.39	19.88	3.58	14.57	12.40	2.91	8.62	132.3 lb
SVA 200	mm	90	692	579	726	613	117	464	400	86	276	111.5 kg
SVA (8)	in.	3.54	27.24	22.80	28.58	24.13	4.61	18.27	15.75	3.39	10.87	245.8 lb

Specified weights are approximate values only.

© Danfoss | DCS (ms) | 2020.03

Ordering

Available connection sizes

SVA-**S**:
The **S** means **S**tandard bonnet length (sizes from DN50 to DN200 are insulation friendly)

SVA-**L**:
The **L** means **L**ong bonnet length (insulation friendly)

Size	SVA-S	SVA-L
6	x	
10	x	
15	x	x
20	x	x
25	x	x
32	x	x
40	x	x
50	x	
65	x	
80	x	
100	x	
125	x	
150	x	
200	x	

Please note that the type codes only serve to identify the valves, some of which may not form part of the standard product range. For further information please contact your local Danfoss Sales Company.

Type codes

Valve type	**SVA**	Shut-off valve					
Nominal size in mm			Available connections				
			A/D	G	SOC	FPT	T
(valve size measured on the connection diameter)	**6**	DN 6 (1/4)	x				x
	10	DN 10 (3/8)	x	x			
	15	DN 15 (½)	x	x	x	x	
	20	DN 20 (¾)	x	x	x	x* x	
	25	DN 25 (1)	x	x	x	x	
	32	DN 32 (1¼)	x	x	x	x	
	40	DN 40 (1½)	x	x	x		
	50	DN 50 (2)	x	x	x		
	65	DN 65 (2½)	x				
	80	DN 80 (3)	x				
	100	DN 100 (4)	x	x			
	125	DN 125 (5)	x	x			
	150	DN 150 (6)	x	x			
	200	DN 200 (8)	x				
Connections	**A**	Butt-weld connection: ANSI B 36.10 schedule 80, DN 15 - 40 (½ - 1½ in.) Butt-weld connection: ANSI B 36.10 schedule 40, DN 50 - 200 (2 - 8 in.)					
	D	Butt-weld connection: DIN EN 10220					
	G	Butt-weld connection: GOST (8734-75 and 8732-78)					
	SOC	Socket weld: ANSI B 16.11					
	FPT	Female Pipe Thread NPT: ANSI/ASME B 1.20.1					
	T	Outside threaded connections ISO 228/1 Pipe thread					
Valve housing	**ANG**	Angle flow					
	STR	Straight flow					
Other equipment	**H-WHEEL**	Hand wheel					
	CAP	Cap					

* Special combination SOC-inlet, FPT outlet

Important!
Where products need to be certified according to specific certification societies or where higher pressures are required, the relevant information should be included at the time of order.

Ordering SVA-S complete valves

Example:
SVA-S 20 DIN angleway with hand wheel = **148B5300**

Important!
Where products need to be certified according to specific certification societies or where higher pressures are required, the relevant information should be included at the time of order.

ANG = Angleway
STR = Straightway

CAP = Cap
H-WHEEL = Hand wheel

SVA-S Angleway

Size mm	Size in.	Type	MWP bar	MWP psi	Code number
Butt-weld DIN (EN 10220)					
6	¼	SVA-S 6 D ANG H-WHEEL	52	754	**148B5000**
6	¼	SVA-S 6 D ANG CAP	52	754	**148B5001**
10	3/8	SVA-S 10 D ANG H-WHEEL	52	754	**148B5100**
10	3/8	SVA-S 10 D ANG CAP	52	754	**148B5101**
15	½	SVA-S 15 D ANG H-WHEEL	52	754	**148B5200**
15	½	SVA-S 15 D ANG CAP	52	754	**148B5201**
20	¾	SVA-S 20 D ANG H-WHEEL	52	754	**148B5300**
20	¾	SVA-S 20 D ANG CAP	52	754	**148B5301**
25	1	SVA-S 25 D ANG H-WHEEL	52	754	**148B5400**
25	1	SVA-S 25 D ANG CAP	52	754	**148B5401**
32	1¼	SVA-S 32 D ANG H-WHEEL	52	754	**148B5500**
32	1¼	SVA-S 32 D ANG CAP	52	754	**148B5501**
40	1½	SVA-S 40 D ANG H-WHEEL	52	754	**148B5600**
40	1½	SVA-S 40 D ANG CAP	52	754	**148B5601**
50	2	SVA-S 50 D ANG H-WHEEL	52	754	**148B5700**
50	2	SVA-S 50 D ANG CAP	52	754	**148B5701**
65	2½	SVA-S 65 D ANG H-WHEEL	52	754	**148B5800**
65	2½	SVA-S 65 D ANG CAP	52	754	**148B5801**
80	3	SVA-S 80 D ANG H-WHEEL	52	754	**148B5900**
80	3	SVA-S 80 D ANG CAP	52	754	**148B5901**
100	4	SVA-S 100 D ANG H-WHEEL	52	754	**148B6000**
100	4	SVA-S 100 D ANG CAP	52	754	**148B6001**
125	5	SVA-S 125 D ANG H-WHEEL	52	754	**148B6100**
125	5	SVA-S 125 D ANG CAP	52	754	**148B6101**
150	6	SVA-S 150 D ANG H-WHEEL	52	754	**148B6200**
150	6	SVA-S 150 D ANG CAP	52	754	**148B6201**
200	8	SVA-S 200 D ANG H-WHEEL	52	754	**148B6300**
200	8	SVA-S 200 D ANG CAP	52	754	**148B6301**
Butt-weld ANSI (B 36.10 Schedule 80)					
6	¼	SVA-S 6 A ANG H-WHEEL	52	754	**148B5020**
6	¼	SVA-S 6 A ANG CAP	52	754	**148B5021**
10	3/8	SVA-S 10 A ANG H-WHEEL	52	754	**148B5120**
10	3/8	SVA-S 10 A ANG CAP	52	754	**148B5121**
15	½	SVA-S 15 A ANG H-WHEEL	52	754	**148B5220**
15	½	SVA-S 15 A ANG CAP	52	754	**148B5221**
20	¾	SVA-S 20 A ANG H-WHEEL	52	754	**148B5320**
20	¾	SVA-S 20 A ANG CAP	52	754	**148B5321**
25	1	SVA-S 25 A ANG H-WHEEL	52	754	**148B5420**
25	1	SVA-S 25 A ANG CAP	52	754	**148B5421**
32	1¼	SVA-S 32 A ANG H-WHEEL	52	754	**148B5520**
32	1¼	SVA-S 32 A ANG CAP	52	754	**148B5521**
40	1½	SVA-S 40 A ANG H-WHEEL	52	754	**148B5620**
40	1½	SVA-S 40 A ANG CAP	52	754	**148B5621**
Butt-weld ANSI (B 36.10 Schedule 40)					
50	2	SVA-S 50 A ANG H-WHEEL	52	754	**148B5720**
50	2	SVA-S 50 A ANG CAP	52	754	**148B5721**
65	2½	SVA-S 65 A ANG H-WHEEL	52	754	**148B5820**
65	2½	SVA-S 65 A ANG CAP	52	754	**148B5821**
80	3	SVA-S 80 A ANG H-WHEEL	52	754	**148B5920**
80	3	SVA-S 80 A ANG CAP	52	754	**148B5921**
100	4	SVA-S 100 A ANG H-WHEEL	52	754	**148B6020**
100	4	SVA-S 100 A ANG CAP	52	754	**148B6021**
125	5	SVA-S 125 A ANG H-WHEEL	52	754	**148B6120**
125	5	SVA-S 125 A ANG CAP	52	754	**148B6121**
150	6	SVA-S 150 A ANG H-WHEEL	52	754	**148B6220**
150	6	SVA-S 150 A ANG CAP	52	754	**148B6221**
200	8	SVA-S 200 A ANG H-WHEEL	52	754	**148B6320**
200	8	SVA-S 200 A ANG CAP	52	754	**148B6321**
Butt-weld, GOST					
150	6	SVA-S 150 G ANG H-WHEEL	52	754	**148B6240**
150	6	SVA-S 150 G ANG CAP	52	754	**148B6241**
Socket welding ANSI (B 16.11)					
15	½	SVA-S 15 SOC ANG H-WHEEL	52	754	**148B5222**
15	½	SVA-S 15 SOC ANG CAP	52	754	**148B5223**
20	¾	SVA-S 20 SOC ANG H-WHEEL	52	754	**148B5322**
20	¾	SVA-S 20 SOC ANG CAP	52	754	**148B5323**
25	1	SVA-S 25 SOC ANG H-WHEEL	52	754	**148B5422**
25	1	SVA-S 25 SOC ANG CAP	52	754	**148B5423**
32	1¼	SVA-S 32 SOC ANG H-WHEEL	52	754	**148B5522**
32	1¼	SVA-S 32 SOC ANG CAP	52	754	**148B5523**
40	1½	SVA-S 40 SOC ANG H-WHEEL	52	754	**148B5622**
40	1½	SVA-S 40 SOC ANG CAP	52	754	**148B5623**
50	2	SVA-S 50 SOC ANG H-WHEEL	52	754	**148B5722**
50	2	SVA-S 50 SOC ANG CAP	52	754	**148B5723**

SVA-S Straightway

Size mm	Size in.	Type	MWP bar	MWP psi	Code number
Butt-weld DIN (EN 10220)					
6	¼	SVA-S 6 D STR H-WHEEL	52	754	**148B5010**
6	¼	SVA-S 6 D STR CAP	52	754	**148B5011**
10	3/8	SVA-S 10 D STR H-WHEEL	52	754	**148B5110**
10	3/8	SVA-S 10 D STR CAP	52	754	**148B5111**
15	½	SVA-S 15 D STR H-WHEEL	52	754	**148B5210**
15	½	SVA-S 15 D STR CAP	52	754	**148B5211**
20	¾	SVA-S 20 D STR H-WHEEL	52	754	**148B5310**
20	¾	SVA-S 20 D STR CAP	52	754	**148B5311**
25	1	SVA-S 25 D STR H-WHEEL	52	754	**148B5410**
25	1	SVA-S 25 D STR CAP	52	754	**148B5411**
32	1¼	SVA-S 32 D STR H-WHEEL	52	754	**148B5510**
32	1¼	SVA-S 32 D STR CAP	52	754	**148B5511**
40	1½	SVA-S 40 D STR H-WHEEL	52	754	**148B5610**
40	1½	SVA-S 40 D STR CAP	52	754	**148B5611**
50	2	SVA-S 50 D STR H-WHEEL	52	754	**148B5710**
50	2	SVA-S 50 D STR CAP	52	754	**148B5711**
65	2½	SVA-S 65 D STR H-WHEEL	52	754	**148B5810**
65	2½	SVA-S 65 D STR CAP	52	754	**148B5811**
80	3	SVA-S 80 D STR H-WHEEL	52	754	**148B5910**
80	3	SVA-S 80 D STR CAP	52	754	**148B5911**
100	4	SVA-S 100 D STR H-WHEEL	52	754	**148B6010**
100	4	SVA-S 100 D STR CAP	52	754	**148B6011**
125	5	SVA-S 125 D STR H-WHEEL	52	754	**148B6110**
125	5	SVA-S 125 D STR CAP	52	754	**148B6111**
150	6	SVA-S 150 D STR H-WHEEL	52	754	**148B6210**
150	6	SVA-S 150 D STR CAP	52	754	**148B6211**
200	8	SVA-S 200 D STR H-WHEEL	52	754	**148B6310**
200	8	SVA-S 200 D STR CAP	52	754	**148B6311**
Butt-weld ANSI (B 36.10 Schedule 80)					
6	¼	SVA-S 6 A STR H-WHEEL	52	754	**148B5030**
6	¼	SVA-S 6 A STR CAP	52	754	**148B5031**
10	3/8	SVA-S 10 A STR H-WHEEL	52	754	**148B5130**
10	3/8	SVA-S 10 A STR CAP	52	754	**148B5131**
15	½	SVA-S 15 A STR H-WHEEL	52	754	**148B5230**
15	½	SVA-S 15 A STR CAP	52	754	**148B5231**
20	¾	SVA-S 20 A STR H-WHEEL	52	754	**148B5330**
20	¾	SVA-S 20 A STR CAP	52	754	**148B5331**
25	1	SVA-S 25 A STR H-WHEEL	52	754	**148B5430**
25	1	SVA-S 25 A STR CAP	52	754	**148B5431**
32	1¼	SVA-S 32 A STR H-WHEEL	52	754	**148B5530**
32	1¼	SVA-S 32 A STR CAP	52	754	**148B5531**
40	1½	SVA-S 40 A STR H-WHEEL	52	754	**148B5630**
40	1½	SVA-S 40 A STR CAP	52	754	**148B5631**
Butt-weld ANSI (B 36.10 Schedule 40)					
50	2	SVA-S 50 A STR H-WHEEL	52	754	**148B5730**
50	2	SVA-S 50 A STR CAP	52	754	**148B5731**
65	2½	SVA-S 65 A STR H-WHEEL	52	754	**148B5830**
65	2½	SVA-S 65 A STR CAP	52	754	**148B5831**
80	3	SVA-S 80 A STR H-WHEEL	52	754	**148B5930**
80	3	SVA-S 80 A STR CAP	52	754	**148B5931**
100	4	SVA-S 100 A STR H-WHEEL	52	754	**148B6030**
100	4	SVA-S 100 A STR CAP	52	754	**148B6031**
125	5	SVA-S 125 A STR H-WHEEL	52	754	**148B6130**
125	5	SVA-S 125 A STR CAP	52	754	**148B6131**
150	6	SVA-S 150 A STR H-WHEEL	52	754	**148B6230**
150	6	SVA-S 150 A STR CAP	52	754	**148B6231**
200	8	SVA-S 200 A STR H-WHEEL	52	754	**148B6330**
200	8	SVA-S 200 A STR CAP	52	754	**148B6331**
Butt-weld, GOST					
150	6	SVA-S 150 G STR H-WHEEL	52	754	**148B6250**
150	6	SVA-S 150 G STR CAP	52	754	**148B6251**
Socket welding ANSI (B 16.11)					
15	½	SVA-S 15 SOC STR H-WHEEL	52	754	**148B5232**
15	½	SVA-S 15 SOC STR CAP	52	754	**148B5233**
20	¾	SVA-S 20 SOC STR H-WHEEL	52	754	**148B5332**
20	¾	SVA-S 20 SOC STR CAP	52	754	**148B5333**
25	1	SVA-S 25 SOC STR H-WHEEL	52	754	**148B5432**
25	1	SVA-S 25 SOC STR CAP	52	754	**148B5433**
32	1¼	SVA-S 32 SOC STR H-WHEEL	52	754	**148B5532**
32	1¼	SVA-S 32 SOC STR CAP	52	754	**148B5533**
40	1½	SVA-S 40 SOC STR H-WHEEL	52	754	**148B5632**
40	1½	SVA-S 40 SOC STR CAP	52	754	**148B5633**
50	2	SVA-S 50 SOC STR H-WHEEL	52	754	**148B5732**
50	2	SVA-S 50 SOC STR CAP	52	754	**148B5733**

© Danfoss | DCS (ms) | 2020.03

Ordering SVA-S complete valves

ANG = Angleway
STR = Straightway

CAP = Cap
H-WHEEL = Hand wheel

FPT inside pipe thread, NPT (ANSI/ASME B 1.20.1)

15	½	SVA-S 15 FPT ANG H-WHEEL	52	754	**148B5224**
15	½	SVA-S 15 FPT ANG CAP	52	754	**148B5225**
20	¾	SVA-S 20 FPT ANG H-WHEEL	52	754	**148B5324**
20	¾	SVA-S 20 FPT ANG CAP	52	754	**148B5325**
25	1	SVA-S 25 FPT ANG H-WHEEL	52	754	**148B5424**
25	1	SVA-S 25 FPT ANG CAP	52	754	**148B5425**
32	1¼	SVA-S 32 FPT ANG H-WHEEL	52	754	**148B5524**
32	1¼	SVA-S 32 FPT ANG CAP	52	754	**148B5525**

T outside pipe thread, (ISO 228/1)

6	¼	SVA-S 6 T ANG CAP	52	754	**148B5032**

Socket welding ANSI (B 16.11) inlet
FPT inside pipe thread, NPT (ANSI/ASME B 1.20.1) outlet

20	¾	SVA-S 20 SOC/FPT ANG H-WHEEL	52	754	**148B6789**
20	¾	SVA-S 20 SOC/FPT ANG CAP	52	754	**148B6791**

FPT inside pipe thread, NPT (ANSI/ASME B 1.20.1)

15	½	SVA-S 15 FPT STR H-WHEEL	52	754	**148B5234**
15	½	SVA-S 15 FPT STR CAP	52	754	**148B5235**
20	¾	SVA-S 20 FPT STR H-WHEEL	52	754	**148B5334**
20	¾	SVA-S 20 FPT STR CAP	52	754	**148B5335**
25	1	SVA-S 25 FPT STR H-WHEEL	52	754	**148B5434**
25	1	SVA-S 25 FPT STR CAP	52	754	**148B5435**
32	1¼	SVA-S 32 FPT STR H-WHEEL	52	754	**148B5534**
32	1¼	SVA-S 32 FPT STR CAP	52	754	**148B5535**

Socket welding ANSI (B 16.11) inlet
FPT inside pipe thread, NPT (ANSI/ASME B 1.20.1) outlet

20	¾	SVA-S 20 SOC/FPT STR H-WHEEL	52	754	**148B6790**
20	¾	SVA-S 20 SOC/FPT STR CAP	52	754	**148B6792**

Ordering SVA-L complete valves

Example:
SVA-L 20 DIN angleway with hand wheel = **148B5340**

Important!
Where products need to be certified according to specific certification societies or where higher pressures are required, the relevant information should be included at the time of order.

ANG = Angleway
STR = Straightway

CAP = Cap
H-WHEEL = Hand wheel

SVA-L Angleway

Size mm	Size in.	Type	MWP bar	MWP psi	Code number
Butt-weld DIN (EN 10220)					
15	½	SVA-L 15 D ANG H-WHEEL	52	754	**148B5240**
15	½	SVA-L 15 D ANG CAP	52	754	**148B5241**
20	¾	SVA-L 20 D ANG H-WHEEL	52	754	**148B5340**
20	¾	SVA-L 20 D ANG CAP	52	754	**148B5341**
25	1	SVA-L 25 D ANG H-WHEEL	52	754	**148B5440**
25	1	SVA-L 25 D ANG CAP	52	754	**148B5441**
32	1¼	SVA-L 32 D ANG H-WHEEL	52	754	**148B5540**
32	1¼	SVA-L 32 D ANG CAP	52	754	**148B5541**
40	1½	SVA-L 40 D ANG H-WHEEL	52	754	**148B5640**
40	1½	SVA-L 40 D ANG CAP	52	754	**148B5641**
Butt-weld ANSI (B 36.10 Schedule 80)					
15	½	SVA-L 15 A ANG H-WHEEL	52	754	**148B5260**
15	½	SVA-L 15 A ANG CAP	52	754	**148B5261**
20	¾	SVA-L 20 A ANG H-WHEEL	52	754	**148B5360**
20	¾	SVA-L 20 A ANG CAP	52	754	**148B5361**
25	1	SVA-L 25 A ANG H-WHEEL	52	754	**148B5460**
25	1	SVA-L 25 A ANG CAP	52	754	**148B5461**
32	1¼	SVA-L 32 A ANG H-WHEEL	52	754	**148B5560**
32	1¼	SVA-L 32 A ANG CAP	52	754	**148B5561**
40	1½	SVA-L 40 A ANG H-WHEEL	52	754	**148B5660**
40	1½	SVA-L 40 A ANG CAP	52	754	**148B5661**
Socket welding ANSI (B 16.11)					
15	½	SVA-L 15 SOC ANG H-WHEEL	52	754	**148B5262**
15	½	SVA-L 15 SOC ANG CAP	52	754	**148B5263**
20	¾	SVA-L 20 SOC ANG H-WHEEL	52	754	**148B5362**
20	¾	SVA-L 20 SOC ANG CAP	52	754	**148B5363**
25	1	SVA-L 25 SOC ANG H-WHEEL	52	754	**148B5462**
25	1	SVA-L 25 SOC ANG CAP	52	754	**148B5463**
32	1¼	SVA-L 32 SOC ANG H-WHEEL	52	754	**148B5562**
32	1¼	SVA-L 32 SOC ANG CAP	52	754	**148B5563**
40	1½	SVA-L 40 SOC ANG H-WHEEL	52	754	**148B5662**
40	1½	SVA-L 40 SOC ANG CAP	52	754	**148B5663**
FPT inside pipe thread, NPT (ANSI/ASME B 1.20.1)					
15	½	SVA-L 15 FPT ANG H-WHEEL	52	754	**148B5264**
15	½	SVA-L 15 FPT ANG CAP	52	754	**148B5265**
20	¾	SVA-L 20 FPT ANG H-WHEEL	52	754	**148B5364**
20	¾	SVA-L 20 FPT ANG CAP	52	754	**148B5365**
25	1	SVA-L 25 FPT ANG H-WHEEL	52	754	**148B5464**
25	1	SVA-L 25 FPT ANG CAP	52	754	**148B5465**
32	1¼	SVA-L 32 FPT ANG H-WHEEL	52	754	**148B5564**
32	1¼	SVA-L 32 FPT ANG CAP	52	754	**148B5565**

SVA-L Straightway

Size mm	Size in.	Type	MWP bar	MWP psi	Code number
Butt-weld DIN (EN 10220)					
15	½	SVA-L 15 D STR H-WHEEL	52	754	**148B5250**
15	½	SVA-L 15 D STR CAP	52	754	**148B5251**
20	¾	SVA-L 20 D STR H-WHEEL	52	754	**148B5350**
20	¾	SVA-L 20 D STR CAP	52	754	**148B5351**
25	1	SVA-L 25 D STR H-WHEEL	52	754	**148B5450**
25	1	SVA-L 25 D STR CAP	52	754	**148B5451**
32	1¼	SVA-L 32 D STR H-WHEEL	52	754	**148B5550**
32	1¼	SVA-L 32 D STR CAP	52	754	**148B5551**
40	1½	SVA-L 40 D STR H-WHEEL	52	754	**148B5650**
40	1½	SVA-L 40 D STR CAP	52	754	**148B5651**
Butt-weld ANSI (B 36.10 Schedule 80)					
15	½	SVA-L 15 A STR H-WHEEL	52	754	**148B5270**
15	½	SVA-L 15 A STR CAP	52	754	**148B5271**
20	¾	SVA-L 20 A STR H-WHEEL	52	754	**148B5370**
20	¾	SVA-L 20 A STR CAP	52	754	**148B5371**
25	1	SVA-L 25 A STR H-WHEEL	52	754	**148B5470**
25	1	SVA-L 25 A STR CAP	52	754	**148B5471**
32	1¼	SVA-L 32 A STR H-WHEEL	52	754	**148B5570**
32	1¼	SVA-L 32 A STR CAP	52	754	**148B5571**
40	1½	SVA-L 40 A STR H-WHEEL	52	754	**148B5670**
40	1½	SVA-L 40 A STR CAP	52	754	**148B5671**
Socket welding ANSI (B 16.11)					
15	½	SVA-L 15 SOC STR H-WHEEL	52	754	**148B5272**
15	½	SVA-L 15 SOC STR CAP	52	754	**148B5273**
20	¾	SVA-L 20 SOC STR H-WHEEL	52	754	**148B5372**
20	¾	SVA-L 20 SOC STR CAP	52	754	**148B5373**
25	1	SVA-L 25 SOC STR H-WHEEL	52	754	**148B5472**
25	1	SVA-L 25 SOC STR CAP	52	754	**148B5473**
32	1¼	SVA-L 32 SOC STR H-WHEEL	52	754	**148B5572**
32	1¼	SVA-L 32 SOC STR CAP	52	754	**148B5573**
40	1½	SVA-L 40 SOC STR H-WHEEL	52	754	**148B5672**
40	1½	SVA-L 40 SOC STR CAP	52	754	**148B5673**
FPT inside pipe thread, NPT (ANSI/ASME B 1.20.1)					
15	½	SVA-L 15 FPT STR H-WHEEL	52	754	**148B5274**
15	½	SVA-L 15 FPT STR CAP	52	754	**148B5275**
20	¾	SVA-L 20 FPT STR H-WHEEL	52	754	**148B5374**
20	¾	SVA-L 20 FPT STR CAP	52	754	**148B5375**
25	1	SVA-L 25 FPT STR H-WHEEL	52	754	**148B5474**
25	1	SVA-L 25 FPT STR CAP	52	754	**148B5475**
32	1¼	SVA-L 32 FPT STR H-WHEEL	52	754	**148B5574**
32	1¼	SVA-L 32 FPT STR CAP	52	754	**148B5575**

Accessories

6T Nipple Kit solution

Code no.	
148B4245	ACCESSORY WELD.NIPPLE DN6 A + UNION NUT
148B4184	ACCESSORY WELD.NIPPLE DN6 D + UNION NUT

Ordering SVA-S from the parts programme

Example
(select from table 1 and 2)

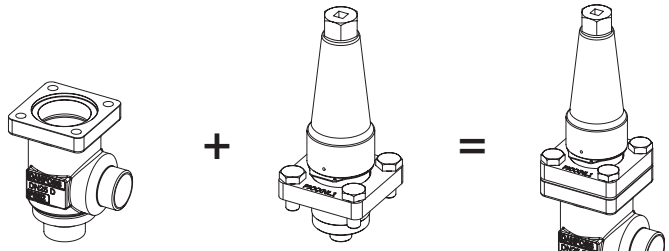

Valve housing, size 25 (1 in.), DIN butt weld, angleway, **148B5452**
Table 1

Top part, SVA-S size 25 (1 in.) with cap **148B5476**
Table 2

Table 1
SVL valve housings w/different connections

Please note:
Not all sizes available for SVA-L - see table 2.

DN 6-10 mm (¼ - ⅜ in.) | *DN 15-65 mm (½ - 2½ in.)* | *DN 80-125 mm (3 - 5 in.)*

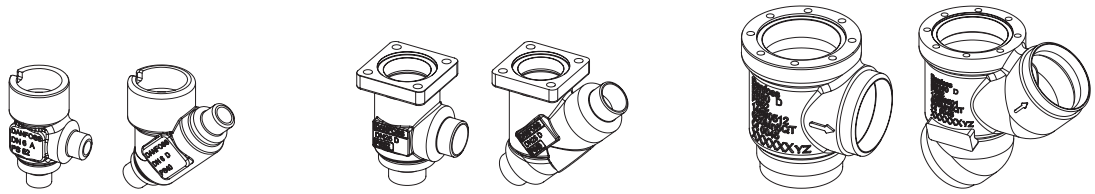

Sizes [DN]		Valve Housing SVL										
		DIN-Butt weld		ANSI-Butt weld		GOST-Butt-weld		SOC		FPT		T
mm	in.	ANG	STR	ANG	STR	ANG	STR	ANG	STR	ANG	STR	ANG
6	¼	148B5002	148B5003	148B5004	148B5005							148B5012
10	⅜	148B5122	148B5123	148B5124	148B5125	148B5134	148B5135					
15	½	148B5252	148B5253	148B5254	148B5255	148B5391	148B5392	148B5256	148B5257	148B5258	148B5259	
20	¾	148B5352	148B5353	148B5354	148B5355	148B5393	148B5394	148B5356	148B5357	148B5358	148B5359	
25	1	148B5452	148B5453	148B5454	148B5455	148B5498	148B5499	148B5456	148B5457	148B5458	148B5459	
32	1¼	148B5576	148B5577	148B5578	148B5579	148B5593	148B5594	148B5580	148B5581	148B5582	148B5583	
40	1½	148B5652	148B5653	148B5654	148B5655	148B5681	148B5682	148B5656	148B5657			
50	2	148B5741	148B5742	148B5743	148B5744	148B5759	148B5760	148B5745	148B5746			
65	2½	148B5816	148B5817	148B5818	148B5819	148B5816	148B5817					
80	3	148B5912	148B5913	148B5914	148B5915	148B5912	148B5913					
100	4	148B6014	148B6015	148B6016	148B6017	148B6033	148B6034					
125	5	148B6112	148B6113	148B6114	148B6115	148B6133	148B6134					

Table 2
SVA complete top part including gaskets and bolts

SVA-S 6-10 with cap | SVA-S 6-10 with h-wheel | SVA-S 15-65 with cap | SVA-S 15-65 with h-wheel | SVA-S 80-125 with cap | SVA-S 80-125 with h-wheel | SVA-L 15-40 with cap | SVA-L 15-40 with h-wheel

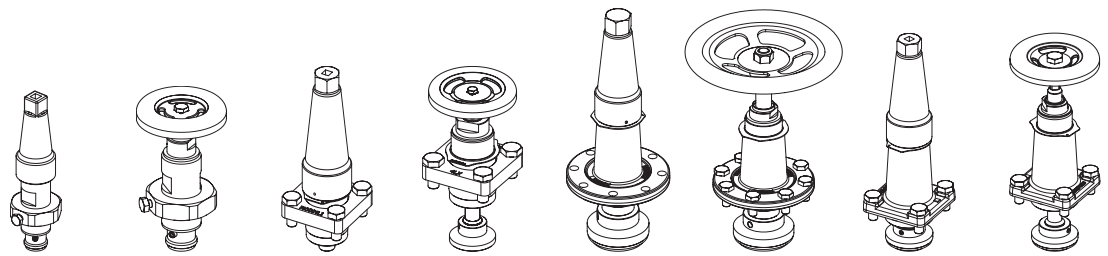

Sizes [DN]		Complete top part			
mm	in.	SVA-S CAP	SVA-S H-WHEEL	SVA-L CAP	SVA-L H-WHEEL
6	¼	148B5013	148B5014		
10	⅜				
15	½	148B5276	148B5277	148B5278	148B5279
20	¾				
25	1	148B5476	148B5477	148B5478	148B5479
32	1¼				
40	1½				
50	2	148B5728	148B5729		
65	2½	148B5822	148B5823		
80	3	148B5916	148B5917		
100	4	148B6012	148B6018		
125	5	148B6116	148B6117		

© Danfoss | DCS (ms) | 2020.03

Danfoss can accept no responsibility for possible errors in catalogues, brochures and other printed material. Danfoss reserves the right to alter its products without notice. This also applies to products already on order provided that such alterations can be made without subsequential changes being necessary in specifications already agreed.
All trademarks in this material are property of the respective companies. Danfoss and the Danfoss logotype are trademarks of Danfoss A/S. All rights reserved.