ENGINEERING
TOMORROW

Data sheet

Shut-off ball valve
Type GBC

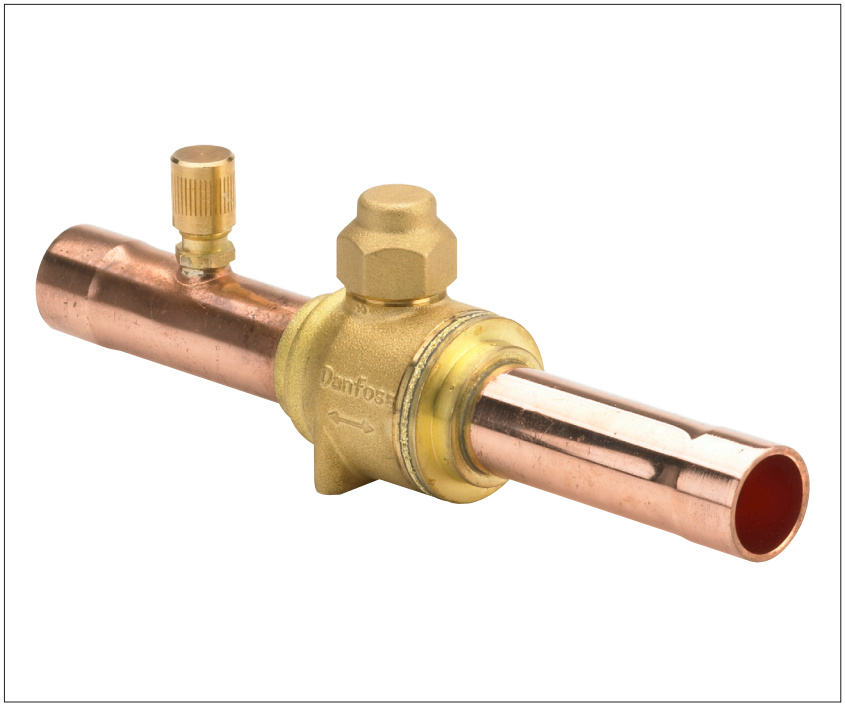

Danfoss shut-off ball valves, type GBC, are manually operated shut-off valves suitable for bi-directional flow.

The GBC valves are used in liquid, suction and hotgas lines in refrigeration and air conditioning systems.

The GBC bi-directional ball valves can be delivered with or without external access port.

The valves have one-piece wire seal cap to prevent unintentional cap removal or tampering between services.

Features

- Broad temperature range equally applicable to freezing, refrigeration and air conditioning applications
- ¼ turn from fully open to fully closed
- Full flow with minimum pressure drop
- Ball status indicator on spindle top indicating open or closed position
- Bi-directional flow, i.e. valve orientation is unimportant
- One-piece seal cap for safety purpose Complies with European Safety Directive EN 378 (Safety and environmental requirements)
- Laser welded construction
- Burst-proof spindle design
- Drilled and tapped for panel mounting
- Selected Teflon and O-ring material to secure the best tightness and long lifetime
- Versions with access port helps in reducing cost if service of the system is necessary
- Double O-ring stem seal design
- Customized brass material ensures consistent performance under aggressive environment

Approvals

Technical data

- **Refrigerants:** R134a, R22/R407C, R404A/R507, R407A, R407F, R410A, R448A, R449A, R450A, R452A, R513A, R1234ze
- GBC 6s - GBC 25s can be used with R32, R454B, R452B, R290
- For a fully updated list of approved refrigerants, visit **www.products.danfoss.com** and search for individual code numbers, where refrigerants are listed as part of product specifications

Type	Media temperature range	Max. working pressure (PS/MWP)
GBC 6s - GBC 42s	-40 °C – 150 °C (short term for 150 °C) / -40 °F – 300 °F (short term for 300 °F) For long term use in high temperature application, please consult Danfoss.	45 bar / 650 psig
GBC 54s - GBC 79s	-40 – 121 °C / -40 – 250 °F	45 bar / 650 psig

Ordering

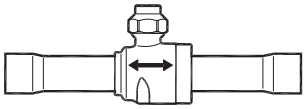

GBC without access port, ODF/ODF

Type	Solder ODF/ODF connection		K_v value [1])	C_v value [1])	Code no.
	[inch]	[mm]	[m³/h]	[gal/min]	
GBC 6s	1/4	–	1.83	2.12	009L7020
	–	6	1.83	2.12	009L7030
GBC 10s	3/8	–	8.04	9.29	009L7021
	–	10	8.04	9.29	009L7031
GBC 12s	1/2	–	13.17	15.22	009L7022
	–	12	13.17	15.22	009L7032
GBC 16s	5/8	16	15.66	18.10	009L7023
GBC 18s	3/4	–	21.93	25.35	009L7024
	–	18	21.93	25.35	009L7035
GBC 22s	7/8	22	33.34	38.54	009L7025
GBC 28s	1 1/8	–	62.25	71.96	009L7026
	–	28	62.25	71.96	009L7033
GBC 35s	1 3/8	35	92.76	107.23	009L7027
GBC 42s	1 5/8	–	134.76	155.78	009L7028
	–	42	134.76	155.78	009L7034
GBC 54s	2 1/8	54	240.11	277.57	009L7029
GBC 67s	2 5/8	–	367.38	424.69	009L7959
GBC 67s RP	2 5/8	–	203.12	234.81	009L7036
GBC 79s	3 1/8	–	528.87	611.37	009L7980
GBC 79s RP	3 1/8	–	171.89	198.70	009L7037

[1]) Calculated based on fluid dynamic equations. RP: Reduced Port

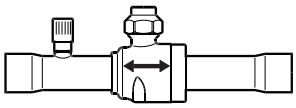

GBC with access port, ODF/ODF

Type	Solder ODF/ODF connection		K_v value [1])	C_v value [1])	Code no.
	[inch]	[mm]	[m³/h]	[gal/min]	
GBC 6s	1/4	–	1.83	2.12	009L7050
	–	6	1.83	2.12	009L7060
GBC 10s	3/8	–	8.04	9.29	009L7051
	–	10	8.04	9.29	009L7061
GBC 12s	1/2	–	13.17	15.22	009L7052
	–	12	13.17	15.22	009L7062
GBC 16s	5/8	16	15.66	18.10	009L7053
GBC 18s	3/4	–	21.93	25.35	009L7054
	–	18	21.93	25.35	009L7065
GBC 22s	7/8	22	33.34	38.54	009L7055
GBC 28s	1 1/8	–	62.25	71.96	009L7056
	–	28	62.25	71.96	009L7063
GBC 35s	1 3/8	35	92.76	107.23	009L7057
GBC 42s	1 5/8	–	134.76	155.78	009L7058
	–	42	134.76	155.78	009L7064
GBC 54s	2 1/8	54	240.11	277.57	009L7059
GBC 67s	2 5/8	–	367.38	424.69	009L7960
GBC 67s RP	2 5/8	–	203.12	234.81	009L7066
GBC 79s	3 1/8	–	528.87	611.37	009L7981
GBC 79s RP	3 1/8	–	171.89	198.70	009L7067

[1]) calculated based on fluid dynamic equations. RP: Reduced Port

Ordering

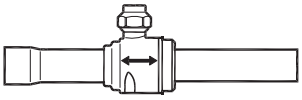

GBC without access port, ODF/ ODM

Type	Solder ODF/ODF connection		K_v value [1])	C_v value [1])	Code no.
	[inch]	[mm]	[m³/h]	[gal/min]	
GBC 22s	7/8	22	33.34	38.54	009L7000
GBC 28s	1 1/8	–	62.25	71.96	009L7001
GBC 35s	1 3/8	35	92.76	107.23	009L7002
GBC 42s	1 5/8	–	134.76	155.78	009L7003
GBC 79s	3 1/8	–	528.87	611.37	009L7969

[1]) *calculated based on fluid dynamic equations*

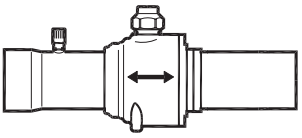

GBC with access port, ODF/ ODM

Type	Solder ODF/ODF connection		K_v value [1])	C_v value [1])	Code no.
	[inch]	[mm]	[m³/h]	[gal/min]	
GBC 28s	1 1/8	–	62.25	71.96	009L7097
GBC 35s	1 3/8	35	92.76	107.23	009L7098
GBC 42s	1 5/8	–	134.76	155.78	009L7099
GBC 54s	2 5/8	54	240.11	277.57	009L7069
GBC 67s	2 5/8	–	367.38	424.69	009L7958
GBC 79s	3 1/8	–	528.87	611.37	009L7970

[1]) *calculated based on fluid dynamic equations*

Spare parts

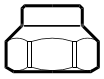

Seal cap kit

Type	Valve connection size		Industrial pack [pcs]	Code no.
	[inch]	[mm]		
GBC 6s - GBC 12s	1/4 – 1/2	6 – 12	6	009L7209
GBC 16s - GBC 22s	5/8 – 7/8	16 – 22	6	009L7210
GBC 28s - GBC 35s	1 1/8 – 1 3/8	28 – 35	4	009L7211
GBC 42s - GBC 79s	1 5/8 – 3 1/8	42 – 79	4	009L7212

Bracket kit

Type	Valve connection size		Industrial pack [pcs.]	Code no.
	[inch]	[mm]		
GBC 6s - GBC 12s	1/4 – 1/2	6 – 12	12	009G7089
GBC 16s	5/8	16	12	009G7084
GBC 18s - GBC 22s	3/4 – 7/8	18 – 22	12	009G7085
GBC 28s	1 1/8	28	10	009G7086
GBC 35s	1 3/8	35	5	009G7087
GBC 42s	1 5/8	42	4	009G7088

Design / Function

1. Connection
2. Valve body
3. Ball seat (modified PTFE)
4. Valve tail
5. Stainless steel ball
6. Double spindle O-ring seal (chloroprene)
7. Cap seal (PTFE)
8. Seal cap
9. Spindle
10. Pin
11. Access port cap
12. Guide ring
13. Schrader valve

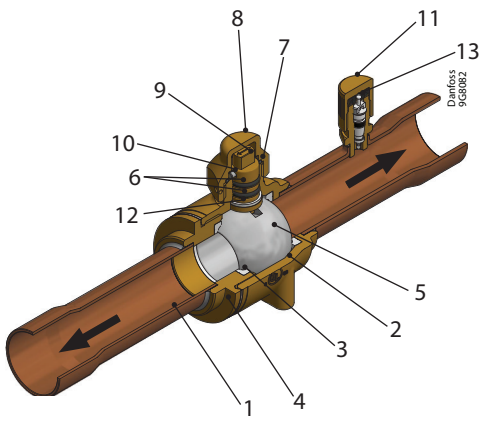

Direct flow gives maximum through-flow with minimum pressure drop across valve.
The combination of laser-welded valve body (2) and valve tail (4), ball seat/seal (3), double spindle O-ring seal (6), and cap seal (7) gives absolutely minimum leakage.

Dimension and weight

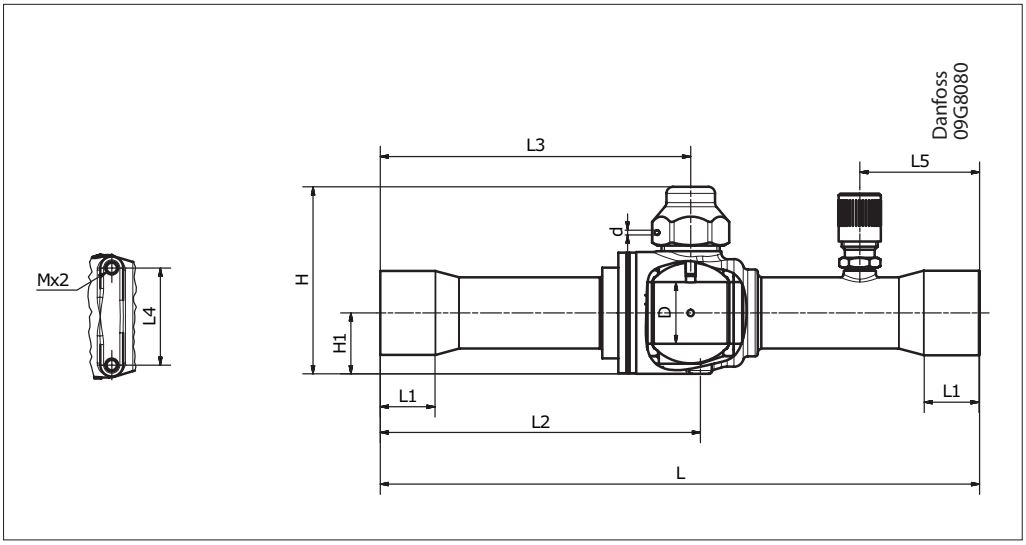

SI units

Type	Connection		H	H_1	L	L_1	L_2	L_3	L_4	L_5	M	D	d	Weight
	[inch]	[mm]	[mm]	[mm]	[mm]	[mm]	[mm]	[mm]	[mm]	[mm]	[mm]	[mm]	[mm]	[kg] [1])
GBC 6s	1/4	6	43	12	139	7	73	73	16.8	31	M3 × 0.5	11.1	1.5	0.1
GBC 10s	3/8	10	43	12	139	9	73	73	16.8	31	M3 × 0.5	11.1	1.5	0.1
GBC 12s	1/2	12	43	12	161	10	84	84	16.8	31	M3 × 0.5	11.1	1.5	0.1
GBC 16s	5/8	16	50	15	161	12	86	84	22	31	M4 × 0.7	14	1.5	0.2
GBC 18s	3/4	18	58	19	185	14	99	96	30	37	M4 × 0.7	19	1.5	0.4
GBC 22s	7/8	22	58	19	185	17	99	96	30	37	M4 × 0.7	19	1.5	0.4
GBC 28s	1 1/8	28	80	25	208	20	112	108	38	44	M4 × 0.7	25.5	1.5	0.9
GBC 35s	1 3/8	35	89	30	251	25	136	130	48	44	M6 × 1.0	32	1.5	1.4
GBC 42s	1 5/8	42	110	35	281	29	151	145	55	56	M6 × 1.0	38	1.5	2.2
GBC 54s	2 1/8	54	131	46	305	34	167	157	74	56	M6 × 1.0	50	1.5	4.2
GBC 67s	2 5/8	–	149	55	343	38	188	172	84	72	M6 × 1.0	60.5	1.5	5.8
GBC 67s RP	2 5/8	–	131	46	305	37	167	157	74	56	M6 × 1.0	50	1.5	4.4
GBC 79s ODF / ODF	3 1/8	–	169	65	416	38	230	214	86	80	M6 × 1.0	73.5	1.5	9.1
GBC 79s ODF / ODM	3 1/8	–	169	65	406	38	220	204	86	80	M6 × 1.0	73.5	1.5	9.1
GBC 79s RP	3 1/8	–	131	46	305	42	167	157	74	56	M6 × 1.0	50	1.5	4.5

[1]) Calculated value
RP: Reduced Port

Dimension and weight

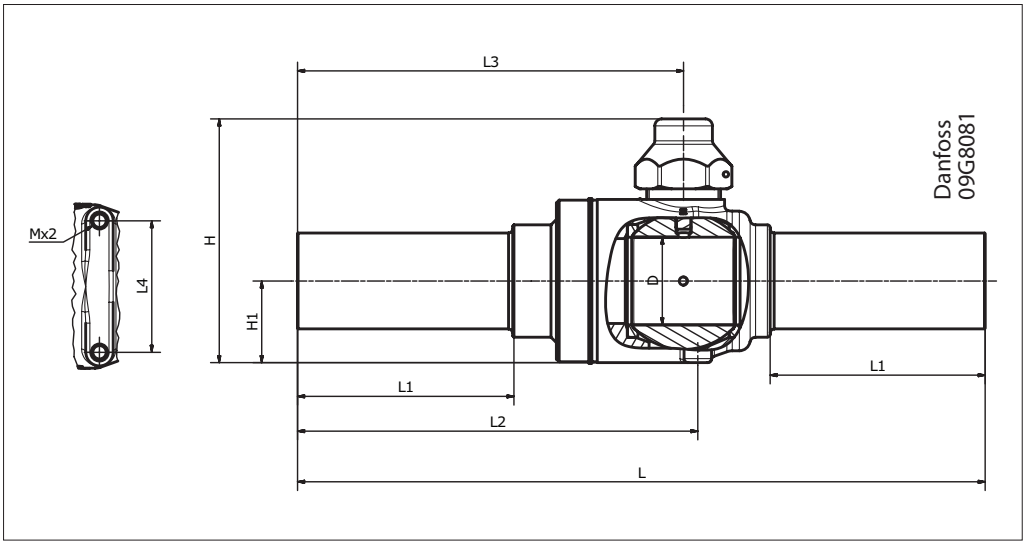

US units

Type	Connection		H	H_1	L	L_1	L_2	L_3	L_4	L_5	M	D	d	Weight
	[inch]	[mm]	[inch]	[inch]	[inch]	[inch]	[inch]	[inch]	[inch]	[inch]	[mm]	[inch]	[inch]	[lbs] [1])
GBC 6s	1/4	6	1.7	0.5	5.5	0.3	2.9	2.9	0.7	1.2	M3 × 0.5	0.4	0.1	0.3
GBC 10s	3/8	10	1.7	0.5	5.5	0.4	2.9	2.9	0.7	1.2	M3 × 0.5	0.4	0.1	0.3
GBC 12s	1/2	12	1.7	0.5	6.3	0.4	3.3	3.3	0.7	1.2	M3 × 0.5	0.4	0.1	0.3
GBC 16s	5/8	16	2.0	0.6	6.3	0.5	3.4	3.3	0.9	1.2	M4 × 0.7	0.6	0.1	0.5
GBC 18s	3/4	18	2.3	0.7	7.3	0.6	3.9	3.8	1.2	1.5	M4 × 0.7	0.7	0.1	1.0
GBC 22s	7/8	22	2.3	0.7	7.3	0.7	3.9	3.8	1.2	1.5	M4 × 0.7	0.7	0.1	1.0
GBC 28s	1 1/8	28	3.1	1.0	8.2	0.8	4.4	4.3	1.5	1.7	M4 × 0.7	1.0	0.1	2.0
GBC 35s	1 3/8	35	3.5	1.2	9.9	1.0	5.4	5.1	1.9	1.7	M6 × 1.0	1.3	0.1	3.1
GBC 42s	1 5/8	42	4.3	1.4	11.1	1.1	5.9	5.7	2.2	2.2	M6 × 1.0	1.5	0.1	4.9
GBC 54s	2 1/8	54	5.2	1.8	12.0	1.3	6.6	6.2	2.9	2.2	M6 × 1.0	2.0	0.1	9.3
GBC 67s	2 5/8	–	5.9	2.2	13.5	1.5	7.4	6.8	3.3	2.8	M6 × 1.0	2.4	0.1	12.8
GBC 67s RP	2 5/8	–	5.2	1.8	12.0	1.5	6.6	6.2	2.9	2.2	M6 × 1.0	2.0	0.1	9.7
GBC 79s ODF / ODF	3 1/8	–	6.7	2.6	16.4	1.5	9.1	8.4	3.4	3.1	M6 × 1.0	2.9	0.1	20.1
GBC 79s ODF / ODM	3 1/8	–	6.7	2.6	16.0	1.5	8.7	8.0	3.4	3.1	M6 × 1.0	2.9	0.1	20.1
GBC 79s RP	3 1/8	–	5.2	1.8	12.0	1.7	6.6	6.2	2.9	2.2	M6 × 1.0	2.0	0.1	9.9

[1]) Calculated value
RP: Reduced Port

Danfoss can accept no responsibility for possible errors in catalogues, brochures and other printed material. Danfoss reserves the right to alter its products without notice. This also applies to products already on order provided that such alterations can be made without subsequential changes being necessary in specifications already agreed.
All trademarks in this material are property of the respective companies. Danfoss and the Danfoss logotype are trademarks of Danfoss A/S. All rights reserved.