ENGINEERING
TOMORROW

Data sheet

Gasketed Plate Heat Exchangers (DN 150 / 6”)

S41 / S41A / S42 / S62 / S62AE / S62TY / S63 / S79 / S86 / S86SE / S87 / S110 / S110SE

Description

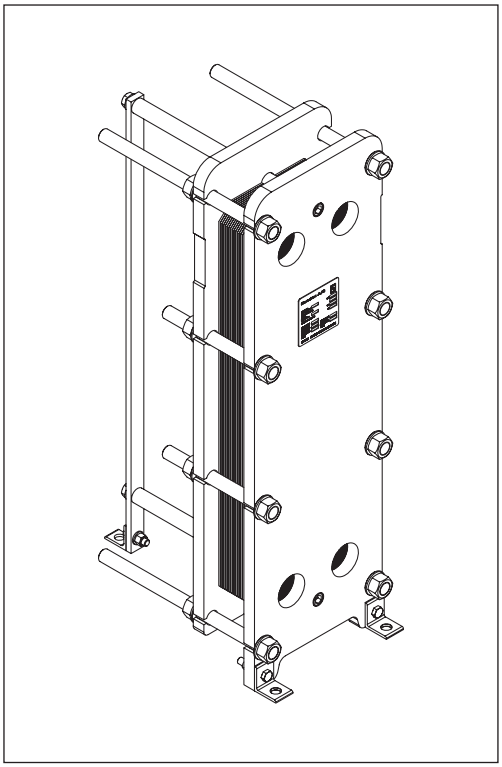

SONDEX® gasketed plate heat exchangers are the ideal choice for a wide range of applications across numerous market segments.

We have the largest plate portfolio in the world, and we customize each heat exchanger to meet your exact requirements. Innovative technologies and smart design make our gasketed plate heat exchangers a stellar investment.

Benefits:
- Individually customized solution that perfectly matches your requirements and lowers your energy consumption.
- High performance and a low pressure drop eliminate unnecessary burdens on your system and optimize overall system performance.
- The design results in a compact solution with a small footprint, simple installation, and easy access for maintenance.

Common applications:
- HVAC industry
- Marine/offshore industry
- Dairy/food/beverage industry
- Sugar industry
- Biogas industry
- Pulp and paper industry
- Heavy industry
- Mining industry
- Petrochemical industry
- Chemical industry DN 150

Main data:
- Min. temperature –10 °C
- Max. temperature 180 °C
- Max. working pressure 16 / 25 bar (6 / 10 bar on request)
- Water and different fluids, steam
- Connection size DN 150 or 6”

Approvals:
- Please contact your local Danfoss/SONDEX® sales representative for an overview of the available approvals in your region

Construction standard:
- EN13445 (PED 2014/68/EU)
- ASME sec VIII, Div. 1

Naming of units

S41A-IS16-21-TKTL89

- TKTL89 - Plate grouping [3]
- 21 - Number of plates in the heat exchanger
- 16 - Design pressure of the heat exchanger
- IS - Frame type [2]
- 41A – Type of heat exchanger [1]
- S – Gasketed heat exchanger

[1] Type of heat exchanger:

41 - …

Letter A shows type of the attachment of gasket to plate:

e.g. 41 (without A) – SonderLock

41A (with A) – Hang-on

SE - SonderLock Energy Saving plate design

AE - Hang-on with smaller channel gap

TY - asymmetric channel design

[2] Description of frame types:

There are few different frame types which can be offered for different applications and duties.

IS – with suspension roller,

IG – without suspension roller,

FS – food/sanitary with suspension roller,

FG - food/sanitary,

ST – simple design of frame with threaded connections

[3] Channel grouping:

In this example, the heat exchanger combines TK and TL channels. The share of TL channels equals 89% of the total number of channels.

The number of channels is defined as “the number of plates - 1”.

TK - short thermal length

TM - medium thermal length

TL - long thermal length

Heat exchanger design

Gasketed heat exchangers consist of

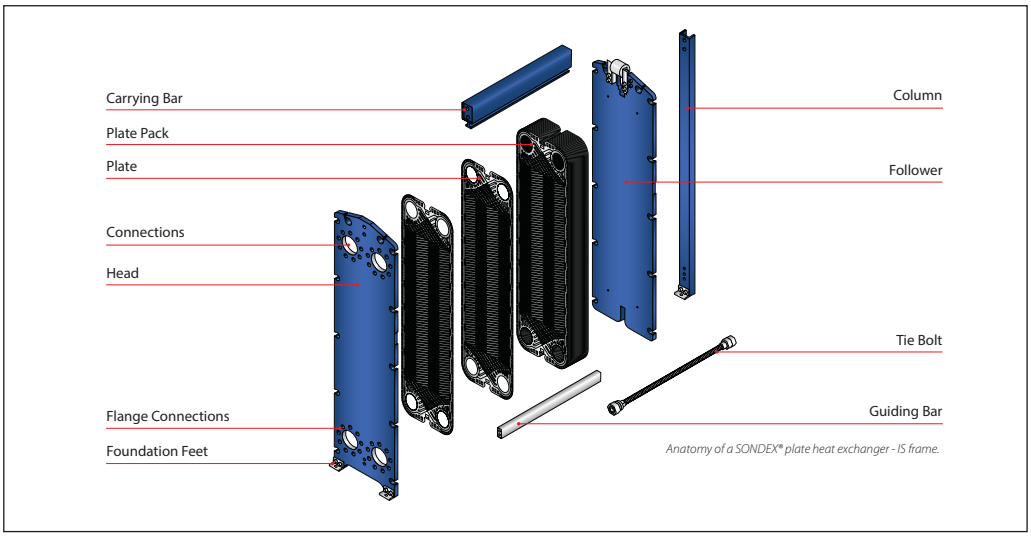

Anatomy of a SONDEX® plate heat exchanger - IS frame.

Heat exchanger design
(continued)

Multi-pass design

To the left: A multi-pass solution with connections on the follower and the head.
To the right: A single-pass solution with all connections on the head.

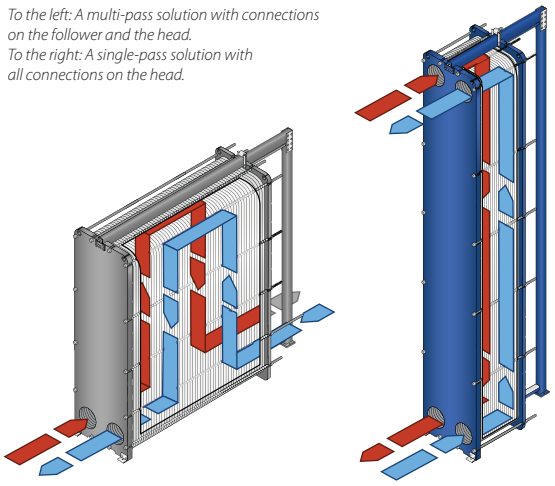

Connections

The heat exchanger may have connections on both front and back end sides of the unit.

Connections on the front-end plate are marked with F and connections on the back-end plate are marked with B. The numbers 1, 2, 3 and 4 designate the position of the connection on the end-plate from the top-left port clockwise.

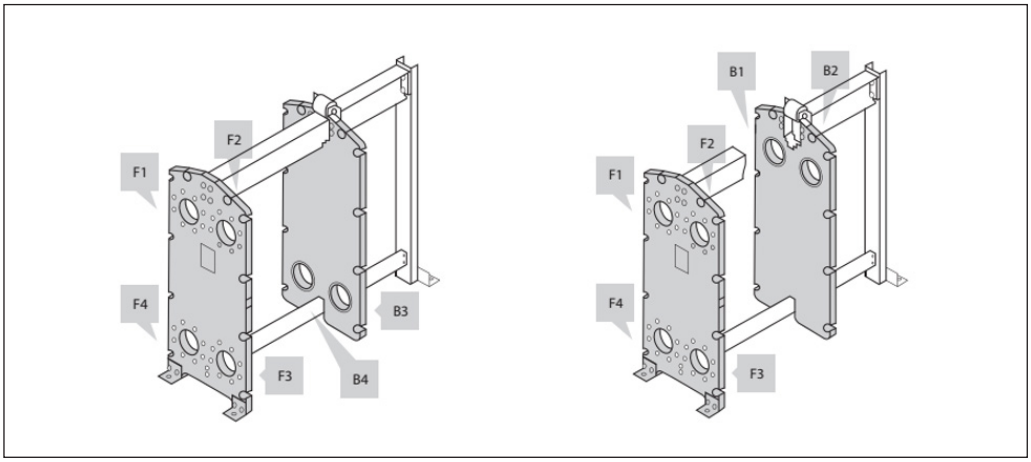

Technical data

Heat exchanger **S41 / S41A / S42 / S62 / S62AE / S62TY / S63 / S79 / S86 / S86SE / S87 / S110 / S110SE**

Type		S41	S41A	S42	S62	S62TY	S62AE	S63	S79	S86	S86SE	S87	S110	S110SE
Max. working pressure	PN (bar)	(6)[1], (10)[1], 16, 25												
Max. operating temperature	°C	Up to 180												
Min. operating temperature	°C	-10												
Flow medium		Water and different fluids, steam												
Volume / channel	l	1.25		1.6	2.6	2.65/1.55	1.6	3.1	2.5	2.7	1.6	4.06	3.2	1.98
Connection size		DN 150/ 6"												
Connection type		• DN 150/6” flanges. Carbon steel, rubberlined or cladded with AISI 316L (other materials available on request) • DN 125 / 5” Dairy union (for food/sanitary industry frames only) • DN 100 / 4” Dairy union (for food/sanitary industry frames only)												
Plate material		Stainless steel EN 1.4404 (AISI 316L), EN 1.4301 (AISI 304), SMO254, Hastelloy C276, titanium Gr.1 Other materials available on request												
Plate thickness	mm	0.4; 0.5; 0.6; 0.7 (ti)[1] 2 x 0.4 SonderSafe plates[2] Other thicknesses available on request												
Gasket material		NBR, EPDM, FKM Other materials available on request												
Gasket attachment type		Hang-on; Sonder Lock												
Liners in connections		• Rubber NBR, EPDM, FKM • Stainless steel EN 1.4404 (AISI 316L), EN 1.4301 (AISI 304), SMO254, Hastelloy C276, titanium Gr.1												
Frame		• Painted frame, color RAL 5010 (other colors available on request) • Stainless steel frame, designed for the sanitary applications (e.g. food and dairy industries)												
Frame painting specification		Painting available for corrosion categories C2L, C4M, C5M												

[1] *Not available for all frame variations*
[2] *SonderSafe – double plate*

Using the right plate for each individual duty is very important, as it greatly impacts the efficiency of the entire installation.
It is important that the length of the plates and the type of pattern match the requirements of individual thermal duty.
We have developed a wide plate portfolio to provide the perfect plate and connection size for any duty.
No application is too small or too big for us - we provide the optimal technical solution every time.

Our extensive SONDEX® plate portfolio includes plates that lie outside the commonly manufactured plate sizes to cover all thermal duties optimally.

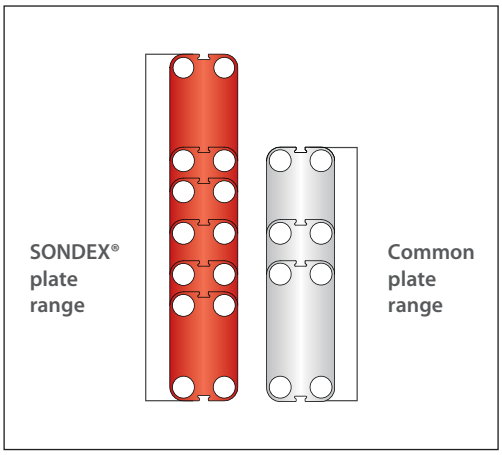

Accessories

Insulation

Recommended applications:
The insulation jacket for the plate heat exchanger is used in different applications with high temperatures and cooling systems.

Application	Heating	Cooling
Material	45 mm mineral wool Not flammable DIN EN 4102A2	40 mm PU-foam DIN 4102-1 B2
Outer cap	1 mm aluminium "Stucco" Embossed	
Internal insulation	0.05 mm aluminium foil	
Panel fixation	Plastic rivets	
Temperature	20 … 200 °C	-50 … -80 °C
U-value	0.55 W/m²K	0.38 W/m²K
Insulation class	3 [1)]	4 [1)]
Heat loss	17.1 W/m²	-

Please note:
Inlet and outlet temperatures in the exchanger have been based on 90/50 – 30/70 °C.

[1)] The loss of heating/cooling is stated per m² surface on the insulation jacket.
The bottom of the heat exchanger is not insulated and this fact has been excluded.
A possible loss of ventilation, largely dependent on the mounting of the heat exchanger, has not been taken into account either.

Drip trays

Recommended Applications:
The drip tray is available in two types. A "fail-safe" solution which prevents water or liquid from leaking onto the floor, or when the heat exchangers is dismantled, or opened for inspection and maintenance. And an insulated drip tray for cooling applications, which collects condensate formed outside of the plate heat exchanger.

Materials
Drip tray consists of:
- 1 mm galvanized steel frame
- Hanging brackets in galvanized steel
- 60 mm Polyurethane insulation for cooling applications
- Draining valve.

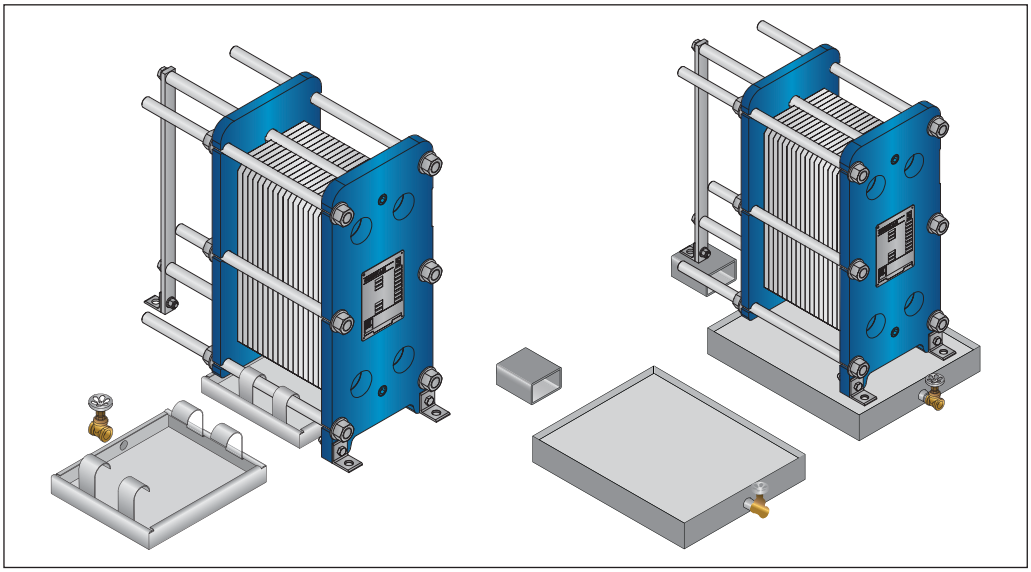

Spare parts

Spare parts for gasketed heat exchangers, such as plates, gaskets, frame parts can be ordered for maintenance, repair, increasing heat exchanger capacity, etc.

Please contact your local Danfoss or SONDEX® sales representative to provide you with information on spare parts available for gasketed heat exchangers.

Selection and ordering

Please contact your local SONDEX® or Danfoss sales representative for the selection and / or ordering of the heat exchangers, spare parts, and accessories.

For contact information please visit *https://www.danfoss.com/en/contact-us*.

Dimensions
Non-sanitary applications

Any connection can be used for primary side in.
All the rest are made correspondingly.

S41 / S42 frames

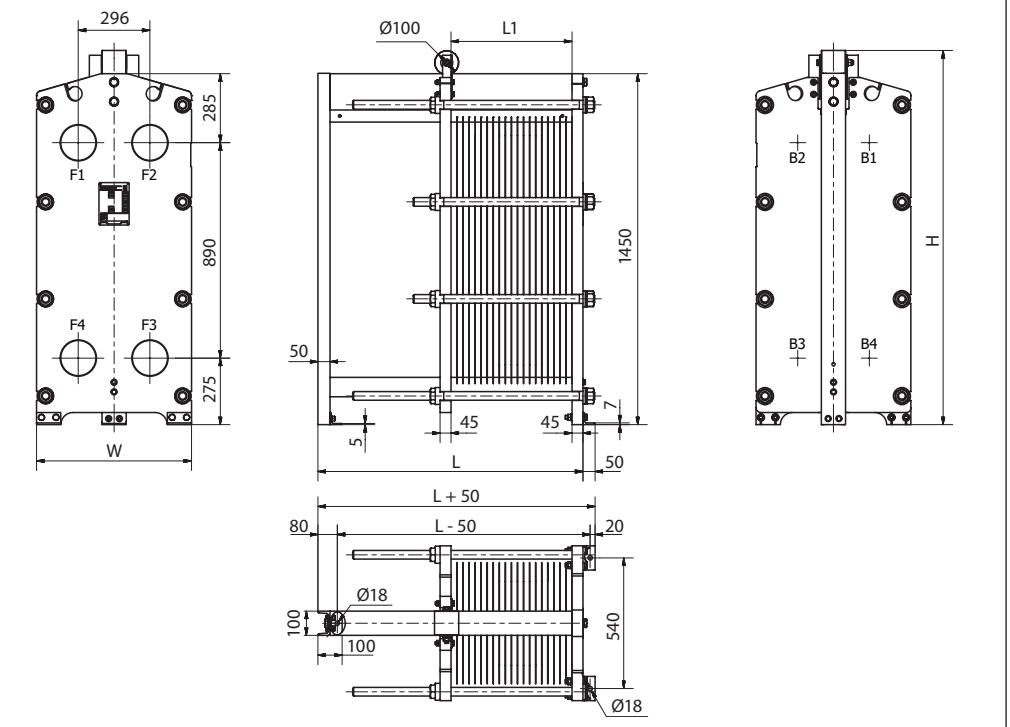

Drawing of S41 IS16 frame

Number of plates [1]	L (frame length) (mm)	W (mm)	H (mm)	Weight max, empty [2] (kg)	Connection type
S41 / S41A IS16					
7 – 40[3]	695	640 (25.20")	1546 (60.87")	875	DN 150 flange or 6"
41 – 114[3]	1095			1099	
115-170[3]	1395			1269	
171-207[3]	1595			1381	
208 - 300[3]	2095			1663	
301 - 392[3]	2595			1942	
393 - 485[3]	3095			2222	
486 - 670[3]	4095		1746 (68.70")	2783	
671 - 855[3]	5095			3344	
866 - 1040[3]	6095			3904	
S41 / S41A IS25					
7 – 38[3]	710	640 (25.20")	1550 (61.02")	1214	DN 150 flange or 6"
39 – 109[3]	1110			1464	
110 – 163[3]	1410			1652	
164 – 199[3]	1610			1779	
200 – 288[3]	2110			2090	
289 – 377[3]	2610			2402	
378 - 466[3]	3110			2714	
467 - 645[3]	4110		1754 (69.06")	3341	
646 - 824[3]	5110			3967	
825 - 1002[3]	6110			4592	

[1] the indicated maximum number of plates is based on the minimum plate thickness allowable for the PN level of the unit;
[2] the maximum weight of the empty unit with the maximum allowable number of plates;
[3] the indicated maximum number of plates is for units without intermediate frames. Adding an intermediate frame reduces the maximum allowable number of plates in the unit;
[*] PNclass 10 bar is available on request

Dimensions *(continued)*
Non-sanitary applications

S41 / S42 frames

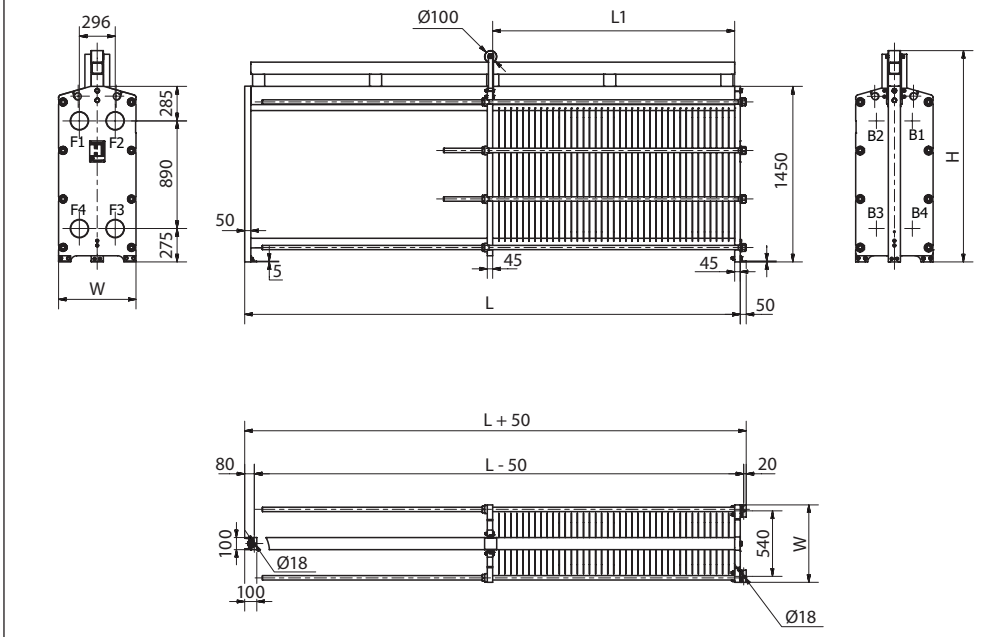

Drawing of S42 IS16 frame

Number of plates [1]	L (frame length) (mm)	W (mm)	H (mm)	Weight max, empty [2] (kg)	Connection type
S42 IS16					
7 – 31[3]	695	640 (25.20")	1546 (60.87")	875	DN 150 flange or 6"
32 – 89[3]	1095			1042	
90-133[3]	1395			1182	
134-162[3]	1595			1275	
163 – 234[3]	2095			1507	
235 – 307[3]	2595			1740	
308 – 379[3]	3095			1971	
380 – 524[3]	4095		1746 (68.70")	2436	
525 – 669[3]	5095			2901	
670 – 814[3]	6095			3365	
S42 IS25					
7 – 30[3]	710	640 (25.20")	1550 (61.02")	1192	DN 150 flange or 6"
31 – 87[3]	1110			1402	
88 – 130[3]	1410			1559	
131 – 159[3]	1610			1666	
160 – 230[3]	2110			1926	
231 – 302[3]	2610			2190	
303 – 373[3]	3110			2452	
374 – 516[3]	4110		1754 (69.06")	2977	
517 – 659[3]	5110			3502	
660 - 802[3]	6110			4027	

[1] the indicated maximum number of plates is based on the minimum plate thickness allowable for the PN level of the unit;
[2] the maximum weight of the empty unit with the maximum allowable number of plates;
[3] the indicated maximum number of plates is for units without intermediate frames. Adding an intermediate frame reduces the maximum allowable number of plates in the unit;
[*] PNclass 10 bar is available on request

Dimensions *(continued)*
Sanitary applications

S62 / S63 frames

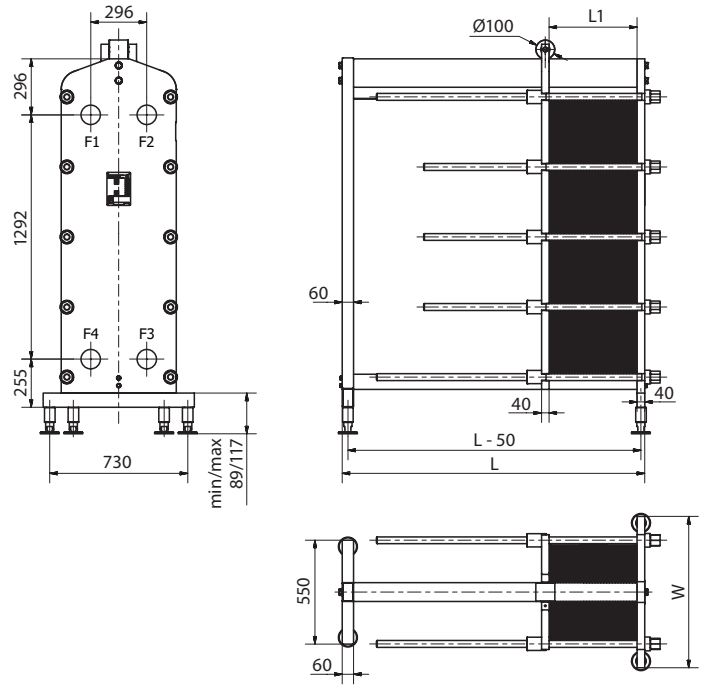

Drawing of S62 FS10 frame

Number of plates [1]	L (frame length) (mm)	W (mm)	H (mm)	Weight max, empty [2] (kg)	Connection type
S62 FS10					
7 – 114[3]	1100	800 (31.50")	2059-2099[4] (81.06-82.64")	1167	DN 125 dairy union
115 – 207[3]	1600			1488	
208 – 300[3]	2100			1807	
301 – 392[3]	2600			2125	
393 – 485[3]	3100			2445	
486 – 670[3]	4100			3082	
S62AE FS10					
7 – 140[3]	1100	800 (31.50")	2059-2099[4] (81.06-82.64")	1251	DN 125 dairy union
141 – 254[3]	1600			1625	
255 – 368[3]	2100			2001	
369 – 481[3]	2600			2373	
482 – 595[3]	3100			2748	
596 – 822[3]	4100			3495	
S63 FS10					
7 - 96[3]	1100	800 (31.50")	2059-2099[4] (81.06-82.64")	1120	DN 125 dairy union
97 – 175[3]	1600			1404	
176 – 253[3]	2100			1685	
254 - 331[3]	2600			1966	
332 – 409[3]	3100			2247	
410 – 565[3]	4100			2809	

[1] the indicated maximum number of plates is based on the minimum plate thickness allowable for the PN level of the unit;
[2] the maximum weight of the empty unit with the maximum allowable number of plates;
[3] the indicated maximum number of plates is for units without intermediate frames. Adding an intermediate frame reduces the maximum allowable number of plates in the unit;
[4] the height of the heat exchanger can be modified with special adjustable feet.
[*] PNclass 10 bar is available on request

Dimensions *(continued)*
Non-sanitary applications

S62 / S63 frames

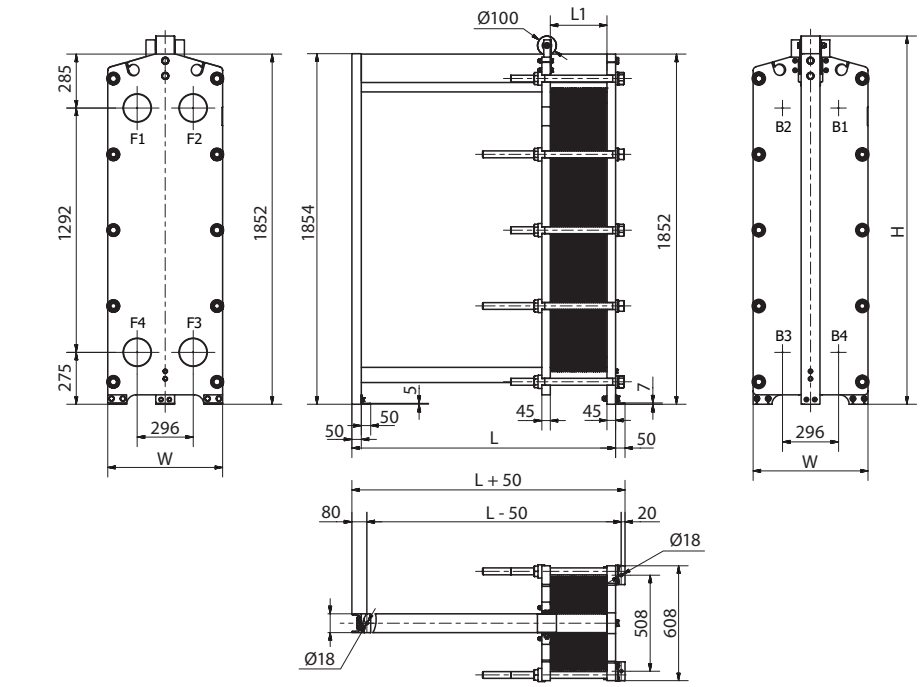

Drawing of S62 IS16 frame

Number of plates [1]	L (frame length) (mm)	W (mm)	H (mm)	Weight max, empty [2] (kg)	Connection type
S62 (S63) IS16					
7 - 40[3] (7 - 33)[3]	695	608 (23.94")	1948 (76.69")	1107 (1084)	DN 150 flange or 6"
41 - 112[3] (34 - 95)[3]	1095			1387 (1333)	
113 - 167[3] (96 - 141)[3]	1395			1600 (1517)	
168 - 203[3] (142 - 172)[3]	1595			1740 (1640)	
204 - 294[3] (173 - 249)[3]	2095			2093 (1948)	
295 - 385[3] (250 - 326)[3]	2595			2447 (2257)	
386 - 476[3] (327 - 403)[3]	3095			2800 (2565)	
477 - 658[3] (404 - 556)[3]	4095		2148 (84.57")	3505 (3177)	
659 - 840[3] (557 - 710)[3]	5095			4212 (3794)	
841 - 1021[3] (711 - 864)[3]	6095			4916 (4410)	
S62 (S63) IS25					
7 - 44[3] (7 - 31)[3]	710	640 (25.20")	1952 (76.85")	1566 (1517)	DN 150 flange or 6"
45 - 131[3] (32 - 91)[3]	1110			1947 (1794)	
132 - 196[3] (92 - 137)[3]	1410			2232 (2006)	
197 - 240[3] (139 - 167)[3]	1610			2425 (2145)	
241 - 348[3] (168 - 243)[3]	2110			2899 (2497)	
349 - 457[3] (244 - 318)[3]	2610			3376 (2844)	
458 - 566[3] (319 - 394)[3]	3110			3854 (3195)	
567 - 783[3] (395 - 546)[3]	4110		2156 (84.88")	4805 (3898)	
784 - 1001[3] (547 - 697)[3]	5110			5760 (4596)	
1002 - 1218[3] (395 - 546)[3]	6110			6712 (5299)	

[1] the indicated maximum number of plates is based on the minimum plate thickness allowable for the PN level of the unit;
[2] the maximum weight of the empty unit with the maximum allowable number of plates;
[3] the indicated maximum number of plates is for units without intermediate frames. Adding an intermediate frame reduces the maximum allowable number of plates in the unit;
[*] PNclass 6/10 bar is available on request

Dimensions *(continued)*
Non-sanitary applications

S62AE / S62TY frames

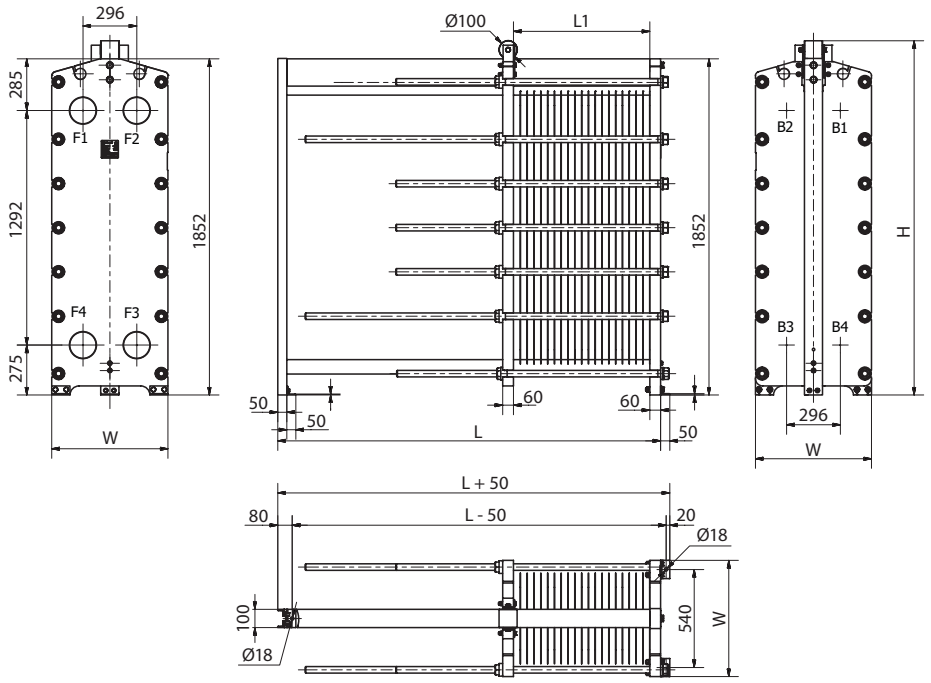

Drawing of S62AE IS16 frame

Number of plates [1]	L (frame length) (mm)	W (mm)	H (mm)	Weight max, empty [2] (kg)	Connection type
S62AE IS16					
7 – 48[3]	695	640 (25.20")	1948 (76.69")	1134	DN 150 flange or 6"
49 – 137[3]	1095			1469	
138 - 204[3]	1395			1721	
205 - 248[3]	1595			1887	
249 – 360[3]	2095			2307	
361 – 471[3]	2595			2725	
472 – 582[3]	3095			3143	
583 – 804[3]	4095		2148 (84.57")	3977	
805 – 1026[3]	5095			4813	
1027 – 1248[3]	6095			5648	
S62AE IS25					
7 – 44[3]	710	640 (25.20")	1952 (76.85")	1148	DN 150 flange or 6"
45 – 131[3]	1110			1529	
132 – 196[3]	1410			1815	
197 – 240[3]	1610			2008	
241 – 348[3]	2110			2481	
349 – 457[3]	2610			2958	
458 – 566[3]	3110			3437	
567 – 783[3]	4110		2156 (84.88")	4387	
784 – 1001[3]	5110			5343	
1002 - 1218[3]	6110			6295	

[1] the indicated maximum number of plates is based on the minimum plate thickness allowable for the PN level of the unit;
[2] the maximum weight of the empty unit with the maximum allowable number of plates;
[3] the indicated maximum number of plates is for units without intermediate frames. Adding an intermediate frame reduces the maximum allowable number of plates in the unit;
[*] PNclass 6/10 bar is available on request

Dimensions *(continued)*
Non-sanitary applications

S79 frames

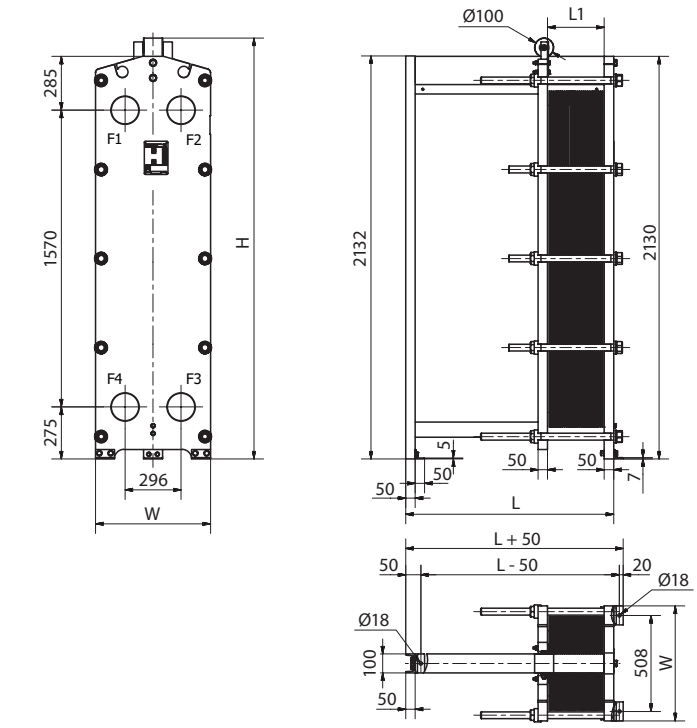

Drawing of S79 IS16 frame

Number of plates [1]	L (frame length) (mm)	W (mm)	H (mm)	Weight max, empty [2] (kg)	Connection type
S79 IS10					
7 – 42[3]	685	608 (23.94")	2226 (87.64")	897	DN 150 flange or 6"
43 – 116[3]	1085			1179	
117 - 172[3]	1385			1392	
173 - 209[3]	1585			1533	
210 – 301[3]	2085			1884	
302 – 394	2585			2238	
395 – 487[3]	3085			2592	
S79 IS16					
7 – 39[3]	700	608 (23.94")	2226 (87.64")	1218	DN 150 flange or 6"
40 – 111[3]	1100			1550	
112 – 166[3]	1400			1801	
167 – 202[3]	1600			1966	
203 – 293[3]	2100			2384	
294 - 384[3]	2600			2801	
385- 475[3]	3100			3219	

[1] the indicated maximum number of plates is based on the minimum plate thickness allowable for the PN level of the unit;
[2] the maximum weight of the empty unit with the maximum allowable number of plates;
[3] the indicated maximum number of plates is for units without intermediate frames. Adding an intermediate frame reduces the maximum allowable number of plates in the unit;

Dimensions *(continued)*
Non-sanitary applications

S86 / S87 frames

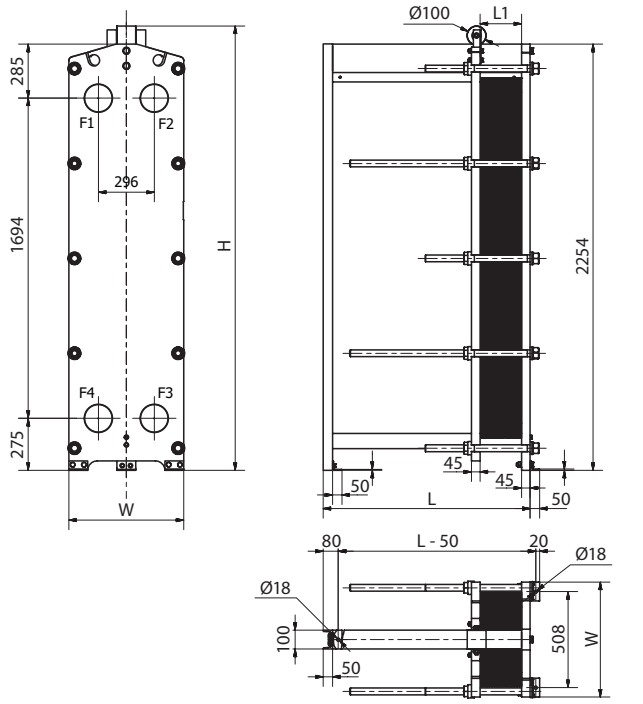

Drawing of S37 FG10 frame

Number of plates [1]	L (frame length) (mm)	W (mm)	H (mm)	Weight max, empty [2] (kg)	Connection type
S86 (S86SE) IS16					
7 – 40 (7 - 44)[3]	695	608 (23.94")	2350 (")	1657 (1373)	DN 150 flange or 6"
41 – 112 (45 - 124)[3]	1095			1707 (1755)	
113 – 167 (125 - 184)[3]	1395			1973 (2042)	
168 – 203 (185 - 224)[3]	1595			2148 (2233)	
204 – 294 (225 - 324)[3]	2095			2589 (2711)	
295 – 385 (325 - 424)[3]	2595			3030 (3188)	
386 – 476 (425 - 524)[3]	3095			3472 (3666)	
477 – 658 (525 - 724)[3]	4095		2550 (")	4354 (4622)	
659 – 840 (725 - 924)[3]	5095			5237 (5577)	
841 – 1021 (925 - 1124)[3]	6095			6116 (6522)	
S86 (S86SE) IS25					
7 – 36 (7 - 40)[3]	710	640 (25.20")	2354 (92.68")	1880 (1899)	DN 150 flange or 6"
37 – 108 (41 - 118)[3]	1110			2286 (2334)	
109 – 161 (119 - 177)[3]	1410			2584 (2661)	
162 – 197 (178 - 216)[3]	1610			2787 (2879)	
198 – 286 (217 - 314)[3]	2110			3289 (3424)	
287 – 375 (315 - 412)[3]	2610			3790 (3969)	
376 – 465 (413 - 510)[3]	3110			4297 (4514)	
466 – 643 (511 - 706)[3]	4110			5301 (5604)	
644 – 822 (707 - 902)[3]	5110		2558 (100.71")	6309 (6694)	
823 – 1000 (903 - 1099)[3]	6110			7312 (7789)	

[1] the indicated maximum number of plates is based on the minimum plate thickness allowable for the PN level of the unit;
[2] the maximum weight of the empty unit with the maximum allowable number of plates;
[3] the indicated maximum number of plates is for units without intermediate frames. Adding an intermediate frame reduces the maximum allowable number of plates in the unit;
[*] PNclass 6/10 bar is available on request

Dimensions *(continued)*
Sanitary applications

S86 / S87 frames

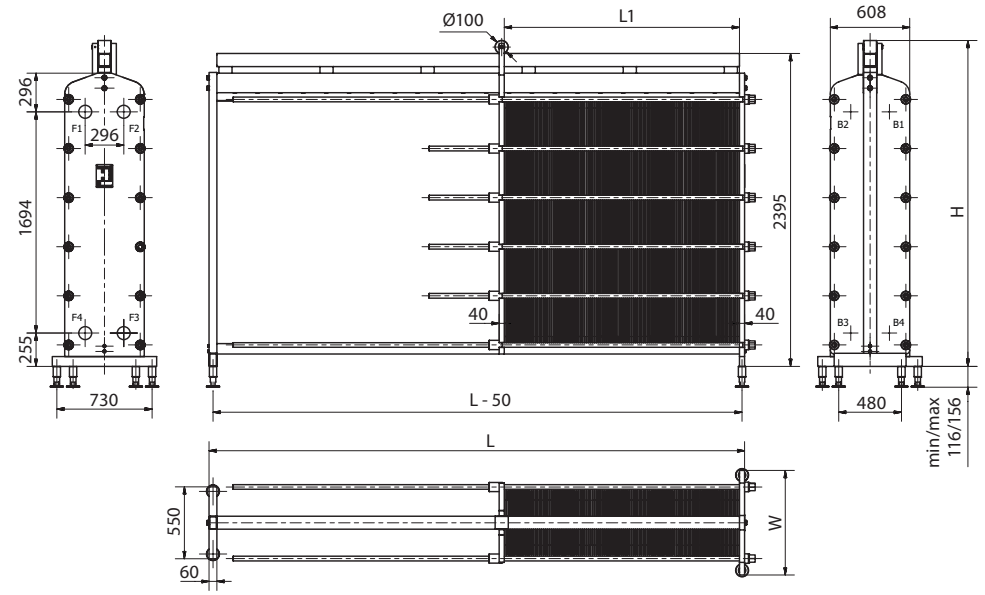

Drawing of S86 FS10 frame

Number of plates [1]	L (frame length) (mm)	W (mm)	H (mm)	Weight max, empty [2] (kg)	Connection type
S86 FS10					
7 – 114[3]	1100	800 (31.50")	2611-2651[4] (102.80-104.37")	620	DN 125 dairy union
115 – 207[3]	1600			1120	
208 - 300[3]	2100			1620	
301 - 392[3]	2600			2120	
393 – 485[3]	3100			2620	
486 – 670[3]	4100			3620	

[1] the indicated maximum number of plates is based on the minimum plate thickness allowable for the PN level of the unit;
[2] the maximum weight of the empty unit with the maximum allowable number of plates;
[3] the indicated maximum number of plates is for units without intermediate frames. Adding an intermediate frame reduces the maximum allowable number of plates in the unit;
[4] the height of the heat exchanger can be modified with special adjustable feet.
[*] PNclass 10 bar is available on request

Dimensions *(continued)*
Non-sanitary applications

S86 / S87 frames

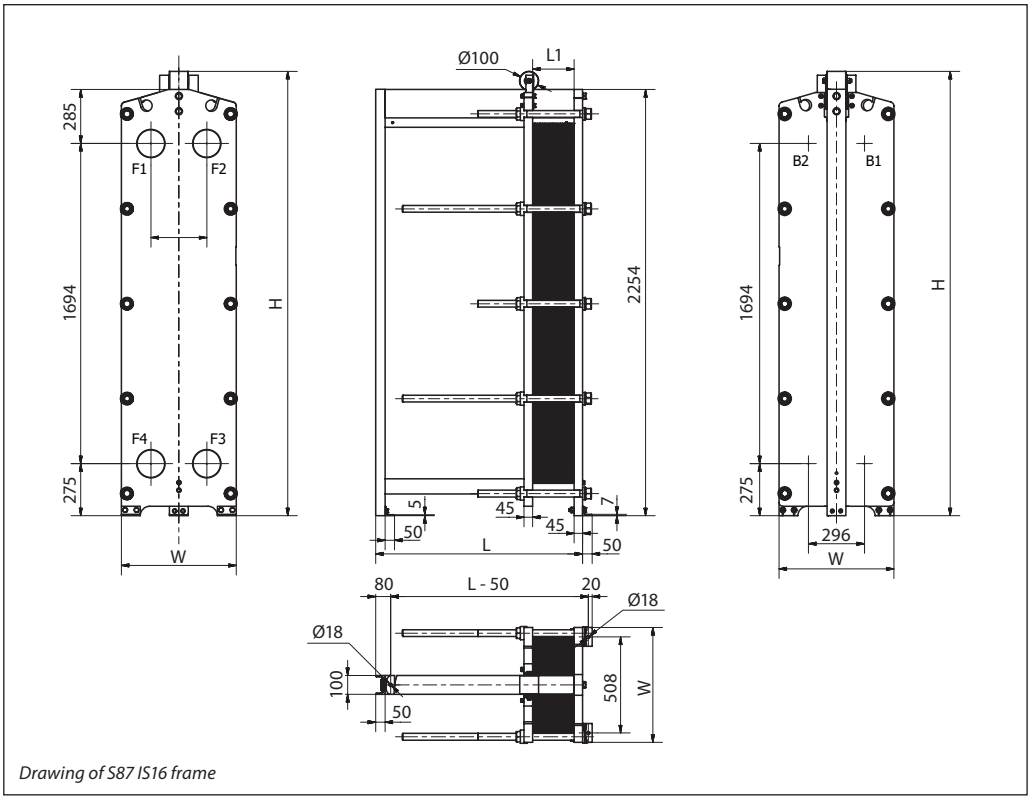

Drawing of S87 IS16 frame

Number of plates [1]	L (frame length) (mm)	W (mm)	H (mm)	Weight max, empty [2] (kg)	Connection type
S87 IS16					
7 – 33[3]	695	608 (23.94")	2350 (92.52")	1328	DN 150 flange or 6"
34 – 95[3]	1095			1637	
96 - 141[3]	1395			1866	
142 - 172[3]	1595			2020	
173 – 249[3]	2095			2404	
250 – 326[3]	2595			2788	
327 – 403[3]	3095			3172	
404 – 556[3]	4095		2550 (100.39")	3935	
557 – 710[3]	5095			4703	
711 – 864[3]	6095			5471	
S87 IS25					
7 – 31[3]	710	640 (25.20")	2534 (99.76")	1855	DN 150 flange or 6"
32 – 91[3]	1110			2203	
92 – 137[3]	1410			2467	
138 – 167[3]	1610			2641	
168 – 243[3]	2110			3079	
244 – 318[3]	2610			3512	
319 – 394[3]	3110			3951	
395 – 546[3]	4110		2558 (100.71")	4827	
547 – 697[3]	5110			5699	
698 - 849[3]	6110			6575	

[1] the indicated maximum number of plates is based on the minimum plate thickness allowable for the PN level of the unit;
[2] the maximum weight of the empty unit with the maximum allowable number of plates;
[3] the indicated maximum number of plates is for units without intermediate frames. Adding an intermediate frame reduces the maximum allowable number of plates in the unit;
[*] PNclass 10 bar is available on request

Dimensions *(continued)*
Non-sanitary applications

S110 frames

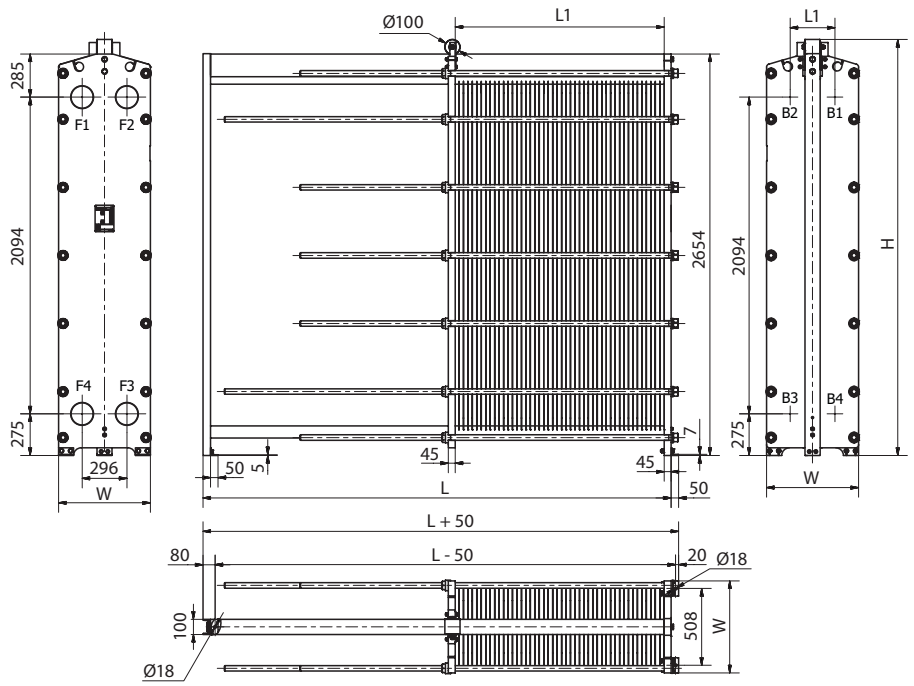

Drawing of S110 IS16 frame

Number of plates [1]	L (frame length) (mm)	W (mm)	H (mm)	Weight max, empty [2] (kg)	Connection type
S110 (S110SE) IS16					
7 – 40[3] (7 - 43)	695	608 (23.94")	2750 (108.27")	1628 (1643)	DN 150 flange or 6"
41 – 112[3] (44 - 123)	1095			2063 (2117)	
113 – 167[3] (124 - 183)	1395			2395 (2473)	
168 – 203[3] (184 - 223)	1595			2613 (2710)	
204 – 294[3] (224 - 323)	2095			3163 (3304)	
295 – 385[3] (324 - 423)	2595			3712 (3898)	
386 – 476[3] (424 - 523)	3095			4262 (4491)	
477 – 658[3] (524 - 723)	4095		2950 (116.14")	5361 (5678)	
659 – 840[3] (724 - 923)	5095			6460 (6865)	
841 – 1021[3] (924 - 1123)	6095			7554 (8052)	
S110 (S110SE) IS25					
7 – 36[3] (7 – 39)	710	640 (25.20")	2750 (108.27")	2045 (2062)	DN 150 flange or 6"
37 – 108[3] (40 - 117)	1110			2548 (2600)	
109 – 161[3] (118 - 176)	1410			2919 (3006)	
162 – 197[3] (177 - 215)	1610			3171 (3275)	
198 – 286[3] (216 - 313)	2110			3794 (3950)	
287 – 375[3] (314 - 411)	2610			4416 (4625)	
376 – 465[3] (412 - 509)	3110			5044 (5299)	
466 – 643[3] (510 - 705)	4110		2958 (116.47")	6289 (6649)	
644 – 822[3] (706 - 901)	5110			7541 (7999)	
823 – 1000[3] (902 - 1098)	6110			8789 (9355)	

[1] the indicated maximum number of plates is based on the minimum plate thickness allowable for the PN level of the unit;
[2] the maximum weight of the empty unit with the maximum allowable number of plates;
[3] the indicated maximum number of plates is for units without intermediate frames. Adding an intermediate frame reduces the maximum allowable number of plates in the unit;
[*] PNclass 10 bar is available on request

Dimensions *(continued)*
Sanitary applications

S110 frames

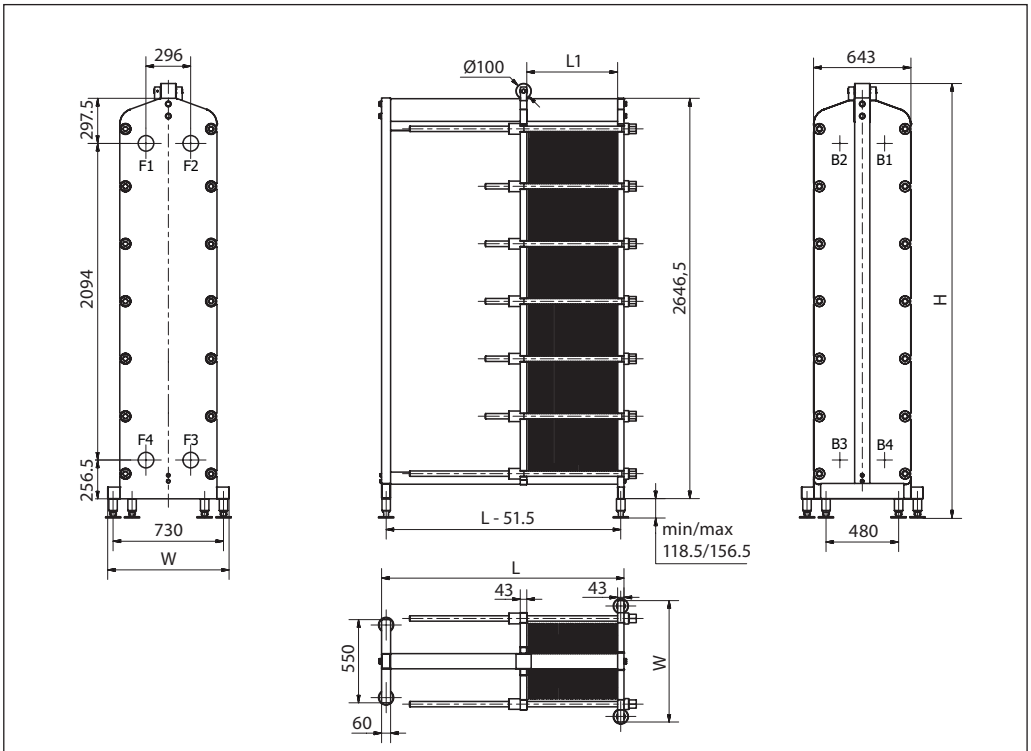

Drawing of S110 FS10 frame

Number of plates [1]	L (frame length) (mm)	W (mm)	H (mm)	Weight max, empty [2] (kg)	Connection type
S110 FS10					
7 – 114[3]	1103	803 [31.61"]	2863.5-2901.5[4] [112.74-114.23"]	1677	DN 125 dairy union
115 – 206[3]	1603			2121	
207 - 299[3]	2103			2568	
300 - 392[3]	2603			3015	
393 – 484[3]	3103			3458	
485 – 669[3]	4103			4349	

[1] the indicated maximum number of plates is based on the minimum plate thickness allowable for the PN level of the unit;
[2] the maximum weight of the empty unit with the maximum allowable number of plates;
[3] the indicated maximum number of plates is for units without intermediate frames. Adding an intermediate frame reduces the maximum allowable number of plates in the unit;
[4] the height of the heat exchanger can be modified with special adjustable feet.
**) PNclass 10 bar is available on request*

Sondex A/S • Member of the Danfoss Group
Heating Segment • heatexchangers.danfoss.com • +45 7630 6100 • E-Mail: info@sondex.dk

Danfoss can accept no responsibility for possible errors in catalogues, brochures and other printed material. Danfoss reserves the right to alter its products without notice. This also applies to products already on order provided that such alterations can be made without subsequential changes being necessary in specifications already agreed.
All trademarks in this material are property of the respective companies. Danfoss and all Danfoss logotypes are trademarks of Danfoss A/S. All rights reserved.