ENGINEERING
TOMORROW

Data sheet

Gasketed Plate Heat Exchangers (DN 250 / 10”) S67 / S113 / S155

Description

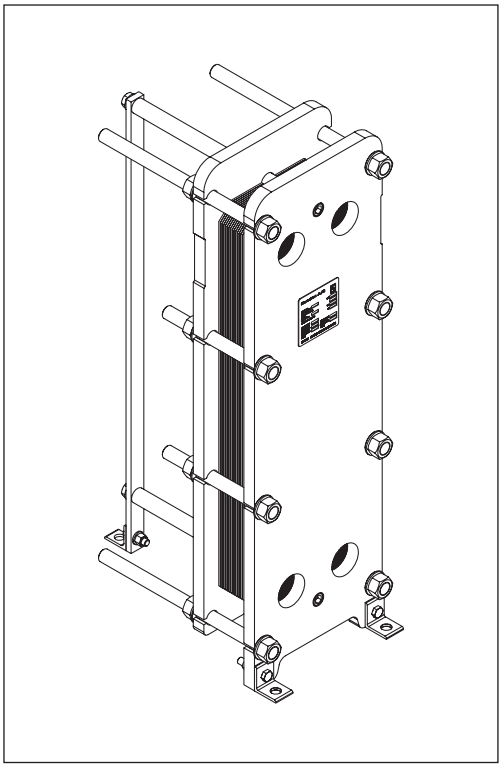

SONDEX® gasketed plate heat exchangers are the ideal choice for a wide range of applications across numerous market segments.

We have the largest plate portfolio in the world, and we customize each heat exchanger to meet your exact requirements. Innovative technologies and smart design make our gasketed plate heat exchangers a stellar investment.

Benefits:
- Individually customized solution that perfectly matches your requirements and lowers your energy consumption.
- High performance and a low pressure drop eliminate unnecessary burdens on your system and optimize overall system performance.
- The design results in a compact solution with a small footprint, simple installation, and easy access for maintenance.

Common applications:
- HVAC industry
- Marine/offshore industry
- Dairy/food/beverage industry
- Sugar industry
- Biogas industry
- Pulp and paper industry
- Heavy industry
- Mining industry
- Petrochemical industry
- Chemical industry

Main data:
- Min. temperature –10 °C
- Max. temperature 180 °C
- Max. working pressure 16 / 25 bar (10 bar on request)
- Water and different fluids, steam
- Connection size DN 250 or 10”

Approvals:
- Please contact your local Danfoss/SONDEX® sales representative for an overview of the available approvals in your region

Construction standard:
- EN13445 (PED 2014/68/EU)
- ASME sec VIII, Div. 1

Naming of units

S67-IS16-21-TKTL89

- TKTL89 - Plate grouping [3)]
- 21 - Number of plates in the heat exchanger
- 16 - Design pressure of the heat exchanger
- IS - Frame type [2)]
- 67 – Type of heat exchanger [1)]
- S – Gasketed heat exchanger

[1)] **Type of heat exchanger:**
67 - …
Letter S67 shows type of the attachment of gasket to plate:
e.g. 67 (without A) – SonderLock
67A (with A) – Hang-on

[2)] **Description of frame types:**
There are few different frame types which can be offered for different applications and duties.
IS – with suspension roller,
IG – without suspension roller,
FS – food/sanitary with suspension roller,
FG - food/sanitary,
ST – simple design of frame with threaded connections

[3)] **Channel grouping:**
In this example, the heat exchanger combines TK and TL channels. The share of TL channels equals 89% of the total number of channels.
The number of channels is defined as “the number of plates - 1”.
TK - short thermal length
TM - medium thermal length
TL - long thermal length

Heat exchanger design

Gasketed heat exchangers consist of

Anatomy of a SONDEX® plate heat exchanger - IS frame.

Heat exchanger design
(continued)

Multi-pass design

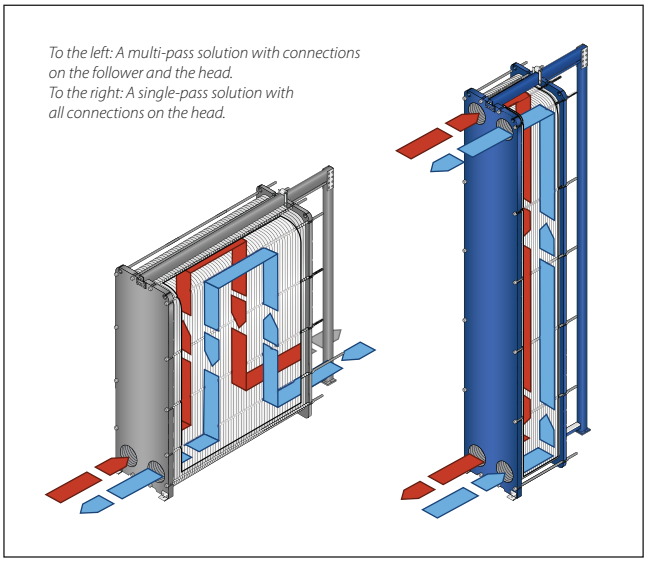

Connections
The heat exchanger may have connections on both front and back-end sides of the unit.

Connections on the front-end plate are marked with F and connections on the back-end plate are marked with B. The numbers 1, 2, 3 and 4 designate the position of the connection on the end-plate from the top-left port clockwise.

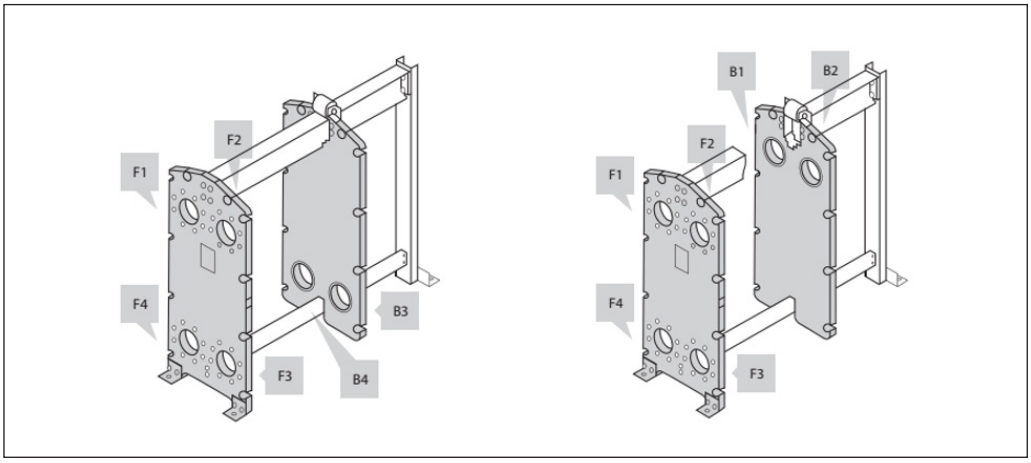

Technical data

Heat exchanger **S67 / S113 / S155**

Type		**S67**	**S113**	**S155**
Max. working pressure	PN (bar)	(10)[1], 16, 25		
Max. operating temperature	°C	Up to 180		
Min. operating temperature	°C	-10		
Flow medium		Water and different fluids, steam		
Volume / channel	l	1.8	3.6	4.7
Connection size		DN 250 / 10"		
Connection type		• DN 250/10" flanges. Carbon steel, rubberlined or cladded with AISI 316L (other materials available on request)		
Plate material		Stainless steel EN 1.4404 (AISI 316L), EN 1.4301 (AISI 304), SMO254, Hastelloy C276, titanium Gr.1 Other materials available on request		
Plate thickness	mm	0.4; 0.5; 0.6 2 x 0.4 SonderSafe plates [2] Other thicknesses available on request		
Gasket material		NBR, EPDM, Other materials available on request		
Gasket attachment type		Sonder Lock		
Liners in connections		• Rubber NBR, EPDM, • Stainless steel EN 1.4404 (AISI 316L), EN 1.4301 (AISI 304), SMO254, Hastelloy C276, titanium Gr.1		
Frame		• Painted frame, color RAL 5010 (other colors available on request) • Stainless steel frame, designed for the sanitary applications (e.g. food and dairy industries)		
Frame painting specification		Painting available for corrosion categories C2L, C4M, C5M		

[1] *Not available for all frame variations*
[2] *SonderSafe - double plate*

Using the right plate for each individual duty is very important, as it greatly impacts the efficiency of the entire installation.
It is important that the length of the plates and the type of pattern match the requirements of individual thermal duty.
We have developed a wide plate portfolio to provide the perfect plate and connection size for any duty.
No application is too small or too big for us - we provide the optimal technical solution every time.

Our extensive SONDEX® plate portfolio includes plates that lie outside the commonly manufactured plate sizes to cover all thermal duties optimally.

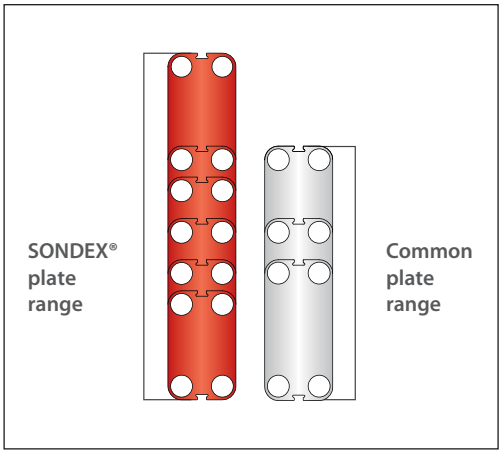

Accessories

Insulation

Recommended applications:
The insulation jacket for the plate heat exchanger is used in different applications with high temperatures and cooling systems.

Application	Heating	Cooling
Material	45 mm mineral wool Not flammable DIN EN 4102A2	40 mm PU-foam DIN 4102-1 B2
Outer cap	1 mm aluminium "Stucco" Embossed	
Internal insulation	0.05 mm aluminium foil	
Panel fixation	Plastic rivets	
Temperature	20 … 200 °C	-50 … -80 °C
U-value	0.55 W/m²K	0.38 W/m²K
Insulation class	3 [1)]	4 [1)]
Heat loss	17.1 W/m²	-

Please note:
Inlet and outlet temperatures in the exchanger have been based on 90/50 – 30/70 °C.

[1)] The loss of heating/cooling is stated per m² surface on the insulation jacket.
The bottom of the heat exchanger is not insulated and this fact has been excluded.
A possible loss of ventilation, largely dependent on the mounting of the heat exchanger, has not been taken into account either.

Drip trays

Recommended applications:
The drip tray is available in two types. A "fail-safe" solution which prevents water or liquid from leaking onto the floor, or when the heat exchanger is dismantled, or opened for inspection and maintenance. And an insulated drip tray for cooling applications, which collects condensate formed outside of the plate heat exchanger.

Materials
Drip tray consists of:
- 1 mm galvanized steel frame
- Hanging brackets in galvanized steel
- 60 mm Polyurethane insulation for cooling applications
- Draining valve.

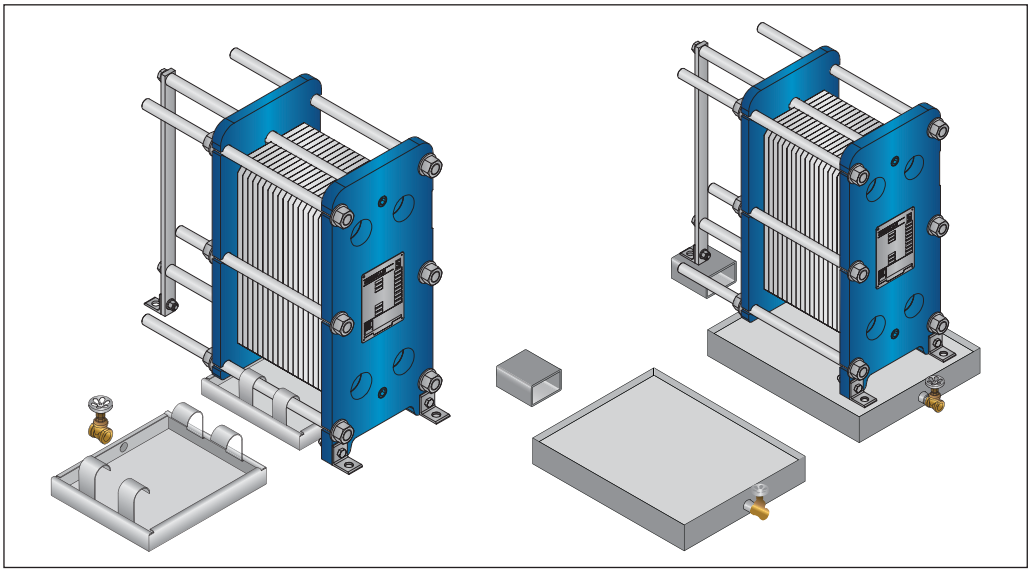

Spare parts

Spare parts for gasketed heat exchangers, such as plates, gaskets, frame parts can be ordered for maintenance, repair, increasing heat exchanger capacity, etc.

Please contact your local Danfoss or SONDEX® sales representative to provide you with information on spare parts available for gasketed heat exchangers.

Selection and ordering

Please contact your local SONDEX® or Danfoss sales representative for the selection and / or ordering of the heat exchangers, spare parts, and accessories.

For contact information please visit *https://www.danfoss.com/en/contact-us.*

Dimensions
Non-sanitary applications

Any connection can be used for primary side in.
All the rest are made correspondingly.

S67 frames

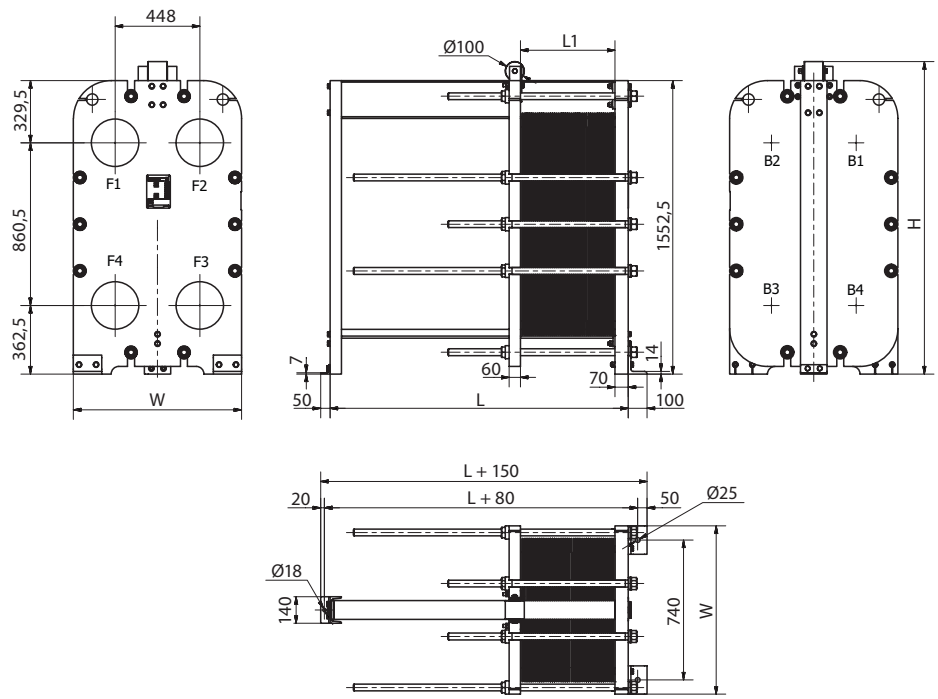

Drawing of S67 IS16 frame

Number of plates [1]	L (frame length) (mm)	W (mm)	H (mm)	Weight max, empty [2] (kg)	Connection type
S67 IS16					
8 – 80	1077	890 (35.04”)	1652,5 (65.06”)	1879	DN 250 flange or 10” flange
81 – 134	1377			2117	
135 – 170	1577			2279	
171 – 261	2077			2693	
262 – 352	2720		1705.5 (67.15”)	3120	
353 – 443	3220			3550	
444 – 625	4220			4467	

[1] *the indicated maximum number of plates is based on the minimum plate thickness allowable for the PN level of the unit;*
[2] *the maximum weight of the empty unit with the maximum allowable number of plates;*
[*] *PN class 10 bar / 25 bar is available on request.*

Dimensions *(continued)*
Non-sanitary applications

S113 frames

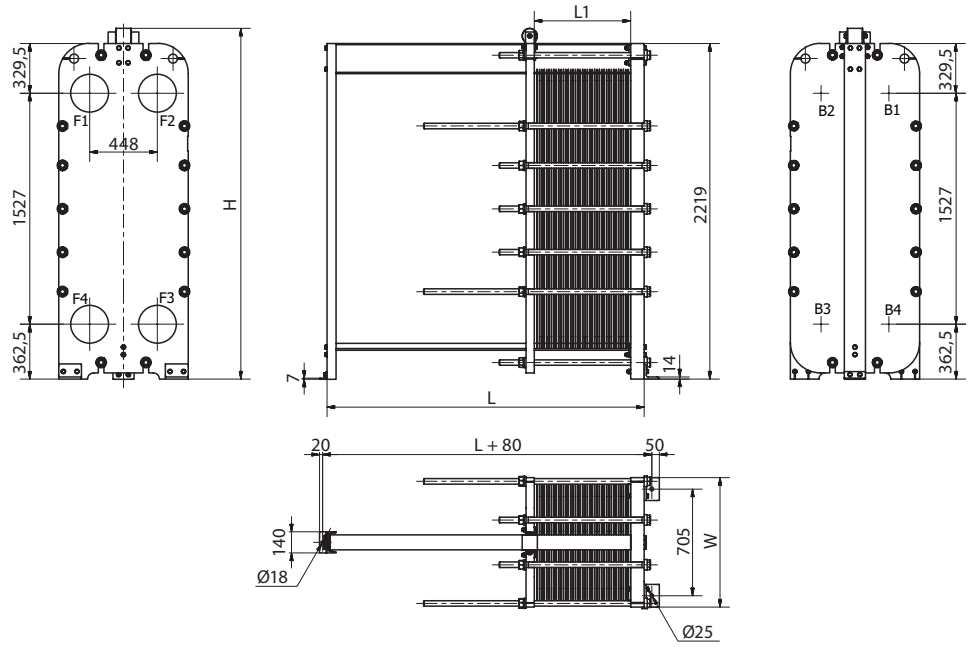

Drawing of S113 IS16 frame

Number of plates [1]	L (frame length) (mm)	W (mm)	H (mm)	Weight max, empty [2] (kg)	Connection type
S113 IS16					
9 – 80	1097	855 (33.66”)	2319 (91.30”)	2636	DN 250 flange or 10” flange
81 – 135	1397			3017	
136 – 171	1597			3266	
172 – 262	2097			3895	
263 – 353	2740		2372 (93.39”)	4525	
354 – 444	3240			5153	
445 – 626	4240			6412	
S113 IS25					
9 – 80	1097	920 (36.22”)	2319 (91.30”)	2724	DN 250 flange or 10” flange
81 – 133	1397			3150	
134 – 169	1597			3439	
170 – 258	2097			4154	
259 – 343	2740		2372 (93.39”)	4841	
344 – 433	3240			5562	
434 – 611	4240			6992	

[1] the indicated maximum number of plates is based on the minimum plate thickness allowable for the PN level of the unit;
[2] the maximum weight of the empty unit with the maximum allowable number of plates;
[*] PN class 10 bar is available on request.

Dimensions *(continued)*
Non-sanitary applications

S155 frames

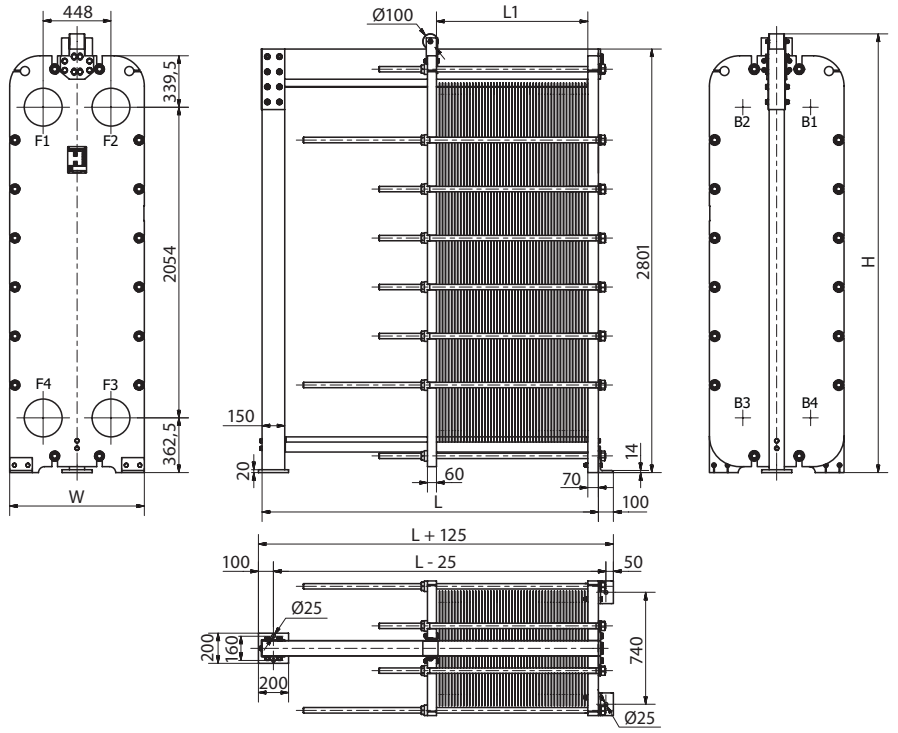

Drawing of S155 IS16 frame

Number of plates [1]	L (frame length) (mm)	W (mm)	H (mm)	Weight max, empty [2] (kg)	Connection type
S155 IS16					
7 – 34	820	890 (35.04”)	2901 (114.21”)	3345	DN 250 flange or 10” flange
35 – 107	1220			3965	
108 – 161	1520			4425	
162 – 198	1720			4739	
199 – 289	2220			5513	
290 – 380	2720			6286	
381 – 470	3220			7052	
471 – 652	4220			8600	
S155 IS25					
7 – 28	840	920 (36.22”)	2901 (114.21”)	4219	DN 250 flange or 10” flange
29 – 100	1240			4936	
101 – 153	1540			5465	
154 – 189	1740			5823	
190 – 278	2240			6709	
279 – 367	2740			7596	
368 – 457	3240			8492	
458 – 635	4240			10267	

[1] the indicated maximum number of plates is based on the minimum plate thickness allowable for the PN level of the unit;
[2] the maximum weight of the empty unit with the maximum allowable number of plates;
[*] PN class 10 bar is available on request.

Sondex A/S • Member of the Danfoss Group
Heating Segment • heatexchangers.danfoss.com • +45 7630 6100 • E-Mail: info@sondex.dk

Danfoss can accept no responsibility for possible errors in catalogues, brochures and other printed material. Danfoss reserves the right to alter its products without notice. This also applies to products already on order provided that such alterations can be made without subsequential changes being necessary in specifications already agreed.
All trademarks in this material are property of the respective companies. Danfoss and all Danfoss logotypes are trademarks of Danfoss A/S. All rights reserved.