ENGINEERING
TOMORROW

JIP® ball valves

Shut off the pressure loss
Open up for energy savings

For district heating, district cooling and HVAC applications

Energy savings

and short payback time due to low pressure drop engineering.

districtheating.danfoss.com

What is **shut-off system control?**

In every district heating utility, combined heat and power plant, distribution network and substation, there is a need for on/off control of the building system connection.

With on/off regulation (opening and closing) shut-off valves create sectioning of the system that enables service, maintenance and repairs to be carried out in sections, without shutting down and emptying the whole system.

Using special types of ball valves (hot tap and branching), the network can be expanded while the system is fully operational.

From a heat generation plant to the smallest subscriber Danfoss offers a comprehensive range of ball valves to ensure system sectioning and maintenance for any application.

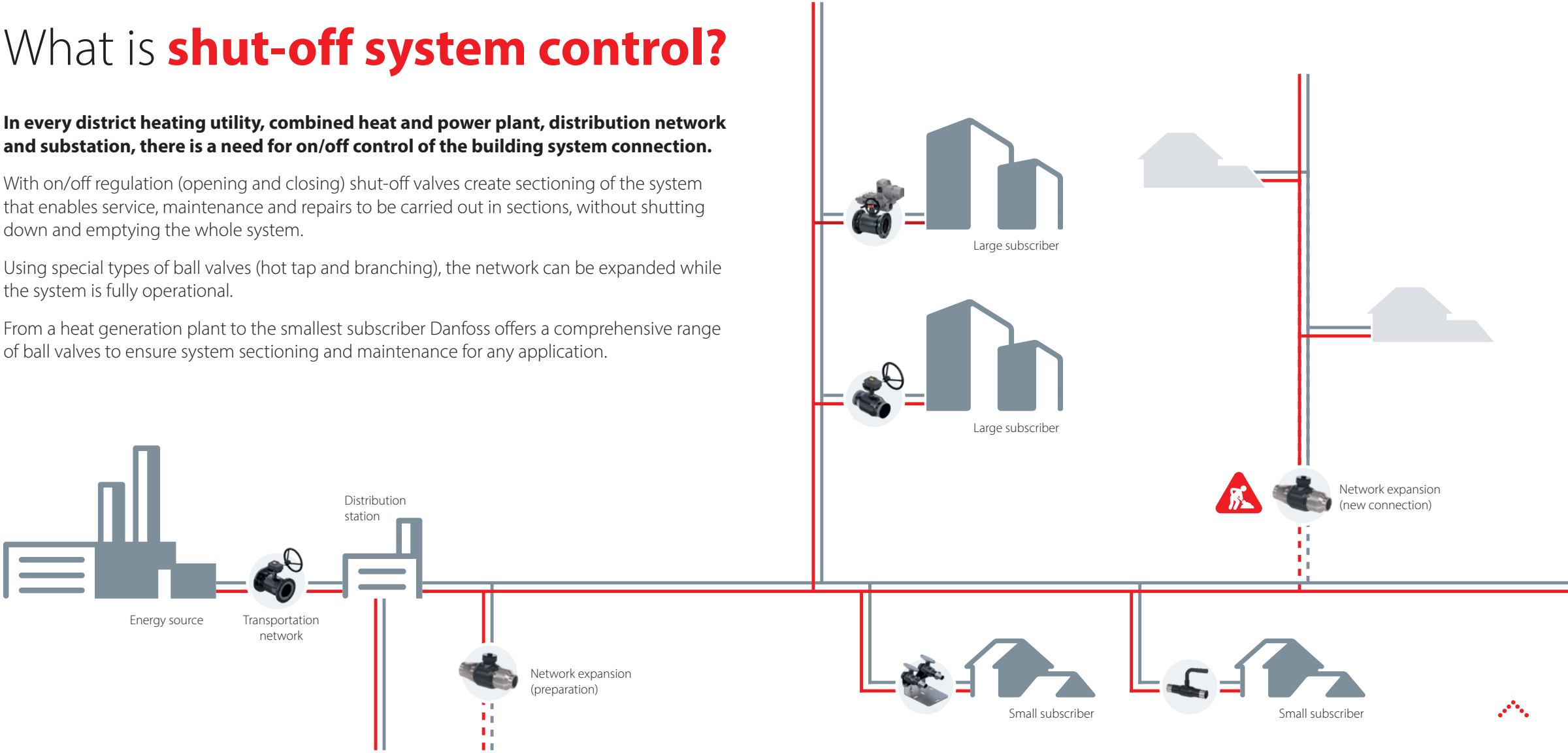

>> What is **shut-off system control?**

Energy source and transportation network	Distribution network	Expansion of the network	Large subscriber substation	Small subscriber
The energy source and transportation network place the highest demands on equipment. This is because of the high demands of safety and reliability as well as the large volumes and pressures involved. Danfoss offers a full range of shut-off JIP® ball valves.	The distribution network is the part of the primary network between the transportation network and consumption / subscriber stations. Operating conditions are not as tough as in the transportation network but demands placed on Danfoss products still are. This is because many smaller and mid-size systems are connected directly to the energy source. For distribution network Danfoss offers JIP® ball valves.	Both Transportation and Distribution network are often being expanded with new areas and users. Using Danfoss JIP® branching ball valves network can be prepared in the initial phase to allow for future expansion. With Danfoss JIP® hot tap ball valves new connections to the network can be added while the system is fully operational. This saves time and eliminates interruptions for the users.	Large subscriber substations (commercial and multi-family residential buildings) are either directly or indirectly connected to the distribution network where ball valves (JIP®) can be used.	Small subscribers (single family houses) can be connected to the system using small sized twin ball valves (flow/return) dedicated for single or double preinsulated pipes connection. Different connection options from internal thread, welding ends, to the press fit connection for PEX, AluPEX or Copper pipes. Ideal solution for individual house connections in conversion projects from natural gas to district heating. Suitable for micro networks. In addition to twin ball valves Danfoss offers also small sized single ball valves in different connection options.
				
JIP® standard & full bore	JIP® standard & full bore	JIP® branching JIP® hot tap	JIP® standard & full bore	JIP® single or twin

What defines an **optimum** ball valve solution?

Long lifetime
An optimum ball valve is expected to have the same lifetime as the pipeline itself which is from 25 to 35 years, depending on the conditions.

Energy saving
Ball valves are not big contributors to total pressure drop in the system, but since each application contains several shut-off valves in different locations the effect is multiplied. An optimum ball valve has low pressure drop and adds minimum resistance to the system.

Reliable sealing
Optimum ball valves have sealing that is reliable and maintenance free during the lifetime.

What are the **key challenges** to overcome?

Achieving long lifetime
Ball valves can, if used in proper conditions (treated water, no sediments, etc.), last 25 to 30 years. But polymer sealing materials (f.e. EPDM) that are often used for stem sealing of valves, age over the years and lose the initial performance which can lead to leakage.

Enabling energy savings
Saving energy in a ball valve requires good knowledge in fluid dynamics in order to minimize the pressure loss.

The solution is... **Danfoss JIP® ball valves**

Danfoss JIP®
The advanced ball valve with **optimum flow design**

Ball valves are expected to be maintenance free. They create sections in the system and are used during maintenance on other products. Larger sections of the system need to be closed down for maintenance on a ball valve.

Danfoss JIP® steel ball valves with their features, present the leading and unique solution on the market of ball valves.

What makes JIP® special?

The unique flow design is represented by guiding pipes and pipe insert in the ball which ensures smooth flow through the ball eliminating cavitation and achieving a lower pressure drop.

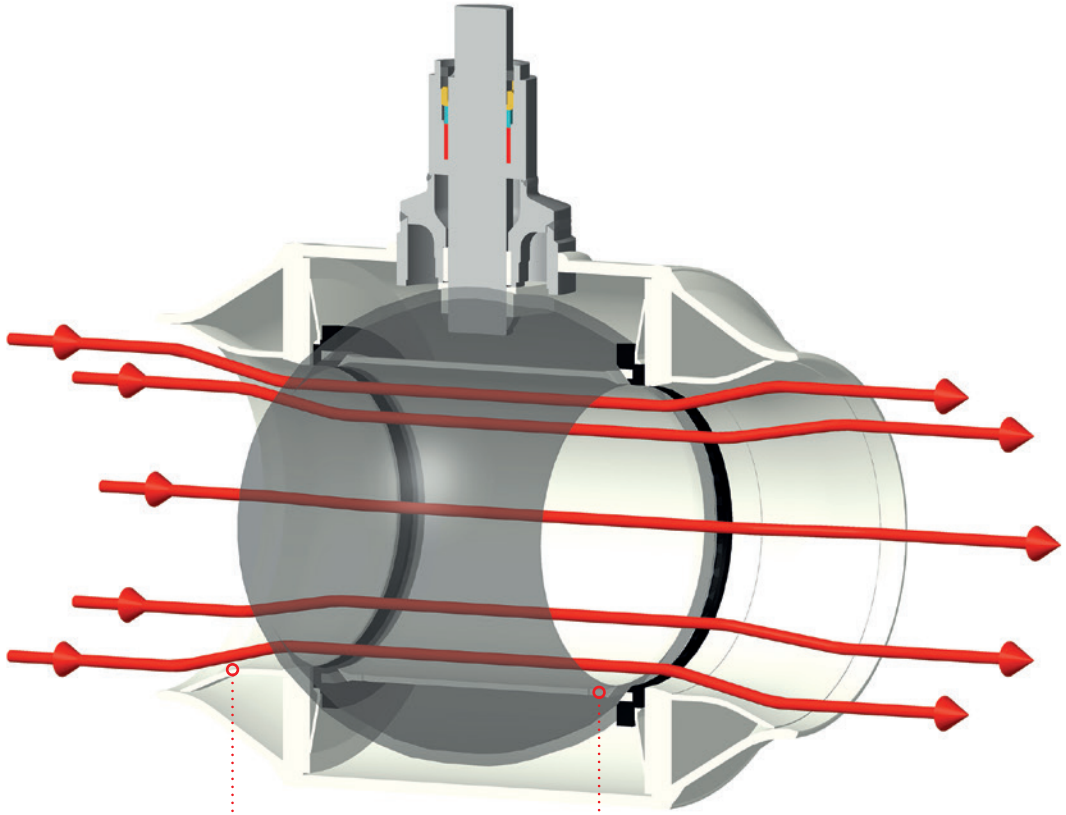

Guiding pipes
Danfoss ball valves have cylindrical inlets and outlets that ensure smooth transition of the flow in and out of the ball valve.

Ball with pipe insert
Ball design with pipe insert ensures smooth flow through the ball and eliminates cavitation.

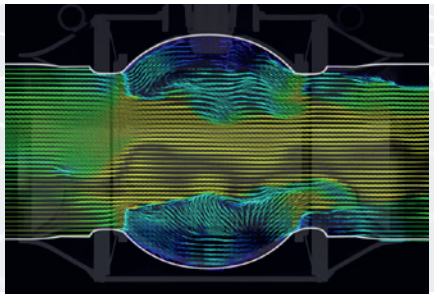

Conventional ball valve creating disrupted flow

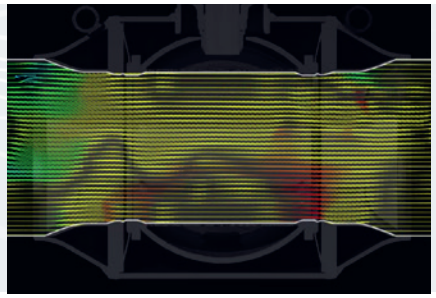

Danfoss JIP® with optimum flow design

The unique flow design enables a chain of events **leading to benefits**

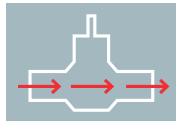

Optimum flow design
Optimum flow design reduces pressure drop through the ball valve

↓

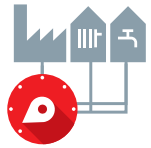

Low pressure drop
Lower pressure drop equals higher kv value of the valve

↓

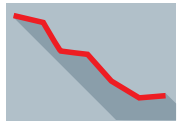

Low pump power consumption
With reduced pressure drop through ball valves in the system, pumping power can be decreased which leads to lower operating costs

With low pressure drop due to the unique flow design we achieve lower pump consumption. Lower pump consumption contributes to lower operating costs and leads to energy saving. This means, that when using Danfoss JIP® less energy is needed to pump working media through a ball valve.

Outcome 1: **Lower operating costs**
Outcome 2: **Lower CO_2 emissions**
Outcome 3: **Energy savings**

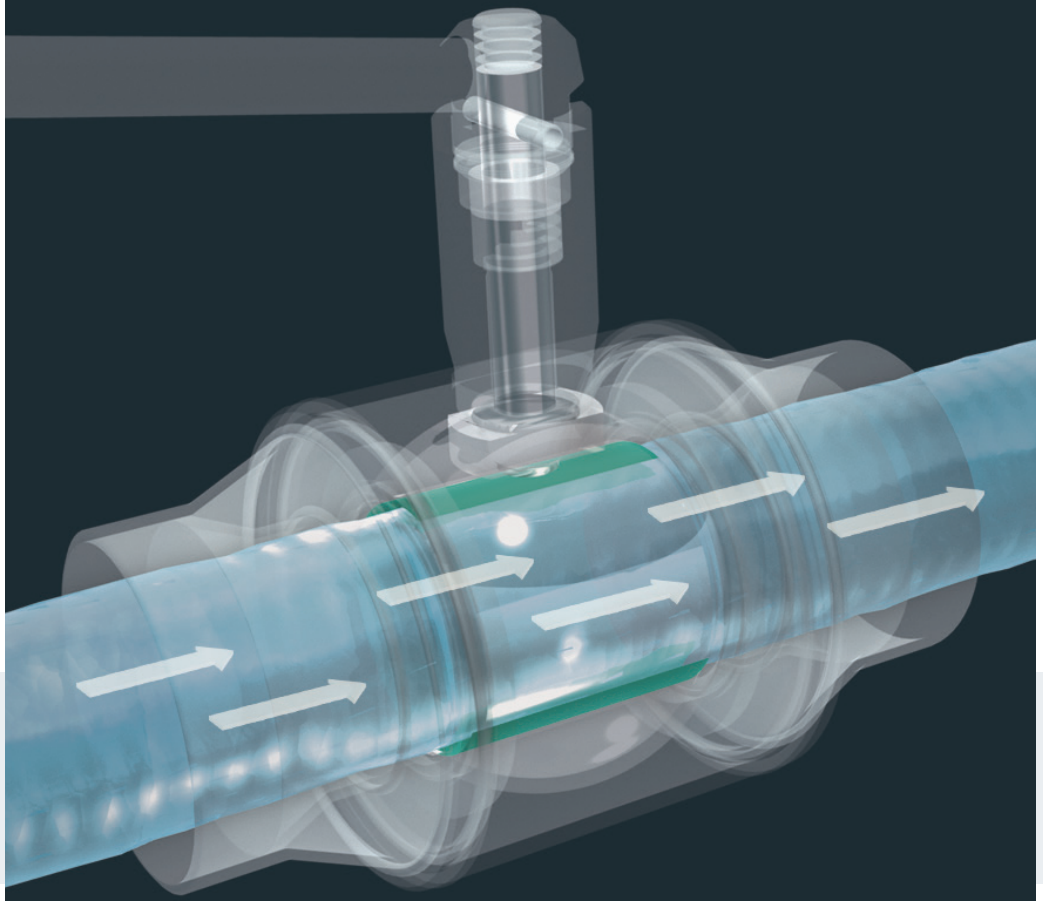

Unique body design developed by Danfoss

Ensuring long lifetime and reliable tightness of the ball valve.

Packing box design

In order to secure complete tightness, we have developed a stem design called a packing box. The packing box consists of stem sealing and an adjustable nut that prevents any external leakage.

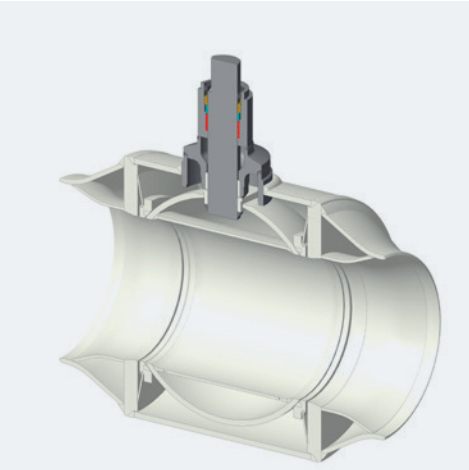

Graphite sealing

Stem sealing is ensured with graphite sealing rings that will not deteriorate over the years even at high temperatures and temperature variations as opposed to polymer based O-rings.

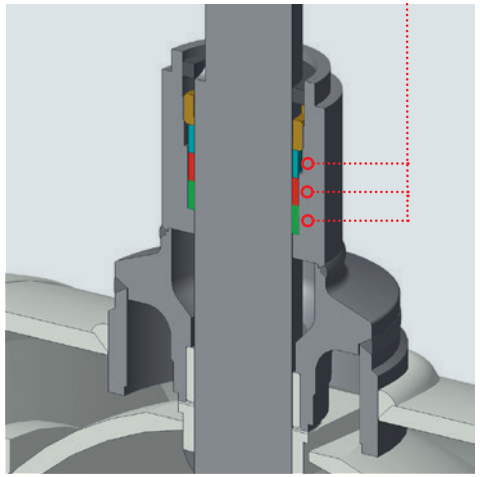

Adjustable external thread nut

During the lifetime there is no need to change the stem seal. It can simply be re-tightened by turning clockwise the adjustable nut in the packing box. Sealing rings are compressed and re-tightened.

Adjustable external thread nut

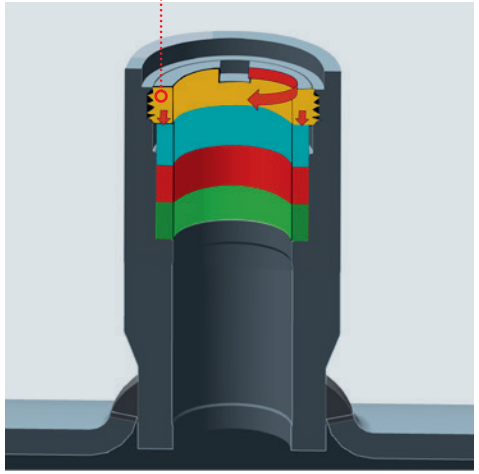

Fully welded body design

This unique design is represented by a sophisticated break loose system, spring construction system and fully welded body.

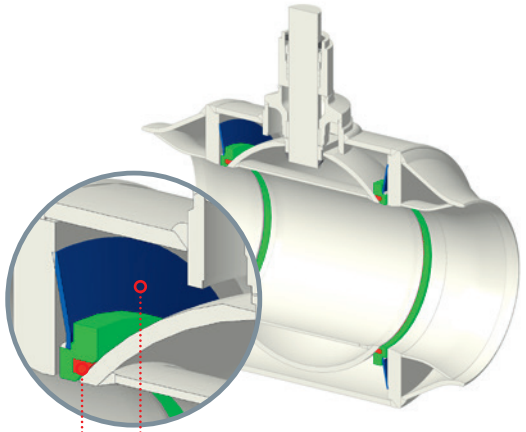

Ergonomic L-shape handle
Ensures efficient grip and offers more space for thicker valve insulation.

Spring for ball balancing
Ensures that the seals always will be pressed against the ball with a controlled operating force, independent of the axial forces.

Carbon reinforced PTFE ball sealing ring
Ensure complete tightness.

The advanced body design **benefit summary**

Extended lifetime of the product with no maintenance

- Danfoss has developed a unique body design for ball valves
- This unique design consists of sophisticated packing box and ball balanced by the spring*
- Materials used for stem sealing (graphite) does not age and extend the lifetime of the product
- With extended product lifetime we can achieve lower operating costs

Energy savings

- Danfoss has developed a unique body design for ball valves
- These unique design features include optimized inlets and outlets (guiding pipes) and ball (pipe insert).
- Optimized flow design minimizes the pressure loss over the ball valve which reduces operating costs and saves on energy and CO_2 emissions

* depend on valve DN size

Danfoss JIP® ball valves for building installations

Danfoss JIP® reduced bore valves

OPERATION	L - Handle			Worm Gear / Actuator		L - Handle		Worm Gear / Actuator
TYPE	**Flange (FF)**					**Welding (WW)**		
DN	15-50	65-200		65-500		15-50	65-200	65-600
PN	40	16	25	16	25	40	25	25

OPERATION	L - Handle			T - Handle	L - Handle	T - Handle	L - Handle
TYPE	**Flange / Welding (FW)**			**Internal thread (II)**		**Internal thread / Welding (IW)**	
DN	15-50	65-200		15-25	15-50	15-25	15-50
PN	40	16	25	40	40	40	40

Find all reduced bore valves

Watch video

>> Danfoss JIP® ball valves for building installations

Danfoss JIP® full bore valves





OPERATION	L - Handle			Worm Gear / Actuator		L - Handle		Worm Gear / Actuator	L - Handle		
TYPE	**Full Bore Flange (FF)**					**Full Bore Welding (WW)**			**Flange / Welding (FW)**		
DN	15-50	65-150		150-400		15-50	65-150	50-400	15-50	65-150	
PN	40	16	25	16	25	40	25	25	40	16	25

Danfoss JIP® draining valves


OPERATION	Hexagon	L - Handle
TYPE	**Welding / External thread + closing cap (WE)**	**Welding / External thread + closing cap (WE)**
DN	15-50	15-25
PN	40	40

Find all full bore valves

Find all draining valves

>> Danfoss JIP® ball valves for building installations

Danfoss JIP® twin valves

Twin single pipe

OPERATION	T - Handle	L - handle	T - Handle	L - Handle	T - Handle	L - Handle	Accessories
TYPE	**Welded (WW)**		**Internal thread (II)**		**Internal thread / Welding (IW)**		EPP valve insulation covers for twin single pipe valves 
DN	15-25	32	15-25	32	15-25	32	
PN	40	40	40	40	40	40	

Twin double pipe

OPERATION	45° T - Handle	45° T - Handle	Accessories
TYPE	**Internal thread (II)**	**Internal thread / Welding (IW)**	EPP valve insulation cover for twin double pipe valves 
DN	15-25	15-25	
PN	40	40	

Find all twin valves

Watch video

>> Danfoss JIP® ball valves for building installations

Danfoss JIP® twin valves for quick & easy press-fit connection

OPERATION	T - Handle	T - Handle
TYPE	**TWIN single pipe (JIP IP-TWS)**	**TWIN double pipe (JIP IP-TWD)**
DN	15-25	
PN	25/40	
CONNECTION TYPE	Rp Int. thread /Press fit*	
FIT TO PIPE TYPE	AluPEX, PEX, & Copper preinsulated pipes by Logstor/Isoplus*	

Accessories

EPP valve insulation covers

For twin single pipe valves

For twin double pipe valves

*For subscribers connection in low duty DH systems with AluPEX , PEXFlex or Copper pre-insulated twin/single pipes by Logstor/Isoplus

Danfoss JIP® valves for copper pipe connections

OPERATION	L - Handle	L - Handle
TYPE	**Copper (CC)**	**Internal thread / Copper (IC)**
DN	15-25	15-25
PN	16	16

Find all press-fit valves

Find all copper connection valves

Danfoss JIP® ball valves for extension of pre-insulated systems

Danfoss JIP® branching valves

Branching ball valves

Branching ball valves are the solution for preparing the network for future extension. The valves are welded in place and the connection is added in the future when needed. When the extension is done, valves can be secured in the open position and easily insulated.

OPERATION	External hexagon		External hexagon		External hexagon		External hexagon
TYPE	**Branching reduced bore (WW)**		**Branching Full bore (WW)**		**Branching reduced bore (CC)**		**Branching welding/ press-fit* (WP)**
DN	15-50	65-200	20-50	65-100	15-40	50-80	20-25
PN	40	25	40	25	16	10	40

* For connection to AluPEX & PEX preinsulated pipes by Logstor/Isoplus.

Find all branching valves

>> Danfoss JIP® ball valves for extension of pre-insulated systems

Danfoss JIP® hot tap valves

The hot tap system enables an easy, safe, environmental friendly and economical connection of a new customer - without having to cut off the heating supply to other district heating customers. This ensures better service towards existing customers of the district heating net.

		Hot tap-drilling machine driven tool For valve DN 15/20-100
OPERATION	External hexagon	 Hot tapping tool with drilling machine  Hot tapping machine toolbox DN15/20-100  Adapter toolbox DN15/20-100
TYPE	**Hot Tap (WW)**	
DN	15/20-100	
PN	40	

		Hot tap-manual ratchet driven tool For valve DN15/20-32
OPERATION	External hexagon	 Hot tapping manual ratchet machine  Hot tapping machine toolbox DN15/20-32 with included adapters
TYPE	**Hot Tap (WW)**	
DN	15/20-32	
PN	40	

Find all hot tap valves

Find all hot tap tools

Long lasting quality to the core
Danfoss valves in fact

System reliability, building and occupant safety are crucial when it comes to district heating and cooling applications. This is why we pay special attention to design and material selection used in our products. Valve bodies are made of high quality materials. Critical internal parts are made of well-proven stainless steel material, that in combination with a specially designed internal components ensures resistance to cavitation and corrosion. Danfoss products will ensure trouble free operation, low maintenance and operational costs.

About Danfoss
For more than 90 years Danfoss has been supplying innovative heating solutions that cover everything from individual components to complete district heating systems. Danfoss engineers technologies that enable the world of tomorrow to do more with less.

For more information visit
districtheating.danfoss.com

ENGINEERING
TOMORROW

Our journey towards **carbon neutrality**

We want to be your preferred decarbonization partner

We help you decarbonize through our energy-efficient solutions and by applying high standards and setting stretch targets across our business.

We are going carbon neutral

Danfoss commits to CO2 neutrality in our global operations latest by 2030 – supporting the Business Ambition for 1.5°C and having validated Science Based Targets in line with a 1.5°C trajectory.

As an engineering company, we naturally believe in science to solve our biggest challenges.

Read more on **danfoss.com**

Danfoss A/S
Climate Solutions • danfoss.com • +45 7488 2222

AD494047764822en-010102