MAKING MODERN LIVING POSSIBLE

Parts Manual

Variable Displacement Motors
Series 51, 110cc

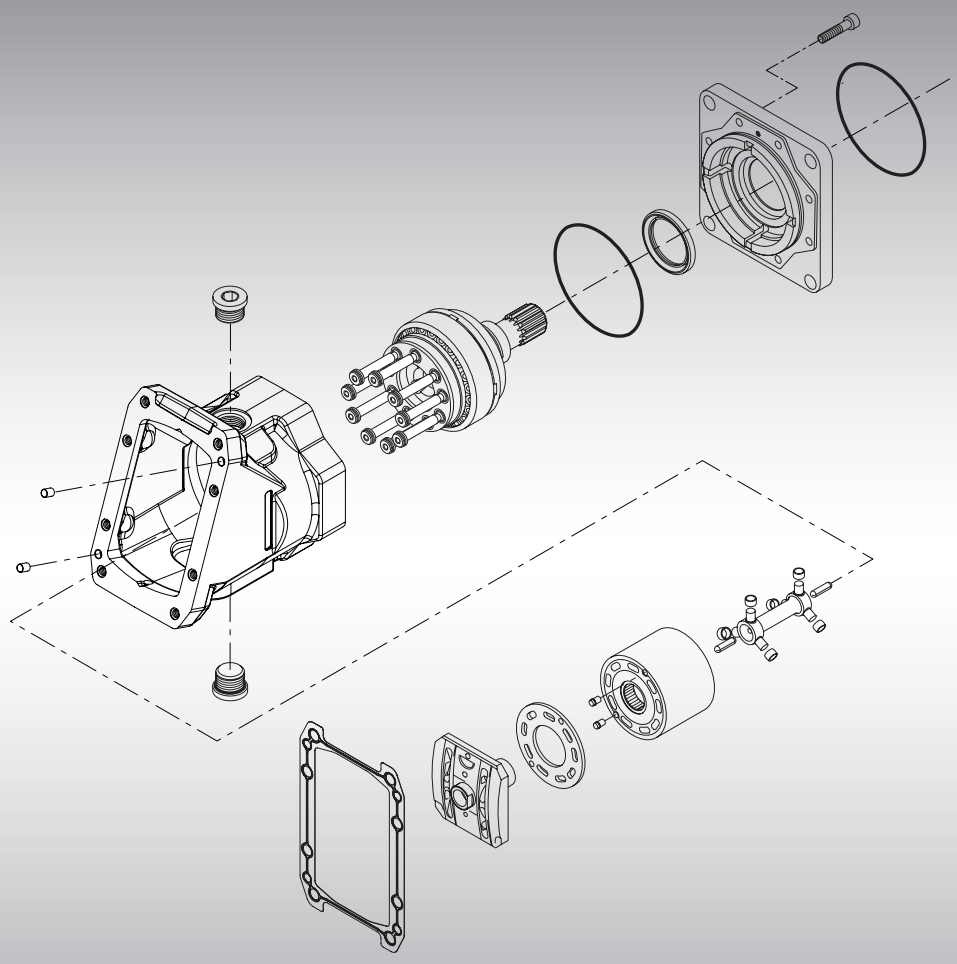

powersolutions.danfoss.com

Contents

General Information
Service parts identification 5
Nameplate 5
Date code 6
Service bulletins 6
Procedure to identify a part 6

Order code
Order code 7

Cartridge flange
Common parts 8-9
Special hardware 8-11

DIN flange
Common parts 12-13
Special hardware 12-13

SAE flange
Common parts 14-17
Special hardware 14-17

Maximum displacement
Maximum displacement common parts 18-19
Maximum displacement 18-19

End cap
Axial ports 20-21
Side ports 22-27

Threshold/range
Threshold/range 28-29

Charge relief
Charge relief 30-33

Output shaft
Shaft 32-33

Control
Electric proportional (D7 and D8) 34-35
Electric 2-position (E1 and E2) 36-37
Electric proportional (EP, EQ, ER, and ES) 38-39
Electric 2-position (F1 and F2) 40-41
Hydraulic porportional with electric override (H1 and H2) 42-43
Electric proportional w/pressure reducing (H3 and H4) 44-45
Hydraulic proportional (HA, HE and HP) 46-47
Hydraulic proportional (HS and HZ) 48-49
Hydraulic porportional with electric override (J1 and J2) 50-51
Hydraulic proportional (JA) 52-53
Hydraulic porportional with electric override (K1 and K2) 54-55
Electric proportional (L1, L2, L3, L4 and L7) 56-57
Hydraulic 2-position (N2) 56-57
Pressure compensator (PC) 58-59
Electric 2-position (U1 and U2) 60-61
Electric 2-position with solenoid (T9) 62-63
Pressure compensator (TA) 62-63
Hydraulic 2-position (TH) 62-63
Electric 2-position (U1) 64-65
Electric proportional (Y7) 64-65

Contents

Servo supply Servo pressure supply 66-75

Loop flushing system Loop flushing 76-77

Control ramp Control ramp 78-79

Orifice Orifice 80-97

Minimum displacement Minimum displacement 98-99

Pcor adjuster PCOR adjuster 98-99

Overhaul seal kit Overhaul seal kit 100

Service bulletins
SB-1993-006 (end cap gasket) 101
SB-1995-013 (threshold adjustment screw) 102
SB-1996-005 (end cap and valve segment) 103-104
SB-1997-009 (servo piston seal ring) 105
SB-1997-030 (valve segment) 106
SB-1998-035 (incorporate speed sensor in cartridge motors) 107
SB-1999-059 (thread change on DIN shaft assemblies) 108
SB-2000-044 (loop flushing spring and spring seat change) 109
SB-2001-015 (synch shaft kit) 110
SB-2002-001 (end cap/control interface seal) 111-112
SB-2004-004 (end cap gasket) 113
SB-2004-013 (shaft seal) 114
SB-2009-019 (bearing housing redesign) 115

General information

Service parts indentification

The following information and procedure is used to identify the module group, item number, manufacture date, part number, and part name of the parts included in the Series 51 110cc variable displacement motors.

The parts listed include all parts which may be used when performing either "Minor Repairs", "Major Repairs" or "Conversions" on the Series 51 110cc motors.

Nameplate

Each unit will have a nameplate affixed to the housing. The nameplate will include the following information.

Model Code
The Danfoss model code completely defines the specific unit and must be used when ordering parts to service this product.

Model Number
The Danfoss model number is used by the factory in manufacturing. On repeat orders, a complete unit can be ordered by the model number.

Serial Number
The Danfoss serial number is used to identify the manufacture date and the unit sequence in the build. The serial number is also used to identify the units warranty time period.

The letter code indicates the location of original manufacture (assembly). "N" indicates the unit was originally assembled in Neumuenster, Germany.

The first number (2 digits) indicates the year of manufacture. ("01" would indicate the unit was manufactured in 2001)

The second number (2 digits) indicates the calendar week of manufacture.

The third number (5 digits) is a sequential number used to identify a specific unit.

General information

Date code

The date code is defined as the year and week of manufacture. The same item number may list more than one part number. This indicates that there is more than one configuration for that item number. You will see that there are different date codes for the different part numbers. Find the date code of your unit from the nameplate to determine which service part number you need to order.

EXAMPLE: The service part desired is Item L035.

Order Code	Item	Date Begin	Date End	Part Number	Part Name	Usage
C	L035	00-25		515752	Bearing housing (SB-2000-049)	1
	L035	92-33	00-24	743831	Bearing housing	1

All units using this order code with a date code of 92-33 and up to and including 00-24, must use part number "743831". All units with a date code of 00-25 and newer must use part number "515752.".

Service bulletins

A Service Bulletin Number (SB-_ _ _ _ - _ _ _) may follow the "Part Name" of the part you desire. You must read that Service Bulletin prior to ordering that part. The information contained in these Service Bulletins, as of the print date of this bulletin, are included at the end of this manual. Service Bulletins contain more detailed information such as interchangeability, what additional parts are involved, etc. It is suggested that you add additional Service Bulletins to this manual as you recieve them.

Procedure to identify a part

General
The modular design of Series 51 motors result in a simplified service parts list and part number identification procedure.

The same item numbers are used for same part names on all units within a product type. (Example: The lip seal - Item L40, has the same item number on all motors.)

A part number that has another number following it in parentheses is done to make this a world wide manual. The first number is sold in Germany. The number in parentheses is sold in the United States. (Example: 664524 (9005110-9000), customers would order 9005110-9000 if ordering the part in the United States.)

Example of a part identification
The nameplate on a Series 51 motor has an Order Code of 51V110 R F1 N HZ B1 B E G5 NNN 052 AA NN 06 00. Use the following procedures to determine the part number of the drive shaft used on this motor.

1) Referring to the shaft module in the Order Code (see page 7), the shaft option for this motor is identified by the code "F1". (51V110 R **F1** N HZ B1 B E G5 NNN 052 AA NN 06 00)

2) Referring to the Service Parts List, find the shaft group. Next find the order code that relates to this unit, which is "F1". The shaft is found to be item QL10 and part number 11100435 if a speed ring is not required. The shaft is found to be item QL11 and part number 11100436 if a speed ring is required.

Notes

Order code

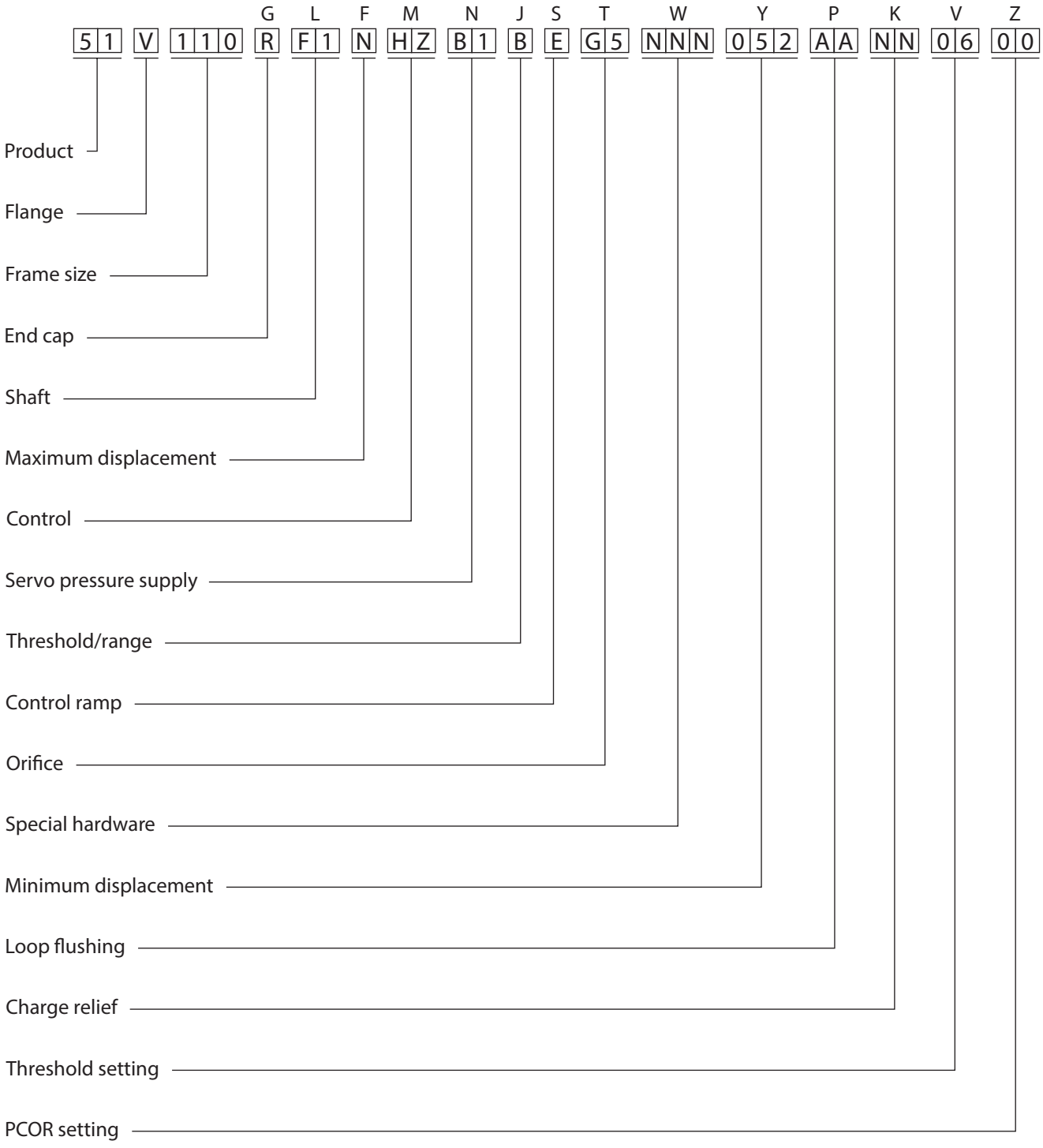

P100 540E

Variable Displacement Motor

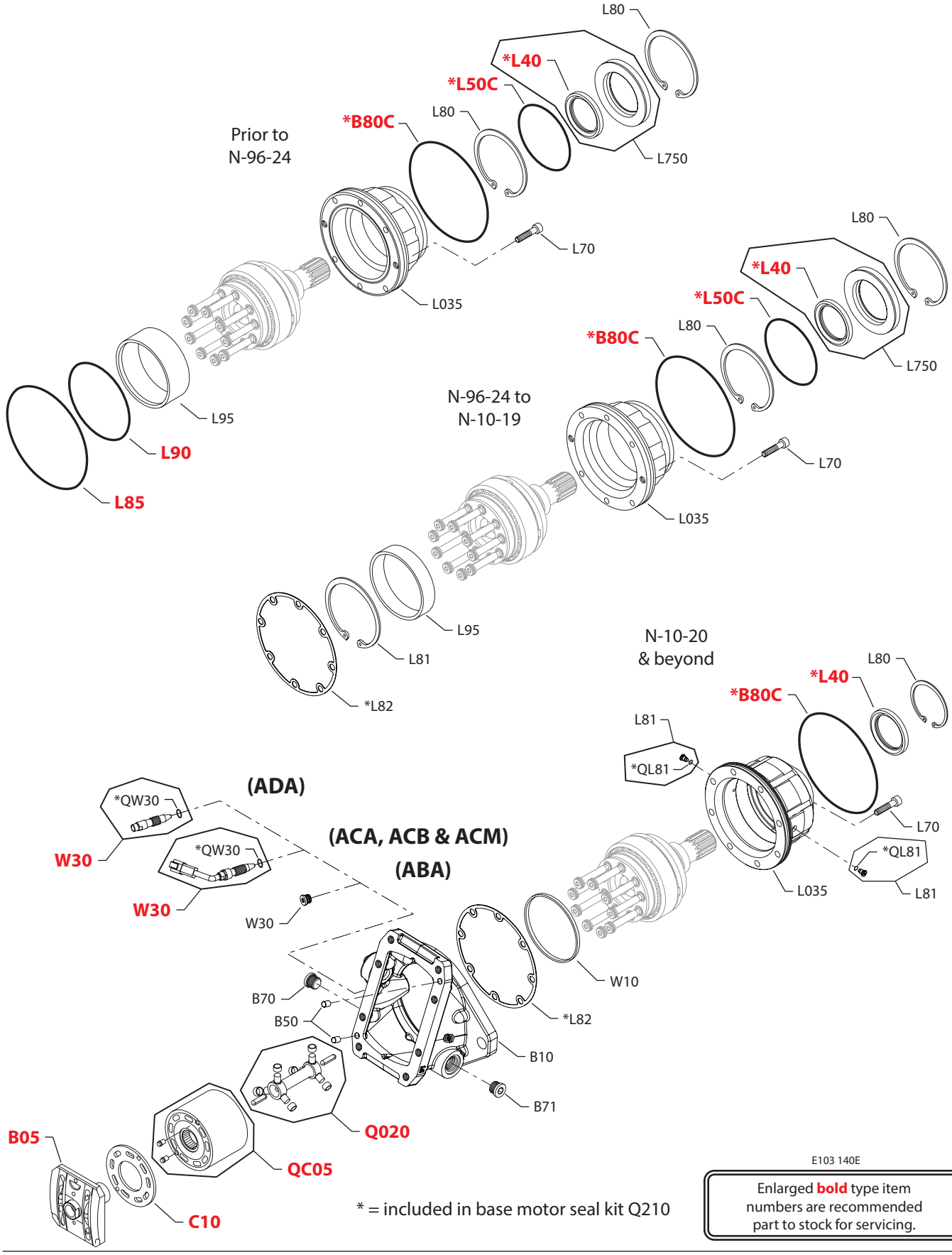

E103 140E

Enlarged **bold** type item numbers are recommended part to stock for servicing.

* = included in base motor seal kit Q210

Variable Displacement Motor

Cartridge flange common parts

Order code	Item	Date begin	Date end	Part number	Part name	Qty. per model/kit
C	B05	92-33		508199	Valve segment (SB-1996-005 & SB-1997-030)	1
	B50	92-33		9004800-3708	Pin	2
	B70	92-33		664524 (9005110-9000)	Plug assembly	1
	B71	92-33		664524 (9005110-9000)	Plug assembly	1
	B80C	92-33		502206	O-ring	1
	C10	92-33		515368	Bearing plate	1
	L035	10-20		11038814	Bearing housing (SB-2009-019)	1
	L035	96-24	10-19	11009383	Bearing housing (SB-1998-035)	1
	L40	05-41		519022	Lip seal (SB-2004-013)	1
	L40	92-33	05-40	341735	Lip seal	1
	L50C	92-33	10-19	507116 (9004104-1580)	O-ring (SB-2009-019)	1
	L70	92-33		727586	Screw	8
	L80	10-20		392423	Retaining ring (SB-2009-019)	1
	L80	92-33	10-19	739037	Retaining ring	2
	L81	10-20		11056747	Bearing log (SB-2009-019)	2
	L81	96-24	10-19	504732	Retaining ring (SB-1998-035)	1
	L82	96-24		501113	Gasket (SB-1998-035)	1
	L85	92-33	96-23	502205	O-ring (SB-1998-035)	1
	L90	92-33	96-23	512678	O-ring (SB-1998-035)	1
	L95	96-24	10-19	501118	Distance ring (SB-1998-035)	1
	L750	92-33	10-19	510484	Seal carrier assembly (SB-2004-013 & SB-2009-019)	1
	Q020	92-33		516485	Synch shaft kit (SB-2001-015)	1
	QC05	92-33		355883	Cylinder block assembly	1
	QL81	10-20		039297 (9004201-1200)	O-ring	2

Special hardware

ABA	B10	97-41		501105	Housing with speed sensor port	1
	W10	97-41		11132981	Speed ring	1
	W30	97-41		140644	Plug assembly	1
ACA	B10	96-24		501105	Housing with speed sensor port (SB-1998-035)	1
	QW30	96-02		085043 (9004201-3700)	O-ring	1
	W10	96-02		11132981	Speed ring	1
	W30	96-02		KPPG23408	Speed sensor assembly	1
ACB	B10	07-30		501105	Housing with speed sensor port (SB-1998-035)	1
	QW30	07-30		085043 (9004201-3700)	O-ring	1
	W10	07-30		11132981	Speed ring	1
	W30	07-30		KPPG26408	Speed sensor assembly	1
ACM	B10	07-30		501105	Housing with speed sensor port (SB-1998-035)	1
	QW30	07-30		085043 (9004201-3700)	O-ring	1
	W10	07-30		11132981	Speed ring	1
	W30	07-30		KPPG29408	Speed sensor assembly	1
ADA	B10	96-24		501105	Housing with speed sensor port (SB-1998-035)	1
	QW30	96-07		085043 (9004201-3700)	O-ring	1
	W10	96-07		11132981	Speed ring	1
	W30	96-07		KPPG256	Speed sensor assembly	1

Variable Displacement Motor

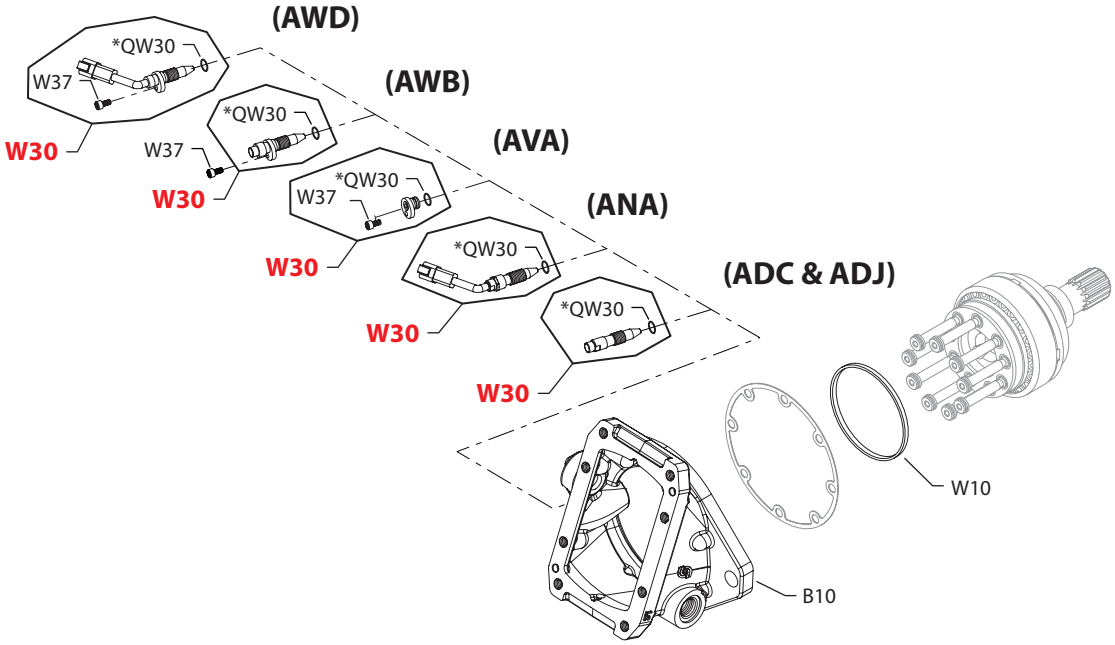

(DDH & NNN)

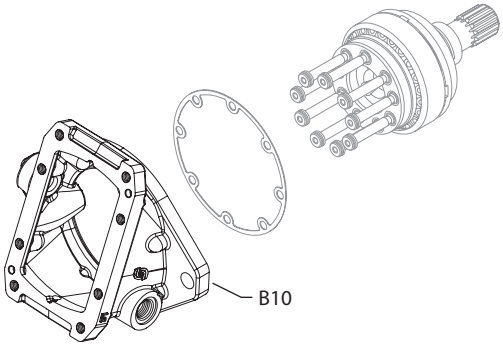

E103 141E

* = included in base motor seal kit Q210

Enlarged **bold** type item numbers are recommended part to stock for servicing.

Variable Displacement Motor

Special hardware, cartridge flange

Order code	Item	Date begin	Date end	Part number	Part name	Qty. per model/kit
ADC	B10	97-07		501105	Housing with speed sensor port	1
	QW30	97-07		085043 (9004201-3700)	O-ring	1
	W10	97-07		11132981	Speed ring	1
	W30	97-07		KPPG236	Speed sensor assembly	1
ADJ	B10	02-41		501105	Housing with speed sensor port (SB-1998-035)	1
	QW30	02-41		085043 (9004201-3700)	O-ring	1
	W10	02-41		11132981	Speed ring	1
	W30	02-41		KPPG256	Speed sensor assembly	1
ANA	B10	97-41		501105	Housing with speed sensor port	1
	QW30	97-41		085043 (9004201-3700)	O-ring	1
	W10	97-41		11132981	Speed ring	1
	W30	97-41		KPPG23703	Speed sensor assembly	1
AVA	B10	07-30		517816	Housing with speed sensor port	1
	QW30	07-30		085043 (9004201-3700)	O-ring	1
	W10	07-30		11132981	Speed ring	1
	W30	07-30		520997/P	Speed sensor plug assembly	1
	W37	07-30		395822 (9007315-0603)	Screw	1
AWB	B10	02-44		517816	Housing with speed sensor port	1
	QW30	02-44		085043 (9004201-3700)	O-ring	1
	W10	02-44		11132981	Speed ring	1
	W30	02-44		KPPG356	Speed sensor plug assembly	1
	W37	02-44		395822 (9007315-0603)	Screw	1
AWD	B10	05-09		517816	Housing with speed sensor port	1
	QW30	05-09		085043 (9004201-3700)	O-ring	1
	W10	05-09		11132981	Speed ring	1
	W30	05-09		KPPG36708B	Speed sensor plug assembly	1
	W37	05-09		395822 (9007315-0603)	Screw	1
DDH	B10	92-33		505530	Housing without speed sensor port	1
NNN	B10	92-33		505530	Housing without speed sensor port	1

Variable Displacement Motor

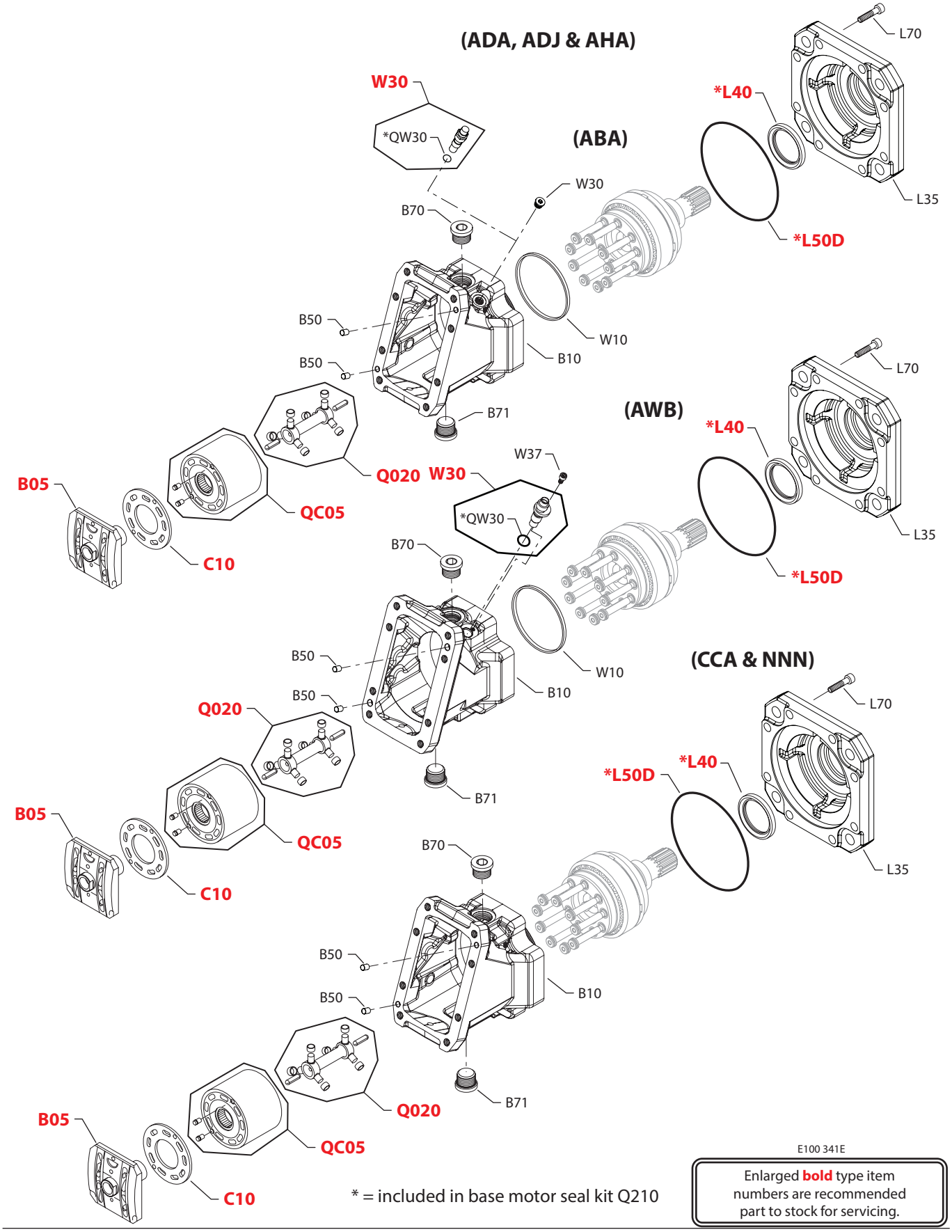

* = included in base motor seal kit Q210

Enlarged **bold** type item numbers are recommended part to stock for servicing.

Variable Displacement Motor

DIN flange common parts

Order code	Item	Date begin	Date end	Part number	Part name	Qty. per model/kit
D	B05	92-01		508199	Valve segment (SB-1996-005 & SB-1997-030)	1
	B50	92-01		9004800-3708	Pin	2
	B70	92-01		664524 (9005110-9000)	Plug assembly	1
	B71	92-01		664524 (9005110-9000)	Plug assembly	1
	C10	92-01		515368	Bearing plate	1
	L35	05-45		520316	Flange, DIN (SB-2004-013)	1
	L40	05-41		519022	Lip seal (SB-2004-013)	1
	L40	92-01	05-40	341735	Lip seal	1
	L50D	92-01		729285	O-ring	1
	L70	92-01		064493	Screw	8
	Q020	92-01		516485	Synch shaft kit (SB-2001-015)	1
	QC05	92-01		355883	Cylinder block assembly	1

Special hardware, DIN flange

ABA	B10	92-01		504598	Housing with speed sensor port	1
	QW30	92-01		085043 (9004201-3700)	O-ring	1
	W10	92-01		11132981	Speed ring	1
	W30	92-01		140644	Plug assembly	1
ADA	B10	99-01		504598	Housing with speed sensor port	1
	QW30	99-01		085043 (9004201-3700)	O-ring	1
	W10	99-01		11132981	Speed ring	1
	W30	99-01		KPPG156	Speed sensor assembly	1
ADJ	B10	02-41		504598	Housing with speed sensor port	1
	QW30	02-41		085043 (9004201-3700)	O-ring	1
	W10	02-41		11132981	Speed ring	1
	W30	02-41		KPPG156	Speed sensor assembly	1
AHA	B10	96-12		504598	Housing with speed sensor port	1
	QW30	96-12		085043 (9004201-3700)	O-ring	1
	W10	96-12		11132981	Speed ring	1
	W30	96-12		KPPG166	Speed sensor assembly	1
AWB	B10	02-44		518915	Housing with speed sensor port	1
	QW30	02-44		085043 (9004201-3700)	O-ring	1
	W10	02-44		11132981	Speed ring	1
	W30	02-44		KPPG456	Speed sensor assembly	1
	W37	02-44		395822 (9007315-0603)	Screw	1
CCA	B10	93-33		774778	Housing without speed sensor port	1
NNN	B10	92-01		774778	Housing without speed sensor port	1

Variable Displacement Motor

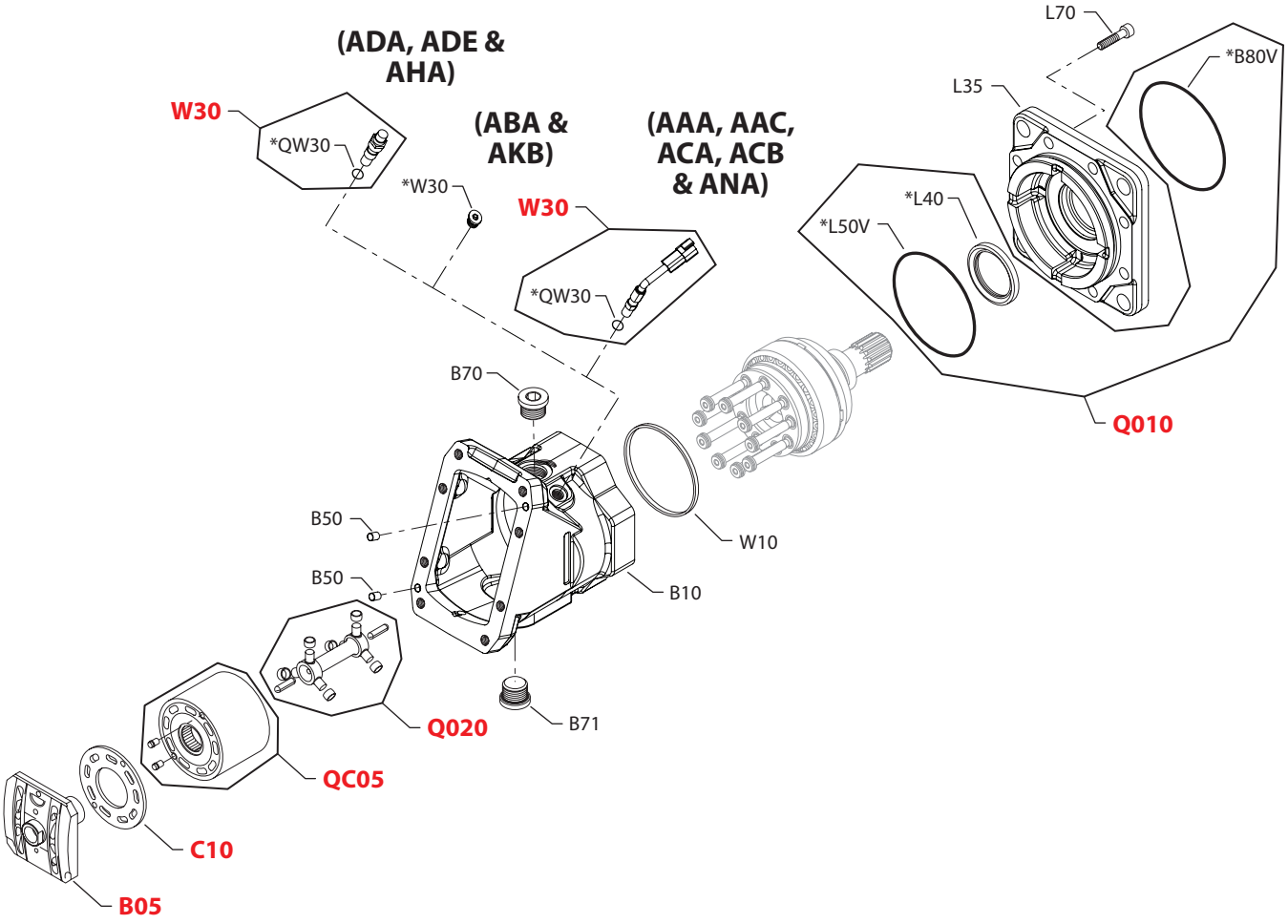

E103 142E

* = included in base motor seal kit Q210

Enlarged **bold** type item numbers are recommended part to stock for servicing.

Variable Displacement Motor

SAE flange common parts

Order code	Item	Date begin	Date end	Part number	Part name	Qty. per model/kit
V	B05	92-33		508199	Valve segment (SB-1996-005 & SB-1997-030)	1
	B50	92-33		9004800-3708	Pin	2
	B70	95-42		664524 (9005110-9000)	Plug assembly	1
	B71	92-33		664524 (9005110-9000)	Plug assembly	1
	B80V	92-33		729285	O-ring	1
	C10	92-33		515368	Bearing plate	1
	L35	05-45		520319	Flange, SAE (SB-2004-013)	1
	L40	05-41		519022	Lip seal (SB-2004-013)	1
	L40	92-01	05-40	341735	Lip seal	1
	L50V	92-33		717462	O-ring	1
	L70	92-33		064493	Screw	8
	Q010	05-41		773184	Shaft seal kit	1
	Q020	92-33		516485	Synch shaft kit (SB-2001-015)	1
	QC05	92-33		355883	Cylinder block assembly	1
	W10	92-33		11132981	Speed ring	1

Special hardware

AAA & AAC	B10	95-42		504595	Housing with speed sensor port	1
	QW30	92-33		085043 (9004201-3700)	O-ring	1
	W30	92-33		KPPG12508	Speed sensor assembly	1
ABA	B10	95-42		504595	Housing with speed sensor port	1
	W30	92-33		140644	Plug assembly	1
ACA	B10	95-42		504595	Housing with speed sensor port	1
	QW30	92-33		085043 (9004201-3700)	O-ring	1
	W30	92-33		KPPG13408	Speed sensor assembly	1
ACB	B10	98-32		504595	Housing with speed sensor port	1
	QW30	98-32		085043 (9004201-3700)	O-ring	1
	W30	98-32		KPPG16408	Speed sensor assembly	1
ADA	B10	95-42		504595	Housing with speed sensor port	1
	QW30	94-33		085043 (9004201-3700)	O-ring	1
	W30	94-33		KPPG156	Speed sensor assembly	1
ADE	B10	00-34		504595	Housing with speed sensor port	1
	QW30	00-34		085043 (9004201-3700)	O-ring	1
	W30	00-34		KPPG156	Speed sensor assembly	1
AHA	B10	02-13		504595	Housing with speed sensor port	1
	QW30	02-13		085043 (9004201-3700)	O-ring	1
	W30	02-13		KPPG166	Speed sensor assembly	1
AKB	B10	00-38		504595	Housing with speed sensor port	1
	W30	00-38		140644	Plug assembly	1
ANA	B10	01-04		504595	Housing with speed sensor port	1
	QW30	01-04		085043 (9004201-3700)	O-ring	1
	W30	01-04		KPPG13703	Speed sensor assembly	1

Variable Displacement Motor

(DAA, DBA, DDA, DDB, DDH & NNN)

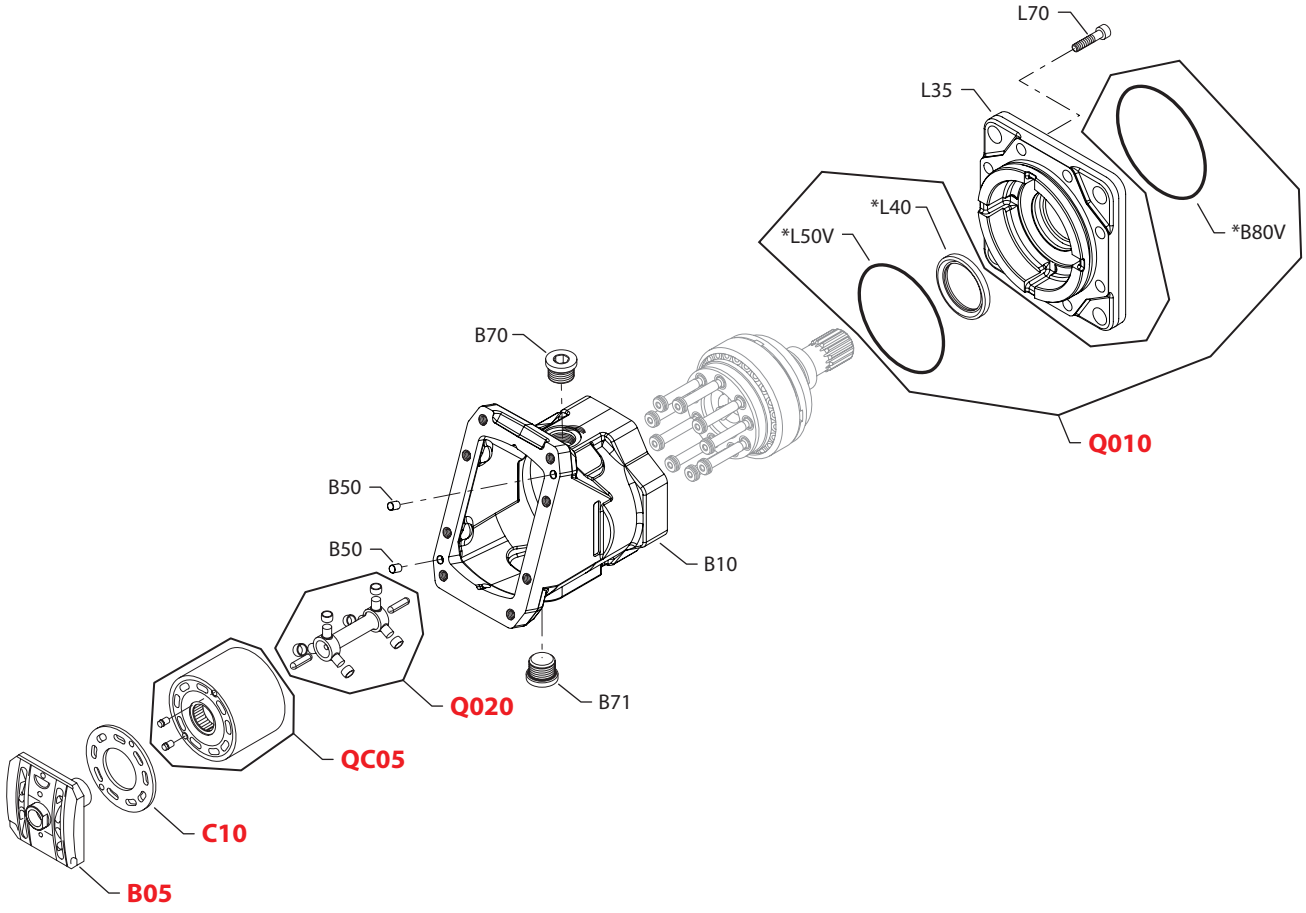

E103 143E

* = included in base motor seal kit Q210

Enlarged **bold** type item numbers are recommended part to stock for servicing.

Variable Displacement Motor

SAE flange common parts

Order code	Item	Date begin	Date end	Part number	Part name	Qty. per model/kit
V	B05	92-33		508199	Valve segment (SB-1996-005 & SB-1997-030)	1
	B50	92-33		9004800-3708	Pin	2
	B70	95-42		664524 (9005110-9000)	Plug assembly	1
	B71	92-33		664524 (9005110-9000)	Plug assembly	1
	B80V	92-33		729285	O-ring	1
	C10	92-33		515368	Bearing plate	1
	L35	05-45		520319	Flange, SAE (SB-2004-013)	1
	L40	05-41		519022	Lip seal (SB-2004-013)	1
	L40	92-01	05-40	341735	Lip seal	1
	L50V	92-33		717462	O-ring	1
	L70	92-33		064493	Screw	8
	Q010	05-41		773184	Shaft seal kit	1
	Q020	92-33		516485	Synch shaft kit (SB-2001-015)	1
	QC05	92-33		355883	Cylinder block assembly	1

Special hardware

DAA	B10	02-13		727297	Housing without speed sensor port	1
DBA	B10	02-13		727297	Housing without speed sensor port	1
DDA	B10	04-47		727297	Housing without speed sensor port	1
DDB	B10	04-47		727297	Housing without speed sensor port	1
DDH	B10	07-40		727297	Housing without speed sensor port	1
NNN	B10	92-33		727297	Housing without speed sensor port	1

Variable Displacement Motor

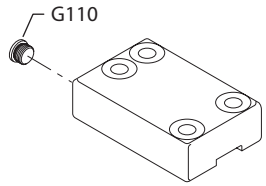

Prior to 03-39

(B & D)

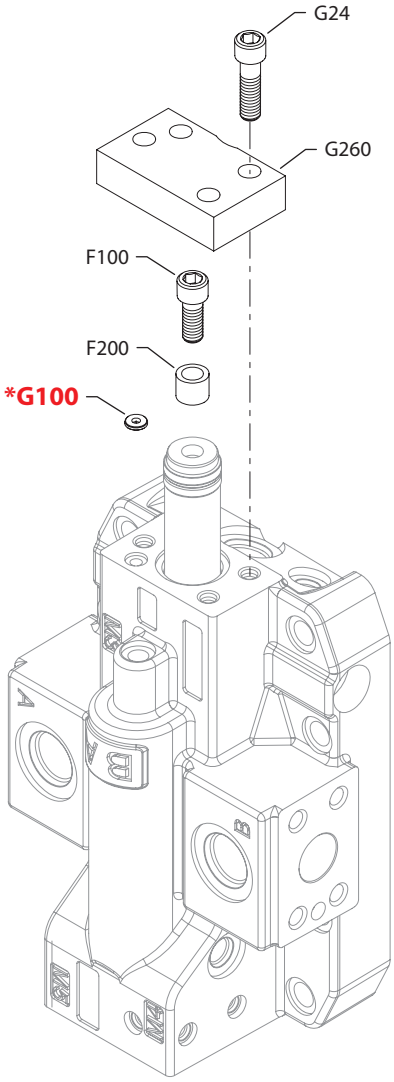

(N)

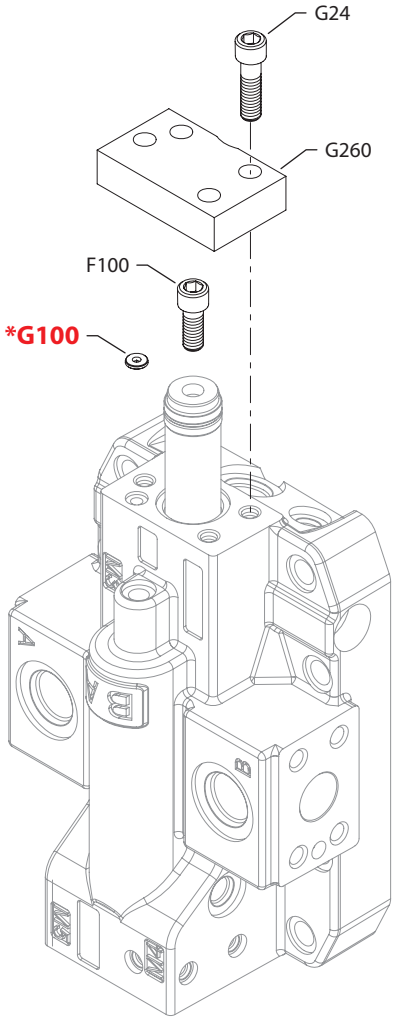

E100 272E

* = included in base motor seal kit Q210

Enlarged **bold** type item numbers are recommended part to stock for servicing.

Variable Displacement Motor

Maximum displacement common parts

Order code	Item	Date begin	Date end	Part number	Part name	Qty. per model/kit
	G24	92-33		727586 (9007314-1008)	Screw	4
	G100	92-33		792739	O-ring, rectangular	1
	G110	92-33	03-38	504519	Plug assembly	1
	G260	92-33		518996	Cover	1

Maximum displacement

B	F100	98-35		393702	Screw, M10 x 30 mm	1
	F200	98-35		788620	Spacer, 7.5 mm	1
D	F100	98-03		727586	Screw, M10 x 35 mm	1
	F200	98-03		682211	Spacer, 15.0 mm	1
N	F100	92-33		393686	Screw, M10 x 20 mm	1

Variable Displacement Motor

(A)

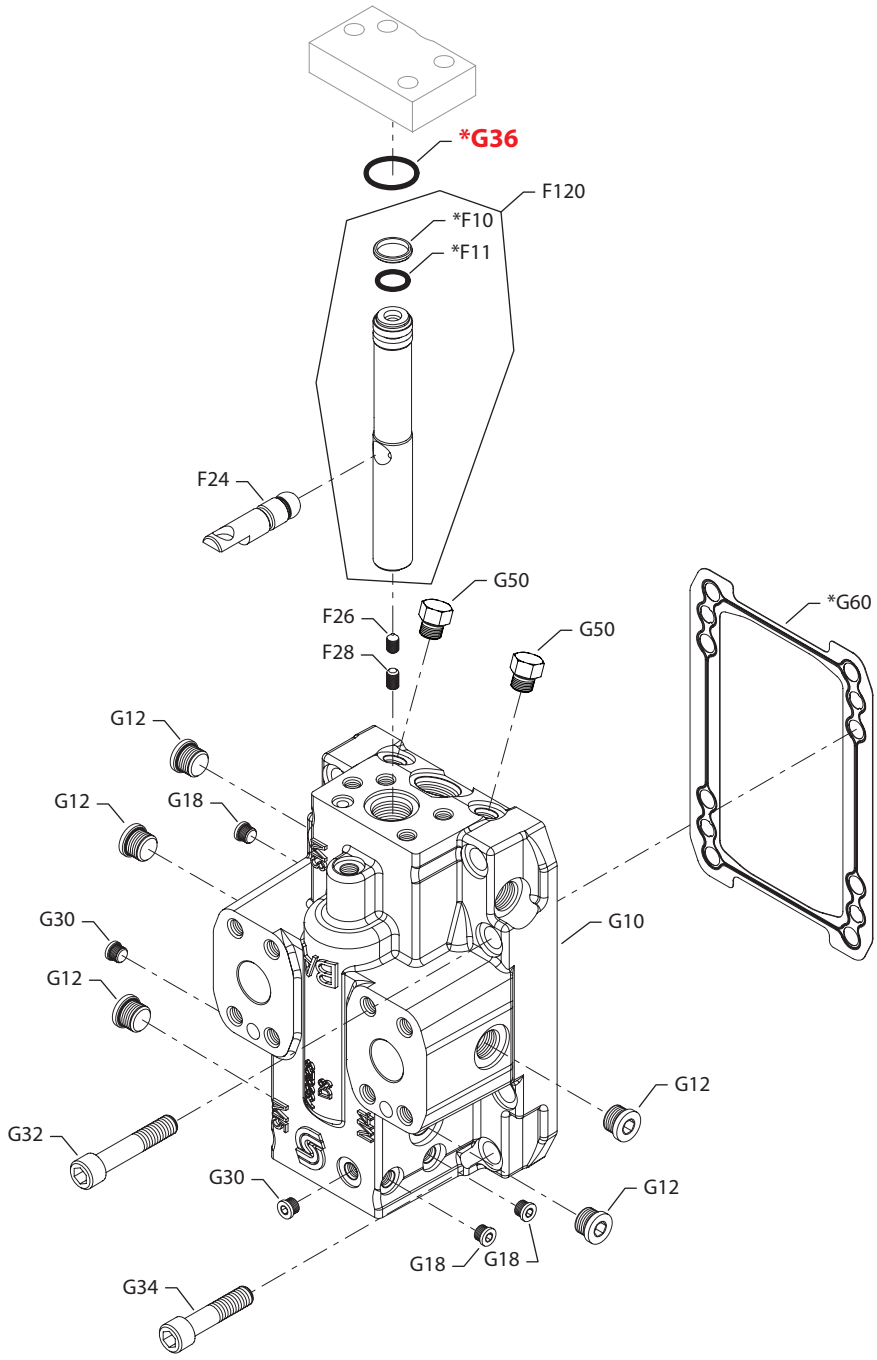

E100 311E

* = included in base motor seal kit Q210

Enlarged **bold** type item numbers are recommended part to stock for servicing.

Variable Displacement Motor

End cap, axial ports

Order code	Item	Date begin	Date end	Part number	Part name	Qty. per model/kit
A	F10	92-33		508133	Servo piston seal ring (SB-1997-009)	1
	F11	92-33		019950 (9004100-1150)	O-ring	1
	F24	92-33		511120	Feedback lever	1
	F26	92-33		396879	Set screw	1
	F28	92-33		042465	Set screw	1
	F120	92-33		510076	Servo piston assembly	1
	G10	92-33		513592	End cap, axial ports (SB-1996-005, SB-2002-001)	1
	G12	95-07		140644	Plug assembly	5
	G12	92-33	95-06	140644	Plug assembly	7
	G18	95-07		11040532	Plug assembly	3
	G18	92-33	95-06	092114 (9007712-0604)	Set screw	2
	G30	92-33		11040532	Plug assembly	2
	G32	92-33		914127 (9007314-1213)	Screw	4
	G34	92-33		283325 (9007314-1211)	Screw	4
	G36	92-33		11118915	O-ring	1
	G50	92-33		001511 (9005100-4400)	Plug assembly	2
	G60	92-33		516124	End cap gasket (SB-1993-006 & SB-2004-004)	1

Variable Displacement Motor

(G)

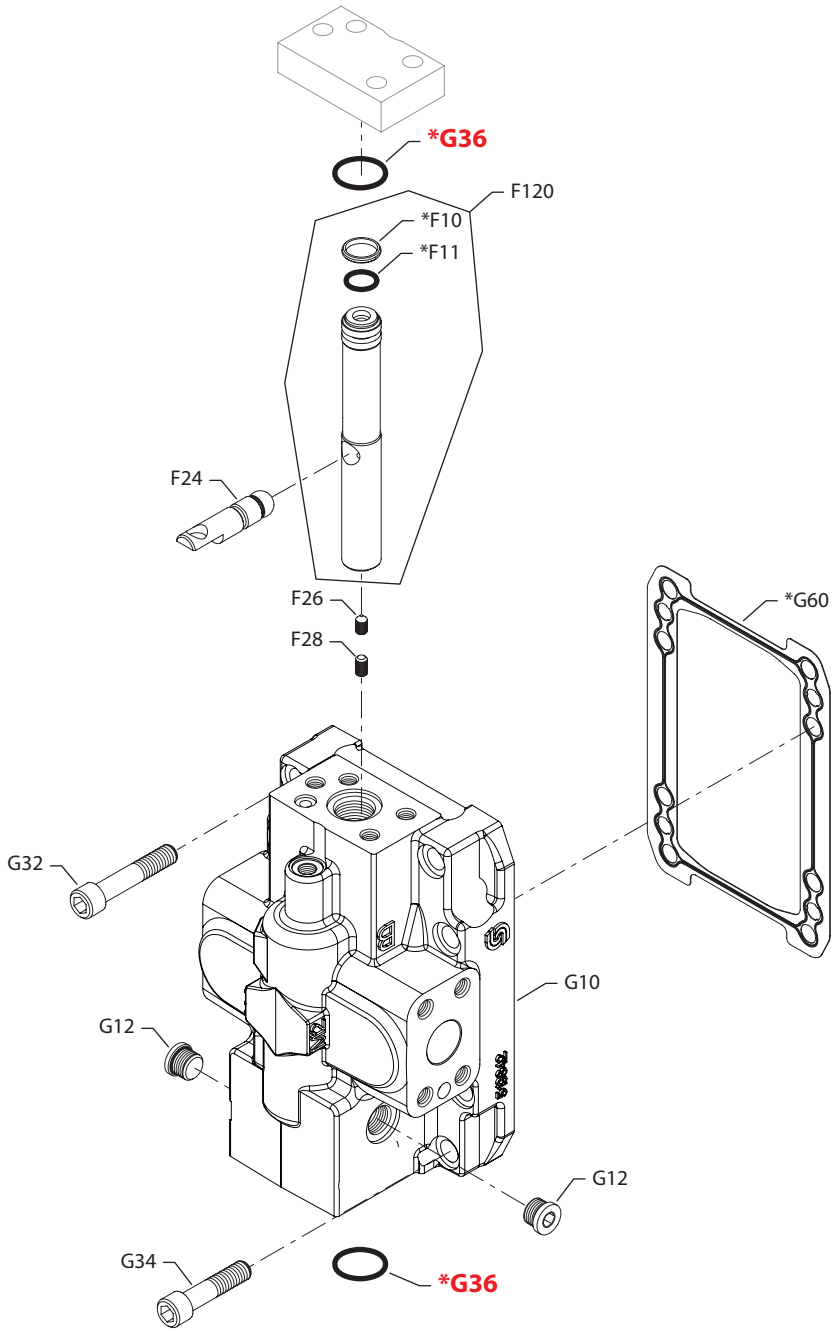

E100 296E

* = included in base motor seal kit Q210

Enlarged **bold** type item numbers are recommended part to stock for servicing.

Variable Displacement Motor

End cap, side ports

Order code	Item	Date begin	Date end	Part number	Part name	Qty. per model/kit
G	F10	94-12	13-28	508133	Servo piston seal ring (SB-1997-009)	1
	F11	94-12	13-28	019950 (9004100-1150)	O-ring	1
	F24	94-12	13-28	511119	Feedback lever	1
	F26	94-12	13-28	396879	Set screw	1
	F28	94-12	13-28	042465	Set screw	1
	F120	94-12	13-28	510076	Servo piston assembly	1
	G10	94-12	13-28	502403	End cap, side ports (SB-1996-005)	1
	G12	94-12	13-28	140644	Plug	2
	G32	94-12	13-28	914127 (9007314-1213)	Screw	4
	G34	94-12	13-28	283325 (9007314-1211)	Screw	4
	G36	94-12	13-28	364968	O-ring	2
	G60	94-12	13-28	516124	End cap gasket (SB-1993-006 & SB-2004-004)	1

Variable Displacement Motor

(R & V)

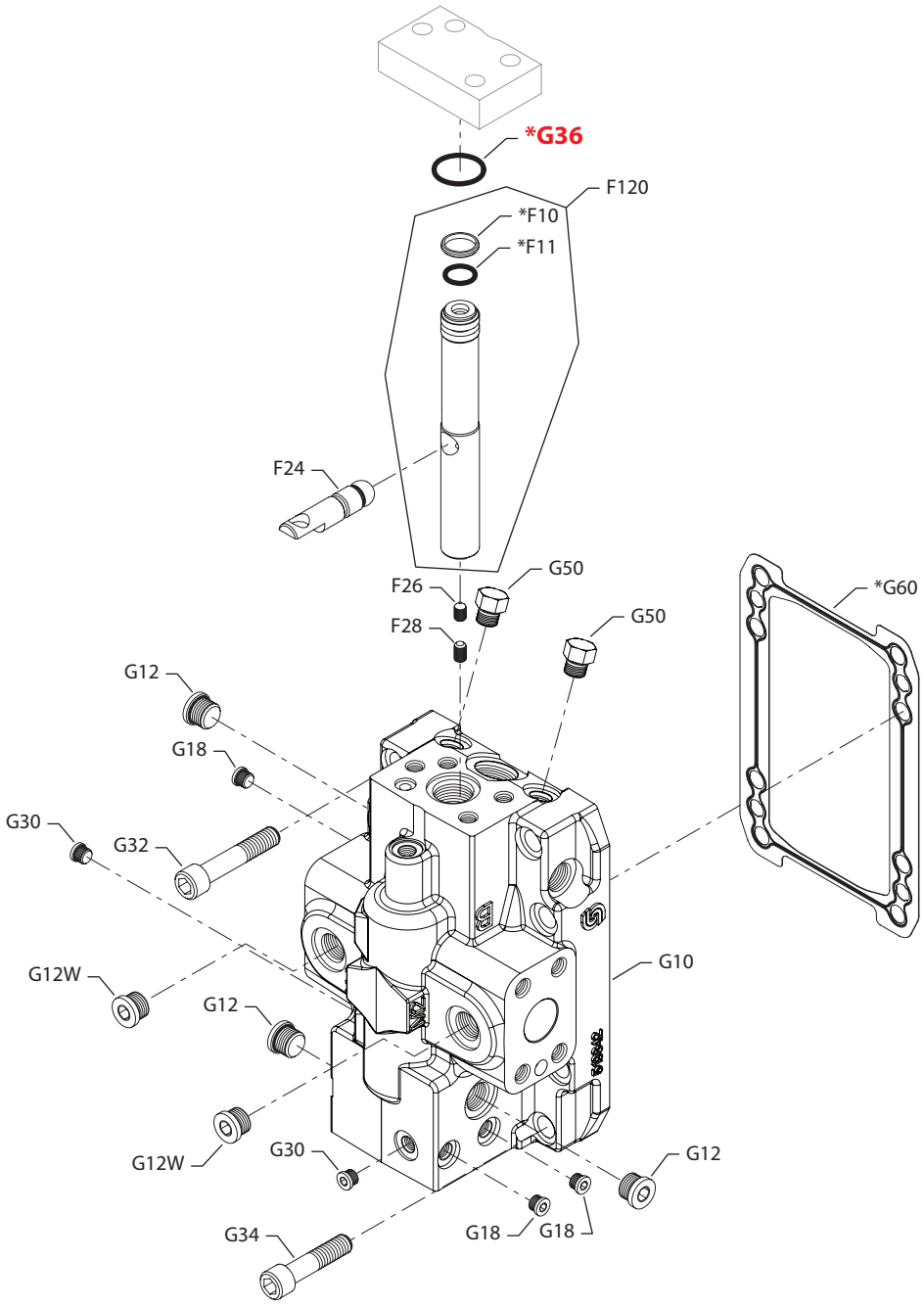

E100 653E

* = included in base motor seal kit Q210

Enlarged **bold** type item numbers are recommended part to stock for servicing.

Variable Displacement Motor

End cap, side ports

Order code	Item	Date begin	Date end	Part number	Part name	Qty. per model/kit
R	F10	92-33		508133	Servo piston seal ring (SB-1997-009)	1
	F11	92-33		019950 (9004100-1150)	O-ring	1
	F24	92-33		511120	Feedback lever	1
	F26	92-33		396879	Set screw	1
	F28	92-33		042465	Set screw	1
	F120	92-33		510076	Servo piston assembly	1
	G10	92-33		516058	End cap, side ports (SB-1996-005, SB-2002-001)	1
	G12	95-07		140644	Plug assembly	5
	G12	92-33	95-06	140644	Plug assembly	7
	G18	95-07		11040532	Plug assembly	3
	G18	92-33	95-06	092114 (9007712-0604)	Set screw	2
	G30	92-33		11040532	Plug assembly	2
	G32	92-33		914127 (9007314-1213)	Screw	4
	G34	92-33		283325 (9007314-1211)	Screw	4
	G36	92-33		11118915	O-ring	1
	G50	92-33		001511 (9005100-4400)	Plug	2
	G50A	92-33		001123 (9004201-2500)	O-ring	2
	G60	92-33		516124	End cap gasket (SB-1993-006 & SB-2004-004)	1
V	F10	92-33		508133	Servo piston seal ring (SB-1997-009)	1
	F11	92-33		019950 (9004100-1150)	O-ring	1
	F24	92-33		511120	Feedback lever	1
	F26	92-33		396879	Set screw	1
	F28	92-33		042465	Set screw	1
	F120	92-33		510076	Servo piston assembly	1
	G10	92-33		518904	End cap, side ports, metric	1
	G12	95-07		140644	Plug assembly	5
	G12	92-33	95-06	140644	Plug assembly	7
	G18	95-07		11040532	Plug assembly	3
	G18	92-33	95-06	092114 (9007712-0604)	Set screw	2
	G30	92-33		11040532	Plug assembly	2
	G32	92-33		914127 (9007314-1213)	Screw	4
	G34	92-33		283325 (9007314-1211)	Screw	4
	G36	92-33		11118915	O-ring	1
	G50	92-33		001511 (9005100-4400)	Plug	2
	G50A	92-33		001123 (9004201-2500)	O-ring	2
	G60	92-33		516124	End cap gasket (SB-1993-006 & SB-2004-004)	1

Variable Displacement Motor

(W)

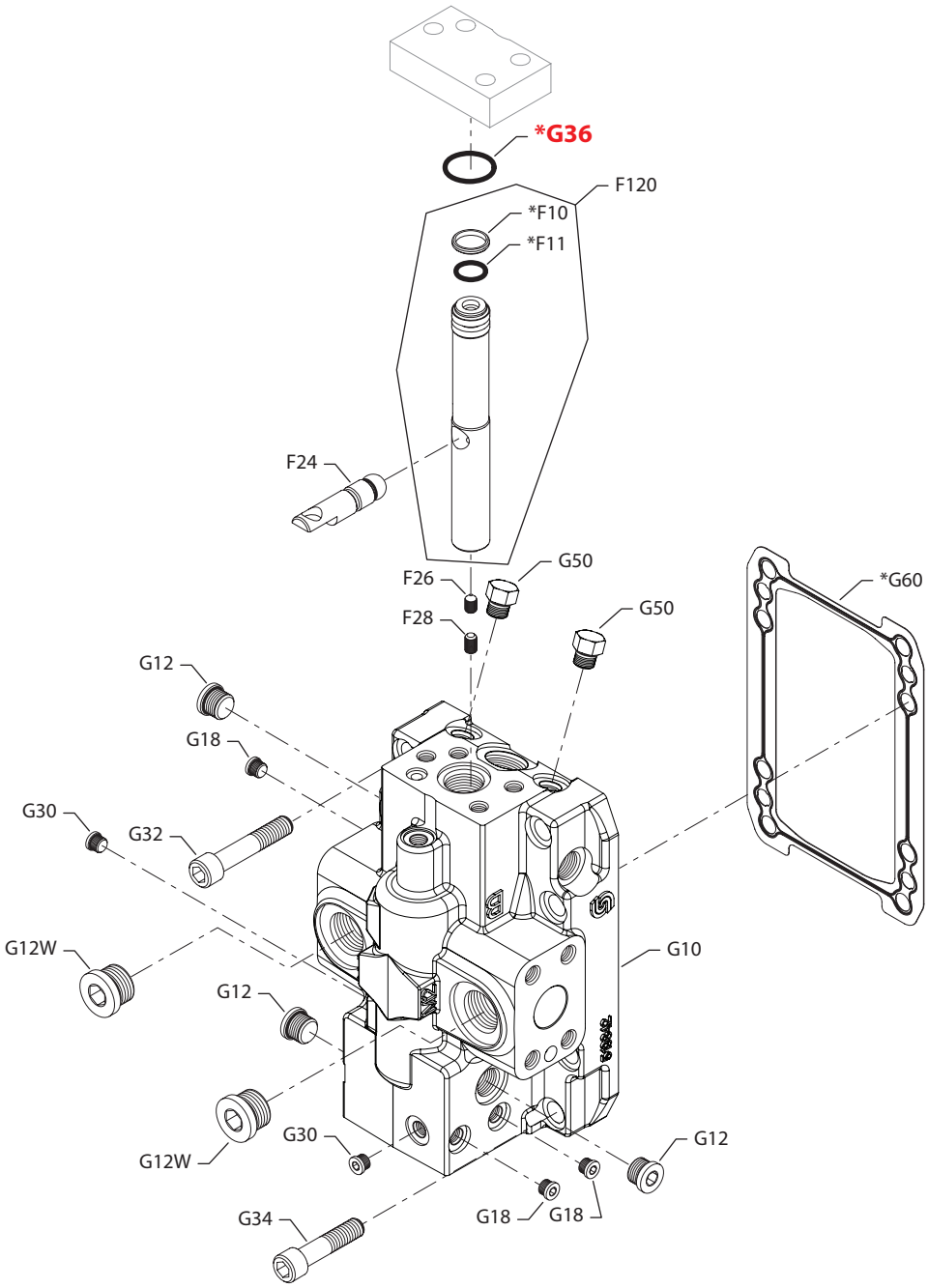

E103 144E

* = included in base motor seal kit Q210

Enlarged **bold** type item numbers are recommended part to stock for servicing.

Variable Displacement Motor

End cap, side ports

Order code	Item	Date begin	Date end	Part number	Part name	Qty. per model/kit
W	F10	02-44		508133	Servo piston seal ring	1
	F11	02-44		019950 (9004100-1150)	O-ring	1
	F24	02-44		511120	Feedback lever	1
	F26	02-44		396879	Set screw	1
	F28	02-44		042465	Set screw	1
	F120	02-44		510076	Servo piston assembly	1
	G10	02-44		518911	End cap, side ports, metric	1
	G12	02-44		140644	Plug assembly	3
	G12W	02-44		664524 (9005110-9000)	Plug assembly	2
	G18	02-44		11040532	Plug assembly	2
	G30	02-44		11040532	Plug assembly	2
	G32	02-44		914127 (9007314-1213)	Screw	4
	G34	02-44		283325 (9007314-1211)	Screw	4
	G36	02-44		11118915	O-ring	1
	G50	02-44		001511 (9005100-4400)	Plug assembly	2
	G60	02-44		516124	End cap gasket (SB-2004-004)	1

Variable Displacement Motor

(A, B, C, D, G, H, J, K, L, R, S, V & W)

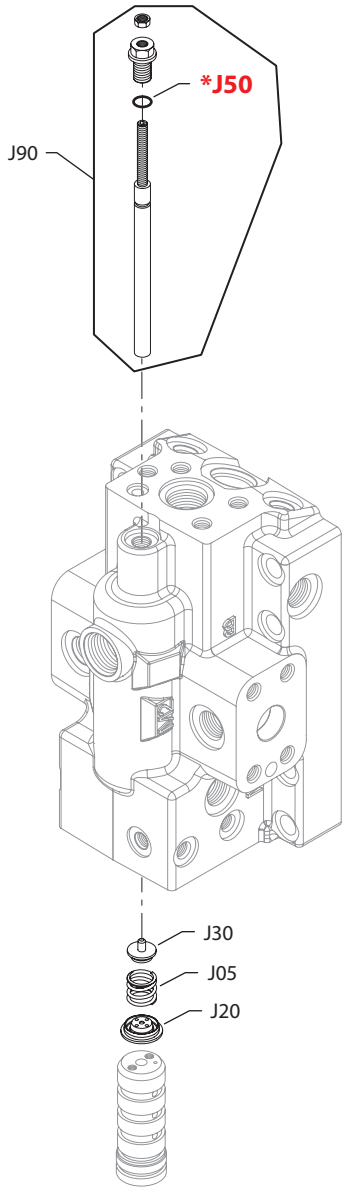

E100 299E

* = included in base motor seal kit Q210

Enlarged **bold** type item numbers are recommended part to stock for servicing.

Variable Displacement Motor

Threshold/range common parts

Order code	Item	Date begin	Date end	Part number	Part name	Qty. per model/kit
	J20	92-33		11036824	Spring seat	1
	J30	96-07		507670	Spring seat (SB-1995-013)	1
	J50	92-33		732479 (9004105-0100)	O-ring	1
	J90	96-07		507679	Threshold adjustment screw assembly (SB-1995-013)	1

Threshold/range

A	J05	92-33		507638	Spring	1
(2-5 bar)						
B	J05	92-33		722215	Spring	1
(6-12 bar)						
C	J05	92-33		722207	Spring	1
(13-30 bar)						
D	J05	92-33		722207	Spring	1
(20-30 bar)						
G	J05	92-33		722207	Spring	1
(3-5 bar)						
H	J05	92-33		722207	Spring	1
(6-8 bar)						
J	J05	92-33		722215	Spring	1
(15-50 mA)						
K	J05	92-33		722207	Spring	1
(51-85 mA)						
L	J05	92-33		722215	Spring	1
(110-370 mA)						
N				No parts		
(no adjustment)						
R	J05	99-35		507638	Spring	1
(320 mA)						
S	J05	99-35		507638	Spring	1
(640 mA)						
V	J05	95-35		507638	Spring	1
(220 mA)						
W	J05	97-41		507638	Spring	1
(440 mA)						

Variable Displacement Motor

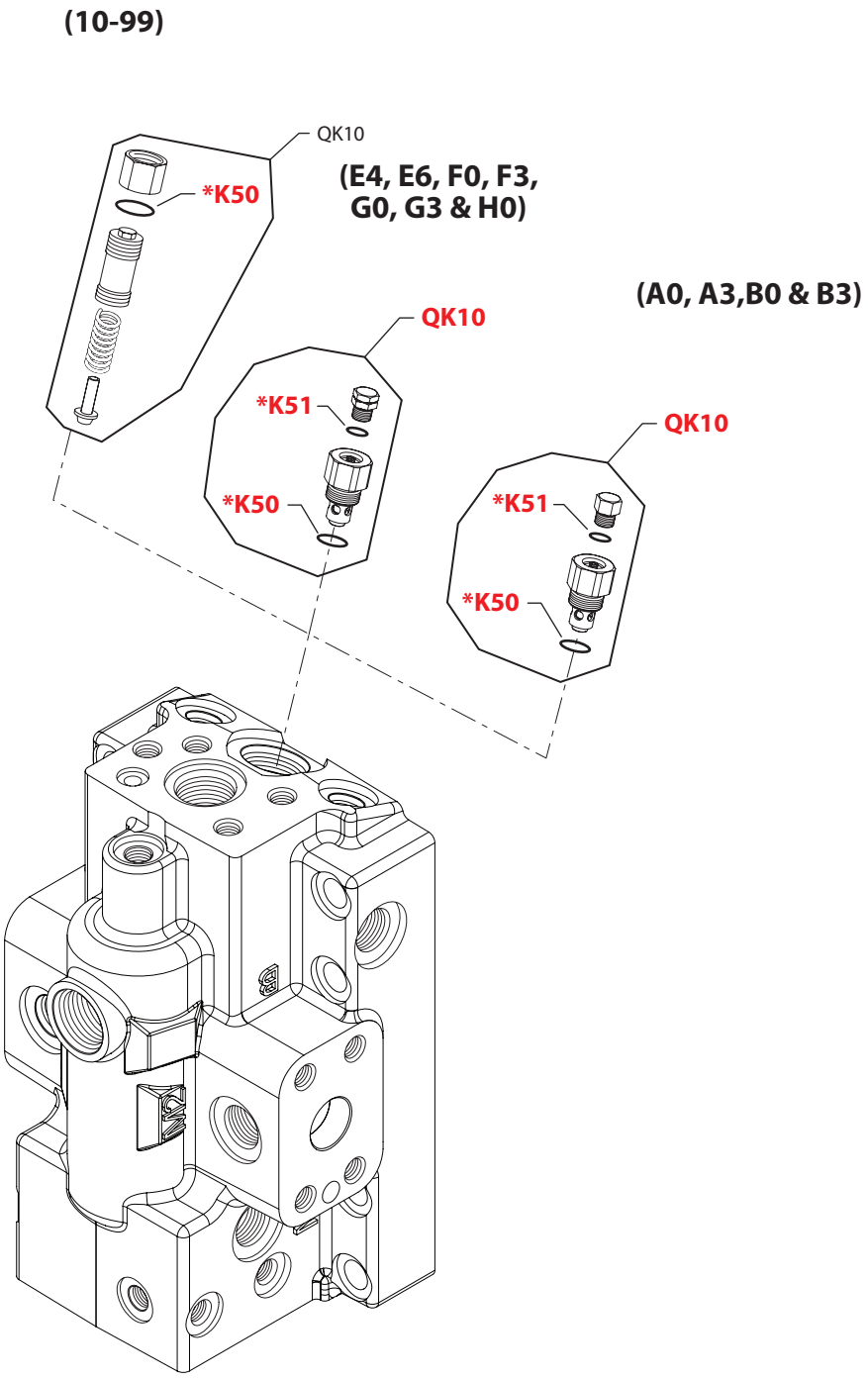

E100 300E

* = included in base motor seal kit Q210

Enlarged **bold** type item numbers are recommended part to stock for servicing.

Variable Displacement Motor

Charge pressure relief

Order code	Item	Date begin	Date end	Part number	Part name	Qty. per model/kit
00		92-33	01-18	None		
10-99	K50	92-33	01-17	001149 (9004201-6200)	O-ring	1
	QK10	92-33	01-17	8510012	Charge relief valve kit	1
A0	K50	97-25		001149 (9004201-6200)	O-ring	1
	K51	97-25		085043 (9004201-3700)	O-ring	1
	QK10	97-25		8510253	Cartridge kit, 13 bar, 11 l/min	1
A3	K50	97-25		001149 (9004201-6200)	O-ring	1
	K51	97-25		085043 (9004201-3700)	O-ring	1
	QK10	97-25		8510256	Cartridge kit, 13 bar, 16 l/min	1
B0	K50	97-25		001149 (9004201-6200)	O-ring	1
	K51	97-25		085043 (9004201-3700)	O-ring	1
	QK10	97-25		11020552	Cartridge kit, 13 bar, 22 l/min	1
B3	K50	97-25		001149 (9004201-6200)	O-ring	1
	K51	97-25		085043 (9004201-3700)	O-ring	1
	QK10	97-25		8510243	Cartridge kit, 13 bar, 27 l/min	1
E4	K50	97-25		001149 (9004201-6200)	O-ring	1
	K51	97-25		085043 (9004201-3700)	O-ring	1
	QK10	97-25		8510261	Cartridge kit, 16 bar, 4 l/min	1
E6	K50	97-25		001149 (9004201-6200)	O-ring	1
	K51	97-25		085043 (9004201-3700)	O-ring	1
	QK10	97-25		8510252	Cartridge kit, 16 bar, 7 l/min	1
F0	K50	97-25		001149 (9004201-6200)	O-ring	1
	K51	97-25		085043 (9004201-3700)	O-ring	1
	QK10	97-25		8510259	Cartridge kit, 16 bar, 11 l/min	1
F3	K50	97-25		001149 (9004201-6200)	O-ring	1
	K51	97-25		085043 (9004201-3700)	O-ring	1
	QK10	97-25		8510262	Cartridge kit, 16 bar, 16 l/min	1
G0	K50	97-25		001149 (9004201-6200)	O-ring	1
	K51	97-25		085043 (9004201-3700)	O-ring	1
	QK10	97-25		8510260	Cartridge kit, 16 bar, 22 l/min	1
G3	K50	97-25		001149 (9004201-6200)	O-ring	1
	K51	97-25		085043 (9004201-3700)	O-ring	1
	QK10	97-25		8510263	Cartridge kit, 16 bar, 2 l/min	1
H0	K50	97-25		001149 (9004201-6200)	O-ring	1
	K51	97-25		085043 (9004201-3700)	O-ring	1
	QK10	97-25		8510258	Cartridge kit, 16 bar, 35 l/min	1

Variable Displacement Motor

(NN)

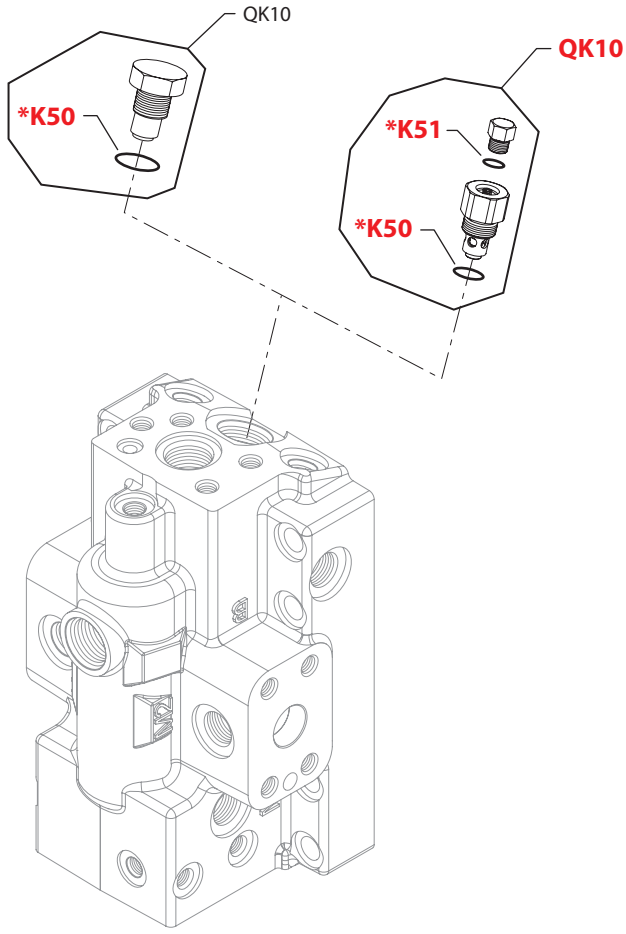

(N4 & N6)

(C8, D3, D4 & F1)

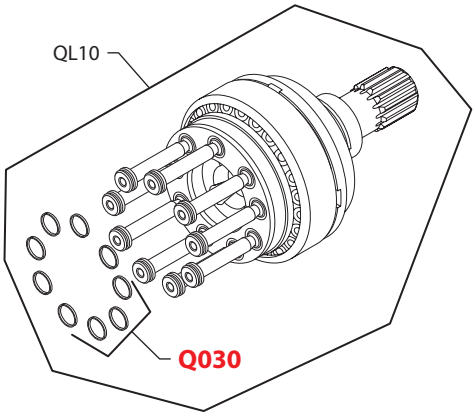

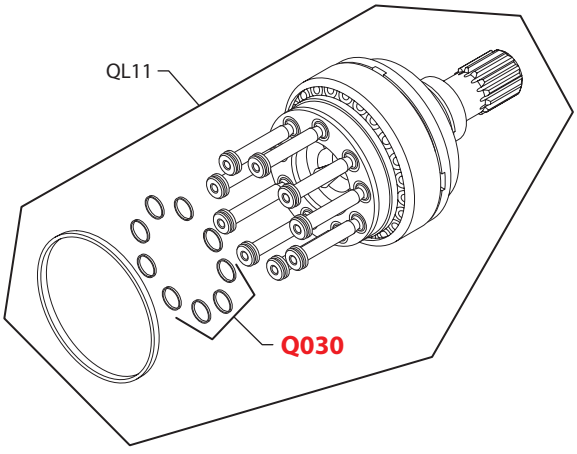

E100 256E

* = included in base motor seal kit Q210

Enlarged **bold** type item numbers are recommended part to stock for servicing.

Variable Displacement Motor

Charge pressure relief

Order code	Item	Date begin	Date end	Part number	Part name	Qty. per model/kit
N4	K50	97-25		001149 (9004201-6200)	O-ring	1
	K51	97-25		085043 (9004201-3700)	O-ring	1
	QK10	97-25		8510255	Cartridge kit, 13 bar, 4 l/min	1
N6	K50	97-25		001149 (9004201-6200)	O-ring	1
	K51	97-25		085043 (9004201-3700)	O-ring	1
	QK10	97-25		11097072	Cartridge kit, 13 bar, 7 l/min	1
NN	K50	97-25		001149 (9004201-6200)	O-ring	1
	QK10	97-25		11097045	Loop flushing defeated kit	1

Shaft

C8	QL10	92-33		11100429	Shaft, 27 tooth spline without speed ring	1
	QL11	92-33		11100430	Shaft, 27 tooth spline with speed ring	1
	Q030	92-33		11100634	Piston ring kit	1
D3	QL10	92-33		11100453	Shaft, 18 t. spline without speed ring (SB-1999-059)	1
	QL11	92-33		11100454	Shaft, 18 tooth spline with speed ring (SB-1999-059)	1
	Q030	92-33		11100634	Piston ring kit	1
D4	QL10	92-33		11100455	Shaft, 21 t. spline without speed ring (SB-1999-059)	1
	QL11	92-33		11100456	Shaft, 21 tooth spline with speed ring (SB-1999-059)	1
	Q030	92-33		11100634	Piston ring kit	1
F1	QL10	92-33		11100435	Shaft, 13 tooth spline without speed ring	1
	QL11	92-33		11100436	Shaft, 13 tooth spline with speed ring	1
	Q030	92-33		11100634	Piston ring kit	1

Variable Displacement Motor

(D7 & D8)

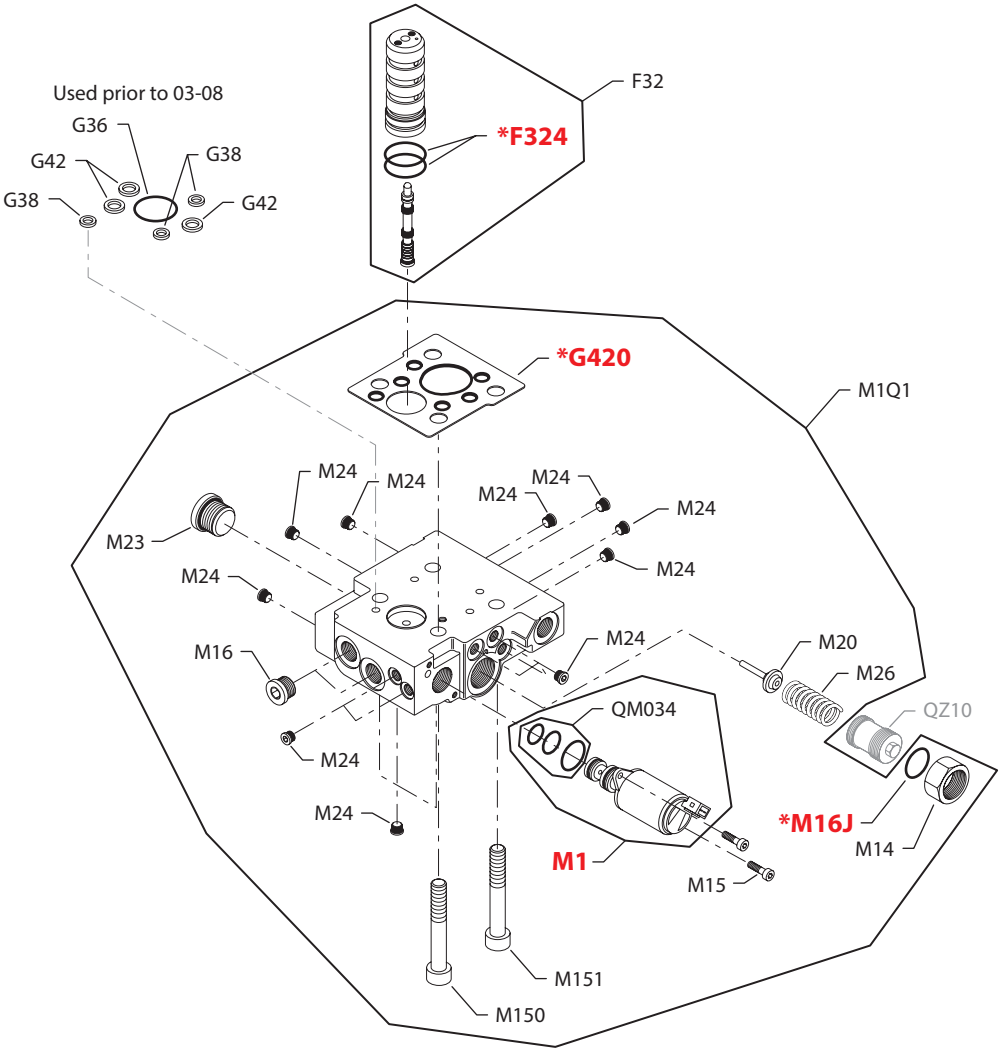

E100 655E

* = included in base motor seal kit Q210

Enlarged **bold** type item numbers are recommended part to stock for servicing.

Variable Displacement Motor

Electric proportional

Order code	Item	Date begin	Date end	Part number	Part name	Qty. per model/kit
D7	F32	99-35		727115	4-way valve assembly	1
	F324	99-35		730036	O-ring	2
	G36	99-35	03-07	364968	O-ring (SB-2002-001)	1
	G38	99-35	03-07	792739	O-ring (SB-2002-001)	3
	G42	99-35	03-07	754580	O-ring (SB-2002-001)	3
	G420	03-08		511810	Gasket/O-ring seal (SB-2002-001)	1
	M1	99-35		518080	Solenoid valve, 12 volt, Jet connector	1
	M1Q1	99-35		518257	Control kit, 12 volt, Jet connector	1
	M14	99-35		342709	Nut	1
	M15	99-35		067694	Screw	2
	M16	99-35		140644	Plug assembly	2
	M16J	99-35		001149 (9004201-6200)	O-ring	1
	M20	99-35		501876	PCOR spool	1
	M23	99-35		315325	Plug assembly	1
	M24	99-35		11040532	Plug	15
	M26	99-35		509152	Spring	1
	M150	99-35		739664	Screw	2
	M151	99-35		680686	Screw	2
	QM034	99-35		11099849	Solenoid valve seal kit	1
D8	F32	99-35		727115	4-way valve assembly	1
	F324	99-35		730036	O-ring	2
	G36	99-35	03-07	364968	O-ring (SB-2002-001)	1
	G38	99-35	03-07	792739	O-ring (SB-2002-001)	3
	G42	99-35	03-07	754580	O-ring (SB-2002-001)	3
	G420	03-08		511810	Gasket/O-ring seal (SB-2002-001)	1
	M1	99-35		518081	Solenoid valve, 24 volt, Jet connector	1
	M1Q1	99-35		518256	Control kit, 24 volt, Jet connector	1
	M14	99-35		342709	Nut	1
	M15	99-35		067694	Screw	2
	M16	99-35		140644	Plug assembly	2
	M16J	99-35		001149 (9004201-6200)	O-ring	1
	M20	99-35		501876	PCOR spool	1
	M23	99-35		315325	Plug assembly	1
	M24	99-35		11040532	Plug	15
	M26	99-35		509152	Spring	1
	M150	99-35		739664	Screw	2
	M151	99-35		680686	Screw	2
	QM034	99-35		11099849	Solenoid valve seal kit	1

Variable Displacement Motor

(E1 & E2)

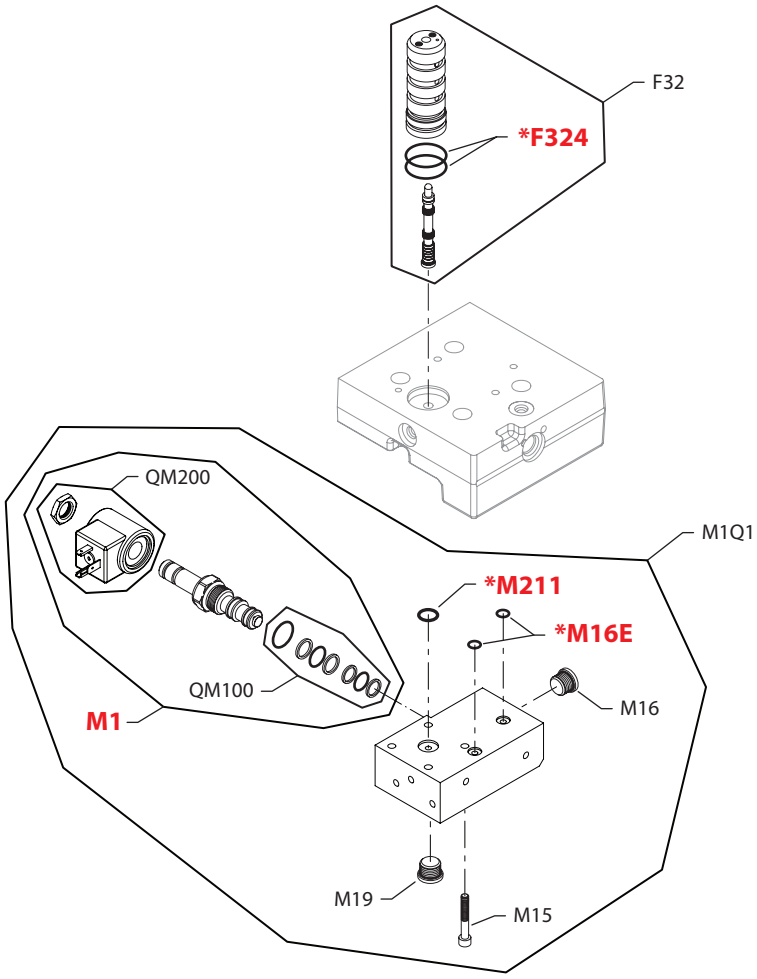

E100 257E

* = included in base motor seal kit Q210

Enlarged **bold** type item numbers are recommended part to stock for servicing.

Variable Displacement Motor

Electric 2-position

Order code	Item	Date begin	Date end	Part number	Part name	Qty. per model/kit
E1	F32	92-33		727115	4-way valve assembly	1
	F324	92-33		730036	O-ring	2
	M1	92-33		784942	Solenoid valve, 12 volt, DIN connector	1
	M1Q1	92-33		503618	Control kit, 12 volt, DIN connector	1
	M15	92-33		329599	Screw	4
	M16	92-33		140644	Plug assembly	1
	M16E	92-33		732479 (9004105-0100)	O-ring	2
	M19	92-33		140644	Plug assembly	1
	M211	92-33		365015	O-ring	1
	QM100	92-33		11146862	Solenoid valve seal kit	1
	QM200	92-33		11146863	Coil kit, 12 volt, DIN connector	1
E2	F32	92-33		727115	4-way valve assembly	1
	F324	92-33		730036	O-ring	2
	M1	92-33		784934	Solenoid valve, 24, volt, DIN connector	1
	M1Q1	92-33		503617	Control kit, 24 volt, DIN connector	1
	M15	92-33		329599	Screw	4
	M16	92-33		140644	Plug assembly	1
	M16E	92-33		732479 (9004105-0100)	O-ring	2
	M19	92-33		140644	Plug assembly	1
	M211	92-33		365015	O-ring	1
	QM100	92-33		11146862	Solenoid valve seal kit	1
	QM200	92-33		11146864	Coil kit, 24 volt, DIN connector	1

Variable Displacement Motor

(EP & EQ)

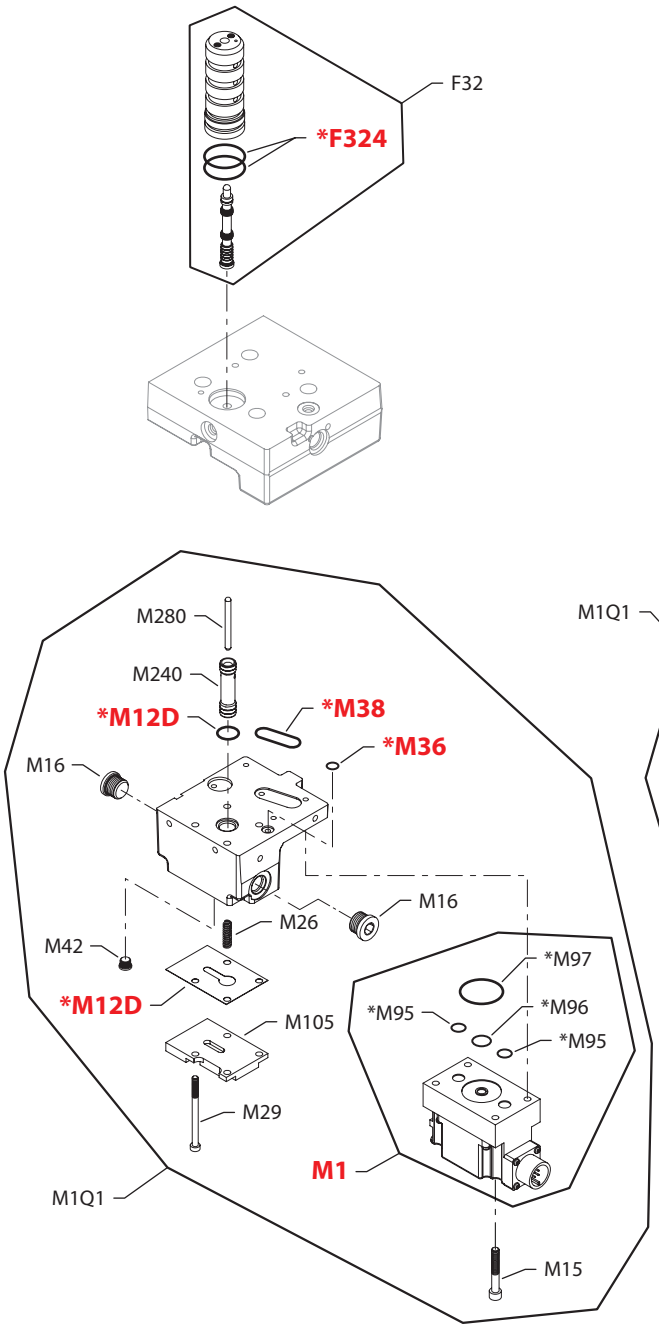

(ER & ES)

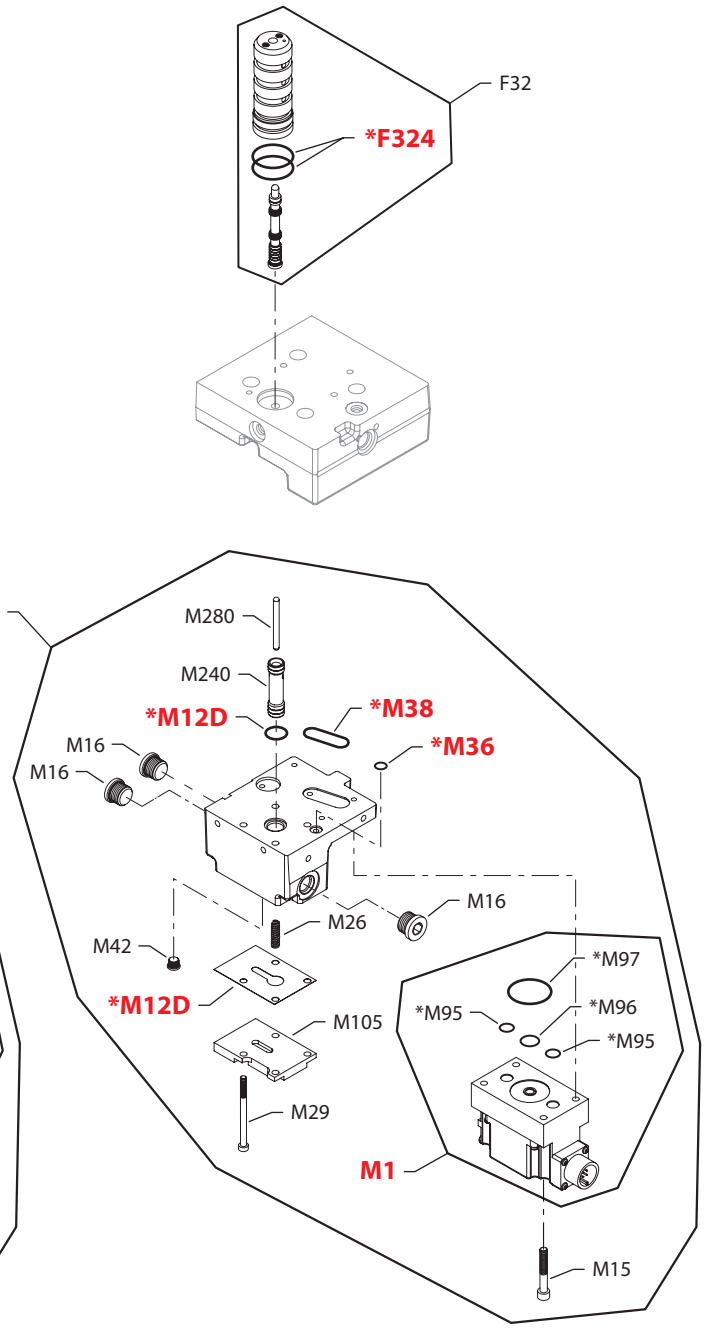

E100 258E

* = included in base motor seal kit Q210

Enlarged **bold** type item numbers are recommended part to stock for servicing.

Variable Displacement Motor

Electric proportional common parts

Order code	Item	Date begin	Date end	Part number	Part name	Qty. per model/kit
	F32	92-33		753186	4-way valve assembly	1
	F324	92-33		730036	O-ring	2
	M12D	92-33		504358	Gasket	1
	M15	92-33		067678 (9007315-0504)	Screw	4
	M26	92-33		717454	Spring	1
	M29	92-33		771832	Screw	4
	M30	92-33		056770 (9004105-0150)	O-ring	1
	M36	92-33		732479 (9004105-0100)	O-ring	1
	M38	92-33		011395 (9004104-0230)	O-ring	1
	M42	92-33		11040532	Plug assembly	1
	M95	92-33		9004104-0120	O-ring	2
	M96	92-33		9004104-0140	O-ring	1
	M97	92-33		9004104-0240	O-ring	1
	M105	92-33		751883	Cover	1
	M240	92-33		741942	Piston	1
	M280	92-33		742320	Pin	1

Electric proportional

EP	M1	92-33		MCV110A1058	PCP, Packard connector	1
	M16	92-33		140644	Plug assembly	2
	M1Q1	92-33		503791	Control kit, Packard connector	1
EQ	M1	92-33		MCV110A1017	PCP, MS connector	1
	M16	92-33		140644	Plug assembly	2
	M1Q1	92-33		503790	Control kit, MS connector	1
ER	M1	95-17		MCV110A1058	PCP, Packard connector	1
	M16	92-33		140644	Plug assembly	3
	M1Q1	95-17		507391	Control kit, Packard connector	1
ES	M1	95-17		MCV110A1017	PCP, MS connector	1
	M16	92-33		140644	Plug assembly	3
	M1Q1	95-17		507393	Control kit, MS connector	1

Variable Displacement Motor

(F1 & F2)

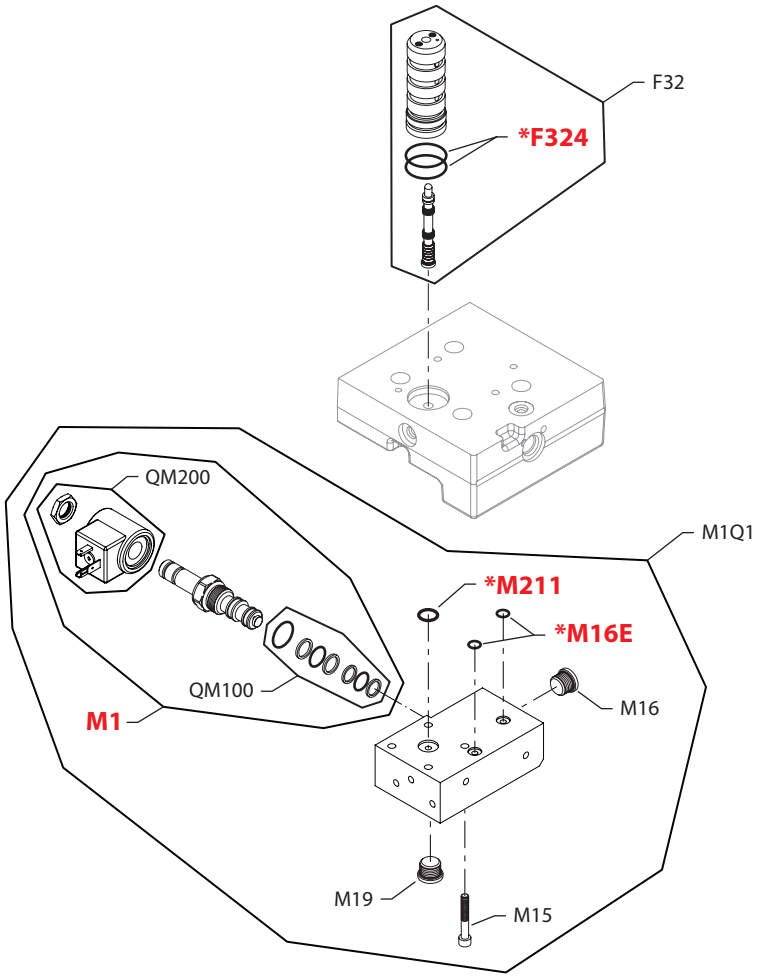

E100 257E

* = included in base motor seal kit Q210

Enlarged **bold** type item numbers are recommended part to stock for servicing.

Variable Displacement Motor

Electric 2-position

Order code	Item	Date begin	Date end	Part number	Part name	Qty. per model/kit
F1	F32	92-33		500820	4-way valve assembly	1
	F324	92-33		730036	O-ring	2
	M1	92-33		784942	Solenoid valve, 12 volt, DIN connector	1
	M1Q1	92-33		503618	Control kit, 12 volt, DIN connector	1
	M15	92-33		329599	Screw	4
	M16	92-33		140644	Plug assembly	1
	M16E	92-33		732479 (9004105-0100)	O-ring	2
	M19	92-33		140644	Plug assembly	1
	M211	92-33		365015	O-ring	1
	QM100	92-33		11146862	Solenoid valve seal kit	1
	QM200	92-33		11146863	Coil kit, 12 volt, DIN connector	1
F2	F32	92-33		500820	4-way valve assembly	1
	F324	92-33		730036	O-ring	2
	M1	92-33		784934	Solenoid valve, 24, volt, DIN connector	1
	M1Q1	92-33		503617	Control kit, 24 volt, DIN connector	1
	M15	92-33		329599	Screw	4
	M16	92-33		140644	Plug assembly	1
	M16E	92-33		732479 (9004105-0100)	O-ring	2
	M19	92-33		140644	Plug assembly	1
	M211	92-33		365015	O-ring	1
	QM100	92-33		11146862	Solenoid valve seal kit	1
	QM200	92-33		11146864	Coil kit, 24 volt, DIN connector	1

Variable Displacement Motor

(H1 & H2)

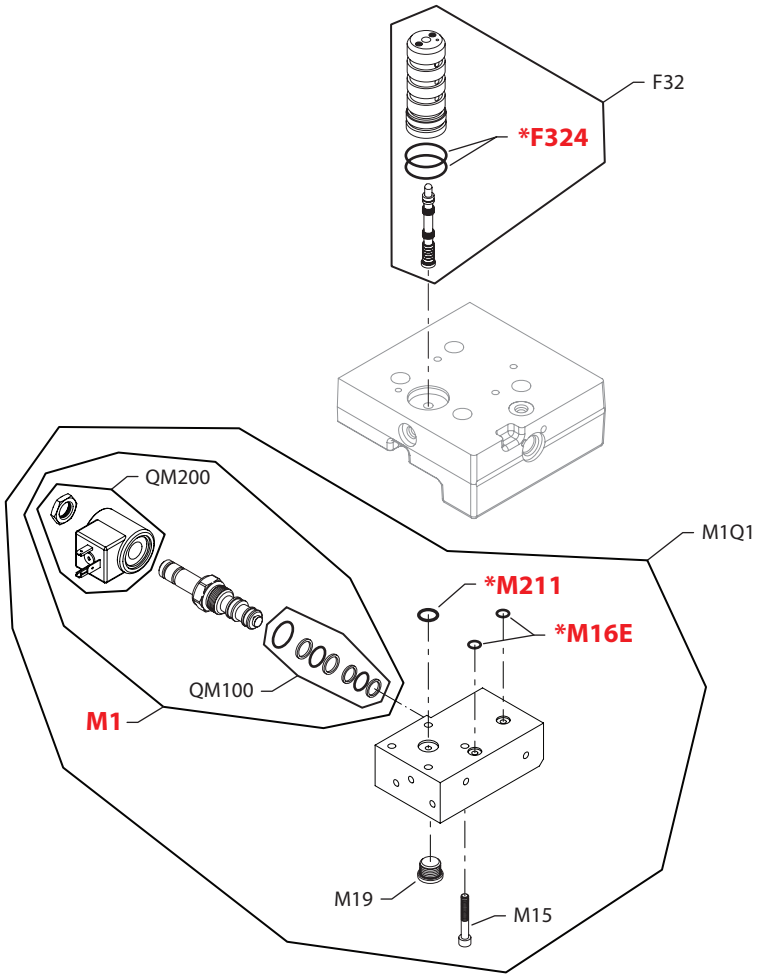

E100 260E

* = included in base motor seal kit Q210

Enlarged **bold** type item numbers are recommended part to stock for servicing.

Variable Displacement Motor

Hydraulic proportional w/maximum angle override

Order code	Item	Date begin	Date end	Part number	Part name	Qty. per model/kit
H1	F32	92-33		727115	4-way valve assembly	1
	F324	92-33		730036	O-ring	2
	M1	92-33		784942	Solenoid valve, 12 volt, DIN connector	1
	M1Q1	92-33		503613	Control kit, 12 volt, DIN connector	1
	M15	92-33		329599	Screw	4
	M16E	92-33		732479 (9004105-0100)	O-ring	2
	M19	92-33		140644	Plug assembly	1
	M211	92-33		365015	O-ring	1
	QM100	92-33		11146862	Solenoid valve seal kit	1
	QM200	92-33		11146863	Coil kit, 12 volt, DIN connector	1
H2	F32	92-33		727115	4-way valve assembly	1
	F324	92-33		730036	O-ring	2
	M1	92-33		784934	Solenoid valve, 24, volt, DIN connector	1
	M1Q1	92-33		503614	Control kit, 24 volt, DIN connector	1
	M15	92-33		329599	Screw	4
	M16E	92-33		732479 (9004105-0100)	O-ring	2
	M19	92-33		140644	Plug assembly	1
	M211	92-33		365015	O-ring	1
	QM100	92-33		11146862	Solenoid valve seal kit	1
	QM200	92-33		11146864	Coil kit, 24 volt, DIN connector	1

Variable Displacement Motor

(H3 & H4)

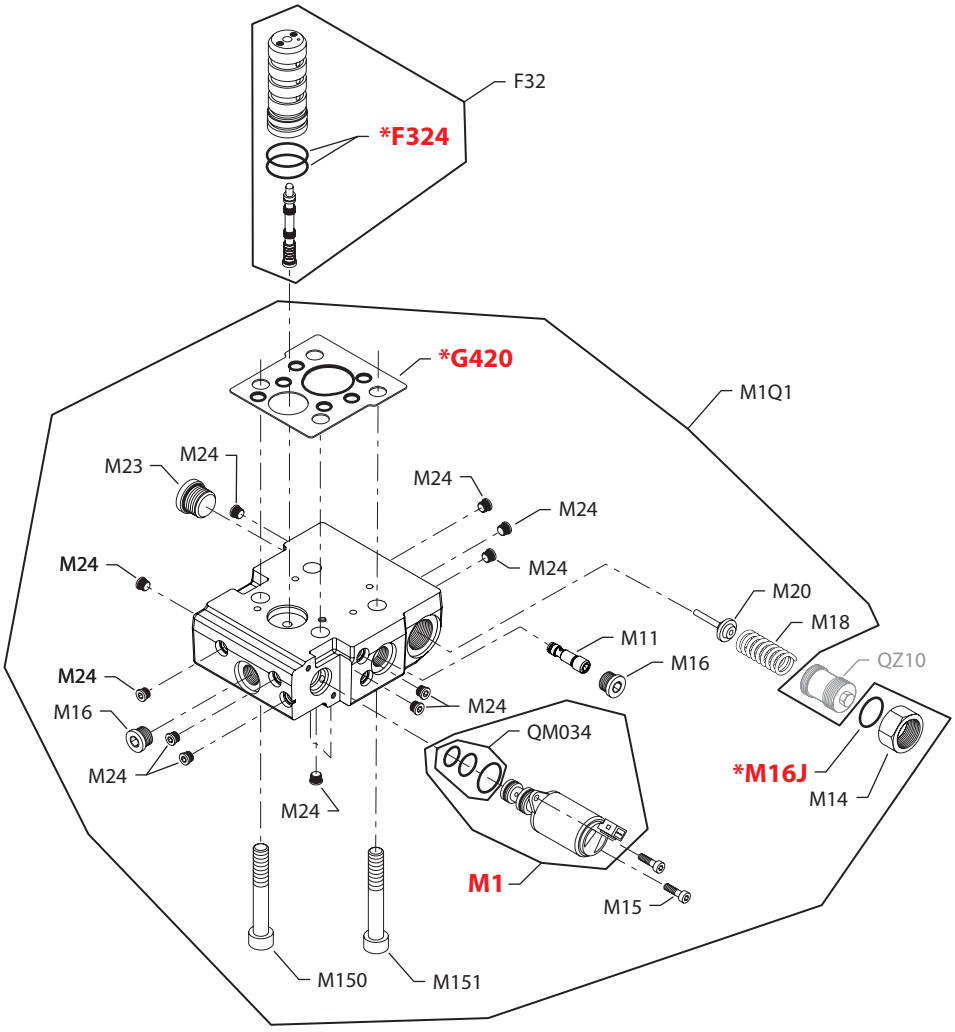

E103 123E

* = included in base motor seal kit Q210

Enlarged **bold** type item numbers are recommended part to stock for servicing.

Variable Displacement Motor

Electric proportional w/pressure reducing

Order code	Item	Date begin	Date end	Part number	Part name	Qty. per model/kit
H3	F32	07-21		727115	4-way valve assembly	1
	F324	07-21		730036	O-ring	2
	G420	07-21		511810	Gasket/O-ring seal	1
	M1	07-21		518080	Solenoid valve, 12 volt, 25 bar, Jet connector	1
	M1Q1	07-21		11097916	Control kit, 12 volt, 25 bar, Jet connector	1
	M11	07-21		11000893	Shuttle valve	1
	M14	07-21		342709 (9003575-0101)	Nut	1
	M15	07-21		067694	Screw	2
	M16	07-21		140644	Plug assembly	2
	M16J	07-21		001149 (9004201-6200)	O-ring	1
	M20	07-21		501876	PCOR spool	1
	M23	07-21		315325 (9005110-8700)	Plug assembly	1
	M24	07-21		11040532	Plug	15
	M26	07-21		509152	Spring	1
	M150	07-21		739664	Screw	2
	M151	07-21		739664	Screw	2
	QM034	07-21		11099849	Solenoid valve seal kit	1
H4	F32	07-21		727115	4-way valve assembly	1
	F324	07-21		730036	O-ring	2
	G420	07-21		511810	Gasket/O-ring seal	1
	M1	07-21		518081	Solenoid valve, 24 volt, 25 bar, Jet connector	1
	M1Q1	07-21		11013385	Control kit, 24 volt, 25 bar, Jet connector	1
	M11	07-21		11000893	Shuttle valve	1
	M14	07-21		342709 (9003575-0101)	Nut	1
	M15	07-21		067694	Screw	2
	M16	07-21		140644	Plug assembly	2
	M16J	07-21		001149 (9004201-6200)	O-ring	1
	M20	07-21		501876	PCOR spool	1
	M23	07-21		315325 (9005110-8700)	Plug assembly	1
	M24	07-21		11040532	Plug	15
	M26	07-21		509152	Spring	1
	M150	07-21		739664	Screw	2
	M151	07-21		739664	Screw	2
	QM034	07-21		11099849	Solenoid valve seal kit	1

Variable Displacement Motor

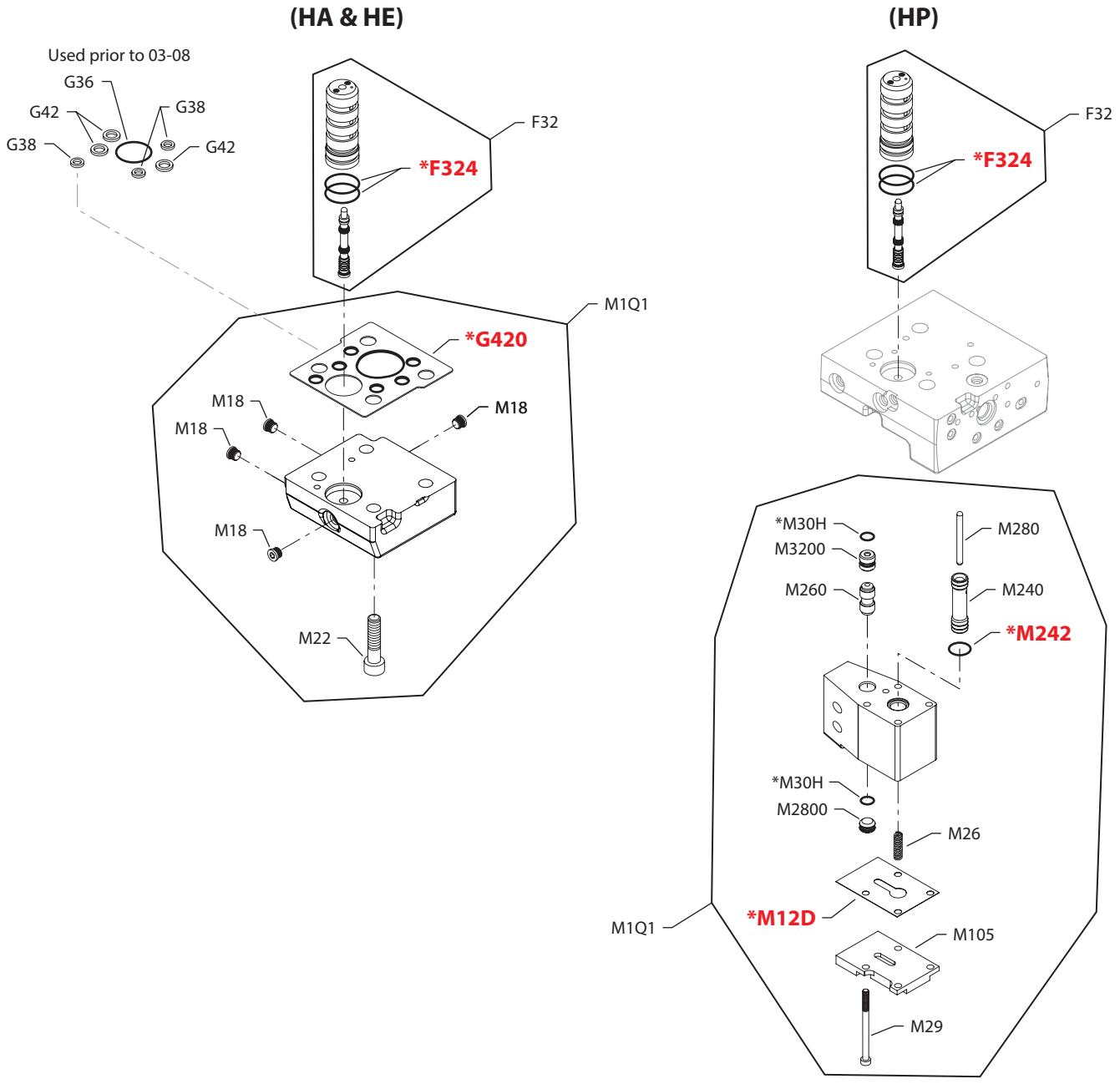

E103 145E

* = included in base motor seal kit Q210

Enlarged **bold** type item numbers are recommended part to stock for servicing.

Variable Displacement Motor

Hydraulic proportional

Order code	Item	Date begin	Date end	Part number	Part name	Qty. per model/kit
HA	F32	94-12		727115	4-way valve assembly	1
	F324	94-12		730036	O-ring	2
	G36	94-12	03-07	364968	O-ring (SB-2002-001)	1
	G38	94-12	03-07	792739	O-ring (SB-2002-001)	3
	G42	94-12	03-07	754580	O-ring (SB-2002-001)	3
	G420	03-08		511810	Gasket/O-ring seal (SB-2002-001)	1
	M1Q1	94-12		518237	Control kit	1
	M18	94-12		11040532	Plug assembly	4
	M22	94-12		732982 (9007314-1009)	Screw	4
HE	F32	94-12		727115	4-way valve assembly	1
	F324	94-12		730036	O-ring	2
	G36	94-12	03-07	364968	O-ring (SB-2002-001)	1
	G38	94-12	03-07	792739	O-ring (SB-2002-001)	3
	G42	94-12	03-07	754580	O-ring (SB-2002-001)	3
	G420	03-08		511810	Gasket/O-ring seal (SB-2002-001)	1
	M1Q1	94-12		518237	Control kit	1
	M18	94-12		11040532	Plug assembly	4
	M22	94-12		732982 (9007314-1009)	Screw	4
HP	F32	92-33		753186	4-way valve assembly	1
	F324	92-33		730036	O-ring	2
	M1Q1	92-33		796482	Control kit	1
	M12D	92-33		504358	Gasket	1
	M26	92-33		717454	Spring	1
	M29	92-33		771832	Screw	4
	M30H	92-33		011296 (9004105-0120)	O-ring	2
	M105	92-33		751883	Cover	1
	M240	92-33		741942	Shuttle piston	1
	M242	92-33		056770	O-ring	1
	M260	92-33		751644	Shuttle valve	1
	M280	92-33		742320	Pin	1
	M2800	92-33		342246	Sealing plug	1
	M3200	92-33		353615	Sealing plug	1

Variable Displacement Motor

(HS)

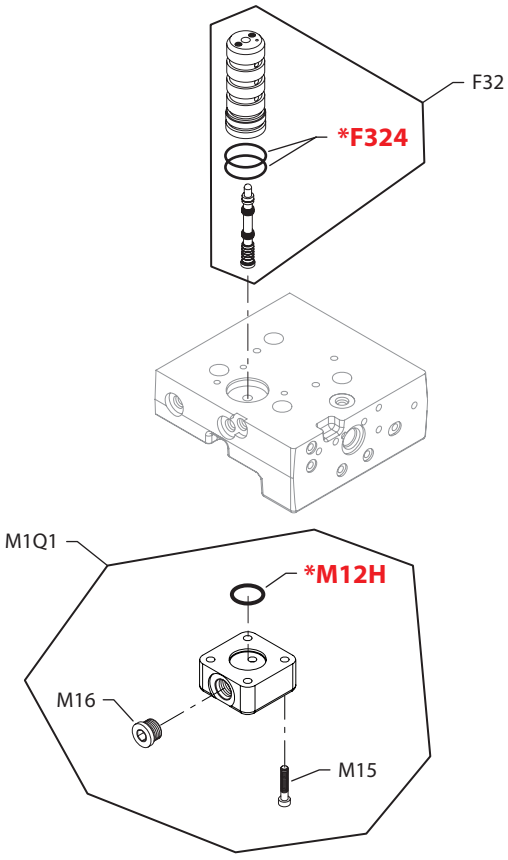

(HZ)

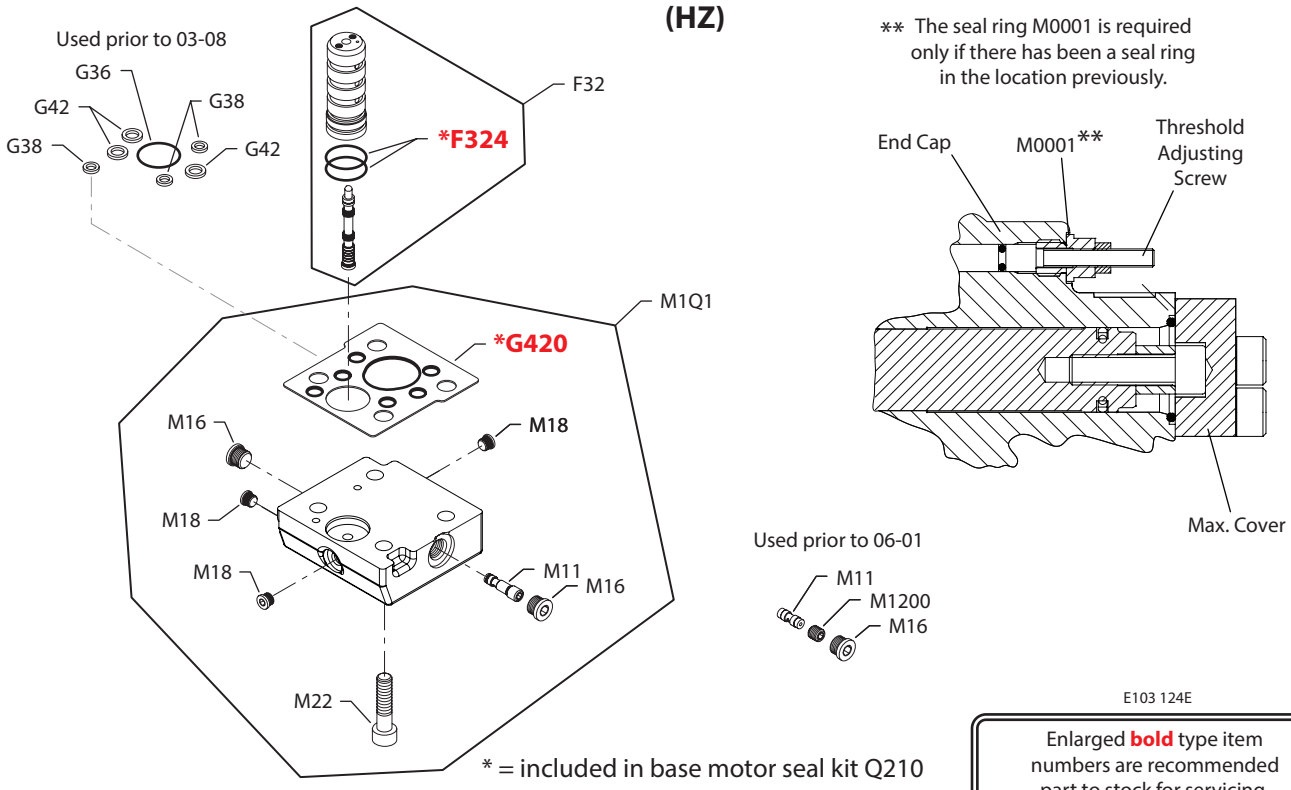

E103 124E

* = included in base motor seal kit Q210

Enlarged **bold** type item numbers are recommended part to stock for servicing.

Variable Displacement Motor

Hydraulic proportional

Order code	Item	Date begin	Date end	Part number	Part name	Qty. per model/kit
HS	F32	92-33		727115	4-way valve assembly	1
	F324	92-33		730036	O-ring	2
	M1Q1	92-33		503804	Control kit	1
	M12H	92-33		364984	O-ring	1
	M15	92-33		124115	Screw	4
	M16	92-33		140644	Plug assembly	1
HZ	F32	92-33		727115	4-way valve assembly	1
	F324	92-33		730036	O-ring	2
	G36	92-33	03-07	364968	O-ring (SB-2002-001)	1
	G38	92-33	03-07	792739	O-ring (SB-2002-001)	3
	G42	92-33	03-07	754580	O-ring (SB-2002-001)	3
	G420	03-08		511810	Gasket/O-ring seal (SB-2002-001)	1
	M1Q1	92-33		518221	Control kit (SB-2002-001)	1
	M001	07-16		084673	Seal ring	1
	M11	06-01		11000893	Shuttle valve	1
	M11	92-33	05-52	759415	Shuttle valve	1
	M16	92-33		140644	Plug assembly	2
	M18	92-33		11040532	Plug	3
	M22	92-33		732982	Screw	4
	M1200	92-33	05-52	759423	Orifice plug	1

Variable Displacement Motor

(J1 & J2)

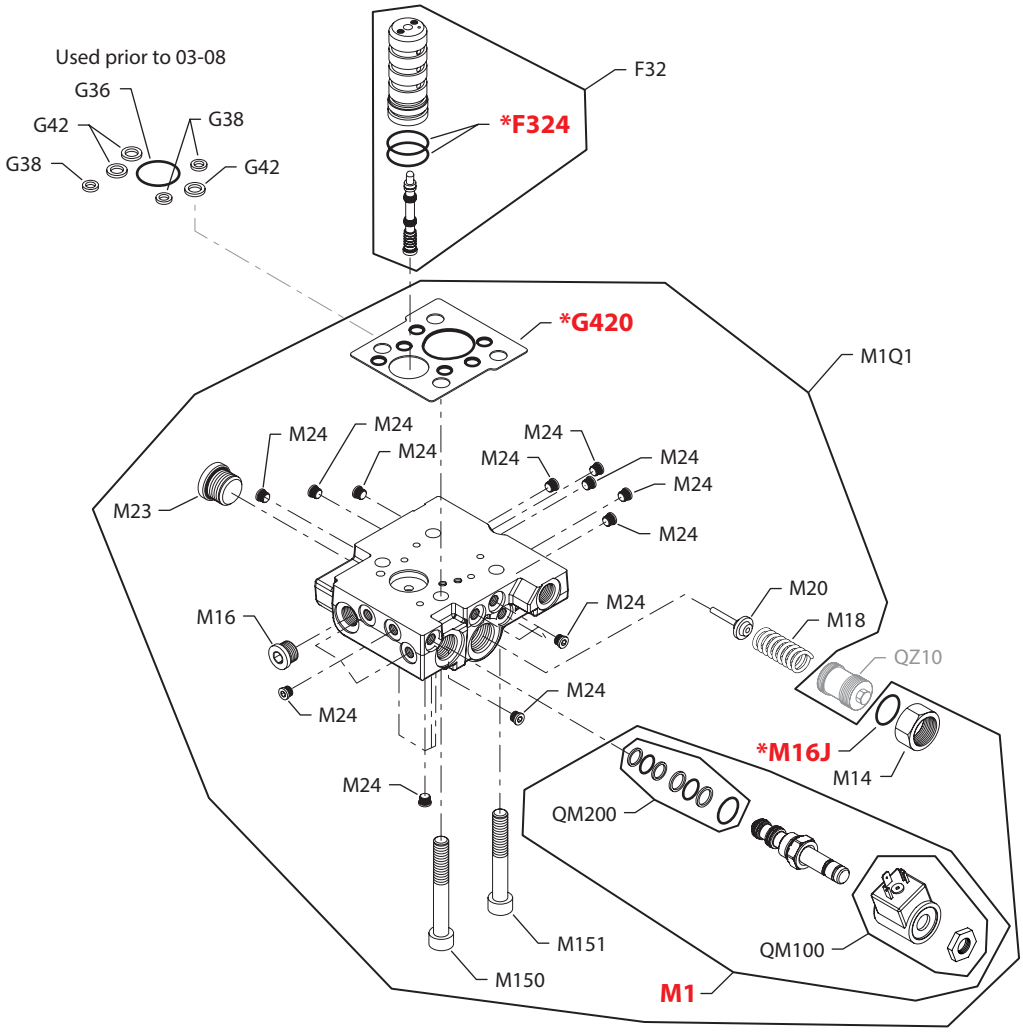

E100 305E

* = included in base motor seal kit Q210

Enlarged **bold** type item numbers are recommended part to stock for servicing.

Variable Displacement Motor

Hydraulic proportional with electric override

Order code	Item	Date begin	Date end	Part number	Part name	Qty. per model/kit
J1	F32	94-47		727115	4-way valve assembly	1
	F324	94-47		730036	O-ring	2
	G36	94-47	03-07	364968	O-ring (SB-2002-001)	1
	G38	94-47	03-07	792739	O-ring (SB-2002-001)	3
	G42	94-47	03-07	754580	O-ring (SB-2002-001)	3
	G420	03-08		511810	Gasket/O-ring seal (SB-2002-001)	1
	M1	94-47		784942	Solenoid valve, 12 volt, DIN connector	1
	M1Q1	94-47		518230	Control kit, 12 volt, DIN connector	1
	M14	94-47		342709 (9003575-0101)	Nut	1
	M16	94-47		140644	Plug assembly	1
	M16J	94-47		001149 (9004201-6200)	O-ring	1
	M20	94-47		746016	PCOR spool assembly	1
	M23	94-47		315325 (9005110-8700)	Plug assembly	1
	M24	94-47		11040532	Plug assembly	21
	M26	94-47		509152	Spring	1
	M150	94-47		739664	Screw	2
	M151	94-47		680686	Screw	2
	QM100	94-47		11146862	Solenoid valve seal kit	1
	QM200	94-47		11146863	Coil kit, 12 volt	1
J2	F32	94-47		727115	4-way valve assembly	1
	F324	94-47		730036	O-ring	2
	G36	94-47	03-07	364968	O-ring (SB-2002-001)	1
	G38	94-47	03-07	792739	O-ring (SB-2002-001)	3
	G42	94-47	03-07	754580	O-ring (SB-2002-001)	3
	G420	03-08		511810	Gasket/O-ring seal (SB-2002-001)	1
	M1	94-47		784934	Solenoid valve, 24 volt, DIN connector	1
	M1Q1	94-47		518238	Control kit, 24 volt, DIN connector	1
	M14	94-47		342709 (9003575-0101)	Nut	1
	M16	94-47		140644	Plug assembly	1
	M16J	94-47		001149 (9004201-6200)	O-ring	1
	M20	94-47		746016	PCOR spool assembly	1
	M23	94-47		315325 (9005110-8700)	Plug assembly	1
	M24	94-47		11040532	Plug assembly	21
	M26	94-47		509152	Spring	1
	M150	94-47		739664	Screw	2
	M151	94-47		680686	Screw	2
	QM100	94-47		11146862	Solenoid valve seal kit	1
	QM200	94-47		11146864	Coil kit, 24 volt	1

Variable Displacement Motor

(JA)

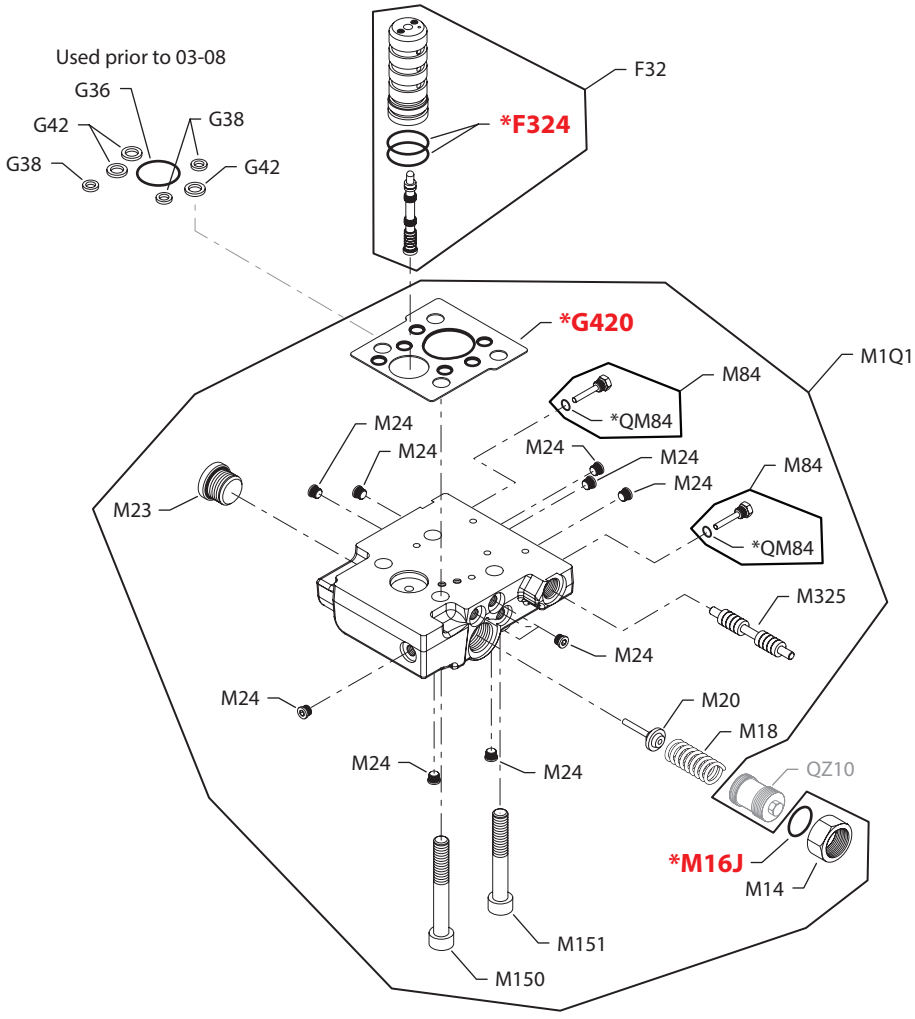

E100 306E

* = included in base motor seal kit Q210

Enlarged **bold** type item numbers are recommended part to stock for servicing.

Variable Displacement Motor

Hydraulic proportional

Order code	Item	Date begin	Date end	Part number	Part name	Qty. per model/kit
JA	F32	95-50		727115	4-way valve assembly	1
	F324	95-50		730036	O-ring	2
	G36	95-50	03-07	364968	O-ring (SB-2002-001)	1
	G38	95-50	03-07	792739	O-ring (SB-2002-001)	3
	G42	95-50	03-07	754580	O-ring (SB-2002-001)	3
	G420	03-08		511810	Gasket/O-ring seal (SB-2002-001)	1
	M1Q1	95-50		518246	Control kit	1
	M14	95-50		342709 (9003575-0101)	Nut	1
	M16J	95-50		001149 (9004201-6200)	O-ring	1
	M20	95-50		501876	PCOR spool assembly	1
	M23	95-50		315325 (9005110-8700)	Plug assembly	1
	M24	95-50		11040532	Plug assembly	11
	M26	95-50		509152	Spring	1
	M84	95-50		735266	Plug assembly	2
	M150	95-50		739664	Screw	2
	M151	95-50		680686	Screw	2
	M325	95-50		346080	Spool	1
	QM84	95-50		039297 (9004201-1200)	O-ring	1

Variable Displacement Motor

(K1 & K2)

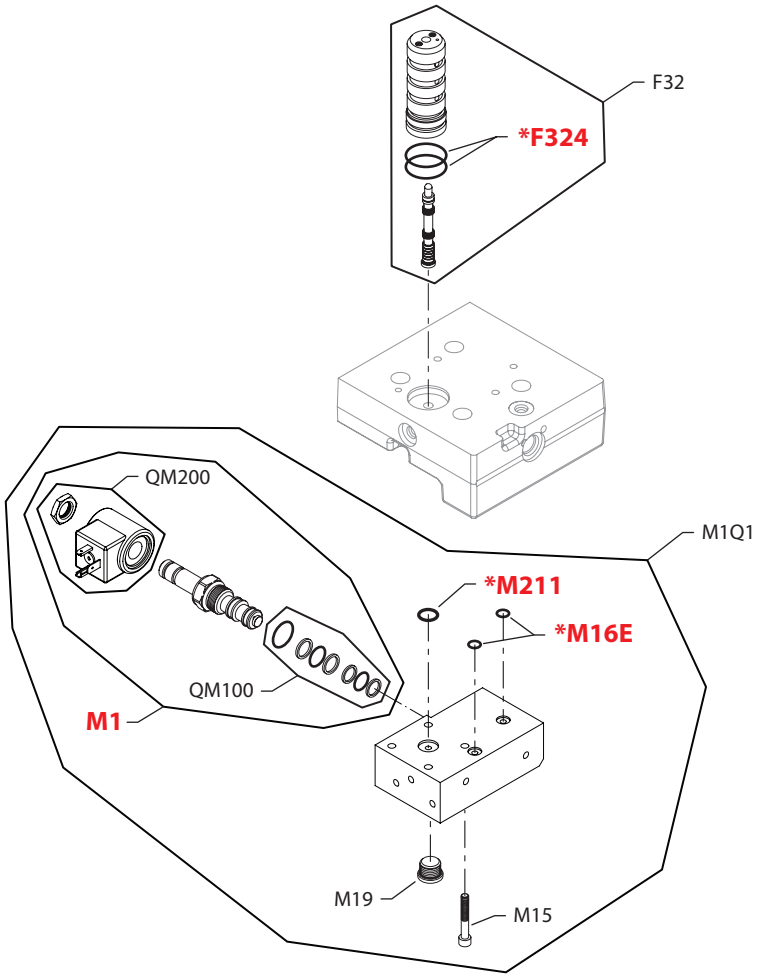

E103 125E

* = included in base motor seal kit Q210

Enlarged **bold** type item numbers are recommended part to stock for servicing.

Variable Displacement Motor

Hydraulic proportional with electric override

Order code	Item	Date begin	Date end	Part number	Part name	Qty. per model/kit
K1	F32	91-35		727115	4-way valve assembly	1
	F324	91-35		730036	O-ring	2
	M1	91-35		784942	Solenoid valve, 12 volt, DIN connector	1
	M1Q1	91-35		503620	Control kit, 12 volt, DIN connector	1
	M15	91-35		329599	Screw	4
	M16E	91-35		732479 (9004105-0100)	O-ring	2
	M19	91-35		140644	Plug assembly	1
	M211	91-35		365015	O-ring	1
K2	F32	91-35		727115	4-way valve assembly	1
	F324	91-35		730036	O-ring	2
	M1	91-35		784934	Solenoid valve, 24 volt, DIN connector	1
	M1Q1	91-35		503806	Control kit, 24 volt, DIN connector	1
	M15	91-35		329599	Screw	4
	M16E	91-35		732479 (9004105-0100)	O-ring	2
	M19	91-35		140644	Plug assembly	1
	M211	91-35		365015	O-ring	1

Variable Displacement Motor

(L1, L2 & L7)

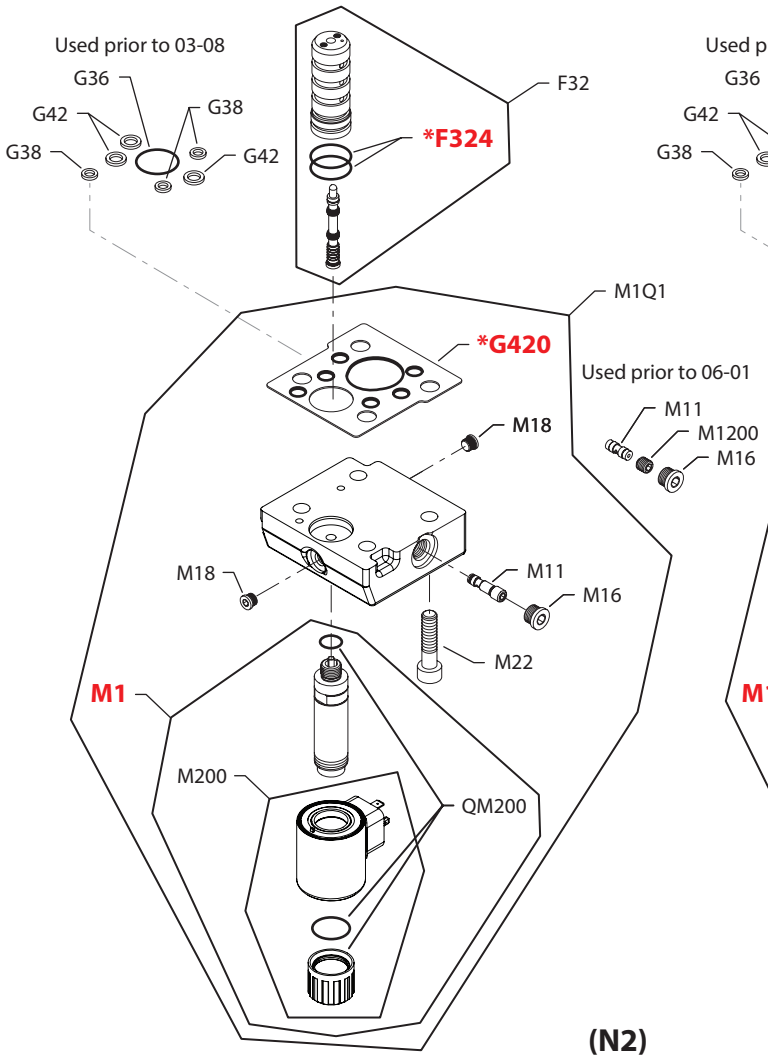

(L3 & L4)

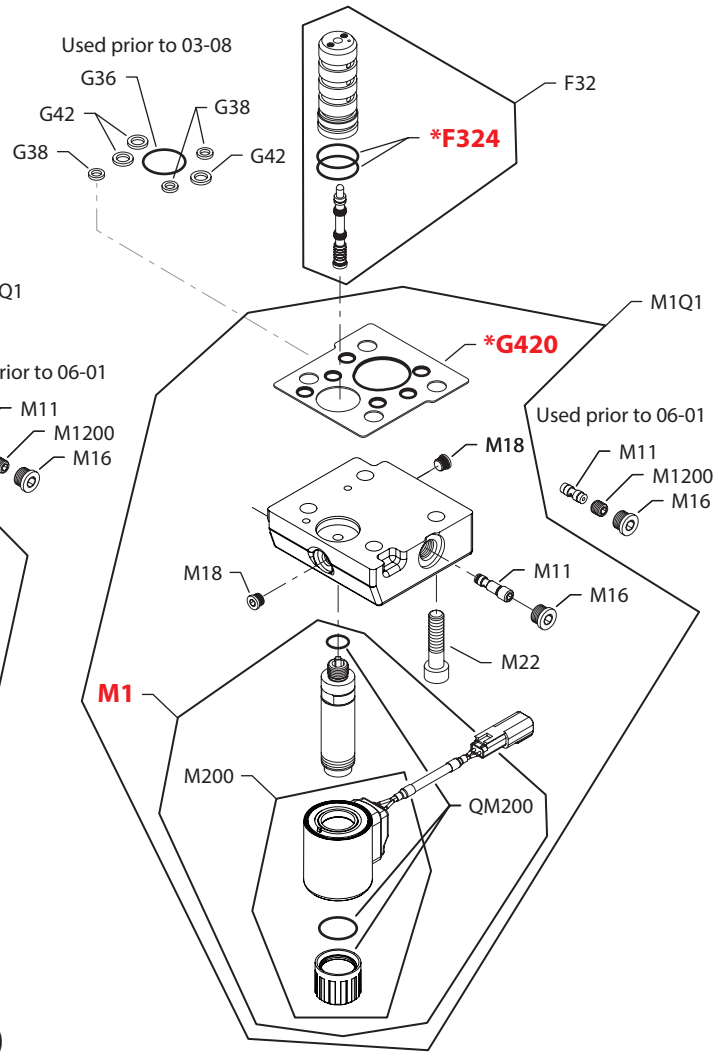

(N2)

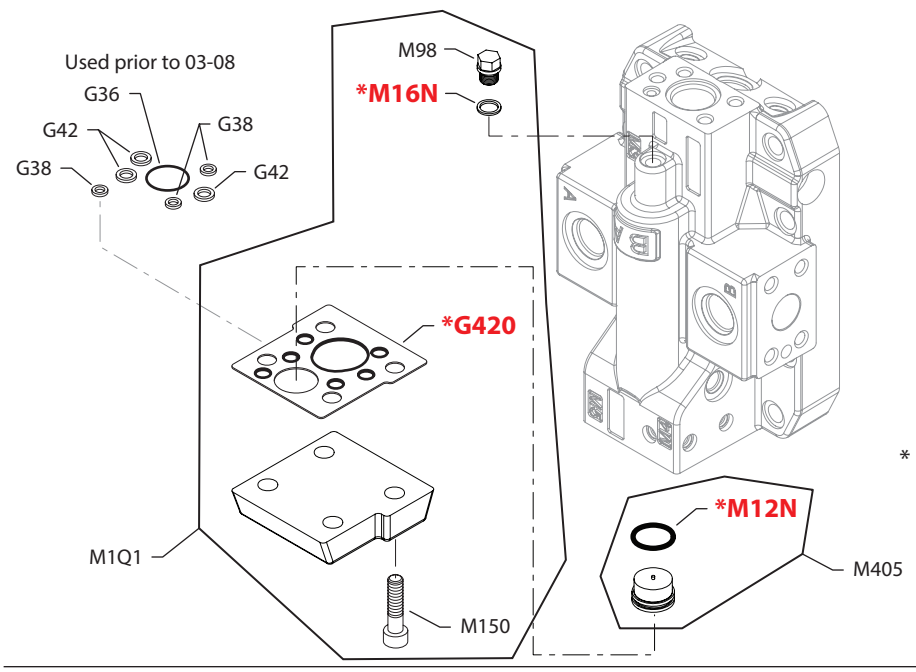

* = included in base motor seal kit Q210

E100 307E

Enlarged **bold** type item numbers are recommended part to stock for servicing.

Variable Displacement Motor

Electric proportional common parts

Order code	Item	Date begin	Date end	Part number	Part name	Qty. per model/kit
	F32	95-35		509845	4-way valve assembly	1
	F324	95-35		730036	O-ring	2
	G36	95-35	03-07	364968	O-ring (SB-2002-001)	1
	G38	95-35	03-07	792739	O-ring (SB-2002-001)	3
	G42	95-35	03-07	754580	O-ring (SB-2002-001)	3
	G420	03-08		511810	Gasket/O-ring seal (SB-2002-001)	1
	M11	06-01		11000893	Shuttle valve	1
	M11	92-33	05-52	759415	Shuttle valve	1
	M16	92-33		140644	Plug assembly	1
	M18	92-33		11040532	Plug	2
	M22	92-33		727586	Screw	4
	M1200	92-33	05-52	759423	Orifice plug	1

Electric proportional

L1	M1	95-35		11026442	Solenoid valve, 12 volt, DIN connector	1
	M1Q1	95-35		518247	Control kit, 12 volt, DIN connector	1
	M200	95-35		11026452	Coil kit, 12 volt, DIN connector	1
	QM200	95-35		11121251	Coil nut kit	1
L2	M1	95-35		11026443	Solenoid valve, 24 volt, DIN connector	1
	M1Q1	95-35		518243	Control kit, 24 volt, DIN connector	1
	M200	95-35		11026453	Coil kit, 24 volt, DIN connector	1
	QM200	95-35		11121251	Coil nut kit	1
L3	M1	01-19		11026447	Solenoid, 12 volt, Deutsch connector	1
	M1Q1	01-19		518259	Control kit, 12 volt, Deutsch connector	1
	M200	95-35		11026454	Coil kit, 12 volt, Deutsch connector	1
	QM200	95-35		11121272	Coil nut kit	1
L4	M1	96-24		11048359	Solenoid, 24 volt, Jet connector	1
	M1Q1	96-24		11048356	Control kit, 24 volt, Jet connector	1
	M200	95-35		11048358	Coil kit, 24 volt, Jet connector	1
	QM200	95-35		11121272	Coil nut kit	1
L7	M1	96-24		11026438	Solenoid, 12 volt, Jet connector	1
	M1Q1	96-24		518249	Control kit, 12 volt, Jet connector	1
	M200	95-35		11026480	Coil kit, 12 volt, Jet connector	1
	QM200	95-35		11121251	Coil nut kit	1

Hydraulic 2-position

N2	G36	92-33	03-07	364968	O-ring (SB-2002-001)	1
	G38	92-33	03-07	792739	O-ring (SB-2002-001)	3
	G42	92-33	03-07	754580	O-ring (SB-2002-001)	3
	G420	03-08		511810	Gasket/O-ring seal (SB-2002-001)	1
	M1Q1	92-33		518226	Control kit	1
	M12N	92-33		730036	O-ring	1
	M16N	92-33		084673	Sealing ring	2
	M98	92-33		745331	Plug assembly	1
	M150	92-33		727586	Screw	4
	M405	92-33		510415	Sleeve assembly	1

Variable Displacement Motor

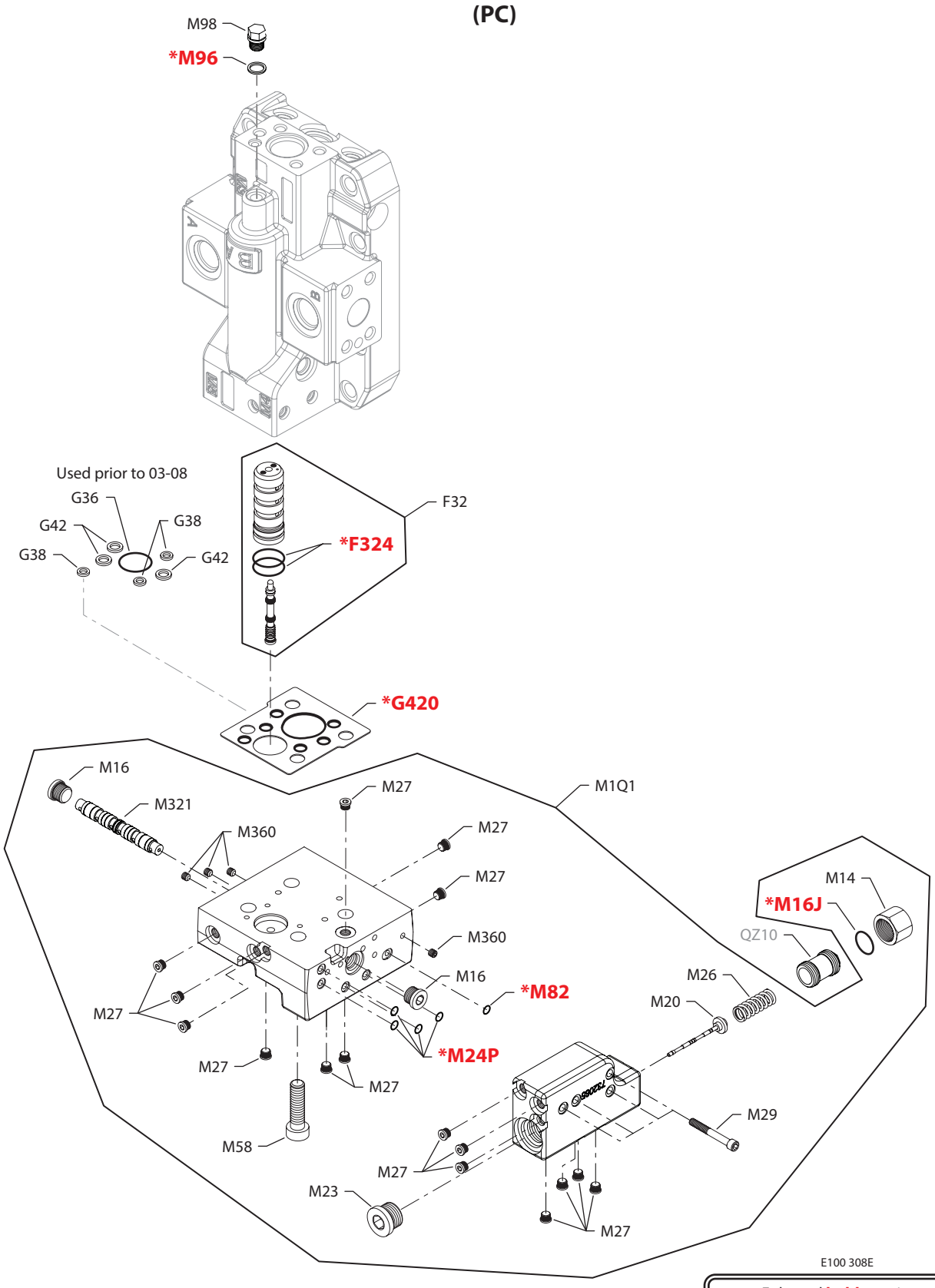

* = included in base motor seal kit Q210

Enlarged **bold** type item numbers are recommended part to stock for servicing.

Variable Displacement Motor

Pressure compensator

Order code	Item	Date begin	Date end	Part number	Part name	Qty. per model/kit
PC	F32	92-33	13-24	510416	4-way valve assembly	1
	F324	92-33	13-24	730036	O-ring	2
	G36	92-33	03-07	364968	O-ring (SB-2002-001)	1
	G38	92-33	03-07	792739	O-ring (SB-2002-001)	3
	G42	92-33	03-07	754580	O-ring (SB-2002-001)	3
	G420	03-08	13-24	511810	Gasket/O-ring seal (SB-2002-001)	1
	M1Q1	92-33	13-24	518223/P	Control kit, PC	1
	M14	92-33	13-24	342709 (9003575-0101)	Nut	1
	M16	92-33	13-24	140644	Plug assembly	2
	M16J	92-33	13-24	001149 (9004201-6200)	O-ring	1
	M20	92-33	13-24	746016	Relief valve	1
	M23	92-33	13-24	315325 (9005110-8700)	Plug assembly	1
	M24P	92-33	13-24	732479 (9004105-0100)	O-ring	4
	M26	92-33	13-24	509152	Spring	1
	M27	92-33	13-24	11040532	Plug assembly	16
	M29	92-33	13-24	713719 (9007314-0610)	Screw	4
	M58	92-33	13-24	732982 (9007314-1009)	Screw	4
	M82	92-33	13-24	732479 (9004105-0100)	O-ring	1
	M96	92-33	13-24	084673	Sealing ring	1
	M98	92-33	13-24	745331	Plug	1
	M321	92-33	13-24	519114	Shuttle valve assembly	1
	M360	92-33	13-24	092114 (9007712-0604)	Set screw	4

Variable Displacement Motor

(T1 & T2)

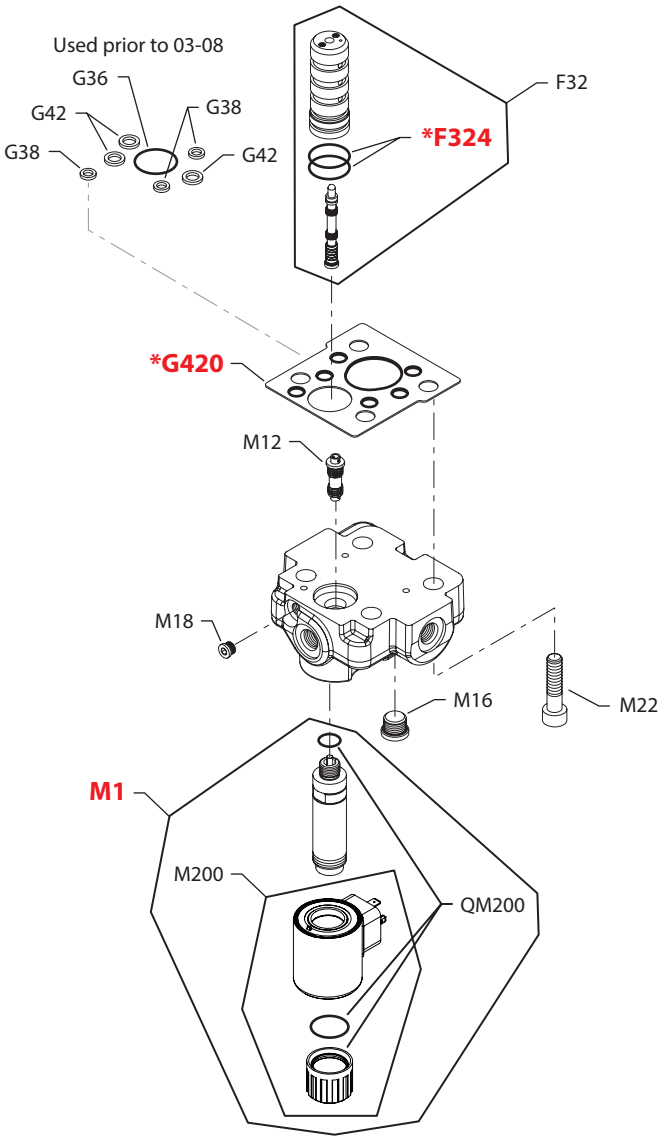

E100 333E

* = included in base motor seal kit Q210

Enlarged **bold** type item numbers are recommended part to stock for servicing.

Variable Displacement Motor

Electric 2-position

Order code	Item	Date begin	Date end	Part number	Part name	Qty. per model/kit
T1	F32	96-31		503380	4-way valve assembly	1
	F324	96-31		730036	O-ring	2
	G36	96-31	03-07	364968	O-ring (SB-2002-001)	1
	G38	96-31	03-07	792739	O-ring (SB-2002-001)	3
	G42	96-31	03-07	754580	O-ring (SB-2002-001)	3
	G420	03-08		511810	Gasket/O-ring seal (SB-2002-001)	1
	M1	96-31		11026435	Solenoid valve, 12 volt, DIN connector	1
	M12	96-31		11082448	Sensing piston	1
	M16	96-31		140644	Plug assembly	1
	M18	96-31		11040532	Plug assembly	1
	M22	96-31		732982 (9007314-1009)	Screw	4
	M200	96-31		11026448	Coil kit, 12 volt, Din connecto	1
	QM200	96-31		11121273	Coil nut kit	1
T2	F32	96-31		503380	4-way valve assembly	1
	F324	96-31		730036	O-ring	2
	G36	96-31	03-07	364968	O-ring (SB-2002-001)	1
	G38	96-31	03-07	792739	O-ring (SB-2002-001)	3
	G42	96-31	03-07	754580	O-ring (SB-2002-001)	3
	G420	03-08		511810	Gasket/O-ring seal (SB-2002-001)	1
	M1	96-31		11026436	Solenoid valve, 24 volt, DIN connector	1
	M12	96-31		Sensing piston	1	
	M16	96-31		140644	Plug assembly	1
	M18	96-31		11040532	Plug assembly	1
	M22	96-31		732982 (9007314-1009)	Screw	4
	M200	96-31		11026449	Coil kit, 24 volt, Din connector	1
	QM200	96-31		11121273	Coil nut kit	1

Variable Displacement Motor

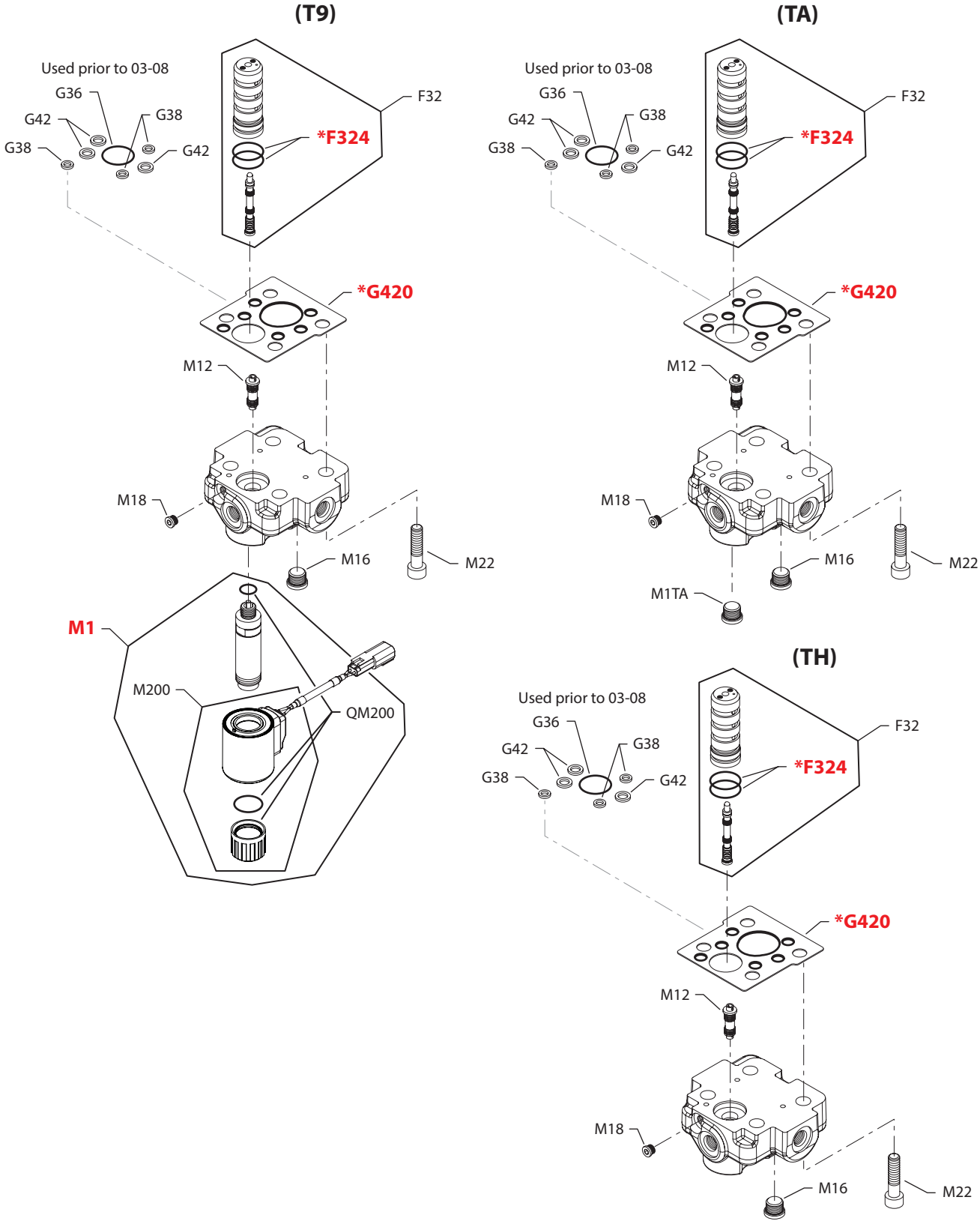

E100 334E

Enlarged **bold** type item numbers are recommended part to stock for servicing.

* = included in base motor seal kit Q210

Variable Displacement Motor

Electric 2-position with solenoid valve

Order code	Item	Date begin	Date end	Part number	Part name	Qty. per model/kit
T9	F32	08-51		503380	4-way valve assembly	1
	F324	08-51		730036	O-ring	2
	G420	08-51		511810	Gasket/O-ring seal (SB-2002-001)	1
	M12	08-51		11082448	Sensing piston	1
	M16	08-51		140644	Plug assembly	1
	M18	08-51		11040532	Plug assembly	1
	M22	08-51		732982 (9007314-1009)	Screw	4
	M1	08-51		11047613	Solenoid valve, 12 volt, Deutsch connector	1
	M200	08-51		11047612	Coil kit, 12 volt, Deutsch connector	1
	QM200	08-51		11121251	Coil nut kit	1

Pressure compensator

TA	F32	97-02		503380	4-way valve assembly	1
	F324	97-02		730036	O-ring	2
	G36	97-02	03-07	364968	O-ring (SB-2002-001)	1
	G38	97-02	03-07	792739	O-ring (SB-2002-001)	3
	G42	97-02	03-07	754580	O-ring (SB-2002-001)	3
	G420	03-08		511810	Gasket/O-ring seal (SB-2002-001)	1
	M1TA	97-02		140644	Plug assembly	1
	M12	97-02		11082448	Sensing piston	1
	M16	97-02		140644	Plug assembly	1
	M18	97-02		11040532	Plug assembly	1
	M22	97-02		732982	Screw	4

Hydraulic 2-position

TH	F32	97-02		503380	4-way valve assembly	1
	F324	97-02		730036	O-ring	2
	G36	97-02	03-07	364968	O-ring (SB-2002-001)	1
	G38	97-02	03-07	792739	O-ring (SB-2002-001)	3
	G42	97-02	03-07	754580	O-ring (SB-2002-001)	3
	G420	03-08		511810	Gasket/O-ring seal (SB-2002-001)	1
	M12	97-02		11083129	Sensing piston	1
	M16	97-02		140644	Plug assembly	1
	M18	97-02		11040532	Plug assembly	1
	M22	97-02		732982	Screw	4

Variable Displacement Motor

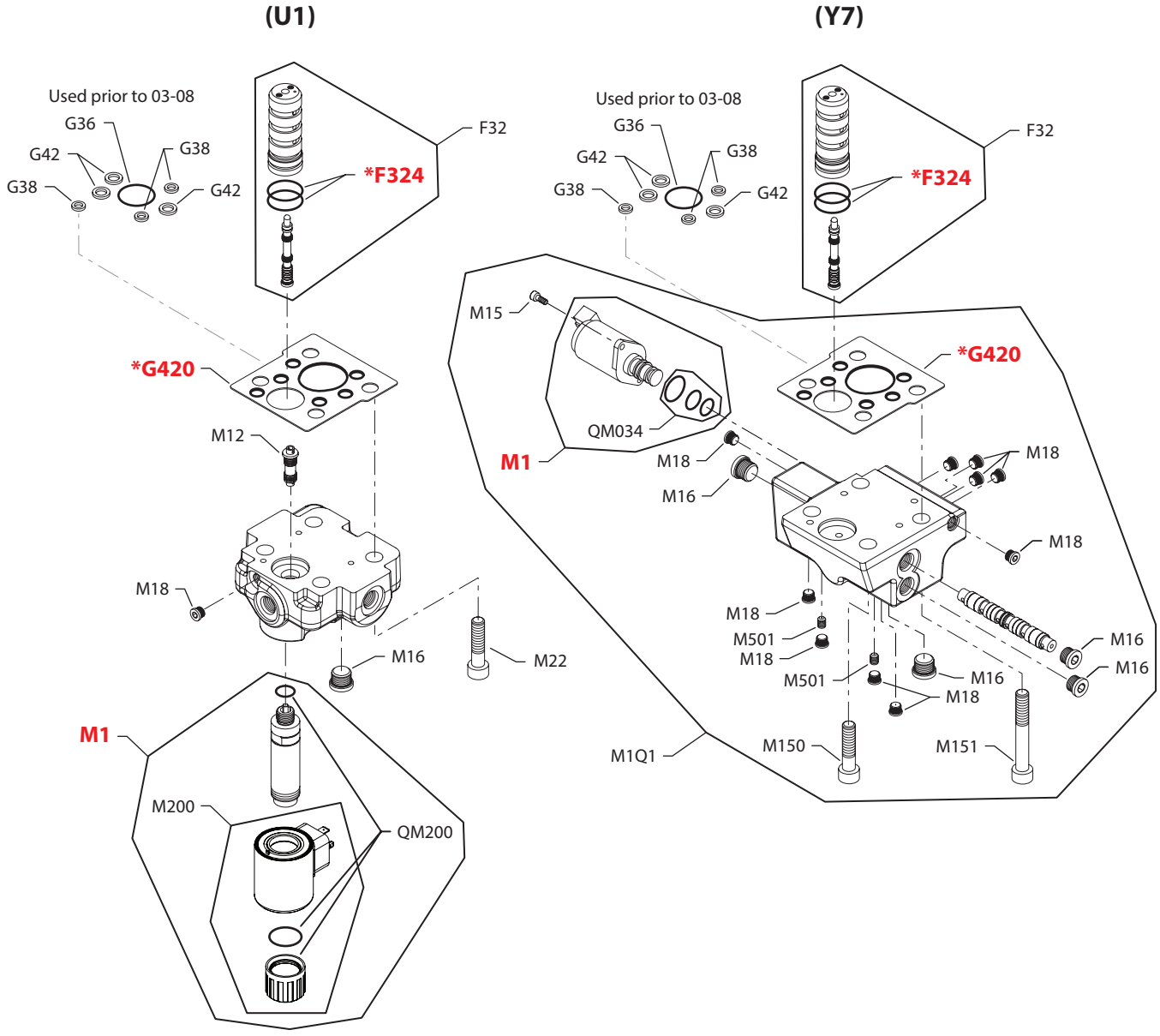

E100 271E

* = included in base motor seal kit Q210

Enlarged **bold** type item numbers are recommended part to stock for servicing.

Variable Displacement Motor

Electric 2-position

Order code	Item	Date begin	Date end	Part number	Part name	Qty. per model/kit
U1	F32	99-30		503925	4-way valve assembly	1
	F324	99-30		730036	O-ring	2
	G36	99-30	03-07	364968	O-ring (SB-2002-001)	1
	G38	99-30	03-07	792739	O-ring (SB-2002-001)	3
	G42	99-30	03-07	754580	O-ring (SB-2002-001)	3
	G420	03-08		511810	Gasket/O-ring seal (SB-2002-001)	1
	M1	99-30		11026435	Solenoid valve, 12 volt, DIN connector	1
	M12	99-30		507292	Piston	1
	M16	99-30		140644	Plug assembly	1
	M18	99-30		11040532	Plug assembly	1
	M22	99-30		732982 (9007314-1009)	Screw	4
	M200	99-30		11026448	Coil kit, 12 volt, Din connector	1
	QM200	99-30		11121273	Coil nut kit	1

Electric proportional

Y7	F32	01-01		727115	4-way valve assembly	1
	F324	01-01		730036	O-ring	2
	G36	01-01	03-07	364968	O-ring (SB-2002-001)	1
	G38	01-01	03-07	792739	O-ring (SB-2002-001)	3
	G42	01-01	03-07	754580	O-ring (SB-2002-001)	3
	G420	03-08		511810	Gasket/O-ring seal (SB-2002-001)	1
	M1	01-01		518080	Solenoid valve, 12 volt, Jet connector	1
	M1Q1	01-01		519577	Control kit	1
	M15	01-01		067694	Screw	2
	M16	01-01		140644	Plug assembly	4
	M18	01-01		11040532	Plug assembly	10
	M150	01-01		672295	Screw	2
	M151	01-01		502580	Screw	2
	M321	01-01		519114	Spool	1
	M501	01-01		578542	Orifce, 0.8, M6 x 8	2
	QM034	01-01		11099849	Solenoid valve seal kit	1

Variable Displacement Motor

(A1 & A3)

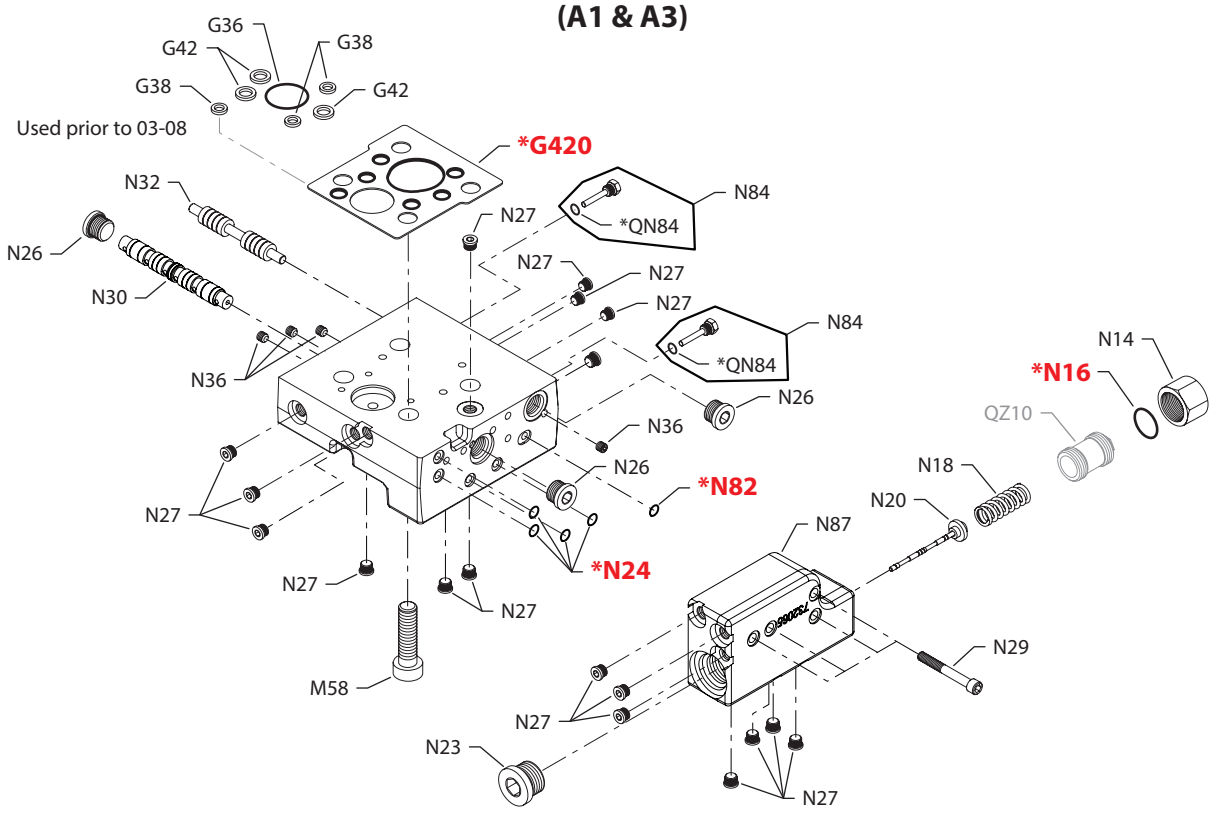

(A2 & A4)

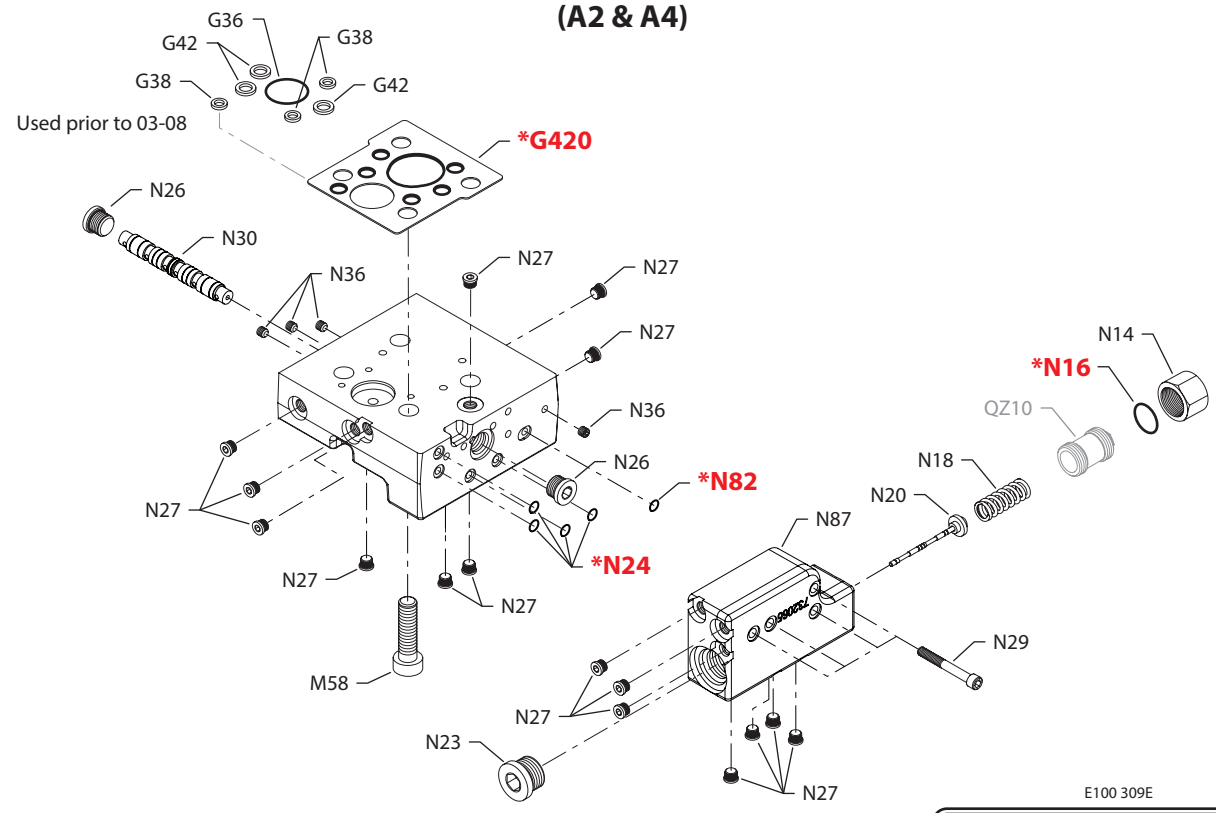

E100 309E

* = included in base motor seal kit Q210

Enlarged **bold** type item numbers are recommended part to stock for servicing.

Variable Displacement Motor

Servo pressure supply

Order code	Item	Date begin	Date end	Part number	Part name	Qty. per model/kit
A1 & A3	G36	92-33	03-07	364968	O-ring (SB-2002-001)	1
	G38	92-33	03-07	792739	O-ring (SB-2002-001)	3
	G42	92-33	03-07	754580	O-ring (SB-2002-001)	3
	G420	03-08		511810	Gasket/O-ring seal (SB-2002-001)	1
	N14	92-33		342709 (9003575-0101)	Nut	1
	N16	92-33		001149 (9004201-6200)	O-ring	1
	N18	92-33		509152	Spring	1
	N20	92-33		746016	Relief valve	1
	N23	92-33		315325 (9005110-8700)	Plug assembly	1
	N24	92-33		732479 (9004105-0100)	O-ring	4
	N26	92-33		140644	Plug assembly	3
	N27	92-33		11040532	Plug assembly	18
	N29	92-33		713719 (9007314-0610)	Screw	4
	N30	92-33		519114	Shuttle valve assembly	1
	N32	92-33		346080	Spool	1
	N36	92-33		092114 (9007712-0604)	Set screw	4
	N58	92-33		732982	Screw	4
	N82	92-33		732479 (9004105-0100)	O-ring	1
	N84	92-33		735266	Stop assembly	2
	QN84	92-33		039297 (9004201-1200)	O-ring	2
	N87	92-33		503887	PCOR housing assembly	1
A2 & A4	G36	92-33	03-07	364968	O-ring (SB-2002-001)	1
	G38	92-33	03-07	792739	O-ring (SB-2002-001)	3
	G42	92-33	03-07	754580	O-ring (SB-2002-001)	3
	G420	03-08		511810	Gasket/O-ring seal (SB-2002-001)	1
	N14	92-33		342709 (9003575-0101)	Nut	1
	N16	92-33		001149 (9004201-6200)	O-ring	1
	N18	92-33		509152	Spring	1
	N20	92-33		746016	Relief valve	1
	N23	92-33		315325 (9005110-8700)	Plug assembly	1
	N24	92-33		732479 (9004105-0100)	O-ring	4
	N26	92-33		140644	Plug assembly	2
	N27	92-33		11040532	Plug assembly	16
	N29	92-33		713719 (9007314-0610)	Screw	4
	N30	92-33		519114	Shuttle valve assembly	1
	N36	92-33		092114 (9007712-0604)	Set screw	4
	N58	92-33		732982	Screw	4
	N82	92-33		732479 (9004105-0100)	O-ring	1
	N87	92-33		503887	PCOR housing assembly	1

Variable Displacement Motor

(A5 & A6)

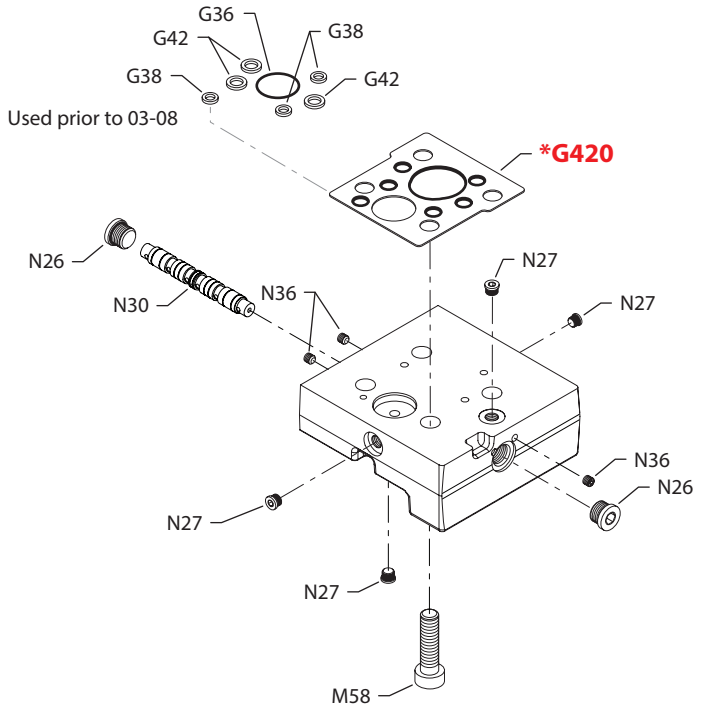

(A7)

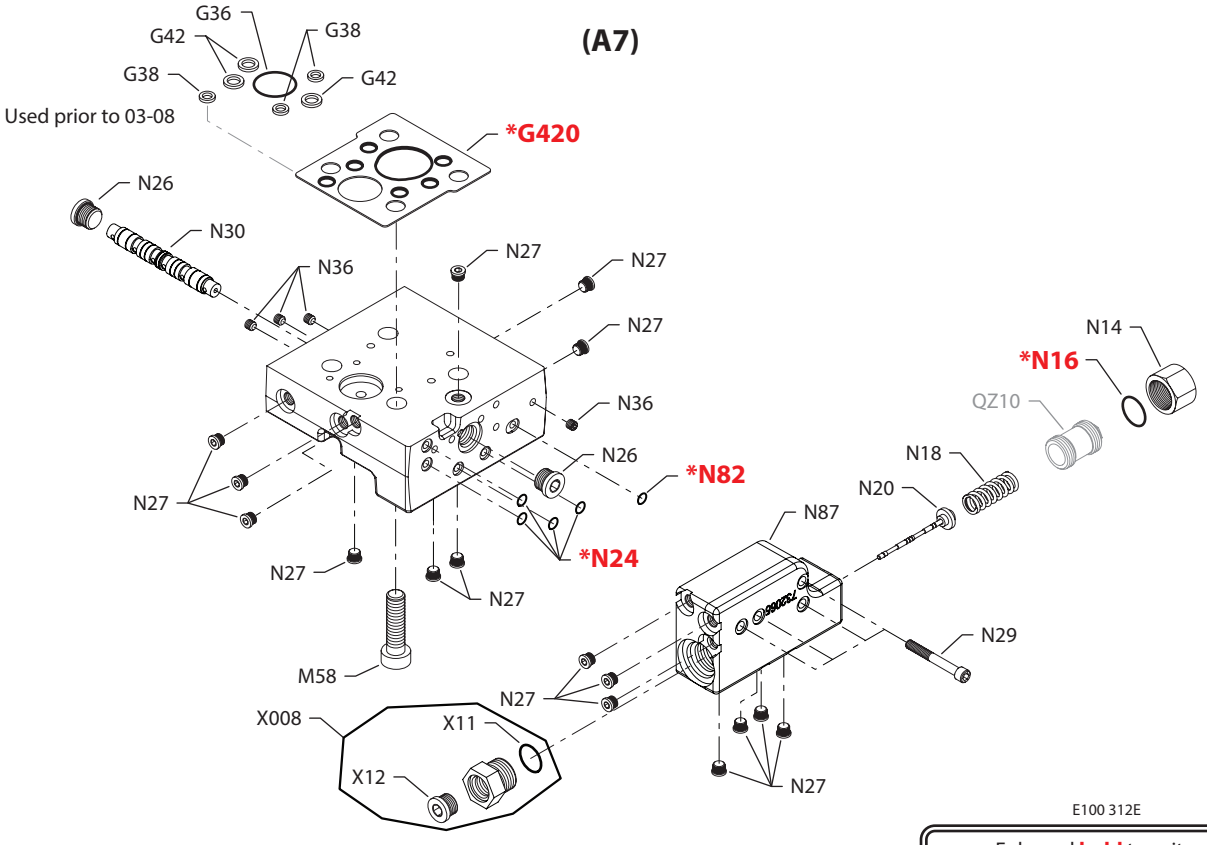

* = included in base motor seal kit Q210

Enlarged **bold** type item numbers are recommended part to stock for servicing.

Variable Displacement Motor

Servo pressure supply

Order code	Item	Date begin	Date end	Part number	Part name	Qty. per model/kit
A5 & A6	G36	92-33	03-07	364968	O-ring (SB-2002-001)	1
	G38	92-33	03-07	792739	O-ring (SB-2002-001)	3
	G42	92-33	03-07	754580	O-ring (SB-2002-001)	3
	G420	03-08		511810	Gasket/O-ring seal (SB-2002-001)	1
	N26	92-33		140644	Plug assembly	2
	N27	92-33		11040532	Plug assembly	4
	N30	92-33		519114	Shuttle valve assembly	1
	N36	92-33		092114 (9007712-0604)	Set screw	4
	N58	92-33		732982	Screw	4
A7	G36	01-07	03-07	364968	O-ring (SB-2002-001)	1
	G38	01-07	03-07	792739	O-ring (SB-2002-001)	3
	G42	01-07	03-07	754580	O-ring (SB-2002-001)	3
	G420	03-08		511810	Gasket/O-ring seal (SB-2002-001)	1
	N14	01-07		342709 (9003575-0101)	Nut	1
	N16	01-07		001149 (9004201-6200)	O-ring	1
	N18	01-07		509152	Spring	1
	N20	01-07		746016	Relief valve	1
	N24	01-07		732479 (9004105-0100)	O-ring	4
	N26	01-07		140644	Plug assembly	2
	N27	01-07		11040532	Plug assembly	16
	N29	01-07		713719 (9007314-0610)	Screw	4
	N30	01-07		519114	Shuttle valve assembly	1
	N36	01-07		092114 (9007712-0604)	Set screw	4
	N58	01-07		732982	Screw	4
	N82	01-07		732479 (9004105-0100)	O-ring	1
	N87	01-07		503887	PCOR housing assembly	1
	X008	01-07		779587	Adapter plug assembly	1
	X11	01-07		001149 (9004201-6200)	O-ring	1
	X12	01-07		140644	Plug assembly	1

Variable Displacement Motor

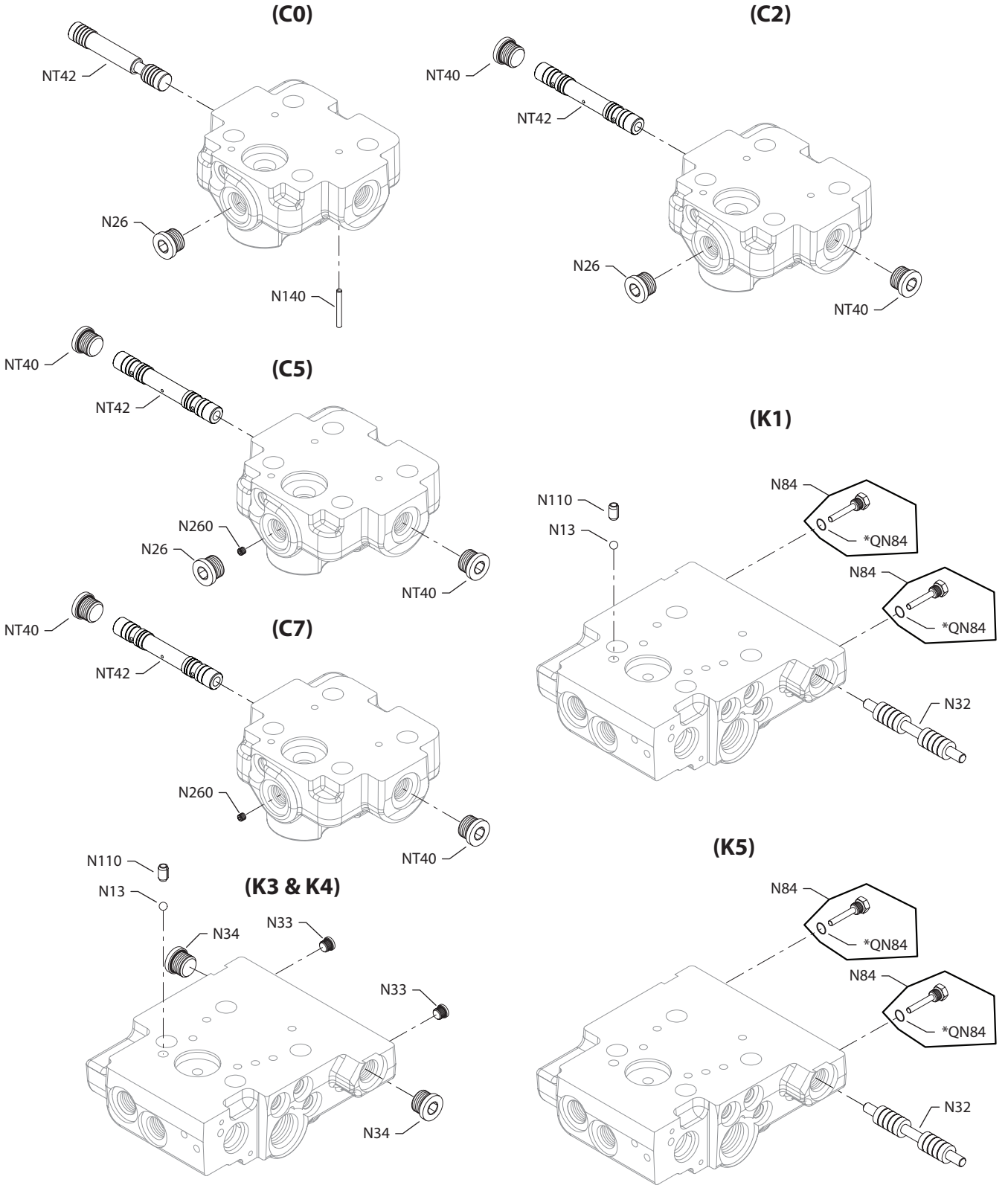

E100 277E

* = included in base motor seal kit Q210

Enlarged **bold** type item numbers are recommended part to stock for servicing.

Variable Displacement Motor

Servo pressure supply

Order code	Item	Date begin	Date end	Part number	Part name	Qty. per model/kit
B1, B2 & B3				No parts		
C0	N26	96-10		140644	Plug assembly	1
	N140	96-10		503503	Pin	1
	NT42	96-10		508175	Spool	1
C2	N26	95-15		140644	Plug assembly	1
	NT40	95-15		140644	Plug assembly	2
	NT42	95-15		508156	Spool	1
C5	N26	95-15		140644	Plug assembly	1
	N260	96-31		913897 (9007712-0605)	Set screw	1
	NT40	95-15		140644	Plug assembly	2
	NT42	95-15		508156	Spool	1
C7	N260	02-45		913897 (9007712-0605)	Set screw	1
	NT40	02-45		140644	Plug assembly	2
	NT42	02-45		508156	Spool	1
K1	N13	95-24		915967	Ball	1
	N32	95-24		346080	Spool	1
	N84	95-24		735266	Stop assembly	2
	N110	95-24		505522	Slotted pin	1
	QN84	95-24		039297 (9004201-1200)	O-ring	2
K3	N110	95-24		505522	Slotted pin	1
	N13	95-24		915967	Ball	1
	N33	95-24		11040532	Plug assembly	2
	N34	95-15		140644	Plug assembly	2
K4	N110	95-24		505522	Slotted pin	1
	N13	95-24		915967	Ball	1
	N33	95-24		11040532	Plug assembly	2
	N34	95-15		140644	Plug assembly	2
K5	N32	95-24		346080	Piston	1
	N84	95-24		735266	Stop assembly	2
	QN84	95-24		039297 (9004201-1200)	O-ring	2

Variable Displacement Motor

(L2 & L4)

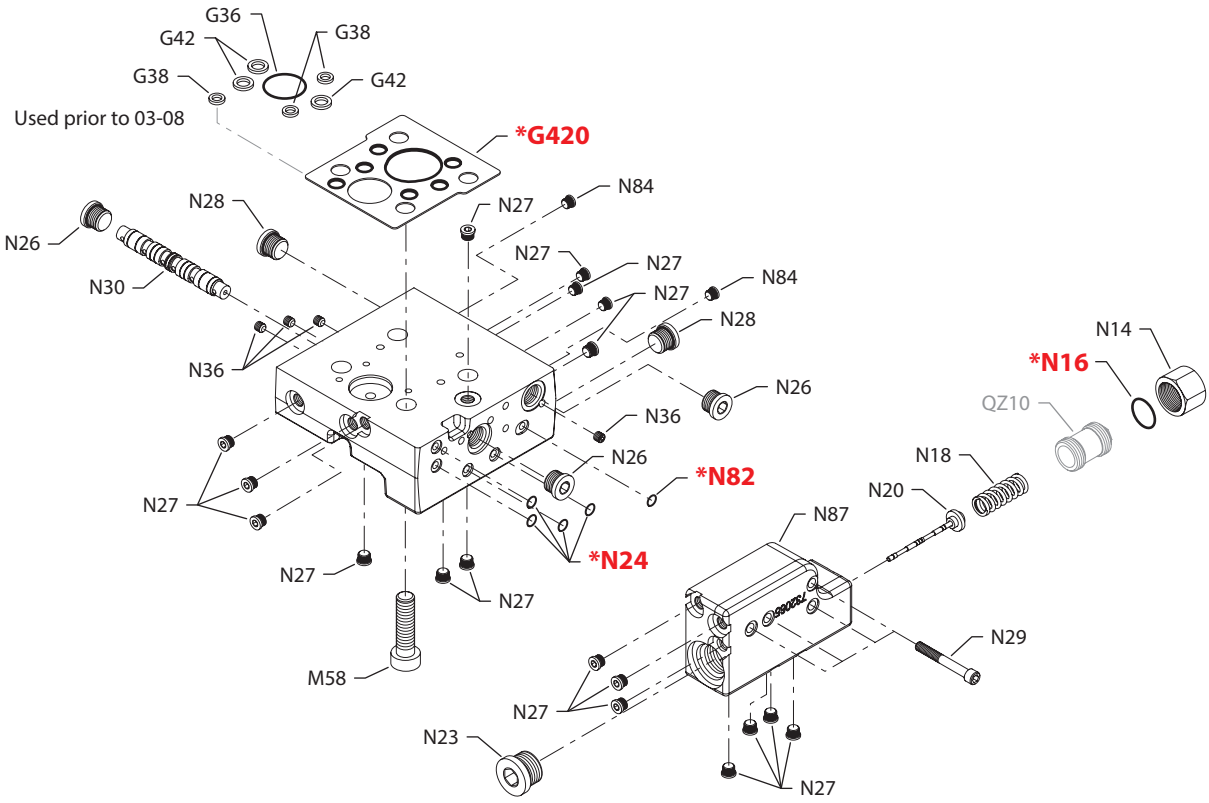

(L5)

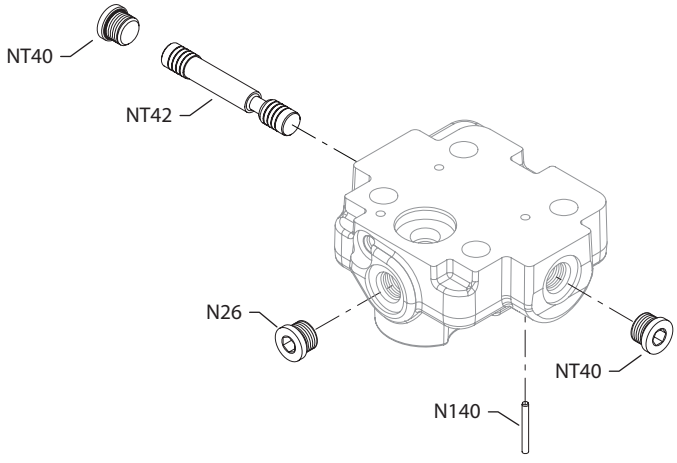

(M1)

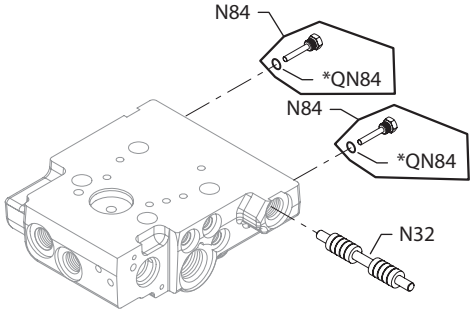

E100 343E

* = included in base motor seal kit Q210

Enlarged **bold** type item numbers are recommended part to stock for servicing.

Variable Displacement Motor

Servo pressure supply

Order code	Item	Date begin	Date end	Part number	Part name	Qty. per model/kit
L2 & L4	G36	91-26	03-07	364968	O-ring (SB-2002-001)	1
	G38	91-26	03-07	792739	O-ring (SB-2002-001)	3
	G42	91-26	03-07	754580	O-ring (SB-2002-001)	3
	G420	03-08		511810	Gasket/O-ring seal (SB-2002-001)	1
	N14	91-26		342709 (9003575-0101)	Nut	1
	N16	91-26		001149 (9004201-6200)	O-ring	1
	N18	91-26		509152	Spring	1
	N20	91-26		746016	Relief valve	1
	N23	91-26		315325 (9005110-8700)	Plug assembly	1
	N24	91-26		732479 (9004105-0100)	O-ring	4
	N26	91-26		140644	Plug assembly	3
	N27	91-26		11040532	Plug assembly	18
	N28	91-26		140644	Plug assembly	2
	N29	91-26		713719 (9007314-0610)	Screw	4
	N30	91-26		519114	Shuttle valve assembly	1
	N36	91-26		092114 (9007712-0604)	Set screw	4
	N58	91-26		732982	Screw	4
	N82	91-26		732479 (9004105-0100)	O-ring	1
	N84	91-26		11040532	Plug assembly	2
	N87	91-26		503887	PCOR housing assembly	1
L5	N26	95-24		140644	Plug assembly	1
	N140	95-24		503503	Pin	2
	NT40	95-24		140644	Plug assembly	2
	NT42	95-24		507782	Spool	1
M1	N32	95-24		346080	Piston	1
	N84	95-24		735266	Stop assembly	2
	QN84	95-24		039297 (9004201-1200)	O-ring	2
NN				No parts		

Variable Displacement Motor

(R2 & R4)

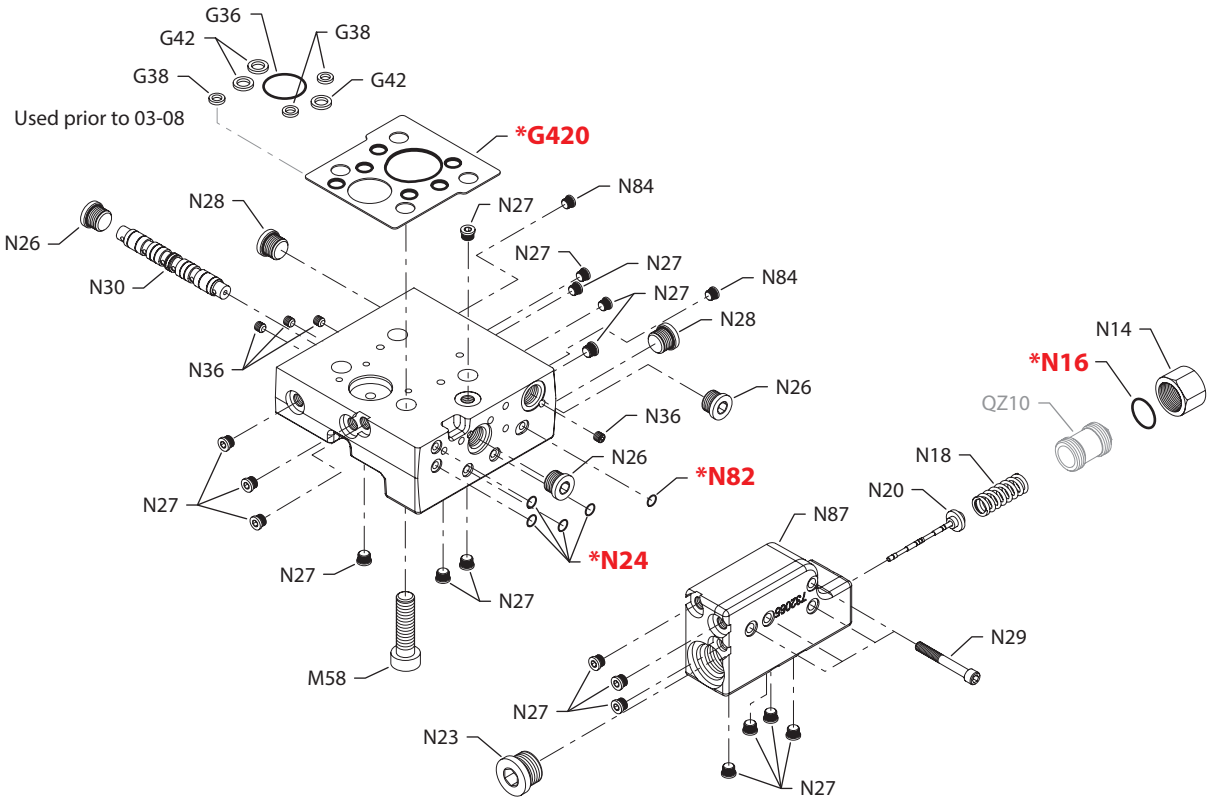

(R5)

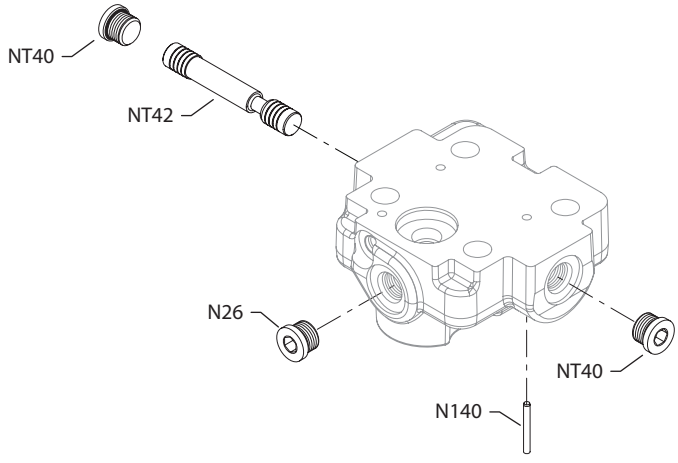

E100 657E

Enlarged **bold** type item numbers are recommended part to stock for servicing.

* = included in base motor seal kit Q210

Variable Displacement Motor

Servo pressure supply

Order code	Item	Date begin	Date end	Part number	Part name	Qty. per model/kit
R2 & R4	G36	91-26	03-07	364968	O-ring (SB-2002-001)	1
	G38	91-26	03-07	792739	O-ring (SB-2002-001)	3
	G42	91-26	03-07	754580	O-ring (SB-2002-001)	3
	G420	03-08		511810	Gasket/O-ring seal (SB-2002-001)	1
	N14	91-26		342709 (9003575-0101)	Nut	1
	N16	91-26		001149 (9004201-6200)	O-ring	1
	N18	91-26		509152	Spring	1
	N20	91-26		746016	Relief valve	1
	N23	91-26		315325 (9005110-8700)	Plug assembly	1
	N24	91-26		732479 (9004105-0100)	O-ring	4
	N26	91-26		140644	Plug assembly	3
	N27	91-26		11040532	Plug assembly	18
	N28	91-26		140644	Plug assembly	2
	N29	91-26		713719 (9007314-0610)	Screw	4
	N30	91-26		519114	Shuttle valve assembly	1
	N36	91-26		092114 (9007712-0604)	Set screw	4
	N58	91-26		732982	Screw	4
	N82	91-26		732479 (9004105-0100)	O-ring	1
	N84	91-26		11040532	Plug assembly	2
	N87	91-26		503887	PCOR housing assembly	1
R5	N26	95-24		140644	Plug assembly	1
	N140	95-24		503503	Pin	2
	NT40	95-24		140644	Plug assembly	2
	NT42	95-24		507782	Spool	1

Variable Displacement Motor

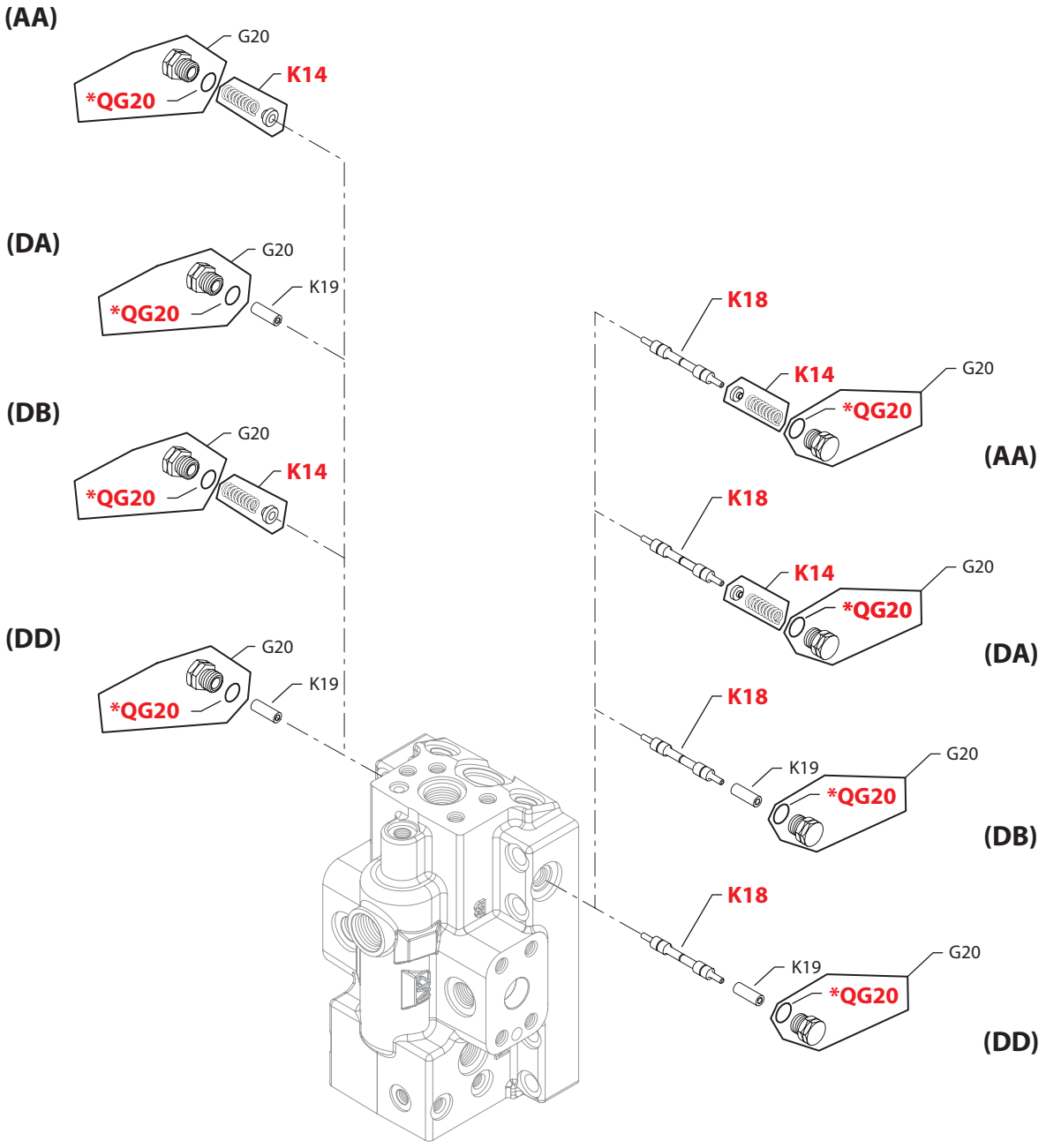

E103 131E

* = included in base motor seal kit Q210

Enlarged **bold** type item numbers are recommended part to stock for servicing.

Variable Displacement Motor

Loop flushing

Order code	Item	Date begin	Date end	Part number	Part name	Qty. per model/kit
AA	G20	92-33		518016	Plug assembly	2
	K14	92-33		513596	Spring seat assembly (SB-2000-044)	2
	K18	92-33		367789	Loop flushing spool	1
	QG20	92-33		085043 (9004201-3700)	O-ring	2
DA	G20	11-15		518016	Plug assembly	2
	K14	11-15		513596	Spring seat assembly	1
	K18	11-15		367789	Loop flushing spool	1
	K19	11-15		11020889	Spacer	1
	QG20	11-15		085043 (9004201-3700)	O-ring	2
DB	G20	11-15		518016	Plug assembly	2
	K14	11-15		513596	Spring seat assembly	1
	K18	11-15		367789	Loop flushing spool	1
	K19	11-15		11020889	Spacer	1
	QG20	11-15		085043 (9004201-3700)	O-ring	2
DD	G20	11-15		518016	Plug assembly	2
	K18	11-15		367789	Loop flushing spool	1
	K19	11-15		11020889	Spacer	2
	QG20	11-15		085043 (9004201-3700)	O-ring	2
NN				No parts		

Variable Displacement Motor

(A, B, E, L & U)

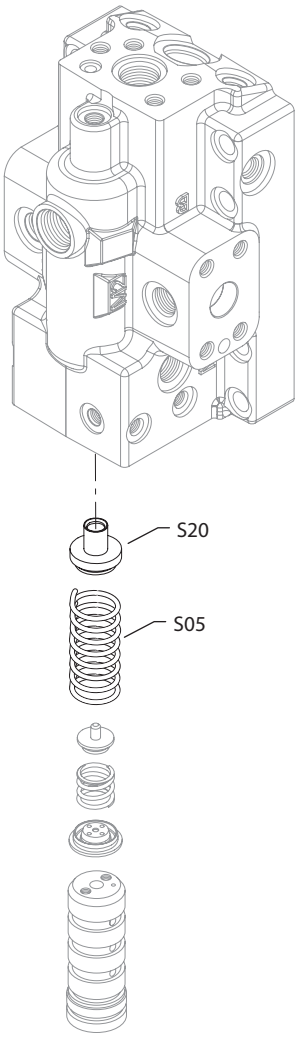

(D, H, J, K, Y & Z)

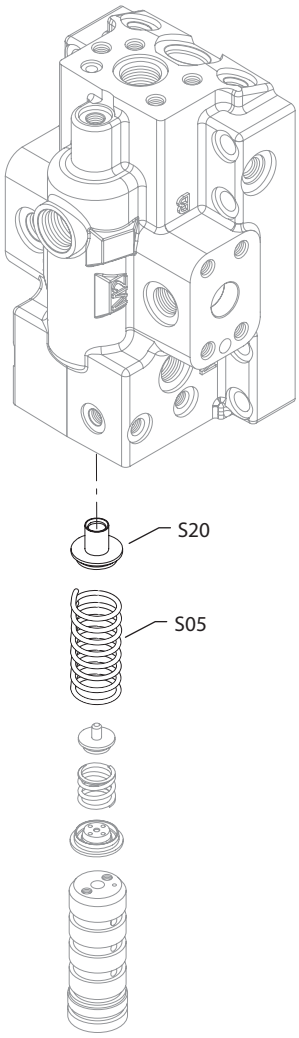

E100 314E

Variable Displacement Motor

Control ramp

Order code	Item	Date begin	Date end	Part number	Part name	Qty. per model/kit
A & B	S05	95-36		721415	Spring	1
	S20	95-36		724518	Spring guide	1
D	S05	91-26		721431	Spring	1
	S20	91-26		722256	Spring guide	1
E	S05	91-26		721415	Spring	1
	S20	91-26		724518	Spring guide	1
H	S05	91-26		721456	Spring	1
	S20	91-26		722256	Spring guide	1
J	S05	99-35		721456	Spring	1
	S20	99-35		722256	Spring guide	1
K	S05	99-35		721456	Spring	1
	S20	99-35		722256	Spring guide	1
L	S05	91-26		721415	Spring	1
	S20	91-26		724518	Spring guide	1
N				No parts		
T				No parts		
U	S05	91-26		721449	Spring	1
	S20	91-26		724518	Spring guide	1
Y	S05	91-26		721456	Spring	1
	S20	91-26		722256	Spring guide	1
Z	S05	91-26		721464	Spring	1
	S20	91-26		722256	Spring guide	1

Variable Displacement Motor

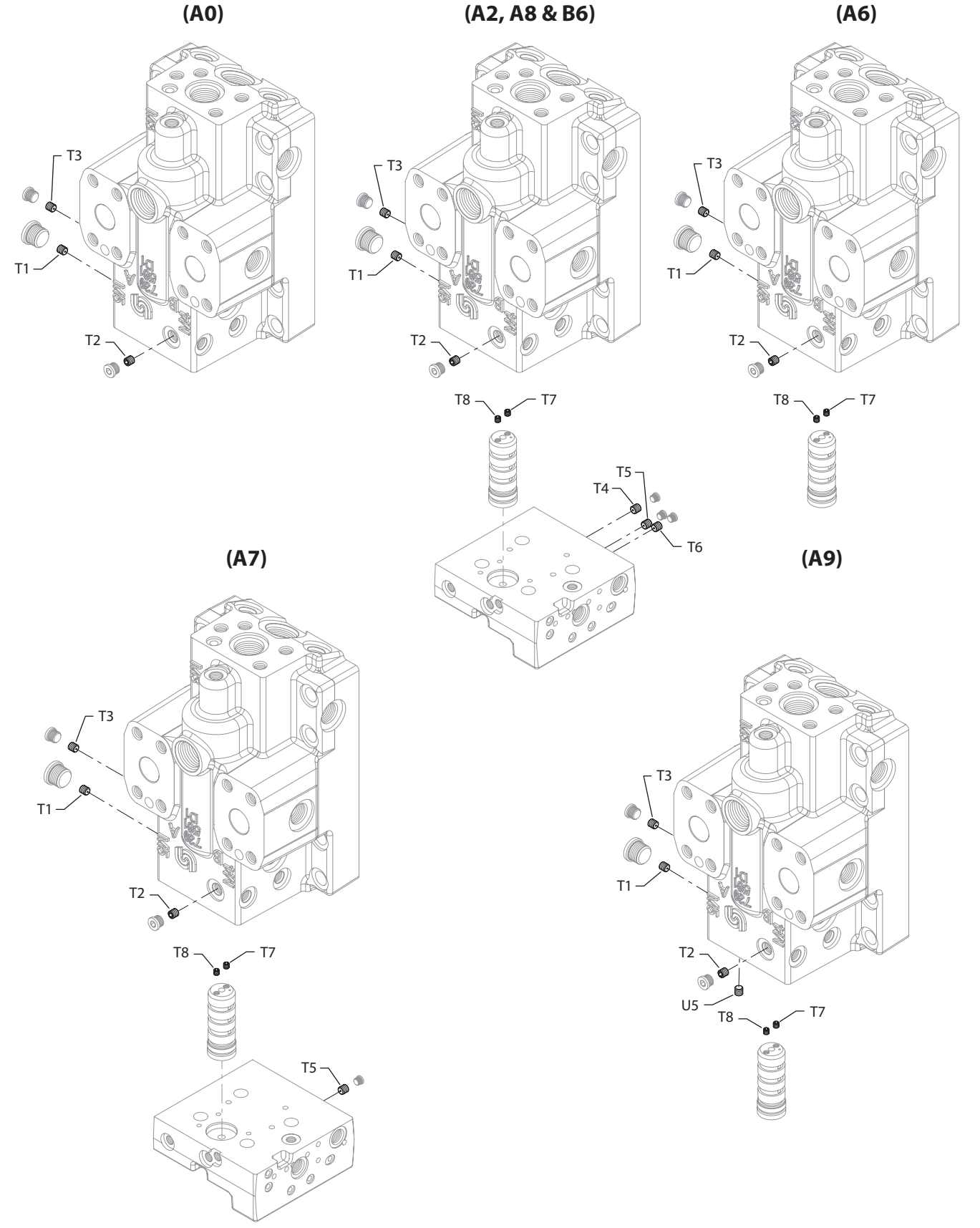

Variable Displacement Motor

Orifice

Order code	Item	Date begin	Date end	Part number	Part name	Qty. per model/kit
A0	T1	92-38		913897 (9007712-0605)	Set screw	1
	T2	92-38		913897 (9007712-0605)	Set screw	1
	T3	92-38		913897 (9007712-0605)	Set screw	1
A2	T1	92-33		679316	Orifice. 0.5, M6 x 8	1
	T2	92-33		578542	Orifice, 0.8, M6 x 8	1
	T3	92-33		578542	Orifice, 0.8, M6 x 8	1
	T4	92-33		578542	Orifice, 0.8, M6 x 8	1
	T5	92-33		913897 (9007712-0605)	Set screw	1
	T6	92-33		578542	Orifice, 0.8, M6 x 8	1
	T7	92-33		639096	Orifice. 0.6, M5 x 6	1
	T8	92-33		639096	Orifice. 0.6, M5 x 6	1
A6	T1	92-33		679316	Orifice. 0.5, M6 x 8	1
	T2	92-33		578542	Orifice, 0.8, M6 x 8	1
	T3	92-33		578542	Orifice, 0.8, M6 x 8	1
	T7	92-33		639096	Orifice. 0.6, M5 x 6	1
	T8	92-33		639096	Orifice. 0.6, M5 x 6	1
A7	T1	92-33		679316	Orifice. 0.5, M6 x 8	1
	T2	92-33		578542	Orifice, 0.8, M6 x 8	1
	T3	92-33		578542	Orifice, 0.8, M6 x 8	1
	T5	92-33		578542	Orifice, 0.8, M6 x 8	1
	T7	92-33		639096	Orifice. 0.6, M5 x 6	1
	T8	92-33		639096	Orifice. 0.6, M5 x 6	1
A8	T1	92-33		679316	Orifice. 0.5, M6 x 8	1
	T2	92-33		578542	Orifice, 0.8, M6 x 8	1
	T3	92-33		578542	Orifice, 0.8, M6 x 8	1
	T4	92-33		913897 (9007712-0605)	Set screw	1
	T5	92-33		913897 (9007712-0605)	Set screw	1
	T6	92-33		578542	Orifice, 0.8, M6 x 8	1
	T7	92-33		639096	Orifice. 0.6, M5 x 6	1
	T8	92-33		639096	Orifice. 0.6, M5 x 6	1
A9	T1	92-33		679316	Orifice. 0.5, M6 x 8	1
	T2	92-33		578542	Orifice, 0.8, M6 x 8	1
	T3	92-33		578542	Orifice, 0.8, M6 x 8	1
	T7	92-33		639096	Orifice. 0.6, M5 x 6	1
	T8	92-33		639096	Orifice. 0.6, M5 x 6	1
	U5	92-33		913897 (9007712-0605)	Set screw	1
B6	T1	92-33		679316	Orifice. 0.5, M6 x 8	1
	T2	92-33		578542	Orifice, 0.8, M6 x 8	1
	T3	92-33		578542	Orifice, 0.8, M6 x 8	1
	T4	92-33		578542	Orifice, 0.8, M6 x 8	1
	T5	92-33		913897 (9007712-0605)	Set screw	1
	T6	92-33		913897 (9007712-0605)	Set screw	1
	T7	92-33		639096	Orifice. 0.6, M5 x 6	1
	T8	92-33		639096	Orifice. 0.6, M5 x 6	1

Variable Displacement Motor

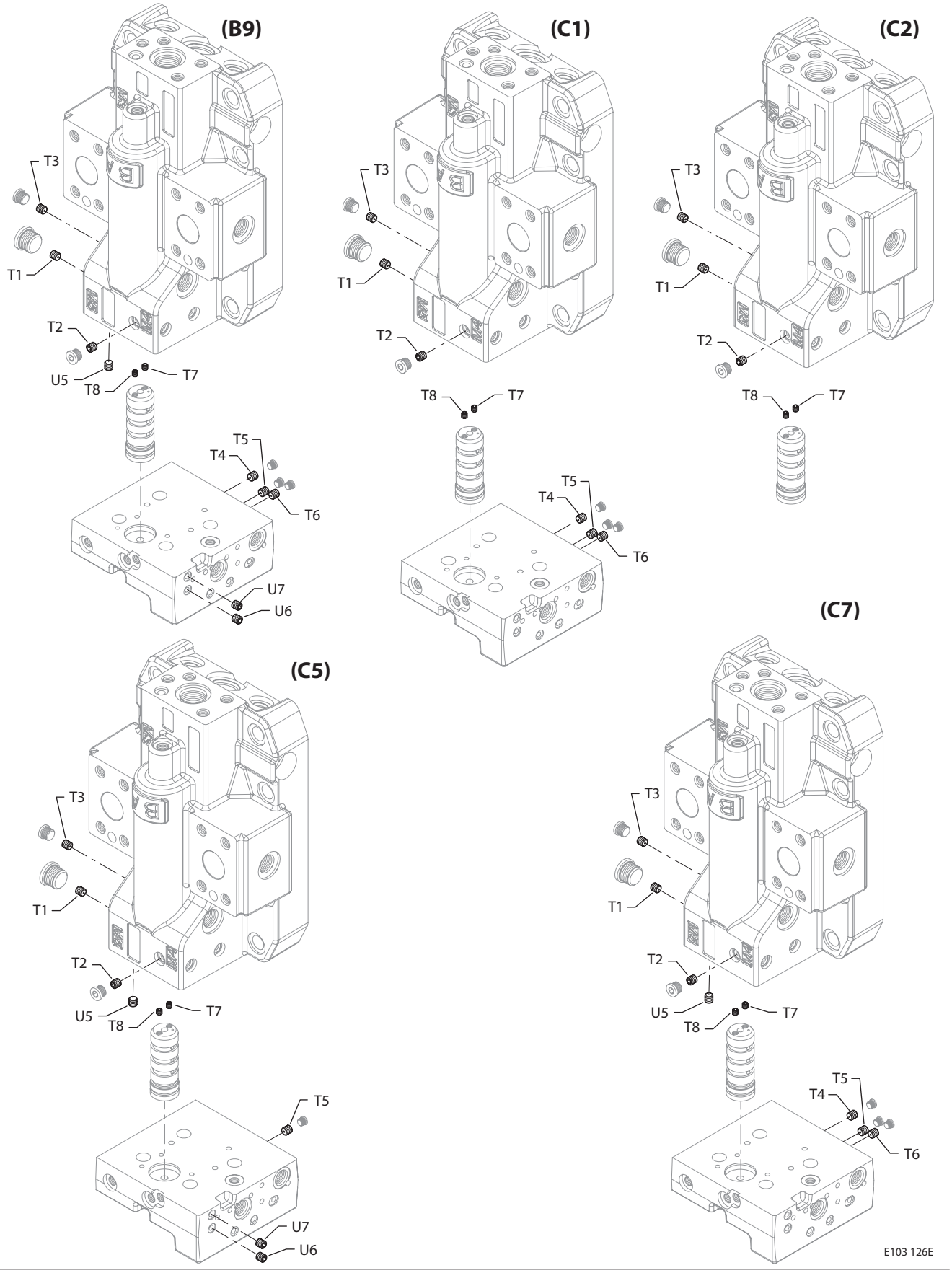

Variable Displacement Motor

Orifice

Order code	Item	Date begin	Date end	Part number	Part name	Qty. per model/kit
B9	T1	92-33		679316	Orifice. 0.5, M6 x 8	1
	T2	92-33		679316	Orifice. 0.5, M6 x 8	1
	T3	92-33		679316	Orifice. 0.5, M6 x 8	1
	T4	92-33		578542	Orifice, 0.8, M6 x 8	1
	T5	92-33		913897 (9007712-0605)	Set screw	1
	T6	92-33		578542	Orifice, 0.8, M6 x 8	1
	T7	92-33		639096	Orifice. 0.6, M5 x 6	1
	T8	92-33		639096	Orifice. 0.6, M5 x 6	1
	U5	92-33		913897 (9007712-0605)	Set screw	1
	U6	92-33		511825	Orifice. 0.6, M6 x 8	1
	U7	92-33		511825	Orifice. 0.6, M6 x 8	1
C0				No parts		
C1	T1	92-33		679316	Orifice. 0.5, M6 x 8	1
	T2	92-33		578542	Orifice, 0.8, M6 x 8	1
	T3	92-33		578542	Orifice, 0.8, M6 x 8	1
	T4	92-33		913897 (9007712-0605)	Set screw	1
	T5	92-33		578542	Orifice, 0.8, M6 x 8	1
	T6	92-33		913897 (9007712-0605)	Set screw	1
	T7	92-33		639096	Orifice. 0.6, M5 x 6	1
	T8	92-33		639096	Orifice. 0.6, M5 x 6	1
C2	T1	92-33		679316	Orifice. 0.5, M6 x 8	1
	T2	92-33		578542	Orifice, 0.8, M6 x 8	1
	T3	92-33		578542	Orifice, 0.8, M6 x 8	1
	T7	92-33		639096	Orifice. 0.6, M5 x 6	1
	T8	92-33		639096	Orifice. 0.6, M5 x 6	1
C5	T1	92-33		679316	Orifice. 0.5, M6 x 8	1
	T2	92-33		578542	Orifice, 0.8, M6 x 8	1
	T3	92-33		578542	Orifice, 0.8, M6 x 8	1
	T5	92-33		578542	Orifice, 0.8, M6 x 8	1
	T7	92-33		639096	Orifice. 0.6, M5 x 6	1
	T8	92-33		639096	Orifice. 0.6, M5 x 6	1
	U5	92-33		913897 (9007712-0605)	Set screw	1
	U6	92-33		511825	Orifice. 0.6, M6 x 8	1
	U7	92-33		511825	Orifice. 0.6, M6 x 8	1
C7	T1	92-33		679316	Orifice. 0.5, M6 x 8	1
	T2	92-33		578542	Orifice, 0.8, M6 x 8	1
	T3	92-33		578542	Orifice, 0.8, M6 x 8	1
	T4	92-33		578542	Orifice, 0.8, M6 x 8	1
	T5	92-33		913897 (9007712-0605)	Set screw	1
	T6	92-33		913897 (9007712-0605)	Set screw	1
	T7	92-33		639096	Orifice. 0.6, M5 x 6	1
	T8	92-33		639096	Orifice. 0.6, M5 x 6	1
	U5	92-33		913897 (9007712-0605)	Set screw	1

Variable Displacement Motor

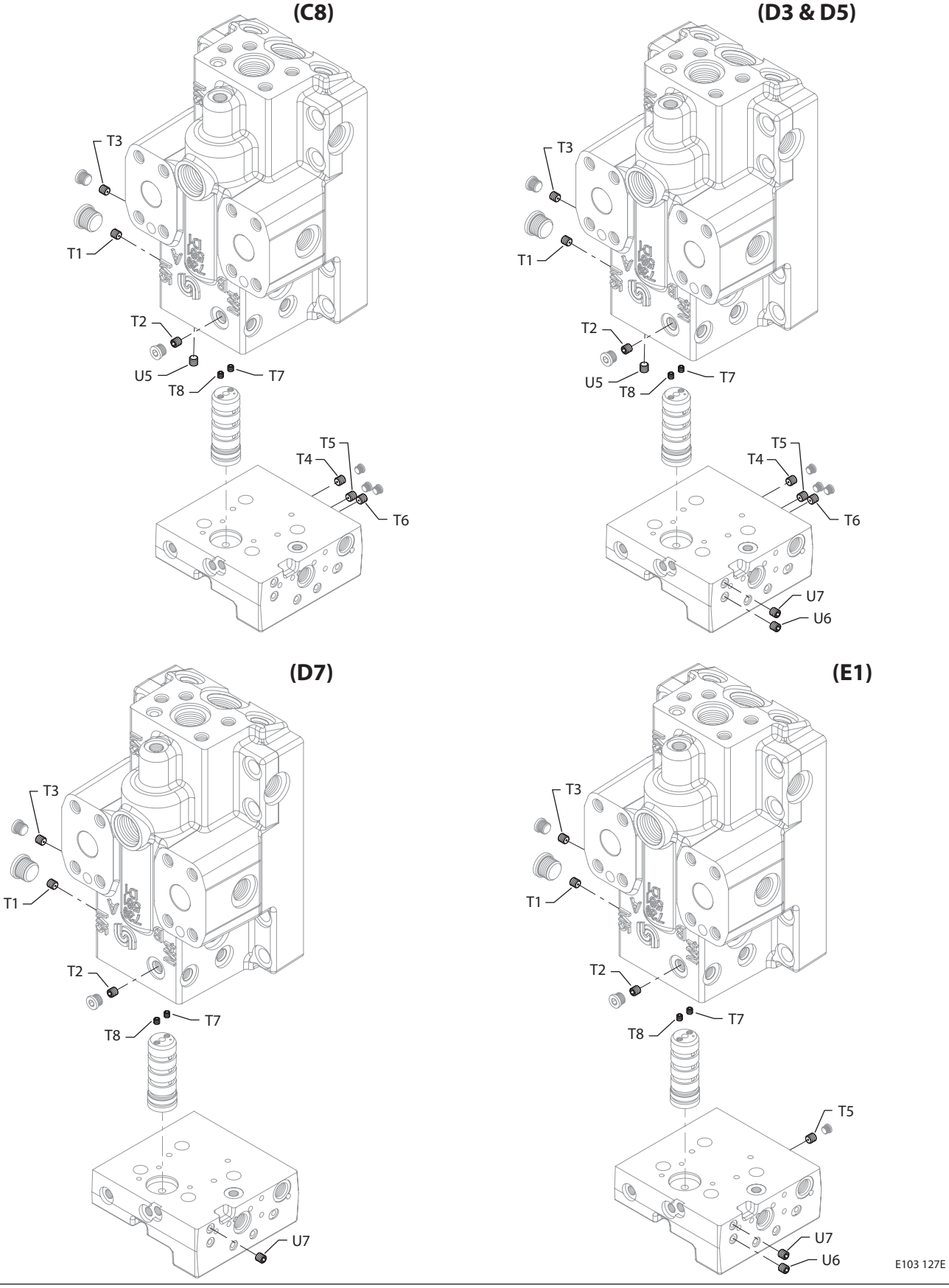

Variable Displacement Motor

Orifice

Order code	Item	Date begin	Date end	Part number	Part name	Qty. per model/kit
C8	T1	92-33		679316	Orifice. 0.5, M6 x 8	1
	T2	92-33		578542	Orifice, 0.8, M6 x 8	1
	T3	92-33		578542	Orifice, 0.8, M6 x 8	1
	T4	92-33		913897 (9007712-0605)	Set screw	1
	T5	92-33		913897 (9007712-0605)	Set screw	1
	T6	92-33		578542	Orifice, 0.8, M6 x 8	1
	T7	92-33		639096	Orifice. 0.6, M5 x 6	1
	T8	92-33		639096	Orifice. 0.6, M5 x 6	1
	U5	92-33		913897 (9007712-0605)	Set screw	1
D3	T1	92-33		578542	Orifice, 0.8, M6 x 8	1
	T2	92-33		511825	Orifice. 0.6, M6 x 8	1
	T3	92-33		511825	Orifice. 0.6, M6 x 8	1
	T4	92-33		913897 (9007712-0605)	Set screw	1
	T5	92-33		913897 (9007712-0605)	Set screw	1
	T6	92-33		578542	Orifice, 0.8, M6 x 8	1
	T7	92-33		639096	Orifice. 0.6, M5 x 6	1
	T8	92-33		639096	Orifice. 0.6, M5 x 6	1
	U5	92-33		913897 (9007712-0605)	Set screw	1
	U6	92-33		511825	Orifice. 0.6, M6 x 8	1
	U7	92-33		511825	Orifice. 0.6, M6 x 8	1
D5	T1	92-33		578542	Orifice, 0.8, M6 x 8	1
	T2	92-33		511825	Orifice. 0.6, M6 x 8	1
	T3	92-33		511825	Orifice. 0.6, M6 x 8	1
	T4	92-33		578542	Orifice, 0.8, M6 x 8	1
	T5	92-33		913897 (9007712-0605)	Set screw	1
	T6	92-33		913897 (9007712-0605)	Set screw	1
	T7	92-33		639096	Orifice. 0.6, M5 x 6	1
	T8	92-33		639096	Orifice. 0.6, M5 x 6	1
	U5	92-33		913897 (9007712-0605)	Set screw	1
	U6	92-33		511825	Orifice. 0.6, M6 x 8	1
	U7	92-33		511825	Orifice. 0.6, M6 x 8	1
D7	T1	92-33		578542	Orifice, 0.8, M6 x 8	1
	T2	92-33		578542	Orifice, 0.8, M6 x 8	1
	T3	92-33		578542	Orifice, 0.8, M6 x 8	1
	T7	92-33		511825	Orifice. 0.6, M6 x 8	1
	T8	92-33		511825	Orifice. 0.6, M6 x 8	1
	U7	92-33		044081	Orifice. 0.7, M6 x 8	1
E1	T1	92-33		679316	Orifice. 0.5, M6 x 8	1
	T2	92-33		578542	Orifice, 0.8, M6 x 8	1
	T3	92-33		578542	Orifice, 0.8, M6 x 8	1
	T5	92-33		578542	Orifice, 0.8, M6 x 8	1
	T7	92-33		639096	Orifice. 0.6, M5 x 6	1
	T8	92-33		639096	Orifice. 0.6, M5 x 6	1
	U6	92-33		044081	Orifice. 0.7, M6 x 8	1
	U7	92-33		044081	Orifice. 0.7, M6 x 8	1

Variable Displacement Motor

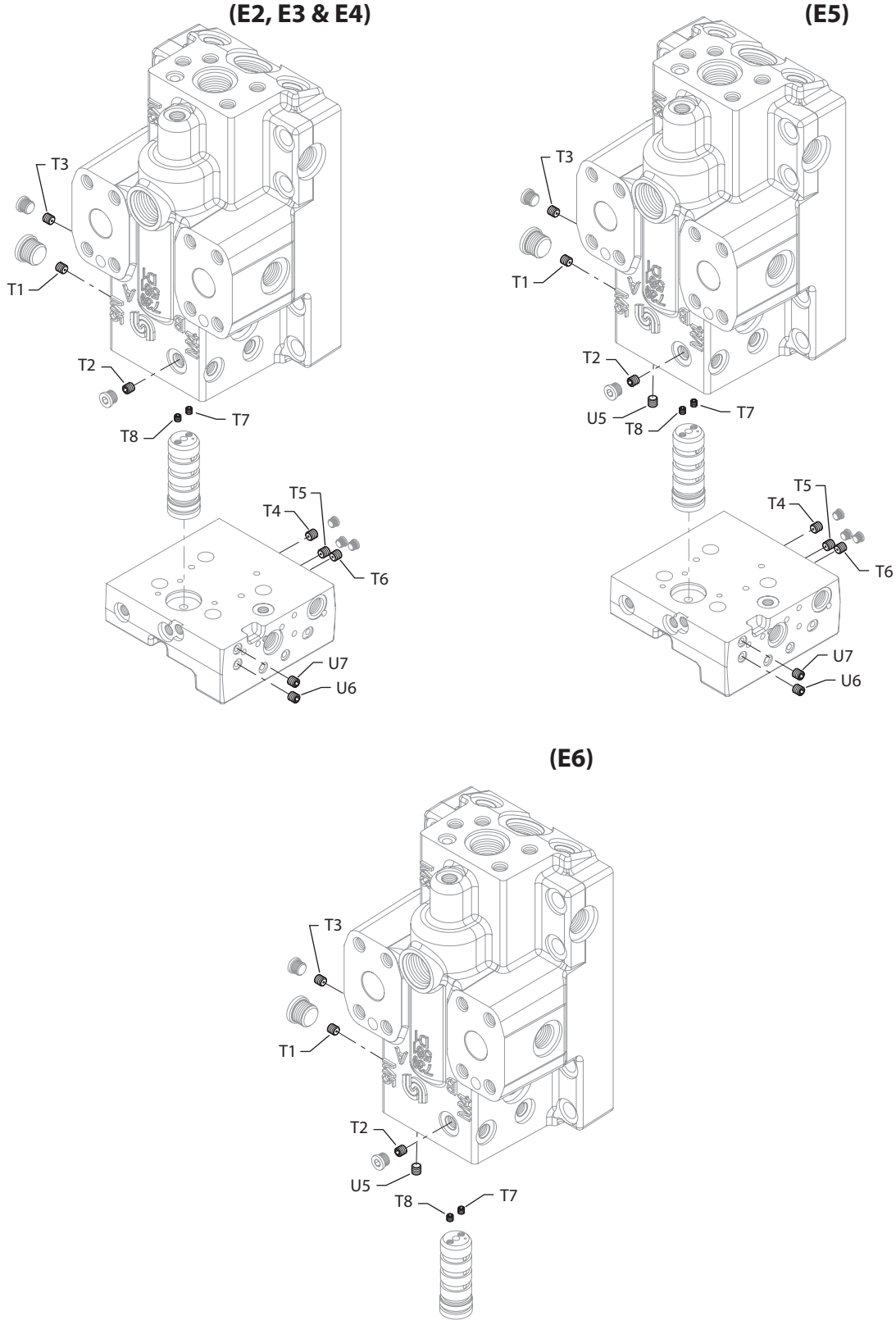

E103 128E

Variable Displacement Motor

Orifice

Order code	Item	Date begin	Date end	Part number	Part name	Qty. per model/kit
E2	T1	92-33		679316	Orifice. 0.5, M6 x 8	1
	T2	92-33		578542	Orifice, 0.8, M6 x 8	1
	T3	92-33		578542	Orifice, 0.8, M6 x 8	1
	T4	92-33		578542	Orifice, 0.8, M6 x 8	1
	T5	92-33		913897 (9007712-0605)	Set screw	1
	T6	92-33		578542	Orifice, 0.8, M6 x 8	1
	T7	92-33		639096	Orifice. 0.6, M5 x 6	1
	T8	92-33		639096	Orifice. 0.6, M5 x 6	1
	U6	92-33		044081	Orifice. 0.7, M6 x 8	1
	U7	92-33		044081	Orifice. 0.7, M6 x 8	1
E3	T1	92-33		679316	Orifice. 0.5, M6 x 8	1
	T2	92-33		578542	Orifice, 0.8, M6 x 8	1
	T3	92-33		578542	Orifice, 0.8, M6 x 8	1
	T4	92-33		578542	Orifice, 0.8, M6 x 8	1
	T5	92-33		913897 (9007712-0605)	Set screw	1
	T6	92-33		913897 (9007712-0605)	Set screw	1
	T7	92-33		639096	Orifice. 0.6, M5 x 6	1
	T8	92-33		639096	Orifice. 0.6, M5 x 6	1
	U6	92-33		044081	Orifice. 0.7, M6 x 8	1
	U7	92-33		044081	Orifice. 0.7, M6 x 8	1
E4	T1	92-33		679316	Orifice. 0.5, M6 x 8	1
	T2	92-33		578542	Orifice, 0.8, M6 x 8	1
	T3	92-33		578542	Orifice, 0.8, M6 x 8	1
	T4	92-33		913897 (9007712-0605)	Set screw	1
	T5	92-33		913897 (9007712-0605)	Set screw	1
	T6	92-33		578542	Orifice, 0.8, M6 x 8	1
	T7	92-33		639096	Orifice. 0.6, M5 x 6	1
	T8	92-33		639096	Orifice. 0.6, M5 x 6	1
	U6	92-33		044081	Orifice. 0.7, M6 x 8	1
	U7	92-33		044081	Orifice. 0.7, M6 x 8	1
E5	T1	92-33		679316	Orifice. 0.5, M6 x 8	1
	T2	92-33		578542	Orifice, 0.8, M6 x 8	1
	T3	92-33		578542	Orifice, 0.8, M6 x 8	1
	T4	92-33		578542	Orifice, 0.8, M6 x 8	1
	T5	92-33		913897 (9007712-0605)	Set screw	1
	T6	92-33		578542	Orifice, 0.8, M6 x 8	1
	T7	92-33		639096	Orifice. 0.6, M5 x 6	1
	T8	92-33		639096	Orifice. 0.6, M5 x 6	1
	U5	92-33		913897 (9007712-0605)	Set screw	1
	U6	92-33		511825	Orifice. 0.6, M6 x 8	1
	U7	92-33		511825	Orifice. 0.6, M6 x 8	1
E6	T1	92-33		679316	Orifice. 0.5, M6 x 8	1
	T2	92-33		578542	Orifice, 0.8, M6 x 8	1
	T3	92-33		578542	Orifice, 0.8, M6 x 8	1
	T7	92-33		639096	Orifice. 0.6, M5 x 6	1
	T8	92-33		639096	Orifice. 0.6, M5 x 6	1
	U5	92-33		913897 (9007712-0605)	Set screw	1

Variable Displacement Motor

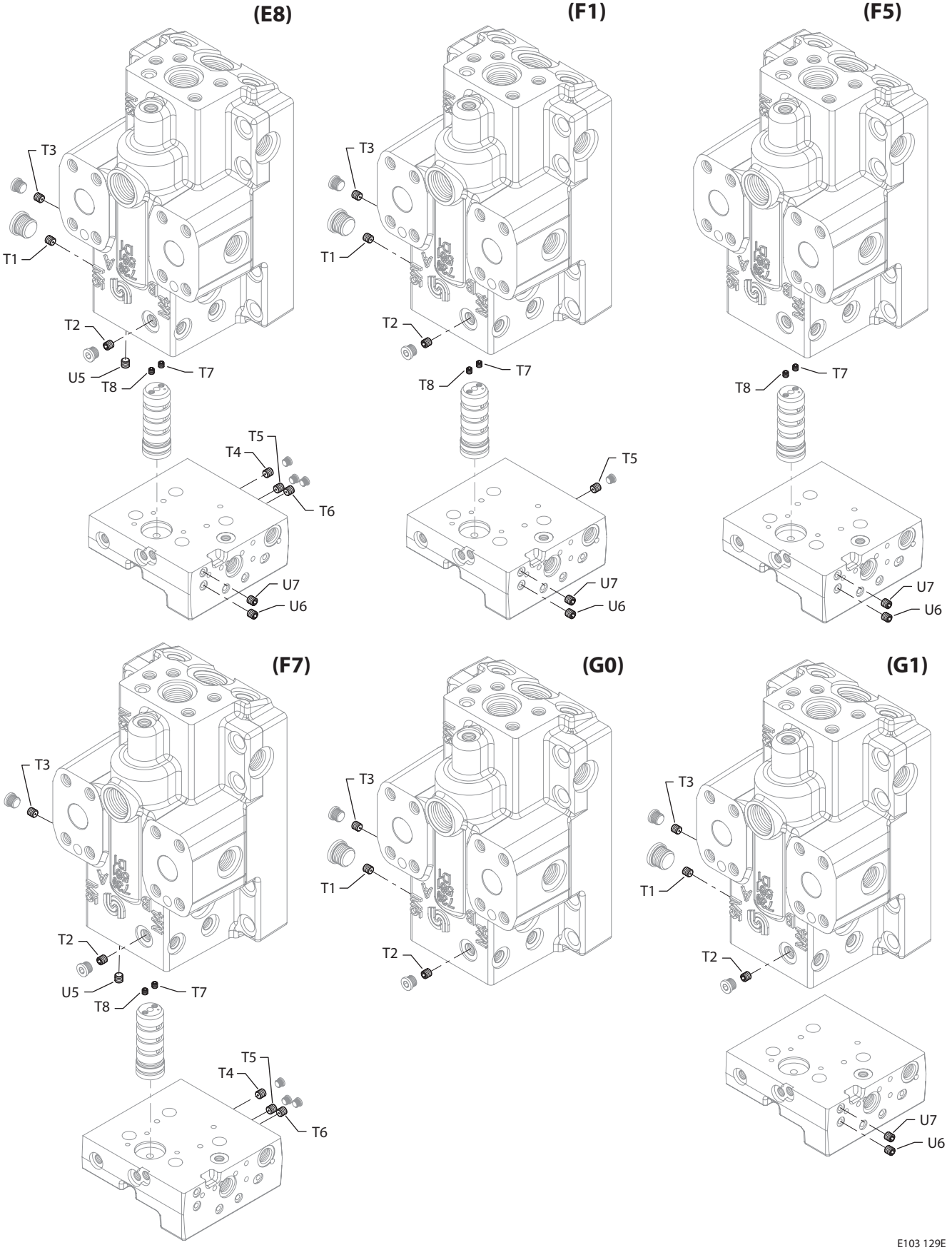

Variable Displacement Motor

Orifice

Order code	Item	Date begin	Date end	Part number	Part name	Qty. per model/kit
E8	T1	92-33		679316	Orifice. 0.5, M6 x 8	1
	T2	92-33		578542	Orifice, 0.8, M6 x 8	1
	T3	92-33		578542	Orifice, 0.8, M6 x 8	1
	T4	92-33		913897 (9007712-0605)	Set screw	1
	T5	92-33		913897 (9007712-0605)	Set screw	1
	T6	92-33		578542	Orifice, 0.8, M6 x 8	1
	T7	92-33		639096	Orifice. 0.6, M5 x 6	1
	T8	92-33		639096	Orifice. 0.6, M5 x 6	1
	U5	92-33		913897 (9007712-0605)	Set screw	1
	U6	92-33		511825	Orifice. 0.6, M6 x 8	1
	U7	92-33		511825	Orifice. 0.6, M6 x 8	1
F1	T1	92-33		679316	Orifice. 0.5, M6 x 8	1
	T2	92-33		578542	Orifice, 0.8, M6 x 8	1
	T3	92-33		578542	Orifice, 0.8, M6 x 8	1
	T5	92-33		578542	Orifice, 0.8, M6 x 8	1
	T7	92-33		639096	Orifice. 0.6, M5 x 6	1
	T8	92-33		639096	Orifice. 0.6, M5 x 6	1
	U6	92-33		578542	Orifice, 0.8, M6 x 8	1
	U7	92-33		578542	Orifice, 0.8, M6 x 8	1
F5	T7	92-33		639096	Orifice. 0.6, M5 x 6	1
	T8	92-33		639096	Orifice. 0.6, M5 x 6	1
	U6	92-33		913897 (9007712-0605)	Set screw	1
	U7	92-33		044081	Orifice. 0.7, M6 x 8	1
F7	T2	92-33		578542	Orifice, 0.8, M6 x 8	1
	T3	92-33		578542	Orifice, 0.8, M6 x 8	1
	T4	92-33		578542	Orifice, 0.8, M6 x 8	1
	T5	92-33		913897 (9007712-0605)	Set screw	1
	T6	92-33		578542	Orifice, 0.8, M6 x 8	1
	T7	92-33		639096	Orifice. 0.6, M5 x 6	1
	T8	92-33		639096	Orifice. 0.6, M5 x 6	1
	U5	92-33		913897 (9007712-0605)	Set screw	1
G0	T1	92-33		578542	Orifice, 0.8, M6 x 8	1
	T2	92-33		679316	Orifice. 0.5, M6 x 8	1
	T3	92-33		679316	Orifice. 0.5, M6 x 8	1
G1	T1	92-33		578542	Orifice, 0.8, M6 x 8	1
	T2	92-33		679316	Orifice. 0.5, M6 x 8	1
	T3	92-33		679316	Orifice. 0.5, M6 x 8	1
	U6	92-33		578542	Orifice, 0.8, M6 x 8	1
	U7	92-33		578542	Orifice, 0.8, M6 x 8	1

Variable Displacement Motor

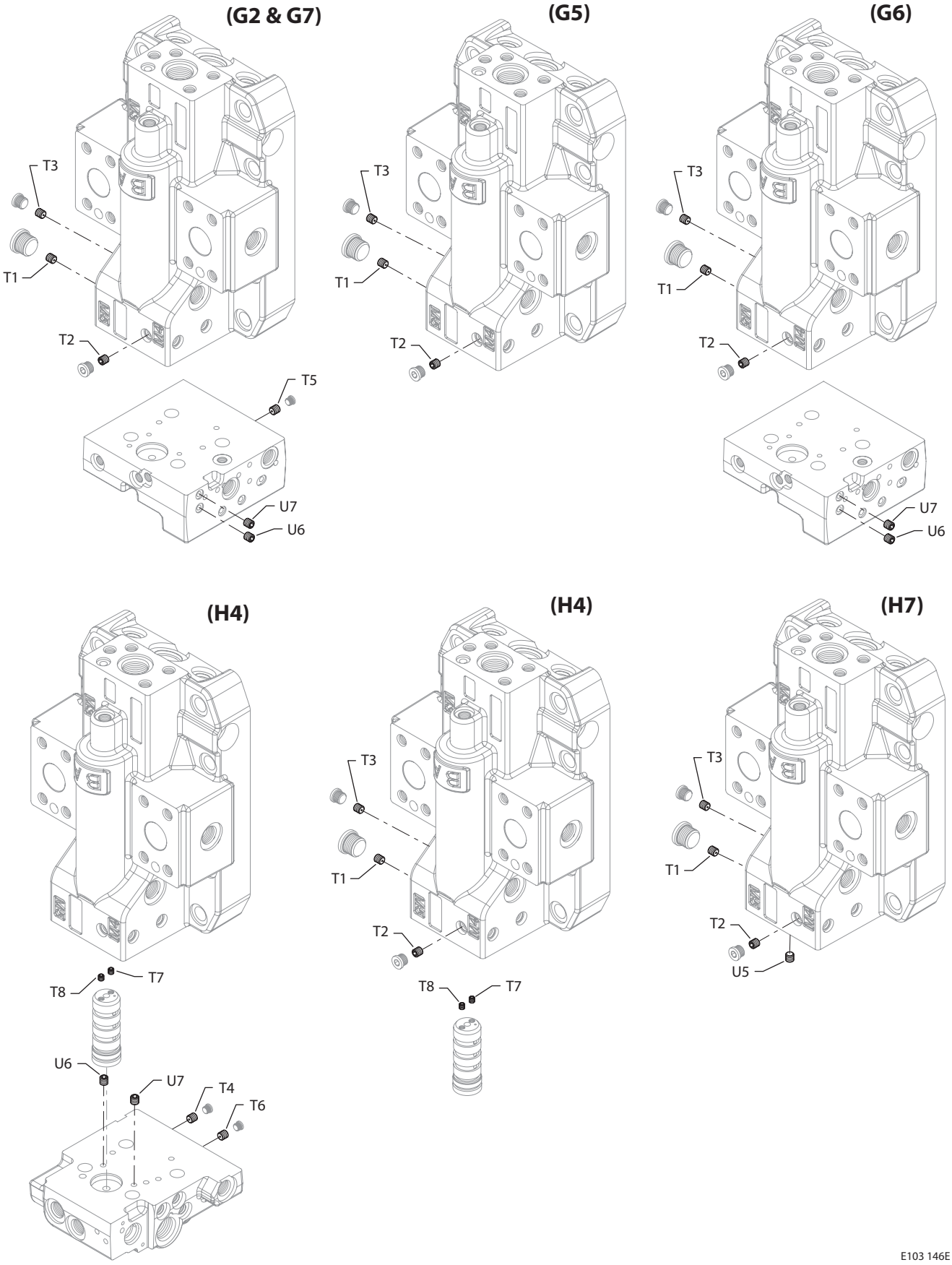

Variable Displacement Motor

Orifice

Order code	Item	Date begin	Date end	Part number	Part name	Qty. per model/kit
G2	T1	92-33		578542	Orifice, 0.8, M6 x 8	1
	T2	92-33		679316	Orifice. 0.5, M6 x 8	1
	T3	92-33		679316	Orifice. 0.5, M6 x 8	1
	T5	92-33		913897 (9007712-0605)	Set screw	1
	U6	92-33		578542	Orifice, 0.8, M6 x 8	1
	U7	92-33		578542	Orifice, 0.8, M6 x 8	1
G5	T1	92-33		679316	Orifice. 0.5, M6 x 8	1
	T2	92-33		679316	Orifice. 0.5, M6 x 8	1
	T3	92-33		679316	Orifice. 0.5, M6 x 8	1
G6	T1	92-33		679316	Orifice. 0.5, M6 x 8	1
	T2	92-33		679316	Orifice. 0.5, M6 x 8	1
	T3	92-33		679316	Orifice. 0.5, M6 x 8	1
	U6	92-33		578542	Orifice, 0.8, M6 x 8	1
	U7	92-33		578542	Orifice, 0.8, M6 x 8	1
G7	T1	92-33		679316	Orifice. 0.5, M6 x 8	1
	T2	92-33		679316	Orifice. 0.5, M6 x 8	1
	T3	92-33		679316	Orifice. 0.5, M6 x 8	1
	T5	92-33		913897 (9007712-0605)	Set screw	1
	U6	92-33		578542	Orifice, 0.8, M6 x 8	1
	U7	92-33		578542	Orifice, 0.8, M6 x 8	1
H4	T4	92-33		578542	Orifice, 0.8, M6 x 8	1
	T6	92-33		578542	Orifice, 0.8, M6 x 8	1
	T7	92-33		639096	Orifice. 0.6, M5 x 6	1
	T8	92-33		639096	Orifice. 0.6, M5 x 6	1
	U6	92-33		044081	Orifice. 0.7, M6 x 8	1
	U7	92-33		044081	Orifice. 0.7, M6 x 8	1
H5	T1	92-33		044081	Orifice, 0.7, M6 x 8	1
	T2	92-33		578542	Orifice, 0.8, M6 x 8	1
	T3	92-33		578542	Orifice, 0.8, M6 x 8	1
	T7	92-33		639096	Orifice. 0.6, M5 x 6	1
	T8	92-33		639096	Orifice. 0.6, M5 x 6	1
H7	T1	92-33		578542	Orifice, 0.8, M6 x 8	1
	T2	92-33		578542	Orifice, 0.8, M6 x 8	1
	T3	92-33		578542	Orifice, 0.8, M6 x 8	1
	U5	92-33		913897 (9007712-0605)	Set screw	1

Variable Displacement Motor

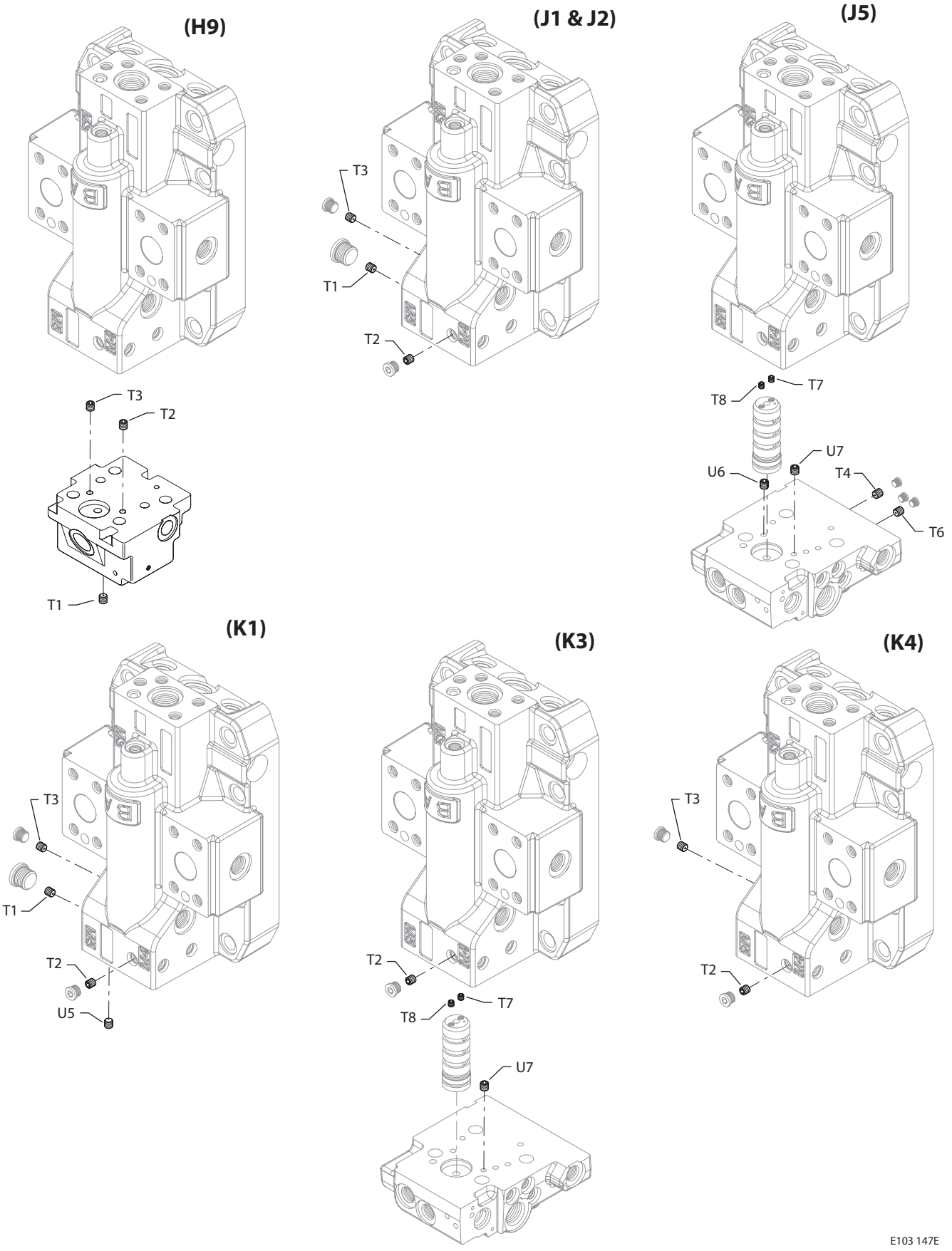

Variable Displacement Motor

Orifice

Order code	Item	Date begin	Date end	Part number	Part name	Qty. per model/kit
H9	T1	92-33		578542	Orifice, 0.8, M6 x 8	1
	T2	92-33		578542	Orifice, 0.8, M6 x 8	1
	T3	92-33		578542	Orifice, 0.8, M6 x 8	1
J1	T1	92-33		578542	Orifice, 0.8, M6 x 8	1
	T2	92-33		578542	Orifice, 0.8, M6 x 8	1
	T3	92-33		578542	Orifice, 0.8, M6 x 8	1
J2	T1	92-33		511825	Orifice, 0.6, M6 x 8	1
	T2	92-33		511825	Orifice, 0.6, M6 x 8	1
	T3	92-33		511825	Orifice, 0.6, M6 x 8	1
J5	T4	92-33		578542	Orifice, 0.8, M6 x 8	1
	T6	92-33		913897	Set screw	1
	T7	92-33		639096	Orifice. 0.6, M5 x 6	1
	T8	92-33		639096	Orifice. 0.6, M5 x 6	1
	U6	92-33		578542	Orifice, 0.8, M6 x 8	1
	U7	92-33		578542	Orifice, 0.8, M6 x 8	1
K1	T1	92-33		679316	Orifice. 0.5, M6 x 8	1
	T2	92-33		679316	Orifice. 0.5, M6 x 8	1
	T3	92-33		679316	Orifice. 0.5, M6 x 8	1
	U5	92-33		913897 (9007712-0605)	Set screw	1
K3	T2	92-33		511825	Orifice. 0.6, M6 x 8	1
	T7	92-33		639096	Orifice. 0.6, M5 x 6	1
	T8	92-33		639096	Orifice. 0.6, M5 x 6	1
	U7	92-33		511825	Orifice. 0.6, M6 x 8	1
K4	T2	92-33		578542	Orifice, 0.8, M6 x 8	1
	T3	92-33		578542	Orifice, 0.8, M6 x 8	1

Variable Displacement Motor

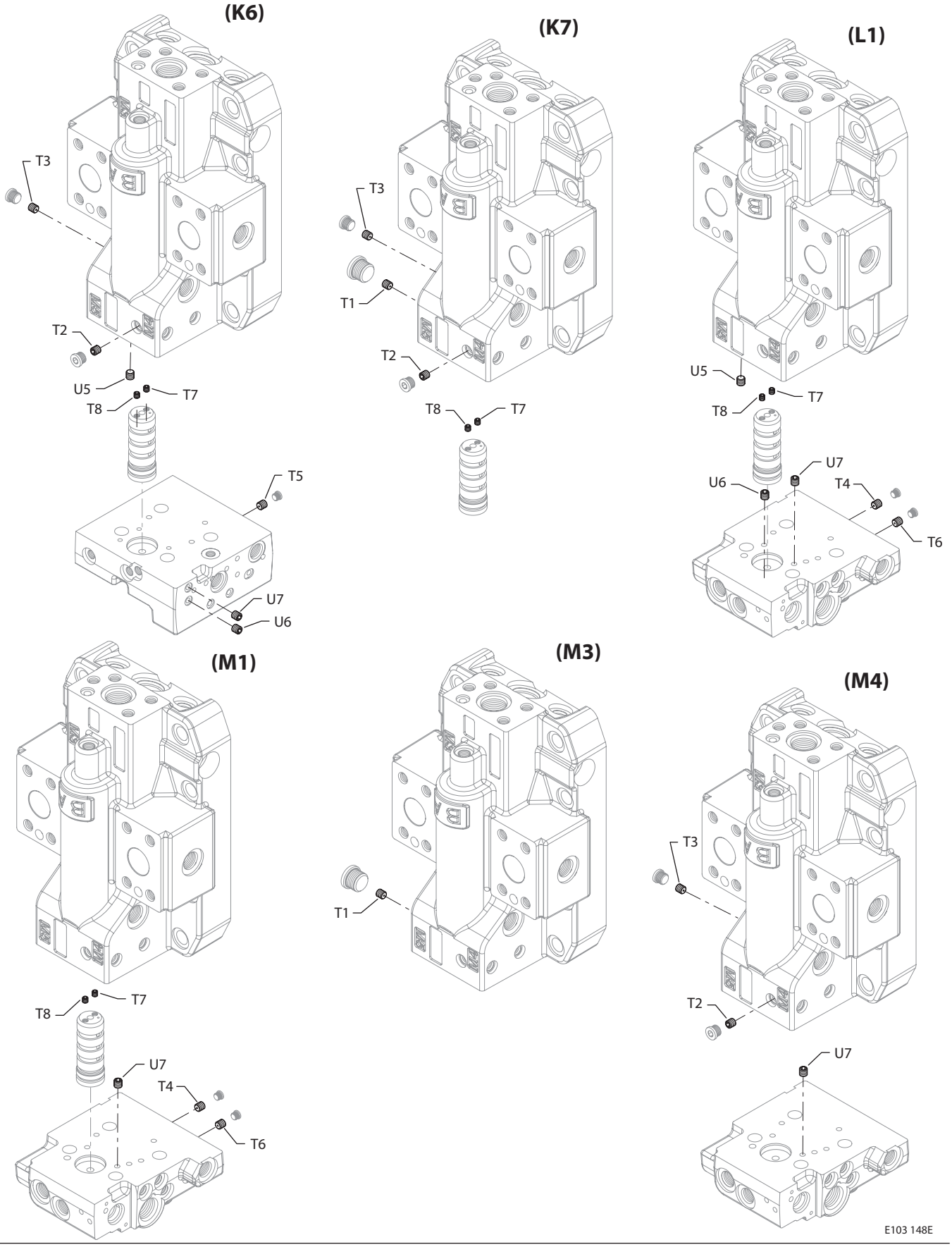

Variable Displacement Motor

Orifice

Order code	Item	Date begin	Date end	Part number	Part name	Qty. per model/kit
K6	T2	92-33		508014	Orifice, 1.0, M6 x 8	1
	T3	92-33		508014	Orifice, 1.0, M6 x 8	1
	T7	92-33		639096	Orifice. 0.6, M5 x 6	1
	T8	92-33		639096	Orifice. 0.6, M5 x 6	1
	U5	92-33		913897 (9007712-0605)	Set screw	1
	U6	92-33		511825	Orifice. 0.6, M6 x 8	1
	U7	92-33		511825	Orifice. 0.6, M6 x 8	1
K7	T1	92-33		578542	Orifice, 0.8, M6 x 8	1
	T2	92-33		679316	Orifice. 0.5, M6 x 8	1
	T3	92-33		679316	Orifice. 0.5, M6 x 8	1
	T7	92-33		639096	Orifice. 0.6, M5 x 6	1
	T8	92-33		639096	Orifice. 0.6, M5 x 6	1
L1	T4	92-33		578542	Orifice, 0.8, M6 x 8	1
	T6	92-33		578542	Orifice, 0.8, M6 x 8	1
	T7	92-33		639096	Orifice. 0.6, M5 x 6	1
	T8	92-33		639096	Orifice. 0.6, M5 x 6	1
	U5	92-33		913897 (9007712-0605)	Set screw	1
	U6	92-33		044081	Orifice. 0.7, M6 x 8	1
	U7	92-33		044081	Orifice. 0.7, M6 x 8	1
M1	T7	92-33		639096	Orifice. 0.6, M5 x 6	1
	T8	92-33		639096	Orifice. 0.6, M5 x 6	1
	T4	92-33		578542	Orifice, 0.8, M6 x 8	1
	T6	92-33		578542	Orifice, 0.8, M6 x 8	1
	U7	92-33		044081	Orifice. 0.7, M6 x 8	1
M3	T1	92-33		578542	Orifice, 0.8, M6 x 8	1
M4	T2	92-33		578542	Orifice. 0.8, M6 x 8	1
	T3	92-33		578542	Orifice. 0.8, M6 x 8	1
	U7	92-33		511825	Orifice, 0.6, M6 x 8	1

Variable Displacement Motor

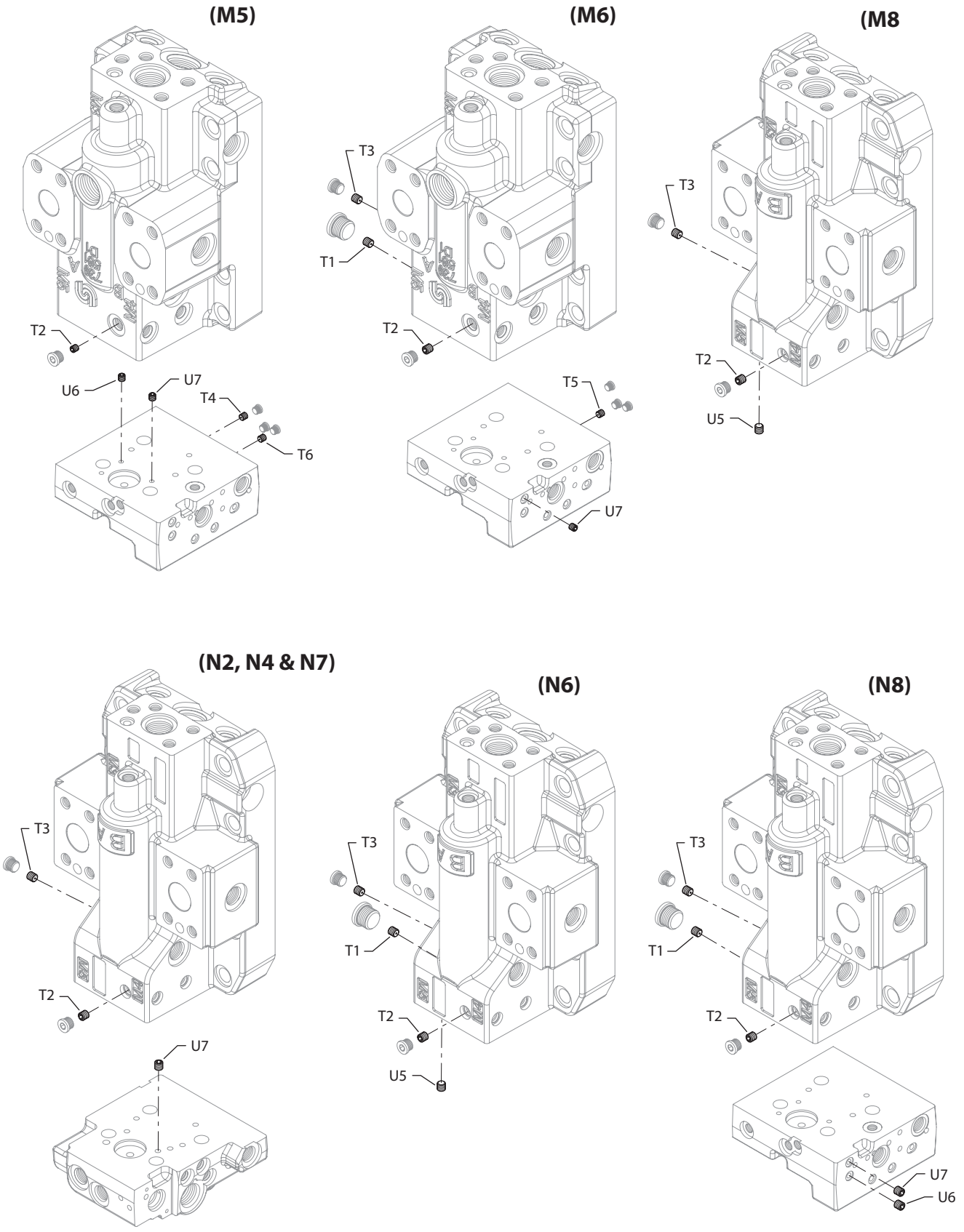

Variable Displacement Motor

Orifice

Order code	Item	Date begin	Date end	Part number	Part name	Qty. per model/kit
M5	T2	92-33		511825	Orifice, 0.6, M6 x 8	1
	T4	92-33		578542	Orifice. 0.8, M6 x 8	1
	T6	92-33		578542	Orifice. 0.8, M6 x 8	1
	U6	92-33		044081	Orifice. 0.7, M6 x 8	1
	U7	92-33		044081	Orifice. 0.7, M6 x 8	1
M6	T1	92-33		578542	Orifice. 0.8, M6 x 8	1
	T2	92-33		578542	Orifice. 0.8, M6 x 8	1
	T3	92-33		578542	Orifice. 0.8, M6 x 8	1
	T5	92-33		913897 (9007712-0605)	Set screw	1
	U7	92-33		578542	Orifice. 0.8, M6 x 8	1
M8	T2	92-33		511825	Orifice, 0.6, M6 x 8	1
	T3	92-33		511825	Orifice, 0.6, M6 x 8	1
	U5	92-33		913897 (9007712-0605)	Set screw	1
N2	T2	92-33		511825	Orifice, 0.6, M6 x 8	1
	T3	92-33		511825	Orifice, 0.6, M6 x 8	1
	U7	92-33		511825	Orifice, 0.6, M6 x 8	1
N4	T2	92-33		044081	Orifice. 0.7, M6 x 8	1
	T3	92-33		044081	Orifice. 0.7, M6 x 8	1
	U7	92-33		511825	Orifice, 0.6, M6 x 8	1
N7	T2	92-33		578542	Orifice. 0.8, M6 x 8	1
	T3	92-33		578542	Orifice. 0.8, M6 x 8	1
	U7	92-33		578542	Orifice. 0.8, M6 x 8	1
N6	T1	92-33		511825	Orifice, 0.6, M6 x 8	1
	T2	92-33		511825	Orifice, 0.6, M6 x 8	1
	T3	92-33		511825	Orifice, 0.6, M6 x 8	1
	U5	92-33		913897 (9007712-0605)	Set screw	1
N8	T1	92-33		578542	Orifice, 0.8, M6 x 8	1
	T2	92-33		679316	Orifice, 0.5, M6 x 8	1
	T3	92-33		578542	Orifice. 0.8, M6 x 8	1
	U6	92-33		578542	Orifice. 0.8, M6 x 8	1
	U7	92-33		578542	Orifice. 0.8, M6 x 8	1

Variable Displacement Motor

(022-074 & M22)

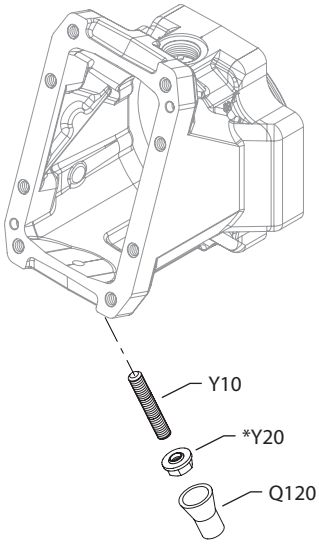

(077-080)

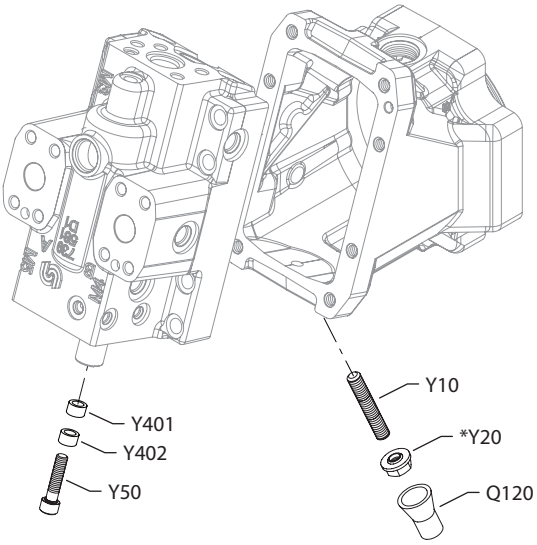

(85 & 100)

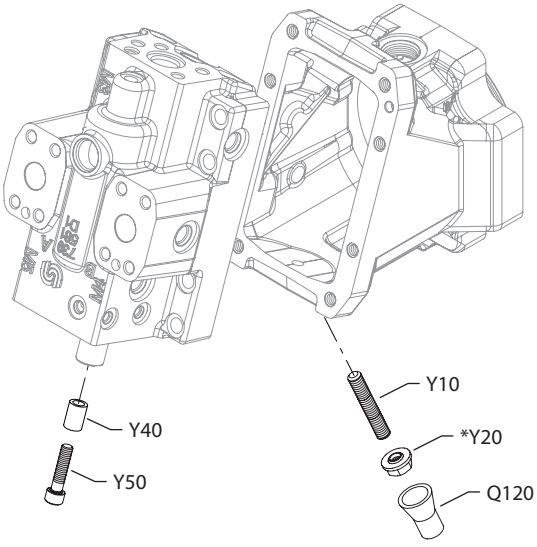

(N38)

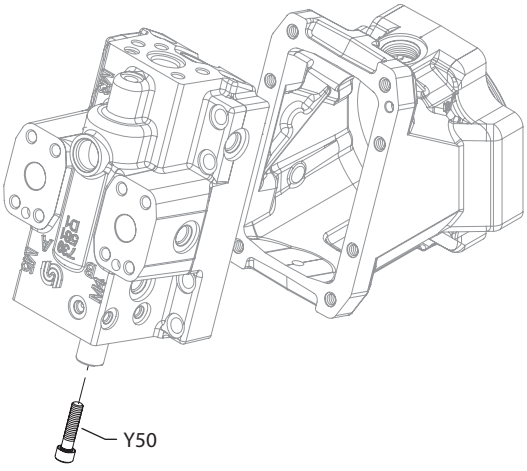

(10 - 37)

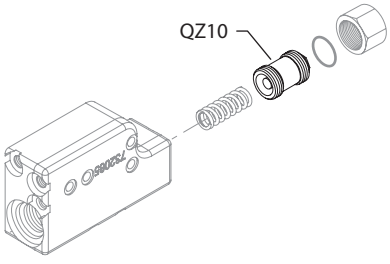

* = included in base motor seal kit Q210

E103 150E

Variable Displacement Motor

Minimum displacement

Order code	Item	Date begin	Date end	Part number	Part name	Qty. per model/kit
022-046	Q120	92-33		770842	Safety cap	1
	Y10	92-33		350090	Set screw, M12 x 70	1
	Y20	92-33		076042 (9003509-0012)	Seal nut, M12	1
047-074	Q120	92-33		770842	Safety cap	1
	Y10	92-33		076109	Set screw, M12 x 80	1
	Y20	92-33		076042 (9003509-0012)	Seal nut, M12	1
077	Q120	92-33		770842	Safety cap	1
	Y10	92-33		11106517	Set screw, M12 x 40	1
	Y20	92-33		076042 (9003509-0012)	Seal nut, M12	1
	Y401	92-33		318683	Spacer, 9.0 mm	1
	Y402	92-33		682211	Spacer, 15.0 mm	1
	Y50	92-33		502580	Screw, M10 x 70	1
080	Q120	92-33		770842	Safety cap	1
	Y10	92-33		11106517	Set screw, M12 x 40	1
	Y20	92-33		076042 (9003509-0012)	Seal nut, M12	1
	Y401	92-33		318683	Spacer, 9.0 mm	1
	Y402	92-33		306993	Spacer, 17.0 mm	1
	Y50	92-33		399758	Screw, M10 x 75	1
085	Q120	92-33		770842	Safety cap	1
	Y10	92-33		11106517	Set screw, M12 x 40	1
	Y20	92-33		076042 (9003509-0012)	Seal nut, M12	1
	Y40	92-33		681692	Spacer, 10.5 mm	1
	Y50	92-33		399758	Screw, M10 x 75	1
100	Q120	92-33		770842	Safety cap	1
	Y10	92-33		11106517	Set screw, M12 x 40	1
	Y20	92-33		076042 (9003509-0012)	Seal nut, M12	1
	Y40	92-33		787846	Spacer, 39.5 mm	1
	Y50	92-33		393785	Screw, M10 x 80	1
M22	Q120	92-33		770842	Safety cap	1
	Y10	92-33		11106517	Set screw, M12 x 40	1
	Y20	92-33		076042 (9003509-0012)	Seal nut, M12	1
N38	Y50	92-33		680686	Screw, M10 x 50	1

PCOR adjuster

00				No parts		
11-26	QZ10	92-33		11112452	Adjuster, 70-260 bar	1
27-37	QZ10	92-33		11112453	Adjuster, 270-420 bar	1

Variable Displacement Motor

Overhaul seal kit

Order Code	Item	Date Begin	Date End	Part Number	Part Name	Qty. per Model/Kit
	Q210	92-33		11122323	Overhaul seal kit, S51 110cc	1
	B80C	92-33		502206	O-ring	1
	B80V	92-33		729285	O-ring	1
	F10	92-33		508133	Seal ring	1
	F11	92-33		019950	O-ring	1
	F324	92-33		730036	O-ring	2
	G100	92-33		792739	O-ring	1
	G36	92-33		11118915	O-ring	1
	G420	03-08		511810	Gasket/O-ring seal (SB-2002-001)	1
	G60	92-33		516124	End cap gasket	1
	J50	92-33		732479 (9004105-0100)	O-ring	1
	K50	92-33		001149 (9004201-6200)	O-ring	1
	K51	92-33		085043 (9004201-3700)	O-ring	1
	L40	92-33		519022	Lip seal	1
	L40	92-33		341735	Lip seal	1
	L50C	92-33		507116	O-ring	1
	L50D	92-33		729285	O-ring	1
	L50V	92-33		717462	O-ring	1
	L82	96-24		501113	Gasket	1
	M12D	92-33		504358	Gasket	1
	M12H	92-33		364984	O-ring	1
	M12N	92-33		730036	O-ring	1
	M16E	92-33		732479 (9004105-0100)	O-ring	2
	M16J	92-33		001149 (9004201-6200)	O-ring	1
	M16N	92-33		084673	Seal ring	1
	M211	92-33		365015	O-ring	1
	M242	92-33		056770	O-ring	1
	M24P	92-33		732479 (9004105-0100)	O-ring	4
	M30	92-33		056770	O-ring	1
	M30H	92-33		011296 (9004105-0120)	O-ring	2
	M36	92-33		732479 (9004105-0100)	O-ring	1
	M38	92-33		011395	O-ring	1
	M82	92-33		732479 (9004105-0100)	O-ring	1
	M95	92-33		9004104-0120	O-ring	2
	M96	92-33		9004104-0140	O-ring	1
	M97	92-33		9004104-0240	O-ring	1
	N16	92-33		001149 (9004201-6200)	O-ring	1
	N24	92-33		732479 (9004105-0100)	O-ring	4
	N82	92-33		732479 (9004105-0100)	O-ring	1
	QG20	92-33		085043 (9004201-3700)	O-ring	2
	QL81	92-33		039297 (9004201-1200)	O-ring	2
	QM84	92-33		039297 (9004201-1200)	O-ring	2
	QN84	92-33		039297 (9004201-1200)	O-ring	2
	QW30	92-33		085043 (9004201-3700)	O-ring	1
	X11	92-33		001149 (9004201-6200)	O-ring	1
	Y20	92-33		076042 (9003509-0012)	Seal nut, M12	1

Service Bulletin: SB-1993-006

Products affected

All Series 51 motors

Subject

End cap gasket change.

Description

Effective immediately, a new end cap gasket has been incorporated on all Series 51 motors. It is a direct replacement for the current gasket. The visible differences between the two gaskets are:

1. The new gasket is thicker. It measures .040" versus .030".

2. The new gasket has a red tint to the surface.

The new gasket is a stand alone gasket which should not be used with any sealing aid. The current torque values stay the same.

The new gaskets are now available and **MUST** be used in any repair or conversion.

Models affected

All series 51 motors

Serial numbers

N/A

Part numbers affected

Frame size	Old part number	New part number
60cc	729228	501198
80cc	734368	501199
110cc	734376	501200
160cc	734384	501201
250cc	734392	501202

Parts disposition

- Interchangeable
- Scrap used parts
- Order replacement parts
- Revise existing part orders

Service Bulletin: SB-1995-013

Products affected Series 51: 60cc-250cc motors

Subject Threshold adjustment screw.

Description

To improve the sensitivity of the threshold adjustment on Series 51 motors, the threads on the adjusting screw are being changed from standard pitch thread to fine pitch thread. The adjusting screw nut and lock nut will also change. At the same time, the bore diameter in the end of the adjusting screw and the pin diameter on the end of the spring seat will decrease.

The old style parts will be obsoleted and no longer available as service parts. A service kit containing the adjusting assembly and the spring seat has been created.

Piece parts are not interchangeable.

All noted parts must be replaced.

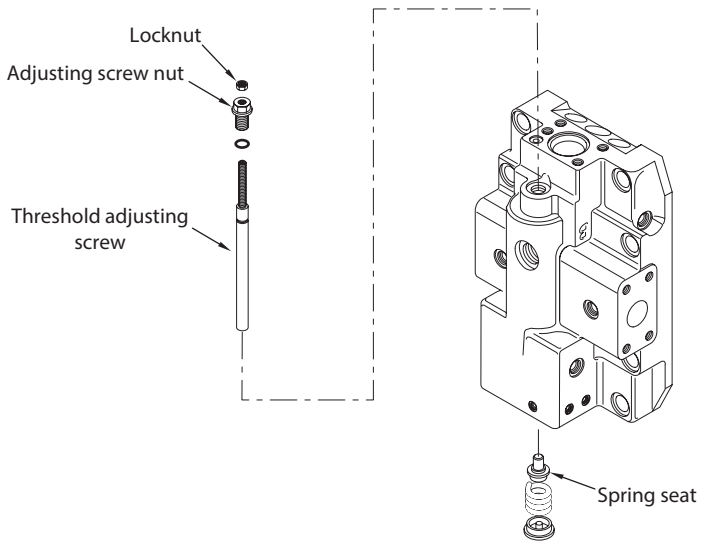

Models affected All series 51: 60cc - 250cc motors

Serial numbers This change became effective at serial number N-96-07-xxxxx.

Part numbers affected

	Old hardware				New kits
Frame size	Spring seat	Adjusting screw nut	Lock nut	Theshold adjusting screw	Threshold adjusting kit
60cc	722264	732487	69393	729251	507691
80cc	722264	732487	69393	732503	507692
80cc	722264	732487	69393	737353	507672
110cc	722264	732487	69393	732511	507693
110cc	722264	732487	69393	732503	507677
160cc	722264	732487	69393	792051	507694
250cc	722264	732487	69393	792069	507695

Parts disposition ■ Interchangeable - Piece part are not interchangeable

Service Bulletin: SB-1996-005

Products affected Series 51: 60cc - 250cc motors

Subject Change to balanced areas between end cap and valve segment.

Description As part of the continuing Series 51 product improvement program, the balance lands on the end cap and valve segment have been changed. The valve segment now defines the balance. The contact surface of the end cap has been made larger while the contact surface of the valve segment has been reduced. The change was implemented in three steps:

1. Change the valve segment so it defines the balance between the valve segment and the end cap. This change was implemented May 1994.

2. Change the end cap to allow a larger contact surface to keep the load arwea constant. This change was implemented January 1995

3. Change the valve segment to allow a smaller contact surface and reduce the balance. This change was implemented Februrary 1996.

Do not use a new end cap with an old valve seagment. However a new valve segment will work with an old end cap. The new valve segment (3rd step) is marked with a drill point on the cylinder block interface side next to the outer drain hole.

The old end cap and valve segment part numbers are obsolete. They are no longer available as genuine service parts.

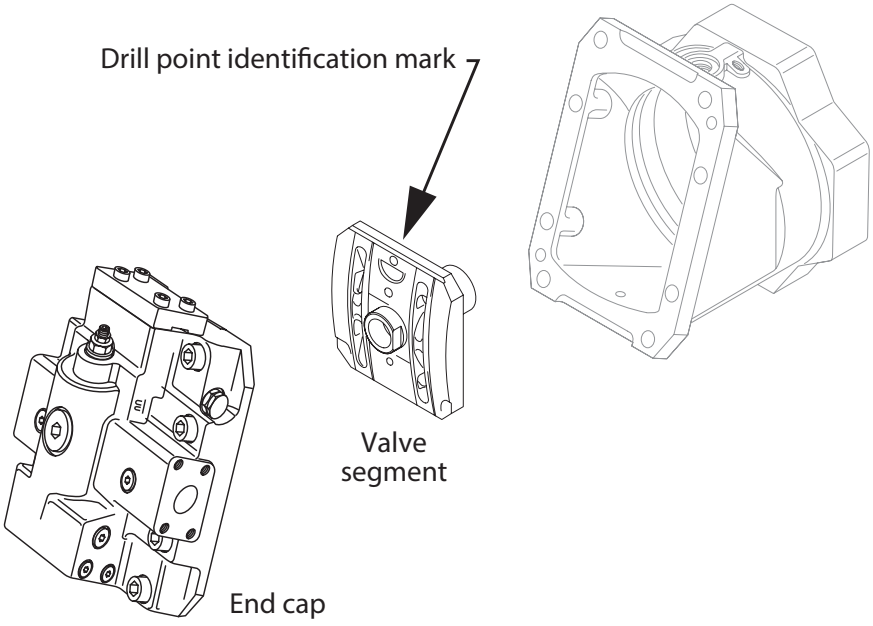

Service Bulletin: SB-1996-005

Models affected All Series 51 motors

Serial numbers N-96-12-xxxxx and later

Part numbers affected

End caps	Radial ports w/LF		Radial ports w/o LF		Axial ports w/LF		Axial ports w/o LF	
	Old	New	Old	New	Old	New	Old	New
60cc	729210	504226	779793	504227	-	-	-	-
80cc	731794	504230	731794	504231	739615	504232	739615	504234
110cc	731802	504236	731802	504236	739631	504237	739631	504238
160cc	731810	504239	731810	504240	731828	504242	731828	504243
250cc	731836	504244	783282	504245	731844	504246	731844	504247

Valve segment	Standard spindle		Retained spindle	
	Old	New	Old	New
60cc	732701	504718	-	-
80cc	360354	503939	-	-
110cc	349076	504715	501349	507758
160cc	356139	507242	500341	507759
250cc	367896	508202	502561	508202

Parts disposition

- Interchangeable - except where noted

Service Bulletin: SB-1997-009

Products affected

Series 51: 60 thru 250cc variable motors

Subject

Servo piston seal ring change

Description

As a product improvement, Sauer-Danfoss is changing the vender for the servo piston seal ring used in the Series 51 variable motors. As a result, the old piston seal ring will become obsolete and no longer available as a service part.

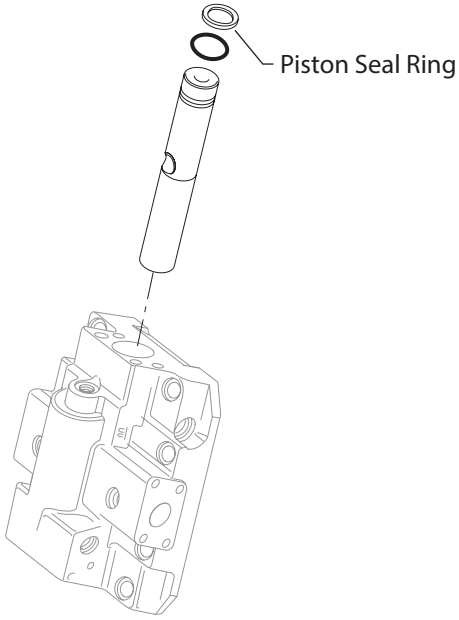

Models affected

All Series 51 motors

Serial numbers

N-96-08-xxxxx and after

Part numbers affected

Frame size	Old part number	New part number
60cc	504202	508131
80cc	504203	508132
110cc	504204	508133
160cc	504205	508134
250cc	687277	504136

Parts disposition

■ Interchangeable

Service Bulletin: SB-1997-030

Products affected

Series 51: 60 thru 250cc variable motors

Subject

Change.to stepped spindle in valve segment

Description

As part of the continuing Series 51 product improvement, the valve segment spindle design has been changed. The new design spindle has a step that stops against a recess in the valve segment. The new stepped spindle valve segment assembly replaces the valve segment assemblies with the straight spindle and the retained spindle.

The old segment valve assemblies will become obsolete. The stepped spindle valve segment assembly will be the standard for all models.

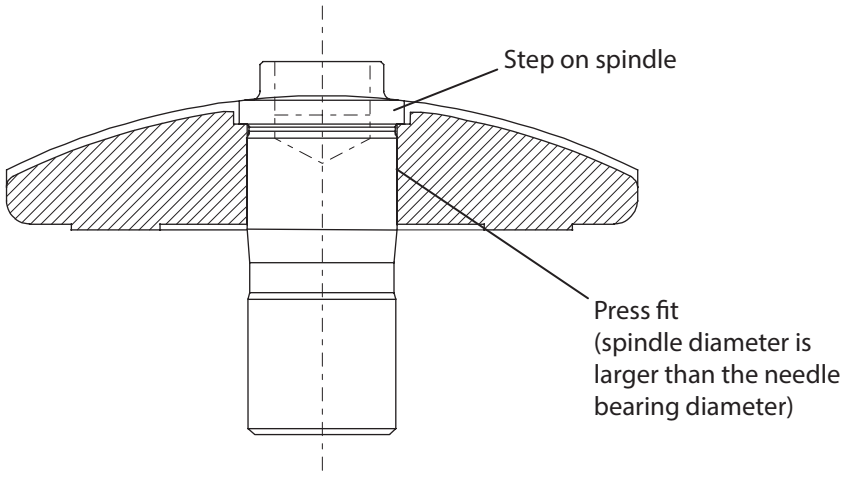

Models affected

All Series 51 motors

Serial numbers

N-96-08-xxxxx and after

Part numbers affected

Frame size	Obsolete Straight spindle valve segment	Obsolete Retained spindle valve segment	New Stepped spindle valve segment
60cc	504718	-	508197
80cc	503939	-	508198
110cc	504715	507758	508199
160cc	507252	507759	508201
250cc	507757	507760	508202

Parts disposition

■ Interchangeable - except where noted

Service Bulletin: SB-1998-035A

Products affected

Series 51cartridge motors

Subject

Incorporation of speed sensor into cartridge motors.

Description

In order to incorporate a speed sensor into the Series 51 cartridge motors, some changes have been made to the main housing and bearing housing. These changes included: adding a boss to the side of the main housing for the speed sensor, changing from O-ring seals between housings to a gasket seal, shortening the distance ring to allow clearance for the speed sensor, and adding a retaining ring to locate the distance ring. These parts are non-interchangeable as both housings have changed. The old housings and distance ring are obsolete and no longer available as service patrts. Refer to Service Bulletin SB-1998-021 for housing bolt torque and sequence.

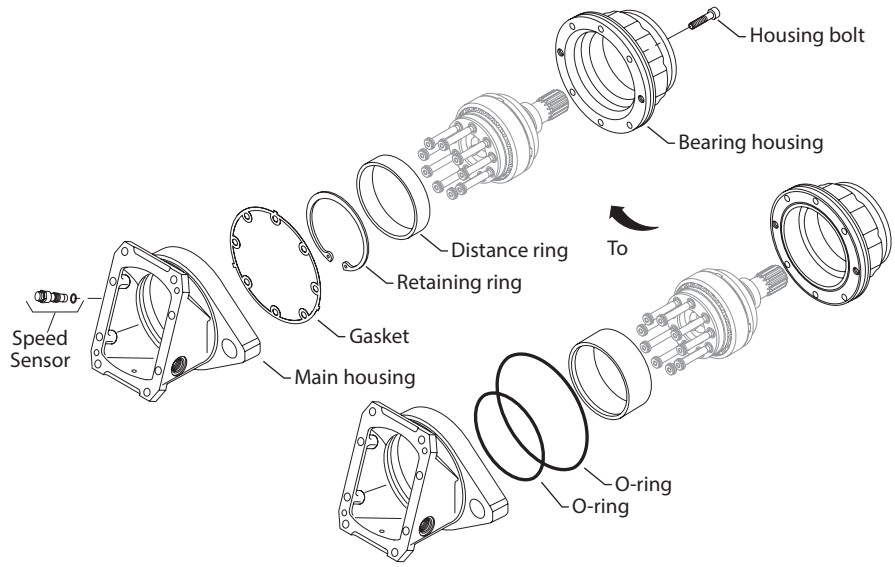

Models affected

51C060, 51C080, and 51C110 cartridge motors

Serial numbers

51C060 motors = N-94-42-xxxxx and after
51C080 motors = N-94-42-xxxxx thru N-98-32-xxxxx. After N98-32-xxxxx see SB-1998-086
51C110 motors = N-96-24-xxxxx and after

Part numbers affected

	From	To	From	To	From	To
Description	60cc	60cc	80cc	80cc	110cc	110cc
Main housing	741652	501103	734855	501104	738997	501105
Bearing housing	763756	501108	734632	501109	738971	501110
Retaining ring	--	501120	--	371625	--	504732
Gasket	--	501019	--	507259	--	501113
O-ring	792319	--	916759	--	502206	--
O-ring	502204	--	279570	--	502207	--
Distance ring	741702	501116	734913	501117	739045	501118

Parts disposition

■ Non-interchangeable

Service Bulletin: SB-1999-059

Products affected

Series 51: 60cc, 80cc, 110cc, and 160cc motors

Subject

Thread change at customer end of DIN shaft assemblies.

Description

As a product improvement, Sauer-Danfoss has changed the threaded hole at the customer end of DIN shaft assemblies to metric threads. Metric shaft assemblies will now have a metric threaded hole. To aid in identifying this change, new shaft assembly part numbers have been released. The new shaft assemblies are interchangeable with the previous shaft assemblies. The previous shaft assembly part numbers will become obsolete.

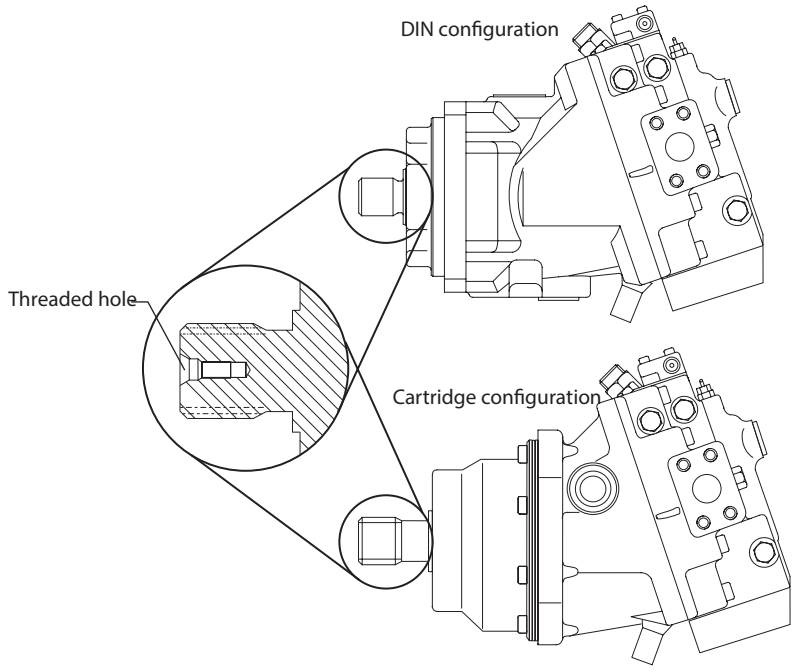

Models affected

All 60, 80, 110, and 160cc motors (Series 51 and 51-1) with DIN shaft assemblies

Serial numbers

See table below

Part numbers affected

Frame size	Shaft code	Previous p/n	New p/n	Bolt size FROM	Bolt size TO	Effective after serial number
60cc	D1	747931	513034	7/16 - 14	M10 x 1.5	N-99-17-xxxxx
60cc	D2	787622	513033	7/16 - 14	M10 x 1.5	N-99-52-xxxxx
80cc	D2	742213	513037	7/16 - 14	M10 x 1.5	N-99-13-xxxxx
80cc	D3	783399	513035	7/16 - 14	M10 x 1.5	N-99-12-xxxxx
110cc	D3	787663	513039	5/8 - 11	M12 x 1.75	N-99-16-xxxxx
110cc	D4	749192	513038	5/8 - 11	M12 x 1.75	N-99-17-xxxxx
160cc	D4	787689	513041	5/8 - 11	M12 x 1.75	N-99-16-xxxxx
160cc	D5	749226	513040	5/8 - 11	M12 x 1.75	N-99-39-xxxxx

Parts disposition

■ Interchangeable

Service Bulletin: SB-2000-044

Products affected

All Series 51 & 51-1 motors

Subject

Change to spring and spring seat at ends of loop flushing shuttle spool.

Description

As a product improvement, and to ease assembly, the spring and spring seat at the ends of the loop flushing shuttle spool have been changed. The new spring and spring seat clip together. The old spring and spring seat are interchangeable with the new spring and spring seat as an assembly only.

The old spring seat will become obsolete and no longer available as a service part. The old spring will remain available as a service part.

From:

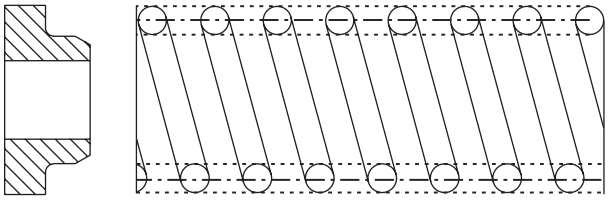

To:

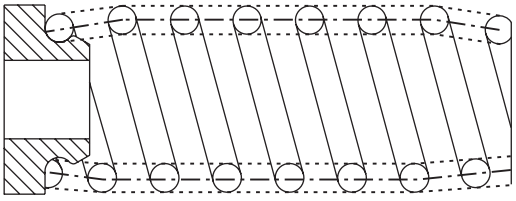

Models affected

All Series 51 and 51-1 variable motors

Serial numbers

This change became effective at serial number N-00-50-xxxxx

Part numbers affected

From: Spring part number 4350286 and spring seat part number 4800353

To: Spring seat assembly part number 513596

Parts disposition

- Interchangeable - as an assembly only

Service Bulletin: SB-2001-015

Products affected

All Series 51 & 51-1 motors

Subject

Incorporation of symmetrical rollers on the synchronizing shaft

Description

As a product improvement and to improve ease of assembly, Sauer-Danfoss has changed the design of the rollers used on the synchronizing shaft in Series 51 and 51-1 motors. The new rollers are symmetrical, in that they can be assembled either direction on the synchronizing shaft. The old rollers were asymmetrical and had to be assembled only one way. The synchronizing shaft has also been changed to accept the symmetrical rollers. The legs for the rollers are now longer in length.

A service kit is available to replace the old design synchronizing shaft and rollers, which are obsolete and no longer available as service parts. The pins at each end of the synchronizing shaft are still the same parts.

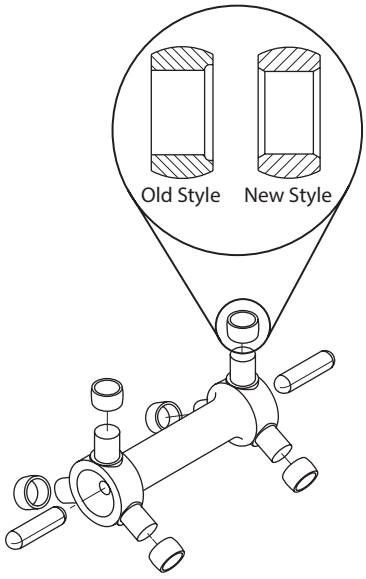

Models affected

All Series 51 and 51-1 motors

Serial numbers

Effective after N-01-39-xxxxx

Part numbers affected

Frame size	Old kit part number	New kit part number
60cc	771675	517308
80cc	771121	517309
110cc	773267	516485
160cc	776823	517310
250cc	776831	517311

Parts disposition

- Interchangeable; as an assembly only
- Use parts in stock

Service Bulletin: SB-2002-001

Products affected All Series 51 & 51-1 motors

Subject Sealing change to end cap/control interface

Description The sealing is improved between the end cap and controls or multi-function blocks on all Series 51 and 51-1 motors. This change replaces individual O-rings with a gasket that incorporates imbedded rubber seal rings.. The O-ring spot faces are removed from the end cap mounting face. There is no change to controls' and multi-function blocks' sealing surface.

New end cap part numbers allow better control of this change. Old end cap part numbers are obsolete. You cannot use the new gasket with old end caps and you cannot use the O-rings with new end caps. Control and multi-function block kit now include the O-rings and the new gasket.

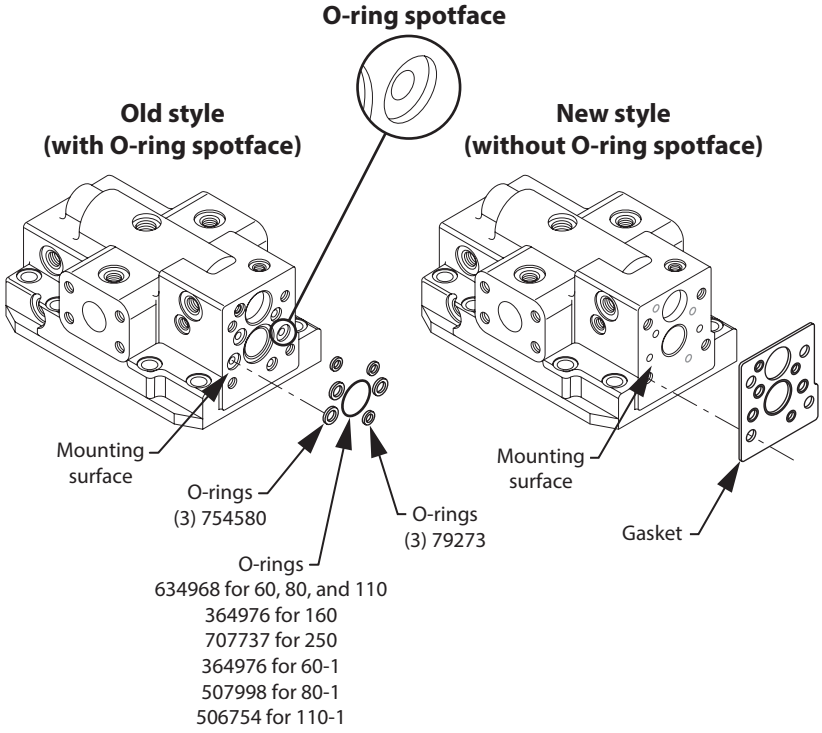

Service Bulletin: SB-2002-001

Models affected

All Series 51 and 51-1 motors

Serial numbers

See table below

Part numbers affected

End cap code	Frame size	Old part number	New part number	Manufacture date code	Gasket part number
R and T	60	504226	516057	N-03-14-xxxxx	511810
A	60	504228	515695	N-03-12-xxxxx	511810
R	60-1	506563	516902	N-03-39-xxxxx	512411
A	60-1	506564	516905	N-03-28-xxxxx	512411
H	60-1	510643	516920	N-03-28-xxxxx	512411
R and T	80	504230	515056	N-03-14-xxxxx	511810
A	80	504232	515696	N-03-27-xxxxx	511810
R	80-1	507976	516903	N-03-39-xxxxx	512411
A	80-1	507977	516907	N-03-39-xxxxx	512411
H	80-1	507978	516921	N-03-39-xxxxx	512411
R and T	110	504235	516058	N-03-14-xxxxx	511810
A	110	504237	513592	N-03-01-xxxxx	511810
R	110-1	506601	516904	N-03-39-xxxxx	512411
A	110-1	506602	515697	N-03-39-xxxxx	512411
H	110-1	510634	516923	N-03-39-xxxxx	512411
R	160	504239	516059	N-03-07-xxxxx	511851
A	160	504242	513543	N-03-01-xxxxx	511851
R	250	504244	516060	N-03-07-xxxxx	511851
A	250	504246	513544	N-03-08-xxxxx	511851

Parts disposition

- Non-interchangeable;
- Order replacement parts

Service Bulletin: SB-2004-004

Products affected

All Series 51 and 51-1 motors

Subject

End cap change

Description

Sauer-Danfoss has made a quality improvement change to the gasket sealing the end cap and housing joint. The gasket changed from paper to a rubber coated metal gasket with a raised bead to aid sealing properties. The new gasket is interchangeable with the old gasket. The old gasket will become obsolete and no longer available for service.

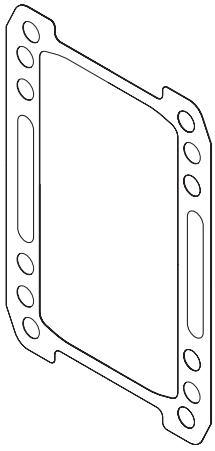

Old gasket

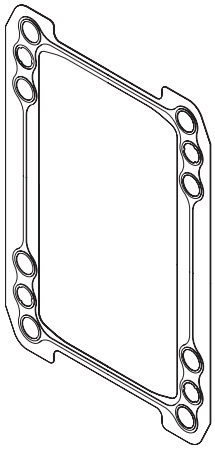

New gasket

Models affected

Series 51 and 51-1 motors, all sizes (60, 80, 110, 160, and 250 cc)

Serial numbers

This change became effective at series numbers:

N-05-48-xxxxx = 60 cc
N-04-19-xxxxx = 80 cc
N-05-48-xxxxx = 110 cc
N-04-21-xxxxx = 160 cc
N-04-36-xxxxx = 250 cc

Part numbers affected

Frame size	Old part number	New part number
60 cc	501198	515733
80 cc	501199	517237
110 cc	501200	516124
160 cc	501201	519806
250 cc	501202	515735

Parts disposition

- Interchangeable;
- Revise exiting part orders

Service Bulletin: SB-2004-013

Products affected

Series 51; 110, 160 & 250 cc motors and 51-1; 110 cc motors

Subject

New shaft lip seal

Description

As a product improvement, Sauer-Danfoss is changing the shaft lip seal in the series 51; 110, 160, & 250 cc motors and in the series 51-1; 110 cc motors. The new seal requires a change to the mounting flange seal bore in SAE & DIN flange options, and the seal carrier used in cartridge motors. The seal carrier assembly part number does not change and is interchangeable with previously built cartridge motors.

The old mounting flange and seal carrier will become obsolete and no longer available. The old lip seal will remain available for service.

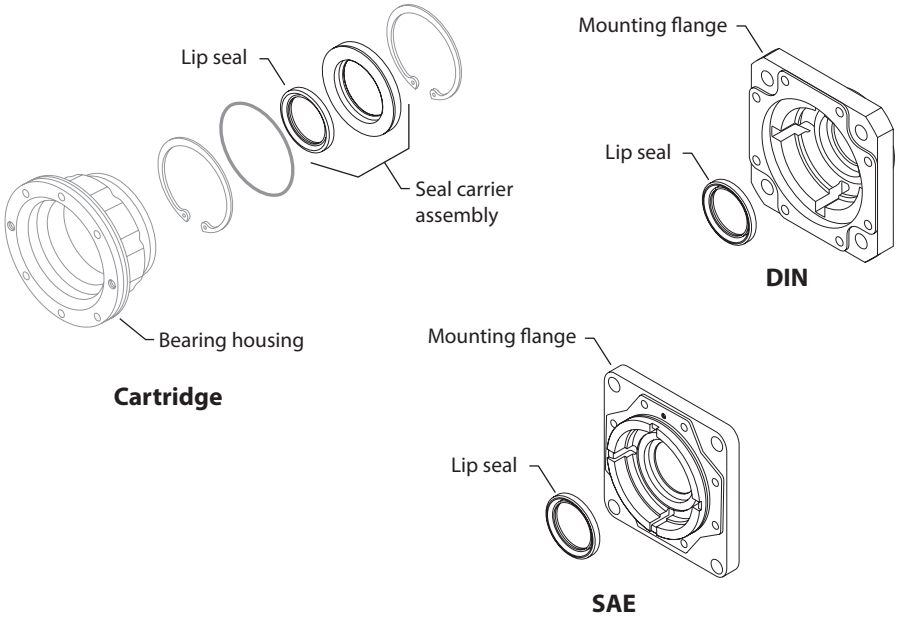

Models affected

All series 51 -110, 160, and 250 cc motors and 51-1 -110 cc motors.

Serial numbers

This change became effective at serial number: N-05-45-xxxxx

Part numbers affected

Frame size	Old flange	New flange	Old seal	New seal
51D110 (DIN)	774737	520316	341735	519022
51V110 (SAE)	366534	520319	341735	519022
51D160 (DIN)	510543	520317	341735	519022
51D160 (SAE)	356261	519417	341735	519022
51V250 (SAE)	511051	519418	341735	519022

Parts disposition

- Non-interchangeable
- Use parts in stock
- Order replacement parts
- Revise existing part orders

Service Bulletin: SB-2009-019

Products affected

Series 51 & 51-1 110 cc cartridge motors

Subject

Redesign of bearing housing

Description

In an effort to commonize the assembly of bent axis motors, the cartridge bearing housing for the series 51 and 51-1 motors has been changed. The new design uses two special plugs to retain the shaft assembly in the housing rather than a spacer ring and retaining ring. The shaft seal hardware has also changed. The new seal design has the lip seal pressed directly into the housing and held in place with a single retaining ring. The old seal design had an O-ring on a seal carrier assembly with two retaining rings holding the seal carrier in place. The lip seal does not change. The new housing will have improved clearances for use in different planetary gearboxes. The old and new housings are not interchangeable. The old housing, spacer ring, spacer retaining ring, seal carrier assembly and retaining rings that held the seal carrier in place will remain available for service.

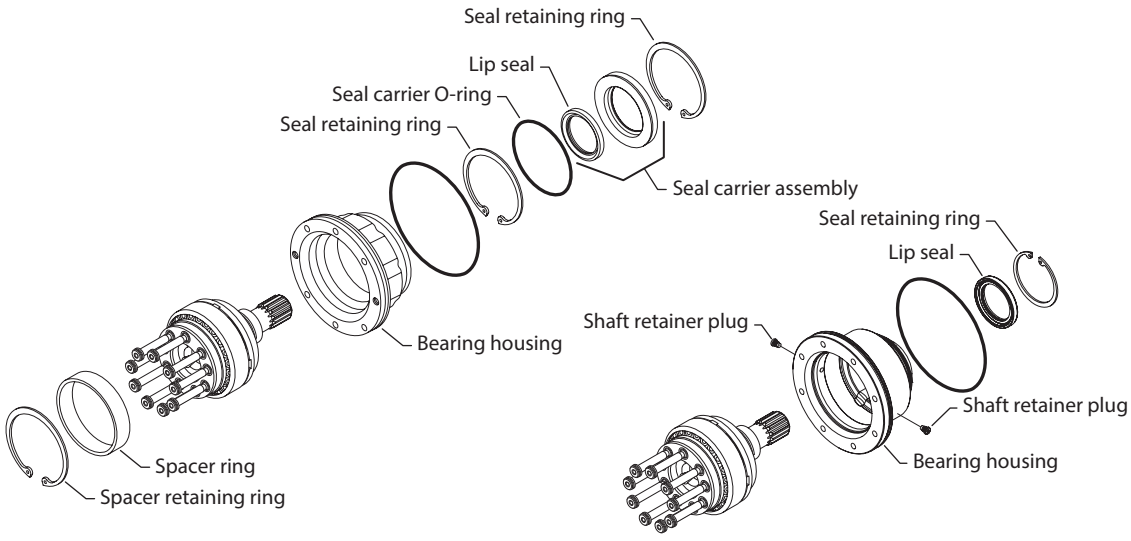

Old design New design

Models affected

All series 51 and 51-1 110cc Cartridge motors.

Serial numbers

This change became effective at serial number N10-20-XXXXX. (17 May 2010)

Part numbers affected

Description	Old part number	Replacement part number
Bearing housing	11009383	11038814
Spacer retaining ring	504732	11056747 (retainer plugs)(2)
Seal carrier assembly	510484	No longer used
Lip seal	519022	No Change
Seal retaining ring	739037 (2)	392423 (1)
Spacer ring	501118	No longer used
Seal carrier O-ring	507116	No longer used

Parts disposition

- Non-interchangeable
- Use parts in stock for repair of units built before serial number N10-20-xxxxx
- Order replacement parts
- Revise existing part orders

Products we offer:

- Bent Axis Motors
- Closed Circuit Axial Piston Pumps and Motors
- Displays
- Electrohydraulic Power Steering
- Electrohydraulics
- Hydraulic Power Steering
- Integrated Systems
- Joysticks and Control Handles
- Microcontrollers and Software
- Open Circuit Axial Piston Pumps
- Orbital Motors
- PLUS+1® GUIDE
- Proportional Valves
- Sensors
- Steering
- Transit Mixer Drives

Danfoss Power Solutions is a global manufacturer and supplier of high-quality hydraulic and electronic components. We specialize in providing state-of-the-art technology and solutions that excel in the harsh operating conditions of the mobile off-highway market. Building on our extensive applications expertise, we work closely with our customers to ensure exceptional performance for a broad range of off-highway vehicles.

We help OEMs around the world speed up system development, reduce costs and bring vehicles to market faster.
Danfoss – Your Strongest Partner in Mobile Hydraulics.

Go to www.powersolutions.danfoss.com for further product information.

Wherever off-highway vehicles are at work, so is Danfoss.

We offer expert worldwide support for our customers, ensuring the best possible solutions for outstanding performance. And with an extensive network of Global Service Partners, we also provide comprehensive global service for all of our components.

Please contact the Danfoss Power Solution representative nearest you.

Comatrol
www.comatrol.com

Schwarzmüller-Inverter
www.schwarzmueller-inverter.com

Turolla
www.turollaocg.com

Valmova
www.valmova.com

Hydro-Gear
www.hydro-gear.com

Daikin-Sauer-Danfoss
www.daikin-sauer-danfoss.com

Local address:

Danfoss
Power Solutions US Company
2800 East 13th Street
Ames, IA 50010, USA
Phone: +1 515 239 6000

Danfoss
Power Solutions GmbH & Co. OHG
Krokamp 35
D-24539 Neumünster, Germany
Phone: +49 4321 871 0

Danfoss
Power Solutions ApS
Nordborgvej 81
DK-6430 Nordborg, Denmark
Phone: +45 7488 4444

Danfoss
Power Solutions
Building #22, No. 1000 Jin Hai Rd
Jin Qiao, Pudong New District
Shanghai, China 201206
Phone: +86 21 3418 5200

Danfoss can accept no responsibility for possible errors in catalogues, brochures and other printed material. Danfoss reserves the right to alter its products without notice. This also applies to products already on order provided that such alterations can be made without subsequential changes being necessary in specifications already agreed.
All trademarks in this material are property of the respective companies. Danfoss and the Danfoss logotype are trademarks of Danfoss A/S. All rights reserved.

AX00000077 | 520L0766 • Rev 0201 • September 2014