ENGINEERING
TOMORROW

Technical Information

# Proportional Valve Group
## PVG 120

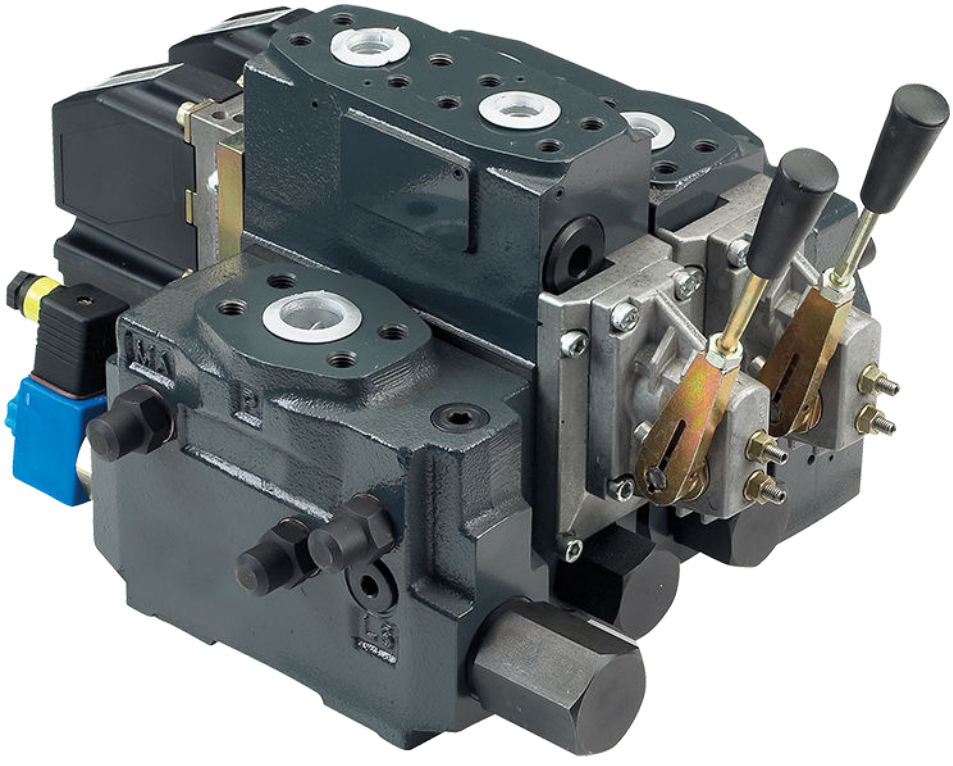

powersolutions.danfoss.com

**Revision history**

*Table of revisions*

| Date | Changed | Rev |
|---|---|---|
| March 2017 | minor updates | 1002 |
| Mar 2014 | Chapters re-order, Modules selection chart | JA |
| Dec 2013 | Converted to Danfoss layout – DITA CMS | ID |
| 2006 - 2012 | Various updates | AB - IC |
| Apr 2006 | New edition | AA |

## Contents

**Literature reference for PVG products**

**General Information**

Valve System ..... 6
General Characteristics ..... 6
Pump Side Module – PVP ..... 6
Basic Module – PVB ..... 7
Actuation Modules ..... 7
Electronic Accessories ..... 7
Remote Controls Units ..... 8

**Function**

PVG 120 with PVP Open Center ..... 9
PVG 120 with PVP Closed Center ..... 9

**PVG 120 sectional view**

**Safety in application**

Control system example ..... 12
Examples of wiring block diagram ..... 14

**Technical Data**

PVG 120 technical data ..... 16
PVM, mechanical actuation ..... 16
PVH, hydraulic actuation ..... 17
PVE, electrical actuation ..... 17
PVPE, electrical relief valve, normally open ..... 17

**Electrical Actuation**

PVEO, ON-OFF ..... 19
PVEH, proportional high ..... 19
PVEH, Inductive Transducer (LVDT – Linear Variable Differential Transformer) ..... 20
PVEH, Pulse Width Modulation (Integrated) ..... 21
PVEH fault monitoring ..... 21
PVEH, connection to fault monitoring output ..... 22

**Technical Characteristics**

General ..... 23
PVP, pump side module ..... 23
PVB, Basic Module ..... 24
PVLP, Shock Valve Characteristic (with Pressure Relief Valve) ..... 26
PVLP/PVLA, Suction Function ..... 27

**Hydraulic system examples**

Example of PVG 120 with variable displacement pump ..... 28
Example of PVG 120 with fixed displacement pump ..... 29

**Other operating conditions**

Hydraulic fluids for PVG ..... 30
Particle Content, Degree of Contamination ..... 30
Filtering ..... 30
Conversion Factors ..... 31

**Dimensions**

PVG 120 dimensions ..... 32
PVM, Lever Positions ..... 34

**Modules and Code Numbers**

PVP and PVPV, Pump Side Modules ..... 35
PVP, Accessories for Open Center Pump Side Modules ..... 35
PVB, Basic Modules ..... 36
PVB, Accessories for Basic Modules ..... 36
PVLA, Suction Valve ..... 37
PVLP, Shock and Suction Valves for A/B Port Connections ..... 37

## Contents

PVBS, Main Spools....38
PVM, Mechanical Actuation....38
PVMD, Cover for Mechanical Actuation....38
PVH, Hydraulic Actuation....38
PVHC, High Current Actuator....39
PVE, Electrical Actuation....39
PVT, tank side module....39
PVAS, Assembly Kit....40

**PVG 120 Modules Selection Chart**

PVG 120 module selection chart....41

**Order specification**

Ordering of modules for oil flow exceeding 180 l/min [47.6 US gal/min]....45
Order Form....45
Reordering....46

## Literature reference for PVG products

*Literature reference*

| Literature title | Type | Order number |
|---|---|---|
| PVG 32 Proportional Valve Group | Technical Information | 520L0344 |
| PVG 100 Proportional Valve Group | Technical Information | 520L0720 |
| PVG 120 Proportional Valve Group | Technical Information | 520L0356 |
| PVG 32 Metric ports | Technical Information | 11051935 |
| PVE Series 4 | Technical Information | 520L0553 |
| PVED-CC Electro-hydraulic actuator | Technical Information | 520L0665 |
| PVED-CX Electro-hydraulic actuator | Technical Information | 11070179 |
| PVE-CI | Technical Information | L1505234 |
| Basic module for PVBZ | Technical Information | 520L0721 |
| PVSK module with integrated diverter valve and P-disconnect function | Technical Information | 520L0556 |
| PVPV / PVPM pump side module | Technical Information | 520L0222 |
| Combination module PVGI | Technical Information | 520L0405 |
| PVSP/M Priority module | Technical Information | 520L0291 |
| Hitch Control | System Description | 11036124 |
| | User Manual | 11033753 |
| PVBZ | Data Sheet | 520L0681 |
| PVBZ-HS | Data Sheet | 520L0956 |
| PVBZ-HD | Data Sheet | 11035599 |
| MC024-010 and MC024-012 Controllers | Data Sheet | 520L0712 |

## General Information

### Valve System

Load sensing proportional valve type PVG 120 is a combined directional and flow control valve which is supplied as a valve group consisting of modules specified to match particular customer needs. The flexible nature of this valve will allow an existing valve bank to be easily adapted to suit changes in requirements.

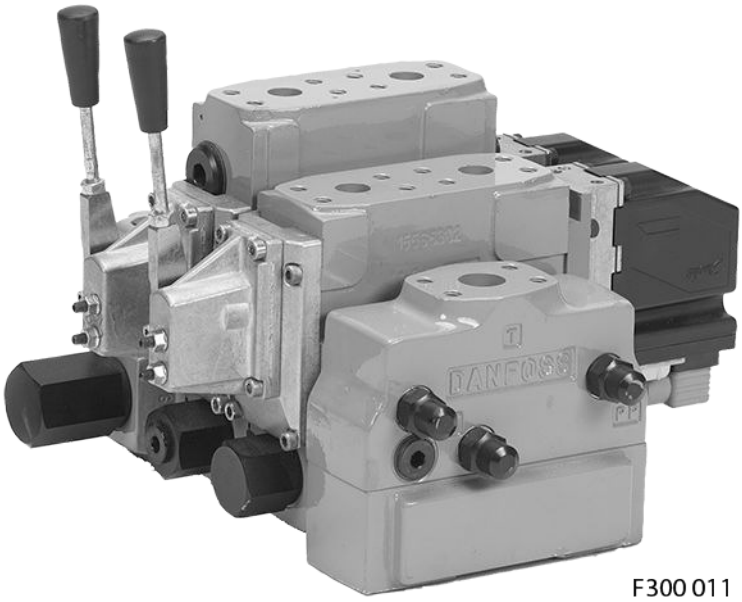


### General Characteristics

- Load-independent flow control:
  - Oil flow to an individual function is independent of the load of this function
  - Oil flow to one function is independent of the load pressure of other functions
- Good regulation characteristics
- Central pilot supply built in when the valves are actuated electrohydraulically
- Energy-saving
- Up to eight basic modules per valve group

### Pump Side Module – PVP

- Built-in pressure relief valve
- System pressure up to 400 bar [5800 psi]
- Pressure gauge connection
- Versions:
  - Open centre version for systems with fixed displacement pumps
  - Open centre version prepared for an extra relief module
  - Closed centre version for systems with variable displacement pumps
  - Closed centre version without system pressure relief valve for variable displace ment pumps with built-in pressure relief valve.

## General Information

### Basic Module – PVB

- Integrated pressure compensator in channel P
- Interchangeable spools
- Depending on requirements the basic module can be supplied with:
  - Shock/suction valves
  - Adjustable LS pressure limiting valve for ports A and B
  - LS connection
  - Module for oil flows exceeding 180 l/min [47.6 US gal/min]
  - Different spool variants

### Actuation Modules

The basic module is always fitted with mechanical actuation PVM, which can be combined with the following as required:

- Electrical actuation:
  - PVEH - proportional, high performance (11 - 32 V )
  - PVEO - On/off (12 V == or 24 V ==)
- Cover for hydraulic remote control, PVH
- Cover for mechanically actuated valve group, PVMD

### Electronic Accessories

- EHF, low adjustment unit
- EHR, ramp generator
- EHS, speed control
- EHSC, closed loop speed control
- EHA, alarm logic
- EHC, closed loop position control

## General Information

### Remote Controls Units

PVRE, electrical control unit, 162F…

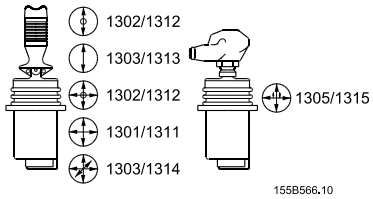


PVRH, hydraulic control unit, 155N…

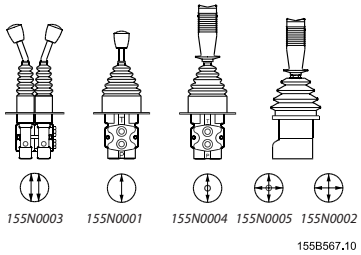


PVREL, electrical control unit, 155U…

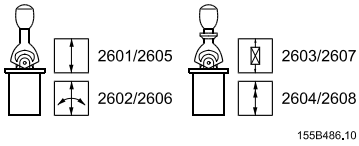


PVRES, electrical control unit, 155B…

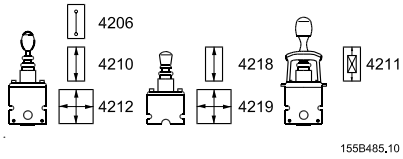


Prof 1, 162F…

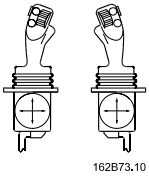

## Function

### PVG 120 with PVP Open Center

When the pump is started and the main spools (1) in the individual basic modules are in neutral position, oil flows from the pump, through connection P, across the pressure adjustment spool (2) to tank.

The oil flow led across the pressure adjustment spool determines the pump pressure (stand-by pressure). If a reduced stand-by pressure is required, an extra relief valve PVPH or PVPE can be used in PVP.

When the main spools are actuated the highest load pressure is distributed across the shuttle valve circuit (3) to the spring chamber behind the pressure adjustment spool (2) and completely or partly closes the connection to tank.

The pump pressure is applied to the right-hand side of the pressure adjustment spool (2). The pressure relief valve (4) opens when the load pressure exceeds the set value, allowing pump flow to be diverted back to tank.

In the basic module the compensator (5) maintains a constant pressure drop across the main spool – both when the load changes and when a module with a higher load pressure is activated.

Shock and suction valves with a fixed setting (7) and the suction valves (8) on ports A and B are used to protect individual working functions against overload.

In the basic module it is possible to build in an adjustable LS pressure relief valve (6) to limit the pressure from each working function.

*The LS pressure limiting valve saves energy:*

- Without LS pressure limiting valve all the oil flow to the working function will be led across the combined shock and suction valves to tank if the pressure exceeds the fixed setting of the valves.
- With LS pressure limiting valve an oil flow of only about 2 l/min [0.5 US gal/min] will be led across the LS pressure limiting valve to tank if the pressure exceeds the valve setting.

### PVG 120 with PVP Closed Center

In the closed center version an orifice (9) has been fitted instead of the plug. This means that the pressure adjustment spool (2) will only open to tank when the pressure in channel P exceeds the pressure relief valve setting (4).

In load sensing systems the load pressure is led to the pump regulator via the LS connection (10), so the orifices (11) have been removed, and a plug (12) has been fitted instead of one of the orifices.

In neutral position the pump regulator will set the displacement so that leakage in the system is just compensated for.

When a main spool is activated, the pump regulator will adjust the displacement so that the set differential pressure between P and LS is maintained.

The pressure relief valve (4) in PVP is set for a pressure of about 30 bar [435 psi] above maximum system pressure (set at the pump or an external pressure relief valve).

If the system or the pump regulation has a pressure relief valve, it is possible to use a PVPV pump side module, without integrated pressure adjustment spool and pressure relief valve.

## PVG 120 sectional view

*PVG 120 sectional view*

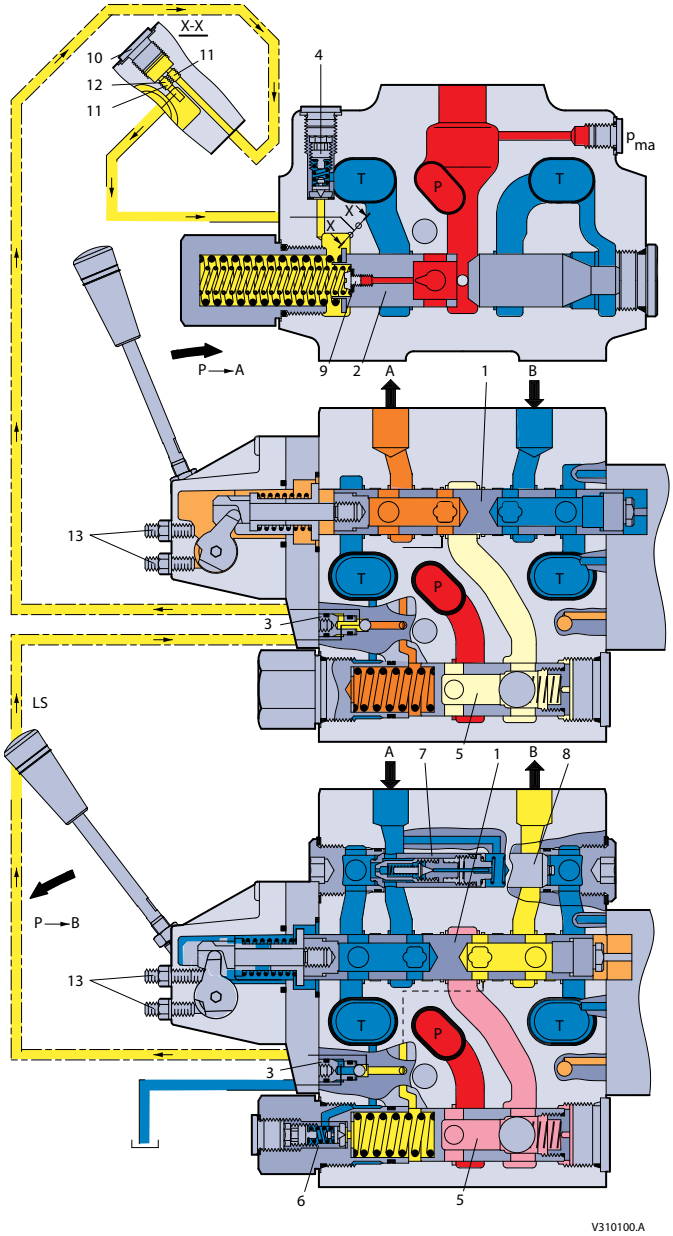


*Legend:*

1 – Main spool
2 – Pressure adjustment spool in PVP
3 – Shuttle valve
4 – Pressure relief valve in PVP
5 – Pressure compensator in PVB
6 – LS pressure relief valve in PVB
7 – Shock and suction valve PVLP
8 – Suction valve PVLA
9 – Orifice, closed center PVP; Plug, open center PVP
10 – LS connection
11 – Orifice, open center PVP
12 – Plug, closed center PVP

## Safety in application

All types of control valves (incl. proportional valves) can fail, thus the necessary protection against the serious consequences of function failure should always be built into the system. For each application an assessment should be made for the consequences of pressure failure and uncontrolled or blocked movements. To determine the degree of protection that is required to be built into the application, system tools such an FMEA (Failure Mode and Effect Analysis) and Hazard and Risk Analysis can be used.

### FMEA – IEC EN 61508

FMEA (Failure Mode and Effect Analysis) is a tool used for analyzing potential risks. This analytical technique is utilized to define, identify, and prioritize the elimination or reduction of known and/or potential failures from a given system before it is released for production. Please refer to the standard IEC FMEA 61508.

### Hazard and risk analysis ISO 12100-1/14121

This analysis is a tool used in new applications as it will indicate whether there are special safety considerations to be met according to the machine directives EN 13849. Dependent on the determined levels conformity this analysis will detirmine if any extra requirements for the product design, development process, production process or maintenance, example the complete product life cycle.

**Warning**

All brands and all types of directional control or proportional valves, which are used in many different operation conditions and applications, can fail and cause serious damage.
Analyze all aspects of the application. The machine builder/system integrator alone is responsible for making the final selection of the products and assuring that all performance, safety and warning requirements of the application are met. The process of choosing the control system and safety levels is governed by the machine directives EN 13849 (Safety related requirements for control systems).

## Safety in application

### Control system example

*Example of a control system for manlift using PVE Fault monitoring input signals and signals from external sensors to ensure the PLUS+1® main controllers correct function of the manlift.*

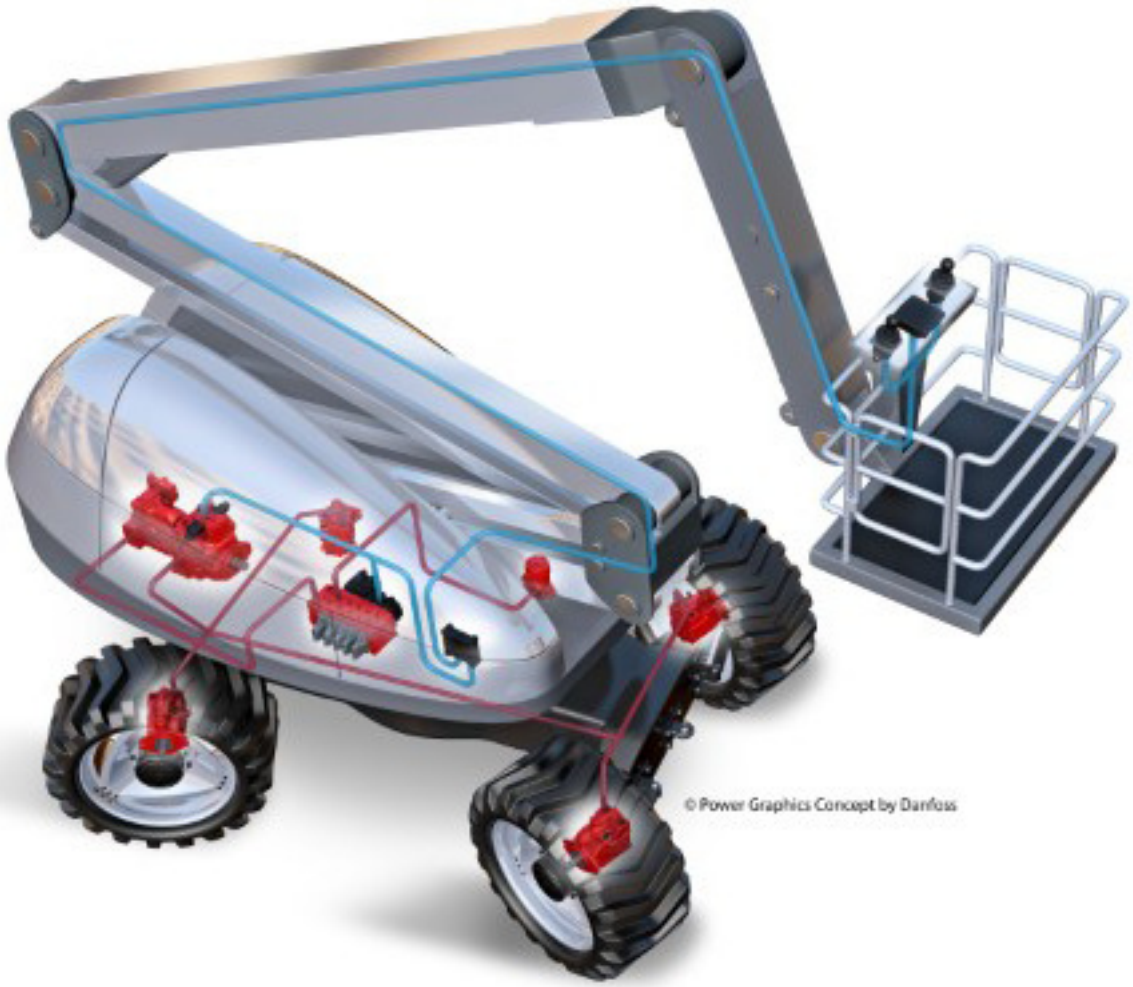

## Safety in application

*Electrical block diagram for the above illustration*

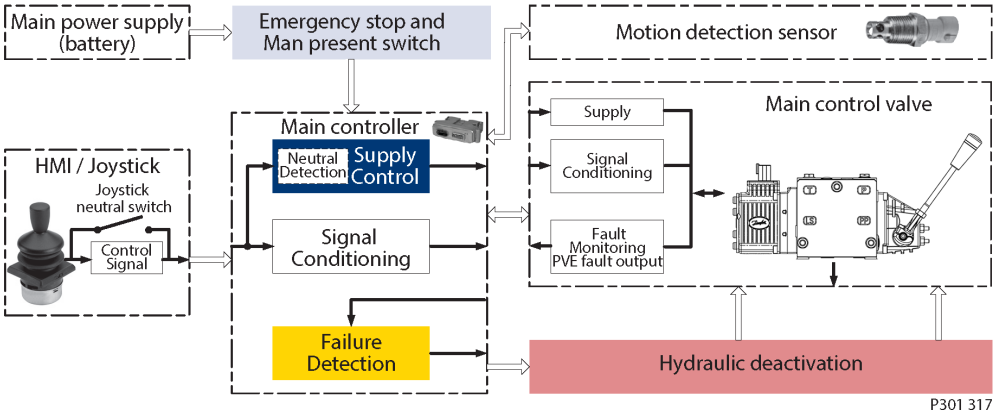


**Warning**

It is the responsibility of the equipment manufacturer that the control system incorporated in the machine is declared as being in conformity with the relevant machine directives.

**PVG 32 – mainly used in system with fixed displacement pumps:**

- PVSK, commonly used in crane application - full flow dump
- PVPX, LS dump to tank

**PVG 100 – alternative LS dump or pilot supply disconnect:**

- PVPP, pilot oil supply shut off
- External cartridge valve connecting LS pressure or main pressure to tank

**PVG 120 – pump disconnect / block for variable pumps:**

## Safety in application

- PVPE, full flow dump for the PVG 120
- External cartridge valve connecting LS pressure to tank

### Examples of wiring block diagram

*Example of a typical wiring block diagram using PVEH with neutral power off switch and fault monitoring output for hydraulic deactivation.*

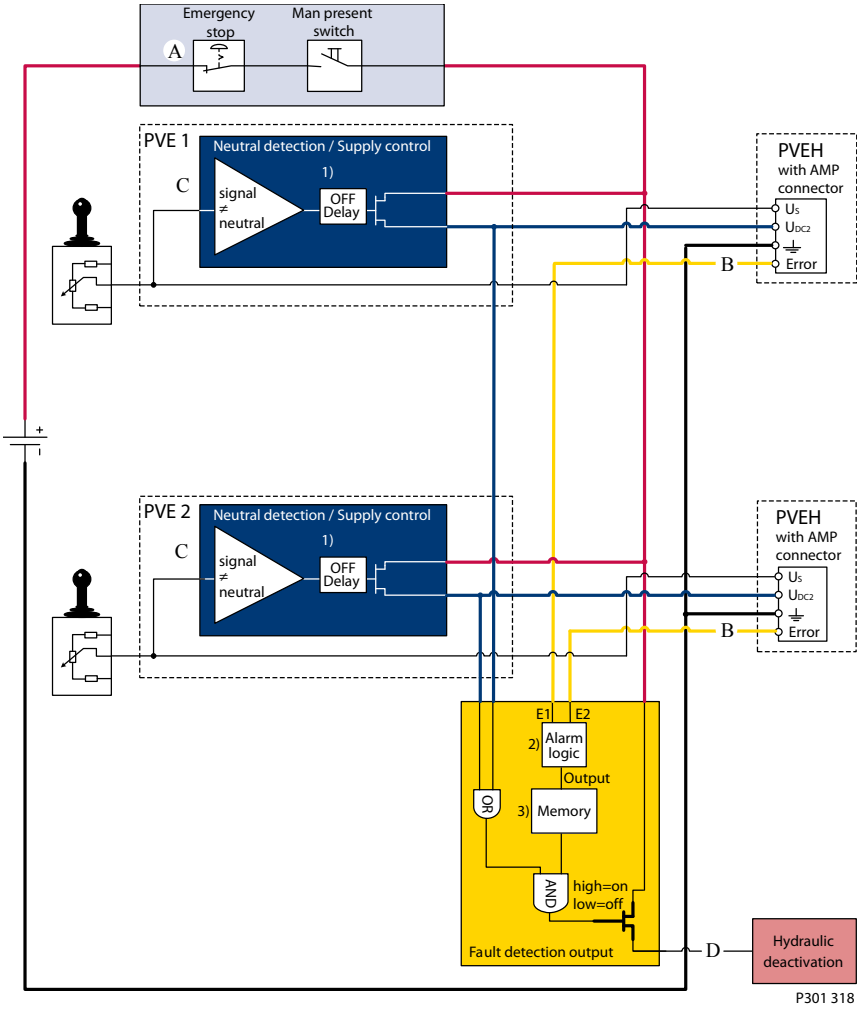


**A**– Emergency stop / man present switch

**B**– PVE Fault monitoring signals

**C**– Neutral signal detection.

**D**– Hydraulic deactivation

System Control Logic e.g. PLUS+1® for signal monitoring and triggering signal for deactivation of the hydraulic system.

**Warning**

It is the responsibility of the equipment manufacturer that the control system incorporated in the machine is declared as being in conformity with the relevant machine directives.

## Safety in application

*Example of fault monitoring for deactivation of the hydraulic system with extra fault inputs using the PVE's with DI (Direction Indication) function.*

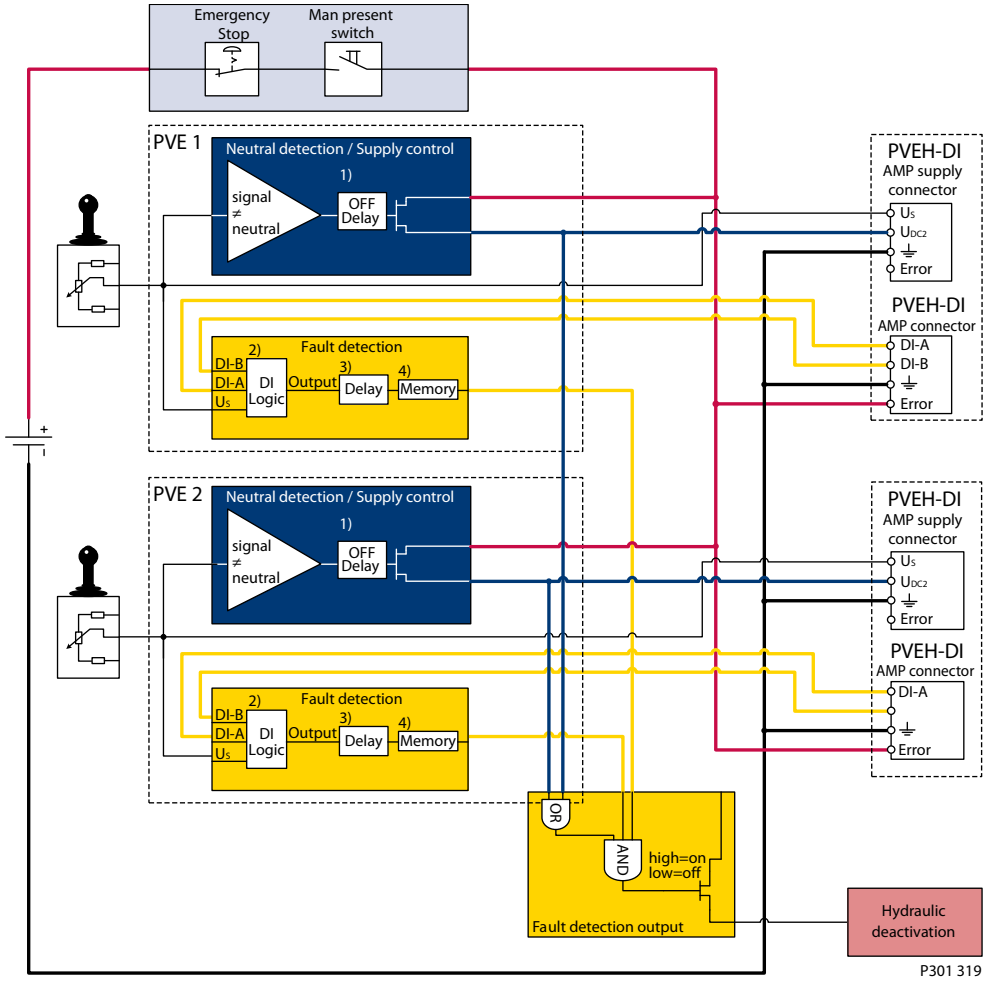


System Control Logic e.g. PLUS+1® for signal monitoring and triggering signal for deactivation of the hydraulic system.

**Warning**

It is the responsibility of the equipment manufacturer that the control system incorporated in the machine is declared as being in conformity with the relevant machine directives.

## Technical Data

### PVG 120 technical data

| | | | | |
|---|---|---|---|---|
| **Maximum pressure** | **Port P** | continuous | 350 bar | [5075 psi] |
| | | **intermittent[1)]** | 400 bar | [5800 psi] |
| | **Port A/B** | | 400 bar | [5800 psi] |
| | **Port T, static/dynamic** | | 25 bar/40 bar | [365/580 psi] |
| **Oil flow**<br>**See *Oil flow characteristics* for more information.** | **Port P, rated max.** | | 240/300 l/min | [63.4/79.3 US gal/min] |
| | **Port A/B[2)]** | | 65/95/130/180/ 210/240 l/min | [17.2/25.1/34.3/47.6/ 55.5/63.4 US gal/min] |
| **Spool travel** | | | ± 8 mm | [± 0.32 in] |
| **Dead band (± 25%)** | | | ± 2 mm | [± 0.08 in] |
| **Maximum internal leakage at 100 bar, 21 mm²/s** | **A/B→T, without shockvalve** | | 90 cm³/min | [5.5 in³/min] |
| | **A/B→ T, with shockvalve** | | 95 cm³/min | [5.6 in³/min] |
| **Oil temperature (inlet temperature)** | **Recommended temperature** | | 30 to 60°C | [86 to 140°F] |
| | **Min. temperature** | | –30°C | [–22°F] |
| | **Max. temperature** | | +90°C | [+194°F] |
| **Ambient temperature** | | | –30 to +60°C | [–22 to +140°F] |
| **Oil viscosity** | **Operating range** | | 12 to 75 mm²/s | [65 SUS to 347 SUS] |
| | **Min. viscosity** | | 4 mm²/s | [39 SUS] |
| | **Max. viscosity** | | 460 mm²/s | [2128 SUS] |
| **Filtering / Max. contamination (ISO 4406)**<br>**See *Filtering* for more information.** | | | 23/19/16 | |
| **Oil consumption in pressure reduction valve for PVT at PVE pilot-oil supply** | | | 0.4 l/min | [0.1 US gal/min] |

[1)] Intermittent operation: the permissible values may occur for max. 10% of every minute.

[2)] See *Order Form* for more information regarding the ordering or conversion of valve groups for oil flows exceeding 180 l/min [47.6 US gal/min].

### PVM, mechanical actuation

*PVM, Mechanical Actuation*

| **PVM data** | | **Neutral position** | **Max. spool travel** |
|---|---|---|---|
| Operating force | PVM + PVMD<br>PVM + PVE (without voltage) | 2.8 ± 0.2 N•m<br>[24.8 ± 1.8 lbf•in] | 4.0 ± 0.2 N•m<br>[35.5 ± 1.8 lbf•in] |
| | PVM + PVH | 4.7 ± 0.2 N•m<br>[41.6 ± 1.8 lbf•in] | 12.8 ± 0.2 N•m<br>[113.3 ± 1.8 lbf•in] |
| Possible control lever positions: 2 × 5 | | | |
| Regulation range, control lever: ±19,5° | | | |

## Technical Data

### PVH, hydraulic actuation

*PVH, Hydraulic Actuation*

| PVH data | Pressure, bar [psi] |
|---|---|
| Control range | 5 to 15 [75 to 220] |
| Maximum pilot pressure, static | 35 [510] |
| Maximum pressure on port T<br>(It is recommended that the tank connection from the hydraulic remote control unit PVRH is taken directly to tank.) | 3 [45 ] |

### PVE, electrical actuation

*PVE, electrical actuation*

| PVE actuation | | | PVEO ON/OFF | PVEH Proportional High |
|---|---|---|---|---|
| Hysteresis (applies to the electrical actuation only) [1] | | Typical | - | 4% |
| Reaction time from neutral position to max. spool travel | | Typical | 250 ms | 250 ms |
| | | Maximum | 350 ms | 280 ms |
| Reaction time from max. spool travel to neutral position[2] | | Typical | 240 ms | 150 ms |
| | | Maximum | 330 ms | 200 ms |
| Pilot oil flow pr. PVE | Neutral position without voltage | | 0 l/min / [0 US gal/min] | |
| | Locked with voltage [3] | | 0 l/min / [0 US gal/min] | |
| Enclosure to IEC 529 | | | IP65 | |

[1] The hysteresis is stated at rated and f = 0,02 Hz for a cycle. One cycle includes the movement from neutral position to max. spool travel direction A, via neutral position to max. spool travel in direction B, and back to neutral position. Further information can be obtained by contacting the Danfoss Power Solutions Sales Organization.

[2] Reaction times for PVEH is reduced by 20 by 30 ms if the voltage is not interrupted during the neutral positioning (remote control lever without neutral position switch).

[3] Total oil consumtion for a spool movement from N to full A or B: 0.0035 l [0.0009 US gal].

### PVPE, electrical relief valve, normally open

*PVPE, electrical relief valve, normally open*

| | | |
|---|---|---|
| **Maximum operation pressure** | | 350 bar [5085 psi] |
| **Maximum pressure drop at flow of 0.2 l/min [0.053 US gal/min]** | | 1.2 bar [17 psi] |
| **Oil temperature (inlet temperature)** | **Recommended temperature** | 30 to 60 °C [86 to 140 °F] |
| | **Min. temperature** | –30 °C [–22 °F] |
| | **Max. temperature** | 90 °C [194 °F] |
| **Maximum coil surface temperature** | | 155 °C [311 °F] |
| **Ambient temperature** | | –30 to +60 °C [–22 to +140 °F] |

## Technical Data

*PVPE, electrical relief valve, normally open (continued)*

| | | | |
|---|---|---|---|
| **Oil viscosity** | **Operating range** | 12 to 75 $mm^2/s$ [65 to 347 SUS] | |
| | **Min. viscosity** | 4 $mm^2/s$ [39 SUS] | |
| | **Max. viscosity** | 460 $mm^2/s$ [2128 SUS] | |
| **Response time for pressure relief to tank** | | 600 ms | |
| **Enclosure to IEC 529** | | IP 65 | |
| **Rated voltage** | | 12 V | 24 V |
| **Maximum permissible deviation from rated supply voltage** | | ± 10 % | ± 10 % |
| **Current consumption at rated voltage** | **at 22 °C [72 °F] coil temperature** | 1.55 A | 0.78 A |
| | **at 85 °C [230 °F] coil temperature** | 1.0 A | 0.5 A |
| **Power consumption** | **at 22 °C [72 °F] coil temperature** | 19 W | 19 W |
| | **at 85 °C [230 °F] coil temperature** | 12 W | 12 W |

## Electrical Actuation

### PVEO, ON-OFF

*The main features of PVEO:*

- Compact
- Robust operation
- Hirschmann or AMP connector
- Low electrical power

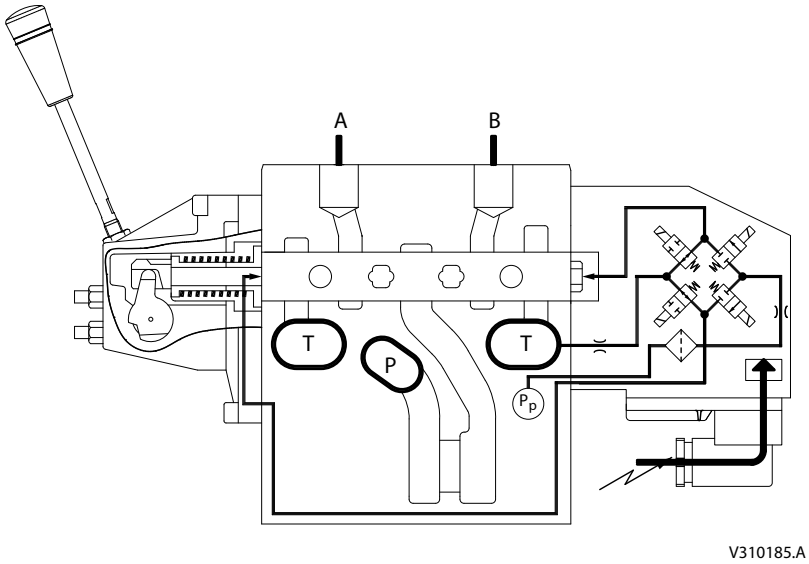


*PVEO parameters*

| | | | |
|---|---|---|---|
| **Supply voltage $U_{DC}$** | **rated** | 12 $V_{DC}$ | 24 $V_{DC}$ |
| | **range** | 11 V to 15 V | 22 V to 30 V |
| | **maximum ripple** | 5% | |
| **Current consumption at rated voltage** | | 0.65 A @ 12 V | 0.33 A @ 24 V |
| **Signal voltage (PVEM)** | **neutral** | 0.5 x $U_{DC}$ | |
| | **A-port ↔ B-port** | 0.25 • $U_{DC}$ to 0.75 • $U_{DC}$ | |
| **Signal current at rated voltage (PVEM)** | | 0.25 mA | 0.50 mA |
| **Input impedance in relation to 0.5 • $U_{DC}$** | | 12 KΩ | |
| **Power consumption** | | 8 W | |

### PVEH, proportional high

PVEH adjusts the main spool position so that it corresponds to an electrical control signal – for example from a remote control unit.

The control signal (set-point signal) is converted into a hydraulic pressure which moves the main spool. The position of the main spool is converted in the positional transducer (C) to an electric signal (feed-back signal). This signal is registered by the electronics.

The variation between the set-point signal and feed-back signal actuates the solenoid valves, thus the hydraulic pressure moves the main spool into the correct position.

## Electrical Actuation

*The main features of PVEH:*

- Inductive transducer
- Integrated pulse width modulation
- Low hysteresis
- Fast reaction time
- Hirschmann or AMP connector
- Fault monitoring with transistor output for signal source
- Low electrical power
- No set-up procedure

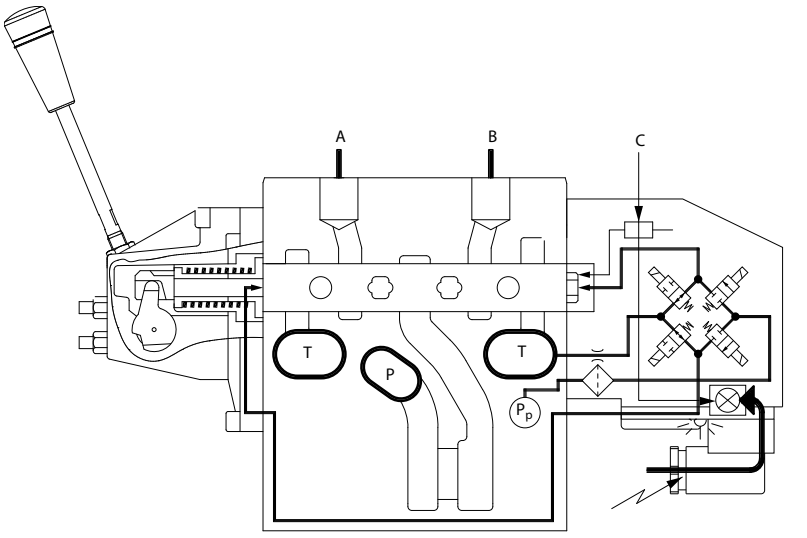


*PVEH parameters*

| | | | | |
|---|---|---|---|---|
| **Supply voltage $U_{DC}$** | **Rated and Range** | | 11 V to 32 V | |
| | **Maximum ripple** | | 5% | |
| **Current consumption at rated voltage** | | | 0.57 (0.33) A @ 12 V | 0.3 (0.17) A @ 24 V |
| **Signal voltage** | **Neutral** | | 0.5 x $U_{DC}$ | |
| | **A-port ↔ B-port** | | 0.25 • $U_{DC}$ to 0.75 • $U_{DC}$ | |
| **Signal current at rated voltage** | | | 0.25 mA to 0.70 mA | |
| **Input impedance in relation to 0.5 • $U_{DC}$** | | | 12 KΩ | |
| **Input capacitor** | | | 100 ηF | |
| **Power consumption** | | | 7 (3.5) W | |
| **PVEH** | **Maximum load** | | 100 mA | 60 mA |
| | **Reaction time at fault** | Active / Passive | 500 ms | 250 ms |

### PVEH, Inductive Transducer (LVDT – Linear Variable Differential Transformer)

When the main spool is moved a voltage is induced proportional to the spool position. The use of LVDT gives contact-free (proximity) registration of the main spool position. This means an extra-long working life and no limitation as regards the type of hydraulic fluid used. In addition, LVDT gives a precise position signal of high resolution.

## Electrical Actuation

### PVEH, Pulse Width Modulation (Integrated)

Positioning of the main spool in PVEH is based on the pulse width modulation principle. As soon as the main spool reaches the required position, modulation stops and the spool is locked in position.

### PVEH fault monitoring

A fault monitoring system is provided in all PVEA, PVEH and PVES modules.

The system is available in two versions:

- The active fault monitoring type, which provides a warning signal, deactivates the solenoid valves and drives the spool in neutral.
- The passive fault monitoring type, which provides a warning signal only.

*Both active and passive fault monitoring systems are triggered by three main events:*

1. **Input signal monitoring** – The input signal voltage is continuously monitored. The permissible range is between 15% and 85% of the supply voltage. Outside this range the section will switch into an active error state.
2. **Transducer supervision** – If one of the wires to the LVDT sensor is broken or short-circuited, the section will switch into an active error state.
3. **Supervision of the closed loop** – The actual position must always correspond to the demanded position (input signal). If the actual spool position is further than the demanded spool position (>12%, PVEA: >25%), the system detects an error and will switch into an active error state. On the other hand, a situation where the actual position is closer to neutral than that demanded will not cause an error state. This situation is considered “in control”.When an active error state occurs, the fault monitoring logic will be triggered.

**Active fault monitoring:**

- A delay of 500 ms (PVEA: 750 ms) before anything happens.
- The solenoid valve bridge will be disabled and all solenoid valves will be released.
- An alarm signal is sent out through the appropriate pin connection.
- This state is memorized and continues until the system is actively reset (by turning off the supply voltage).

**Passive fault monitoring:**

- A delay of 250 ms (PVEA: 750 ms) before anything happens.
- The solenoid valve bridge will not be disabled but still control the main spool position.
- An alarm signal is sent out through the appropriate pin connection.
- This state is not memorized. When the erroneous state disappears, the alarm signal will turn to passive again. However, the signal will always be active for a minimum of 100 ms when triggered.

To prevent the electronics from going into an undefined state, a general supervision of the power supply and the internal clock frequency is made. This function applies to PVEH - and will not activate fault monitoring:

1. **High supply voltage** – The solenoid valves are disabled when the supply voltage exceeds 36 V, and the main spool will return/stay in neutral.
2. **Low supply voltage** – The solenoid valves are disabled when the supply voltage falls below 8.5 V, and the main spool will return/stay in neutral.
3. **Internal clock** – The solenoid valves are disabled when the internal clock frequency fails, and the main spool will return/stay in neutral.

The fault monitoring does not work if the supply voltage to PVEH is cut off - for example by a neutral position switch. When using PVEH with passive fault monitoring **it is up to the customer to decide on the degree of safety required for the system** (See *Safety in Application* for more information about different degrees of safety).

## Electrical Actuation

*Fault monitoring specification*

| Type | Fault monitoring | Delay before error out | Error mode | Error output status | Fault output on PVE** | LED light | Memory†† |
|---|---|---|---|---|---|---|---|
| PVEO | No fault monitoring | | | | | | |
| PVEH | Active | 500 ms | No fault | Low | < 2 V | Green | - |
| | | | Input signal faults | High | ~$U_{DC}$ | Flashing red | Yes |
| | | | Transducer (LVDT) | | | Constant red | |
| | | | Close loop fault | | | | |
| | Passive | 250 ms | No fault | Low | < 2 V | Green | - |
| | | | Input signal faults | High | ~$U_{DC}$ | Flashing red | No |
| | | | Transducer (LVDT) | | | Constant red | |
| | | | Close loop fault | | | | |

* Measured between fault output pin and ground.

† Reset needed

### PVEH, connection to fault monitoring output

**Normal**

Transistor output function – **Green**

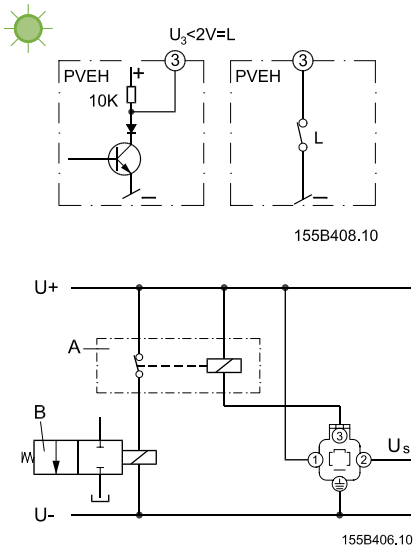


A: External relay, B: Solenoid valve (e.g. PVPE)

**Fault**

Transistor output function – **Red**

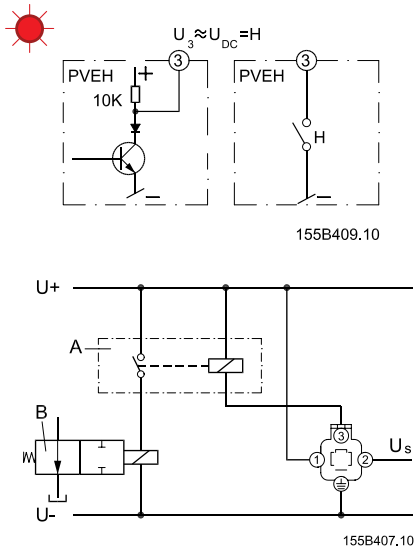


A: External relay, B: Solenoid valve (e.g. PVPE)

Via an external relay pin 3 can be connected to an electrically actuated valve which will relieve pump oil flow to tank, e.g. PVPE.

*Other possible connections:*

- a valve to relieve the LS signal
- a signal lamp, an alarm horn
- a pump cut-out, etc.

## Technical Characteristics

### General

All characteristics and values in the technical information are typical measured results. For the hydraulic system a mineral based hydraulic oil with a viscosity of 21mm$^2$/s [102 SUS] and a temperature of 50°C [122°F] was used.

### PVP, pump side module

*PVP, pressure relief valve characteristic*

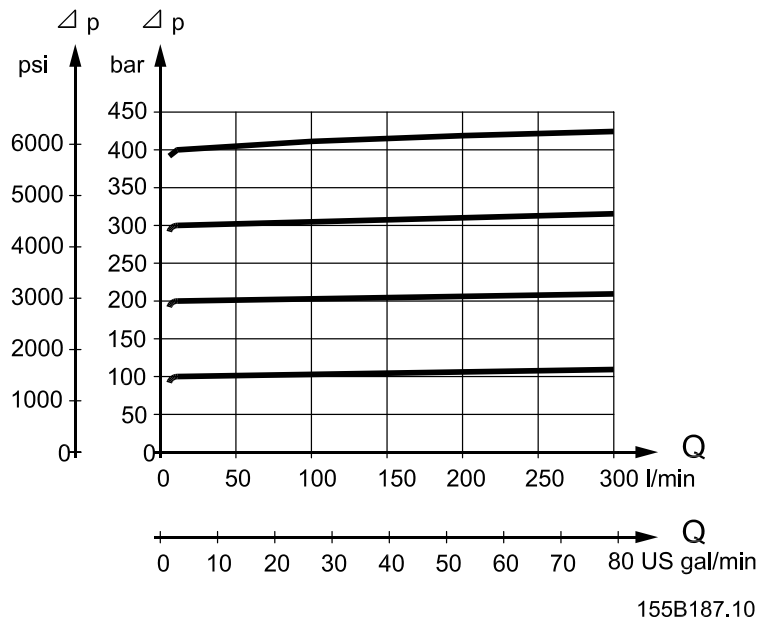


The pressure relief valve is adjustable within the 50-400 bar [725-6225 psi] range by means of a screw.

*PVP, neutral flow pressure in PVP, open center*

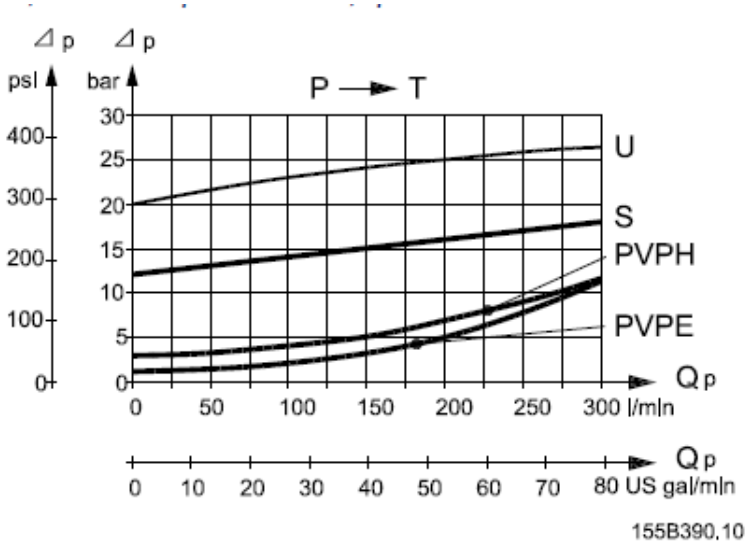


U = PVP for PVB oil flow > 180 l/min [47.6 US gal/min]

S = PVP, standard

## Technical Characteristics

### PVB, Basic Module

*Oil flow characteristics*

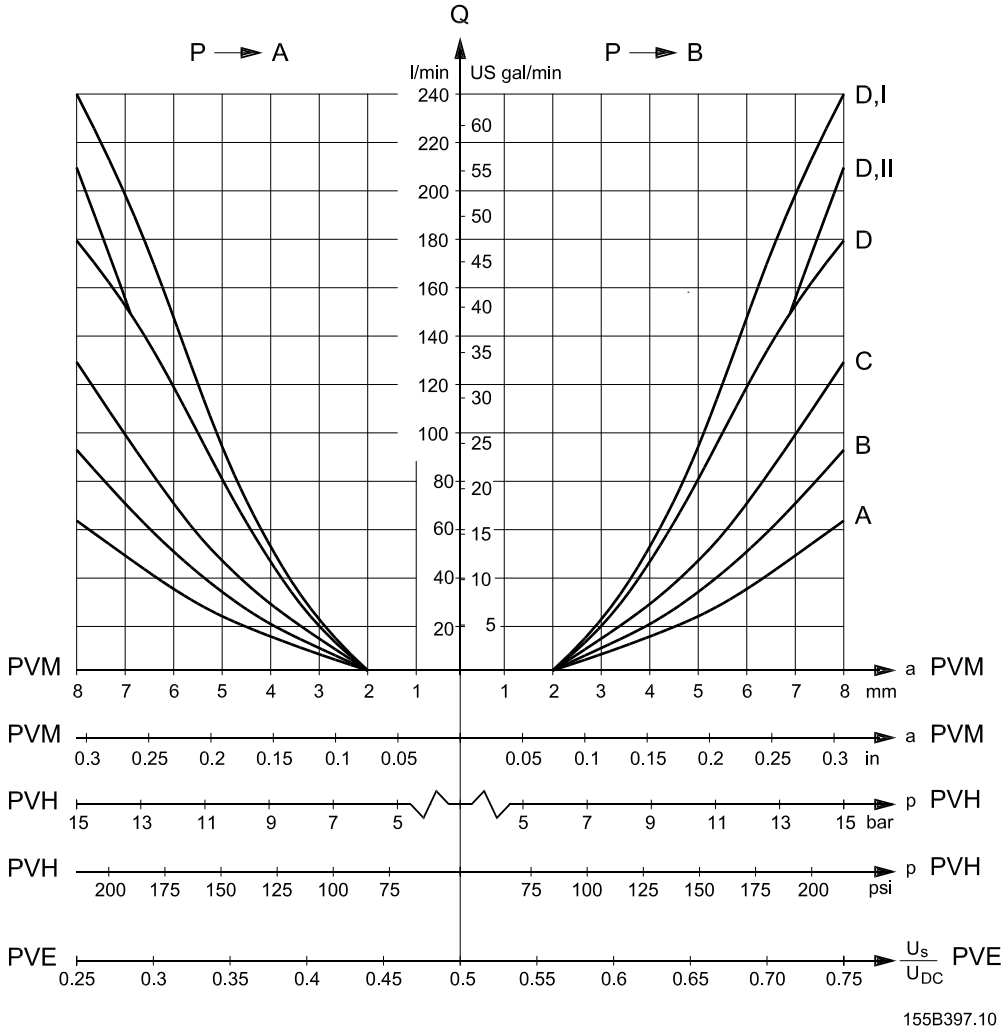


$U_S$= Signal voltage;
$U_{DC}$= Supply voltage

*Port conditions at rated oil flow*

| Port | Metric units | US units |
|---|---|---|
| **A** | 65 l/min | [17.2 US gal/min] |
| **B** | 95 l/min | [25.1 US gal/min] |
| **C** | 130 l/min | [34.3 US gal/min] |
| **D** | 180 l/min | [47.6 US gal/min] |
| **D.I *** | 240 l/min | [63.4 US gal/min] |
| **D.II **** | 210 l/min | [55.5 US gal/min] |

* Closed center system with basic module for oil flow > 180 l/min [47.6 US gal/min].
** Open center system with basic module for oil flow > 180 l/min [47.6 US gal/min] and pump side module 155G5027 / 155G5028 /155G5029.

## Technical Characteristics

*Load independent oil flow*

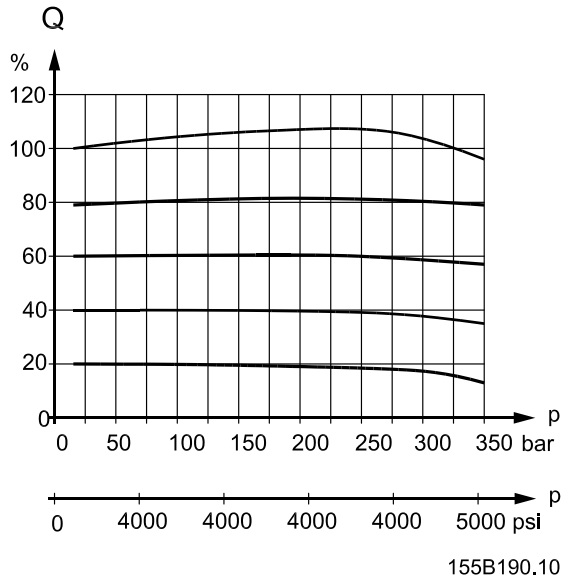


Pressure drop Q T in neutral position /spools with open neutral position, (p). The oil flow Q is shown as a function of the load (p).

*Pressure drop A/B → T at full spool travel*

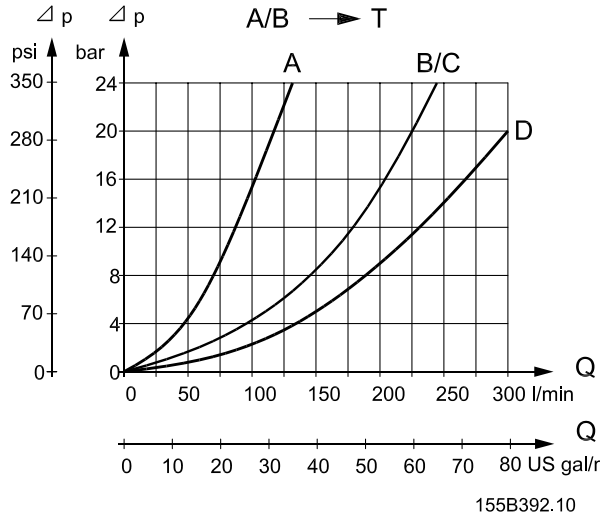

## Technical Characteristics

*Pressure drop A/B → T, spools with open neutral position*

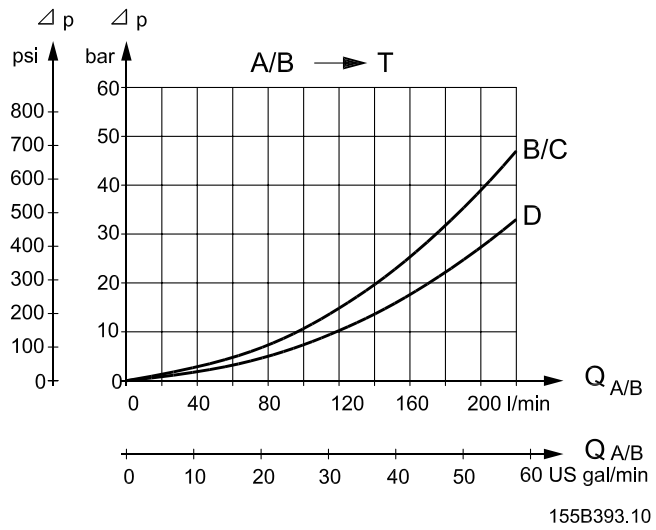


### PVLP, Shock Valve Characteristic (with Pressure Relief Valve)

*PVLP, shock valve characteristic (with Pressure Relief Valve)*

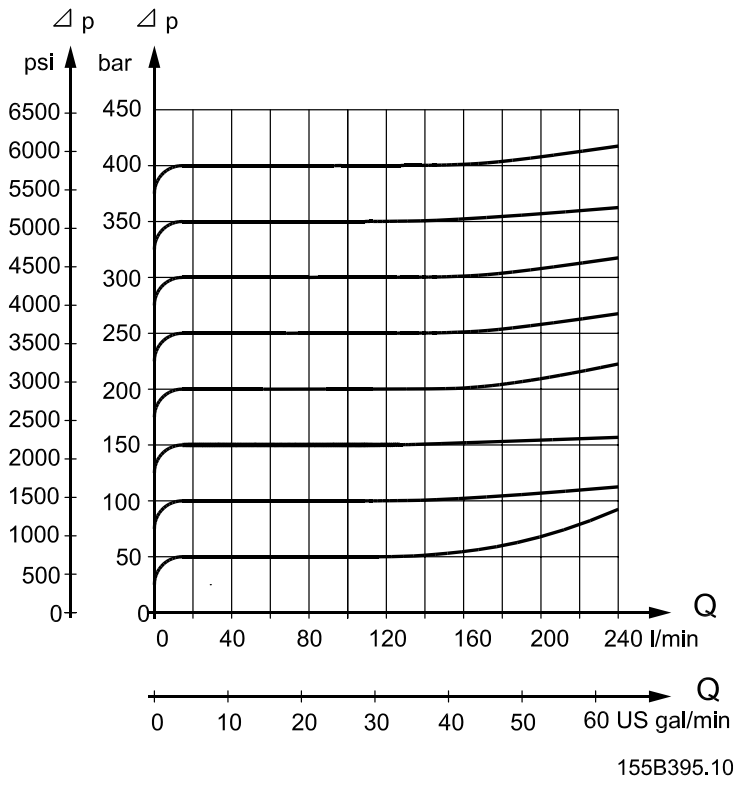


The shock valve PVLP is designed to absorb shock effects. Consequently, it shall not be used as a pressure relief valve.

## Technical Characteristics

### PVLP/PVLA, Suction Function

*PVLP/PVLA, suction function characteristic*

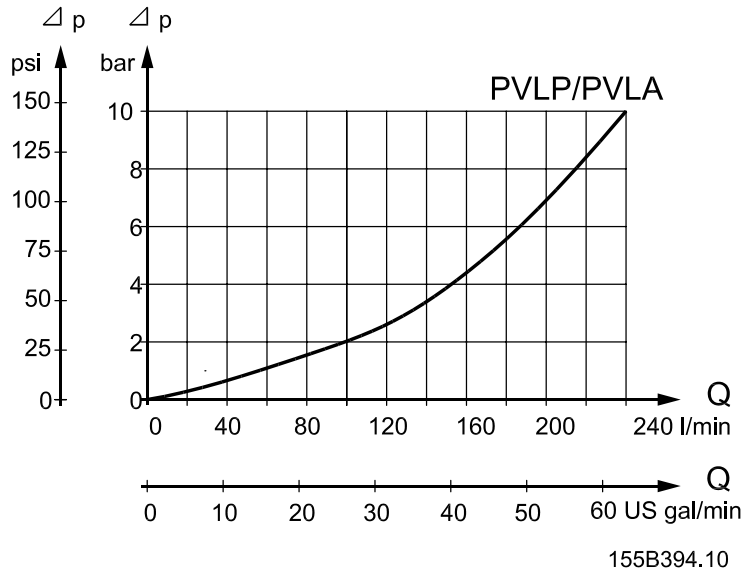

## Hydraulic system examples

### Example of PVG 120 with variable displacement pump

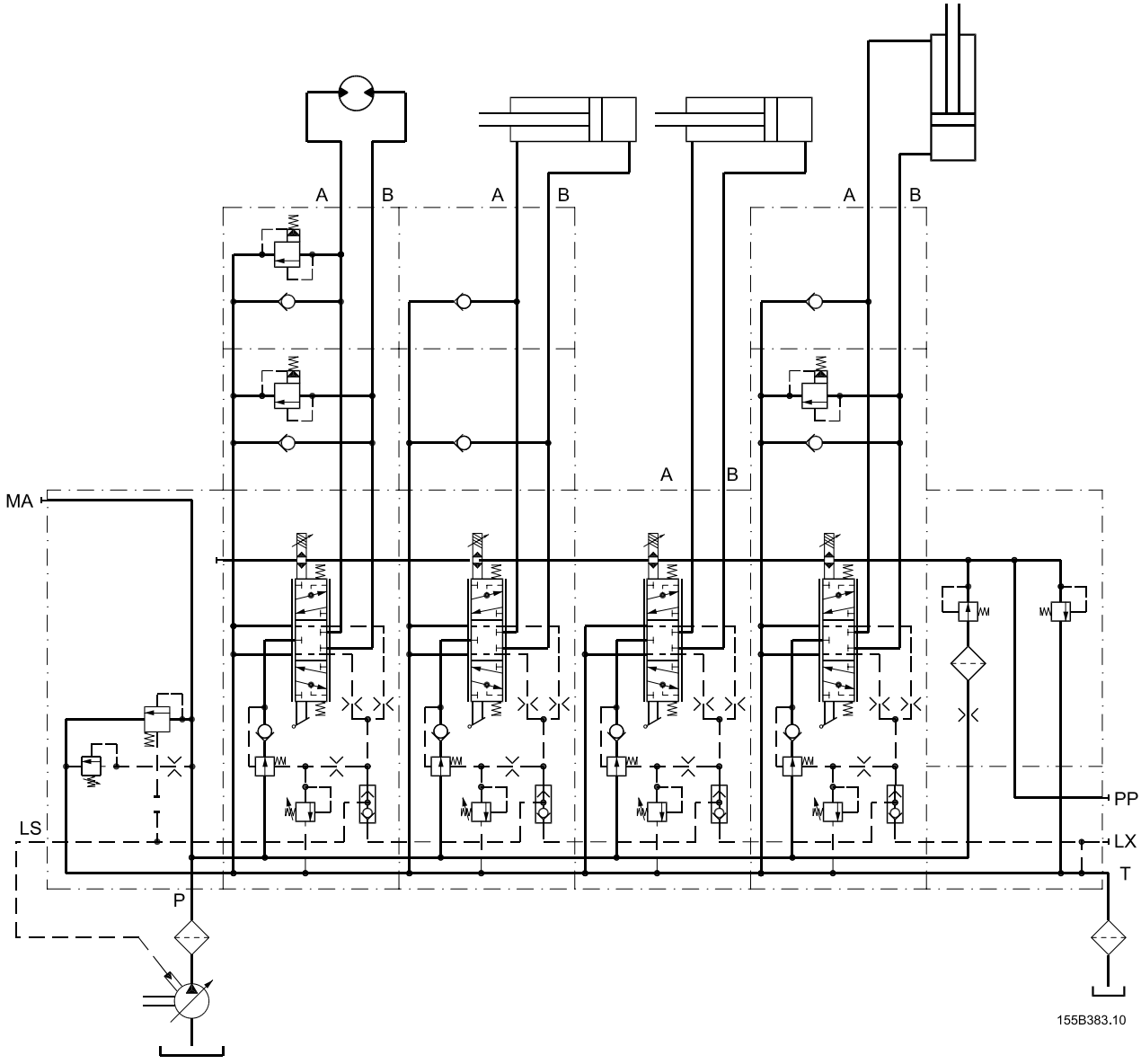

## Hydraulic system examples

### Example of PVG 120 with fixed displacement pump

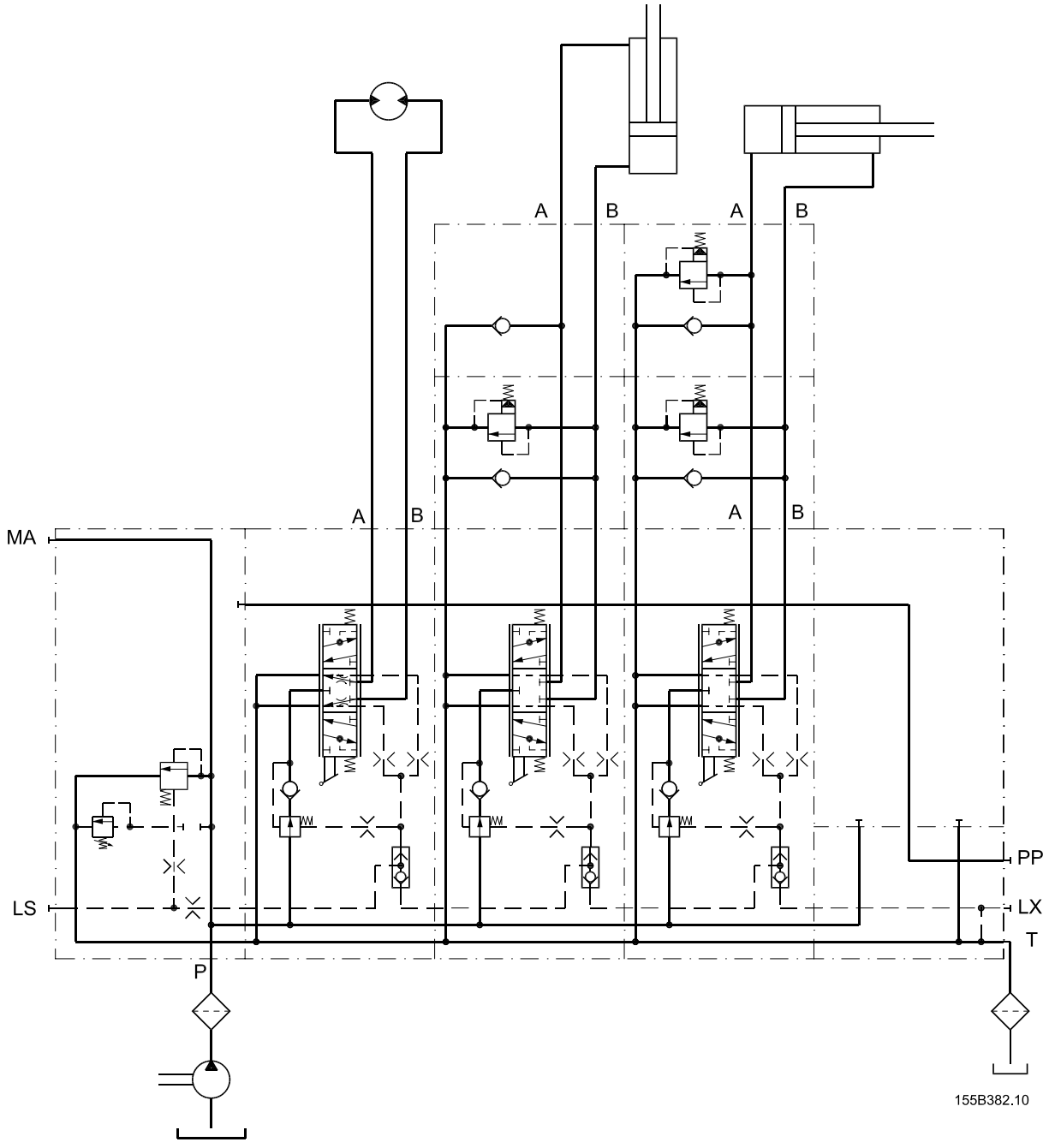

## Other operating conditions

### Hydraulic fluids for PVG

#### Oils

The main duty of the oil in a hydraulic system is to transfer energy; but it must also lubricate the moving parts in hydraulic components, protect them against corrosion, and transport dirt particles and heat out of the system. It is therefore important to choose the correct oil with the correct additives. This gives problem-free operation and long working life.

#### Mineral oils

Danfoss Power Solutions recommends for systems with PVG 120 valves to use mineral-based hydraulic oils containing additives: Type H-LP (DIN 51524) or HM (ISO 6743/4).

#### Non-flammable fluids

Phosphate-esters (HFDR fluids) can be used without special precautions. However, dynamic seals must be replaced with FPM (Viton) seals. Please contact the Danfoss Power Solutions Sales Organisation if the PVG 120 valve is to be used with phosphate-esters.

The following fluids should only be used according to agreement with the Danfoss Power Solutions Sales Organisation:

- Water-glycol mixtures (HFC fluids)
- Water-oil emulsions (HFB fluids)
- Oil-water emulsions (HFAE fluids)

#### Biodegradable fluids

PVG 120 valves can be used in systems using rape-seed oil. The use of rape-seed oil is conditional on:

- it complying with the demands on viscosity, temperature and filtration, etc.
- the operating conditions being adapted to the recommendations of the oil supplier.

Before using other biodegradable fluids, please consult the Danfoss Power Solutions Sales Organisation.

### Particle Content, Degree of Contamination

Oil filtration must prevent the particle content from exceeding an acceptable level, i.e. an acceptable degree of contamination.

Maximum contamination for PVG 120 is 23/19/16 (see ISO 4406).

Calibration in accordance with the ACFTD method.

In our experience a degree of contamination of 23/19/16 can be maintained by using a filter fineness as described in the next section.

### Filtering

Effective filtration is the most important precondition in ensuring that a hydraulic system performs reliably and has a long working life. Filter manufacturers issue instructions and recommendations. It is advisable to follow them.

#### System filters

Where demands for safety and reliability are very high a pressure filter with bypass and indicator is recommended. Experience shows that a 10 µm nominal filter (or finer) or a 20 µm absolute filter (or finer) is suitable.

It is our experience that a return filter is adequate in a purely mechanically operated valve system.

The fineness of a pressure filter must be selected as described by the filter manufacturer so that a particle level of 23/19/16 is not exceeded. See *Particle content, degree of contamination* for more information.

## Other operating conditions

The filter must be fitted with pressure gauge or dirt indicator to make it possible to check the condition of the filter.

In systems with differential cylinders or accumulators the return filter must be sized to suit the max. return oil flow. Pressure filters must be fitted to suit max. pump oil flow.

### Internal filters

The filters built into PVG 120 are not intended to filter the system but to protect important components against large particles.

Such particles can appear in the system as a result of pump damage, hose fracture, use of quick-couplings, filter damage, starting up, contamination, etc.

The filter that protects the pilot supply in the tank side module has a mesh of 125 µm. It is obtainable as a spare part and is easy to replace.

The filter protecting the essential PVE parts has a mesh of 125 µm.

## Conversion Factors

1 N•m = 885.1 lbf•in

1 N = 22.48 lbf

1 bar = 14.50 psi

1 mm = 0.0394 in

1 $cm^3$ = 0.061 $in^3$

1 l = 0.22 UK gal

1 l = 0.264 US gal

°F = 1.8 • °C + 32

## Dimensions

### PVG 120 dimensions

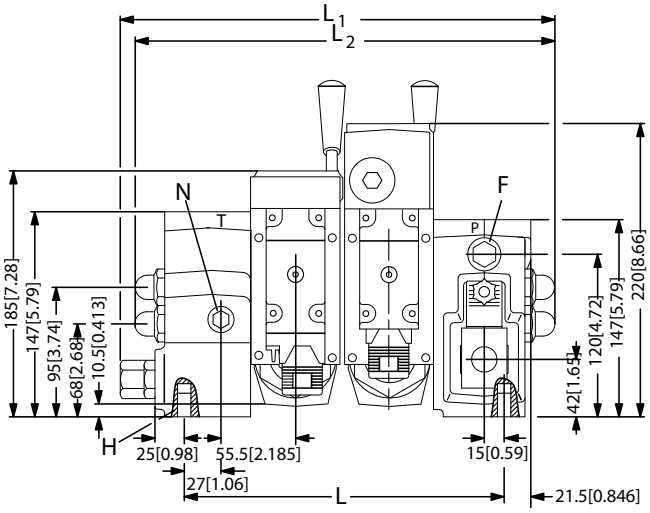


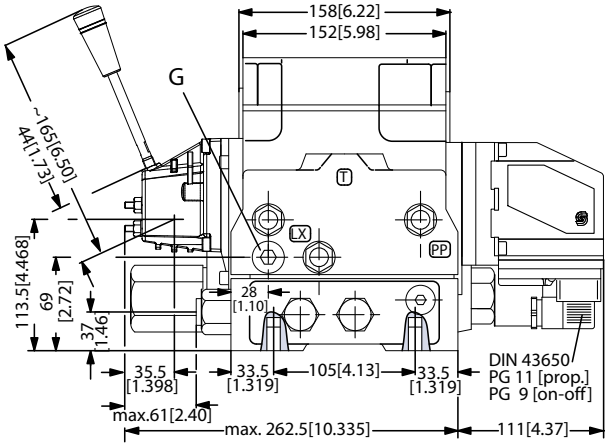


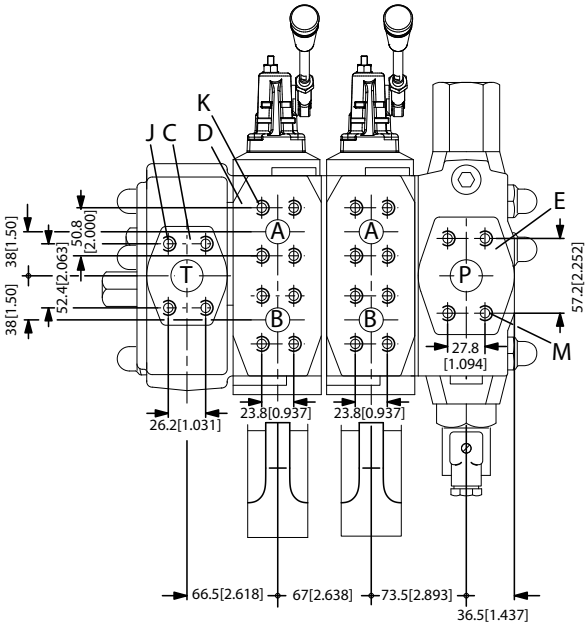


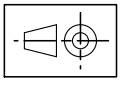

V310153.B

| PVB | | 1 | 2 | 3 | 4 | 5 | 6 | 7 | 8 |
|---|---|---|---|---|---|---|---|---|---|
| L | mm [in] | 170 [6.69] | 237 [9.33] | 304 [11.97] | 371 [14.61] | 438 [17.24] | 505 [19.88] | 572 [22.51] | 639 [25.16] |
| L1 | mm [in] | 263.5 [10.38] | 330.5 [13.02] | 397.5 [15.66] | 464.5 [18.30] | 531.5 [20.94] | 598.5 [23.58] | 665.5 [26.22] | 732.55 [28.86] |
| L2 | mm [in] | 255 [10.05] | 322 [12.69] | 389 [15.33] | 456 [17.97] | 523 [20.61] | 590 [23.25] | 657 [25.89] | 724 [28.53] |

**Port**

**C** 1 in SAE flange (210 bar) $1^{5}/_{16}$–12 UN O-ring Boss (3045 psi)

## Dimensions

| Port | | |
|---|---|---|
| **D** | ¾ in SAE flange (415 bar) | $1\frac{1}{16}$–12 UN O-ring Boss (6020 psi) |
| **E** | 1 in SAE flange (415 bar) | $1\frac{5}{16}$–12 UN O-ring Boss (6020 psi) |
| **F** | G ¼ | ½–20 UNF |
| **G** | G $\frac{3}{8}$ | ¾–16 UNF |
| **H** | M12; 18 mm deep | $\frac{7}{16}$–14 UNC; 0.7 in deep |
| **J** | M10; 17 mm deep | $\frac{3}{8}$–16 UNC; 0.7 in deep |
| **K** | M10; 17 mm deep | $\frac{3}{8}$–16 UNC; 0.7 in deep |
| **M** | M12; 18 mm deep | $\frac{7}{16}$–14 UNC; 0.7 in deep |
| **N** | G $\frac{3}{8}$ | ¾–16 UNF |

*PVG 120 Outline dimensions*

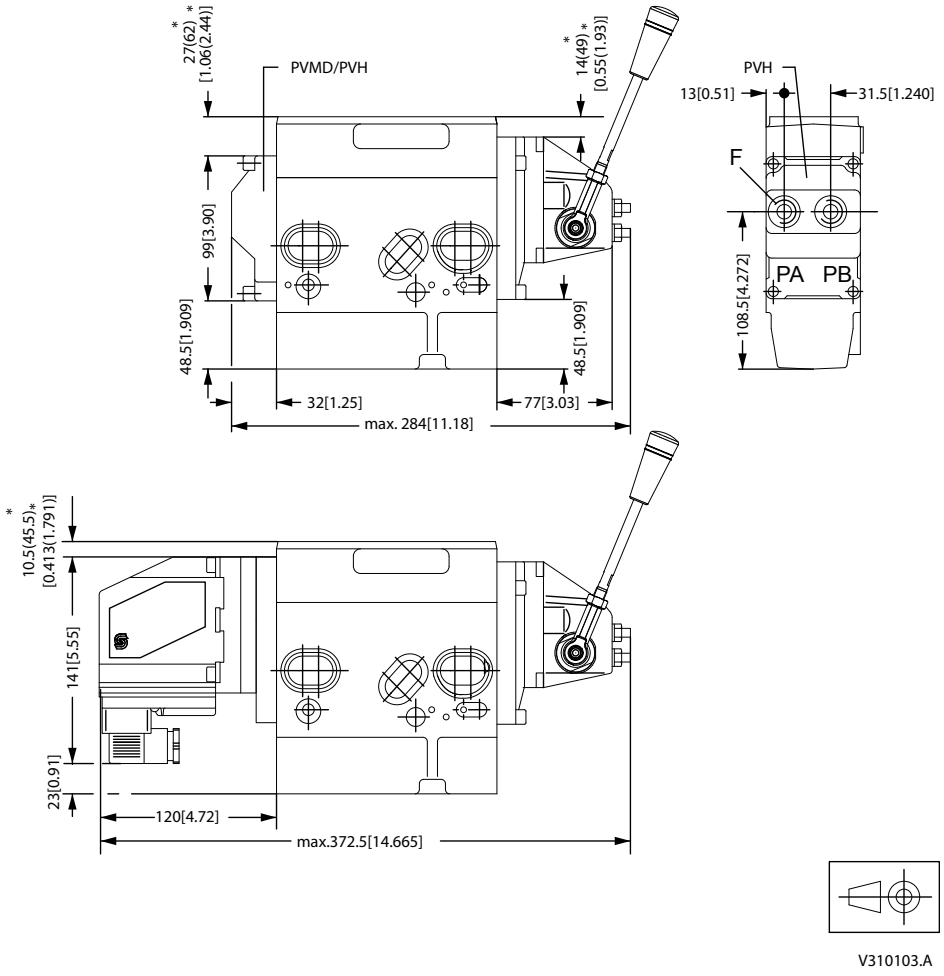


F: G ¼ [1/2 –20 UNF]
* Dimensions in parenthesis apply to high basic modules.

## Dimensions

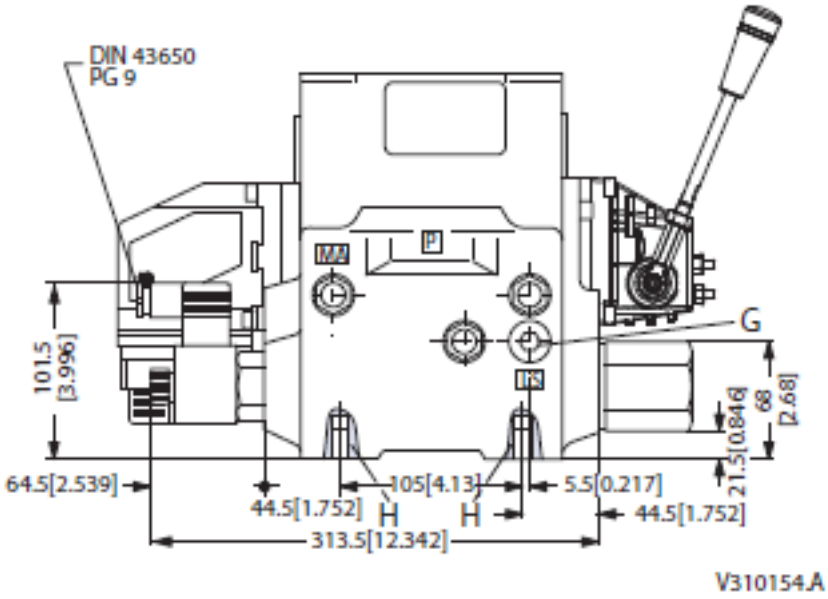


## PVM, Lever Positions

**Base with an angle of 37.5°**

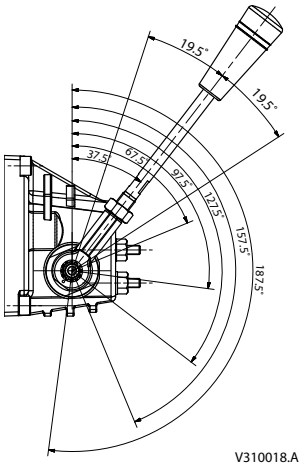


**Base with an angle of 22.5°**

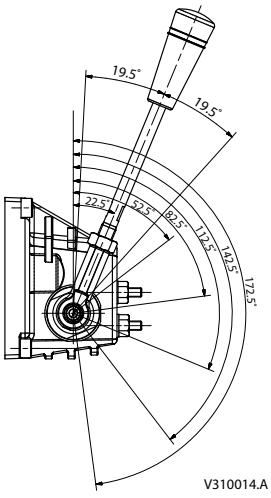

## Modules and Code Numbers

### PVP and PVPV, Pump Side Modules

| Symbol | Description | Port type | Code number |
|---|---|---|---|
| 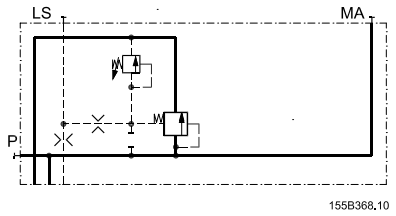 | Open center PVP for pumps with fixed displacement.<br>Pressure gauge connection. | Metric flange | 155G5021 |
| | | SAE flange | 155G5037 |
| | | O-ring boss | 155G5023 |
| | Open center PVP for oil flow exceeding 180 l/min [47.55 US gal/min].<br>For pumps with fixed displacement.<br>Pressure gauge connection. | Metric flange | 155G5027 |
| | | SAE flange | 155G5029 |
| | | O-ring boss | 155G5028 |
| 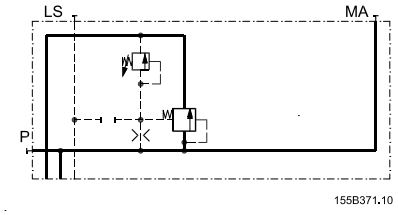 | Closed center PVP for pumps with variable displacement.<br>Pressure gauge connection. | Metric flange | 155G5020 |
| | | SAE flange | 155G5038 |
| | | O-ring boss | 155G5022 |
| 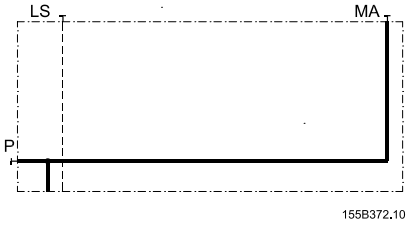 | Closed center PVPV without pressure relief valve.<br>For pumps with variable displacement.<br>Pressure gauge connection. | Metric flange | 155G5030 |
| | | SAE flange | 155G5032 |
| | | O-ring boss | 155G5031 |

*Port connections:*

P = 1 in SAE flange; 415 bar [$1\frac{1}{16}$–12 UN O-ring Boss; 6020 psi]

MA = G ¼ [½–20 UNF O-ring Boss]

LS = G $\frac{3}{8}$ [$\frac{3}{4}$–16 UNF O-ring Boss]

### PVP, Accessories for Open Center Pump Side Modules

| Symbol | Description | | Code number |
|---|---|---|---|
| – | Prop., PVPD | | 155G5041 |
| 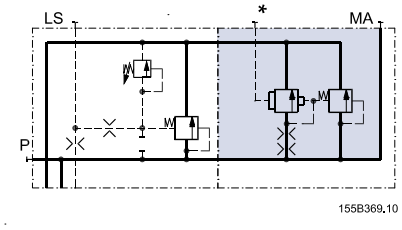 | PVPH,<br>Hydraulically actuated relief valve | | 155G5061<br>* Connection for external pilot pressure: available with $G^1/_4$ thread only. |
| 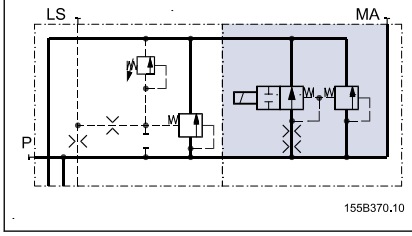 | PVPE,<br>Electrically actuated relief valve.<br>Normally open solenoid valve. | 12 V | 155G5052 |
| | | 24 V | 155G5054 |

## Modules and Code Numbers

### PVB, Basic Modules

| Symbol | Description | | Code number | |
|---|---|---|---|---|
| | | | No facilities for shock valves A/B (low modules) | Facilities for shock valves A/B (high modules) |
| 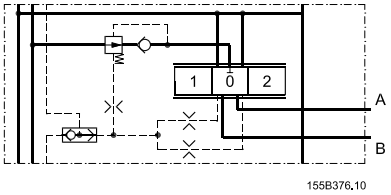  | Pressure compensated<br>*Port connections:*<br>A/B: $^3/_4$ SAE flange; 415 bar<br>[1 $^1/_{16}$–12 UN O-ring Boss; 6020 psi] | Metric flange | 155G6014 | 155G6005 |
| | | SAE flange | 155G6016 | 155G6007 |
| | | O-ring boss | 155G6015 | 155G6006 |

### PVB, Accessories for Basic Modules

| Symbol | Description | Code number |
|---|---|---|
| 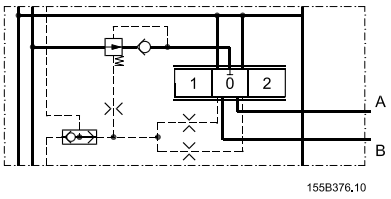  | PVBP, plug | 155G6081 |
| 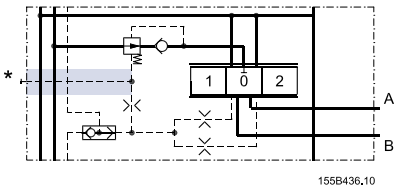  | PVBU, module for oil flow exceeding 180 l/min [47.6 US gal/min].<br>Connection for external LS pressure relief. | 155G6035 |
| | PVBC, connection for external LS pressure relief. | 155G6082 |
| 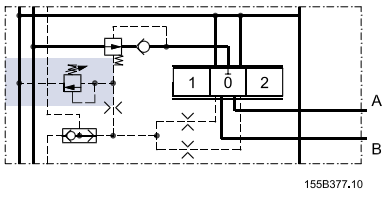  | PVBR, LS-pressure relief valve for ports A/B-port | 155G6080 |

*Port connection:* G $^1/_4$ available with G $^1/_4$ thread only.

## Modules and Code Numbers

### PVLA, Suction Valve

| Symbol | Code number |
|---|---|
| 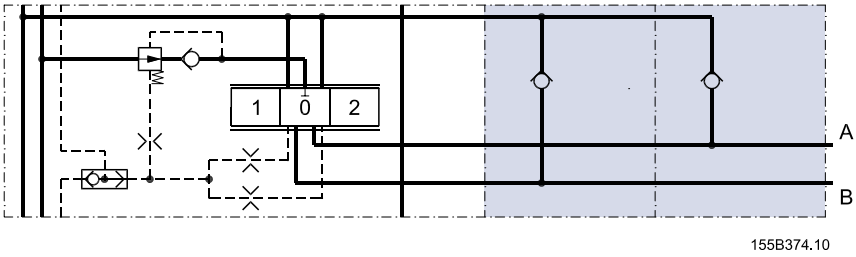  | 155G1065 |

### PVLP, Shock and Suction Valves for A/B Port Connections

| Symbol | Fixed setting bar [psi] | | Code number |
|---|---|---|---|
| 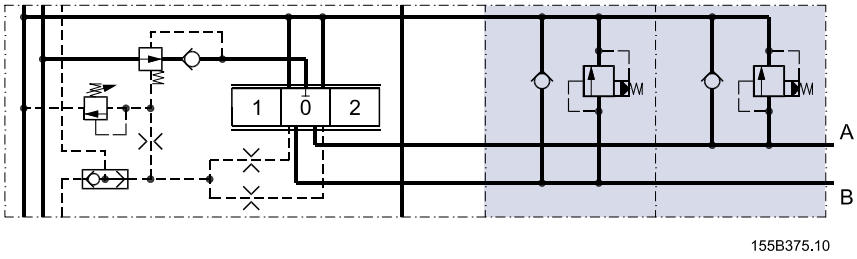  | 50 | [725] | 155G0050 |
| | 75 | [1100] | 155G0075 |
| | 100 | [1450] | 155G0100 |
| | 125 | [1800] | 155G0125 |
| | 150 | [2200] | 155G0150 |
| | 175 | [2550] | 155G0175 |
| | 200 | [2900] | 55G0200 |
| | 225 | [3240] | 155G0225 |
| | 250 | [3650] | 155G0250 |
| | 275 | [4000] | 155G0275 |
| | 300 | [4350] | 155G0300 |
| | 325 | [4700] | 155G0325 |
| | 350 | [5100] | 155G0350 |
| | 375 | [5450] | 155G0375 |
| | 400 | [5800] | 155G0400 |

## Modules and Code Numbers

### PVBS, Main Spools

| Symbol | ISO Symbol | Description | Code number Size | | | |
|---|---|---|---|---|---|---|
| | | | A<br>65 l/min<br>[17.2 US gal/min] | B<br>95 l/min<br>[25.1 US gal/min] | C<br>130 l/min<br>[34.3 US gal/min] | D[1)]<br>180 l/min<br>[47.6 US gal/min] |
| 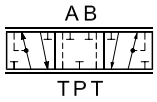 <br>155B235.10 | 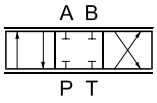 <br>155B384.10 | 4-way, 3-position.<br>Closed neutral position | 155G6452 | 155G6454 | 155G6456 | 155G6458 |
| 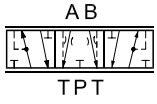 <br>155B236.10 | 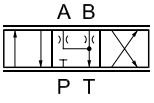 <br>155B385.10 | 4-way, 3-position.<br>Throttled, open neutral position | – | 155G6464 | 155G6466 | 155G6468 |
| 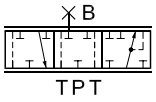 <br>155B226.10 | 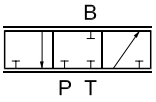 <br>155B386.10 | 3-way, 3-position<br>P → B | – | – | 155G6476 | 155G6478 |

[1)] Main spool D is used for oil flow exceeding 180 l/min [47.6 US gal/min].

### PVM, Mechanical Actuation

*PVM, Mechanical Actuation*

| Symbol | Description | | Code number |
|---|---|---|---|
| 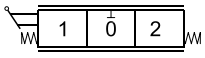 <br>155B387.10 | PVM,<br>Standard, spring centered mechanical actuation.<br>Individual oil flow adjustment to ports A and B. | 22.5° | 155G3040 |
| | | 37,5° | 155G3041 |
| | PVM,<br>Mechanical actuation for hydraulically operated valves.<br>Individual oil flow adjustment to ports A and B. | 22,5° | 155G3050 |
| | | 37,5° | 155G3051 |

### PVMD, Cover for Mechanical Actuation

| Symbol | Description | Code number |
|---|---|---|
| | PVMD, cover for purely mechanically operated valve. | 155G4061 |

### PVH, Hydraulic Actuation

| Symbol | Description | | Code number |
|---|---|---|---|
| 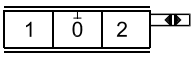 <br>155B339.10 | PVH,<br>cover for hydraulically operated valve. | G $^1/_4$ | 155G4022 |
| | | $^1/_2$–20 UNF | 155G4021 |

## Modules and Code Numbers

### PVHC, High Current Actuator

| Symbol | Description | | Code number | | |
|---|---|---|---|---|---|
| | | | Hirschmann | AMP | Deutsch |
| 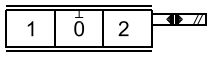  155B388.10 | PVHC | 12 V | – | – | 11110597 |
| | | 24 V | – | – | 11110598 |

### PVE, Electrical Actuation

| Symbol | Description | | Code number | | |
|---|---|---|---|---|---|
| | | | Hirschmann | AMP | Deutsch |
| 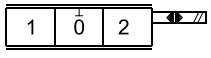  155B388.10 | PVEO, ON/OFF | 12 V | 155G4272 | 155G4282 | 11110601 |
| | | 24 V | 155G4274 | 155G4284 | 11110652 |
| 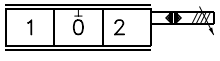  155B389.10 | PVEH, Proportional high. Puls width modulation, short reaction time, low hysteresis, active fault monitoring, inductive transducer | | 155G4092 | 155G4094 | – |
| | PVEH, Proportional high. Puls width modulation, short reaction time, low hysteresis, passive fault monitoring, inductive transducer | | 155G4093 | 155G4095 | 11111206 |
| | PVES Proportional Super. Puls width modulation, short reaction time, 0% hysteresis passive fault monitoring, inductive transducer | | 11111210 | – | 11111207 |
| | PVED-CC, CAN-Bus SAE J 1939/ISOBUS | | – | 11111117 | 11111113 |

### PVT, tank side module

*PVT, tank side module*

| Symbol | Description | Port type | Code number |
|---|---|---|---|
| 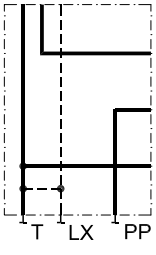  155B380.10 | Upper part without active elements | Metric flange | 155G7020 |
| | | SAE flange | 155G7022 |
| | | O-ring boss | 155G7021 |
| | Upper part with LX connection | Metric flange | 155G7023 |
| | | SAE flange | 155G7025 |
| | | O-ring boss | 155G7024 |
| 155B435.10 | Lower part without active elements | Mounting | 155G7060 |
| | | Mounting thread UNF | 155G7062 |

## Modules and Code Numbers

*PVT, tank side module (continued)*

| Symbol | Description | Port type | Code number |
|---|---|---|---|
| 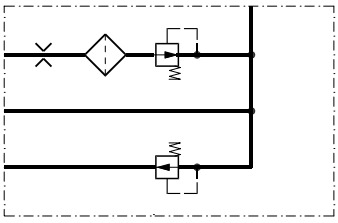 155B381.10 | Lower part of PVE,<br>pilot oil supply for electrical actuations.<br>Filter mesh: 125 µm | Mounting thread metric | 155G7040 |
| | | Mounting thread UNF | 155G7042 |
| 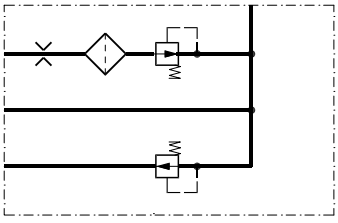 155B381.10 | Lower part of PVH,<br>pilot oil supply for hydraulic actuations.<br>Filter mesh: 125 µm | Mounting thread metric | 155G7043 |
| | | Mounting thread UNF | 155G7044 |

*Port connections:*

T = 1 in SAE flange, 210 bar [$1^5/_{16}$–12 UN O-ring Boss, 3045 psi];

PP = G $^3/_8$ [$^3/_4$–16 UNF O-ring Boss]

LX = G $^3/_8$ [$^3/_4$–16 UNF O-ring Boss]

### PVAS, Assembly Kit

| Code number 155G... | | | | | | | | |
|---|---|---|---|---|---|---|---|---|
| Nr. of modules | 1 PVB | 2 PVB | 3 PVB | 4 PVB | 5 PVB | 6 PVB | 7 PVB | 8 PVB |
| Tie bolts and seals | 155G8031 | 155G8032 | 155G8033 | 155G8034 | 155G8035 | 155G8036 | 155G8037 | 155G8038 |

## PVG 120 Modules Selection Chart

### PVG 120 module selection chart

*PVG 120 modules exploded view*

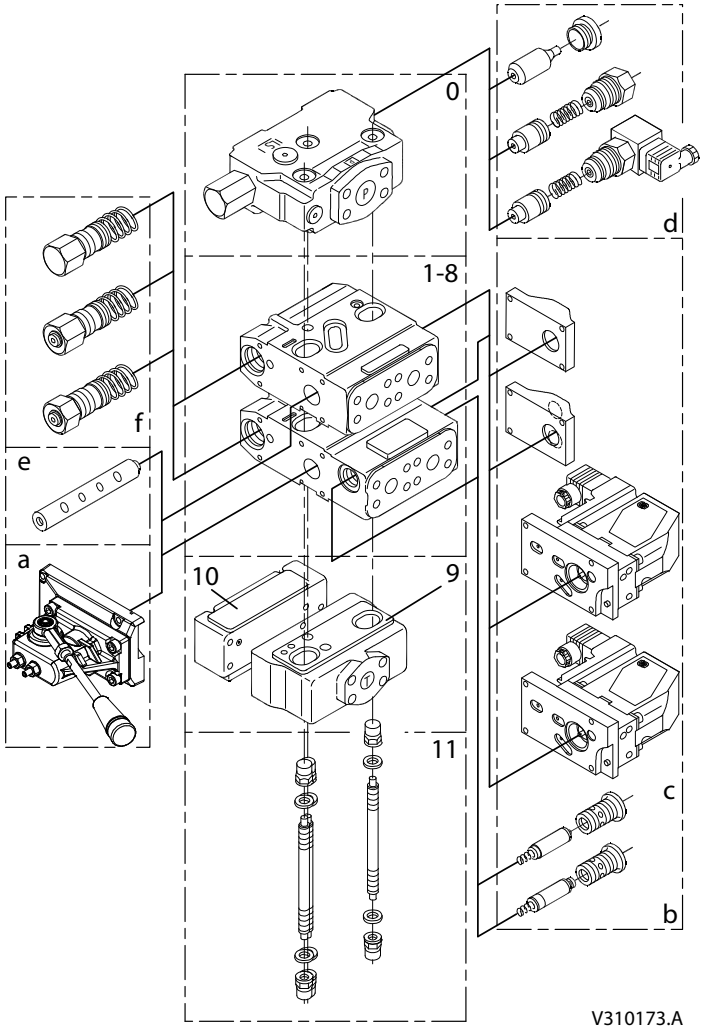


*PVB, high basic module*

| | SAE flange | O-ring Boss | Metric flange | Weight kg [lb] |
|---|---|---|---|---|
| Facilities for shock valves AB | 155G6007 | 155G6006 | 155G6005 | 10.2 [22.5] |

*PVB, low basic module*

| | SAE flange | O-ring Boss | Metric flange | Weight kg [lb] |
|---|---|---|---|---|
| No facilities for shock valves AB | 155G6016 | 155G6015 | 155G6014 | 8.9 [19.6] |

## PVG 120 Modules Selection Chart

*Accessory modules for PVB*

| | Code number | Weight, kg [lb] |
|---|---|---|
| Plug, PVBP | 155G6081 | 0.4 [0.9] |
| $LS_{A/B}$ press. relief valve, PVBR | 155G6080 | |
| External LS connection, PVBC | 155G6082 | |
| Module for oil flow > 180 l/min [47.6 US gal/min], PVBU | 155G6035 | |

*PVBS, mechanical actuation*

| Oil flow, l/min [US gal] | A<br>65 [17.2] | B<br>95 [25.1] | C<br>130 [34.3] | D<br>180 [47.6] |
|---|---|---|---|---|
| 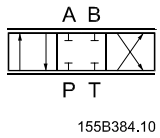 | 155G6452 | 155G6454 | 155G6456 | 155G6458 |
| 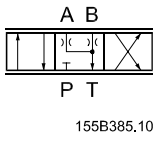 | | 155G6464 | 155G6466 | 155G6468 |
| 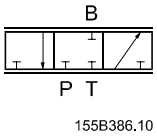 | | | 155G6476 | 155G6478 |
| Weight, kg [lb] | 0.35 [0.8] | | | |

*PVM, mechanical actuation*

| | | |
|---|---|---|
| **PVM + PVMD or<br>PVM + PVE** | 155G3040<br>155G3041 | 22.5°<br>37.5° |
| **PVM + PVH** | 155G3050<br>155G3051 | 22.5°<br>37.5° |
| **Weight** | kg [lb] | 0.5 [1.1] |

*PVMD, cover for PVM*

| Code number | Weight, kg [lb] |
|---|---|
| 155G4061 | 0.3 [0.7] |

*PVT, tank side module*

| Code number | SAE flange | O-ring Boss | Metric flange | Weight kg [lb] |
|---|---|---|---|---|
| Upper part excl. LX connection | 155G7022 | 155G7021 | 155G7020 | 4.6 [10.1] |
| Upper part incl. LX connection | 155G7025 | 155G7024 | 155G7023 | |
| Lower part incl. pilot oil supply for PVE | 155G7042 | | 155G7040 | 4.4 [9.7] |
| Lower part excl. pilot oil supply for PVE | 155G7062 | | 155G7060 | |
| Lower part incl. pilot oil supply for PVH | 155G7044 | | 155G7043 | |

## PVG 120 Modules Selection Chart

*PVP, pump side module*

| Code number | | O-ring Boss | SAE flange | Metric flange | Weight kg [lb] |
|---|---|---|---|---|---|
| Open centre | Excl. PVPD, PVPH, PVPE | 155G5023 | 155G5037 | 155G5021 | 10.0 [22.1] |
| | For PVB-oil flow > 180 l/min [47.6 US gal/min]<br>Excl. PVPD, PVPH, PVPE | 155G5028 | 155G5029 | 155G5027 | |
| Closed centre | Incl. pressure relief valve and plug PVPD | 155G5022 | 155G5038 | 155G5020 | 10.2 [22.5] |
| | Excl. pressure relief valve | 155G5031 | 155G5032 | 155G5030 | 11.0 [24.3] |

*Accessory modules for open centre PVP*

| Description | | Code number | Weight kg [lb] |
|---|---|---|---|
| Plug, PVPD | | 155G5041 | 0.4 [0.9] |
| Hydraulic relief valve, PVPH | | 155G5061 | 0.5 [1.1] |
| Electrical relief valve, PVPE | 12 V | 155G5052 | 0.7 [1.5] |
| | 24 V | 155G5054 | |

*PVH, cover for PVRHH*

| Port | Code number | Weight, kg [lb] |
|---|---|---|
| 1/2 in - 20 UNF | 155G4021 | 0.4 [0.9] |
| G 1/4 | 155G4022 | |

*PVE, electrical actuation*

| Connector | PVEH fault monitoring | | PVEO voltage | |
|---|---|---|---|---|
| | Active | Passive | 12 V | 24 V |
| Hirschmann | 155G4092 | 155G4093 | 155G4272 | 155G4274 |
| AMP | 155G4094 | 155G4095 | 155G4282 | 155G4284 |
| Weight, kg [lb] | 1.25 [2.76] | | 1 [2.2] | |

*PVLA suction valve A/B*

| Code number | Weight kg [lb] |
|---|---|
| 155G1065 | 0.2 [0.4] |

*PVLP, shock and suction valve A/B*

| Pressure setting | | |
|---|---|---|
| bar | [psi] | Code number |
| 50 | 725 | 155G0050 |
| 75 | 1100 | 155G0075 |
| 100 | 1450 | 155G0100 |
| 125 | 1800 | 155G0125 |
| 150 | 2200 | 155G0150 |

## PVG 120 Modules Selection Chart

*PVLP, shock and suction valve A/B (continued)*

| Pressure setting | | |
|---|---|---|
| 175 | 2550 | 155G0175 |
| 200 | 2900 | 155G0200 |
| 225 | 3250 | 155G0225 |
| 250 | 3650 | 155G0250 |
| 275 | 4000 | 155G0275 |
| 300 | 4350 | 155G0300 |
| 325 | 4700 | 155G0325 |
| 350 | 5100 | 155G0350 |
| 375 | 5400 | 155G0375 |
| 400 | 5800 | 155G0400 |
| Weight, kg [lb] | 0.175 [0.386] | |

*PVAS, assembly kit*

| PVB's | | 1 | 2 | 3 | 4 | 5 | 6 | 7 | 8 |
|---|---|---|---|---|---|---|---|---|---|
| Code number | | 155G8031 | 155G8032 | 155G8033 | 155G8034 | 155G8035 | 155G8036 | 155G8037 | 155G8038 |
| Weight | kg | 0.8 | 1.0 | 1.1 | 1.2 | 1.4 | 1.7 | 1.9 | 2.1 |
| | [lb] | [1.8] | [2.2] | [2.4] | [2.6] | [3.1] | [3.7] | [4.2] | [4.6] |

## Order specification

### Ordering of modules for oil flow exceeding 180 l/min [47.6 US gal/min]

***Modules for pump with fixed displacement***

1. *Ordering:* Order accessory module 155G6035, main spool D, and pump side modules 155G5027 / 155G5028 / 155G5029.
2. *Conversion:* In open center systems a max. oil flow exceeding 180 l/min [47.6 US gal/min] can be achieved by changing the following parts in the pump side and basic modules:
   - Open center pump side module

     – Pressure adjustment spool

     – The springs behind the pressure adjustment spool

     – The plug behind the pressure adjustment spool

     Parts from kit 155G5035 may be used.
   - Closed center pump side module (A closed center pump side module can be changed into an upgraded open center pump side module by means of kit 155G5035.)
   - Basic module

     – Spring behind pressure compensator

     – The plug behind the pressure compensator

   Spring and plug with code number 155G6035 (PVBU, accessory module).

***Modules for pump with variable displacement***

1. *Ordering:* Order accessory module 155G6035 and main spool D.
2. *Conversion*:In closed center systems a max. oil flow exceeding 180 l/min [47.6 US gal/min] can be achieved by changing the following basic module parts:

   – The spring behind the pressure compensator.

   – The plug behind the pressure compensator.

   The code number of the spring and plug is 155G6035 (PVBU, accessory module).

### Order Form

An order form for PVG 120 hydraulic valve is shown on next page. The form can be obtained from the Danfoss Power Solutions Sales Organisation.

The module selection chart on the next page and the order form are divided into fields.

*Each module has its own field:*

**0:** PVP, pump side modules

**d:** PVPD, PVPH and PVPE, accessory modules

**1-8:** PVB, basic modules

**e:** PVBS, main spools

**f:** PVBP, PVBR, PVBU and PVBC, accessory modules

**a:** PVM, mechanical actuation

**c:** PVMD, cover for mechanical operation; PVH, cover for hydraulic operation; PVEO and PVEH, electrical actuations

**b:** PVLP, shock and suction valve; PVLA, suction valve

**9:** PVT, tank side module

**10:** PVAS, assembly kit

*Please state:*

## Order specification

- Code numbers of all modules required
- Required setting (p) for pump side module
- Required setting of $LS_{A/B}$ pressure relief valves, if accessory module PVBR is ordered.

### Reordering

The space at the top right-hand corner of the form is for Danfoss to fill in. The code number for the whole of the specified valve group (PVG No.) is entered here. In the event of a repeat order all you have to do is enter the number Danfoss has given on the initial confirmation of order.

If PVG 120 is to be used with phosphate-esters this must be stated on the order form.

**PVG 120**
**Specification Sheet**

| | |
|---|---|
| Subsidiary / Dealer | PVG No. |
| Customer | Customer No. |
| Application | Revision No. |

| | Function | A-port | | | | B-port |
|---|---|---|---|---|---|---|
| 0 | Inlet | | 155G<br>P = | 155G<br>bar | | |
| 1 | | a 155G<br>b 155G | f 155G<br>$LS_A$ = | 155G<br>bar $LS_B$ = | e<br>bar | 155G c<br>155G b |
| 2 | | a 155G<br>b 155G | f 155G<br>$LS_A$ = | 155G<br>bar $LS_B$ = | e<br>bar | 155G c<br>155G b |
| 3 | | a 155G<br>b 155G | f 155G<br>$LS_A$ = | 155G<br>bar $LS_B$ = | e<br>bar | 155G c<br>155G b |
| 4 | | a 155G<br>b 155G | f 155G<br>$LS_A$ = | 155G<br>bar $LS_B$ = | e<br>bar | 155G c<br>155G b |
| 5 | | a 155G<br>b 155G | f 155G<br>$LS_A$ = | 155G<br>bar $LS_B$ = | e<br>bar | 155G c<br>155G b |
| 6 | | a 155G<br>b 155G | f 155G<br>$LS_A$ = | 155G<br>bar $LS_B$ = | e<br>bar | 155G c<br>155G b |
| 7 | | a 155G<br>b 155G | f 155G<br>$LS_A$ = | 155G<br>bar $LS_B$ = | e<br>bar | 155G c<br>155G b |
| 8 | | a 155G<br>b 155G | f 155G<br>$LS_A$ = | 155G<br>bar $LS_B$ = | e<br>bar | 155G c<br>155G b |
| 9 | | a 155G<br>b 155G | f 155G<br>$LS_A$ = | 155G<br>bar $LS_B$ = | e<br>bar | 155G c<br>155G b |
| 10 | | a 155G<br>b 155G | f 155G<br>$LS_A$ = | 155G<br>bar $LS_B$ = | e<br>bar | 155G c<br>155G b |
| 11 | Upper tank module | | 155G | | | |
| 12 | Lower tank module | | 155G | | | |
| 13 | PVAS section | | 155G | | | |

| | |
|---|---|
| Comments | |
| Filled in by | Date |

ENGINEERING
TOMORROW

**Comatrol**
www.comatrol.com

**Turolla**
www.turollaocg.com

**Hydro-Gear**
www.hydro-gear.com

**Daikin-Sauer-Danfoss**
www.daikin-sauer-danfoss.com

Local address:


**Danfoss**
**Power Solutions (US) Company**
2800 East 13th Street
Ames, IA 50010, USA
Phone: +1 515 239 6000

**Danfoss**
**Power Solutions GmbH & Co. OHG**
Krokamp 35
D-24539 Neumünster, Germany
Phone: +49 4321 871 0

**Danfoss**
**Power Solutions ApS**
Nordborgvej 81
DK-6430 Nordborg, Denmark
Phone: +45 7488 2222

**Danfoss**
**Power Solutions Trading**
**(Shanghai) Co., Ltd.**
Building #22, No. 1000 Jin Hai Rd
Jin Qiao, Pudong New District
Shanghai, China 201206
Phone: +86 21 3418 5200



Danfoss can accept no responsibility for possible errors in catalogues, brochures and other printed material. Danfoss reserves the right to alter its products without notice. This also applies to products already on order provided that such alterations can be made without changes being necessary in specifications already agreed.
All trademarks in this material are property of the respective companies. Danfoss and the Danfoss logotype are trademarks of Danfoss A/S. All rights reserved.