ENGINEERING
TOMORROW

Technical Information

Joysticks
JS6000 Joystick Base

Revision history

Table of revisions

Date	Changed	Rev
April 2017	Updated to Engineering Tomorrow design	1104
April 2017	Minor correction to note format and mis-spelling	1103
November 2015	Converted to Danfoss layout	1102
June 2010	Single or Dual Axis Options images; Dimensions and Installation, revised dimensions to include 18 pin connector, added recommended mounting panel cut-out illustration, and updated installation instructions.	KA
February 2010	Axis base image, A Grip Front Plate Diagram illustration, Environmental Characteristics	JA
September 2009	Content update	IA
January 2008	A grip front plate diagram updated	HA
November 2007	Grip options model code details; mechanical options: friction hold torque	GA
June 2007	Corrected temperature and length conversion	FA
June 2007	Text changes and addition of CAN+	EA
April 2007	Text changes	D
February 2006	Text changes	C
November 2005	Feature updates	B
May 2005	Hall sensor pinouts	A
December 2004	Initial release	

Contents

General Information

Description....5
Features and options....5

Product configuration

Product configuration model code....6
Base model code....7
Grip model code....9

Model code details

Code B: Single or dual axis options....10
Code C: Shaft sensor and output options....12
Potentiometer sensor....12
Center tap....12
Directional potentiometer switches....13
Dual potentiometer outputs per axis....13
Hall effect sensor....14
Controller Area Network (CAN) output....14
CAN (configuration model code CAN)....14
CAN+ (configuration model code CPL)....14
Pulse Width Modulated (PWM) output....14
PWM (configuration model code PWM)....14
Code D: Centering return spring options....15
Code E: Hardware configuration....15
Code F: Mechanical options....16
Code G: Microswitch option....18
Code H: Electrical interface options....19
Analog....19
CAN 2.0B, J1939 protocol....19
CANopen 2.0B, J1939 protocol....19
PWM....19
H1 electrical interface options....19
H2, 3 joystick location/CAN source address....19
H4 CAN proportional output....20
Code I, J, K, L: Grip options....20

JS6000 CAN messages

CAN option....21
CAN+ option....21
CAN+ external inputs....21
Analog inputs (AIN)....21
Digital inputs (DIN)....21

CAN message protocol

SAE J1939 CAN message specification....23
SAE J1939 basic joystick message....23
Data field....23
Basic joystick message data field descriptions....23
Joystick X-axis neutral position status....24
Joystick X-axis handle left negative position status....24
Joystick X-axis handle right positive position status....25
Joystick X-axis position status....25
Joystick Y-axis neutral position status....25
Joystick Y-axis handle back negative position status....25
Joystick Y-axis handle forward positive position status....26
Joystick Y-axis position status....26
SAE J1939 extended joystick message....26
SAE J1939 error (DM1) messages....27
SAE CANopen protocol information....28
A grip button and rocker CAN naming conventions....29
Top and operator present switch naming conventions....30

Contents

Proportional rocker naming conventions....30
MG grip button CAN naming conventions....31

Product installation

Dimensions and installation....32
Dimensions....32
Recommended mounting panel cut-out....32
Installation....33
Machine wiring guidelines....33
Joystick safety critical functions....34
JS6000 connector pin assignments general information....34
Pin assignments....35
CAN output connector pin assignments....35
CAN output mating connector DEUTSCH DTM06-6S....35
CAN+ and PWM output connector pin assignments....36
CAN+ and PWM output mating connector DEUTSCH DT16-18SB....37
Potentiometer sensor with analog output connector pin assignments....38
Analog output mating connector....39
Hall effect sensor with analog output pin assignments....40

Specifications

Mechanical characteristics....41
Electrical characteristics....41
Microswitch characteristics....43
Sensor power supply ratings....43
Environmental characteristics....43

General Information

Description

The JS6000 features metal construction with a large diameter stainless steel operating shaft, an innovative ball and socket gimbal design manufactured from pressure die cast zinc alloys, a custom high strength material for the center return cone, and optional contactless Hall effect sensing technology.

The CAN+ version of the JS6000 base allows the value and state of up to eleven digital or seven digital and four analog inputs from external-to-the-joystick sources to be broadcast along with joystick Controller Area network (CAN) messages.

The Pulse Width Modulation (PWM) version of the JS6000 base can be used to directly drive a valve, such as the H1 hydrostatic transmission, without an intermediate microcontroller. This version allows joystick operating parameters (e.g. ramp rates, button function assignments, output characteristics) to be configured using the PLUS+1® Service Tool interface. Refer to *JS6000 PWM User Manual*, **11060942** for instructions and information required to configure JS6000 PWM joystick options.

The flexible design of the JS6000 offers many options, making it the right choice for applications that require more than a simple dual axis joystick with spring return to center.

JS6000 joystick base

Features and options

- Hall effect or potentiometer sensing (model dependent)
- One or two sensors per axis for redundancy
- Single or dual axis
- Mechanical direction switches
- 2 centering spring forces
- 3 available friction-hold options
- Output options:
  - Analog
  - CAN 2.0B, J1939 protocol
  - CANopen protocol
  - High current PWM
- Multiple grip options:
  - HKN — plain knob
  - MG — with operator trigger and hand rest
  - A— configurable ergonomic
  - Custom designed grips
- External-to-joystick analog and digital information included in JS6000 CAN+messages

Product configuration

Product configuration model code

Use the JS6000 product configuration model code to specify particular features when ordering a JS6000 joystick. The model code begins with the product family name: JS6000. Fill in the remaining fields to configure the product with the desired features.

The model code includes both joystick base and joystick grip information. *JS6000 Joystick Base Technical Information Manual*, **520L0760** provides information required to configure the base portion of the joystick. *JS1000, JS6000 Joystick Grips Technical Information Manual*, **520L0872** provides information required to configure JS6000 joystick grips.

Product configuration model code example

J	S	6	0	0	0		X	Y		H	M	M		H		S		N	L		N		J	3	3	1		A	0	H	0		R		V		N	N	N	N	N	N	N	N

Product configuration

Base model code

JS6000 product configuration model code example

A	B	C	D	E	F	G	H	I	J	K	L	M	N	O	P	Q	R	S
JS6000	XY	HMM	H	S	NL	N	J331	A0H0	R	V	N	N	N	N	N	N	N	N

Base — Grip

A—Product series

Code	Description
JS6000	Series JS6000 Joystick

B—Operational axis options

Code	Description
XY	Bi-directional: X and Y axis
NY	Uni-directional: Y axis only (required for friction-holding)

C—Shaft position sensing and output options

Code	Description
PRR	Potentiometer: single output per axis; V_o = 10 to 90% of V_s; ±1.5° neutral threshold
PQQ	Potentiometer: single output per axis; V_o = 25 to 75% of V_s; ±1.5° neutral threshold
PSS	Potentiometer: single output per axis; V_o = 10 to 90% of V_s; ±5° neutral threshold
PTT	Potentiometer: single output per axis; V_o = 25 to 75% of V_s; ±5° neutral threshold
PUU	Potentiometer: dual output per axis; V_o = 10 to 90% of V_s; ±1.5° neutral threshold
HMM	Hall effect: dual sensors per axis; V_s = 5 V_{DC}; V_o = 0.5 to 4.5 V_{DC}
CAN *	Hall effect: dual sensors per axis; V_s = 9 to 36 V_{DC}; CAN 2.0B J1939 communication, 6 pin connector
CANopen *	Hall effect: dual sensors per axis; V_s = 9 to 36 V_{DC}; CANopen 2.0B J1939 communication, 6 pin connector
CPL	Hall effect: dual sensors per axis; V_s = 9 to 36 V_{DC}; CAN 2.0B communication, 18 pin connector
PWM	Hall effect: dual sensors per axis; V_s = 9 to 36 V_{DC}; high current PWM and digital outputs

* See *H1 electrical interface options* on page 19.

D—Centering spring options

Code	Description
H	Heavy force
M	Medium force
F	Friction-hold (position maintained, center detent)

E—Gate pattern options

Code	Description
S	Square, full output at 45 degree

Product configuration

F—Mechanical options

Code	Description
NL	No mechanical option; spring return to center only
FB	Friction-held in Y axis; no X axis; center detent; 1.25 Nm [0.92 lb•ft] friction-hold force; 2.5 Nm [1.66 lb•ft] breakout force
FC	Friction-held in Y axis; no X axis; center detent; 1.25 Nm [0.92 lb•ft] friction-hold force; 3.25 Nm [2.40 lb•ft] breakout force
HC	Friction-held in Y axis; no X axis; center detent; 2.25 Nm [1.66 lb•ft] friction-hold force; 4.0 Nm [2.95 lb•ft] breakout force

G—Direction (microswitch) options

Code	Description
N	No switches
Y	Microswitches installed

Product configuration

Grip model code

JS6000 product configuration model code example

A	B	C	D	E	F	G	H	I	J	K	L	M	N	O	P	Q	R	S
J S 6 0 0 0	X Y	H M M	H	S	N L	N	J 3 3 1	A 0 H 0	R	V	N	N	N	N	N	N	N	N

1 2 3 4

H1—Electrical interface options

Code	Description
S	Analog (DC voltage output)
J	CAN, SAE J1939 protocol
W	PWM output
P	CANopen protocol (default: 125 Kbit band rate)

*H2, 3—CAN source address**

Code	Description
NN	None—use with analog outputs when H1 = S
33	Source address = 0x 33 (use this source address with PWM outputs.)
34	Source address = 0x 34
35	Source address = 0x 35
36	Source address = 0x 36

*Consult the factory if additional source addresses are required.

H4—Joystick output type

Code	Description
N	None—use with analog and PWM outputs
1	CAN full scale output = 1000 counts

I, J, K, L, M, N, O, P, Q, R, S—*Grip options*

JS1000, JS6000 Joystick Grips Technical Information, **520L0872** provides information required to configure the JS6000 joystick grip.

Model code details

Code B: Single or dual axis options

JS6000 product configuration model code B

J	S	6	0	0	0	B	B																										

Code B designates the number of operational axes.

Single Axis Base—NY with friction hold option in the configuration code

Dual Axis Base—XY in the configuration code

2456B

Model code details

X and Y Operation (or movement).

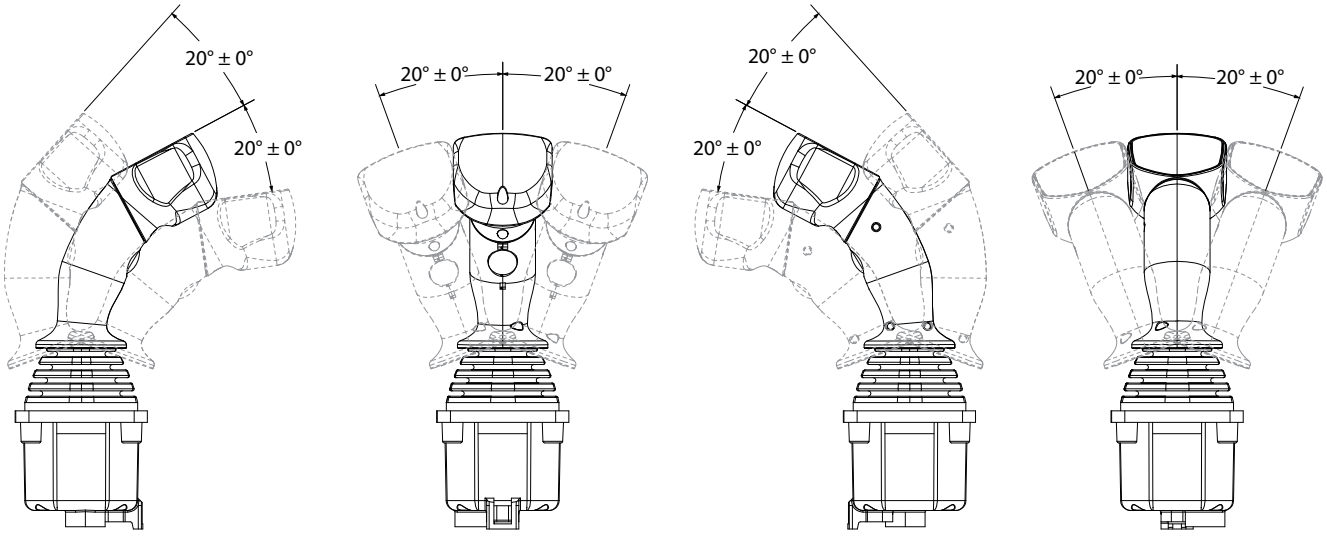

P200 001

Model code details

Code C: Shaft sensor and output options

JS6000 product configuration model code C

										C																					
J	S	6	0	0	0		X	Y		P	R	R																			

Code C designates the shaft sensing technology; potentiometer or Hall effect; and the electrical output characteristics of the joystick base.

C—Shaft position sensing and output options

Code	Description
PRR	Potentiometer: single output per axis; V_o = 10 to 90% of V_s; ±1.5° neutral threshold
PQQ	Potentiometer: single output per axis; V_o = 25 to 75% of V_s; ±1.5° neutral threshold
PSS	Potentiometer: single output per axis; V_o = 10 to 90% of V_s; ±5° neutral threshold
PTT	Potentiometer: single output per axis; V_o = 25 to 75% of V_s; ±5° neutral threshold
PUU	Potentiometer: dual output per axis; V_o = 10 to 90% of V_s; ±1.5° neutral threshold
HMM	Hall effect: dual sensors per axis; V_s = 5 V_{DC}; V_o = 0.5 to 4.5 V_{DC}
CAN*	Hall effect: dual sensors per axis; V_s = 9 to 36 V_{DC}; CAN 2.0B J1939 communication, 6 pin connector
CANopen*	Hall effect: dual sensors per axis; V_s = 9 to 36 V_{DC}; CANopen 2.0B J1939 communication, 6 pin connector
CPL	Hall effect: dual sensors per axis; V_s = 9 to 36 V_{DC}; CAN 2.0B communication, 18 pin connector
PWM	Hall effect: dual sensors per axis; V_s = 9 to 36 V_{DC}; high current PWM and digital outputs

* See *H1 electrical interface options* on page 19.

Potentiometer sensor

The potentiometer sensor electrical connections are made via a 16 pin AMP 040 series MULTILOCK connector mounted on the base of the unit.

Potentiometer outputs are ratiometric. The output value is dependent on the supply voltage. When the joystick handle returns to center, the output will be between 48% and 52% of supply voltage (Vs).

Potentiometer sensor specifications

Minimum load impedance	1 MΩ recommended
Maximum wiper current	5 mA
Supply voltage	> 36 Vdc
Center tap/switch alignment	Within 0.5°
Potentiometer electrical angle	± 18°
Center tap angle	± 2.5°
Insulation resistance at 50 Vdc	> 50 MΩ

Center tap

A center tap is standard on all potentiometer tracks, where 50% of the supply voltage can be supplied to force the sensor voltage to this known reference. When the center tap is not connected there will be a center dead band (where the voltage output does not change on initial deflection) and the output voltage will be between 48 and 52% of the supply voltage.

Model code details

Directional potentiometer switches

Potentiometer tracks have directional and normally closed (center on) position switches that operate at the angles shown in the table below. Switch outputs are independent of the proportional potentiometer elements on each axis and can be terminated by the customer to provide directional or center on/off data to the control system.

Directional potentiometer switches specifications

Maximum load current	200 mA resistive
Maximum supply voltage	> 36 Vdc

Directional potentiometer switch circuit diagram

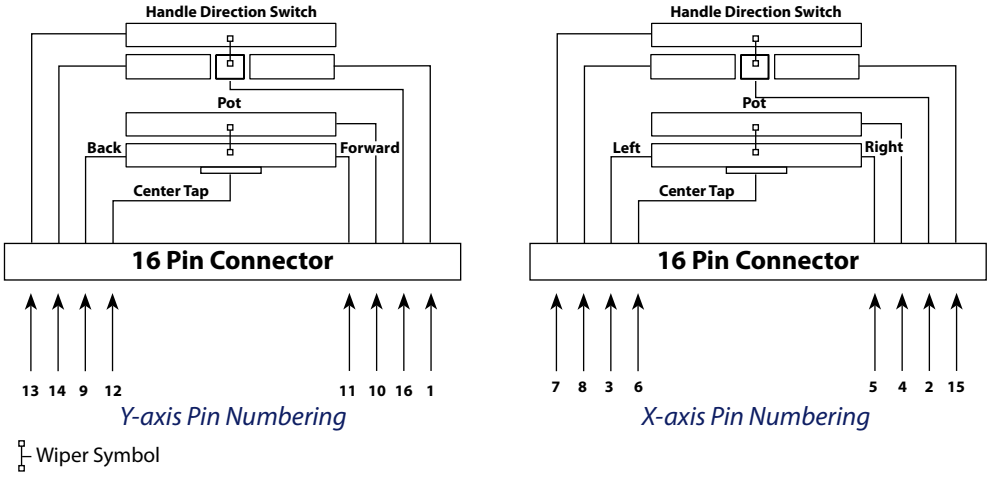

Potentiometer track outputs

Minimum output Voltage (% Vs)	Maximum output Voltage (% Vs)	Switch track angle	Resistance kΩ	Order code
10 ± 2	90 ± 2	±1.5°	1.6 to 2.4	R
25 ± 2	75 ± 2	±1.5°	2.2 to 3.6	Q
10 ± 2	90 ± 2	±5°	1.6 to 2.4	S
25 ± 2	75 ± 2	±5°	2.2 to 3.6	T

Warning

Potential uncommanded machine movement. When a JS6000 joystick with the 25% to 75% potentiometer output option (designated Q or T) is used to directly drive a PVG valve, if the power or ground side of the joystick is lost, there is a risk of the valve going full on in one direction or the other. To avoid the possibility of unintended machine motion, the PVG valve must have Active Fault Monitoring.

Dual potentiometer outputs per axis

Dual potentiometer outputs are available that feature independent power inputs and sensor outputs. The secondary potentiometer output connections are via an 8 pin AMP® connector. Secondary potentiometer outputs do not provide secondary directional and center switches.

Hall sensing and dual potentiometer outputs are not available together.

Model code details

Dual potentiometer track selection

Minimum output Voltage (% Vs)	Maximum output Voltage (% Vs)	Switch track angle	Resistance kΩ	Order code
10 ± 2	90 ± 2	±1.5°	1.6 to 2.4	U

Hall effect sensor

The Hall effect sensor option includes dual sensors per axis. The sensors can be supplied from two separate regulated 5 V supplies for a higher degree of redundancy, or can be supplied from a single regulated 5 V supply.

Hall effect sensing electrical connections are made via a 12 pin AMP® 040 series MULTILOCK connector on the base of the unit.

JS6000 Hall effect sensors are affected by temperature. Output values change temporarily by 2.6% and permanently by 0.6% when subjected to a -40°C (-40°F) to 80°C (176°F) operating temperature range cycle.

Hall effect sensor specifications

Supply voltage (Vs)	5 Vdc regulated
Minimum output voltage	10% ± 4% Vs
Center voltage	50% ± 2% Vs
Maximum output voltage	90% ± 4% Vs

Controller Area Network (CAN) output

Three versions of JS6000 CAN joysticks are available:

- A grip
- MG grip
- HKN grip

CAN (configuration model code CAN)

CAN 2.0bB J1939 protocol and CANopen 2.0B J1939 protocol (reference *Code H: Electrical interface options* on page 19 product configuration model code, under *H1 electrical interface options* on page 19).

CAN+ (configuration model code CPL)

CAN+ output broadcasts joystick shaft position, grip switch states, grip proportional rocker position and the state and value of up to 11 digital (DIN) or 7 digital (DIN) and 4 analog (AIN) inputs from sources external to the joystick. The CAN+ option joystick base has an 18 pin DEUTSCH connector.

Pulse Width Modulated (PWM) output

One version of the JS6000 PWM joystick is available.

PWM (configuration model code PWM)

The PWM version of JS6000 joystick has two bi-directional PWM channels and six digital outputs. The PWM option joystick base has an 18 pin DEUTSCH connector.

Model code details

Code D: Centering return spring options

JS6000 product configuration model code D

																D															
J	S	6	0	0	0	X	Y	H	M	M	H																				

Code D designates centering spring force options.

The center spring returns the joystick to its center position when released by the operator and provides the physical resistance to movement when the joystick is operated. Two levels of spring force are available: heavy and medium. Spring force is selected by choosing a letter from the order character column of the following table.

Warning

Potential uncommanded machine movement. The spring choice affects the joystick's ability to resist system vibrations. Each of the following springs give a different product harmonic range. This, in combination with critical mass differences as a result of grip choice, results in each system (joystick and machine) having different vibration characteristics. With this in mind, please consider the vibration range of the system and determine whether any resonance exists in the joystick. Resonance causes dither and could cause the joystick to leave neutral.

Centering spring selection

Spring option	Breakout force on axis	Force at full deflection	Order code
Heavy duty spring	12 to 19 N [2.7 to 4.3 lbf]	31 to 47 N [6.7 to 10.6 lbf]	H
Medium duty spring	6 to 8.5 N [1.3 to 1.9 lbf]	15 to 23 N [3.4 to 5.2 lbf]	M

The above forces are measured 55 mm (2.17 in) from the joystick mounting surface and are perpendicular to the shaft.

Code E: Hardware configuration

JS6000 product configuration model code E

																E															
J	S	6	0	0	0	X	Y	H	M	M	H	S																			

Code E designates hardware configuration.

JS6000 joysticks have a square gate pattern as the standard configuration. This is designated as S in the configuration code and includes a standard label.

Gate selection

Gate option	Characteristics	Order code
Square	± 20° mechanical travel (on axis)	S

The square gate offers full X and Y outputs when the joystick is moved to the corner positions.

Model code details

Code F: Mechanical options

JS6000 product configuration model code F

J	S	6	0	0	0		X	Y		H	M	M		H		S		N	L												

F

Code F designates joystick mechanical options.

JS6000 joysticks are available with a friction-hold option. With this option, the joystick handle position will remain in a position set by the operator and will not automatically return to center. This option is only available in a single (Y) axis configuration. Four levels of friction/breakout from center force are available.

Friction-hold selection

Friction-hold torque	Center detent breakout torque	Order code
No mechanical options		NL
1.25 Nm (0.92 lb•ft)	2.50 Nm (1.84 lb•ft)	FB
1.25 Nm (0.92 lb•ft)	3.25 Nm (2.40 lb•ft)	FC
2.25 Nm (1.66 lb•ft)	4.00 Nm (2.95 lb•ft)	HC

JS6000 FB option

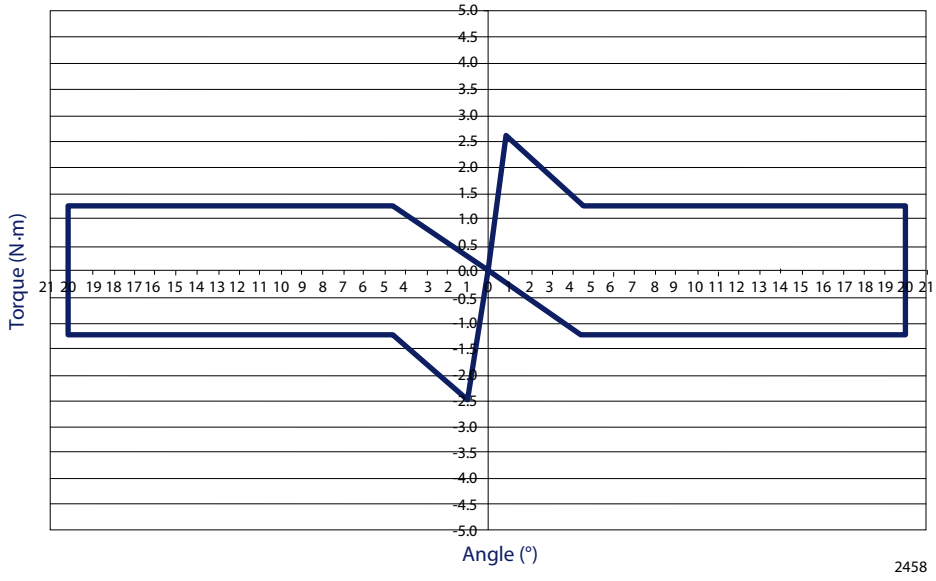

Model code details

JS6000 FC option

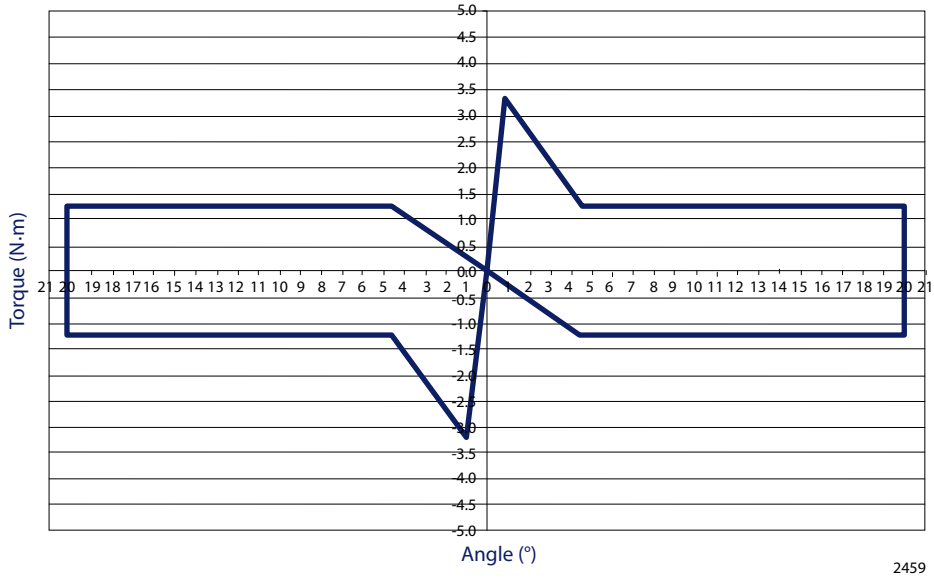

JS6000 HC option

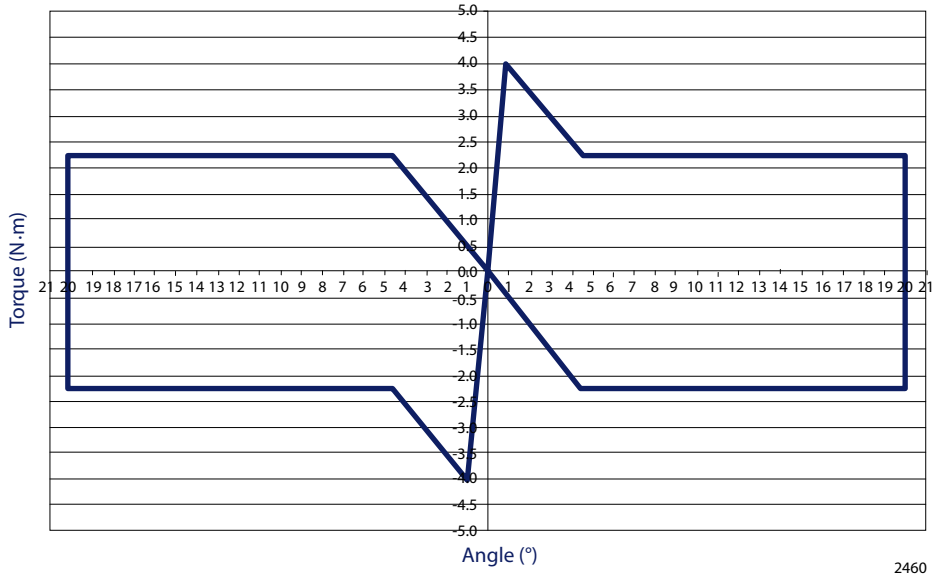

Model code details

Code G: Microswitch option

JS6000 product configuration model code G

																G															
J	S	6	0	0	0	X	Y	H	M	M	H	S	N	L	N																

Code G designates joystick microswitch options.

Optional microswitch outputs can replace the low current directional potentiometer switches on the potentiometer tracks. Microswitch outputs are on the 16 pin connector (potentiometer option). There are two switches per axis and the microswitches are configured as normally open, with the handle centered. The microswitch joystick shaft direction indication feature is not available with the dual potentiometer sensing option.

Optional microswitches are also available with the Hall effect sensing option. Microswitch outputs, in this case, are on the 8 pin connector.

Optional microswitches are only available on analog output joysticks with the spring-return-to-center mechanical operation.

Optional microswitches are not available on BMM, CAN, CPL, or PWM output joysticks.

The Honeywell® microswitch electrical details follow. These details are taken directly from the switch manufacturer's specification. Further information is available from *http://www.honeywell.com*.

- Microswitch operates at a mechanical deflection of 2 to 5 degrees in any direction
- Contact ratings are 3 A at 125 Vac, 2 A at 30 Vdc
- Life rating is 100,000 cycles minimum at 1 A 12 Vdc
- Temperature range is -25°C to 85°C [-13°F to 185°F] (when fitted, the joystick temperature is limited to this range)

With the microswitch option, choose the letter from the order character column of the following table. The choice is either Y for microswitch N for none.

Microswitch option

Microswitch option	Mechanical function description	Order code
Without microswitch	No switches	N
Microswitch	Microswitches installed	Y

Model code details

Code H: Electrical interface options

JS6000 product configuration model code H

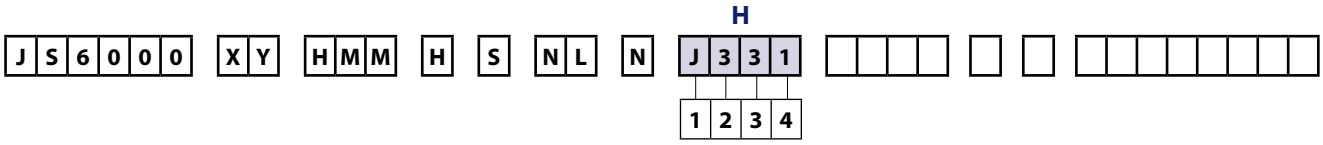

Code H designates joystick output options.

JS6000 joystick base signal outputs are available in analog voltage, PWM, or Controller Area Network (CAN) versions.

Analog

The analog output option gives a direct voltage output from the joystick's shaft sensors, position switches and grip functions. No signal conditioning is performed. The PWM output option provides a conditioned output from the joystick's shaft sensors, position switches, and grip functions. Output characteristics are configured using the PLUS+1® Service Tool.

CAN 2.0B, J1939 protocol

The CAN J1939 output option provides conditioned joystick output information in 2.0B, J1039 message protocol.

CANopen 2.0B, J1939 protocol

The CANopen output option provides conditioned joystick output information in 2.0B, CANopen message protocol.

PWM

The PWM output option provides high voltage outputs for directly driving valves. The CAN port is active on the PWM version, but it is not designed to be used on a CAN bus in a system with other devices. The CAN bus is only to be used for configuration and data logging while connected to a PC running the PLUS +1® Service Tool.

H1 electrical interface options

H1 electrical interface options

Code	Description
S	Analog voltage
J	CAN 2.0B, J1939 protocol
P	CAN 2.0B, CANopen protocol
W	PWM

H2, 3 joystick location/CAN source address

*H2, 3 joystick location/CAN source address**

Code	Description
NN	None—use when H1 = S
33	Source address = 0x 33
34	Source address = 0x 34

Model code details

H2, 3 joystick location/CAN source address (continued)*

Code	Description
35	Source address = 0x 35
36	Source address = 0x 36

* Source addresses are factory set. Additional addresses are available upon request.

H4 CAN proportional output

H4 CAN proportional output

Code	Description
N	None (if Analog or PWM)
1	CAN full scale output = 1000 counts

Code I, J, K, L: Grip options

JS6000 product configuration model code I

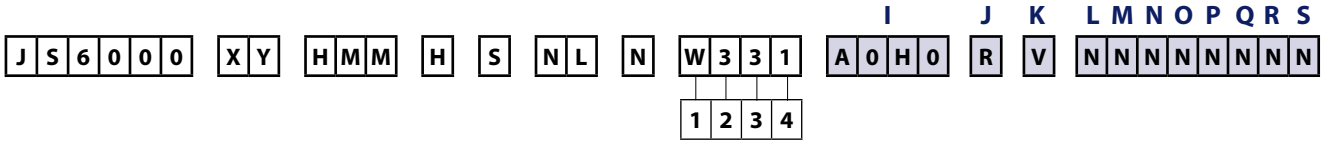

The Danfoss manual *JS1000, JS6000 Joystick Grips Technical Information*, **520L0872** provides instructions and information required to specify JS6000 joystick grip options.

JS6000 CAN messages

CAN option

Joysticks CAN J1939 protocol option, designated as model code CAN, broadcasts two J1939 messages to communicate device information: Basic Joystick Message 1 (BJM1) and Extended Joystick Message 1 (EJM1). The two CAN options available are:

- CAN 2.0B, J1939 protocol option
- CAN 2.0B, CANopen protocol option

CAN+ option

Joysticks with the CAN+ option, designated as model code CPL, allow eleven external inputs that are not associated with the joystick shaft position or grip functions to be read by the joystick's microcontroller and broadcast by the joystick's CAN transceiver.

CAN+ joysticks broadcast four CAN messages. Basic Joystick Message 1 and Extended Joystick Message 1 have the same data content as the CAN option, above. External digital input (DIN) and analog input (AIN) input information is contained in Basic Joystick Message 3 and Extended Joystick Message 3. The data field format for Basic Joystick Message 3 and Extended Joystick Message 3 is the same as that for Basic Joystick Message 1 and Extended Joystick Message 1.

CAN+ external inputs

Analog inputs (AIN)

- All external analog inputs must be powered by the joystick's 5 Vdc regulated power supply (connector pin 8).
- No calibration, error checking or software filtering is performed on analog data received from external inputs.
- External analog data is scaled in raw form from 0 to 1000 counts.
- Data associated with CAN+ pins 9, 10,11 and 12 is broadcast in both Basic Joystick Message 3 and Extended Joystick Message 3. For analog inputs use the appropriate data bytes in Basic Joystick Message 3 or Extended Joystick Message 3.

Digital inputs (DIN)

- External inputs are pull-down and must be powered by a voltage source <32 Vdc. Low state is interpreted as <0.97 Vdc. High state is interpreted as >4.00 Vdc.
- Data associated with CAN+ pins 9, 10, 11, 12 is broadcast in both BJM3 and EJM3. For digital inputs use the appropriate data bytes in BJM3.

See Danfoss publication *JS6000 PWM Service Tool User Manual*, **11060942** for technical details on the JS6000 PWM Joystick Base and complete details regarding the use of the PLUS+1® Service Tool interface for troubleshooting and configuring the device.

Obtain free PLUS+1® Service Tool software license and download the P1D file at:
http://www.powersolutions.danfoss.com/products/PLUS-1-GUIDE/GUIDE-service-tool-software-and-license

External input pin assignment/J1939 basic joystick message 3 designation

CAN+ connector pin number	CAN+ function	Corresponding J1939 BJM3 data field designation
7	5 Vdc sensor power (0 = 0 Vdc, 1000 = 5.25 Vdc)	X-Axis Position
9	External input pin 9 AIN. Use if pin 9 data is required in analog form (0 = 0 Vdc, 1000 = 5.00 Vdc)	Y-Axis Position
9	External input pin 9 DIN status. Use if pin 9 data is required in digital form	Button 1

JS6000 CAN messages

External input pin assignment/J1939 basic joystick message 3 designation (continued)

CAN+ connector pin number	CAN+ function	Corresponding J1939 BJM3 data field designation
10	External input pin 10 DIN status. Use if pin 10 data is required in digital form	Button 2
11	External input pin 11 DIN status. Use if pin 11 data is required in digital form	Button 3
12	External input pin 12 DIN status. Use if pin 12 data is required in digital form	Button 4
13	External input pin 13 status	Button 5
14	External input pin 14 status	Button 6
15	External input pin 15 status	Button 7
16	External input pin 16 status	Button 8
17	External input pin 17 status	Button 9
18	External input pin 18 status	Button 10
6	External input pin 6 status (see following *Warning* statement)	Button 11

Warning

Potential uncommanded machine movement. JS6000 CAN+ Joysticks fitted with an operator present switch have an internal connection between the operator present switch and pin 6. The operator present switch status is broadcast in BJM1 and BJM3. Unintended machine motion may result if an external DIN is applied to pin 6 with a joystick that has a grip with operator present switch.

External input pin assignment/J1939 extended joystick message 3 designation

CAN+ connector pin number	CAN+ function	Corresponding J1939 EJM3 data field designation
10	External input pin 10 AIN. Use if pin 10 data is required in analog form (0 = 0 Vdc, 1000 = 5.00 Vdc)	Grip X-Axis
11	External input pin 11 AIN. Use if pin 11 data is required in analog form (0 = 0 Vdc, 1000 = 5.00 Vdc)	Grip Y-Axis
12	External input pin 12 AIN. Use if pin 12 data is required in analog form (0 = 0 Vdc, 1000 = 5.00 Vdc)	Grip Theta-Axis

CAN message protocol

SAE J1939 CAN message specification

SAE J1939 basic joystick message

The JS6000 joystick uses the SAE J1939 basic joystick message to transfer information about the measured status of the X and Y axes of a joystick, the state of switches on the joystick grip, and the state of external-to-the-joystick digital inputs.

Basic joystick message structure

Basic message number	Priority	Basic PGN		PDU format		PDU specific		Source address		Data field
		Dec	hex	Dec	hex	Dec	hex	Dec	hex	
1	3	64982	FDD6	253	FD	214	D6	*	*	8 bytes
3	3		FDDA		FD		DA	*	*	8 bytes

* Depends on position specified in master model code. See *H2, 3 joystick location/CAN source address* on page 19.

- Message transmission rate: 20 ms
- CAN bus baud rate: 250kbps

The resulting SAE J1939 basic joystick message PGN on the CAN bus is:

0xCFDD6 _*_ or 0xCFDDA _*_

* = joystick source address (hex)

Data field

The data field contains the joystick's output information. SAE J1939 data fields contain 8 bytes of data.

Information in the data field

Byte#	0								1								2 and so on							
Bit#	1	2	3	4	5	6	7	8	1	2	3	4	5	6	7	8	1	2	3	4	5	6	7	8

Basic joystick message data field descriptions

Basic joystick message parameters and data field locations

Start position (byte/bit)	Length (bits)	Parameter name
0/1	2	Joystick X-axis neutral position status
0/3	2	Joystick X-axis lever left negative position status
0/5	2	Joystick X-axis lever right positive position status
0/7 through 1/1-8	10	Joystick X-axis position (Byte 0 Bit 7 is LSB. Byte 1 Bit 8 is MSB)
2/1	2	Joystick Y-axis neutral position status
2/3	2	Joystick Y-axis lever back negative position
2/5	2	Joystick Y-axis lever forward positive position
2/7 through 3/1-8	10	Joystick Y-axis position (Byte 2 Bit 7 is LSB. Byte 3 Bit 8 is MSB)
4/5	2	Joystick Y-axis detent position status
4/7	2	Joystick X-axis detent position status
5/1	2	Grip button 4 pressed status
5/3	2	Grip button 3 pressed status
5/5	2	Grip button 2 pressed status
5/7	2	Grip button 1 pressed status

CAN message protocol

Basic joystick message parameters and data field locations (continued)

Start position (byte/bit)	Length (bits)	Parameter name
6/1	2	Grip button 8 pressed status
6/3	2	Grip button 7 pressed status
6/5	2	Grip button 6 pressed status
6/7	2	Grip button 5 pressed status
7/1	2	Grip button 12 pressed status
7/3	2	Grip button 11 pressed status
7/5	2	Grip button 10 presses status
7/7	2	Grip button 9 pressed status

Button naming convention: Refer to *A grip button and rocker CAN naming conventions* on page 29, for button and proportional input definitions.

Data field examples

Byte	0							
Bit	8	7	6	5	4	3	2	1
	The 2 **LSB*** of X-axis position		X-axis lever right positive status		X-axis lever left negative position status		X-axis neutral position status	

* Least Significant Bit

Byte	1							
Bit	8	7	6	5	4	3	2	1
	MSB† X-axis position							

† Most Significant Bit

Byte	2							
Bit	8	7	6	5	4	3	2	1
	The 2 **LSB*** of Y-axis position status		X-axis lever forward positive status		Y-axis lever back negative position status		Y-axis neutral position status	

Joystick X-axis neutral position status

Reports when the current joystick position is in the neutral position for the X-axis of travel.

Information in the data field

Bit status	Remarks
00	Not in neutral position
01	In neutral position
10	Error indicator
11	Not available

Joystick X-axis handle left negative position status

Reports when the current joystick position is on the negative travel side (back, left, counterclockwise, down) relative to the neutral position for the X-axis.

CAN message protocol

Information in the data field

Bit status	Remarks
00	Not on negative side of neutral
01	On negative side of neutral
10	Error indicator
11	Not available

Joystick X-axis handle right positive position status

Reports when the current joystick position is on the positive travel side (forward, right, clockwise, up) relative to the neutral position for the X-axis.

Information in the data field

Bit status	Remarks
00	Not on positive side of neutral
01	On positive side of neutral
10	Error indicator
11	Not available

Joystick X-axis position status

The position of the joystick in the relative motion of travel from the neutral position. The position value of 0 is always neutral. The output range of the joystick handle at the end of travel is factory set according to the option specified in the electrical interface options section of the master model code.

The master model code specifies that the full-scale output at the end of each linear zone will be 1000 counts.

Warning

Potential uncommanded machine movement. Per the SAE J1939-71 standard, if the JS6000 joystick internal diagnostics detect a shaft position measurement error, the joystick output will be set to a value of 1022 counts regardless of shaft position. Application software should be written to recognize this error condition to avoid the possibility of unintended machine motion.

Per the SAE J1939-71 standard, if a specific joystick axis is not available, the basic joystick message for the unavailable axis will indicate an output value of 1023 counts. Application software should be written to recognize this condition to avoid the possibility of unintended machine motion.

Joystick Y-axis neutral position status

Reports when the current joystick position is in the neutral position for the Y-axis of travel.

Information in the data field

Bit status	Remarks
00	Not in neutral position
01	In neutral position
10	Error indicator
11	Not available

Joystick Y-axis handle back negative position status

Reports when the current joystick position is on the negative travel side (back, left, counterclockwise, down) relative to the neutral position for the Y-axis.

CAN message protocol

Information in the data field

Bit status	Remarks
00	Not on negative side of neutral
01	On negative side of neutral
10	Error indicator
11	Not available

Joystick Y-axis handle forward positive position status

Reports when the current joystick position is on the positive travel side (forward, right, clockwise, up) relative to the neutral position for the Y-axis.

Information in the data field

Bit status	Remarks
00	Not on positive side of neutral
01	On positive side of neutral
10	Error indicator
11	Not available

Joystick Y-axis position status

The position of the joystick in the relative motion of travel from the neutral position. The position value of 0 is always neutral. The output range of the joystick handle at the end of travel is factory set according to the option specified in the electrical interface options section of the master model code.

The master model code specifies that the full-scale output at the end of each linear zone will be 1000 counts.

Warning

Potential uncommanded machine movement. Per the SAE J1939-71 standard, if the JS6000 joystick internal diagnostics detect a shaft position measurement error, the joystick output will be set to a value of 1022 counts regardless of shaft position. Application software should be written to recognize this error condition to avoid the possibility of unintended machine motion.

Per the SAE J1939-71 standard, if a specific joystick axis is not available, the basic joystick message for the unavailable axis will indicate an output value of 1023 counts. Application software should be written to recognize this condition to avoid the possibility of unintended machine motion.

Joystick button 1-8 pressed status

Bit status	Remarks
00	Button not pressed
01	Button pressed
10	Error indicator
11	Not available (no button installed)

SAE J1939 extended joystick message

The JS6000 joystick uses the SAE J1939 extended joystick message to transfer information about the measured status of up to 3 additional proportional input functions on the joystick grip, and external-to-the-joystick analog inputs. The joystick base X and Y-axis information is available in the basic joystick message. The extended joystick message structure is as follows:

CAN message protocol

Extended joystick message structure

Extended message number	Priority	Base PGN		PDU format		PDU specific		Source address		Data field
		Dec	hex	Dec	hex	Dec	hex	Dec	hex	
1	3	64983	FDD7	253	FD	215	D7	*	*	8 bytes
3			FDDB		FD		DB		*	8 bytes

* Depends on position specified in master model code. See *H2, 3 joystick location/CAN source address* on page 19.

- Message transmission rate: 20 ms
- CAN bus baud rate: 250kbps

The resulting SAE J1939 basic joystick message PGN on the CAN bus is:

0xCFDD7 $\underbrace{\_\_}_{*}$ or 0xCFDDB $\underbrace{\_\_}_{*}$

* = joystick source address (hex)

Extended joystick message parameters and data field locations

Start position (byte/bit)	Length (bits)	Parameter name
0/1	2	Grip X-axis neutral position status
0/3	2	Grip X-axis lever left negative position status
0/5	2	Grip X-axis lever right positive position status
0/7 through 1/1-8	10	Grip X-axis position
2/1	2	Grip Y-axis neutral position status
2/3	2	Grip Y-axis lever back negative position
2/5	2	Grip Y-axis lever forward positive position
2/7 through 3/1-8	10	Grip Y-axis position
6/5	2	Grip Y-axis detent position status-not available
6/7	2	Grip X-axis detent position status-not available

Data field descriptions and output ranges for extended joystick messages are similar to those for base X and Y-axis basic joystick messages.

Grip proportional input naming convention

Proportional input location	Extended joystick message designation
Horizontal orientation, top	Y-axis
Horizontal orientation, bottom	X-axis
Vertical orientation, left side	X-axis
Vertical orientation, right side	Y-axis

Refer to *A grip button and rocker CAN naming conventions* on page 29 for proportional input naming conventions.

SAE J1939 error (DM1) messages

SAE J1939 DM1 error messages are supported by JS6000 software.

See the following tables for SPN and FMI information.

CAN message protocol

Failure: Voltage too high

Message	Axis	SPN	FMI
BJM1	X	2660	3
BJM1	Y	2661	3
BJM1	Grip X	2662	3
BJM1	Grip Y	2663	3
BJM1	Grip Theta	2664	3

Failure: Voltage too low

Message	Axis	SPN	FMI
BJM1	X	2660	4
BJM1	Y	2661	4
BJM1	Grip X	2662	4
BJM1	Grip Y	2663	4
BJM1	Grip Theta	2664	4

Failure: Input not calibrated

Message	Axis	SPN	FMI
BJM1	X	2660	13
BJM1	Y	2661	13
BJM1	Grip X	2662	13
BJM1	Grip Y	2663	13
BJM1	Grip Theta	2664	13

Failure: Redundant input failure

Message	Axis	SPN	FMI
BJM1	X	2660	14
BJM1	Y	2661	14
BJM1	Grip X	2662	14
BJM1	Grip Y	2663	14
BJM1	Grip Theta	2664	14

Sensor power fault (CAN+ only)

Message	Power fault	SPN	FMI
	Sensor power too high	3509	3
	Sensor power too low	3509	4

SAE CANopen protocol information

JS6000 joysticks do not support SAE J1939 dynamic addressing, since the joystick source addresses are hard-coded (static). However, JS6000 joysticks are compliant with SAE J1939 address claiming protocol (in the unlikely event another node on the SAE J1939 bus claims an identical source address to the JS6000, the JS6000 may cease communication on the bus, depending on the message priority of the other node).

CAN message protocol

When you want to use CANopen Joystick, go to *http://powersolutions.danfoss.com/products/electronic-components/joysticks/*, and click on CANopen EDS to open CANopen Object Dictionary

A grip button and rocker CAN naming conventions

A grip front plate diagram

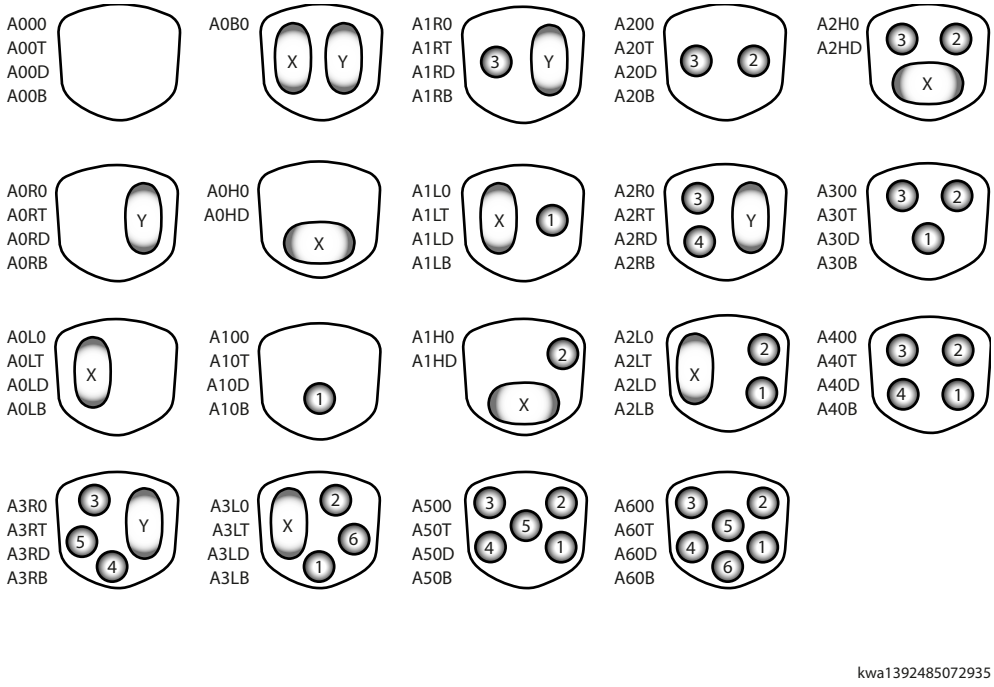

For CAN and CAN+ output models, include grip configurations: A0BD, A0BB, A0BT.

CAN message protocol

Top and operator present switch naming conventions

Top and operator present switch state information is broadcast on J1939 Basic Joystick Message 1 (BJM1)

Switch state information

Top switch	BJM1 button 7
Operator present switch	BJM1 button 8

Proportional rocker naming conventions

Grip rocker proportional output information is broadcast on J1939 Extended Joystick Message 1 (EJM1) using the X and Y axis data bits. See *A grip button and rocker CAN naming conventions* on page 29 for proportional rocker output X and Y naming conventions.

Each rocker switch also has two switch states—one for each end of travel. Rocker switch state information is broadcast on BJM1 concurrently with proportional output information. See *A grip button and rocker CAN naming conventions* on page 29 for rocker switch naming conventions.

CAN message protocol

MG grip button CAN naming conventions

MG grip button CAN naming conventions

Product installation

Dimensions and installation

Dimensions

millimeter [inches]

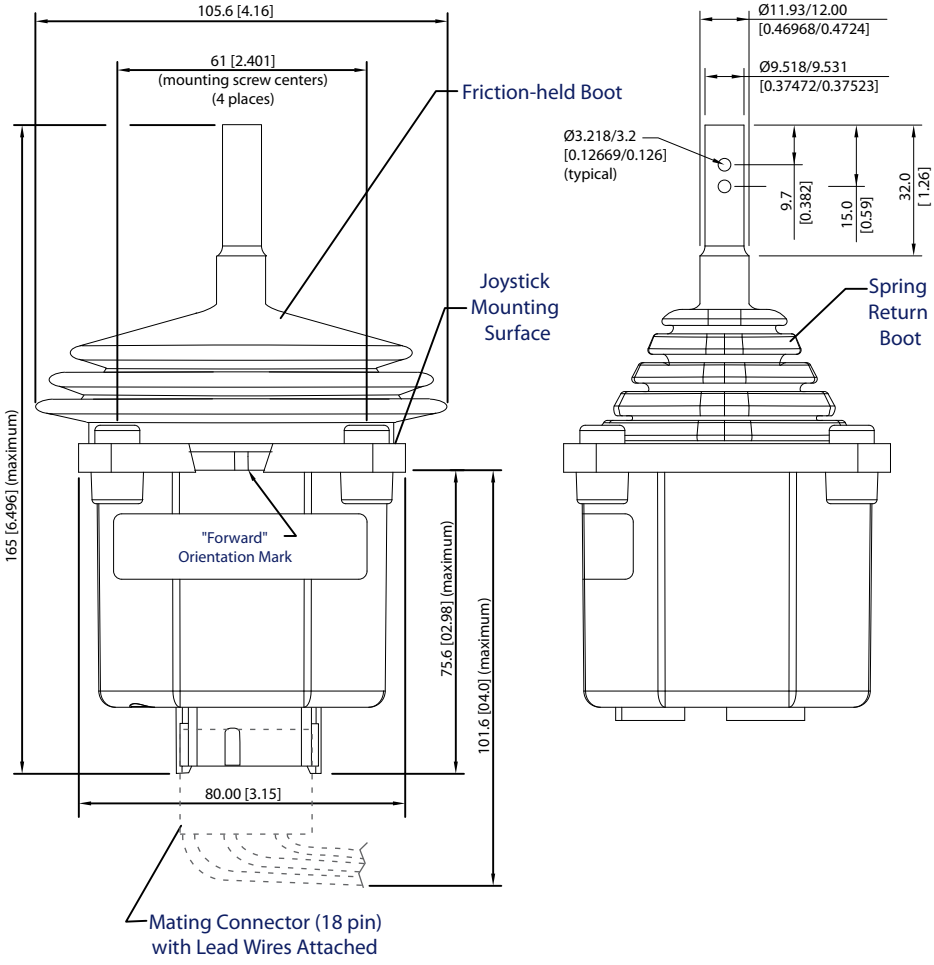

The JS6000 is designed to be installed from the panel below, through a 68 mm [2.677 in] diameter hole.

Recommended mounting panel cut-out

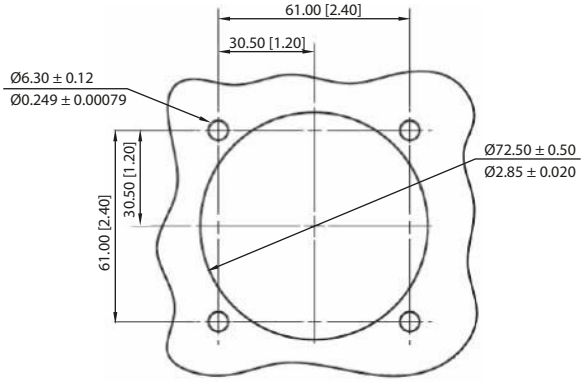

Product installation

Installation

1. Drive mounting screws to a maximum torque of 5 N.m [44.25 lbf.in] when clamped against a 3.0 to 6.0 mm [0.118 to 0.236 in] thick panel.

   The joystick flange mounting hole depth is 12.6 mm [0.496 in].
2. For through-hole mounting, drive the screws at a torque of 3.5 N.m [30.98 lbf.in] directly through the blind cast holes to remove the cast covers.
3. Use fit and seal for fitting and sealing of the joystick into the mounting panel using the screws supplied.

- Note the panel material type, thickness, strength and rigidity. Install in a panel with a minimum thickness of 3.0 to 6.0 mm [0.118 to 0.236 in]. This allows the mounting screws to correctly clamp the sealing boot.
- Apply the specified screw torque to ensure sufficient and even clamping force on the sealing boot.
- The mounting flange of the joystick should be connected to the vehicle chassis ground.

Machine wiring guidelines

- Protect wires from mechanical abuse, run wires in flexible metal or plastic conduits.
- Use 85˚ C (185˚ F) wire with abrasion resistant insulation and 105˚ C (221˚ F) wire should be considered near hot surfaces.
- Use a wire size that is appropriate for the module connector.
- Separate high current wires such as solenoids, lights, alternators or fuel pumps from sensor and other noise-sensitive input wires.
- Run wires along the inside of, or close to, metal machine surfaces where possible, this simulates a shield which will minimize the effects of EMI/RFI radiation.
- Do not run wires near sharp metal corners, consider running wires through a grommet when rounding a corner.
- Do not run wires near hot machine members.
- Provide strain relief for all wires.
- Avoid running wires near moving or vibrating components.
- Avoid long, unsupported wire spans.
- Ground electronic modules to a dedicated conductor of sufficient size that is connected to the battery (-).
- Power the sensors and valve drive circuits by their dedicated wired power sources and ground returns.
- Twist sensor lines about one turn every 10 cm (4 in).
- Use wire harness anchors that will allow wires to float with respect to the machine rather than rigid anchors.

Warning

Unintended movement of the machine or mechanism may cause injury to the technician or bystanders. The module will be powered up if battery voltage is applied to the module's output pin. To protect against unintended movement, secure the machine.

Caution

Warranty will be voided if module is damaged.
Avoid significant current driven back through an output pin.

Product installation

Joystick safety critical functions

For a system to operate safely it must be able to differentiate between commanded and uncommanded inputs. Take steps to detect and manage joystick and system failures that may cause an erroneous output.

For safety critical functions Danfoss recommends you use an independent momentary action system enable switch. You can incorporate this switch into the joystick as an operator presence switch or can be a separate foot or hand operated momentary switch. Disable all joystick functions that the joystick controls when this switch is released.

Ensure the control system looks for the appropriate system enable switch input before the joystick is displaced from its neutral position. Enable functions only after receiving this input.

Applications using CAN joysticks should continuously monitor for the presence of the CAN messages on periodic basis. Messages are to be checked frequently enough for the system or operator to react if the CAN messages lose priority or are no longer received.

JS6000 connector pin assignments general information

JS6000 Joystick base pin assignments are a function of the following options:

- Type of shaft position sensor (potentiometer or Hall)
- Electrical output (analog or CAN)
- Grip type

Base pin and connector assignments are different for the potentiometer and Hall sensor options.

In all cases, grip pin assignments are dependent on the type of grip and the number of grip options that are selected.

Refer to *CAN output connector pin assignments* on page 35.

Refer to *CAN+ and PWM output connector pin assignments* on page 36.

Refer to *Potentiometer sensor with analog output connector pin assignments* on page 38.

Refer to *Hall effect sensor with analog output pin assignments* on page 40.

Product installation

Pin assignments

CAN output connector pin assignments

Pin location

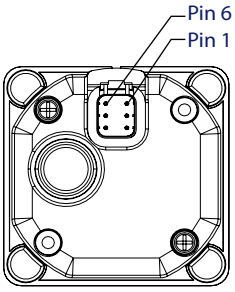

2239

Pinout and wiring information

Pin	CAN output
1	Ground
2	Power
3	CAN high
4	CAN low
5	CAN shield
6	No connection

CAN output mating connector DEUTSCH DTM06-6S

Danfoss provides mating connector kits (bag assemblies) for JS6000 joysticks. The bag assembly contains loose parts you must assemble. The connector with wire harness features a fully assembled connector with an unterminated wire harness.

Mating connector assemblies

Type	Danfoss material number
Connector bag assembly	10101551
Connector with 400 mm [15.75 in] wire harness	10101557

Product installation

CAN+ and PWM output connector pin assignments

Pin location

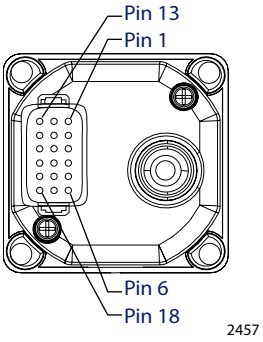

CAN+ output connector pinout and wiring information

Pin	CAN output
1	Ground -
2	Power +
3	CAN high
4	CAN low
5	CAN shield
6	Operator present/DIN11
7	Sensor ground -
8	5 Vdc sensor power +
9	AIN1/DIN7
10	AIN2/DIN8
11	AIN3/DIN9
12	AIN4/DIN10
13	DIN1
14	DIN2
15	DIN3
16	DIN4
17	DIN5
18	DIN6

PWM output connector pinout and wiring information

Pin	CAN output
1	Ground -
2	Power +
3	CAN high
4	CAN low
5	PWM Valve Out 1 +
6	PWM Valve Out 1 -
7	PWM Valve Out 2 +
8	PWM Valve Out 2 -
9	AIN / CAN Shield

Product installation

PWM output connector pinout and wiring information (continued)

Pin	CAN output
10	DIN
11	DOUT1
12	DOUT2
13	DOUT3
14	DOUT4
15	Operator Presence +
16	Operator Presence -
17	DOUT5
18	DOUT6

Caution

Joystick electronics damage may occur possibly causing the joystick to non-function. Do not connect battery power to operator presence + or operator presence -.

CAN+ and PWM output mating connector DEUTSCH DT16-18SB

Danfoss provides mating connector kits (bag assemblies) for JS6000 joysticks. The bag assembly contains loose parts you must assemble. The connector with wire harness features a fully assembled connector with an unterminated wire harness.

Mating connector assemblies

Type	Danfoss material number
Connector bag assembly	11012648
Connector with 400 mm [15.75 in] wire harness	11012646

Product installation

Potentiometer sensor with analog output connector pin assignments

Pin location

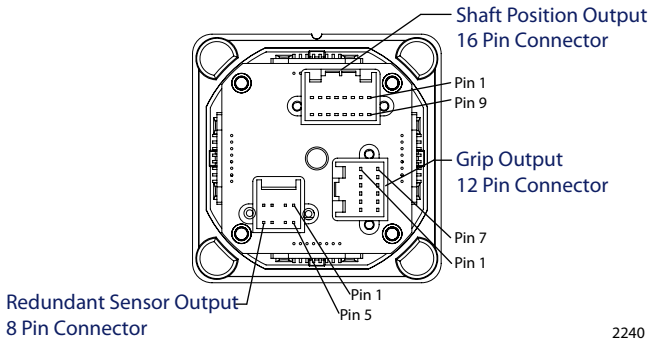

*16 pin sensor connections**

Pin	Pin allocation description
1	N/O signal Y-axis direction switch forward
2	N/C signal X-axis direction switch center
3	X-axis ground
4	X-axis position signal
5	X-axis + supply voltage
6	X-axis center tap + supply voltage
7	X-axis direction switches + supply voltage
8	N/O signal X-axis direction switch left
9	Y-axis ground
10	Y-axis position signal
11	Y-axis + supply voltage
12	Y-axis center tap + supply voltage
13	Y-axis direction switches + supply voltage
14	N/O signal Y-axis direction switch back
15	N/O signal X-axis direction switch right
16	N/C signal Y-axis direction switch center

* Refer to *Potentiometer sensor* on page 12 for additional details referencing potentiometer measurement and switch track connections.

8 pin redundant sensor connections

Pin	Pin allocation description for redundant potentiometer sensor
1	Second Y axis + supply voltage
2	Second Y-axis center tap + supply voltage
3	Second Y-axis position signal
4	Second Y-axis ground
5	Second X-axis + supply voltage
6	Second X-axis position signal
7	Second X-axis center tap + supply voltage
8	Second X-axis ground

Product installation

For 12 pin grip output connections see Danfoss manual *JS1000, JS6000 Joystick Grips Technical Information*, **520L0872** for grip connector pin out assignments.

Analog output mating connector

Danfoss provides mating connector kits (bag assemblies) for JS6000 joysticks. The bag assembly contains loose parts you must assemble. The connector with 400 mm leads features a fully assembled connector with an unterminated wire harness.

Bag assemblies

Type	Danfoss material number
16 pin + contacts	10101552
12 pin + contacts	10101020
8 pin + contacts	10101022
12 + 8 pin + contacts	10101023

Wire harness

Type	Danfoss material number
16 pin with 400 mm [15.75 in] leads	10101556
12 pin with 400 mm [15.75 in] leads	10101555
8 pin with 400 mm [15.75 in] leads	10101554

Product installation

Hall effect sensor with analog output pin assignments

Pin assignments

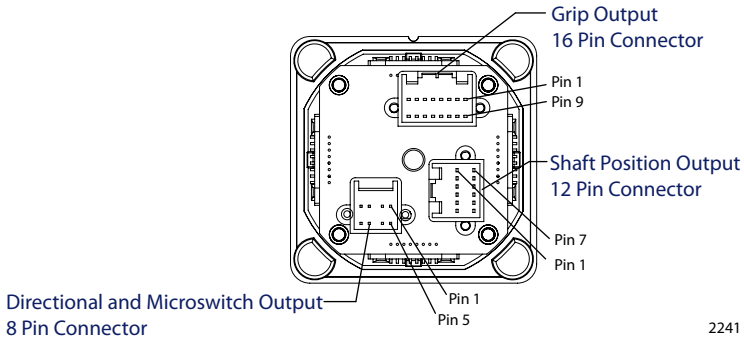

12 pin shaft position connections

Pin	Pin allocation description
1	Hall 3 and 4 5 Vdc + supply
2	Hall 3 and 4 ground
3	Hall 1 and 2 5 Vdc + supply
4	Hall 1 and 2 ground
5	Hall 3 forward/backward output
6	Hall 2 left/right output
7	Hall 4 left/right output
8	Hall 1 forward/backward output
9	Not connected
10	Not connected
11	Not connected
12	Not connected

8 pin microswitch and directional switch connections

Pin	Pin allocation description
1	Joystick forward common
2	Forward switch output
3	Backward switch output
4	Switch backward common
5	Switch left common
6	Left switch output
7	Right switch output
8	Switch right common

For 12 pin grip output connections see Danfoss manual *JS1000, JS6000 Joystick Grips Technical Information*, **520L0872**.

Specifications

Mechanical characteristics

Mechanical

Shaft mechanical angle limits	± 20°
Shaft maximum overload	5 cycles only at 490 N [110.15 lbf] measured 130 mm [5.12 in] above mounting surface
Shaft maximum operating load	390 N [87.67 lbf] measured 130 mm [5.12 in] above mounting surface
Shaft maximum downward loading	2450 N [550.76 lbf]
Shaft maximum torques	15 N.m [11.06 lbf.ft]
Base mechanical life (X and Y axis only)	> 7.5 million operating cycles
Base only mass	0.75 kg [1.65 lbf]

Breakout load on axis

Medium duty spring	6 to 8.5 N [1.349 to 1.911 lbf]
Heavy duty spring	12 to 19 N [2.698 to 4.271 lbf]

Load at full deflection

Medium duty spring	15 to 23 N [3.37 to 5.17 lbf]
Heavy duty spring	31 to 47 N [6.97 to 10.57 lbf]

Electrical characteristics

Potentiometer sensor with analog output

Supply voltage (Vs)	9 to 36 Vdc
Maximum survival voltage	36 Vdc
Maximum wiper current	5 mA
Maximum load current	200 mA resistive
Center tap/switch alignment	Within 0.5°
Potentiometer electrical angle	± 18°
Center tap angle	± 2.5°
Insulation resistance at 50 Vdc	> 50 MΩ
Minimum load impedance	1 MΩ recommended

Potentiometer output options

Minimum voltage (% Vs)	Maximum voltage (% Vs)	Switch track angle (°)	Resistance (kΩ)	Model code order character
10 ± 2	90 ± 2	± 1.5	1.6 to 2.4	R
25 ± 2	75 ± 2	± 1.5	2.2 to 3.6	Q
10 ± 2	90 ± 2	± 5	1.6 to 2.4	S
25 ± 2	75 ± 2	± 5	2.2 to 3.6	T

Specifications

Dual potentiometer output

Minimum voltage (% Vs)	Maximum voltage (% Vs)	Switch track angle (°)	Resistance (kΩ)	Model code order character
10 ± 2	90 ± 2	± 1.5	1.6 to 2.4	U

Hall effect sensor with analog output

Supply voltage (Vs)	5 ± -0.5 Vdc
Maximum survival supply voltage	18 Vdc
Maximum current draw (base only)	90 mA
Minimum output voltage	10% ± 4% Vs
Center voltage	50% ± 2% Vs
Maximum output voltage	90% ± 4% Vs

Hall effect sensor with can output option

Supply voltage (Vs)	9 to 36 Vdc
Maximum current draw (base only)	90 mA

Supports CAN 2.0B with SAE J1939 message protocol

Hall effect sensor with pwm output option

Supply voltage (Vs)	9 to 36 Vdc
Maximum survival supply voltage	40 Vdc
Maximum current draw (base only)	13 amps
Valve outputs	2.5 amps maximum
Digital outputs	3.0 amps maximum
Maximum output current	13.0 amps

External-to-joystick digital inputs

Property	Minimum	Maximum	Comments
Allowed voltage at pin	0 Vdc	36 Vdc	
Rising voltage threshold	2.48 Vdc	3.5 Vdc	Digital input will be read as high if voltage is greater than 3.5 Vdc
Falling voltage threshold	1 Vdc	2.25 Vdc	Digital input will be read as low if voltage is less than 1 Vdc
CAN output latency	6 ms	24 ms	Based on update rate of application software
Response to voltage below minimum			Non-damaging, non-latching: reading saturates to low limit
Response to voltage above maximum			Non-damaging; non-latching: reading saturates to high limit

Specifications

External-to-joystick analog inputs

Property	Minimum	Maximum	Comments
Allowed voltage at pin	0 Vdc	36 Vdc	
	0 Vdc	25 Vdc	AIN/CAN_Shld on PWM version
Maximum discernible voltage	4.915 Vdc	5.085 Vdc	
Minimum discernible voltage	0 mVdc	85 mVdc	
Response to input below minimum voltage			Effect on other inputs; non damaging, non-latching; reading saturates to low limit
Response to input above maximum voltage			Effect on other inputs; non damaging, non-latching; reading saturates to high limit
Response to open input			Pull down = 0 Vdc

Microswitch characteristics

Microswitch characteristics

Mechanical deflection	0 to 5°
Contact ratings	3 A at 125 V AC, 2 A at 30 Vdc
Service life	100,000 cycles minimum at a cycling frequency of 1 Hz at 1 A 12 Vdc

Sensor power supply ratings

Sensor power supply ratings

Property	Minimum	Maximum	Comments
Output current		50 mA	
Output voltage	4.85 Vdc	5.15 Vdc	
Output short circuit voltage		36 Vdc	

Environmental characteristics

Environmental

Operating temperature	-40°C to +80°C [-40°F to 176°F] With microswitches: -25°C to 80°C [-13°F to +176°F]
Storage temperature	-40°C to +85°C [-40°F to 185°F] With microswitches: -25°C to +80°C [-13°F to +176°F]
Joystick base Ingress Protection (IP) rating	Potentiometer: IP 40 below panel (grip dependent above) Hall: IP 40 below panel (grip dependent above) CAN, CAN+, PWM: IP 66 below panel (grip dependent above)
EMI/RFI rating	100 V/m

Specifications

Environmental (continued)

Vibration (sinusoidal)	Level 3.6 G rms: Frequency range 10 to 200 Hz (Duration 2 hours each axis) Level ± 3 G Peak: Frequency range 10 to 200 Hz (Duration 1 hour each axis random)
Shock	Level 20 G type 1/2 sine 6 ms Number of shocks: 1350 each axis

ENGINEERING
TOMORROW

Products we offer:

- Bent Axis Motors
- Closed Circuit Axial Piston Pumps and Motors
- Displays
- Electrohydraulic Power Steering
- Electrohydraulics
- Hydraulic Power Steering
- Integrated Systems
- Joysticks and Control Handles
- Microcontrollers and Software
- Open Circuit Axial Piston Pumps
- Orbital Motors
- PLUS+1® GUIDE
- Proportional Valves
- Sensors
- Steering
- Transit Mixer Drives

Danfoss Power Solutions is a global manufacturer and supplier of high-quality hydraulic and electronic components. We specialize in providing state-of-the-art technology and solutions that excel in the harsh operating conditions of the mobile off-highway market. Building on our extensive applications expertise, we work closely with our customers to ensure exceptional performance for a broad range of off-highway vehicles.

We help OEMs around the world speed up system development, reduce costs and bring vehicles to market faster.

Danfoss – Your Strongest Partner in Mobile Hydraulics.

Go to www.powersolutions.danfoss.com for further product information.

Wherever off-highway vehicles are at work, so is Danfoss. We offer expert worldwide support for our customers, ensuring the best possible solutions for outstanding performance. And with an extensive network of Global Service Partners, we also provide comprehensive global service for all of our components.

Please contact the Danfoss Power Solution representative nearest you.

Comatrol
www.comatrol.com

Turolla
www.turollaocg.com

Hydro-Gear
www.hydro-gear.com

Daikin-Sauer-Danfoss
www.daikin-sauer-danfoss.com

Local address:

Danfoss
Power Solutions (US) Company
2800 East 13th Street
Ames, IA 50010, USA
Phone: +1 515 239 6000

Danfoss
Power Solutions GmbH & Co. OHG
Krokamp 35
D-24539 Neumünster, Germany
Phone: +49 4321 871 0

Danfoss
Power Solutions ApS
Nordborgvej 81
DK-6430 Nordborg, Denmark
Phone: +45 7488 2222

Danfoss
Power Solutions Trading
(Shanghai) Co., Ltd.
Building #22, No. 1000 Jin Hai Rd
Jin Qiao, Pudong New District
Shanghai, China 201206
Phone: +86 21 3418 5200

Danfoss can accept no responsibility for possible errors in catalogues, brochures and other printed material. Danfoss reserves the right to alter its products without notice. This also applies to products already on order provided that such alterations can be made without changes being necessary in specifications already agreed.
All trademarks in this material are property of the respective companies. Danfoss and the Danfoss logotype are trademarks of Danfoss A/S. All rights reserved.