MAKING MODERN LIVING POSSIBLE

Technical Information

dACi® Series C-AGV
with software 67 10300

Phased Out Products

powersolutions.danfoss.com

Contents

General
General features ... 3
Warnings ... 3

Technical Data
Power specifications ... 4
Interfaces ... 5

Wiring Diagram
Wiring diagram ... 7

Power/Control Connections
X1, Key switch, digital input and analog output ... 8
X2, Main contactor ... 9
X4, Motor interfaces (encoder, PTC and brake control) ... 10
X5 CAN-bus interface ... 11
X6, Speed and control input signals ... 11
X7, RS485 interface ... 12

CAN Communication
CAN-bus Time out ... 14
CAN-bus identifier ... 14

Function Diagram
Function diagram ... 15

Parameter List
Software versions ... 16
Read & write parameters ... 16
Output signal ... 17
Setup parameters ... 18
Read only parameters ... 19

Accessories
PC-based software service tool BPS ... 20
RS232-RS485 converter ... 23

System Setup
System setup ... 24

Fault Codes
Fault codes ... 27

Option H – Valve Control Input
X3, On-off output signals ... 30
X3, Proportional valve output signals ... 30

CAN Communication
Read & write parameters ... 31
Read only parameters ... 31

Dimensions
Dimensions ... 32

Phased Out Products

Phased Out Products

General Features

The dACi® Series C-AGV inverter is designed especially for use on Automated Guided Vehicles, AGV's as a powerful platform for pump, traction or steering actuation. Together with Danfoss induction motors type TSA the motor and inverter are matched and optimized for best performance.

⚠ Warnings

For the installation and use of the inverter this manual and other instructions for additional components must be followed.

To avoid any hazard situation always disconnect the battery before working on the inverter or other additional components.

Work on motors must only be carried out when the power connection between battery and inverter is disconnected.

It is assumed that only trained people who hold the necessary know-how carry out the installation and settings of parameters.

All existing safety regulations both electric and mechanical must be followed.

Technical Data

Power Specifications

Type dACi® 24/xxx GC-AGV	24/240	24/360	24/480
Housing	C4	C6	C8k
Nominal battery voltage	24 V dc		
Input voltage range Permanent Short time (<30s)	17…30 V dc 17…35 V dc		
Nominal output current[1]	120 A	180 A	240 A
Maximum output current[2]	240 A	360 A	480 A
Output voltage[3]	3 × 0…16 V ac		

Type dACi® 36/xxx GC-AGV	36/150	36/300	36/400
Housing	C3	C6	C8k
Nominal battery voltage	36 V dc		
Input voltage range Permanent Short time (<30s)	25…45 V dc 25…50 V dc		
Nominal output current[1]	75 A	150 A	200 A
Maximum output current[2]	150 A	300 A	400 A
Output voltage[3]	3 × 0…24 V ac		

Type dACi® 48/xxx GC-AGV	48/110	48/225	48/300	36/400
Housing	C3	C6	C8k	C8
Nominal battery voltage	48 V dc			
Input voltage range Permanent Short time (<30s)	30…60 V dc 30…70 V dc			
Nominal output current[1]	55 A	112 A	150 A	200 A
Maximum output current[2]	110 A	225 A	300 A	400 A
Output voltage[3]	3 × 0…32 V ac			

Type dACi® 48/xxx GC-AGV	80/60	80/120	80/160
Housing	C3	C6	C8k
Nominal battery voltage	80 V dc		
Input voltage range Permanent Short time (<30s)	48…100 V dc 48…115 V dc		
Nominal output current[1]	30 A	60 A	80 A
Maximum output current[2]	60 A	120 A	160 A
Output voltage[3]	3 × 0…53 V ac		

[1] Dependant on the temperature resistance of the mounting plate
[2] Duration depends on the temperature resistance and thermal capacity of the mounting plate
[3] At input voltage = nominal battery voltage

Phased Out Products

Interfaces

Type dACi® xx/xxx GC-AGV	24/xxx	36/xxx 48/xxx	80/xxx
Digital inputs (X6.4, X6.8, X6.9)			
Number	3 input		
Logic	Active – high		
Input impedance	3.5 kΩ	10 kΩ	25 kΩ
Low - level, max	2 V	3 V	8 V
High - level, min	12 V	24 V	40 V

Type dACi® xx/xxx GC-AGV	24/xxx	36/xxx 48/xxx	80/xxx
Digital inputs			
Main contactor output (X2.2)	Low - side switch with inverse diode		
Nominal current	2.0 A	1.0 A	
Maximum current	3.0 A	1.5 A	
Signal condition	1s 100% on, then 60% PWM		
Electromechanic brake output (X4.5)	Low - side switch with inverse diode		
Nominal current	2.0 A	1.0 A	
Maximum current	3.0 A	1.5 A	
Signal condition	1 s 100% on, then 60% PWM		
Programmable outputs (X1.3, X1.6)	Low - side switch with inverse diode		
Number	2 outputs		
Nominal current	1.0 A	0.7 A	0.3 A
Maximum current	1.5 A	1.0 A	0.5 A

Type dACi® xx/xxx GC-AGV	24/xxx	36/xxx 48/xxx	80/xxx
Analog inputs			
Number	2 inputs		
Type	Differential input		
Resolution	10 bit		
0...+/- 10V input (X6.1, X6.6)			
Input impedance	200 kΩ		
Voltage range	-10…+10V		
0...+/- 20mA input (X6.5, X6.10)			
Input impedance	100 Ω		
Current range	-20…+20 mA		
Analog output (X1.2, X1.5)			
Voltage range	0…10V		
Output impedance	100 Ω		

Phased Out Products

Phased Out Products

Interfaces (continued)

Type dACi® xx/xxx GC-AGV	24/xxx	36/xxx 48/xxx	80/xxx
Motor speed feedback (X4.3, X4.4, X4.7, X4.8			
Type	Incremental encoder		
Signal level	0 / 15 V - A, B signal		
Signal level Power supply (X4.7)	15 V, max 100 mA		
Motor temperature sensor (X4.2, X4.6)			
Type	PTC		
Serial interfaces (X5, X7)			
RS485 (X7)			
Supply for external converter	15 V, max 100 mA		
CAN (X5)	V 2.0 A (V2.0B passive) galvanic insulated		
Terminal resistor	120 Ω		

Others

Switching frequency	16 kHz
Efficiency	About 95% at nominal output
Output frequency	0...300 Hz
Temperature range	-40°C…50°C [-40°F…122°F] (mounting plate)
Relative humidity	Max. 90%, no condensation
Operation signal	Built-in LED
Signal line connectors	Molex mini fit junior
IP protection	IP 40

Wiring Diagram

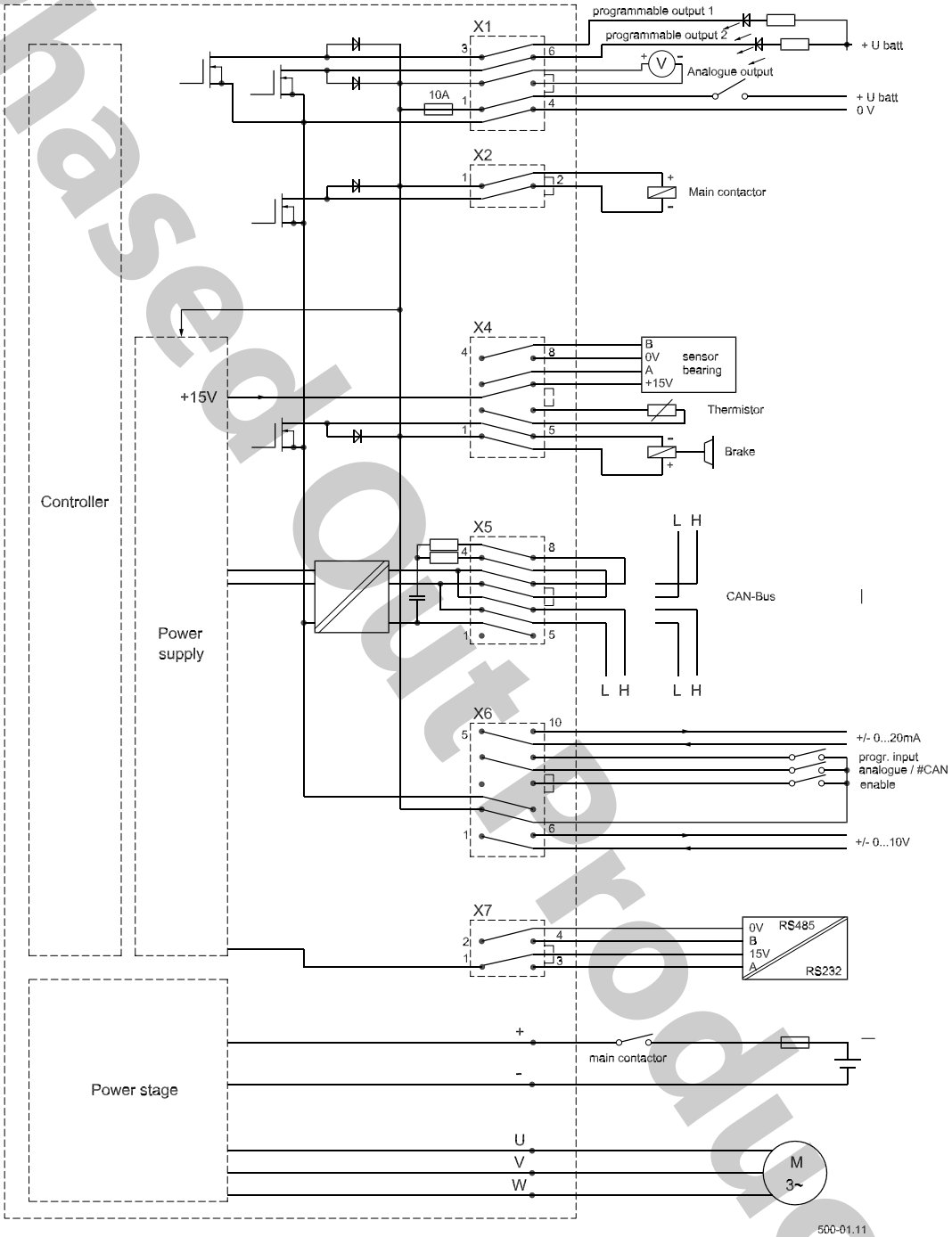

Phased Out Products

Phase Out Products

Power/control Connections

Power Connections

⚠ Warnings
Important: The minus-connection always has to be connected first.
When disconnecting the system the minus has to be the last one to be disconnected.

Terminal + and -
The power supply (battery voltage) is connected to these terminals. The diameter of the power cables has to be determined according to the dimension of the fuse used. To provide for a reverse-connect protection it is highly recommended to use a main contactor to be controlled by the inverter.

⚠ Warnings
A polarity inversion will damage the inverter.

Terminal U, V, W
The motor is connected to these terminals.
Basically the motor has to be connected to the inverter as U_{motor} to $U_{inverter}$ and so on also for V and W.

Control Connections

The dimension of the control wires is specified to 0.5mm² (i.e. all plug-able connections). Bigger diameters can be used alternatively to improve the mechanical stiffness.
The Molex® Mini-Fit, Jr.™ connector is specified for wire dimensions between 0.24 and 0.82 mm².
The below illustration gives an example for the numbering of a 6- and 10-pin connector seen from cable side:

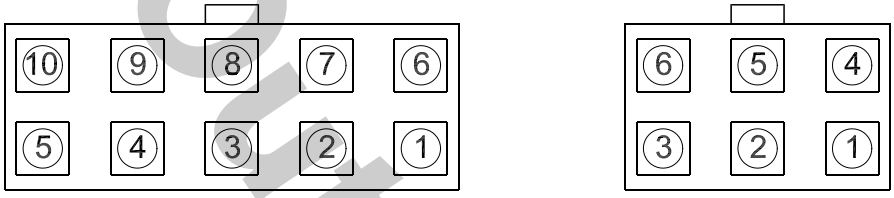

500-02.11

X1, Key switch, digital input and analog output

X1.1 Key-switch
Battery voltage has to be supplied to this input in order to power-on the inverter. The inverter does not work without the key-switch being connected to the supply voltage – in that moment the current consumption on the main terminals is less than 10mA.
A 10A fuse placed near the connectors protects this input. This input provides the supply voltage for other connections like the main contactor, electromechanical brake and digital outputs.

X1.4 0 V-Terminal (control stage)
Negative battery-pole connection for the control stage. This connection is used as the return connection for components powered by the key switch.

X1.2 Analog output (positive pin) 0…10 V
The output pin X1.2 provides an analog voltage signal between 0 and 10 V, internal impedance: 100 Ω.
Setup of output signal is done by parameters 230 to 234.

See section „Output Signals parameters“ on page 17.

Phased Out Products

Control Connections (continued)

X1.5 Analog output (negative pin)

X1.3 &X1.6 Programmable digital outputs
Open-drain outputs switch to battery minus.
Freewheeling diode internal connected to X1.1 (key-switch input).
See Technical data for Digital outputs on page 5 for max current.
Output 1 X1.3
Output 2 X1.6

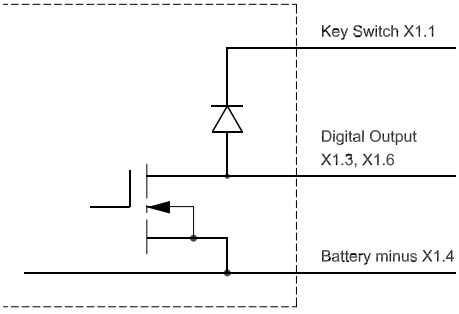

The outputs can be programmed by parameters 70 to 75.
See section "Output Signals parameters" on page 17.

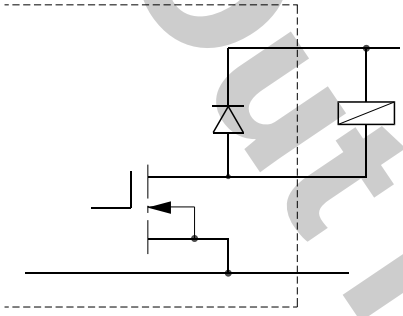

Output connected to relay

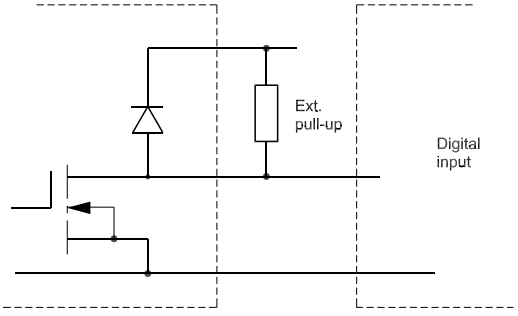

Output connected to vehicle controller

An external pull-up resistor is only required if the digital input is not pulled up with an internal resistor.

X9, Main contactor
X2.1 Positive pin for the main contactor
The pin is supplied through the key-switch input and protected with the internal fuse.

Control Connections (continued)

X2.2 Negative pin for the main contactor
The pin is switched to the negative pole via a transistor. A freewheeling diode is implemented. When the contactor is operated pin X2.2 is connected fully to the negative pole for approximately 1sec. After that the transistor will reduce the voltage by 60% PWM duty cycle switching, supplying only 60% of the battery voltage.
This is enough to keep the main contactor switched on and at the same time reduces the thermal stress.

X4, Motor interfaces (encoder, PTC and brake control)
X4.1 Positive pin for electro magnetic brake control
The pin is supplied through the key-switch input and protected with the internal fuse.

X4.5 Negative pin for electro magnetic brake
The pin is switched to the negative pole via a transistor. A freewheeling diode is implemented.
To release the brake pin X4.5 is connected fully to the negative pole for approximately 1sec. After that the transistor will reduce the voltage by 60% PWM duty cycle switching, supplying only 60% of the battery voltage. This is enough to keep the brake released on and at the same time reduce the thermal stress.
See „RPDO specification" on page 13 for how the brake is operated in CAN control mode.
If CAN control is disabled (input X6.4 high) the brake is released by activation the drive enable signal on X6.8.

X4.2, X4.6 Temperature sensor (PTC)
A temperature sensor (PTC) can be connected to this input.
If no sensor is used the terminals X4.2 and X4.6 must be short circuited.

X4.3 Encoder signal A (open collector or push-pull)
Sequence: A before B, for clockwise rotation of the motor shaft
X4.4 Encoder signal B (open collector or push-pull)
X4.7 +15 V Power supply for encoder
X4.8 0 V connection for encoder
The speed of the traction motor is always monitored and controlled through the encoder speed feedback signal.
If the sensor signal is also needed for other equipment (i.e. vehicle controller) it must be connected in the following way:

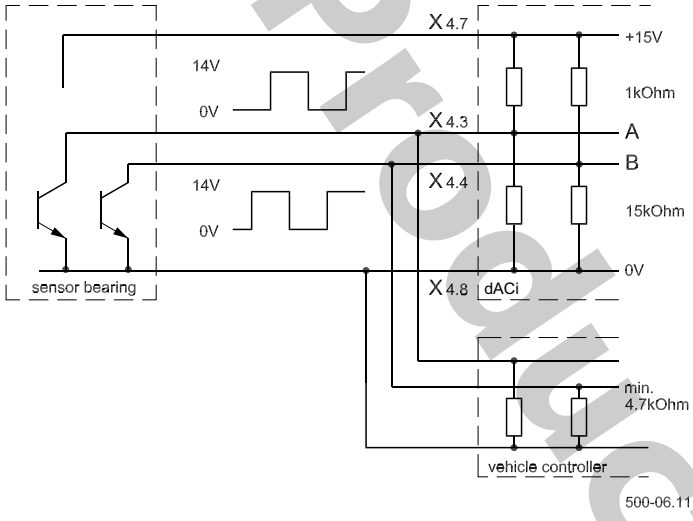

Phased Out Products

Phased Out Products

Control Connections (continued)

X5 CAN-bus interface

X5.2, X5.3 CAN_L (low)
X5.6, X5.7 CAN_H (high)
X5.4, X5.8 CAN-bus termination (120 Ω)
A CAN-bus line must always be terminated in both ends by a termination resistor of 120Ω. This means that every inverter that is connected at the end of the CAN-bus line must have the internal termination resistor connected.

Connecting X5.3 to X5.4 and X5.7 to X5.8 does this.

X5.5 CAN_GND
Ground for CAN-bus, galvanic insulated to battery minus.

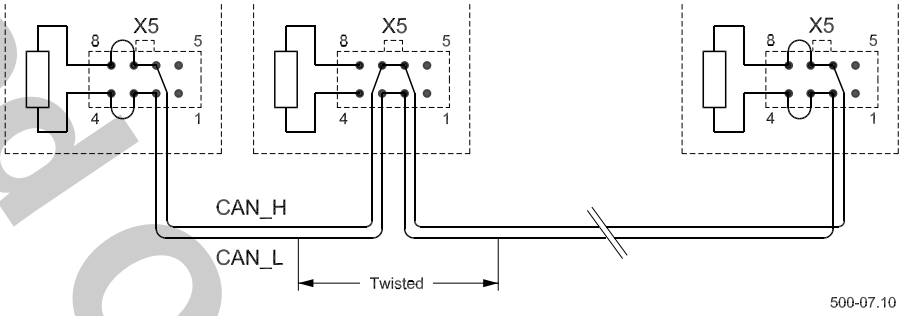

We recommend to connect GND_ISO (X5.5) of all inverters.

X6, Speed and control input signals

X6.1 & X6.6 0…+/-10 V speed input
The analog input 0..+/-10 V is used for speed control.
The input is a differential input.
10 V relates to 100% speed set by parameter 211.
Positive voltage on X6.1 in relation X6.6 will result in positive speed of the motor.

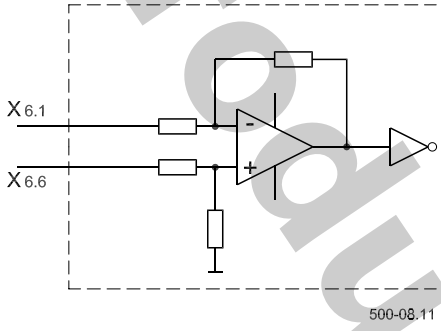

Control Connections (continued)

X6.5 & X6.10 0…+/-20mA speed input
The analog input 0..+/-20mA is used for speed control.
The input is a differential input.
20mA relates to 100% speed set by parameter 211.
Current send into X6.5 and returned on X6.10 will result in positive speed of the motor.

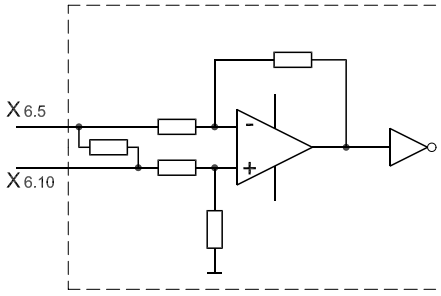

500-09.11

The signals on both analog inputs (X6.1/X6.6 and X6.5/X6.10) are added.

X6.2 Battery plus
This supply can be used to supply the digital inputs on X6.8 and X6.4.
The supply is fed from the key input on X1.1, and protected by the internal fuse.

X6.4 Analog/CAN control select
In order to activate the CAN control input X6.4 must be low or not connected.
In order to activate the analog input signals (and disable CAN control) input X6.4 must be connected to battery plus (terminal X6.2).

Swap between analog and CAN control can only take place after cycling the enable input on X6.8.

X6.8 Drive enable (release)
In order to release the drive and power up the power stage battery plus (X6.2) must be applied to input X6.8.

a) CAN control: X6.8 could be connected static with battery plus. There is no need for a rising edge on the digital input.

If CAN control is used both hardware enable on X6.8 and CAN enable signal must be applied to release the power stage.

b) Analog input: The enable is activated by a rising edge on the input.
The brake current is applied simultaneously to X4.5 as long as the power stage is working.

X6.9 Programmable input (not active)

X7, RS485 interface

X7.1	**+15V**	*15V supply for the Danfoss service tool interface.*
X7.2	**0 V**	*0V supply for the Danfoss service tool interface.*
X7.3	**RS484, A signal**	
X7.4	**RS484, B signal**	

Phased Out Products

Phased Out Products

CAN Communication

As default the unit is CAN controlled. Analog or CAN control can be chosen by digital input on terminal X6.4. Due to safety reasons the change between analog and CAN control will only take place after a recycle of the enable signal.
The CAN communication supports only PDO's (Process Data Objects). All service communication like system setup and data logging are done through the RS485 terminal on X7, using the PC Windows based software tool, BPS.
Two kinds of PDO's are defined:

1. Receive PDO (RPDO) for data reception
2. Transmit PDO (TPDO) for data transmission

For every RPDO received the inverter always returns a TPDO. The transmit frequency of RPDO's are controlled by the overall system controller. A minimum time of 2 ms must be observed between every RPDO's.
The CAN communication does not meet the CANopen specification 100%, but the object format is CANopen compatible. This means that the inverter can be operated on a mutual CANopen bus together with other CAN-bus components.
In case the inverter is setup for analog control information can still be send on the bus. In order to trigger the unit to send a TPDO a RPDO must be send to the unit.
Byte 0,1 and 2 in the RPDO will not be used.

RPDO specification

Byte	Data	Scale	Range/Setting
Byte 0 (low)	Set speed command	0.25 rpm	-32.768...32.767
Byte 1 (high)			-8.192...8.191 rpm
Byte 2	Control byte	1	see table below
Byte 3	Not used		0...255
Byte 4	Analog output	0.392%	(0...100%)

Control byte

Bit	Name	Function
Bit 0	Enable	0: Drive disabled 1: Drive enabled *Drive is only enabled if Bit 0 is 1 and input X6.8 is high*
Bit 1	Brake release	0: No brake current applied 1: Brake current applied
Bit 2…Bit 7	Not used	

The command of the inverter are triggered by the following bit pattern in the control Byte combined with input X6.8.

CAN Communication (continued)

Control byte

Input / Command	Control Byge		Digital input X6.8
	Bit 0	Bit	
	Enable	Brake release	Enable
Drive enable	←	X	1
Brake current applied	X	1	X

The X mark indicates indifferent value for the command
The ← indicates a rising edge 0-1 on the input

TPDO specification

Byte	Data	Scale	Range/Setting
Byte 0 (low)	Actual speed	0.25 rpm	-32.768...32.767
Byte 1 (high)			-8.192...8.191 rpm
Byte 2	Motor load 1)	1%	-100...+100
Byte 3	Battery voltage	1%	0...200
Byte 4 (low)	Motor encoder	1 increment	-32.768...32767
Byte 5 (high)	pulse counter 2)		
Byte 6	Status Byte	1	See table below

1) This value can be used for indication of the motor torque. As the actual motor torque cannot be measured the slip in the motor is used as indicator for the load.
2) The pulse counter is based on the pulses from the motor encoder. The pulse number used for the count is four times the pulse number per revolution of the encoder.

Status byte

Bit	Name	Function
Bit 0	Fault	0: No fault 1: Drive enabled, fault
Bit 1	Power stage active	0: Power stage disabled 1: Power stage active
Bit 2	Analog control active	0: CAN-control active 1: Analog control active
Bit 3	Motor temperatur warning	0: No warning 1: Warning
Bit4…Bit 7	Not used	Value always 0

CAN-bus Time out
The maximum time allowed between receiving new command RPDO from the CAN-bus can be set by parameter 93. The timer is initiated by the first RPDO received.
If no RPDO is received within 5 sec after power-on timeout will also be activated.
The timeout will set fault code 9, and disable the drive. The timeout function is only active when CAN-control is used (low or no signal on X6.4).

CAN-bus identifier
RPDO: 200 h + CAN node ID (parameter 156)
TPDO: 180 h + CAN node ID (parameter 156)

Phased Out Products

Function Diagram

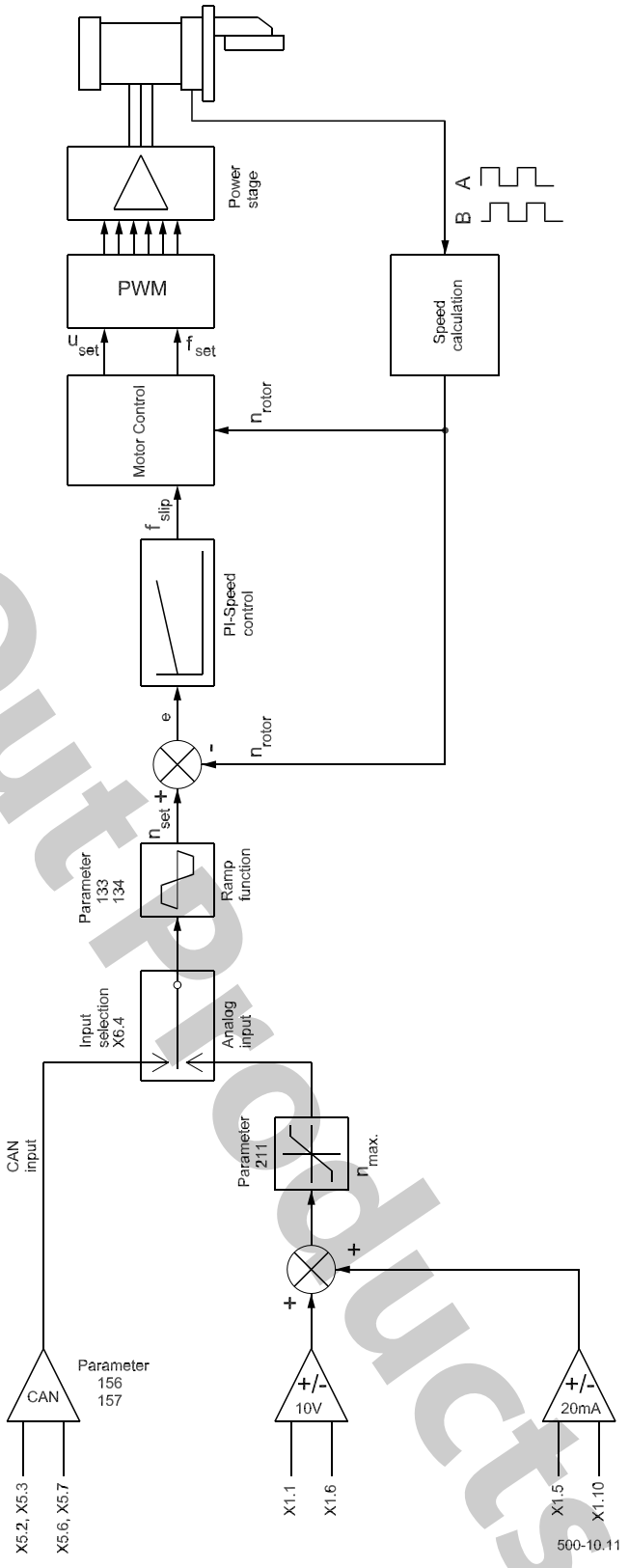

Phased Out Products

Phase-Out Products

Parameter List

Software version

The parameter list below is valid for Software version **67 10300**, and requires that the below files are available in the dACi® BPS directory of the PC used for system setup. 67 10300 gb.pfd

67 10300 gb.err
67 10300 gb.onl
67 10300 gb.def

Read & write Parameters

Speed control parameters

Par.no.	Name	Range	Units	Default
133	Acceleration ramp The parameter sets the ramp slope for speed acceleration (increasing numeric rpm).	0.50 - 32 000	rpm/s	500
134	Deceleration ramp The parameter sets the ramp slope for speed deceleration (decreasing numeric rpm).	0.50 - 32 000	rpm/s	500
180	Inverse speed The direction of speed of the motor can be inversed by this parameter. This parameter is used to adapt the positive direction of the vehicles to positive control input.	0 - Normal 1 - Inverse		0
211	Max. motor speed set-point for analog input The maximum motor speed corresponding to 100% analog signal. This parameter only applies for analog speed referenced, not for CAN speed reference.	0.00 - 8 191. 75	rpm/s	1500.00

Output Signal Parameters

Speed control parameters

Par.no.	Name	Range	Units	Default
70	Output setting - digital output 1 Programmable digital output.	0: Inactive 1: Drive ready (no fault) 2: Brake released 3: Enable active 4: Load >threshold 5: State LED-signal 6: Temperature warning inverter 7: Temperature warning motor 8: Power stage active		5
71	Output setting - Digital output 2 Programmable digital output.			8
74	Inverse digital output 1 To inverse digital output 1 set value to 1.	0: Normal 1: Inverse		0
75	Inverse digital output 2 To inverse digital output 2 set value to 1.	0: Normal 1: Inverse		0
120	Load threshold for digitals output signal. The load threshold in % above which value the digital output 1 or 2 should become active if parameter 70 or 71 is set to 4.	0-100	%	0
230	Analog output setup Programmable analog output Dependant on this selection, the corresponding unit factor has to be considered in the calculation of parameter 233 and 234.	0: Inactive 1: Set value speed 2: Actual speed 3: CAN - controlled 4: Inactive 5: Motor load 6: Motor voltage 7: Output frequency 8: Fixed value (parameter 231)	0.25 rpm 0.25 rpm - - 1% Umax/255 0.061	0

Output Signal Parameters

Par.no.	Name	Range	Units	Default
231	Fixed value for analog output Value used for the setting of the fixed voltage output on the analog output. The value is depending on the setting of parameter 232, 233 and 234. Using the default values of parameters 232 - 234 the output voltage is 10 V for value 1024 and 0 V for value 0.	-32 768 - 32 767		0
232	Analog output - absolute value setting[1)] The range of the analog output is 0 - 10 V. If the selected road readout is bidirectional, like for instant the actual speed, absolute value must be selected along with parameter 233 at zero.	0: normal 1: absolute value		1
233	Parameter value at zero voltage - analoge output[1)] This determines the value of the selected output in para- meter 230 that corresponds to zero voltage on the analog output.	-32 768 - 32767		0
234	Parameter value at 10 Volt - analog output[1)] This determines the values of the selected output in parameter 230 that corresponds to 10 V on the analog output.	-32 768 - 32 767		6000

[1)] Not active for CAN controlled analog output (parameter 230 = 3)

Par.no.	Name	Range	Units	Default
93	*CAN-bus timeout* The time in ms allowed without receiving any new command through the CAN-bus. Timeout will activate fault code 9.	10 - 1 000	ms}}	80
156	CAN node ID To identify the unit on the CAN-bus a node ID must be present. All units on the bus must have different node ID's.	2 - 127		30
157	*CAN-bus baud-rate* The baud-rate of the can communication can be changed in three steps.	0 125 kBaud 1 250 kBaud 2 500 kBaud		2
250	*Serial communication adress (RS485)* This parameter defines the bus communication address. A maximal number of 10 units can be adressed on the bus. Independent of address set in this parameter communication with a unit can always be done through address 0. In that case only one unit can be connected at the time. A broadcast can be made to all units on the bus through address 32. In order to avoid bus conflict none of the units will reply to address 32.	1-10		1

Phased Out Products

Read only Parameters

System readout parameters

Par. no.	Name	Units
9	*Operating hours* Readout of active hours of operation of the unit. Counting the hours of active power stage.	hours
10	*Actual motor speed* readout of the actual motor speed.	rpm
11	Set value speed Readout of the present speed demand after any influence of the ramp setting.	rpm
16	*Motor load* Readout of the motor load based on the slip in the motor.	%
17	*Inverter temperature* Readout of the actual heat sink temperature	°C
18	*Analog input* Readout of the actual analog control input	%
25	*Operating state* Displays the actual status of the inverter.	0: error 1: ready 2: power stage on
34	*Battery voltage* Readout of the actual battery voltage in % of the nominal voltage of the unit.	%
46	*Connector X1* Displays the actual state of the pins on connector X1.	
47	*Connector X2* Displays the actual state of the pins on connector X2.	
49	*Connector X4* Displays the actual state of the pins on connector X4.	
50	*Connector X6* Displays the actual state of the pins on connector X6.	

Phased Out Products

Acccessories

PC-based Software Service Tool BPS

For easy system setup a PC Windows based software tool (BPS) is available.
The software is communicating with the inverter through the COM-port of the PC. To connect to the RS485 on the inverter a converter box RS232 to RS485 is used.
As the RS485 is a bus connection more inverters can be connected and individually addressed from the software by choosing the right address.

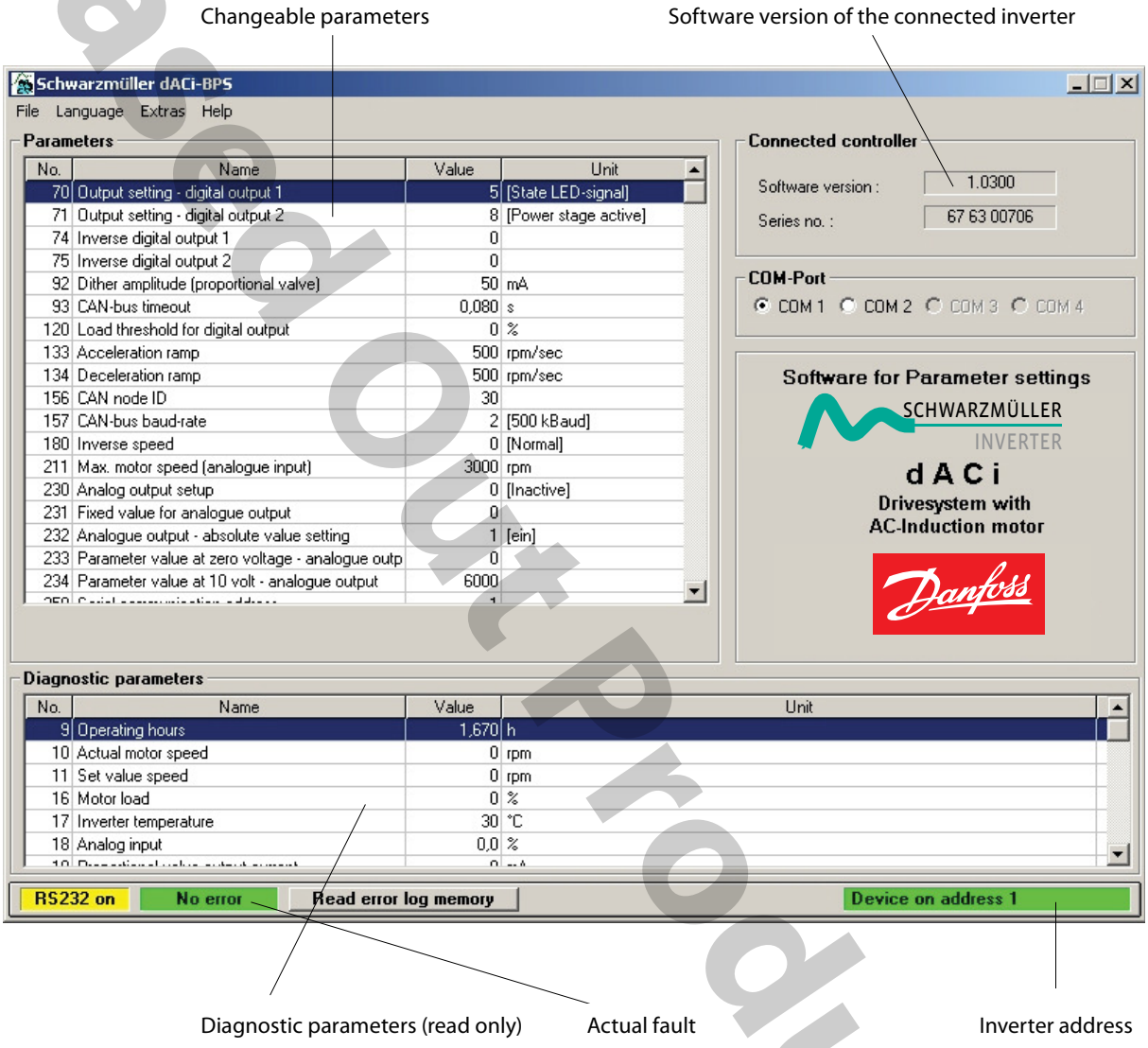

Phased Out Products

PC-based Software Service Tool BPS (continued)

When started the setup tool will search for any connected inverter on the COM-port. The search will start at address 1. When more inverters are connected the one with the lowest address will be connected. If connection to another inverter is desired a double click on the "inverter address" field will open a dialog box where other connected inverters can be selected.

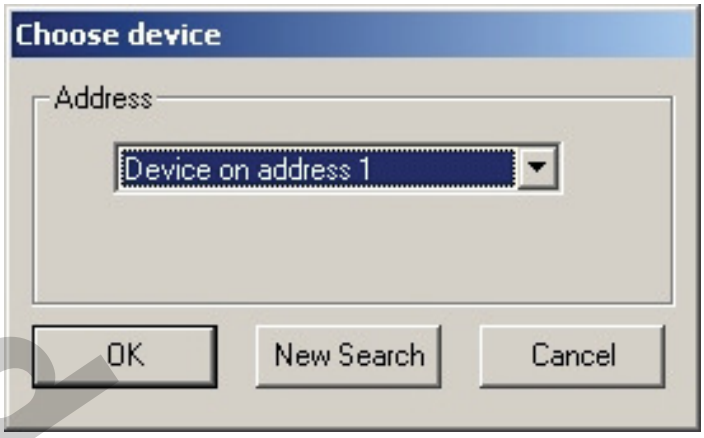

In the upper window of the setup tool the changeable parameters can be addressed. By a double click on a parameter a dialog box will appear as shown.
If a new value is entered and acknowledged by OK the value is immediately transferred to the inverter and stored in the EEPROM.

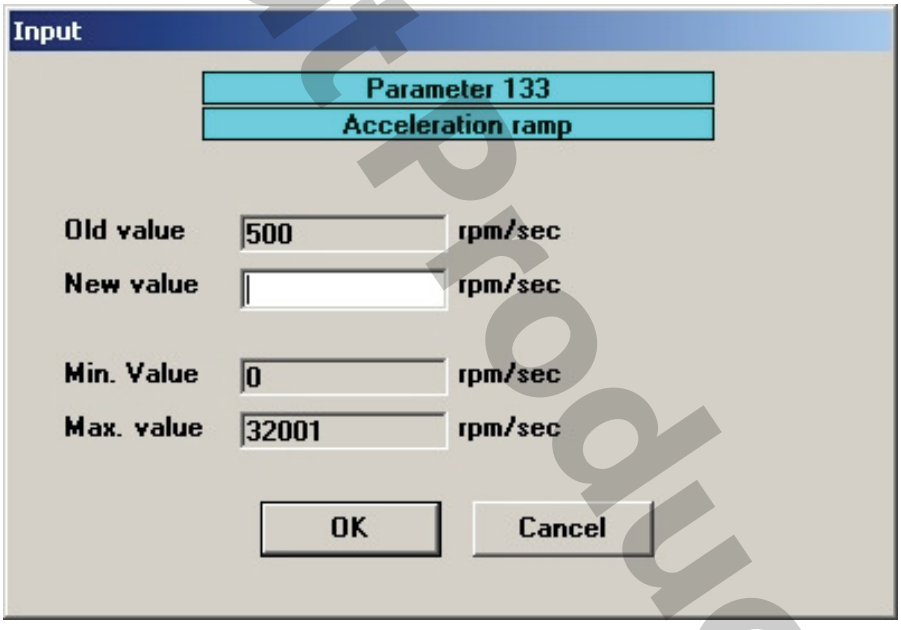

A fault in the inverter will immediately be indicated. The field "Actual Fault" will change to red and flash the fault code. By double click on the fault code field an information box will show the fault code description.

Phased Out Products

PC-based Software Service Tool BPS (continued)

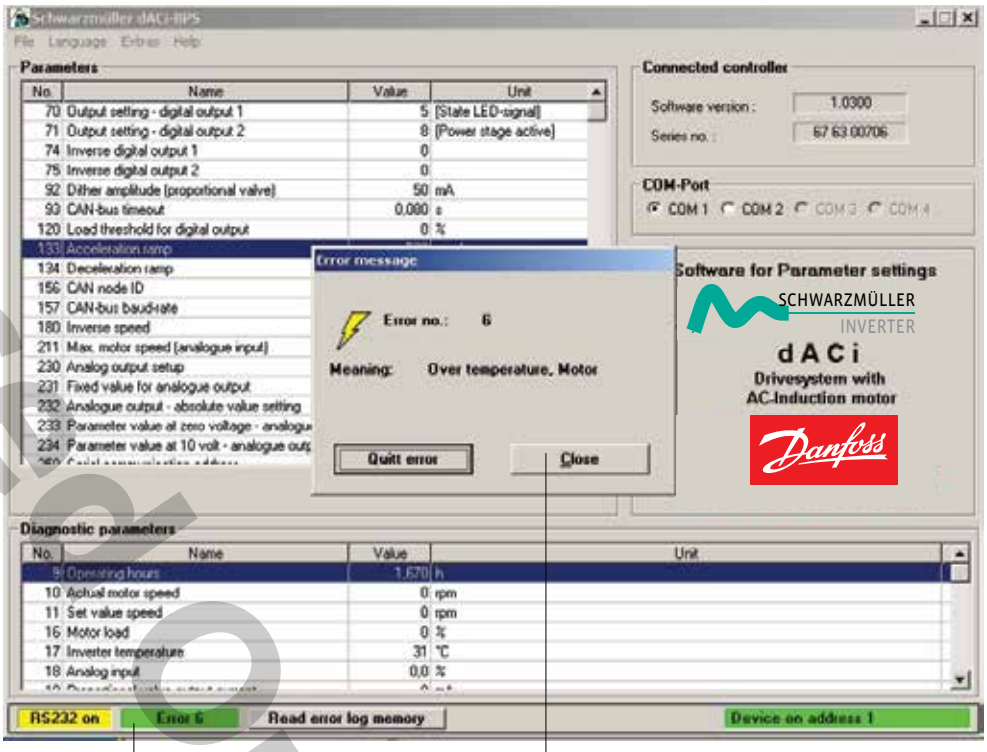

A fault code or a warning is displayed here.

The fault code description is shown, and can be reset, when the cause has been found.

Extended functions:
The setup tool is able to:

- Load and retrieve total parameter sets to and from inverter
- Load new software down to the inverter (for this a separate instruction is used)
- Compare parameter sets

The language of the user interface is changeable. the options are:
- German
- English

For the complete functionality of the software setup tool a set of data for every inverter software version and language must be present. The data contains information on:

- Which parameter can be changed, and the matching limitations
- Which parameters can be displayed online, and the matching format
- Which text to be used for fault description

Phased Out Products

Older BPS versions will not work correctly with actual inverter with 67 10300 software. Please ensure that the actual BPS version is installed (available on the CD)
Check Help / about:

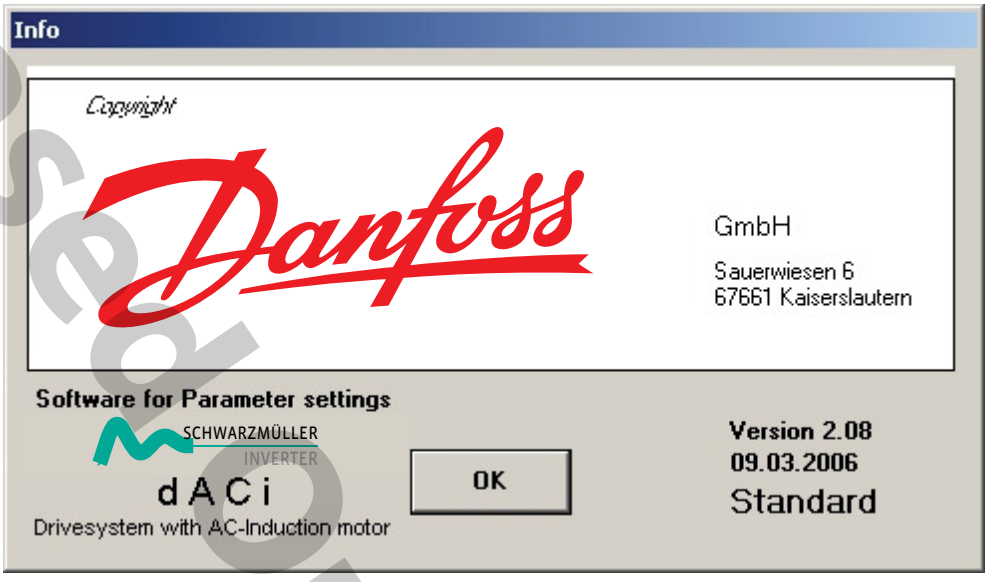

RS232-RS475 Converter

For the use of the software tool an interface converter RS232-RS485 is available.
The converter is to be used between the RS232 (PC COM-port) and RS485 on the inverter. On the RS232 connection the connection to the PC can be done with a 1:1 extension cable (Sub-D 9 pole).
The converter is power supplied from the inverter.
The RS232 and the RS485 are optical galvanic insulated. For Faultless communication between inverter and PC it is recomended to use only this type of converter.

Phased out Products

System Setup

In order to have the system work correctly hardware and software of the system must be setup and connected right. Therefore it is most important to follow the setup instruction carefully step by step! The motor specific parameters are factory loaded and must correspond to the actual motor used. The motor design identification code next to the nameplate must be identical to the code on the motor. Failure to apply with this instruction can cause damage to motor or inverter and lead to hazard behavior of the system.

1. Motor identification

The inverter is supplied with preloaded motor parameters optimized for a specified Danfoss induction motor type.

Check that the motor design identification code on the inverter is corresponding with the code on the motor.

The motor design identification number on the inverter can be found as a separate label

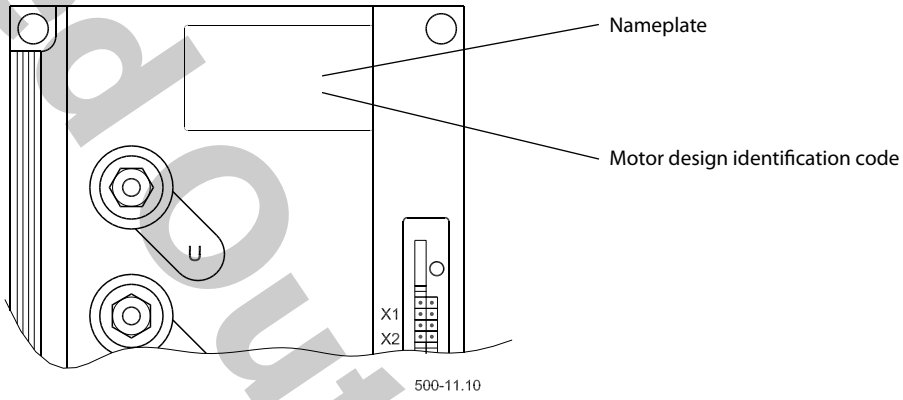

The identification code can be found on the Danfoss induction motor next to the nameplate.

Phased Out Products

System Setup

2. Install the controller
Make all electric connections according to the diagram on page 7.
Use the original MOLEX crimp equipment for “Molex mini fit junior” connectors.

Use the original MOLEX crimp equipment for “Molex mini fit junior” connectors. Disconnect the battery during wiring.

Checklist.
Minimum connections needed for setting up the system:

- Battery + and –
- Motor connections U, V and W
- Main contactor on X2
- Motor encoder feedback on X4 (X4.3, X4.4, X4.7 and X4.8)
- Motor temperature sensor input on X4 (X4.2 and X4.6). If no sensor is used the input must be short-circuit
- Electro magnetic brake if present on X4 (X4.1 and X4.5)
- Key switch input. Battery plus to X1.1 and battery minus to X1.4
- Control input selection
  If CAN control is used connection on X5 must be made
  If analog control signal is used input X6.4 must be activated. Analog 0…+/-10V to X6.1 and X6.6 or 0..-+/-20mA to X6.6 and X6.10
- Setup tool is connected to X7

3. CAN control setup
Set the CAN node ID by parameter 156.
Set the CAN baud rate by parameter 157.

4. Setup speed limitation (only analog control)
Set the maximum motor speed by parameter 211. This speed corresponds to 100% analog input signal. For traction systems the maximum speed can be found from the maximum ground speed using the equation:

$$\mathbf{n}_{max}\ (\text{par } 211)[\text{rpm}] = \frac{\text{max. ground speed [m/s]} \cdot \text{Gear ratio} \cdot 60\,000}{\text{Wheel diameter [mm]} \cdot \pi}$$

5. Speed ramp setting
The acceleration and deceleration is limited by the setting of parameter 133 and 134.
The setting is done as rpm change per sec. To find the ground speed acceleration for traction systems the equation above can be used again.

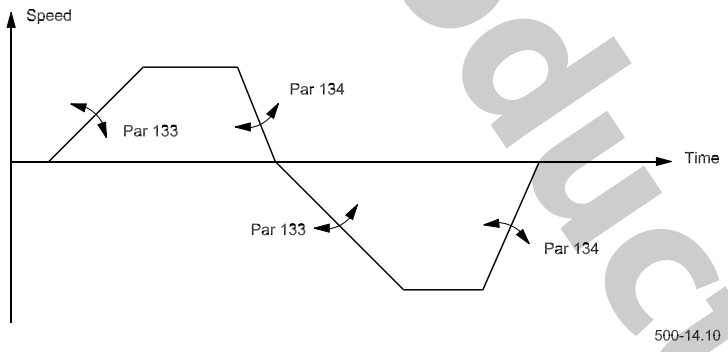

6. Check speed direction
Power up the system, and apply a positive speed signal.
If the speed of the drive is opposite to the desired positive speed direction the speed is inversed by setting parameter 180 to 1.

Phase Out Products

Phased Out Products

Fault codes

Fault no.:	Type of fault:	Fault characteristics Flash code LED:	Possible cause:	Possible action:
	Watchdog	Pulse duty cycle 1 : 1 (f = 2.25 Hz)	Internal fault. **Cannot** be reset by user	Replace it
	Ram fault	Pulse duty cycle 1 : 3 (f = 2.1 Hz)		
	Flash fault	Pulse duty cycle 3 : 1 (f = 2.1 Hz)		
2	New software version	2 pulses...pause	Will only appear when loading a new software version	Reload the software exactly following the instruction by the service tool
3	Power stage over current	3 pulses...pause	The inverter was loaded at the limit for a long time. This fault will not appear if the motor speed is measured correctly.	Monitor the signals on connector X4 at very low motor speed. Check the encoder sequence. The digits 3 and 4 must appear in a uniform pattern. If the sequence is not right, check the cable and the connections or if necessary change the encoder.
4	Low battery voltage	4 pulses...pause	Battery voltage below 60% of nominal value for more than 3s.	Check the charge condition of the battery. Check the cable connection for the supply to the inverter.
5	Battery over voltage	5 pulses...pause	Battery voltage has exceeded 130% for more than 3s.	Check battery voltage. Check that the connections from battery to inverter are OK.
6	Over temperature, motor	6 pulses...pause	1. The temperatur sensor connected to X4 has detected a too high temperature in the motor. The motor could have been overloaded for too long time. 2. If the motor is not equipped with a temperature sensor pin 2 and 6 on X4 must be short circuit.	Ad. 1: Check if the system is operating sliggish or is defect. Check eventually the motor current. The continuous motor current must not exceed the motor nominal current. Ad 2: Check the connections on X4.
7	Over temperature, inverter	7 pulses...pause	Long time operation in overload condition.	Check that the unit is mounted in a way to secure sufficient cooling. Check eventually the motor current. The continuous motor current must not exceed the nominal current of the unit.
9	CAN-bus time out	9 pulses...pause	No CAN-bus RPDO has been received at the bus for more than the time set in parameter 93, or within 5s after power-on.	Check if connections, cables and termination are OK and made according to instructions. Check that the system controller is operating.
14	EEPROM fault	14 pulses...pause	Internal fault. Can not be reset by user.	Replace unit
15	Unrealistic setting of V/f characteristic	15 pulses...pause	Bad parameter setting	Contact Danfoss

Phased Out Products

Option H - valve control output

This section describes the additions and differences for units equipped with this option. The option is used for controlling a maximum of two proportional and two on-off valves directly from the dACi-unit. The control of the valve outputs can only be done through the CAN-interface.
If option H is available on the unit the connector X3 will be mounted.

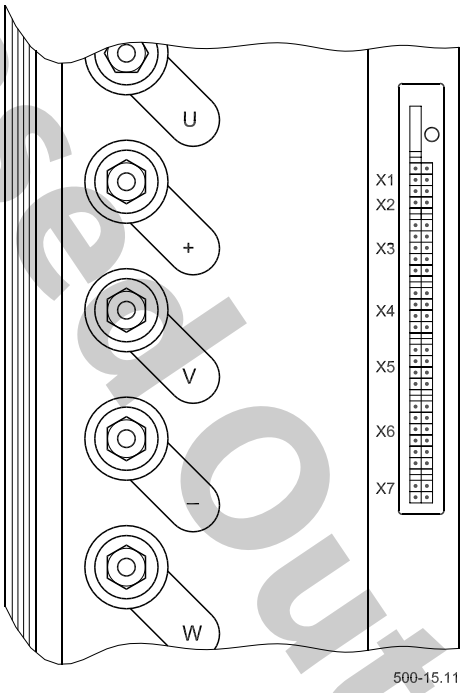

Connector X3
Valve control option H

Type dACI® xx/xxx GCH-AGV	24/xxx	36/xxx 48/xxx	80/xxx
Digital outputs for on-off valves or contactors (X3.1, X3.2, X3.5, X3.6)			
Number	2 outputs		
Characteristic	Low-side switch with inverse diode		
Nominal current	2.0 A	1.0 A	
Maximum current	3.0 A	1.5 A	
Analog outputs for proportional valves (X3.3, X3.4, X3.7, 3.8)			
Number	2 outputs		
Characteristic	High-side switch with inverse diode Current controlled, superposed with dither-signal		
Nominal current	3.0 A	2.0 A	0.7 A
Maximum current	4.5 A	3.0 A	1.0 A
Current control range		0 - 2.0 A	

Wiring diagram

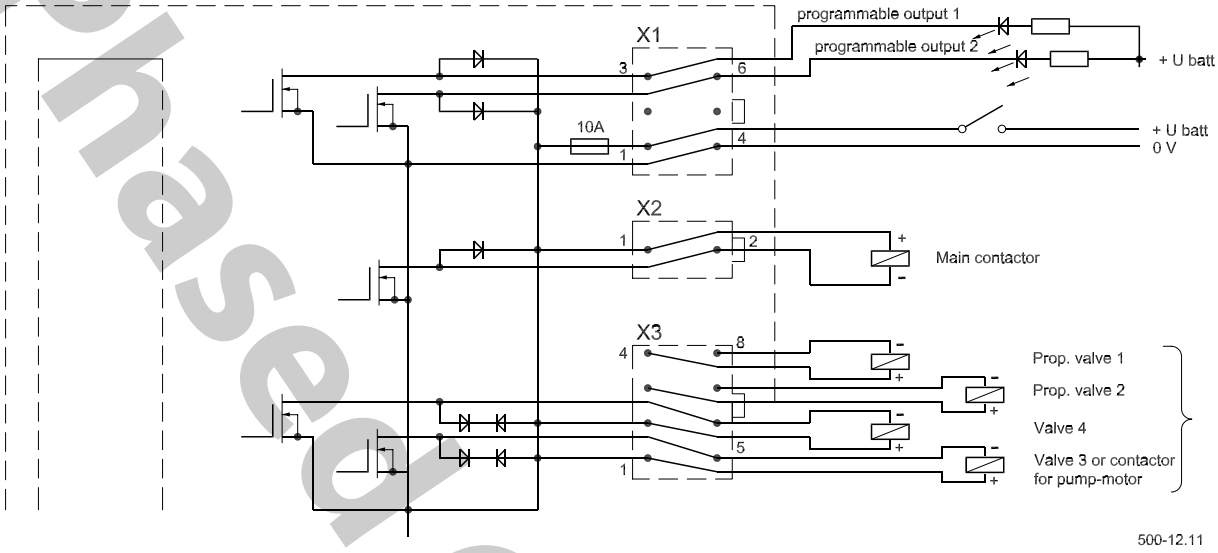

Option H connections are situated on connector X3.
For option H the analog output is not available on X1, as the analog signal is used to control the proportional valve output on X3.
Only one analog signal controls the proportional valve outputs. This means that the two outputs can be operated in parallel, or individually but not at the same time.

Control Connections

X3, On-off output signals
X3.1, X3.2 Positive pins for on-off output
The pins are supplied through the key-switch input and protected with the internal fuse. X3.5, X3.6.

Negative controlled pins for on-off output
The pins are switched to the negative pole via a transistor. A freewheeling diode is implemented. The outputs are controlled by the CAN-interface only; see section „RPDO specification“ below for details.

X3, Proportional valve output signals
X3.3, X3.4 Positive pins for proportional valve output
Controlled positive pins for the proportional current output. A freewheeling diode is implemented. The outputs are controlled by the CAN-interface only. The control range is 0 – 2,0A. The two outputs can only be operated in parallel or separately, as only one analog channel is available.
See section „RPDO specification“ below for details.

X3.7, X3.8 Negative pins for proportional valve output

Phased Out Products

Phased Out Products

CAN Communication

RPDO specification

Byte	Data	Scale	Range/Setting
Byte 3	Option H output	1	See table below
Byte 4	Analog output for proportional valves	0.392%	0...255 (0...2.0A)

CAN-controlled analog output must be selected by parameter 230 (value 3) in order to control the proportional valves output.
The two proportional valve outputs are not individual controlled. The analog output value set by Byte 4 controls both outputs. By controlling Bit 0 and 1 of Byte 3 the output to respond to the analog value can be selected.

Option H output, Byte 3

Bit	Name	Function
Bit 0	Proportional valve (X3.4, X3.8)	0: Output disabled 1: Output enabled
Bit 1	Proportional valve (X3.3, X3.7)	
Bit 2	On-off output (X3.2, X3.6)	
Bit 3	On-off output (X3.1, X3.5)	
Bit 4...Bit 7	Not used	

Read & Write Parameters

Setup parameters

Par.no.	Name	Range	Units	Default
92	Dither amplitude (proportional valve) The amplitude (peak to peak) of the dither added to the proportional valve output can be changed by this parameter. The dither frequency is constant f = 62.5 Hz.	0 - 300	mA	50

Read Only Parameters

System read-out parameters

Par.no.	Name	Units
19	Proportional valve output current. Readout of the set point for the proportional valve control output.	mA
48	Connector X3 Displays the actual state of the pins on connector X3.	

Phased Out Products

Dimensions

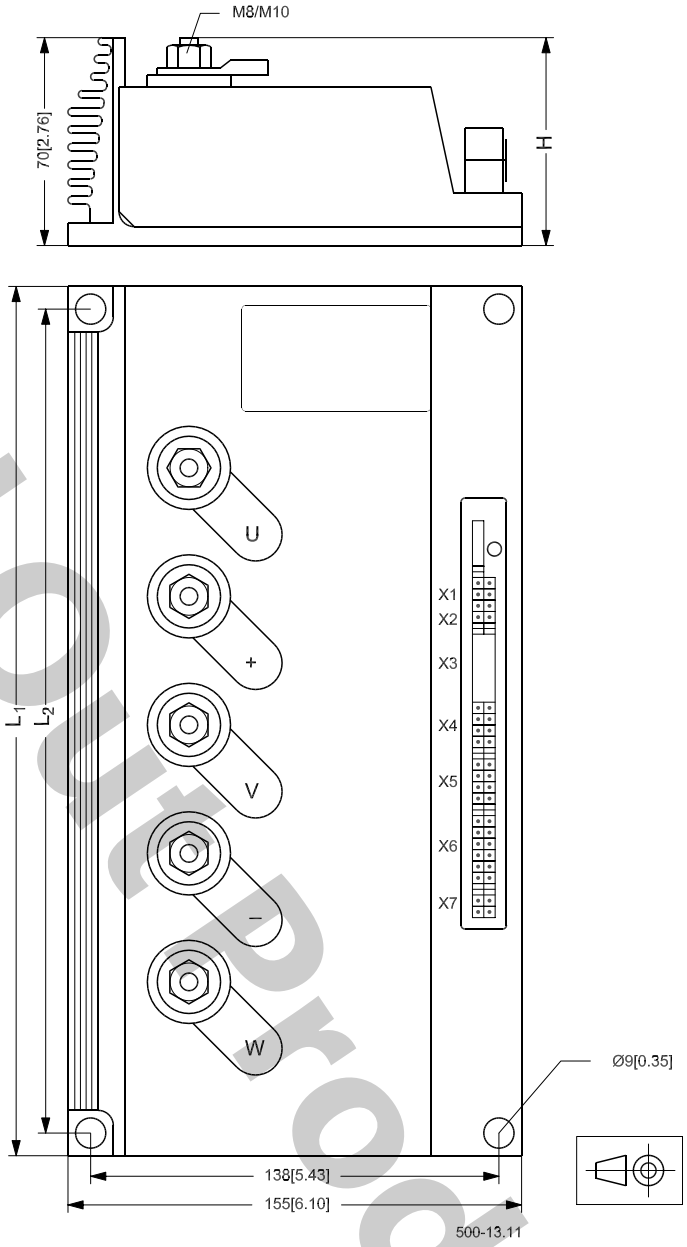

Housing	L1	L2	H	Power Terminals
C3, C4	200 mm [7.87 in]	182 mm [7.17 in]	70 mm [2.76 in]	M8
C6, C8k	300 mm [11.81 in]	282 mm [11.1 in]	80 mm [3.15 in]	M10
C8	390 mm [15.35 in]	372 mm [14.65in]	80 mm [3.15 in]	M10

Notes

Phased Out Products

Notes

Phased Out Products

Products we offer:

- Bent Axis Motors
- Closed Circuit Axial Piston Pumps and Motors
- Displays
- Electrohydraulic Power Steering
- Electrohydraulics
- Hydraulic Power Steering
- Integrated Systems
- Joysticks and Control Handles
- Microcontrollers and Software
- Open Circuit Axial Piston Pumps
- Orbital Motors
- PLUS+1® GUIDE
- Proportional Valves
- Sensors
- Steering
- Transit Mixer Drives

Danfoss Power Solutions is a global manufacturer and supplier of high-quality hydraulic and electronic components. We specialize in providing state-of-the-art technology and solutions that excel in the harsh operating conditions of the mobile off-highway market. Building on our extensive applications expertise, we work closely with our customers to ensure exceptional performance for a broad range of off-highway vehicles.

We help OEMs around the world speed up system development, reduce costs and bring vehicles to market faster.
Danfoss – Your Strongest Partner in Mobile Hydraulics.

Go to www.powersolutions.danfoss.com for further product information.

Wherever off-highway vehicles are at work, so is Danfoss.

We offer expert worldwide support for our customers, ensuring the best possible solutions for outstanding performance. And with an extensive network of Global Service Partners, we also provide comprehensive global service for all of our components.

Please contact the Danfoss Power Solution representative nearest you.

Phased Out Product

Comatrol
www.comatrol.com

Schwarzmüller-Inverter
www.schwarzmueller-inverter.com

Turolla
www.turollaocg.com

Valmova
www.valmova.com

Hydro-Gear
www.hydro-gear.com

Daikin-Sauer-Danfoss
www.daikin-sauer-danfoss.com

Local address:

Danfoss
Power Solutions (US) Company
2800 East 13th Street
Ames, IA 50010, USA
Phone: +1 515 239 6000

Danfoss
Power Solutions GmbH & Co. OHG
Krokamp 35
D-24539 Neumünster, Germany
Phone: +49 4321 871 0

Danfoss
Power Solutions ApS
Nordborgvej 81
DK-6430 Nordborg, Denmark
Phone: +45 7488 2222

Danfoss
Power Solutions Trading (Shanghai) Co., Ltd.
Building #22, No. 1000 Jin Hai Rd
Jin Qiao, Pudong New District
Shanghai, China 201206
Phone: +86 21 3418 5200

Danfoss can accept no responsibility for possible errors in catalogues, brochures and other printed material. Danfoss reserves the right to alter its products without notice. This also applies to products already on order provided that such alterations can be made without changes being necessary in specifications already agreed.
All trademarks in this material are property of the respective companies. Danfoss and the Danfoss logotype are trademarks of Danfoss A/S. All rights reserved.