ENGINEERING
TOMORROW

User Guide

Intelligent Purging System (IPS 8) Ammonia

230 V AC, 50 Hz. CE marked

Other IPS 8 User Guide languages

Імпортер:ТОВ з ii "Данфосс ТОВ" 04080, Київ 80, п/с 168, Україна

Info for UK customers only : Danfoss Ltd., 22 Wycombe End, HP9 1NB, GB

148R9692

Contents

Legal notice ... 3
Technical data ... 4
Ordering ... 5
Introduction ... 6
Features ... 6
Working principle ... 7
Working cycle ... 8
Air traps ... 9
Connection locations ... 10
Connection points ... 12
8 Extra Purge Points ... 14
Installation ... 15
Lifting Procedure ... 15
Electrical wiring ... 17
Light Indicators ... 19
Quick Startup ... 20
Configuring IPS via the HMI[1)] on the MCX15B2 controller ... 22
Modbus RTU ... 29
Maintenance/Service/Disposal ... 29

© Danfoss | Climate Solutions | 2026.02

Legal notice

This product information is a part of the documentation for the Danfoss scope of delivery and serves as product presentation and customer advisory service. It contains important information and technical data regarding the product.

This product information should be supplemented with the information about the industrial safety and health related regulations at the site of installation of the product. The regulations vary from place to place as a result of the statutory regulations applicable at the site of installation and are therefore not considered in this product information.

In addition to this product information and the accident prevention regulations applicable for the respective country and area where the product is used, the technical regulations for safe and professional work must also be observed.

This product information has been written in good faith. However, Danfoss cannot be held responsible for any errors that this document may contain or for their consequences.

Danfoss reserves the right to make technical changes during the course of further development of the equipment covered by this product information.

Illustrations and drawings in this product information are simplified representations. As a result of the improvements and changes, it is possible that the illustrations do not exactly match the current development status. The technical data and dimensions are subject to change. No claims will be accepted on the basis of them.

ENGINEERING TOMORROW

Danfoss A/S
6430 Nordborg
Denmark
CVR nr.: 20 16 57 15

Telephone: +45 7488 2222
Fax: +45 7449 0949

EU DECLARATION OF CONFORMITY

Danfoss A/S

Refrigeration & Air Conditioning Controls

declares under our sole responsibility that the

Product category: Intelligent Purger System (Air Purger)

Type designation(s): IPS 8, code numbers 084H5004, 084H5005

Covered by this declaration is in conformity with the following directive(s), standard(s) or other normative document(s), provided that the product is used in accordance with our instructions.

Machine Directive 2006/42/EC
EN 378-2:2016 Refrigerating systems and heat pumps - Safety and environmental requirements - Part 2: Design, construction, testing, marking and documentation

EN 60204-1:2018 Safety requirements for electrical equipment for measurement, control, and laboratory use - Part 1: General requirements

Pressure Equipment Directive 2014/68/EU (PED)
EN 378-2:2016 Refrigerating systems and heat pumps - Safety and environmental requirements - Part 2: Design, construction, testing, marking and documentation

Ammonia side (R717): Category A4P3. Fluid group: 1. PS = 40 bar. TS: -40 °C to 60 °C.
R290 side: Category I. Fluid group: 1. PS = 24 bar. TS: -40 °C to 60 °C

Ambient temperature: -10 °C to 43 °C

Electromagnetic Compatibility Directive 2014/30/EU (EMC)
EN 61000-6-2:2005 Electromagnetic compatibility (EMC) - Part 6-2: Generic standards - Immunity standard for industrial environments (IEC77/488/CDV:2015)

EN 61000-6-4:2007/A1:2011 Electromagnetic compatibility (EMC) - Part 6-4: Generic standards - Emission standard for industrial environments

Note: EMC test performed with cable length < 30 m.

Date: 2025.01.31 **Place of issue:**	**Issued by**	Date: 2025.01.31 **Place of issue:**	**Approved by**
Grodzisk Mazowiecki, Poland	**Signature:** **Name: Tomasz Siejka** **Title: Senior Design Engineer**	Grodzisk Mazowiecki, Poland	**Signature:** **Name: Małgorzata Wojtan** **Title: Senior R&D and Eng. Manager**

Danfoss only vouches for the correctness of the English version of this declaration. In the event of the declaration being translated into any other language, the translator concerned shall be liable for the correctness of the translation

ID No: 084R9656 **Revision No:** AA
This doc. is managed by 500B0577

Page 1 of 1

Classified as Business

Technical data

Supply voltage for: IPS 8 Field[1] connected solenoid coils	230 V +/-10% AC, 1ph, 50Hz
Current	3,3 A (max. 8,38 A)
Power consumption	0,6 kW (max. 1,93 kW)
Short-circuit current rating	Icc 10kA
Temperature range ambient	-10 °C to +43 °C (14 °F to 109 °F)
Temperature range transport/storage	-30 °C to +60 °C (-22 °F to 140 °F)
Enclosure	IP55
Weight	max. 100 kg (221 lbs)
Dimensions (LxWxH)	1051 x 441 x 703 mm (41.4 x 17.4 x 27.7 inches)
Purger refrigerant	R290 below 150 gram (5.3 oz)
Max. operating pressure (PS) R290	24 bar (348 psi)
System refrigerant	R717
Max. operating pressure R717	40 bar (580 psi)
Operating temperature R717	-40 °C to +60 °C (-40 °F to 140 °F)

1)

Description	Field connected valves
Digital Output, DO6	YV ICFD – Valve on ICF (Optional)
Digital Output, DO7	Y1 Valve – Purge Point 1
Digital Output, DO8	Y2 Valve – Purge Point 2
Digital Output, DO9	Y3 Valve – Purge Point 3
Digital Output, DO10	Y4 Valve – Purge Point 4
Digital Output, DO11	Y5 Valve – Purge Point 5
Digital Output, DO12	Y6 Valve – Purge Point 6
Digital Output, DO13	Y7 Valve – Purge Point 7
Digital Output, DO14	Y8 Valve – Purge Point 8
Digital Output, DO15	Y9 Valve – Bubbler (Optional) / General Alarm (Optional)

See also Fig. 18

© Danfoss | Climate Solutions | 2026.02

Ordering

Unit	Code number
Danfoss Intelligent Purging System IPS 8 unit	**084H5004**

Accessories/Spare parts	Accessory (Not included with IPS)	Spare parts for service (Built-into IPS)	Code
Flange blind blank incl Bolts, nuts and Gaskets*	x		**084H5053**
Bubbler for IPS			**084H5070**
SV3 Float Valve	x		**027B2023**
ICF 15-4 solenoid, DIN Butt weld 15mm ½ inch	x		**027L4543**
ICF 15-4 solenoid, ANSI Socket weld 15mm ½ inch	x		**027L4538**
ICF 15-4 solenoid, ANSI Butt weld 15mm ½ inch	x		**027L4602**
Welding Flange incl Bolts, nuts and Gaskets		x	**084H5055**
Repair kit for Main Purge Valve (Armature, tube, Sealing, Orifice, Filter insert). See Fig. 1, Item 16	x	x	**084H5051**
Solenoid coil, 220 – 230V, 50 Hz. For possible use for field connected solenoid coils	x		**018F6801**
Solenoid coil, 24V DC for Main Purge Valve. See Fig. 1, Item 16	x	x	**018F6757**
PSU, 24V DC - optional for powering purge points	x	x	**080Z0059**
Restrictor, in purge line after Main Purge Valve. See Fig. 1, Item 18 and Fig. 13.		x	**084H5054**
Compressor Cranck case heater		x	**084H5071**
Fan motor for condenser Incl fan grid and screws		x	**084H5072**
Extraction Fan		x	**084H5068**
Air grid with filter (2 pieces)		x	**084H5069**
Pre-programmed MCX15B2 with application SW included		x	**084H5067**
Pressure transmitter evaporator, soldered (AKS 32R)		x	**060G3552**
Compressor including Start relay box and Start and Run Capacitor		x	**123B3125**
Compressor Hi-temp sensor		x	**084N2003**
Expansion valve, R290		x	**068U3733**
Sight glass		x	**014L0040**
Pressure transmitter - R717, Threaded, AKS2050		x	**060G5750**
Thermostat for crankcase heater control		x	**060L1112**
Temperature sensor - R717, AKS 21M		x	**084N2003**
LLS 4000 liquid level switch G 3/4"**		x	**084H6001**
IPS 8 extension module	X		**080G5040**
Pressure switch for Fan		x	Contact Danfoss
Pressure safety switch		x	Contact Danfoss

** For closing system flange during system pressure testing*
*** See Fig. 1 and Fig. 10a*

Introduction

The Danfoss Intelligent Purging System (IPS 8) is a stand-alone, self-contained purging unit designed to remove non-condensable gases (NC gases = air and other unwanted foreign gases) from industrial ammonia refrigeration systems.

The IPS control can handle up to 8 purge points automatically.

The ingress of NC gases into a refrigeration system is inevitable, regardless of the refrigerant, pressures, or temperatures. NC gases in the system will result in a decrease in system efficiency, both in terms of an increase in power consumption and reduced cooling capacity.

Due to having a different density than ammonia, the ingressed air will accumulate in specific areas of the system, where it can be removed using the Danfoss IPS 8.
The accumulation areas are identified in the Connection locations section, along with recommended connection principles.

The purger unit is an electronically controlled, self-contained R290 refrigerant system that runs independent of the main ammonia system and with only one flange connection to the ammonia plant.

The flanged opening allows the ammonia gas/NC gas mix access to the purger's heat exchanger, where it is split into ammonia condensate and NC gases. The ammonia condensate is returned by gravity to the main plant, while the NC gases are purged to the atmosphere through e.g. a water bath.

Through the flanged opening, the purger unit has access to the parameters from the ammonia plant required for full electronic control.

The unit runs automatically in 24-hour cycles, checking for the presence of NC gases and, if present, removes the NC gases.

To regain and retain the design capacity of the main ammonia system and prevent future air accumulation, it is highly recommended to install the Danfoss IPS 8.

Features

- State-of-the-art electronically controlled unit based on the Danfoss MCX controller platform
- Reduced power consumption of the ammonia plant
- Automatic purging response to NC gases in the refrigeration system
- Continuous and smart monitoring of differential pressure between the system refrigerant and the purger's refrigerant
- Smart purging that minimizes refrigerant (ammonia) release to the environment
- Self-contained unit operation, which functions independently from the main plant
- An operation log for easy purging cycle data monitoring
- Industry standard Modbus RTU communication for remote monitoring and system integration
- Reduced purging unit power consumption compared to other units due to on-demand operation only
- Load scheme to identify which purge point is removing most NCC
- Prepared to manage/control Bubbler
- Option to install LLS 4000 to protect IPS for high column of ammonia liquid
- Self-diagnostics for both unit and system operation to shut down in the event of malfunctions
- Cost-effective installation with few mechanical and electrical connections
- A fully brazed and leak-tested R290 cooling system, minimizing leakage risks
- A plug-and-play stand-alone design, which simplifies installation and commissioning while reducing potential errors
- No need for advanced settings
- A compact and easy-to-handle design
- IPS carry a registered patent
- With our solution of IPS 8 Air Purger combined with the Bubbler, we can help customers to keep machine rooms free of ammonia smelling, while IPS 8 is removing the non-condensable gases, and purging to the Bubbler
- IPS 8 supports another 8 Purge points can be added, giving in total 16 Purge points

© Danfoss | Climate Solutions | 2026.02

Working principle

The Danfoss IPS 8 is factory-tested and ready to use in ammonia plants with a condenser pressure of more than 6,5 bar (94 psi). The purger is charged with below 150 gram (5.3 oz) of R290.

Only 1 mechanical connection is needed for the purger (see fig. 1). The flow of ammonia/NC gases from the main plant is done through the flange for ammonia (see 13 in Fig. 1 below), while the NC gas purge is done through the blow-off pipe after the purge restrictor (18).

Through the flange for ammonia (13), a mixture of ammonia gas and NC gases enters the heat exchanger (12) part of the purger.

The ammonia gas/NC gas mix is cooled down below the condensing temperature of the ammonia by the R290 circuit. At this point, ammonia gas condenses and returns by gravity to the ammonia plant whereas the NC gases accumulate in the heat exchanger (12) for subsequent purging.

By condensing the ammonia gas, a new ammonia/NC gases mix is naturally pulled through. This new mix is separated through a continuous process.

As the NC gas concentration in the heat exchanger (12) increases, the R290 heat exchanger pressure and temperature will simultaneously decrease.

The controller continuously monitors the R290 heat exchanger pressure as well as ammonia pressure and temperature. When the R290 pressure reaches a predefined pressure difference when compared with the ammonia pressure (temperature) it prepares to purge the NC gases through the solenoid valve (16). The blow-off is activated by the solenoid (16) and through appropriate piping/hosing, should be led into a water bath. This process is recommended to retain small amounts of ammonia (see Installation section).

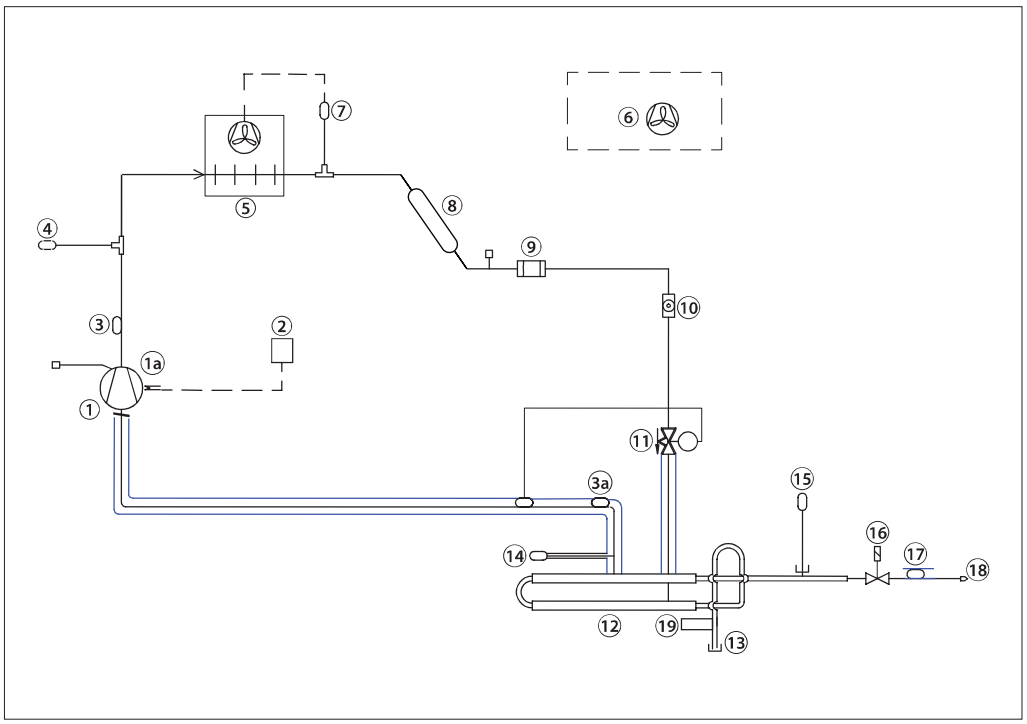

Fig. 1 - Purger R290 lay-out

1	Compressor (below 150 gram (5.3 oz) R290) controlled via Digital Output, DO1	**11**	Expansion valve, R290
1a	Compressor Cranck case heater	**12**	Heat exchanger Ammonia/R290
2	Thermostat for crankcase heater control	**13**	Welding Flange
3	Discharge temp sensor R290 via Analog Input AI3, Pt 1000	**14**	Pressure transmitter R290. Measured via via Analog Input AI1, Pressure transmitter, AKS 32R
3a	Suction temperature sensor R290 via Analog Input AI4, Pt 1000	**15**	Pressure transmitter R717. Measured via Analog Input, AI2, Pressure transmitter, AKS 2050
4	Pressure safety switch	**16**	Main Purge Valve controlled via Digital Output, DO2
5	Condenser	**17**	NC temperature sensor R717. Measured via Analog Input, AI5, Pt1000
6	Extraction fan	**18**	Restrictor, purge line
7	Pressure switch for Condenser Fan	**19**	LLS 4000 Liquid Level Switch. Accessory. Not included with standard IPS
8	Liquid accumulator		
9	Filter		
10	Sight glass		

Working cycle

The Danfoss IPS 8 operates in 24-hour cycles, of which 45 minutes are dedicated to an R290 pull down. At power on, the pull down is initiated immediately. If no NC gases are detected during the 40 minute pull down, the system will close the solenoid valve at purge point 1 and open the solenoid valve at point 2. After a cycle time of 24 hours/N (Number of purge points), the compressor will pull down again condensing the ammonia. After 24 hours, all purge points have been vented one time.

To identify NC gases, the controller utilizes upper and lower thresholds for R290 evaporating temperature. If, during pull down, the temperature continues decreasing and the lower threshold is passed, the controller considers this to be a high concentration of NC gases and opens the purge solenoid valve. The purge valve will stay open until sufficient condensing ammonia is present to lift the R290 evaporating temperature above the upper threshold.

The compressor will continue running and if the temperature again decreases below the lower threshold, a new purge will be performed. This process will be repeated until the R290 heat exchanger temperature stays above the lower threshold for >40 minutes following the previous closure of the purge valve.

Label ID	Parameter Name	Description and selection options	Factory setting
CM3	PDT	Pull down time Pull down time of compressor	40 min
CM4	CST	Compressor start time See Fig. 2 for details	1440 min (24 h)
VA5	PLT	Endless purging max time Max time for endless purging on one point. When the time has expired, IPS will go to next Purge Point (PP)	24 h

See complete Parameter List – Table 01

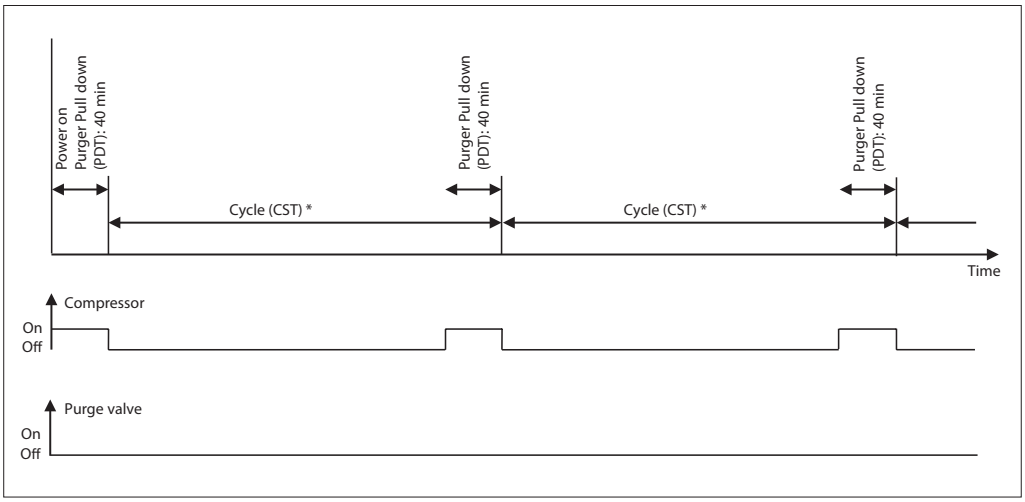

Fig. 2 - Power on & Cycle at no NC gases present: CST (compressor start time) and PDT (pull down time) are configurable
** Cycle (CST) = 24 hours/N (number of purge points)*

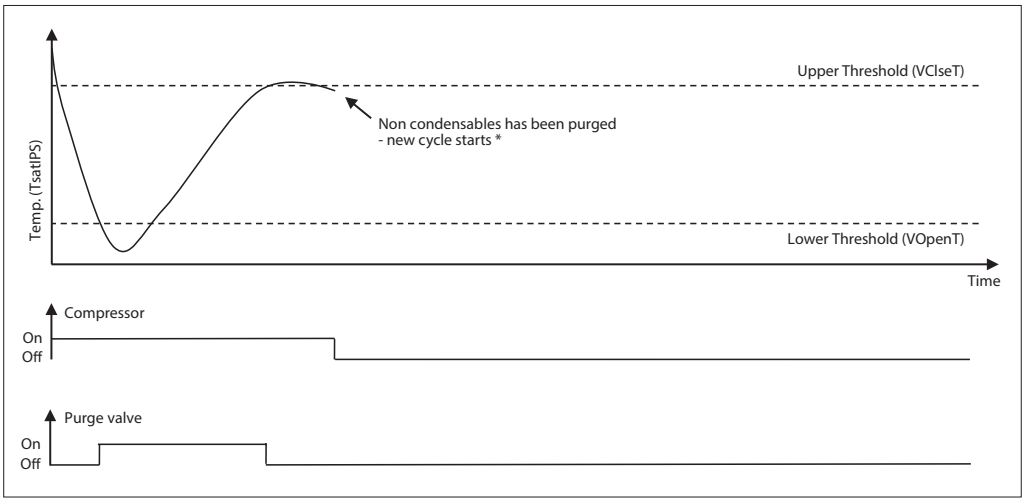

Fig. 3 - Purging procedure - Low R290 evap. temperature detected during PDT: Thresholds are configurable
** If low evaporator temperature is detected (passing lower threshold), the purging procedure will be repeated immediately*

© Danfoss | Climate Solutions | 2026.02

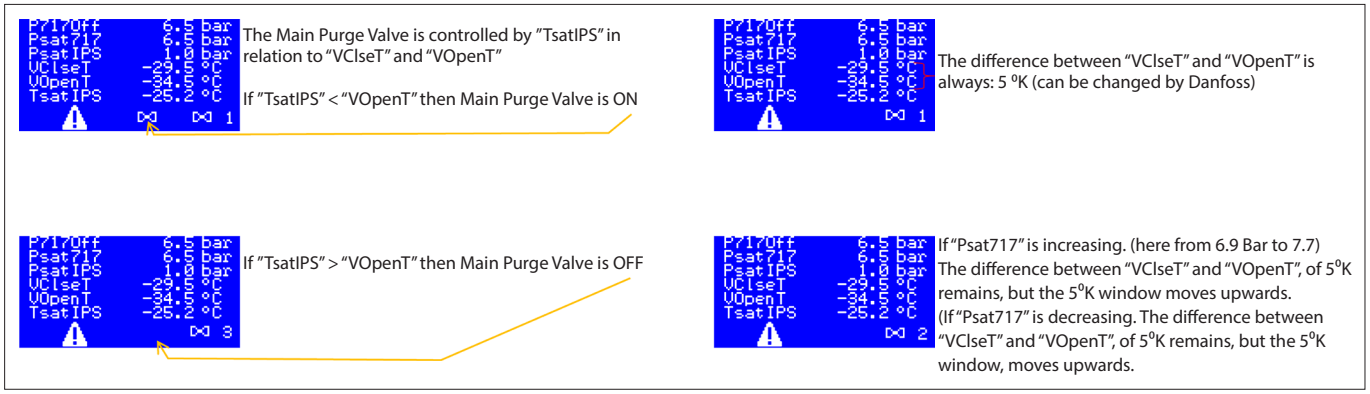

Fig. 3a

Air traps

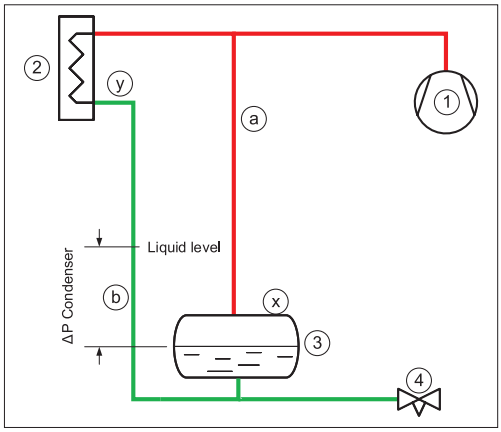

Fig. 4 Liquid level. Bottom connected receiver

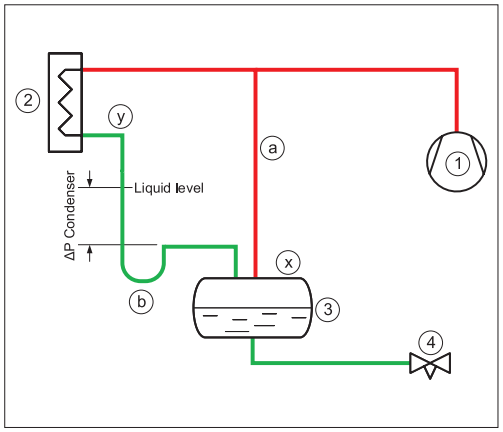

Fig. 5 Liquid level. Top connected receiver

For systems with low pressure liquid level control, the correct condenser/ receiver installation is as shown in Fig. 4 and Fig. 5.

The discharge gas from the compressor (1) is led to the condenser (2) where it is condensed. The receiver (3) holds the liquid until there is a demand for liquid from the LP side, e.g., until the expansion valve (4) opens. If the expansion valve is closed, the liquid condensed in the condenser will need to be stored in the receiver and the level will increase. To ensure a free flow to the receiver, the gas must be allowed to leave the receiver; this process is accomplished through the pressure equalizing line (a). The pressure equalizing line makes the pressure in the receiver the same as in the compressor discharge line. The pressure in the condenser outlet is lower due to the pressure loss in the condenser. Since the condenser outlet pressure is lower than in the receiver, it is therefore necessary to mount the condenser higher than the receiver and allow for a higher liquid level in the piping between the condenser and the receiver (b).

The liquid column in the line (b) compensates for the pressure difference between the condenser outlet and the receiver.

Fig. 4 shows the liquid connection at the bottom of the receiver.

If the liquid from the condenser is connected to the top of the receiver (Fig. 5), a slightly different arrangement must be made.
The liquid line (b) from the condenser to the receiver will need to have a goose neck/liquid trap to ensure that the liquid column is actually established.

As air is heavier than ammonia gas, the air will collect in two locations in this type of installation: On top of the liquid in the receiver (x) and/or on top of the liquid in the drop leg from the condenser (y).

Connection locations

Air purger installation in a low-pressure liquid level controlled installation

The correct locations for the air purger to be connected to the ammonia plant are:
(See Fig. 6 and Fig. 7)

- on top of the receiver or
- on top of the liquid in the drop leg from the condenser.

The air purger (5) is connected to the two purge points through solenoid valves (px and py). Note that only one solenoid should be open at any given time, otherwise the liquid column in the condenser will be short-circuited.
The air purger must have its own liquid return drop leg (c) connected in parallel with the condenser's drop legs (b).

When the purger is connected to the receiver i.e. solenoid (px) open, the liquid level in the air purgers drop leg (c) will be equal to the receiver liquid level (3); when the purger is connected to the condenser outlet i.e. solenoid (py) open, the liquid level will be equal to the liquid level in the condenser drop leg (b).

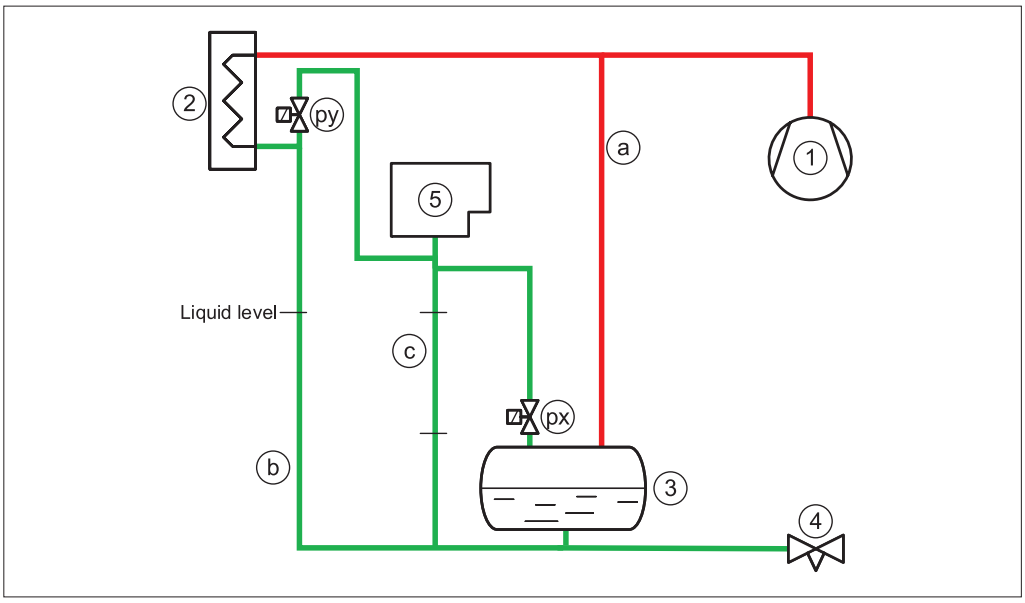

Fig. 6 Purger connections (px) & (py). Drain piping (c) must be vertical/downward slope

Alternatively, the air purger draining of liquid can be achieved effectively through an HP float valve (6) to the low pressure side (see Fig. 7).

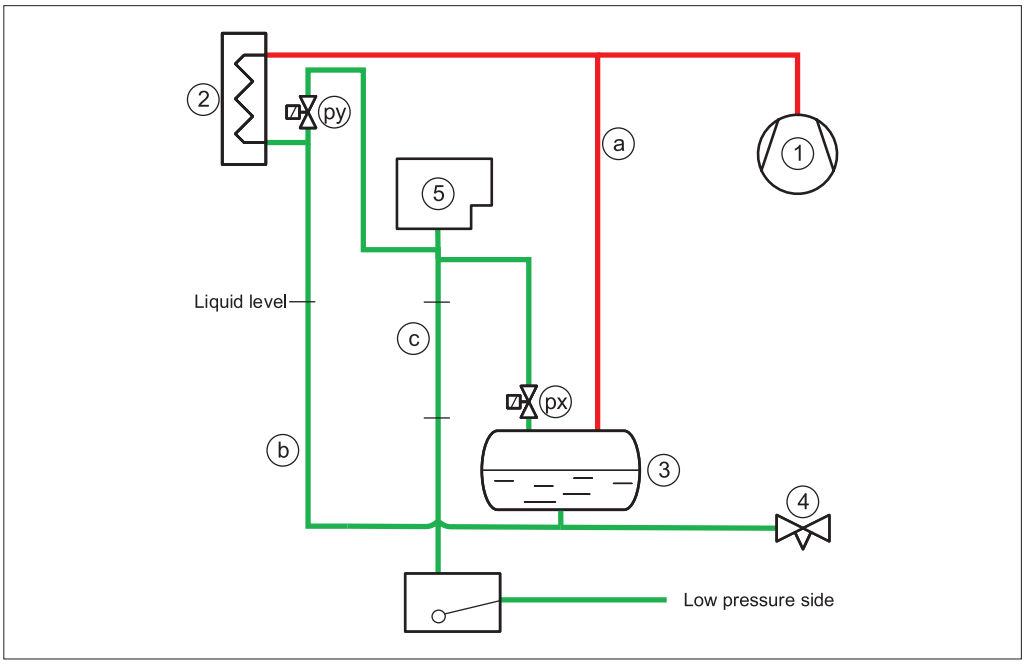

Fig. 7 Purger connections (px) & (py). Drain piping (c) must be vertical/downward slope

© Danfoss | Climate Solutions | 2026.02

Connection locations
(continued)

Air purger installation in a high-pressure liquid level controlled installation

For systems with a high-pressure liquid level control, the air will collect in the float valve (3). (See Fig. 8).

The compressor (1) supplies high-pressure gas to the condenser (2), where it is condensed. The float valve (3) will flash any liquid back to the LP side. The air purger (5) must be connected to the float valve through a solenoid valve (pv).

The ammonia liquid condensed in the air purger must be drained through drain pipe (c) to the LP side via a float valve (6).

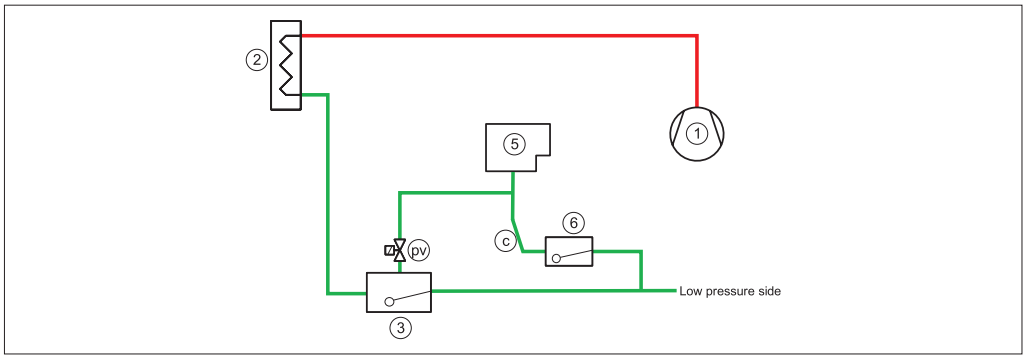

Fig. 8 Purger connections (pv). Drain Piping (c) must be vertical/downward slope

General

The air purger must always be mounted above the highest liquid level to be able to drain the ammonia condensed in it. Otherwise, the air purger can flood and potentially purge ammonia liquid.

The purger liquid return leg (c) must always be mounted vertically or at minimum, with a downward slope.

The solenoid valves at the connection points must never be activated at the same time. Finalize purging at one location before switching to the next.

WARNING !

Cod. 99000572

Follow the installation guide strictly during Purger installation. Install the Purger unit in a location where the bottom flange level and any gas inlet connection level is above any possible ammonia liquid level.

Liquid drain piping from the purger must always have a downward slope.

Install a shut off valve close to the bottom flange entrance to enable removal of the unit and closing for high pressure ammonia gas.

Connect proper resistant piping to the purging outlet pipe and ensure the purged non-condensables are discharged into a water bath of max. 200 liter.

Connection points

Multi-point purging

As factory default, the Danfoss IPS 8 is configured to manage up to 8 purge points. (Multi-point purging. See Fig. 10).
The actual amount of purge points connected needs to be setup in the MCX controller after power-up.
The parameter in question for entering the actual number of purge point: V10, Max_PP (See Table 3).

Single point purging setup is possible (See Fig. 09 -no purge solenoid valves).
For single point purging the parameter in question for entering the actual number of purge point: V10, Max_PP must be set to 1 (See Table 3).

Both power and control wiring of the installed solenoid valves coils should take place prior to first power up.

NEVER HAVE MORE THAN 1 PURGE POINT OPEN AT A TIME.
Always close one purge valve before opening the next.

This is done by turning the purger unit power on and entering the number of actual purge points (V10, Max_PP) in the program. See section "Programming/configuration".

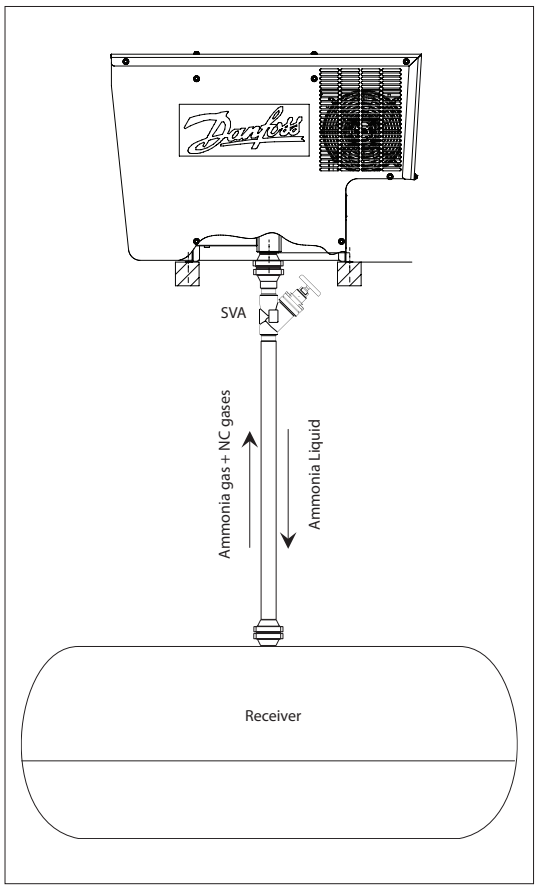

Fig. 9 Single point purging from receiver

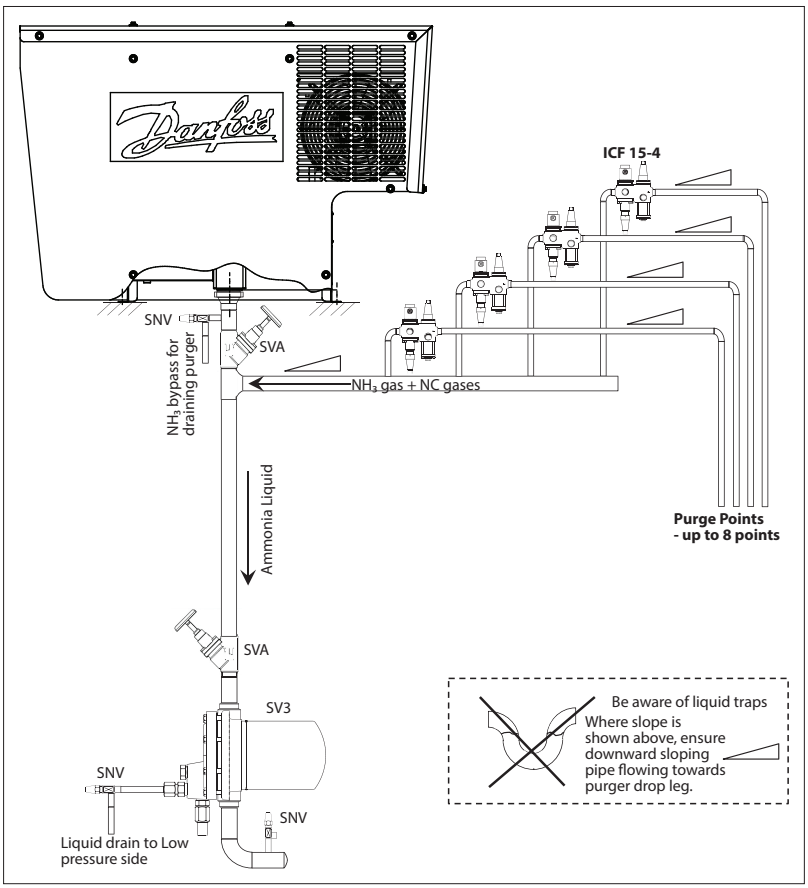

Fig. 10 Multi-point purging from up to 8 purging points

See Installation guide for Danfoss floats:
Type SV3 - Lit.No. : **AN149486432996**
Type ICFD used in ICFD - Lit.No. : **AN250286497620**
Refer Setup IPS 8 for Bubbler support: **AN370832505987**

See Installation guide for LLS 4000 Liquid Level Switch: **AN317523977313**

© Danfoss | Climate Solutions | 2026.02

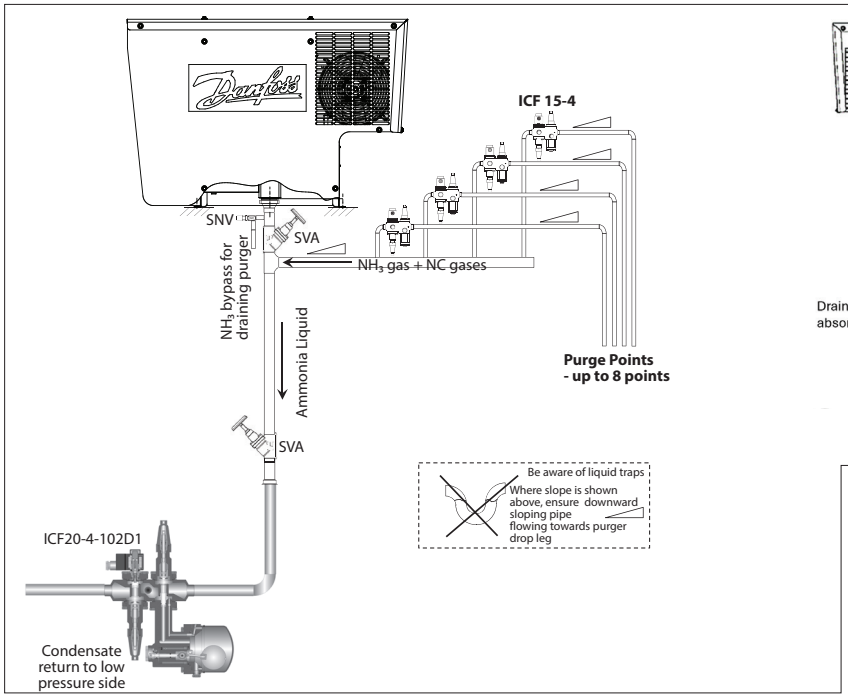

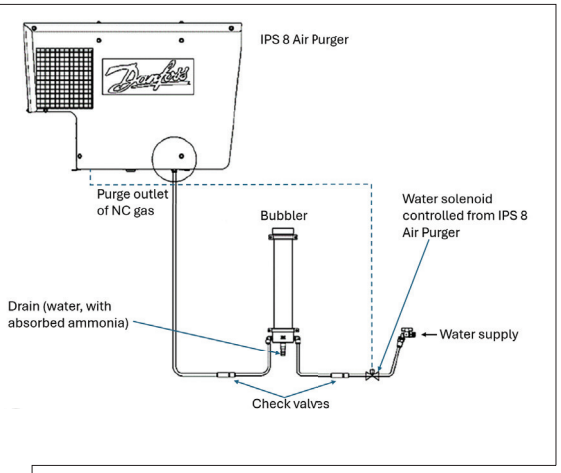

The IPS 8 is prepared for control of the Bubbler. The MCX15B2 controller in the IPS 8 will automatically manage the water level the bubbler. A cleaning cycle program is available along with possible manual operation at start-up.

Fig. 10b Multi-point purgering from up to 8 purgering points and ICFD as a drain valve

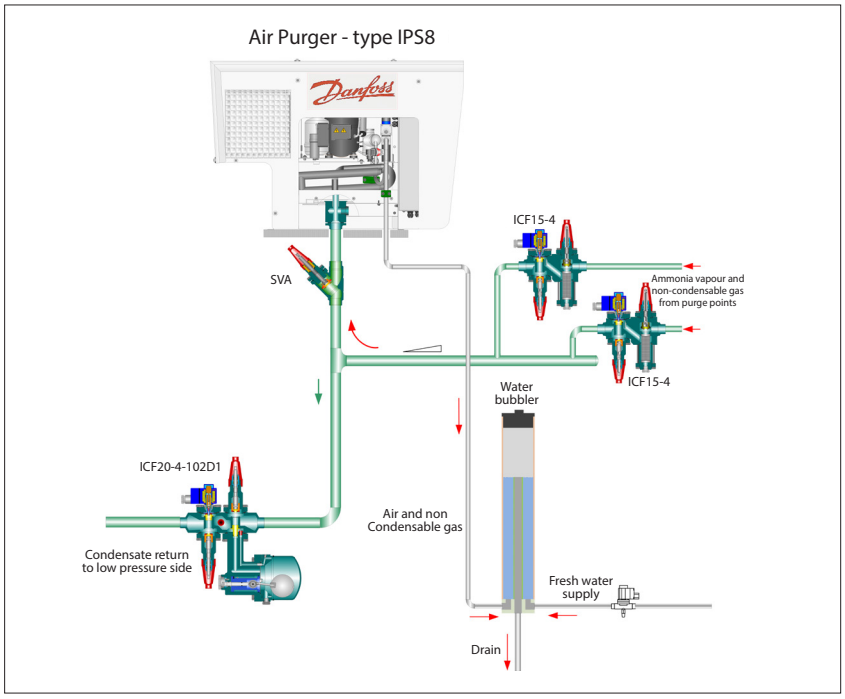

Fig. 10c Multi-point purgering from up to 8 purgering points and ICFD as a drain valve, and bubbler

With our solution of IPS 8 Air Purger combined with the Bubbler, we can help customers to keep machine rooms free of ammonia smelling, while IPS 8 is removing the non-condensable gases, and purging to the Bubbler.

Bubbler activation

Main Switch OFF – Login - Password 200 - Unit config - Bubbler settings - On/Off bubbler - ON

Fig. 10C.1 Bubbler activation

See Installation guide

Bubbler for IPS - 084H5070: **AN480520648609**

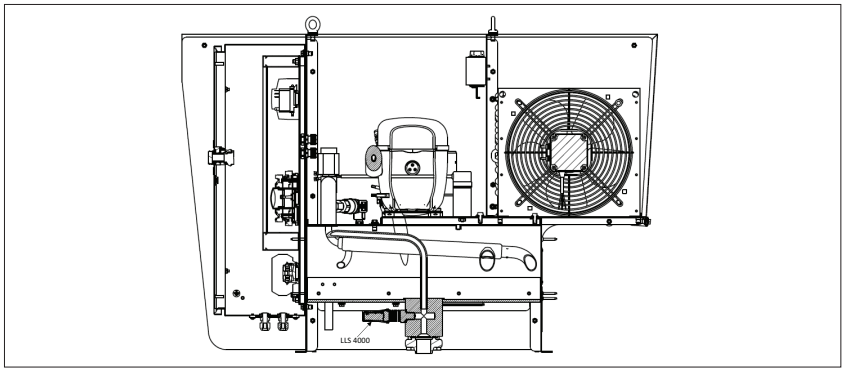

Fig. 10d IPS with LLS 4000 installed

8 Extra Purge Points

8 Extra Purge Points is possible by adding an IPS 8 extension module to the IPS 8, giving in total 16 Purge points.

See Installation guide
IPS 8 extension module - 084H5040:
AN508522055668
See Fig. 10e

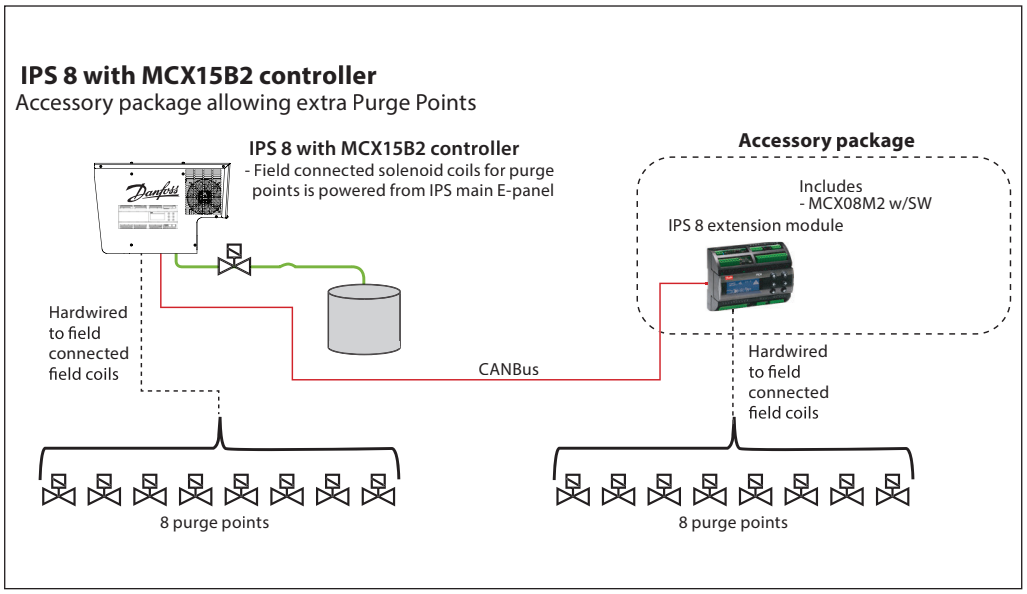

Fig. 10e 8 Extra Purge Points

Installation

The Danfoss IPS 8 must be installed in accordance with locations recommended in the Connection locations and Connection points sections of this document.

The unit has a protection rating of IP55 and may be installed outside, in ambient temperature ranges from from -10 °C to 43 °C / 14 °F to 109 °F). Avoid installation in direct sunlight as this may lead to excessive sunlight exposure and ambient temperatures above allowed limits. For ambient temperatures below -10 °C (14 °F) the air purger must be installed in a heated and ventilated area. The unit must be installed in a non-ATEX atmosphere as the purger unit is not explosion proof.

The purger unit should be kept in an upright position at all times - from receipt to final installation.

Use all 4 lifting eyes and suitable lifting gear during installation (unit weight = 100 kg/220 lbs).

Install the unit on an even horizontal base 0.05 to 1.1 meter (2 to 43 in) above a service platform with sufficient support and allowing the purger subframe to be bolted to the support (see example in Fig. 12). Maintain recommended distances in all directions (Fig. 12) to allow fan cooling and servicing.

Always leave the unit off for at least 12 hours from finished installation to first time power up.

It is important that the support construction is level to ensure the internal liquid trap is properly filled.
Angle to horizontal < 2 degrees

Lifting Procedure

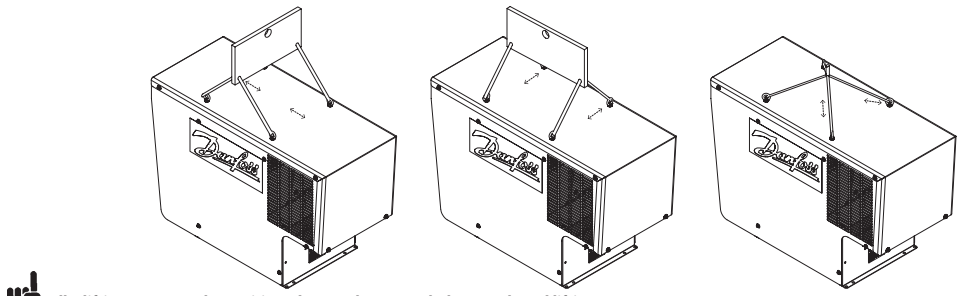

Fig. 11

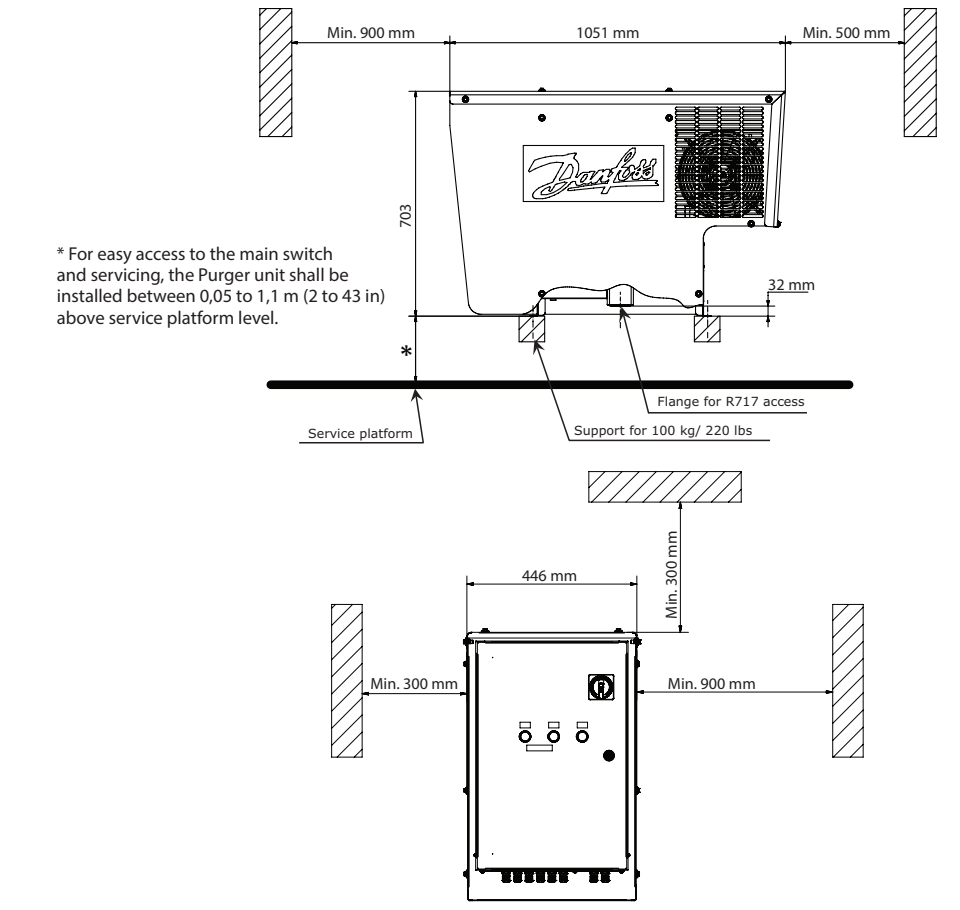

Fig. 12 Installation dimensions

© Danfoss | Climate Solutions | 2026.02

Installation *(continued)*

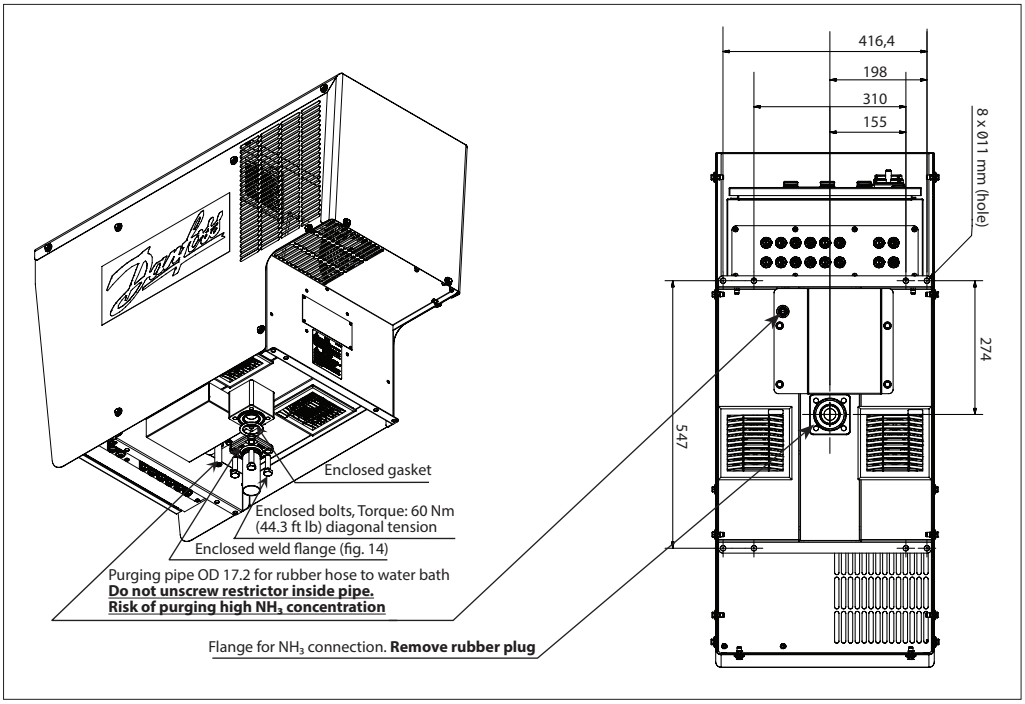

Fig. 13 Ammonia connection

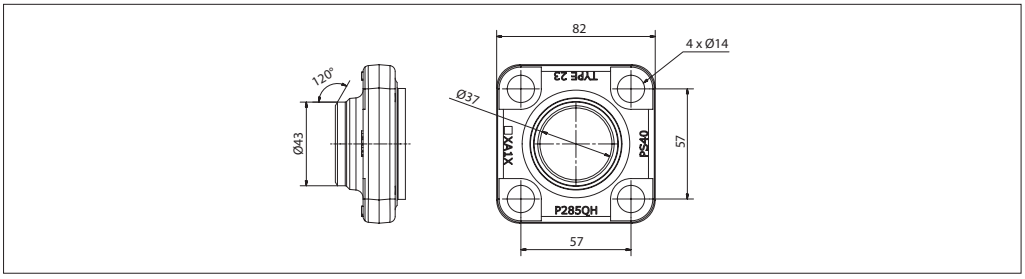

Fig. 14 Enclosed weld flange

1. Prepare the ammonia pipework with the weld flange according to Fig. 13 and Fig. 14. The main/drain piping should never be smaller than inner diameter Ø37 mm (1.5 in).

2. Complete the supporting structure able to carry 100 kg (221 lbs).

3. Lift the purger into position using the lifting eyes on each side of the purger's cabinet. **Remove the rubber plug from the flange opening. See Fig. 13.**

4. Connect the weld flange with the purger flange using the enclosed flat gasket and tighten the supplied 4 bolts diagonally to a torque of 60 Nm (44.3 ft-lb).

5. Insert 4 bolts (not supplied) through the purger frame and the support construction and tighten.

6. Perform a leak test to ensure an airtight connection.

7. In the event the purger unit needs to be dismantled please contact Danfoss for instructions.

8. Correctly install a suitable pipe/hose from the purge solenoid valve for blow-off of NC gases in accordance with local or national regulations.

9. Prepare an outside water tank with a maximum of 200 liters (53 gal.) and ensure the piping allows the purged gas to be immersed in the water.

10. Regularly check the pH level of the tank's contents.

11. The pH level should never exceed 12.6. Otherwise the water content must be renewed.

12. Dispose of concentrated waste water in accordance with to local/national regulations.

Note: Prior to replacing the water in the water tank ensure that the purger is switched off and the shut off valve at the flanged purger inlet is closed. Leave the unit in this condition for a period to allow the remaining gas in the piping to be dissolved/released.
Watch out for bubbles.

Establish a procedure for regular checking the pH level and bubble pattern. If continuous bubbles are observed in the water tank during "stand by" (Green light indicator) in normal operation, one or more of the purge solenoid valves needs repair or replacement.

Electrical wiring

The internal wiring of the purger is done at the factory. Only the electrical wiring for the main power supply, the purge point solenoids and optional bus communication needs wiring on site.

It is highly recommended that all external cables coming from the IPS 8 to the power supply and to all purge point solenoids are protected by metallic pipes.

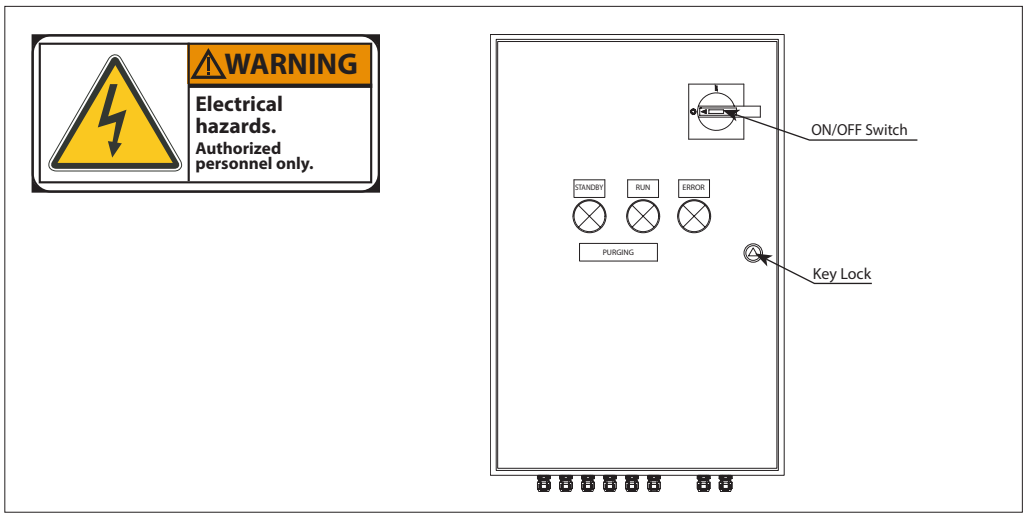

Fig. 15 Controller box external

Controller box cover can only be opened at key unlock and with the main switch off.
Note: Authorized personel only

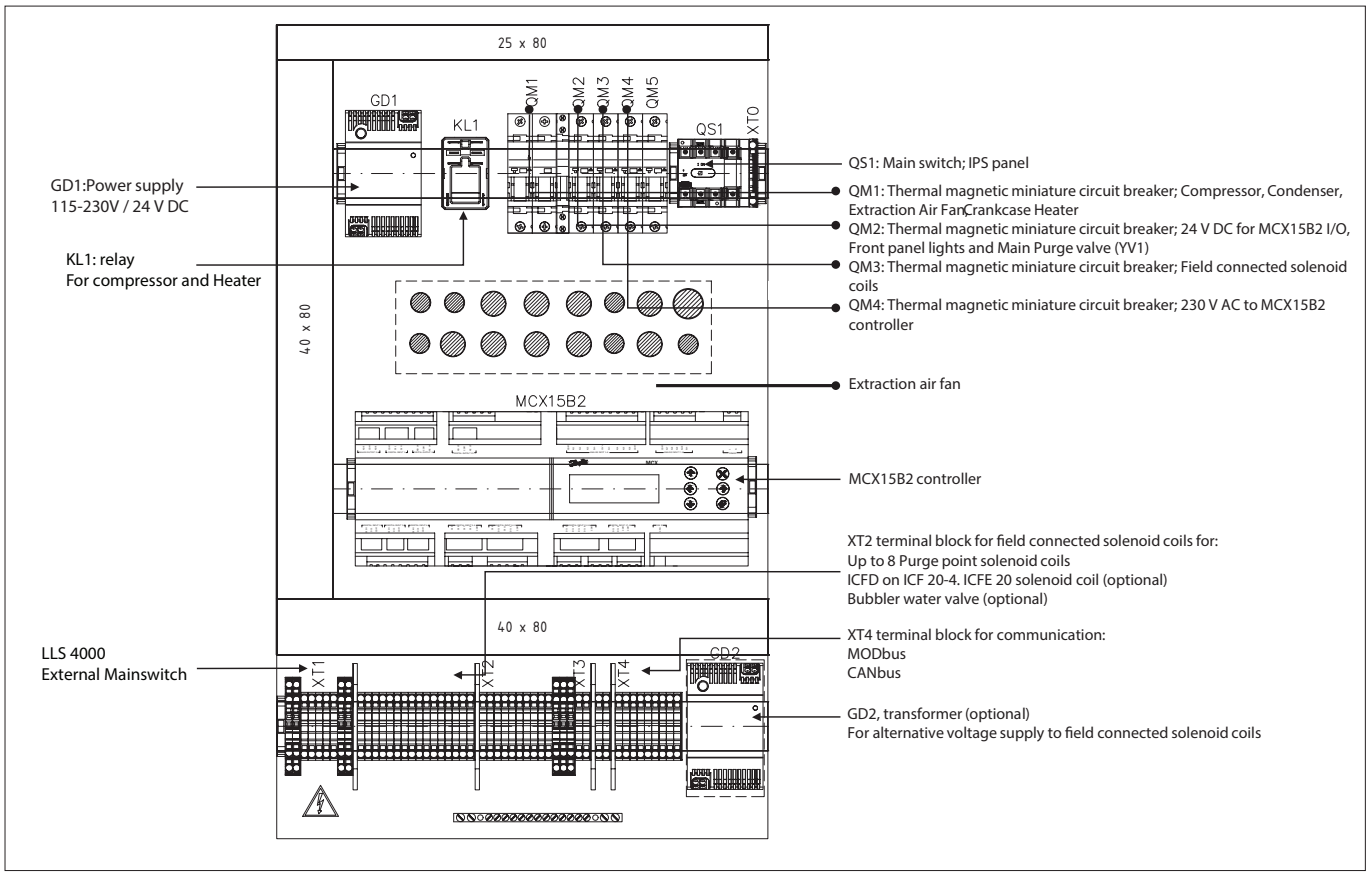

Fig. 16 Controller box internal

© Danfoss | Climate Solutions | 2026.02

Electrical wiring
(continued)

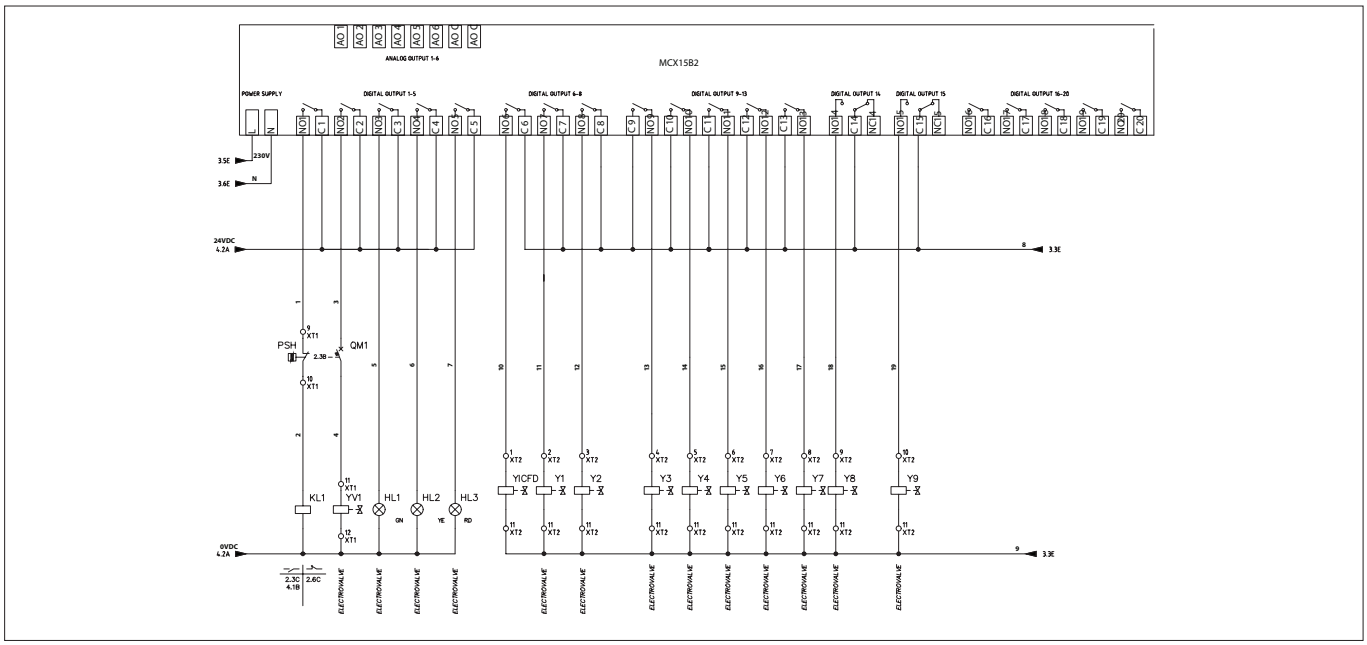

Fig. 17 Power Supply

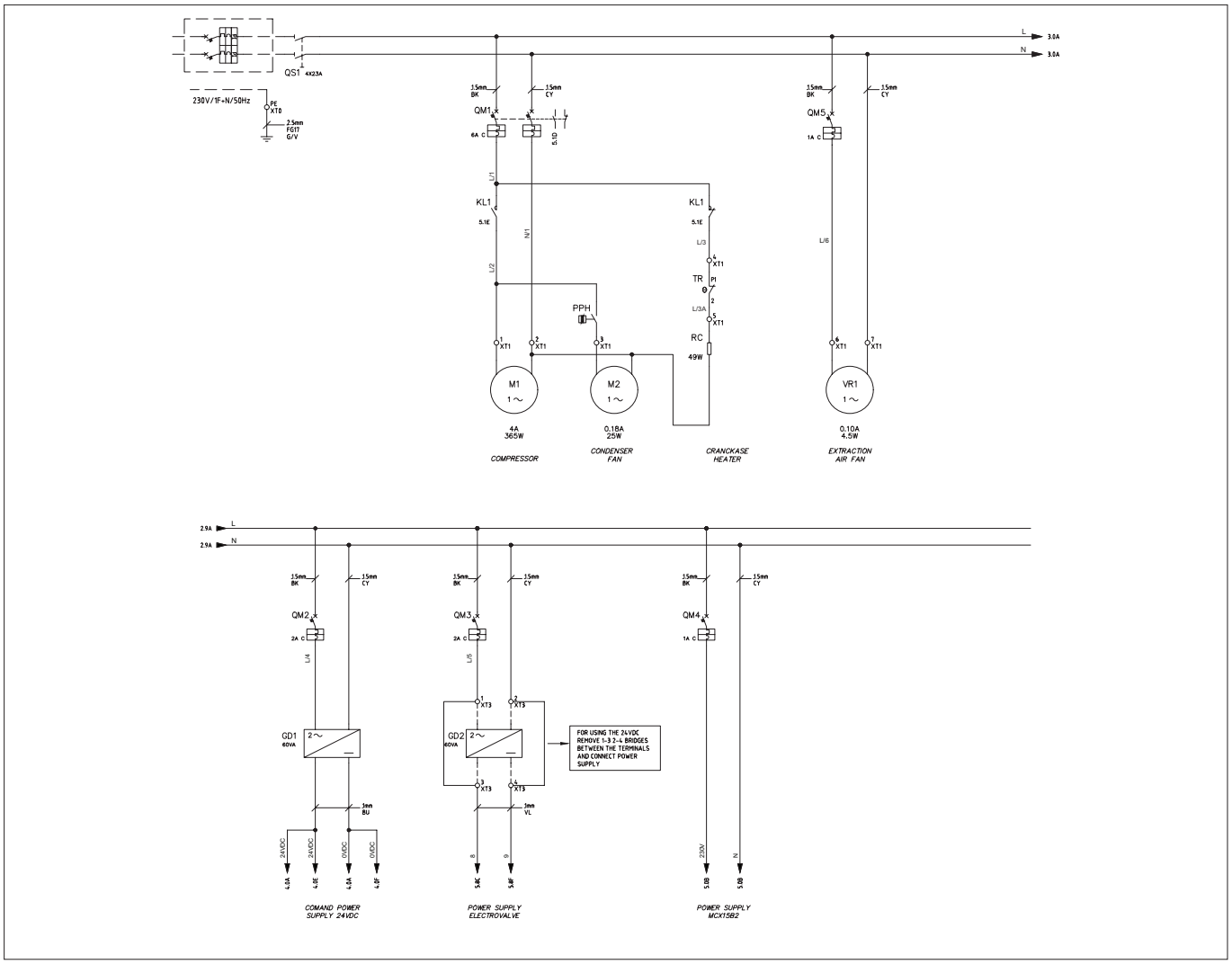

Fig. 18 Controller MCX15B2 Inputs and Outputs

Electrical wiring
(continued)

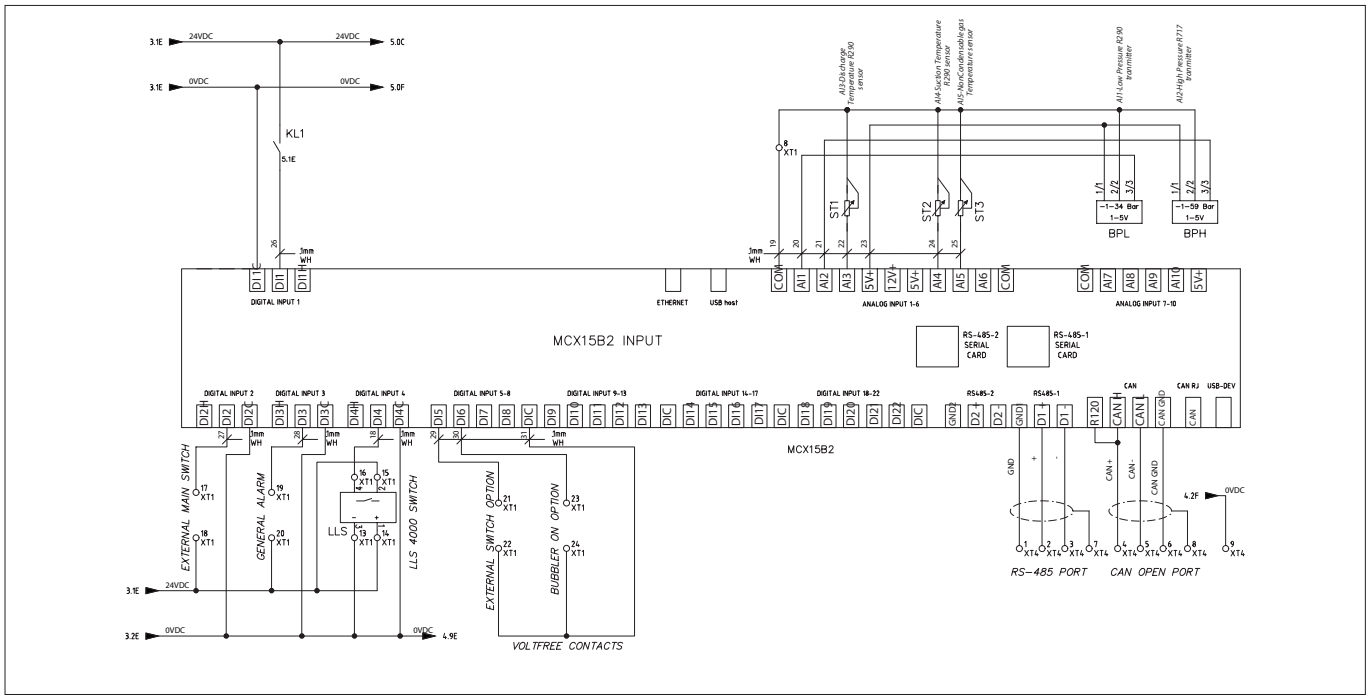

Fig. 19 Controller MCX15B2 Inputs

Light Indicators

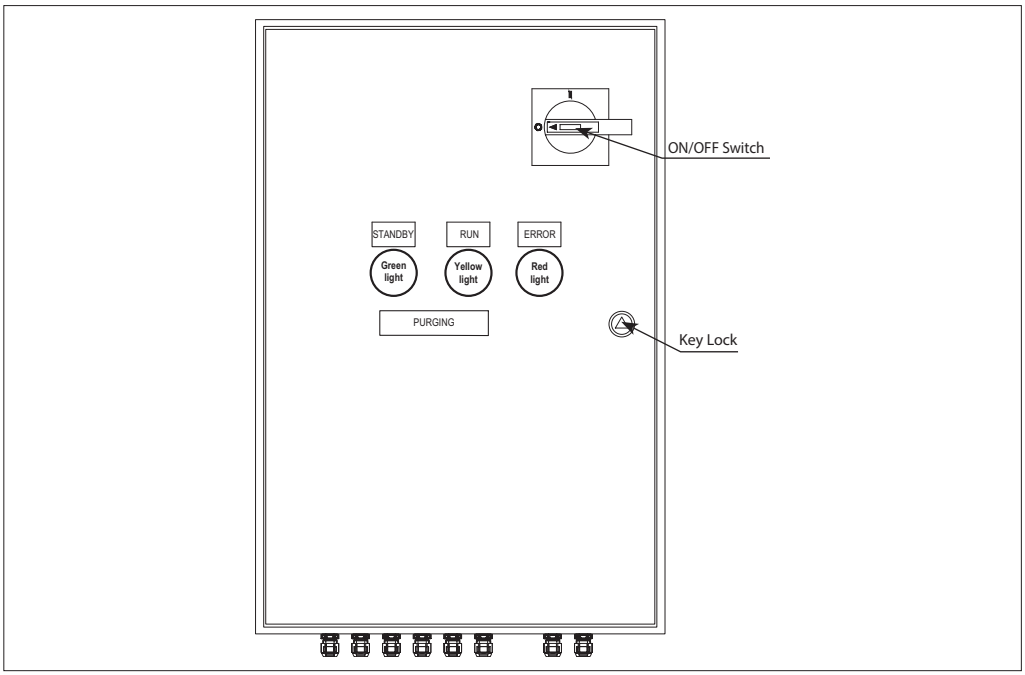

Fig. 20

Lights ON	Status	Compressor ON	Compressor OFF	Purge Valve ON	Purge Valve OFF	Alarm
Green	Stand by		x		x	
Yellow	Run	x			x	
Green & Yellow	Purging	x		x		
Green & Yellow & Red	Uninterupted Long time purging (> 150 h)	x		x*		
Red	Occurs when: Check list of alarms description	(x**)	x**			x

** The purger continuous purging until max running period (default 160 h) is reached and the purger compressor will stop*
*** The purger compressor stops when alarm occurs*

© Danfoss | Climate Solutions | 2026.02

Quick Startup

For the fastest possible system configuration after connecting all purge points to the IPS and following first power up of the IPS, follow these simple instructions:
1. Navigate from the Main Menu to Login
2. Enter password '200'.
3. Choose 'Parameters'.
4. Choose 'Unit Config'
5. Choose 'Valve Settings'
6. Enter the amount of purge solenoid valves connected to the IPS.

Navigation - built in MCX controller
(Placed at the rear of the front panel door)

After switching on the controller, a display window will momentarily show the actual software version, followed by the default main operating window shown in Fig. 26.

While in operation mode, the Up/Down arrow buttons lead the user to the status windows described in Table 01 below.

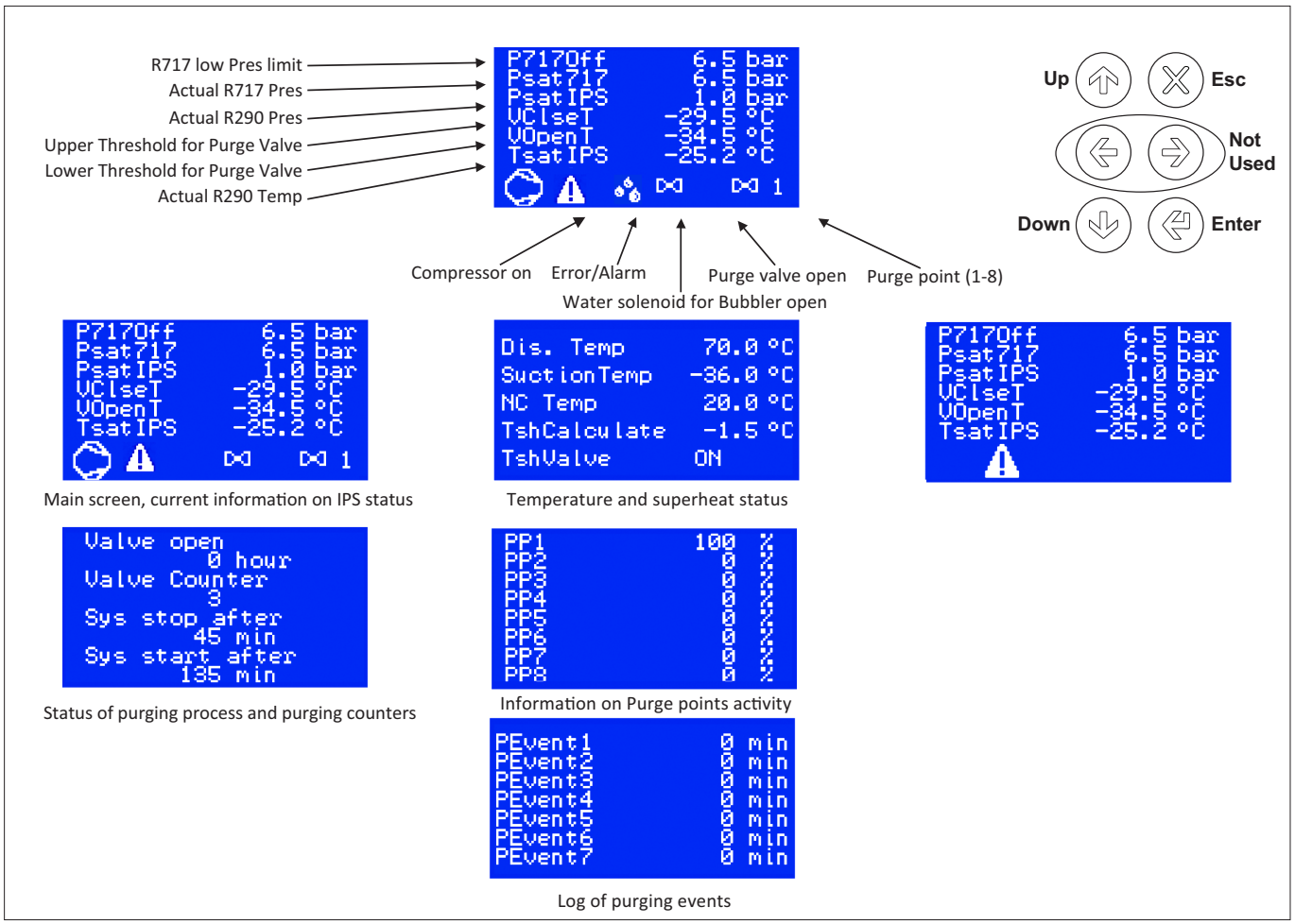

Fig. 21 - Default main window. Operating (start) mode. (Examples only)

Bubbler functionality. See Fig. 22

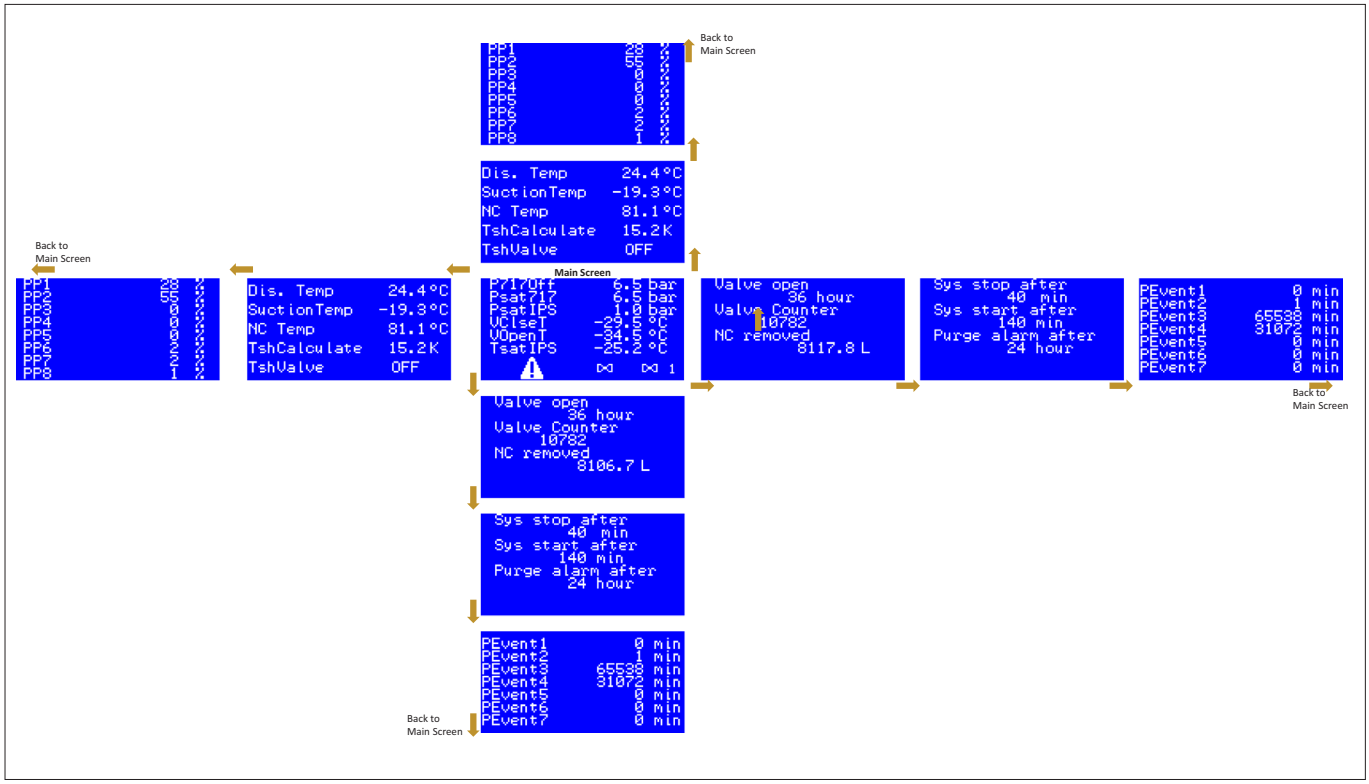

Fig. 21a

Fig. 22

© Danfoss | Climate Solutions | 2026.02

Configuring IPS via the HMI[1] on the MCX15B2 controller

By pressing the main menu will show up with the options below

Table 01
Main menu navigation

Label ID	Parameter Name	Description and selection options	Min.	Max.	Value/ Type	Unit	RW	MODBUS Register
StU	**General > Setup**							
y01	**Main switch**	**Release the IPS for operation** OFF: the IPS is forced out of operation ON: the controller released for operation. Observe if DI1, On/ Off - External Mainswitch must also be ON to release the IPS for operation	0	1	0 - OFF	Enum 1	RW	3001
y07	**Restore default parameters**	**Back factory settings** No: Not active Yes: All parameters will be returned to factory default settings, and the alarm list will be cleared. The parameter will automatically be set back to 'No' when factory reset has finished (after a few seconds).	0	1	0 - NO	Enum 2	RW	3002
SEr	**General > Serial settings**							
SEr	**Serial address (Modbus and CAN)**	**Enter ID adress of the controller** Only relevant if connected to external equipment (like PLC) or other Danfoss equipment.	1	100	1		RW	3006
bAU	**Serial baudrate (Modbus)**	**Baudrate** The system unit usually communicates with 38.400. 0=0 1=12 corresponds to 1200 2=24 corresponds to 2400 3=48 corresponds to 4800 4=96 corresponds to 9600 5=144 corresponds to 14400 6=192 corresponds to 192000 7=288 corresponds to 288000 8=384 corresponds to 38400	0	8	8 - 384	Enum 3	RW	3007
COM	**Serial settings (Modbus)**	**Serial mode** 0=8N1 1=8E1 2=8N2	0	2	1 - 8E1	Enum 4	RW	3008
ExP	**General > Expansion settings**							
Ex1	**Enable expansion**	**Enable expansion of extra purge point** Panel with MCX contoller to purge extra purge points, in addition to the 8 purge points at the main IPS No: Disabel Yes: Enable	0	1	0 - NO	Enum 2	RW	3013
Ex2	**Expansion address**	**Expansion adress of MCX controller** Located in external panel (outside main IPS electrical panel)	0	255	125		RW	3014
CMP	**Unit config > Compressor**							
CM3	**PDT**	**Pull down time** Pull down time of compressor	1	CM4	40	min	RW	3016
CM4	**CST**	**Compressor start time** See Fig. 2 for details	180	2000	1440	min	RW	3017
VA5	**PLT**	**Endless purging max time** Max time for endless purging on one point. When the time has expired, IPS will go to next Purge Point (PP)	2	768	24	h	RW	3018
VAL	**Unit config > Valve settings**							
VA2	**DeltaTValveOFF**	**Temperatue difference Open/Close Main Purge valve** Temperature diffrence between opening and and closing setpoint of main Purge valve on DO2	2.0	10.0	5.0		RW	3019
V10	**Max_PP**	**Max number of Purge points** Enter number of purge point (valves) connected to IPS	1	16	8		RW	3026
BUB	**Unit config > Bubbler settings**							
BU6	**On/Off Bubbler**	**Bubbler connected?** Select if a bubbler is connected and water valve (on DO15)will be controlled OFF: Function disabled ON: Function enabled	0	1	0 - OFF	Enum 1	RW	3032
BU1	**Bubbler time**	**Bubbler time** Time for water valve to open for adding water to bubbler after start of compressor	0	720	30	s	RW	3033
BU2	**Bubbler manual off time**	**Bubbler manual off time** Only active if BU3, Bubbler man start=ON Se description for BU3, Bubbler man start	0	100	1	min	RW	3034
BU3	**Bubbler man start**	**Manual opening of water valve for bubbler** Select manual opening of water valve - DO15 OFF: Function disabled ON: Function enabled. Water valve will be open for the time ,given by BU3, Bubbler man start, have expired and close again	0	1	0 - OFF	Enum 1	RW	3035

[1] Human Machine Interface (HMI) is the interface between the IPS and the user. Here the key pad and the display on the MCX15B2

Label ID	Parameter Name	Description and selection options	Min.	Max.	Value/ Type	Unit	RW	MODBUS Register
BU4	**Clean period**	**Bubbler cleaning program** Setting of time between start cleaning of bubbler. Se description for BU5, Clean duration	0	72	24	h	RW	3036
BU5	**Clean duration**	**Bubbler cleaning program - duration** Once the Cleaning start period, given by BU4, Clean period, has has passed, the water valve - DO15, will open until the time give by BU5, Clean duration has expired	0	100	5	min	RW	3037
BU7	**Water stop delay**	**Water stop delay** Delay for closing water valve - DO15 after main purge valve - DO2 is closed	0	360	30	sec	RW	3038
LIM	**Unit config > Limits settings**							
LI3	**BPLMin**	**Calibration Low Pressure tranmitter R290. [bar]** Minimum value	-1.0	25.0	0.1	bar	RW	3051
F06	**BPLMin**	**Calibration Low Pressure tranmitter R290. [psi]** Minimum value	-14.5	362.6	1.4	Psi	RW	3052
LI6	**BPHMax**	**Calibration of High Pressure tranmitter R717. Min [bar]** Maximum value	-1.0	59.0	24.0	bar	RW	3057
F09	**BPHMax**	**Calibration of High Pressure tranmitter R717. Min [psi]** Maximum value	-14.5	855.7	348.0	Psi	RW	3058
CM1	**Setpoint**	**Setpoint [bar]** Minimum pressure at when the purging process will start. If the P717 pressure (AI2) - is lower than this setpoint, Purge point 1 will open, then Purge point 2 automaticly etc. Once purging a given Purge point and P717 pressure (AI2) - is higher than this setpoint, the cycle with compressor will start. See also V48, Setpoint_Out	5.0	12.0	6.5	bar	RW	3061
F10	**Setpoint**	**Setpoint [psi]** Minimum pressure at when the purging process will start. If the P717 pressure (AI2) - is lower than this setpoint, Purge point 1 will open, then Purge point 2 automaticly etc. Once purging a given Purge point and P717 pressure (AI2) - is higher than this setpoint, the cycle with compressor will start. See also V48, Setpoint_Out	41.0	174.0	94.2	Psi	RW	3062
UNI	**Service > Unit**							
UN1	**Unit sensor**	**Display unit** 0:MET: Metric units - Celsius (°C) and Bar 1:IMP: Imperial units - Fahrenheit (°F) and psi	0	1	0 - Metric	Enum 6	RW	3065
LOG	**Status var > MCX Design Hotspots**							
C01	**Reset Alarms**	**Reset Alarms**	0	2	0		RW	1859
V02	**SystemOnOff**	**System ON / OFF** Status of both intermal and external mainswitch and internal main switch	-32768	32767	0		Read	8101
V03	**ValveStatus**	**Purge Valve status** Startus of Main purge valve AKVA - DO2	-32768	32767	0		Read	8102
V04	**CompressorStatus**	**Compressor Status** Startus of Compressor operation - DO1	-32768	32767	0		Read	8103
V06	**PressTotemp**	**Pressure to temperature** Pressure form Low Pressure tranmitter R290, AI1 calculated to temperature	-327.7	327.7	0.0		Read	8104
V07	**ValveCount**	**Valve counter** The amount of purge valve activations for Main purge valve AKVA - DO2	-2147483648	2147483647	0		Read	8105
V08	**ComprTime**	**ComprTime** Remaining time for compressor pull-down for the actual purge point cycle	-2147483648	2147483647	0		Read	8107
V09	**COmprStartAfter**	**COmprStartAfter** Delay of compressor start between the purging cycles	-2147483648	2147483647	0		Read	8109
V11	**ValveHour**	**Valve Hours** The amount of hours that the main purge valve has been active	-214748364.8	214748364.7	0.0		Read	8111
V12	**StatusKL**	**Startus of relay (KL) operation compressor** Status of KL01 relay (compressor) See electrical diagram	-32768	32767	0		Read	8113
V13	**WaringCompr**	**Warning compressor** Indicates problem with compressor status	-32768	32767	0		Read	8114
V14	**ValveSetpoint**	**Main Purge valve setpoint** Temperature threshhold for the opening of the Main purge valve AKVA on DO2 Correspond to ""VOpenT"" on HMI By default (""VClseT"" - ""VOpenT"")= 5K(9R) The 5K(9R) window will move with the Psat717 on AI2. If Psat717 is increasing both ""VClseT"" and ""VOpenT"" will increase, but with with a difference with 5K(9R) If Psat717 is decreasing both ""VClseT"" and ""VOpenT"" will decrease, but with with a difference with 5K(9R) See also: V15, Valve Close V42, BPHStatus	-2147483648	2147483647	0		Read	8115

© Danfoss | Climate Solutions | 2026.02

Label ID	Parameter Name	Description and selection options	Min.	Max.	Value/ Type	Unit	RW	MODBUS Register
V15	**ValveClose**	**Main Purge valve setpoint** Temperature threshhold for the closing of the Main purge valve AKVA on DO2 Correspond to ""VClseT"" on HMI By default (""VClseT"" - ""VOpenT"")= 5K(9R) If Psat717 is increasing both ""VClseT"" and ""VOpenT"" will increase, but with with a difference with 5K(9R) If Psat717 is decreasing both ""VClseT"" and ""VOpenT"" will decrease, but with with a difference with 5K(9R) See also V14, ValveSetpoint V42, BPHStatus	-2147483648	2147483647	0		Read	8117
V16	**Event1**	**Purge event no. 1** Purge cycle event counts of minutes that the purge valve has been open, during a finished cycle	-3276.8	3276.7	0.0		Read	8118
V17	**Event2**	**Purge event no. 2** Purge cycle event counts of minutes that the purge valve has been open, during a finished cycle	-3276.8	3276.7	0.0		Read	8120
V18	**Event3**	**Purge event no. 3** Purge cycle event counts of minutes that the purge valve has been open, during a finished cycle	-3276.8	3276.7	0.0		Read	8122
V19	**Event4**	**Purge event no. 4** Purge cycle event counts of minutes that the purge valve has been open, during a finished cycle	-3276.8	3276.7	0.0		Read	8124
V20	**Event5**	**Purge event no. 5** Purge cycle event counts of minutes that the purge valve has been open, during a finished cycle	-3276.8	3276.7	0.0		Read	8126
V21	**Event6**	**Purge event no. 6** Purge cycle event counts of minutes that the purge valve has been open, during a finished cycle	-3276.8	3276.7	0.0		Read	8128
V22	**Event7**	**Purge event no. 7** Purge cycle event counts of minutes that the purge valve has been open, during a finished cycle	-3276.8	3276.7	0.0		Read	8130
V23	**PP1**	**Percentage for purge point valve no. 1** The time percentage split for this purge point	-32768	32767	0		Read	8132
V24	**PP2**	**Percentage for purge point valve no. 2** The time percentage split for this purge point	-32768	32767	0		Read	8134
V25	**PP3**	**Percentage for purge point valve no. 3** The time percentage split for this purge point	-32768	32767	0		Read	8136
V26	**PP4**	**Percentage for purge point valve no. 4** The time percentage split for this purge point	-32768	32767	0		Read	8138
V27	**PP5**	**Percentage for purge point valve no. 5** The time percentage split for this purge point	-32768	32767	0		Read	8140
V28	**PP6**	**Percentage for purge point valve no. 6** The time percentage split for this purge point	-32768	32767	0		Read	8142
V29	**PP7**	**Percentage for purge point valve no. 7** The time percentage split for this purge point	-32768	32767	0		Read	8144
V30	**PP8**	**Percentage for purge point valve no. 8** The time percentage split for this purge point	-32768	32767	0		Read	8146
V31	**Val1**	**Status for purge point valve no. 1** This indicates if the purge point is active (open)	-32768	32767	0		Read	8148
V32	**Val2**	**Status for purge point valve no. 2** This indicates if the purge point is active (open)	-32768	32767	0		Read	8149
V33	**Val3**	**Status for purge point valve no. 3** This indicates if the purge point is active (open)	-32768	32767	0		Read	8150
V34	**Val4**	**Status for purge point valve no. 4** This indicates if the purge point is active (open)	-32768	32767	0		Read	8151
V35	**Val5**	**Status for purge point valve no. 5** This indicates if the purge point is active (open)	-32768	32767	0		Read	8152
V36	**Val6**	**Status for purge point valve no. 6** This indicates if the purge point is active (open)	-32768	32767	0		Read	8153
V37	**Val7**	**Status for purge point valve no. 7** This indicates if the purge point is active (open)	-32768	32767	0		Read	8154
V38	**Val8**	**Status for purge point valve no. 8** This indicates if the purge point is active (open)	-32768	32767	0		Read	8155
V40	**TempStatus**	**NonCondensable gas Temperature sensor** NC temperature sensor The measured NC temperature sensor. From AI5	-32768	32767	0		Read	8156
V41	**BPLStatus**	**Low Pressure tranmitter R290** The measured pressure R290. From AI1	-32768	32767	0		Read	8157
V42	**BPHStatus**	**High Pressure tranmitter R717** The measured pressure R717. From AI2	-2147483648	2147483647	0		Read	8158
V43	**DisTemp**	**Discharge Temperature** The measured temperature on the discharge line of compressor. From AI3	-32768	32767	0		Read	8159

Label ID	Parameter Name	Description and selection options	Min.	Max.	Value/ Type	Unit	RW	MODBUS Register
V44	SuctionTemp	**Suction Temperature** The measured temperature at the main purge valve. From AI4	-2147483648	2147483647	0		Read	8160
V45	TshValveStatus	**LOW charge operation** Linked to below mention text on HMI If V46, TshCalculate > 15 K then showing ""TshValve OFF"" the main purge valve, D02 will close If V46, TshCalculate < 15 K then showing ""TshValve ON"" is normal operation	-32768	32767	0		Read	8161
V46	TshCalculate	**Superheat calculated** Calculated Superheat= (T452- P452[C]) T452: Suction Temperature R290 sensor from AI4 P452[C]: Low Pressure tranmitter R290 from AI1 calculated into temperature Shown on HMI as ""Tsh Calculate"" See also: V06, PressTotemp V44, SuctionTemp	-2147483648	2147483647	0		Read	8162
V47	ALARActive	**Alarm active** One or more alarms active 0: No Alarm 1: One or more alarms active	0	1	0		Read	8164
V48	Setpoint_Out	**Read out of setpoint** Similar to readout on HMI: ""P717Off"" See also CM1, Setpoint	-2147483648	2147483647	0		Read	8165
V49	Point_Status	**Read out of which Purge point No. is active** Readout of which Purge point number that is actively purging. Similar to number in HMI	-32768	32767	0		Read	8167
V50	SysOFF	**Read out if IPS is not in operation** Read out if IPS is not in operation	-32768	32767	0		Read	8168
V51	PP9	**Percentage for purge point valve no. 9** The time percentage split for this purge point	-2147483648	2147483647	0		Read	8169
V52	PP10	**Percentage for purge point valve no. 10** The time percentage split for this purge point	-2147483648	2147483647	0		Read	8171
V53	PP11	**Percentage for purge point valve no. 11** The time percentage split for this purge point	-2147483648	2147483647	0		Read	8173
V54	PP12	**Percentage for purge point valve no. 12** The time percentage split for this purge point	-2147483648	2147483647	0		Read	8175
V55	PP13	**Percentage for purge point valve no. 13** The time percentage split for this purge point	-2147483648	2147483647	0		Read	8177
V56	PP14	**Percentage for purge point valve no. 14** The time percentage split for this purge point	-2147483648	2147483647	0		Read	8179
V57	PP15	**Percentage for purge point valve no. 15** The time percentage split for this purge point	-2147483648	2147483647	0		Read	8181
V58	Val9	**Status for purge point valve no. 9** This indicates if the purge point is active (open)	-32768	32767	0		Read	8183
V59	Val10	**Status for purge point valve no. 10** This indicates if the purge point is active (open)	-32768	32767	0		Read	8184
V60	Val11	**Status for purge point valve no. 11** This indicates if the purge point is active (open)	-32768	32767	0		Read	8185
V61	Val12	**Status for purge point valve no. 12** This indicates if the purge point is active (open)	-32768	32767	0		Read	8186
V62	Val13	**Status for purge point valve no. 13** This indicates if the purge point is active (open)	-32768	32767	0		Read	8187
V63	Val14	**Status for purge point valve no. 14** This indicates if the purge point is active (open)	-32768	32767	0		Read	8188
V64	Val15	**Status for purge point valve no. 15** This indicates if the purge point is active (open)	-32768	32767	0		Read	8189
V66	ResetMem	**Reset Memory**	0	1	0		RW	9902
V66	PLT_Out_Timer	**Timeout for PLT timer**	-2147483648	2147483647	0		Read	8191
V67	Bubler	**Water solenoid for Bubbler Status** This indicates if the Water solenoid is closed or open. Connected on DO15	-32768	32767	0		Read	8193
V68	ICFD_Status	**ICFD Status** This indicates if the ICFD is closed or open. Connected on DO6	-32768	32767	0		Read	8194
V69	Val16	**Status for purge point valve no. 16** This indicates if the purge point is active (open)	-32768	32767	0		Read	8195
V70	Liter	**Amount of NC liters removed** Show how many liters of Non Condensable gases have been removed in total	-2147483648	2147483647	0		Read	8196
V71	PP16	**Percentage for purge point valve no. 16** The time percentage split for this purge point	-2147483648	2147483647	0		Read	8198

© Danfoss | Climate Solutions | 2026.02

ALARMS E type: System related A type: General Process alarms All Auto Reset, except E13								
	Parameter Name	**Description**	**Min.**	**Max.**	**Value/ Type**	**Unit**	**RW**	**ADU**
A01	General alarm	If DI3, General Alarms is OFF, it leads to shut down of IPS 8	0	1	AUTO	ACTIVE	Read	1901 .08
E01	NC Temp Sensor Fault	AI5, NC temperatrue sensor fault	0	1	AUTO	ACTIVE	Read	1901 .09
E02	BPL Sensor Fault	AI1, Low Pressure R290 tranmitter fault	0	1	AUTO	ACTIVE	Read	1901 .10
E03	BPH Sensor Fault	AI2, High Pressure R717 tranmitter fault	0	1	AUTO	ACTIVE	Read	1901 .11
E04	Dis.Temp.Sens Low temperature	AI3, Discharge Temperature R290 sensor. Low temperature alarm	0	1	AUTO	ACTIVE	Read	1901 .12
E05	Dis.Temp.Sens Hi temperature	AI3, Discharge Temperature R290 sensor. High temperature alarm	0	1	AUTO	ACTIVE	Read	1901 .13
E06	Low pressure BPL	AI1, Low Pressure R290 tranmitter. Low pressure alarm	0	1	AUTO	ACTIVE	Read	1901 .14
E07	Hi pressure BPL	AI1, Low Pressure R290 tranmitter. High pressure alarm	0	1	AUTO	ACTIVE	Read	1901 .15
E08	Low pressure BPH	AI2, High Pressure R717 tranmitter. Low pressure alarm	0	1	AUTO	ACTIVE	Read	1901 .00
E09	Hi pressure BPH	AI2, High Pressure R717 tranmitter. High pressure alarm	0	1	AUTO	ACTIVE	Read	1901 .01
E10	System is OFF	If DI2, (external) Main Switch is OFF, it leads to shut down of IPS	0	1	AUTO	ACTIVE	Read	1901 .02
E11	Memory is full	A memory reset is required	0	1	AUTO	ACTIVE	Read	1901 .03
E12	Totla purge time error	Occurs when PLT is activated. System will automatically restart when CST has expired	0	1	AUTO	ACTIVE	Read	1901 .04
E13	Compressor EROR	Feedback from compressor relay KL1 in electrical panel of IPS If DI1, Status KL1 - Compressor in operation, is OFF, while DO1, Compressor is ON, it leads to to shut down of IPS	0	1	AUTO	ACTIVE	Read	1901 .05
E14	Liquid alarm	If DI4, LLS 4000 is OFF (liquid in the evaporator), it leads to shut down of IPS	0	1	Manual Mode	ACTIVE	Read	1901 .06
E15	Memory wrong!	Carry out: Reset to factory setting	0	1	AUTO	ACTIVE	Read	1901 .07
E16	Discharge sensor error	AI3, Discharge Temperature R290 sensor fault	0	1	AUTO	ACTIVE	Read	1902 .08
E17	Suction sensor error	AI4, Suction Temperature R290 sensor fault	0	1	AUTO	ACTIVE	Read	1902 .09
E18	Tsh Alarm	Superheat alarm. If V46, TshCalculate> Alarm setting default Delta 15 K (LI7, Tsh Danfoss only.)	0	1	AUTO	ACTIVE	Read	1902 .10
E19	NC.Temp.Sensor Hi temperature	AI5, NonCondensable gas Temperature sensor High temperature alarm	0	1	AUTO	ACTIVE	Read	1902 .11
E20	NC.TempSens Low temperature	AI5, NonCondensable gas Temperature sensor Low temperature alarm (-10 ºC)	0	1	AUTO	ACTIVE	Read	1902 .12
E21	TempSucion.Sens Hi temperature	AI4, Suction Temperature R290 sensor. High temperature alarm	0	1	AUTO	ACTIVE	Read	1902 .13
E22	TempSucion.Sens Low temperature	AI4, Suction Temperature R290 sensor. Low temperature alarm	0	1	AUTO	ACTIVE	Read	1902 .14
E23	Configuration error	No Expansion panel found	0	1	AUTO	ACTIVE	Read	1902 .15
E24	Link error	No Expansion panel lost. Check CAN connection	0	1	AUTO	ACTIVE	Read	1902 .00
	I/O CONFIGURATION							
	PARAMETER NAME	**Description**	**MIN**	**MAX**	**VALUE/ TYPE**	**UNIT**	**RW**	**ADU**
AI	ANALOG INPUTS							
1	BPL-1/34	Low Pressure R290 tranmitter	-1.0	34.0	0-5 V		Read	18503
2	BPH-1/59	High Pressure R717 tranmitter	-1.0	59.0	0-5 V		Read	18504
3	Dis. Temp	Discharge Temperature R290 sensor	-30.0	170.0	PT1000		Read	18502
4	Suction Temp	Suction Temperature R290 sensor	-50.0	170.0	PT1000		Read	18506
5	NC Temp	NonCondensable gas Temperature sensor	-50.0	170.0	PT1000		Read	18505
DI	**DIGITAL INPUTS**							
1	Status KL1	Status KL1 - Compressor in operation	0	1	N.O.		Read	17504
2	On/Off	On/Off - External Mainswitch	0	1	N.O.		Read	17502
3	General Alarm	General Alarm - SW prepared	0	1	N.O.		Read	17503
4	LiquidAlarm	Liquid Alarm - from LLS 4000/4000U	0	1	N.O.		Read	17505
5	Switch	Switch - Switch to the next purge point (pulse). SW prepared	0	1	N.O.		Read	17506
6	Bubbler On	Bubbler On - Force Bubbler solenoid ON. SW prepared	0	1	N.O.		Read	17507

	Parameter Name	Description	Min.	Max.	Value/ Type	Unit	RW	ADU
DO	**DIGITAL OUTPUTS**							
1	Compressor	Compressor	0	1	N.O.		Read	18007
2	Valve	Valve - Main purge valve AKVA	0	1	N.O.		Read	18008
3	Green	Green - Lamp in front panel - Standby	0	1	N.O.		Read	18004
4	Yellow	Yellow- Lamp in front panel - Run	0	1	N.O.		Read	18005
5	DO_Red	Red - Lamp in front panel - Error	0	1	N.O.		Read	18006
6	ICFD_Valve	ICFD_Valve	0	1	N.O.		Read	18017
7	Valve1	Purge valve no. 1	0	1	N.O.		Read	18009
8	Valve2	Purge valve no. 2	0	1	N.O.		Read	18010
9	Valve3	Purge valve no. 3	0	1	N.O.		Read	18011
10	Valve4	Purge valve no. 4	0	1	N.O.		Read	18012
11	Valve5	Purge valve no. 5	0	1	N.O.		Read	18013
12	Valve6	Purge valve no. 6	0	1	N.O.		Read	18014
13	Valve7	Purge valve no. 7	0	1	N.O.		Read	18015
14	Valve8	Purge valve no. 8	0	1	N.O.		Read	18016
15	Bubler	Water valve for bubler	0	1	N.O.		Read	18018
16	Valve9	Purge valve no. 9	0	1	N.O.		Read	18019
17	Valve10	Purge valve no. 10	0	1	N.O.		Read	18020
18	Valve11	Purge valve no. 11	0	1	N.O.		Read	18021
19	Valve12	Purge valve no. 12	0	1	N.O.		Read	18022
20	Valve13	Purge valve no. 13	0	1	N.O.		Read	18023
21	Valve14	Purge valve no. 14	0	1	N.O.		Read	18024
22	Valve15	Purge valve no. 15	0	1	N.O.		Read	18025
23	Alarm	Alarm	0	1	N.O.		Read	18002

© Danfoss | Climate Solutions | 2026.02

Table 02
Occurring active alarms, possible reasons and recommended action

Label	Parameter Name	Description	Possible Reason	Recommended action
	ALARMS			
A01	General alarm	Input from AI3 Leads to shut down of IPS 8	Fault in system connected to the DIO4	Input from AI3 Leads to shut down of IPS 9
E01	Temp Sensor Fault	Indicates no signal from temperature sensor (R290)	Broken wire to R290 temperature sensor	Repair temperature sensor wire or replace temperature sensor
E01	Temp Sensor Fault	Indicates no signal from temperature sensor (R290)	Electrical supply failure supplying R290 temperature sensor	Repair or replace power source
E01	Temp Sensor Fault	Indicates no signal from temperature sensor (R290)	Temperature measurement of the R290 line is out of range	Compare temperature with another temperature sensor reading and replace temperature sensor if needed
E02	BPL Sensor Fault	Indicates no signal from pressure transmitter (R290)	Broken wire to R290 pressure transmitter	Repair pressure transmitter wire or replace pressure transmitter
E02	BPL Sensor Fault	Indicates no signal from pressure transmitter (R290)	Electrical supply failure to the R290 pressure transmitter	Repair or replace power source
E02	BPL Sensor Fault	Indicates no signal from pressure transmitter (R290)	Pressure measurement of the R290 line is out of range	Compare pressure with another pressure reading and replace pressure transmitter if needed
E03	BPH Sensor Fault	Indicates no signal from pressure transmitter (R717)	Broken wire to R717 pressure transmitter	Repair pressure transmitter wire or replace pressure transmitter
E03	BPH Sensor Fault	Indicates no signal from pressure transmitter (R717)	Electrical supply failure to the R717 pressure transmitter	Repair or replace power source
E03	BPH Sensor Fault	Indicates no signal from pressure transmitter (R717)	Pressure measurement of the R717 line is out of range	Compare pressure with another pressure reading and replace pressure transmitter if needed
E04	Low temperature	Indicates too low ambient temperature (<-10 °C)	Too low ambient temperature	Move the IPS to a higher ambient temperature
E05	High temperature	Indicates too high ambient temperature (>120 °C)	Too high ambient temperature	Move the IPS to a lower ambient temperature
E05	High temperature	Low R290 charge because of possible leak	Locate and repair leak	Move the IPS to a lower ambient temperature
E06	Low pressure BPL	Indicates too low R290 pressure	Choked restrictor / wrong piping	Factory setting 0.3 bar, we can have several problems: a) Restrictor is blocked (clean it). b) Wrong piping and as addition ammonia is draining, so check piping's. c) Check SV float
E07	High pressure BPL	Indicates too high R290 pressure	R290 system pressure too high	a) Expansion valve is not working b) To high ambient temperature (24 bar /54 °C)
E08	Low pressure BPH	Indicates too low R717 pressure	Closed stop valve	Purge points are blocked, or flange is blocked with rubber plug
E09	High pressure BPH	Indicates too high R717 pressure	R717 system pressure too high	Pressure is 24 bar
E10	System is OFF	Indicates status of the main switch	Main switch is OFF	Switch ON the main switch
E11	Memory is full	A memory reset is required	Memory is full from long time operation	Clean MCX memory by means of finding Parameters_UnitConfig_
E12	Totla purge time error	This occurs when PLT is activated System will automatically restart when CST has expired	Restrictor is blocked	Replace the restrictor
E13	Compressor ERROR	Indicates no status is being received from relay KL01	Possible broken wire from the MCX	Repair broken wire from the MCX
E14	Liquid alarm	Signal from the LLS that there is liquid in the evaporator	Check piping	
E15	Memory wrong!	Wrong counter values	Carry out: **Reset** to factory setting	
E16	Discharge sensor error	Indicates no signal from temperature sensor	Check sensor	
E17	Suction sensor error	Indicates no signal from temperature sensor	Check sensor	

All alarms except (*) activates red light on box outside
For alarms not resettable and/or cause not identified, please contact Danfoss
Level legend: 0 = Read view, 2 = Installer view (code 200) 3 = Danfoss Service view (Contact Danfoss)

Modbus RTU

Good Practice

The wiring of Modbus RTU (RS485) must be carried out in accordance with the standard ANSI/TIA/EIA-485-A-1998.
Galvanic separation shall be provided for segments crossing buildings.
Common ground shall be used for all devices on the same network inclusive router, gateways etc.
All bus connections in the cables are made with twisted pair wires.
The recommended cable type for this is AWG 22/0.32 mm^2. If used for longer distances please use a AWG 20/0.5mm^2 or AWG 18/0.75mm^2 cable. The cables characteristic impedance shall be between 100 – 130Ω The capacitance between conductors shall be less than 100 pf per meter.

Note: the length of the cables influence the communication speed used. Longer cable lengths mean lower baud rate should be used. Maximum cable length allowed is 1200m.
Use a minimum 20 cm distance between 110V/230V/400V power line cables and bus cables.

Maintenance/Service/ Disposal

Table 03
Maintenance checklist - Perform once a year minimum

1	Use P&I dagram and check that all powered components are working properly
2	Check for alarms in the MCX controller
3	Fans, air filters and fins must be cleaned for dirt and dust
4	Expansion valve must be inspected and must be replaced if damaged
5	Ensure expansion valves sensor bulb has good contact with suction line
6	Replace water in water bubble bath. Check pH level frequently and replace when pH > 12.6
7	Check cover is mounted correctly and all bolts are tightened accordingly
8	Check and verify the amperage of the unit
9	Check for abnormal compressor noises in normal operating conditions (may indicate loose bolts, worn bearings or pistons)

Table 04
Procedure to isolate IPS for servicing

	Multipoint	Single point purging from receiver
1	Close all supply lines from the purge points of the ammonia system. Do not close any stop valve between IPS 8 and float valve	Restart the controller to force pump-down
2	Restart the controller to force pump-down	Wait 20 minutes
3	Wait 20 minutes	
4	Stop the compressor by turning the compressor switch QM1 to the off position	Stop the compressor by turning the compressor switch QM1 to the off position
5	Close the SVA shut-off valve in the drain line (located under the IPS 8)	Close the SVA shut-off valve in the drain line (located under the IPS 8)
6	Release the remaining system pressure to atmosphere by opening the SNV drain valve. This can also be done by attaching a permanent magnet on the AKVA 10 valve for forced opening	Release the remaining system pressure to atmosphere by opening the SNV drain valve. This can also be done by attaching a permanent magnet on the AKVA 10 valve for forced opening

Disposal of the IPS 8

If an IPS 8 unit is worn out and has to be replaced, the disposal must be done in accordance with national legislation and only done by competent personnel.

© Danfoss | Climate Solutions | 2026.02

Danfoss A/S
Climate Solutions • danfoss.com • +45 7488 2222

Any information, including, but not limited to information on selection of product, its application or use, product design, weight, dimensions, capacity or any other technical data in product manuals, catalogues descriptions, advertisements, etc. and whether made available in writing, orally, electronically, online or via download, shall be considered informative, and is only binding if and to the extent, explicit reference is made in a quotation or order confirmation. Danfoss cannot accept any responsibility for possible errors in catalogues, brochures, videos and other material.
Danfoss reserves the right to alter its products without notice. This also applies to products ordered but not delivered provided that such alterations can be made without changes to form, fit or function of the product.
All trademarks in this material are property of Danfoss A/S or Danfoss group companies. Danfoss and the Danfoss logo are trademarks of Danfoss A/S. All rights reserved.