MAKING MODERN LIVING POSSIBLE

Solar assisted Ice Cream Cabinet

– with Danfoss BD100CN direct current operated propane compressor

Ice cream cabinets using environmentally friendly HFC-free refrigerants with low power requirement.

- **High efficiency - *low energy consumption***
- **AEO - *Adaptive Energy Optimization***
- **Starting current reduced to a minimum**
- **Adjustable variable speed**
- **Reduces your *Carbon Footprint***

COOLING with conscience®

During the Olympic Games in Sydney, Australia 2000, ice cream cabinets using hydrocarbon (HC) refrigerants were tested. These have been subsequently rolled out in large numbers in Europe.

An extension of the project has been to investigate whether solar panels could be used to reduce energy consumption. This project was run jointly with Danfoss, who developed a compressor using HC refrigerant, that was capable of running on DC power supply with a low power requirement on start up and running so that it could be used with solar panels and a battery.

These compressors were fitted in an Ice Cream Cabinet where part of the energy supply comes from a 80 W solar panel, and the remaining part is coming from a 130 Ah solar deep cycle maintenance free battery. Initial tests suggest that it is capable of maintaining the temperature inside the cabinet even at +50°C ambient temperatures.

During the Athens Olympic Games and the autumn, four of these Ice Cream cabinets were located at strategic places in the centre of Athens.

Fig. 1 shows a detailed energy supply diagram.
During the night the cabinets are moved to a place with mains supply to charge the batteries.
The size of the solar panel has been chosen so that the contribution from the PV panel is approx. 35% of the total energy consumption of the cabinet, see **Fig. 3**.

Fig. 2 shows the energy flow in the cabinet over 24 hours. As it can be seen from the figure there is a surplus of energy from the solar panel during day. The surplus of energy is charged into the battery.

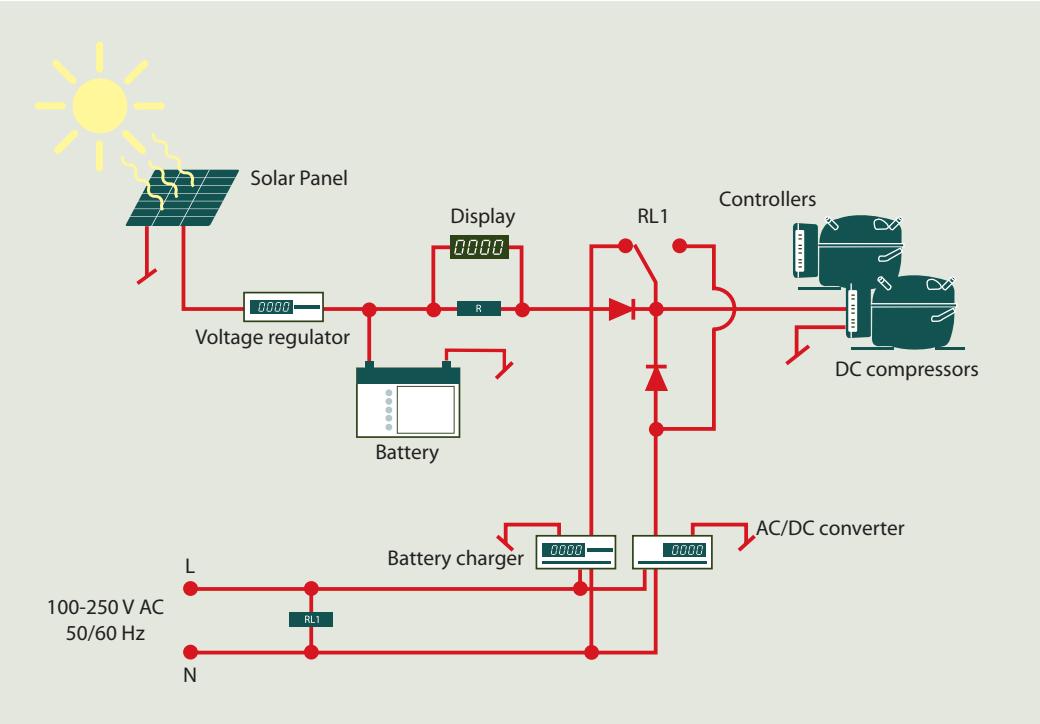

Fig. 1 – Energy supply diagram

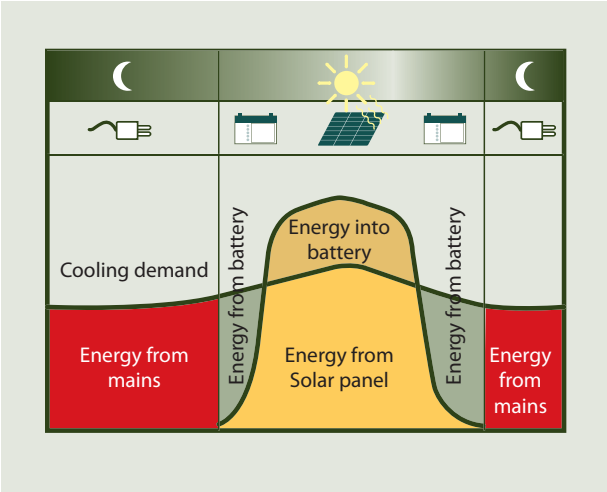

Fig. 2 – Energy Flow

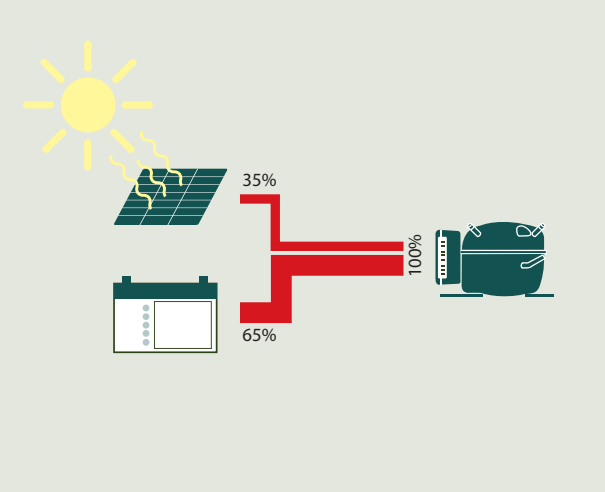

Fig. 3 – Solar contribution per 24 hours

Danfoss Household Compressors GmbH • Mads-Clausen-Str. 7 • D-24939 Flensburg / Germany • Tel: +49 (0461) 4941-0 • **compressors.danfoss.com**

Danfoss can accept no responsibility for possible errors in catalogues, brochures and other printed material. Danfoss reserves the right to alter its products without notice. This also applies to products already on order provided that such alterations can be made without subsequential changes being necessary in specifications already agreed.
All trademarks in this material are property of the respective companies. Danfoss and the Danfoss logotype are trademarks of Danfoss A/S. All rights reserved

DEHC.EN.100.F2.02/520N1028 Produced by Danfoss Household Compressors, DEHC6093, 05.2010