ENGINEERING
TOMORROW

Operating Guide

NovoCon® L/XL

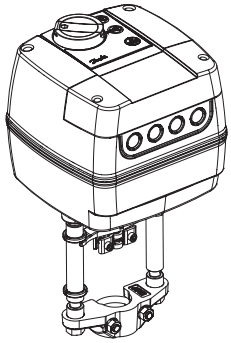

NovoCon® L / SU / SD

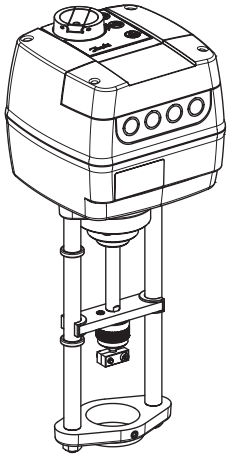

NovoCon® XL

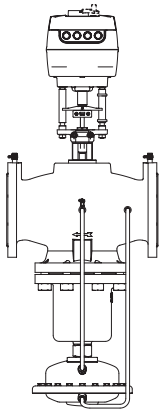

NovoCon® L / SU / SD
AB-QM DN 125 - 150HF

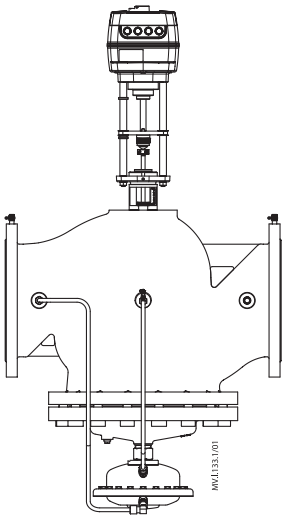

NovoCon® XL
AB-QM DN 200 - 250HF

MAINTENANCE
FREE

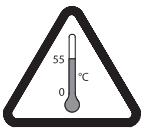

5-95 % RH
no condensing

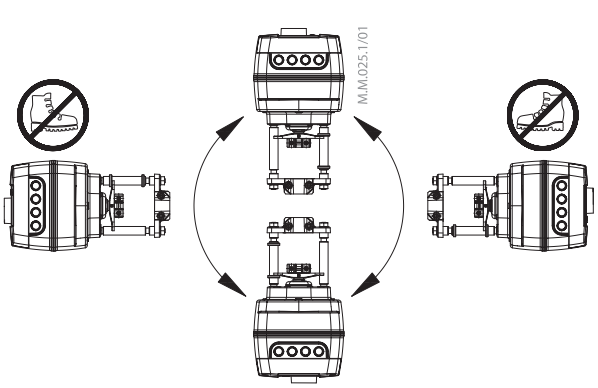

NovoCon® L

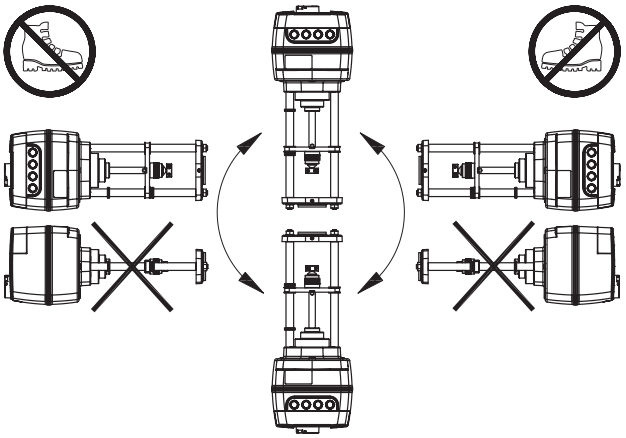

NovoCon® XL

© Danfoss | 2020.08

❶

Ⓐ

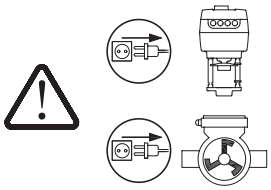

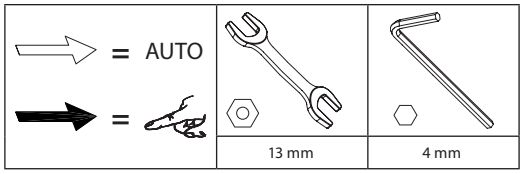
= AUTO
=
13 mm
4 mm

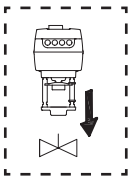

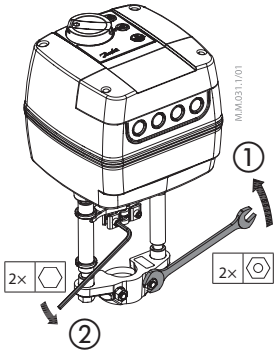
M.M.031.1/01
①
②
2×
2×

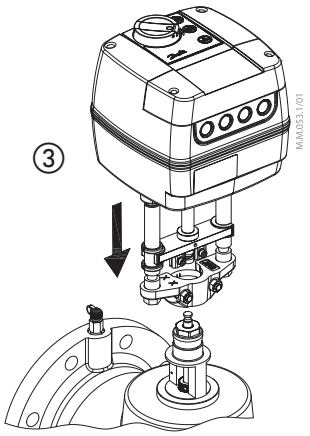
M.M.053.1/01
③

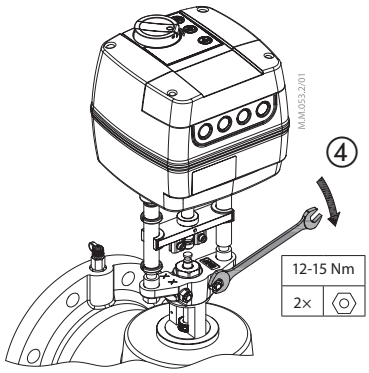
M.M.053.2/01
④
12-15 Nm
2×

Ⓑ

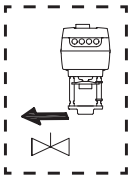

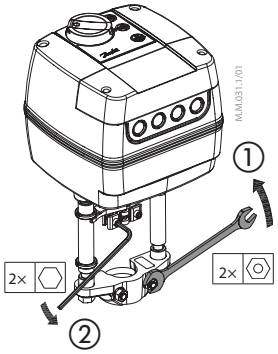
M.M.031.1/01
①
②
2×
2×

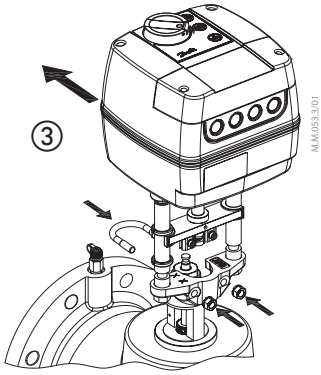
M.M.053.3/01
③

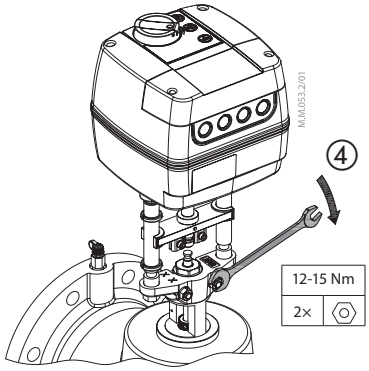
M.M.053.2/01
④
12-15 Nm
2×

❷

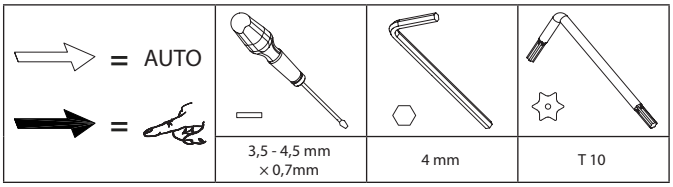
= AUTO
=
3,5 - 4,5 mm
× 0,7mm
4 mm
T 10

Ⓐ **NovoCon® L**

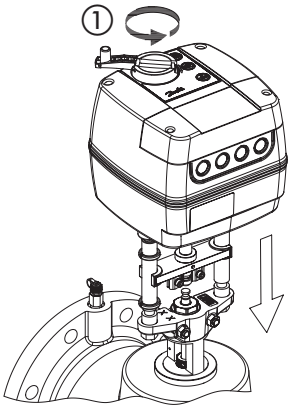
①

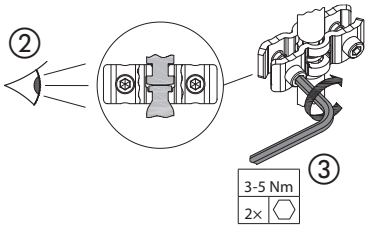
②
③
3-5 Nm
2×

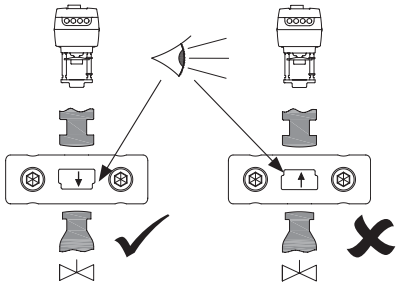

Ⓑ NovoCon® L SD

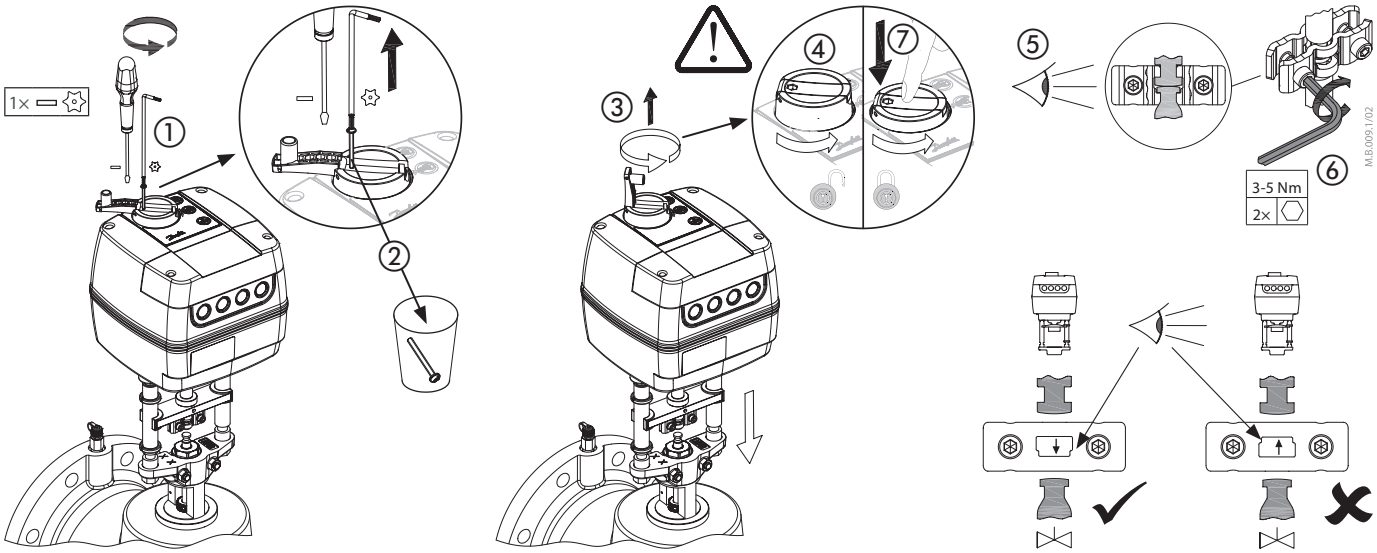

Ⓒ NovoCon® L SU

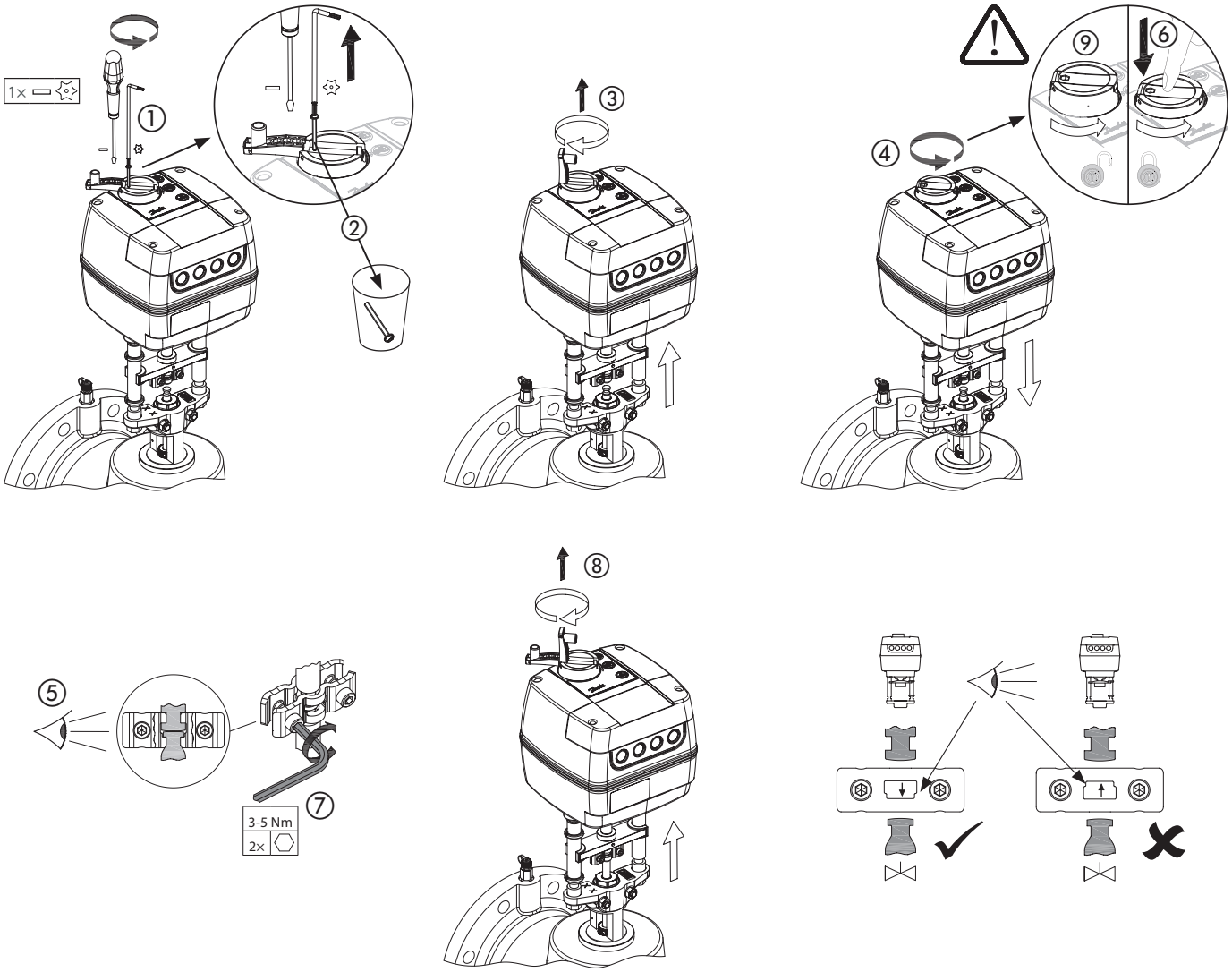

© Danfoss | 2020.08 | 3

3 NovoCon® XL

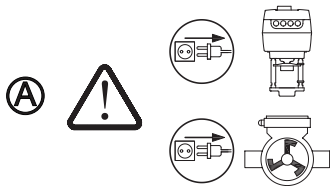

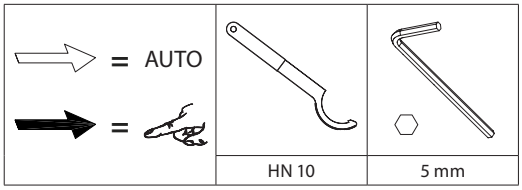

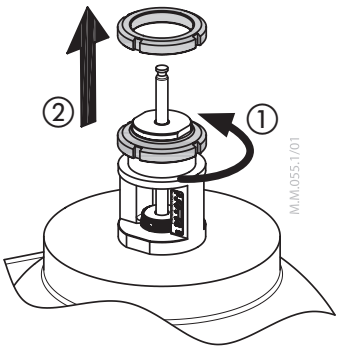

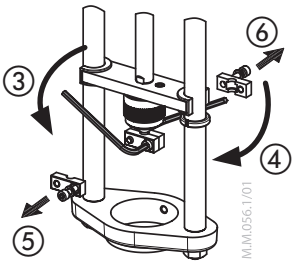

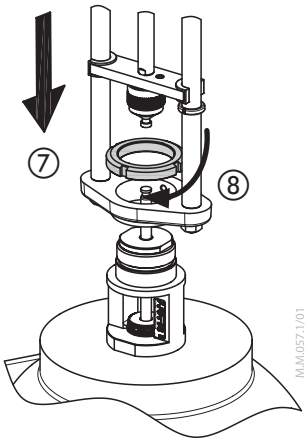

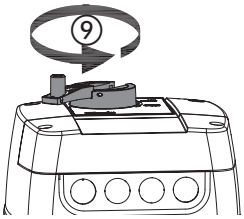

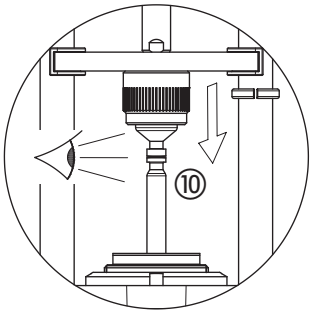

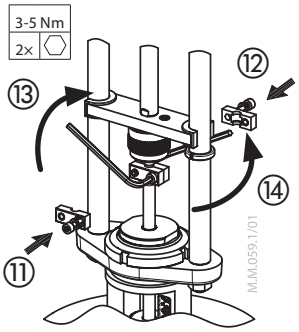

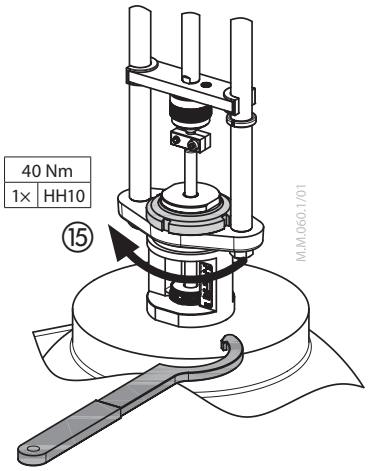

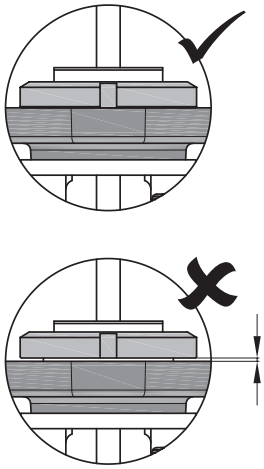

4 NovoCon® XL

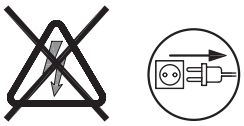

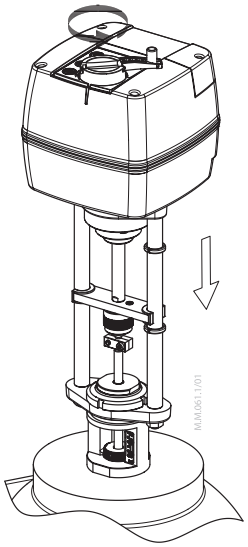

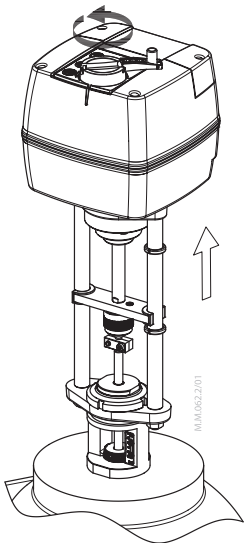

5

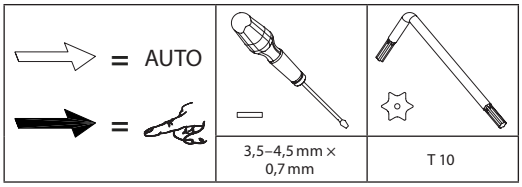

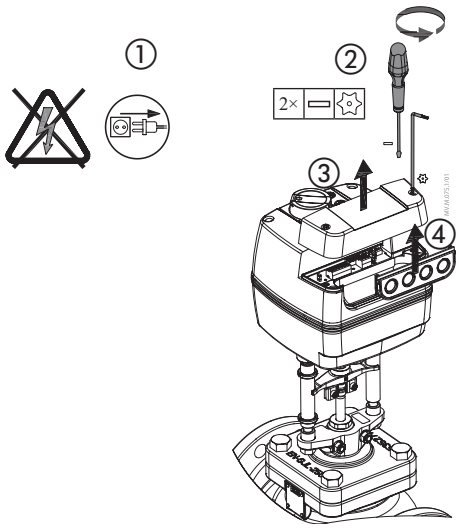

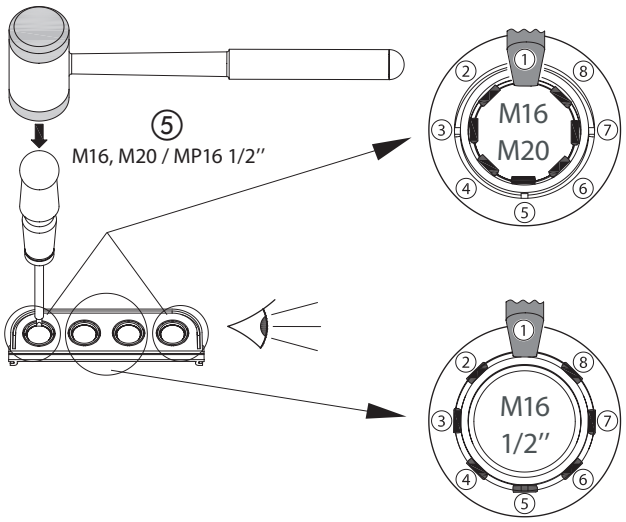

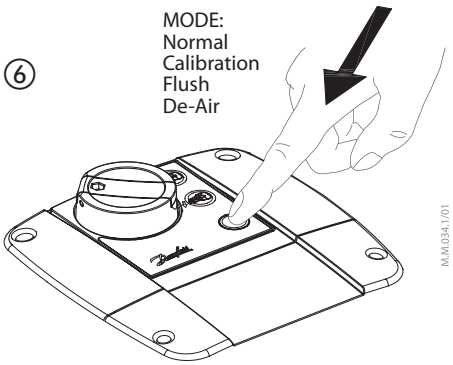

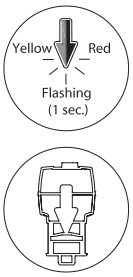

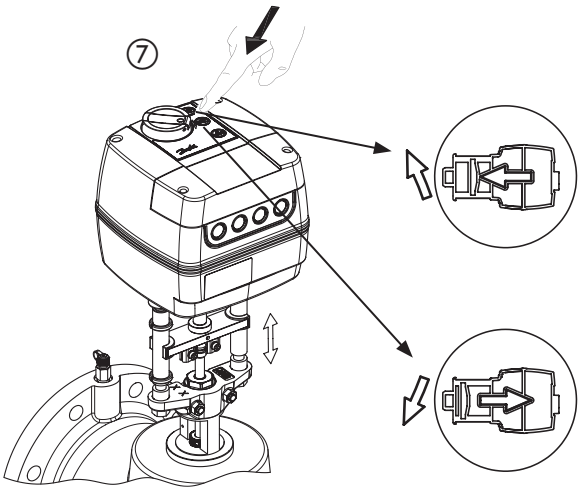

6

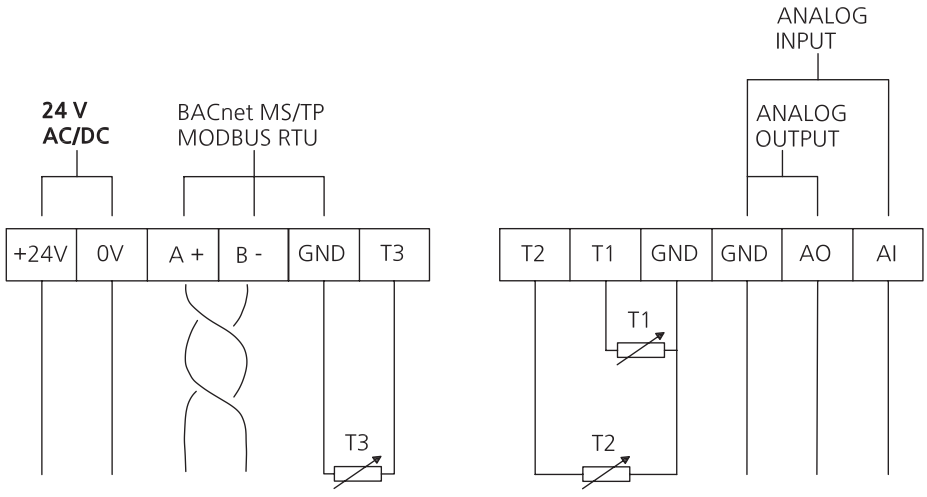

GND is common for all signals

© Danfoss | 2020.08 | 5

7

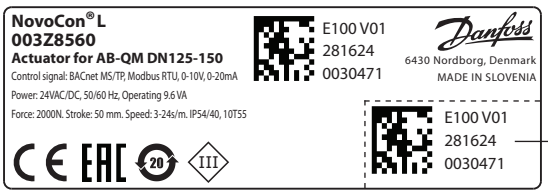

Serial number and QR code can be removed from the NovoCon® L/XL label and added to installation drawing.

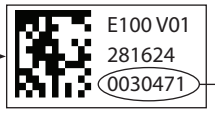

Device Object Instance Number

8

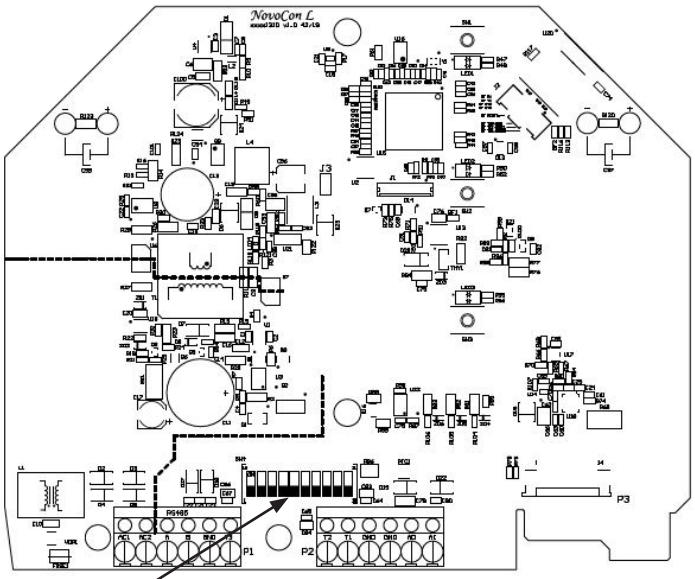

DIP Switch

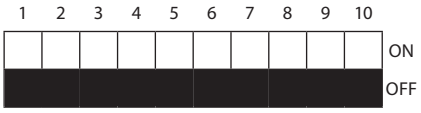

Dip switches for addressing and bus protocol selection are located under the lid of the actuator.
DIP Switches 1 to 7 are used to assign the MAC address manually. Default MAC address assignment method is Auto MAC addressing for BACnet MS/TP and DIP Switches for Modbus RTU.
For termination of last unit on the field bus, turn DIP Switch 8 ON.
Dip switch 9 is not used.
Dip switch 10 is used to select between BACnet MS/TP (OFF=Default) and Modbus RTU (ON).
When the protocol is changed on DIP Switch 10, a power cycle is required.

9

Presettings

NovoCon® L	**Application mode: MSV:9 / 32810** Digital control (default), Analog control	**Select Valve Type MSV:3 / 32802** (default AB-QM DN125)	**Select application MSV:10 / 32811** Heating (default) Cooling	**Design Flow Rate** AV:30 / 32796 Heating AV:31 / 32798 Cooling
NovoCon® XL	**Application mode: MSV:9 / 32810** Digital control (default), Analog control	**Select Valve Type MSV:3 / 32802** (default AB-QM DN200)	**Select application MSV:10 / 32811** Heating (default) Cooling	**Design Flow Rate** AV:30 / 32796 Heating AV:31 / 32798 Cooling

10

Safety Note

To avoid injury and damage to persons and devices, it is absolutely necessary these instructions are carefully read and observed prior to assembly and commissioning. Necessary assembly, start-up, and maintenance work must be performed only by qualified, trained and authorised personnel. Switch off the pump and the power line before mounting and wiring the actuator.

Safety Note

If the NovoCon® L/XL network is supplied with two or more AC power boosters, caution must be observed when disconnecting one of the transformers from the high voltage power line. As the NovoCons may be connected in a daisy chain, there may be high voltage on the primary side of the disconnected power supply. Disconnect always both the primary and secondary side of the transformer.

Safety Note

Connect via safety isolating transformer.
Galvanic separations shall be provided for segments crossing buildings.

Disposal instruction

This product should be dismantled and its components sorted if possible, in various groups before recycling or disposal. Always follow the local disposal regulations.

Firmware update

We recommend to validate the firmware version before installation. The latest firmware can be downloaded at www.novocon.com by selecting the tab: Support files.

© Danfoss | 2020.08 | 7

Part Name	Hazardous Substances Table					
	Lead (Pb)	Mercury (Hg)	Cadmium (Cd)	Hexavalent Chromium (Cr(VI))	Polybrominated biphenyls (PBB)	Polybrominated diphenyl ethers (PBDE)
Motor	X	O	O	O	O	O
O: Indicates that this hazardous substance contained in all of the homogeneous material for this part is below the limit requirement in GB/T 26572;						
X: Indicates that this hazardous substance contained in at least one of the homogeneous material for this part is above the limit requirement in GB/T 26572;						

Danfoss A/S
Heating Segment • heating.danfoss.com • +45 7488 2222 • E-Mail: heating@danfoss.com

Danfoss can accept no responsibility for possible errors in catalogues, brochures and other printed material. Danfoss reserves the right to alter its products without notice. This also applies to products already on order provided that such alterations can be made without subsequential changes being necessary in specifications already agreed.
All trademarks in this material are property of the respective companies. Danfoss and all Danfoss logotypes are trademarks of Danfoss A/S. All rights reserved.