Data sheet

Adapters for thermostatic sensors

Application

Angle adapter 013G1350 *Angle adapter 013G1360*

Compact adapter 013G1350

Angle adapter
Danfoss angle adapters are used in situations like

- not adequate space for normal mounting
- angle mounting enables easier operation of the sensor

Danfoss angle adapters are available in two versions:

- with pressure connection for the radiator valve and snap-lock for Danfoss RA2000 thermostatic sensors.
  Code no. 013G1350

- with M 30 x 1.5 connection for the radiator valve and snap-lock for Danfoss RA2000 thermostatic sensors.
  Code no. 013G1360

Compact adapter for wall temperature adjusters

The compact adapter is used instead of the standard adapter directly on the actuator.

Due to smaller dimensions, the compact adapter is suitable where space is limited, in resesses or behind panels.

Compact adapters are also suitable as an aesthetic solution, where the wall temperatur adjuster is mounted on visible valves, e.g. on towel rail or design radiators.
Code no. 013G5190

Mounting

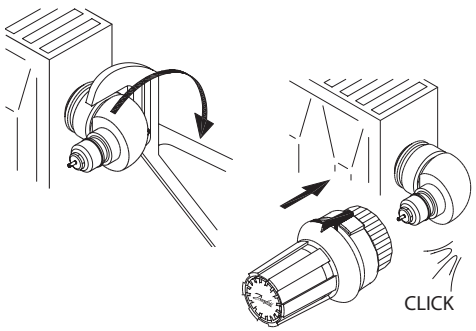

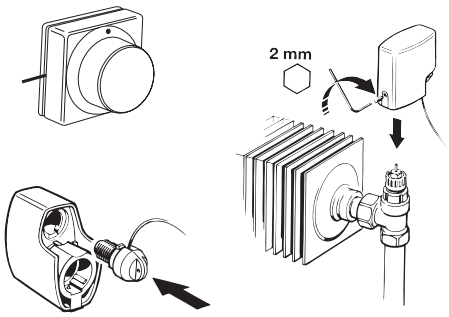

Dimensions

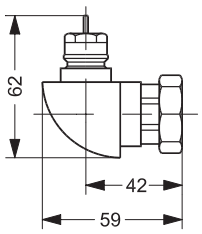

Angle adapter 013G1360 for M30x1,5 connection

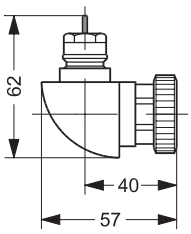

Angle adapter 013G1350 for Danfoss RA sensors

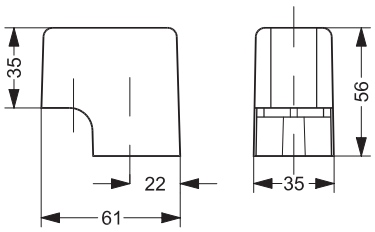

Compact-adapter for wall temperature adjusters

 © Danfoss 01/2005

Danfoss can accept no responsibility for possible errors in catalogues, brochures and other printed material. Danfoss reserves the right to alter its products without notice. This also applies to products already on order provided that such alterations can be made without subsequential changes being necessary in specifications already agreed.
All trademarks in this material are property of the respective companies. Danfoss and the Danfoss logotype are trademarks of Danfoss A/S. All rights reserved.

Danfoss A/S
DK-6430 Nordborg
Denmark
Tel.: +45 74 88 22 22
Telefax: +45 74 49 09 49
E-mail: danfoss@danfoss.com