ENGINEERING
TOMORROW

Data sheet

ECL Comfort 310 controller, Remote Control Units ECA 30 / 31 and Application keys

Designed in Denmark

Description

ECL Comfort 310 controller series

ECL 310

The ECL Comfort 310 is an electronic weather compensated temperature controller in the ECL Comfort controller family for use in district heating, central heating and cooling systems. Energy savings can be achieved by correct control of the flow temperature in heating and cooling systems. Up to 4 circuits can be controlled.

The weather compensation function in the ECL Comfort controllers measures the outdoor temperature and controls the flow temperature to the heating system accordingly. The weather compensated heating system increases the comfort level and saves energy.

The ECL Comfort 310 controller is configured with a selected application by means of an ECL Application Key.

The web based ECL Portal communicates with the ECL Comfort 310 for an effective and easy-to-use turnkey SCADA (Supervisory Control And Data Acquisition) tool for all users, service personnel and at commissioning. Service level can be increased and/or service costs reduced. The heating and/or cooling installation is made accessible from virtually anywhere at any time via laptops or Smartphones which increases service level and reduces response time to alarms.

The ECL Tool software for ECL Comfort 310 offers possibilities for an alternative remote control in relation to ECL Portal and OPC server software.

ECL Comfort 310 is designed for comfortable temperatures, optimum energy consumption, easy installation by means of the ECL Application Key (Plug-and-Play) and user friendly operation.

Improved energy savings are facilitated by weather compensation, adjustment of temperature according to schedule, optimization as well as limitation of return temperature, flow and power.

The ECL Comfort 310 is easily operated by means of a dial (multi-functional knob) or a Remote Control Unit (RCU). The dial and the backlighted display guide the user through the text menus in the selected language.

The ECL Comfort 310 controller has electronic output for motorized valve control, relay output for circulation pump / changeover valve control among others, as well as alarm output.

6 Pt 1000 temperature sensors can be connected. In addition, 4 inputs are configured when uploading the application. The configuration can be Pt 1000 temperature sensor input, analogue input (0 – 10 V) or digital input.

Depending on application, the internal extension module ECA 32 (inserted into the controllers base part) can give additional input and output signals.

Description (continued)

The enclosure is designed for mounting on wall and DIN rail. A variant ECL Comfort 310B (without display and dial) is available. It can be used for mounting inside a panel and is operated by means of the RCU ECA 30 / 31 which can be placed in front of the panel.

The ECL Comfort 310 can work as a stand-alone controller and communicate with up to two RCUs and an extension module ECA 32 with additional inputs / outputs.

The ECL Comfort 310 can also work with up to 2 x RCUs, ECA 32 and other ECL Comfort 210 / 310 controllers via the ECL 485 communication bus.

Ethernet connection is integrated in the controller. Furthermore, Modbus communication to SCADA systems (Supervisory Control and Data Acquisition) and M-bus communication to heat meters are integrated.

Remote Control Unit (RCU):

The RCUs ECA 30 and ECA 31 are used for room temperature control and override of the ECL Comfort 310. The display has backlight. The RCUs are connected to the ECL Comfort controllers by means of 2 × twisted pair cable for communication and power supply (ECL 485 communication bus).

The ECA 30 / 31 has a built-in room temperature sensor. An external room temperature sensor can be connected substituting the built-in temperature sensor.

Furthermore, the ECA 31 has a built-in relative humidity sensor and the signal is used in relevant applications. It is possible to connect up to 2 RCUs on the ECL 485 communication bus. One RCU can monitor max. 10 ECL Comfort controllers (master/ slave system).

ECL Application Key and applications:

Different ECL Application Keys make it easy for the ECL Comfort 310 hardware to run different applications. The ECL Comfort 310 controller is loaded with the desired application by means of the ECL Application Key, which contains information about applications (basic application sketches are shown in the display), languages and factory settings.

The ECL Application Keys, series A2xx can be used in ECL Comfort 210 and ECL Comfort 310. Most of the A2xx application keys give extended functionalities when used in ECL Comfort 310, such as additional temperature sensors and M-bus communication.
The ECL Application Keys, series 3xx can be used in ECL Comfort 310 only.

The application parameters are stored in the controller and are not affected by power break.
The relevant ECL Application Keys for the ECL Comfort 210 / 310 controller can be found in the ordering section.

Key overview, sub-circuits, combinations

	ECL Comfort 210	ECL Comfort 310
Key		
A214	A214.1, A214.2, A214.3, A214.4, A214.5, A214.6	A214.1, A214.2, A214.3, A214.4, A214.5, A214.6 A314.1, A314.2, A314.3, A314.4, A314.5, A314.6, A314.7
A217	A217.1, A217.2, A217.3	A217.1, A217.2, A217.3 A317.1, A317.2
A230	A230.1, A230.2	A230.1, A230.2
A231	A231.1, A231.2	A231.1, A231.2 A331.1, A331.2
A232	A232.1	A232.1 A332.1, A332.2
A237	A237.1, A237.2	A237.1, A237.2 A337.1, A337.2
A247	A247.1, A247.2	A247.1, A247.2 A347.1, A347.2
A260	A260.1, A260.2	A260.1, A260.2
A266	A266.1, A266.2, A266.9	A266.1, A266.2, A266.9
A275	A275.1, A275.2, A275.3	A275.1, A275.2, A275.3 A375.1, A375.2, A375.3
A333		A333.1, A333.2, A333.3
A361		A361.1, A361.2
A367		A367.1, A367.2
A368		A368.1, A368.2, A368.3, A368.4
A376		A376.1, A376.2, A376.3, A376.9
A377		A377.1, A377.2

This is an overview of currently available application keys for the ECL Comfort controllers. Not all keys are for sale in your country. Please contact your local Danfoss sales company.

Application examples

All mentioned components (S = temperature sensor, P = pump, M = Motorized control valve and so on) are wired to the ECL Comfort 210 / 310.

All applications from ECL Comfort 210 can run in ECL Comfort 310. Extra functions and communication facilities are enabled.

A214.1, ex. a:
Cooling application, duct temperature based on room temperature

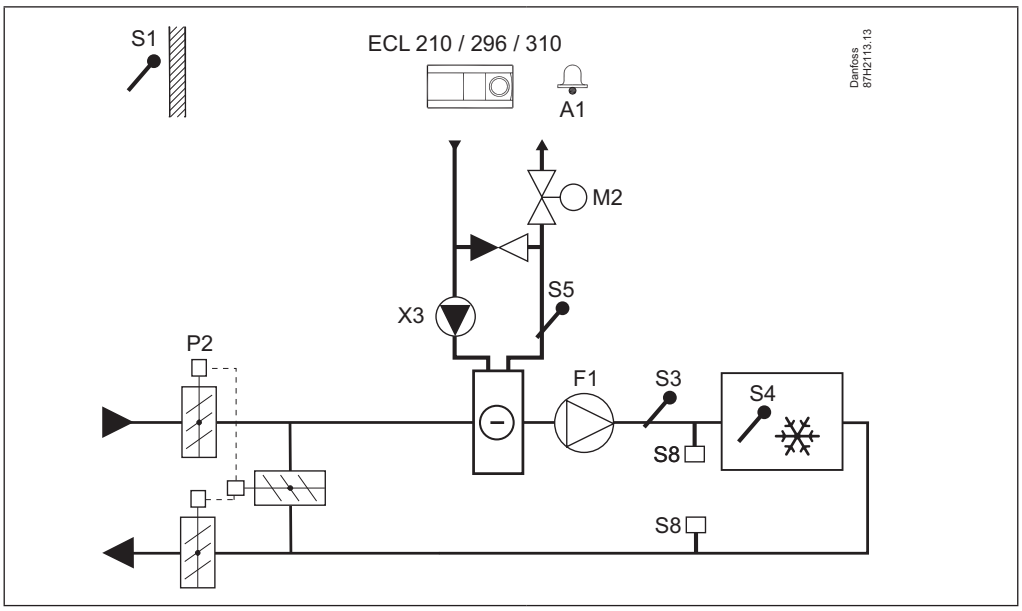

A214.2, ex. a:
Heating application, heating temperature based on duct temperature

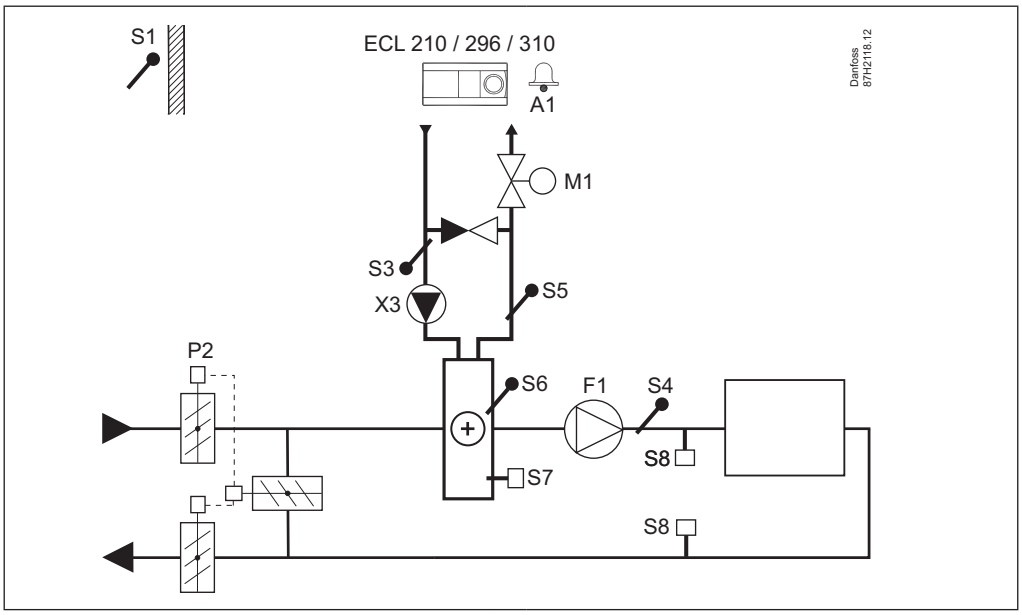

A214.3, ex. a:
Heating application, duct temperature based on room temperature

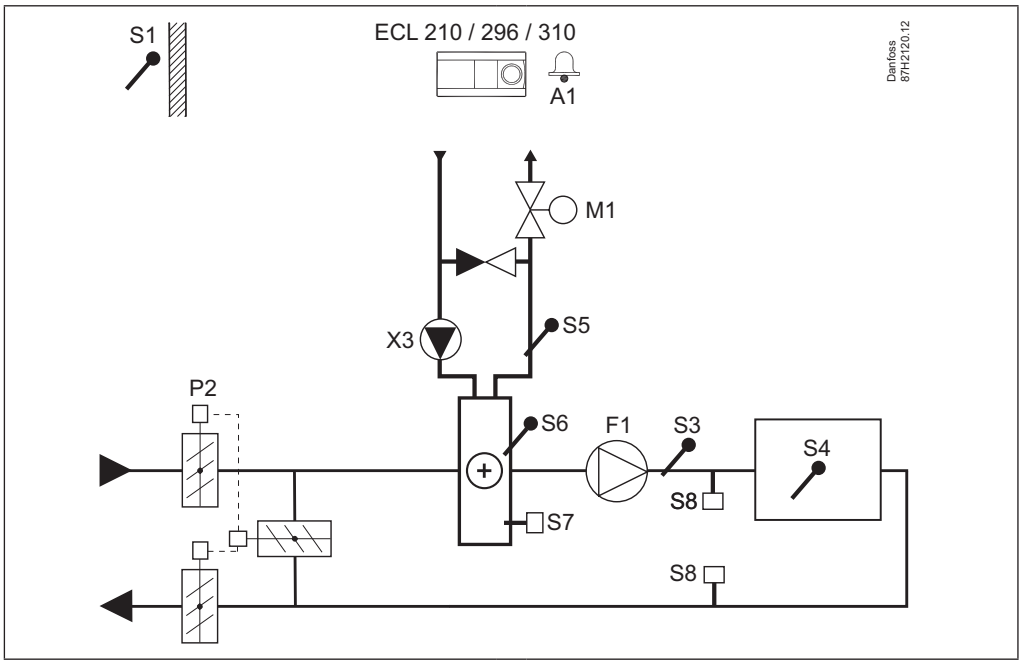

A214.5, ex. a:
Heating / cooling application, duct temperature based on room temperature

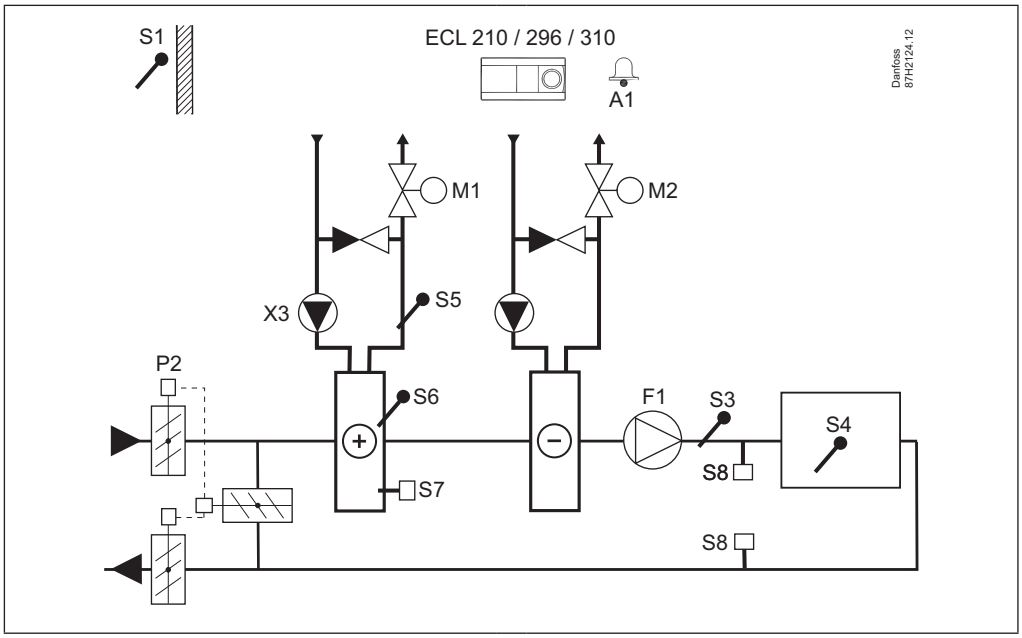

A314.1, ex. a:
Ventilation system with heating, passive cooling (outside air) and constant duct temperature control. Analogue controlled passive cooling stage (M2).

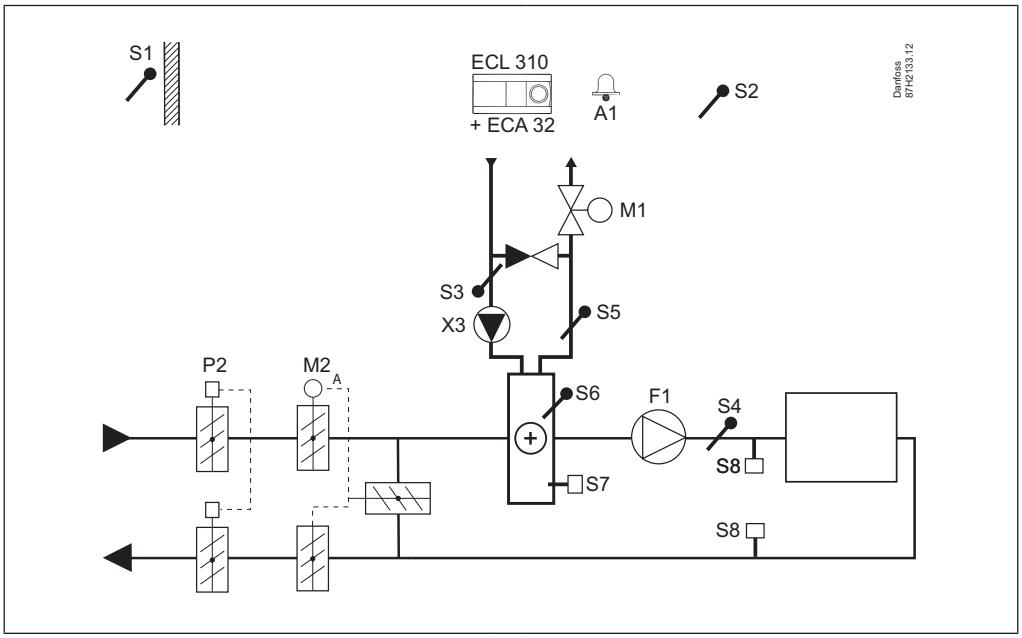

A314.1, ex. b:
Ventilation system with heating, cooling and duct temperature control.
Analogue controlled cooling stage (M2).

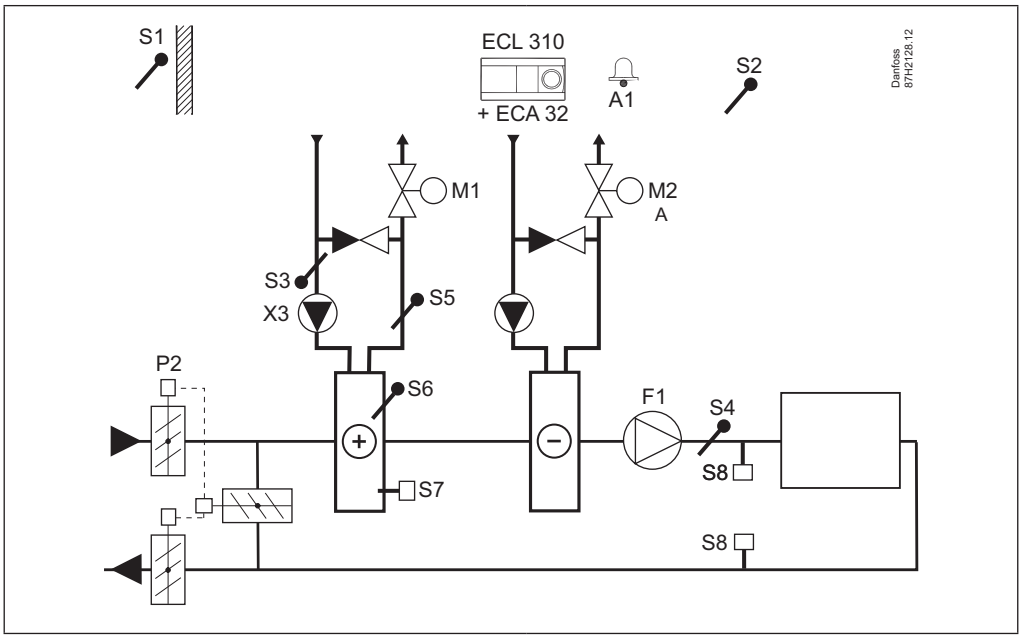

A314.2, ex. b:
Ventilation system with heating, cooling and room temperature control. Analogue controlled cooling stage (M2).

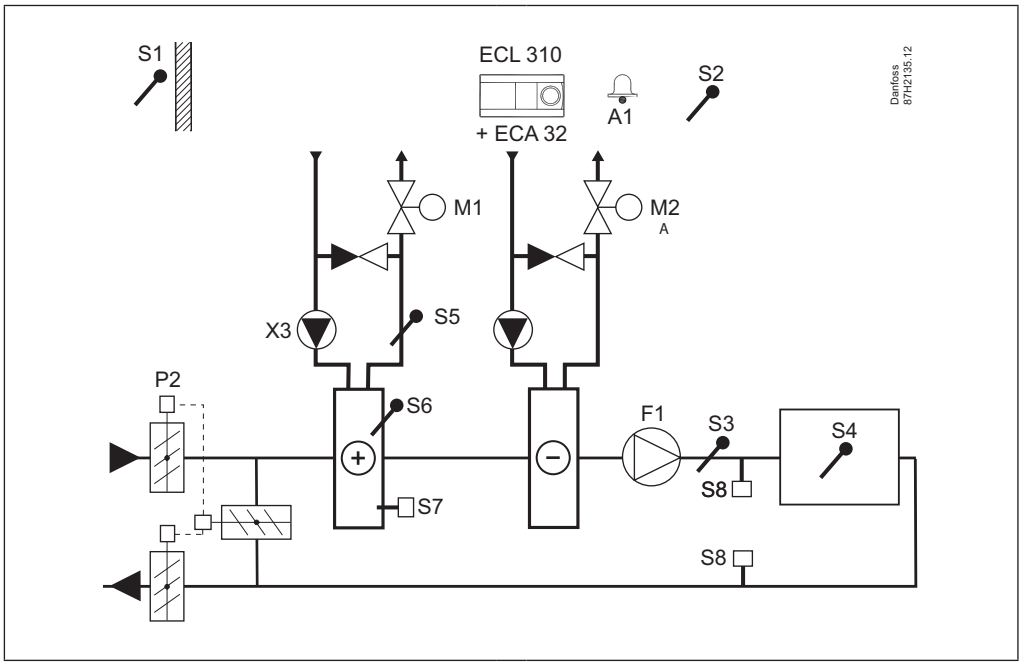

A314.3, ex. a:
Ventilation system with heating and room temperature control. Speed controlled fan.

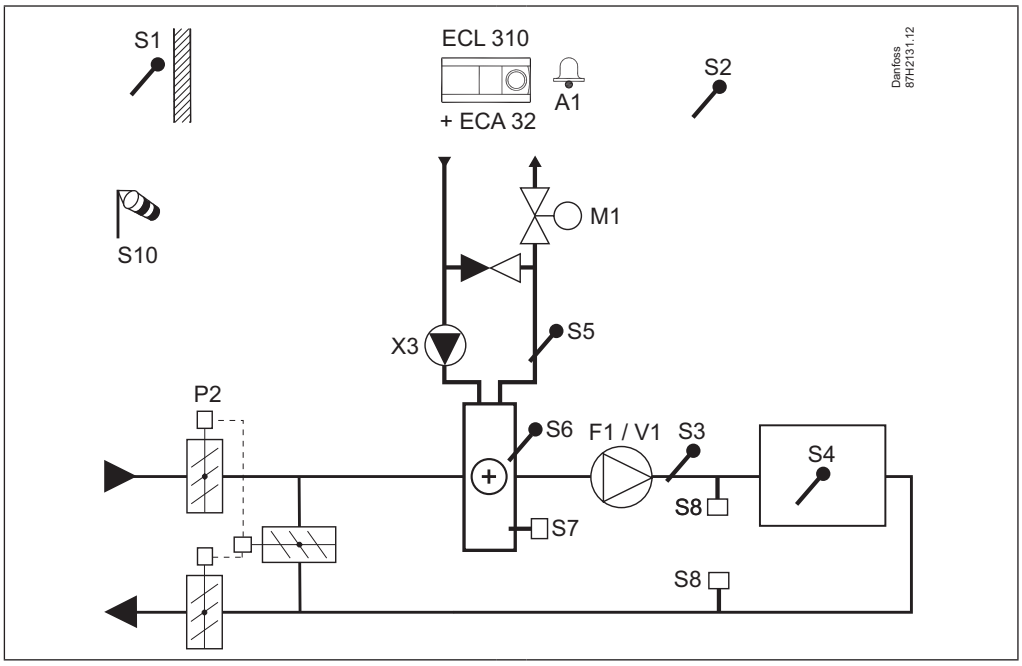

A217.1, ex. a:
DHW tank charging application

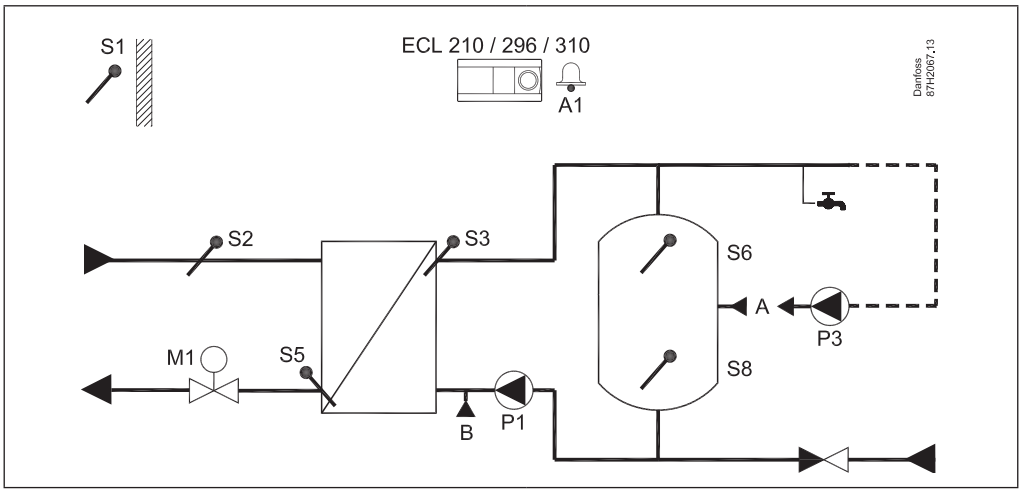

A217.1, ex. b:
DHW tank heating application

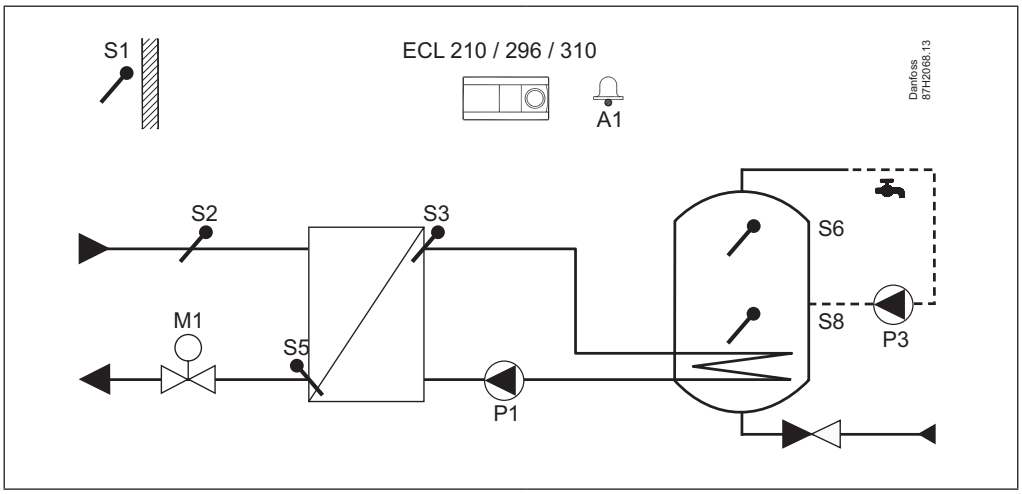

A217.2, ex. a:
DHW tank charging with preheating circuit

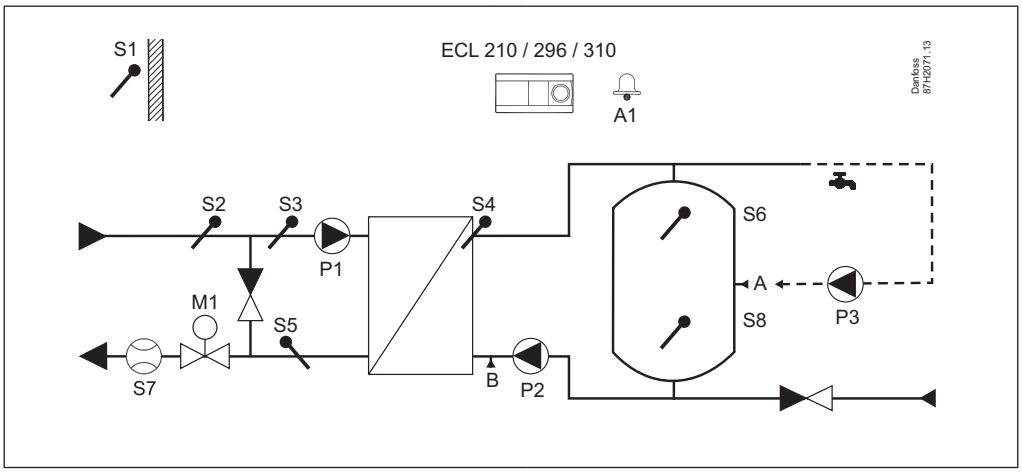

A217.3, ex. a:
DHW heating

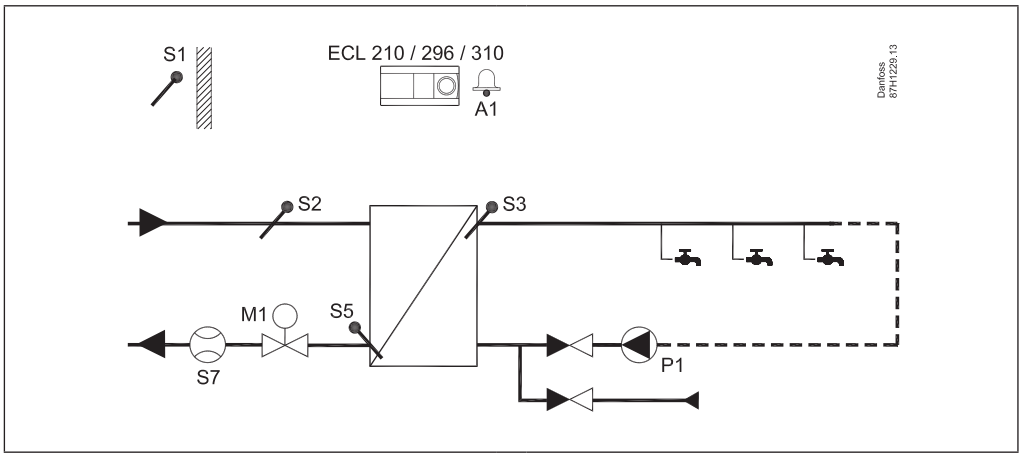

A217.3, ex. c:
DHW heating on demand (flow switch). With or without circulation

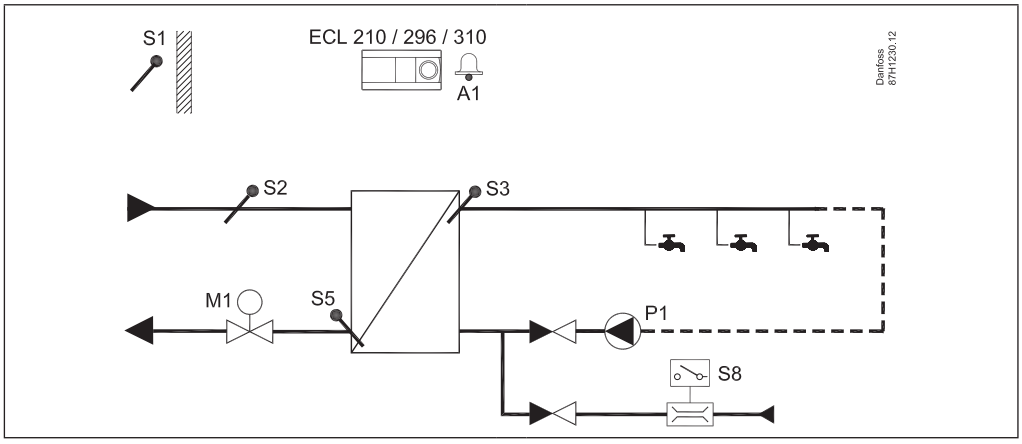

A230.1, ex. a:
Indirectly connected heating system. Wind compensation as option

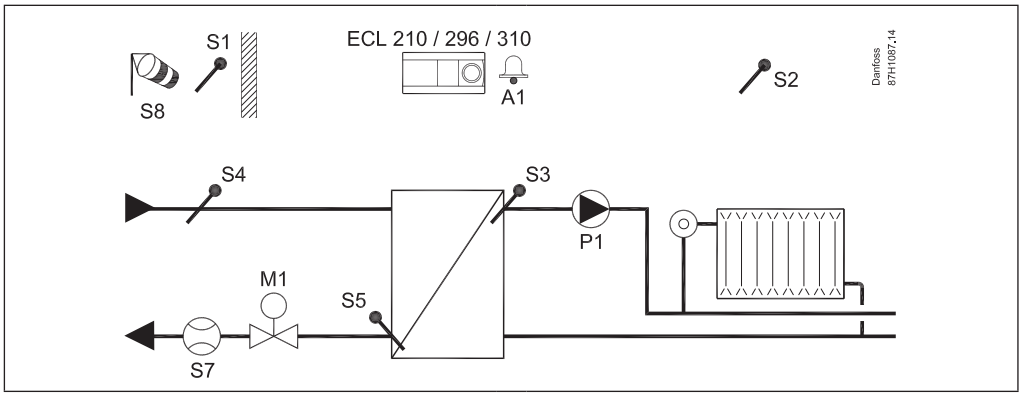

A230.2, ex. a:
Indirectly connected cooling system (district cooling)

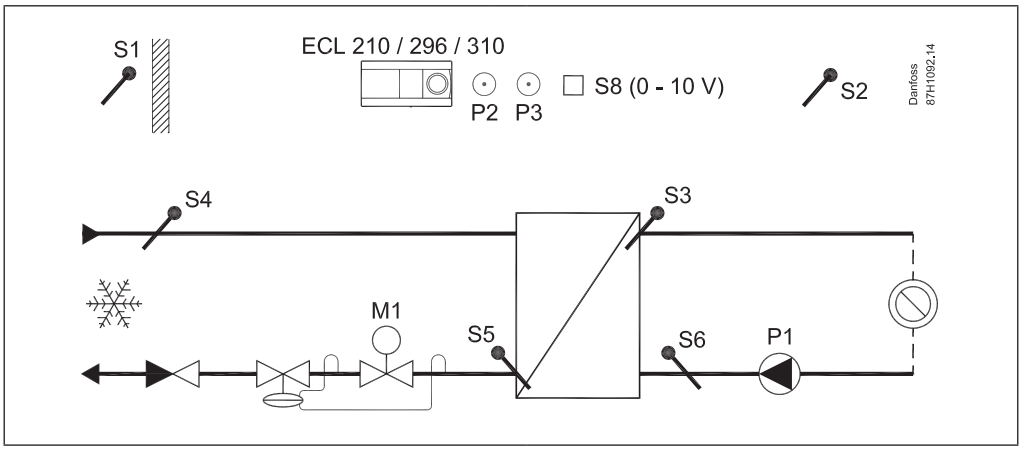

A231.2:
Indirectly connected heating system with 2-pump control and refill water function

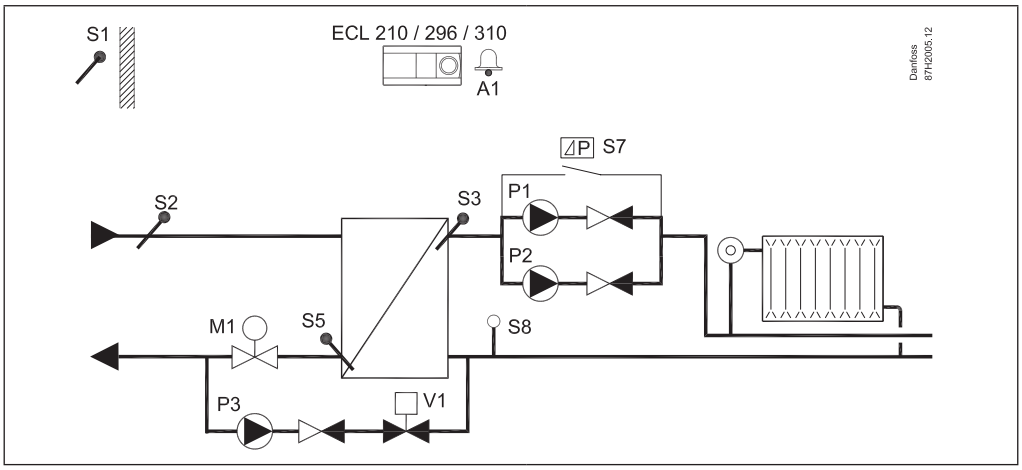

A331.2, ex. a:
Heating system with two-pump control and refill water function.
Supply temperature dependent flow temperature control.

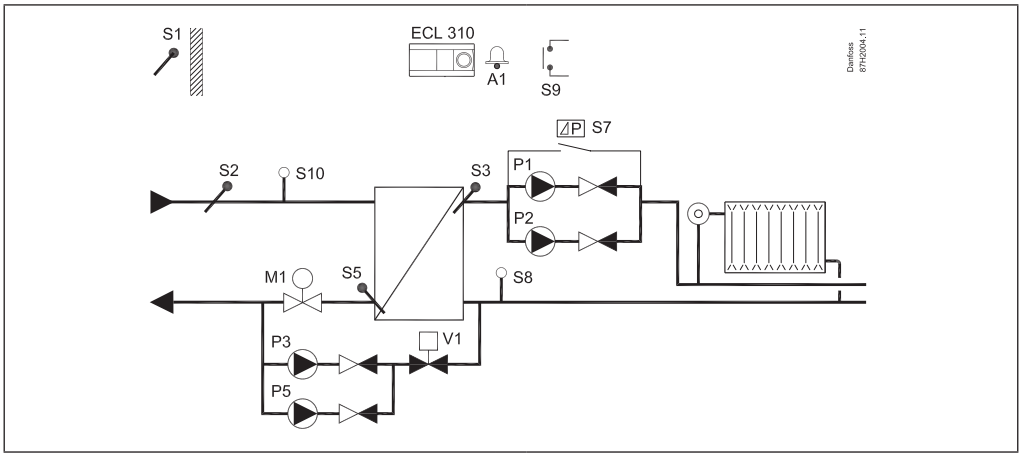

A232.1, ex. a:
Control of flow temperature (heating in floor / cooling in ceiling) in relation to outdoor, room and dew point temperature.

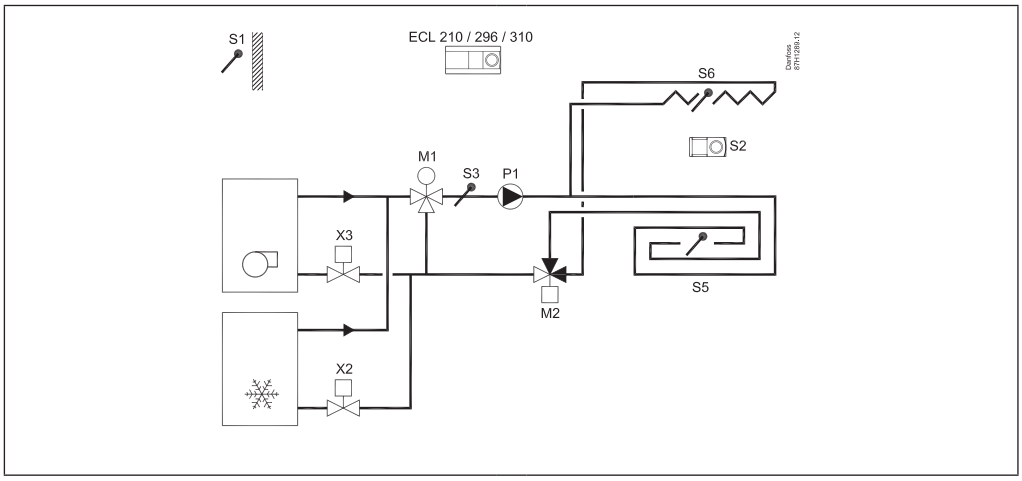

A332.1, ex. a:
Control of flow temperature (heating in floor / cooling in ceiling) in relation to outdoor, room and dew point temperature. Optional return temperature limitation.

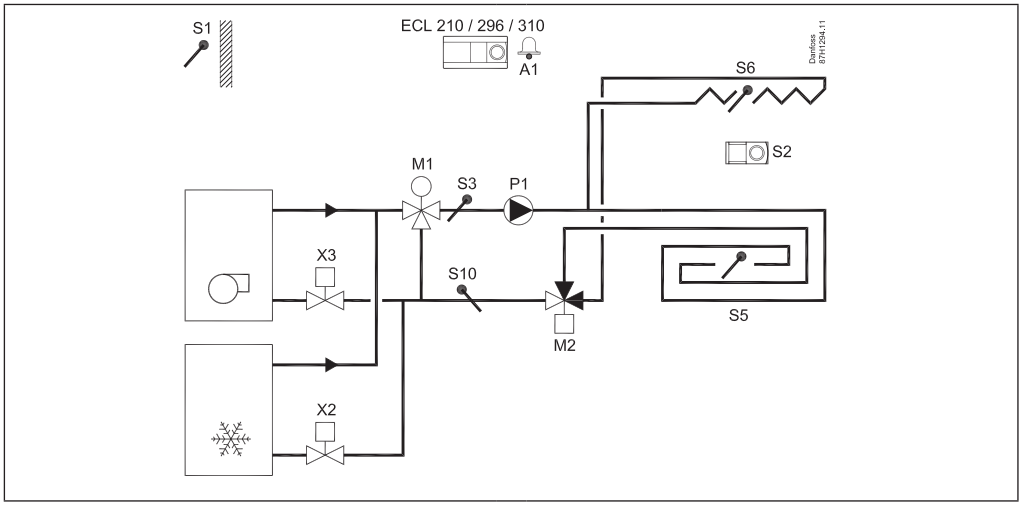

A332.2, ex. a:
Separated control of flow temperatures for heating / cooling in relation to outdoor, room and dew point temperature. Optional return temperature limitations.

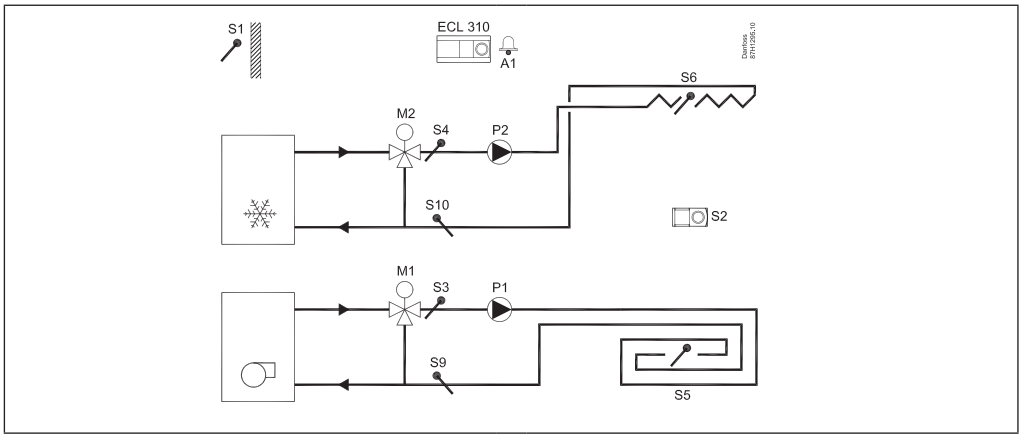

A237.1, ex. a:
Indirectly connected heating and DHW system

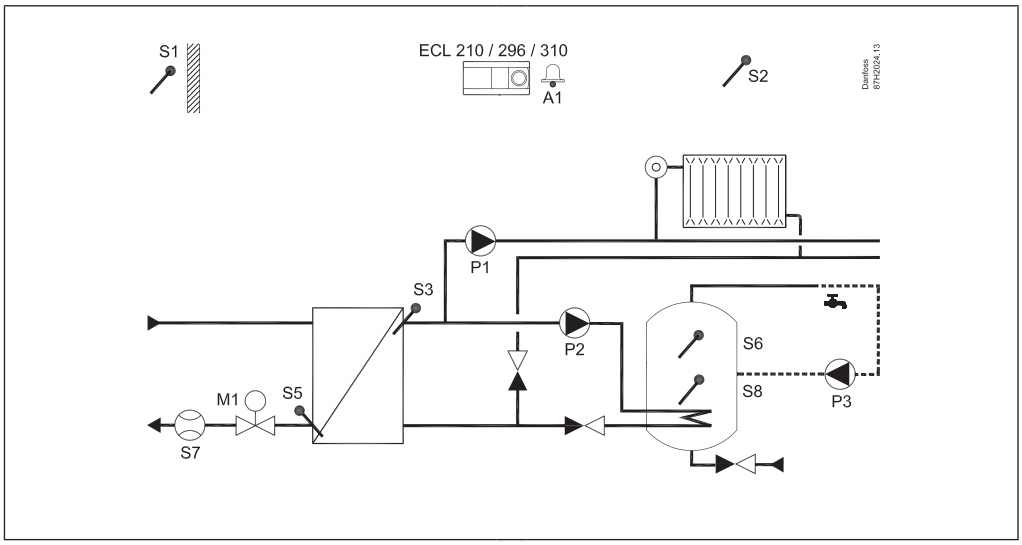

A237.2, ex. a:
Indirectly connected heating and DHW charging system

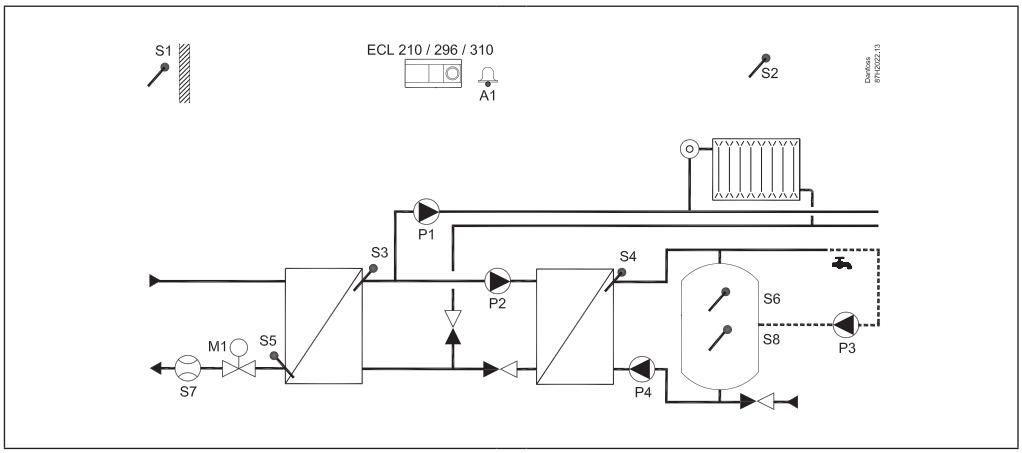

A247.1, ex. a:
Indirectly connected heating and DHW tank charging system. Parallel mode or DHW priority

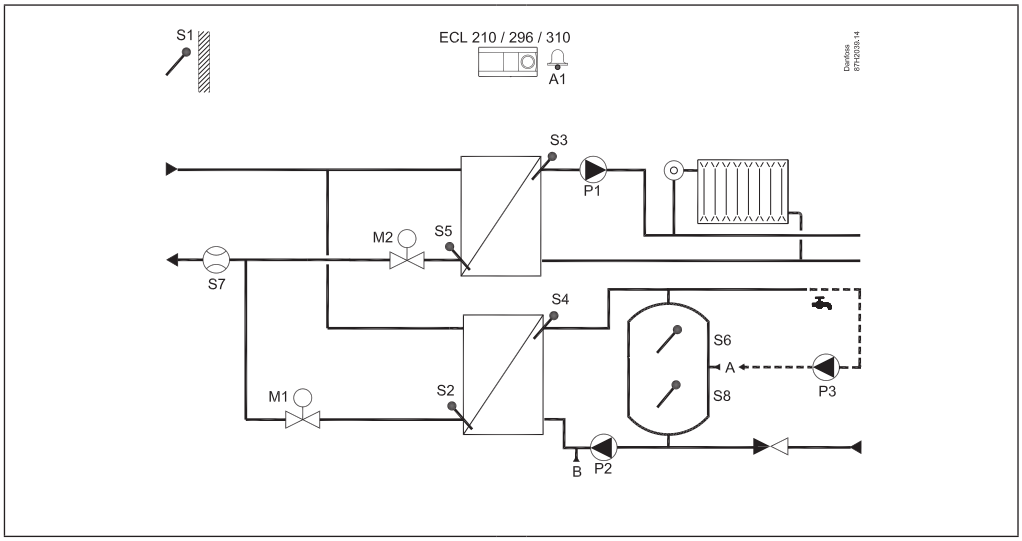

(S7*) = optional in ECL Comfort 310

A247.2, ex. a:
Indirectly connected heating and DHW tank charging system with preheating circuit.
Parallel mode or DHW priority

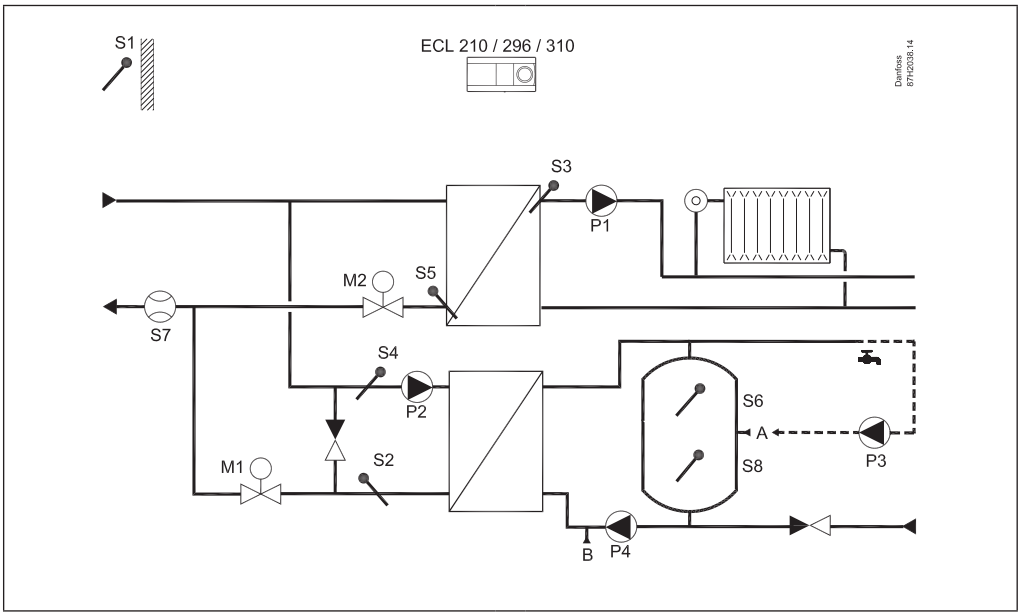

(S7*) = optional in ECL Comfort 310

A347.1, ex. a:
Indirectly connected heating and DHW tank charging system. Parallel mode or DHW priority

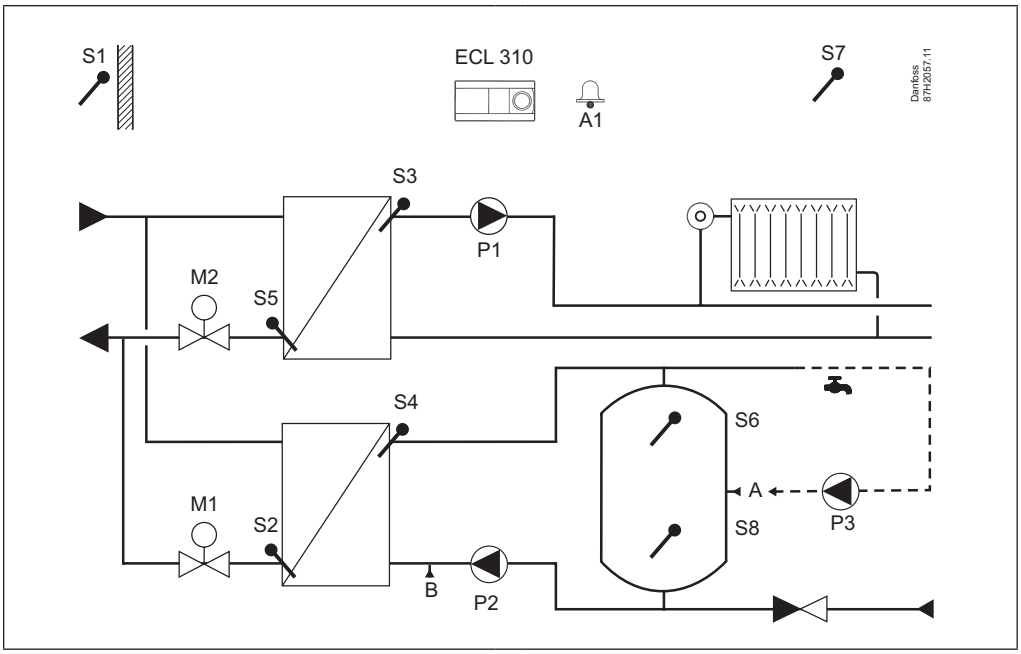

A347.2, ex. a:
Indirectly connected heating and DHW tank charging system with preheating circuit.
Parallel mode or DHW priority

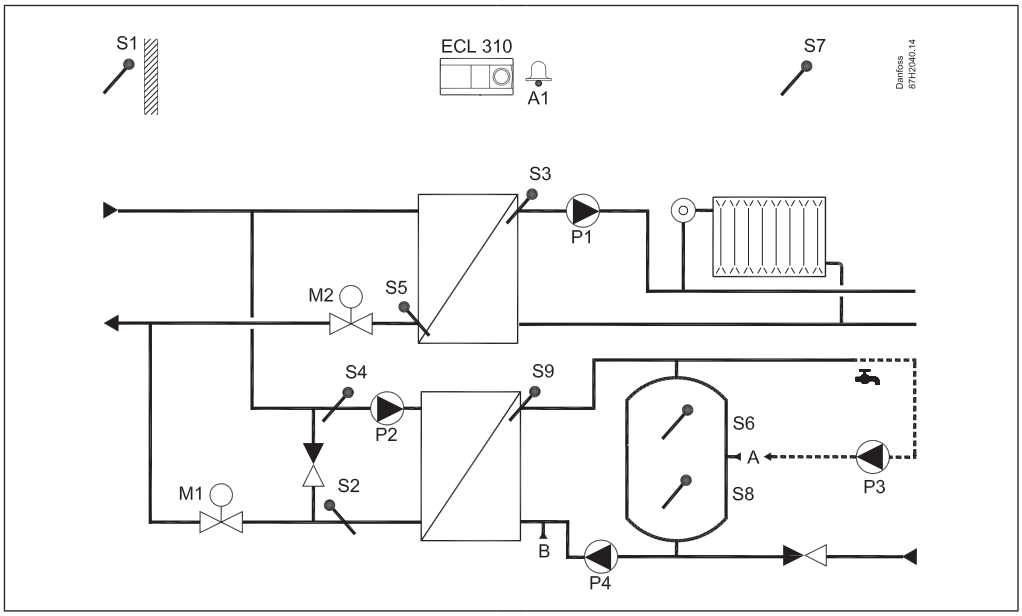

A260.1, ex. a:
Two heating systems

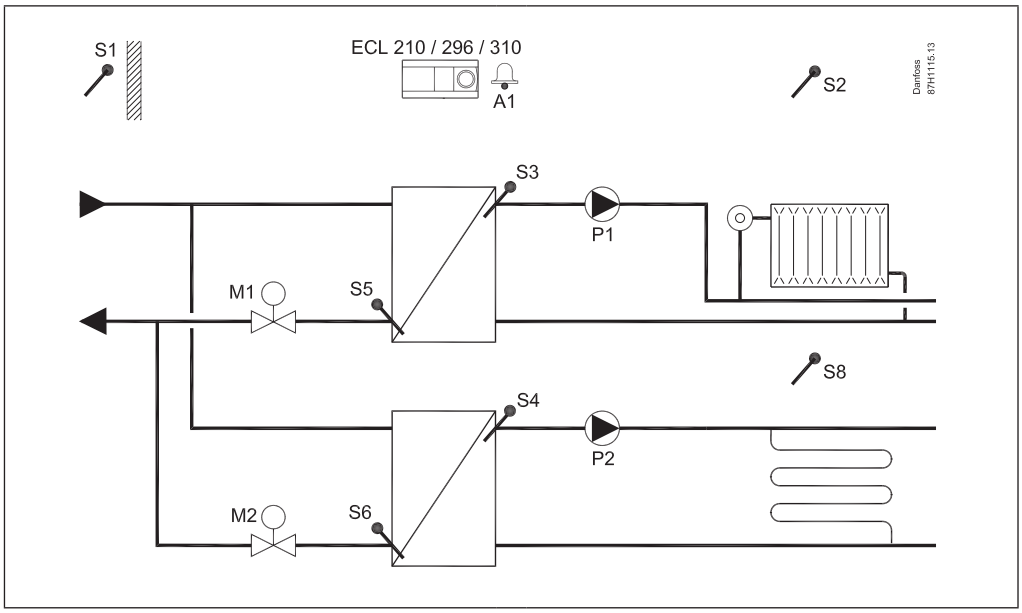

A260.1, ex. d:
Two heating systems. Circuit 2 is a sub-circuit of circuit 1.

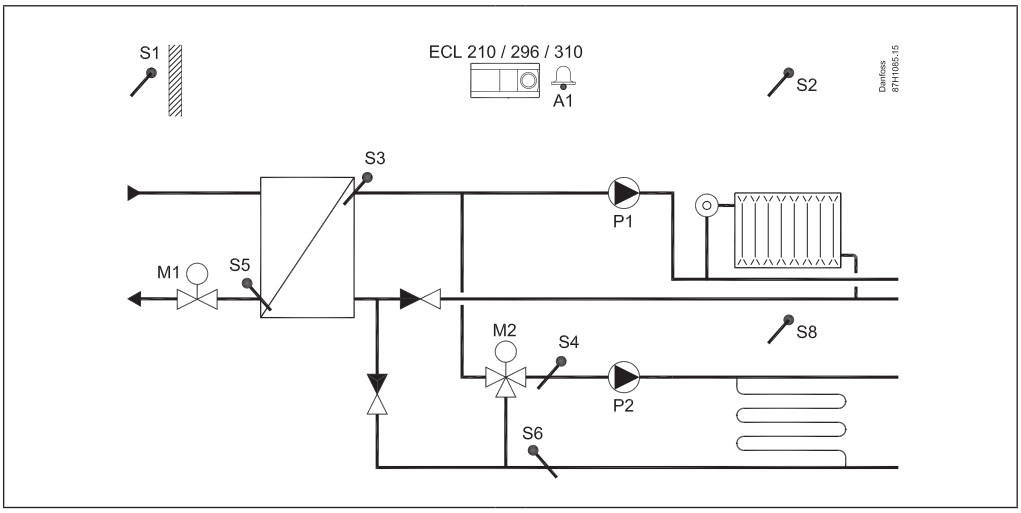

A266.1, ex. a:
Heating and direct DHW heating system. Parallel mode or DHW priority.

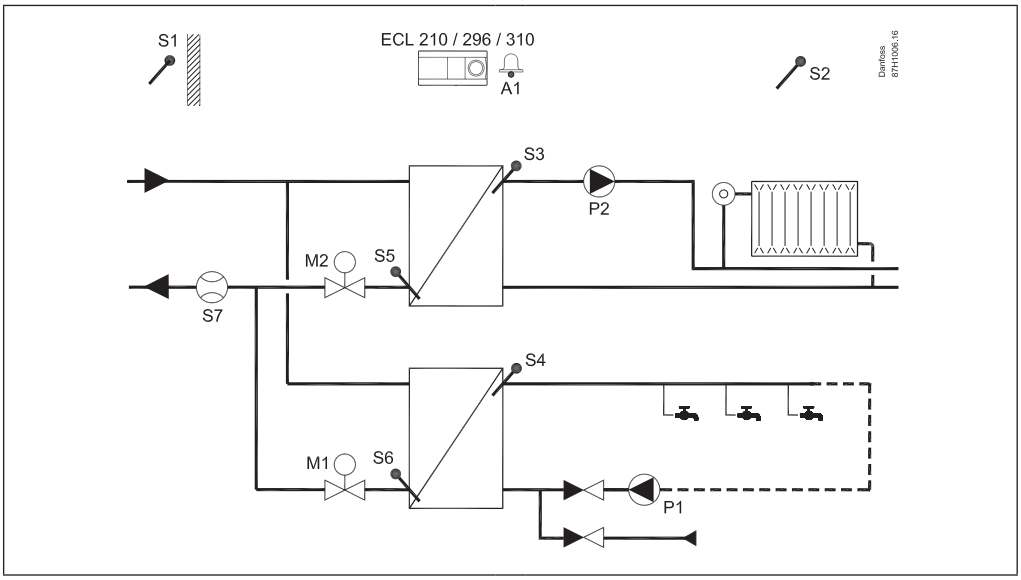

A266.2:
Heating and direct DHW heating system. Parallel mode or DHW priority. DHW heating on demand (flow switch)

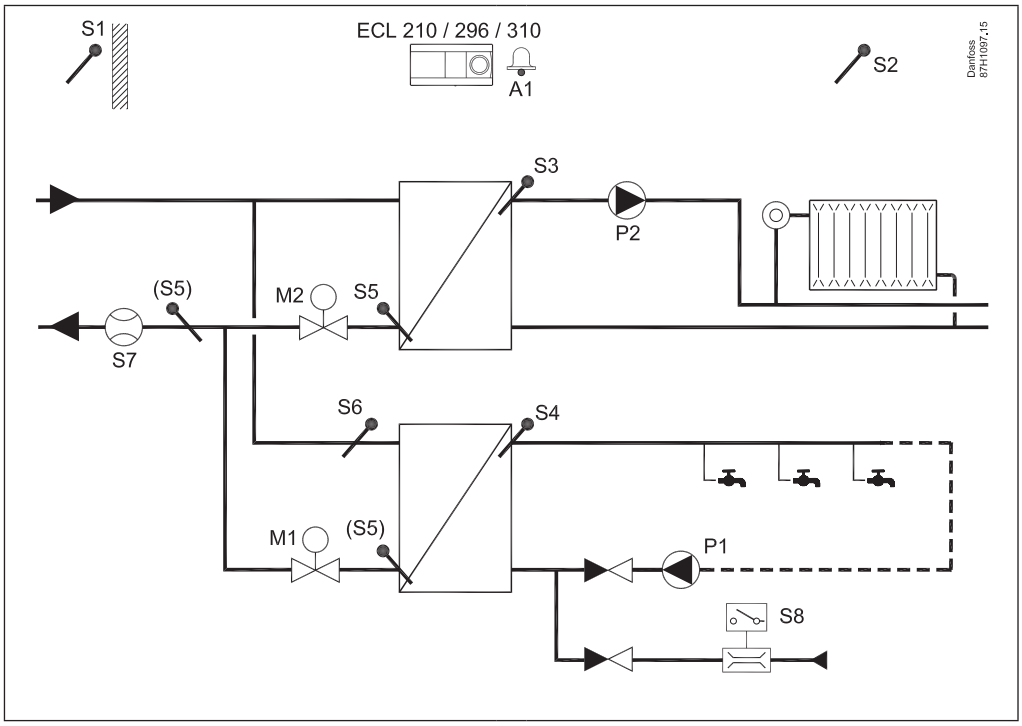

A275.1, ex. a:
Heating system with 1-stage boiler

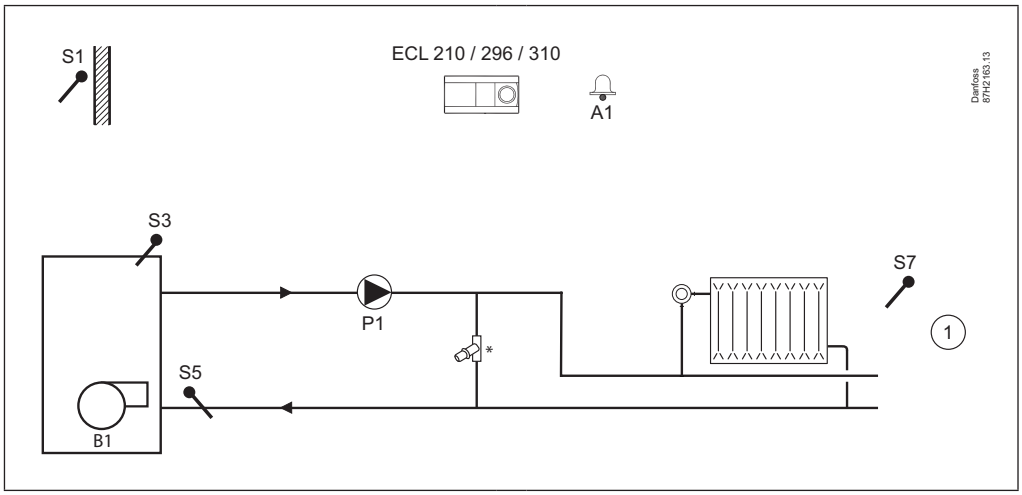

A275.2, ex. a:
Heating system with 1-stage boiler and DHW tank

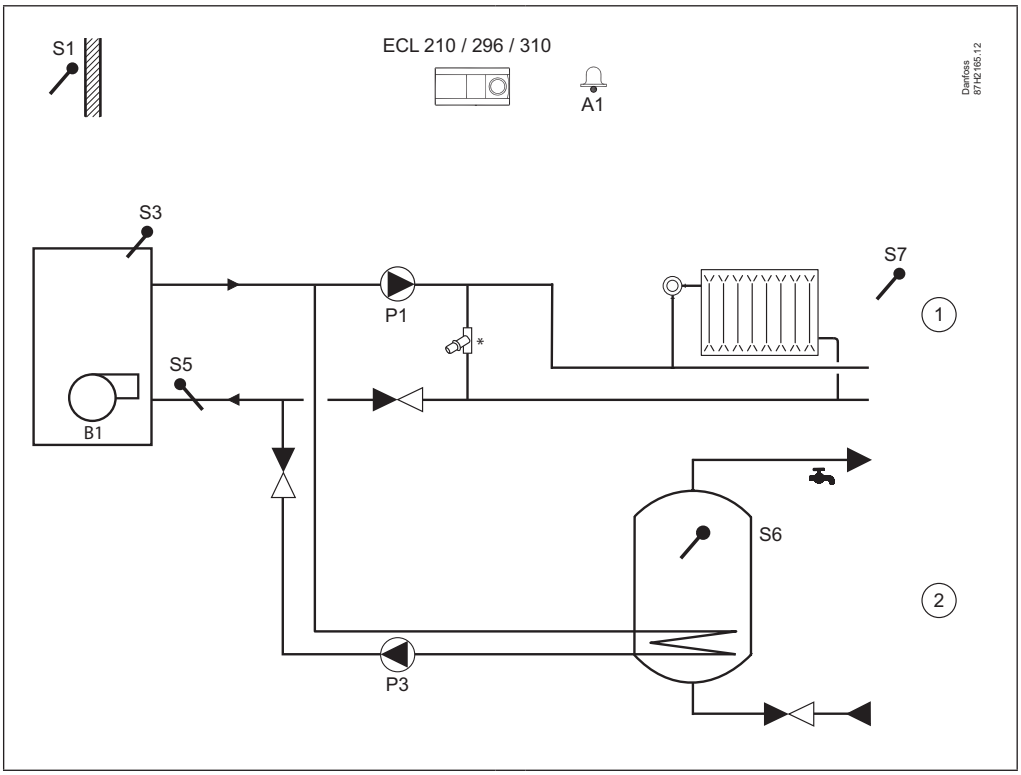

A275.3, ex. a:
Heating system with 1-stage boiler, mixing circuit and DHW tank

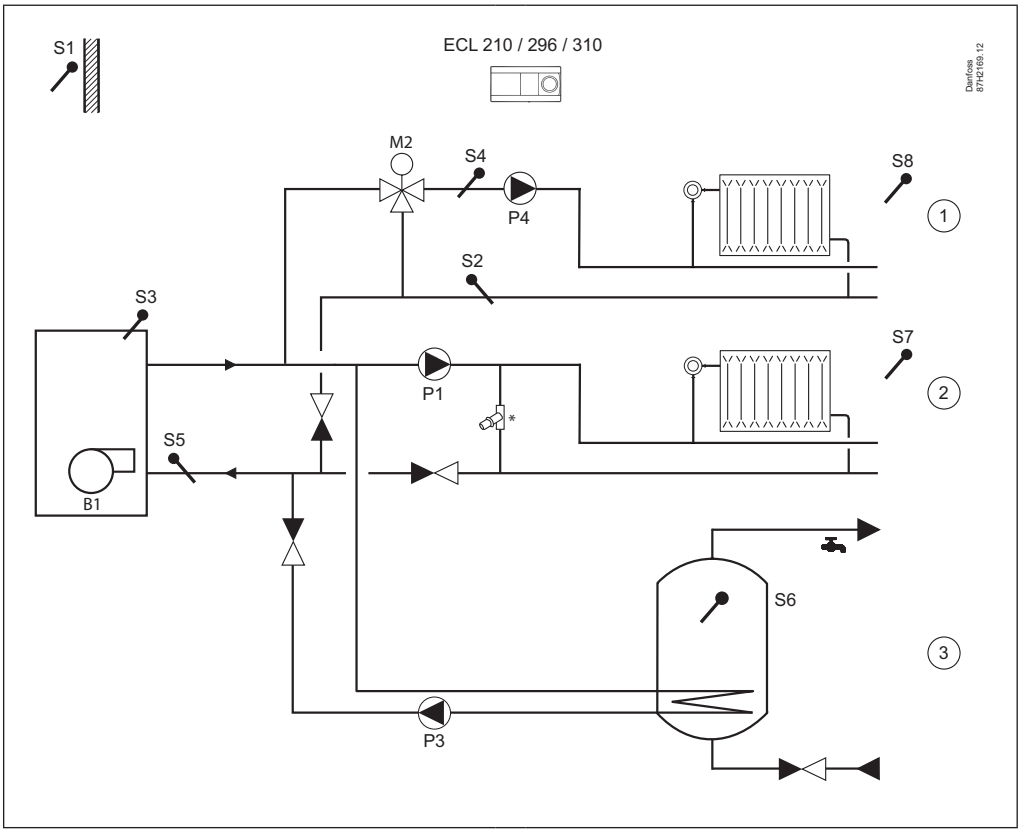

A375.1, ex. a:
Up to 8 x boiler ON / OFF control for a heating circuit

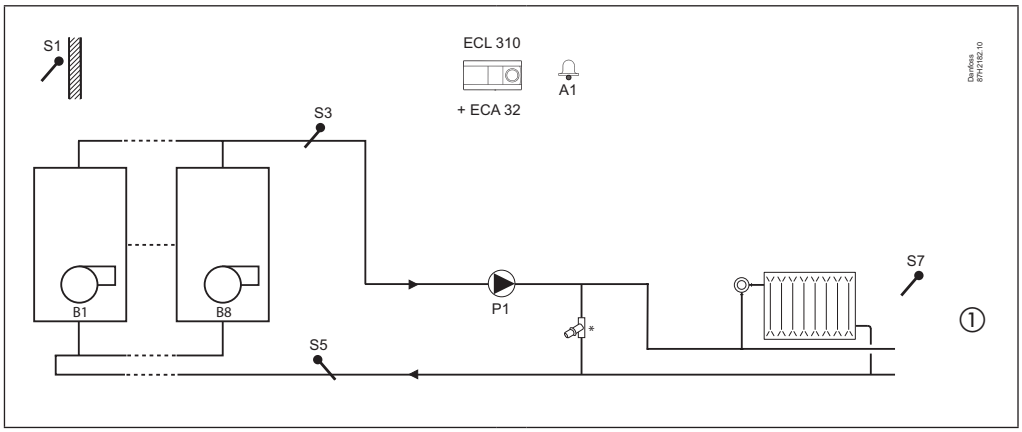

A375.2, ex. a:
Up to 8 x boiler ON / OFF control for a heating circuit and a DHW circuit. Optional DHW priority.

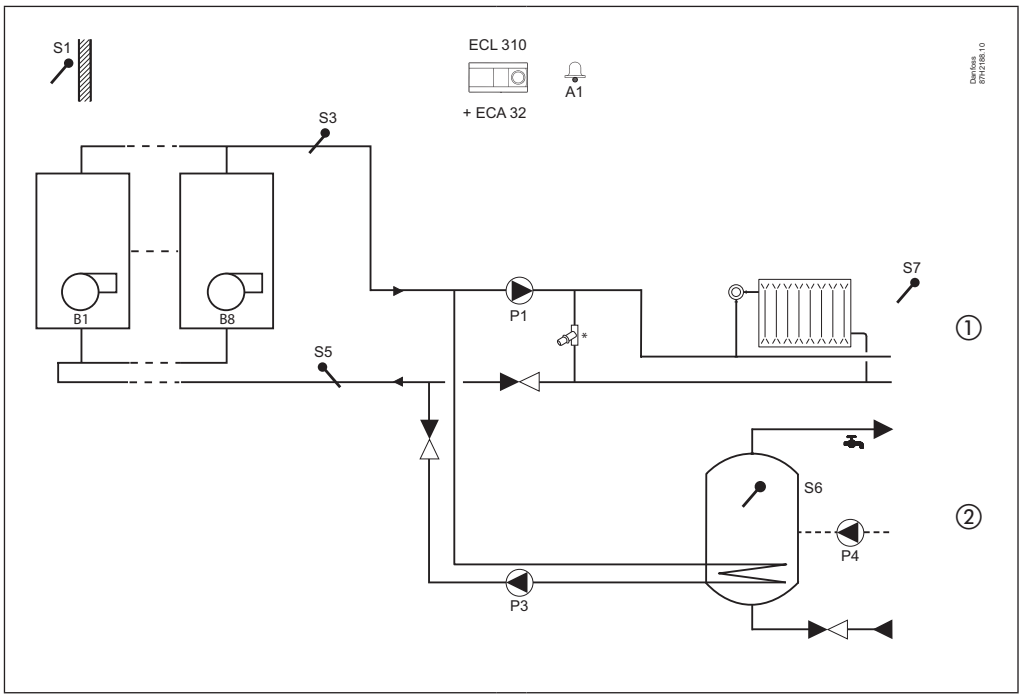

A375.3, ex. a:
Up to 8 x boiler ON / OFF control for a direct heating circuit (1), a mixing circuit (2) and a DHW circuit (3). Optional DHW priority.

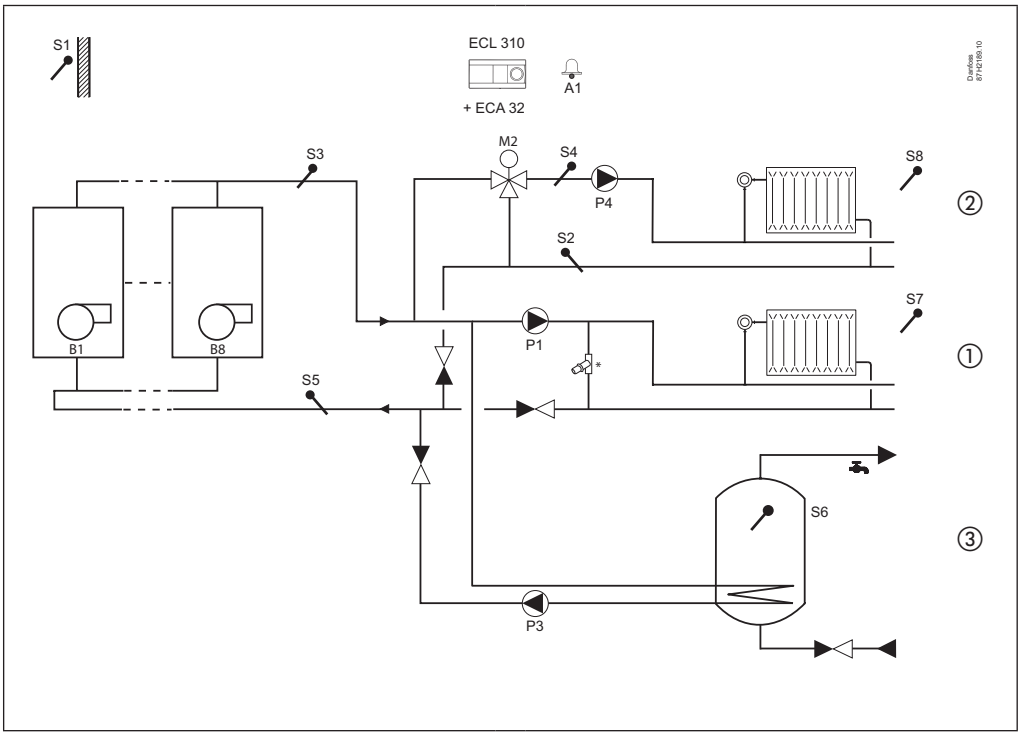

Burner control overview:

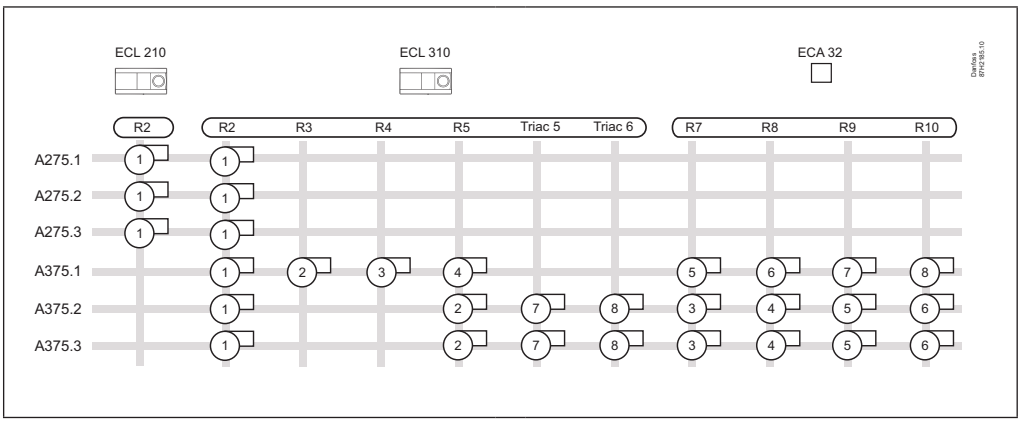

R2-R10 = relay nos. in ECL / ECA 32

A333.1, ex. a:
Heating system with control of 1 or 2 circulation pumps. Refill water function with control of 1 or 2 pumps. Pressure measurements in the system.

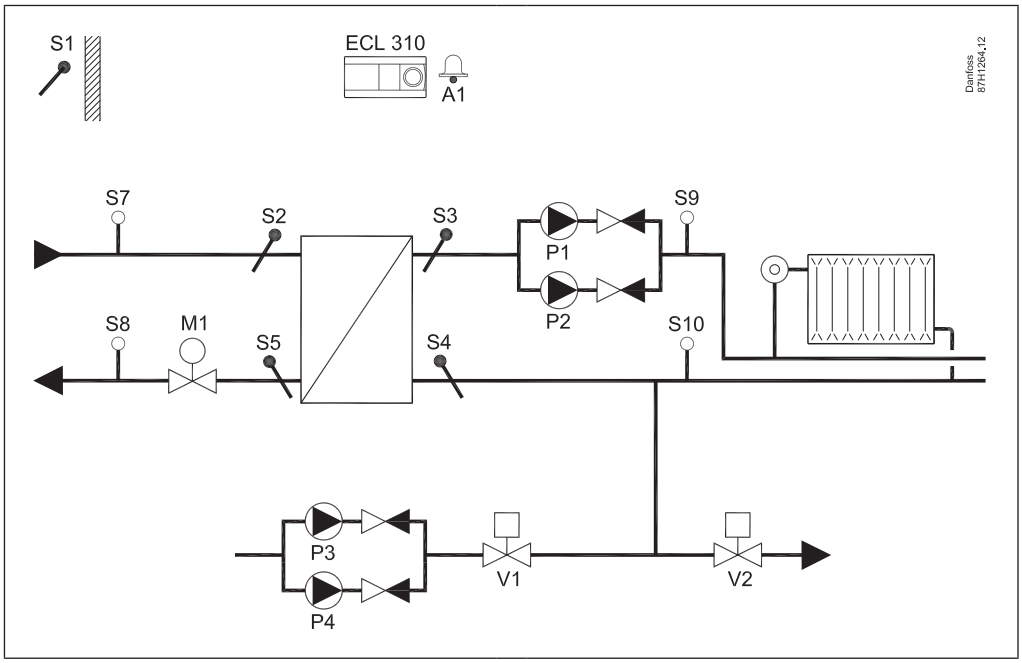

A333.2, ex. a:
Heating system with ON / OFF and speed control of 1 or 2 circulation pumps. Refill water function with ON / OFF and speed control of 1 or 2 pumps. Level control of refill water storage tank. Pressure measurements in the system.

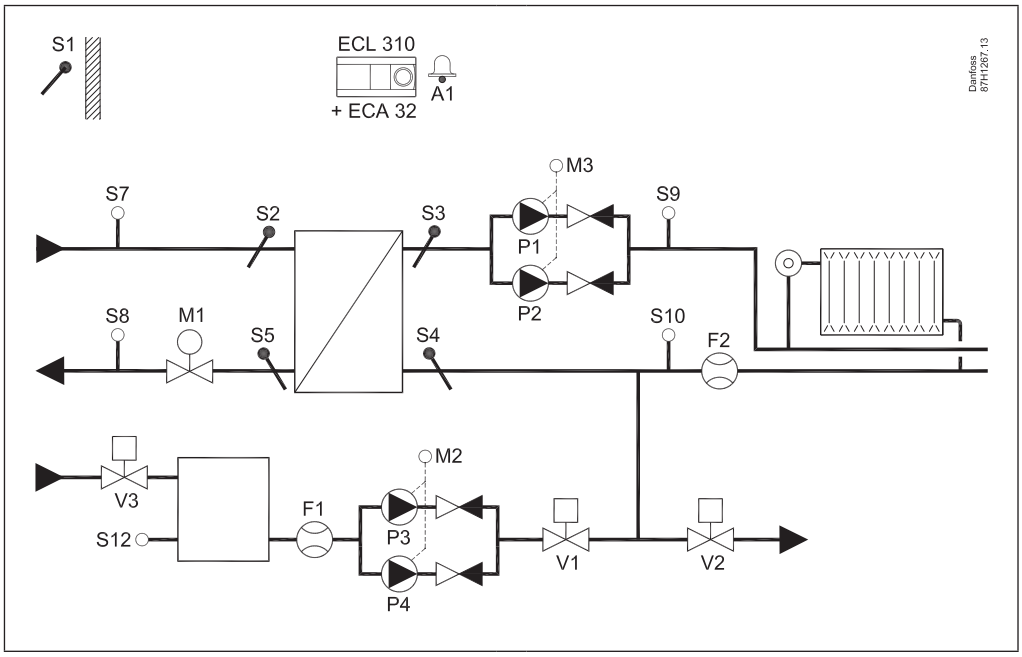

A333.3, ex. a:
Heating system with ON / OFF and speed control of 1 or 2 circulation pumps. Control valve M1 is 0 - 10 V controlled. Refill water function with ON / OFF and speed control of 1 or 2 pumps. Level control of refill water storage tank. Pressure measurements in the system.

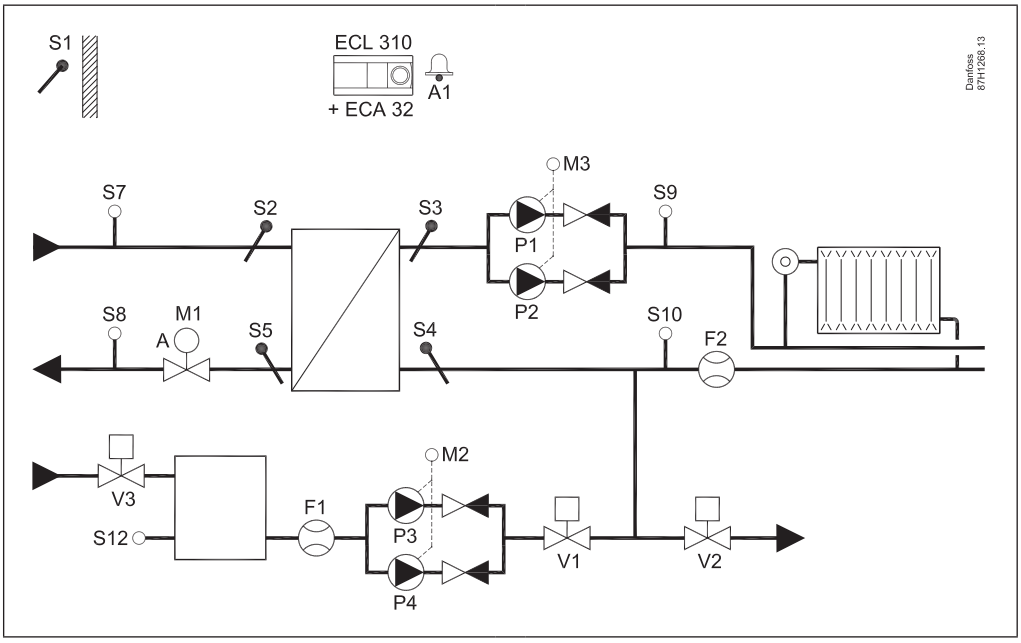

A361.2, ex. a:
2 x heating systems with two-pump control and refill water function. Supply temperature dependent flow temperature control.

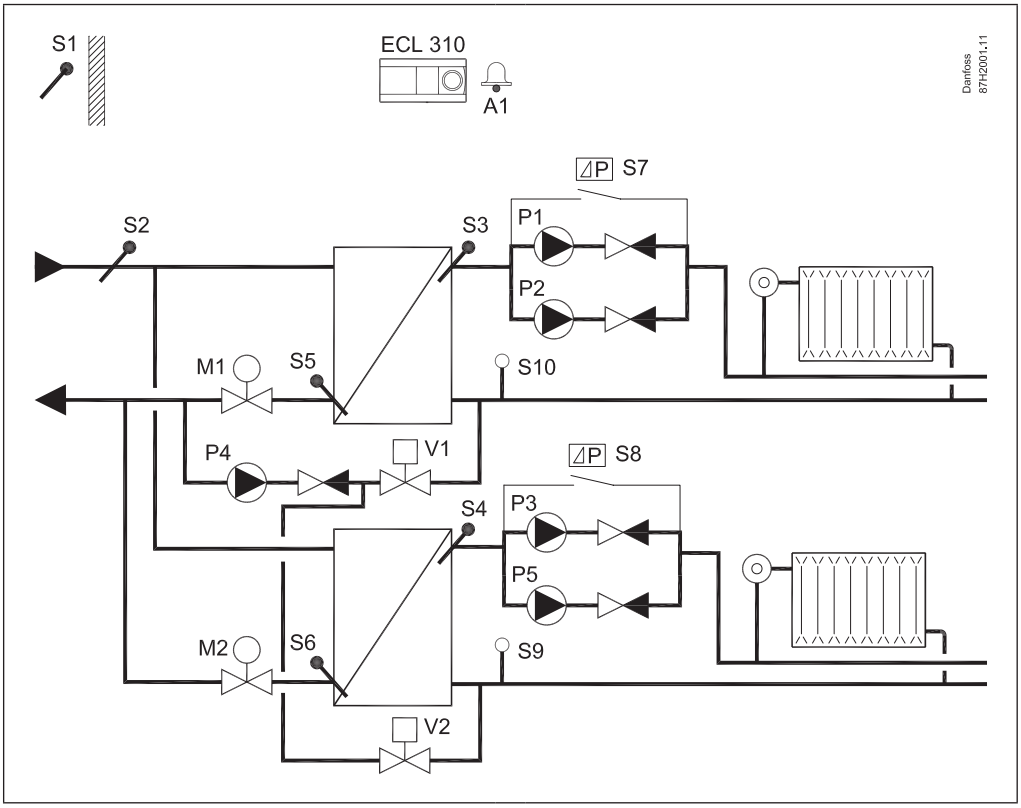

A367.1, ex. a:
System with 2 heating circuits and secondarily connected DHW tank with internal heat exchanger.
Optional DHW priority.

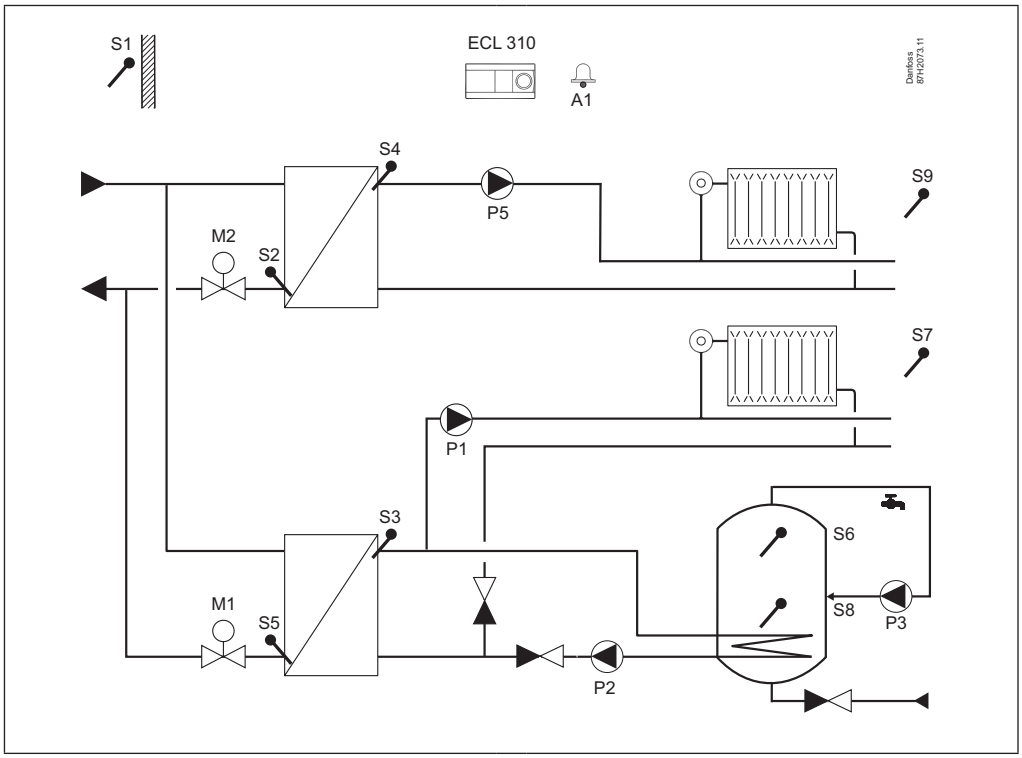

A367.2, ex. a:
System with 2 heating circuits and secondarily connected DHW tank charging system.
Optional DHW priority.

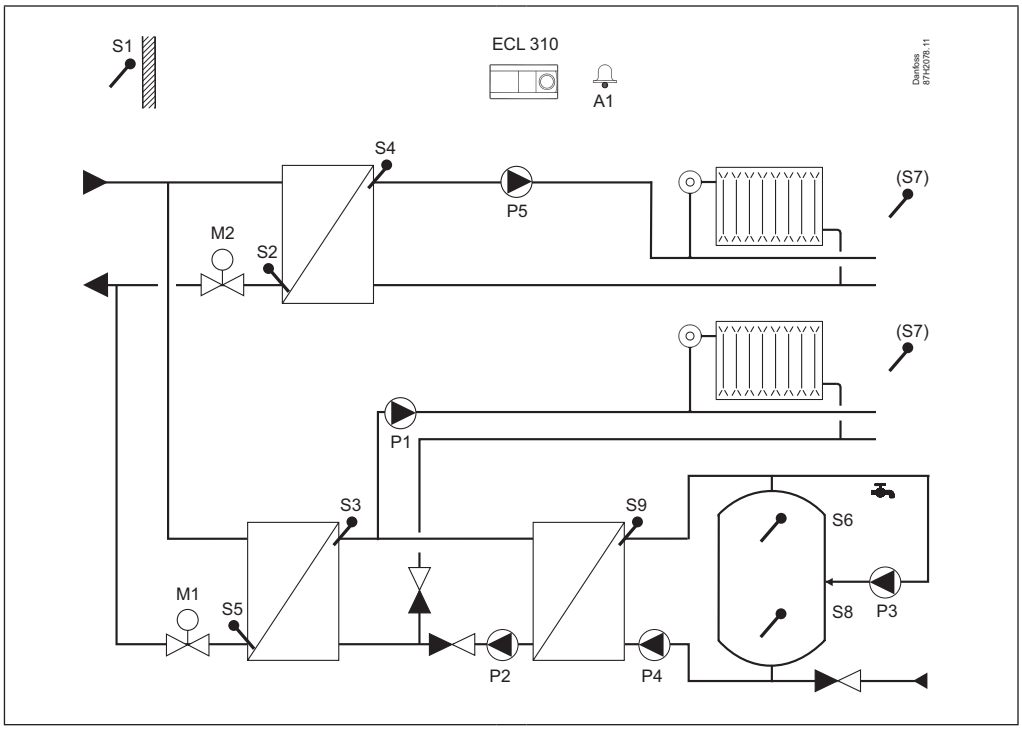

A368.2, ex. a:
Heating system with two-pump control and refill water function. Supply temperature dependent flow temperature control. DHW heating system with control of 1 or 2 circulation pumps.

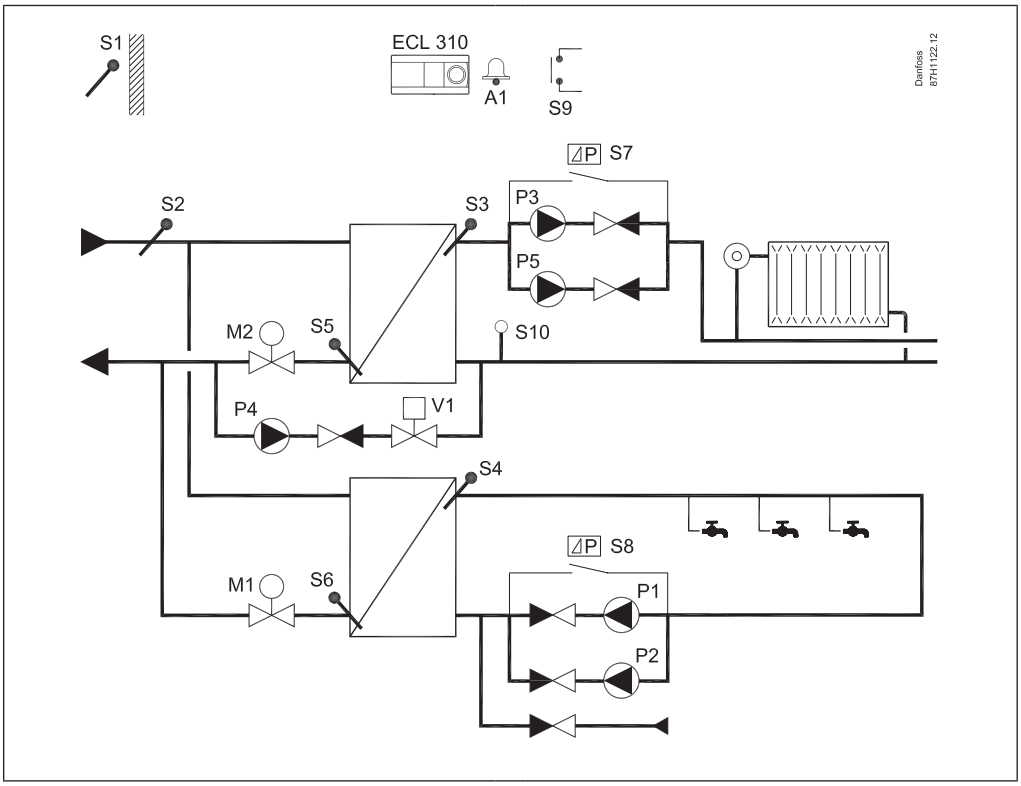

A368.4, ex. a:
Heating system with two-pump control and refill water function with 1 or 2 pumps. Supply temperature dependent flow temperature control. DHW heating system with control of 1 or 2 circulation pumps. Pressure measurements in the systems.

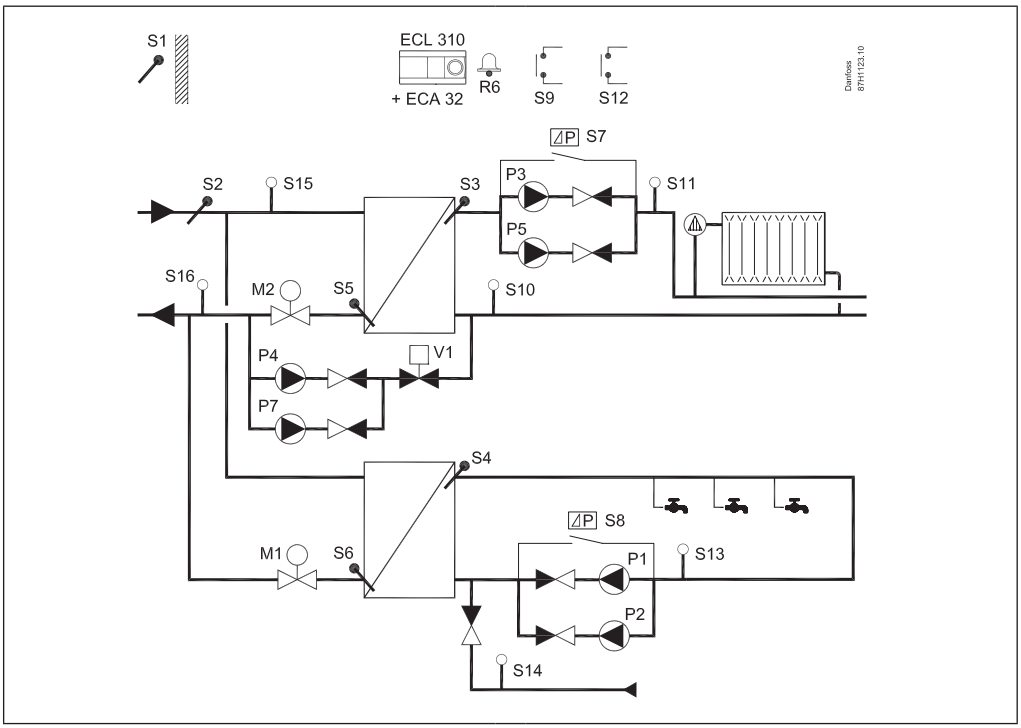

A376.1, ex. a:
Two heating circuits and one direct DHW heating system. Parallel mode or DHW priority.

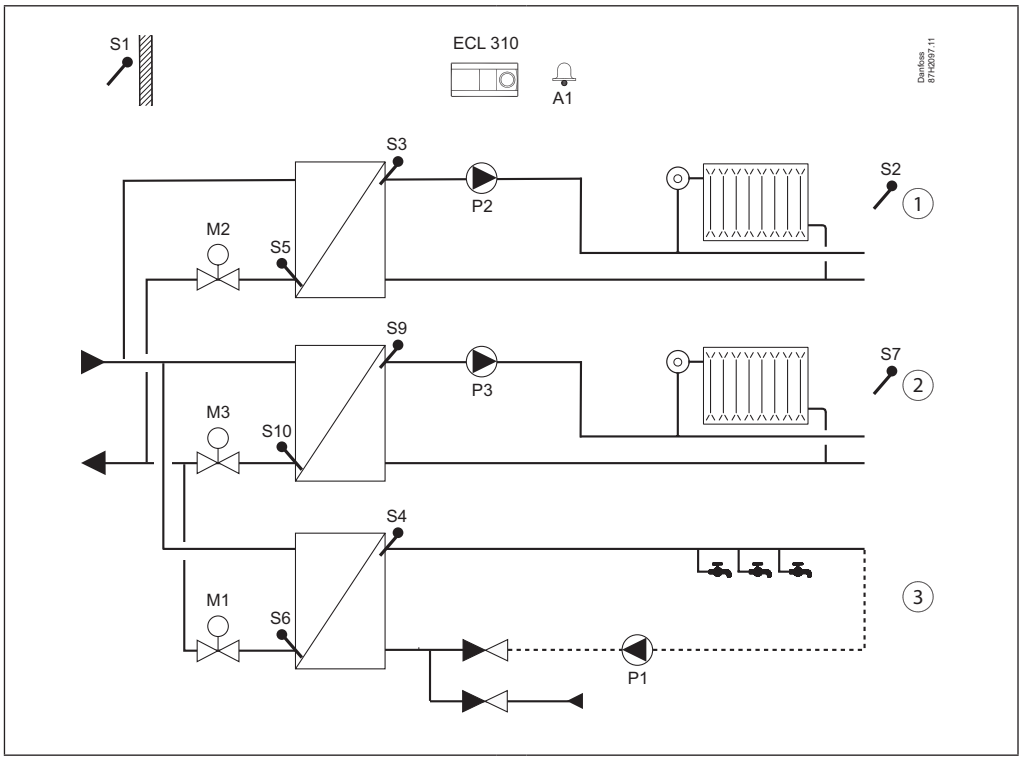

A376.2, ex. a:
Two heating circuits and one direct DHW heating system. Parallel mode or DHW priority.
DHW heating on demand (flow switch).

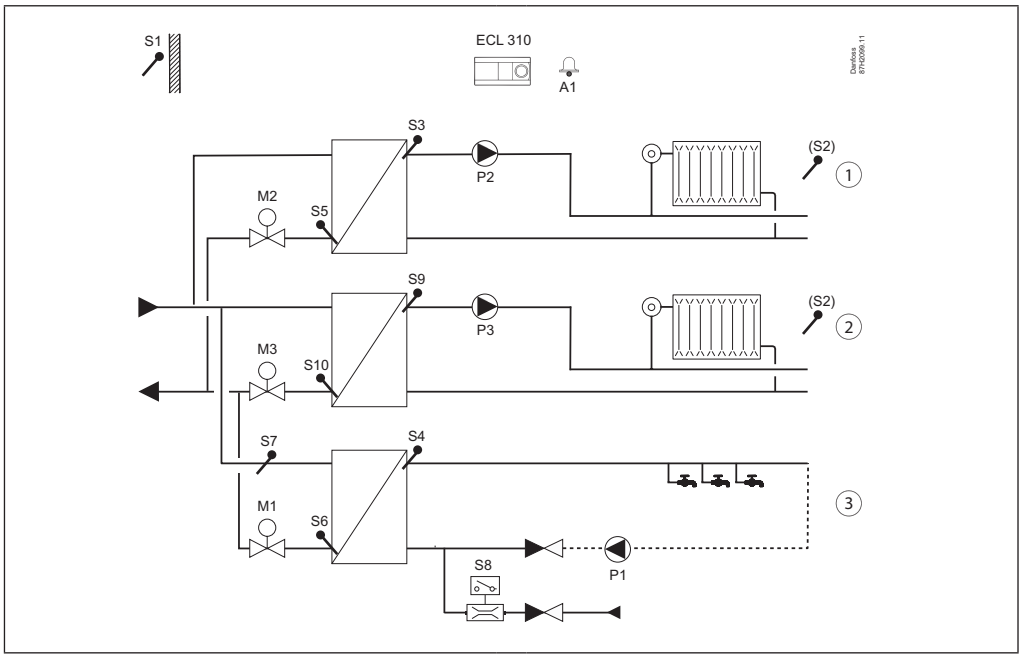

A376.3, ex. a:
Two heating circuits and one direct DHW heating system. Parallel mode or DHW priority. Control valves M1, M2 and M3 are 0 - 10 V controlled.

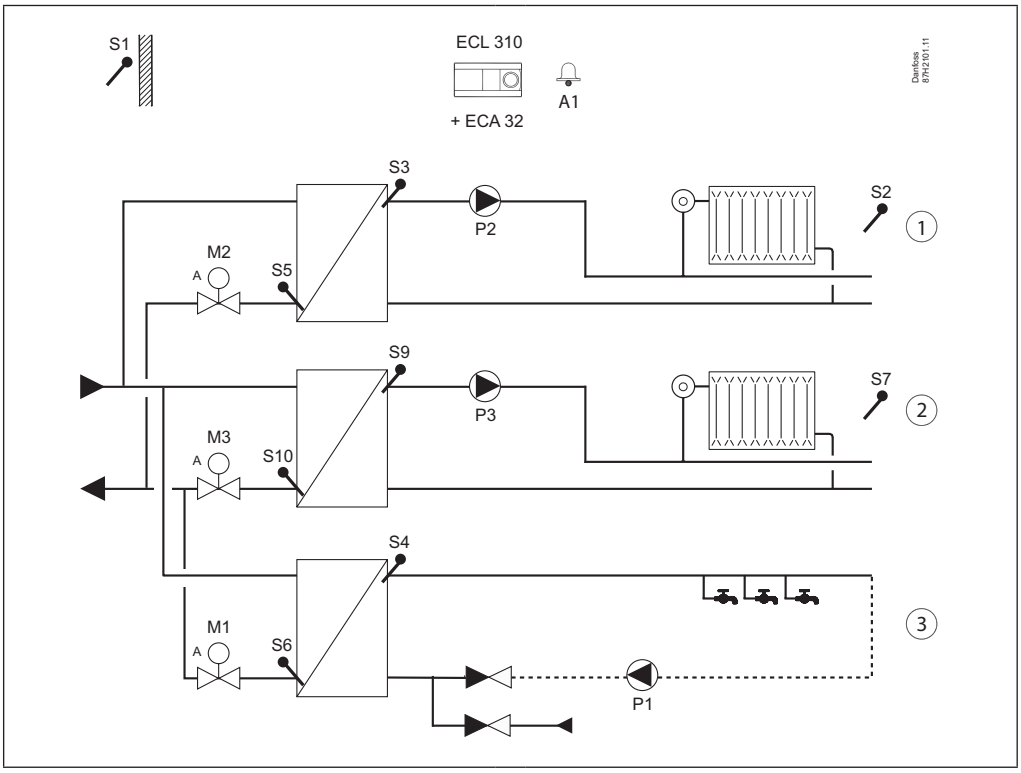

A376.9, ex. a:
Two heating circuits and one direct DHW heating system. Parallel mode or DHW priority. Pressure measurements and temperature monitoring in the system.

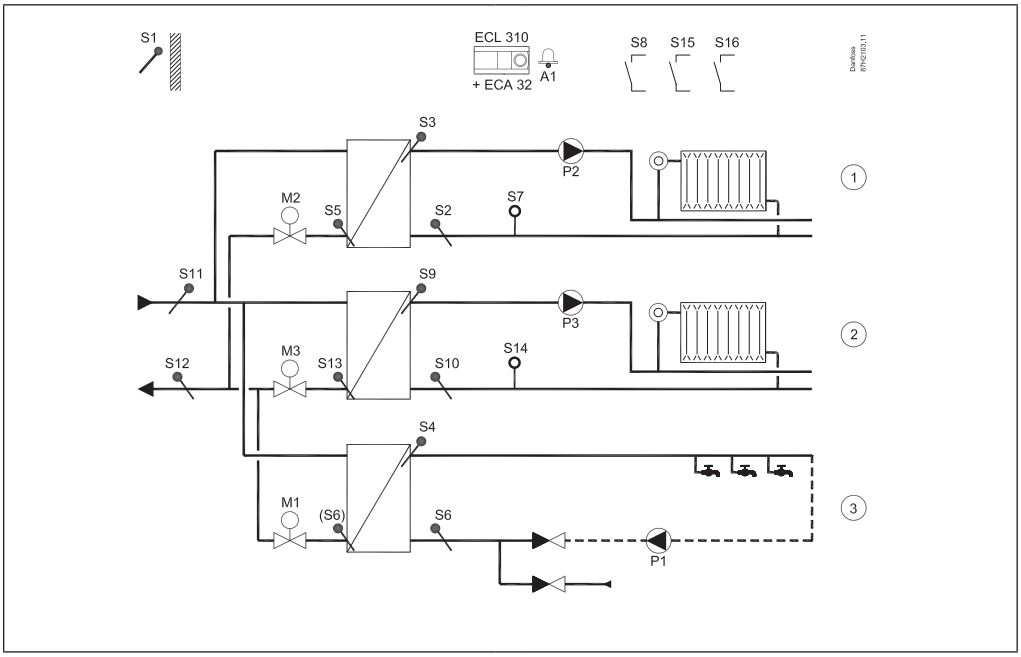

A377.1, ex. a:
Two heating circuits and one DHW tank charging system. Parallel mode or DHW priority.

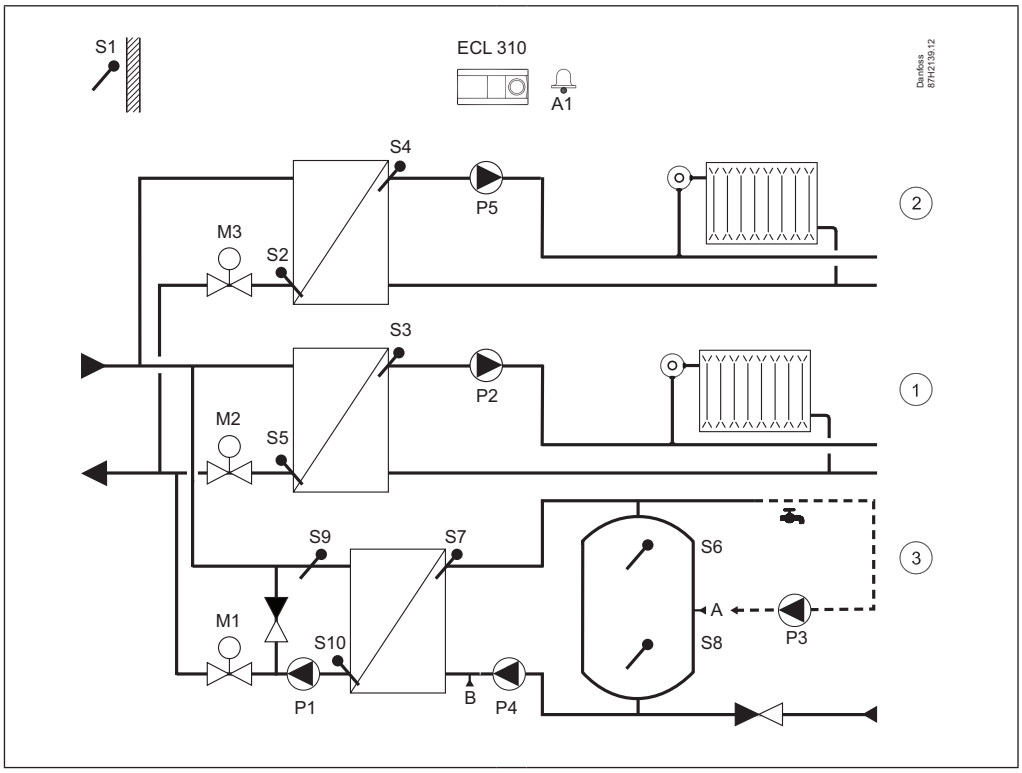

A377.2, ex. a:
Two heating circuits and one DHW tank charging system. Control of the DHW heating temperature. Parallel mode or DHW priority.

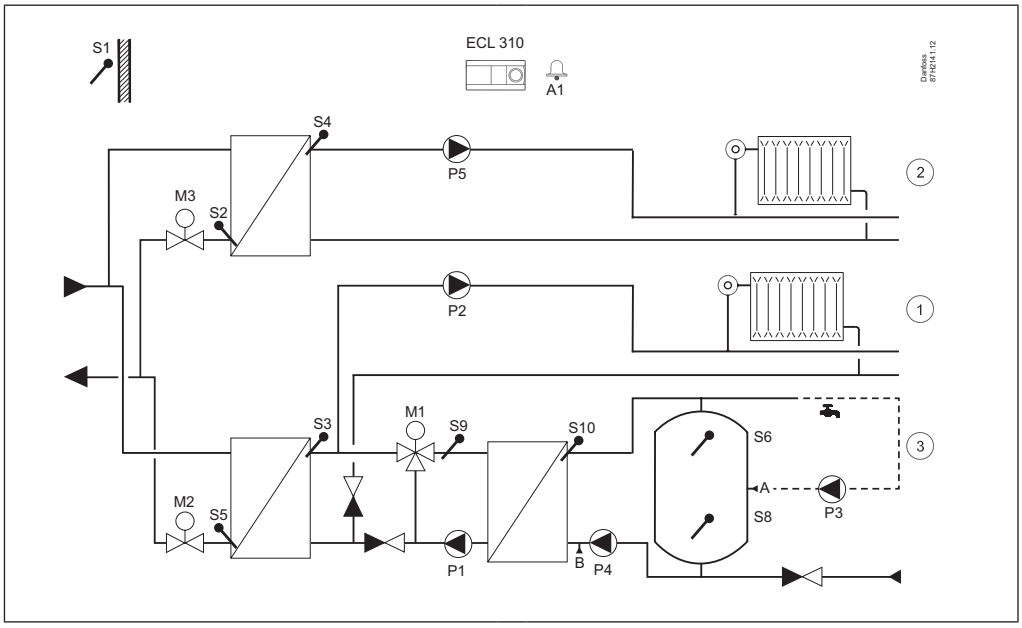

Ordering

Controller, base parts and accessories:

Type	Designation	Code no.
ECL Comfort 310	Universal hardware - 230 V a.c. Base part is not included. Installation guide (no text) is included.	087H3040
ECL Comfort 310	Universal hardware - 24 V a.c. Base part is not included. Installation guide (no text) is included.	087H3044
ECL Comfort 310B	Universal hardware - 230 V a.c. Without display and dial. Requires a Remote Control Unit. Base part is not included. Installation guide (no text) is included.	087H3050
ECL Comfort 310 base part	For mounting on wall or DIN rail (35 mm). ECL Comfort 210 can be mounted in an ECL Comfort 310 base part (for future upgrade). Installation guide (no text) and cable inlet accessories is included.	087H3230

Remote Control Units and accessories

Type	Designation	Code no.
ECA 30	Remote Control Unit with an integrated room temperature sensor and possibility for connecting an external Pt 1000 room temperature sensor. Base part for mounting on wall included. Installation guide (no text) is included.	087H3200
ECA 31	Remote Control Unit with an integrated room temperature sensor and a humidity sensor. Possibility for connecting an external Pt 1000 room temperature sensor. Used for dedicated applications. Base part for mounting on wall included. Installation guide (no text) is included.	087H3201
ECA 30 / 31 frame kit for mounting in panel front	For mounting in a panel cut-out. Format 144 × 96 mm, actual cut-out 139 × 93 mm. Installation guide (no text) is included.	087H3236
ECA 32	Internal extension module with additional inputs and outputs. To be placed in the ECL Comfort 310 base part. See separate data sheet.	087H3202

Accessories:

Type	Designation	Code no.
ECA 99	230 V a.c. to 24 V a.c. transformer (35 VA)	087B1156

ECL Application Keys

Type	Application type description	Controller output signals	Code no.
A214	• Temperature control (heating / cooling) of ventilation systems. Duct / room temperature control. Return temperature limitation. Flow / power limitation. Fire and frost protection as well as alarm function. • The A214 application key contains applications related to ECL Comfort 310 for increased functionalities (control of rotating heat-exchanger).	2 x 3-point, 2 x 2-point	087H3811
A217	• Advanced temperature control of DHW (Domestic Hot Water) circuit with/ without storage charging system. Circulation pump control. Return temperature limitation. Frost protection and alarm function. • The A217 application key contains applications related to ECL Comfort 310 for increased functionalities (M-bus).	1 x 3-point, 3 x 2-point	087H3807
A230	• (A230.1) Weather compensated flow temperature control of heating systems. Circulation pump control. Room temperature control and sliding return temperature limitation. Flow / power limitation. Wind compensation, frost protection and alarm function. • (A230.2) Flow temperature control of cooling systems. Compensation for outdoor and room temperatures. Return temperature limitation. • The A230 application key works in ECL Comfort 310 for increased functionalities (M-bus).	1 x 3-point, 2 x 2-point	087H3802
A231	• Weather compensated flow temperature control of heating systems. 2-pump control for circulation and refill water function. Sliding return temperature limitation. Frost protection and alarm function. • The A231 application key contains applications related to ECL Comfort 310 for increased functionalities (2 pumps for refill water and M-bus).	1 x 3-point, 3 x 2-point	087H3805
A232	• Weather compensated flow temperature control of heating / cooling circuit(s). Automatic change-over between heating and cooling. Circulation pump control. Dew point (cooling mode only) and surface temperature compensation. • The A232 application key contains applications related to ECL Comfort 310 for increased functionalities (return temperature limitation and separated control of heating and cooling circuits).	1 x 3-point, 3 x 2-point	087H3812

ECL Application Keys (continued):

Type	Application type description	Controller output signals	Code no.
A237	• Weather compensated flow temperature control of heating systems. Circulation pump control. Room temperature control and sliding return temperature limitation. Flow / power limitation. Temperature control of secondarily connected DHW circuit with storage tank charging system or storage tank with internal heat exchanger. Optional ON / OFF control of the DHW circuit in connection with primarily connected storage tank with internal heat exchanger. DHW circulation pump control. Frost protection and alarm function. • The A237 application key contains applications related to ECL Comfort 310 for increased functionalities (M-bus).	1 x 3-point, 3 x 2-point	087H3806
A247	• Weather compensated flow temperature control of heating systems. Circulation pump control. Sliding return temperature limitation. Flow / power limitation. Temperature control of DHW circuit with storage tank charging system. DHW circulation pump control through the storage tank or the heat-exchanger. Frost protection and alarm function. • The A247 application key contains applications related to ECL Comfort 310 for increased functionalities (room temperature sensor and M-bus).	2 x 3-point, 3 x 2-point	087H3808
A260	• Weather compensated flow temperature control of heating systems. Circulation pump control, room temperature control and sliding return temperature limitation for two independent heating circuits. Flow / power limitation, frost protection and alarm function. • The A260 application key works in ECL Comfort 310 for increased functionalities (M-bus).	2 x 3-point, 2 x 2-point	087H3801
A266	• Weather compensated flow temperature control of heating systems. Circulation pump control, room temperature control and sliding return temperature limitation. • Temperature control of DHW circuit with DHW circulation. Return temperature limitation, sliding DHW priority, frost protection and alarm function. Optional control of DHW heating based on DHW demand. • The A266 application key works in ECL Comfort 310 for increased functionalities (M-bus).	2 x 3-point, 2 x 2-point	087H3800
A275	• Weather compensated flow temperature control of 1-stage boiler based heating systems. One direct heating circuit and one mixing circuit. Circulation pumps control, room temperature control and sliding return temperature limitation. • Temperature control of DHW storage tank with internal heat exchanger. Frost protection and alarm function. • The A275 application key contains applications related to ECL Comfort 310 for increased functionalities (multiple boiler stages).	1 x 3-point, 4 x 2-point	087H3814
A333	• Weather compensated flow temperature control of a heating system. ON / OFF and speed control of 1 or 2 circulation pumps and sliding return temperature limitation. Flow / power limitation. Frost protection and alarm function. ON / OFF and speed control of 1 or 2 refill water pumps. Refill water storage control. Pressure release function. Pressure and temperature monitoring. Frost protection and alarm function.	1 x 3-point, 7 x 2-point* or 1 x 0 - 10 V control*, 7 x 2-point*	087H3818
A361	• Weather compensated flow temperature control of 2 heating circuits. Supply temperature dependent flow temperature control. 2-pump control for circulation. Sliding return temperature limitation. Flow / power limitaion. Refill water function. Frost protection and alarm function.	2 x 3-point, 7 x 2-point*	087H3804
A367	• Weather compensated flow temperature control of 2 heating circuits. Circulation pump control. Room temperature control and sliding return temperature limitation. Flow / power limitation. • Temperature control of secondarily connected DHW circuit with storage tank charging system or storage tank with internal heat exchanger. Optional ON / OFF control of the DHW circuit in connection with primarily connected storage tank with internal heat exchanger. DHW circulation pump control. Frost protection and alarm function.	2 x 3-point, 5 x 2-point	087H3813
A368	• Weather compensated flow temperature control of a heating circuit. Supply temperature dependent flow temperature control. 2-pump control for circulation. Sliding return temperature limitation. Flow / power limitation Flow / power limitation and refill water function. • Temperature control of a DHW circuit with DHW circulation, return temperature limitation and sliding DHW priority. Frost protection and alarm function.	2 x 3-point, 5 x 2-point	087H3803

* ECA 32 module needed

ECL Application Keys (continued):

Type	Application type description	Controller output signals	Code no.
A376	• Weather compensated flow temperature control of 2 heating circuits. Circulation pump control. Room temperature control and sliding return temperature limitation. Flow / power limitation. • Temperature control of a DHW circuit with DHW circulation, return temperature limitation and sliding DHW priority. Optional control of DHW heating based on DHW demand. Frost protection and alarm function.	3 x 3-point, 5 x 2-point or 3 x 0 - 10 V control*, 5 x 2-point	087H3810
A377	• Weather compensated flow temperature control of 2 heating circuits. Circulation pump control. Room temperature control and sliding return temperature limitation. Flow / power limitation. • Temperature control of DHW circuit with storage tank charging system or storage tank with internal heat exchanger. DHW circulation pump control. Optional DHW heating temperature control. Frost protection and alarm function.	3 x 3-point, 5 x 2-point	087H3817

* ECA 32 module needed

Each of the abovementioned code nos. comprises 1 ECL Application Key, 1 installation guide and 1 set of multi-lingual user guides.

Pt 1000 temperature sensors (IEC 751B, 1000 Ω / 0 °C):

Type	Designation	Code No.
ESMT	Outdoor temperature sensor	084N1012
ESM-10	Room temperature sensor	087B1164
ESM-11	Pipe surface temperature sensor	087B1165
ESMB-12	Universal temperature sensor	087B1184
ESMC	Pipe surface temperature sensor incl. 2 m cable	087N0011
ESMU-100	Immersion sensor, 100 mm, copper	087B1180
ESMU-250	Immersion sensor, 250 mm, copper	087B1181
ESMU-100	Immersion sensor, 100 mm, stainless steel	087B1182
ESMU-250	Immersion sensor, 250 mm, stainless steel	087B1183
Accessories and spare parts:		
Pocket	Immersion, stainless steel 100 mm, for ESMU-100, Cu (087B1180)	087B1190
Pocket	Immersion, stainless steel 250 mm, for ESMU-250, Cu (087B1181)	087B1191
Pocket	Immersion, stainless steel 100 mm, for ESMB-12, (087B1184)	087B1192
Pocket	Immersion, stainless steel 250 mm, for ESMB-12, (087B1184)	087B1193

Typical ordering, types:

ECL Comfort Controller	Base part	Appl. key	Remote Control Unit	Temperature sensors	Actuators / valves
ECL 310, 230 V a.c. ECL 310 B, 230 V a.c. ECL 310, 24 V a.c.	for ECL 310	A2xx A3xx	ECA 30 ECA 31	ESMT (outdoor) ESM-11 (pipe surface) ESMC (pipe surface) ESMU (immersion) ESM-10 (room) ESMB-12 (universal)	see dedicated literature

Reference, additional products / software:

ECL Portal	Access to the ECL Comfort 310 via a web browser. After having arranged an account, access to the ECL Comfort 310 can also be done via a Smart phone.	See separate data sheet
ECL Tool	Software for laptop. Connect ECL Comfort 210 / 310 directly to laptop for e.g. parameter lists, commissioning reports.	Download from Internet
OPC server	For ECL Comfort 210 (Modbus connection) and ECL Comfort 310 (Modbus or TCP Ethernet connection).	See separate data sheet and download from Internet

Operation

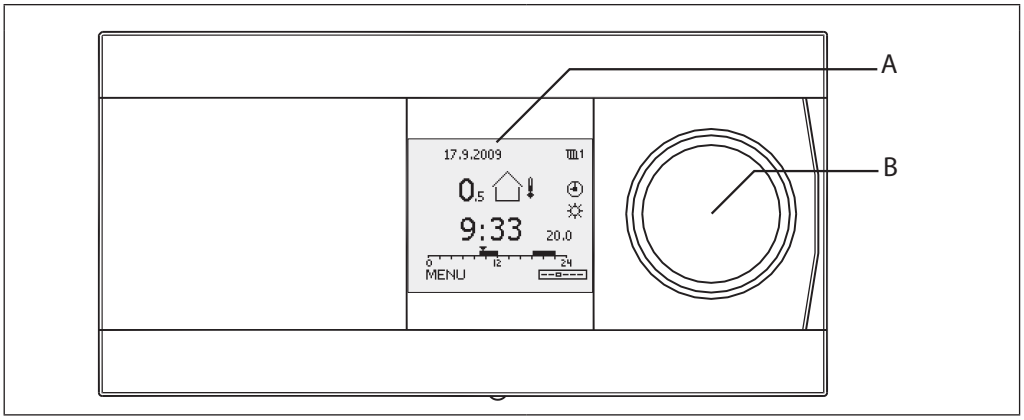

The graphical monochrome display (A) shows all temperature values as well as status information and is used for the setting of control parameters. The display has backlight. Different favorite displays can be selected. Navigation, browsing and selecting the current item in the menus is done by means of the dial (multi-functional knob (B)).

The RCUs ECA 30 / 31 are used for remote setting and override of ECL Comfort controller. By means of the built-in room temperature sensor, the flow temperature can be corrected to keep a constant room temperature at comfort or saving temperature. The ECA 30 / 31 is operated as an ECL Comfort 310 with dial and backlighted display.

Examples of favorite displays:

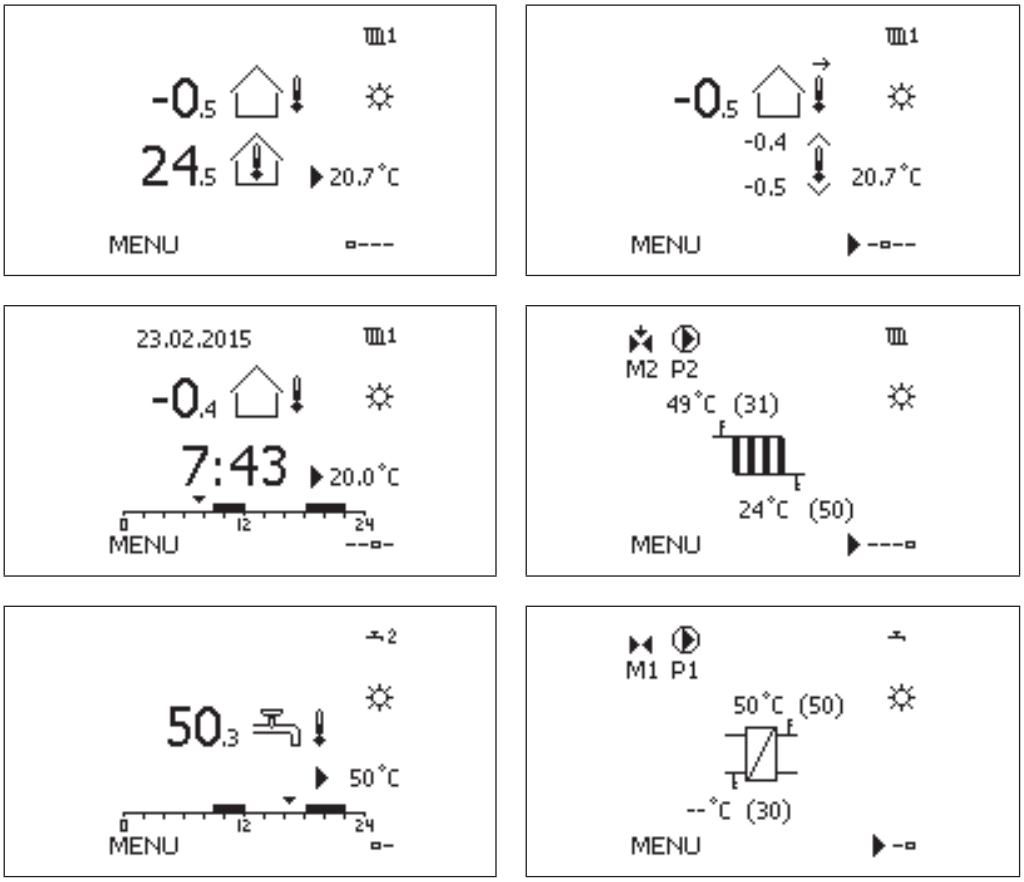

Functions

General functions:

- The ECL Comfort 310 has all the required functions of a modern electronic temperature controller for heating and DHW applications.
- The controller can be used as master or slave in systems with master / slave ECL Comfort 210 / 310 controllers.
- The ECL Application Key contains the application software for flexible configuration. Furthermore, an update of the controller software is done automatically, if required.
- The ECL Comfort 310 contains, besides the standard functions, log and alarm functions.
- The built-in Real Time Clock gives automatic summer / winter time changeover, week and holiday schedule.
- Motor protection, which ensures stable control and a long life of the motorized control valve, is available for most of the applications. In periods without heat demand, the motorized control valve is exercised to avoid blocking.
- Scheduled control (Comfort and Saving mode) is based on a week program. A holiday program gives the possibility to select days with comfort or saving mode.
- The ECL Comfort 310 can receive pulses from a heat or flow meter to limit the power or the flow. Alternatively, the data can come from heat or flow meter via the M-bus connection.
- In many applications analogue input (0 – 10 V) is configured for pressure measuring among others. The scaling is set in the controller.
- Some applications are configured to handle digital input. This function can be used to have an external switch to run comfort or saving mode or react on a flow switch signal.
- The control parameters, proportional band (Xp), integration time (Tn), running time of the motorized control valve and neutral zone (Nz) can be set individually for each output (3-point control).
- Motorized control valves in some applications can be controlled with a 0 - 10 V signal.
- Several applications fulfil the demand for refill water function and / or 2-pump control.

Heating functions:

- The heat curve (relationship between outdoor temperature and desired flow temperature) is set by means of 6 coordinate points or a slope value. Max. / min. limitation of the desired flow temperature can be set.

  In some application sub-types (for example A337, A347, A367, A375 and A377) the desired flow temperature can be set by means of a voltage in the range 0 - 10 volt.
- The return temperature limitation can work in relation to the outdoor temperature or be a fixed value.
- The heating cut-out function can switch OFF the heating and stop the circulation pump at high outdoor temperatures.
- Based on the room temperature the ECL Comfort 310 can correct the desired flow temperature in order to increase the comfort level.
- The optimizer function ensures heating in the desired periods (the lower outdoor temperature, the earlier cut-in of the heating).
- The ramping function makes a smooth cut-in of the heating valuable (district heating installations).
- The boost function makes a powerful cut-in of the heating (boiler based installations).
- The circulation pump is controlled in relation to heat demand and frost protection. In periods without heat demand, the circulation pump is exercised to avoid blocking.
- The saving function gives two possibilities:
  - reduced flow temperature with fixed reduction or reduction in relation to outdoor temperature (the lower the outdoor temperature, the less the reduction),
  - heating off, still with active frost protection.

DHW functions:

- The Auto Tuning function with automatic setting of control parameters for constant DHW temperature is integrated in the application A217, A266, A368 and A376. However, Auto Tuning is only applicable with valves that are approved for Auto Tuning, i.e. the Danfoss types VB 2 and VM 2 with split characteristic as well as logarithmic valves such as VF and VFS.
- The anti-bacteria function can follow a schedule program.
- The heating circuit can have sliding DHW priority.

Communication

The ECL Comfort 310 has:

- **ECL 485** bus, non-galvanic isolated, for closed communication between master, slave and RCUs.
- **RS 485** bus, galvanic isolated, for Modbus communication.
- **M-bus**, non-galvanic isolated, for M-bus communication with meters.
- **USB**, type B, for ECL Tool (software for PC).
- **Ethernet**, RJ 45, for TCP communication to SCADA systems.

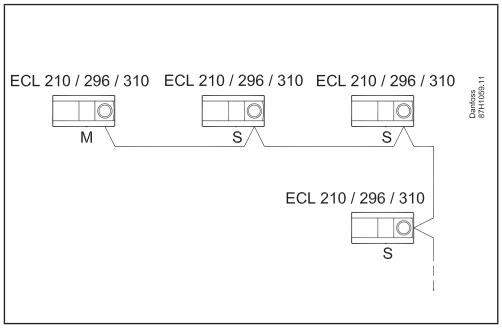

Master / slave connections

Languages

Menu languages are selectable among approx. 20 languages. See "Language list".

Furthermore, English is always uploaded in parallel to the selected language.

General data

ECL Comfort controller and RCU data:

	ECL Comfort 310 / 310B	**ECA 30 / 31**
Ambient temperature	0 - 55 °C	
Storage and transportation temperature	-40 - 70 °C	
Mounting	Vertically, on wall or DIN rail (35 mm)	Vertically, on wall or in panel cut-out
Connections	Terminals in base part	Terminals in base part
Number of inputs	8 in total: 6 temperature sensors 4*) Pt 1000 sensor, digital, analogue or pulse	-
Temperature sensor type	Pt 1000 (1000 ohm at 0 °C), IEC 751B Range: -60 – 150 °C	Alternative to built-in room temperature sensor: Pt 1000 (1000 ohm at 0 °C), IEC 751B
Digital input	12 V pull-up possible	-
Analog input	0 - 10 V, resolution 9 bits	-
Pulse input, frequency range (selected applications)	For monitoring: 0.01 - 200 Hz For limitation: Minimum 1 Hz (recommended) and regular pulses for having a stable control.	-
Weight	0.46 / 0.42 kg	0.14 kg
Display (ECL Comfort 310 and ECA 30 / 31 only)	Graphical monochrome with backlight 128 × 96 dots Display mode: Black background, white text	
Setting (ECL Comfort 310 and ECA 30 / 31 only)	Dial with intuitive push and turn function	
Setting (ECL Comfort 310 B)	ECA 30 / 31	
Min. backup time for time and date	72 hours	-
Backup of settings and data	Flash memory	Flash memory
Grade of enclosure	IP 41	IP 20
CE-marking in accordance with the standards	EMC directive LVD directive RoHS directive	

*) Configured at application upload.

ECL application key:

Storage type	Flash memory
Segmentation	Part 1: Application data, not changeable Part 2: Factory settings, not changeable Part 3: Updating SW for the ECL Comfort controller, not changeable Part 4: User settings, changeable
Applications	A2xx keys work in ECL Comfort 210 and ECL Comfort 310 A3xx keys work in ECL Comfort 310 only
Lock function	If not inserted in the ECL Comfort controller, all settings can be seen, but not changed

ECL 485 communication bus data:

Purpose	For internal ECL Comfort 210 / 310 and ECA 30 / 31 use only (Danfoss proprietary bus)
Connection	Terminals in base part Non-galvanic isolated
Cable type	Shielded cable, 2 x twisted pair, Min. cross section: 0,22 mm (AWG 24). Examples: LiYCY 2 × 2 × 0.25 mm2 (AWG 24) or Ethernet CAT5
Max. total cable length (bus cable + sensor cables)	200 m in total (inclusive sensor cables)
Max. number of ECL slaves connected	Units with unigue address (1 - 9): 9 Units with address "0": 5
Max. number of Remote Control Units connected	2
Data sent from master	Date Time Outdoor temperature Desired room temperature DHW-priority signal
Data sent from addressed slave controller	Desired flow temperature from each circuit
Data sent from ECA 30 / 31	• Actual and desired room temperature • Function selector mode • (ECA 31) Relative humidity

Modbus communication data:

Purpose	For SCADA system
Connection	Terminals 34 and 35 in base part. Modbus reference (terminal 36) must be connected. Galvanic isolated (500 V).
Protocol	Modbus RTU
Cable type	Shielded cable, 2 x twisted pair + Signal GND. Min. cross section: 0,22 mm2 (AWG 24). Example: LiYCY 2 × 2 × 0.25 mm2 (AWG 24)
Max. bus cable length	1200 m (dependent on cable type and installation).
Communication speed	Half duplex. 9,6 Kbit/s (default) / 19.2 Kbit/s / 38.4 Kbit/s
Serial mode	8 data bit, even parity and 1 stop bit.
Network	According to the standard Modbus Serial Line Implementation Guide V1.0.

M-bus communication data:

Purpose	Connection to heat meters, max. 5 heat meters
Connection	Terminals 37 and 38 in base part. Non-galvanic isolated
M-Bus master according to	DS / EN 1434-3: 1997
Cable type	2 x 0,8 mm2 Example: JY(St)Y 2 x 0.8 mm2 (not twisted pair)
Max. cable length	50 m
Baud rate	300 baud (adjustable)
Update time	60 s (adjustable)
Gateway function	Allows the ECL Portal to read energy meters directly
Supported heat meters	Infocal 6 and many other marks and types. Information about other heat meters on request
Transmitted heat meter data	Heat meter type dependent: • Primary flow temperature • Primary return temperature • Actual flow / accumulated flow • Actual heat / power • Accumulated heat energy
Recommendations:	Danfoss recommends 230 V a.c. supplied heat meters

USB communication data:

USB CDC (Communication Device Class)	For service purposes (Windows driver is needed, to enable that Windows recognize the ECL as a virtual COM port)
Modbus over USB	Similar to the serial Modbus, but with relaxed timing
Connection, cable type	Standard USB cable (USB A -------- USB B)

Ethernet communication (Modbus / TCP) data:

Purpose	For SCADA system
Connection	RJ45 female connector
Protocol	Modbus / TCP
Cable type	Standard Ethernet cable (CAT 5)
Max. Bus cable length	According to Ethernet standard
Auto cross-over detection	Enabled
Default Ethernet address (IP address)	192.168.1.100
Port number	502 (Modbus / TCP port)
Number of connections	1
Security	Must be provided by Ethernet infrastructure

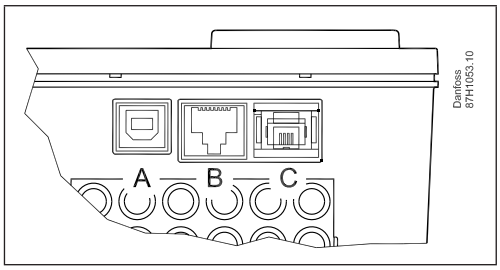

A port: USB (type B female plug)
B port: Ethernet
C port: ECL Application Key

Languages

Bulgarian	Estonian	Italian	Russian
Croatian	Finnish	Latvian	Serbian
Czech	French	Lithuanian	Slovak
Danish	German	Polish	Slovenian
Dutch	Hungarian	Romanian	Swedish
English	Spanish		

The selected language + English is uploaded at application upload.

Comparison ECL Comfort 310 / 210

	ECL Comfort 310	**ECL Comfort 210**
M-bus communication	Yes	No
Modbus connection	Yes, galvanic isolated	Yes, non-galvanic isolated
Ethernet	Yes, RJ45 connection, Modbus / TCP. For SCADA solutions and ECL Portal	No
Inputs	10	8
Relay outputs	6	4
Valve actuator outputs	3 pairs	2 pairs
Extension of inputs / outputs	Yes, ECA 32, placed in base part. • 6 inputs • 2 pulse inputs • 3 analogue outputs (0 - 10 V) • 4 relays	No

Wiring - 230 V a.c.

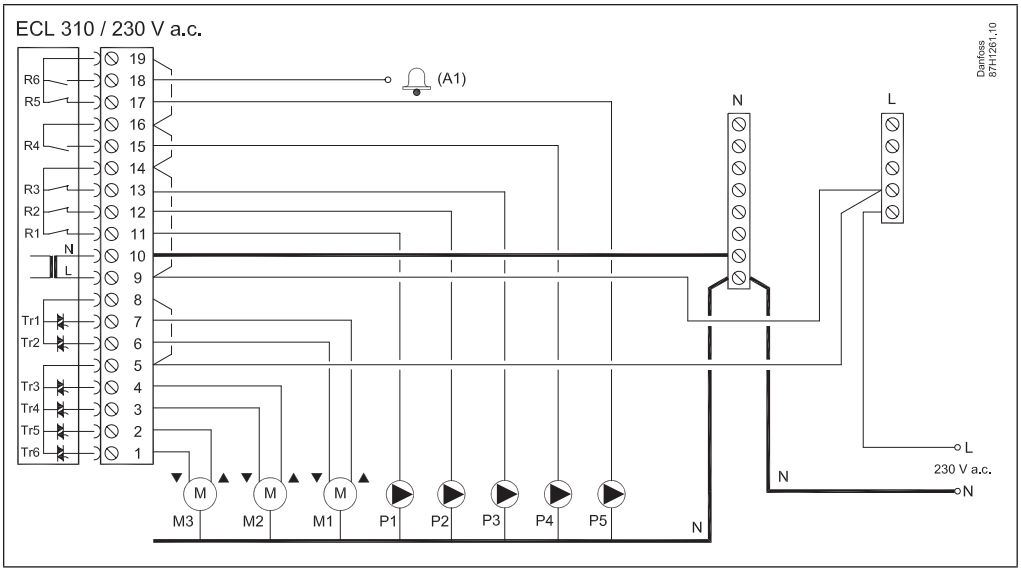

ECL Comfort 310 wiring example

Supply voltage	230 V a.c. - 50 Hz
Voltage range	207 to 244 V a.c. (IEC 60038)
Power consumption	5 VA
Max. load on relay outputs	4(2) A - 230 V a.c. (4 A for ohmic load, 2 A for inductive load)
Max. load on actuator outputs	0.2 A - 230 V a.c.

Wiring - 24 V a.c.

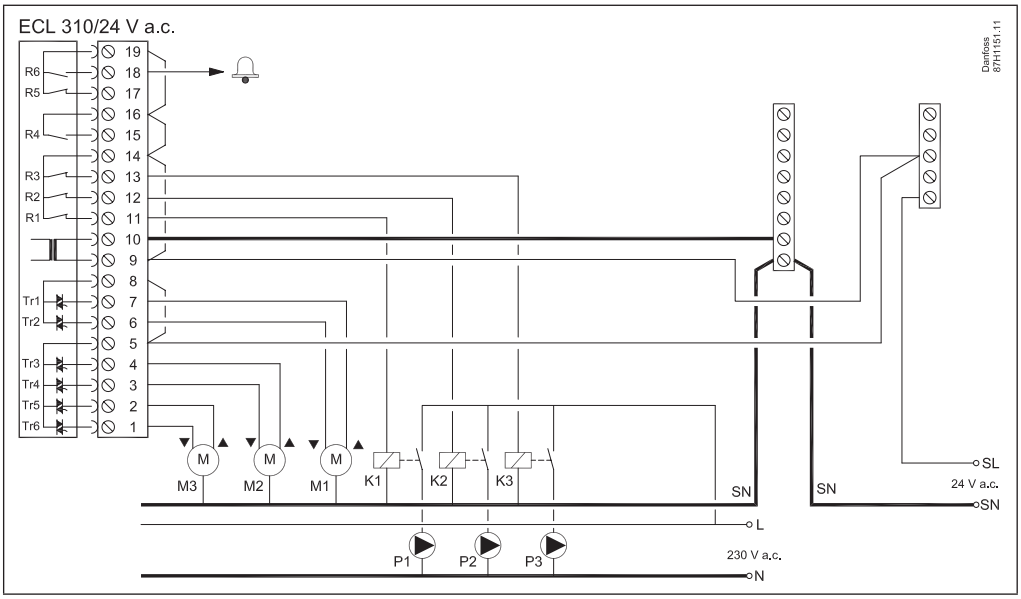

ECL Comfort 310 wiring example

Auxiliary relays (K) must be used in order to separate the 230 V a.c. supply from the 24 V a.c. supply of the controller.

Supply voltage	24 V a.c. - 50 Hz
Voltage range	21.6 to 26.4 V a.c. (IEC 60038)
Power consumption	5 VA
Max. load on relay output	4(2) A - 24 V a.c. (4 A for ohmic load, 2 A for inductive load)
Max. load on actuator output	1 A - 24 V a.c.

Wiring - input

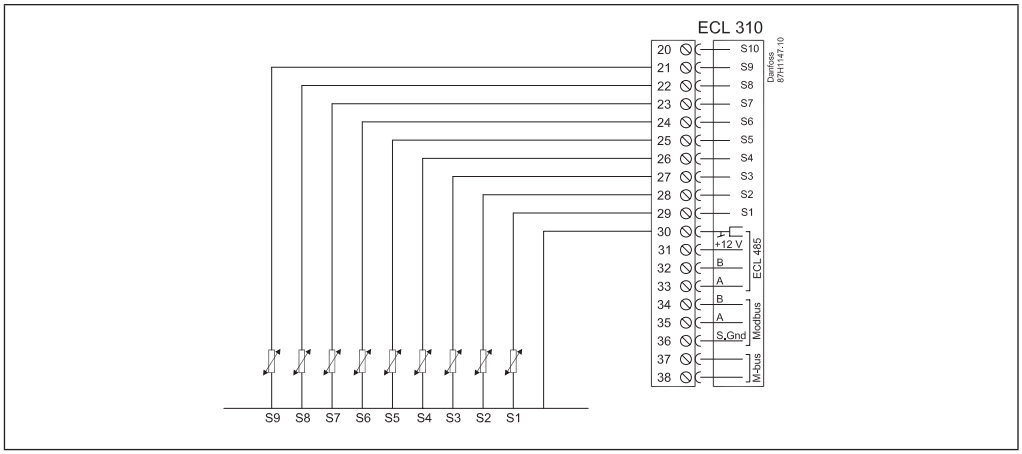

Wiring - ECA 30 / 31 Remote Control Unit

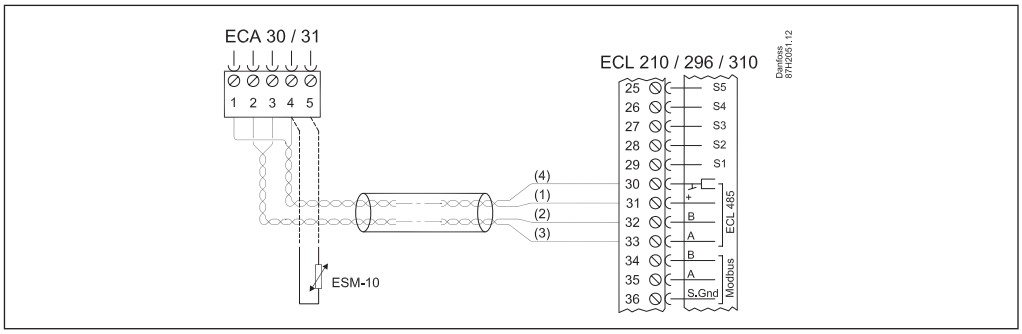

Wiring of ECL Comfort 310 / 310B and ECA 30 / 31

Supply voltage	From ECL 485 communication bus
Power consumption	1 VA
External room temperature sensor	Pt 1000 (ESM-10), substitutes the built-in room temperature sensor
ECA 31 only	Contains humidity sensor, used for special applications

Base part

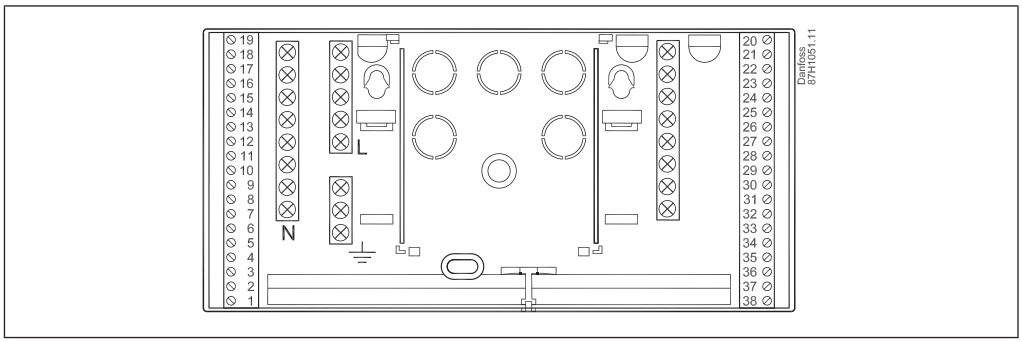

ECL Comfort 310 base part (can be used for ECL Comfort 210 too).

Dimensions

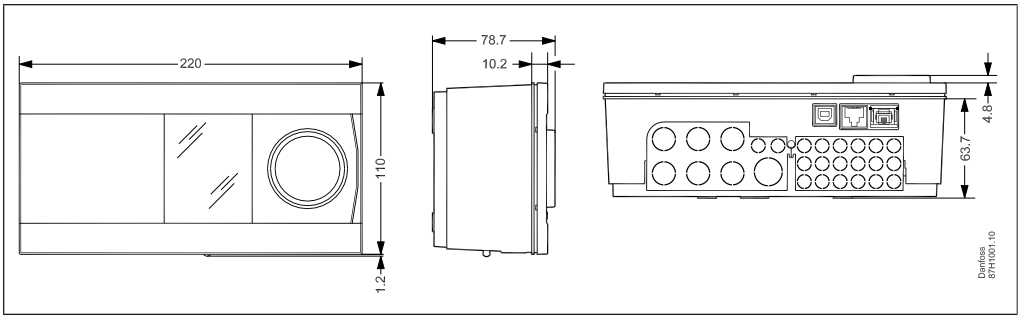

ECL Comfort 310

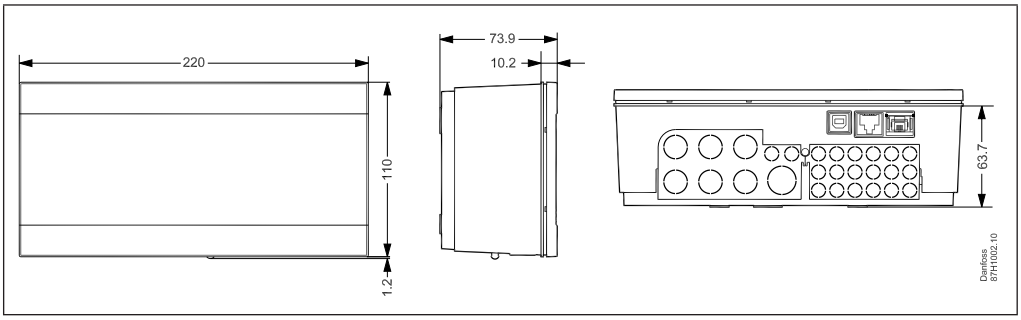

ECL Comfort 310B

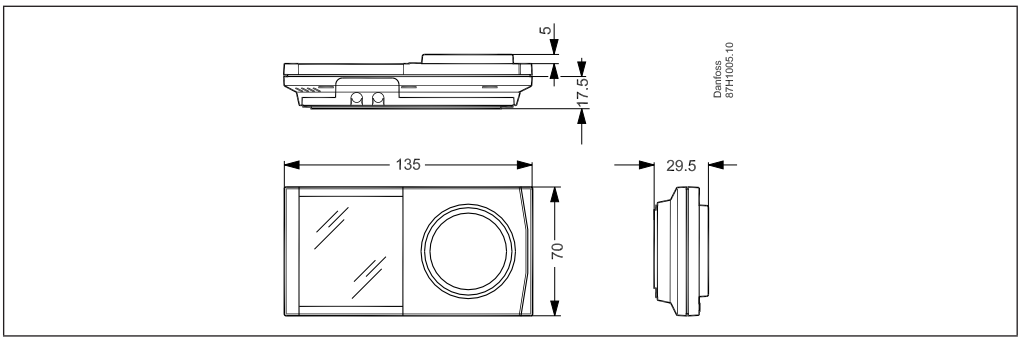

ECA 30 / 31

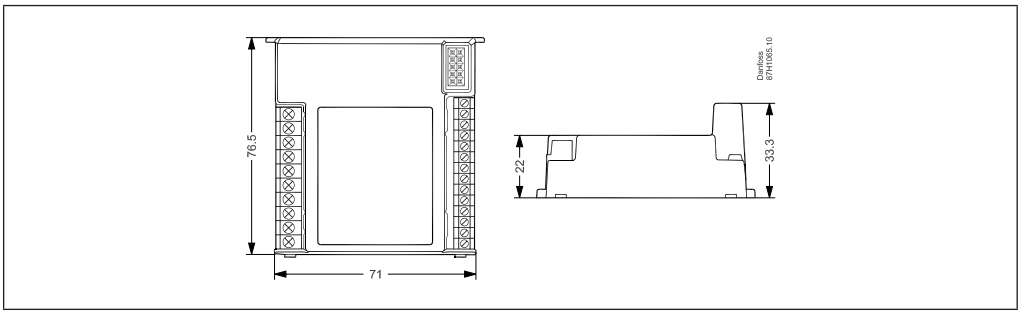

ECA 32

ECA 30 / 31 cut-out for mounting in panel front

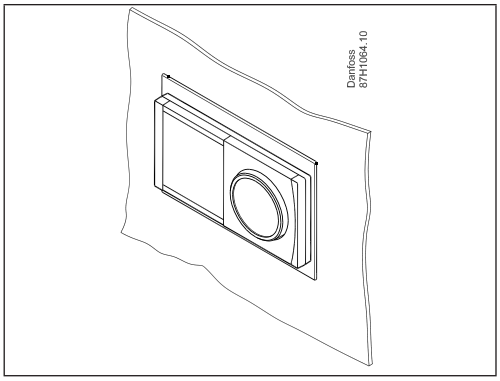

A frame (code no. 087H3236) is placed in the cut-out (139 × 93 mm) in which the ECA 30 / 31 is placed.

Tender text:

Electronic controller for heating and domestic hot water application

1a
Electronic weather compensator for flow temperature control in heating and domestic hot water installations.
Turn-push-dial, backlighted graphic display and menu based operation in local languages.
The controller can operate multiple application uploaded by means of application software keys.

1b
- Heat curve setting in 6 coordinates or as slope.
- Flow temperature limitations.
- Room temperature compensation and Comfort / Saving periods according to week schedule.
- Holiday schedule.
- Return temperature limitation as a fixed value (DHW) or in relation to outdoor temperature (heating).
- Pumps controlled in relation to heat demand and frost protection.
- Alarm functions and log pictures for all sensors.
- Manuel override of the individual outputs.
- Communication: M-bus (up to 5 meters), Modbus, Ethernet, ECL 485 (internal data bus).
- Connection for commissioning / service via PC
- 6 temperature sensor (Pt 1000) inputs.
- 4 application related and configured inputs.
- 6 relay outputs
- 3 pairs of electronic output for noiseless operation of the motorized control valve.

Extension module enables:
- Additional 6 configurable inputs
- 2 pulse counters
- 4 relay outputs
- 3 analogue outputs

1c
Main data:
- Supply voltage, 230 V a.c., 50 Hz: ECL 310 and ECL 310 B
- Supply voltage, 24 V a.c., 50 Hz: ECL 310
- Power consumption: max. 5 VA
- Ambient temperature: 0 – 55 °C
- Storage temperature: -40 – 70 °C

2
Product characteristics:
- Protection class: IP 41
- DIN rail adaptor integrated
- Dimension (inclusive base part) L*W*H, 220*110*80 mm
- Ordering code no.: ECL Comfort 310, 230 V: 087H3040
- Ordering code no.: ECL Comfort 310B, 230 V: 087H3050
- Ordering code no.: ECL Comfort 310, 24 V: 087H3044

Additional documentation for ECL Comfort 310, modules and accessories is available on *http://heating.danfoss.com/*

Danfoss can accept no responsibility for possible errors in catalogues, brochures and other printed material. Danfoss reserves the right to alter its products without notice. This also applies to products already on order provided that such alterations can be made without subsequential changes being necessary in specifications already agreed.
All trademarks in this material are property of the respective companies. Danfoss and the Danfoss logotype are trademarks of Danfoss A/S. All rights reserved.