ENGINEERING
TOMORROW

Data sheet

Pressure independent balancing and control valve AB-QM DN 10-250

The AB-QM valve equipped with an actuator is a control valve with full authority and an automatic balancing function / flow limitation. Typical applications are: Temperature control with permanent automatic balancing on terminal units (chillers, air-handling units, fan coils, induction units, radiation panels and heat exchangers).

Description

The **precise flow control performance** of the AB-QM with a Danfoss actuator provides increased comfort and **superior Total Cost of Ownership** because of savings made on:

- Efficient energy transfer and minimal pumping costs since there are no overflows at partial loads because of the exact pressure independent flow limitation.
- Smaller pump investments and lower energy consumption as the pump head needed is lower than in the traditional setup. With the built in test plugs it is easy to troubleshoot and find the optimal setpoint for the pump.
- Reduced movements of the actuator since the built-in differential pressure controller ensure the pressure fluctuations do not influence the room temperature.
- Achieving a stable temperature in a room leading to a lower average temperature at the same comfort level.
- Minimal flow complains, as the valve performs as designed.
- Minimal blockage complains, as the membrane design makes AB-QM less susceptible to blockage than a cartridge type constriction.
- Trouble-free segmentation of the building project. When sections of a project are finished they can normally not be handed over to the customer with a fully functional HVAC installation. However the AB-QM with a Danfoss actuator will automatically control the flow, even when other parts of the installation are still unfinished. It's not needed to adjust the AB-QM after finalisation of the project.
- Commissioning costs, the costs are close to zero because of a convenient setting procedure without the need for flow charts, calculations or measuring equipment. The AB-QM valves can be set to a precise design value even when the system is up and running.
- Halved mounting costs as the AB-QM valve covers two functions, Balancing & Control

Control performance

The AB-QM has a linear control characteristic. The AB-QM is pressure independent which means that the control characteristic is independent from the available pressure and is not influenced by a low authority.
The flow limitation on the AB-QM is achieved by limiting the stroke and the Danfoss actuators calibrate to the stroke of the valves. This means that the AB-QM keeps its linear characteristic independent of the setting or differential pressure.

Because of the predictable characteristic the actuators on the AB-QM can be used to change the response from linear to logarithmic (equal percentage). That makes the AB-QM suitable for all applications, including AHUs, where the equal percentage characteristic is needed to get a stable control loop. The actuators can be switched from linear to logarithmic by changing a dipswitch setting on the actuator.

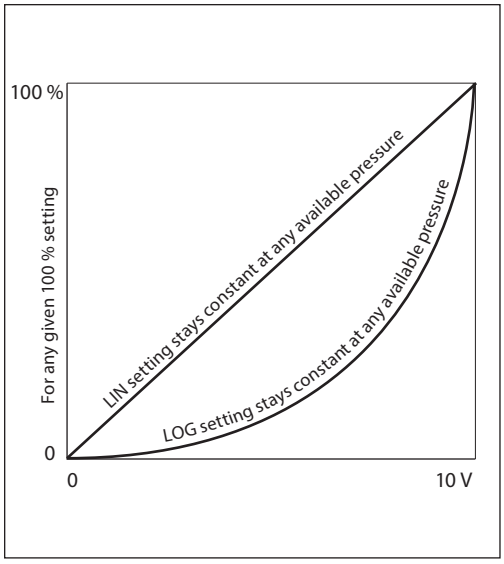

Applications

- variable flow systems

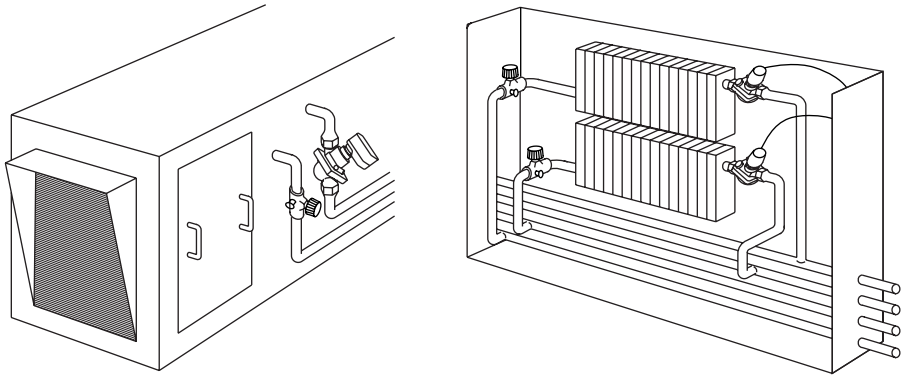

Air handling unit (AHU) / fan coil unit (FCU)

An AB-QM with a Danfoss actuator is used as a control valve for terminal units, like an AHU (Air Handling Unit), FCU (Fan Coil Unit) or radiation panel. The AB-QM ensures and control the required flow on every terminal unit and maintains Hydronic balance in the system.

Because of the integrated differential pressure controller the control valve always has 100 % authority and therefore offers always stable control. At partial load there is no overflow, contrary to conventional solutions, because the AB-QM will always limit the flow to exactly what is needed. By installing the AB-QM the whole system is divided in completely independent control loops.

There is a full range of Danfoss actuators available for the AB-QM, suitable for every control strategy. Actuators are available for On/Off, 0-10 Volt, 4-20 mA or floating point.

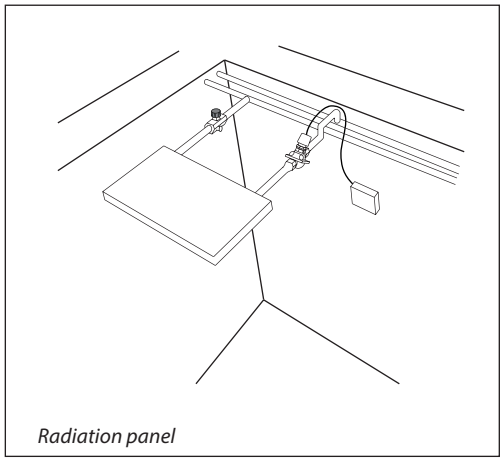

Radiation panel

Applications
- constant flow systems

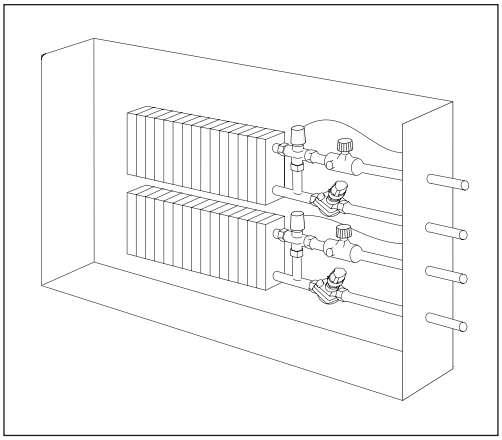

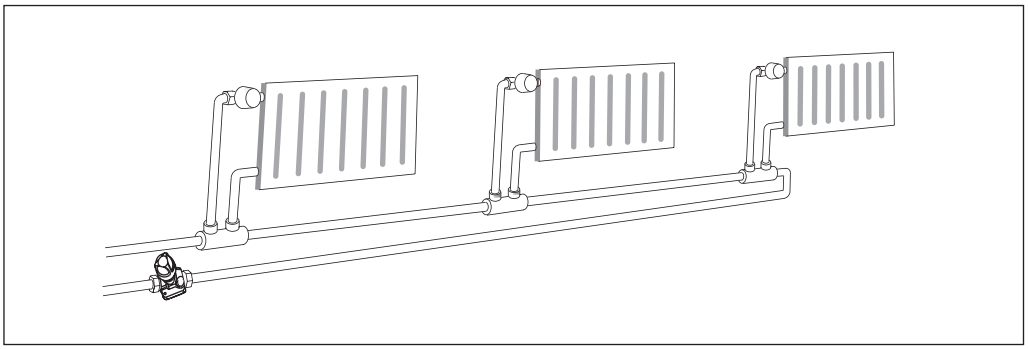

In constant flow system with FCUs or in a one pipe heating system the AB-QM can be installed as an automatic balancing valve in every riser. The AB-QM limits the flow to the set value, thus automatically achieving hydronic balance in the system.

There are numerous applications in which AB-QM can be used. Every time you need an automatic flow limiter or a control valve you can take advantage of the cost-saving properties of the AB-QM. That includes systems with (floor) heating/cooling, concrete core activation or radiation panels.

Note: For more application examples please contact your local Danfoss organization.

Easy implementation

- No Kv or authority calculations needed. Flow is the only parameter to be considered when designing.
- The AB-QM always fits the application because the maximum setting of the AB-QM corresponds with international standards for flow velocity in pipes.
- The AB-QM can be used for all HVAC applications since it can have a linear or logarithmic characteristic when combined with thermal electric or gear actuators.
- Compact design, essential when only limited space is available. For example in fan-coil units.
- Easy commissioning. No specialized staff or measuring equipment needed.
- Easy trouble shooting.
- Fast start-up because AB-QM valves don't need to be flushed or de-aired before use.
- Trouble-free segmentation of the building project. The AB-QM will automatically control the flow, even when parts of the installation are still unfinished. It's not needed to adjust the AB-QM after finalisation of the building project.

Ordering

AB-QM threaded version (with test plugs and without test plugs)

Picture	DN	$Q_{nom.}$ (l/h)	Ext. thread (ISO 228/1)	Code No.	AB-QM	Ext. thread (ISO 228/1)	Code No.
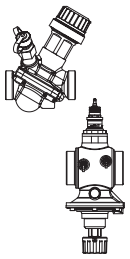	10 LF	150	G ½A	**003Z1261**		G ½A	**003Z1251**
	10	275		**003Z1211**			**003Z1201**
	15 LF	275	G ¾A	**003Z1262**		G ¾A	**003Z1252**
	15	450		**003Z1212**			**003Z1202**
	15 HF	1,135					**003Z1222**
	20	900	G 1A	**003Z1213**		G 1A	**003Z1203**
	20 HF	1,700					**003Z1223**
	25	1,700	G 1 ¼A	**003Z1214**		G 1 ¼A	**003Z1204**
	25HF	2,700					**003Z1224**
	32	3,200	G 1 ½A	**003Z1215**		G 1 ½A	**003Z1205**
	32 HF	4,000					**003Z1225**
	40	7,500	G 2A	**003Z0770**	*AB-QM (DN 10-32) can not be upgraded to AB-QM with test plugs!*		
	50	12,500	G 2 ½A	**003Z0771**			

AB-QM industry pack (with test plugs and without test plugs)

Picture	DN	$Q_{nom.}$ (l/h)	Ext. thread (ISO 228/1)	Code No.	AB-QM	Ext. thread (ISO 228/1)	Code No.
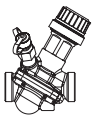	10 LF	150	G ½A	**003Z1761**		G ½A	**003Z1751**
	10	275		**003Z1711**			**003Z1701**
	15 LF	275	G ¾A	**003Z1762**		G ¾A	**003Z1752**
	15	450		**003Z1712**			**003Z1702**
	20	900	G 1A	**003Z1713**		G 1A	**003Z1703**

AB-QM flanged version

Picture	DN	$Q_{nom.}$ (l/h)	Flange connection	Code No.
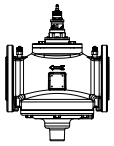	50	12,500	PN 16	**003Z0772**
	65	20,000		**003Z0773**
	65 HF	25,000		**003Z0793**
	80	28,000		**003Z0774**
	80 HF	40,000		**003Z0794**
	100	38,000		**003Z0775**
	100 HF	59,000		**003Z0795***
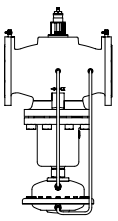	125	90,000		**003Z0705**
	125 HF	110,000		**003Z0715**
	150	145,000		**003Z0706**
	150 HF	190,000		**003Z0716**
	200	200,000		**003Z0707**
	200 HF	270,000		**003Z0717**
	250	300,000		**003Z0708**
	250 HF	370,000		**003Z0718**

* Will be available in April 2017

Set-pack (one MSV-S and one AB-QM without test plugs)

Picture	DN	$Q_{nom.}$ (l/h)	Ext. thread (ISO 228/1)	Code No.
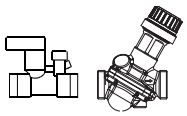	15 LF	275	G ¾ A	**003Z1238**
	15	450		**003Z1242**
	20	900	G 1 A	**003Z1243**
	25	1,700	G 1 ¼ A	**003Z1244**
	32	3,200	G 1 ½ A	**003Z1245**

Ordering *(continuous)*

Accessories & spare parts

Type	Comments		Code No.
	To pipe	To valve	
Union connection (CW617N) (1 pcs.)	R 3/8	DN 10	003Z0231
	R 1/2	DN 15	003Z0232
	R 3/4	DN 20	003Z0233
	R 1	DN 25	003Z0234
	R 1 1/4	DN 32	003Z0235
	R 1 1/2	DN 40	003Z0279
	R 2	DN 50	003Z0278
Tailpiece welding (W. Nr. 1.0308) (1 pcs.)	Weld.	DN 15	003Z0226
		DN 20	003Z0227
		DN 25	003Z0228
		DN 32	003Z0229
		DN 40	003Z0270
		DN 50	003Z0276
Tailpiece welding - INOX (W. Nr. 1.4404) (1 pcs.)	Weld.	DN 15	003Z1271
		DN 20	003Z1272
		DN 25	003Z1273
		DN 32	003Z1274
		DN 40	003Z1275
		DN 50	003Z1276
Tailpieces for soldering (CW614N) (2 nuts, 2 gaskets, 2 soldering plugs	12×1 mm	DN 10	065Z7016
	15×1 mm	DN 15	065Z7017
Shut-off & protection piece (max. closing pressure 16 bar)		DN 10-32	003Z1230
Shut-off - plastic (max. closing pressure 1 bar)			003Z0240
Handle AB-QM (necessary accessory if installing valve without actuator)		DN 40-100	003Z0695
		DN 125-150	003Z0696
		DN 200-250	003Z0697
Adapter for AB-QM DN 10, G ½ internal thread for AB-QM, G 3/8 internal thread (1 pcs.)			003Z3954
Adapter for AB-QM DN 15, G ¾ internal thread for AB-QM, G ¾A external thread (1 pcs.)			003Z3955
Adapter for AB-QM DN 20, G 1 internal thread for AB-QM, G 1A external thread (1 pcs.)			003Z3956
Adapter for AB-QM DN 25, G 5/4 internal thread for AB-QM, G 5/4A external thread (1 pcs.)			003Z3957
Adapter AMV(E) 25/35 (AB-QM DN 40-100, 2nd. generation)			003Z0694
Adapter AME 435 for AB-QM DN 40-100 (1st. generation)			065Z0313
Locking ring AB-QM DN10-32 (5 pcs.)			003Z1236
Stroke limiter - TWA (5 pcs. in a bag)			003Z1237
Adapter AME 13 SU for AB-QM (1st. generation)			003Z3959
Adapter AME 13 SU for AB-QM (2nd. generation)			003Z3960
Stem heater for AB-QM DN 40-100 / AME 15 QM			065B2171
Stem heater for AB-QM DN 40-100 / AME 435 QM			065Z0315
Stem heater for AB-QM DN 125, 150 / AME 55 QM			065Z7022

Type	Code No.
AB-QM heating insul. cap DN10	003Z4730
AB-QM heating insul. cap DN15	003Z4731
AB-QM heating insul. cap DN20	003Z4732
AB-QM heating insul. cap DN25	003Z4733
AB-QM heating insul. cap DN32	003Z4734
AB-QM heating insul. cap DN40	003Z4735
AB-QM heating insul. cap DN50	003Z4736

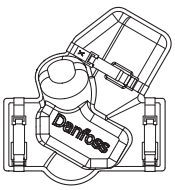

Type	Comments	Code No.
Refrig. instalation ABQM DN15_ABNM/TWA-Z	DN15	003Z4787
Refrig. instalation ABQM DN20_ABNM/TWA-Z	DN20	003Z4788
Refrig. instalation ABQM DN25_ABNM/TWA-Z	DN25	003Z4789
Refrig. instalation ABQM DN32_ABNM/TWA-Z	DN32	003Z4790

Type	Code No.
Set of needle plug (1 pcs.)	003Z0100
Set of ext. plug (1 pcs.)	003Z0106
Set of measuring needle (1 pcs.)	003Z0107
Elbow test plug extension (1 pcs.)	003Z3944
Straight test plug extension (1 pcs.)	003Z3945
Straight plug extension set (1 pcs.)	003Z3946

Ordering *(continuous)*

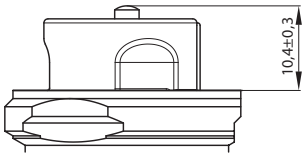

Closing point (measure) for DN 10-32

Combinations AB-QM with electrical actuators (AB-QM DN 10-100) [1]

Valve type	Stroke (mm)	TWA-Z [3]	AMI 140	ABNM	AMV 110/120 NL AME 110/120 NL	NovoCon™	AME 435 QM
		Recommended ordering code numbers (for details refer to data sheets for these actuators)					
		082F1266 NC, 230 V	**082H8048** AMI 140 24 V, 12 s/mm, 2-point control	**082F1160** Thermal act. LOG 24 V (0-10 V) **082F1161** Thermal act. LIN 24 V (0-10 V)	**082H8056** AMV 110 NL 24 V, 24 s/mm, 3-point control **082H8057** AME 110 NL 24 V, 24 s/mm, 0-10 V	**003Z8502** NovoCon® S Digital & Hybrid 24V AC/DC **003Z8503** NovoCon® S CO6, Energy, I/O 24V AC/DC	**082H0171** AME 435 QM 24 V
DN 10-20	2.25	✓	✓	✓	✓	✓	-
DN 25, 32	4.50	✓ [2]	✓	✓ [4]	✓	✓	-
DN 40, 50	10	-	-	-	-	-	✓
DN 65-100	15	-	-	-	-	-	✓

[1] Minimum recommended AB-QM setting is 20 %
[2] up to 60 % of Q_{nom}
[3] Please be aware that only this type of TWA actuator is to be used with AB-QM
[4] up to 90 % of Q_{nom}
Additional actuator's functionality available, for more info please contact your local Danfoss organization.

Combinations AB-QM with electrical actuators (AB-QM, DN 125-250)

Valve type	Stroke (mm)	AME 55 QM	AME 85 QM
		Recommended ordering code numbers (for details refer to data sheets for these actuators)	
		082H3078 24 V, 8 s/mm, 0-10 V	**082G1453** 24 V, 8 s/mm, 0-10 V
DN 125	30	✓	-
DN 150		✓	-
DN 200		-	✓
DN 250		-	✓

Operational pressure for all AB-QM valves is 6 bar. Closing pressure for all actuators is 16 bar.
Additional actuator's functionality available, for more info please contact your local Danfoss organization.

Technical data

AB-QM (*thread version)*

Nominal diameter		**DN**	**10 LF**	**10**	**15 LF**	**15**	**15 HF**	**20**	**20 HF**	**25**	**25 HF**	**32**	**32 HF**	**40**	**50**
Flow range	Q_{nom} (100 %)[1]	l/h	150	275	275	450	1,135	900	1,700	1,700	2,700	3,200	4,000	7,500	12,500
	Q_{high}[3]		180	330	330	540	1,250[4]	1,080	1,870[4]	1,870[4]	2,970[4]	3,520[4]	4,400[4]	7,500	12,500
Setting range [1, 2]		%	20-120				20-110	20-120	20-110[4]					40-100	
Diff. pressure [3, 5]	Δp_{min}	kPa	16 (18)				35 (40)	16 (18)	35 (40)	20 (25)	35 (40)	25 (30)	35 (40)	30	
	Δp_{max}		600												
Pressure stage		PN	16												
Control range			1:1000												
Control valve's characteristic			Linear (could be converted by actuator to equal percentage)												
Leakage rate with recommended actuators			No visible leakage							max. 0.05 % of Q_{nom}					
For shut off function			Acc. to ISO 5208 class A - no visible leakage												
Flow medium			Water and water mixture for closed heating and cooling systems according to plant type I for DIN EN 14868. When used in plant Type II for DIN EN 14868 appropriate protective measures are taken. The requirements of VDI 2035, part 1 + 2 are observed.												
Medium temperature		°C	–10 ... +120												
Storage and transport temp.			–40 … 70												
Stroke		mm	2.25				4	2.25	4	4.5				10	
Connection	ext. thread (ISO 228/1)		G ½ A		G ¾ A			G 1 A		G 1¼ A		G 1½ A		G 2 A	G 1½ A
	actuator		M30 × 1.5											Danfoss standard	
Materials in the water															
Valve bodies			DZR Brass (CuZn36Pb2As - CW 602N)											Grey iron EN-GJL-250 (GG25)	
Membranes and O-rings			EPDM												
Springs			W.Nr. 1.4568, W.Nr. 1.4310												
Cone (Pc)			W.Nr. 1.4305											CuZn40Pb3 - CW 614N, W.Nr. 1.4305	
Seat (Pc)			EPDM											W.Nr. 1.4305	
Cone (Cv)			CuZn40Pb3 - CW 614N												
Seat (Cv)			DZR Brass (CuZn36Pb2As - CW 602N)											W.Nr. 1.4305	
Screw			Stainless Steel (A2)												
Flat gasket			NBR												
Sealing agent (only for valves with test plugs)			Dimethacrylate Ester												
Materials out of the water															
Plastic parts			PA											POM	
Insert parts and outer screws			CuZn39Pb3 - CW 614N; W.Nr. 1.4310; W.Nr. 1.4401											-	

[1] Factory setting of the valve is done at nominal setting range.
[2] Regardless of the setting, the valve can modulate below 1 % of set flow.
[3] When set above 100 %, minimum starting pressure needed is higher, see figures in the ().
[4] Actuator with compatible stroke must be selected.
[5] At min differential pressure valve reaches at least 90% of nominal flow. Declaration of performance is available upon request.

According suitability and usage especially in not oxygen tight systems please mind the instructions given by the coolant producer.

Pc - pressure controller part
Cv - Control valve part

Technical data *(continuous)*

AB-QM (flange version)

Nominal diameter		DN	50	65	65 HF	80	80 HF	100	100 HF
Flow range	Q_{nom} (100 %) [1]	l/h	12,500	20,000	25,000	28,000	40,000	38,000	59,000
	Q_{high}		12,500	20,000	25,000	28,000	40,000	38,000	59,000
Setting range [1), 2)]		%	40-100						
Diff. pressure [3), 5)]	Δp_{min}	kPa	30		60	30	60	30	60
	Δp_{max}		600						
Pressure stage		PN	16						
Control range			Acc. to standard IEC 534 control range is high as Cv characteristic is linear. (1:1000)						
Control valve's characteristic			Linear (could be converted by actuator to equal percentage)						
Leakage rate with recommended actuators			max. 0.05 % of Q_{nom}						
For shut off function			Acc. to ISO 5208 class A - no visible leakage						
Flow medium			Water and water mixture for closed heating and cooling systems according to plant type I for DIN EN 14868. When used in plant Type II for DIN EN 14868 appropriate protective measures are taken. The requirements of VDI 2035, part 1 + 2 are observed.						
Medium temperature		°C	–10 ... +120						
Storage and transport temp.			–40 … 70						
Stroke		mm	10	15					
Connection	flange		PN 16						
	actuator		Danfoss standard						
Materials in the water									
Valve bodies			Grey iron EN-GJL-250 (GG25)						
Membranes/ Bellow			EPDM						
O-rings			EPDM						
Springs			W.Nr. 1.4568, W.Nr. 1.4310						
Cone (Pc)			CuZn40Pb3 - CW 614N, W.Nr. 1.4305						
Seat (Pc)			W.Nr. 1.4305						
Cone (Cv)			CuZn40Pb3 - CW 614N						
Seat (Cv)			W.Nr. 1.4305						
Screw			Stainless Steel (A2)						
Flat gasket			NBR						

Nominal diameter		DN	125	125 HF	150	150 HF	200	200 HF	250	250 HF
Flow range	Q_{nom} (100 %) [1]	l/h	90,000	110,000	145,000	190,000	200,000	270,000	300,000	370,000
	Q_{high} [3]		100,000	120,000	160,000	209,000	220,000	300,000	330,000	407,000
Setting range [2)]		%	40-110							
Diff. pressure [3), 4), 5)]	Δp_{min}	kPa	40 (60)	60 (80)	40 (60)	60 (80)	45 (65)	60 (80)	45 (65)	60 (80)
	Δp_{max}		600	600	600	600	600	600	600	600
Pressure stage		PN	16							
Control range			1:1000							
Control valve's characteristic			Linear (could be converted by actuator to equal percentage)							
Leakage rate with recommended actuators			max.0.01 % of Q_{nom}							
Flow medium			Water and water mixture for closed heating and cooling systems according to plant type I for DIN EN 14868. When used in plant Type II for DIN EN 14868 appropriate protective measures are taken. The requirements of VDI 2035, part 1 + 2 are observed.							
Medium temperature		°C	–10 ... +120							
Storage and transport temp.			–40 … 70							
Stroke		mm	30							
Connection	flange		PN 16							
	actuator		Danfoss standard							
Materials in the water										
Valve bodies			Grey iron EN-GJL-250 (GG 25)							
Membranes/ Bellow			W.Nr.1.4571	EPDM						
O-rings			EPDM							
Springs			W.Nr.1.4401	W.Nr.1.4310						
Cone (Pc)			W.Nr.1.4404NC	W.Nr.1.4021						
Seat (Pc)			W.Nr.1.4027							
Cone (Cv)			W.Nr.1.4404NC	W.Nr.1.4021						
Seat (Cv)			W.Nr.1.4027							
Screw			W.Nr.1.1181							
Flat gasket			Graphite gasket	Non asbestos						

1) *Factory setting of the valve is done at nominal setting range.*
2) *Regardless of the setting, the valve can modulate below 1 % of set flow.*
3) *When set above 100 %, minimum starting pressure needed is higher, see figures in the ().*
4) *In case AB-QM is used above 400 kPa differential pressure contact Danfoss design center to assure proper design.*
5) *At min differential pressure valve reaches at least 90% of nominal flow. Declaration of performance is available upon request.*

Pc - pressure controller part
Cv - Control valve part

Design

1. Spindle
2. Stuffing box
3. Pointer
4. Control valve's cone
5. Membrane
6. Main spring
7. Hollow cone (pressure controller)
8. Vulcanized seat (pressure controller)

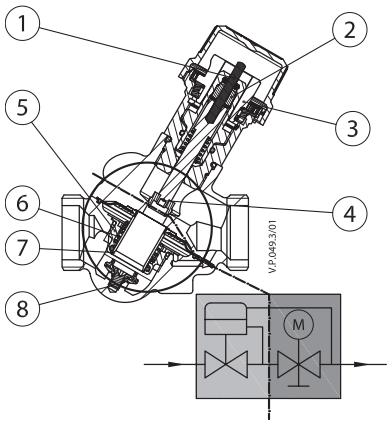

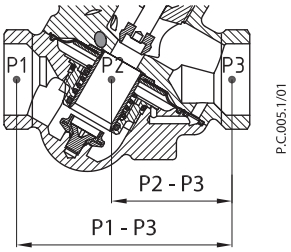

$\Delta p = (P1-P3)$
$\Delta p_{cv} = (P2-P3)$

AB-QM DN 10-32

Function:
The AB-QM valve consists of two parts:
1. Differential pressure controller
2. Control valve

1. Differential pressure controller DPC
The differential pressure controller maintains a constant differential pressure across the control valve. The pressure difference Δp_{Cv} (P2-P3) on the membrane is balanced with the force of the spring. Whenever the differential pressure across the control valve changes (due to a change in available pressure, or movement of the control valve) the hollow cone is displaced to a new position which brings a new equilibrium and therefore keeps the differential pressure at a constant level.

2. Control valve Cv
The control valve has a linear characteristic. It features a stroke limitation function that allows adjustment of the Kv value. The percentage marked on the scale equals the percentage of 100 % flow marked on the pointer. Changing the stroke limitation is done by lifting the blocking mechanism and turning the top of the valve to the desired position, showed on the scale as a percentage. A blocking mechanism automatically prevents unwanted changing of the setting.

1. Shut off screw
2. Main spring
3. Membrane
4. DP cone
5. Seat
6. Valve body
7. Control valves cone
8. Locking screw
9. Scale
10. Stuffing box
11. Spindle

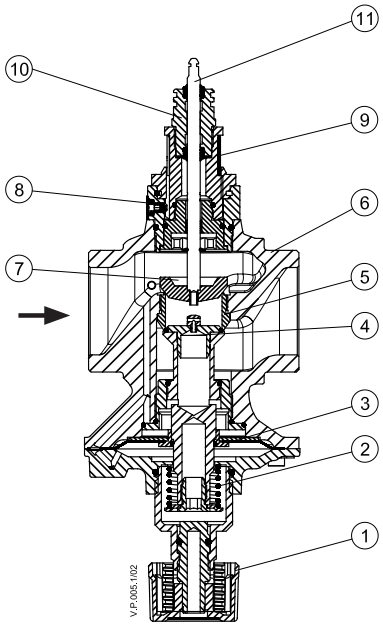

AB-QM DN 40, 50

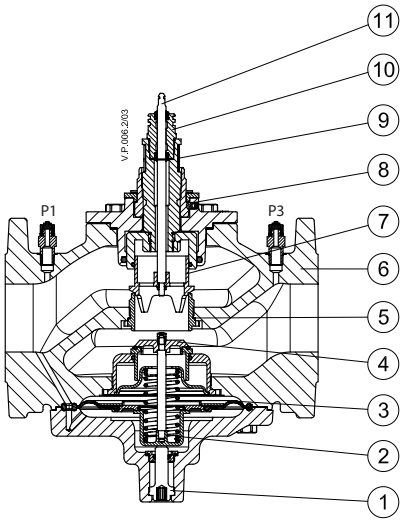

AB-QM DN 50-100

Design *(continuous)*

1. Valve body
2. Valve seat
3. DPC cone
4. CV cone
5. Controller casting
6. Rolling diaphragm
7. Adjusting screw
8. Bellow for pressure relief on DPC cone

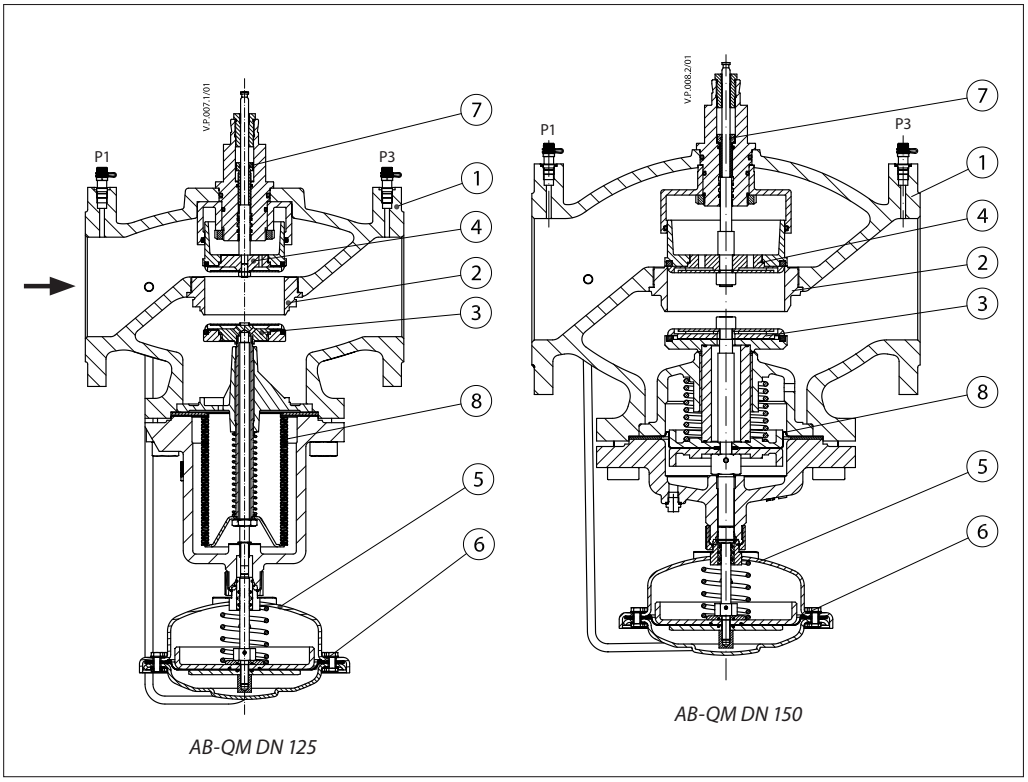

AB-QM DN 125

AB-QM DN 150

1. Valve body
2. Valve seat
3. DPC cone
4. CV cone
5. Controller casting
6. Rolling diaphragm
7. Adjusting screw
8. Bellow for pressure relief on DPC cone

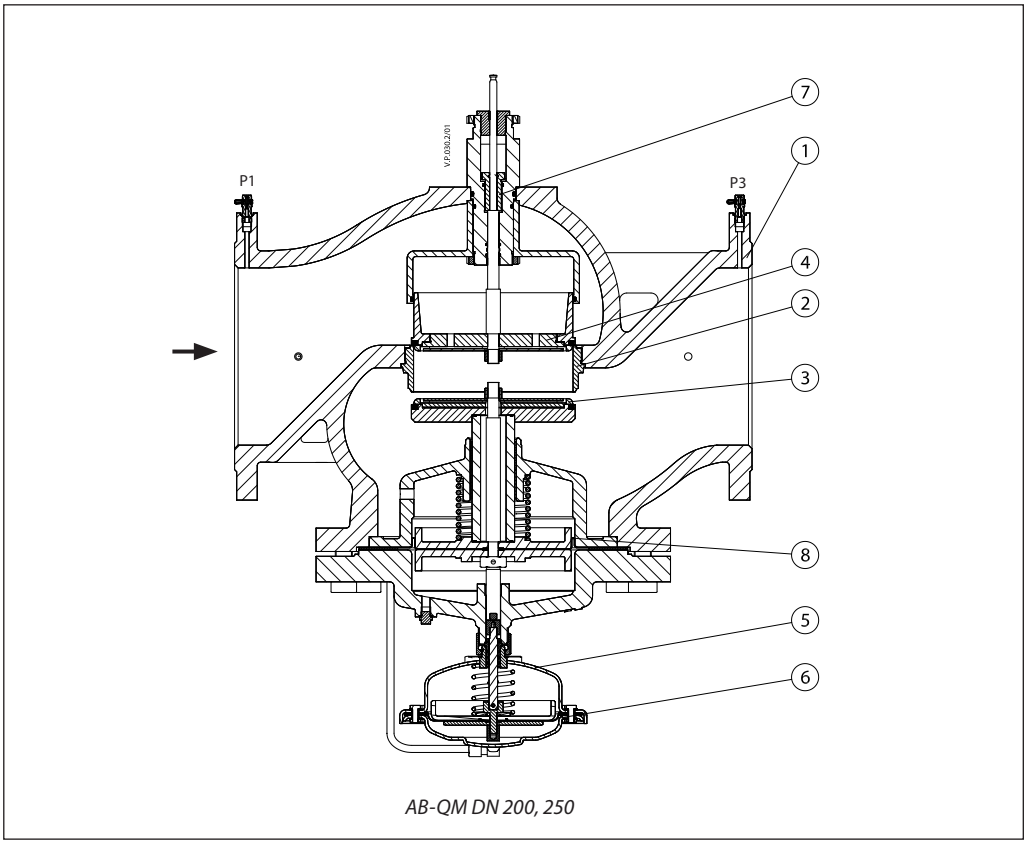

AB-QM DN 200, 250

Sizing

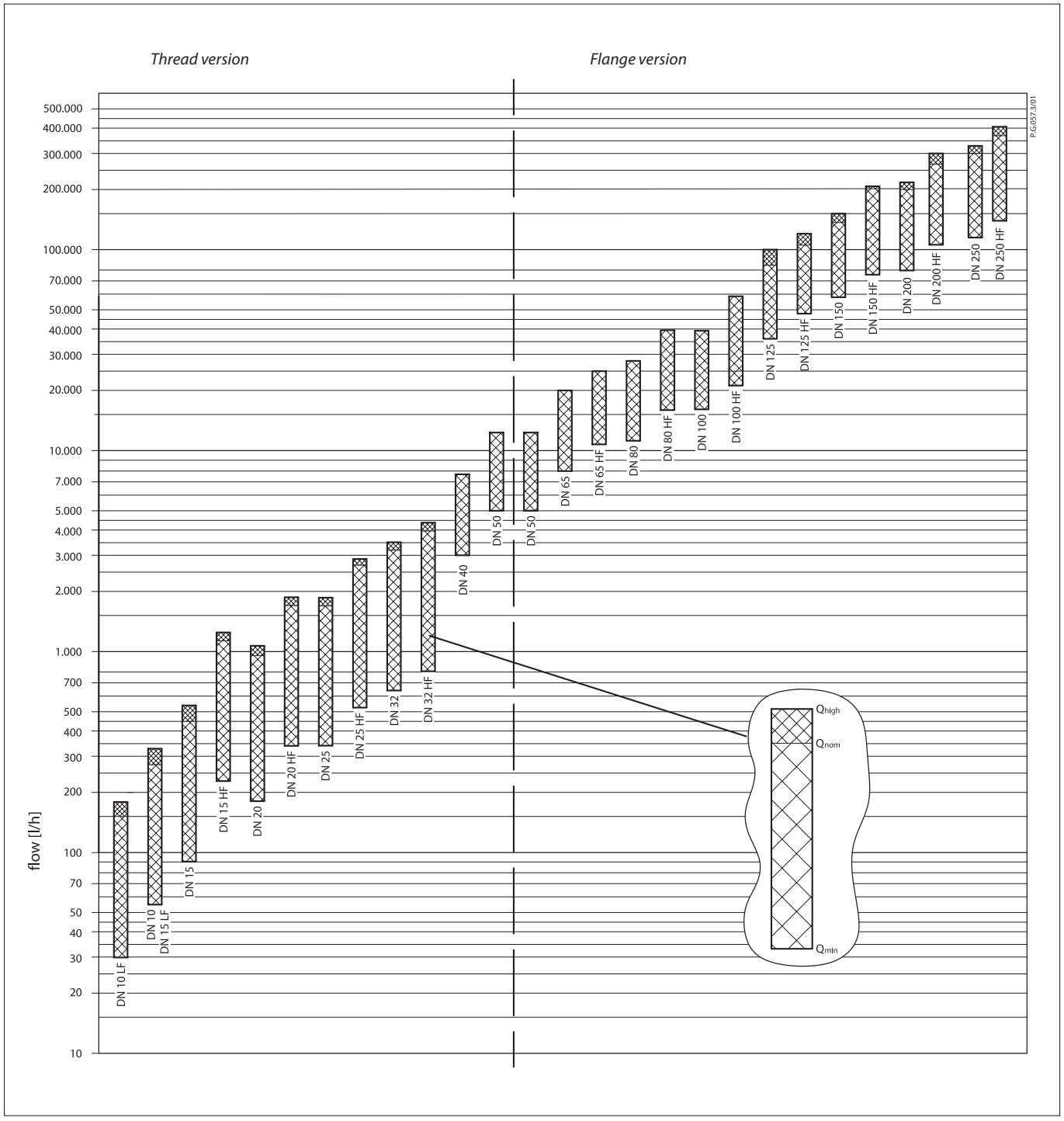

© Danfoss | 2017.03 | 11

Sizing *(continuous)*

Example 1: Variable flow system

Given:
Cool requirement per unit : 1000 W
Flow temperature in the system: 6 °C
Return temperature in the system: 12 °C

*Required - **control and balancing valves:***
AB-QM and actuators type for BMS system.
Solution:
Flow in the system: Q (l/h)
Q = 0.86×1000/(12–6) = 143 l/h

Selected:
AB-QM DN 10 mm with Q_{nom} = 275 l/h presetting on 143/275 = 0.52 = 52 % of nominal opening.
Actuators: AMV 110NL - 24 V
Remarks:
required minimum differential pressure across the AB-QM DN 10: 16 kPa.

Example 2: Constant flow system

Given:
Cool requirement per unit : 4000 W
Flow temperature in the system : 6 °C
Return temperature in the system : 12 °C

*Required - **automatic flow limiter:***
AB-QM and presetting.

Solution:
Flow in the system : Q (l/h)
Q = 0.86 × 4000 / (12 – 6) = 573 l/h

Selected:
AB-QM DN 20 mm with Q_{nom} = 900 l/h presetting on 573/900 = 0.64 = 64 % of maximum opening.

Remarks:
required minimum differential pressure across the AB-QM DN 20: 16 kPa.

Example 3: Sizing AB-QM according pipe dimension

Given:
Flow in system 1.4 m^3/h (1400 l/h = 0.38 l/s), pipe dimension DN 25 mm

*Required - **automatic flow limiter:***
AB-QM and presetting.

Solution:
In this case we can selected AB-QM DN 25 mm with Q_{nom} = 1700 l/h

In this case it will be recommended to check the maximum velocity in the pipe. For this we calculate velocity in the pipe for condition:
DN 25 mm – Di 27.2 mm

Dimension and condition acceptable, veloscity below 1.0 m/s.

Preseting on the valve AB-QM DN 25 mm
1400/1700 = 0.82 = 82 % of nominal opening.
Remarks:
required minimum differential pressure across the AB-QM DN 25: 20 kPa.

Pump optimising / Trouble shooting

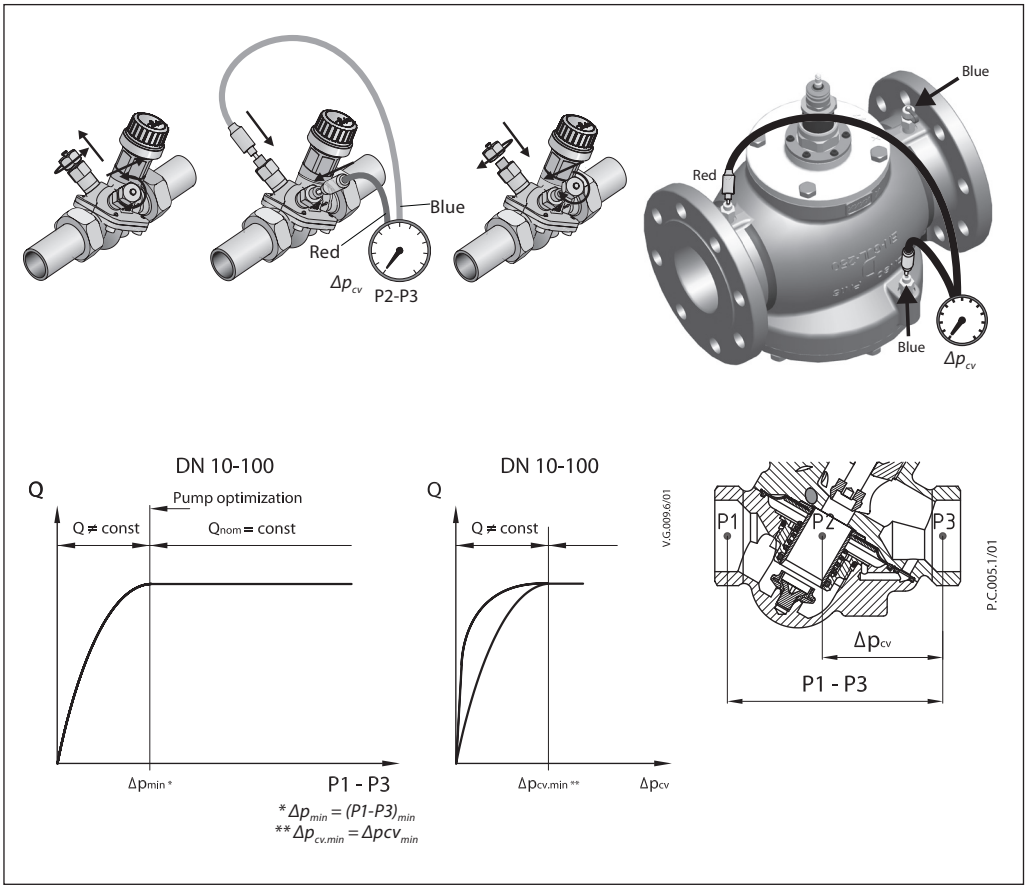

The AB-QM (DN 10-100) features test plugs that allow measuring of the pressure difference Δpcv across the control valve. If the pressure difference exceeds the minimal required pressure is operational and the flow limitation is achieved. The measuring function can be used to verify if enough pressure difference is available and thus verify the flow or measure the flow directly. For detail information how to measure flow on DN 40-250 please refer to Flow checker document.

It can also be used to optimize the pump head. The pump head can be decreased until no more than the minimal required pressure is available on the most critical valve (in terms of hydronic). This optimal point is to be found when proportionality between pump head and measured differential pressure cease to exist. Verifying the pressure can be done by using for example Danfoss PFM device (for more details please refer to AB-QM Tech Note).

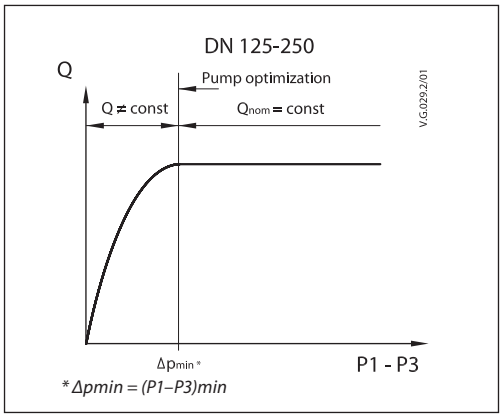

© Danfoss | 2017.03 | 13

Presetting

The calculated flow can be adjusted easily without using special tools.

To change the presetting (factory setting is 100 %) follow the four steps below:

① Remove the blue protective cap or the mounted actuator
② Raise the grey pointer
③ Turn (clock wise to decrease) to the new presetting
④ Press grey pointer back into lock position. After click presetting is locked.

The presetting scale indicates values from 100 % flow to 0 %. Clock wise turning would decrease the flow value while counter clock wise would increase it.

If the valve is a DN 15 then the nom flow = 450 l/h =100 % presetting. To set a flow of 270 l/h you have to set: 270/450 = 60 %.

Danfoss recomends a presetting/flow from 20 % to 100 %. Factory presetting is 100 %.

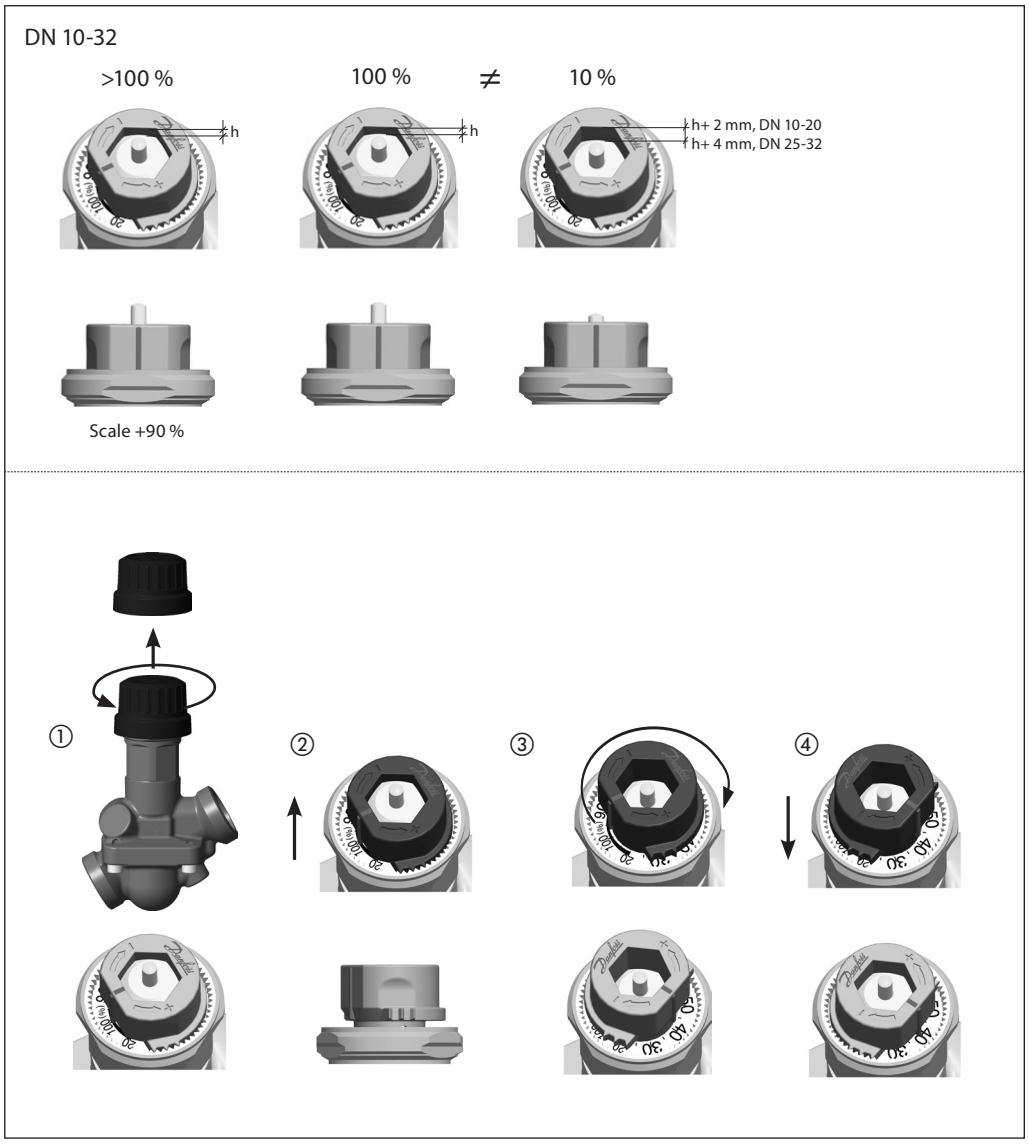

Presetting *(continuous)*

DN 40-100

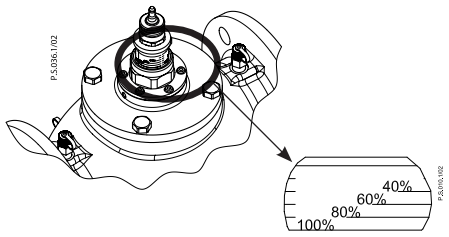

Note: 1 turn = 10 %

DN 125-250

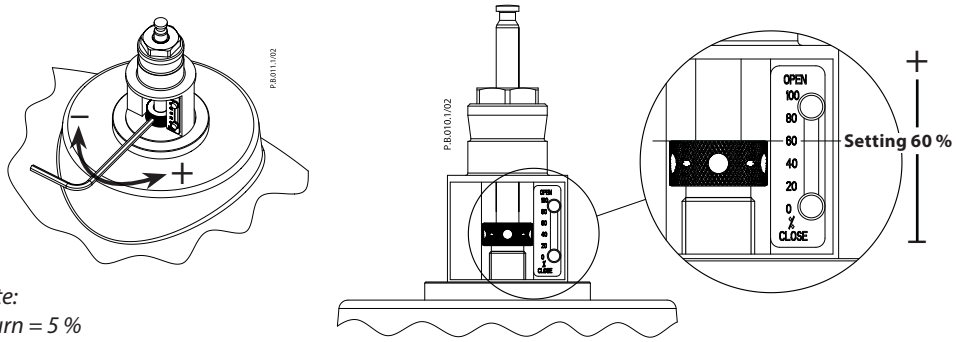

Note:
1 turn = 5 %

Service

DN 10-32
For the service shut off function, it is recommended to install the valve in the supply water pipe.

Valves are equipped with plastic protection cap. When closing against higher differential pressure please use accessory - shut-off & protection piece (003Z1230) or set the value to 0 %.

DN 40-100
For the service shut-off function, the valve can be installed in either supply or return pipe.

Valves are equipped with manual shut-off for isolating function up to 16 bar.

DN 125-250
For the service shut-off function, the valve can be installed in either supply or return pipe.

For shut-off set the valve to 0%.

Installing

AB-QM valve is mono-directional meaning that the valve operates when arrow on the valve body is aligned with flow direction. When this rule is disobeyed the valve acts like variable orifice that cause water hammer at sudden closing when available pressure has increased or valve have been set to lower value.

In case when system condition allows backflows it is strongly recommended to use backflow preventer in order to avoid possible water hammer that can damage the valve as well as other elements in the system.

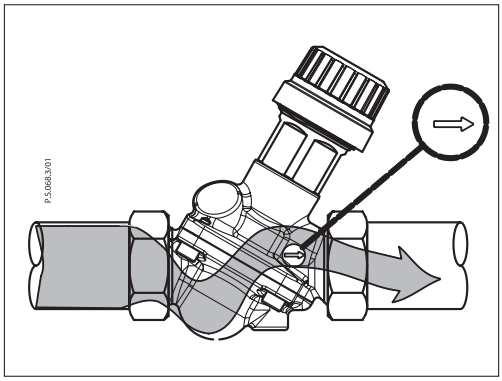

Tender text

The pressure independent balancing and control valve which means that the control characteristic is independent from the available pressure. The precise flow control performance of the AB-QM with a Danfoss actuator provides increased comfort and superior Total Cost of Ownership. The AB-QM ensures and control the required flow on every terminal unit and maintains Hydronic balance in the system.

AB-QM has following features:

- Flow limitation function
- Modulating below 1% of set flow, regardless of the setting,
- Authority of 1 at all settings
- Able to close against 16 bar of differential pressure.
- Linear control characteristic
- Scale in percentage of flow
- Control ratio 1:1000
- Test plugs for pump optimization and flow verification for DN 10-250. Available in the range from DN 10 – 250 from one supplier.
- Characteristic changed from linear to equal percentage characteristic at all sizes by adjusting actuator settings.
- Lockable setting
- Leakage rate of no visible leakage for DN 10 - DN 20 in combination with recommended actuator
- Leakage of 0.05 % of the Qnom for DN 25 - DN 100 in combination with recommended actuator
- Leakage of 0.01 % of the Qnom for DN 125 - DN 250 in combination with recommended actuator

Dimensions

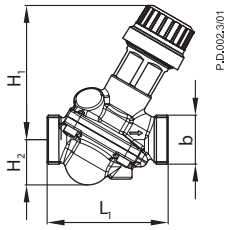

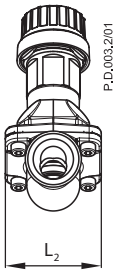

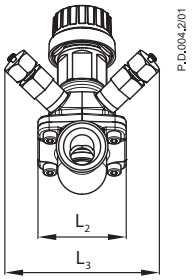

AB-QM DN 10-32

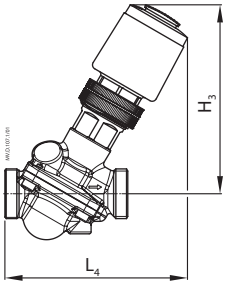

TWA-Z + AB-QM

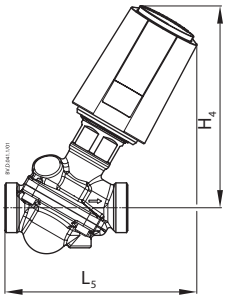

ABNM + AB-QM

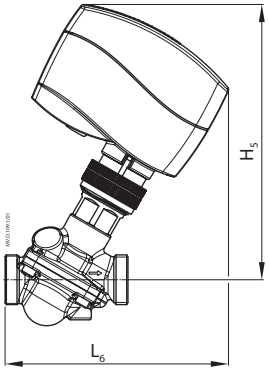

AMV (E) 110 NL + AB-QM
AMI 140 + AB-QM

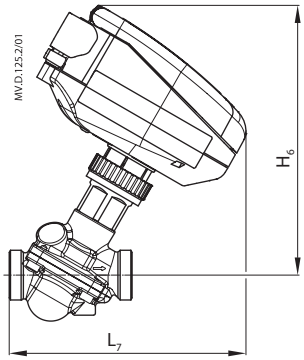

NovoCon™ + AB-QM

Type	L_1	L_2	L_3	L_4	L_5	L_6	L_7	H_1	H_2	H_3	H_4	H_5	H_6	b	Valve weight
	mm													ISO 228/1	(kg)
DN 10	53	36	79	92	104	109	119	69	20	100	104	138	140	G ½	0.38
DN 15	65	45	79	98	110	116	126	72	25	102	108	141	143	G ¾	0.48
DN 20	82	56	79	107	120	125	134	74	33	105	112	143	145	G 1	0.65
DN 25	104	71	79	124	142	142	149	82	42	117	124	155	153	G 1 ¼	1.45
DN 32	130	90	79	142	154	160	167	93	50	128	136	166	164	G 1 ½	2.21

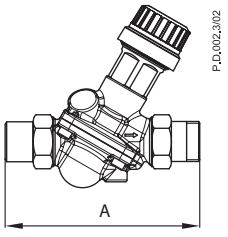

AB-QM DN 10-50

DN	Union connection A* [mm]	Tailpiece welding A* [mm]	Talpieces for soldering A* [mm]
10	79		70
15	92.5	102	87
20	112.5	124	
25	139	146	
32	168.5	172	
40	155	157	
50	187	182	

** Length is decreased with installation due to deforamtion of the gasket.*

© Danfoss | 2017.03 | 17

Dimensions *(continuous)*

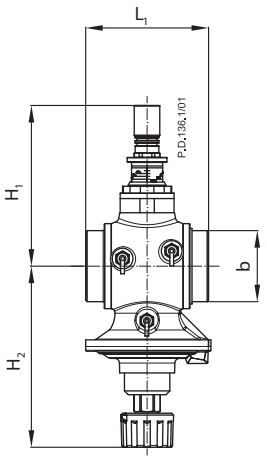

AB-QM DN 40, 50

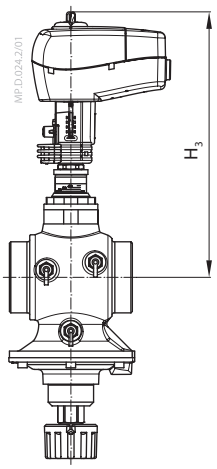

AME 435 QM + AB-QM

Type	L_1	H_1	H_2	H_3	b	Weight
	mm				ISO 228/1	kg
DN 40	110	170	174	280	G 2	6.9
DN 50	130	170	174	280	G 2 ½	7.8

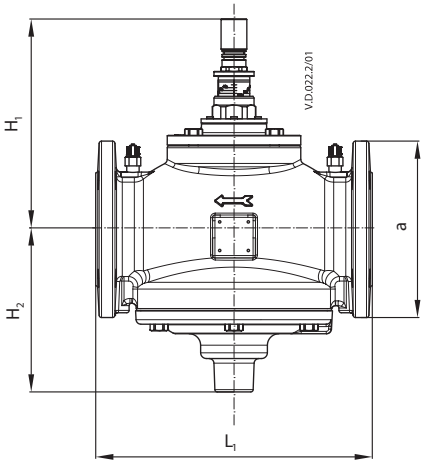

AB-QM DN 50-100

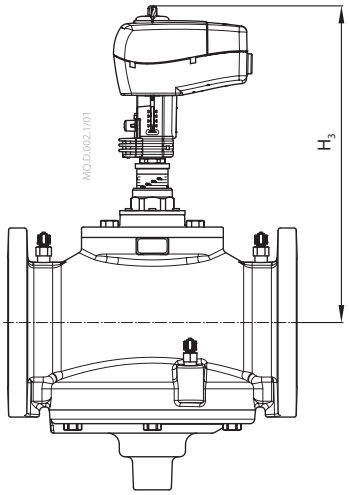

AME 435 QM + AB-QM

Type	L_1	H_1	H_2	H_3	a	Weight
	mm				(EN 1092-2)	(kg)
DN 50	230	170	174	280	165	14.2
DN 65	290	220	172	330	185	38.0
DN 80	310	225	177	335	200	45.0
DN 100	350	240	187	350	220	57.0

Dimensions *(continuous)*

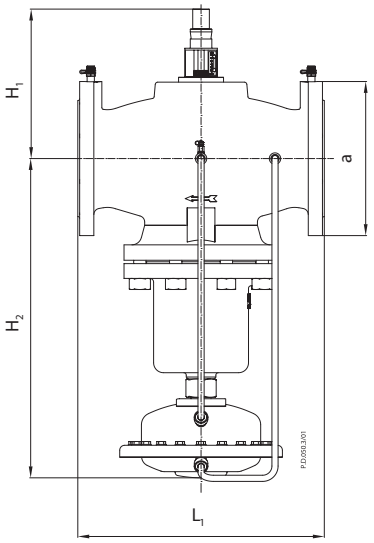

AB-QM DN 125

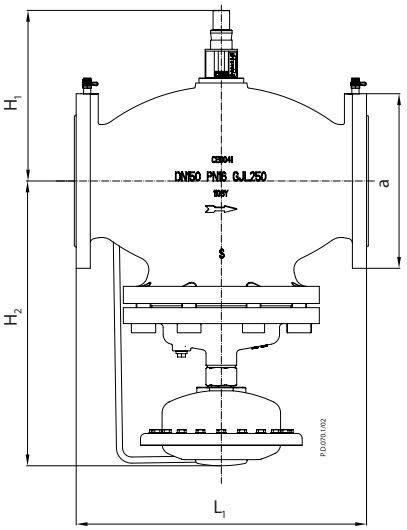

AB-QM DN 150

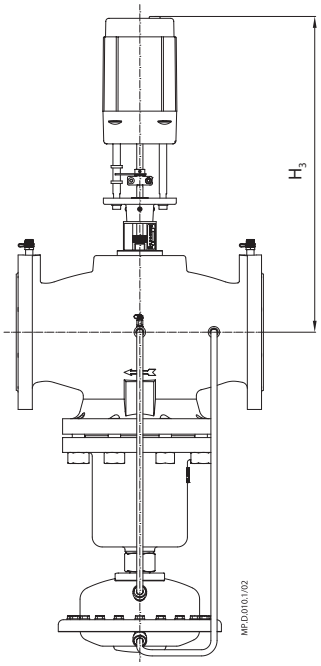

AME 55 QM + AB-QM DN 125

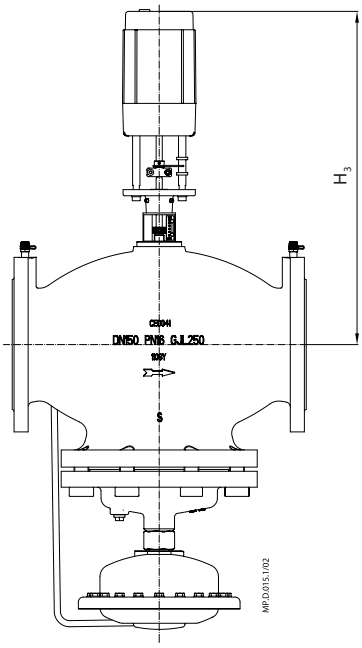

AME 55 QM + AB-QM DN 150

Type	L_1	H_1	H_2	H_3	a	Weight
	mm				(EN 1092-2)	(kg)
DN 125	400	272	518	507	250	85.3
DN 150	480	308	465	518	285	138

© Danfoss | 2017.03 | 19

Dimensions *(continuous)*

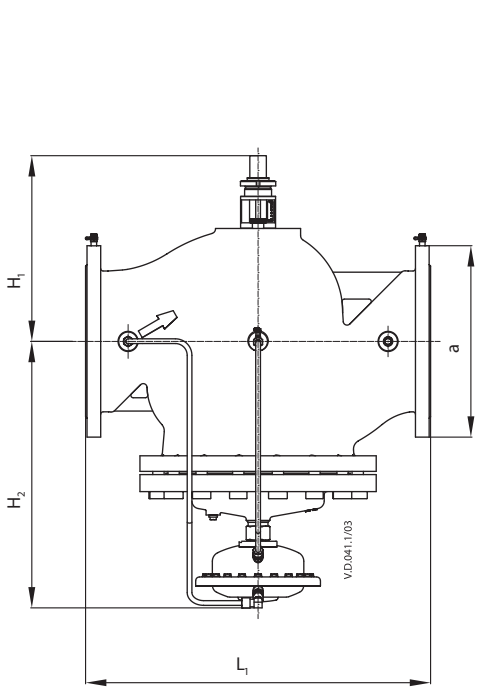

AB-QM DN 200, 250

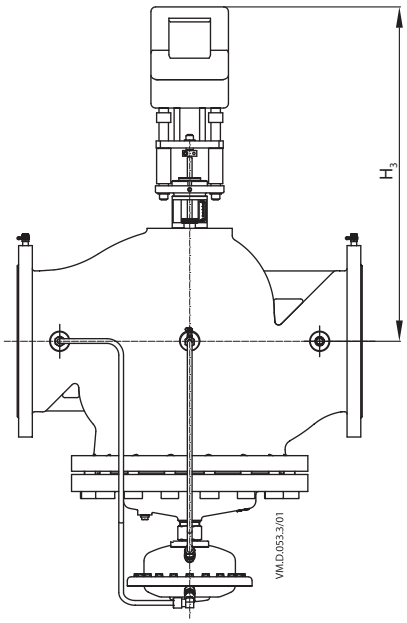

AME 85 QM + AB-QM DN 200, 250

Type	L_1	H_1	H_2	H_3	a	Weight
	mm				(EN 1092-2)	(kg)
DN 200	600	434	483	618	340	219
DN 250	730	430	533	708	405	342

Danfoss can accept no responsibility for possible errors in catalogues, brochures and other printed material. Danfoss reserves the right to alter its products without notice. This also applies to products already on order provided that such alterations can be made without subsequential changes being necessary in specifications already agreed.
All trademarks in this material are property of the respective companies. Danfoss and the Danfoss logotype are trademarks of Danfoss A/S. All rights reserved.