Data sheet

# Externally operated valves, Type AV210

AV210 is an externally operated angle seat valve for use in demanding industrial applications. The valve can operate at very high medium temperatures and viscosities, and is insensitive to dirt particles in the medium; thus, it is often called a "troubleshooter" valve. The valve is available in bronze and stainless steel.

**Features**

- For all fluids and gases
- Flow range: 0 – 234 $m^3/h$
- Differential pressure: 0 – 16 bar
- Media temperature: -30 – 180 °C
- Ambient temperature: -30 – 60 °C
- Thread connection: G 3/8 - 2"
- DN: 15 - 50
- Viscosity: Up to 600 cSt
- Stainless steel version for neutral and aggressive liquid and gaseous media
- Unpressurized closed (NC) bidirectional versions and unpressurized opened (NO) version closing against the flow direction
- Operating pressure up to 16 bar, depending on valve type
- The valves can be used for rough vacuum
- Control connection G 1/8 and NAMUR
- Valves comply with P.E.D. 97/23/ EC group 1 & 2
- Bi-directional NC version - two flow directions
- Bronze version for water, oil and compressed air

© Danfoss A/S (IA-MS / ABP) 2013-may

## Bronze valve body, NC

| Connection ISO 228/1 | Seal mate-rial | Orifice size [mm] | kv - value [m³/h] | Diameter control head [mm] | Control pressure [ bar] | Differential pressure, min. to max. [bar][1]) | Code number |
|---|---|---|---|---|---|---|---|
| G 3/8 | PTFE | 15 | 4.5 | 40[2]) | 4.2 – 10 | 0 – 16 | **042N4400** |
| G 3/8 | PTFE | 15 | 4.9 | 50 | 4 – 10 | 0 – 16 | **042N4401** |
| G 1/2 | PTFE | 15 | 5.3 | 40[2]) | 4.2 – 10 | 0 – 16 | **042N4402** |
| G 1/2 | PTFE | 15 | 5.7 | 50 | 4 – 10 | 0 – 16 | **042N4403** |
| G 3/4 | PTFE | 20 | 10 | 50 | 4 – 10 | 0 – 10 | **042N4404** |
| G 3/4 | PTFE | 20 | 10 | 63 | 4 – 10 | 0 – 16 | **042N4405** |
| G 1 | PTFE | 25 | 20 | 63 | 4 – 10 | 0 – 11 | **042N4406** |
| G 1 | PTFE | 25 | 20 | 90 | 4 – 8 | 0 – 16 | **042N4407** |
| G 1 1/4 | PTFE | 32 | 29 | 90 | 4 – 8 | 0 – 14 | **042N4408** |
| G 1 1/2 | PTFE | 40 | 46 | 90 | 4 – 8 | 0 – 11 | **042N4409** |
| G 1 1/2 | PTFE | 40 | 47 | 110 | 4 – 8 | 0 – 16 | **042N4410** |
| G 2 | PTFE | 50 | 74 | 110 | 4 – 8 | 0 – 10 | **042N4411** |

[1]) Pressure range can be extended for use in rough vacuum, typically up to 99% vacuum (10mbar), depending on the application
[2]) Without NAMUR interface

## Stainless steel valve body, NC

| Connection ISO 228/1 | Seal mate-rial | Orifice size [mm] | kv - value [m³/h] | Diameter control head [mm] | Control pressure [ bar] | Differential pressure, min. to max. [bar][1]) | Code number |
|---|---|---|---|---|---|---|---|
| G 3/8 | PTFE | 15 | 4.9 | 50 | 4 – 10 | 0 – 16 | **042N4450** |
| G 1/2 | PTFE | 15 | 5.7 | 50 | 4 – 10 | 0 – 16 | **042N4451** |
| G 3/4 | PTFE | 20 | 10 | 50 | 4 – 10 | 0 – 10 | **042N4452** |
| G 3/4 | PTFE | 20 | 10 | 63 | 4 – 10 | 0 – 16 | **042N4453** |
| G 1 | PTFE | 25 | 20 | 63 | 4 – 10 | 0 – 11 | **042N4454** |
| G 1 | PTFE | 25 | 20 | 90 | 4 – 8 | 0 – 16 | **042N4455** |
| G 1 1/4 | PTFE | 32 | 29 | 90 | 4 – 8 | 0 – 14 | **042N4456** |
| G 1 1/2 | PTFE | 40 | 46 | 90 | 4 – 8 | 0 – 11 | **042N4457** |
| G 1 1/2 | PTFE | 40 | 47 | 110 | 4 – 8 | 0 – 16 | **042N4458** |
| G 2 | PTFE | 50 | 74 | 110 | 4 – 8 | 0 – 10 | **042N4459** |

[1]) Pressure range can be extended for use in rough vacuum, typically up to 99% vacuum (10mbar), depending on the application

**Mounting:** closing *against* or closing *with* the flow direction:

Closing *against* is recommended to avoid water hammer

## Bronze valve body, NO

| Connection ISO 228/1 | Seal mate-rial | Orifice size [mm] | kv - value [m³/h] | Diameter control head [mm] | Pressure range[1]) [ bar] | Control pressure, [bar] | | Code number |
|---|---|---|---|---|---|---|---|---|
| | | | | | | min. | max. | |
| G 3/8 | PTFE | 15 | 4.9 | 50 | See diagram, page 10 | | 10 | **042N4430** |
| G 1/2 | PTFE | 15 | 5.7 | 50 | See diagram, page 10 | | 10 | **042N4431** |
| G 3/4 | PTFE | 20 | 10 | 50 | See diagram, page 10 | | 10 | **042N4432** |
| G 1 | PTFE | 25 | 20 | 63 | See diagram, page 10 | | 10 | **042N4433** |
| G 1 1/4 | PTFE | 32 | 29 | 63 | See diagram, page 10 | | 10 | **042N4434** |
| G 1 1/2 | PTFE | 40 | 46 | 90 | See diagram, page 10 | | 8 | **042N4435** |
| G 2 | PTFE | 50 | 74 | 110 | See diagram, page 10 | | 8 | **042N4436** |

[1]) Pressure range can be extended for use in rough vacuum, typically up to 99% vacuum (10mbar), depending on the application

## Stainless steel valve body, NO

| Connection ISO 228/1 | Seal mate-rial | Orifice size [mm] | kv - value [m³/h] | Diameter control head [mm] | Pressure range[1]) [ bar] | Control pressure, [bar] | | Code number |
|---|---|---|---|---|---|---|---|---|
| | | | | | | min. | max. | |
| G 3/8 | PTFE | 15 | 4.9 | 50 | See diagram, page 10 | | 10 | **042N4480** |
| G 1/2 | PTFE | 15 | 5.7 | 50 | See diagram, page 10 | | 10 | **042N4481** |
| G 3/4 | PTFE | 20 | 10 | 50 | See diagram, page 10 | | 10 | **042N4482** |
| G 1 | PTFE | 25 | 20 | 63 | See diagram, page 10 | | 10 | **042N4483** |
| G 1 1/4 | PTFE | 32 | 29 | 63 | See diagram, page 10 | | 10 | **042N4484** |
| G 1 1/2 | PTFE | 40 | 46 | 90 | See diagram, page 10 | | 8 | **042N4485** |
| G 2 | PTFE | 50 | 74 | 110 | See diagram, page 10 | | 8 | **042N4486** |

[1]) Pressure range can be extended for use in rough vacuum, typically up to 99% vacuum (10mbar), depending on the application

**Mounting:** Always closing *against* the flow direction

## Technical data
## NC/NO

| Main type | 50 – 63 mm control head. Closing with the flow direction | 50 – 63 mm control head. Closing against the flow direction | 90 – 110 mm control head. Closing with the flow direction | 90 – 110 mm control head. Closing against the flow direction |
|---|---|---|---|---|
| Time to open [ms] [1]) | 40 – 180 | 50 – 350 | 80 – 780 | 100 – 460 |
| Time to close [ms] [1]) | 160 – 500 | 120 – 350 | 580 – 1270 | 360 – 790 |

[1]) The times are indicative.

| | | | | |
|---|---|---|---|---|
| Type | AV210 NC/NO | | | |
| Design | Piston-operated; angle-seated | | | |
| Installation | Optional | | | |
| Tightness | Internally/ Externally: | | Better than 0.4 mbar l/sec (25 ccm air per min.) | |
| Pressure range | See ordering | | | |
| Ambient temperature | -30 – 60 °C | | | |
| Medium temperature | -30 – 180 °C | | | |
| Viscosity | Max. 600 cSt | | | |
| Control medium | Air | | | |
| Materials | Valve body: | | Bronze | RG 5 |
| | | | Stainless steel | AISI 316 |
| | Intermediate piece: | Bronze body: | Brass | W.no.2.0402 |
| | | Stainless steel body: | Stainless steel | AISI 316 |
| | Seat control and nut: | | Stainless steel | AISI 316 |
| | Spindle: | | Stainless steel | AISI 316 |
| | Spindle gasket: | | PTFE | – |
| | Gasket: | | Graphite | – |
| | Valve plate unit: | | PTFE | – |
| | Control head: | | PA66 | – |

| Type | Approval |
|---|---|
| AV210 15-25 | The products are not allowed to carry CE mark, according to PED 97/23/EC |
| AV210 32 - 40 - 50 Bronze | CE marked and covered by PED 97/23/EC, fluid group 1, class I |
| AV210 32 - 40 SS | CE marked and covered by PED 97/23/EC, fluid group 1, class I |
| AV210 50 SS | CE marked and covered by PED 97/23/EC, fluid group 1, class II |

## Dimensions and weight
## Bronze valve body

| Connection ISO 228/1 | Orifice size [mm] | Diameter control head [mm] | A [mm] | B [mm] | C [mm] | D [mm] | øE [mm] | F [mm] | H [mm] | ch.L [mm] | Weight [kg] |
|---|---|---|---|---|---|---|---|---|---|---|---|
| G 3/8 | 15 | 40 | 144 | 121 | 134 | 35 | 61 | 65 | 12 | 27 | **1.1** |
| G 3/8 | 15 | 50 | 163 | 140 | 153 | 44 | 70 | 65 | 12 | 27 | **1.1** |
| G 1/2 | 15 | 40 | 144 | 121 | 134 | 35 | 61 | 65 | 13 | 27 | **1.0** |
| G 1/2 | 15 | 50 | 163 | 140 | 153 | 44 | 70 | 65 | 13 | 27 | **1.0** |
| G 3/4 | 20 | 50 | 173 | 147 | 163 | 44 | 70 | 75 | 14.3 | 27.5 | **1.2** |
| G 3/4 | 20 | 63 | 191 | 165 | 181 | 50.5 | 84.4 | 75 | 14.3 | 27.5 | **1.2** |
| G 1 | 25 | 63 | 206 | 176 | 196 | 50.5 | 84.4 | 90 | 17.5 | 41 | **1.6** |
| G 1 | 25 | 90 | 246 | 216 | 236 | 66.2 | 116.4 | 90 | 17.5 | 41 | **1.7** |
| G 1 1/4 | 32 | 90 | 255 | 220 | 245 | 66.2 | 116.4 | 110 | 19 | 50 | **3.0** |
| G 1 1/2 | 40 | 90 | 270 | 235 | 264 | 66.2 | 116.4 | 120 | 18 | 58 | **3.4** |
| G 1 1/2 | 40 | 110 | 306 | 271 | 300 | 77.4 | 140.6 | 120 | 18 | 58 | **4.0** |
| G 2 | 50 | 110 | 316 | 276 | 311 | 77.4 | 140.6 | 150 | 20 | 70 | **5.3** |

## Dimensions and weight
## Stainless steel valve body

| Connection ISO 228/1 | Orifice size [mm] | Diameter control head [mm] | A [mm] | B [mm] | C [mm] | D [mm] | øE [mm] | F [mm] | H [mm] | ch.L [mm] | Weight [kg] |
|---|---|---|---|---|---|---|---|---|---|---|---|
| G 3/8 | 15 | 40 | 190 | 156 | 169 | 44 | 70 | 85 | 12 | 25 | **1.1** |
| G 1/2 | 15 | 50 | 190 | 156 | 169 | 44 | 70 | 85 | 15 | 25 | **1.0** |
| G 3/4 | 20 | 50 | 195 | 160 | 176 | 44 | 70 | 95 | 16.3 | 31 | **1.2** |
| G 3/4 | 20 | 63 | 213 | 178 | 194.4 | 50.5 | 84.4 | 95 | 16.3 | 31 | **1.2** |
| G 1 | 25 | 63 | 219 | 182 | 202 | 50.5 | 84.4 | 105 | 19.5 | 38 | **1.6** |
| G 1 | 25 | 90 | 259 | 222 | 242 | 66.2 | 116.4 | 105 | 19.5 | 38 | **1.7** |
| G 1 1/4 | 32 | 90 | 266 | 226 | 249 | 66.2 | 116.4 | 120 | 19 | 47 | **3.0** |
| G 1 1/2 | 40 | 90 | 271 | 230 | 258 | 66.2 | 116.4 | 130 | 18 | 54 | **3.4** |
| G 1 1/2 | 40 | 110 | 307 | 266 | 294 | 77.4 | 140.6 | 130 | 18 | 54 | **4.0** |
| G 2 | 50 | 110 | 321 | 276 | 310 | 77.4 | 140.6 | 150 | 20 | 66 | **5.3** |

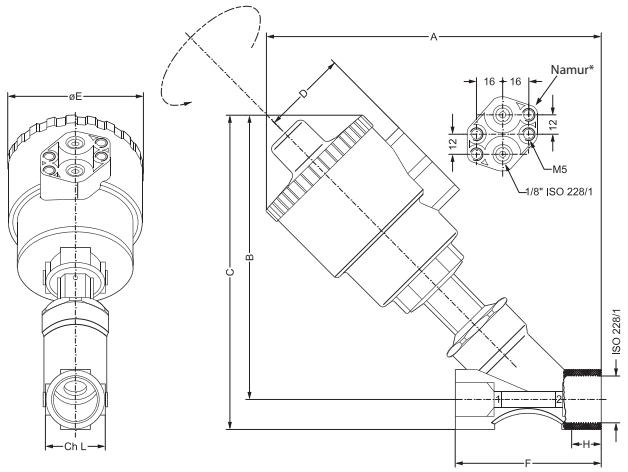


* Control head 40mm 2x 1/8" connection

## Accessories
## Position indicator

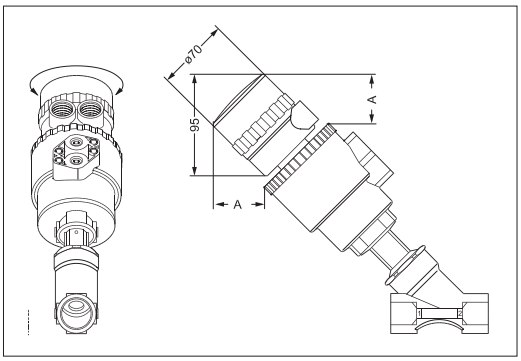


### Features

The control box to check the open/closed positions with two mechanical limit switches is suitable for assembling on the whole range of valves.
Level of protection : IP65
Ambient temperature: from -20 °C – 70 °C
Access lead nr.2 PG11
Body material: polyamide(cap in Lexan/polycarbonate)

| Actuator size [mm] | A [mm] | Code number |
|---|---|---|
| ø50 | 52.1 | **042N4820** |
| ø63 | 47.5 | **042N4821** |
| ø90 | 37.7 | **042N4822** |
| ø110 | 29.5 | **042N4823** |

* Limit Switch Box incl. 2 switches

## Wiring diagram
## for position indicator

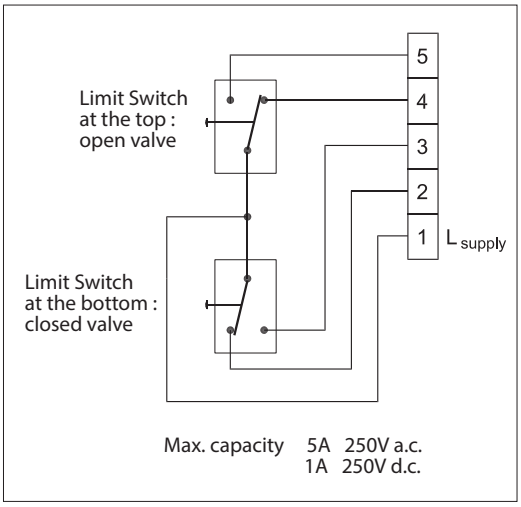

## Accessories
## Manual override

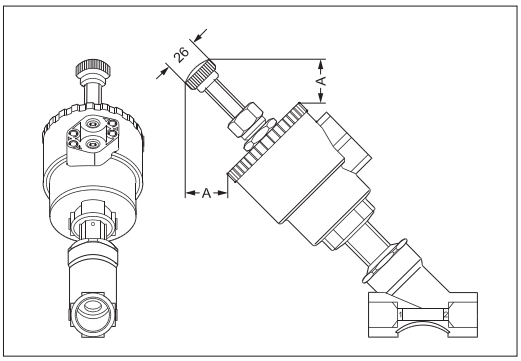


### Features

It permits opening the valve in emergency cases (lack of pilot fluid, machinery damaged, lack of piloting signal).
It is available on all NC versions.

| Actuator size [mm] | A [mm] | Code number |
|---|---|---|
| ø50 | 35.8 | **042N4840** |
| ø63 | 35.8 | **042N4841** |
| ø90 | 29.5 | **042N4842** |
| ø110 | 29.5 | **042N4843** |

## Manual capacity control

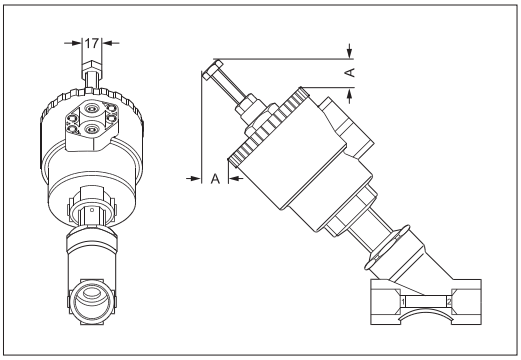


### Features

It limits steplessly the movement of the spindle, thereby controlling the capacity of the valve. Available on all the versions. In NO versions it can be used as manual override.

| Actuator size [mm] | A [mm] | Code number |
|---|---|---|
| ø50 | 25.5 | **042N4860** |
| ø63 | 21.5 | **042N4861** |
| ø90 | 5.2 | **042N4862** |
| ø110 | 5.9 | **042N4863** |

## Repair sets

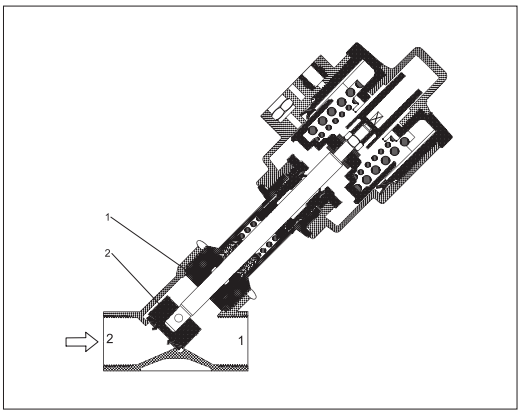


## Ordering
## Bronze/Stainless steel

| Connection ISO 228/1 | Diameter control head [mm] | Material | | Code number |
|---|---|---|---|---|
| | | Valve plate unit | Gasket | |
| G 3/8 | 40 | PTFE | Graphite | **042N4800** |
| G 3/8 | 50 | PTFE | Graphite | **042N4801** |
| G 1/2 | 40 | PTFE | Graphite | **042N4802** |
| G 1/2 | 50 | PTFE | Graphite | **042N4803** |
| G 3/4 | 50 – 63 | PTFE | Graphite | **042N4804** |
| G 1 | 63 | PTFE | Graphite | **042N4805** |
| G 1 | 90 | PTFE | Graphite | **042N4806** |
| G 1 1/4 | 90 | PTFE | Graphite | **042N4807** |
| G 1 1/2 | 90 – 110 | PTFE | Graphite | **042N4808** |
| G 2 | 110 | PTFE | Graphite | **042N4809** |

**The repair set contains :**
1 valve plate unit including mounting pin and 2 gaskets
*Please note only one gasket shall be used one is for Bronze another is for Stainless Steel.*

## Function, NC

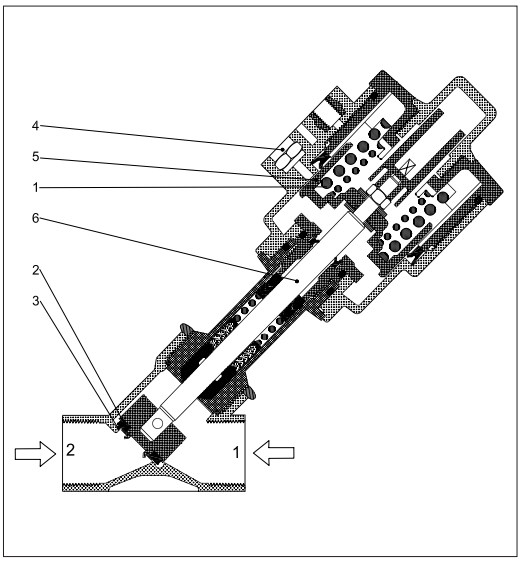


*1. Spring*
*2. Seat gasket*
*3. Valve seat*
*4. Control connection*
*5. Control piston*
*6. Spindle*

*AV210 unpressurized closed version (NC) bidirectional.*
The valve is kept closed by the spring (1), which presses the seat gasket (2) against the valve seat (3). When the pressure is applied to the control connection (4), the control piston (5), the spindle (6) and thus the seat gasket (2) are raised, and the valve opens with or against the pressure of the medium.

## Function, NO

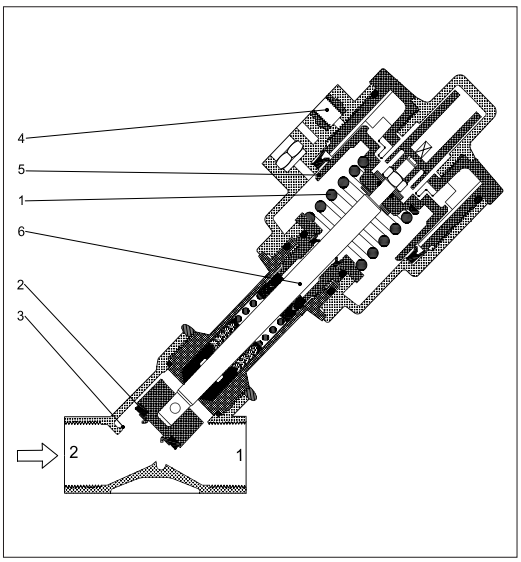


*1. Spring*
*2. Seat gasket*
*3. Valve seat*
*4. Control connection*
*5. Control piston*
*6. Spindle*

*AV210 unpressurized open version (NO):*
The valve is kept open by the spring (1), which keeps the seat gasket (2) away from the valve seat (3). When pressure is applied to the control connection (4), the control piston (5), the spindle (6) and thus the seat gasket (2) are lowered, and the valve closes against the pressure of the medium.

## Diagrams, NC

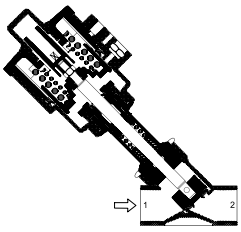

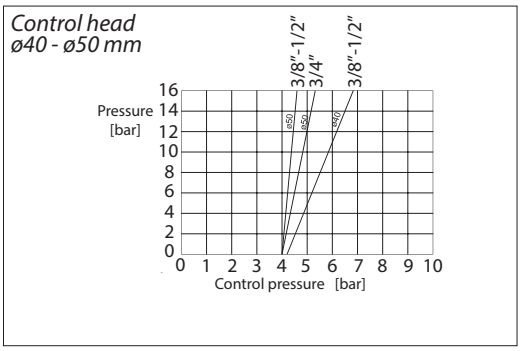


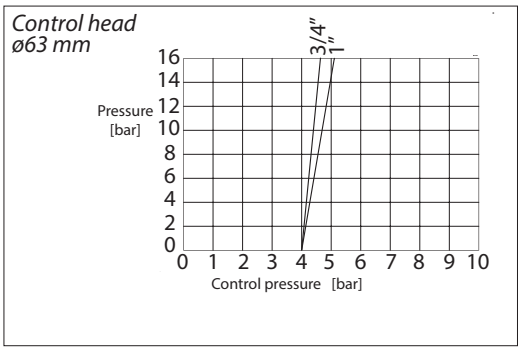


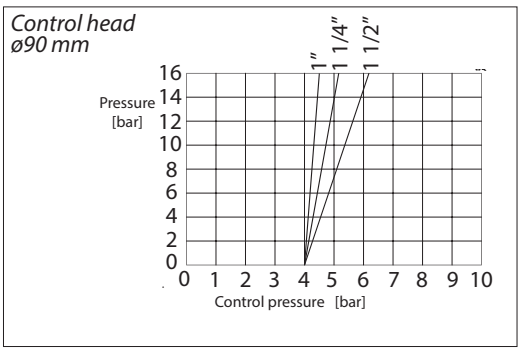


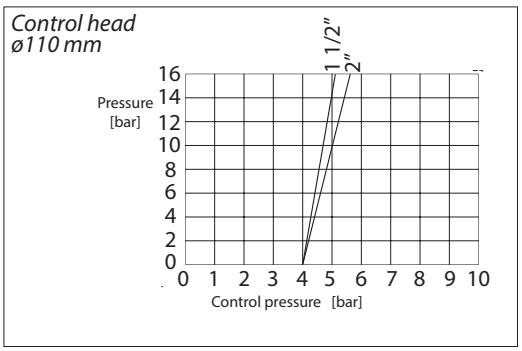


**Mounting:** closing *with* the flow direction
Recommended only for compressible media for extended pressure range

## Diagrams, NO

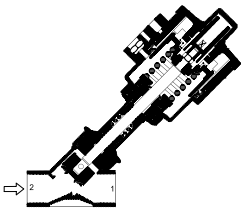

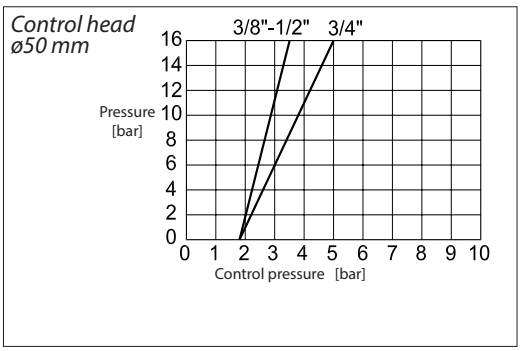


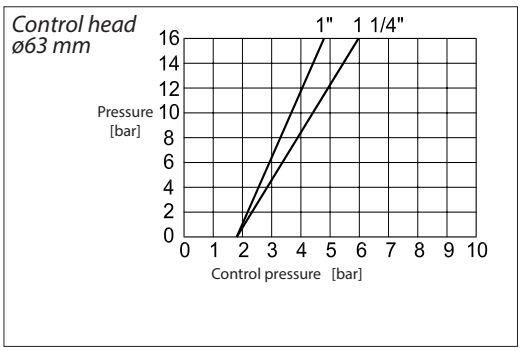


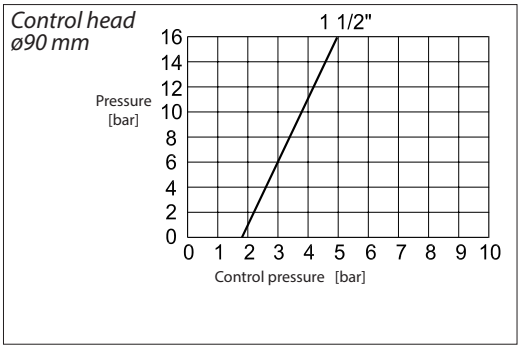


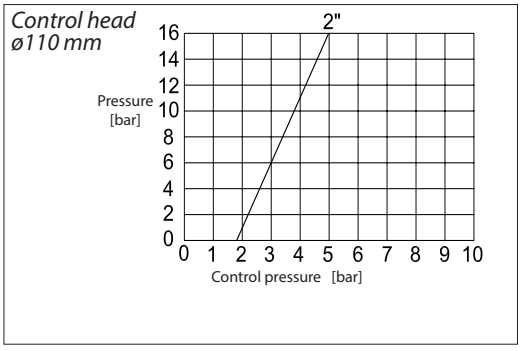

## Capacity diagram, Water

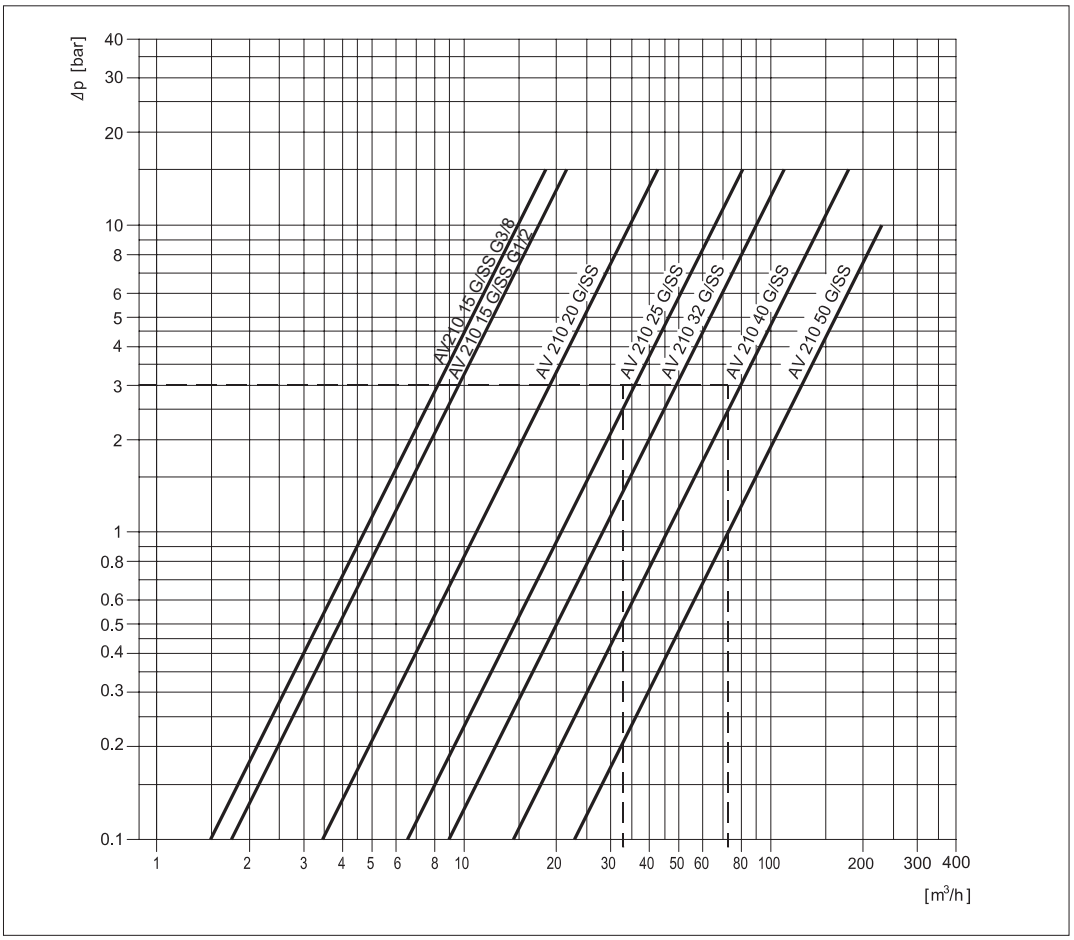


## Control valves, types EV310A and EV310B

*Control valves, type EV310A*

*Control valves, type EV310B*

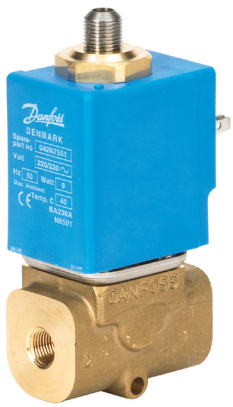

- Valves for industrial applications
- Available in de-energized closed and de-energized open versions
- Available with or without manual operation

*See separate data sheets regarding code numbers, technical data and coil options for Danfoss EV310A and EV310B valves.*

Danfoss can accept no responsibility for possible errors in catalogues, brochures and other printed material. Danfoss reserves the right to alter its products without notice. This also applies to products already on order provided that such alterations can be made without subsequential changes being necessary in specifications already agreed.
All trademarks in this material are property of the respective companies. Danfoss and the Danfoss logotype are trademarks of Danfoss A/S. All rights reserved.