Data sheet

Externally operated valves
Type AV210

AV210 is an externally operated angle seat valve for use in demanding industrial applications. The valve can operate at very high medium temperatures and viscosities, and is insensitive to dirt particles in the medium; thus, it is often called a "troubleshooter" valve. The valve is available in bronze and stainless steel.

Features

- For all fluids and gases
- Flow range: 0 – 234 m^3/h (0 – 275 USgal/min)
- Differential pressure: 0 – 16 bar (232 psi)
- Medium temperature: -30 – 180 °C (-22 – 356 °F)
- Ambient temperature: -30 – 60 °C (-22 – 140 °F)
- Thread connection:
  G ⅜ – G 2 in (NC and NO)
  NPT ½ – 2 in (NC)
- Orifice size: 15 - 50 mm
- Viscosity: Up to 600 cSt (3000 SSU)
- Bronze version for water, oil and compressed air
- Stainless steel version for neutral and aggressive liquid and gaseous media
- Unpressurized closed (NC) bidirectional versions and unpressurized opened (NO) version closing against the flow direction
- Operating pressure up to 16 bar (232 psi), depending on valve type
- The valves can be used for rough vacuum
- Control connection G ⅛ and NAMUR
- Valves comply with
  Pressure Equipment Directive 97/23/EC
- NC version: bi-directional, closing against or closing with the flow direction
- NO version: always closing against the flow direction

Bronze valve body, NC
ISO connection
PTFE seal material

Connection ISO 228/1	Orifice size	Flow value	Control head diameter	Differential pressure, min. to max. [1])	Control pressure	Code number
[in]	[mm]	K_v [m^3/h]	[mm]	[bar]	[bar]	
G 3/8	15	4.5	40[2])	0 – 16	4.2 – 10	**042N4400**
G 3/8	15	4.9	50	0 – 16	4 – 10	**042N4401**
G 1/2	15	5.3	40[2])	0 – 16	4.2 – 10	**042N4402**
G 1/2	15	5.7	50	0 – 16	4 – 10	**042N4403**
G 3/4	20	10	50	0 – 10	4 – 10	**042N4404**
G 3/4	20	10	63	0 – 16	4 – 10	**042N4405**
G 1	25	20	63	0 – 11	4 – 10	**042N4406**
G 1	25	20	90	0 – 16	4 – 8	**042N4407**
G 1 1/4	32	29	90	0 – 14	4 – 8	**042N4408**
G 1 1/2	40	46	90	0 – 11	4 – 8	**042N4409**
G 1 1/2	40	46	110	0 – 16	4 – 8	**042N4410**
G 2	50	67	110	0 – 10	4 – 8	**042N4411**

[1]) Pressure range can be extended for use in rough vacuum, typically up to 99% vacuum (10 mbar), depending on the application
[2]) Without NAMUR interface

Mounting: Bi-directional
Closing *against* or closing *with* the flow direction.

Closing *against* is recommended to avoid water hammer.

Bronze valve body, NC
NPT connection
PTFE seal material

Connection NPT	Orifice size	Flow value		Control head diameter	Differential pressure, min. to max. [1])		Control pressure		Code number
[in]	[mm]	K_v [m^3/h]	C_v [USgal/min]	[mm]	[bar]	[psi]	[bar]	[psi]	
1/2	15	5.7	6.5	50	0 – 16	0 – 232	4 – 10	58 – 145	**042N4503**
3/4	20	10	11.5	50	0 – 10	0 – 140	4 – 10	58 – 145	**042N4504**
1	25	20	23	63	0 – 11	0 – 160	4 – 10	58 – 145	**042N4506**
1 1/4	32	29	33	90	0 – 14	0 – 203	4 – 8	58 – 116	**042N4508**
1 1/2	40	46	53	90	0 – 11	0 – 160	4 – 8	58 – 116	**042N4509**
2	50	67	77	110	0 – 10	0 – 140	4 – 8	58 – 116	**042N4511**

[1]) Pressure range can be extended for use in rough vacuum, typically up to 99% vacuum (10 mbar), depending on the application
[2]) Without NAMUR interface

Mounting: Bi-directional
Closing *against* or closing *with* the flow direction.

Closing *against* is recommended to avoid water hammer.

Stainless steel valve body, NC
ISO Connection
PTFE seal material

Connection ISO 228/1	Orifice size	Flow value	Control head diameter	Differential pressure, min. to max. [1])	Control pressure	Code number
[in]	[mm]	K_v [m^3/h]	[mm]	[bar]	[bar]	
G 3/8	15	4.9	50	0 – 16	4 – 10	**042N4450**
G 1/2	15	5.7	50	0 – 16	4 – 10	**042N4451**
G 3/4	20	10	50	0 – 10	4 – 10	**042N4452**
G 3/4	20	10	63	0 – 16	4 – 10	**042N4453**
G 1	25	20	63	0 – 11	4 – 10	**042N4454**
G 1	25	20	90	0 – 16	4 – 8	**042N4455**
G 1 1/4	32	29	90	0 – 14	4 – 8	**042N4456**
G 1 1/2	40	46	90	0 – 11	4 – 8	**042N4457**
G 1 1/2	40	46	110	0 – 16	4 – 8	**042N4458**
G 2	50	67	110	0 – 10	4 – 8	**042N4459**

[1]) Pressure range can be extended for use in rough vacuum, typically up to 99% vacuum (10 mbar), depending on the application

Mounting: Bi-directional
Closing *against* or closing *with* the flow direction.

Closing *against* is recommended to avoid water hammer.

Bronze valve body, NC
NPT connection
PTFE seal material

Connection NPT	Orifice size	Flow value		Control head diameter	Differential pressure, min. to max. [1])		Control pressure		Code number
[in]	[mm]	K_v [m^3/h]	C_v [USgal/min]	[mm]	[bar]	[psi]	[bar]	[psi]	
1/2	15	5.7	6.5	50	0 – 16	0 – 232	4 – 10	58 – 145	**042N4551**
3/4	20	10	11.5	50	0 – 10	0 – 140	4 – 10	58 – 145	**042N4552**
3/4	20	10	11.5	63	0 – 16	0 – 232	4 – 10	58 – 145	**042N4553**
1	25	20	23	63	0 – 11	0 – 160	4 – 10	58 – 145	**042N4554**
1 1/2	40	46	53	90	0 – 11	0 – 160	4 – 8	58 – 116	**042N4557**
2	50	67	77	110	0 – 10	0 – 140	4 – 8	58 – 116	**042N4559**

[1]) Pressure range can be extended for use in rough vacuum, typically up to 99% vacuum (10 mbar), depending on the application

Mounting: Bi-directional
Closing *against* or closing *with* the flow direction.

Closing *against* is recommended to avoid water hammer.

Bronze valve body, NO
ISO Connection
PTFE seal material

Connection ISO 228/1	Orifice size	Flow value	Control head diameter	Differential pressure, min. to max. [bar][1])	Control pressure [bar]		Code number
[in]	[mm]	K_v [m^3/h]	[mm]		Min.	Max.	
G 1/2	15	5.7	50	See diagram, page 11		10	**042N4431**
G 3/4	20	10	50	See diagram, page 11		10	**042N4432**
G 1	25	20	63	See diagram, page 11		10	**042N4433**
G 1 1/4	32	29	63	See diagram, page 11		10	**042N4434**
G 1 1/2	40	46	90	See diagram, page 11		8	**042N4435**
G 2	50	67	110	See diagram, page 11		8	**042N4436**

[1]) Pressure range can be extended for use in rough vacuum, typically up to 99% vacuum (10 mbar), depending on the application

Mounting
Always closing *against* the flow direction.

Stainless steel valve body, NO
ISO Connection
PTFE seal material

Connection ISO 228/1	Orifice size	Flow value	Control head diameter	Differential pressure, min. to max. [bar][1])	Control pressure [bar]		Code number
[in]	[mm]	K_v [m^3/h]	[mm]		Min.	Max.	
G 3/8	15	4.9	50	See diagram, page 11		10	**042N4480**
G 1/2	15	5.7	50	See diagram, page 11		10	**042N4481**
G 3/4	20	10	50	See diagram, page 11		10	**042N4482**
G 1	25	20	63	See diagram, page 11		10	**042N4483**
G 1 1/4	32	29	63	See diagram, page 11		10	**042N4484**
G 1 1/2	40	46	90	See diagram, page 11		8	**042N4485**
G 2	50	67	110	See diagram, page 11		8	**042N4486**

[1]) Pressure range can be extended for use in rough vacuum, typically up to 99% vacuum (10 mbar), depending on the application

Mounting
Always closing *against* the flow direction.

Technical data
NC/NO

Main type	ø50 – 63 mm (2 – 2 1/2 in) control head Closing with the flow direction	ø50 – 63 mm (2 – 2 1/2 in) control head Closing against the flow direction	ø90 – 110 mm (3 1/2 – 4 1/3 in) control head Closing with the flow direction	ø90 – 110 mm (3 1/2 – 4 1/3 in) control head Closing against the flow direction
Time to open [ms] [1])	40 – 180	50 – 350	80 – 780	100 – 460
Time to close [ms] [1])	160 – 500	120 – 350	580 – 1270	360 – 790

[1]) The times are indicative.

Type	AV210 NC / NO			
Design	Piston-operated; angle-seated			
Installation	Optional			
Tightness	Internally / Externally:		Better than 0.4 mbar l/sec (25 ccm air per min.)	
Pressure range	See ordering			
Ambient temperature	-30 – 60 °C (-22 – 356 °F)			
Medium temperature	-30 – 180 °C (-22 – 140 °F)			
Viscosity	Max. 600 cSt / 3000 SSU			
Control medium	Air			
Materials	Valve body:		Bronze	RG 5
			Stainless steel	AISI 316
	Intermediate piece:	Bronze body:	Brass	W.no.2.0402
		Stainless steel body:	Stainless steel	AISI 316
	Seat control and nut:		Stainless steel	AISI 316
	Spindle:		Stainless steel	AISI 316
	Spindle gasket:		PTFE	–
	Gasket:		Graphite	–
	Valve plate unit:		PTFE	–
	Control head:		PA66	–

Type	Approval [1])
AV210 15-25	The products are not allowed to carry CE mark, according to PED 97/23/EC
AV210 32 - 40 - 50 Bronze	CE marked and covered by PED 97/23/EC, fluid group 1, class I
AV210 32 - 40 SS	CE marked and covered by PED 97/23/EC, fluid group 1, class I
AV210 50 SS	CE marked and covered by PED 97/23/EC, fluid group 1, class II

[1]) Approvals only apply for ISO versions.

Dimensions and weight
Bronze valve body

ISO Connection

Connection ISO 228/1	Orifice size	Control head diameter	A	B	C	D	øE	F	H	ch.L	Weight
[in]	[mm]	[mm]	[mm]	[mm]	[mm]	[mm]	[mm]	[mm]	[mm]	[mm]	[kg]
G 3/8	15	40	144	121	134	35	61	65	12	27	1.1
G 3/8	15	50	163	140	153	44	70	65	12	27	1.1
G 1/2	15	40	144	121	134	35	61	65	13	27	1.0
G 1/2	15	50	163	140	153	44	70	65	13	27	1.0
G 3/4	20	50	173	147	163	44	70	75	14.3	27.5	1.2
G 3/4	20	63	191	165	181	50.5	84.4	75	14.3	27.5	1.2
G 1	25	63	206	176	196	50.5	84.4	90	17.5	41	1.6
G 1	25	90	246	216	236	66.2	116.4	90	17.5	41	1.7
G 1 1/4	32	90	255	220	245	66.2	116.4	110	19	50	3.0
G 1 1/2	40	90	270	235	264	66.2	116.4	120	18	58	3.4
G 1 1/2	40	110	306	271	300	77.4	140.6	120	18	58	4.0
G 2	50	110	316	276	311	77.4	140.6	150	20	70	5.3

NPT Connection

Connection NPT	Orifice size		Control head diameter		A		B		C		D		øE		F		H		ch.L		Weight	
[in]	[mm]	[in]	[mm]	[in]	[mm]	[in]	[mm]	[in]	[mm]	[in]	[mm]	[in]	[mm]	[in]	[mm]	[in]	[mm]	[in]	[mm]	[in]	[kg]	[lbs]
1/2	15	1/2	50	2	163	6.4	140	5.5	153	6.0	44	1.7	70	2.8	65	2.6	13	0.5	27	1.1	1.0	2.2
3/4	15	3/4	50	2	173	6.8	147	5.8	163	6.4	44	1.7	70	2.8	75	3.0	14.3	0.6	27.5	1.1	1.2	2.6
1	25	1	63	2 1/2	206	8.1	176	6.9	196	7.7	50.5	2.0	84.4	3.3	90	3.5	17.5	0.7	41	1.6	1.6	3.5
1 1/4	32	1 1/4	90	3 1/2	255	10.0	220	8.7	245	9.6	66.2	2.6	116.4	4.6	110	4.3	19	0.7	50	2.0	3.0	6.6
1 1/2	40	1 1/2	90	3 1/2	270	10.6	235	9.3	264	10.4	66.2	2.6	116.4	4.6	120	4.7	18	0.7	58	2.3	3.4	7.5
2	50	2	110	4 1/3	316	12.4	276	10.9	311	12.2	77.4	3.0	140.6	5.5	150	5.9	20	0.8	70	2.8	5.3	11.7

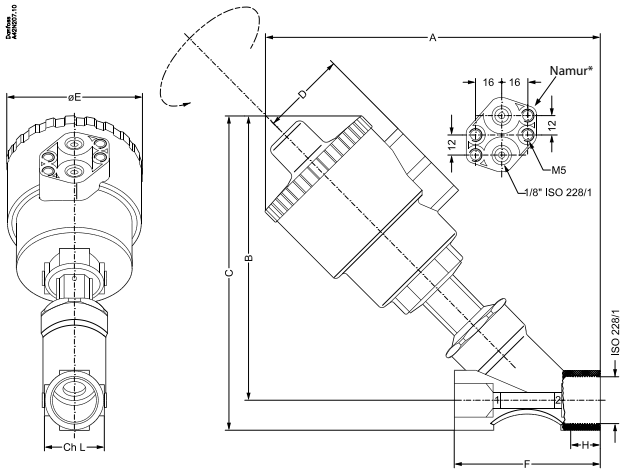

* Control head 40 mm 2x G ⅛ in connection

Dimensions and weight
Stainless steel valve body

ISO Connection

Connection ISO 228/1	Orifice size	Control head diameter	A	B	C	D	øE	F	H	ch.L	Weight
[in]	[mm]	[mm]	[mm]	[mm]	[mm]	[mm]	[mm]	[mm]	[mm]	[mm]	[kg]
G 3/8	15	40	190	156	169	44	70	85	12	25	1.1
G 1/2	15	50	190	156	169	44	70	85	15	25	1.0
G 3/4	20	50	195	160	176	44	70	95	16.3	31	1.2
G 3/4	20	63	213	178	194.4	50.5	84.4	95	16.3	31	1.2
G 1	25	63	219	182	202	50.5	84.4	105	19.5	38	1.6
G 1	25	90	259	222	242	66.2	116.4	105	19.5	38	1.7
G 1 1/4	32	90	266	226	249	66.2	116.4	120	19	47	3.0
G 1 1/2	40	90	271	230	258	66.2	116.4	130	18	54	3.4
G 1 1/2	40	110	307	266	294	77.4	140.6	130	18	54	4.0
G 2	50	110	321	276	310	77.4	140.6	150	20	66	5.3

NPT Connection

Connection NPT	Orifice size		Control head diameter		A		B		C		D		øE		F		H		ch.L		Weight	
[in]	[mm]	[in]	[mm]	[in]	[mm]	[in]	[mm]	[in]	[mm]	[in]	[mm]	[in]	[mm]	[in]	[mm]	[in]	[mm]	[in]	[mm]	[in]	[kg]	[lbs]
1/2	15	1/2	50	2	190	7.5	156	6.1	169	6.7	44	1.7	70	2.8	85	3.3	15	0.6	25	1.0	1.0	2.2
3/4	15	3/4	50	2	195	7.7	160	6.3	176	6.9	44	1.7	70	2.8	95	3.7	16.3	0.6	31	1.2	1.2	2.6
3/4	15	3/4	63	2 1/2	213	8.4	178	7.0	194.4	7.7	50.5	2.0	84.4	3.3	95	3.7	16.3	0.6	31	1.2	1.2	2.6
1	25	1	63	2 1/2	219	8.6	182	7.2	202	8.0	50.5	2.0	84.4	3.3	105	4.1	19.5	0.8	38	1.5	1.6	3.5
1 1/4	32	1 1/4	90	3 1/2	266	10.5	226	8.9	249	9.8	66.2	2.6	116.4	4.6	120	4.7	19	0.7	47	1.9	3.0	6.6
1 1/2	40	1 1/2	90	3 1/2	271	10.7	230	9.1	258	10.2	66.2	2.6	116.4	4.6	130	5.1	18	0.7	54	2.1	3.4	7.5
2	50	2	110	4 1/3	321	12.6	276	10.9	310	12.2	77.4	3.0	140.6	5.5	150	5.9	20	0.8	66	2.6	5.3	11.7

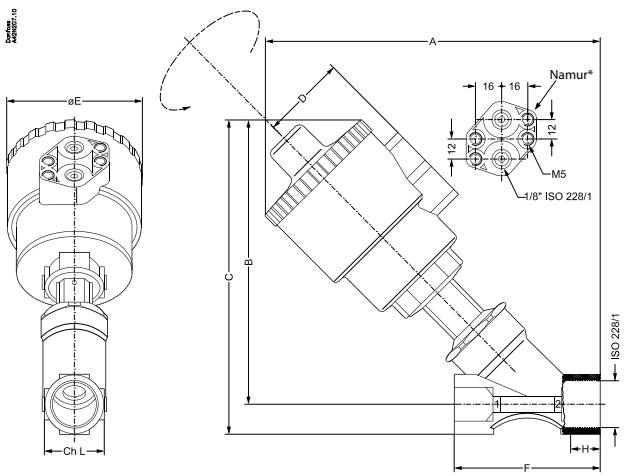

* Control head 40 mm 2x G ⅛ in connection

Accessories
Position indicator

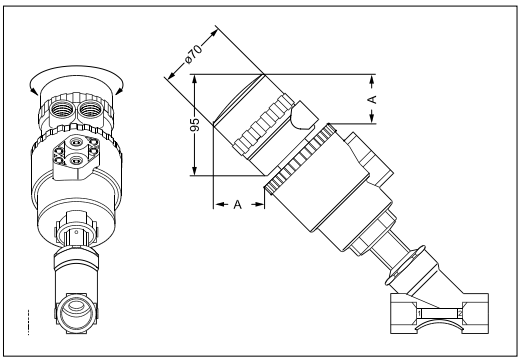

Features

The control box to check the open/closed positions with two mechanical limit switches is suitable for assembling on the whole range of valves.

Level of protection : IP65

Ambient temperature:
from -20 – 70 °C (-4 – 158 °F)

Access lead nr.2 PG11

Body material:
Polyamide (cap in Lexan/polycarbonate)

Actuator size		A		
[mm]	[in]	[mm]	[in]	Code number
ø50	2	52.1	2.1	**042N4820**
ø63	2 1/2	47.5	1.9	**042N4821**
ø90	3 1/2	37.7	1.5	**042N4822**
ø110	4 1/3	29.5	1.2	**042N4823**

* Limit Switch Box incl. 2 switches

Wiring diagram
for position indicator

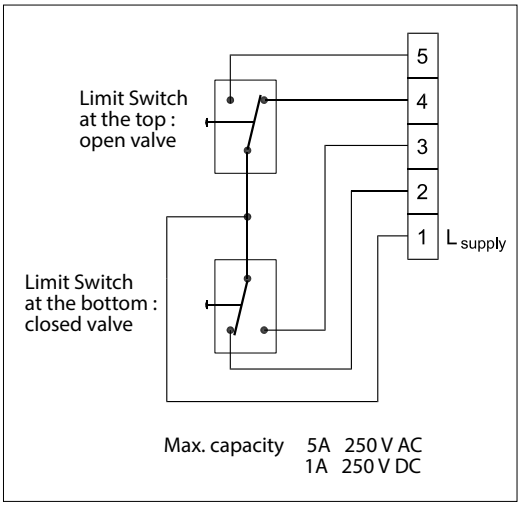

Repair sets

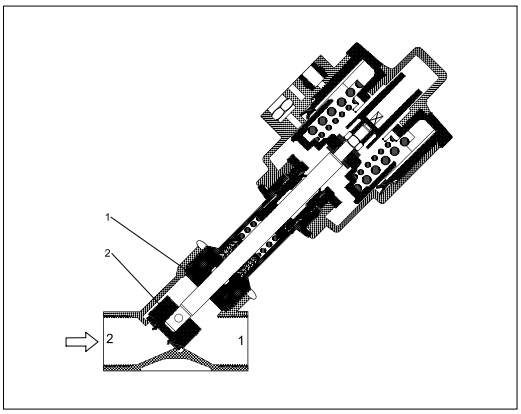

The repair set contains :
1 valve plate unit including mounting pin (2) and 2 gaskets (1).
Please note only one gasket shall be used. One is for Bronze, another is for Stainless Steel.

Ordering
Bronze/Stainless steel

Connection		Control head diameter	Material		
ISO 228/1 [in]	NPT [in]	[mm]	Valve plate unit	Gasket	Code number
G 3/8	–	40	PTFE	Graphite	**042N4800***
G 3/8	–	50	PTFE	Graphite	**042N4801**
G 1/2	–	40	PTFE	Graphite	**042N4802***
G 1/2	1/2	50	PTFE	Graphite	**042N4803**
G 3/4	3/4	50 – 63	PTFE	Graphite	**042N4804**
G 1	1	63	PTFE	Graphite	**042N4805**
G 1	–	90	PTFE	Graphite	**042N4806**
G 1 1/4	1 1/4	90	PTFE	Graphite	**042N4807**
G 1 1/2	1 1/2	90 – 110	PTFE	Graphite	**042N4808**
G 2	2	110	PTFE	Graphite	**042N4809**

** On actuator size 40 (diameter control head) only one gasket included.*

Function, NC
ISO / NPT Connection

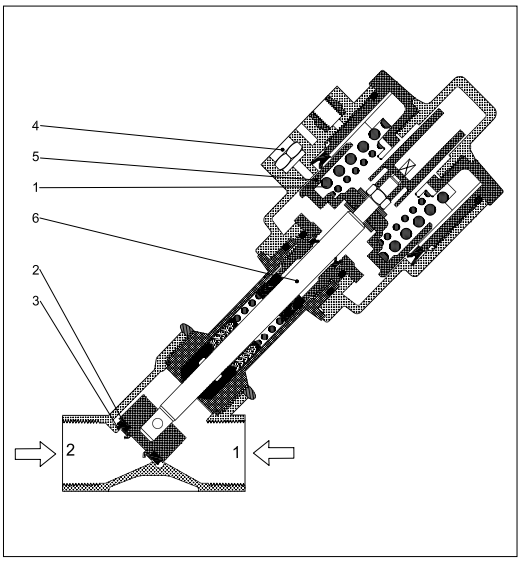

1. Spring
2. Seat gasket
3. Valve seat
4. Control connection
5. Control piston
6. Spindle

AV210 unpressurized closed version (NC) bidirectional.
The valve is kept closed by the spring (1), which presses the seat gasket (2) against the valve seat (3). When the pressure is applied to the control connection (4), the control piston (5), the spindle (6) and thus the seat gasket (2) are raised, and the valve opens with or against the pressure of the medium.

Function, NO
ISO Connection

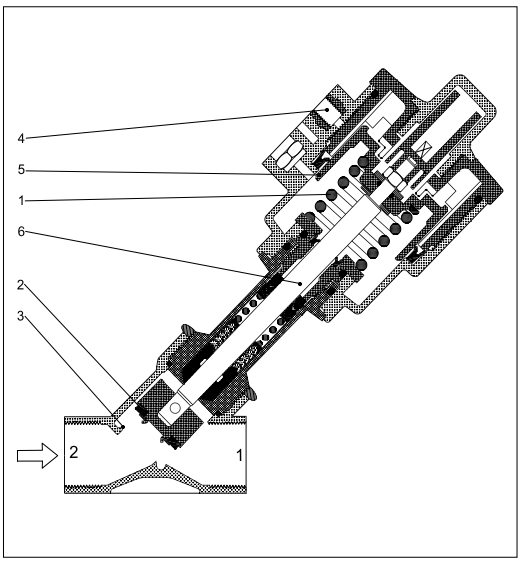

1. Spring
2. Seat gasket
3. Valve seat
4. Control connection
5. Control piston
6. Spindle

AV210 unpressurized open version (NO):
The valve is kept open by the spring (1), which keeps the seat gasket (2) away from the valve seat (3). When pressure is applied to the control connection (4), the control piston (5), the spindle (6) and thus the seat gasket (2) are lowered, and the valve closes against the pressure of the medium.

Diagrams, NC
ISO / NPT Connection

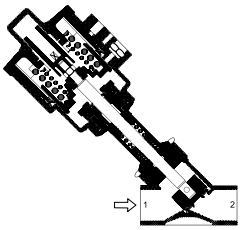

Control head
ø40 - ø50 mm / 2 in

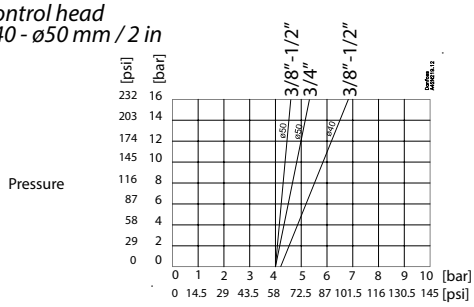

Control head
ø63 mm / 2 1/2 in

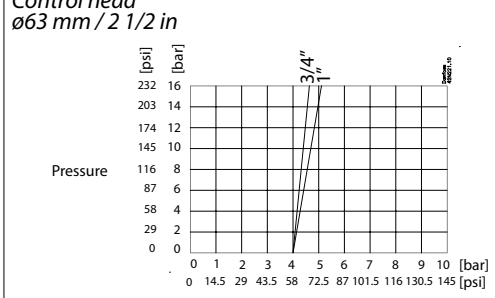

Control head
ø90 mm / 3 1/2 in

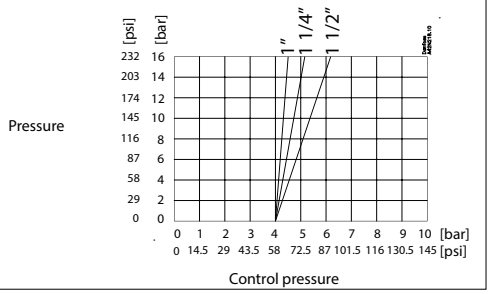

Control head
ø110 mm / 4 1/3 in

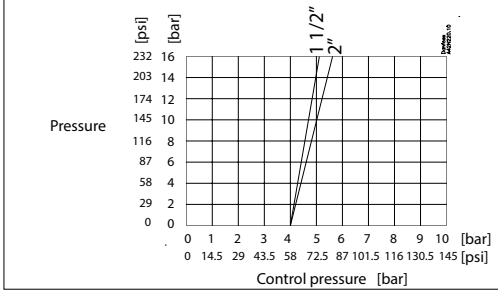

Mounting: closing *with* the flow direction
Recommended only for compressible media for extended pressure range

Diagrams, NO
ISO Connection

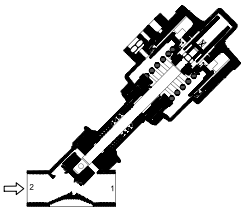

Control head
ø50 mm

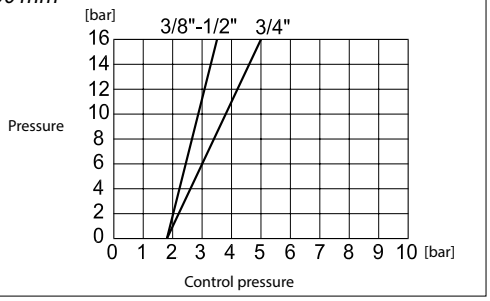

Control head
ø63 mm

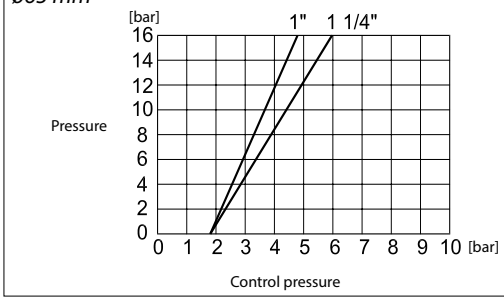

Control head
ø90 mm

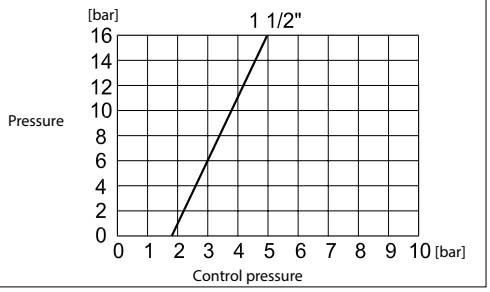

Control head
ø110 mm

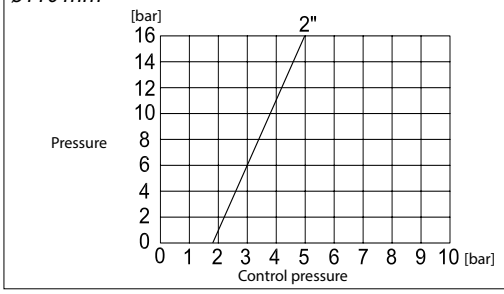

Capacity diagram, Water

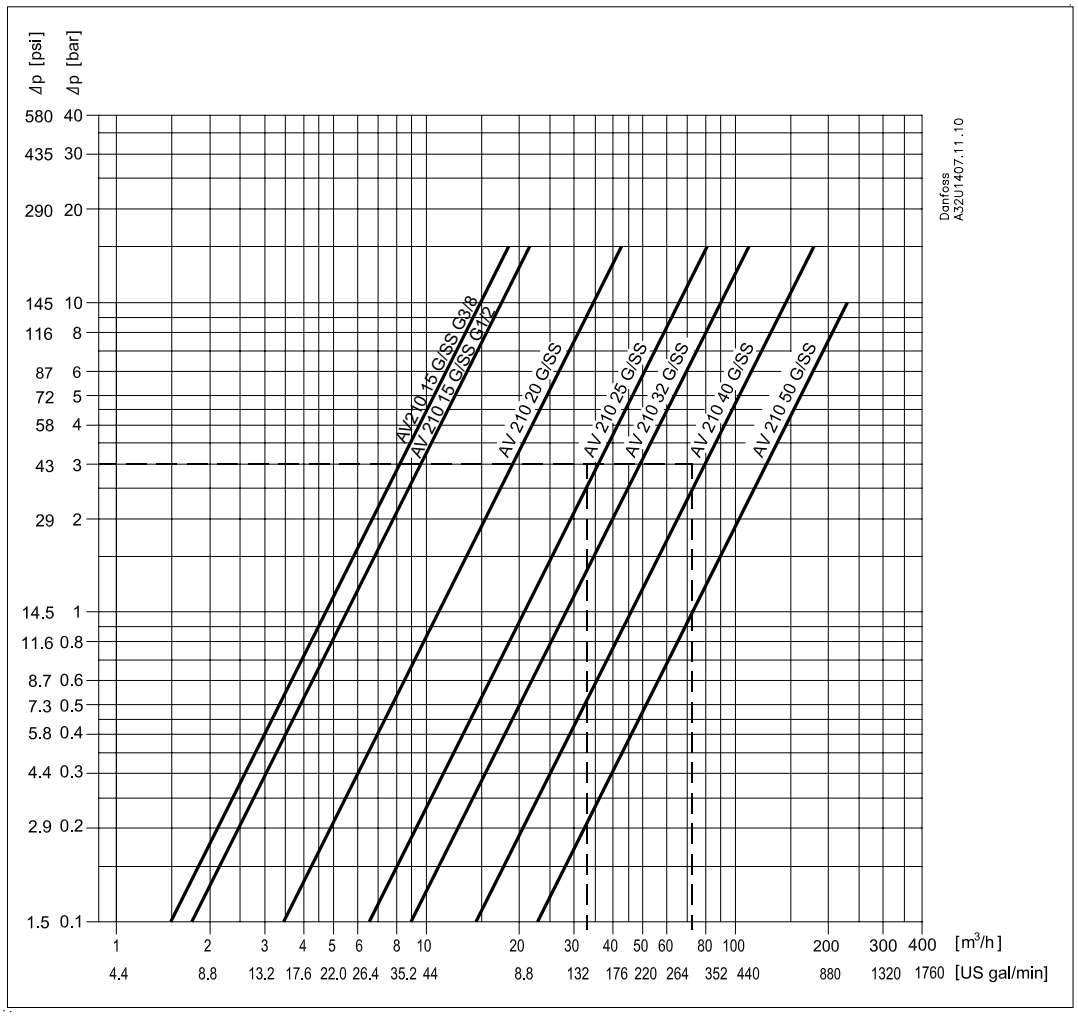

Control valves, types EV310A and EV310B

Control valves, type EV310A

Control valves, type EV310B

- Valves for industrial applications
- Available in de-energized closed and de-energized open versions
- Available with or without manual operation

See separate data sheets regarding code numbers, technical data and coil options for Danfoss EV310A and EV310B valves.

Danfoss can accept no responsibility for possible errors in catalogues, brochures and other printed material. Danfoss reserves the right to alter its products without notice. This also applies to products already on order provided that such alterations can be made without subsequential changes being necessary in specifications already agreed.
All trademarks in this material are property of the respective companies. Danfoss and the Danfoss logotype are trademarks of Danfoss A/S. All rights reserved.