Data sheet

Externally operated valves
Type AV210

AV210 is an externally operated angle seat valve for use in demanding industrial applications. The valve can operate at very high medium temperatures and viscosities, and is insensitive to dirt particles in the medium; thus, it is often called a "troubleshooter" valve. The valve is available in bronze and stainless steel.

Features

- For all fluids and gases
- Flow range: 0 – 234 m^3/h
- Differential pressure: 0 – 16 bar
- Media temperature: -30 – 180 °C
- Ambient temperature: -30 – 60 °C
- Thread connection: G 3/8 - 2"
- DN: 15 - 50
- Viscosity: Up to 600 cSt
- Stainless steel version for neutral and aggressive liquid and gaseous media
- Unpressurized closed (NC) bidirectional versions and unpressurized opened (NO) version closing against the flow direction
- Operating pressure up to 16 bar, depending on valve type
- The valves can be used for rough vacuum
- Control connection G 1/8 and NAMUR
- Valves comply with P.E.D. 97/23/ EC group 1 & 2
- Bi-directional NC version - two flow directions
- Bronze version for water, oil and compressed air

Bronze valve body, NC

Connection ISO 228/1	Seal mate-rial	Orifice size [mm]	kv - value [m³/h]	Diameter control head [mm]	Control pressure [bar]	Differential pressure, min. to max. [bar][1])	Code number
G 3/8	PTFE	15	4.5	40[2])	4.2 – 10	0 – 16	**042N4400**
G 3/8	PTFE	15	4.9	50	4 – 10	0 – 16	**042N4401**
G 1/2	PTFE	15	5.3	40[2])	4.2 – 10	0 – 16	**042N4402**
G 1/2	PTFE	15	5.7	50	4 – 10	0 – 16	**042N4403**
G 3/4	PTFE	20	10	50	4 – 10	0 – 10	**042N4404**
G 3/4	PTFE	20	10	63	4 – 10	0 – 16	**042N4405**
G 1	PTFE	25	20	63	4 – 10	0 – 11	**042N4406**
G 1	PTFE	25	20	90	4 – 8	0 – 16	**042N4407**
G 1 1/4	PTFE	32	29	90	4 – 8	0 – 14	**042N4408**
G 1 1/2	PTFE	40	46	90	4 – 8	0 – 11	**042N4409**
G 1 1/2	PTFE	40	47	110	4 – 8	0 – 16	**042N4410**
G 2	PTFE	50	74	110	4 – 8	0 – 10	**042N4411**

[1]) Pressure range can be extended for use in rough vacuum, typically up to 99% vacuum (10mbar), depending on the application
[2]) Without NAMUR interface

Stainless steel valve body, NC

Connection ISO 228/1	Seal mate-rial	Orifice size [mm]	kv - value [m³/h]	Diameter control head [mm]	Control pressure [bar]	Differential pressure, min. to max. [bar][1])	Code number
G 3/8	PTFE	15	4.9	50	4 – 10	0 – 16	**042N4450**
G 1/2	PTFE	15	5.7	50	4 – 10	0 – 16	**042N4451**
G 3/4	PTFE	20	10	50	4 – 10	0 – 10	**042N4452**
G 3/4	PTFE	20	10	63	4 – 10	0 – 16	**042N4453**
G 1	PTFE	25	20	63	4 – 10	0 – 11	**042N4454**
G 1	PTFE	25	20	90	4 – 8	0 – 16	**042N4455**
G 1 1/4	PTFE	32	29	90	4 – 8	0 – 14	**042N4456**
G 1 1/2	PTFE	40	46	90	4 – 8	0 – 11	**042N4457**
G 1 1/2	PTFE	40	47	110	4 – 8	0 – 16	**042N4458**
G 2	PTFE	50	74	110	4 – 8	0 – 10	**042N4459**

[1]) Pressure range can be extended for use in rough vacuum, typically up to 99% vacuum (10mbar), depending on the application

Mounting: closing *against* or closing *with* the flow direction:

Closing *against* is recommended to avoid water hammer

Bronze valve body, NO

Connection ISO 228/1	Seal mate-rial	Orifice size [mm]	kv - value [m³/h]	Diameter control head [mm]	Pressure range[1]) [bar]	Control pressure, [bar]		Code number
						min.	max.	
G 3/8	PTFE	15	4.9	50	See diagram, page 10		10	**042N4430**
G 1/2	PTFE	15	5.7	50	See diagram, page 10		10	**042N4431**
G 3/4	PTFE	20	10	50	See diagram, page 10		10	**042N4432**
G 1	PTFE	25	20	63	See diagram, page 10		10	**042N4433**
G 1 1/4	PTFE	32	29	63	See diagram, page 10		10	**042N4434**
G 1 1/2	PTFE	40	46	90	See diagram, page 10		8	**042N4435**
G 2	PTFE	50	74	110	See diagram, page 10		8	**042N4436**

[1]) Pressure range can be extended for use in rough vacuum, typically up to 99% vacuum (10mbar), depending on the application

Stainless steel valve body, NO

Connection ISO 228/1	Seal mate-rial	Orifice size [mm]	kv - value [m³/h]	Diameter control head [mm]	Pressure range[1]) [bar]	Control pressure, [bar]		Code number
						min.	max.	
G 3/8	PTFE	15	4.9	50	See diagram, page 10		10	**042N4480**
G 1/2	PTFE	15	5.7	50	See diagram, page 10		10	**042N4481**
G 3/4	PTFE	20	10	50	See diagram, page 10		10	**042N4482**
G 1	PTFE	25	20	63	See diagram, page 10		10	**042N4483**
G 1 1/4	PTFE	32	29	63	See diagram, page 10		10	**042N4484**
G 1 1/2	PTFE	40	46	90	See diagram, page 10		8	**042N4485**
G 2	PTFE	50	74	110	See diagram, page 10		8	**042N4486**

[1]) Pressure range can be extended for use in rough vacuum, typically up to 99% vacuum (10mbar), depending on the application

Mounting: Always closing *against* the flow direction

Technical data
NC/NO

Main type	50 – 63 mm control head. Closing with the flow direction	50 – 63 mm control head. Closing against the flow direction	90 – 110 mm control head. Closing with the flow direction	90 – 110 mm control head. Closing against the flow direction
Time to open [ms] [1])	40 – 180	50 – 350	80 – 780	100 – 460
Time to close [ms] [1])	160 – 500	120 – 350	580 – 1270	360 – 790

[1]) The times are indicative.

Type	AV210 NC/NO			
Design	Piston-operated; angle-seated			
Installation	Optional			
Tightness	Internally/ Externally:		Better than 0.4 mbar l/sec (25 ccm air per min.)	
Pressure range	See ordering			
Ambient temperature	-30 – 60 °C			
Medium temperature	-30 – 180 °C			
Viscosity	Max. 600 cSt			
Control medium	Air			
Materials	Valve body:		Bronze	RG 5
			Stainless steel	AISI 316
	Intermediate piece:	Bronze body:	Brass	W.no.2.0402
		Stainless steel body:	Stainless steel	AISI 316
	Seat control and nut:		Stainless steel	AISI 316
	Spindle:		Stainless steel	AISI 316
	Spindle gasket:		PTFE	–
	Gasket:		Graphite	–
	Valve plate unit:		PTFE	–
	Control head:		PA66	–

Type	Approval
AV210 15-25	The products are not allowed to carry CE mark, according to PED 97/23/EC
AV210 32 - 40 - 50 Bronze	CE marked and covered by PED 97/23/EC, fluid group 1, class I
AV210 32 - 40 SS	CE marked and covered by PED 97/23/EC, fluid group 1, class I
AV210 50 SS	CE marked and covered by PED 97/23/EC, fluid group 1, class II

Dimensions and weight
Bronze valve body

Connection ISO 228/1	Orifice size [mm]	Diameter control head [mm]	A [mm]	B [mm]	C [mm]	D [mm]	øE [mm]	F [mm]	H [mm]	ch.L [mm]	Weight [kg]
G 3/8	15	40	144	121	134	35	61	65	12	27	**1.1**
G 3/8	15	50	163	140	153	44	70	65	12	27	**1.1**
G 1/2	15	40	144	121	134	35	61	65	13	27	**1.0**
G 1/2	15	50	163	140	153	44	70	65	13	27	**1.0**
G 3/4	20	50	173	147	163	44	70	75	14.3	27.5	**1.2**
G 3/4	20	63	191	165	181	50.5	84.4	75	14.3	27.5	**1.2**
G 1	25	63	206	176	196	50.5	84.4	90	17.5	41	**1.6**
G 1	25	90	246	216	236	66.2	116.4	90	17.5	41	**1.7**
G 1 1/4	32	90	255	220	245	66.2	116.4	110	19	50	**3.0**
G 1 1/2	40	90	270	235	264	66.2	116.4	120	18	58	**3.4**
G 1 1/2	40	110	306	271	300	77.4	140.6	120	18	58	**4.0**
G 2	50	110	316	276	311	77.4	140.6	150	20	70	**5.3**

Dimensions and weight
Stainless steel valve body

Connection ISO 228/1	Orifice size [mm]	Diameter control head [mm]	A [mm]	B [mm]	C [mm]	D [mm]	øE [mm]	F [mm]	H [mm]	ch.L [mm]	Weight [kg]
G 3/8	15	40	190	156	169	44	70	85	12	25	**1.1**
G 1/2	15	50	190	156	169	44	70	85	15	25	**1.0**
G 3/4	20	50	195	160	176	44	70	95	16.3	31	**1.2**
G 3/4	20	63	213	178	194.4	50.5	84.4	95	16.3	31	**1.2**
G 1	25	63	219	182	202	50.5	84.4	105	19.5	38	**1.6**
G 1	25	90	259	222	242	66.2	116.4	105	19.5	38	**1.7**
G 1 1/4	32	90	266	226	249	66.2	116.4	120	19	47	**3.0**
G 1 1/2	40	90	271	230	258	66.2	116.4	130	18	54	**3.4**
G 1 1/2	40	110	307	266	294	77.4	140.6	130	18	54	**4.0**
G 2	50	110	321	276	310	77.4	140.6	150	20	66	**5.3**

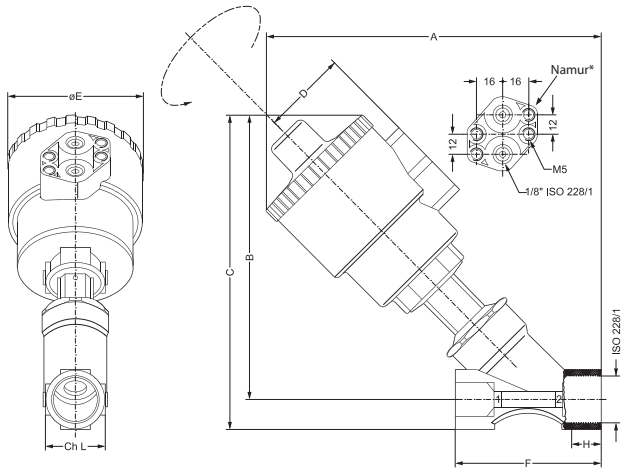

* Control head 40mm 2x 1/8" connection

Accessories
Position indicator

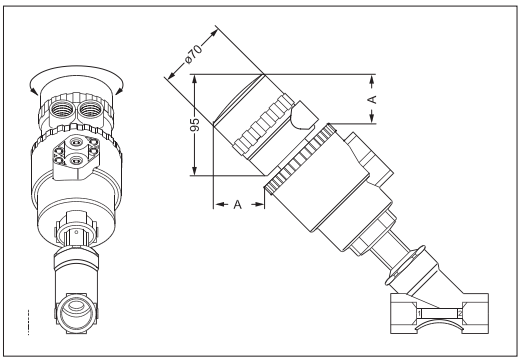

Features

The control box to check the open/closed positions with two mechanical limit switches is suitable for assembling on the whole range of valves.
Level of protection : IP65
Ambient temperature: from -20 °C – 70 °C
Access lead nr.2 PG11
Body material: polyamide(cap in Lexan/polycarbonate)

Actuator size [mm]	A [mm]	Code number
ø50	52.1	**042N4820**
ø63	47.5	**042N4821**
ø90	37.7	**042N4822**
ø110	29.5	**042N4823**

* Limit Switch Box incl. 2 switches

Wiring diagram
for position indicator

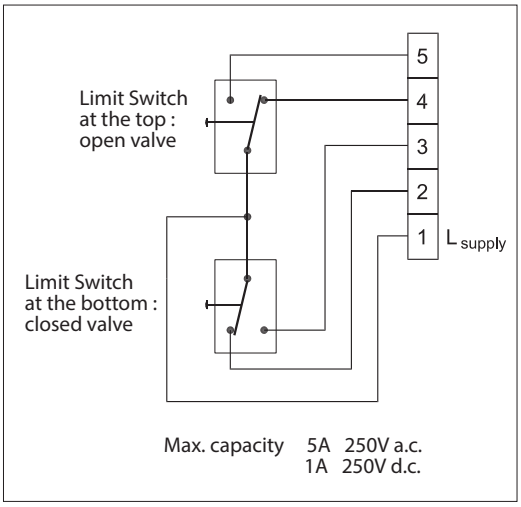

Accessories
Manual override

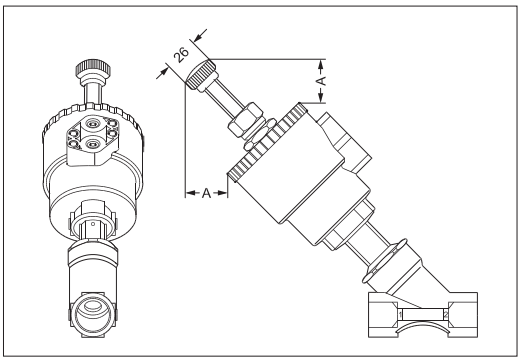

Features

It permits opening the valve in emergency cases (lack of pilot fluid, machinery damaged, lack of piloting signal).
It is available on all NC versions.

Actuator size [mm]	A [mm]	Code number
ø50	35.8	**042N4840**
ø63	35.8	**042N4841**
ø90	29.5	**042N4842**
ø110	29.5	**042N4843**

Manual capacity control

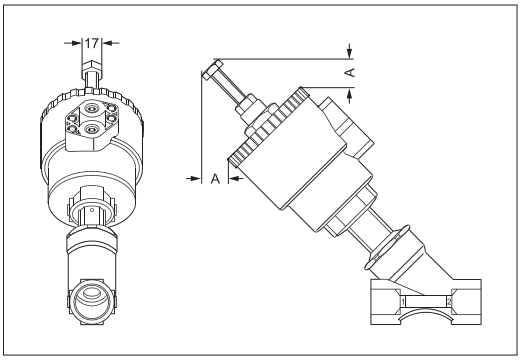

Features

It limits steplessly the movement of the spindle, thereby controlling the capacity of the valve. Available on all the versions. In NO versions it can be used as manual override.

Actuator size [mm]	A [mm]	Code number
ø50	25.5	**042N4860**
ø63	21.5	**042N4861**
ø90	5.2	**042N4862**
ø110	5.9	**042N4863**

Repair sets

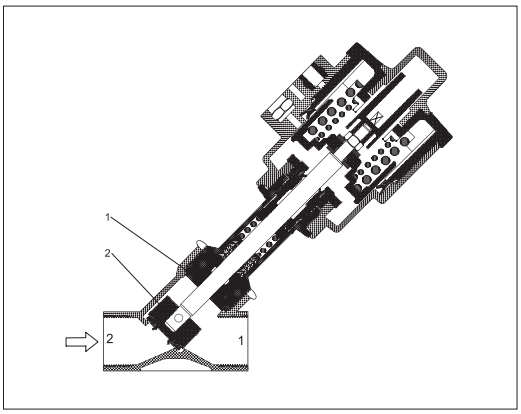

Ordering
Bronze/Stainless steel

Connection ISO 228/1	Diameter control head [mm]	Material		Code number
		Valve plate unit	Gasket	
G 3/8	40	PTFE	Graphite	**042N4800***
G 3/8	50	PTFE	Graphite	**042N4801**
G 1/2	40	PTFE	Graphite	**042N4802***
G 1/2	50	PTFE	Graphite	**042N4803**
G 3/4	50 – 63	PTFE	Graphite	**042N4804**
G 1	63	PTFE	Graphite	**042N4805**
G 1	90	PTFE	Graphite	**042N4806**
G 1 1/4	90	PTFE	Graphite	**042N4807**
G 1 1/2	90 – 110	PTFE	Graphite	**042N4808**
G 2	110	PTFE	Graphite	**042N4809**

** On actuator size 40 (diameter control head) only one gasket included.*

The repair set contains :
1 valve plate unit including mounting pin (2) and 2 gaskets (1).
Please note only one gasket shall be used. One is for Bronze, another is for Stainless Steel.

Function, NC

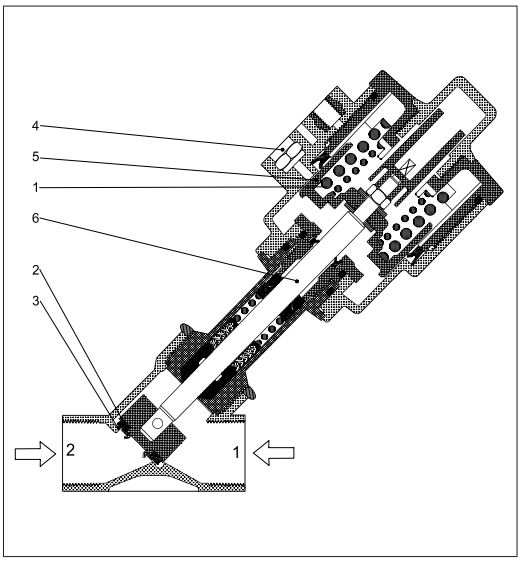

1. Spring
2. Seat gasket
3. Valve seat
4. Control connection
5. Control piston
6. Spindle

AV210 unpressurized closed version (NC) bidirectional.
The valve is kept closed by the spring (1), which presses the seat gasket (2) against the valve seat (3). When the pressure is applied to the control connection (4), the control piston (5), the spindle (6) and thus the seat gasket (2) are raised, and the valve opens with or against the pressure of the medium.

Function, NO

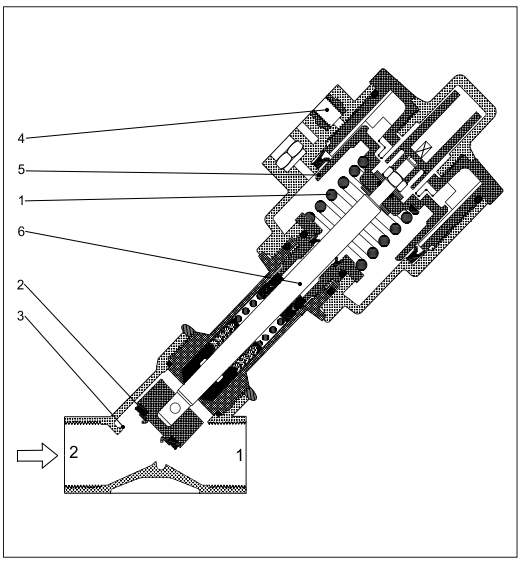

1. Spring
2. Seat gasket
3. Valve seat
4. Control connection
5. Control piston
6. Spindle

AV210 unpressurized open version (NO):
The valve is kept open by the spring (1), which keeps the seat gasket (2) away from the valve seat (3). When pressure is applied to the control connection (4), the control piston (5), the spindle (6) and thus the seat gasket (2) are lowered, and the valve closes against the pressure of the medium.

Diagrams, NC

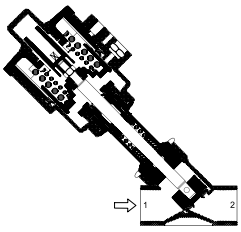

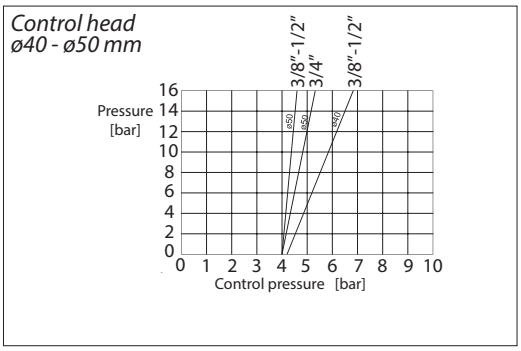

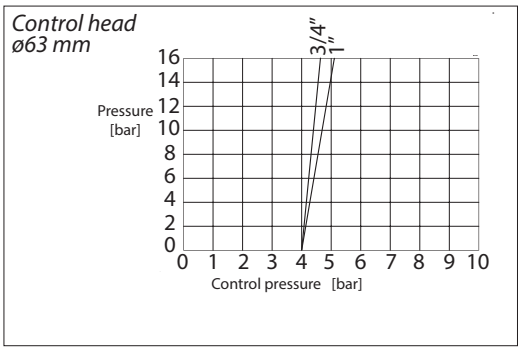

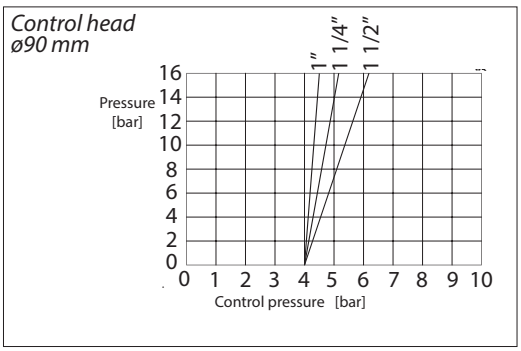

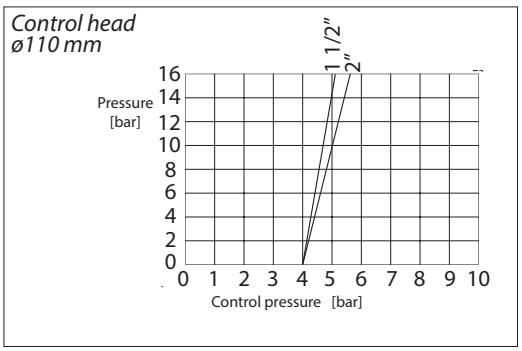

Mounting: closing *with* the flow direction
Recommended only for compressible media for extended pressure range

Diagrams, NO

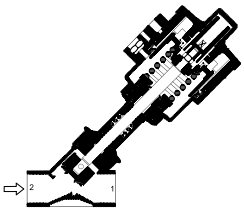

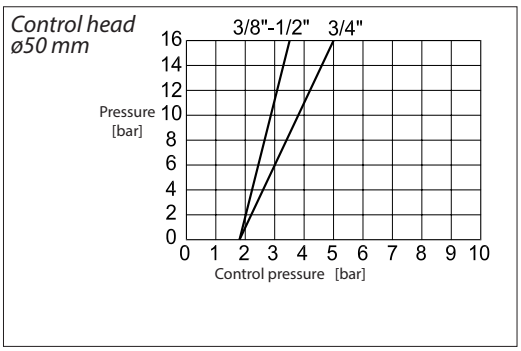

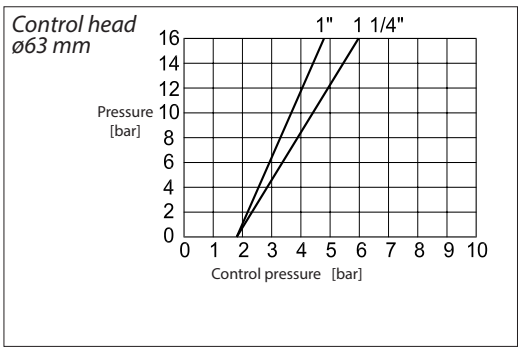

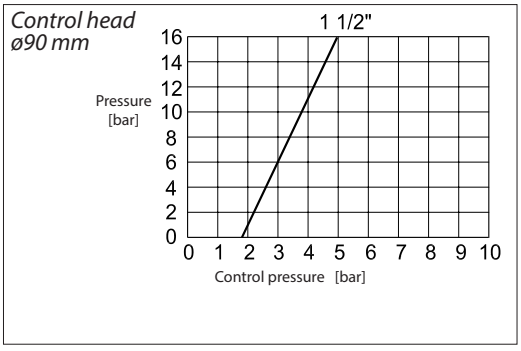

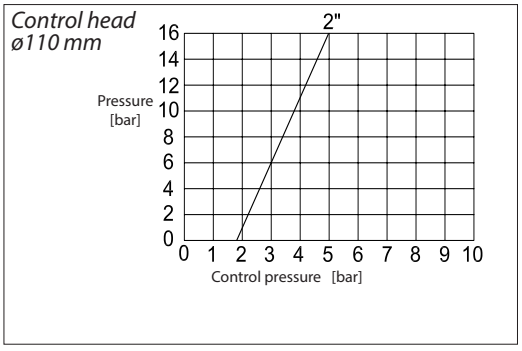

Capacity diagram, Water

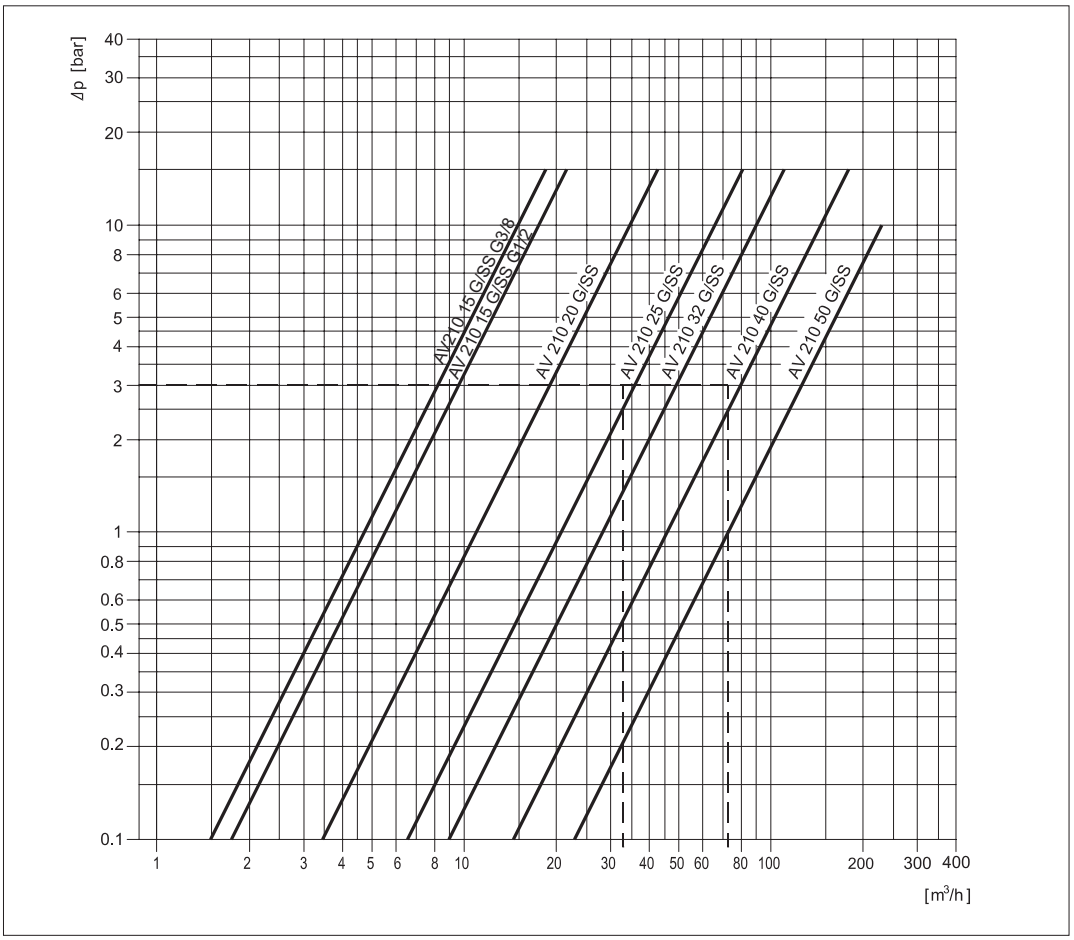

Control valves, types EV310A and EV310B

Control valves, type EV310A

Control valves, type EV310B

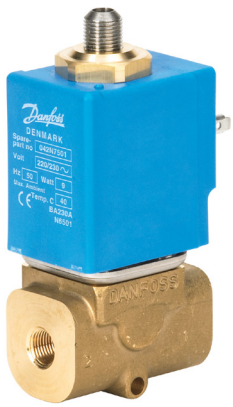

- Valves for industrial applications
- Available in de-energized closed and de-energized open versions
- Available with or without manual operation

See separate data sheets regarding code numbers, technical data and coil options for Danfoss EV310A and EV310B valves.

Danfoss can accept no responsibility for possible errors in catalogues, brochures and other printed material. Danfoss reserves the right to alter its products without notice. This also applies to products already on order provided that such alterations can be made without subsequential changes being necessary in specifications already agreed.
All trademarks in this material are property of the respective companies. Danfoss and the Danfoss logotype are trademarks of Danfoss A/S. All rights reserved.