ENGINEERING
TOMORROW

Quick Selection Catalogue

Products and technologies for all your application needs, today and **tomorrow**

REFRIGERATION & AIR CONDITIONING
Automatic Controls | Electronic Controllers | Compressors and Condensing Units



Easy

selection of future-proof solutions and components.

www.danfoss.co.uk

Table of contents

01 - Thermostatic expansion valves 6
T2 / TE2, Thermostatic expansion valves 6
TE 5 – TE 55, Thermostatic expansion valves 10
TGE, Thermostatic expansion valve 16
TUA / TUAE / TCAE, Thermostatic expansion valves 28
TUB / TUBE / TCBE, Thermostatic expansion valves 34

02 - Electric expansion valves 40
ETS 12C / ETS 24C / ETS 25C / ETS 50C / ETS 100C, Electric expansion valves 40
ETS 6, Electric expansion valve 44
ETS 12.5 – ETS 400, Electric expansion valves 48
CCM, Electric expansion valve 52
CCMT, Electric expansion valve 56
CTM, Multi Ejector Solution™ for R744 (CO_2) 60
AKV 10P / AKV 10PS, Electric expansion valves 62
AKV 15 / AKV 20, Electric expansion valves 66
AKVA, Electric expansion valve 70

03 - Solenoid valves 74
EVR version 2, Solenoid valve 74
EVRS / EVRST, Solenoid valves 86
EVRA / EVRAT, Solenoid valves 88
EVUL, Solenoid valve 90
Solenoid coils 96
ICF EVRAT - FA + solenoid valve 102
ICLX, 2-step solenoid valve 104
ICSH, Dual position solenoid valve 110
VHV / STF, 4-way reversing valves 116

04 - Pressure switches and Thermostats 118
RT, Pressure switch 118
KP, Pressure switch 122
MP, Differential pressure switch 126
ACB / CCB, Cartridge pressure switches 130
RT, Thermostat 134
KP, Thermostat 136
UT, Thermostat 138
077B, Thermostat 140

05 - Pressure and temperature regulating valves 144
KVR / NRD, Condensing pressure regulator / Differential pressure valve 144
KVP, Evaporator pressure regulator 146
KVL, Crankcase pressure regulator 148
KVD, Receiver pressure regulator 150
KVC, Hot gas bypass regulator 152
CPCE, Hot gas bypass regulator / LG, Liquid gas mixer (accessory) 154
WVFX/WVO/WVS, Pressure operated water valves 156
AVTA, Thermostatic operated water valve 160
TUH / TCHE, Capacity regulator (hot gas bypass) 162
TGHE, Capacity regulator (hot gas bypass) 164
KVS, Electric suction modulating control valve 166
ICM 20-150, Motor operated valve 170
ICS 25-150, Pilot-operated servo valve 176
CVH / CVP / CVQ / EVM, Pilot valves 192
CVP / CVPP / CVC / CVE / EVM, Pilot valves and CVH housing 194
OFV / OFV-SS, Pressure regulating valves 196

06 - Liquid level regulating valves (These products are not sold in Europe)

07 - Filter driers 198
DCL, Hermetic filter drier 198
DML, Hermetic filter drier 204
DMT, Hermetic filter drier for CO_2 210
DAS, Hermetic burn-out filter drier 212
DCR, Filter drier with replaceable solid core 214
DMB, Hermetic bi-flow filter drier 224
DCB, Hermetic bi-flow filter drier 228

DMC, Hermetic receiver filter drier 232
DCC, Hermetic receiver filter drier 234

08 - Sight glasses 236
SGP, Sight glass (high pressure) 236
LLG, Sight glass 242
09 - Direct-weld strainers 244
FIA, Strainer - 52 bar / 754 psi 244
FIA, Strainer - 65 bar / 943 psi 254
FIA SS, Strainer 262

10 - Shut-off and regulating valves 266
GBC version 2, Shut-off ball valve 266
GBC version 2, Shut-off ball valve for R744 (CO_2) low pressure 270
GBCH version 2, Shut-off ball valve for R744 (CO_2) high pressure 272
BML / BMT, Shut-off diaphragm valves 274
SVA-S / SVA-L, Shut-off valves - 52 bar /754 psi 278
SVA-S / SVA-L, Shut-off valves - 65 bar / 943 psi 288
SVA-S SS / SVA-L SS, Shut-off valves 294
QDV, Shut-off valve 298
SNV-ST / SNV-SS, Gauge valves 300
REG-SA / REG-SB, Hand-operated regulating valves - 52 bar / 754 psi 304
REG-SA / REG-SB, Hand-operated regulating valves, 65 bar / 943 psi 312
REG-SA SS / REG-SB SS, Hand-operated regulating valves 318

11 - Check valves 320
NRV / NRVH, Check valves 320
NRVA, Check valve 324
SCA-X, Check and stop valve / CHV-X, Check valve - 52 bar / 754 psi 326
SCA-X, Check and stop valve / CHV-X, Check valve - 65 bar / 943 psi 336
SCA-X SS, Check and stop valve / CHV-X SS, Check valve 344

12 - Safety relief valves 346
SFA 15 / SFA 15-50, Safety relief valves 346
SFV, Safety relief valve 350
DSV, Change-over valve 354

13 - Valve stations 356
ICF / ICF SS, Valve stations 356

14 - Oil separators 384
OUB, Oil separator 384

15 - Heat exchangers 386
HE, Tube-in-tube heat exchanger 386
BPHE, Brazed plate heat exchanger 388
MPHE, Micro plate heat exchanger 392

16 - Electronic controllers 402
XGE / RGE, Fan speed controllers 402
Electronic controls – Overview 404
EKC 202, Refrigeration controller 408
EKC 202D1, Refrigeration controller 410
EKC 302, Refrigeration controller 412
AK-CC 210, Universal refrigeration controller 414
AK-CC 250A, Universal refrigeration controller 416
AK-CC 350, Universal refrigeration controller 418
AK-CC 450, Controller for appliance control 420
AK-CC 550A, Controller for appliance control 422
AK-CC 750A, Controller for evaporator control 424
EKC 315A, Refrigeration control 426
EKE 1A / EKE 1B / EKE 1C, Superheat controllers 428
EKE 347, Liquid level controller 430
EKC 368, Controller for temperature control of unpacked food products 432
ERC 211 / ERC 213 / ERC 214, Temperature controllers 434
AK-PC 351, Capacity controller 436
AK-PC 551, Capacity controller 438
AK-PC 651, Capacity controller 440

AK-PC 772A, Capacity controller for small CO_2 booster 442
AK-PC 781A, Capacity controller 444
AK-PC 782A, Capacity controller 446
AK-PC 783A, Capacity controller with cascade control 448
Optyma™ Control, Single-phase 450
Optyma™ Control, Three-phase 452
AK-SM 800 series, System manager 454

17 - Sensors 456
GD, Gas detector for Industrial Refrigeration 456
DGS, Gas sensor 468
AKS 4100 / AKS 4100U - Liquid level sensors 470
AKS and DST P100, Pressure transmitters 476
EKS / AKS, Temperature sensors 480
NSK, Pressure sensor 482

18 - Compressors 484
Danfoss Light commercial compressors - Direct current - BD series 484
Danfoss Light commercial compressors - PL / TL / DL / NL / FR / SC and GS series 488
Danfoss Light commercial compressors - Variable speed DLV / NLV and SLV series 489
Light commercial compressors - B / U / L / P / X / S series 516
MTZ / NTZ, Reciprocating compressors 540
VTZ, Inverter reciprocating compressor 558
DCJ, Scroll compressor - R410A 572
H-Series, Scroll compressor 576
HHP, Scroll heating compressor optimized - R407C 594
MLZ / LLZ, Scroll compressors for refrigeration 598
MLM / MLZ 116, Scroll compressors 624
DSH / SH series, Scroll compressors 628
SM / SY / SZ, S-Series, Scroll compressors 644
CXH 140, Scroll compressor - R410A 662
PSH, Scroll compressor heating optimized - R410A 666
PCH, Scroll compressor heating optimized - R410A 676
VLZ, Inverter scroll compressor - R404A, R448A and R449A 680
VZH, Inverter scroll compressor - R410A 690

19 - Condensing units 710
Optyma™ - Condensing Units - Overview 710
Optyma™ - Condensing Units 712
Optyma™ Slim Pack - The cost effective outdoor solution 772
Optyma™ Plus - The low noise condensing units for quick installation 806
Optyma™ Plus Inverter - Capacity modulation in a simple and adapative package 834

20 - Refrigerant trends 846
Refrigerant control schedules 846
Overview of refrigerant trends 847
Danfoss and low-GWP refrigerants 848
Products for refrigerants with a GWP <2500 850

Table of contents - Type 854

Table of contents - Code numbers 900

T2 / TE2, Thermostatic expansion valves

T2 / TE2 thermostatic expansion valves are used for liquid injection into evaporators on both refrigeration and air conditioning systems. T2 / TE2 valves are supplied as a parts programme, with separate thermostatic element/valve body and orifice assembly.

Available as angleway valves with flare x flare or flare x solder connections, with internal and external equalisation.



Features
T2 / TE2

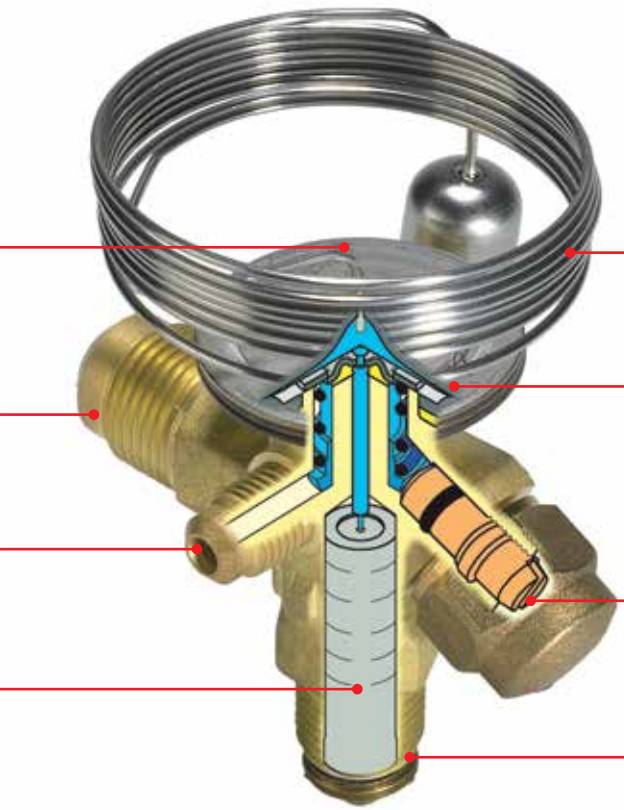

Laser-welded power element in stainless steel
- long diaphragm life
- high pressure tolerance and working pressure
- high corrosion resistance

Flare or solder outlet

Flare or solder pressure equalization

Interchangeable orifice assembly with dirt protection strainer

Stainless steel capillary tube and bulb:
- high corrosion resistance
- high strength and vibration resistance

Laser-engraved label

Easy adjustment of superheat setting

Flare inlet
Solder adaptor available as an option

Facts

Applications:
- Traditional refrigeration
- Heat pump systems
- Air conditioning units
- Liquid coolers
- Transport refrigeration

- Applicable to R22 / R407C, R134a, R404A / R507, R407C, R407F, R407A, R448A,R449A, R452A and R513A
  For a fully updated list of approved refrigerants, visit www.products.danfoss.com and search for individual code numbers,where refrigerants are listed as part of product specifications.
- Large temperature range
- Equally applicable to freezing, refrigeration and air conditioning applications

- Interchangeable orifice assembly
  - easy stocking
  - easy capacity matching
  - better service
- Can be supplied with MOP (Max. Operating Pressure)
- Protects the compressor motor against excessive evaporating pressure during normal operation
- Valves for special temperature ranges and refrigerants can be supplied
- Flare / solder adaptor can be supplied

Technical data and ordering



Thermostatic element + *Orifice*

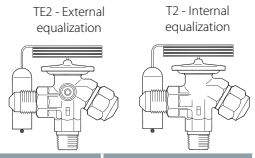

T2 / TE2

Thermostatic element with bulb strap (flare x flare)

Type	Refrigerant	Range		MOP		Pressure equalization Flare		Connection flare inlet × outlet		Code no. Multi pack
		[°C]	[°F]	[°C]	[°F]	[mm]	[in]	[mm]	[in]	
T2	R22 / R407C [1]	-40 – 10	-40 – 50	–	–	–	–	10 × 12	3/8 × 1/2	068Z3206
		-40 – 10	-40 – 50	15	60	–	–	10 × 12	3/8 × 1/2	068Z3208
		-40 – -5	-40 – 25	0	32	–	–	10 × 12	3/8 × 1/2	068Z3224
		-40 – -15	-40 – 5	-10	14	–	–	10 × 12	3/8 × 1/2	068Z3226
		-60 – -25	-75 – -15	–	–	–	–	10 × 12	3/8 × 1/2	068Z3207
		-60 – -25	-75 – -15	-20	-5	–	–	10 × 12	3/8 × 1/2	068Z3228
TE2		-40 – 10	-40 – 50	–	–	6	1/4	10 × 12	3/8 × 1/2	068Z3209
		-40 – 10	-40 – 50	15	60	6	1/4	10 × 12	3/8 × 1/2	068Z3211
		-40 – -5	-40 – 25	0	32	6	1/4	10 × 12	3/8 × 1/2	068Z3225
		-40 – -15	-40 – 5	-10	14	6	1/4	10 × 12	3/8 × 1/2	068Z3227
		-60 – -25	-75 – -15	–	–	6	1/4	10 × 12	3/8 × 1/2	068Z3210
		-60 – -25	-75 – -15	-20	-5	6	1/4	10 × 12	3/8 × 1/2	068Z3229
T2	R407C	-40 – 10	-40 – 50	–	–	–	–	10 × 12	3/8 × 1/2	068Z3496
		-40 – 10	-40 – 50	15	60	–	–	10 × 12	3/8 × 1/2	068Z3516
TE2		-40 – 10	-40 – 50	–	–	6	1/4	10 × 12	3/8 × 1/2	068Z3501
		-40 – 10	-40 – 50	15	60	6	1/4	10 × 12	3/8 × 1/2	068Z3517
T2	R134a	-40 – 10	-40 – 50	–	–	–	–	10 × 12	3/8 × 1/2	068Z3346
		-40 – 10	-40 – 50	15	60	–	–	10 × 12	3/8 × 1/2	068Z3347
		-40 – -5	-40 – 25	0	32	–	–	10 × 12	3/8 × 1/2	068Z3393
		-40 – -15	-40 – 5	-10	14	–	–	10 × 12	3/8 × 1/2	068Z3369
TE2		-40 – 10	-40 – 50	–	–	6	1/4	10 × 12	3/8 × 1/2	068Z3348
		-40 – 10	-40 – 50	15	60	6	1/4	10 × 12	3/8 × 1/2	068Z3349
		-40 – -5	-40 – 25	0	32	6	1/4	10 × 12	3/8 × 1/2	068Z3392
		-40 – -15	-40 – 5	-10	14	6	1/4	10 × 12	3/8 × 1/2	068Z3370
T2	R404A / R507	-40 – 10	-40 – 50	–	–	–	–	10 × 12	3/8 × 1/2	068Z3400
		-40 – 10	-40 – 50	15	60	–	–	10 × 12	3/8 × 1/2	068Z3402
		-40 – -5	-40 – 25	0	32	–	–	10 × 12	3/8 × 1/2	068Z3406
		-40 – -15	-40 – 5	-10	14	–	–	10 × 12	3/8 × 1/2	068Z3408
		-60 – -25	-75 – -15	–	–	–	–	10 × 12	3/8 × 1/2	068Z3401
		-60 – -25	-75 – -15	-20	-5	–	–	10 × 12	3/8 × 1/2	068Z3410
TE2		-40 – 10	-40 – 50	–	–	6	1/4	10 × 12	3/8 × 1/2	068Z3403
		-40 – 10	-40 – 50	15	60	6	1/4	10 × 12	3/8 × 1/2	068Z3405
		-40 – -5	-40 – 25	0	32	6	1/4	10 × 12	3/8 × 1/2	068Z3407
		-40 – -15	-40 – 5	-10	14	6	1/4	10 × 12	3/8 × 1/2	068Z3409
		-60 – -25	-75 – -15	–	–	6	1/4	10 × 12	3/8 × 1/2	068Z3404
		-60 – -25	-75 – -15	-20	-5	6	1/4	10 × 12	3/8 × 1/2	068Z3411
T2	R407F / R407A	-40 – 10	-40 – 50	–	–	–	–	10 × 12	3/8 × 1/2	068Z3715
TE2		-40 – 10	-40 – 50	–	–	6	1/4	10 × 12	3/8 × 1/2	068Z3714
T2	R448A / R449A	-40 – 10	-40 – 50	–	–	–	–	–	3/8 × 1/2	068Z3727
TE2		-40 – 10	-40 – 50	–	–	6	1/4	10 × 12	3/8 × 1/2	068Z3728

[1]) *For R407C plants, please select valves from the dedicated R407C program*
Capillary tube: 1.5 m / 59 in

Technical data and ordering

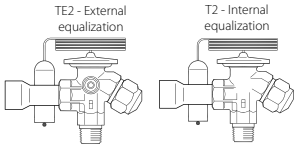

T2 / TE2

Thermostatic element with bulb strap (flare x solder)

Type	Refrigerant	Range		MOP		Pressure equalization solder		Connection inlet (Flare) × outlet (Solder)		Code no. Multi pack
		[°C]	[°F]	[°C]	[°F]	[mm]	[in]	[mm]	[in]	
T2	R22 / R407C [1]	-40 – 10	-40 – 50	–	–	–	–	–	3/8 × 1/2	068Z3281
		-40 – 10	-40 – 50	–	–	–	–	10 × 12	–	068Z3302
		-40 – 10	-40 – 50	15	60	–	–	–	3/8 × 1/2	068Z3287
		-40 – 10	-40 – 50	15	60	–	–	10 × 12	–	068Z3308
		-60 – -25	-75 – -15	–	–	–	–	–	3/8 × 1/2	068Z3357
		-60 – -25	-75 – -15	–	–	–	–	10 × 12	–	068Z3361
TE2		-40 – 10	-40 – 50	–	–	–	1/4	–	3/8 × 1/2	068Z3284
		-40 – 10	-40 – 50	–	–	6	–	10 × 12	–	068Z3305
		-40 – 10	-40 – 50	15	60	–	1/4	–	3/8 × 1/2	068Z3290
		-40 – 10	-40 – 50	15	60	6	–	10 × 12	–	068Z3311
		-40 – -15	-40 – -5	-10	-15	6	–	10 × 12	–	068Z3367
		-60 – -25	-75 – -15	–	–	–	1/4	–	3/8 × 1/2	068Z3359
		-60 – -25	-75 – -15	–	–	6	–	10 × 12	–	068Z3363
T2	R407C	-40 – 10	-40 – 50	–	–	–	–	10 × 12	–	068Z3502
		-40 – 10	-40 – 50	15	60	–	–	–	3/8 × 1/2	068Z3329
		-40 – 10	-40 – 50	15	60	–	–	10 × 12	–	068Z3514
TE2		-40 – 10	-40 – 50	–	–	–	1/4	–	3/8 × 1/2	068Z3446
		-40 – 10	-40 – 50	–	–	6	–	10 × 12	–	068Z3503
		-40 – 10	-40 – 50	15	60	–	1/4	–	3/8 × 1/2	068Z3447
		-40 – 10	-40 – 50	15	60	6	–	10 × 12	–	068Z3515
T2	R134a	-40 – 10	-40 – 50	–	–	–	–	–	3/8 × 1/2	068Z3383
		-40 – 10	-40 – 50	–	–	–	–	10 × 12	–	068Z3384
		-40 – 10	-40 – 50	15	60	–	–	–	3/8 × 1/2	068Z3387
		-40 – 10	-40 – 50	15	60	–	–	10 × 12	–	068Z3388
TE2		-40 – 10	-40 – 50	–	–	–	1/4	–	3/8 × 1/2	068Z3385
		-40 – 10	-40 – 50	–	–	6	–	10 × 12	–	068Z3386
		-40 – 10	-40 – 50	15	60	–	1/4	–	3/8 × 1/2	068Z3389
		-40 – 10	-40 – 50	15	60	6	–	10 × 12	–	068Z3390
T2	R404A / R507	-40 – 10	-40 – 50	–	–	–	–	–	3/8 × 1/2	068Z3414
		-40 – 10	-40 – 50	–	–	–	–	10 × 12	–	068Z3435
		-40 – 10	-40 – 50	15	60	–	–	–	3/8 × 1/2	068Z3416
		-40 – 10	-40 – 50	15	60	–	–	10×12	–	068Z3423
		-40 – -15	-40 – -5	-10	-15	–	–	–	3/8 × 1/2	068Z3429
		-40 – -15	-40 – -5	-10	-15	–	–	10×12	–	068Z3436
		-60 – -25	-75 – -15	–	–	–	–	–	3/8 × 1/2	068Z3418
		-60 – -25	-75 – -15	–	–	–	–	10 × 12	–	068Z3425
		-60 – -25	-75 – -15	-20	-5	–	–	–	3/8 × 1/2	068Z3420
		-60 – -25	-75 – -15	-20	-5	–	–	10 × 12	–	068Z3427
TE2		-40 – 10	-40 – 50	–	–	–	1/4	–	3/8 × 1/2	068Z3415
		-40 – 10	-40 – 50	–	–	6	–	10 × 12	–	068Z3422
		-40 – 10	-40 – 50	15	60	–	1/4	–	3/8 × 1/2	068Z3417
		-40 – 10	-40 – 50	15	60	6	–	10×12	–	068Z3424
		-40 – -15	-40 – -5	-10	-15	–	1/4	–	3/8 × 1/2	068Z3430
		-40 – -15	-40 – -5	-10	-15	6	–	10×12	–	068Z3437
		-60 – -25	-75 – -15	–	–	–	1/4	–	3/8 × 1/2	068Z3419
		-60 – -25	-75 – -15	–	–	6	–	10 × 12	–	068Z3426
		-60 – -25	-75 – -15	-20	-5	–	1/4	–	3/8 × 1/2	068Z3421
		-60 – -25	-75 – -15	-20	-5	6	–	10 × 12	–	068Z3428
T2	R407F / R407A	-40 – 10	-40 – 50	–	–	–	–	–	3/8 × 1/2	068Z3716
TE2		-40 – 10	-40 – 50	–	–	–	1/4	–	3/8 × 1/2	068Z3713
T2	R448A / R449A	-40 – 10	-40 – 50	–	–	–	–	–	3/8 × 1/2	068Z3729
TE2		-40 – 10	-40 – 50	–	–	–	1/4	–	3/8 × 1/2	068Z3730
T2	R452A	-40 – 10	-40 – 50	–	–	–	–	–	3/8 × 1/2	068Z3806
TE2		-40 – 10	-40 – 50	–	–	–	1/4	–	3/8 × 1/2	068Z3807
T2		-40 – 10	-40 – 50	–	–	–	–	10 × 12	–	068Z3808
TE2		-40 – 10	-40 – 50	–	–	6	–	10 × 12	–	068Z3809

[1]) *For R407C plants, please select valves from the dedicated R407C program*
Capillary tube: 1.5 m / 59 in

Technical data and ordering

T2 / TE2

Orifice assembly for flare version

Range: -40 – 10 °C / -40 – 50 °F



Type	Orifice	R22		R407C		R134a		R513A		R404A / R507		R407A		R407F		R448A		R449A		R452A		Code no.
		[kW]	[TR]	[kW]	[TR]	[kW]	[TR]	[kW]	[TR]	[kW]	[TR]	[kW]	[TR]	[kW]	[TR]	[kW]	[TR]	[kW]	[TR]	[kW]	[TR]	
T2 / TE2	0X	0.9	0.25	0.92	0.26	0.68	0.19	0.58	0.16	0.64	0.18	0.88	0.25	1	0.28	0.9	0.26	0.88	0.25	0.69	0.20	068-2002
	00	1.8	0.51	1.8	0.51	1.2	0.34	1	0.29	1.3	0.37	1.7	0.49	2	0.56	1.8	0.51	1.7	0.49	1.3	0.38	068-2003
	01	3.5	1	3.5	1	2.1	0.59	1.8	0.51	2.6	0.75	3.4	1	3.9	1.1	3.5	1	3.4	0.97	2.7	0.78	068-2010
	02	4.7	1.3	4.8	1.4	2.6	0.73	2.2	0.62	3.7	1	4.7	1.3	5.4	1.5	4.8	1.4	4.6	1.3	3.8	1.1	068-2015
	03	8	2.3	8.1	2.3	4.3	1.2	3.7	1	6.3	1.8	8	2.3	9.2	2.6	8.1	2.3	7.9	2.3	6.4	1.8	068-2006
	04	12.1	3.4	12.4	3.5	6.4	1.8	5.4	1.5	9.9	2.8	12.4	3.5	14.3	4.1	12.6	3.6	12.1	3.5	10.0	2.9	068-2007
	05	16.7	4.8	16.5	4.7	8.4	2.4	6.9	2	13	3.7	16.3	4.6	19	5.4	16.3	4.6	15.7	4.5	12.6	3.6	068-2008
	06	19.7	5.6	19.7	5.6	10.1	2.9	8.6	2.5	15.5	4.4	19.6	5.6	22.9	6.5	19.8	5.7	19.1	5.5	15.8	4.5	068-2009

The rated capacity is based on:
Evaporating temperature t_e = 4.4 °C / 40 °F
Condensing temperature t_c = 38 °C / 100 °F
Refrigerant temperature ahead of valve t_l = 37 °C / 98 °F

T2 / TE2

Orifice assembly for solder adapter version

Range: -40 – 10 °C / -40 – 50 °F



Type	Orifice	R22		R407C		R134a		R513A		R404A / R507		R407A		R407F		R448A		R449A		R452A		Code no.
		[kW]	[TR]	[kW]	[TR]	[kW]	[TR]	[kW]	[TR]	[kW]	[TR]	[kW]	[TR]	[kW]	[TR]	[kW]	[TR]	[kW]	[TR]	[kW]	[TR]	
T2 / TE2	0X	0.9	0.25	0.92	0.26	0.68	0.19	0.58	0.16	0.64	0.18	0.88	0.25	1	0.28	0.9	0.26	0.88	0.25	0.69	0.20	068-2089
	00	1.8	0.51	1.8	0.51	1.2	0.34	1	0.29	1.3	0.37	1.7	0.49	2	0.56	1.8	0.51	1.7	0.49	1.3	0.38	068-2090
	01	3.5	1	3.5	1	2.1	0.59	1.8	0.51	2.6	0.75	3.4	1	3.9	1.1	3.5	1	3.4	0.97	2.7	0.78	068-2091
	02	4.7	1.3	4.8	1.4	2.6	0.73	2.2	0.62	3.7	1	4.7	1.3	5.4	1.5	4.8	1.4	4.6	1.3	3.8	1.1	068-2092
	03	8	2.3	8.1	2.3	4.3	1.2	3.7	1	6.3	1.8	8	2.3	9.2	2.6	8.1	2.3	7.9	2.3	6.4	1.8	068-2093
	04	12.1	3.4	12.4	3.5	6.4	1.8	5.4	1.5	9.9	2.8	12.4	3.5	14.3	4.1	12.6	3.6	12.1	3.5	10.0	2.9	068-2094
	05	16.7	4.8	16.5	4.7	8.4	2.4	6.9	2	13	3.7	16.3	4.6	19	5.4	16.3	4.6	15.7	4.5	12.6	3.6	068-2095
	06	19.7	5.6	19.7	5.6	10.1	2.9	8.6	2.5	15.5	4.4	19.6	5.6	22.9	6.5	19.8	5.7	19.1	5.5	15.8	4.5	068-2096

The rated capacity is based on:
Evaporating temperature t_e = 4.4 °C / 40 °F
Condensing temperature t_c = 38 °C / 100 °F
Refrigerant temperature ahead of valve t_l = 37 °C / 98 °F

Solder adaptor without orifice assembly

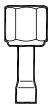

Connection – ODF solder	Code no.
¼ in	068-2062
6 mm	068-2063
6 mm	068-4101 [1])
⅜ in	068-2060
10 mm	068-2061
10 mm	068-4100 [1])

[1]) *Including filter.*

Filter as accessories



Filter type	Code no.
For flare connection	068-0003
For solder adaptor	068-0015

The solder adaptor is for use with thermostatic expansion valves T2 and TE2.
When the solder adaptor is fitted correctly it meets the sealing requirements of DIN 8964. The flare orifice in T2 and TE2 can be used with a solder adaptor when the orifice filter is replaced with a specific filter intended for solder adaptors. Only in this way the sealing requirements of DIN 8964 can be fulfilled.
Solder adaptors for filter driers (FSA) must not be used on the T2 inlet.

Bulb strap as accessories

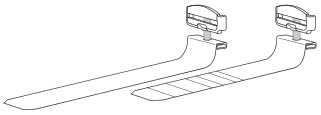

Type	Length	Max. diameter of suction line		Code no.
	[mm]	[mm]	[in]	
T2 / TE2 Accessories	110	28	1 ⅛	068U3507
	190	50	2	068U3508

TE 5 – TE 55, Thermostatic expansion valves

TE 5 – TE 55 thermostatic expansion valves regulate the injection of refrigerant liquid into evaporators for medium sized plants. Injection is controlled by the refrigerant superheat. Therefore the valves are especially suitable for liquid injection in "*dry*" evaporators where the superheat at the evaporator outlet should always be kept constant. TE 5 – TE 55 valves are supplied as parts programme, built up of three main components - thermostatic element, orifice assembly, and valve body with connections, and have external pressure equalization.



Features
TE 5 - TE 55

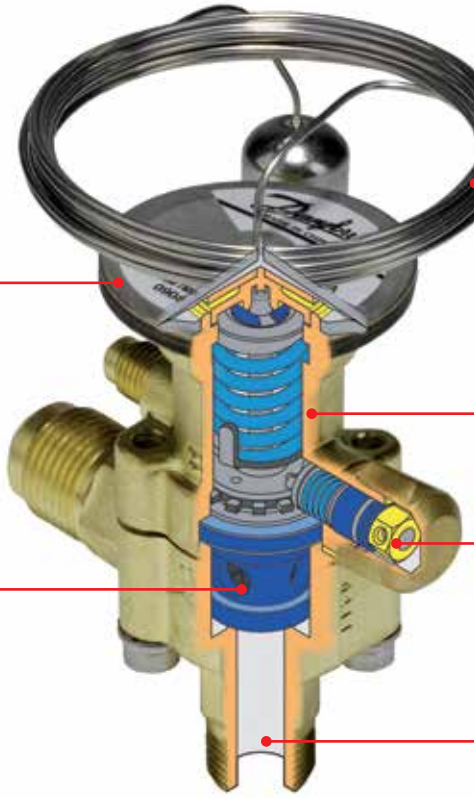

Laser-welded power element in stainless steel
- longer diaphragm life
- high pressure tolerance and working pressure
- high corrosion resistance

Stainless steel capillary tube and bulb
- high corrosion resistance
- high strength and vibration resistance

Large parts programme ensures minimal stocks

To ensure long operating life, the valve cone and seat are made of a special alloy with particularly good wear qualities

Easy adjustment of superheat setting

More connection possibilities
- solder × solder
- flare × flare
- flanges
- straightway or angleway

Facts

Applications:
- Air conditioning system
- Chiller
- Cold room
- Freezer
- Other refrigeration systems

- Applicable to R22, R134a, R404A, R507, R407A, R407F, R407C, R448A, R449A, R452A and R513A
  For a fully updated list of approved refrigerants, visit www.products.danfoss.com and search for individual code numbers, where refrigerants are listed as part of product specifications.
- Interchangeable orifice assembly designed for:
  - easy storage
  - easy capacity matching
  - better service
- Wide operating range:
  -40 – 10 °C / -40 – 50 °F
  -60 – -25 °C / -75 – -15 °F
- TE 55 has balanced port design
- Available with MOP (Max. Operating Pressure)
- Wide capacity range, rated capacity:
  R448A / R449A : 9 – 225 kW / 2.5 – 64 TR
  R407F: 11 – 250 kW / 3 – 71 TR
  R404A / R507: 7 – 183 kW / 2 – 52 TR
- Maximum Working Pressure PS / MWP:
  28 bar / 400 psig

Technical data and ordering



Element for expansion valve + Orifice + Valve body

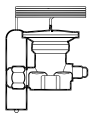

TE 5 – TE 55, R404A / R507

Element for expansion valve - including bulb strap

Type	Range		MOP		Pressure equalization			Capillary tube		Code no. Multi pack
	[°C]	[°F]	[°C]	[°F]	[mm]	[in]	Type	[m]	[in]	
TE 5	-40 – 10	-40 – 50	–	–	6	1/4	Flare	3	118	067B3342
	-40 – 10	-40 – 50	–	–	–	1/4	Solder ODF	3	118	067B3380
	-40 – 10	-40 – 50	15	60	6	1/4	Flare	3	118	067B3238
	-40 – -5	-40 – 25	0	32	6	1/4	Flare	3	118	067B3357
	-40 – -15	-40 – 5	-10	15	6	1/4	Flare	3	118	067B3358
	-40 – -15	-40 – 5	-10	15	–	1/4	Solder ODF	3	118	067B3384
	-60 – -25	-75 – -15	–	–	6	1/4	Flare	3	118	067B3344
	-60 – -25	-75 – -15	–	–	6	–	Solder ODF	3	118	067B3392
	-60 – -25	-75 – -15	-20	-5	6	1/4	Flare	3	118	067B3343
	-60 – -25	-75 – -15	-20	-5	–	1/4	Solder ODF	3	118	067B3381
TE 12	-40 – 10	-40 – 50	–	–	6	1/4	Flare	3	118	067B3347
	-40 – -5	-40 – 25	0	32	6	1/4	Flare	3	118	067B3345
	-40 – -15	-40 – 5	-10	15	6	1/4	Flare	3	118	067B3348
	-60 – -25	-75 – -15	-20	-5	6	1/4	Flare	3	118	067B3349
	-60 – -25	-75 – -15	–	–	6	1/4	Flare	3	118	067B3368
	-40 – 10	-40 – 50	–	–	6	1/4	Flare	5	197	067B3346
	-60 – -25	-75 – -15	-20	-5	6	1/4	Flare	5	197	067B3350
TE 20	-40 – 10	-40 – 50	–	–	6	1/4	Flare	3	118	067B3352
	-40 – -5	-40 – 25	0	32	6	1/4	Flare	3	118	067B3351
	-40 – -15	-40 – 5	-10	15	6	1/4	Flare	3	118	067B3353
	-60 – -25	-75 – -15	-20	-5	6	1/4	Flare	3	118	067B3354
	-40 – 10	-40 – 50	–	–	6	1/4	Flare	5	197	067B3356
	-60 – -25	-75 – -15	-20	-5	6	1/4	Flare	5	197	067B3355
TE 55	-40 – 10	-40 – 50	–	–	6	1/4	Flare	3	118	067G3302
	-40 – -5	-40 – 25	0	32	6	1/4	Flare	3	118	067G3303
	-40 – -15	-40 – 5	-10	15	6	1/4	Flare	3	118	067G3304
	-60 – -25	-75 – -15	-20	-5	6	1/4	Flare	3	118	067G3305
	-40 – 10	-40 – 50	–	–	6	1/4	Flare	5	197	067G3301
	-60 – -25	-75 – -15	-20	-5	6	1/4	Flare	5	197	067G3306

Technical data and ordering

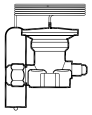

TE 5 – TE 55, R22 / R407C

Element for expansion valve - including bulb strap

Type	Range		MOP		Pressure equalization			Capillary tube		Code no. Multi pack
	[°C]	[°F]	[°C]	[°F]	[mm]	[in]	Type	[m]	[in]	
TE 5	-40 – 10	-40 – 50	–	–	6	1/4	Flare	3	118	067B3250
	-40 – 10	-40 – 50	–	–	–	1/4	Solder ODF	3	118	067B3420
	-40 – 10	-40 – 50	15	60	6	1/4	Flare	3	118	067B3267
	-40 – -5	-40 – 25	0	32	6	1/4	Flare	3	118	067B3249
	-40 – -15	-40 – 5	-10	15	6	1/4	Flare	3	118	067B3253
	-60 – -25	-75 – -15	–	–	6	1/4	Flare	3	118	067B3263
	-60 – -25	-75 – -15	-20	-5	6	1/4	Flare	3	118	067B3251
TE 12	-40 – 10	-40 – 50	–	–	6	1/4	Flare	3	118	067B3210
	-40 – 10	-40 – 50	15	60	6	1/4	Flare	3	118	067B3227
	-40 – -5	-40 – 25	0	32	6	1/4	Flare	3	118	067B3207
	-40 – -15	-40 – 5	-10	15	6	1/4	Flare	3	118	067B3213
	-60 – -25	-75 – -15	-20	-5	6	1/4	Flare	3	118	067B3211
	-60 – -25	-75 – -15	–	–	6	1/4	Flare	3	118	067B3225
	-40 – 10	-40 – 50	–	–	6	1/4	Flare	5	197	067B3209
	-60 – -25	-75 – -15	-20	-5	6	1/4	Flare	5	197	067B3212
TE 20	-40 – 10	-40 – 50	–	–	6	1/4	Flare	3	118	067B3274
	-40 – 10	-40 – 50	15	60	6	1/4	Flare	3	118	067B3286
	-40 – -5	-40 – 25	0	32	6	1/4	Flare	3	118	067B3273
	-40 – -15	-40 – 5	-10	15	6	1/4	Flare	3	118	067B3275
	-60 – -25	-75 – -15	-20	-5	6	1/4	Flare	3	118	067B3276
	-40 – 10	-40 – 50	–	–	6	1/4	Flare	5	197	067B3290
	-60 – -25	-75 – -15	-20	-5	6	1/4	Flare	5	197	067B3287
TE 55	-40 – 10	-40 – 50	-	–	6	1/4	Flare	3	118	067G3205
	-40 – 10	-40 – 50	15	60	6	1/4	Flare	3	118	067G3220
	-40 – -5	-40 – 25	0	32	6	1/4	Flare	3	118	067G3206
	-60 – -25	-75 – -15	-20	-5	6	1/4	Flare	3	118	067G3207
	-40 – 10	-40 – 50	–	–	6	1/4	Flare	5	197	067G3209
	-60 – -25	-75 – -15	-20	-5	6	1/4	Flare	5	197	067G3217

For R407C plants. please select elements from the dedicated R407C program

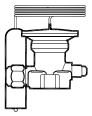

TE 5 – TE 55, R134a

Element for expansion valve - including bulb strap

Type	Range		MOP		Pressure equalization			Capillary tube		Code no. Multi pack
	[°C]	[°F]	[°C]	[°F]	[mm]	[in]	Type	[m]	[in]	
TE 5	-40 – 10	-40 – 50	–	–	6	1/4	Flare	3	118	067B3297
	-40 – 10	-40 – 50	–	–	–	1/4	Solder ODF	3	118	067B3430
	-40 – 10	-40 – 50	15	60	6	1/4	Flare	3	118	067B3298
TE 12	-40 – 10	-40 – 50	–	–	6	1/4	Flare	3	118	067B3232
	-40 – 10	-40 – 50	15	60	6	1/4	Flare	3	118	067B3233
	-40 – 10	-40 – 50	–	–	6	1/4	Flare	5	197	067B3363
TE 20	-40 – 10	-40 – 50	–	–	6	1/4	Flare	3	118	067B3292
	-40 – 10	-40 – 50	15	60	6	1/4	Flare	3	118	067B3293
	-40 – 10	-40 – 50	–	–	6	1/4	Flare	5	197	067B3370
TE 55	-40 – 10	-40 – 50	–	–	6	1/4	Flare	3	118	067G3222
	-40 – 10	-40 – 50	15	60	6	1/4	Flare	3	118	067G3223
	-40 – 10	-40 – 50	–	–	6	1/4	Flare	5	197	067G3230

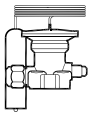

TE 5 – TE 55, R407C

Element for expansion valve - including bulb strap

Type	Range		MOP		Pressure equalization			Capillary tube		Code no. Multi pack
	[°C]	[°F]	[°C]	[°F]	[mm]	[in]	Type	[m]	[in]	
TE 5	-40 – 10	-40 – 50	-	-	6	1/4	Flare	3	118	067B3278
	-40 – 10	-40 – 50	15	60	6	1/4	Flare	3	118	067B3277
TE 12	-40 – 10	-40 – 50	-	-	6	1/4	Flare	3	118	067B3366
	-40 – 10	-40 – 50	15	60	6	1/4	Flare	3	118	067B3367
TE 20	-40 – 10	-40 – 50	-	-	6	1/4	Flare	5	197	067B3371
	-40 – 10	-40 – 50	15	60	6	1/4	Flare	5	197	067B3372
TE 55	-40 – 10	-40 – 50	-	-	6	1/4	Flare	5	197	067G3240
	-40 – 10	-40 – 50	15	60	6	1/4	Flare	5	197	067G3241

Technical data and ordering

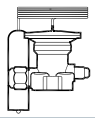

TE 5 – TE 55, R407F / R407A

Element for expansion valve - including bulb strap

Type	Range		MOP		Pressure equalization			Capillary tube		Code no. Multi pack
	[°C]	[°F]	[°C]	[°F]	[mm]	[in]	Type	[m]	[in]	
TE 5	-40 – 10	-40 – 50	–	–	6	1/4	Flare	3	118	067B3501
	-40 – -5	-40 – 25	0	32	6	1/4	Flare	3	118	067B3502
	-40 – -15	-40 – 5	-10	15	6	1/4	Flare	3	118	067B3503
	-40 – 10	-40 – 50	–	–	–	1/4	Solder ODF	3	118	067B3504
TE 12	-40 – 10	-40 – 50	–	–	6	1/4	Flare	3	118	067B3532
	-40 – -5	-40 – 25	0	32	6	1/4	Flare	3	118	067B3531
	-40 – -15	-40 – 5	-10	15	6	1/4	Flare	3	118	067B3533
TE 20	-40 – 10	-40 – 50	–	–	6	1/4	Flare	3	118	067B3561
	-40 – -5	-40 – 25	0	32	6	1/4	Flare	3	118	067B3560
	-40 – -15	-40 – 5	-10	15	6	1/4	Flare	3	118	067B3562
TE 55	-40 – 10	-40 – 50	–	–	6	1/4	Flare	3	118	067G3500

On systems charged with R407A, static sueprheat(SS) will different from standard 4K / 7.2 °F.
For range -40 – 10 °C / -40 – 50 °F, SS = 2.7 K / 4.9 °F.
For range -40 – -5 °C / -40 – 25 °F and range -40 – -15 °C / -40 – 5 °F, SS = 2.8K / 5.0 °F.

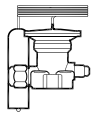

TE 5 – TE 55, R448A / R449A

Element for expansion valve - including bulb strap

Type	Range		MOP		Pressure equalization			Capillary tube		Code no. Multi pack
	[°C]	[°F]	[°C]	[°F]	[mm]	[in]	Type	[m]	[in]	
TE 5	-40 – 10	-40 – 50	–	–	6	1/4	Flare	3	118	067B3252
	-60 – -25	-75 – -15	-20	-5	6	1/4	Flare	3	118	067B3600
TE 12	-40 – 10	-40 – 50	–	–	6	1/4	Flare	3	118	067B2512
TE 20	-40 – 10	-40 – 50	–	–	6	1/4	Flare	3	118	067B3294
TE 55	-40 – 10	-40 – 50	–	–	6	1/4	Flare	3	118	067G3219

On systems charged with R449A, static sueprheat(SS) will be 2.7 K / 4.9 °F

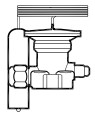

TE 5 – TE 55, R452A

Element for expansion valve - including bulb strap

Type	Range		MOP		Pressure equalization			Capillary tube		Code no. Multi pack
	[°C]	[°F]	[°C]	[°F]	[mm]	[in]	Type	[m]	[in]	
TE 5	-40 – 10	-40 – 50	–	–	6	1/4	Flare	3	118	067B3601
	-60 – -25	-75 – -15	-20	-5	6	1/4	Flare	3	118	067B3602
TE 12	-40 – 10	-40 – 50	–	–	6	1/4	Flare	3	118	067B3652
TE 20	-40 – 10	-40 – 50	–	–	6	1/4	Flare	3	118	067B3680
TE 55	-40 – 10	-40 – 50	–	–	6	1/4	Flare	3	118	067G3600

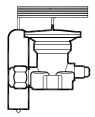

TE 5 – TE 55, R513A

Element for expansion valve - including bulb strap

Type	Range		MOP		Pressure equalization			Capillary tube		Code no. Multi pack
	[°C]	[°F]	[°C]	[°F]	[mm]	[in]	Type	[m]	[in]	
TE 5	-40 – 10	-40 – 50	–	–	6	1/4	Flare	3	118	067B3603
TE 12	-40 – 10	-40 – 50	–	–	6	1/4	Flare	3	118	067B3651
TE 20	-40 – 10	-40 – 50	–	–	6	1/4	Flare	3	118	067B3681
TE 55	-40 – 10	-40 – 50	–	–	6	1/4	Flare	3	118	067G3601

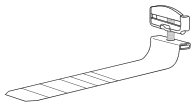

Bulb strap supplied separately as spare part

Max. diameter of suction line		Quantity / box	Code no. Industrial pack
[mm]	[in]		
53	2 1/8	40 pcs	067N0557
78	3 1/8	40 pcs	067N0559

Technical data and ordering

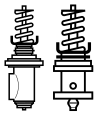

TE 5 – TE 55

Orifice assembly - Rated capacity

Type	Orifice	R407F		R407A		R448A/R449A		R452A		R404A/R507		R22		R513A		R134a		R407C		Code no. Multi pack
		[kW]	[TR]	[kW]	[TR]	[kW]	[TR]	[kW]	[TR]	[kW]	[TR]	[kW]	[TR]	[kW]	[TR]	[kW]	[TR]	[kW]	[TR]	
TE 5	0.5	11	3	9	2.5	9	2.5	7	2	7	2	9	2.5	5	1.5	5	1.5	11	3	067B2788
	01	18	5	18	5	18	5	14	4	14	4	16	4.5	11	3	11	3	18	5	067B2789
	02	28	8	25	7	25	7	21	6	19	5.5	25	7	14	4	16	4.5	25	7	067B2790
	03	35	10	32	9	32	9	28	8	25	7	32	9	18	5	21	6	32	9	067B2791
	04	46	13	42	12	46	13	39	11	35	10	42	12	25	7	28	8	46	13	067B2792
TE 12	05	70	20	56	16	53	15	46	13	49	14	56	16	30	8.5	35	10	53	15	067B2708
	06	95	27	74	21	70	20	63	18	63	18	74	21	39	11	49	14	74	21	067B2709
	07	113	32	95	27	91	26	81	23	81	23	95	27	53	15	63	18	91	26	067B2710
TE20	08	141	40	127	36	123	35	84	24	84	24	127	36	74	21	77	22	116	33	067B2771 [1])
	09	158	45	148	42	141	40	98	28	102	29	148	42	81	23	91	26	134	38	067B2773 [1])
TE 55	9B	123	35	109	31	113	32	84	24	84	24	113	32	70	20	74	21	109	31	067G2705 [1])
	10	172	49	165	47	155	44	116	33	127	36	169	48	98	28	109	31	162	46	067G2701
	11	186	53	183	52	169	48	127	36	137	39	183	52	106	30	120	34	176	50	067G2704
	12	208	59	200	57	186	53	141	40	151	43	200	57	116	33	134	38	190	54	067G2707
	13	250	71	243	69	225	64	172	49	183	52	246	70	144	41	165	47	232	66	067G2710

The rated capacity is based on:
Evaporating temperature t_e = 4.4 °C / 40 °F
Condensing temperature t_c = 38 °C / 100 °F
Refrigerant temperature ahead of valve t_l = 37 °C / 98 °F

[1]) Recommend to use orifice no. 9B as alternative for orifice no. 08 and 09 on TE 55 when selecting the valve to work in range -60 – -25 °C / -75 – -15 °F. Please contact Danfoss for more information.

Technical data and ordering

TE 5 - TE 55

Valve body

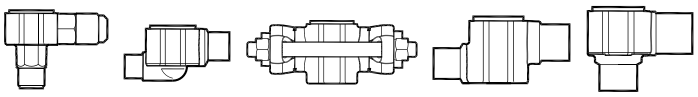

Type	Connection / Flow direction	Connection Type	Connection inlet × outlet		Code no. Multi pack
			[mm]	[in]	
TE 5	Flare angleway	–	12 × 16	½ × ⅝	067B4013
	Solder angleway	ODF × ODF	–	½ × ⅝	067B4009
	Solder angleway	ODF × ODF	–	½ × ⅞	067B4010
	Solder angleway	ODF × ODF	–	⅝ × ⅞	067B4011
	Solder angleway	ODF × ODM	–	⅞ × 1 ⅛	067B4034
	Solder angleway	ODF × ODF	12 × 16	–	067B4004
	Solder angleway	ODF × ODF	12 × 22	–	067B4005
	Solder angleway	ODF × ODF	16 × 22	–	067B4012
	Solder angleway	ODF × ODM	22 × 28	–	067B4037
	Solder straightway	ODF × ODF	–	½ × ⅝	067B4007
	Solder straightway	ODF × ODF	–	½ × ⅞	067B4008
	Solder straightway	ODF × ODF	–	⅝ × ⅞	067B4032
	Solder straightway	ODF × ODM	–	⅞ × 1 ⅛	067B4033
	Solder straightway	ODF × ODF	12 × 16	–	067B4002
	Solder straightway	ODF × ODF	12 × 22	–	067B4003
	Solder straightway	ODF × ODF	16 × 22	–	067B4035
	Solder straightway	ODF × ODM	22 × 28	–	067B4036
TE 12	Solder angleway	ODF × ODF	–	⅝ × ⅞	067B4022
	Solder angleway	ODF × ODM	–	⅞ × 1 ⅛	067B4023
	Solder angleway	ODF × ODM	22 × 28	–	067B4017
	Solder straightway	ODF × ODF	–	⅝ × ⅞	067B4020
	Solder straightway	ODF × ODM	–	⅞ × 1 ⅛	067B4021
	Solder straightway	ODF × ODM	22 × 28	–	067B4016
	Solder flanges	ODF × ODF	–	⅝ × ⅞	067B4025
	Solder flanges	ODF × ODF	–	⅞ × 1	067B4026
	Solder flanges	ODF × ODF	16 × 22	–	067B4027
	Solder flanges	ODF × ODF	22 × 25	–	067B4015
TE 20	Solder angleway	ODF × ODM	–	⅞ × 1 ⅛	067B4023
	Solder angleway	ODF × ODM	22 × 28	–	067B4017
	Solder straightway	ODF × ODM	–	⅞ × 1 ⅛	067B4021
	Solder straightway	ODF × ODM	22 × 28	–	067B4016
TE 55	Solder angleway	ODM × ODM	–	1 ⅛ × 1 ⅜	067G4004
	Solder angleway	ODM × ODM	28 × 35	–	067G4002
	Solder straightway	ODM × ODM	–	1 ⅛ × 1 ⅜	067G4003
	Solder straightway	ODM × ODM	28 × 35	–	067G4001

ODF = internal diameter
ODM = External diameter

TGE, Thermostatic expansion valve

TGE is an innovatively designed series of thermostatic expansion valves for fluorinated refrigerants.
TGE has copper connections upgraded for high-pressure applications with tight soldering, and is available with a wide variety of connection types such as solder, flare, MIO, and ORFS, and a wide variety of connection sizes.



Features
TGE

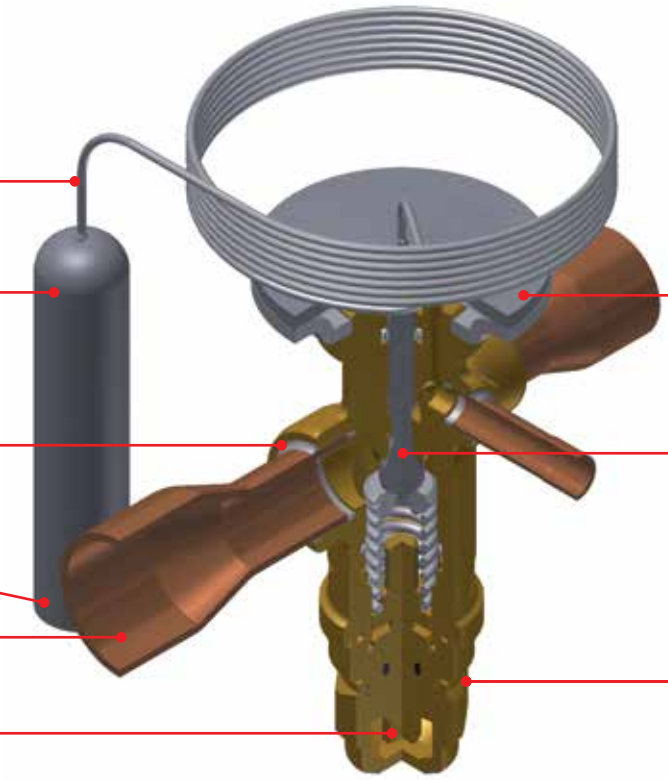

Facts

Applications:
- Water chillers
- Bus A/C
- Rooftop units
- Heat pumps
- Refrigerated containers
- Others A/C and refrigeration system

- Refrigerants: R410A, R32, R452B, R454B, R22,R134a, R1234ze, R407F, R407A,R404A, R507, R407C and R290

For a fully updated list of approved refrigerants, visit www.products.danfoss.com and search for individual code numbers,where refrigerants are listed as part of product specifications.
- Capacity range: 3.5 – 52 TR / 12 – 182 kW for R410A
- Balance port design
- Biflow with expansion in both directions
- Low hysteresis
- Long lifetime for heat pump applications
- Mechanical connections types solder ODF, flare, MIO, ORFS are available
- Laser welded, stainless steel power element, capillary tube, and bulb
- MOP (Max. Operating Pressure) function is available
- Optional bleed function
- PS / MWP (maximum working pressure): 46 bar/ 667 psig
- Straightway flow
- Adjustable superheat setting
- Cylindrical bulb and patented bulb strap design
- Compliance with ATEX hazard zone 2
- UL certified

Technical data and ordering

TGE - R22 / R407C

Thermostatic expansion valve with bulb strap
Range: -40 – 10 °C / -40 – 50 °F

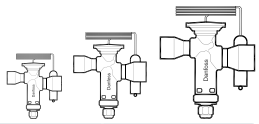

Type	Orifice no.	Rated capacity [1]		Connections solder ODF				Capillary tube		Code no. Multi pack
				Inlet x Outlet		Pressure equalization				
		[kW]	[TR]	[mm]	[in]	[mm]	[in]	[m]	[in]	
TGE 10	3	10	3	–	3/8 x 5/8	–	1/4	1.5	59	067N2150
	3	10	3	–	1/2 x 5/8	–	1/4	1.5	59	067N2151
	4	14	4	–	1/2 x 7/8	–	1/4	1.5	59	067N2152
	6	20	6	–	1/2 x 5/8	–	1/4	1.5	59	067N2153
	6	20	6	–	1/2 x 7/8	–	1/4	1.5	59	067N2154
	6	20	6	12 × 22	–	6	–	1.5	59	067N2194
	6	20	6	16 × 16	–	6	–	1.5	59	067N2263
	6	20	6	–	5/8 x 7/8	–	1/4	1.5	59	067N2155
	8	27	7.5	–	5/8 x 7/8	–	1/4	1.5	59	067N2156
	8	27	7.5	16 × 22	–	6	–	1.5	59	067N2196
	9	32	9	–	5/8 x 7/8	–	1/4	1.5	59	067N2460
	9	32	9	16 x 22	–	6	–	1.5	59	067N2281
	11	38	11	–	5/8 x 7/8	–	1/4	1.5	59	067N2157
	11	38	11	16 × 22	–	6	–	1.5	59	067N2197
	11	38	11	–	5/8 x 1 1/8	–	1/4	1.5	59	067N2158
	11	38	11	16 × 28	–	6	–	1.5	59	067N2198
	12.5	43	12	–	5/8 x 7/8	–	1/4	1.5	59	067N2720
	16	50	14	–	5/8 x 1 1/8	–	1/4	1.5	59	067N2721
	16	50	14	–	7/8 x 1 1/8	–	1/4	1.5	59	067N2722
TGE 20	12.5	43	12	–	5/8 x 7/8	–	1/4	1.5	59	067N2159
	12.5	43	12	–	5/8 x 1 1/8	–	1/4	1.5	59	067N2160
	12.5	43	12	16 × 28	–	6	–	1.5	59	067N2200
	16	54	15	–	5/8 x 7/8	–	1/4	1.5	59	067N2255
	16	54	15	–	5/8 x 1 1/8	–	1/4	1.5	59	067N2161
	16	54	15	–	7/8 x 1 1/8	–	1/4	1.5	59	067N2162
	20	63	18	–	7/8 x 1 1/8	–	1/4	1.5	59	067N2163
	20	63	18	–	7/8 x 1 3/8	–	1/4	1.5	59	067N2164
TGE 40	26	92	26	–	7/8 x 1 1/8	–	1/4	3	118	067N2251
	26	92	26	–	7/8 x 1 3/8	–	1/4	3	118	067N2165
	30	104	30	–	7/8 x 1 3/8	–	1/4	3	118	067N2167
	30	104	30	–	1 1/8 x 1 3/8	–	1/4	3	118	067N2168
	40	134	38	–	1 1/8 x 1 3/8	–	1/4	3	118	067N2169
	42	148	42	–	1 1/8 x 1 3/8	–	1/4	3	118	067N2283

[1]) The rated capacity is based on:
Evaporating temperature t_e = 4.4 °C / 40 °F
Condensing temperature t_c = 38 °C / 100 °F
Refrigerant temperature ahead of valve t_l = 37 °C / 98 °F

For R407C plants, please select valves from the dedicated R407C program.

Technical data and ordering

TGE - R22 / R407C

Thermostatic expansion valve with bulb strap
Range: - 25 – 10 °C / -15 – 50 °F with MOP 100 psig / 6.9 bar

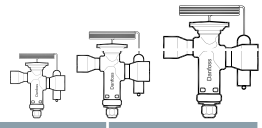

Type	Orifice no.	Rated capacity [1]		Connections solder ODF		Capillary tube		Code no. Multi pack
				Inlet x Outlet	Pressure equalization			
		[kW]	[TR]	[in]	[in]	[m]	[in]	
TGE 10	3	10	3	3/8 x 5/8	1/4	1.5	59	067N2000
	3	10	3	1/2 x 5/8	1/4	1.5	59	067N2001
	4	14	4	1/2 x 7/8	1/4	1.5	59	067N2002
	6	20	6	1/2 x 5/8	1/4	1.5	59	067N2003
	6	20	6	5/8 x 7/8	1/4	1.5	59	067N2005
	8	27	7.5	5/8 x 7/8	1/4	1.5	59	067N2006
	11	38	11	5/8 x 7/8	1/4	1.5	59	067N2007
	11	38	11	5/8 x 1 1/8	1/4	1.5	59	067N2008
	12.5	43	12	5/8 x 7/8	1/4	1.5	59	067N2700
	16	50	14	7/8 x 1 1/8	1/4	1.5	59	067N2701
TGE 20	12.5	43	12	5/8 x 7/8	1/4	1.5	59	067N2009
	12.5	43	12	5/8 x 1 1/8	1/4	1.5	59	067N2010
	16	54	15	5/8 x 1 1/8	1/4	1.5	59	067N2011
	16	54	15	7/8 x 1 1/8	1/4	1.5	59	067N2012
	20	63	18	7/8 x 1 1/8	1/4	1.5	59	067N2013
	20	63	18	7/8 x 1 3/8	1/4	1.5	59	067N2014
TGE 40	26	92	26	7/8 x 1 3/8	1/4	3	118	067N2015
	26	92	26	1 1/8 x 1 3/8	1/4	3	118	067N2016
	30	104	30	7/8 x 1 3/8	1/4	3	118	067N2017
	30	104	30	1 1/8 x 1 3/8	1/4	3	118	067N2018
	40	134	38	1 1/8 x 1 3/8	1/4	3	118	067N2019

[1]) The rated capacity is based on:
Evaporating temperature t_e = 4.4 °C / 40 °F
Condensing temperature t_c = 38 °C / 100 °F
Refrigerant temperature ahead of valve t_l = 37 °C / 98 °F

For R407C plants, please select valves from the dedicated R407C program.

TGE - R22 / R407C

Thermostatic expansion valve with bulb strap
Range: -30 – 15 °C / -22 – 60 °F with anti hunting charge

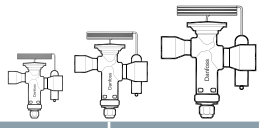

Type	Orifice no.	Rated capacity [1]		Connections solder ODF		Capillary tube		Code no. Multi pack
				Inlet x Outlet	Pressure equalization			
		[kW]	[TR]	[in]	[in]	[m]	[in]	
TGE 10	6	20	6	1/2 x 7/8	1/4	1.5	59	067N9404
	8	27	7.5	5/8 x 7/8	1/4	1.5	59	067N9406
	11	38	11	5/8 x 1 1/8	1/4	1.5	59	067N9407
TGE 20	12.5	43	12	5/8 x 7/8	1/4	1.5	59	067N9409
	16	54	15	7/8 x 1 1/8	1/4	1.5	59	067N9412
	20	63	18	7/8 x 1 3/8	1/4	1.5	59	067N9413
TGE 40	26	92	26	7/8 x 1 3/8	1/4	3	118	067N9415
	30	104	30	1 1/8 x 1 3/8	1/4	3	118	067N9418
	40	134	38	1 1/8 x 1 3/8	1/4	3	118	067N9419

[1]) The rated capacity is based on:
Evaporating temperature t_e = 4.4 °C / 40 °F
Condensing temperature t_c = 38 °C / 100 °F
Refrigerant temperature ahead of valve t_l = 37 °C / 98 °F

For R407C plants, please select valves from the dedicated R407C program.

Technical data and ordering

TGE - R134a

Thermostatic expansion valve with bulb strap
Range: -40 – 10 °C / -40 – 50 °F

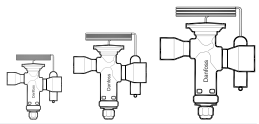

Type	Orifice no.	Rated capacity [1]		Connections solder ODF				Capillary tube		Code no. Multi pack
		[kW]	[TR]	Inlet x Outlet		Pressure equalization				
				[mm]	[in]	[mm]	[in]	[m]	[in]	
TGE 10	3	6	1.5	–	3/8 x 5/8	–	1/4	1.5	59	067N5150
	3	6	1.5	12 x 16	–	6	–	1.5	59	067N5191
	4	8	2.5	–	1/2 x 7/8	–	1/4	1.5	59	067N5152
	4	8	2.5	12 x 22	–	6	–	1.5	59	067N5192
	6	12	3.5	–	1/2 x 5/8	–	1/4	1.5	59	067N5153
	6	12	3.5	–	1/2 x 7/8	–	1/4	1.5	59	067N5154
	6	12	3.5	16 x 22	–	6	–	1.5	59	067N5195
	8	17	4.5	–	5/8 x 7/8	–	1/4	1.5	59	067N5156
	8	17	4.5	16 x 22	–	6	–	1.5	59	067N5196
	9	20	5.5	–	5/8 x 7/8	–	1/4	1.5	59	067N5260
	11	24	7	–	5/8 x 7/8	–	1/4	1.5	59	067N5157
	12.5	29	8	–	5/8 x 7/8	–	1/4	1.5	59	067N5720
	16	35	9.5	–	7/8 x 1 1/8	–	1/4	1.5	59	067N5721
TGE 20	12.5	29	8	–	5/8 x 7/8	–	1/4	1.5	59	067N5159
	16	37	10	–	5/8 x 1 1/8	–	1/4	1.5	59	067N5161
	16	37	10	–	7/8 x 1 1/8	–	1/4	1.5	59	067N5162
	20	44	12	–	7/8 x 1 1/8	–	1/4	1.5	59	067N5163
TGE 40	26	61	17	–	7/8 x 1 3/8	–	1/4	3	118	067N5165
	26	61	17	–	1 1/8 x 1 3/8	–	1/4	3	118	067N5166
	30	70	20	–	7/8 x 1 3/8	–	1/4	3	118	067N5167
	30	70	20	–	1 1/8 x 1 3/8	–	1/4	3	118	067N5168
	40	87	25	–	1 1/8 x 1 3/8	–	1/4	3	118	067N5169

[1]) The rated capacity is based on:
Evaporating temperature t_e = 4.4 °C / 40 °F
Condensing temperature t_c = 38 °C / 100 °F
Refrigerant temperature ahead of valve t_l = 37 °C / 98 °F

TGE - R134a

Thermostatic expansion valve with bulb strap
Range: -25 – 10 °C / -15 – 50 °F with MOP 55 psig / 3.8 bar

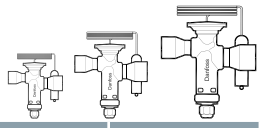

Type	Orifice no.	Rated capacity [1]		Connections solder ODF				Capillary tube		Code no. Multi pack
		[kW]	[TR]	Inlet x Outlet		Pressure equalization				
				[mm]	[in]	[mm]	[in]	[m]	[in]	
TGE 10	3	6	1.5	–	3/8 x 5/8	–	1/4	1.5	59	067N5000
	4	8	2.5	–	1/2 x 7/8	–	1/4	1.5	59	067N5002
	6	12	3.5	–	1/2 x 5/8	–	1/4	1.5	59	067N5003
	6	12	3.5	12 x 16	–	6	–	1.5	59	067N5043
	6	12	3.5	–	5/8 x 7/8	–	1/4	1.5	59	067N5005
	8	17	4.5	–	5/8 x 7/8	–	1/4	1.5	59	067N5006
	11	24	7	–	5/8 x 7/8	–	1/4	1.5	59	067N5007
	11	24	7	16 x 22	–	6	–	1.5	59	067N5047
	11	24	7	–	5/8 x 1 1/8	–	1/4	1.5	59	067N5008
	12.5	29	8	–	5/8 x 7/8	–	1/4	1.5	59	067N5700
TGE 20	12.5	29	8	–	5/8 x 7/8	–	1/4	1.5	59	067N5009
	16	37	10	–	5/8 x 1 1/8	–	1/4	1.5	59	067N5011
	20	44	12	–	7/8 x 1 1/8	–	1/4	1.5	59	067N5013
TGE 40	26	61	17	–	7/8 x 1 3/8	–	1/4	3	118	067N5015
	30	70	20	–	1 1/8 x 1 3/8	–	1/4	3	118	067N5018
	40	87	25	–	1 1/8 x 1 3/8	–	1/4	3	118	067N5019

[1]) The rated capacity is based on:
Evaporating temperature t_e = 4.4 °C / 40 °F
Condensing temperature t_c = 38 °C / 100 °F
Refrigerant temperature ahead of valve t_l = 37 °C / 98 °F

Technical data and ordering

TGE - R134a

Thermostatic expansion valve with bulb strap
Range: -40 – 10 °C / -40 – 50 °F

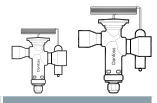

Type	Orifice no.	Rated capacity [1]		Connections Flare / MIO				Capillary tube		Code no. Multi pack
		[kW]	[TR]	Inlet x Outlet [in]		Pressure equalization [in]		[m]	[in]	
				Flare	MIO	Flare	MIO			
TGE 10	3	6	1.5	–	1/2 × 5/8	–	1/4	1.5	59	067N7150
	4	8	2.5	–	3/8 × 1/2	1/4	–	1.5	59	067N7153
	4	8	2.5	3/8 x 1/2	–	1/4	–	1.5	59	067N7154
	6	12	3.5	–	1/2 × 5/8	–	1/4	1.5	59	067N7171
	6	12	3.5	1/2 x 5/8	–	1/4	–	1.5	59	067N7157
	6	12	3.5	–	3/8 × 1/2	1/4	–	1.5	59	067N7158
	6	12	3.5	3/8 x 1/2	–	1/4	–	1.5	59	067N7160
	6	12	3.5	–	3/8 × 1/2	–	1/4	1.5	59	067N7177
	8	17	4.5	–	3/8 × 1/2	–	1/4	1.5	59	067N7176
	8	17	4.5	–	1/2 × 5/8	–	1/4	1.5	59	067N7161
	8	17	4.5	1/2 × 5/8	–	1/4	–	1.5	59	067N7163
	8	17	4.5	–	3/8 × 1/2	1/4	–	1.5	59	067N7164
	8	17	4.5	–	5/8 × 3/4	–	1/4	1.5	59	067N7165
	9	20	5.5	–	5/8 × 3/4	–	1/4	1.5	59	067N7181
	11	24	7	–	5/8 × 3/4	–	1/4	1.5	59	067N7166
	12.5	29	8	–	5/8 × 3/4	–	1/4	1.5	59	067N7200
	16	35	9.5	–	5/8 × 3/4	–	1/4	1.5	59	067N7201
	16	35	9.5	5/8 x 3/4	–	1/4	–	1.5	59	067N7203
TGE 20	12.5	29	8	–	5/8 × 3/4	–	1/4	1.5	59	067N7167
	16	37	10	–	5/8 × 3/4	–	1/4	1.5	59	067N7169
	16	37	10	5/8 x 3/4	–	1/4	–	1.5	59	067N7168
	20	44	12	–	5/8 × 3/4	–	1/4	1.5	59	067N7174

[1]) The rated capacity is based on:
Evaporating temperature t_e = 4.4 °C / 40 °F
Condensing temperature t_c = 38 °C / 100 °F
Refrigerant temperature ahead of valve t_l = 37 °C / 98 °F

MIO: Male inserts O-ring

TGE - R134a

Thermostatic expansion valve with bulb strap
Range: -25 – 10 °C / -15 – 50 °F with MOP 55 psig / 3.8 bar

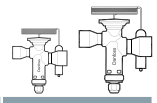

Type	Orifice no.	Rated capacity [1]		Connections Flare / MIO				Capillary tube		Code no. Multi pack
		[kW]	[TR]	Inlet x Outlet [in]		Pressure equalization [in]		[m]	[in]	
				Flare	MIO	Flare	MIO			
TGE 10	4	8	2.5	–	1/2 × 5/8	–	1/4	1.5	59	067N7002
	6	12	3.5	3/8 × 1/2	–	1/4	–	1.5	59	067N7003
	6	12	3.5	1/2 × 5/8	–	1/4	–	1.5	59	067N7004
	8	17	4.5	–	1/2 × 5/8	–	1/4	1.5	59	067N7010
	8	17	4.5	1/2 × 5/8	–	1/4	–	1.5	59	067N7008
	8	17	4.5	–	5/8 × 3/4	–	1/4	1.5	59	067N7012
	8	17	4.5	5/8 × 3/4	–	1/4	–	1.5	59	067N7013
	9	20	5.5	–	5/8 × 3/4	–	1/4	1.5	59	067N7046
	11	24	7	–	5/8 × 3/4	–	1/4	1.5	59	067N7015
	11	24	7	5/8 × 3/4	–	1/4	–	1.5	59	067N7016
	12.5	29	8	–	5/8 × 3/4	–	1/4	1.5	59	067N7210
	12.5	29	8	5/8 × 3/4	–	1/4	–	1.5	59	067N7212
	16	35	9.5	–	5/8 × 3/4	–	1/4	1.5	59	067N7211
TGE 20	12.5	29	8	–	5/8 × 3/4	–	1/4	1.5	59	067N7017
	12.5	29	8	5/8 × 3/4	–	1/4	–	1.5	59	067N7018
	16	37	10	–	5/8 × 3/4	–	1/4	1.5	59	067N7019
	16	37	10	5/8 × 3/4	–	1/4	–	1.5	59	067N7020
	20	44	12	5/8 × 3/4	–	1/4	–	1.5	59	067N7021

[1]) The rated capacity is based on:
Evaporating temperature t_e = 4.4 °C / 40 °F
Condensing temperature t_c = 38 °C / 100 °F
Refrigerant temperature ahead of valve t_l = 37 °C / 98 °F

MIO: Male inserts O-ring.

Technical data and ordering

TGE - R407C

Thermostatic expansion valve with bulb strap
Range: -40 – 10 °C / -40 – 50 °F

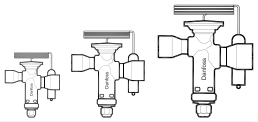

Type	Orifice no.	Rated capacity [1]		Connections solder ODF				Capillary tube		Code no. Multi pack
		[kW]	[TR]	Inlet x Outlet		Pressure equalization				
				[mm]	[in]	[mm]	[in]	[m]	[in]	
TGE 10	3	9	2.5	–	1/2 × 5/8	–	1/4	1.5	59	067N4151
	3	9	2.5	12 × 16	–	6	–	1.5	59	067N4191
	4	13	3.5	–	1/2 × 7/8	–	1/4	1.5	59	067N4152
	4	13	3.5	12 × 22	–	6	–	1.5	59	067N4192
	6	19	5	–	1/2 × 5/8	–	1/4	1.5	59	067N4153
	6	19	5	12 × 16	–	6	–	1.5	59	067N4193
	8	25	7	–	1/2 × 5/8	–	1/4	1.5	59	067N4236
	8	25	7	–	5/8 × 7/8	–	1/4	1.5	59	067N4156
	8	25	7	16 × 22	–	6	–	1.5	59	067N4196
	11	36	10	–	5/8 × 7/8	–	1/4	1.5	59	067N4157
	11	36	10	16 × 22	–	6	–	1.5	59	067N4197
	12.5	39	11	–	5/8 × 7/8	–	1/4	1.5	59	067N4410
	16	49	14	–	7/8 × 1 1/8	–	1/4	1.5	59	067N4411
TGE 20	12.5	42	12	–	5/8 × 7/8	–	1/4	1.5	59	067N4159
	16	53	15	–	5/8 × 1 1/8	–	1/4	1.5	59	067N4161
	16	53	15	–	7/8 × 1 1/8	–	1/4	1.5	59	067N4162
	20	62	18	–	7/8 × 1 1/8	–	1/4	1.5	59	067N4163
TGE 40	26	84	24	–	7/8 × 1 3/8	–	1/4	3	118	067N4165
	30	95	27	–	7/8 × 1 3/8	–	1/4	3	118	067N4167
	40	121	34	–	1 1/8 × 1 3/8	–	1/4	3	118	067N4169

[1]) The rated capacity is based on:
Evaporating temperature t_e = 4.4 °C / 40 °F
Condensing temperature t_c = 38 °C / 100 °F
Refrigerant temperature ahead of valve t_l = 37 °C / 98 °F

TGE - R407C

Thermostatic expansion valve with bulb strap
Range: -40 – 10 °C / -40 – 50 °F



Type	Orifice no.	Rated capacity [1]		Connections MIO		Capillary tube		Code no. Multi pack
		[kW]	[TR]	Inlet x Outlet	Pressure equalization			
				[in]	[in]	[m]	[in]	
TGE 10	4	13	3.5	1/2 x 5/8	1/4	1.5	59	067N7400
	6	19	5	1/2 x 5/8	1/4	1.5	59	067N7401
	8	25	7	5/8 x 3/4	1/4	1.5	59	067N7402
	11	36	10	5/8 x 3/4	1/4	1.5	59	067N7403

[1]) The rated capacity is based on:
Evaporating temperature t_e = 4.4 °C / 40 °F
Condensing temperature t_c = 38 °C / 100 °F
Refrigerant temperature ahead of valve t_l = 37 °C / 98 °F

Technical data and ordering

TGE - R407C

Thermostatic expansion valve with bulb strap
Range: -25 – 10 °C / -15 – 50 °F with MOP 95 psig / 6.6 bar

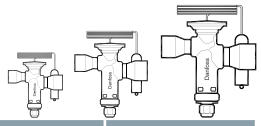

Type	Orifice no.	Rated capacity [1]		Connections solder ODF				Capillary tube		Code no. Multi pack
				Inlet x Outlet		Pressure equalization				
		[kW]	[TR]	[mm]	[in]	[mm]	[in]	[m]	[in]	
TGE 10	3	9	2.5	–	3/8 x 5/8	–	1/4	1.5	59	067N4000
	3	9	2.5	12 × 16	–	6	–	1.5	59	067N4041
	4	13	3.5	–	1/2 x 7/8	–	1/4	1.5	59	067N4002
	6	19	5	–	1/2 x 5/8	–	1/4	1.5	59	067N4003
	6	19	5	–	1/2 x 7/8	–	1/4	1.5	59	067N4004
	8	25	7	–	5/8 x 7/8	–	1/4	1.5	59	067N4006
	8	25	7	16 × 22	–	6	–	1.5	59	067N4046
	11	36	10	–	5/8 x 7/8	–	1/4	1.5	59	067N4007
	11	36	10	16 × 22	–	6	–	1.5	59	067N4047
	12.5	39	11	–	5/8 x 1 1/8	–	1/4	1.5	59	067N4400
	16	49	14	–	5/8 x 1 1/8	–	1/4	1.5	59	067N4401
TGE 20	12.5	42	12	–	5/8 x 7/8	–	1/4	1.5	59	067N4009
	12.5	42	12	–	5/8 x 1 1/8	–	1/4	1.5	59	067N4010
	16	53	15	–	5/8 x 1 1/8	–	1/4	1.5	59	067N4011
	20	62	18	–	7/8 x 1 1/8	–	1/4	1.5	59	067N4013
TGE 40	26	84	24	–	7/8 x 1 3/8	–	1/4	3	118	067N4015
	30	95	27	–	7/8 x 1 3/8	–	1/4	3	118	067N4017
	40	121	34	–	1 1/8 x 1 3/8	–	1/4	3	118	067N4019

[1]) The rated capacity is based on:
Evaporating temperature t_e = 4.4 °C / 40 °F
Condensing temperature t_c = 38 °C / 100 °F
Refrigerant temperature ahead of valve t_l = 37 °C / 98 °F

TGE - R407F / R407A

Thermostatic expansion valve with bulb strap
Range: -40 – 10 °C / -40 – 50 °F



Type	Orifice no.	Rated capacity [1]				Connections solder ODF		Capillary tube		Code no. Multi pack
		R407F		R407A		Inlet x Outlet	Pressure equalization			
		[kW]	[TR]	[kW]	[TR]	[in]	[in]	[m]	[in]	
TGE 10	4	14	4	12	3.5	1/2 x 7/8	1/4	1.5	59	067N4700
	6	20	6	17	5	5/8 x 7/8	1/4	1.5	59	067N4701
	8	27	7.5	23	6.5	5/8 x 7/8	1/4	1.5	59	067N4702
	9	32	9	28	8	5/8 x 7/8	1/4	1.5	59	067N4703
	11	40	11	34	10	5/8 x 1 1/8	1/4	1.5	59	067N4704

[1]) The rated capacity is based on:
Evaporating temperature t_e = 4.4 °C / 40 °F
Condensing temperature t_c = 38 °C / 100 °F
Refrigerant temperature ahead of valve t_l = 37 °C / 98 °F

On systems charged with R407F, SS = 4.0°C / 7.2 °F,
On systems charged with R407A, SS = 2.7 °C / 4.9 °F.

Technical data and ordering

Only solder versions, connection size 28 mm / 1 1/8 in. or smaller are approved for flammable refrigerants.

TGE - R410A / R32

Thermostatic expansion valve with bulb strap
Range: -40 – 10 °C / -40 – 50 °F

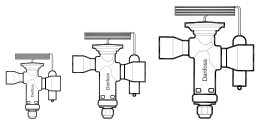

Type	Orifice no.	Rated capacity [1]				Connections solder ODF		Capillary tube		Code no. Multi pack
		R410A		R32		Inlet x Outlet	Pressure equalization			
		[kW]	[TR]	[kW]	[TR]	[in]	[in]	[m]	[in]	
TGE 10	3	12	3.5	18	5	3/8 x 5/8	1/4	1.5	59	067N3150
	3	12	3.5	18	5	1/2 x 5/8	1/4	1.5	59	067N3151
	4	16	4.5	24	7	1/2 x 7/8	1/4	1.5	59	067N3152
	6	24	6.5	35	10	1/2 x 5/8	1/4	1.5	59	067N3153
	6	24	6.5	35	10	1/2 x 7/8	1/4	1.5	59	067N3154
	6	24	6.5	35	10	5/8 x 7/8	1/4	1.5	59	067N3155
	8	32	9	47	13	1/2 x 5/8	1/4	1.5	59	067N3293
	8	32	9	47	13	5/8 x 7/8	1/4	1.5	59	067N3156
	9	37	11	54	15	5/8 x 7/8	1/4	1.5	59	067N3296
	11	45	13	68	19	5/8 x 7/8	1/4	1.5	59	067N3157
	12.5	50	14	74	21	5/8 x 7/8	1/4	1.5	59	067N3410
TGE 20	12.5	54	15	81	23	5/8 x 7/8	1/4	1.5	59	067N3159
TGE 40	26	110	31	165	47	1 1/8 x 1 1/8	1/4	3	118	067N3234

[1]) The rated capacity is based on:
Evaporating temperature t_e = 4.4 °C / 40 °F
Condensing temperature t_c = 38 °C / 100 °F
Refrigerant temperature ahead of valve t_l = 37 °C / 98 °F

TGE - R410A

Thermostatic expansion valve with bulb strap
Range: -40 – 10 °C / -40 – 50 °F

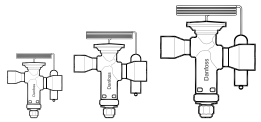

Type	Orifice no.	Rated capacity [1]		Connections solder ODF		Capillary tube		Code no. Multi pack
				Inlet x Outlet	Pressure equalization			
		[kW]	[TR]	[in]	[in]	[m]	[in]	
TGE 10	11	45	13	5/8 x 1 1/8	1/4	1.5	59	067N3158
	16	60	17	7/8 x 1 1/8	1/4	1.5	59	067N3411
TGE 20	12.5	54	15	5/8 x 1 1/8	1/4	1.5	59	067N3160
	12.5	54	15	7/8 x 7/8	1/4	1.5	59	067N3231
	12.5	54	15	7/8 x 1 1/8	1/4	1.5	59	067N3232
	16	68	19	5/8 x 1 1/8	1/4	1.5	59	067N3161
	16	68	19	7/8 x 1 1/8	1/4	1.5	59	067N3162
	20	79	23	7/8 x 1 1/8	1/4	1.5	59	067N3163
	20	79	23	7/8 x 1 3/8	1/4	1.5	59	067N3164
TGE 40	26	110	31	7/8 x 1 3/8	1/4	3	118	067N3165
	26	110	31	1 1/8 x 1 3/8	1/4	3	118	067N3166
	30	125	35	1 1/8 x 1 3/8	1/4	3	118	067N3168
	40	161	46	1 1/8 x 1 3/8	1/4	3	118	067N3169
	42	182	52	1 1/8 x 1 3/8	1/4	3	118	067N3400

[1]) The rated capacity is based on:
Evaporating temperature t_e = 4.4 °C / 40 °F
Condensing temperature t_c = 38 °C / 100 °F
Refrigerant temperature ahead of valve t_l = 37 °C / 98 °F

Technical data and ordering

TGE - R410A

Thermostatic expansion valve with bulb strap
Range: -25 – 10 °C / -15 – 50 °F with MOP 165 psig / 11.4 bar

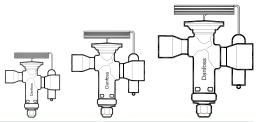

Type	Orifice no.	Rated capacity [1]		Connections solder ODF		Capillary tube		Code no. Multi pack
				Inlet x Outlet	Pressure equalization			
		[kW]	[TR]	[in]	[in]	[m]	[in]	
TGE 10	3	12	3.5	3/8 x 5/8	1/4	1.5	59	067N3000
	3	12	3.5	1/2 x 5/8	1/4	1.5	59	067N3001
	4	16	4.5	1/2 x 7/8	1/4	1.5	59	067N3002
	6	24	6.5	1/2 x 5/8	1/4	1.5	59	067N3003
	6	24	6.5	5/8 x 7/8	1/4	1.5	59	067N3005
	8	32	9	5/8 x 7/8	1/4	1.5	59	067N3006
	9	37	11	5/8 x 7/8	1/4	1.5	59	067N3340
	11	45	13	5/8 x 7/8	1/4	1.5	59	067N3007
	11	45	13	5/8 x 1 1/8	1/4	1.5	59	067N3008
	12.5	50	14	5/8 x 1 1/8	1/4	1.5	59	067N3402
	16	60	17	5/8 x 1 1/8	1/4	1.5	59	067N3401
TGE 20	12.5	54	15	5/8 x 7/8	1/4	1.5	59	067N3009
	12.5	54	15	5/8 x 1 1/8	1/4	1.5	59	067N3010
	16	68	19	5/8 x 1 1/8	1/4	1.5	59	067N3011
	16	68	19	7/8 x 1 1/8	1/4	1.5	59	067N3012
	20	79	23	7/8 x 1 1/8	1/4	1.5	59	067N3013
TGE 40	26	110	31	7/8 x 1 1/8	1/4	3	118	067N3135
	26	110	31	7/8 x 1 3/8	1/4	3	118	067N3015
	30	125	35	1 1/8 x 1 3/8	1/4	3	118	067N3018
	40	161	46	1 1/8 x 1 3/8	1/4	3	118	067N3019
	42	182	52	1 1/8 x 1 3/8	1/4	3	118	067N3341

[1]) The rated capacity is based on:
Evaporating temperature t_e = 4.4 °C / 40 °F
Condensing temperature t_c = 38 °C / 100 °F
Refrigerant temperature ahead of valve t_l = 37 °C / 98 °F

TGE - R410A

Thermostatic expansion valve with bulb strap
Range: -30 – 15 °C / -22 – 60 °F with anti hunting charge

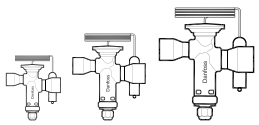

Type	Orifice no.	Rated capacity [1]		Connections solder ODF		Capillary tube		Code no. Multi pack
				Inlet x Outlet	Pressure equalization			
		[kW]	[TR]	[in]	[in]	[m]	[in]	
TGE 10	3	12	3.5	1/2 x 5/8	1/4	1.5	59	067N9201
	4	16	4.5	1/2 x 7/8	1/4	1.5	59	067N9202
	6	24	6.5	1/2 x 5/8	1/4	1.5	59	067N9203
	6	24	6.5	5/8 x 7/8	1/4	1.5	59	067N9200
	8	32	9	5/8 x 7/8	1/4	1.5	59	067N9206
	9	37	11	5/8 x 7/8	1/4	1.5	59	067N9287
	11	45	13	5/8 x 7/8	1/4	1.5	59	067N9207
	12.5	50	14	5/8 x 7/8	1/4	1.5	59	067N9509
	16	60	17	7/8 x 1 1/8	1/4	1.5	59	067N9512
TGE 20	12.5	54	15	5/8 x 7/8	1/4	1.5	59	067N9209
	12.5	54	15	5/8 x 1 1/8	1/4	1.5	59	067N9210
	16	68	19	7/8 x 1 1/8	1/4	1.5	59	067N9212
	20	79	23	7/8 x 1 1/8	1/4	1.5	59	067N9213
TGE 40	26	110	31	7/8 x 1 3/8	1/4	3	118	067N9215
	26	110	31	1 1/8 x 1 3/8	1/4	3	118	067N9216
	30	125	35	1 1/8 x 1 3/8	1/4	3	118	067N9218
	40	161	46	1 1/8 x 1 3/8	1/4	3	118	067N9219
	42	182	52	1 1/8 x 1 3/8	1/4	3	118	067N9289

[1]) The rated capacity is based on:
Evaporating temperature t_e = 4.4 °C / 40 °F
Condensing temperature t_c = 38 °C / 100 °F
Refrigerant temperature ahead of valve t_l = 37 °C / 98 °F

Technical data and ordering

TGE - R404A/R507

Thermostatic expansion valve with bulb strap
Range: -40 – 10 °C / -40 –50 °F

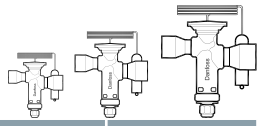

Type	Orifice no.	Rated capacity [1]		Connections solder ODF		Capillary tube		Code no. Multi pack
				Inlet x Outlet	Pressure equalization			
		[kW]	[TR]	[in]	[in]	[m]	[in]	
TGE 10	3	7	2	3/8 × 5/8	1/4	1.5	59	067N6170
	4	9	2.5	1/2 × 7/8	1/4	1.5	59	067N6172
	6	14	4	1/2 × 5/8	1/4	1.5	59	067N6173
	6	14	4	1/2 × 7/8	1/4	1.5	59	067N6151
	8	18	5	1/2 × 5/8	1/4	1.5	59	067N6175
	8	18	5	5/8 × 7/8	1/4	1.5	59	067N6150
	9	21	6	5/8 × 7/8	1/4	1.5	59	067N6167
	11	26	7.5	5/8 × 7/8	1/4	1.5	59	067N6154
	12.5	31	9	5/8 × 7/8	1/4	1.5	59	067N6300
	16	35	10	5/8 × 1 1/8	1/4	1.5	59	067N6301
TGE 20	12.5	31	9	5/8 × 7/8	1/4	1.5	59	067N6158
	16	39	11	5/8 × 1 1/8	1/4	1.5	59	067N6155
	16	39	11	1 1/8 × 1 3/8	1/4	1.5	59	067N6188
	16	39	11	7/8 × 1 1/8	1/4	1.5	59	067N6181
	20	45	13	7/8 × 1 1/8	1/4	1.5	59	067N6162
TGE 40	26	64	18	7/8 × 1 3/8	1/4	3	118	067N6161
	30	72	21	1 1/8 × 1 3/8	1/4	3	118	067N6186
	40	92	26	1 1/8 × 1 3/8	1/4	3	118	067N6187

[1]) The rated capacity is based on:
Evaporating temperature t_e = 4.4 °C / 40 °F
Condensing temperature t_c = 38 °C / 100 °F
Refrigerant temperature ahead of valve t_l = 37 °C / 98 °F

⚠ Only solder versions, connection size 28 mm / 1 1/8 in. or smaller are approved for flammable refrigerants.

TGE - R290

Thermostatic expansion valve with bulb strap
Range: -40 – 10 °C / -40 – 50 °F

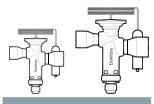

Type	Orifice no.	Rated capacity [1]		Connections solder ODF		Capillary tube		Code no. Multi pack
				Inlet x Outlet	Pressure equalization			
		[kW]	[TR]	[in]	[in]	[m]	[in]	
TGE 10	6	19	5	5/8 × 7/8	1/4	1.5	59	067N9100
	11	36	10	5/8 × 7/8	1/4	1.5	59	067N9103
TGE 20	12.5	44	12	5/8 × 7/8	1/4	1.5	59	067N9104
	16	54	15	7/8 × 7/8	1/4	1.5	59	067N9105
	20	63	18	7/8 × 7/8	1/4	1.5	59	067N9106

[1]) The rated capacity is based on:
Evaporating temperature t_e = 4.4 °C / 40 °F
Condensing temperature t_c = 38 °C / 100 °F
Refrigerant temperature ahead of valve t_l = 37 °C / 98 °F

SS = 5K / 9°F (except 067N9100, 067N9103)

TGE - R290

Thermostatic expansion valve with bulb strap
Range: -25 – 10 °C / -15 – 50 °F

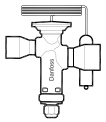

Type	Orifice no.	Rated capacity [1]		Connections solder ODF		Capillary tube		Code no. Multi pack
				Inlet x Outlet	Pressure equalization			
		[kW]	[TR]	[in]	[in]	[m]	[in]	
TGE 40	26	92	26	7/8 × 7/8	1/4	3	118	067N9107
	40	133	38	7/8 × 7/8	1/4	3	118	067N9109

[1]) The rated capacity is based on:
Evaporating temperature t_e = 4.4 °C / 40 °F
Condensing temperature t_c = 38 °C / 100 °F
Refrigerant temperature ahead of valve t_l = 37 °C / 98 °F

Technical data and ordering

Only solder versions, connection size 28 mm / 1 1/8 in. or smaller are approved for flammable refrigerants.

TGE - R1234ze

Thermostatic expansion valve with bulb strap
Range: -30 – 10 °C / -22 – 50 °F

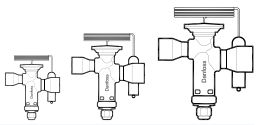

Type	Orifice no.	Rated capacity [1]		Connections solder ODF		Capillary tube		Code no. Multi pack
				Inlet x Outlet	Pressure equalization			
		[kW]	[TR]	[in]	[in]	[m]	[in]	
TGE 10	8	14	4	5/8 x 7/8	1/4	1.5	59	067N8001
	11	20	5.5	5/8 x 7/8	1/4	1.5	59	067N8002
	12.5	22	6	5/8 x 7/8	1/4	1.5	59	067N8003
TGE 20	20	31	8.5	7/8 x 1 1/8	1/4	1.5	59	067N8004
TGE 40	26	49	14	7/8 x 1 1/8	1/4	3	118	067N8005

[1]) The rated capacity is based on:
Evaporating temperature t_e = 4.4 °C / 40 °F
Condensing temperature t_c = 38 °C / 100 °F
Refrigerant temperature ahead of valve t_l = 37 °C / 98 °F

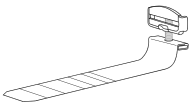

Bulb strap supplied separately as spare part

Max. diameter of suction line		Quantity / box	Code no. Industrial pack
[mm]	[in]		
22	7/8	40 pcs	067N0551
53	2 1/8	40 pcs	067N0557
78	3 1/8	40 pcs	067N0559

Quick Selection Notes:

TUA / TUAE / TCAE, Thermostatic expansion valves

TUA / TUAE / TCAE stainless steel thermostatic expansion valves are used for liquid injection into evaporators on both refrigeration and air conditioning systems. Valves are compact in design, light weight and have steel / copper bi-metal connections for fast soldering. They are supplied as parts programme, with separate thermostatic element / valve body, and orifice assembly. TUA has internal equalization, TUAE / TCAE external equalization. TUA / TUAE / TCAE are straightway valves, and have adjustable superheat setting.



Features
TUA / TUAE / TCAE

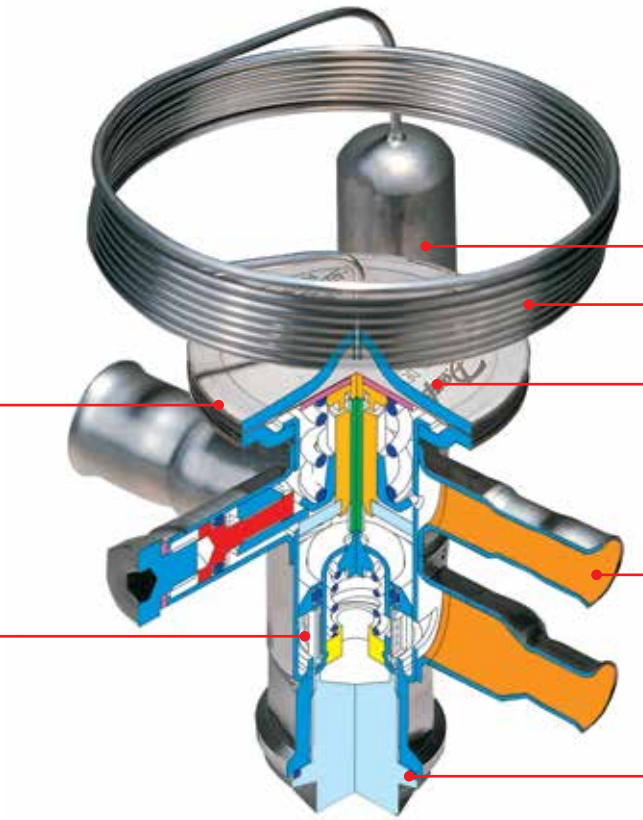

Stainless steel capillary tube and bulb:
- high corrosion resistance
- high strength and vibration resistance

Laser-engraved label

Laser welded stainless steel thermostatic element for unsurpassed joint strength and operational lifetime

Bi-metal connections
Stainless steel with rolled on copper cladding for safe, fast and convenient copper-to-copper soldering

Separate strainer, mounted on the orifice assembly for easy maintenance and cleaning

Orifice assembly with an unmatched hermetic seal

Facts

Applications:
- Traditional refrigeration
- Heat pump systems
- Air conditioning units
- Liquid coolers
- Ice cube machines
- Transport refrigeration
- Applicable to R134a, R404A, R407C, R22, R507 and R410A
  For a fully updated list of approved refrigerants, visit www.products.danfoss.com and search for individual code numbers, where refrigerants are listed as part of product specifications.
- The use of stainless steel makes the valves light and strong
- Bi-metal connections for safe, fast and convenient soldering
- Stainless steel capillary tube for superior strength and ductility
- Allen key superheat setting screw is convenient and space-saving compared to the standard screwdriver adjustment used in most conventional valves
- Can be supplied with MOP (Max. Operating Pressure)
  Protects the compressor motor against excessive evaporating pressure during normal operation
- Valves for special temperature ranges can be supplied
- 4 K / 7.2 °F opening superheat
- Bi-flow function
  (TUAE: only orifice 1 – 8,
  TCAE: Only orifice 1 and 2)

Technical data

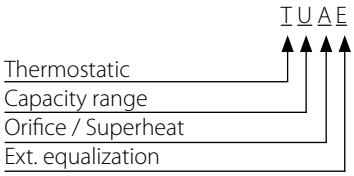

Orifice / Superheat

	Interchangeable	Adjustable
A	YES	YES
B	NO	YES
C	NO	NO

N = -40 °C – 10 °C / -40 – 50 °F
NM = -40 °C – -5 °C MOP 0 °C / -40 – 25 °F MOP 32 °F
NL = -40 °C – -15 °C with MOP - 10 °C / -40 – 5 °F MOP 14 °F
B = -60 °C – -25 °C / -75 – -15 °F

TUA
TUAE
TCAE

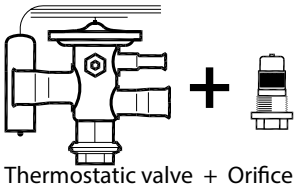

Thermostatic valve + Orifice

TUB
TUBE
TUC
TUCE
TCBE
TCCE

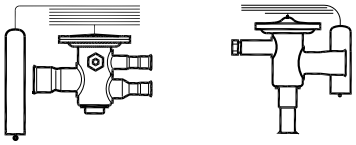

Thermostatic valve including Orifice

Valve types **TUB / TUBE / TUC / TUCE** and **TCBE / TCCE** can be replaced by **TUA / TUAE** and **TCAE** types

Technical data and ordering

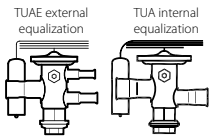

TUA / TUAE - Solder

Thermostatic element with bulb strap

Type	Refrigerant	Range		MOP		Ext. pressure equalization		Solder connections inlet × outlet		Code no.
		[°C]	[°F]	[°C]	[°F]	[mm]	[in]	[mm]	[in]	
TUA	R22 / R407C	-40 – 10	-40 – 50	–	–	–	–	–	1/4 × 1/2	068U2234
		-40 – 10	-40 – 50	–	–	–	–	6 × 12	–	068U2230
		-40 – 10	-40 – 50	–	–	–	–	–	3/8 × 1/2	068U2235
		-40 – 10	-40 – 50	–	–	–	–	10 × 12	–	068U2231
TUAE		-40 – 10	-40 – 50	–	–	–	1/4	–	1/4 × 1/2	068U2236
		-40 – 10	-40 – 50	–	–	–	1/4	–	3/8 × 1/2	068U2237
		-40 – 10	-40 – 50	–	–	6	–	10 × 12	–	068U2233
		-40 – 10	-40 – 50	15	60	–	1/4	–	3/8 × 1/2	068U2245
		-40 – 10	-40 – 50	15	60	6	–	10 × 12	–	068U2241
TUA	R134a / R513A	-40 – 10	-40 – 50	–	–	–	–	–	1/4 × 1/2	068U2204
		-40 – 10	-40 – 50	–	–	–	–	6 × 12	–	068U2200
		-40 – 10	-40 – 50	–	–	–	–	–	3/8 × 1/2	068U2205
		-40 – 10	-40 – 50	–	–	–	–	10 × 12	–	068U2201
		-40 – 10	-40 – 50	15	60	–	–	–	1/4 × 1/2	068U2212
		-40 – 10	-40 – 50	15	60	–	–	6 × 12	–	068U2208
		-40 – 10	-40 – 50	15	60	–	–	–	3/8 × 1/2	068U2213
TUAE		-40 – 10	-40 – 50	–	–	–	1/4	–	1/4 × 1/2	068U2206
		-40 – 10	-40 – 50	–	–	6	–	6 × 12	–	068U2202
		-40 – 10	-40 – 50	–	–	–	1/4	–	3/8 × 1/2	068U2207
		-40 – 10	-40 – 50	–	–	6	–	10 × 12	–	068U2203
		-40 – 10	-40 – 50	15	60	–	1/4	–	1/4 × 1/2	068U2214
		-40 – 10	-40 – 50	15	60	–	1/4	–	3/8 × 1/2	068U2215
		-40 – 10	-40 – 50	15	60	6	–	10 × 12	–	068U2211
TUA	R404A / R507	-40 – 10	-40 – 50	–	–	–	–	–	1/4 × 1/2	068U2284
		-40 – 10	-40 – 50	–	–	–	–	6 × 12	–	068U2280
		-40 – 10	-40 – 50	–	–	–	–	–	3/8 × 1/2	068U2285
		-40 – 10	-40 – 50	–	–	–	–	10 × 12	–	068U2281
		-40 – 10	-40 – 50	15	60	–	–	–	1/4 × 1/2	068U2292
		-40 – 10	-40 – 50	15	60	–	–	–	3/8 × 1/2	068U2293
		-60 – -25	-75 – -15	–	–	–	–	–	1/4 × 1/2	068U2308
		-60 – -25	-75 – -15	–	–	–	–	–	3/8 × 1/2	068U2309
		-40 – -5	-40 – 25	0	32	–	–	–	1/4 × 1/2	068U2300
		-40 – -5	-40 – 25	0	32	–	–	6 × 12	–	068U2296
		-60 – -25	-75 – -15	-20	-5	–	–	–	1/4 × 1/2	068U2316
		-60 – -25	-75 – -15	-20	-5	–	–	6 × 12	–	068U2312
		-60 – -25	-75 – -15	-20	-5	–	–	–	3/8 × 1/2	068U2317
TUAE		-40 – 10	-40 – 50	–	–	–	1/4	–	1/4 × 1/2	068U2286
		-40 – 10	-40 – 50	–	–	6	–	6 × 12	–	068U2282
		-40 – 10	-40 – 50	–	–	–	1/4	–	3/8 × 1/2	068U2287
		-40 – 10	-40 – 50	–	–	6	–	10 × 12	–	068U2283
		-40 – 10	-40 – 50	15	60	–	1/4	–	3/8 × 1/2	068U2295
		-40 – -5	-40 – 25	0	32	–	1/4	–	3/8 × 1/2	068U2303
		-40 – -5	-40 – 25	0	32	6	–	10 × 12	–	068U2299
		-60 – -25	-75 – -15	-20	-5	–	1/4	–	1/4 × 1/2	068U2318
		-60 – -25	-75 – -15	-20	-5	–	1/4	–	3/8 × 1/2	068U2319
		-60 – -25	-75 – -15	-20	-5	6	–	10 × 12	–	068U2315

Capillary tube: 1.5 m / 59 in

Technical data and ordering

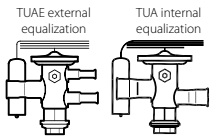

TUA / TUAE - Solder

Thermostatic element with bulb strap

Type	Refrigerant	Range		MOP		Ext. pressure equalization		Solder connections inlet × outlet		Code no.
		[°C]	[°F]	[°C]	[°F]	[mm]	[in]	[mm]	[in]	
TUA	R407C	-40 – 10	-40 – 50	15	60	–	–	–	1/4 × 1/2	068U2332
		-40 – 10	-40 – 50	15	60	–	–	–	3/8 × 1/2	068U2333
		-40 – 10	-40 – 50	–	–	–	–	–	1/4 × 1/2	068U2324
		-40 – 10	-40 – 50	–	–	–	–	6 × 12	–	068U2320
		-40 – 10	-40 – 50	–	–	–	–	–	3/8 × 1/2	068U2325
		-40 – 10	-40 – 50	–	–	–	–	10 × 12	–	068U2321
TUAE		-40 – 10	-40 – 50	–	–	–	1/4	–	1/4 × 1/2	068U2326
		-40 – 10	-40 – 50	–	–	6		6 × 12	–	068U2322
		-40 – 10	-40 – 50	–	–		1/4	–	3/8 × 1/2	068U2327
		-40 – 10	-40 – 50	–	–	6	–	10 × 12	–	068U2323
		-40 – 10	-40 – 50	15	60	6	–	6 × 12	–	068U2330
		-40 – 10	-40 – 50	15	60	–	1/4	–	3/8 × 1/2	068U2335
		-40 – 10	-40 – 50	15	60	6	–	10 × 12	–	068U2331
TUA	R410A	-40 – 10	-40 – 50	–	–	–	–	–	3/8 × 1/2	068U2414
TUAE		-40 – 10	-40 – 50	–	–	–	1/4	–	3/8 × 1/2	068U1714
		-40 – 10	-40 – 50	–	–	6		10 × 12	–	068U2780

Capillary tube: 1.5 m / 59 in

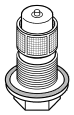

TUA / TUAE

Orifice assembly with filter and gasket

Valve	Orifice no.	Bleed	R134a		R404A / R507		R407C		R22		R410A		R513A		R448A		R449A		Code no.
			[kW]	[TR]	[kW]	[TR]	[kW]	[TR]	[kW]	[TR]	[kW]	[TR]	[kW]	[TR]	[kW]	[TR]	[kW]	[TR]	
TUA / TUAE	0	–	0.42	0.12	0.48	0.14	0.66	0.19	0.63	0.18	0.99	0.28	0.36	0.10	0.63	0.18	0.61	0.17	068U1030
	1	–	0.61	0.18	0.71	0.20	0.94	0.27	0.92	0.26	1.3	0.38	0.53	0.15	0.93	0.26	0.90	0.25	068U1031
	1	15%	0.61	0.18	0.71	0.20	0.94	0.27	0.92	0.26	1.3	0.38	0.53	0.15	0.93	0.26	0.90	0.25	068U1131
	2	–	0.72	0.21	0.87	0.25	1.1	0.32	1.1	0.32	1.7	0.48	0.62	0.18	1.1	0.32	1.1	0.31	068U1032
	2	15%	0.72	0.21	0.87	0.25	1.1	0.32	1.1	0.32	1.7	0.48	0.62	0.18	1.1	0.32	1.1	0.31	068U1132
	3	–	0.94	0.27	1.1	0.32	1.5	0.42	1.4	0.41	2.1	0.60	0.82	0.23	1.4	0.41	1.4	0.40	068U1033
	3	15%	0.94	0.27	1.1	0.32	1.5	0.42	1.4	0.41	2.1	0.60	0.82	0.23	1.4	0.41	1.4	0.40	068U1133
	4	–	1.6	0.46	2	0.57	2.5	0.72	2.5	0.72	4.1	1.2	1.4	0.39	2.5	0.72	2.4	0.69	068U1034
	4	15%	1.6	0.46	2	0.57	2.5	0.72	2.5	0.72	4.1	1.2	1.4	0.39	2.5	0.72	2.4	0.69	068U1134
	5	–	2.1	0.61	2.7	0.76	3.4	0.96	3.4	0.96	5.3	1.5	1.8	0.53	3.4	0.96	3.2	0.92	068U1035
	5	15%	2.1	0.61	2.7	0.76	3.4	0.96	3.4	0.96	5.3	1.5	1.8	0.53	3.4	0.96	3.2	0.92	068U1135
	6	–	3.4	0.95	4.2	1.1	5.3	1.5	5.3	1.5	8.5	2.4	2.9	0.82	5.3	1.5	5.1	1.4	068U1036
	6	15%	3.4	0.95	4.2	1.1	5.3	1.5	5.3	1.5	8.5	2.4	2.9	0.82	5.3	1.5	5.1	1.4	068U1136
	7	–	4.4	1.3	5.6	1.6	7	2	7	2	11.2	3.2	3.8	1.1	7.0	2.0	6.7	1.9	068U1037
	7	15%	4.4	1.3	5.6	1.6	7	2	7	2	11.2	3.2	3.8	1.1	7.0	2.0	6.7	1.9	068U1137
	8	–	6.5	1.9	8	2.3	10.2	2.9	10.1	2.9	15.8	4.5	5.6	1.6	10.1	2.9	9.8	2.8	068U1038
	8	15%	6.5	1.9	8	2.3	10.2	2.9	10.1	2.9	15.8	4.5	5.6	1.6	10.1	2.9	9.8	2.8	068U1138
	9 [1])	–	9	2.6	11.3	3.2	14	4	14.1	4	23.1	6.6	7.7	2.2	13.9	4.0	13.6	3.9	068U1039
	9 [1])	15%	9	2.6	11.3	3.2	14	4	14.1	4	23.1	6.6	7.7	2.2	13.9	4.0	13.6	3.9	068U1139

The rated capacity is based on:
Evaporating temperature t_e = 4.4 °C / 40 °F
Liquid temperature t_l = 37 °C / 98 °F
Condensing temperature t_c = 38 °C / 100 °F

[1]) *TUAE with orifice no. 9 cannot be used for Biflow operation.*

Technical data and ordering

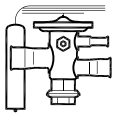

TCAE

Thermostatic element, with bulb strap

Type	Refrigerant	Range		MOP		Ext. pressure equalization		Solder connection inlet × outlet		Code no.
		[°C]	[°F]	[°C]	[°F]	[mm]	[in]	[mm]	[in]	
TCAE	R22 / R407C	-40 – 10	-40 – 50	–	–	–	1/4	–	3/8 × 5/8	068U4280
		-40 – 10	-40 – 50	–	–	–	1/4	–	1/2 × 5/8	068U4281
		-40 – 10	-40 – 50	15	59	–	1/4	–	1/2 × 5/8	068U4283
TCAE	R134a / R513A	-40 – 10	-40 – 50	–	–	–	1/4	–	3/8 × 5/8	068U4292
		-40 – 10	-40 – 50	–	–	–	1/4	–	1/2 × 5/8	068U4293
		-40 – 10	-40 – 50	–	–	6	–	10 × 16	–	068U4296
		-40 – 10	-40 – 50	–	–	6	–	12 × 16	–	068U4297
		-40 – 10	-40 – 50	15	59	–	1/4	–	1/2 × 5/8	068U4295
		-40 – 10	-40 – 50	15	59	6	–	12 × 16	–	068U4299
TCAE	R404A / R507	-40 – 10	-40 – 50	–	–	–	1/4	–	3/8 × 5/8	068U4304
		-40 – 10	-40 – 50	–	–	–	1/4	–	1/2 × 5/8	068U4305
		-40 – 10	-40 – 50	–	–	6	–	10 × 16	–	068U4308
		-40 – 10	-40 – 50	–	–	6	–	12 × 16	–	068U4309
		-40 – 10	-40 – 50	15	59	–	1/4	–	1/2 × 5/8	068U4307
		-40 – 10	-40 – 50	15	59	6	–	10 × 16	–	068U4310
		-40 – -5	-40 – 25	0	32	–	1/4	–	1/2 × 5/8	068U4313
		-40 – -5	-40 – 25	0	32	6	–	10 × 16	–	068U4314
		-40 – -5	-40 – 25	0	32	6	–	12 × 16	–	068U4315
		-60 – -25	-75 – -15	–	–	–	1/4	–	1/2 × 5/8	068U4317
		-60 – -25	-75 – -15	–	–	6	–	12 × 16	–	068U4321
		-60 – -25	-75 – -15	-20	68	–	1/4	–	1/2 × 5/8	068U4319
		-60 – -25	-75 – -15	-20	68	6	–	10 × 16	–	068U4322
TCAE	R407C	-40 – 10	-40 – 50	–	–	–	1/4	–	3/8 × 5/8	068U4324
		-40 – 10	-40 – 50	–	–	–	1/4	–	1/2 × 5/8	068U4325
		-40 – 10	-40 – 50	–	–	6	–	10 × 16	–	068U4328
		-40 – 10	-40 – 50	–	–	6	–	12 × 16	–	068U4329
		-40 – 10	-40 – 50	15	59	–	1/4	–	3/8 × 5/8	068U4326
		-40 – 10	-40 – 50	15	59	–	1/4	–	1/2 × 5/8	068U4327
		-40 – 10	-40 – 50	15	59	6	–	12 × 16	–	068U4331
TCAE	R410A	-40 – 10	-40 – 50	–	–	–	1/4	–	3/8 × 5/8	068U4336
		-40 – 10	-40 – 50	–	–	–	1/4	–	1/2 × 5/8	068U4337
		-40 – 10	-40 – 50	–	–	6	–	12 × 16	–	068U4341
		-40 – 10	-40 – 50	15	59	–	1/4	–	1/2 × 5/8	068U4339
		-40 – 10	-40 – 50	15	59	6	–	12 × 16	–	068U4343

Capillary tube: 1.5 m / 59 in

Technical data and ordering

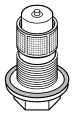

TCAE

Orifice assembly with filter and gasket

Type	Orifice no.	Bleed	R134a		R404A / R507		R407C		R22		R410A		R448A		R449A		R513A		Code no.
			[kW]	[TR]	[kW]	[TR]	[kW]	[TR]	[kW]	[TR]	[kW]	[TR]	[kW]	[TR]	[kW]	[TR]	[kW]	[TR]	
TCAE	1	–	13	3.7	13	3.7	17.8	5.1	18.3	5.2	21.2	6	17.6	5.0	16.9	4.8	11.5	3.3	068U4100
	1	15%	13	3.7	13	3.7	17.8	5.1	18.3	5.2	21.2	6	17.6	5.0	16.9	4.8	11.5	3.3	068U4097
	2	–	14.9	4.3	15.1	4.3	20.4	5.8	21.2	6	24.5	7	20.3	5.8	19.3	5.5	13.2	3.8	068U4101
	2	15%	14.9	4.3	15.1	4.3	20.4	5.8	21.2	6	24.5	7	20.3	5.8	19.3	5.5	13.2	3.8	068U4098
	3 [1])	–	18.6	5.3	18.9	5.4	25.2	7.2	26.7	7.6	30.6	8.7	25.1	7.1	23.9	6.8	16.5	4.7	068U4102
	3 [1])	15%	18.6	5.3	18.9	5.4	25.2	7.2	26.7	7.6	30.6	8.7	25.1	7.1	23.9	6.8	16.5	4.7	068U4099

The rated capacity is based on:
Evaporating temperature, t_e = 4.4 °C / 40 °F
Liquid temperature, t_l = 37 °C / 98 °F
Condensing temperature, t_c = 38 °C / 100 °F

[1]) TCAE with orifice no. 3 cannot be used for Biflow operation.

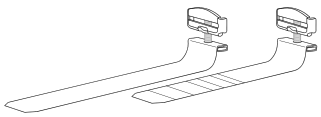

Bulb strap (delivered with the valve) and accessories

Type	Length		Max. diameter of suction line		Code no.
	[mm]	[in]	[mm]	[in]	
TCAE Accessories	110	4 5/16	28	1 1/8	068U3507
	190	7 3/8	50	2	068U3508

TUB / TUBE / TCBE, Thermostatic expansion valves

TUB / TUBE / TCBE stainless steel thermostatic expansion valves are used for liquid injection into evaporators on both refrigeration and air conditioning systems.
Valves are compact in design, light weight and have steel / copper bi-metal connections for fast soldering.

TUB has internal equalization, TUBE / TCBE external equalization. TUB / TUBE and TCBE are available in straightway or angleway versions, have a fixed orifice and adjustable superheat.



Features
TUB / TUBE / TCBE

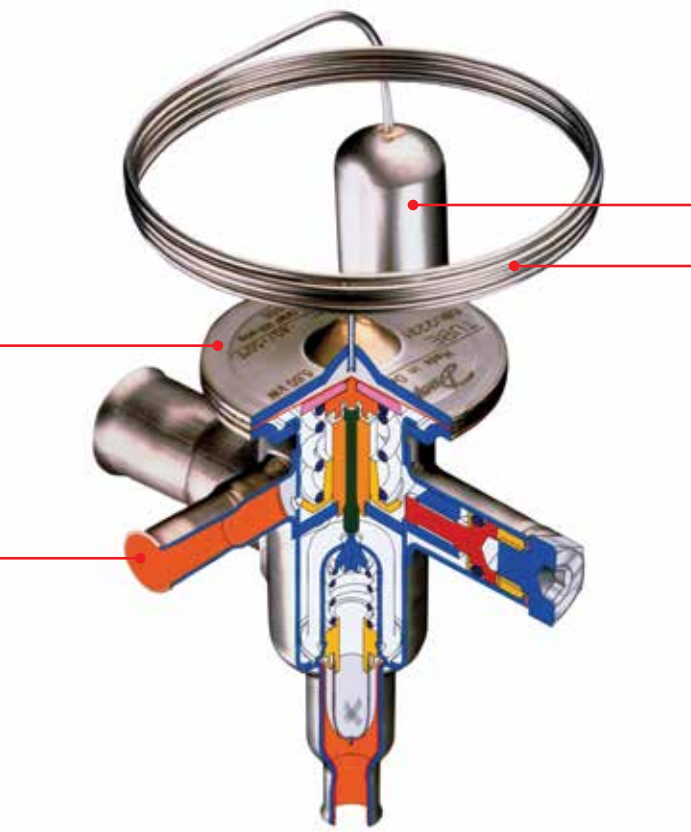

Stainless steel capillary tube and bulb:
- high corrosion resistance
- high strength and vibration resistance

Laser welded stainless steel thermostatic element for unsurpassed joint strength and operational lifetime

Bi-metal connections
Stainless steel with rolled on copper cladding for safe, fast and convenient copper-to-copper soldering

Facts

Applications:
- Traditional refrigeration
- Heat pump systems
- Air conditioning units
- Liquid coolers
- Ice cube machines
- Transport refrigeration
- Applicable to R134a, R404A, R407C, R22, R507 and R410A
  For a fully updated list of approved refrigerants, visit www.products.danfoss.com and search for individual code numbers, where refrigerants are listed as part of product specifications.

- The use of stainless steel makes the valves light and strong
- Bi-metal connections for safe, fast and convenient soldering
- Stainless steel capillary tube for superior strength and ductility
- Allen key superheat setting screw is convenient and space-saving compared to the standard screwdriver adjustment used in most conventional valves

- Can be supplied with MOP (Max. Operating Pressure) - protects the compressor motor against excessive evaporating pressure during normal operation
- Valves for special temperature ranges can be supplied
- 4 K / 7.2 °F opening superheat
- Bi-flow function
- Can be supplied as non adjustable OEM versions

Technical data

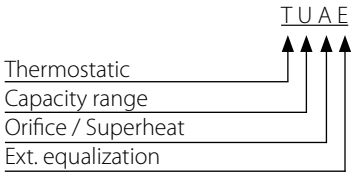

Orifice / Superheat

	Interchangeable	Adjustable
A	YES	YES
B	NO	YES
C	NO	NO

Range N = -40 – 10 °C / -40 – 50 °F
Range NM = -40 – -5 °C with MOP / -40 – 25 °F with MOP
Range NL = -40 – -15 °C with MOP / -40 °C – 5 °F with MOP
Range B = -60 – -25 °C with MOP / -75 – -15 °F with MOP

TUA
TUAE
TCAE

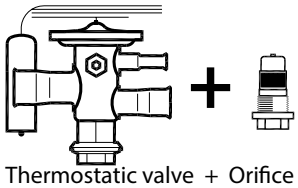

Thermostatic valve + Orifice

TUB
TUBE
TUC
TUCE
TCBE
TCCE

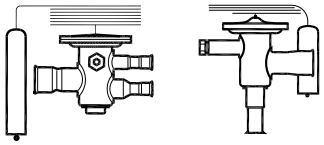

Thermostatic valve including Orifice

Valve types **TUB / TUBE / TUC / TUCE** and **TCBE / TCCE** can be replaced by **TUA / TUAE** and **TCAE** types.

Technical data and ordering

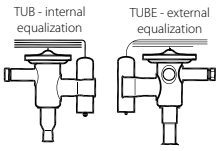

TUB / TUBE

Thermostatic element, angle way, with bulb strap

Type	Refrigerant	Orifice no. [2]	Range		Rated capacity $Q_{nom.}$ [1]		Ext. pressure equalization		Connection inlet × outlet		Code no.
			[°C]	[°F]	[kW]	[TR]	[mm]	[in]	[mm]	[in]	
TUB	R22 / R407C	1	-40 – 10	-40 – 50	0.92	0.26	–	–	–	1/4 × 1/2	068U2057
		2	-40 – 10	-40 – 50	1.1	0.32	–	–	–	1/4 × 1/2	068U2058
		3	-40 – 10	-40 – 50	1.4	0.41	–	–	–	1/4 × 1/2	068U2059
		4	-40 – 10	-40 – 50	2.5	0.72	–	–	–	1/4 × 1/2	068U2060
		5	-40 – 10	-40 – 50	3.4	0.96	–	–	–	1/4 × 1/2	068U2061
		6	-40 – 10	-40 – 50	5.3	1.5	–	–	–	1/4 × 1/2	068U2062
		7	-40 – 10	-40 – 50	7	2	–	–	–	3/8 × 1/2	068U2063
		8	-40 – 10	-40 – 50	10.1	2.9	–	–	–	3/8 × 1/2	068U2064
TUBE		5	-40 – 10	-40 – 50	3.4	0.96	–	1/4	–	1/4 × 1/2	068U2071
		6	-40 – 10	-40 – 50	5.3	1.5	–	1/4	–	1/4 × 1/2	068U2072
		7	-40 – 10	-40 – 50	7	2	–	1/4	–	3/8 × 1/2	068U2073
		8	-40 – 10	-40 – 50	10.1	2.9	–	1/4	–	3/8 × 1/2	068U2074
		9	-40 – 10	-40 – 50	14.1	4	–	1/4	–	3/8 × 1/2	068U2075
TUB	R407C	1	-40 – 10	-40 – 50	0.94	0.27	–	–	6 × 12	–	068U1901
		3	-40 – 10	-40 – 50	1.5	0.42	–	–	6 × 12	–	068U1903
		4	-40 – 10	-40 – 50	2.5	0.72	–	–	6 × 12	–	068U1904
		5	-40 – 10	-40 – 50	3.4	0.96	–	–	6 × 12	–	068U1905
		6	-40 – 10	-40 – 50	5.3	1.5	–	–	6 × 12	–	068U1906
		7	-40 – 10	-40 – 50	7	2	–	–	10 × 12	–	068U1907
		8	-40 – 10	-40 – 50	10.2	2.9	–	–	10 × 12	–	068U1908
		9	-40 – 10	-40 – 50	14	4	–	–	10 × 12	–	068U1909
TUBE		2	-40 – 10	-40 – 50	1.1	0.32	6	–	6 × 12	–	068U1912
		3	-40 – 10	-40 – 50	1.5	0.42	6	–	6 × 12	–	068U1913
		4	-40 – 10	-40 – 50	2.5	0.72	6	–	6 × 12	–	068U1914
		5	-40 – 10	-40 – 50	3.4	0.96	–	1/4	–	1/4 × 1/2	068U1935
		5	-40 – 10	-40 – 50	3.4	0.96	6	–	6 × 12	–	068U1915
		6	-40 – 10	-40 – 50	5.3	1.5	–	1/4	–	1/4 × 1/2	068U1936
		6	-40 – 10	-40 – 50	5.3	1.5	6	–	6 × 12	–	068U1916
		7	-40 – 10	-40 – 50	7	2	–	1/4	–	3/8 × 1/2	068U1937
		7	-40 – 10	-40 – 50	7	2	6	–	10 × 12	–	068U1917
		8	-40 – 10	-40 – 50	10.2	2.9	–	1/4	–	3/8 × 1/2	068U1938
		8	-40 – 10	-40 – 50	10.2	2.9	6	–	10 × 12	–	068U1918
		9	-40 – 10	-40 – 50	14	4	–	1/4	–	3/8 × 1/2	068U1939
		9	-40 – 10	-40 – 50	14	4	6	–	10 × 12	–	068U1919
TUB	R410A	1	-40 – 10	-40 – 50	1.34	0.38	–	–	–	1/4 × 1/2	068U1958
		2	-40 – 10	-40 – 50	1.7	0.48	–	–	–	1/4 × 1/2	068U1959
		3	-40 – 10	-40 – 50	2.1	0.60	–	–	–	1/4 × 1/2	068U1960
		4	-40 – 10	-40 – 50	4.1	1.2	–	–	–	1/4 × 1/2	068U1961
		5	-40 – 10	-40 – 50	5.3	1.5	–	–	–	1/4 × 1/2	068U1962
		6	-40 – 10	-40 – 50	8.5	2.4	–	–	–	1/4 × 1/2	068U1963
TUBE		7	-40 – 10	-40 – 50	11.2	3.2	–	1/4	–	3/8 × 1/2	068U1973
		8	-40 – 10	-40 – 50	15.8	4.5	–	1/4	–	3/8 × 1/2	068U1974
		9	-40 – 10	-40 – 50	23.1	6.6	–	1/4	–	3/8 × 1/2	068U1975

[1]) The rated capacity is based on:
Evaporating temperature: t_e = 4.4 °C / 40 °F
Condensing temperature: t_c = 38 °C / 100 °F
Liquid temperature: t_l = 37 °C / 98 °F
[2]) TUBE with orifice 0 and 9 and all TUB (internal pressure equalization) cannot be used for biflow operation.

For R407C plants, please select valves from the dedicated R407C program.

Technical data and ordering

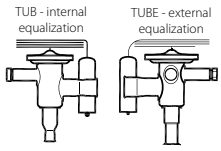

TUB / TUBE

Thermostatic element, angle way, with bulb strap

Type	Refrigerant	Orifice no. [2]	Range		Rated capacity $Q_{nom.}$ [1]		Ext. pressure equalization		Connection inlet × outlet		Code no.
			[°C]	[°F]	[kW]	[TR]	[mm]	[in]	[mm]	[in]	
TUB	R290	0	-40 – 10	-40 – 50	0.64	0.18	–	–	–	1/4 × 3/8	068U3701
		1	-40 – 10	-40 – 50	0.94	0.27	–	–	–	1/4 × 3/8	068U3702
TUBE		2	-40 – 10	-40 – 50	1.12	0.32	–	1/4	–	1/4 × 3/8	068U3703
		3	-40 – 10	-40 – 50	1.46	0.42	–	1/4	–	1/4 × 3/8	068U3704
		4	-40 – 10	-40 – 50	2.55	0.72	–	1/4	–	1/4 × 3/8	068U3705
		5	-40 – 10	-40 – 50	3.39	0.96	–	1/4	–	1/4 × 3/8	068U3706
		6	-40 – 10	-40 – 50	5.33	1.51	–	1/4	–	1/4 × 3/8	068U3707
		7	-40 – 10	-40 – 50	7.03	2	–	1/4	–	1/4 × 3/8	068U3708
		8	-40 – 10	-40 – 50	10.2	2.91	–	1/4	–	3/8 × 1/2	068U3709
		9	-40 – 10	-40 – 50	14.3	4.05	–	1/4	–	3/8 × 1/2	068U3710
TUB		0	-40 – 10	-40 – 50	0.64	0.18	–	–	6 × 12	–	068U3712
		1	-40 – 10	-40 – 50	0.94	0.27	–	–	6 × 12	–	068U3713
TUBE		2	-40 – 10	-40 – 50	1.12	0.32	6	–	6 × 12	–	068U3714
		3	-40 – 10	-40 – 50	1.46	0.42	6	–	6 × 12	–	068U3715
		4	-40 – 10	-40 – 50	2.55	0.72	6	–	6 × 12	–	068U3716
		5	-40 – 10	-40 – 50	3.39	0.96	6	–	6 × 12	–	068U3717
		6	-40 – 10	-40 – 50	5.33	1.51	6	–	6 × 12	–	068U3718
		7	-40 – 10	-40 – 50	7.03	2	6	–	6 × 12	–	068U3719
		8	-40 – 10	-40 – 50	10.2	2.91	6	–	10 × 12	–	068U3720
		9	-40 – 10	-40 – 50	14.3	4.05	6	–	10 × 12	–	068U3721
TUB		1	-40 – 10	-40 – 50	0.94	0.27	–	–	–	1/4 × 1/2	068U3731
		2	-40 – 10	-40 – 50	1.12	0.32	–	–	–	1/4 × 1/2	068U3732
		3	-40 – 10	-40 – 50	1.46	0.42	–	–	–	1/4 × 1/2	068U3733
		4	-40 – 10	-40 – 50	2.55	0.72	–	–	–	1/4 × 1/2	068U3735
TUBE		5	-40 – 10	-40 – 50	3.39	0.96	–	1/4	–	1/4 × 1/2	068U3734

[1]) The rated capacity is based on:
Evaporating temperature: t_e = 4.4 °C / 40 °F
Condensing temperature: t_c = 38 °C / 100 °F
Liquid temperature: t_l = 37 °C / 98 °F
[2]) TUBE with orifice 0 and 9 and all TUB (internal pressure equalization) cannot be used for biflow operation.

For R407C plants, please select valves from the dedicated R407C program.

Technical data and ordering

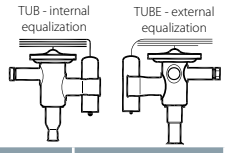

TUB / TUBE

Thermostatic element, angle way, with bulb strap

Type	Refrigerant	Orifice no. [2]	Range		Rated capacity $Q_{nom.}$ [1]		Ext. pressure equalization		Connection inlet × outlet		Code no.
			[°C]	[°F]	[kW]	[TR]	[mm]	[in]	[mm]	[in]	
TUB	R134a / R513A	0	-40 – 10	-40 – 50	0.42	0.12	–	–	–	1/4 × 1/2	068U2660
		1	-40 – 10	-40 – 50	0.61	0.17	–	–	–	1/4 × 1/2	068U2027
		1	-40 – 10	-40 – 50	0.61	0.17	–	–	6 × 12	–	068U2000
		2	-40 – 10	-40 – 50	0.72	0.20	–	–	–	1/4 × 1/2	068U2028
		2	-40 – 10	-40 – 50	0.72	0.20	–	–	6 × 12	–	068U2001
		3	-40 – 10	-40 – 50	0.95	0.27	–	–	–	1/4 × 1/2	068U2029
		3	-40 – 10	-40 – 50	0.95	0.27	–	–	6 × 12	–	068U2002
		4	-40 – 10	-40 – 50	1.6	0.46	–	–	–	1/4 × 1/2	068U2030
		4	-40 – 10	-40 – 50	1.6	0.46	–	–	6 × 12	–	068U2003
		5	-40 – 10	-40 – 50	2.1	0.61	–	–	–	1/4 × 1/2	068U2031
		5	-40 – 10	-40 – 50	2.1	0.61	–	–	6 × 12	-	068U2004
		6	-40 – 10	-40 – 50	3.4	0.95	–	–	–	1/4 × 1/2	068U2032
		6	-40 – 10	-40 – 50	3.4	0.95	–	–	6 × 12	–	068U2005
TUBE		1	-40 – 10	-40 – 50	0.61	0.17	6	–	6 × 12	–	068U2009
		2	-40 – 10	-40 – 50	0.72	0.20	6	–	6 × 12	–	068U2010
		3	-40 – 10	-40 – 50	0.95	0.27	–	1/4	–	1/4 × 1/2	068U2020
		3	-40 – 10	-40 – 50	0.95	0.27	6	–	6 × 12	–	068U2011
		4	-40 – 10	-40 – 50	1.6	0.46	–	1/4	–	1/4 × 1/2	068U2021
		4	-40 – 10	-40 – 50	1.6	0.46	6	–	6 × 12	–	068U2012
		5	-40 – 10	-40 – 50	2.1	0.61	–	1/4	–	1/4 × 1/2	068U2022
		5	-40 – 10	-40 – 50	2.1	0.61	6	–	6 × 12	–	068U2013
		6	-40 – 10	-40 – 50	3.4	0.95	–	1/4	–	1/4 × 1/2	068U2023
		6	-40 – 10	-40 – 50	3.4	0.95	6	–	6 × 12	–	068U2014
		7	-40 – 10	-40 – 50	4.4	1.3	–	1/4	–	3/8 × 1/2	068U2024
		7	-40 – 10	-40 – 50	4.4	1.3	6	–	10 × 12	–	068U2015
		8	-40 – 10	-40 – 50	6.5	1.9	–	1/4	–	3/8 × 1/2	068U2025
		8	-40 – 10	-40 – 50	6.5	1.9	6	–	10 × 12	–	068U2016
		9	-40 – 10	-40 – 50	9	2.6	–	1/4	–	3/8 × 1/2	068U2026
		9	-40 – 10	-40 – 50	9	2.6	6	–	10 × 12	–	068U2017
TUB	R404A / R507	1	-40 – 10	-40 – 50	0.71	0.20	–	–	–	1/4 × 1/2	068U2094
		1	-40 – 10	-40 – 50	0.71	0.20	–	–	6 × 12	–	068U2076
		2	-40 – 10	-40 – 50	0.87	0.25	–	–	–	1/4 × 1/2	068U2095
		2	-40 – 10	-40 – 50	0.87	0.25	–	–	6 × 12	–	068U2077
		3	-40 – 10	-40 – 50	1.1	0.32	–	–	–	1/4 × 1/2	068U2096
		3	-40 – 10	-40 – 50	1.1	0.32	–	–	6 × 12	–	068U2078
		4	-40 – 10	-40 – 50	2	0.57	–	–	–	1/4 × 1/2	068U2097
		4	-40 – 10	-40 – 50	2	0.57	–	–	6 × 12	–	068U2079
		5	-40 – 10	-40 – 50	2.7	0.76	–	–	–	1/4 × 1/2	068U2098
		5	-40 – 10	-40 – 50	2.7	0.76	–	–	6 × 12	–	068U2080
		6	-40 – 10	-40 – 50	4.2	1.2	–	–	–	1/4 × 1/2	068U2099
TUBE		1	-40 – 10	-40 – 50	0.71	0.20	–	1/4	–	1/4 × 1/2	068U2103
		2	-40 – 10	-40 – 50	0.87	0.25	–	1/4	–	1/4 × 1/2	068U2104
		2	-40 – 10	-40 – 50	0.87	0.25	6	–	6 × 12	–	068U2086
		3	-40 – 10	-40 – 50	1.1	0.32	–	1/4	–	1/4 × 1/2	068U2105
		3	-40 – 10	-40 – 50	1.1	0.32	6		6 × 12	–	068U2087
		4	-40 – 10	-40 – 50	2	0.57	–	1/4	–	1/4 × 1/2	068U2106
		4	-40 – 10	-40 – 50	2	0.57	6	–	6 × 12	–	068U2088
		5	-40 – 10	-40 – 50	2.7	0.76	–	1/4	–	1/4 × 1/2	068U2107
		5	-40 – 10	-40 – 50	2.7	0.76	6	–	6 × 12	–	068U2089
		6	-40 – 10	-40 – 50	4.2	1.2	–	1/4	–	1/4 × 1/2	068U2108
		6	-40 – 10	-40 – 50	4.2	1.2	6	–	6 × 12	–	068U2090
		7	-40 – 10	-40 – 50	5.6	1.6	–	1/4	–	3/8 × 1/2	068U2109
		7	-40 – 10	-40 – 50	5.6	1.6	6	–	10 × 12	–	068U2091
		8	-40 – 10	-40 – 50	8	2.3	–	1/4	–	3/8 × 1/2	068U2110
		8	-40 – 10	-40 – 50	8	2.3	6	–	10 × 12	–	068U2092
		9	-40 – 10	-40 – 50	11.3	3.2	–	1/4	–	3/8 × 1/2	068U2111
		9	-40 – 10	-40 – 50	11.3	3.2	6	–	10 × 12	–	068U2093

[1]) The rated capacity is based on:
Evaporating temperature, t_e = 4.4 °C / 40 °F
Liquid temperature, t_l = 37 °C / 98 °F
Condensing temperature, t_c = 38 °C / 100 °F
[2]) TUBE with orifice 0 and 9 and all TUB (internal pressure equalization) cannot be used for biflow operation.

Capillary tube: 0.8 m / 31 in



TCBE

Thermostatic element, Straight way, with bulb strap

Type	Refrigerant	Orifice no.	Range		MOP		Rated capacity $Q_{nom.}$ [1])		Pressure equalization		Connection inlet × outlet		Code no.
			[°C]	[°F]	[°C]	[°F]	[kW]	[TR]	[mm]	[in]	[mm]	[in]	
TCBE	R22 / R407C	1	-40 – 10	-40 – 50	–	–	18.3	5.2	–	1/4	–	1/2 × 5/8	068U4201
		1	-40 – 10	-40 – 50	15	60	18.3	5.2	–	1/4	–	3/8 × 5/8	068U4204
		1	-40 – 10	-40 – 50	15	60	18.3	5.2	–	1/4	–	1/2 × 5/8	068U4205
		1	-40 – 10	-40 – 50	15	60	18.3	5.2	6	–	12 × 16	–	068U4213
		2	-40 – 10	-40 – 50	–	–	21.2	6	–	1/4	–	1/2 × 5/8	068U4202
		3	-40 – 10	-40 – 50	15	60	26.7	7.6	–	1/4	–	1/2 × 5/8	068U4207
TCBE	R134a / R513A	1	-40 – 10	-40 – 50	–	–	13	3.7	–	1/4	–	1/2 × 5/8	068U4217
		2	-40 – 10	-40 – 50	–	–	14.9	4.3	–	1/4	–	1/2 × 5/8	068U4218
		3	-40 – 10	-40 – 50	–	–	18.6	5.3	–	1/4	–	1/2 × 5/8	068U4219
TCBE	R404A / R507	1	-40 – 10	-40 – 50	–	–	13	3.7	6	–	12 × 16	–	068U4225
		1	-40 – 10	-40 – 50	15	60	13	3.7	6	–	10 × 16	–	068U4244
		2	-40 – 10	-40 – 50	–	–	15.1	4.3	–	1/4	–	1/2 × 5/8	068U4234
		2	-40 – 10	-40 – 50	–	–	15.1	4.3	6	–	12 × 16	–	068U4226
		2	-40 – 10	-40 – 50	15	60	15.1	4.3	6	–	12 × 16	–	068U4246
		3	-40 – 10	-40 – 50	–	–	19.8	5.4	–	1/4	–	1/2 × 5/8	068U4235
		3	-40 – 10	-40 – 50	–	–	19.8	5.4	6	–	12 × 16	–	068U4231
		3	-40 – 10	-40 – 50	15	60	19.8	5.,4	6	–	12 × 16	–	068U4247
TCBE	R407C	1	-40 – 10	-40 – 50	–	–	17.8	5.1	–	1/4	–	1/2 × 5/8	068U4249
		1	-40 – 10	-40 – 50	15	60	17.8	5.1	–	1/4	–	1/2 × 5/8	068U4253
		1	-40 – 10	-40 – 50	–	–	17.8	5.1	6	–	10 × 16	–	068U4256
		1	-40 – 10	-40 – 50	–	–	17.8	5.1	6	–	12 × 16	–	068U4257
		1	-40 – 10	-40 – 50	15	60	17.8	5.1	6	–	10 × 16	–	068U4260
		1	-40 – 10	-40 – 50	15	60	17.8	5.1	6	–	12 × 16	–	068U4261
		2	-40 – 10	-40 – 50	–	–	20.4	5.8	–	1/4	–	1/2 × 5/8	068U4250
		2	-40 – 10	-40 – 50	15	60	20.4	5.8	–	1/4	–	1/2 × 5/8	068U4254
		2	-40 – 10	-40 – 50	–	–	20.4	5.8	6	–	12 × 16	–	068U4258
		2	-40 – 10	-40 – 50	15	60	20.4	5.8	6	–	12 × 16	–	068U4262
		3	-40 – 10	-40 – 50	–	–	25.2	7.2	–	1/4	–	1/2 × 5/8	068U4251
		3	-40 – 10	-40 – 50	–	–	25.2	7.2	6	–	12 × 16	–	068U4259
		3	-40 – 10	-40 – 50	15	60	25.2	7.2	6	–	12 × 16	–	068U4263
TCBE	R410A	1	-40 – 10	-40 – 50	–	–	21.2	6	–	1/4	–	3/8 × 5/8	068U4264
		1	-40 – 10	-40 – 50	–	–	21.2	6	–	1/4	–	1/2 × 5/8	068U4265
		1	-40 – 10	-40 – 50	–	–	21.2	6	6	–	12 × 16	–	068U4273
		2	-40 – 10	-40 – 50	–	–	24.5	7	–	1/4	–	1/2 × 5/8	068U4266
		2	-40 – 10	-40 – 50	15	60	24.5	7	–	1/4	–	1/2 × 5/8	068U4270
		2	-40 – 10	-40 – 50	–	–	24.5	7	6	–	12 × 16	–	068U4274
		3	-40 – 10	-40 – 50	–	–	30.6	8.7	–	1/4	–	1/2 × 5/8	068U4267
		3	-40 – 10	-40 – 50	–	–	30.6	8.7	6	–	12 × 16	–	068U4275
		3	-40 – 10	-40 – 50	15	60	30.6	8.7	6	–	12 × 16	–	068U4279
TCBE	R290	1	-40 – 10	-40 – 50	–	–	19.1	5.43	–	1/4	–	3/8 × 5/8	068U4383
		1	-40 – 10	-40 – 50	–	–	19.1	5.43	6	–	10 × 16	–	068U4386
		2	-40 – 10	-40 – 50	–	–	22.2	6.3	–	1/4	–	1/2 × 5/8	068U4384
		2	-40 – 10	-40 – 50	–	–	22.2	6.3	6	–	12 × 16	–	068U4387
		3	-40 – 10	-40 – 50	–	–	27.9	7.93	–	1/4	–	1/2 × 5/8	068U4385
		3	-40 – 10	-40 – 50	–	–	27.9	7.93	6	–	12 × 16	–	068U4388

[1]) The rated capacity is based on:
Evaporating temperature, t_e = 4.4 °C / 40 °F
Liquid temperature, t_l = 37 °C / 98 °F
Condensing temperature, t_c = 38 °C / 100 °F

Capillary tube: 0.8 m / 31 in

ETS 12C / ETS 24C / ETS 25C / ETS 50C / ETS 100C, Electric expansion valves

ETS Colibri® is an electric stepper motor valve. The valve has been designed for precise liquid injection into evaporators for air conditioning and refrigeration applications.
The valves are compact, lightweight and in-line design. The valves are compact, lightweight and in-line design includes a balanced cage and slider assembly operated by the direct driven motor technology.
This ensures solenoid tight shut-off in both flow directions, thus providing smooth operation of the system.
The valve incorporates a powerful bi-polar motor which precisely controls flow regulation.
ETS Colibri® valves are compatible with electronic control solutions from Danfoss and other manufacturers.

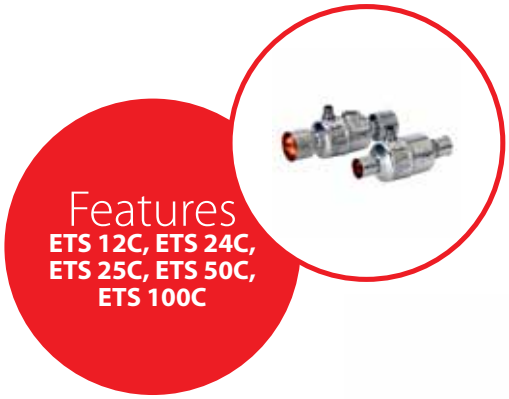

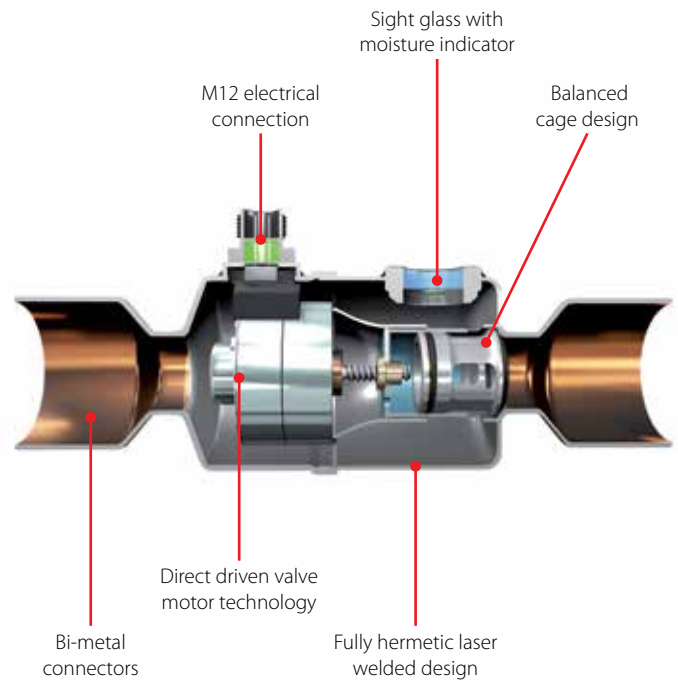

Facts

Applications:
- Air Conditioning
  - Chillers, heat pumps
  - Roof top and ducted split systems
  - VRF and other split systems
  - Close control cooling
- Refrigeration
  - Cold Rooms, Food retail and Transport
- Applicable to R410A, R404A, R507, R134a, R407A, R407B, R407C, R407F, R32, R290, R1234ze, R1234yf, R449A, R449B, R452A, R1270, R600, R600a, R22, R23, R227, R417A, R444B, R447A, R448A, R454B, R422A, R422D, R427A, R502, R513A, R413A, R438A, R450A, R455B, R454C, R454A, R452B, L40*)
  For a fully updated list of approved refrigerants, visit www.products.danfoss.com and search for individual code numbers, where refrigerants are listed as part of product specifications.
- Precise control of liquid injection
- Linear Flow characteristic
- Higher MOPD and MWP
- ETS Colibri® approvals: CE, REACH, UL, LLC CDC EURO TYSK, EAC, ATEX II 3G Ex nA T6 (applied for)
- Supports variety of refrigerants, approved for oil free applications
- Fast opening/closing time of 4 sec.
- Solenoid tight shut-off
- Sight glass / moisture indicator
- Compact, lightweight and in-line design
- Bi-metal connectors allows fast and improved brazing process
- Internal and external corrosion resistant
- Manufactured according to ISO/TS16949

**) R-number allocation by ASHRAE is pending*

Technical data and ordering

ETS Colibri®

Technical data

Refrigerant oil	POE, PVE, All mineral oils, ester oils and supports oil free
Complies with PED	Yes, Fluid group 1*) and group 2.
MOPD	40 bar / 580 psi
Max. working pressure PS/MWP	50 bar(g) / 725 psi(g)
Refrigerant temperature range (measured at the inlet of the valve)	-40 – 70 °C / -40 – 158 °F
Ambient temperature	-40 – 70 °C / -40 – 158 °F
Capacity control range	10% - 100% of total opening degree
Initial opening	5% = 30 full steps
Environmental transport / storage temperature and humidity	Max. +75 °C / 167 °F, Humidity: <100% RH
Material of construction	Body: Stainless Steel / Connector: Bimetal (stainless steel and copper)
Sightglass / moisture indicator	Type N moisture indicator

**) Variants with connector size 1-1/8 in. and smaller.*

Electrical data

Motor enclosure	IP67
Stepper motor type	Bi-polar - permanent magnet
Step mode	Microstepping (recommended), 2 phase full step or half step
Phase current	800 mA peak / 600 mA RMS
Holding current	No permanent holding current needed. Max. 20% permanent holding current allowed with refrigerant flow through valve. For optimal performance, driver should keep 100% current on coils 10ms after last step
Phase resistance	10 Ω ±10% at 20 °C / 68 °F
Inductance	14 mH ±25%
Duty cycle	100% possible, requiring refrigerant flow through valve. Less than 50% over 120 sec period recommended
Nominal Power consumption	7.44 W RMS at 20 °C (total, both coils)
Total number of full steps	600
Step rate	Current control driver: a. Step type: Microstep (1/4th or higher): 160 full steps/sec. recommended b. Step type: Full step or Half steps: 50 full steps/sec. recommended Emergency close : 250 full steps/sec. OEMs with 3rd party controller, please contact Danfoss.
Step translation	0.0167 mm / step
Full travel time	3.75 at 160 steps/sec
Opening stroke	10 mm / 0.4 in.
Reference position	Overdriving against the full close position
Overdriving performance	1% (6 full steps) Overdrive is recommended for optimum performance 628 steps in closing direction recommended for initialisation Overdriving in open position not recommended
Electrical connection	According to EN 61076-2-101
Compatible controllers / driver	Danfoss EKE 1A, EKE 1B, EKE 1C, MCX061V, MCX152V Certain third party controllers / drivers. Contact Danfoss for details

Technical data and ordering

ETS Colibri®



Ordering - Without sight glass

Type	K_v value	C_v value	Rated capacity [1]										Connection		Code no. single pack
			R410A		R407C		R1234ze		R134a		R290		ODF × ODF (A × B)		
	[m³/h]	[gpm]	[kW]	[TR]	[kW]	[TR]	[kW]	[TR]	[kW]	[TR]	[kW]	[TR]	[in]	[mm]	
ETS 12C	0.60	0.69	105	29.8	95.1	27.0	53.6	15.2	68.0	19.0	91.0	26.0	1/2 × 1/2	–	034G7500
	0.60	0.69	105	29.8	95.1	27.0	53.6	15.2	68.0	19.0	91.0	26.0	5/8 × 5/8	16 × 16	034G7501
	0.60	0.69	105	29.8	95.1	27.0	53.6	15.2	68.0	19.0	91.0	26.0	7/8 × 7/8	22 × 22	034G7502
ETS 24C	1.20	1.39	170	48.5	155	44.0	87.3	24.8	111	31.5	149	42.0	1/2 × 1/2	–	034G7900
	1.20	1.39	170	48.5	155	44.0	87.3	24.8	111	31.5	149	42.0	5/8 × 5/8	16 × 16	034G7901
	1.20	1.39	170	48.5	155	44.0	87.3	24.8	111	31.5	149	42.0	7/8 × 7/8	22 × 22	034G7902



Ordering - With sight glass

Type	K_v value	C_v value	Rated capacity [1]										Connection		Code no. single pack
			R410A		R407C		R1234ze		R134a		R290		ODF × ODF (A × B)		
	[m³/h]	[gpm]	[kW]	[TR]	[kW]	[TR]	[kW]	[TR]	[kW]	[TR]	[kW]	[TR]	[in]	[mm]	
ETS 25C	1.20	1.39	170	48.5	155	44.0	87.3	24.8	111	31.5	149	42.0	7/8 × 7/8	22 × 22	034G7602
ETS 50C	2.50	2.89	323	92.0	294	83.5	166	47.1	210	59.7	282	80.0	7/8 × 7/8	22 × 22	034G7700
	2.50	2.89	323	92.0	294	83.5	166	47.1	210	59.7	282	80.0	7/8 × 1 1/8	22 × 28	034G7701
	2.50	2.89	323	92.0	294	83.5	166	47.1	210	59.7	282	80.0	1 1/8 × 1 1/8	28 × 28	034G7702
	2.50	2.89	323	92.0	294	83.5	166	47.1	210	59.7	282	80.0	1 1/8 × 1 3/8	28 × 35	034G7703
ETS 100C	5.00	5.78	635	181	577	164	325	92.5	413	117	554	157	1 1/8 × 1 1/8	28 × 28	034G7800
	5.00	5.78	635	181	577	164	325	92.5	413	117	554	157	1 1/8 × 1 3/8	28 × 35	034G7801
	5.00	5.78	635	181	577	164	325	92.5	413	117	554	157	1 3/8 × 1 3/8	35 × 35	034G7802
	5.00	5.78	635	181	577	164	325	92.5	413	117	554	157	1 5/8 × 1 5/8	–	034G7803

[1]) The above estimated capacities, are based on the following conditions:
Evaporating temperature t_e: 5 °C / 40 °F
Liquid temperature t_l: 28 °C / 82 °F
Condensing temperature t_c: 32 °C / 90 °F.
Full stroke opening in normal flow direction.
Capacity is ± 10% in full open state in reverse flow direction.

Note: for fast and precise selection of valve, use Danfoss' CoolSelector2® software. You can download it from http://coolselector.danfoss.com

M12 angle cable

Specification

Jacket	PVC - black
Cable outer sheath	Oil - resistant
Water proof rating	IP 67
Operating temperature range	-40 – 80 °C
Wire type	Twisted pair, cross section 20 AWG / 0.5 mm²
Cable outer diameter	7.0 mm
Minimum bending radius	10 x cable diameter
Cable combustibility / test	Flame retardant / VW-1 / CSA FT - 1
M12 standard	EN 61076-2-101
Reference standard	UL style 2464 and DIN VDE 0812
LVD directive	2014/35/EU
Approval	CE, RoHS, UL, EAC, LLC CDC EURO TYSK



Ordering

Cable	Cable length (L)	Insulation	Packing format	Code no.
PVC - Black	2 m / 6.6 ft	SR-PVC	Single pack	034G7073
	8 m / 26.2 ft	SR-PVC	Single pack	034G7074

Caution: M12 angle cable is not approved for flammable applications.

Quick Selection Notes:

ETS 6, Electric expansion valve

ETS 6 are compact and lightweight electric expansion valves.
Bi-flow operation is possible for heat pump systems.
The valve operation is by means of a unipolar motor, which can be controlled by a number of controllers from Danfoss or third party vendors.

With a Danfoss EKE 1A, EKE 1B, EKE 1C and EIM 336 (current drivers) and an AKS sensor, an accuracy better than ± 0.5 K can be obtained.



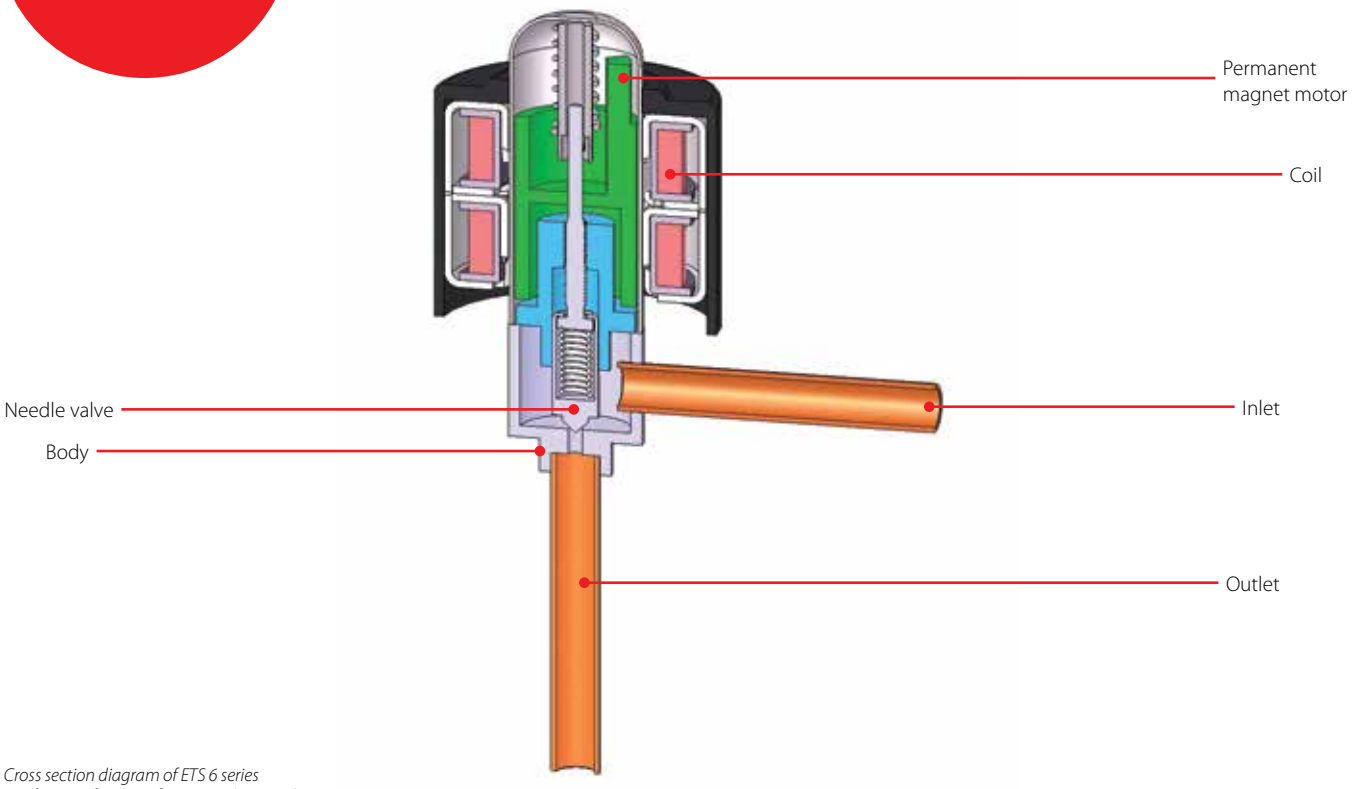

Cross section diagram of ETS 6 series
** Refers to refrigerant flow in cooling mode*

Facts

Applications:
- Heat pumps
- Modular air-cooled chillers
- VRF
- Multi split
- Inverter mini split
- Bus air conditioning
- IT cooling
- Applicable to R410A, R407C, R404A, R507, R134a, R22, R448A, R449A, R452A
  For a fully updated list of approved refrigerants, visit www.products.danfoss.com and search for individual code numbers, where refrigerants are listed as part of product specifications.

- Precision flow control
- Proven know-how and high reliability
- Power saving design that enables energy efficiency
- Compact and lightweight hermetic design with removable coil

- Bi-flow operation for reversible systems
- Controller: Danfoss supplies electronic controller EKE 1 Series, temperature sensors and transmitters

Technical data and ordering

ETS 6

Technical data

Maximum working pressure	47 bar / 681 psig
Refrigerant oil	All mineral oils and ester oils (to lubricate ETS 6 valve)
Ambient temperature	-30 – 70 °C / -22 – 158 °F
Fluid temperature	-30 – 70 °C / -22 – 158 °F
Durability	- Tested for 60 Million total pulses supplied to the valve during partially open valve, which is comparable to 150.000 cycles if the valve is operated between 100 to 300 pulses open - Tested for 30.000 full stroke cycles including 20 pulse overdrive at each closure
Ambient humidity	95% RH or less
Modulation	Permanent magnet type direct operating stepper motor
Excitation method	1 – 2 phase
Electrical connection	JST XHP-6 and JST XHP-5
Excitation speed	min 30 pps (pulses per second) to max. 90 pps, recommended 31.3 pps
Operating range	0 – 480 pulses, no holding power required (NOTE: do not apply more than 520 pulses)
Full motion transit time	e.g. 16 second at 30 pps, 6 second at 80 pps
Installation position Liquid line solenoid valve	With coil on the upper side and the valve / coil assembly within ±15° of the vertical axis. If a liquid line solenoid valve is used, it must be installed in such a way that it does not create liquid hammering in the ETS 6 valve.
Max. coil winding temperature	115 °C / 239 °F
Approvals	EAC, LLC CDC EURO TYSK, CE, UL, RoHS, CQC

ETS 6 - Valve excl. coil



Valve ordering

Type	Orifice no.	Nominal Capacity [kW]					Connection (solder)		Valve tube confi-guration	MWP	MOPD	Max. Reverse Pressure [1]	Flow direction charact.	Code no.
		R22	R134a	R404A / R507	R407C	R410A	A [mm]	B [mm]		[bar]	[bar]	[bar]		
ETS 6 – 08	08	1.5	1.2	1.1	1.6	1.8	6.35	7.94	90°	47	35	20	Bi-flow	034G5095
ETS 6 – 10	10	2.6	2	1.8	2.7	3.1	7.94	7.94	90°	47	35	35	Bi-flow	034G5005
ETS 6 – 14	14	5.8	4.5	4.1	5.9	6.8	7.94	7.94	90°	47	35	20	Bi-flow	034G5015
ETS 6 – 18	18	10.3	8.1	7.3	10.6	12.1	6.35	6.35	90°	47	35	28	Bi-flow	034G5026
ETS 6 – 25	25	19.6	15.3	13.8	20.1	23	7.94	7.94	90°	47	35	22	Bi-flow	034G5035
ETS 6 – 32	32	28.8	22.5	20.3	29.6	33.9	7.94	7.94	90°	47	28	12 [2]	Bi-flow	034G5055
ETS 6 – 40	40	39.1	30.6	27.6	40.2	46	7.94	7.94	90°	47	21	7	Bi-flow	034G5065

The Rated capacity is based on:
Evaporating temperature t_e: 5 °C, Condensing temperature t_c: 38 °C, Subcooling t_{sub}: 0 K, Superheat SH: 0 K
[1]) Max. Reverse Pressure = Pressure at which the valve can still close tightly in reverse direction.
[2]) Please contact Danfoss if higher maximum reverse pressure valve is required.

ETS 6 - Valve excl. coil

Valve ordering

Type	Orifice no.	Nominal Capacity [TR]					Connection (solder)		Valve tube confi-guration	MWP	MOPD	Max. Reverse Pressure [1]	Flow direction charact.	Code no.
		R22	R134a	R404A / R507	R407C	R410A	A [in]	B [in]		[psig]	[psig]	[psig]		
ETS 6 – 08	08	0.426	0.341	0.312	0.454	0.511	1/4	1/4	90°	681	507	290	Bi-flow	034G5095
ETS 6 – 10	10	0.74	0.57	0.51	0.77	0.88	5/16	5/16	90°	681	507	507	Bi-flow	034G5005
ETS 6 – 14	14	1.65	1.28	1.16	1.68	1.93	5/16	5/16	90°	681	507	290	Bi-flow	034G5015
ETS 6 – 18	18	2.93	2.30	2.07	3.01	3.44	1/4	1/4	90°	681	507	406	Bi-flow	034G5026
ETS 6 – 25	25	5.57	4.35	3.92	5.72	6.54	5/16	5/16	90°	681	507	319	Bi-flow	034G5035
ETS 6 – 32	32	8.19	6.40	5.77	8.42	9.64	5/16	5/16	90°	681	406	174	Bi-flow	034G5055
ETS 6 – 40	40	11.12	8.70	7.85	11.43	13.08	5/16	5/16	90°	681	305	101	Bi-flow	034G5065

The Rated capacity is based on:
Evaporating temperature t_e: 41 °F, Condensing temperature t_c: 100 °F, Subcooling t_{sub}: 32 °F, Superheat SH: 32 °F
[1]) Max. Reverse Pressure = Pressure at which the valve can still close tightly in reverse direction.
Please contact Danfoss if higher maximum reverse pressure valve is required.

Technical data and ordering

Coil for ETS 6



Ordering

Model No.	Voltage (current)	Enclosure	Insulation class	Cable length [m]	Connector	Code no.
Coil ordering for ETS 6, Single pack						
ETS 6 Coil	12 V DC (0.26A / phase)	IP66	Class "E" (UL Class 105 (A))	0.7	JST XHP-6	034G5105
				0.7	JST XHP-5	034G5115
				1.5	JST XHP-5	034G5145
				2.0	JST XHP 5 1	034G5185
				3.0	JST XHP-5	034G5135
				0.6	AMP UPC- 6	034G5175

Related products

Electronic control
Type EKE 1A, EKE 1B, EKE 1C and EIM 336 (current drivers)
Temperature sensors and pressure transmitters
Type AKS

Quick Selection Notes:

ETS 12.5 – ETS 400, Electric expansion valves

ETS 12.5 - ETS 400 are electric expansion valves for precise liquid injection in evaporators for air conditioning and refrigeration applications.
The valve piston and linear positioning design is fully balanced, providing bi-flow feature as well as solenoid tight shut function in both flow directions.

ETS valves are operated with a current or voltage driver such as Danfoss Controllers EKE 1A, EKE 1B, EKE 1C, MCX.



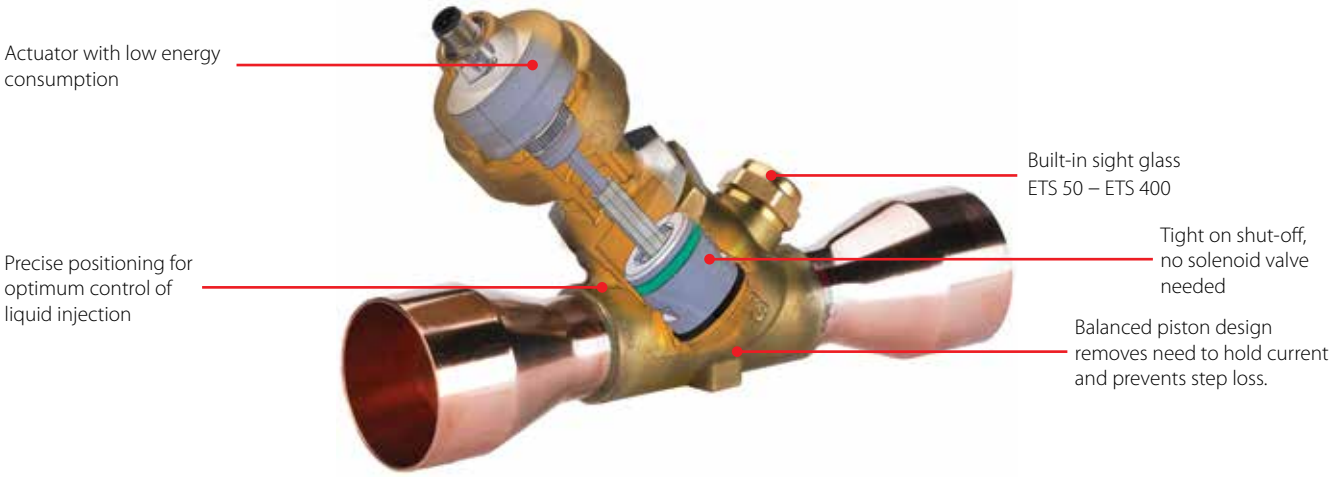

Facts

Applications:
- Heat pumps
- Refrigeration
- Air conditioning
- Chillers
- Applicable to R22, R134a, R404A, R407A, R407C, R407F, R422B, R422D, R438A, R448A, R449A, R450A, R452A, R507, R513A, R410A, R1234ze. Special ETS versions for systems with R744 (CO_2) are available.
  For a fully updated list of approved refrigerants, visit www.products.danfoss.com and search for individual code numbers, where refrigerants are listed as part of product specifications.
- Balanced design (ETS 12.5 – ETS 400) providing bi-flow operation as well as solenoid tight shut-off function in both flow directions
- Lower energy consumption
- ETS 50 and ETS 100 feature improved process and productivity due to waterless brazing i.e. soldering without wet cloth for cooling
- ETS 50 to ETS 400 are all designed with built-in sight glass with moisture indicator
- Internal and external corrosion resistant design
- Precise positioning for optimum control of liquid injection
- ETS 12.5, ETS 25, ETS 50, ETS 100 provide working pressure of 45.5 bar / 660 psig and ETS 250, ETS 400 provide 34 bar / 493 psig
- EKE 1 Series and MCX are examples of Danfoss controllers with drivers matching ETS requirements
- Equipped with M12 connector for cable connection (cable and connector assemblies as accessories)
- Approvals: CE, REACH, LLC CDC EURO TYSK, EAC

Technical data and ordering

ETS 12.5 – ETS 400

Technical data

Refrigerant oil	All mineral oils and ester oils Full life time of ETS can only be ensured if oil is present in the system
PED compliance	Yes
MOPD normal flow	33 bar / 479 psig
MOPD reverse flow	ETS 12.5, ETS 25, ETS 50, ETS 100: 33 bar / 479 psig ETS 250, ETS 400: 10 bar / 145 psig
Max. working pressure (PS / MWP)	ETS 12.5, ETS 25, ETS 50, ETS 100: 45.5 bar / 660 psig ETS 250, ETS 400: 34 bar / 493 psig
Refrigerant temperature range	-40 – 65 °C / -40 – 150 °F
Ambient temperature	-40 – 60 °C / -40 – 150 °F
Material of construction	ETS 50, ETS 100: Body and AST enclosure in brass, connections in bi-metal (stainless steel / copper) ETS 12.5, ETS 250, ETS 400: Body and AST enclosure in brass, connections in copper

ETS 12.5 – ETS 400

Electrical data

Motor enclosure	IP67	
Stepper motor type	Bi-polar - permanent magnet	
Step mode	2 phase full step	
Phase resistance	52 Ω ±10%	
Phase inductance	85 mH	
Holding current	Depends on application. Full current allowed (100% duty cycle)	
Step angle	7.5° (motor) 0.9° (lead screw) Gearing ratio 8.5:1	
Nominal voltage	(Constant voltage drive) 12 V DC -4% / 15%, 150 steps / second	
Phase current	(Using chopper drive) 100 mA RMS -4% / 15%	
Max. total power	Voltage / current drive: 5.5 / 1.3 W (UL: NEC class 2)	
Step rate	150 steps / sec (constant voltage drive) 0-300 steps / sec 300 recommended (chopper current drive)	
Total steps	ETS 12.5, ETS 25, ETS 50 ETS 100 ETS 250, ETS 400	2625 (160 / 0) steps 3530 (160 / 0) steps 3810 (160 / 0) steps
Full travel time	ETS 12.5, ETS 25, ETS 50 ETS 100 ETS 250 and ETS 400	17 / 8.5 seconds (voltage / current) 23 / 11.5 seconds (voltage / current) 25.4 / 12.7 seconds (voltage / current)
Lifting height	ETS 12.5, ETS 25, ETS 50 ETS 100 ETS 250 and ETS 400	13 mm / 0.5 in 16 mm / 0.63 in 17.2 mm / 0.68 in
Reference position	Overdriving against the full close position	
Electrical connection	M12 connector	
Compatible controller/driver	Danfoss EKE 1A, EKE 1B, EKE 1C, MCX Certain third party controllers / drivers. Contact Danfoss for details	

Technical data and ordering

ETS 12.5 / ETS 25 - Valve included actuator (without sight glass)

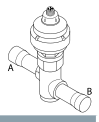

Ordering

Type	Rated capacity [1]										Connection		
	R410A		R407C		R22		R134a		R404A		ODF × ODF (A × B)		Code no.
	[kW]	[TR]	[kW]	[TR]	[kW]	[TR]	[kW]	[TR]	[kW]	[TR]	[in]	[mm]	
Straightway, Single pack													
ETS 12.5	70	20	63	18	57	16	45	13	43	12	1/2 × 1/2	–	034G4209
	70	20	63	18	57	16	45	13	43	12	–	12 × 12	034G4208
	70	20	63	18	57	16	45	13	43	12	5/8 × 5/8	16 × 16	034G4210
	70	20	63	18	57	16	45	13	43	12	7/8 × 7/8	22 × 22	034G4211
ETS 25	144	41	129	37	117	34	93	27	88	25	1/2 × 1/2	–	034G4201
	144	41	129	37	117	34	93	27	88	25	–	12 × 12	034G4200
	144	41	129	37	117	34	93	27	88	25	5/8 × 5/8	16 × 16	034G4202
	144	41	129	37	117	34	93	27	88	25	7/8 × 7/8	22 × 22	034G4203
Angleway, Single pack													
ETS 12.5	70	20	63	18	57	16	45	13	43	12	1/2 × 1/2	–	034G4213
	70	20	63	18	57	16	45	13	43	12	–	12 × 12	034G4212
	70	20	63	18	57	16	45	13	43	12	5/8 × 5/8	16 × 16	034G4214
	70	20	63	18	57	16	45	13	43	12	7/8 × 7/8	22 × 22	034G4215
ETS 25	144	41	129	37	117	34	93	27	88	25	1/2 × 1/2	–	034G4205
	144	41	129	37	117	34	93	27	88	25	–	12 × 12	034G4204
	144	41	129	37	117	34	93	27	88	25	5/8 × 5/8	16 × 16	034G4206
	144	41	129	37	117	34	93	27	88	25	7/8 × 7/8	22 × 22	034G4207

[1]) The rated capacity is based on:
Evaporating temperature t_e: 5 °C / 41 °F
Liquid temperature t_l: 28 °C / 82 °F
Condensing temperature t_c: 32 °C / 90 °F
Full stroke opening in normal flow direction.

ETS 50 / ETS 100 - Valve included actuator (with sight glass)

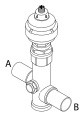

Ordering

Type	Rated capacity [1]										Connection		
	R410A		R407C		R22		R134a		R404A		ODF × ODF (A × B)		Code no.
	[kW]	[TR]	[kW]	[TR]	[kW]	[TR]	[kW]	[TR]	[kW]	[TR]	[in]	[mm]	Single pack
ETS 50	262	75	240	69	215	62	170	48	161	46	7/8 × 7/8	22 × 22	034G1708
	262	75	240	69	215	62	170	48	161	46	7/8 × 1 1/8	22 × 28	034G1705
	262	75	240	69	215	62	170	48	161	46	1 1/8 × 1 1/8	28 × 28	034G1706
	262	75	240	69	215	62	170	48	161	46	1 1/8 × 1 3/8	28 × 35	034G1704
ETS 100	488	140	447	128	400	115	316	91	300	86	1 1/8 × 1 1/8	28 × 28	034G0507
	488	140	447	128	400	115	316	91	300	86	1 1/8 × 1 3/8	28 × 35	034G0501
	488	140	447	128	400	115	316	91	300	86	1 3/8 × 1 3/8	35 × 35	034G0508
	488	140	447	128	400	115	316	91	300	86	1 5/8 × 1 5/8	–	034G0505

[1]) The rated capacity is based on:
Evaporating temperature t_e: 5 °C / 41 °F5
Liquid temperature t_l: 28 °C / 82 °F
Condensing temperature t_c: 32 °C / 90 °F
Full stroke opening in normal flow direction.

ETS 250 / ETS 400 - Valve included actuator (with sight glass)

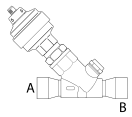

Ordering

Type	Rated capacity [1]								Connection		
	R407C		R22		R134a		R404A		ODF × ODF (A × B)		Code no.
	[kW]	[TR]	[kW]	[TR]	[kW]	[TR]	[kW]	[TR]	[in]	[mm]	Single pack
ETS 250	1212	349	1106	319	874	252	828	239	1 1/8 × 1 1/8	28 × 28	034G2600
	1212	349	1106	319	874	252	828	239	1 3/8 × 1 3/8	35 × 35	034G2601
	1212	349	1106	319	874	252	828	239	1 5/8 × 1 5/8	–	034G2602
	1212	349	1106	319	874	252	828	239	–	42 × 42	034G2611
ETS 400	1933	556	1764	509	1394	402	1320	381	1 5/8 × 1 5/8	–	034G3500
	1933	556	1764	509	1394	402	1320	381	2 1/8 × 2 1/8	54 × 54	034G3501

[1]) The rated capacity is based on:
Evaporating temperature t_e: 5 °C / 41 °F
Liquid temperature t_l: 28 °C / 82 °F
Condensing temperature t_c: 32 °C / 90 °F
Full stroke opening in normal flow direction.

Technical data and ordering



Ordering

Cable	Cable length (L)	Insulation	Packing format	Code no.
PVC - Black	2 m / 6.6 ft	SR-PVC	Single pack	034G7073
	8 m / 26.2 ft	SR-PVC	Single pack	034G7074

Caution: M12 angle cable is not approved for flammable applications.

M12 angle cable

Specification

Jacket	PVC - black
Cable outer sheath	Oil - resistant
Water proof rating	IP 67
Operating temperature range	-40 – 80 °C
Wire type	Twisted pair, cross section 20 AWG / 0.5 mm²
Cable outer diameter	7.0 mm
Minimum bending radius	10 x cable diameter
Cable combustibility / test	Flame retardant / VW-1 / CSA FT - 1
M12 standard	EN 61076-2-101
Reference standard	UL style 2464 and DIN VDE 0812
LVD directive	2014/35/EU
Approval	CE, RoHS, UL, EAC, LLC CDC EURO TYSK

Accessory

Type	Description	Type designation	Code no. single pack
AST-G service driver	Hand held driver for installation and servicing.	AST-G driver	034G0013

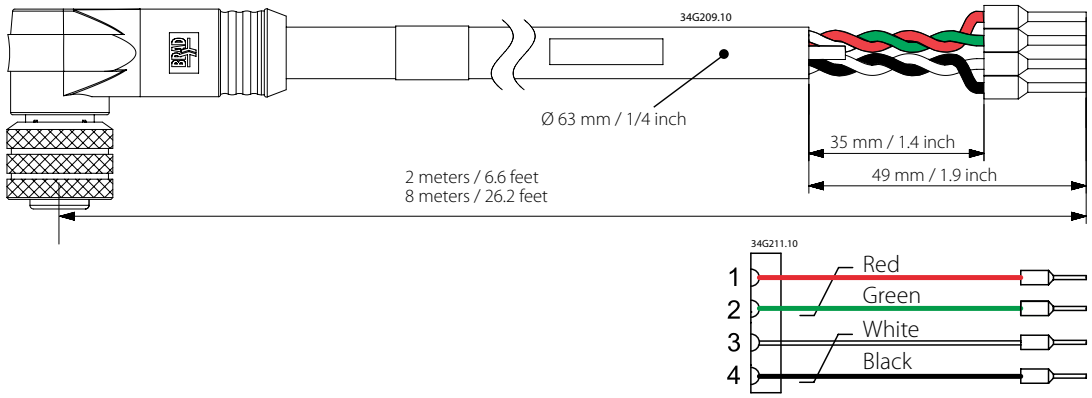

Related products

Electronic control
Type EKE 1A, EKE 1B, EKE 1C or MCX
Temperature sensors and pressure transmitters
Type AKS

CCM, Electric expansion valve

CCM are electric expansion valves designed specifically for operation in R744 (CO_2) systems with working pressures of up to 90 bar / 1305 psig and an MOPD up to 50 bar / 725 psig.
CCM functions both as an expansion valve, and as a gas bypass valve with back-pressure regulation in subcritical applications.

The pressure rating allows for operation in environments where system standby capability is required without the need for auxiliary cooling systems during servicing or power outages.

Features
CCM



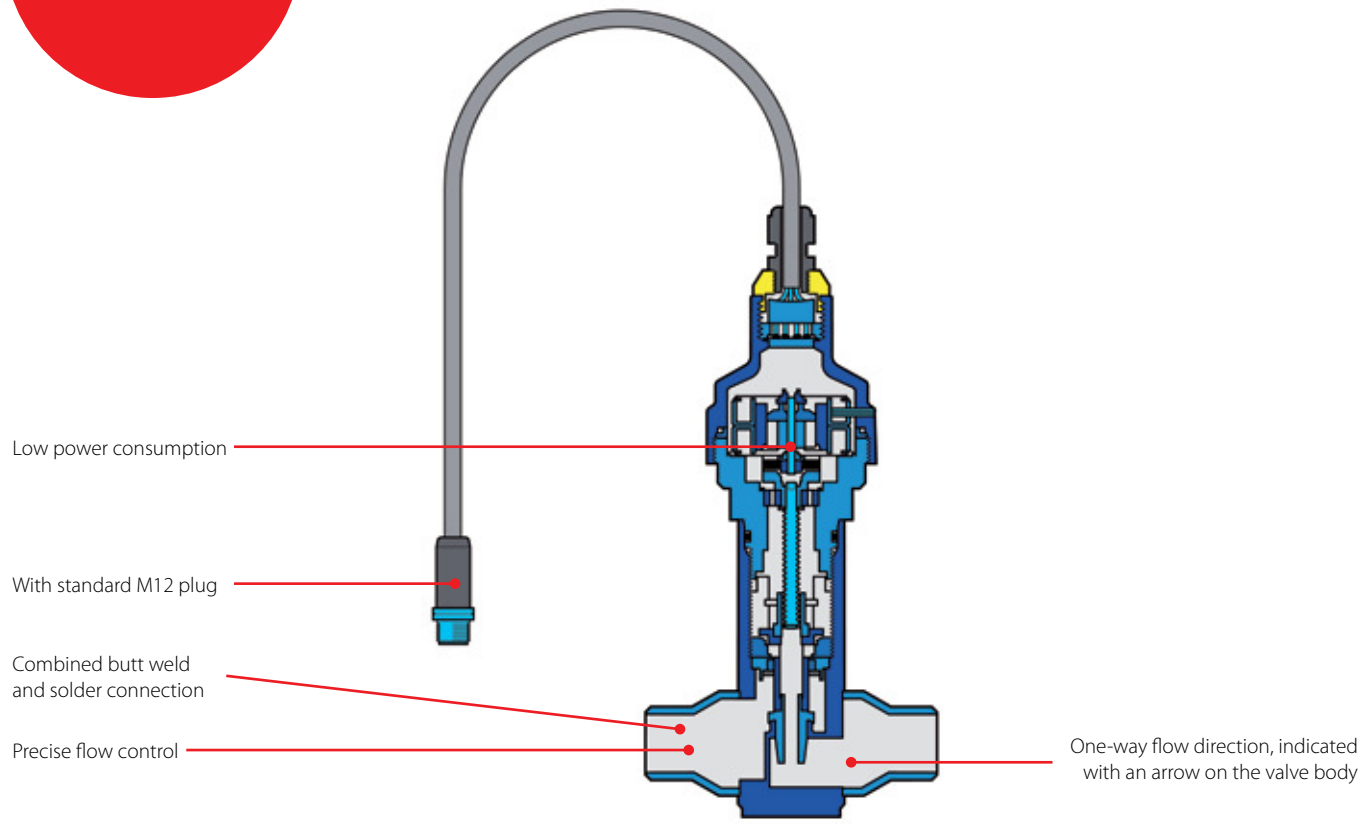

Facts

Application:
- Gas bypass in a transcritical R744 booster system
- Expansion valve for R744

- Up to 90 bar / 1305 psig working pressure to accommodate R744 system pressures during standstill conditions
- Precise positioning for optimal control of intermediate pressures in transcritical R744 systems or liquid injection in heat exchangers
- MOPD up to 50 bar / 725 psig

- Combined stainless steel butt weld / solder connections for installation in copper piped systems (K65 alloy or standard) as well as steel piped systems
- Standard M12 connector for simple and flexible connection to the motor driver
- For manual operation and service of the CCM, an AST-g service driver is available
- UL recognised

Technical data and ordering

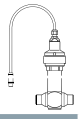

CCM

Technical data

Parameter	CCM
Compatibility	R744 (CO_2)
MOPD	50 bar / 725 psig
Max. working pressure (PS / MWP)	90 bar / 1305 psig
Refrigerant temperature range	-40 – 60 °C / -40 – 140 °F
Ambient temperature	-40 – 60 °C / -40 – 140 °F
Material specification	Stainless steel

CCM

Electrical data

Parameter	CCM
Motor enclosure	IP67
Stepper motor type	Bi-polar - permanent magnet
Step mode	2 phase full step
Phase resistance	52 Ω ± 10%
Phase inductance	85 mH
Holding current	Depends on application Full current allowed (100% duty cycle)
Step angle	7.5° (motor) 0.9° (lead screw) Gearing ratio 8.5:1
Nominal voltage	(Constant voltage drive) 12 V DC -4% / 15%, 150 steps / second
Phase current	(Using chopper drive) 100 mA RMS -4% / 15%
Max. total power	Voltage / current drive: 5.5 / 1.3 W (UL: NEC class 2)
Step rate	150 steps / second. (constant voltage drive) 0–300 steps / second. 300 recommended (chopper current drive)
Total steps	CCM 10, CCM 20, CCM 30 2625 (160 / 0) steps CCM 40 3530 (160 / 0) steps
Full travel time	CCM 10, CCM 20, CCM 30 17 / 8.5 second. (voltage / current) CCM 40 23 / 11.5 second. (voltage / current)
Lifting height	CCM 10, CCM 20, CCM 30 13 mm / 0.51 in CCM 40 16 mm / 0.63 in
Reference position	Overdriving against the full close position
Electrical connection	4 wire 0.5 mm² / 20 AWG, 0.3 m / 12 in long cable
Total stroke	13 mm / 16 mm / 0.51 in / 0.63 in

Stepper motor switch sequence:

CCM				Connector
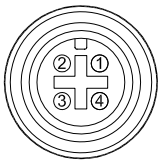	4	Black	4	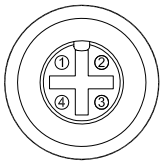
	3	White	3	
	2	Green	2	
	1	Red	1	
	Connection 1	Wire colour	Connection 2	
		Pin out		

Stepper motor switch sequence:

	STEP	Coil I		Coil II		
		Red	Green	White	Black	
	1	+	–	+	–	
↑ CLOSING ↑	2	+	–	–	+	↓ OPENING ↓
	3	–	+	–	+	
	4	–	+	+	–	
	1	+	–	+	–	

Technical data and ordering

Valve included actuator

Ordering

Type	Connections (Combi)		K_v value [2] [m^3/h]	C_v value [2] [gpm]	Code no. single pack
	Weld [1] [in]	Solder ODF × ODF [in]			
CCM 10	1/2 × 1/2	5/8 × 5/8	0.7	0.81	027H7188
CCM 20	3/4 × 3/4	7/8 × 7/8	1.6	1.87	027H7187
CCM 30	1 × 1	1 1/8 × 1 1/8	2.4	2.78	027H7186
CCM 40	1 × 1	1 1/8 × 1 1/8	4.2	4.87	027H7185

[1]) OD according to EN 10220.
[2]) The K_v / C_v value is the water flow in [m^3/h] / [gpm] at a pressure drop across the valve of 1 bar. p = 1000 kg/m^3 / 62.4 lb/ft^3.

Accessories

Type	Description	Code no.
M12 Cable	Cable with M12 connector - 2 m / 6.6 ft, Insulation - SR-PVC	034G7073
	Cable with M12 connector - 8 m / 26.2 ft, Insulation - SR-PVC	034G7074
AST-G	Manual valve driver for service	034G0013

Spare parts

Type	Description	Code no.
AST	Actuator for CCM R744 valve	027H7184
	O-ring spare part kit for CCM / CCMT (2 O-rings)	027H7230

Related products

Electronic control
Type EKE 1-series (EKE 1A, EKE 1B and EKE 1C)
Temperature sensors and pressure transmitters
Type AKS

Quick Selection Notes:

CCMT, Electric expansion valve

CCMT are electric expansion valves designed specifically for operation in R744 (CO_2) systems. CCMT is used as an expansion valve, as a pressure regulator for the gas cooler or as a gas bypass valve with back-pressure regulation in transcritical or subcritical applications.

Designed for R744 systems with maximum working pressure of 140 bar / 2031 psig.
Applicable to R744 (CO_2) and other common refrigerants.
CCMT is compatible with oil types PAG, POE and PVE.



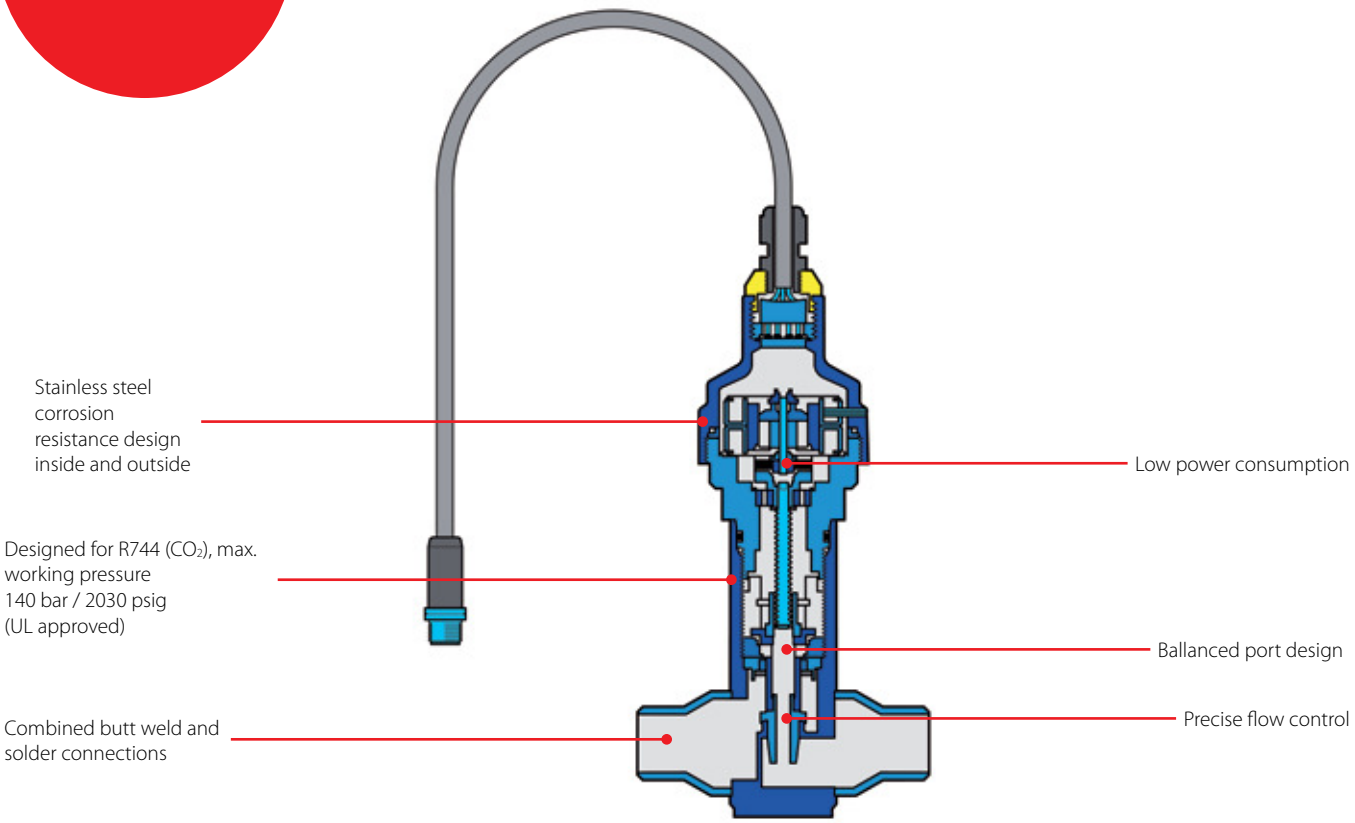

Facts

Application:
- High pressure valve
- Gas bypass in a transcritical R744 booster system
- Liquid expansion for R744, R744 cascades or R744 evaporators

- Designed for R744 systems with maximum working pressure of 140 bar
- UL approved
- Applicable to R744 and other common refrigerants. The CCMT is compatible with the oil types PAG, POE and PVE
- Regulating cone ensures optimum regulating accuracy, particularly at part load
- Patented cone and balance design
- The PEEK seat provides excellent valve tightness and robustness
- Combined butt weld and sold connections

- Top part with built-in strainer
- MOPD up to 90 bar / 1305 psi
- Standard M12 connector for simple and flexible connection to the motor drive
- Low weight and compact design
- Easy to service
- Insert easily taken out by removing top part
- For manual operation and service of the CCMT an AST-g service driver is available

Technical data and ordering

CCMT

Technical data

Parameter	CCMT
Compatibility	R744 (CO_2) and other refrigerants Not applicable for flammable refrigerants and Ammonia
MOPD	90 bar / 1305 psig
Max. working pressure (PS / MWP)	140 bar / 2030 psig
Refrigerant temperature range	-40 – 60 °C / -40 – 140 °F
Ambient temperature	-40 – 60 °C / -40 – 140 °F
PED compliance	Fluid group II / Article 4, Paragraph 3
Material specification	Stainless steel
Step rate	max. 150 steps / second (constant voltage drive) max. 300 steps / second (chopper current drive)
Total steps	CCMT 2, CCMT 4, CCMT 8: 1100 steps
Full travel time	CCMT 2, CCMT 4, CCMT 8: 5 second at 220 steps / second
Reference position	Overdriving against the full close position
Approval	CE, UL, RoHS

CCMT

Electrical data

Parameter	CCMT
Stepper motor type	Bi-polar - permanent magnet
Motor enclosure	IP67
Step mode	2 phase full step
Phase resistance	52 Ω ± 10%
Phase inductance	85 mH
Holding current	Voltage driver: Depends on application Current controller: Full current allowed
Nominal voltage	(Constant voltage drive) 12 V DC -4% / 15%, 150 steps / second
Phase current	(Using chopper drive) 100 mA RMS -4% / 15%
Max. total power	Voltage / current drive: 5.5 / 1.3 W (UL: NEC class 2)
Electrical connection	4 wire 0.5 mm², 0.3 m / 1 ft long cable

Stepper motor switch sequence:

CCMT				Connector
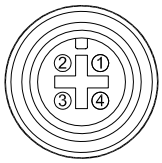	4	Black	4	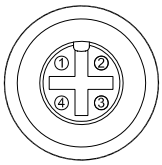
	3	White	3	
	2	Green	2	
	1	Red	1	
	Connection 1	Wire colour	Connection 2	
		Pin out		

Stepper motor switch sequence:

	STEP	Coil I		Coil II		
		Red	Green	White	Black	
	1	+	–	+	–	
↑ CLOSING ↑	2	+	–	–	+	↓ OPENING ↓
	3	–	+	–	+	
	4	–	+	+	–	
	1	+	–	+	–	

Technical data and ordering

Valve incl. actuator

Ordering

Type	Connections (Combi)		K_V value [2] [m^3/h]	C_V value [2] [gpm]	Max. working pressure		Code no.
	Weld [1] [in]	Solder ODF × ODF [in]			[bar]	[psig]	
Standard							
CCMT 2	1/2 × 1/2	5/8 × 5/8	0.17	0.20	140	2030	027H7200
CCMT 4	1/2 × 1/2	5/8 × 5/8	0.45	0.52	140	2030	027H7201
CCMT 8	1/2 × 1/2	5/8 × 5/8	0.80	0.93	140	2030	027H7202

[1]) OD according to EN 10220.
[2]) The K_V / C_V value is the water flow in [m^3/h] / [gpm] at a pressure drop across the valve of 1 bar. p = 1000 kg/m^3 / 62.4 lb/ft^3.

Accessories

Type	Description	Code no.
M12 Cable	Cable with M12 connector - 2 m / 6.6 ft, Insulation - SR-PVC	034G7073
	Cable with M12 connector - 8 m / 26.2 ft, Insulation - SR-PVC	034G7074
AST-G	Manual valve driver for service	034G0013
EKE 1A	Superheat controller / driver	080G5300
EKE 1B	Superheat controller / driver	080G5350
EKE 1C	Superheat controller / driver	080G5400
MMIGRS2	Remote display for EKE 1 series	080G0294

Spareparts

Type	Description	Code no.
Gasket	O-ring spare part kit for CCM / CCMT (2 O-rings)	027H7230

Related products

Electronic control
Type EKE 1-series (EKE 1A, EKE 1B and EKE 1C)
Temperature sensors and pressure transmitters
Type AKS

Quick Selection Notes:

CTM, Multi Ejector Solution™ for R744 (CO_2)

Danfoss Multi Ejector makes CO_2 refrigeration systems economically competitive with the HFC systems at all ambient temperatures by improving COP in comparison to standard booster and parallel compressor systems.

Multi Ejector can be installed in any climate delivering lower energy consumption than i.e. R404A. It removes the CO_2 equator entirely.

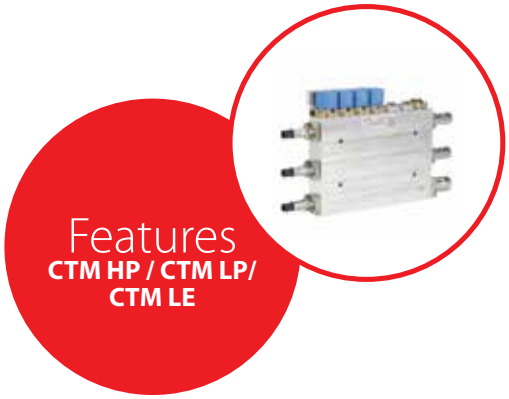

Features
CTM HP / CTM LP/ CTM LE

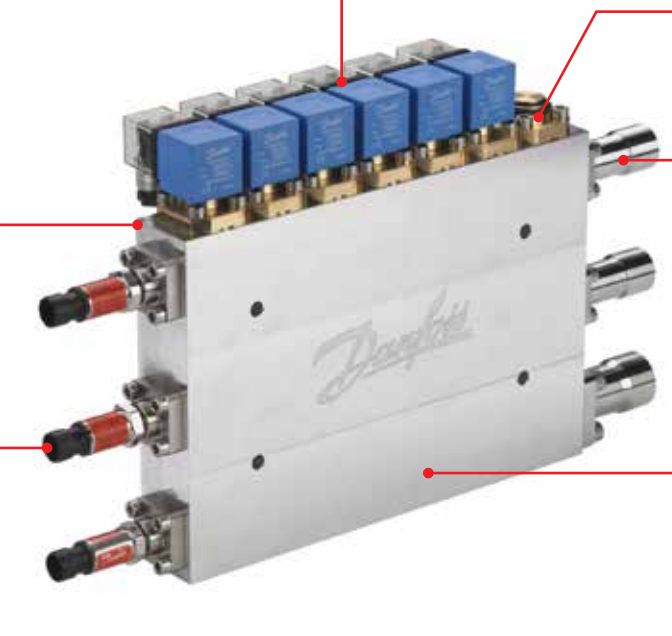

Facts

- Multi Ejector types:
  - CTM 6 HP for CO_2 systems with parallel compression to lift a part of the gas from MT suction and mix it with the gas coming from the gas cooler at medium pressure level
  - CTM 6 LP for CO_2 booster systems to lift a part of the gas from MT suction and mix it with the gas coming from the gas cooler at medium pressure level
  - CTM 1 and CTM 2 Liquid Ejector for CO_2 booster and parallel compression systems to pump the CO_2 liquid from the low point in the suction accumulator back to the receiver resulting even in 5 bar pressure lift after mixing with gas coming from the gas cooler
- Lower first cost compared to standard booster and parallel compression systems due to lower swept volume of compressors (i.e. smaller compressors or less number of compressors).
- CTM 6 HP and LP enables 15 – 35% savings on compressor swept volume, compared to booster systems without Multi Ejector systems
- CTM 1 – 2 Liquid Ejectors enables 5 – 10% savings on compressor swept volume, compared to standard booster systems
- Improved COP, enhanced operation of parallel compressors and/or lower swept volume to the MT compressors, resulting in lower energy consumption
- Less compressors and higher efficiency on the systems, leads to shorter payback time
- Fully integrated solution not requiring any additional components like check valves or motorized ball valves
- Fully serviceable - wide range of spare parts and accessories.
- The combination of Multi Ejector and the AK-PC 782A ensure an easy setup and commissioning, robust control of the system that ensures many years of problem free operation.
- CE (PED) approved and UL Recognized
- Maximum working pressure: 140 bar / 2031 psi

Technical data and ordering

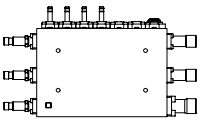
CTM 6 HP 1875

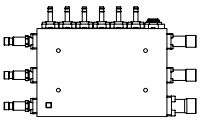
CTM 6 HP 3875

Multi Ejector CTM 6 HP (High Pressure)

Ordering

Type	Capacity - Mass flow [1] [kg/h]	Capacity - Mass flow [2] [lb/h]	Code no. Single pack
CTM 6 HP 1875	1875	4134	032F5673
CTM 6 HP 3875	3875	8543	032F5674

[1] R744 at 90 bar / 35 °C
[2] R744 at 1305 psi /95 °F
(HP = High Pressure lift)
(The above code numbers are without coils which should be ordered separately – see coil ordering below).

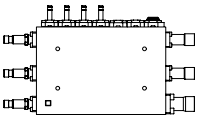
CTM 6 LP 935

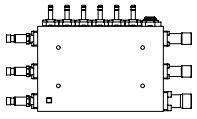
CTM 6 LP 1935

Multi Ejector CTM 6 LP (Low Pressure)

Ordering

Type	Capacity - Mass flow [1] [kg/h]	Capacity - Mass flow [2] [lb/h]	Code no. Single pack
CTM 6 LP 935	935	2061	032F5678
CTM 6 LP 1935	1935	4266	032F5679

[1] R744 at 90 bar / 35 °C
[2] R744 at 1305 psi /95 °F
(LP = Low Pressure lift)
(The above code numbers are without coils which should be ordered separately – see coil ordering below).

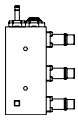
CTM 1

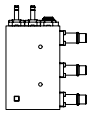
CTM 2

Multi Ejector CTM 1 and CTM 2 LE (Liquid Ejector)

Ordering

Type	Capacity - Mass flow [1] [kg/h]	Capacity - Mass flow [2] [lb/h]	Code no. Single pack
CTM 1 LE 200	200	441	032F5683
CTM 1 LE 400	400	882	032F5684
CTM 2 LE 600	600	1323	032F5685

[1] R744 at 90 bar / 35 °C
[2] R744 at 1305 psi /95 °F
(LE = Liquid Ejector)
(The above code numbers are without coils which should be ordered separately – see coil ordering below).

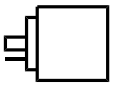

Coils

Ordering

Type	Voltage	Frequency / Power consumption				Code no. Single pack
	[V]	[Hz]	[W]	[Hz]	[W]	with DIN plug [1]
AS230CS	230	50	8	60	7	042N7601
AZ120CS	110 - 120	50	8.5	60	7	042N4202

[1] The three pins on the coil can be fitted with spade tabs, 6.3 mm wide (to DIN 46247). The two current carrying pins can also be fitted with spade tabs, 4.8 mm wide.
Max. lead cross section: 1.5 mm².

Voltage variation: V AC -15% - 10%,
If DIN plug is used (DIN 43650) the leads must be connected in the socket. The socket is fitted with a Pg 11 screwed entry for 6 – 12 mm.

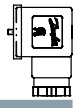

Accessories

Ordering

Type	Voltage [V]	Frequency [Hz]	Code no. Single pack
DIN plug (LED)	230	50 / 60	042N0265 [2]
DIN plug	Max. 250	50 / 60	042N0156

[1] Only for AS230CS.

Spare parts

Please refer to the Data Sheet where you will find list of Spare Parts - individual ejectors, strainer, o-rongs, connectors.

AKV 10P / AKV 10PS, Electric expansion valves

AKV 10P and AKV10PS are electric operated expansion valves designed for refrigerating plants.
The AKV 10P and AKV 10PS valves are normally controlled by a controller from Danfoss range of ADAP- KOOL® controllers, that ensures a precise liquid injection into evaporators.

AKV 10P and AKV10PS valves are fully serviceable valves and are supplied as a parts programme with separate valve body and coil (with terminal box, cable or DIN plug).

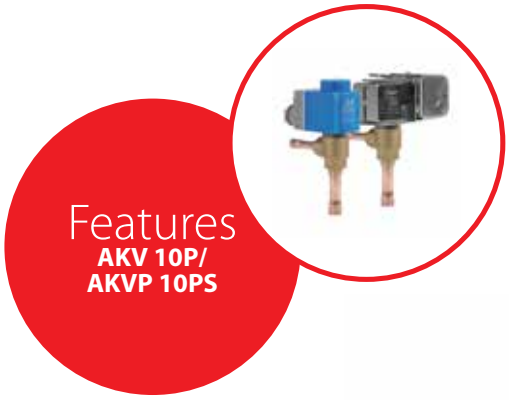

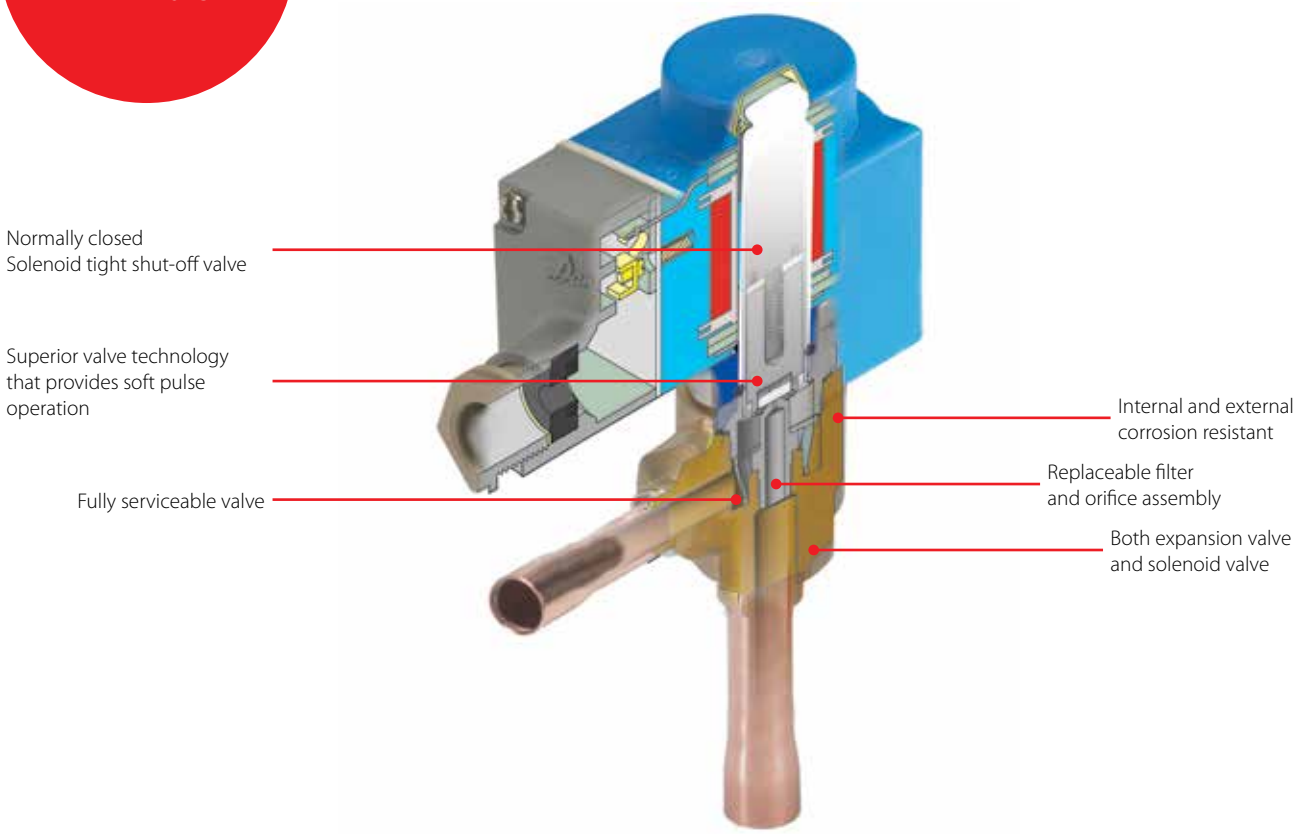

Facts

Applications:
- Traditional refrigeration
- Cold rooms
- Water chillers
- Applicable to R744, R22, R23, R134a, R404A, R407A, R407C, R407F, R410A, R422B, R422D, R448A, R449A,R449B, R450A, R452A, R507, R513A
  For a fully updated list of approved refrigerants, visit www.products.danfoss.com and search for individual code numbers, where refrigerants are listed as part of product specifications.
- Precise control of liquid injection
- The AKV 10P/10PS valves cover a capacity range from 0.2 – 12.5 kW / 0.06 – 3.55 TR (404A / R507) and are divided into 8 capacity ranges
- Supports variety of refrigerants
- Solenoid tight shut-off
- Fully serviceable valve
- Superior valve technology that provides soft pulse operation
- Approvals: REACH, UL, LLC CDC EURO TYSK, EAC
- The AKV 10P/10PS valves are supplied as a parts programme, as follows:
  - separate valve incl. exchangeable orifice
  - separate coil
- The valve requires no adjustment
- Manufactured according to ISO/TS16949

Technical data and ordering

AKV 10P / AKV 10PS

Direct operated Valve

Valve type	AKV 10P0 to AKV 10P7
Working principle	PWM (Pulse-width modulation)
Recommended period of cycle time	6 Seconds
Regulation range (Capacity range)	10 – 100%
Connection type	Solder
Evaporating temperature	-60 – 60 °C / -76 – 140 °F
Ambient temperature	-50 – 50 °C / -58 – 122 °F
MOPD, AKV 10P0 to AKV 10P6	35 bar / 508 psig
MOPD, AKV 10P7	18 bar / 261 psi
Min. OPD, AKV 10P0 to AKV 10P7	0 bar / 0 psi
Filter, replaceable	Internal 100 µm
Max. working pressure	90 barg / 1305 psig
MAP (Max. Abnormal Pressure)	1305 psig
COT (Continuous Operation Temperature)	140 °F

Note: It is recommended to selected Servo operated AKV 10PS valves for those application where higher MOPD (with low coil power) and high dampening is required.

Servo operated Valve

Valve type	AKV 10PS4 to AKV 10PS7
Working principle	PWM (Pulse-width modulation)
Recommended period of cycle time	6 Seconds
Regulation range (Capacity range)	10 – 100%
Connection type	Solder
Evaporating temperature	-60 – 60 °C / -76 – 140 °F
Ambient temperature	-50 – 50 °C / -58 – 122 °F
MOPD	35 bar / 508 psig
Min. OPD, AKV 10PS4 to AKV 10PS7	0.1 bar / 1.45 psi
Filter, replaceable	Internal 53 µm
Max. working pressure	90 barg / 1305 psig
MAP (Max. Abnormal Pressure)	1305 psig
COT (Continuous Operation Temperature)	140 °F
Recommended Danfoss Filter	ELIMINATOR® Hermetic filter drier, type DML / DMSC

Note: It is recommended to selected Servo operated AKV 10PS valves for those application where higher MOPD (with low coil power) and high dampening is required.

Technical data and ordering

AKV 10P / AKV 10PS

AKV 10P - Rated capacity

Valve type / orifice no.	R744 [2]				R407A [1]		R404A/ R507 [1]		K_v value	C_v value	Connection size Solder ODF/ODF		Code no. Single pack	Code no. Industrial pack 16 pcs. pr. pack
	Refrig.	Freezing	Refrig.	Freezing										
	[kW]	[kW]	[TR]	[TR]	[kW]	[TR]	[kW]	[TR]	[m³/h]	[gpm]	[in]	[mm]		
AKV 10P0	0.44	0.69	0.13	0.20	0.34	0.10	0.21	0.06	0.003	0.0035	$^3/_8 \times ^1/_2$	–	068F5210	068F5230
AKV 10P0	0.44	0.69	0.13	0.20	0.34	0.10	0.21	0.06	0.003	0.0035	–	10 × 12	068F5200	068F5220
AKV 10P1	1.17	1.84	0.33	0.53	0.90	0.26	0.8	0.23	0.09	0.104	$^3/_8 \times ^1/_2$	–	068F5211	068F5231
AKV 10P1	1.17	1.84	0.33	0.53	0.90	0.26	0.8	0.23	0.09	0.104	–	10 × 12	068F5201	068F5221
AKV 10P2	2.06	3.25	0.59	0.93	1.59	0.45	1.3	0.37	0.016	0.021	$^3/_8 \times ^1/_2$	–	068F5212	068F5232
AKV 10P2	2.06	3.25	0.59	0.93	1.59	0.45	1.3	0.37	0.016	0.021	–	10 × 12	068F5202	068F5222
AKV 10P3	3.14	4.97	0.90	1.41	2.43	0.69	2.0	0.57	0.024	0.028	$^3/_8 \times ^1/_2$	–	068F5213	068F5233
AKV 10P3	3.14	4.97	0.90	1.41	2.43	0.69	2.0	0.67	0.024	0.028	–	10 × 12	068F5203	068F5223
AKV 10P4	6.10	9.64	1.74	2.75	4.71	1.34	3.1	0.88	0.046	0.053	$^3/_8 \times ^1/_2$	–	068F5214	068F5234
AKV 10P4	6.10	9.64	1.74	2.75	4.71	1.34	3.1	0.88	0.046	0.053	–	10 × 12	068F5204	068F5224
AKV 10P5	8.49	13.4	2.42	3.82	6.55	1.87	4.9	1.39	0.064	0.074	$^3/_8 \times ^1/_2$	–	068F5215	068F5235
AKV 10P5	8.49	13.4	2.42	3.82	6.55	1.87	4.9	1.39	0.064	0.074	–	10 × 12	068F5205	068F5225
AKV 10P6	15.1	23.9	4.31	6.81	11.7	3.32	7.8	2.22	0.114	0.132	$^3/_8 \times ^1/_2$	–	068F5216	068F5236
AKV 10P6	15.1	23.9	4.31	6.81	11.7	3.32	7.8	2.22	0.114	0.132	–	10 × 12	068F5206	068F5226
AKV 10P7	24.6	39.3	7.00	11.1	18.9	5.39	12.5	3.55	0.185	0.214	$^1/_2 \times ^5/_8$	–	068F5217	–
AKV 10P7	24.6	39.3	7.00	11.1	18.9	5.39	12.5	3.55	0.185	0.214	–	12 x 16	068F5207	–

AKV 10PS- Rated capacity

Valve type / orifice no.	R744 [2]				R407A [1]		R404A/ R507 [1]		K_v value	C_v value	Connection size Solder ODF/ODF		Code no. Single pack	Code no. Industrial pack 16 pcs. pr. pack
	Refrig.	Freezing	Refrig.	Freezing										
	[kW]	[kW]	[TR]	[TR]	[kW]	[TR]	[kW]	[TR]	[m³/h]	[gpm]	[in]	[mm]		
AKV 10PS4	6.10	9.64	1.74	2.75	4.71	1.34	3.1	0.88	0.046	0.053	$^3/_8 \times ^1/_2$	–	068F4044	068F5184
AKV 10PS4	6.10	9.64	1.74	2.75	4.71	1.34	3.1	0.88	0.046	0.053	–	10 × 12	068F4034	068F5174
AKV 10PS5	8.49	13.4	2.42	3.82	6.55	1.87	4.9	1.39	0.064	0.074	$^3/_8 \times ^1/_2$	–	068F4045	068F5185
AKV 10PS5	8.49	13.4	2.42	3.82	6.55	1.87	4.9	1.39	0.064	0.074	–	10 × 12	068F4035	068F5175
AKV 10PS6	15.1	23.9	4.31	6.81	11.7	3.32	7.8	2.22	0.114	0.132	$^3/_8 \times ^1/_2$	–	068F4046	068F5186
AKV 10PS6	15.1	23.9	4.31	6.81	11.7	3.32	7.8	2.22	0.114	0.132	–	10 × 12	068F4036	068F5176
AKV 10PS7	24.6	39.3	7.00	11.1	18.9	5.39	12.5	3.55	0.185	0.214	$^1/_2 \times ^5/_8$	–	068F4047	–
AKV 10PS7	24.6	39.3	7.00	11.1	18.9	5.39	12.5	3.55	0.185	0.214	–	10 × 16	068F4037	–

[1]) Rated capacities are based on:
Condensing temperature tc = 38 °C / 100 °F
Liquid temperature tl = 37 °C / 98 °F
Evaporating temperature te = 4 °C / 39 °F

[2]) Rated capacities are based on:
Condensing temperature tc = 0 °C / 32 °F
Evaporating temperature Refrig. te = -10 °C / 14 °F
Evaporating temperature Freezing. te = -30 °C / -22 °F
Subcooling = 1°C / 1.8 °F

C_v value is calculated from Kv value in above table

Spare part ordering - Single pack

Kit	Description	Code no.
Kit 1	Orifice kit direct operated AKV 10P0-3	068F5151
Kit 2	orifice kit direct operated AKV 10P4-7	068F5152
Kit 3	Armature kit direct operated AKV 10P0-7	068F5153
Kit 4	Filter kit direct operated AKV 10P	068F5154
Kit 5	Orifice kit servo operated AKV 10PS4-7	068F5155
Kit 6	Filter kit servo operated AKV 10PS	068F5156
Kit 7	Armature kit servo operated AKV 10PS4-7	068F5161

Coolselector®2

Valve sizing using calculation software

It is strongly recommended to use **Coolselector®2** to find the correct valve for your application.
The software can be downloaded from the Danfoss website. When using the calculation software it is recommended to choose a valve that is between 50% and 75% loaded at the nominal capacity.
In addition, the liquid velocity in the line leading to the valve should not exeed 1m/s (3ft/s).

You can download it from http://coolselector.danfoss.com

Technical data and ordering

AKV 10P / AKV 10PS

Standard coil for AKV 10P/ AKV 10PS

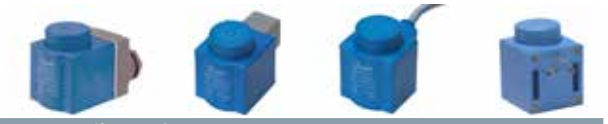

Coil type	MOPD (Max. Operation Pressure Differential)						
	Voltage	Frequecy	Power consumption	Connection	Multi pack Code no.	Industrial pack Code no.	
	[V AC]	[Hz]	[W]			Code no.	Pcs. per pack
BE230CS	230	50	17	terminal box	018F6732	–	50
BE230CS	230	50	17	DIN plugs	018F6193	–	50
BF230CS	230	50	17	1 m cable	018F6282	018F8232	24
BF230CS	230	50	17	3 m cable	–	018F8290	12
BF230CS	230	50	17	8 m cable	018F4961	018F8291	6
BE240CS	240	60	15	terminal box	018F6713	–	–
BE240CS	240	60	15	terminal box	018F6814	–	–
BE240CS	240	60	15	1 m cable	018F6264	–	–
BG110BS	240	60	15	terminal box	018F6813	–	–

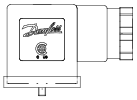

Acessories (coil)

Type	Voltage	Frequency	Quantity	Code no. Multi pack
	[V]	[Hz]	[Pcs]	
DIN plug	Max. 250	50 / 60	100	042N0156

Single pack = 1 product in a box with installation guide
Multi pack = box with x pieces single pack (can be split)
Industrial pack = x pieces in one box (cannot be split)

AKV 10P / AKV 10PS

UL coil for AKV 10P / AKV 10PS



Coil type	Wire length		Voltage	Frequency	Power consumption	Multi pack Code no.
	[in]	[cm]	[V AC]	[Hz]	[W]	
Junction box NEMA 2 for AKV 10P / AKV 10PS						
BJ024CS	–	–	24	50 / 60	14	018F4100
BJ120CS	–	–	110	50	16	018F4110
BJ120CS	–	–	120	60	15	
BJ240CS	–	–	208 – 240	60	14	018F4120
BJ240CS	–	–	230	50	17	
Conduit boss NEMA 4 for AKV 10P / AKV 10PS						
BX024CS	18	46	24	50 / 60	14	018F4102
BX024CS	71	180	24	50 / 60	14	018F4103
BX024CS	98	250	24	50 / 60	14	018F4104
BX120CS	18	46	110	50	16	018F4112
BX120CS	18	46	120	60	15	
BX120CS	36	91	110	50	16	018F4113
BX120CS	36	91	120	60	15	
BX120CS	71	180	110	50	16	018F4114
BX120CS	71	180	120	60	15	
BX120CS	98	250	110	50	16	018F4115
BX120CS	98	250	120	60	15	
BX240CS	18	46	208 – 240	60	14	018F4122
BX240CS	98	250	230	50	17	
BX240CS	18	46	208 – 240	60	14	018F4123
BX240CS	98	250	230	50	17	

AKV 15 / AKV 20, Electric expansion valves

AKV are electrically operated expansion valves designed for refrigeration plants.
The AKV valves are designed for use with a controller from Danfoss' range of ADAP-KOOL® controllers.

The AKV valves are supplied as a parts programme with separate valve body and coil (with terminal box, cable or DIN plug).
AKV has an exchangeable orifice.

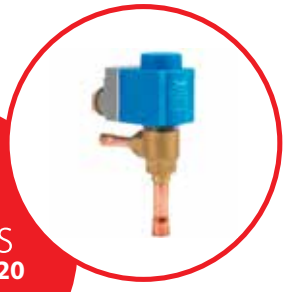

Features
AKV 15 / AKV 20

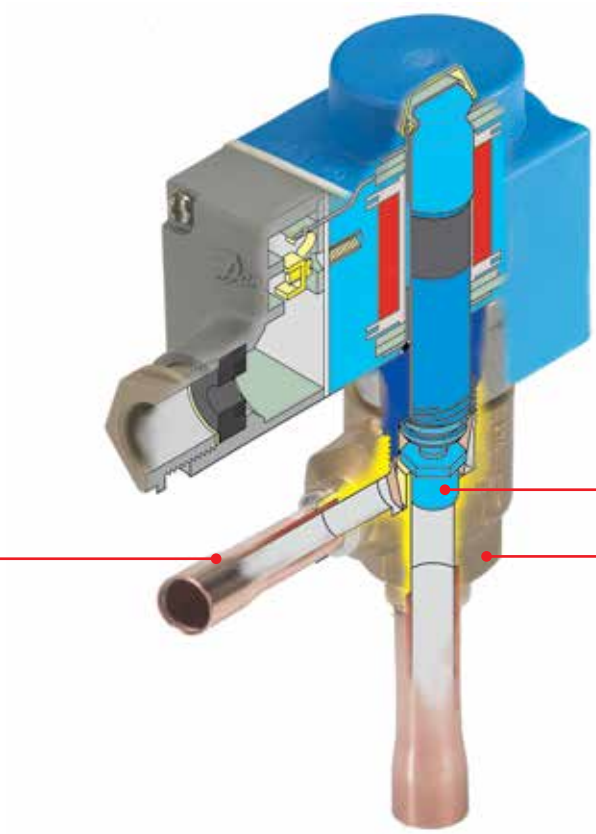

Available with ODF solder connections (AKV 15 and AKV 20 – straightway,

The orifice assembly is replaceable

Both expansion valve and solenoid valve

Facts

Applications:
- Traditional refrigeration
- Cold rooms
- Water chillers

- Applicable to R744, R22 / R407C, R404A / R507, R410A, R134a, R407A, R23, R407F, R422B, R422D, R448A, R449A, R449B, R450A, R452A, R513A
  For a fully updated list of approved refrigerants, visit www.products.danfoss.com and search for individual code numbers, where refrigerants are listed as part of product specifications

- The AKV valves are supplied as a parts programme, as follows:
  - separate valve incl. exchangeable orifice
  - separate coil
- The valve requires no adjustment

- The AKV 15 valves cover a capacity range from 14 – 85 kW / 3.98 – 24.1 TR (404A / R507) and are divided into 4 capacity ranges
- The AKV 20 valves cover a capacity range from 56 – 530 kW / 15.9 – 150 TR (404A / R507) and are divided into 5 capacity ranges.

Technical data and ordering

AKV

Technical data

Valve type	AKV 15	AKV 20
Tolerance of coil voltage	10% / -15%	10% / -15%
Enclosure to IEC 529	IP67	IP67
Working principle	PWM	PWM
Recommended period of time	6 Seconds	6 Seconds
Capacity (404A / R507)	14 – 85 kW / 3.98 – 24.1 TR	56 – 530 kW / 15.9 – 150 TR
Regulation range (Capacity range)	10 – 100%	10 – 100%
Connection	Solder	Solder or weld
Evaporating temperature	-50 – 60 °C / -58 – 140 °F	-40 – 60 °C / -40 – 140 °F
Ambient temperature	-40 – 120 °F / -40 – 50 °C	-40 – 120 °F / -40 – 50 °C
Leak of valve seat	<0.02% of K_V value / C_V value	<0.02% of K_V value / C_V value
MOPD	22 bar / 318 psig	18 bar / 260 psig
Filter, replaceable	External 100 µm	External 100 µm
Max. working pressure	AKV 15 – 1,2,3 PS / MWP = 42 bar g / 610 psig AKV 15 – 4 PS / MWP = 28 bar g / 400 psig	PS / MWP = 28 bar g / 400 psig

Ordering

AKV 15 - Valve excluded coil

Valve type	Rated capacity [1]								K_V value	C_V value	Connections	
											Solder ODF	
	R22 / R407C		R134a		R404A / R507		R407C					
	[kW]	[TR]	[kW]	[TR]	[kW]	[TR]	[kW]	[TR]	[m³/h]	[gpm]	Inlet × outlet [in]	Code no.
Solder ODF [in]												
AKV 15 – 1	25.5	7.25	21.2	6.02	19.6	5.57	25.2	7.16	0.25	0.28	¾ × ¾	068F5000
AKV 15 – 2	40.8	11.6	33.8	9.61	31.4	8.92	40.4	11.4	0.40	0.46	¾ × ¾	068F5005
AKV 15 – 3	64	18.2	53	15.1	49.4	14.0	63	18.1	0.63	0.72	⅞ × ⅞	068F5010
AKV 15 – 4	102	29.0	84	24.0	78	22.2	101	28.7	1.0	1.15	1 ⅛ × 1 ⅛	068F5015
Solder ODF [mm]												
AKV 15 – 1	25.5	7.25	21.2	6.02	19.6	5.57	25.2	7.16	0.25	0.28	18 × 18	068F5001
AKV 15 – 2	40.8	11.6	33.8	9.61	31.4	8.92	40.4	11.4	0.40	0.46	18 × 18	068F5006
AKV 15 – 3	64	18.2	53	15.1	49.4	14.0	63	18.1	0.63	0.72	22 × 22	068F5010
AKV 15 – 4	102	29.0	84	24.0	78	22.2	101	28.7	1.0	1.15	28 × 28	068F5016

AKV 20 - Valve excluded coil

Solder ODF [in]												
AKV 20 – 1	102	29.0	84	24.0	78	22.2	101	28.7	1.0	1.15	1 ⅜ × 1 ⅜	042H2020
AKV 20 – 2	163	46.3	135	38.3	125	35.5	170	48.3	1.6	1.85	1 ⅜ × 1 ⅜	042H2022
AKV 20 – 3	255	72	212	60	196	55	252	71	2.5	2.89	1 ⅝ × 1 ⅝	042H2024
AKV 20 – 4	408	116	338	96	314	89	404	114	4.0	4.62	2 ⅛ × 2 ⅛	042H2027
AKV 20 – 5	643	182	533	151	494	140	637	181	6.3	7.28	2 ⅛ × 2 ⅛	042H2029
Solder ODF [mm]												
AKV 20 – 1	102	29.0	84	24.0	78	22.2	101	28.7	1.0	1.15	35 × 35	042H2020
AKV 20 – 2	163	46.3	135	38.3	125	35.5	170	48.3	1.6	1.85	35 × 35	042H2022
AKV 20 – 3	255	72	212	60	196	55	252	71	2.5	2.89	42 × 42	042H2025
AKV 20 – 4	408	116	338	96	314	89	404	114	4.0	4.62	54 × 54	042H2027
AKV 20 – 5	643	182	533	151	494	140	637	181	6.3	7.28	54 × 54	042H2029
Weld [in]												
AKV 20 – 1	102	29.0	84.6	24.0	78	22.2	101	28.7	1.0	1.15	1 ¼ × 1 ¼	042H2021
AKV 20 – 2	163	46.3	135	38.3	125	35.5	170	48.3	1.6	1.85	1 ¼ × 1 ¼	042H2023
AKV 20 – 3	255	72	212	60	196	55	252	71	2.5	2.89	1 ¼ × 1 ¼	042H2026
AKV 20 – 4	408	116	338	96	314	89	404	114	4.0	4.62	1 ½ × 1 ½	042H2028
AKV 20 – 5	643	182	533	151	494	140	637	181	6.3	7.28	2 × 2	042H2030

[1]) The Rated capacity is based on:
Evaporating temperature t_e: 5 °C / 41 °F
Liquid temperature t_l: 28 °C / 82 °F
Condensing temperature t_c: 32 °C / 90 °F

Technical data and ordering

Coils for AKV valves

Ordering

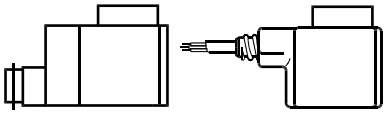

Terminal box | Cable | DIN spade + cap

DC coils	Connection	Valve size and orifice no. AKV 15 – 1 AKV 15 – 2 AKV 15 – 3 AKV 15 – 4	 AKV 20 – 1 AKV 20 – 2 AKV 20 – 3	 AKV 20 – 4 AKV 20 – 5	Code no.
220 V DC 20 W, standard	Terminal box	+	+	+	018F6851
100 V DC 18 W, special	Terminal box	+	+	+	018F6780
230 V DC 18 W, special	Terminal box	+	+	+	018F6781 [1]
	DIN spade + cap	+	+	+	018F6991 [1]
230 V DC 18 W, special	2.5 m / 8.2 ft cable	+	+	+	018F6288 [1]
	4.0 m / 13.0 ft cable	+	+	+	018F6278 [1]
	8.0 m / 26.0 ft cable	+	+	+	018F6279 [1]

[1]) *Recommended for commercial refrigeration plant.*

AC coils	Connection				Code no.
240 V AC 10 W, 50 Hz	Terminal box	+	–	–	018F6702
	DIN spade + cap	+	–	–	018F6177
240 V AC 10 W, 60 Hz	Terminal box	+	–	–	018F6713
240 V AC 12 W, 50 Hz	Terminal box	+	+	–	018F6802
230 V AC 10 W, 50 Hz	Terminal box	+	–	–	018F6701
	DIN spade + cap	+	–	–	018F6176
230 V AC 10 W, 60 Hz	Terminal box	+	–	–	018F6714
	DIN spade + cap	+	–	–	018F6189
230 V AC 10 W, 50 / 60 Hz	Terminal box	+	–	–	018F6732
	DIN spade + cap	+	–	–	018F6193
230 V AC 12 W, 50 Hz	Terminal box	+	+	–	018F6801
230 V AC 12 W, 60 Hz	Terminal box	+	+	–	018F6814
230 V AC 20 W, 50 Hz	Terminal box	+	+	+	018F6905
115 V AC 10 W, 50 Hz	Terminal box	+	–	–	018F6711
115 V AC 10 W, 60 Hz	Terminal box	+	–	–	018F6710
	DIN spade + cap	+	–	–	018F6185
110 V AC 12 W, 50 Hz	Terminal box	+	+	–	018F6811
110 V AC 12 W, 60 Hz	Terminal box	+	+	–	018F6813
24 V AC 10 W, 50 Hz	Terminal box	+	–	–	018F6707
	DIN spade + cap	+	–	–	018F6182
24 V AC 10 W, 60 Hz	Terminal box	+	–	–	018F6715
24 V AC 12 W, 50 Hz	Terminal box	+	+	+	018F6807
24 V AC 12 W, 60 Hz	Terminal box	+	+	+	018F6815
24 V AC 20 W, 50 Hz	Terminal box	+	+	+	018F6903
24 V AC 20 W, 60 Hz	Terminal box	+	+	+	018F6906

Related products

Electric suction modulating valves
Type AK-CC 550 / EKC 315 / EKC 414A
Temperature sensors and pressure transmitters
Type AKS

Quick Selection Notes:

AKVA, Electric expansion valve

AKVA are electric expansion valves designed for ammonia refrigerating plants. The AKVA valves can be used for flooded evaporation (high / low pressure), pump separators and direct expansion.

The AKVA valves are normally controlled by a controller from Danfoss' range of ADAP-KOOL® controllers.

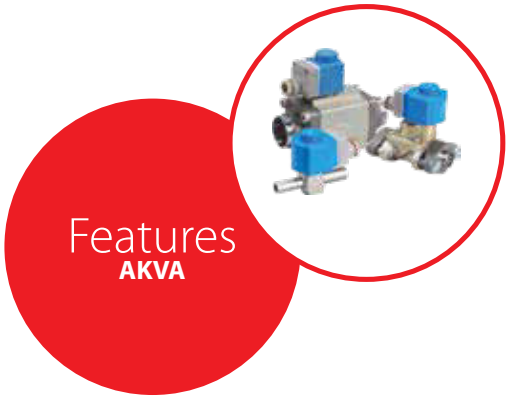

Features
AKVA

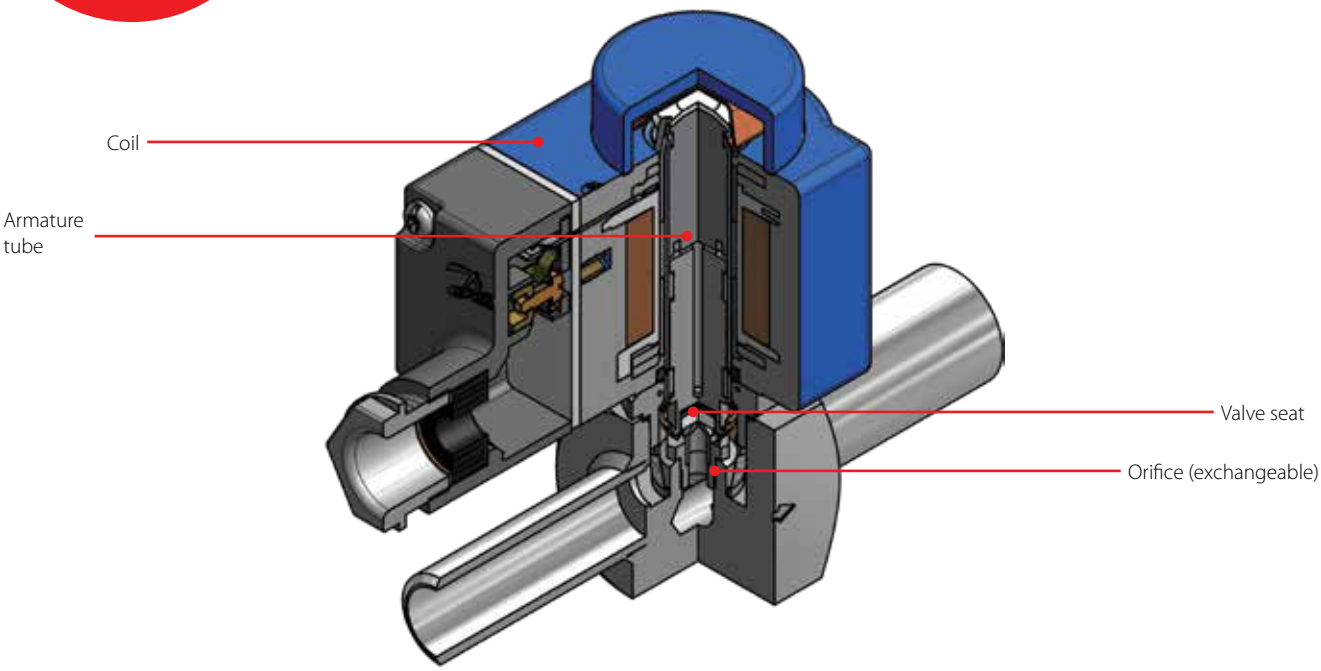

Facts

- Applicable to R717, R744, R134a, R22, R401A, R402A, R404A, R407A, R407B, R407C, R407F, R409A, R410A, R421A, R502 and R507
- The valve requires no adjustment
- Wide regulation range
- Replaceable orifice assembly
- Wide range of coils for DC and AC
- Quick reaction in whole range of stated capacity
- In some applications AKVA can be used both as expansion valve and solenoid valve
- The AKVA 10 valves cover a capacity range from 4 kW to 100 kW (R 717) and are divided up into 8 capacity ranges
  The AKVA 10 valve bodies are made in stainless steel and have weld connections.
- The AKVA 15 valves have flange connections
  The valve covers a capacity range from 125 kW to 500 kW (R 717) and are divided up into 4 capacity ranges
- The AKVA 20 valves cover a capacity range from 500 kW to 3150 kW (R 717) and are divided up into 5 capacity ranges
  The AKVA 20 valve has weld connections

Technical data and ordering

AKVA

Technical data

	AKVA 10	AKVA 15	AKVA 20
Tolerance of coil voltage	10 / -15%	10 / -15%	10 / -15%
Enclosure to IEC 529	IP67	IP67	IP67
Working principle (Pulse-width modulation)	PWM	PWM	PWM
Recommend period of time	6 seconds	6 seconds	6 seconds
Capacity (R717)	4 – 100 kW	125 – 500 kW	500 – 3150 kW
Regulation range	10 – 100%	10 – 100%	10 – 100%
Connection	Weld	Weld	Weld
Media temperature	- 50 – 60 °C	- 40 – 60 °C	- 40 – 60 °C
Ambient temperature	- 50 – 50 °C	- 40 – 50 °C	- 40 – 50 °C
Leak of valve seat	< 0.02% of K_V value	< 0.02% of K_V value	< 0.02% of K_V value
MOPD	18 bar	22 bar	18 bar
Strainer	Internal 100 µm replaceable	external 100 µm *)	external 100 µm *)
Max. working pressure	PS = 42 bar g	PS = 42 bar g	PS = 42 bar g

**) On plants with ammonia and similar industrial plant a strainer must be mounted in front of AKVA 15 and AKVA 20. AKVA 10 has built-in strainer and external strainer is not necessary. See the sections FIA and FIA SS for more inforamtion on availbale Danfoss strainers.*

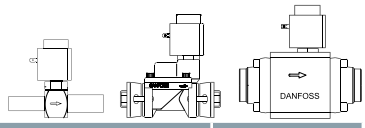

AKVA

Ordering valve excluding coil

Valve type	Rated capacity[1] NH_3		K_V value	Connections - inlet x outlet	Code no.
	[kW]	[TR]	[m³/h]	[in]	
AKVA 10 – 1	4	1.1	0.010	3/8 × 1/2	068F3261
	4	1.1	0.010	1/2 × 3/4	068F3281
AKVA 10 – 2	6.3	1.8	0.015	3/8 × 1/2	068F3262
	6.3	1.8	0.015	1/2 × 3/4	068F3282
AKVA 10 – 3	10	2.8	0.022	3/8 × 1/2	068F3263
	10	2.8	0.022	1/2 × 3/4	068F3283
AKVA 10 – 4	16	4.5	0.038	3/8 × 1/2	068F3264
	16	4.5	0.038	1/2 × 3/4	068F3284
AKVA 10 – 5	25	7.1	0.055	3/8 × 1/2	068F3265
	25	7.1	0.055	1/2 × 3/4	068F3285
AKVA 10 – 6	40	11.4	0.103	3/8 × 1/2	068F3266
	40	11.4	0.103	1/2 × 3/4	068F3286
AKVA 10 – 7	63	17.9	0.162	1/2 × 3/4	068F3267
AKVA 10 – 8	100	28.4	0.251	1/2 × 3/4	068F3268
AKVA 15 – 1	125	35	0.25	Flange	068F5020 [2]
AKVA 15 – 2	200	60	0.40	Flange	068F5023 [2]
AKVA 15 – 3	300	90	0.63	Flange	068F5026 [2]
AKVA 15 – 4	500	140	1.0	Flange	068F5029 [2]
AKVA 20 – 1	500	140	1.0	1 1/4 × 1 1/4	042H2101
AKVA 20 – 2	800	240	1.6	1 1/4 × 1 1/4	042H2102
AKVA 20 – 3	1250	350	2.5	1 1/4 × 1 1/4	042H2103
AKVA 20 – 4	2000	600	4.0	1 1/2 × 1 1/2	042H2104
AKVA 20 – 5	3150	900	6.3	2 × 2	042H2105

[1]) *Rated capacities are based on*
Condensing temperature t_c = 32 °C
Liquid temperature t_l = 28 °C
Evaporating temperature t_e = 5 °C
[2]) *Incl. bolts and gaskets but without flanges*

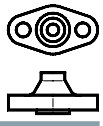

AKVA 15

Ordering flange set for AKVA 15

Valve type	Connection	Code no.
	[in]	
AKVA 15 – 1 to 4	3/4	027N1220
	1	027N1225

Technical data and ordering

AKVA

Ordering coils

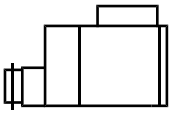

Terminal box

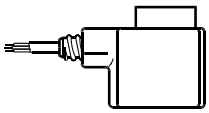

Cable

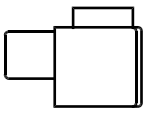

DIN spade + cap

		Valve size and orifice no.						
		AKVA 10 – 1 AKVA 10 – 2 AKVA 10 – 3 AKVA 10 – 4 AKVA 10 – 5	AKVA 10 – 6	AKVA 10 – 7 AKVA 10 – 8	AKVA 15 – 1 AKVA 15 – 2 AKVA 15 – 3 AKVA 15 – 4	AKVA 20 – 1 AKVA 20 – 2 AKVA 20 – 3	AKVA 20 – 4 AKVA 20 – 5	
DC coils	**Connection**							**Code no.**
220 V DC 20 W, standard	**Terminal box**	+	+	+	+	+	+	018F6851
100 V DC 18 W, special	**Terminal box**	+	+	+	+	+	+	018F6780
230 V DC 18 W, special	**Terminal box**	+	+	+	+	+	+	018F6781 [1])
	DIN spade	+	+	+	+	+	+	018F6991 [1])
230 V DC 18 W, special	**2.5 m / 8.2 ft cable**	+	+	+	+	+	+	018F6288 [1])
	4.0 m / 13.0 ft cable	+	+	+	+	+	+	018F6278 [1])
	8.0 m / 26.0 ft cable	+	+	+	+	+	+	018F6279 [1])

[1]) *Recommended for commercial refrigeration plant.*

AC coils	**Connection**							**Code no.**
240 V AC 10 W, 50 Hz	**Terminal box**	+	+	–	+	–	–	018F6702
	DIN spade + cap	+	+	–	+	–	–	018F6177
240 V AC 10 W, 60 Hz	**Terminal box**	+	+	–	+	–	–	018F6713
240 V AC 12 W, 50 Hz	**Terminal box**	+	+	+	+	+	–	018F6802
220 V AC 10 W, 50 Hz	**Terminal box**	+	+	–	+	–	–	018F6701
	DIN spade + cap	+	+	–	+	–	–	018F6176
220 V AC 10 W, 60 Hz	**Terminal box**	+	+	–	+	–	–	018F6714
	DIN spade + cap	+	+	–	+	–	–	018F6189
230 V AC 10 W, 50 / 60 Hz	**Terminal box**	+	+	–	+	–	–	018F6732
	DIN spade + cap	+	+	–	+	–	–	018F6193
220 V AC 12 W, 50 Hz	**Terminal box**	+	+	–	+	+	–	018F6801
220 V AC 12 W, 60 Hz	**Terminal box**	+	+	–	+	+	–	018F6814
230 V AC 20 W, 50 Hz	**Terminal box**	+	+	+	+	+	+	018F6905
115 V AC 10 W, 50 Hz	**Terminal box**	+	+	–	+	–	–	018F6711
115 V AC 10 W, 60 Hz	**Terminal box**	+	+	–	+	–	–	018F6710
	DIN spade + cap	+	+	–	+	–	–	018F6185
110 V AC 12 W, 50 Hz	**Terminal box**	+	+	–	+	+	–	018F6811
110 V AC 12 W, 60 Hz	**Terminal box**	+	+	–	+	+	–	018F6813
24 V AC 10 W, 50 Hz	**Terminal box**	+	–	–	+	–	–	018F6707
	DIN spade + cap	+	–	–	+	–	–	018F6182
24 V AC 10 W, 60 Hz	**Terminal box**	+	–	–	+	–	–	018F6715
24 V AC 12 W, 50 Hz	**Terminal box**	+	–	–	+	+	+	018F6807
24 V AC 12 W, 60 Hz	**Terminal box**	+	–	–	+	+	+	018F6815
24 V AC 20 W, 50 Hz	**Terminal box**	+	+	+	+	+	+	018F6903
24 V AC 20 W, 60 Hz	**Terminal box**	+	+	+	+	+	+	018F6906

Quick Selection Notes:

EVR version 2, Solenoid valve

EVR v2 solenoid valves are direct or servo operated solenoid valves for liquid, suction and hot gas lines with most refrigerants, including flammable refrigerants. They are suitable for condensing units and power packs in all refrigeration, freezing and air conditioning applications.

The valves can be delivered as normally open or normally closed valves and with or without manual operation.
EVR v2 valves are available with flare, solder or flange connections.

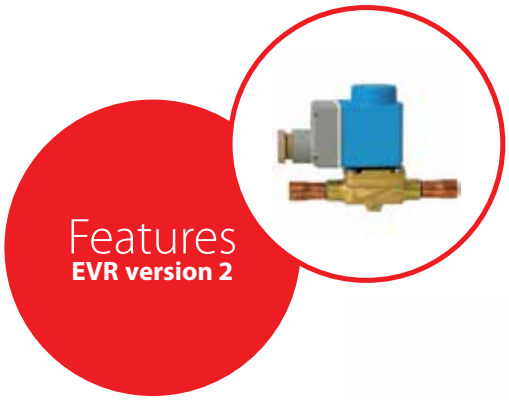

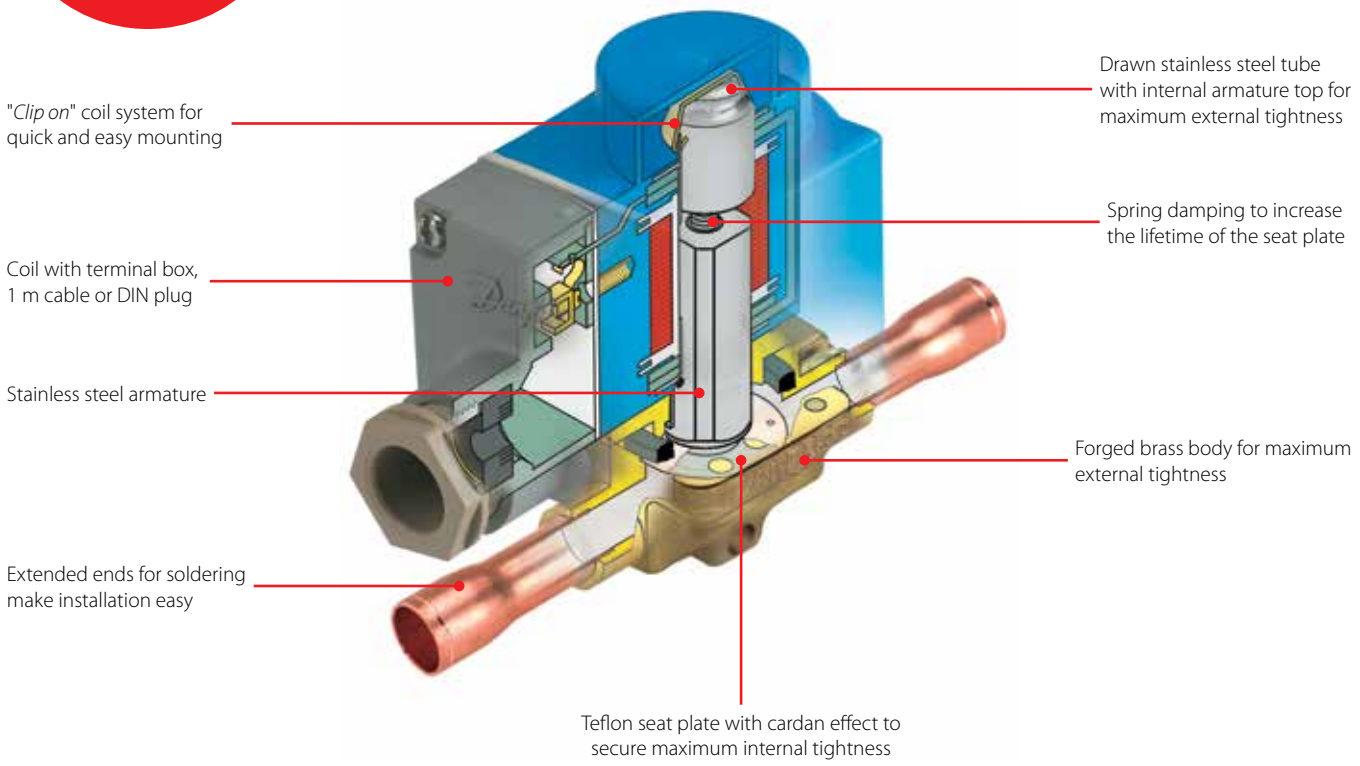

Facts

Application:
- Food service and Cold rooms
- Heat pump systems
- Air conditioning units
- Liquid coolers
- Transport refrigeration
- Complete programme of valves and coils for every application
- Wide range of coils for AC and DC
- Wide range of connection types and sizes
- Normally open or normally closed
- With or without manual operation
- High reliability and durability due to maximum internal and external tightness

- Applicable to R22 / R407C, R134a, R404A / R507, R410A, R407A, R32, R290, R600, R600a, R1234yf, R1234ze, R404A, R407A, R407C, R407F, R125, R152A, R448A, R449A, R452A, and R450A
  EVR 2 – EVR 22 with solder connections and without manual stem are suitable for use with the flammable refrigerants R152A, R32, R290, R600, R600a, R1234yf, and R1234ze
  For a fully updated list of approved refrigerants, visit www.products.danfoss.com and search for individual code numbers, where refrigerants are listed as part of product specifications.

- Temperature range:
  -40 – 105 °C / -40 – 221 °F
- Media temperature:
  -40 – 105 °C / -40 – 221 °F
  Max. 130 °C / 266 °F during defrosting
- Max. working pressure (PS / MWP):
  - EVR v2 solder and flare connections: 45.2 bar / 655 psi
  - EVR v2 flange connections: 32 bar / 460 psi
- MOPD up to 38 bar / 550 psi
- 100% test of functionality, internal / external leakage and electrical characteristics

Technical data and ordering

EVR v2

Technical data

Type	Opening differential pressure with standard coil Δp [bar]		
	Min.	Max. (= MOPD) liquid	
		AC coil 10 W	DC coil 20 W
EVR 2 NC	0.00	38	33
EVR 3 NC	0.00	38	18
EVR 4 NC	0.03	38	28
EVR 6 NC	0.03	38	28
EVR 6 NO	0.03	21	21
EVR 8 NC	0.03	38	28
EVR 10 NC	0.03	38	20
EVR 10 NO	0.03	21	21
EVR 15 NC	0.03	38	20
EVR 15 NO	0.03	21	21
EVR 18 NC	0.03	38	20
EVR 20 NC	0.03	38	20
EVR 20 NO	0.03	19	19
EVR 22 NC	0.03	38	20
EVR 22 NO	0.03	19	19
EVR 25 NC	0.20	38	17
EVR 32 NC	0.20	38	17
EVR 40 NC	0.20	38	17

For higher MODP 12 W and 20 W AC coils are available on request.

Technical data and capacities

EVR v2

Rated capacity [kW] – Liquid

Type	R22 / R407C	R134a	R404A / R507	R410A	R32	R290	R600a
EVR 2	3.02	2.79	2.04	2.96	4.23	3.36	3.38
EVR 3	5.43	5.02	3.68	5.32	7.61	6.05	6.09
EVR 4	13.68	12.66	9.26	13.41	19.17	15.23	15.33
EVR 6	17.90	16.56	12.12	17.55	25.09	19.93	20.07
EVR 8	21.32	19.73	14.44	20.90	29.88	23.74	23.90
EVR 10	37.62	34.80	25.47	36.88	52.71	41.88	42.17
EVR 15	57.93	53.60	39.23	56.79	81.18	64.49	64.94
EVR 18	75.84	70.16	51.36	74.35	106.26	84.43	85.01
EVR 20	120.29	111.29	81.46	117.93	168.56	133.92	134.85
EVR 22	137.19	126.92	92.90	134.49	192.23	152.73	153.79
EVR 25	149.23	138.06	101.06	146.30	–	–	–
EVR 32	254.97	235.89	172.66	249.96	–	–	–
EVR 40	368.74	341.15	249.71	361.49	–	–	–

Rated capacity [kW] – Suction vapour

Type	R22 / R407C	R134a	R404A / R507	R410A	R32	R290	R600a
EVR 2	0.33	0.24	0.29	0.42	0.54	0.41	0.23
EVR 3	0.60	0.44	0.52	0.75	0.96	0.73	0.41
EVR 4	1.51	1.10	1.32	1.90	2.43	1.85	1.03
EVR 6	1.98	1.44	1.72	2.48	3.18	2.42	1.35
EVR 8	2.35	1.71	2.05	2.96	3.78	2.88	1.60
EVR 10	4.15	3.02	3.62	5.22	6.67	5.09	2.83
EVR 15	6.40	4.65	5.57	8.03	10.28	7.83	4.36
EVR 18	8.37	6.09	7.30	10.52	13.45	10.26	5.70
EVR 20	13.28	9.66	11.57	16.68	21.34	16.27	9.04
EVR 22	15.15	11.02	13.20	19.02	24.34	18.55	10.31
EVR 25	16.33	11.79	14.25	20.58	–	–	–
EVR 32	27.90	20.14	24.35	35.16	–	–	–
EVR 40	40.35	29.12	35.21	50.85	–	–	–

Rated capacity [kW] – Hot gas

Type	R22 / R407C	R134a	R404A / R507	R410A	R32	R290	R600a
EVR 2	1.35	1.04	1.10	1.65	2.18	1.54	0.94
EVR 3	2.42	1.87	1.99	2.98	3.92	2.76	1.70
EVR 4	6.10	4.70	5.01	7.50	9.86	6.96	4.28
EVR 6	7.99	6.16	6.56	9.81	12.91	9.11	5.61
EVR 8	9.51	7.33	7.81	11.68	15.37	10.85	6.68
EVR 10	16.78	12.94	13.78	20.61	27.12	19.14	11.78
EVR 15	25.85	19.93	21.22	31.74	41.77	29.48	18.14
EVR 18	33.84	26.08	27.77	41.55	54.67	38.59	23.75
EVR 20	53.68	41.37	44.05	65.91	86.72	61.21	37.67
EVR 22	61.22	47.18	50.24	75.17	98.91	69.81	42.96
EVR 25	87.87	67.73	72.12	107.91	–	–	–
EVR 32	150.17	115.75	123.24	184.40	–	–	–
EVR 40	217.22	167.43	178.27	266.74	–	–	–

Rated liquid and suction vapor capacity is based on:
Evaporating temperature t_e = -10 °C
Liquid temperature ahead of valve t_l = 25 °C
Pressure drop in valve Δp = 0.15 bar

Rated hot gas capacity is based on:
Condensing temperature t_c = 40 °C
Pressure drop across valve Δp = 0.8 bar
Hot gas temperature t_h = 65 °C
Subcooling of refrigerant Δt_{sub} = 4 K

Technical data and ordering

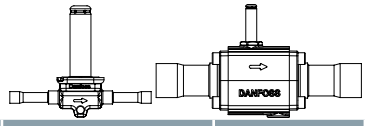

EVR v2 solder connection, Normally Closed (NC) - separate valve bodies

Ordering

Type	Current type	Connection size		Manual operation	K_v value [m^3/h]	Code no.
		[mm]	[in]			
EVR 2	AC / DC	–	1/4	No	0.15	032F1201
	AC / DC	–	1/4	No	0.15	032F7100
	AC / DC	6	–	No	0.15	032F1202
EVR 3	AC / DC	–	1/4	No	0.26	032F1206
	AC / DC	–	3/8	No	0.26	032F1204
	AC / DC	6	–	No	0.26	032F1207
	AC / DC	10	–	No	0.26	032F1208
EVR 4	AC / DC	–	3/8	No	0.70	032L7110
EVR 6	AC / DC	–	3/8	No	1.0	032L1212
	AC / DC	–	3/8	Yes	0.87	032L7116
	AC / DC	10	–	No	1.0	032L1213
	AC / DC	12	–	No	1.0	032L1236
	AC / DC	–	1/2	No	1.0	032L1209
	AC / DC	–	1/2	Yes	0.87	032L7144
	AC / DC	–	5/8	No	1.0	032L7117
EVR 8	AC /DC	–	1/2	No	1.15	032L7121
	AC / DC	–	1/2	Yes	1.09	032L7148
	AC / DC	–	5/8	No	1.15	032L7122
EVR 10	AC / DC	–	3/8	No	1.47	032L7125
	AC / DC	12	–	No	2.2	032L1218
	AC / DC	–	1/2	No	2.2	032L1217
	AC / DC	–	1/2	Yes	2.2	032L1188
	AC / DC	16	5/8	No	2.2	032L1214
	AC / DC	–	5/8	Yes	2.2	032L7149
EVR 15	AC / DC	16	5/8	No	3.3	032L1228
	AC / DC	16	5/8	Yes	3.3	032L1227
	AC / DC	22	7/8	No	3.3	032L1225
EVR 18	AC / DC	–	7/8	Yes	3.9	032L1004
EVR 20	AC / DC	–	7/8	No	6.0	032L1240
	AC / DC	–	7/8	Yes	6.0	032L1254
	AC / DC	–	1 1/8	No	6.0	032L1244
	AC / DC	28	–	No	6.0	032L1245
EVR 22	AC / DC	–	1 1/8	No	6.0	032L7145
	AC / DC	–	1 1/8	Yes	6.0	032L7137
	AC / DC	–	1 3/8	No	6.0	032L3267
EVR 25	AC / DC	–	1 1/8	Yes	9.8	032L2200
	AC / DC	–	1 1/8	No	9.8	032L2201
	AC / DC	28	–	Yes	9.8	032L2205
	AC / DC	28	–	No	9.8	032L2206
	AC / DC	–	1 3/8	Yes	9.8	032L2207
	AC / DC	–	1 3/8	No	9.8	032L2208
EVR 32	AC / DC	35	1 3/8	Yes	16.7	032L1105
	AC / DC	35	1 3/8	No	16.7	032L1106
	AC / DC	–	1 5/8	Yes	16.7	032L1103
	AC / DC	–	1 5/8	No	16.7	032L1104
	AC / DC	42	–	Yes	16.7	032L1107
	AC / DC	42	–	No	16.7	032L1108
	AC / DC	–	2 1/8	No	16.7	032L1180
	AC / DC	–	2 1/8	Yes	16.7	032L1181
EVR 40	AC / DC	–	1 5/8	Yes	24.2	032L1109
	AC / DC	–	1 5/8	No	24.2	032L1110
	AC / DC	42	–	Yes	24.2	032L1113
	AC / DC	42	–	No	24.2	032L1114
	AC / DC	–	2 1/8	Yes	24.2	032L1111
	AC / DC	–	2 1/8	No	24.2	032L1112

Technical data and capacities

EVR v2 solder connection, Normally Open (NO) - separate valve bodies

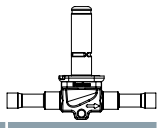

Ordering

Type	Current type	Connection size		Manual operation	K_v value [m^3/h]	Code no.
		[mm]	[in]			
EVR 6	AC / DC	–	3/8	No	1.0	032L1290
	AC / DC	10	–	No	1.0	032L1295
EVR 10	AC / DC	–	1/2	No	2.2	032L1291
	AC / DC	12	–	No	2.2	032L1296
EVR 15	AC / DC	16	5/8	No	3.3	032L1299
	AC / DC	–	7/8	No	3.3	032L3270
EVR 20	AC / DC	–	7/8	No	6.0	032L1260
	AC / DC	–	1 1/8	No	6.0	032L1269
	AC / DC	28	–	No	6.0	032L1279
EVR 22	AC	–	1 3/8	No	6.0	032L3268

The normal range of coils can be used for the NO valves, with the exception of the double frequency versions of 110 V, 50/60 Hz and 220 V, 50/60 Hz.

EVR v2 flare connection, Normally Closed (NC) - separate valve bodies

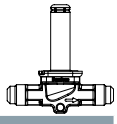

Ordering

Type	Current type	Connection size		Manual operation	K_v value [m^3/h]	Code no.
		[mm]	[in]			
EVR 2	AC	6	1/4	No	0.15	032F8056
EVR 3	AC / DC	6	1/4	No	0.26	032F8107
	AC / DC	10	3/8	No	0.26	032F8116
EVR 6	AC / DC	10	3/8	No	1.0	032L8072
	AC / DC	12	1/2	No	1.0	032L8079
EVR 10	AC / DC	12	1/2	No	2.2	032L8095
	AC / DC	16	5/8	No	2.2	032L8098
EVR 15	AC / DC	16	5/8	Yes	3.3	032L8100
	AC / DC	16	5/8	No	3.3	032L8101

EVR v2 flare connection, Normally Open (NO) - separate valve bodies

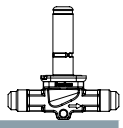

Ordering

Type	Current type	Connection size		Manual operation	K_v value [m^3/h]	Code no.
		[mm]	[in]			
EVR 6	AC / DC	10	3/8	No	1.0	032L8085
EVR 10	AC / DC	12	1/2	No	2.2	032L8090

The normal range of coils can be used for the NO valves, with the exception of the double frequency versions of 110 V, 50/60 Hz and 220 V, 50/60 Hz.

Valve bodies are supplied without flare nuts.
Separate flare nuts:
– 6 mm or 1/4 in, code no. ***011L1101***
– 10 mm or 3/8 in, code no. ***011L1135***
– 12 mm or 1/2 in, code no. ***011L1103***
– 16 mm or 5/8 in, code no. ***011L1167***

Technical data and ordering

EVR v2 flange connection, Normally Closed (NC) - separate valve bodies

Ordering

Type	Current type	Connection	Manual operation	Code no.
EVR 15	AC / DC	Flanges	No	032L1224
	AC / DC	Flanges	Yes	032L1234
EVR 20	AC / DC	Flanges	No	032L1243
	AC / DC	Flanges	Yes	032L1253

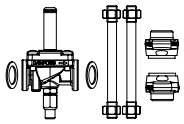

EVR v2 flange sets, Normally Closed (NC) - separate valve bodies

Ordering

Type	Connection size		Connection type			Code no.
			Solder		Weld	
	[mm]	[in]	[mm]	[in]	[in]	
EVR 15	–	1/2	–	–	Yes	027N1115
	–	5/8	Yes	–	–	027L1117
	16	–	–	Yes	–	027L1116
	–	3/4	–	–	Yes	027N1120
	–	7/8	Yes	–	–	027L1123
	22	–	–	Yes	–	027L1122
EVR 20	–	3/4	–	–	Yes	027N1220
	–	7/8	Yes	–	–	027L1223
	22	–	–	Yes	–	027L1222
	–	1	–	–	Yes	027N1225
	–	1 1/8	Yes	–	–	027L1229
	28	–	–	Yes	–	027L1228

Example:
EVR 15 without manual operation - code no. ***032L1224****.*
1/2 in weld flange set. - code no. ***027N1115****.*
+ coil with terminal box, 220 V, 50 Hz, - code no. ***018F6701****.*

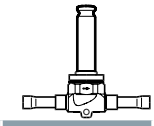

EVRC solder connection, Normally Closed (NC) - separate valve bodies

Ordering

Type	Current type	Connection size		Manual operation	K_v value [m^3/h]		Code no.
		[mm]	[in]		Flow in arrow direction	Flow against arrow direction	
EVRC 15	AC / DC	16	5/8	No	2.7	2.5	032L1255
EVRC 20	AC / DC	22	7/8	No	3.6	5.0	032L1258

Technical data and ordering

EVR v2

Technical data

Type	Opening differential pressure with UL listed or standard coil Δp [psi]		
	Min.	Max. (= MOPD) liquid	
		UL listed AC coil 14 – 17 W	Standard DC coil 20 W
EVR 2 NC	0	550	478
EVR 3 NC	0	550	261
EVR 4 NC	0.44	550	406
EVR 6 NC	0.44	550	406
EVR 6 NO	0.44	305	305
EVR 8 NC	0.44	550	406
EVR 10 NC	0.44	550	290
EVR 10 NO	0.44	305	305
EVR 15 NC	0.44	550	290
EVR 15 NO	0.44	305	305
EVR 18 NC	0.44	550	290
EVR 20 NC	0.44	550	290
EVR 20 NO	0.44	305	305
EVR 22 NC	0.44	550	290
EVR 22 NO	0.44	305	305
EVR 25 NC	2.9	450	246
EVR 32 NC	2.9	450	246
EVR 40 NC	2.9	450	246

Technical data and capacities

EVR v2

Rated capacity [TR] – Liquid

Type	R22 / R407C	R134a	R404A / R507	R410A	R32	R290	R600a
EVR 2	0.92	0.85	0.59	0.86	1.25	1.03	1.06
EVR 3	1.66	1.54	1.07	1.55	2.26	1.85	1.91
EVR 4	4.18	3.87	2.68	3.9	5.69	4.65	4.81
EVR 6	5.47	5.07	3.51	5.11	7.44	6.08	6.3
EVR 8	6.52	6.03	4.18	6.08	8.87	7.25	7.5
EVR 10	11.5	10.64	7.38	10.73	15.64	12.78	13.24
EVR 15	17.71	16.39	11.37	16.53	24.09	19.68	20.39
EVR 18	23.18	21.46	14.88	21.64	31.53	25.77	26.69
EVR 20	36.76	34.04	23.6	34.32	50.01	40.87	42.33
EVR 22	41.93	38.82	26.92	39.14	57.04	46.61	48.28
EVR 25	60.19	55.72	38.64	56.18	–	–	–
EVR 32	102.85	95.23	66.03	96.01	–	–	–
EVR 40	148.77	137.75	95.51	138.88	–	–	–

Rated capacity for liquid is based on:
Pressure drop across valve: 3 psi
Liquid temperature: 100 °F
Subcooling: 10 °F
Evaporating temperature: 40 °F
Superheat: 0 °F

Rated capacity [TR] – Suction vapour

Type	R22 / R407C	R134a	R404A / R507	R410A	R32	R290	R600a
EVR 2	0.08	0.06	0.06	0.09	0.12	0.09	0.06
EVR 3	0.14	0.11	0.12	0.17	0.22	0.17	0.1
EVR 4	0.35	0.27	0.29	0.42	0.55	0.42	0.26
EVR 6	0.46	0.35	0.38	0.55	0.72	0.55	0.34
EVR 8	0.55	0.41	0.46	0.66	0.86	0.66	0.4
EVR 10	0.96	0.73	0.8	1.16	1.51	1.16	0.71
EVR 15	1.48	1.13	1.24	1.79	2.32	1.79	1.1
EVR 18	1.94	1.47	1.62	2.34	3.04	2.34	1.44
EVR 20	3.08	2.34	2.57	3.71	4.82	3.71	2.28
EVR 22	3.51	2.67	2.93	4.23	5.5	4.24	2.61
EVR 25	4.67	3.5	3.9	5.65	–	–	–
EVR 32	7.97	5.99	6.66	9.65	–	–	–
EVR 40	11.53	8.66	9.63	13.96	–	–	–

Rated capacity for Suction vapour is based on:
Pressure drop across valve: 1 psi (EVR 25, EVR 32, EVR 40: 2 psi)
Liquid temperature: 100 °F
Subcooling: 10 °F
Evaporating temperature: 40 °F
Superheat: 0 °F

Rated capacity [TR] – Hot gas

Type	R22 / R407C	R134a	R404A / R507	R410A	R32	R290	R600a
EVR 2	0.21	0.17	0.18	0.25	0.33	0.25	0.16
EVR 3	0.37	0.30	0.32	0.46	0.59	0.44	0.29
EVR 4	0.94	0.76	0.82	1.16	1.48	1.12	0.73
EVR 6	1.23	0.99	1.07	1.51	1.94	1.46	0.95
EVR 8	1.47	1.18	1.27	1.80	2.31	1.74	1.13
EVR 10	2.59	2.09	2.25	3.18	4.07	3.07	2.00
EVR 15	4.00	3.22	3.46	4.89	6.26	4.73	3.08
EVR 18	5.23	4.21	4.53	6.40	8.20	6.19	4.03
EVR 20	8.30	6.69	7.18	10.16	13.01	9.81	6.4
EVR 22	9.46	7.62	8.19	11.59	14.83	11.19	7.3
EVR 25	13.58	10.94	11.76	16.63	–	–	–
EVR 32	23.21	18.70	20.09	28.42	–	–	–
EVR 40	33.58	27.05	29.06	41.11	–	–	–

Rated capacity for Hot gas is based on:
Pressure drop across valve: 3 psi
Condensing temperature: 10 °F
Subcooling: 10 °F
Hot gas temperature: 40 °F
Evaporating temperature: 40 °F
Superheat: 0 °F

Technical data and ordering

EVR v2 solder ODF connections, Normally Closed (NC) - separate valve bodies, UL listed

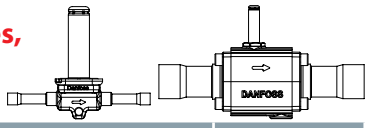

Ordering

Type	Current type	Connection size		Manual operation	Code no.
		[mm]	[in]		
EVR 2	AC / DC	1/4	–	No	032F1201
	AC / DC	1/4	–	No	032F7100
	AC / DC	–	6	No	032F1202
EVR 3	AC / DC	1/4	–	No	032F1206
	AC / DC	3/8	–	No	032F1204
	AC / DC	–	6	No	032F1207
	AC / DC	–	10	No	032F1208
EVR 4	AC / DC	3/8	–	No	032L7110
EVR 6	AC / DC	3/8	–	No	032L1212
	AC / DC	3/8	–	Yes	032L7116
	AC / DC	–	10	No	032L1213
	AC / DC	–	12	No	032L1236
	AC / DC	1/2	–	No	032L1209
	AC / DC	1/2	–	Yes	032L7144
	AC / DC	5/8	–	No	032L7117
EVR 8	AC /DC	1/2	–	No	032L7121
	AC / DC	1/2	–	Yes	032L7148
	AC / DC	5/8	–	No	032L7122
EVR 10	AC / DC	3/8	–	No	032L7125
	AC / DC	–	12	No	032L1218
	AC / DC	1/2	–	No	032L1217
	AC / DC	1/2	–	Yes	032L1188
	AC / DC	5/8	16	No	032L1214
	AC / DC	5/8	–	Yes	032L7149
EVR 15	AC / DC	5/8	16	No	032L1228
	AC / DC	5/8	16	Yes	032L1227
	AC / DC	7/8	22	No	032L1225
EVR 18	AC / DC	7/8	–	Yes	032L1004
EVR 20	AC / DC	7/8	–	No	032L1240
	AC / DC	7/8	–	Yes	032L1254
	AC / DC	1 1/8	–	No	032L1244
	AC / DC	–	28	No	032L1245
EVR 22	AC / DC	1 1/8	–	No	032L7145
	AC / DC	1 1/8	–	Yes	032L7137
	AC / DC	1 3/8	–	No	032L3267
EVR 25	AC / DC	1 1/8	–	Yes	032L2200
	AC / DC	1 1/8	–	No	032L2201
	AC / DC	–	28	Yes	032L2205
	AC / DC	–	28	No	032L2206
	AC / DC	1 3/8	–	Yes	032L2207
	AC / DC	1 3/8	–	No	032L2208
EVR 32	AC / DC	1 3/8	35	Yes	032L1105
	AC / DC	1 3/8	35	No	032L1106
	AC / DC	1 5/8	–	Yes	032L1103
	AC / DC	1 5/8	–	No	032L1104
	AC / DC	–	42	Yes	032L1107
	AC / DC	–	42	No	032L1108
	AC / DC	2 1/8	–	No	032L1180
	AC / DC	2 1/8	–	Yes	032L1181
EVR 40	AC / DC	1 5/8	–	Yes	032L1109
	AC / DC	1 5/8	–	No	032L1110
	AC / DC	–	42	Yes	032L1113
	AC / DC	–	42	No	032L1114
	AC / DC	2 1/8	–	Yes	032L1111
	AC / DC	2 1/8	–	No	032L1112

Technical data and capacities

EVR v2 flare connections, Normally Closed (NC) - separate valve bodies

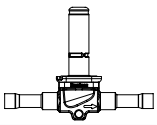

Ordering

Type	Current type	Connection size		Manual operation	Code no.
		[mm]	[in]		
EVR 6	AC / DC	–	3/8	No	032L1290
	AC / DC	10	–	No	032L1295
EVR 10	AC / DC	–	1/2	No	032L1291
	AC / DC	12	–	No	032L1296
EVR 15	AC / DC	16	5/8	No	032L1299
	AC / DC	–	7/8	No	032L3270
EVR 20	AC / DC	–	7/8	No	032L1260
	AC / DC	–	1 3/8	No	032L1269
	AC / DC	28	–	No	032L1279
EVR 22	AC	–	1 3/8	No	032L3268

The normal range of coils can be used for the NO valves, with the exception of the double frequency versions of 110 V, 50/60 Hz and 220 V, 50/60 Hz.

EVR v2 flare connections, Normally Closed (NC) - separate valve bodies

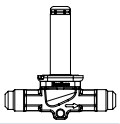

Ordering

Type	Current type	Connection size		Manual operation	Code no.
		[mm]	[in]		
EVR 2	AC / DC	6	1/4	No	032F8056
EVR 3	AC / DC	6	1/4	No	032F8107
	AC / DC	10	3/8	No	032F8116
EVR 6	AC / DC	10	3/8	No	032L8072
	AC / DC	12	1/2	No	032L8079
EVR 10	AC / DC	12	1/2	No	032L8095
	AC / DC	16	5/8	No	032L8098
EVR 15	AC / DC	16	5/8	Yes	032L8100
	AC / DC	16	5/8	No	032L8101

EVR v2 flare connection, Normally Open (NO) - separate valve bodies

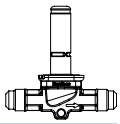

Ordering

Type	Current type	Connection size		Manual operation	Code no.
		[mm]	[in]		
EVR 6	AC / DC	10	3/8	No	032L8085
EVR 10	AC / DC	12	1/2	No	032L8090

The normal range of coils can be used for the NO valves, with the exception of the double frequency versions of 110 V, 50/60 Hz and 220 V, 50/60 Hz.

Valve bodies are supplied without flare nuts.
Separate flare nuts:
– 6 mm or 1/4 in, code no. ***011L1101***
– 10 mm or 3/8 in, code no. ***011L1135***
– 12 mm or 1/2 in, code no. ***011L1103***
– 16 mm or 5/8 in, code no. ***011L1167***

Technical data and ordering

EVR v2 flange connection, Normally Closed (NC) - separate valve bodies

Ordering

Type	Current type	Connection	Manual operation	Code no.
EVR 15	AC / DC	Flanges	No	032L1224
	AC / DC	Flanges	Yes	032L1234
EVR 20	AC / DC	Flanges	No	032L1243
	AC / DC	Flanges	Yes	032L1253

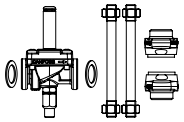

EVR v2 flange sets, Normally Closed (NC) - separate valve bodies

Ordering

Type	Connection size		Connection type			Code no.
	[mm]	[in]	Solder		Weld	
			[mm]	[in]	[in]	
EVR 15	–	1/2	–	–	Yes	027N1115
	–	5/8	Yes	–	–	027L1117
	16	–	–	Yes	–	027L1116
	–	3/4	–	–	Yes	027N1120
	–	7/8	Yes	–	–	027L1123
	22	–	–	Yes	–	027L1122
EVR 20	–	3/4	–	–	Yes	027N1220
	–	7/8	Yes	–	–	027L1223
	22	–	–	Yes	–	027L1222
	–	1	–	–	Yes	027N1225
	–	1 1/8	Yes	–	–	027L1229
	28	–	–	Yes	–	027L1228

Example:
EVR 15 without manual operation - code no. ***032L1224****.*
1/2 in weld flange set. - code no. ***027N1115****.*
+ coil with terminal box, 220 V, 50 Hz, - code no. ***018F6701****.*

Quick Selection Notes:

EVRS / EVRST, Solenoid valves

EVRS and EVRST solenoid valves are made in stainless steel.
EVRS 3 is direct operated, EVRS 10 / EVRS 15 / EVRS 20 are servo operated.
EVRST 10 / EVRST 15 / EVRST 20 are forced servo operated valves.
EVRS and EVRST are used in liquid, suction, hot gas and oil return lines.

EVRS and EVRST are supplied as a parts programme, i. e. separate valve, body and coil. EVRS / EVRST 10, EVRS / EVRST 15, EVRS / EVRST 20 are equipped with spindle for manual opening.



Features
EVRS / EVRST

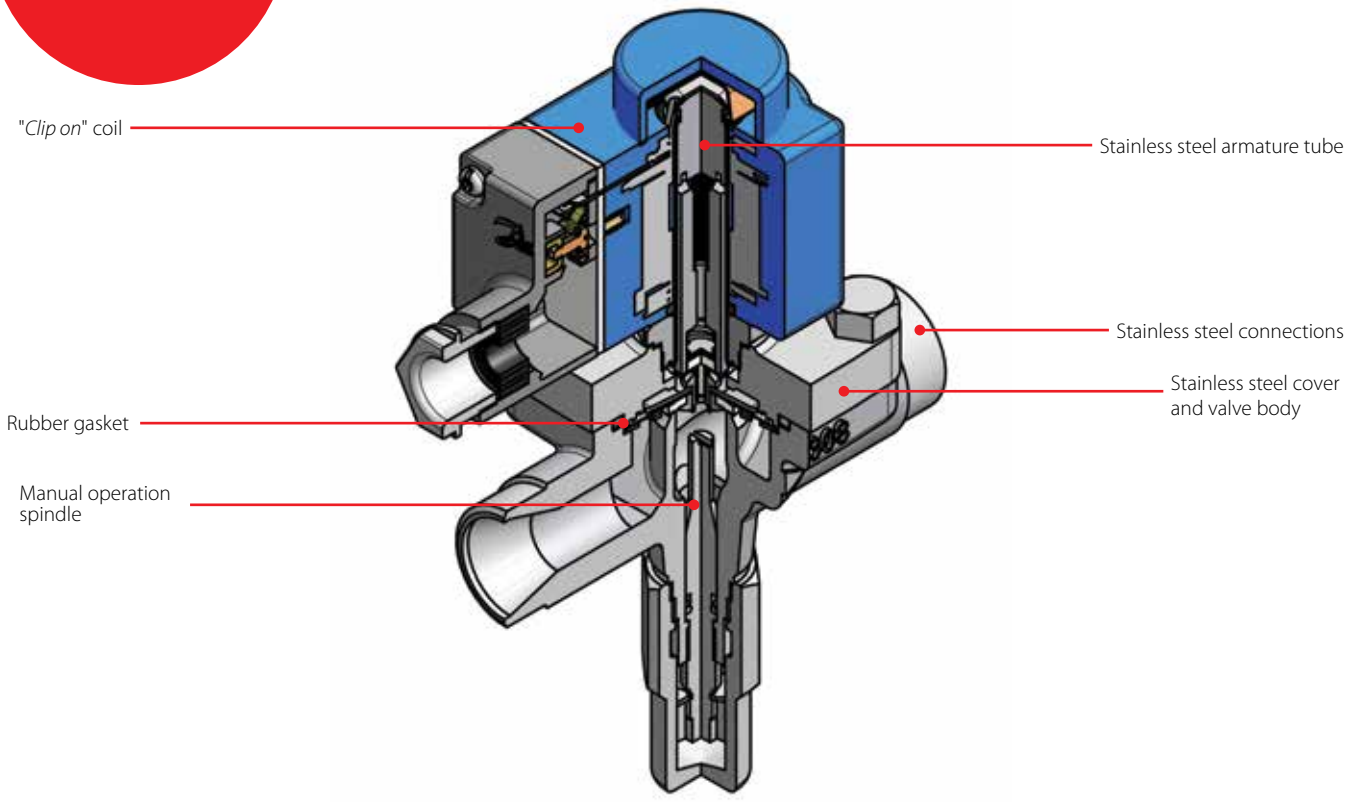

Facts

- Stainless steel valve body and connections
- Max. working pressure 50 bar (suitable for CO_2 subcritical)
- Applicable to R717, R744, R401A, R402A, R404A, R407A, R407B, R407C, R407F, R409A, R410A, R421A, R502, R507, R134a and R22
  For a fully updated list of approved refrigerants, visit www.products.danfoss.com and search for individual code numbers, where refrigerants are listed as part of product specifications.
- MOPD up to 38 bar with 20 watt AC coil
- Wide choice of AC and DC coils
- Designed for temperatures of media up to 105 °C
- Manual system on EVRS 10 / EVRS 15 / EVRS 20 and EVRST 10 / EVRST 15 / EVRST 20

Technical data and ordering

EVRS / EVRST solenoid valves, Normally closed (NC)

Technical data

Type	Opening differential pressure Δp [bar]					K_v value [2] [m³/h]	Max. working pressure PS [bar]
	Min. [bar]	Max. (MOPD) liquid [1] [bar]					
		10 W AC	12 W AC	20 W AC	20 W DC		
EVRS 3	0.0	21	25	38	14	0.23	50.0
EVRS 10	0.05	21	25	38	18	1.5	50.0
EVRST 10	0.0	14	21	38	16	1.5	50.0
EVRS 15	0.05	21	25	38	18	2.7	50.0
EVRST 15	0.0	14	21	38	18	2.7	50.0
EVRS 20	0.05	21	25	38	13	4.5	50.0
EVRST 20	0.0	14	21	38	13	4.5	50.0

[1]) MOPD for media in gas form is approx. 1 bar greater.
[2]) The K_v value is the water flow in [m³/h] with a pressure drop across the valve of 1 bar, ρ = 1000 kg/m³.

EVRS / EVRST solenoid valves, Normally Closed (NC)

Technical data

Type	Rated capacity [1] [kW]														
	Liquid					Suction vapour					Hot gas [2]				
	R717	R22	R134a	R404A / R507	R410A	R717	R22	R134a	R404A / R507	R410A	R717	R22	R134a	R404A / R507	R410A
EVRS 3	21.8	4.6	4.3	3.2	4.5	–	–	–	–	–	6.5	2.1	1.7	1.7	2.3
EVRS / EVRST 10	142.0	30.2	27.8	21.1	29.7	9.0	3.4	2.5	3.1	4.3	42.6	13.9	11.0	11.3	14.9
EVRS / EVRST 15	256.0	54.4	50.1	38.0	53.5	16.1	6.2	4.4	5.5	7.7	76.7	24.9	19.8	20.3	26.7
EVRS / EVRST 20	426.0	90.6	83.5	63.3	89.1	26.9	10.3	7.3	9.2	12.0	128.0	41.5	32.9	33.9	44.5

[1]) Rated liquid and suction vapour capacity is based on evaporating temperature t_e = -10 °C, liquid temperature ahead of valve t_l = 25 °C, and pressure drop across valve Δp = 0.15 bar.
[2]) Rated hot gas capacity is based on condensing temperature t_c = 40 °C, pressure drop across valve Δp = 0.8 bar, hot gas temperature t_h = 60 °C, and subcooling of refrigerant Δt_{sub} = 4 K.

EVRS / EVRST solenoid valves, Normally Closed (NC)

Technical data

Type	R 744 Rated capacity [kW] [1]	
	Liquid	Suction
EVRS 3	6.65	–
EVRS / EVRST 10	43.3	6.9
EVRS / EVRST 15	78.0	12.4
EVRS / EVRST 20	130.0	20.7

[1]) Rated liquid and suction vapour capacity is based on evaporating temperature t_e = -40 °C, liquid temperature ahead of the valve t_l = -8 °C and pressure drop across the valve Δp = 0.15 bar.

EVRS / EVRST solenoid valves, Normally Closed (NC)

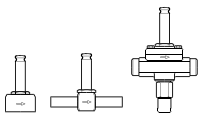

Ordering

Type	Max. working pressure PS	Connection		Manual stem	Code no.
	[bar g]	Weld [in]	Pipe thread ISO 228/1	[with / without]	
EVRS 3	50	3/8	–	without	032F3080
EVRS 3	50	–	G 1/4	without	032F3081
EVRS 10	50	1/2	–	with	032F3082
EVRST 10	50	1/2	–	with	032F3083
EVRS 15	50	3/4	–	with	032F3084
EVRST 15	50	3/4	–	with	032F3085
EVRS 20	50	1	–	with	032F5437
EVRST 20	50	1	–	with	032F5438

EVRA / EVRAT, Solenoid valves

EVRA and EVRAT are solenoid valves for liquid, suction and hot gas lines. EVRA is a direct or servo operated valve, EVRAT is an assisted lift, servo operated valve.
EVRA valves are supplied complete or as a parts programme, i.e. valve body, coil and flanges can be ordered separately.
EVRAT is specially designed to open – and stay open – at a pressure drop of 0 bar.

The EVRAT solenoid valve is thus suitable for use in all plants where the required opening differential pressure is 0 bar.
EVRAT is available as a parts programme, i.e. separate valve body, flanges and coil.
EVRAT 10 / EVRAT 15 / EVRAT 20 all have a spindle for manual operation.



Features
EVRA / EVRAT

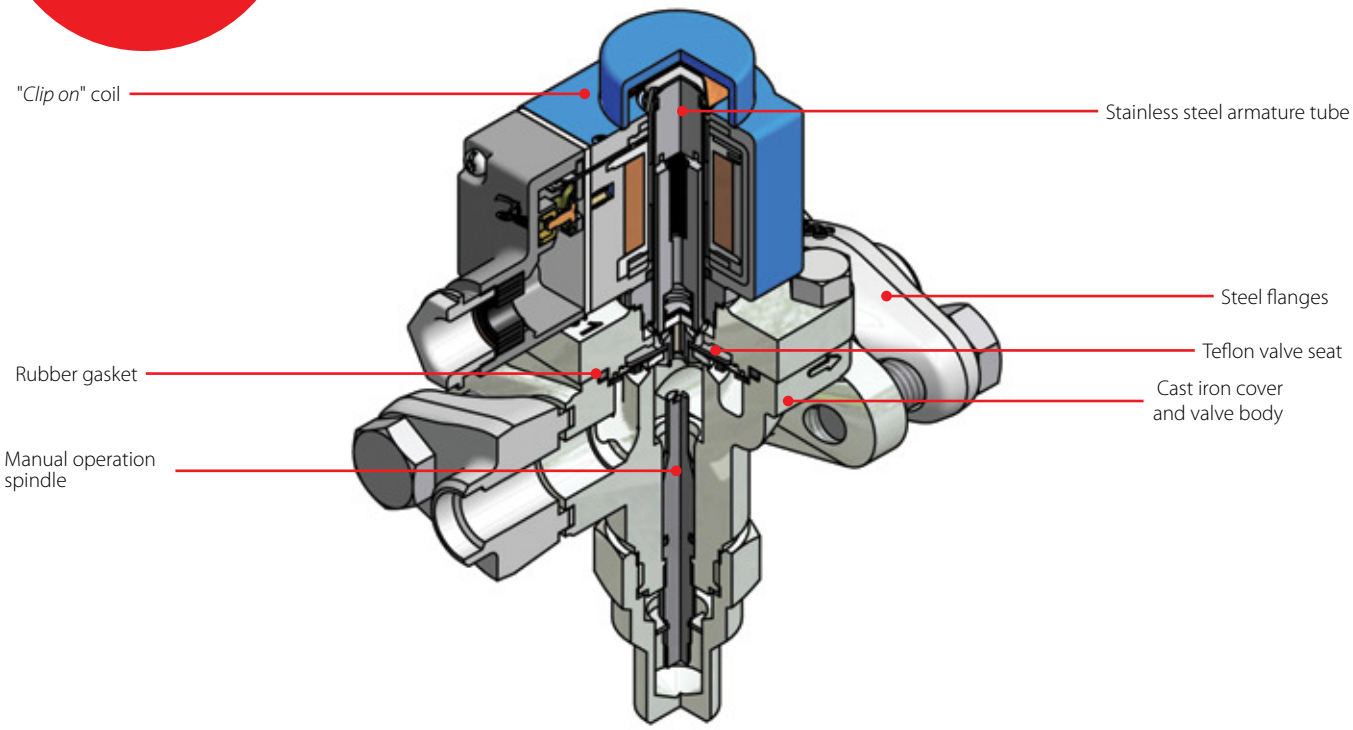

Facts

- Applicable to R717, R401A, R402A, R404A, R407A, R407B, R407C, R407F, R409A, R410A, R421A, R502, R507, R134a and R22
  For a fully updated list of approved refrigerants, visit www.products.danfoss.com and search for individual code numbers, where refrigerants are listed as part of product specifications.
- EVRA and EVRAT valves use a teflon gasket which ensures great tightness across the valve seat
- EVRA valves have a low pressure drop
- EVRAT valves have a minimum opening differential pressure of 0 (zero)
- EVRA and EVRAT valve range can be used with the wide range of standard Danfoss coils
- Strainer type FA can be mounted directly on the valve body except for EVRA 32 / EVRA 40
- EVRA 3 – EVRA 25 and EVRAT 10 / EVRAT 20 valves offer a wide range of flange connection dimensions in accordance with connection standards DIN, ANSI, SOC, Solder and FPT, and a wide range of connection types
- Butt welding DIN (DIN 2448)
- Butt welding ANSI (ANSI B36.10 schedule 80) (3/8 – 1 1/2 in valve sizes)
- Butt welding ANSI (ANSI B36.10 schedule 40) (2 in valve sizes)
- Socket welding ANSI (ANSI B 16.11)
- Solder connection DIN (DIN 2856)
- Solder connection ANSI (ANSI B 16.22)
- FPT internal thread, NPT (ANSI / ASME B 1.20.1)
- EVRA 32 and EVRA 40 are supplied with integrated flanges for either:
  - Welding DIN (DIN 2448)
  - Welding ANSI (ANSI B 36.10)

Technical data and ordering



EVRA / EVRAT Solenoid valves

Ordering valve with coil

Type	Manual Stem	Inlet connection type	Orifice size [mm]	Max OPD 10 W AC [bar]	Max OPD 20 W DC [bar]	Coil type	Coil connection	Supply voltage [V] AC	Frequency [Hz]	Power consumption [W]	Singlepack/ Multipack (12 pcs.)	Code no.
EVRA 3	No	Flange *)	3	21	14	BF230AS	Cable (1 m/3.3 ft)	220 – 230	50	10	Multipack	032F310231
	No	Flange *)	3	21	14	BE230AS	Connection Box	220 – 230	50	10	Multipack	032F310331
	No	Flange *)	3	21	14	BE230CS	Connection Box	220 – 230	50 / 60	10	Multipack	032F310332
EVRA 10	No	Flange *)	10	21	18	BE230AS	Connection Box	220 – 230	50	10	Multipack	032F620831
	Yes	Flange *)	10	21	18	BF230AS	Cable (1 m/3.3 ft)	220 – 230	50	10	Singlepack	032F621231
	Yes	Flange *)	10	21	18	BE230AS	Connection Box	220 – 230	50	10	Singlepack	032F621331
	Yes	Flange *)	10	21	18	BE230CS	Connection Box	220 – 230	50 / 60	10	Singlepack	032F621332
EVRA 15	No	Flange *)	15	21	18	BF230AS	Cable (1 m/3.3 ft)	220 – 230	50	10	Singlepack	032F621731
	No	Flange *)	15	21	18	BF230CS	Cable (1 m/3.3 ft)	220 – 230	50 / 60	10	Singlepack	032F621732
	No	Flange *)	15	21	18	BE230AS	Connection Box	220 – 230	50	10	Singlepack	032F621831
	No	Flange *)	15	21	18	BE230CS	Connection Box	220 – 230	50 / 60	10	Singlepack	032F621832
EVRA 20	No	Flange *)	20	21	13	BF230AS	Cable (1 m/3.3 ft)	220 – 230	50	10	Singlepack	032F622231
	No	Flange *)	20	21	13	BE230AS	Connection Box	220 – 230	50	10	Singlepack	032F622331
	No	Flange *)	20	21	13	BE230CS	Connection Box	220 – 230	50 / 60	10	Singlepack	032F622332
EVRA 25	Yes	Flange *)	25	21	14	BE230CS	Connection Box	220 – 230	50 / 60	10	Singlepack	032F803432

*) For ordering flanges; please downlad the data sheet DKRCI.PY.000.B from www.danfoss.com



EVRA / EVRAT Solenoid valves

Ordering valve without coil

Type	Manual Stem	Inlet connection type	Inlet size [in]	Orifice size [mm]	Max OPD 10 W AC [bar]	Max OPD 12 W AC [bar]	Max OPD 20 W DC [bar]	Required coil type **)	Singlepack/ Multipack (12 pcs.)	Code no.
EVRA 3	No	Flange *)	–	3	21	25	14	AC / DC	Multipack	032F3050
EVRA 10	Yes	Flange *)	–	10	21	25	18	AC / DC	Singlepack	032F6210
	No	Flange *)	–	10	21	25	18	AC / DC	Singlepack	032F6211
EVRAT 10	Yes	Flange *)	–	10	14	21	16	AC / DC	Singlepack	032F6214
EVRA 15	Yes	Flange *)	–	15	21	25	18	AC / DC	Singlepack	032F6215
EVRAT 15	Yes	Flange *)	–	15	14	21	16	AC / DC	Singlepack	032F6216
EVRAT 20	Yes	Flange *)	–	20	14	21	13	AC / DC	Singlepack	032F6219
EVRA 20	Yes	Flange *)	–	20	21	25	13	AC	Singlepack	032F6220
	Yes	Flange *)	–	20	19	21	16	AC / DC	Singlepack	032F6221
EVRA 25	Yes	Flange *)	–	25	21	25	14	AC / DC	Singlepack	032F6225
	No	Flange *)	–	25	21	25	14	AC / DC	Singlepack	032F6226
EVRA 32	Yes	Butt weld DIN	1 ¼	22.2	21	25	14	AC / DC	Singlepack	042H1126
	No	Butt weld DIN	1 ¼	22.2	21	25	14	AC / DC	Singlepack	042H1127
EVRA 40	Yes	Butt weld DIN	1 ½	25.4	21	25	14	AC / DC	Singlepack	042H1128
	No	Butt weld DIN	1 ½	25.4	21	25	14	AC / DC	Singlepack	042H1129
EVRA 32	Yes	Butt weld DIN	1 ½	22.2	21	25	14	AC / DC	Singlepack	042H1131
EVRA 40	Yes	Butt weld DIN	2	25.4	21	25	14	AC / DC	Singlepack	042H1132
EVRA 32	Yes	Butt weld ANSI 36.10	1 ¼	22.2	21	25	14	AC / DC	Singlepack	042H1140
	Yes	Butt weld ANSI 36.10	1 ½	22.2	21	25	14	AC / DC	Singlepack	042H1141
EVRA 40	Yes	Butt weld ANSI 36.10	1 ½	25.4	21	25	14	AC / DC	Singlepack	042H1142
	Yes	Butt weld ANSI 36.10	2	25.4	21	25	14	AC / DC	Singlepack	042H1143

*) Includes flange gaskets and bolts. For ordering flanges; please downlad the data sheet DKRCI.PY.000.B from www.danfoss.com
**) For ordering coils; please download the data sheet DKRCC.PD.BS0.F from www.danfoss.com

EVUL, Solenoid valve

EVUL solenoid valves are designed to fit into compact refrigeration systems.

Available in servo operated versions they can be applied in liquid, suction, and hot gas lines.

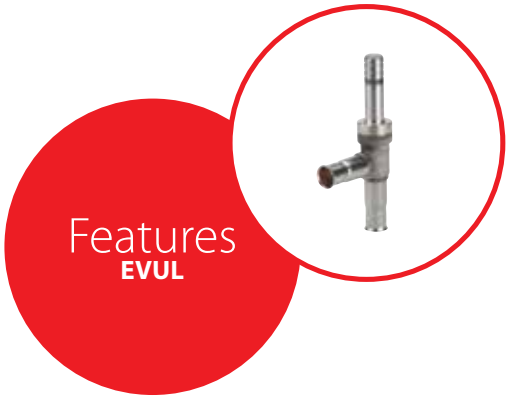

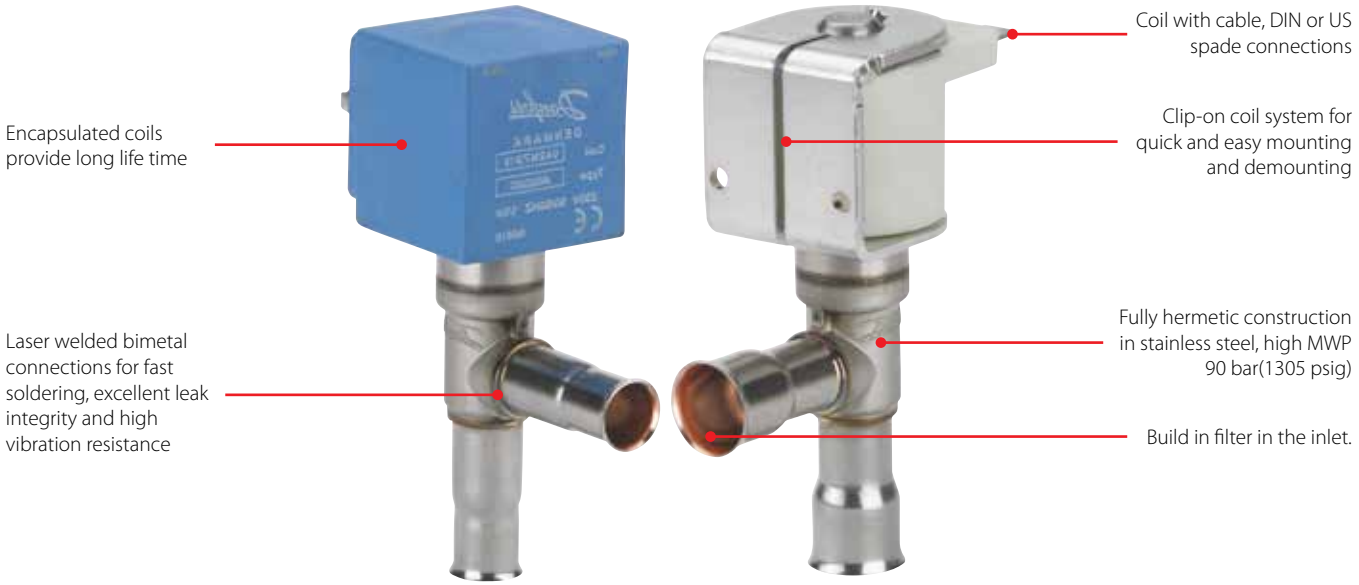

Facts

Application:
- Commercial refrigeration systems
- Refrigeration appliances
- Liquid coolers
- Ice cube machines
- Mobile refrigeration systems
- Heat pump systems
- Air conditioning units

- Applicable to R744, R22 / R407C, R404A R507, R410A, R134a, R407A, R23, R290 R407F, R448A, R449A, R450A, and R452A.
- For R290, The EVUL is validated in accordance to ATEX, ISO 5149, IEC 60335, and UL. Ignition risk is evaluated in accordance to ISO 5149 and IEC 60335. *For a fully updated list of approved refrigerants, visit www.products.danfoss.com and search for individual code numbers, where refrigerants are listed as part of product specifications.*
- Ambient temperature range: -40 – 105 °C / -40 – 221 °F
- Media temperature: -40 – 105 °C / -40 – 221 °F Max. 130 °C / 266 °F during defrosting
- Max. working pressure (PS / MWP): - 90 bar / 1305 psi
- MOPD up to 38 bar / 550 psi
- 100% test of functionality, internal / external leakage and electrical characteristics

Technical data and ordering

EVUL

Rated capacity [kW] – Liquid

Type	R22/R407C	R134a	R404A/R507	R407A	R410A	R290
EVUL 1	2.01	1.65	1.38	1.85	2.02	2.24
EVUL 2	4.02	3.31	2.76	3.70	4.04	4.48
EVUL 3	6.03	4.96	4.14	5.55	6.06	6.72
EVUL 4	10.05	8.27	6.91	9.25	10.10	11.20
EVUL 5	13.06	10.75	8.98	12.02	13.13	14.55
EVUL 6	15.07	12.40	10.36	13.87	15.15	16.79
EVUL 8	18.09	14.88	12.43	16.65	18.18	20.15

Rated capacity [kW] – Suction vapour

Type	R22/R407C	R134a	R404A/R507	R407A	R410A	R290
EVUL 1	0.16	0.13	0.14	0.16	0.21	0.27
EVUL 2	0.32	0.26	0.29	0.31	0.41	0.54
EVUL 3	0.48	0.38	0.43	0.47	0.62	0.82
EVUL 4	0.79	0.64	0.71	0.78	1.04	1.36
EVUL 5	1.03	0.83	0.93	1.01	1.35	1.77
EVUL 6	1.19	0.96	1.07	1.17	1.56	2.04
EVUL 8	1.43	1.15	1.29	1.40	1.87	2.45

Rated capacity [kW] – Hot gas

Type	R22/R407C	R134a	R404A/R507	R407A	R410A	R290
EVUL 1	0.42	0.32	0.34	0.41	0.49	1.02
EVUL 2	0.85	0.64	0.67	0.82	0.98	2.05
EVUL 3	1.27	0.96	1.01	1.22	1.46	3.07
EVUL 4	2.11	1.60	1.69	2.04	2.44	5.12
EVUL 5	2.75	2.08	2.19	2.65	3.17	6.67
EVUL 6	3.17	2.40	2.53	3.06	3.66	7.78
EVUL 8	3.80	2.88	3.03	3.67	4.39	9.21

Rated liquid and suction vapor capacity is based on:
Evaporating temperature t_e = -10 °C
Liquid temperature ahead of valve t_l = 25 °C
Pressure drop in valve Δp = 0.15 bar

Rated hot gas capacity is based on:
Condensing temperature t_c = 40 °C
Pressure drop across valve Δp = 0.8 bar
Hot gas temperature t_h = 65 °C
Subcooling of refrigerant Δt_{sub} = 4 K

Technical data and ordering

EVUL

Rated capacity [kW] – Liquid

Type	R22/R407C	R134a	R404A / R507	R407A	R410A	R290
EVUL 1	0.58	0.47	0.39	0.53	0.57	0.68
EVUL 2	1.15	0.93	0.79	1.06	1.15	1.37
EVUL 3	1.73	1.40	1.18	1.59	1.72	2.05
EVUL 4	2.88	2.33	1.97	2.65	2.87	3.42
EVUL 5	3.74	3.02	2.57	3.44	3.73	4.44
EVUL 6	4.32	3.49	2.96	3.97	4.31	5.13
EVUL 8	5.18	4.19	3.55	4.77	5.17	6.15

Rated capacity [TR] – Suction vapour

Type	R22/R407C	R134a	R404A / R507	R407A	R410A	R290
EVUL 1	0.05	0.04	0.04	0.05	0.06	0.06
EVUL 2	0.10	0.08	0.09	0.09	0.12	0.12
EVUL 3	0.14	0.12	0.13	0.14	0.19	0.19
EVUL 4	0.24	0.20	0.22	0.24	0.31	0.31
EVUL 5	0.31	0.25	0.28	0.31	0.40	0.40
EVUL 6	0.36	0.29	0.32	0.35	0.47	0.47
EVUL 8	0.43	0.35	0.39	0.42	0.56	0.56

Rated capacity [TR] – Hot gas

Type	R22/R407C	R134a	R404A / R507	R407A	R410A	R290
EVUL 1	0.10	0.07	0.08	0.09	0.11	0.13
EVUL 2	0.19	0.15	0.15	0.18	0.22	0.27
EVUL 3	0.29	0.22	0.23	0.28	0.33	0.40
EVUL 4	0.48	0.37	0.38	0.46	0.54	0.67
EVUL 5	0.62	0.48	0.49	0.60	0.70	0.86
EVUL 6	0.72	0.56	0.57	0.69	0.81	1.00
EVUL 8	0.86	0.67	0.68	0.83	0.98	1.19

Rated liquid and suction capacity are based on:
- evaporating temperature t_e = 40 °F,
- liquid temperature ahead of the valve t_l = 100 °F,
- pressure drop Δp across valve – with liquid:
- Δp = 2 psi for R134a
- Δp = 3 psi for R22, R404A/R507 – with suction vapor: Δp = 1 psi

Rated hot gas capacity is based on:
- condensing temperature t_c = 100 °F,
- hot gas temperature t_h = 140 °F,
- pressure drop across valve Δp = 2 psi

Technical data and ordering

EVUL solder connection, Normally Closed (NC) - separate valve bodies



Ordering

Valve type	Connections	Industrial pack		Multi pack	Connections	Industrial pack		Multi pack
	[in.]	Code no.	Pcs.	Code no.	[mm]	Code no.	Pcs.	Code no.
EVUL 1	1/4	032F8200	40	–	6	032F8227	40	–
	1/4	–	–	032F9506	6	–	-	032F9508
EVUL 2	1/4	032F8201	40	032F9510	6	032F8228	40	032F9516
EVUL 3	1/4	032F8202	40	032F9511	6	032F8229	40	032F9517
	3/8	032F8203	40	–	10	032F8230	40	–
EVUL 4	1/4	032F8204	40	032F9512	6	032F8231	40	032F9518
	3/8	032F8205	40	–	10	032F8232	40	–
	1/2	032F8206	40	–	12	032F8233	40	–
EVUL 5	3/8	032F8207	40	032F9513	10	032F8234	40	032F9519
	1/2	032F8208	40	–	12	032F8235	40	–
EVUL 6	3/8	032F8209	40	–	10	032F8236	40	–
	1/2	032F8210	40	032F9514	12	032F8237	40	032F9521
EVUL 8	1/2	032F8211	40	032F9515	12	032F8238	40	032F9522

Single pack = 1 product in a box with installation guide
Multi pack = box with x pieces single pack (can be split)
Industrial pack = x pieces in one box (cannot be split)

EVUL solder connection, Normally Closed (NC)- only works with UL/UR approved coils - separate valve bodies

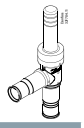

Ordering

Valve type	Connections [in.]	Industrial pack	
		Code no.	Pcs.
EVUL 1	1/4	032F8245	40
EVUL 2	1/4	032F8246	40
EVUL 3	1/4	032F8247	40
	3/8	032F8248	40
EVUL 4	1/4	032F8249	40
	3/8	032F8250	40
	1/2	032F8251	40
EVUL 5	3/8	032F8252	40
	1/2	032F8253	40
EVUL 6	3/8	032F8254	40
	1/2	032F8255	40
EVUL 8	1/2	032F8256	40

Single pack = 1 product in a box with installation guide
Multi pack = box with x pieces single pack (can be split)
Industrial pack = x pieces in one box (cannot be split)

Technical data and ordering

EVUL Coil

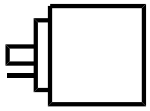

Alternating current AC - with DIN plug 1) - IP65

Type	Ambient Temp. [°C]	Supply voltage [V]	Voltage variation [%]	Frequency [Hz]	Power consumption		Industrial pack		Multi pack
					[W]	[VA]	Code no.	Pcs.	Code no.
AS024CS	-40 – 50	24	-15 – 10	50	9.5	18	–	-	042N7608
		24	-15 – 10	60	7.0	14			
AS230CS	-40 – 50	230	-15 – 10	50	8.0	16	–	-	042N7601
		208 – 240	-15 – 10	60	7.0	14			
AS240CS	-40 – 50	240	-15 – 10	50	6.5	13	–	-	042N7602
		240	-15 – 10	60	5.0	10			

[1]) The three pins on the coil can be fitted with spade tabs, 6.3 mm wide (to DIN 46247). The two current carrying pins can also be fitted with spade tabs, 4.8. mm wide. Max. lead cross section: 1.5 mm². If DIN plug is used (DIN 43650) the leads must be connected in the socket. The socket is fitted with a Pg 11 screwed entry for 6 – 12 mm.

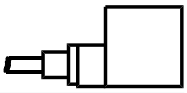

Alternating current AC with 1 m cable - IP67

Type	Ambient Temp. [°C]	Supply voltage [V]	Voltage variation [%]	Frequency [Hz]	Power consumption		Industrial pack		Multi pack
					[W]	[VA]	Code no.	Pcs.	Code no.
AU115CS	-40 – 50	115	-15 – 10	50	7.0	14	–	-	042N7662
		115	-15 – 10	60	5.0	10			
AU230CS	-40 – 50	230	-15 – 10	50	7.0	14	042N8651	20	042N7651
		230	-15 – 10	60	5.0	10			
AU240CS	-40 – 50	240	-15 – 10	50	6.5	13	042N8652	20	–
		240	-15 – 10	60	5.0	10			

Single pack = 1 product in a box with installation guide
Multi pack = box with x pieces single pack (can be split)
Industrial pack = x pieces in one box (cannot be split)

Technical data and ordering

EVUL Coil

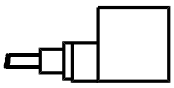

Direct current DC with 1 m cable IP67

Type	Ambient Temp. [°C]	Supply voltage [V]	Voltage variation [%]	Frequency [Hz]	Power consumption		Industrial pack		Multi pack
					[W]	[VA]	Code no.	Pcs.	Code no.
AU012DS	-40 – 50	12	±10	DC	12	–	042N8696	20	042N7696
AU024DS	-40 – 50	24	±10	DC	14	–	042N8697	20	042N7697

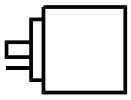

Direct current DC with DIN spade IP00

Type	Ambient Temp. [°C]	Supply voltage [V]	Voltage variation [%]	Frequency [Hz]	Power consumption		Industrial pack		Multi pack
					[W]	[VA]	Code no.	Pcs.	Code no.
AS012DS	-40 – 60	12	±10	DC	14	–	042N8686	40	–
AS024D	-40 – 50	24	±10	DC	14	–	042N8687	40	042N7687

DC coils with 0.25 in. US spade can be supplied on request.

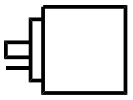

Alternating current AC with DIN spade (UL recognized version) IP00

Type	Ambient Temp. [°C]	Supply voltage [V]	Voltage variation [%]	Frequency [Hz]	Power consumption		Industrial pack		Multi pack
					[W]	[VA]	Code no.	Pcs.	Code no.
AZ240CS	-40 – 50	230	-15 – 10	50	8.0	16	042N8201	40	042N4201
		208 – 240	-15 – 10	60	7.0	14			
AZ120CS	-40 – 50	115	-15 – 10	50	8.5	16	042N8202	40	042N4202
		110 – 120	-15 – 10	60	7.0	14			
AZ024CS	-40 – 50	24	-15 – 10	50	9.5	18	042N8203	40	042N4203
		24	-15 – 10	60	7.0	14			

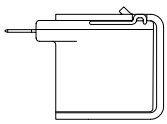

Alternating current AC with US spade IP00

Type	Ambient Temp. [°C]	Supply voltage [V]	Voltage variation [%]	Frequency [Hz]	Power consumption		Industrial pack		Multi pack
					[W]	[VA]	Code no.	Pcs.	Code no.
AY240C	-40 – 50	208 – 240	-15 – 10	50	8.0	16	042N8230	40	042N4230
		208 – 240	-15 – 10	60	8.0	16			
AY120C	-40 – 50	110 – 120	-15 – 10	50	8.0	16	042N8233	40	042N4233
		110 – 120	-15 – 10	60	8.0	16			
AY024C	-40 – 50	24	-15 – 10	50	8.0	16	042N8236	40	–
		24	-15 – 10	60	8.0	16			

Single pack = 1 product in a box with installation guide
Multi pack = box with x pieces single pack (can be split)
Industrial pack = x pieces in one box (cannot be split)



Accessories

Description	Multi pack	
	Code no.	Pcs.
DIN plug	042N0156	100
O-ring for sealing the coil. Industrial pack (50 pcs.) NB: Valve body suppplied with O-ring	032F6115	125

Solenoid coils

The coils are specially designed to operate in the aggressive environment of high humidity and temperature fluctuations that you find in most refrigeration systems.

The Clip-on fastening system ensures a faultless installation and makes the coils easy to mount and dismount. A Danfoss Clip-on coil can be mounted without any tools at all, and it is simple to dismount the coil by means of a screwdriver.

The Clip-on coils are available for the entire range of Danfoss solenoid valves for refrigeration, freezing and air conditioning purposes.





Clip-on system for easy and fast mounting and demounting

Many voltage and frequency combinations for flexible installation worldwide

Many power versions for high MOPD performance on different valve types

Terminal box, DIN plug or cable for flexible electrical installation

Facts

- Encapsulated coils with long operating life, even under extreme conditions
- Standard coils for AC or DC
- Standard coils available with 3-core cable, terminal box or DIN plugs
- Standard coils from 12 V to 420 V, 50, 60 or 50 / 60 Hz
- Coil version for max. opening differential pressure (MOPD) of up to 38 bar.
- Coils can be fitted without the use of tools.
- ATEX approved coil version for use in EX zone 2

Technical data and ordering

BF solenoid coil with 1m 3-core cable IP67

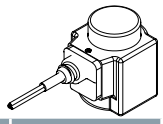

Ordering

Type	Valve type	Tambient [°C]	Supply voltage [V]	Voltage variation [%]	Frequency [Hz]	Power consumption		Code no.
						[W]	[VA]	
BF024AS	EVR 2 – EVR 40 (NC) EVR 6 – EVR 22 (NO) EVRH 10 – EVR 40 EVRC EVRA EVRAT EVRS / EVRST EVM (NC)	-40T80	24	-15, +10	50	12	20	018F6257
BF230AS		-40T80	230	-15, +10	50	12	22	018F6251
BF230AS		-40T80	220	-15, +10	50	11	20	018F6251
BF240AS		-40T80	240	-15, +10	50	11	19	018F6252
BF400AS		-40T80	380 / 400	±10	50	10	21	018F6253
BF024BS		-40T80	24	-15, +10	60	14	25	018F6265
BF115CS		-40T80	115	-15, +10	60	13	22	018F6260
BF115CS		-40T80	100	-15, +10	50	11	19	018F6260
BF220BS		-40T80	220	-15, +10	60	14	23	018F6264
BF110CS		-40T50	110	±10	50	15	29	018F6280
BF110CS		-40T50	110	±10	60	13	23	018F6280
BF230CS		-40T50	220 – 230	±10	50	16	31	018F6282
BF230CS		-40T50	220 - 230	±10	60	14	24	018F6282

BE solenoid coil with terminal box IP67



Ordering

Type	Valve type	Tambient [°C]	Supply voltage [V]	Voltage variation [%]	Frequency [Hz]	Power consumption		Code no.
						[W]	[VA]	
BE012AS	EVR 2 – EVR 40 (NC) EVR 6 – EVR 22 (NO) EVRH 10 – EVRH 40 EVRC EVRA EVRAT EVRS / EVRST EVM (NC)	-40T80	12	-15, +10	50	10	18	018F6706
BE024AS		-40T80	24	-15, +10	50	12	21	018F6707
BE042AS		-40T80	42	-15, +10	50	10	21	018F6708
BE048AS		-40T80	48	-15, +10	50	10	21	018F6709
BE115AS		-40T80	115	-15, +10	50	11	19	018F6711
BE230AS		-40T80	230	-15, +10	50	12	22	018F6701
BE230AS		-40T80	220	-15, +10	50	11	19	018F6701
BE240AS		-40T80	240	-15, +10	50	11	19	018F6702
BE440CS		-40T80	380 – 400	-15, +10	50	13	23	018F6703
BE440CS		-40T80	440	-15, +10	60	14	24	018F6703
BE440AS		-40T80	420	-15, +10	50	11	21	018F6704
BE024BS		-40T80	24	-15, +10	60	14	25	018F6715
BE115CS		-40T80	100	-15, +10	50	11	19	018F6710
BE115CS		-40T80	115	-15, +10	60	13	22	018F6710
BE220BS		-40T80	220	-15, +10	60	13	23	018F6714
BE240CS		-40T80	200	-15, +10	50	11	20	018F6713
BE240CS		-40T80	240	-15, +10	60	15	25	018F6713
BE110CS		-40T50	110	±10	50	15	28	018F6730
BE110CS		-40T50	110	±10	60	13	22	018F6730
BE230CS		-40T50	220 - 230	±10	50	17	31	018F6732
BE230CS		-40T50	220 - 230	±10	60	14	24	018F6732

See „Opening differential pressure" under „Technical data" for the valve concerned.
When replacing a coil with terminal box, it is sufficient to change the coil unit itself. Therefore, order coil with DIN plugs and protective cap.

Technical data and ordering

BG solenoid coil with terminal box IP67

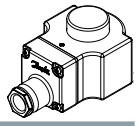

Ordering

Type	Valve type	Tambient [°C]	Supply voltage [V]	Voltage variation [%]	Frequency [Hz]	Power consumption		Code no.
						[W]	[VA]	
BG024AS	EVR 3 – EVR 40 EVRC EVRA EVRAT EVRS/EVRST EVM (NC/NO)	-40T80	24	-15, +10	50	11	21	018F6807
BG048AS		-40T80	48	-15, +10	50	12	26	018F6809
BG110AS		-40T80	110	-15, +10	50	13	25	018F6811
BG230AS		-40T80	230	-15, +10	50	15	28	018F6801
BG230AS		-40T80	220	-15, +10	50	13	25	018F6801
BG240AS		-40T80	240	-15, +10	50	13	25	018F6802
BG400AS		-40T80	380 / 400	-15, +10	50	12	26	018F6803
BG024BS		-40T80	24	-15, +10	60	12	26	018F6815
BG110BS		-40T80	110	-15, +10	60	16	29	018F6813
BG220BS		-40T80	220	-15, +10	60	16	29	018F6814
BG012DS	EVR 2 – EVR 15 (NC) EVR 25 – EVR 40 (NC/NO) EVR 6 – EVR 15 (NO) EVRC 10 – EVRC 15 EVRA 3 – EVRA 15 (NC) EVRA 25 – EVRA 40 (NC) EVRAT 10 – EVRAT 15 (NC) EVRS/EVRST 3 – EVRS/EVRST 15 EVM (NC/NO)	-40T50	12	±10	DC	20	–	018F6856
BG024DS		-40T50	24	±10	DC	16	–	018F6857
BG048DS		-40T50	48	±10	DC	20	–	018F6859
BG110DS		-40T50	110	±10	DC	16	–	018F6860
BG115DS		-40T50	115	±10	DC	19	–	018F6861
BG220DS		-40T50	220	±10	DC	20	–	018F6851
BG012DS	EVR 20 to 22 (NC/NO) EVRC 20 EVRA 20 EVRAT 20 EVRST 20	-40T50	12	±10	DC	20	–	018F6886
BG024DS		-40T50	24	±10	DC	20	–	018F6887
BG048DS		-40T50	48	±10	DC	20	–	018F6889
BG110DS		-40T50	110	±10	DC	20	–	018F6890
BG220DS		-40T50	220	±10	DC	20	–	018F6881

See „Opening differential pressure" under „Technical data" for the valve concerned.
When replacing a coil with terminal box, it is sufficient to change the coil unit itself. Therefore, order coil with DIN plugs and protective cap.

BE solenoid coil with DIN spade and protection cap IP20

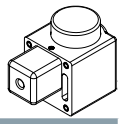

Ordering

Type	Valve type	Tambient [°C]	Supply voltage [V]	Voltage variation [%]	Frequency [Hz]	Power consumption		Code no.
						[W]	[VA]	
BE024AS	EVR 2 – EVR 40 (NC) EVR 6 – EVR 22 (NO) EVRH 10 – EVRH 40 EVRC EVRA EVRAT EVRS/EVRST EVM (NC)	-40T80	24	-15, +10	50	12	21	018F6182
BE230AS		-40T80	230	-15, +10	50	12	22	018F6176
BE230AS		-40T80	220	-15, +10	50	11	19	018F6176
BE240AS		-40T80	240	-15, +10	50	11	19	018F6177
BE420AS		-40T80	420	-15, +10	50	10	21	018F6179
BE115CS		-40T80	100	-15, +10	50	11	19	018F6185
BE115CS		-40T80	115	-15, +10	60	13	22	018F6185
BE220BS		-40T80	220	-15, +10	50	13	23	018F6189
BE110CS		-40T50	110	±10	50	15	28	018F6192
BE110CS		-40T50	110	±10	60	13	22	018F6192
BE230CS		-40T50	220-230	±10	50	17	31	018F6193
BE230CS		-40T50	220-230	±10	60	14	24	018F6193

Technical data and ordering

BB solenoid coil with DIN spade *)

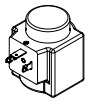

Ordering

Type	Valve type	Tambient [°C]	Supply voltage [V]	Voltage variation [%]	Frequency [Hz]	Power consumption		Code no.
						[W]	[VA]	
BB024AS	EVR 2 – EVR 40 (NC) EVR 6 – EVR 22 (NO) EVRH 10 – EVRH 40 EVRC EVRA EVRAT EVRS/EVRST EVM (NC)	-40T80	24	-15, +10	50	11	19	018F7358
BB115AS		-40T80	115	-15, +10	50	11	19	018F7361
BB230AS		-40T80	220 - 230	-15, +10	50	11	19	018F7351
BB240AS		-40T80	240	-15, +10	50	11	19	018F7352
BB024BS		-40T80	24	-15, +10	60	14	23	018F7365
BB110CS		-40T50	110	±10	50	15	28	018F7360
BB110CS		-40T50	110	±10	60	13	22	018F7360
BB230CS		-40T50	220 - 230	±10	50	16	31	018F7363
BB230CS		-40T50	220 - 230	±10	60	13	24	018F7363

See „Opening differential pressure" under „Technical data" for the valve concerned.
When replacing a coil with terminal box, it is sufficient to change the coil unit itself. Therefore, order coil with DIN plugs and protective cap.
**) Can only be used with DIN plug.*

BN special solenoid coil with terminal box IP67

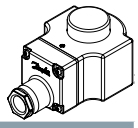

Ordering

Type	Valve type	Tambient [°C]	Supply voltage [V]	Voltage variation [%]	Frequency [Hz]	Power consumption		Code no.
						[W]	[VA]	
BN024AS	EVR 2 – EVR 40 (NC) EVR 6 – EVR 22 (NO) EVRH 4 – EVRH 40 EVRC/EVRA/EVRAT/ EVRS/EVRST/EVM (NC)	-40T50	24	-15, +10	50	24	49	018F6903 [1])
BN024BS		-40T50	24	-15, +10	60	22	42	018F6906 [1])
BN230AS		-40T50	230	-15, +10	50	19	43	018F6905 [1])

[1]) Recommended use for EVRH with high MOPD (38 bar).

BV solenoid coils with ATEX (Zone 2) approval IP65

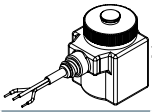

Ordering

Coil type	Coil for valve type	Power consumption	Frequency [Hz]	Voltage [V] AC	Code no.
					With 1 m cable
BV	EVR 2 – EVR 40 (NC) EVR 6 – EVR 22 (NO) EVRC EVRA / EVRAT EVRS / EVRST EVM (NC / NO)	Holding: 11 W 21 VA Inrush: 44 VA	50	24	018Z6120
			50	110	018Z6121
			50	230	018Z6122
			50	240	018Z6123
			60	24	018Z6125
			60	230	018Z6127

Coil with DIN plug

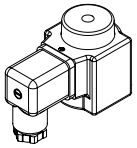

Ordering

Terminal box	With built-in light emitting indicator diode for solenoid valves (only for AC)	018Z0089
DIN plug	Enclosure IP65, EN 175301-803A	042N0156

Technical data and ordering



BJ coils - Junction box NEMA 2 ~ (UL listed) IP12 – IP32

Ordering

Coil type	Valve type	Power consumption [W]	Frequency [Hz]	Voltage [V] AC	Wire length		Code no.
					[in]	[cm]	
BJ	AKV / EVR EVRH / EVRA EVRAT / EVRS EVRST / EVM EV220B 6-50 EV210B EV215B EV225B EV250B	14	50 / 60	24	7	18	018F4100
		16 15	50 / 60 60	110 120	7	18	018F4110
		14 17	60 50	208 – 240 230	7	18	018F4120
	AKVH / EVRH	16	60	120	7	18	018F4130
		16	60	208	7	18	018F4132
		16	60	240	7	18	018F4134

Permissible voltage variation
Alternating current (AC):
50 Hz and 60 Hz: -10% – 15%
50/60 Hz: +/- 10%

Insulation of coil wire
Class H according to IEC 85
Enclosure. IEC 60529
Ambient temperature:
-40 – 50 °C / -40 – 122 °F

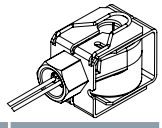

BX coils - Conduit boss NEMA 4 ~ (UL listed) IP54

Ordering

Coil type	Valve type	Power consumption [W]	Frequency [Hz]	Voltage [V] AC	Wire length		Code no.
					[in]	[cm]	
BX	AKV / EVR EVRH / EVRA EVRAT / EVRS EVRST / EVM EV220B 6-50 EV210B EV215B EV225B EV250B	14	50 / 60	24	18	46	018F4102
		14	50 / 60	24	71	180	018F4103
		14	50 / 60	24	98	250	018F4104
		16 15	50 / 60 60	110 120	18	46	018F4112
					36	91	018F4113
					71	180	018F4114
					98	250	018F4115
		14 17	60 50	208 – 240 230	18	46	018F4122
					98	250	018F4123
	AKVH / EVRH	16	60	120	98	250	018F4131
		16	60	208	98	250	018F4133
		16	60	240	98	250	018F4135

Permissible voltage variation
Alternating current (AC):
50 Hz and 60 Hz: -10% – 15%
50/60 Hz: +/- 10%

Insulation of coil wire
Class H according to IEC 85
Enclosure. IEC 60529
Ambient temperature:
-40 – 50 °C / -40 – 122 °F

Quick Selection Notes:

ICF EVRAT - FA + solenoid valve

Based on advanced technology the ICF EVRAT retrofit valve incorporates three functions in one housing, which can replace the widely used direct coupled FA + EVRAT, as a drop-in solution.

The two function modules - solenoid valve and manual opener are identical to the function modules in the ICF 20 valve station concept thus facilitating logistics and service.

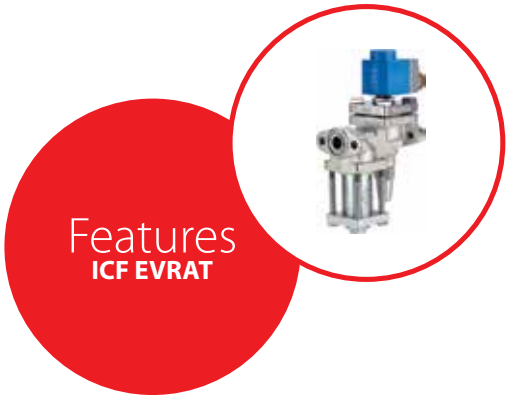

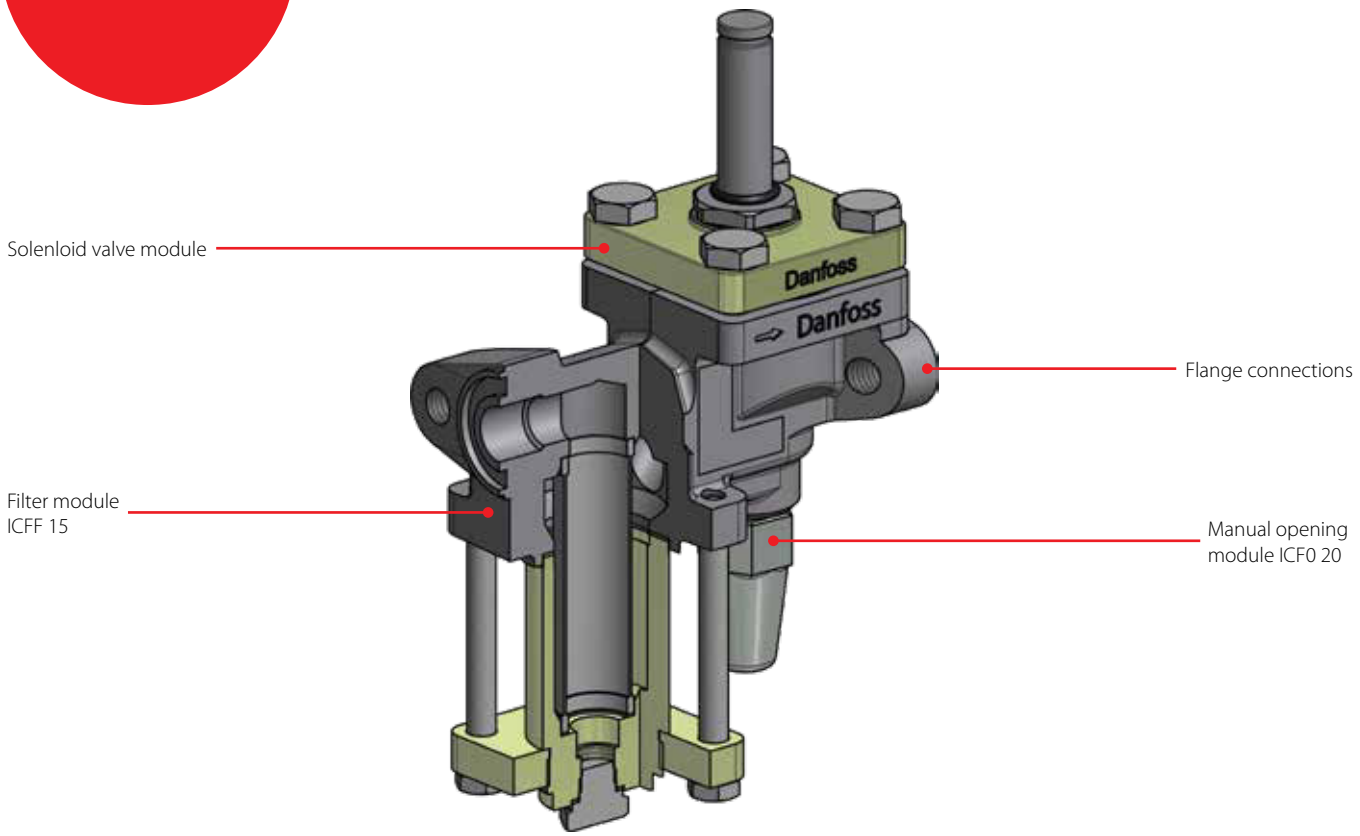

Facts

- Applicable to R717, R744, R401A, R402A, R404A, R407A, R407B, R407C, R407F, R409A, R410A, R421A, R502, R507, R134a and R22
  The use of ICF EVRAT with flammable hydrocarbons is not recommended.
  For a fully updated list of approved refrigerants, visit www.products.danfoss.com and search for individual code numbers, where refrigerants are listed as part of product specifications.
- Designed for industrial refrigeration applications for a maximum working pressure of 42 bar / 610 psig
- Low temperature steel housing
- Low weight and compact design
- The solenoid valve ICFE 20 is designed to open - and stay open at a pressure drop of 0 bar thus suitable for lines with low pressure drop
- UL approved

Technical data and ordering

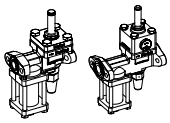

ICF EVRAT

Technical data

Temperature range	-40 – 105 °C / -40 – 221 °F
Presssure range	The ICF EVRAT is designed for a max. working pressure of 42 bar g / 610 psig
Ambient temperature	-30 °C – 50 °C / -22 °F – 122 °F
Surface protection	The external surface is zinc-TLP treated to provide corrosion protection according to EN ISO 2081:2009 Additional on-site corrosion protection is recommended

Ordering

ICF EVRAT valves are intended as drop-in replacement valves.
To identify the correct code number simply select the same size as the replaced valve.

Type	Solenoid	K_v value [m³/h]	C_v value [US gal/min]	Code no.
ICF 15 EVRAT	ICFE 20	2.4	2.8	027L4517
ICF 20 EVRAT	ICFE 20	3.0	3.5	027L4518
ICF 20 EVRAT	ICFE 20H	3.7	4.3	027L4519

ICLX, 2-step solenoid valve

ICLX 2-step solenoid valves are used in suction lines for opening against a high differential pressure, e.g. after hot gas defrost in large industrial refrigeration systems. ICLX can be used in chemical and petro-chemical applications.
ICLX servo valves belong to the ICV (Industrial Control Valve) family.
The ICLX valve is factory configured to open in 2 steps.
By following a simple procedure the valve can be configured to open in 1 step only.

In 2-step configuration, step 1 opens to approx. 10% of the capacity after the pilot solenoid valves are energised.
Step 2 opens automatically when the pressure differential across the valve has decreased to approx. 1.25 bar / 18 psig.
The ICLX servo valve is based on five main components:
Valve body, top cover, function module and 2 pilot solenoid valves.
The top cover and function module are factory-assembled.



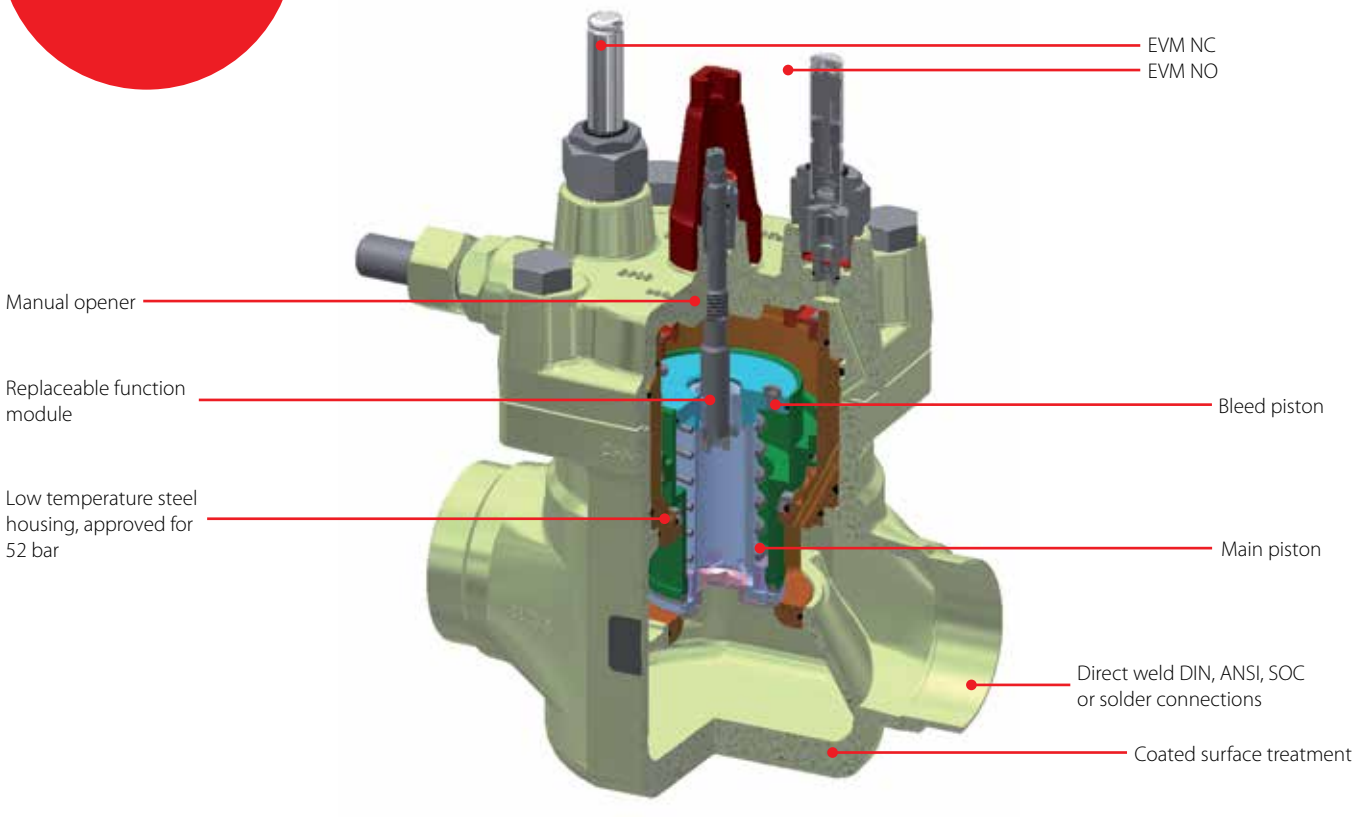

Facts

- Designed for industrial refrigeration applications for a maximum working pressure of 52 bar / 754 psig
- Modular concept
  - Each valve body is available with several different connection types and sizes
  - Valve overhaul is performed by replacing the function module
  - Possible to convert ICLX servo to ICM motor valve
- Low weight and compact design
- Low temperature steel body
- Direct coupled connections
- Connection types include butt weld, socket weld, solder and threaded connections
- Easy change from 2 to 1 step opening
- Manual operating spindle
- Only one signal needed to control both EVM NC and EVM NO coils
- Applicable to R717, R744, R401A, R402A, R404A, R407A, R407B, R407C, R407F, R409A, R410A, R421A, R502, R507, R134a and R22. Use with flammable hydrocarbons is not recommended.
  For a fully updated list of approved refrigerants, visit www.products.danfoss.com and search for individual code numbers, where refrigerants are listed as part of product specifications.
- Temperature range:
  -60 – 120 °C / -76 – 248 °F
- Surface protection
  - The external surface is zinc-plated to provide good corrosion protection

The ICLX concept

The ICLX concept has been developed on a modular principle. This makes it possible to combine function modules and top covers with valve bodies, which are available in many different sizes and with a variety of connection options.

The valve body

There are seven valve bodies available.



ICV 32



ICV 40

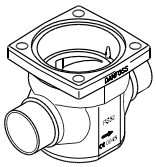

ICV 50

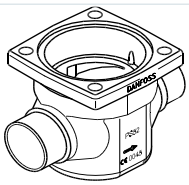

ICV 65

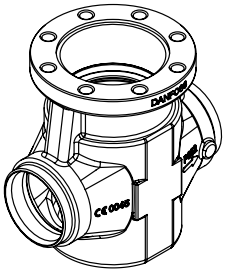

ICV 100

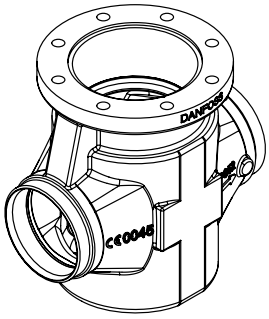

ICV 125

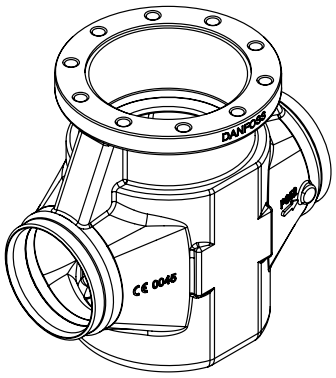

ICV 150

Top / function module

Top covers are fitted with external connector, EVM NC and EVM NO pilots and a complete function module.

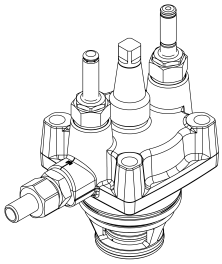

Coils

Both coils to be IP67.
EVM NC: 10 W AC (or higher) for MOPD up to 21 bar - EVM NC: 20W AC for MOPD 21– 40 bar.
EVM NO: 10 W AC (or higher).

Valve bodies in the sizes ICV 32–ICV 65 are available with a range of nominal through oversized connection sizes and types.
ICV 100-ICV 150 are available in butt-weld DIN and butt-weld ANSI nominal sizes.

D	A	SOC	SD	SA
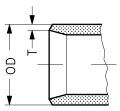	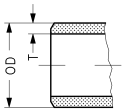	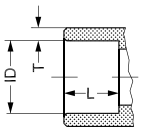	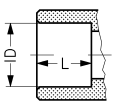	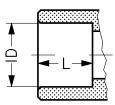
Butt-weld DIN	Butt-weld ANSI	Socket weld ANSI	Solder DIN	Solder ANSI

Capacities

	ICLX 32	ICLX 40	ICLX 50	ICLX 65	ICLX 100	ICLX 125	ICLX 150
K_v value [m³/h]	22	29	47	82	151	225	390
C_v value [US gal/min]	25.5	33.6	54.5	95	175	261	452

Ordering

ICLX

Ordering factory assembled valve including external connector, EVM NC and EVM NO pilot

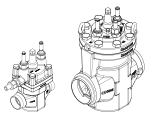

Type	Available connections		Connection type	Connection designation	Code no.
	[in]	[mm]			
ICLX 32	1 ¼	32	Butt weld, EN 10220	D	027H3040
	1 ¼	32	Butt weld, ANSI (B 36.10)	A	027H3041
	1 ¼	32	Socket weld, ANSI (B 16.11)	SOC	027H3042
ICLX 40	1 ½	40	Butt weld, EN 10220	D	027H4040
	1 ½	40	Butt weld, ANSI (B 36.10)	A	027H4041
	1 ½	40	Socket weld, ANSI (B 16.11)	SOC	027H4042
ICLX 50	2	50	Butt weld, EN 10220	D	027H5040
	2	50	Butt weld, ANSI (B 36.10)	A	027H5041
	2	50	Socket weld, ANSI (B 16.11)	SOC	027H5042
ICLX 65	2 ½	65	Butt weld, EN 10220	D	027H6040
	2 ½	65	Butt weld, ANSI (B 36.10)	A	027H6041
	2 ½	65	Socket weld, ANSI (B 16.11)	SOC	027H6042
ICLX 80	3	80	Butt weld, EN 10220	D	027H8040
	3	80	Butt weld, ANSI (B 36.10)	A	027H8042
ICLX 100	4	100	Butt weld, EN 10220	D	027H7147
	4	100	Butt weld, ANSI (B 36.10)	A	027H7148
ICLX 125	5	125	Butt weld, EN 10220	D	027H7157
	5	125	Butt weld, ANSI (B 36.10)	A	027H7158
ICLX 150	6	150	Butt weld, EN 10220	D	027H7167
	6	150	Butt weld, ANSI (B 36.10)	A	027H7168

Ordering

Ordering from the parts programme (valve body + top / function module)

Example:

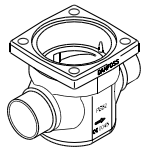

Valve body 50 D (2 in)
027H5120
Table I

+

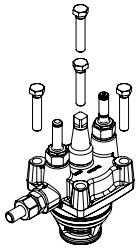

Top / function module
ICLX 50
027H5204
Table II

=

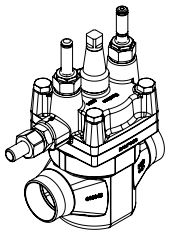

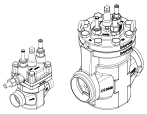

ICLX 32

ICV 32 Valve body

Type	Connection size		Connection type	Connection designation	Code no.
	[in]	[mm]			
ICV 32	1 1/4	32	Butt weld, EN 10220	D	027H3120
	1 1/4	32	Butt weld, ANSI (B 36.10)	A	027H3121
	1 1/4	32	Socket weld, ANSI (B 16.11)	SOC	027H3122
	1 3/8	35	Solder connection, DIN (2856)	SD	027H3123
	1 1/2	40	Butt weld, EN 10220	D	027H3125
	1 1/2	40	Butt weld, ANSI (B 36.10)	A	027H3126
	1 5/8	42	Solder connection, ANSI (B 16.22)	SA	027H3127
	1 5/8	42	Solder connection, DIN (2856)	SD	027H3128

ICLX 32 top / function module [1])

Type		Code no.
ICLX 32		027H3204

ICLX 40

ICV 40 Valve body

Type	Connection size		Connection type	Connection designation	Code no.
	[in]	[mm]			
ICV 40	1 1/2	40	Butt weld, EN 10220	D	027H4120
	1 1/2	40	Butt weld, ANSI (B 36.10)	A	027H4121
	1 1/2	40	Socket weld, ANSI (B 16.11)	SOC	027H4122
	1 5/8	42	Solder connection, ANSI (B 16.22)	SA	027H4124
	1 5/8	42	Solder connection, DIN (2856)	SD	027H4123
	2	50	Solder connection, DIN (2856)	D	027H4126
	2	50	Butt weld, ANSI (B 36.10)	A	027H4127

ICLX 40 top/function module [1])

Type		Code no.
ICLX 40		027H4204

ICLX 50

ICV 50 Valve body

Type	Connection size		Connection type	Connection designation	Code no.
	[in]	[mm]			
ICV 50	2	50	Butt weld, EN 10220	D	027H5120
	2	50	Butt weld, ANSI (B 36.10)	A	027H5121
	2	50	Socket weld, ANSI (B 16.11)	SOC	027H5122
	2 1/8	54	Solder connection, DIN (2856)	SD	027H5123
	2 1/2	65	Butt weld, EN 10220	D	027H5124
	2 1/2	65	Butt weld, ANSI (B 36.10)	A	027H5125

ICLX 50 top / function module [1])

Type		Code no.
ICLX 50		027H5204

[1]) Top / function module includes external connector, EVM N C and EVM N O pilots, gaskets and O-rings.

Ordering

ICLX 65

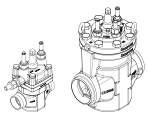

ICV 65 Valve body

Type	Connection size		Connection type	Connection designation	Code no.
	[in]	[mm]			
ICV 65	2 1/2	65	Butt weld, EN 10220	D	027H6120
	2 1/2	65	Butt weld, ANSI (B 36.10)	A	027H6121
	2 1/2	65	Socket weld, ANSI (B 16.11)	SOC	027H6123
	2 5/8	67	Solder connection, ANSI (B 16.22)	SA	027H6125
	3	76	Solder connection, DIN (2856)	SD	027H6124
	3	80	Butt weld, EN 10220	D	027H6126
	3	80	Butt weld, ANSI (B 36.10)	A	027H6127

ICLX 65 top / function module [1])

Type		Code no.
ICLX 65		027H6204

[1]) Top / function module includes external connector, EVM N C and EVM N O pilots, gaskets and O-rings.

Quick Selection Notes:

ICSH, Dual position solenoid valve

ICSH dual position solenoid valve belongs to the ICV family and consists of an ICV housing, an ICS insert together with an ICSH top cover with 2 EVM normally closed solenoid pilots installed in the top cover.

ICSH is used in hot gas lines for the opening of hot gas defrost flow to the evaporator in 2 steps. Both steps are activated by a controller or a PLC energizing the magnetic coils in a time delay sequence.

Step 1 (approx. 20% of full flow) is to allow a smooth pressure build-up in the evaporator, while the subsequent step 2 opens the flow to 100% to get the full defrost capacity.

The ICSH is designed for large industrial refrigeration systems with ammonia, fluorinated refrigerants or CO_2.

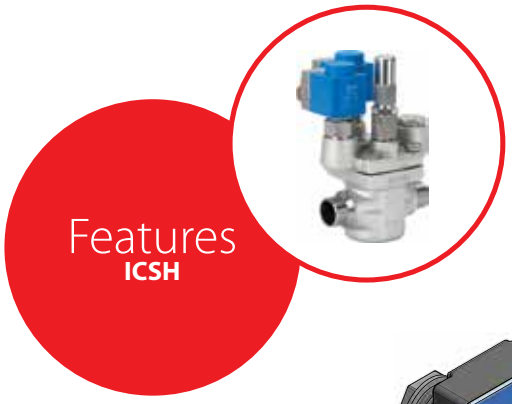

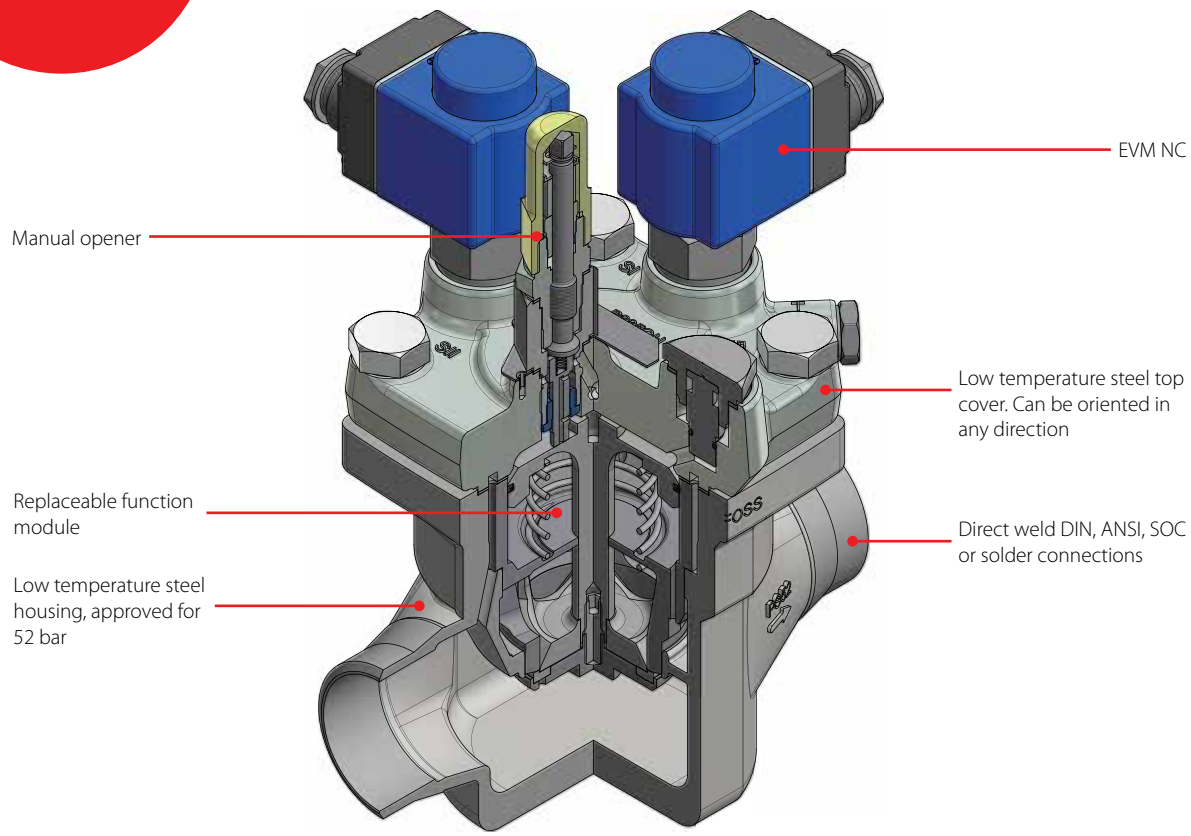

Facts

- Designed for Industrial Refrigeration applications for a maximum working pressure of 52 bar g / 754 psig
- Applicable to R717, R744, R134a, R22, R401A, R402A, R404A, R407A, R407B, R407C, R407F, R409A, R410A, R421A, R502 and R507.
  For a fully updated list of approved refrigerants, visit www.products.danfoss.com and search for individual code numbers, where refrigerants are listed as part of product specifications.
- Direct welded connections
- Connection types include butt weld, socket weld and solder connections
- Low temperature steel body
- Low weight and compact design
- 2-wire connection for use with a timer relay or 4 wire connection for connecting to a controller or a PLC
- The ICSH main valve top cover can be oriented in any direction without the function of pilot valves being affected
- Stabilizes working conditions and eliminates pressure pulsations during opening of hot gas
- Manual opening possible
- PTFE seat provides excellent valve tightness
- Service friendly design

The ICSH concept

The ICSH concept is developed to highest flexibility of direct welded connections. For valve sizes ICV 25 – ICV 65 a wide range of connection sizes and types is available. The direct welded (non-flanged) connections secure low risk of leakage.

The valve body

There are five valve bodies available.

			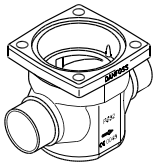	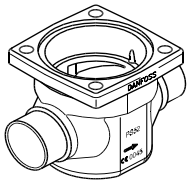
ICV 25	ICV 32	ICV 40	ICV 50	ICV 65

Valve bodies in the sizes ICV 25 – ICV 65 are available with a range of undersizes through oversized connection sizes and types.

D	A	SOC	SD	SA
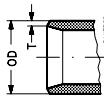	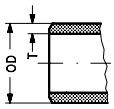	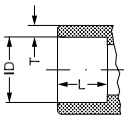	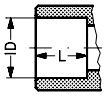	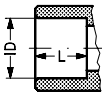
Butt-weld DIN	Butt-weld ANSI	Socket weld ANSI	Solder DIN	Solder ANSI

The top cover

Including bolts, one blanking plug and 2 EVM NC

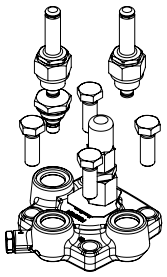

The function module

The ICS funtion module is also used for ISCH. Multiple function modules are available to give different capacities.

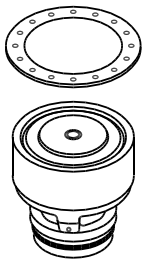

Type	Valve body size	K_v value [m³/h]
ICS 25 – 5	25	1.7
ICS 25 – 10	25	3.5
ICS 25 – 15	25	6.0
ICS 25 – 20	25	8
ICS 25 – 25	25	11.5
ICS 32	32	17
ICS 40	40	27
ICS 50	50	44
ICS 65	65	70
ICS 80	80	85

Ordering



ICSH

Ordering factory assembled valve including 2 EVM NC pilot valves and 1 blanking plug

Type	Available connections		Connection type	Connection designation	Code no.
	[in]	[mm]			
ICSH 25	1	25	Butt weld, EN 10220	D	027H2309
	1	25	Butt weld, ANSI (B 36.10)	A	027H2308
	1	25	Socket weld, ANSI (B 16.11)	SOC	027H2307
ICSH 32	1 1/4	32	Butt weld, EN 10220	D	027H3309
	1 1/4	32	Butt weld, ANSI (B 36.10)	A	027H3378
	1 1/4	32	Socket weld, ANSI (B 16.11)	SOC	027H3377
ICSH 40	1 1/2	40	Butt weld, EN 10220	D	027H4309
	1 1/2	40	Butt weld, ANSI (B 36.10)	A	027H4308
	1 1/2	40	Socket weld, ANSI (B 16.11)	SOC	027H4307
ICSH 50	2	50	Butt weld, EN 10220	D	027H5309
	2	50	Butt weld, ANSI (B 36.10)	A	027H5308
	2	50	Socket weld, ANSI (B 16.11)	SOC	027H5307
ICSH 65	2 1/2	65	Butt weld, EN 10220	D	027H6309
	2 1/2	65	Butt weld, ANSI (B 36.10)	A	027H6311
	2 1/2	65	Socket weld, ANSI (B 16.11)	SOC	027H6308
ICSH 80	3	80	Butt weld, EN 10220	D	027H7302
	3	80	Butt weld, ANSI (B 36.10)	A	027H7303

Ordering

Ordering from the parts programme (valve body + function module + top cover)

Example:



Valve body 32 D (1¼ in.)
027H3120

+

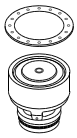

Function module ICS 32
027H3200

+

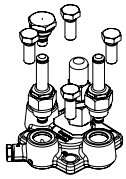

Top cover ICSH
027H0164

=

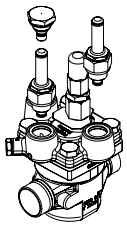

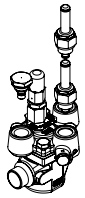

ICSH 25 / ICV 25 Valve body

Type	Connection size		Connection type	Connection designation	Code no.
	[in]	[mm]			
ICV 25	3/4	20	Butt weld, EN 10220	D	027H2128
	3/4	20	Butt weld, ANSI (B 36.10)	A	027H2131
	3/4	20	Socket weld, ANSI (B 16.11)	SOC	027H2132
	3/4	20	Female pipe thread (ANSI/ASME B 1.20.1)	FTP	027H2133
	7/8	22	Solder connection, ANSI (B 16.22)	SA	027H2125
	7/8	22	Solder connection, DIN (2856)	SD	027H2123
	1	25	Butt weld, EN 10220	D	027H2120
	1	25	Butt weld, ANSI (B 36.10)	A	027H2121
	1	25	Socket weld, ANSI (B 16.11)	SOC	027H2122
	1	25	Female pipe thread (ANSI/ASME B 1.20.1)	FTP	027H2127
	1 1/8	28	Solder connection, ANSI (B 16.22)	SA	027H2126
	1 1/8	28	Solder connection, DIN (2856)	SD	027H2124
	1 1/4	32	Butt weld, EN 10220	D	027H2129
	1 1/4	32	Butt weld, ANSI (B 36.10)	A	027H2130
	1 3/8	35	Solder connection, DIN (2856)	SD	027H2134
	1 1/2	40	Butt weld, EN 10220	D	027H2135

ICSH 25 / ICS 25 Function module

Type	C_v value [gal/min]	K_v value [m^3/h]	Code no.
ICSH / ICS 25 – 5	13.30	11.500	027H2201 [1]
ICSH / ICS 25 – 10	2.00	1.700	027H2202 [1]
ICSH / ICS 25 – 15	4.10	3.500	027H2203 [1]
ICSH / ICS 25 – 20	7.00	6.000	027H2204 [1]
ICSH / ICS 25 – 25	13.90	12.000	027H2200 [1]

ICSH 25 Top cover

Type	Code no.
ICSH 25	027H0159 [2]

ICSH 32 / ICV 32 Valve body

Type	Connection size		Connection type	Connection designation	Code no.
	[in]	[mm]			
ICV 32	1 1/4	32	Butt weld, EN 10220	D	027H3120
	1 1/4	32	Butt weld, ANSI (B 36.10)	A	027H3121
	1 1/4	32	Socket weld, ANSI (B 16.11)	SOC	027H3122
	1 3/8	35	Solder connection, DIN (2856)	SD	027H3123
	1 1/2	40	Butt weld, EN 10220	D	027H3125
	1 1/2	40	Butt weld, ANSI (B 36.10)	A	027H3126
	1 5/8	42	Solder connection, ANSI (B 16.22)	SA	027H3127
	1 5/8	42	Solder connection, DIN (2856)	SD	027H3128

ICSH 32 / ICS 32 Function module

Type	Code no.
ICSH / ICS 32	027H3200 [1]

ICSH 32 Top cover

Type	Code no.
ICSH 32	027H0164 [2]

[1] Including gasket and O-rings
[2] Including bolts, one blanking plug and 2 EVM NC

Ordering

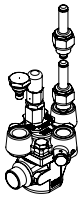

ICSH 40 / ICV 40 Valve body

Type	Connection size		Connection type	Connection designation	Code no.
	[in]	[mm]			
ICV 40	1 1/2	40	Butt weld, EN 10220	D	027H4120
	1 1/2	40	Butt weld, ANSI (B 36.10)	A	027H4121
	1 1/2	40	Socket weld, ANSI (B 16.11)	SOC	027H4122
	1 5/8	42	Solder connection, ANSI (B 16.22)	SA	027H4124
	1 5/8	42	Solder connection, DIN (2856)	SD	027H4123
	2	50	Butt weld, EN 10220	D	027H4126
	2	50	Butt weld, ANSI (B 36.10)	A	027H4127

ICSH 40 / ICS 40 Function module

Type		Code no.
ICSH / ICS 40		027H4200 [1]

ICSH 40 Top cover

Type		Code no.
ICSH 40		027H0169 [2]

ICSH 50 / ICV 50 Valve body

Type	Connection size		Connection type	Connection designation	Code no.
	[in]	[mm]			
ICV 50	2	50	Butt weld, EN 10220	D	027H5120
	2	50	Butt weld, ANSI (B 36.10)	A	027H5121
	2	50	Socket weld, ANSI (B 16.11)	SOC	027H5122
	2 1/8	54	Solder connection, DIN (2856)	SD	027H5123
	2 1/2	65	Butt weld, EN 10220	D	027H5124
	2 1/2	65	Butt weld, ANSI (B 36.10)	A	027H5125

ICSH 50 / ICS 50 Function module

Type		Code no.
ICSH / ICS 50		027H5200 [1]

ICSH 50 Top cover

Type		Code no.
ICSH 50		027H0174 [2]

ICSH 65 – 80 / ICV 65-80 Valve body

Type	Connection size		Connection type	Connection designation	Code no.
	[in]	[mm]			
ICV 65 – 80	2 1/2	65	Butt weld, EN 10220	D	027H6120
	2 1/2	65	Butt weld, ANSI (B 36.10)	A	027H6121
	2 1/2	65	Socket weld, ANSI (B 16.11)	SOC	027H6123
	2 1/2	65	Butt weld, JIS (B S 602)	J	027H6122
	2 5/8	67	Solder connection, ANSI (B 16.22)	SA	027H6125
	3	76	Solder connection, DIN (2856)	SD	027H6124
	3	80	Butt weld, EN 10220	D	027H6126
	3	80	Butt weld, ANSI (B 36.10)	A	027H6127

ICSH 65 – 80 / ICS 65 – 80 Function module

Type		Code no.
ICSH / ICS 65		027H6200 [1]
ICSH / ICS 80		027H8200 [1]

ICSH 65 – 80 Top cover

Type		Code no.
ICSH 65		027H0179 [2]
ICSH 80		027H0227 [2]

[1] Including gasket and O-rings
[2] Including bolts, one blanking plug and 2 EVM NC

Note:
The capacity of the ICS 80 module can only be achieved when using the valve body with 80 D or A (3 in) connections. If any other ICV 65 valve body is used the capacity of the complete valve will be reduced by up to 6%.

Quick Selection Notes:

VHV / STF, 4-way reversing valves

Danfoss Saginomiya STF and VHV 4-way reversing valves are used in reversible applications such as heat pumps or reversible air conditioning units and chillers.
The 4-way valve allows an inversion of the refrigeration cycle, changing from cooling mode in summer to heating mode in winter.

The cycle inversion is initiated by a small solenoid pilot valve controlling the movement of a slider, which changes the direction of the refrigerant.
The 4-way reversing valves are available with many different connection sizes. Capacities: 1.5 – 400 kW.
The 4-way reversing valves are UL and CE approved.

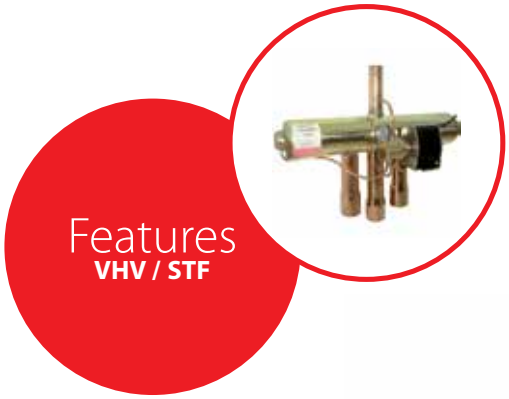

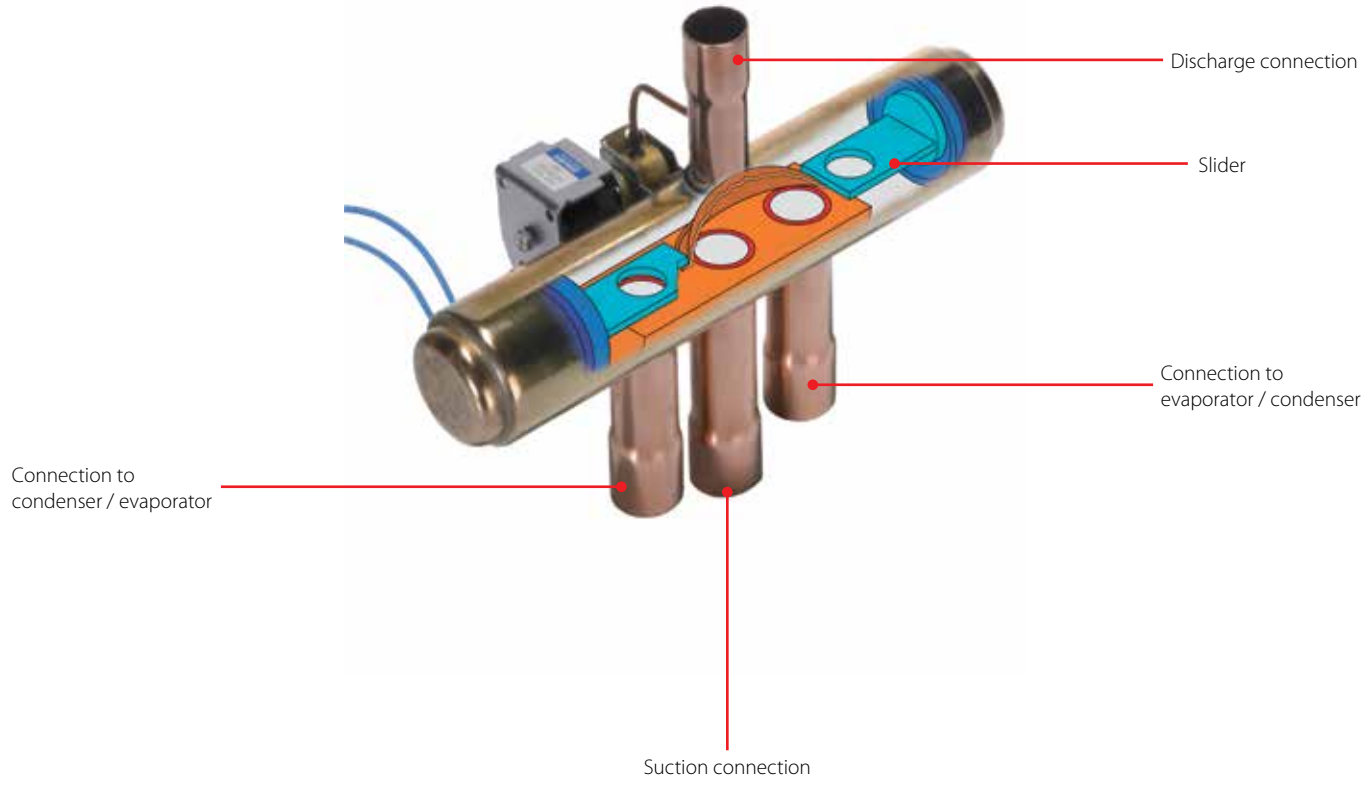

Facts

Application:
- Heat pump applications
- Reversing chillers
- Packaged air conditioning systems
- Room air conditioning systems

- Applicable to R410A, R407C, R134a, R404A, R22
  For a fully updated list of approved refrigerants, visit www.products.danfoss.com and search for individual code numbers, where refrigerants are listed as part of product specifications.
- Different connection sizes and connection configurations available
- Designed for instantaneous changeover with minimum pressure differential
- Minimal leakage in the valve
- Reduced pressure drop thanks to unique design (shape of internal elements)
- Max. working pressure PS: 45 bar
- Ambient temperature: -20 – 55 °C
- Full capacity range up to 400 kW
- Largest valve available on the market (VHV-6001)
- 30 years of experience and know-how

Technical data and ordering

STF / VHV

Technical data

Type	Discharge		Suction		Nominal capacity [1]	Style	Box qty.	Code no.
	I.D. [mm]	O.D. [in]	I.D. [mm]	O.D. [in]	[kW]			
STF-0101G	7.95	5/16	9.50	3/8	1.6 – 5.1	A	4	061L1206
	7.95	5/16	9.50	3/8	1.6 – 5.1	A	45	061L1188
STF-0104G	7.95	5/16	9.50	3/8	2.4 – 6.4	A	45	061L1143
STF-0201G	9.50	3/8	12.70	1/2	2.8 – 11.4	A	3	061L1207
	9.50	3/8	12.70	1/2	2.8 –11.4	A	32	061L1144
STF-0204G	9.50	3/8	15.90	5/8	2.8 – 11.4	D	32	061L1145
STF-0205G	7.95	5/16	12.70	1/2	2.8 – 11.4	B	32	061L1146
STF-0208G	9.50	3/8	15.90	5/8	2.8 – 11.4	C	32	061L1147
STF-0209G	9.50	3/8	12.70	1/2	2.8 – 11.4	B	32	061L1148
STF-0214G	12.70	1/2	15.90	5/8	2.8 – 11.4	D	32	061L1149
STF-0301G	12.70	1/2	15.90	5/8	5.3 – 14.6	E	4	061L1208
STF-0306G	12.70	1/2	19.05	3/4	5.3 – 14.6	E	32	061L1151
STF-0401G	12.70	1/2	19.05	3/4	8.3 – 29.2	B	2	061L1209
	12.70	1/2	19.05	3/4	8.3 – 29.2	B	24	061L1152
STF-0409G	12.70	1/2	22.20	7/8	8.3 – 29.2	B	24	061L1154
STF-0413G	15.90	5/8	22.20	7/8	8.3 – 29.2	B	24	061L1155
STF-0420G	12.70	1/2	22.20	7/8	8.4 – 33	B	24	061L1156
STF-0712G	19.05	3/4	22.20	7/8	21 – 53	B	1	061L1223
	19.05	3/4	22.20	7/8	21 – 53	B	6	061L1195
STF-0715G	22.20	7/8	28.60	1 1/8	21 – 53	B	6	061L1158
STF-0728G	22.20	7/8	22.20	7/8	21 – 53	B	6	061L1160
STF-1511G	22.20	7/8	28.60	1 1/8	41 – 61	F	1	061L1224
STF-1513G	22.20	7/8	34.95	1 3/8	41 – 61	F	1	061L1217
STF-1514G	28.60	1 1/8	34.95	1 3/8	41 – 61	F	1	061L1218
STF-2011G	22.20	7/8	28.60	1 1/8	41 – 77	B	1	061L1219
STF-2017G	28.60	1 1/8	34.95	1 3/8	41 – 77	B	1	061L1225
STF-2501G [2]	25.40	1	31.80	1 1/4	55 – 98	G	1	061L1278
STF-2505G	28.60	1 1/8	34.95	1 3/8	55 – 98	G	1	061L1279
STF-2506G	28.60	1 1/8	41.30	1 5/8	55 – 98	G	1	061L1280
STF-3001G	31.80	1 1/4	38.10	1 1/2	68 – 129	G	1	061L1281
STF-3003G	28.60 [3]	1 1/8 [5]	41.30	1 5/8	68 – 129	G	1	061L1282
STF-4001G	38.10	1 1/2	44.50	1 3/4	122 – 195	G	1	061L1284
STF-4002G	41.30 [3]	1 5/8 [5]	41.30	1 5/8	122 – 195	G	1	061L1285
STF-5001G	38.10	1 1/2	54.00	2 1/8	183 – 256	G	1	061L1286
STF-5002G	41.30 [3]	1 5/8 [5]	54.00	2 1/8	183 – 256	G	1	061L1287

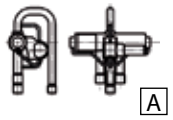

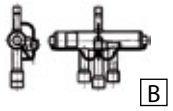

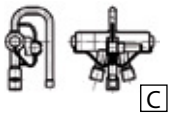

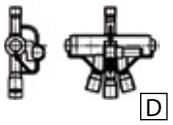

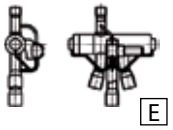

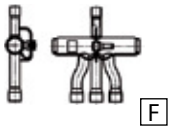

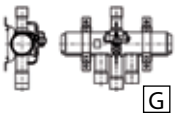

STF / VHV

Ordering

Coil for 4-way reversing valves [4]	Cable length [mm]	Rated voltage	Box qty.	Code no.
STF-01AB500A1	600	24 V AC	10	061L2092
STF-01AB503B1	1200	24 V AC	100	061L2038
STF-01AJ506B1	600	220 – 240 V AC	10	061L2093
STF-01AJ504F1	1200	208 – 240 V AC	1	061L2125
	1200	208 – 240 V AC	10	061L2094
STF-01AJ512D1	2000	220 – 240 V AC	10	061L2095
	2000	220 – 240 V AC	60	061L2074

[1]) The nominal capacities for R407C.
[2]) STF-2501G does not have a bracket.
[3]) Refers to O.D.
[4]) STF coils can be used with all STF and VHV valves.
[5]) Refers to I.D.
Note: R407C and R410A: for discharge and suction, I.D. describes exact inner diameter of valve connections.
O.D. relates to the outer diameter of connection pipe in the system.

RT, Pressure switch

RT pressure switches contain a pressure operated single-pole changeover contact, the position of which depends on the pressure in the inlet connection and the set scale value.
The RT series includes pressure switches for general applications within industrial and maritime refrigeration, as well as differential pressure switches for neutral zone regulation, and special pressure switches with gold-plated contact surfaces for PLC applications.

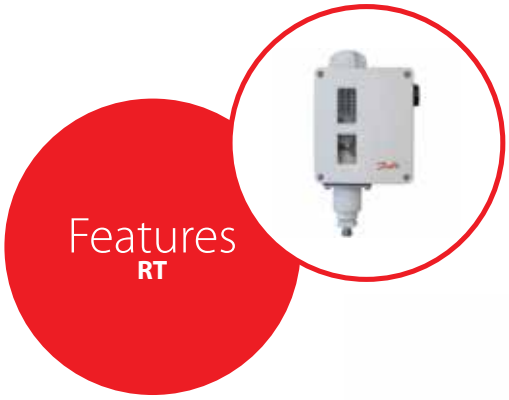

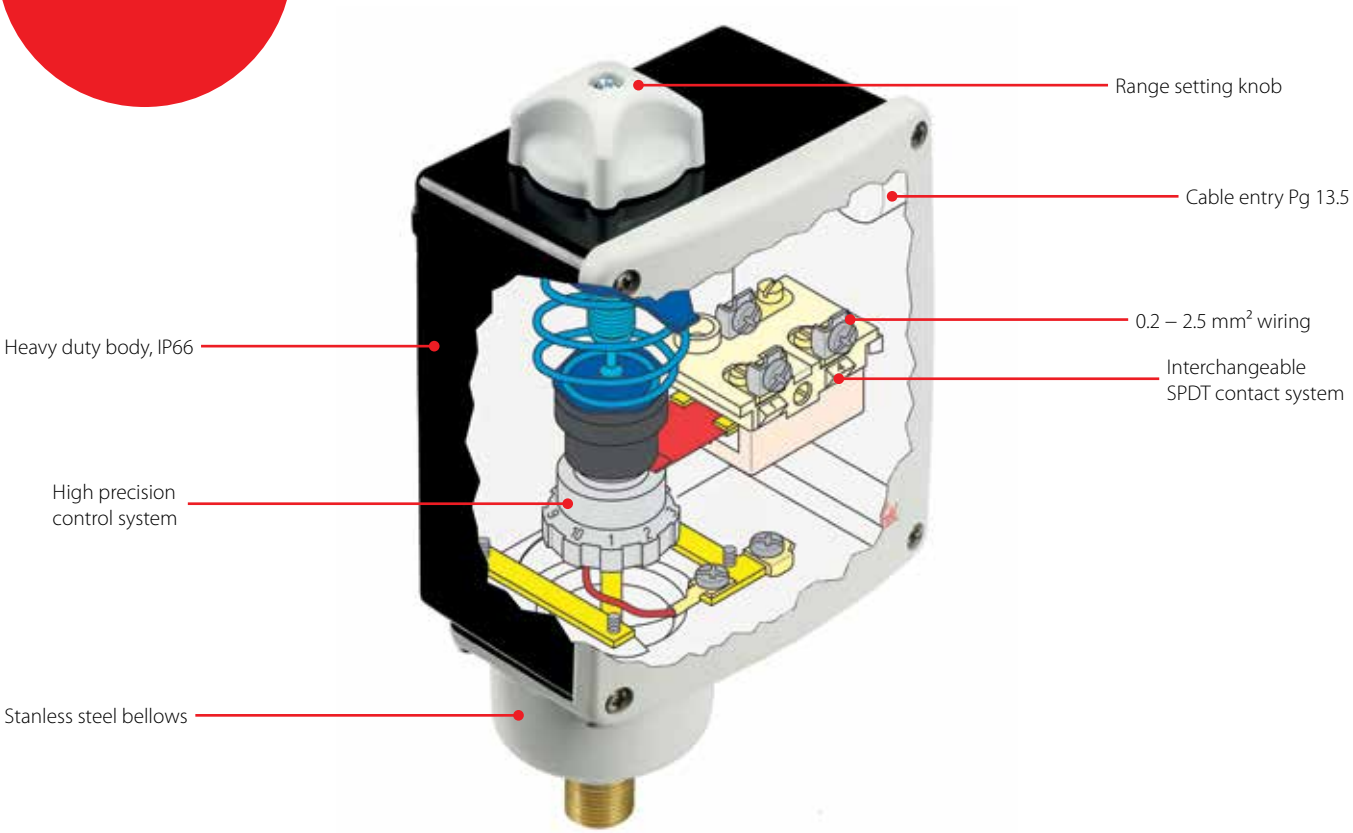

Facts

Application:
- General applications within industrial and marine refrigeration

- Pressure switches for fluorinated refrigerants and R717 (NH_3)
- Wide regulating range
- Suitable for both alternating and direct current (AC and DC)
- Interchangeable contact system
- Special versions with gold plated contact surfaces for PLC applications
- Versions for neutral zone regulation
- High stability and accuracy
- Long operating life time

- Enclosure: IP66 to EN 60529 / IEC 60529, except for versions with ext. reset which are IP54
- Insulation 400 V
- Ambient temperature: -50 – 70 °C for housing
- Cable connection: Pg 13.5
- Cable diameter: 6 – 14 mm

Technical data and ordering

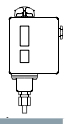

RT pressure switches for R22, R134a, R404A, R407A, R407C, R407F, R422B, R422D

Ordering

Type	Pressure	Regulation range [bar]	Differential Δp [bar]	Reset	Max. working pressure [bar]	Max. test pressure [bar]	Connection type	Code no.
RT 1	Low	-0.8 – 5	0.5 – 1.6	Auto	22	25	1/4 in / 6 mm flare	017-524566
	Low	-0.8 – 5	0.5	Man. (Min.)	22	25	1/4 in / 6 mm flare	017-524666
RT 200	Low	0.2 – 6	0.25 – 1.2	Auto	22	25	G 3/8 A [1]	017-523766
RT 117	High	10 – 30	1 – 4	Auto	42	47	G 3/8 A [1]	017-529566

[1]) G ext. thread, ISO 228-1

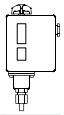

RT safety pressure switches for R22, R134a, R404A, R407A, R407C, R407F, R422B, R422D, R507A, R717 (NH_3)

Ordering

Type	Pressure	Regulation range [bar]	Differential Δp [bar]	Reset	Max. working pressure [bar]	Max. test pressure [bar]	Connection type	Code no.
RT 1A	Low	-0.8 – 5	0.5 – 1.6	Auto	22	25	1/4 in / 6 mm flare	017-501966
	Low	-0.8 – 5	0.5 – 1.6	Auto	22	25	G 3/8 A [1]	017-500166
	Low	-0.8 – 5	0.5	Man. (Min.)	22	25	1/4 in / 6 mm flare	017-502766
	Low	-0.8 – 5	0.5	Man. (Min.)	22	25	G 3/8 A [1]	017-500266
	Low	-0.8 – 5	1.3 – 2.4	Auto	22	25	G 3/8 A [1]	017-500766
RT 5A	High	4 – 17	1.2 – 4	Auto	22	25	1/4 in / 6 mm flare	017-505266
	High	4 – 17	1.2 – 4	Auto	22	25	G 3/8 A [1]	017-504666
	High	4 – 17	1.3	Man. (Max.)	22	25	1/4 in / 6 mm flare	017-506166
	High	4 – 17	1.3	Man. (Max.)	22	25	G 3/8 A [1]	017-504766

[1]) G external thread, ISO 228-1

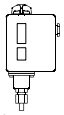

RT pressure switches with adjustable neutral zone for R22, R134a, R404A, R407A, R407C, R407F, R507A, R717 (NH_3) *)

Ordering

Type	Pressure	Regulation range [bar]	Mechanical differential Δp [bar]	Neutral zone Δp [bar]	Max. working pressure [bar]	Max. test pressure [bar]	Connection type	Code no.
RT 1AL	Low	-0.8 – 5	0.2	0.2 – 0.9	22	25	cutting ring ø6 mm	017L001666
	Low	-0.8 – 5	0.2	0.2 – 0.9	22	25	G 3/8 A [1] + weld nipple ø6.5 / 10 mm	017L003366
RT 200L	Low	0.2 – 6	0.25	0.25 – 0.7	22	25	G 3/8 A [1] + weld nipple ø6.5 / 10 mm	017L003266
RT 5AL	High	4 – 17	0.35	0.35 – 1.4	22	25	cutting ring ø6 mm	017L001766 [2])
	High	4 – 17	0.35	0.35 – 1.4	22	25	G 3/8 A [1] + weld nipple ø6.5 / 10 mm	017L004066 [2])
RT 117L	High	10 – 30	1	1 – 3	42	47	G 3/8 A [1] + weld nipple ø6.5 / 10 mm	017L004266 [2])

[1]) G external thread, ISO 228-1
[2]) Without nipple
*) Only types with letter A are suitable for R717.

Technical data and ordering

RT differential pressure switches for R22, R134a, R404A, R407A, R407C, R407F, R422B, R422D, R507A, R717 (NH_3)

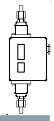

Ordering

Type	Regulation range [bar]	Mechanical differential Δp [bar]	Operating range for LP bellows [bar]	Max. working pressure [bar]	Max. test pressure [bar]	Connection type	Code no.
RT 260A	0.5 – 4	0.3	-1 – 18	22	25	cutting ring ø6 mm	017D001466
	0.5 – 4	0.3	-1 – 18	22	25	G 3/8 A [1]) + weld nipple ø6.5 / 10 mm	017D002166
	0.5 – 4	0.3	-1 – 18	22	25	G 3/8 A [1]) + weld nipple ø6.5 / 10 mm	017D002266 [2])
	0.5 – 6	0.5	-1 – 36	42	47	cutting ring ø6 mm	017D001566
	0.5 – 6	0.5	-1 – 36	42	47	G 3/8 A [1]) + weld nipple ø6.5 / 10 mm	017D002366
	1.5 – 11	0.5	-1 – 31	42	47	cutting ring ø6 mm	017D001666
	1.5 – 11	0.5	-1 – 31	42	47	G 3/8 A [1]) + weld nipple ø6.5 / 10 mm	017D002466
RT 262A	0.1 – 1.5	0.1	-1 – 9	11	13	cutting ring ø6 mm	017D001366
	0.1 – 1.5	0.1	-1 – 9	11	13	G 3/8 A [1]) + weld nipple ø6.5 / 10 mm	017D002566
RT 265A [3])	1 – 6	0.5	-1 – 36	42	47	G 3/8 A [1]) + weld nipple ø6.5 / 10 mm	017D007266

[1]) G external thread, ISO 228-1
[2]) Manual reset
[3]) Filter monitor: Alarm Δp = 0.8 bar, cut-out Δp = 1 bar (factory setting)

RT differential pressure switches with adjustable neutral zone for R22, R134a, R404A, R407A, R407C, R407F, R422B, R422D, R507A, R717 (NH_3)

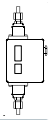

Ordering

Type	Regulation range [bar]	Mechanical differential Δp [bar]	Adjustable Neutral zone [bar]	Operating range for LP bellows [bar]	Max. working pressure [bar]	Max. test pressure [bar]	Connection type	Code no.
RT 262 AL	0.1 – 1.5	0.1	1 – 0.33	-1 – 9	11	13	G 1/2 A [1]) + weld nipple ø6.5 / 10 mm	017D004366

[1]) G external thread, ISO 228-1

RT safety pressure switches with EN 12263 approval and CE marked according to PED, Pressure Equipment Directive
For R22, R134a, R404A, R407A, R407C, R407F, R422B, R422D, R507A, R717 (NH_3) *)

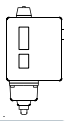

Ordering

Type	Pressure	Regulation range [bar]	Differential (fixed) Δp [bar]	Reset	Max. working pressure [bar]	Max. test pressure [bar]	Connection type	Code no.
RT 6W	High	5 – 25	3	Auto	28 [2])	38	1/4 in / 6 mm flare	017-503166
RT 6B	High	10 – 28	1	Man. (Max.)	28 [2])	38	1/4 in / 6 mm flare	017-503466
RT 6S	High	10 – 28	1	Man. (Max.)	28 [2])	38	1/4 in / 6 mm flare	017-507566
RT 30AW	High	1 – 10	0.8	Auto	22	25	G 1/2 A [1])	017-518766
RT 30AB	High	1 – 10	0.4	Man. (Max.)	22	25	G 1/2 A [1])	017-518866
RT 30AS	High	1 – 10	0.4	Man. (Max.)	22	25	G 1/2 A [1])	017-518966
RT 6AW	High	5 – 25	3	Auto	28 [2])	38	cutting ring ø6 mm	017-513166
	High	5 – 25	3	Auto	28 [2])	38	G3/8 A [1]) + weld nipple ø6.5 / 10 mm	017-503266
RT 6AB	High	10 – 28	1.5	Man. (Max.)	28 [2])	38	cutting ring ø6 mm	017-513366
	High	10 – 28	1.5	Man. (Max.)	28 [2])	38	G3/8 A [1]) + weld nipple ø6.5 / 10 mm	017-503566
RT 6AS	High	10 – 28	1.5	Man. (Max.)	28 [2])	38	cutting ring ø6 mm	017-514666
	High	10 – 28	1.5	Man. (Max.)	28 [2])	38	G3/8 A [1]) + weld nipple ø6.5 / 10 mm	017-507666

[1]) G external thread, ISO 228-1
[2]) Max. working pressure acc. to PED is limited to 28 bar. If the unit is going to be used outside PED regulation, then MWP may be increased to 34 bar.
**) Only types with letter A are suitable for R717*

Quick Selection Notes:

KP, Pressure switch

KP pressure switches are designed to protect refrigeration systems from excessively high discharge pressures, excessively low suction pressures, to start / stop compressors or to operate fans of aircooled condensers.

The enhanced contact system for 16 A makes it possible to operate electrical motors up to 2 kW directly, without the use of contactors. KP pressure switches are available in IP30 and IP44 enclosures.



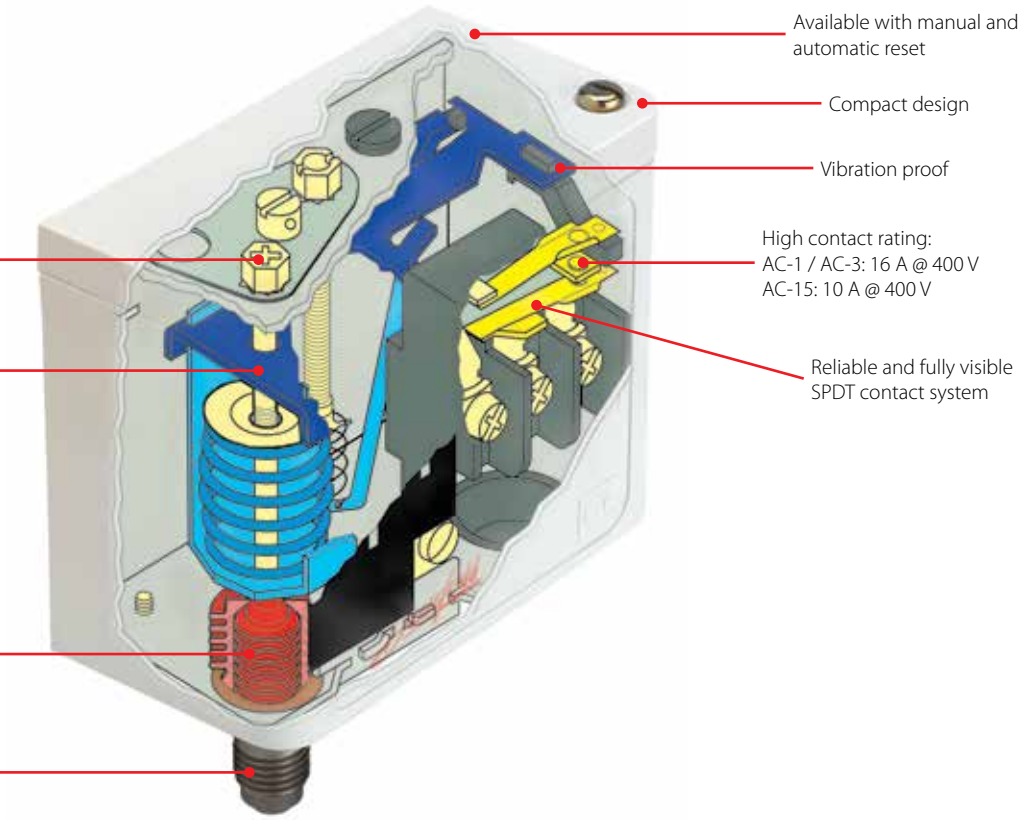

Facts

Application: Food Retail, Heavy Commercial Refrigeration, Light Commercial Refrigeration, Commercial Air Conditioning, Food Processing and Storage.

- Easy to handle compact design with large and visible scale plates
- Vibration and shock resistant
- Accurate and reliable compressor operation due to excellent electro-mechanical function
- High reliability both electrically and mechanically-a KP switch can be connected directly to a single-phase AC motor of up to approximately 2 kW or installed in the control circuit of DC motors and large AC motors
- Easy to install electrical connection which also facilitates rack mounting
- Bellows without any welding points, which makes them stress free and completely tight
- Wide range of approvals - Danfoss offers a wide range of approval suited for specific applications and geographical markets
- Available with flare, solder or capillary tube connections
- Pressure switches PED 97 / 23 / EC approved available
- Wide pressure ranges
  The programme covers working ranges:
  -0.9 – 46.5 bar / -1.3 – 674 psi
- Versions with IP30 enclosure rating can be updated to IP44 or IP55 enclosure rating using top plate (IP44) or IP55 enclosure (IP55), available as accessories

Technical data and ordering

KP pressure switches for R22, R134a, R404A, R407A, R407C, R407F, R422B, R422D, R438A, R448A, R449A, R450A, R452A, R507A, R513A

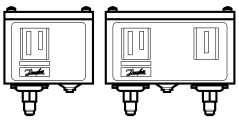

Ordering

Type	Pressure	Low pressure (LP)		High pressure (HP)		Reset		Contact System	Connection type	Code no.
		Regulating range [bar]	Differential Δp [bar]	Regulating range [bar]	Differential Δp [bar]	Low pressure LP	High pressure HP			
KP 1	Low	-0.2 – 7.5	0.7 – 4.0	–	–	Auto	–	SPDT	1/4 in / 6 mm flare	060-110166 [1] [4]
	Low	-0.2 – 7.5	0.7 – 4.0	–	–	Auto	–	SPDT	1/4 in ODF solder	060-111266 [4]
	Low	-0.2 – 7.5	0.7 – 4.0	–	–	Auto	–	SPDT	6 mm ODF solder	060-111066 [4]
	Low	-0.2 – 7.5	0.7 – 4.0	–	–	Auto	–	SPDT	1/4 in / 6 mm flare	060-114166 [2] [4]
	Low	-0.9 – 7.0	0.7	–	–	Man. (Min.)	–	SPDT	1/4 in / 6 mm flare	060-110366 [1]
	Low	-0.9 – 7.0	0.7	–	–	Man. (Min.)	–	SPDT	1/4 in ODF solder	060-111166
	Low	-0.9 – 7.0	0.7	–	–	Man. (Min.)	–	SPDT	6 mm ODF solder	060-110966
KP 2	Low	-0.2 – 5.0	0.4 – 1.5	–	–	Auto	–	SPDT	1/4 in / 6 mm flare	060-112066 [1] [4]
	Low	-0.2 – 5.0	0.4 – 1.5	–	–	Auto	–	SPDT	6 mm ODF solder	060-112366 [4]
KP 5	High	–	–	8 – 32	1.8 – 6.0	–	Auto	SPDT	1/4 in / 6 mm flare	060-117166 [1] [4]
	High	–	–	8 – 32	1.8 – 6.0	–	Auto	SPDT	1/4 in / ODF solder	060-117966 [4]
	High	–	–	8 – 32	1.8 – 6.0	–	Auto	SPDT	6 mm ODF solder	060-117766 [4]
	High	–	–	8 – 32	3	–	Man. (Max.)	SPDT	1/4 in / 6 mm flare	060-117366 [1]
	High	–	–	8 – 32	3	–	Man. (Max.)	SPDT	1/4 in ODF solder	060-118066
KP 15	Dual	-0.2 – 7.5	0.7 – 4.0	8 – 32	4	Auto	Auto	SPDT+LP signal	1/4 in / 6 mm flare	060-124166 [4]
	Dual	-0.2 – 7.5	0.7 – 4.0	8 – 32	4	Auto	Auto	SPDT+LP signal	1/4 in ODF solder	060-125466 [4]
	Dual	-0.2 – 7.5	0.7 – 4.0	8 – 32	4	Auto	Man. (Max.)	SPDT+LP signal	1/4 in / 6 mm flare	060-124366 [1]
	Dual	-0.2 – 7.5	0.7 – 4.0	8 – 32	4	Auto	Man. (Max.)	SPDT+LP signal	1/4 in / 6 mm flare	060-114866 [2]
	Dual	-0.9 – 7.0	0.7	8 – 32	4	Man. (Min.)	Man. (Max.)	SPDT+LP signal	1/4 in / 6 mm flare	060-124566 [1]
	Dual	-0.9 – 7.0	0.7	8 – 32	4	Conv. [3]	Conv. [3]	SPDT+LP signal	1/4 in / 6 mm flare	060-126166
	Dual	-0.2 – 7.5	0.7 – 4.0	8 – 32	4	Auto	Auto	SPDT+LP and HP signal	1/4 in / 6 mm flare	060-126566 [1] [4]
	Dual	-0.2 – 7.5	0.7 – 4.0	8 – 32	4	Auto	Auto	SPDT+LP and HP signal	1/4 in ODF solder	060-129966 [4]
	Dual	-0.2 – 7.5	0.7 – 4.0	8 – 32	4	Auto	Man. (Max.)	SPDT+LP and HP signal	1/4 in / 6 mm flare	060-126466 [1]
	Dual	-0.2 – 7.5	0.7 – 4.0	8 – 32	4	Auto	Man. (Max.)	SPDT+LP and HP signal	1/4 in ODF solder	060-128466 [1]
	Dual	-0.2 – 7.5	0.7 – 4.0	8 – 32	4	Conv. [3]	Conv. [3]	SPDT+LP and HP signal	1/4 in / 6 mm flare	060-115466 [4]
	Dual	-0.2 – 7.5	0.7 – 4.0	8 – 32	4	Conv. [3]	Conv. [3]	SPDT+LP and HP signal	1/4 in ODF solder	060-001066 [4]
	Dual	-0.9 – 7.0	0.7	8 – 32	4	Conv. [3]	Conv. [3]	SPDT+LP and HP signal	1/4 in / 6 mm flare	060-122066

[1] Available in Asia market with code 060-xxxx91
[2] Pressure switches with gold-plated contacts
[3] Conv.: optional automatic or manual reset
[4] Enclosure IP44

Technical data and ordering

KP pressure switches PED 2014/68/EU approved; EN 12263
For R22, R134a, R404A, R407A, R407C, R407F, R410A*), R422B, R422D, R438A, R448A, R449A, R450A, R452A, R507A, R513A

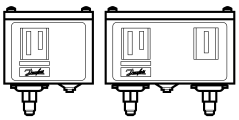

Ordering

Type	Pressure	Low pressure (LP)		High pressure (HP)		Reset		Contact System	Connection type	Code no.
		Regulating range [bar]	Differential Δp [bar]	Regulating range [bar]	Differential Δp [bar]	Low pressure LP	High pressure HP			
KP 1	Low	-0.2 – 7.5	0.7 – 4.0	–	–	Auto	–	SPDT	1/4 in / 6 mm flare	060-110166 [2] [3]
	Low	-0.2 – 7.5	0.7 – 4.0	–	–	Auto	–	SPDT	6 mm ODF solder	060-111066 [3]
	Low	-0.9 – 7	0.7	–	–	Man. (Min.)	–	SPDT	1/4 in / 6 mm flare	060-110366 [2]
	Low	-0.9 – 7	0.7	–	–	Man. (Min.)	–	SPDT	6 mm ODF solder	060-110966
KP 2	Low	-0.2 – 5	0.4 – 1.5	–	–	Auto	–	SPDT	1/4 in / 6 mm flare	060-112066 [2] [3]
	Low	-0.2 – 5	0.4 – 1.5	–	–	Auto	–	SPDT	6 mm ODF solder	060-112366 [3]
KP 6W [1]	High	–	–	8 – 42	4 – 10	–	Auto	SPDT	1/4 in / 6 mm flare	060-519066 [3]
KP 6B [1]	High	–	–	8 – 42	4	–	Man. (Max.)	SPDT	1/4 in / 6 mm flare	060-519166
KP 7W [1]	High	–	–	8 – 32	4 – 10	–	Auto	SPDT	1/4 in / 6 mm flare	060-119066 [3]
	High	–	–	8 – 32	4 – 10	–	Auto	SPDT	6 mm ODF solder	060-120366 [3]
KP 7B [1]	High	–	–	8 – 32	4	–	Man. (Max.)	SPDT	1/4 in / 6 mm flare	060-119166
KP 7S [1]	High	–	–	8 – 32	4	–	Man. (Max.)	SPDT	1/4 in / 6 mm flare	060-119266 [3]
KP 7BS [1]	Dual	–	–	8 – 32	4	–	Man. (Max.)	SPST	1/4 in / 6 mm flare	060-120066
KP 17W [1]	Dual	0.2 – 7.5	0.7 – 4	8 – 32	4	Auto	Auto	SPDT+LP and HP signal	1/4 in / 6 mm flare	060-127566 [3]
	Dual	0.2 – 7.5	0.7 – 4	8 – 32	4	Auto	Auto	SPDT+LP and HP signal	6 mm ODF solder	060-127666 [3]
KP 17W [1]	Dual	0.2 – 7.5	0.7 – 4	8 – 32	4	Auto	Auto	SPDT+LP signal	1/4 in / 6 mm flare	060-126766 [3]
KP 17B [1]	Dual	0.2 – 7.5	0.7 – 4	8 – 32	4	Auto	Man. (Max.)	SPDT	1/4 in / 6 mm flare	060-126866
	Dual	0.2 – 7.5	0.7 – 4	8 – 32	4	Auto	Man. (Max.)	SPDT	6 mm ODF solder	060-127466
KP 17WB [1]	Dual	0.2 – 7.5	0.7 – 4	8 – 32	4	Auto	Conv. [5]	SPDT+LP and HP signal	1/4 in / 6 mm flare	060-539766 [3] [4]

[1] W = PSH (pressure switch), B = PZH (pressure switch with ext. reset), S = PZHH (pressure switch with int. reset)
[2] Available in Asia market with code 060-xxxx91
[3] Enclosure IP44
[4] Factory setting: LP side: range = 1 bar P_e, diff. = 1 bar; HP side: range = 18 bar P_e, diff. = 4 bar fixed
[5] Conv.: optional automatic or manual reset
**) only for KP6W, KP6B*

Technical data and ordering

KP pressure switches for R717, R22, R134a, R404A, R407A, R407C, R407F, R422B, R422D, R438A, R448A, R449A, R450A, R452A, R507A, R513A

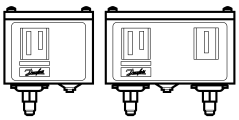

Ordering

Type	Pressure	Low pressure (LP)		High pressure (HP)		Reset		Contact System	Connection type	Code no.
		Regulating range [bar]	Differential Δp [bar]	Regulating range [bar]	Differential Δp [bar]	Low pressure LP	High pressure HP			
KP 1A	Low	-0.2 – 7.5	0.7 – 4.0	–	–	Auto	–	SPDT	M10 × 0.75	060-116266 [3]
	Low	-0.2 – 7.5	0.7 – 4.0	–	–	Auto	–	SPDT	1 m cap. tube with M10 × 0.75	060-116066 [2]
	Low	-0.9 – 7.0	0.7	–	–	Man. (Min.)	–	SPDT	1 m cap. tube with M10 × 0.75	060-116166
KP 5A	High	–	–	8 – 32	1.8 – 6.0	–	Auto	SPDT	1 m cap. tube with M10 × 0.75	060-123066 [2]
	High	–	–	8 – 32	3	–	Man. (Max.)	SPDT	M10 × 0.75	060-115366 [3]
	High	–	–	8 – 32	3	–	Man. (Max.)	SPDT	1 m cap. tube with M10 × 0.75	060-123166
KP 15A	Dual	-0.2 – 7.5	0.7 – 4.0	8 – 32	4	Auto	Auto	SPDT+LP and HP signal	M10 × 0.75	060-129566
	Dual	-0.2 – 7.5	0.7 – 4.0	8 – 32	4	Auto	Auto	SPDT+LP and HP signal	1 m cap. tube with M10 × 0.75	060-129366 [2]
	Dual	-0.2 – 7.5	0.7 – 4.0	8 – 32	4	Auto	Man. (Max.)	SPDT+LP and HP signal	M10 × 0.75	060-129666
	Dual	-0.2 – 7.5	0.7 – 4.0	8 – 32	4	Auto	Man. (Max.)	SPDT+LP and HP signal	1 m cap. tube with M10 × 0.75	060-129466
	Dual	-0.9 – 7.0	0.7	8 – 32	4	Conv. [1]	Conv. [1]	SPDT+LP signal	1 m cap. tube with M10 × 0.75	060-128366
KP 7ABS	Dual	–	–	8 – 32	4	–	Man. (Max.)	SPST	1 m cap. tube with M10 × 0.75	060-120566

[1]) Conv.: optional automatic or manual reset
[2]) Enclosure IP44
[3]) Available in Asia market with code 060-xxxx91

KP pressure switches for R290, R444B, R600, R600a, R1234ze, R1290

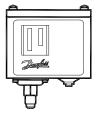

Ordering

Type	Pressure	Low pressure (LP)		High pressure (HP)		Reset		Contact System	Function *)	Code no.
		Regulating range [bar]	Differential Δp [bar]	Regulating range [bar]	Differential Δp [bar]	Low pressure LP	High pressure HP			Connection ¼ in ODF solder
KP 1E	Low	- 0.2 – 7.5	0.7 – 4.0	–	–	Auto	–	SPDT	PSL	060-530066
KP 1E	Low	- 0.9 – 7.0	0.7	–	–	Man. (Min.)	–	SPDT	PZL	060-530266
KP 7EW	High	–	–	8 – 32	1.8 – 6.0	–	Auto	SPDT	PSH	060-530466
KP 7EB	High	–	–	8 – 32	4	–	Man. (Max.)	SPDT	PZH	060-530666

**) PSL, PZL, PSH, PZH according to EN12263: 1998*

MP, Differential pressure switch

MP 54 and MP 55 oil differential pressure switches are used as safety switches to protect refrigeration compressors against low lubricating oil pressure. If the oil pressure fails, the oil differential pressure switch stops the compressor after a certain time period.

MP 54 has a fixed differential pressure setting. It also incorporates a thermal time relay with a fixed release time setting.
MP 55 and MP 55A have adjustable differential pressure and are available both with and without thermal time relay.

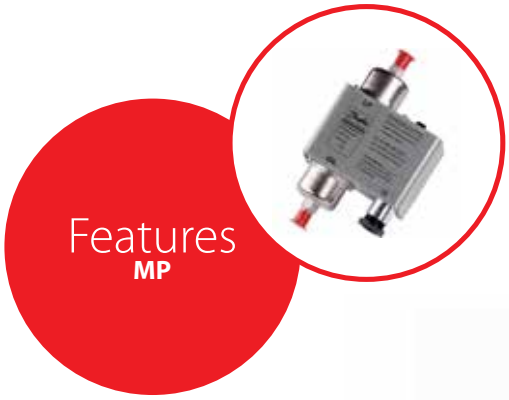

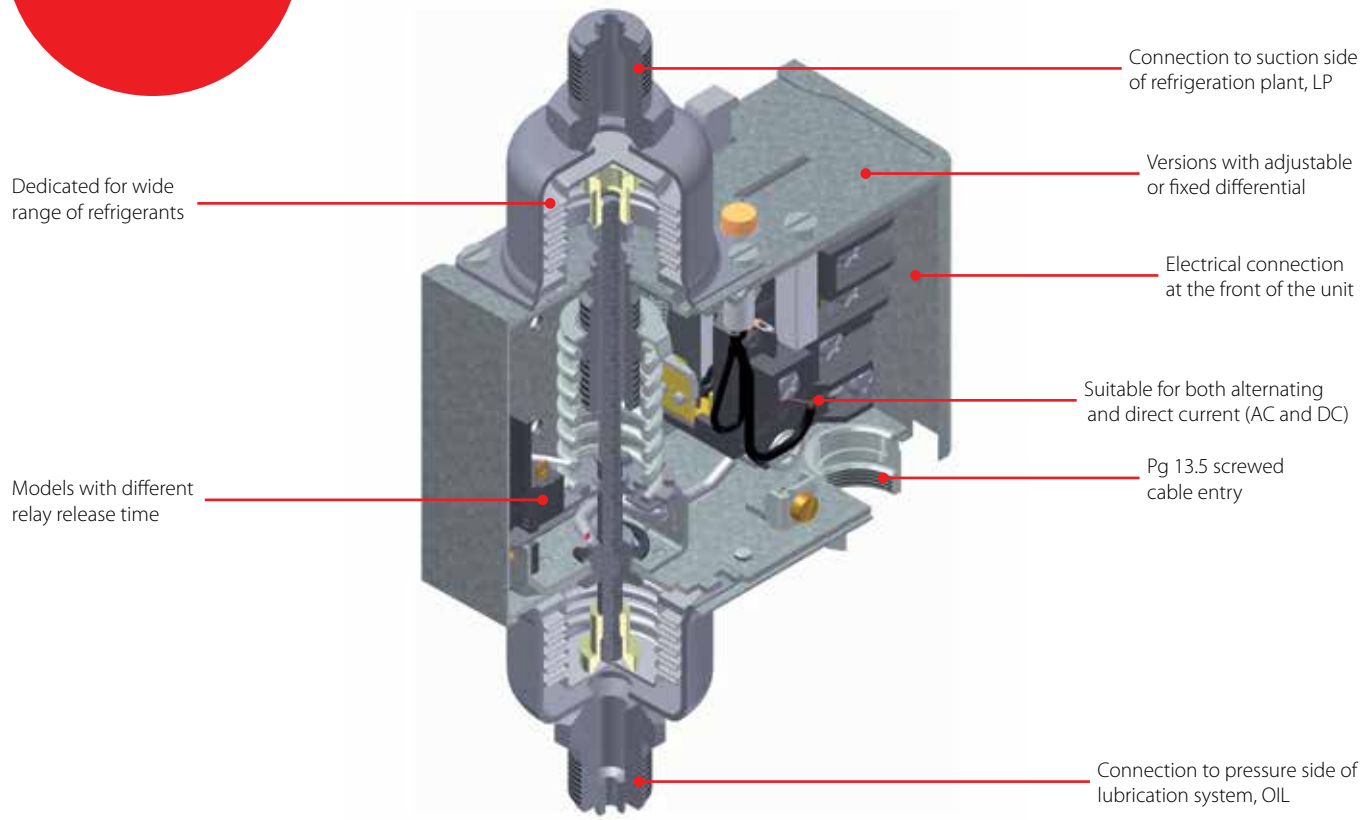

Facts

Application:
- Food Retail
- Heavy Commercial Refrigeration
- Light Commercial Refrigeration
- Commercial Air Conditioning
- Food Processing and Storage

- Suitable for both alternating and direct current (AC and DC)
- Small contact differential
- Bellows without any welding points, which makes them stress free and completely tight
- Wide regulating range

- Screwed cable entry for cables: 6 – 14 mm diameter
- Electrical connection at the front of the unit
- Wide range of approvals - Danfoss offers a wide range of approvals suited for specific applications and geographical markets

Technical data and ordering

MP differential pressure switches for R22, R134a, R404A, R407A, R407C, R407F, R422B, R422D, R448A, R449A, R450A, R452A, R507A, R513A



Ordering

Type	Differential Δp [bar]	Operation range, LP side [bar]	Relay release time [s]	Connection type	Code no.
MP 54	0.65	-1 – 12	0 [2]	1/4 in Flare	060B029766
	0.65	-1 – 12	45	1/4 in Flare	060B016666
	0.9	-1 – 12	60	1/4 in Flare	060B016766
	0.65	-1 – 12	90	1/4 in Flare	060B016866
	0.65	-1 – 12	120	1/4 in Flare	060B016966
MP 55	0.3 – 4.5	-1 – 12	45	1/4 in Flare	060B017066
	0.3 – 4.5	-1 – 12	45	1 m cap.tube 1/4 in ODF solder	060B013366
	0.3 – 4.5	-1 – 12	60	1/4 in Flare	060B017166
	0.3 – 4.5	-1 – 12	60	1/4 in Flare	060B017866 [1]
	0.3 – 4.5	-1 – 12	90	1/4 in Flare	060B017266
	0.3 – 4.5	-1 – 12	120	1/4 in Flare	060B017366
	0.3 – 4.5	-1 – 12	0 [2]	1/4 in Flare	060B029966

[1] *With glow lamp that remains on during normal operation.*
Note: If the operational light goes out, the compressor should not run longer than the release time.
[2] *MP without time relay.*
Versions without time relay are for applications where an external time relay is required - perhaps with a different release time than the one specified.

MP differential pressure switches for R22, R134a, R404A, R407A, R407C, R407F, R422B, R422D, R448A, R449A, R450A, R452A, R507A, R513A

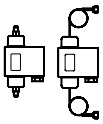

Ordering

Type	Control differential Δp [psi]	Regulation range LP side [inHg] – [psi]	Time relay delay time [s]	Connection type	Code no.
MP 54	6.0	29 – 175	45	1/4 in Flare	060B200866
	6.0	29 – 175	45	1/4 in Flare nut with 36 in capillary tube	060B205066
	9.0	29 – 175	90	1/4 in Flare	060B200266
	9.0	29 – 175	120	1/4 in Flare	060B200366 [2]
	9.0	29 – 175	120	1/4 in Flare nut with 36 in capillary tube	060B205366 [2]
MP 55	4.3 – 65	29 – 175	45	1/4 in Flare nut with 36 in capillary tube	060B205466
	4.3 – 65	29 – 175	60	1/4 in Flare	060B201266 [1]
	4.3 – 65	29 – 175	90	1/4 in Flare	060B200666
	4.3 – 65	29 – 175	120	1/4 in Flare	060B200766
	4.3 – 65	29 – 175	120	1/4 in Flare nut with 36 in capillary tube	060B205766

[1] *With glow lamp that remains on during normal operation of compressor.*
[2] *Three-wire hook-up.*
Note: When time delay is energized which also means that min. permisible oil pressure (differential Δp) is reached, light goes out.

MP differential pressure switches for R717, R22, R134a, R404A, R407A, R407C, R407F, R422B, R422D, R448A, R449A, R450A, R452A, R507A, R513A



Ordering

Type	Differential Δp [bar]	Operation range, LP side [bar]	Relay release time [s]	Connection type	Code no.
MP 55A	0.3 – 4.5	-1 – 12	45	G 3/8 A supplied with ø6.5 / 10 mm weld nipple	060B017466
	0.3 – 4.5	-1 – 12	45	M12×1.5 with 6 mm cutting ring	060B018266
	0.3 – 4.5	-1 – 12	60	G 3/8 A supplied with ø6.5 / 10 mm weld nipple	060B017566
	0.3 – 4.5	-1 – 12	60	M12×1.5 with 6 mm cutting ring	060B018366
	0.3 – 4.5	-1 – 12	60	G 3/8 A supplied with ø6.5 / 10 mm weld nipple	060B017966 [1]
	0.3 – 4.5	-1 – 12	90	G 3/8 A supplied with ø6.5 / 10 mm weld nipple	060B017666
	0.3 – 4.5	-1 – 12	90	M12×1.5 with 6 mm cutting ring	060B018466
	0.3 – 4.5	-1 – 12	120	G 3/8 A supplied with ø6.5 / 10 mm weld nipple	060B017766
	0.3 – 4.5	-1 – 12	120	M12×1.5 with 6 mm cutting ring	060B018566
	0.3 – 4.5	-1 – 12	0 [2]	G 3/8 A supplied with ø6.5 / 10 mm weld nipple	060B029866 [2]
	0.3 – 4.5	-1 – 12	0 [2]	M12×1.5 with 6 mm cutting ring	060B029666

[1] *With glow lamp that remains on during normal operation.*
Note: If the operational light goes out, the compressor should not run longer than the release time.
[2] *MP without time relay.*
Versions without time relay are for applications where an external time relay is required - perhaps with a different release time than the one specified.

Technical data and ordering

MP differential pressure switches for R32, R290, R600, R600a, R1270

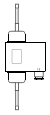

Ordering

Type	Differential range Δp [bar]	Switch differential max. Δp [bar]	Operation range, LP side [bar]	Connection type	Code no.
MP 55E	0.3 – 4.5	0.2	-1 – 12	1/4 inch ODF solder	060B530066

Quick Selection Notes:

ACB / CCB, Cartridge pressure switches

Cartridge pressure switches are small diaphragm type pressure switches for use in refrigeration and air conditioning systems. They as standard are equipped with a 6A contact system with automatic or manual reset. ACB / CCB are robust and reliable in use, and the small size, lightness and high degree of protection means that they can be mounted directly on the refrigeration system where pressure monitoring is required.
Cartridge pressure switches are available in many different versions with different pressure settings and pressure connections.



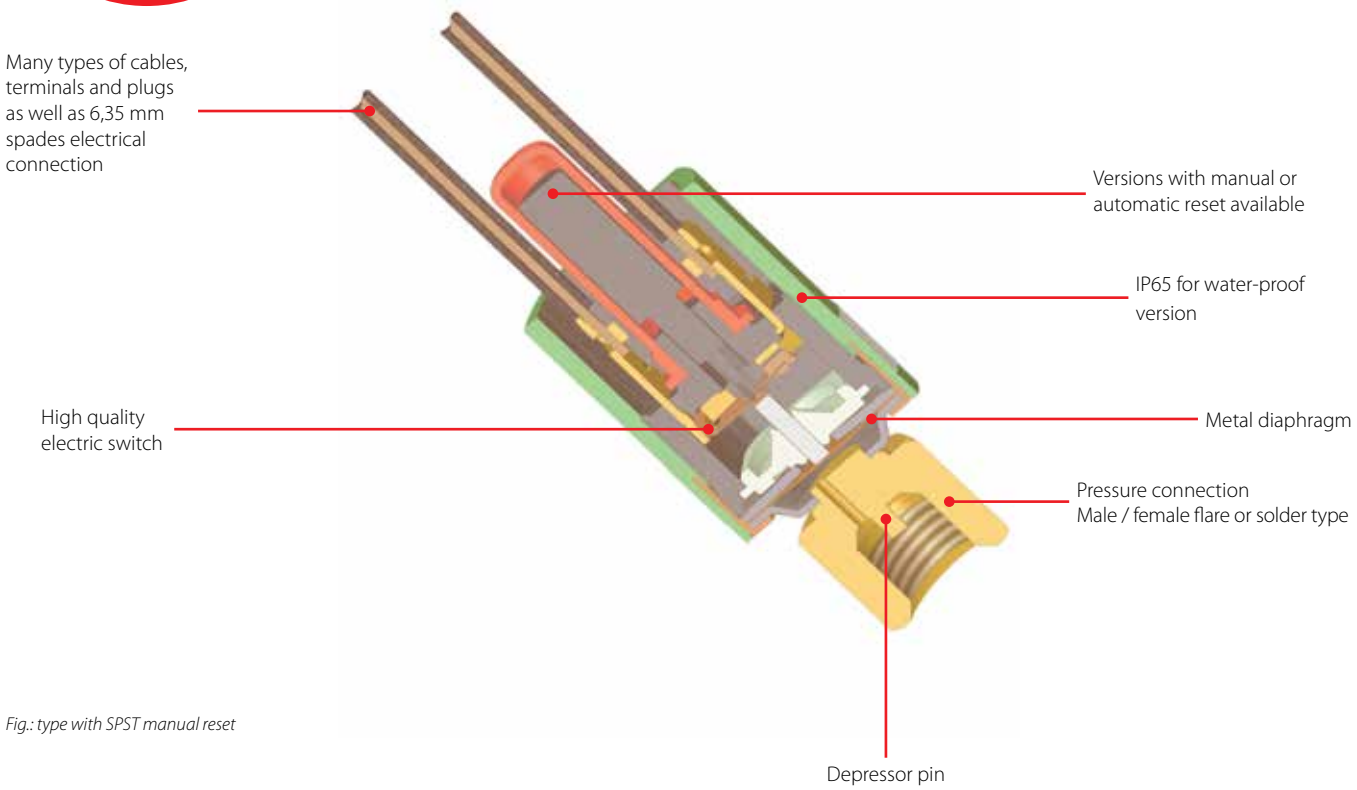

Fig.: type with SPST manual reset

Facts

Application:
- Traditional refrigeration
- Heat pump systems
- Air conditioning units
- Liquid coolers
- Transport refrigeration

- Compact and easy to install
- Metal diaphragm:
  - excellent reliability and repeatability
  - lifetime of 100 000 cycles minimum
  - no contact chattering during changeover
- Flexible order quantity due to European production with short lead times
- Wide choice of specifications:
  - set-point
  - pressure connection
  - electrical connection
- Global coverage and widespread use by major OEMs
- Over 100 million pcs installed in the field

- CE, TÜV, UL and C-UL approvals (SPDT man. only CE appovals)
- Additional information about special versions: 1 A (250 V AC); 4 A (250 V AC) SPDT, 6 A (250 V AC) SPST and gold plated contact system 0.05 A (12 / 24 V DC)
- Normally Closed (NC), Normally Open (NO) or SPDT contact system
- Convenient electrical connection - spades or cables (1.5 m cable for standard version)
- Pressure range: -0.6 – 150 bar
- Automatic or manual reset
- IP65 (water proof version with cables)

Technical data and ordering

ACB cartridge pressure switches for R22, R134a, R404A, R407C, R407A, R40C, R407F, R410A, R438A, R448A, R449A, R450A, R452A, R513A

Ordering

Application	Reset	Cut out		Cut in		Contact system	Enclosure type W-waterproof [1] O-open type [2]	Connection type	Code no.
		[bar]	[psi]	[bar]	[psi]				
High pressure cut-out	Auto	18 ± 0.7	260 ± 10	13 ± 1.2	190 ± 17	SPST-NC	W	6 mm / solder	061F7504
	Auto	18 ± 0.7	260 ± 10	13 ± 1.2	190 ± 17	SPST-NC	W	1/4 in / solder	061F7505
	Auto	18 ± 0.7	260 ± 10	13 ± 1.2	190 ± 17	SPST-NC	W	1/4 in / female flare	061F7506
	Auto	18 ± 0.7	260 ± 10	13 ± 1.2	190 ± 17	SPDT	W	1/4 in / female flare	061F9057
	Auto	20 ± 1.0	290 ± 14	16 ± 1.5	230 ± 21	SPST-NC	O	1/4 in / solder	061F8710
	Auto	20 ± 1.0	290 ± 14	16 ± 1.5	230 ± 21	SPST-NC	O	1/4 in / female flare	061F8708
	Auto	23 ± 0.7	335 ± 10	19 ± 1.5	275 ± 17	SPST-NC	O	1/4 in / solder	061F8707
	Auto	23 ± 0.7	335 ± 10	19 ± 1.2	275 ± 17	SPST-NC	W	1/4 in / female flare	061F8494
	Auto	23 ± 0.7	335 ± 10	19 ± 1.2	275 ± 17	SPDT	W	1/4 in / female flare	061F9056
	Manual	23 ± 0.7	335 ± 10	19 ± 1.2	275 ± 17	SPDT	W	1/4 in / female flare	061F9243
	Auto	26 ± 1.0	380 ± 15	20 ± 1.5	290 ± 22	SPST-NC	W	6 mm / solder	061F7507
	Auto	26 ± 1.0	380 ± 15	20 ± 1.5	290 ± 22	SPST-NC	W	1/4 in / solder	061F7508
	Auto	26 ± 1.0	380 ± 15	20 ± 1.5	290 ± 22	SPST-NC	W	1/4 in / female flare	061F7509
	Auto	26 ± 1.0	380 ± 15	20 ± 1.5	290 ± 22	SPST-NC	O	1/4 in / solder	061F8705
	Auto	26 ± 1.0	380 ± 15	20 ± 1.5	290 ± 22	SPST-NC	O	1/4 in / female flare	061F8701
	Auto	26 ± 1.0	380 ± 15	20 ± 1.5	290 ± 22	SPDT	W	1/4 in / female flare	061F9055
	Manual	26 ± 1.0	380 ± 15	20 ± 1.5	290 ± 22	SPST-NC	W	6 mm / solder	061F9703
	Manual	26 ± 1.0	380 ± 15	20 ± 1.5	290 ± 22	SPST-NC	W	1/4 in / solder	061F9714
	Manual	26 ± 1.0	380 ± 15	20 ± 1.5	290 ± 22	SPST-NC	W	1/4 in / female flare	061F9713
	Auto	28 ± 1.0	405 ± 14	21 ± 1.5	305 ± 22	SPST-NC	W	6 mm / solder	061F7510
	Auto	28 ± 1.0	405 ± 14	21 ± 1.5	305 ± 22	SPST-NC	W	1/4 in / solder	061F7513
	Auto	28 ± 1.0	405 ± 14	21 ± 1.5	305 ± 22	SPST-NC	W	1/4 in / female flare	061F7514
	Auto	28 ± 1.0	405 ± 14	21 ± 1.5	305 ± 22	SPST-NC	O	1/4 in / solder	061F8704
	Auto	28 ± 1.0	405 ± 14	21 ± 1.5	305 ± 22	SPST-NC	O	1/4 in / female flare	061F8700
	Auto	28 ± 1.0	405 ± 14	21 ± 1.5	305 ± 22	SPDT	W	1/4 in / female flare	061F9054
	Manual	28 ± 1.0	405 ± 14	21 ± 1.5	305 ± 22	SPDT	W	1/4 in / female flare	061F9242
	Manual	28 ± 1.0	405 ± 14	21 ± 1.5	305 ± 22	SPST-NC	W	1/4 in / female flare	061F9522
	Auto	31 ± 1.0	405 ± 14	24 ± 1.5	350 ± 22	SPST-NC	W	6 mm / solder	061F8493
	Auto	31 ± 1.0	405 ± 14	24 ± 1.5	350 ± 22	SPST-NC	W	1/4 in / female flare	061F8492
	Auto	31 ± 1.0	405 ± 14	24 ± 1.5	350 ± 22	SPST-NC	O	1/4 in / solder	061F8706
	Auto	31 ± 1.0	405 ± 14	24 ± 1.5	350 ± 22	SPDT	W	1/4 in / female flare	061F9053
	Auto	42 ± 1.2	610 ± 17	33 ± 2.0	480 ± 29	SPST-NC	W	6 mm / solder	061F7515
	Auto	42 ± 1.2	610 ± 17	33 ± 2.0	480 ± 29	SPST-NC	W	1/4 in / solder	061F7516
	Auto	42 ± 1.2	610 ± 17	33 ± 2.0	480 ± 29	SPST-NC	W	1/4 in / female flare	061F7517
	Manual	42 ± 1.2	610 ± 17	33 ± 2.0	480 ± 29	SPST-NC	W	1/4 in / female flare	061F9575
	Auto	42 ± 1.2	610 ± 17	33 ± 2.0	480 ± 29	SPDT	W	1/4 in / female flare	061F9052
Low pressure cut-out	Auto	0.5 ± 0.4	7 ± 6	1.5 ± 0.5	22 ± 4	SPST-NO	W	6 mm / solder	061F7518
	Auto	0.5 ± 0.4	7 ± 6	1.5 ± 0.5	22 ± 4	SPST-NO	W	1/4 in / solder	061F7519
	Auto	0.5 ± 0.4	7 ± 6	1.5 ± 0.5	22 ± 4	SPST-NO	W	1/4 in / female flare	061F7520
	Auto	0.5 ± 0.4	7 ± 6	1.5 ± 0.5	22 ± 4	SPST-NO	O	1/4 in / solder	061F7402
	Auto	0.5 ± 0.4	7 ± 6	1.5 ± 0.5	22 ± 4	SPST-NO	O	1/4 in / female flare	061F7400
	Auto	0.5 ± 0.4	7 ± 6	1.5 ± 0.5	22 ± 4	SPDT	O	1/4 in / solder	061F9106
	Auto	0.5 ± 0.4	7 ± 6	1.5 ± 0.5	22 ± 4	SPDT	O	1/4 in / female flare	061F9102
	Auto	0.7 ± 0.5	10 ± 7	1.7 ± 0.4	25 ± 6	SPST-NO	W	6 mm / solder	061F7521
	Auto	0.7 ± 0.5	10 ± 7	1.7 ± 0.4	25 ± 6	SPST-NO	W	1/4 in / solder	061F7522
	Auto	0.7 ± 0.5	10 ± 7	1.7 ± 0.4	25 ± 6	SPST-NO	W	1/4 in / female flare	061F7523
	Auto	0.7 ± 0.5	10 ± 7	1.7 ± 0.4	25 ± 6	SPDT	W	1/4 in / female flare	061F9058
	Auto	1.7 ± 0.5	25 ± 7	2.7 ± 0.4	39 ± 6	SPST-NO	W	6 mm / solder	061F7524
	Auto	1.7 ± 0.5	25 ± 7	2.7 ± 0.4	39 ± 6	SPST-NO	W	1/4 in / solder	061F7525
	Auto	1.7 ± 0.5	25 ± 7	2.7 ± 0.4	39 ± 6	SPST-NO	W	1/4 in / female flare	061F7526
	Auto	2.2 ± 0.3	32 ± 4.5	3.4 ± 0.3	50 ± 4.5	SPST-NO	W	6 mm / solder	061F7418
Fan Control	Auto	8.5 ± 1.2	125 ± 17	11 ± 0.8	11 ± 0.8	SPST-NO	W	6 mm / solder	061F8491
	Auto	8.5 ± 1.2	125 ± 17	11 ± 0.8	11 ± 0.8	SPST-NO	W	1/4 in / female flare	061F8490
	Auto	13 ± 1.5	190 ± 22	16 ± 1.0	16 ± 1.0	SPST-NO	W	6 mm / solder	061F8334
	Auto	13 ± 1.5	190 ± 22	16 ± 1.0	16 ± 1.0	SPST-NO	W	1/4 in / female flare	061F8333

[1]) Waterproof models (IP65) with 1.5 m wires AWG18, packed per 20 pcs.
[2]) Models with spade connectors (IP40), Packed per 50 pcs..

Technical data and ordering

CCB cartridge pressure switches for CO_2 only

Ordering

Application	Reset	Cut out		Cut in		Contact system	Enclosure type W-waterproof	Connection type	Code no.
		[bar]	[psi]	[bar]	[psi]				
High pressure control	Auto	100±10	1450±145	70±20	1015±290	SPST-NC	W	6.35 mm / solder	061F9808 [1]
	Auto	100±10	1450±145	70±20	1015±290	SPST-NC	W	6.35 mm / solder	061F9908 [2]
	Auto	110±10	1595±145	80±20	1160±290	SPST-NC	W	6.35 mm / solder	061F9809 [1]
	Auto	110±10	1595±145	80±20	1160±290	SPST-NC	W	6.35 mm / solder	061F9909 [2]
	Auto	120±10	1740±145	90±20	1305±290	SPST-NC	W	6.35 mm / solder	061F9810 [1]
	Auto	120±10	1740±145	90±20	1305±290	SPST-NC	W	6.35 mm / solder	061F9910 [2]
	Auto	130±10	1885±145	100±20	1450±290	SPST-NC	W	6.35 mm / solder	061F9811 [1]
	Auto	140±10	2030±145	100±20	1450±290	SPST-NC	W	6.35 mm / solder	061F9812 [1]
	Auto	150±10	2175±145	100±20	1450±290	SPST-NC	W	6.35 mm / solder	061F9813 [1]

[1] Models packed per 100 pcs.
[2] Models packed per 20 pcs.

Quick Selection Notes:

RT, Thermostat

RT thermostats are fitted with a single-pole changeover switch. The position of the contacts depends on the bulb temperature and the set scale value. The RT series includes thermostats for general applications within industrial and marine refrigeration.

The RT series also includes differential thermostats, thermostats for neutral zone regulation, and special thermostats with gold-plated contact surface for PLC applications.



Features
RT

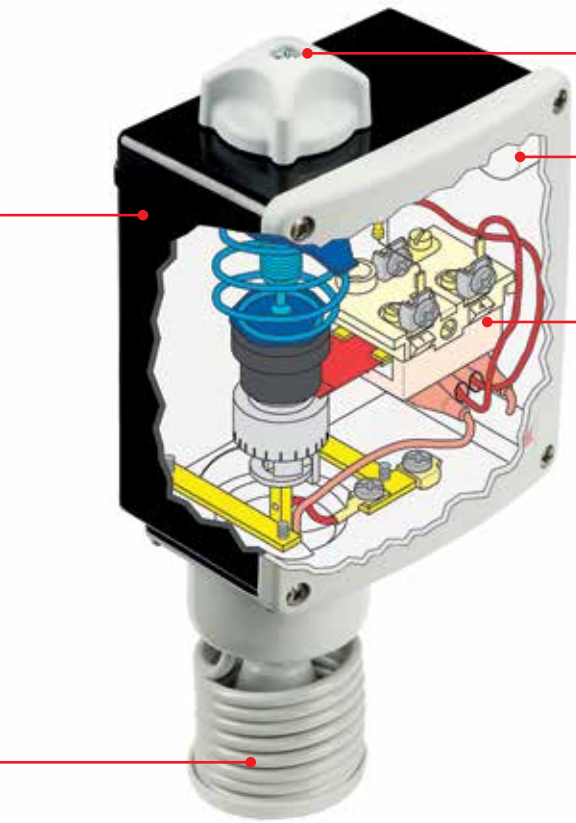

Facts

Application:
- General applications within industrial and marine refrigeration

- Wide regulating range
- Suitable for both alternating and direct current (AC and DC)
- Interchangeable contact system
- High stability and accuracy
- Long operating life time
- Enclosure: IP66 to EN 60529 / IEC 60529, except for versions with ext. reset which are IP54

- Insulation 400 V
- Ambient temperature: -50 – 70 °C for housing
- Special versions for PLC applications
- Cable connection: Pg 13.5
- Cable diameter: 6 – 14 mm

Technical data and ordering

RT thermostats

Ordering

Type	Charge type	Sensor type	Regulation range [°C]	Differential Δt		Reset	Max. sensor temp. [°C]	Capillary tube length [m]	Code no.
				Lowest temp. setting [°C]	Highest temp. setting [°C]				
RT 9	State Vapour [1]	A	-45 – -15	2.2 – 10	1 – 4.5	Auto	150	2	017-506666
RT 3	State Vapour [1]	A	-25 – 15	2.8 – 10	1 – 4	Auto	150	2	017-501466
RT 17	State Vapour [1]	B	-50 – -15	2.2 – 7	1.5 – 5	Auto	100	–	017-511766
RT 11	State Vapour [1]	B	-30 – 0	1.5 – 6	1 – 3	Auto	66	–	017-508366
RT 4	State Vapour [1]	B	-5 – 30	1.5 – 7	1.2 – 4	Auto	75	–	017-503666 017-503766 [4]
RT 13	State Vapour [1]	A	-30 – 0	1.5 – 6	1 – 3	Auto	150	2	017-509766
RT 2	Adsorption [2]	A	-25 – 15	5 – 18	6 – 20	Auto	150	2	017-500866
RT 8	Adsorption [2]	A	-20 – 12	1.5 – 7	1.5 – 7	Auto	145	2	017-506366
RT 12	Adsorption [2]	A	-5 – 10	1 – 3.5	1 – 3	Auto	65	2	017-508966
RT 23	Adsorption [2]	A	5 – 22	1.1 – 3	1 – 3	Auto	85	2	017-527866
RT 15	Adsorption [2]	A	8 – 32	1.6 – 8	1.6 – 8	Auto	150	2	017-511566
RT 24	Adsorption [2]	A	15 – 34	1.4 – 4	1.4 – 3.5	Auto	105	2	017-528566
RT 140	Adsorption [2]	C	15 – 45	1.8 – 8	2.5 – 11	Auto	240	2	017-523666
RT 102	Adsorption [2]	D	25 – 90	2.4 – 10	3.5 – 20	Auto	300	2	017-514766
RT 34	Adsorption [2]	B	-25 – 15	2 – 10	2 – 12	Auto	100	–	017-511866
RT 7	Adsorption [2]	A	-25 – 15	2 – 10	2.5 – 14	Auto	150	2	017-505366
RT 14	Adsorption [2]	A	-5 – 30	2 – 8	2 – 10	Auto	150	2	017-509966
RT 101	Adsorption [2]	A	25 – 90	2.4 – 10	3.5 – 20	Auto	300	2	017-500366
RT 107	Partial [3]	A	70 – 150	6 – 25	1.8 – 8	Auto	215	2	017-513566

[1] The sensor must be located colder than thermostat housing and capillary tube.
[2] The sensor can be located warmer or colder than thermostat housing.
[3] The sensor must be located warmer than thermostat housing and capillary tube.
[4] With built-in heating coil, reduces the thermal differential.

RT thermostats with adjustable neutral zone

Ordering

Type	Charge	Sensor type	Regulation range [°C]	Mechanical differential [K]	Neutral zone NZ		Max. sensor temp. [°C]	Capillary tube length [m]	Code no.
					At min. range setting [K]	At max. range setting [K]			
RT 16L	Vapour	B	0 – 38	1.5 – 0.7	1.5 – 5	0.7 – 1.9	100	–	017L002466
RT 8L	Adsorption	A	-20 – 12	1.5	1.5 – 4.4	1.5 – 4.9	145	2	017L003066
RT 14L	Adsorption	A	-5 – 30	1.5	1.5 – 5	1.5 – 5	150	2	017L003466
RT 140L	Adsorption	C	15 – 45	1.8 – 2	1.8 – 4.5	2.0 – 5	240	2	017L003166
RT 101L	Adsorption	A	25 – 90	2.5 – 3.5	2.5 – 7	3.5 – 12.5	300	2	017L006266

Type of sensor

A	B	C	D
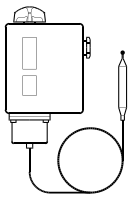	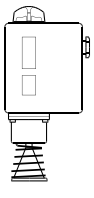	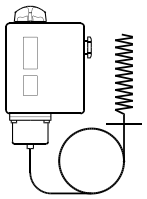	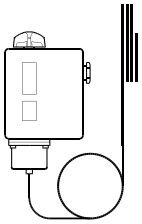
Cylindrical remote sensor	Room sensor	Duct sensor	Capillary tube sensor

KP, Thermostat

KP thermostats are single-pole, double-throw (SPDT) temperature-operated electric switches.
KP thermostats can be connected directly to a single-phase AC motor of up to approximately 2 kW or installed in the control circuit of DC motors and large AC motors.

KP thermostats are used primarily for regulation, but also for safety monitoring systems, and are available with vapour charge or with adsorption charge. With vapour charge the differential is very small. KP thermostats with adsorption charge are widely used to give frost protection.



Features
KP

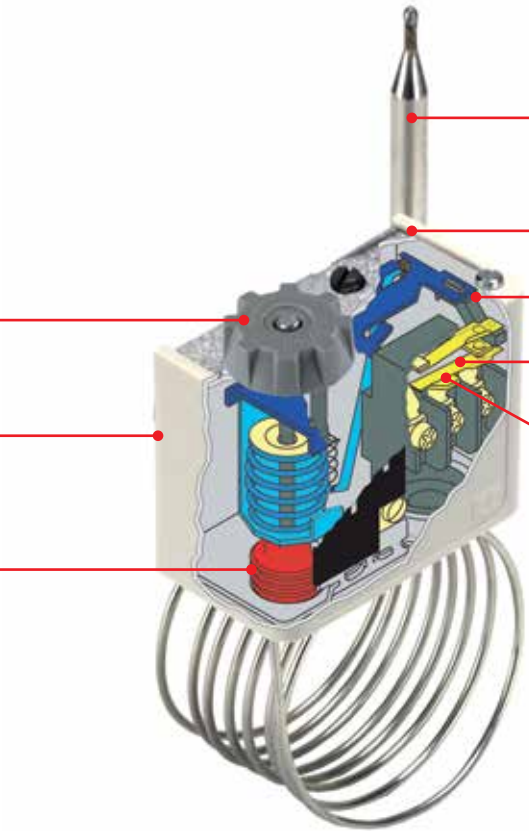

Facts

Application:
- Frost protection
- Defrost control
- Case and Room control

- Easy to handle compact design with large and visible scale plates
- Vibration and shock resistant
- High reliability both electrically and mechanically – a KP control can be connected directly to a single-phase AC motor of up to approximately 2 kW or installed in the control circuit of DC motors and large AC motors
- Wide range of approvals - Danfoss offers a wide range of approvals suited for specific applications and geographical markets
- Available with capillary sensor, air sensor or cylindrical pocket sensor
- Different sensing elements - As experts in charging technologies Danfoss offers temperature switches that operate in a wide temperature range
- Available with vapour charge or with adsorption charge
- IP30 can be increased to IP44 or IP55 using top plate or IP55 enclosure available as accessories

Technical data and ordering

KP thermostats

Ordering

Sensor type	Charge	Bulb type	Regulation range [°C]	Differential Δt		Reset	Max. bulb temp. [°C]	Capillary tube length [m]	Code no.
				Lowest temperature [°C]	Lowest temperature [°C]				
KP 61	Vapour [1]	A	-30 – 15	5.5 – 23	1.5 – 7	Auto	120	2	060L110066
	Vapour [1]	A	-30 – 15	5.5 – 23	1.5 – 7	Auto	120	5	060L110166
	Vapour [1]	B	-30 – 13	4.5 – 23	1.2 – 7	Auto	120	2	060L110266
	Vapour [1]	B	-30 – 15	5.5 – 23	1.5 – 7	Auto	120	2	060L110366 [3]
	Vapour [1]	B	-30 – 15	5.5 – 23	1.5 – 7	Auto	120	2	060L112866 [3] [4]
	Vapour [1]	A	-30 – 15	Fixed 6	Fixed 2	Min.	120	5	060L110466
	Vapour [1]	B	-30 – 15	Fixed 6	Fixed 2	Min.	120	2	060L110566
KP 62	Vapour [1]	C 1	-30 – 15	6.0 – 23	1.5 – 7	Auto	120	–	060L110666
KP 63	Vapour [1]	A	-50 – 10	10.0 – 70	2.7 – 8	Auto	120	2	060L110766
	Vapour [1]	B	-50 – 10	10.0 – 70	2.7 – 8	Auto	120	2	060L110866
KP 68	Vapour [1]	C 1	-5 – 35	4.5 – 25	1.8 – 7	Auto	120	–	060L111166
KP 69	Vapour [1]	B	-5 – 35	4.5 – 25	1.8 – 7	Auto	120	2	060L111266
KP 62	Adsorbtion [2]	C 2	-30 – 15	5.0 – 20	2.0 – 8	Auto	80	–	060L111066 [3] [4]
KP 71	Adsorbtion [2]	E 2	-5 – 20	3.0 – 10	2.2 – 9	Auto	80	2	060L111366
	Adsorbtion [2]	E 2	-5 – 20	Fixed 3	Fixed 3	Min.	80	2	060L111566
KP 73	Adsorbtion [2]	E 1	-25 – 15	12.0 – 70	8.0 – 25	Auto	80	2	060L111766
	Adsorbtion [2]	D 1	-25 – 15	4.0 – 10	3.5 – 9	Auto	80	2	060L111866 [3]
	Adsorbtion [2]	D 1	-25 – 15	Fixed 3.5	Fixed 3.5	Min.	80	2	060L113866
	Adsorbtion [2]	D 2	-20 – 15	4.0 – 15	2.0 – 13	Auto	55	3	060L114066
	Adsorbtion [2]	D 1	-25 – 15	3.5 – 20	3.25 – 18	Auto	80	2	060L114366
KP 75	Adsorbtion [2]	F	0 – 35	3.5 – 16	2.5 – 12	Auto	110	2	060L112066
	Adsorbtion [2]	E 2	0 – 35	3.5 – 16	2.5 – 12	Auto	110	2	060L113766
KP 77	Adsorbtion [2]	E 3	20 – 60	3.5 – 10	3.5 – 10	Auto	130	2	060L112166
	Adsorbtion [2]	E 3	20 – 60	3.5 – 10	3.5 – 10	Auto	130	3	060L112266
	Adsorbtion [2]	E 2	20 – 60	3.5 – 10	3.5 – 10	Auto	130	5	060L116866
KP 79	Adsorbtion [2]	E 3	50 – 100	5.0 – 15	5.0 – 15	Auto	150	2	060L112666
KP 81	Adsorbtion [2]	E 3	80 – 150	7.0 – 20	7.0 – 20	Auto	200	2	060L112566
	Adsorbtion [2]	E 3	80 – 150	Fixed 8	Fixed 8	Max.	200	2	060L115566
KP 98	Adsorbtion [2]	E 2	OIL: 60 – 120	OIL: Fixed 14	OIL: Fixed 14	Max.	150	1	060L113166
	Adsorbtion [2]	E 2	HT: 100 – 180	HT: Fixed 25	HT: Fixed 25	Max.	250	2	

[1]) Sensor must always be placed colder than the thermostat housing and capillary tube. The thermostat will then regulate independent of ambient temperature.
[2]) Sensor can be placed warmer or colder than thermostat housing and capillary tube, but variations from 20 °C ambient temperature will influence the scale accuracy.
[3]) With manual switch, not isolating switch.
[4]) Panel mounting model with top plate.

Thermostat sensor types

A	B	C	D	E	F
	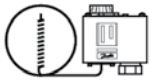		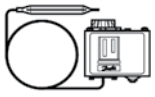		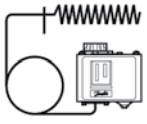
Straight capillary tube	ø9.5 × 70 mm remote air coil	C1: ø40 × 30 mm air coil C2: ø25 × 67 mm air coil (integral with thermostat)	D1: ø10 × 85 mm double contact remote sensor D2: ø16 × 170 mm double contact remote sensor Note! Cannot be used in sensor pocket	E1: ø6.4 × 95 mm remote sensor E2: ø9.5 × 115 mm remote sensor E3: ø9.5 × 85 mm remote sensor	ø25×125 mm remote duct coil

UT, Thermostat

UT thermostats are temperature controlled electric switches with stainless steel $^{18}/_{8}$ or copper capillary tube and sensor.
The temperature can be set easily and accurately using the large knob on the front of the thermostat.

The temperature must be set to correspond to the required mean temperature.
The thermostat has a fixed differential.

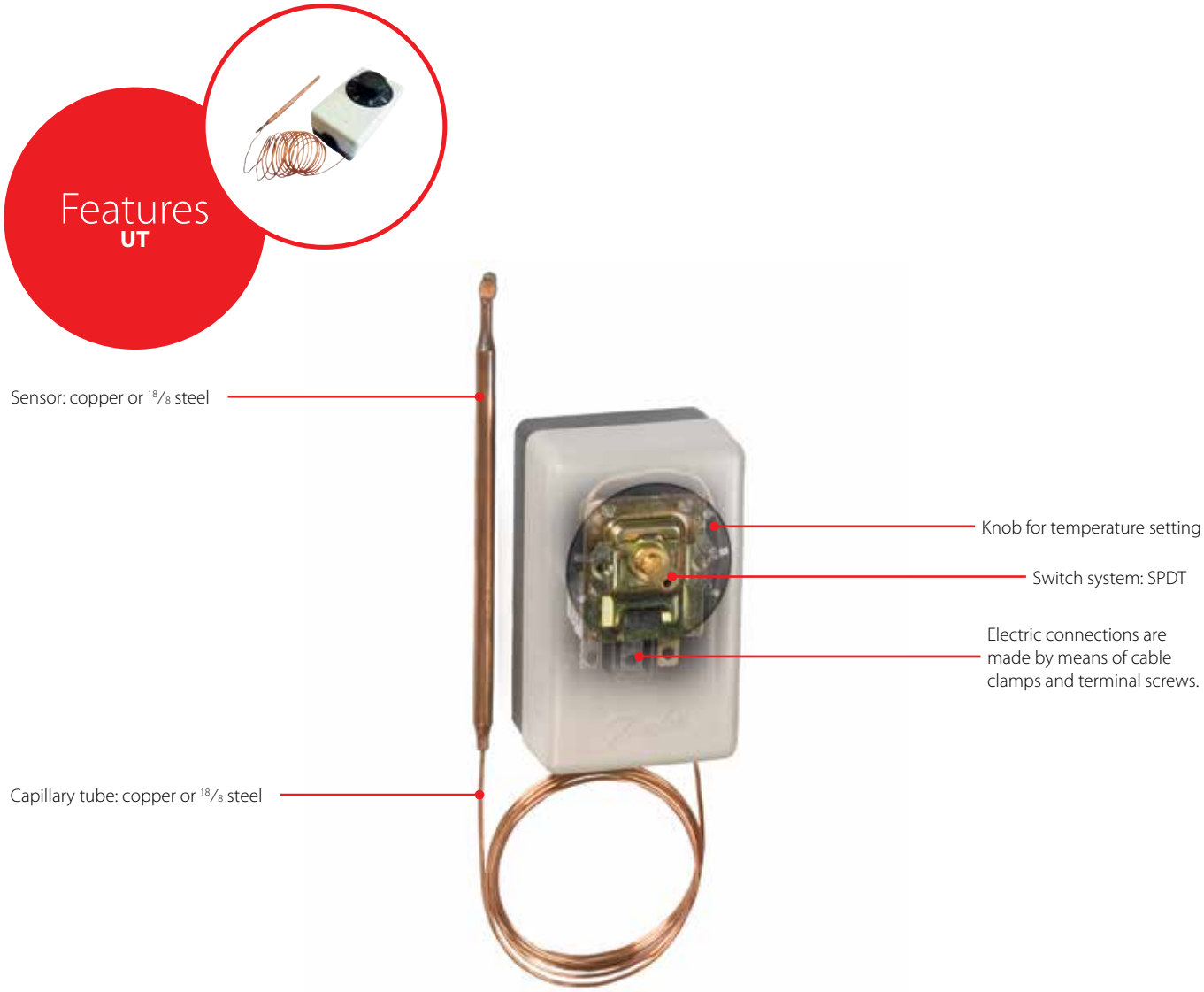

Facts

Application:
- Cold rooms
- Beverage coolers
- Ice cream makers
- Milk coolers
- Air conditioning plant
- Heat recovery systems

- UT is available for wall or panel mounting
- UT for wall mounting:
  IP20 to EN 60529 / IEC 52
- UT for panel mounting:
  IP00 to EN 60529 / IEC 529
- UT 72 for universal purposes:
  -30 – 30 °C

- UT 73 for frost protection:
  0 – 40 °C
- Differential is fixed 2.3 °C
- Automatic reset
- Contact load:
  - AC 1: 10 A, 250 / 380 V

Technical data and ordering

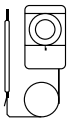

UT thermostats

Ordering

Type	Version	Regulation range [°C]	Differential [°C]	Reset	Max. sensor temperature [°C]	Capillary tube length [m]	Quantity	Connection type	Code no.
UT 72	Wall mounting	-30 – 30	2.3	Auto	60	2.0	1	Copper	060H1501
	Wall mounting	-30 – 30	2.3	Auto	60	2.0	1	18/8 steel	060H1506
	Wall mounting	-30 – 30	2.3	Auto	60	2.0	1	Copper	060H1503 [1])
	Wall mounting	-30 – 30	2.3	Auto	60	3.0	1	Copper	060H1505
	Wall mounting	-30 – 30	2.3	Auto	60	3.0	24	Copper	060H1508
	Panel mounting	-30 – 30	2.3	Auto	60	3.0	48	Copper	060H1605
UT 73	Wall mounting	0 – 40	2.3	Auto	90	2.0	1	Copper	060H1502
	Panel mounting	0 – 40	2.3	Auto	90	2.0	48	Copper	060H1502

[1]) Included bulb clamps.

Accessories

Version	UT 72	UT 73
Setting knob	060-1067	060-1096
Bulb clamp	060-1090	060-1090

077B, Thermostat

077B thermostats have NC (Normally Closed) main contacts; i.e. they cut out the compressor current circuit on decreasing temperature. 077B thermostats are designed to operate at least 300,000 cycles at full load (6/36A and 8/40A respectively); internal quality audits reinforced product performance by metering over 1,000,000 cycles. 077B thermostats are designed for temperature control in refrigerators and freezers and can be used as an evaporator or a room thermostat.

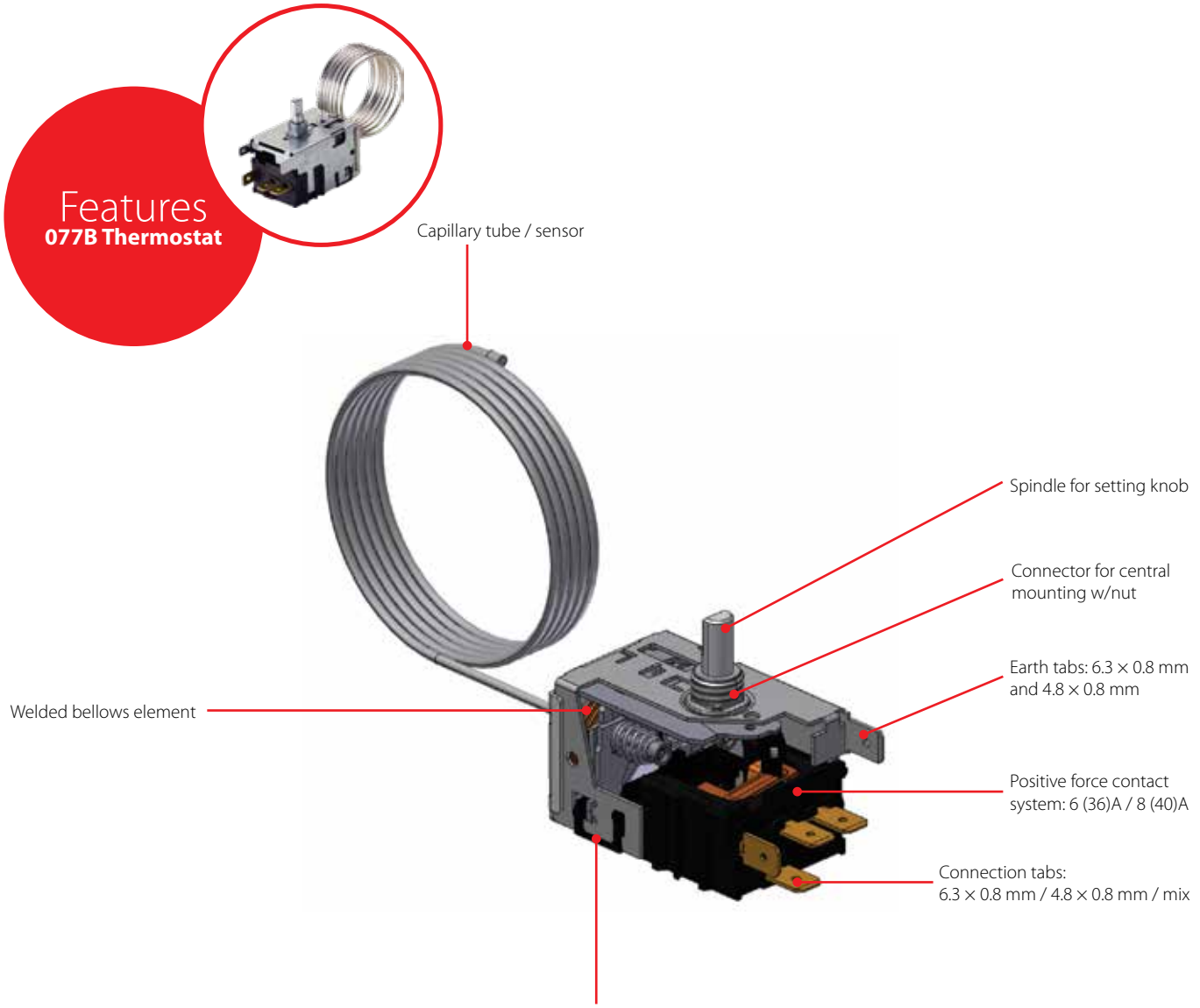

Facts

Application:
- Refrigerators
- Upright and chest freezers
- Liquid and bottle coolers
- Small commercial refrigeration

- World class quality with high CpK values that ensures a long and trouble-free lifetime
- Available with Enclosed Brake Device (EBD) for use in household appliances charged with hydrocarbon gases such as R600a or R290
- Available with a wide range of standard functions, various extra functions and accessories
- Available with 6.3 × 0.8 mm, 4.8 × 0.8 mm terminals or a combination
- Approved by recognized authorities for specific applications and geographical markets
- Danfoss Appliance Controls are certified by Bureau Veritas in ISO14001, ISO9001 and OHSAS18001

Technical data and ordering

077B thermostats

Ordering

077B thermostat type	Application	Function	Temperature °C at 760 mm Hg					Capillary tube length	Code no.
			Thermostat position			Signal	Defrost		
			Warm Cut-in / cut-out	Middle Cut-in / cut-out	Cold Cut-in / cut-out				
077B0	Refrigerators	Without extra functionality	3.5 / -3 *)	0 / -7	-5.4 / -12	–	–	1.0	077B0020
	Refrigerators	Without extra functionality	-2 / -11 *)	-5.5 / -15	-10 / -20.5	–	–	1.0	077B0021
	Refrigerators	Without extra functionality	2.5 / -5 *)	–	-13.5 / -24.5	–	–	1.2	077B0033
	Refrigerators	Without extra functionality	2 / -5.5	–	-13.5 / -25 *)	–	–	1.3	077B7001 [1]
	Ice-cream cabinets and freezers without signal	Without extra functionality	-7.5 / -15 *)	–	-22 / -33.1	–	–	2.0	077B0102
	Ice-cream cabinets and freezers without signal	Without extra functionality	-7.5 / -15	–	-21 / -32.5 *)	–	–	2.3	077B7005 [1]
	Liquid and bottle coolers	Without extra functionality (liquid)	15.5 / 9	12 / 5	8 / 0.5 *)	–	–	1.2	077B0027
	Liquid and bottle coolers	Without extra functionality (bottle)	10.5 / 5	0 / -7	3 / -4.5 *)	–	–	1.2	077B0028
	Liquid and bottle coolers	Without extra functionality (bottle)	10.9 / 5.2	–	-1 / -8.5 *)	–	–	2.0	077B0155
	Liquid and bottle coolers	Without extra functionality (bottle & liquid)	11.5 / 6 *)	–	-1 / -8.5	–	–	2.0	077B7008 [1]
	Chest and Upright freezers	Without extra functionality	-15 / -23 *)	-18 / -27	-22 / -32	–	–	0.8	077B0025
077B02	Absorption coolers	With auxiliary contact	3.5 / -1 *)	-2 / -7	-7 / -12.5	–	–	1.2	077B0220
	Absorption coolers	With auxiliary contact	3.5 / -1 *)	–	-5 / -11	–	–	1.5	077B7004 [1]
077B20	Chest and Upright freezers	With signal contact, cutting in on rising temperature	-15 / -23 *)	-18 / -27	-22 / -32	-12 *)	–	0.8	077B2020
	Chest and Upright freezers	With signal contact, cutting in on rising temperature	-10 / -17 *)	–	-24 / -34.7	-6 *)	–	2.0	077B2077
	Chest and Upright freezers	With signal contact, cutting in on rising temperature (active signal)	-10 / -17 *)	–	-24 / -34.5	-6 *)	–	2.3	077B7006 [1]
077B30	Chest and Upright freezers	With signal contact, cutting out on rising temperature (passive signal)	-10 / -17 *)	–	-24 / -34.5	-6 *)	–	2.3	077B7007 [1] [2]
077B40	Refrigerators with pushbutton defrost	With push button defrost	0 / -7.5 *)	–	-11 / -21	–	6	1.3	077B7002 [1]
077B6/62	Two-temperature cabinets with automatic defrost	With constant cut-in temperature, automatic defrost and auxiliary contact	3.5 / -12.5	3.5 / -17.5	3.5 / -23 *)	–	–	1.0	077B6021
	Two-temperature cabinets with automatic defrost	With constant cut-in temperature, automatic defrost and auxiliary contact	3.5 / -11	–	3.5 / -27 *)	–	–	1.2	077B6208
	Two-temperature cabinets with automatic defrost	With constant cut-in temperature, automatic defrost and auxiliary contact	3.5 / -10	3.5 / -15	3.5 / -20 *)	–	–	1.0	077B6220
	Two-temperature cabinets with automatic defrost	With constant cut-in temperature, automatic defrost and auxiliary contact	3.5 / -11	–	3.5 / -27 *)	–	–	2.0	077B6476
	Two-temperature cabinets with automatic defrost	With constant cut-in temperature, automatic defrost and auxiliary contact	3.5 / -11	–	3.5 / -27.5 *)	–	–	1.6	077B7003 [1]
	Two-temperature cabinets with automatic defrost	With constant cut-in temperature, automatic defrost and changeover contact	5 / -10 *)	–	5 / -30	–	–	1.5	077B6321

**) Adjustment position*
[1]) Forming part of the 8 Service Thermostats, sold with accessories in practical boxes
[2]) Available for After Market Sales

Technical data and ordering

Service thermostats

Ordering

Application	No.	Temperatures [°C]				Accessories						Capillary tube length [m]	Remarks	Code no.
		Warm pos. cut-in / cut out	Cold pos. cut-in / cut out	Signal	Defrosting	Washer	Small knob	Push-button	Mounting bracket	Seal cap	Small parts			
Refrigerators	1	2 / -5.5	-13.5 / -25 *)	–	–	x	x	–	x	–	x	1.3	–	077B7001 [1])
Refrigerators with pushbutton defrost	2	0 / -7.5 *)	-11 / -21	–	6	x	x	x	x	–	x	1.3	–	077B7002
Refrigerators with automatic defrost	3	3.5 / -11	3.5 / -27.5 *)	–	–	x	x	–	x	–	x	1.6	With auxillary switch	077B7003 [1])
Absorption refrigerators	4	3.5 / -1 *)	-5 / -11	–	–	x	x	–	x	–	x	1.5	With auxillary switch	077B7004 [1])
Ice-cream cabinets and freezers without signal	5	-7.5 / -15	-21 / -32.5 *)	–	–	–	x	–	x	x	x	2.3	–	077B7005 [1])
Freezers with active signal	6	-10 / -17 *)	-24 / -34.5	-6 *)	–	–	x	–	x	x	x	2.3	With active signal	077B7006 [1])
Freezers with passive signal	7	-10 / -17 *)	-24 / -34.5	-6 *)	–	–	x	–	x	x	x	2.3	With passive signal	077B7007
Bottle and liquid coolers	8	11.5 / 6 *)	-1 / -8.5	–	–	x	x	–	x	x	x	2.0	–	077B7008 [1])

**) Adjustment position*
[1]) With EBD (from January 2017)

Quick Selection Notes:

KVR / NRD, Condensing pressure regulator / Differential pressure valve

KVR condensing pressure regulator valves can be mounted on either the gas or liquid side of the condenser in refrigeration and air conditioning systems.

They are used to maintain a constant and sufficiently high condensing pressure with systems using air-cooled condensers. KVR condensing pressure regulators can also be used with valve types NRD or KVD to assure that adequate pressure is maintained on the receiver.

Features
KVR / NRD



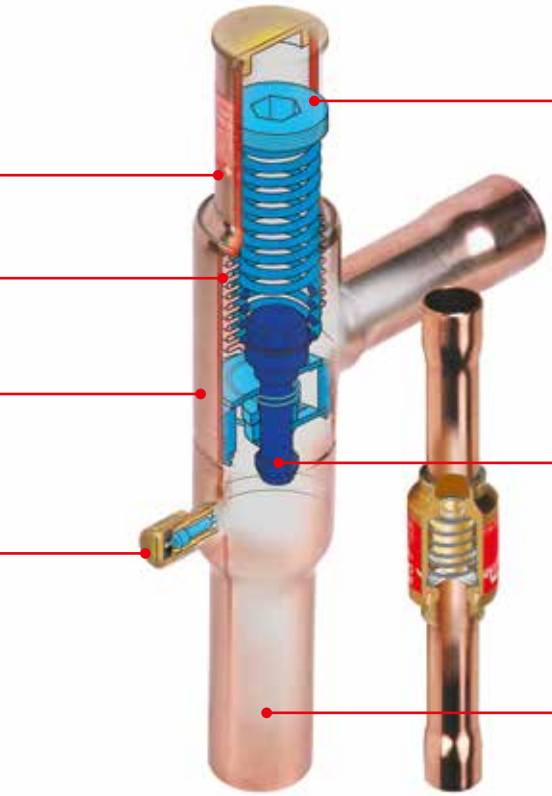

Facts

Application:
- Traditional refrigeration
- Air conditioning units
- Transport refrigeration

- The regulators are the most compact on the market
- Excellent performance because of balanced port design (equalization of force on port)
- The refrigeration system can operate with very large load variations
- Very easy to adjust the KVR
- The NRD is non-adjustable
  - it is activated when pressure differential between discharge line and receiver exceeds 1.4 bar
- Reliable design
- KVR can be installed either in discharge line or liquid line
- Wide capacity and operating range
- Regulation range:
  5 – 17.5 bar / 73 – 254 psig
- KVR 12 – 22, NRD: applicable to R22, R1270, R134a, R290, R404A, R407A, R407C, R407F, R448A, R449A, R450A, R452A, R507A *), R513A, R600, R600a
  *) *Not applicable for NRD*
- KVR 12 – 22 and NRD: May be used in the following EX range: Category 3 (Zone 2)
- KVR 28 – 35: applicable to R22, R134a, R404A, R407A, R407C, R407F, R448A, R449A, R450A, R452A, R507A, R513A
- Maximum working pressure
  KVR: PS / MWP = 28 bar / 406 psig
  NRD: PS / MWP = 46 bar / 667 psig

Technical data and ordering

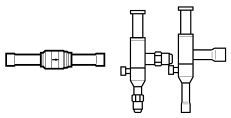

KVR / NRD - Condensing pressure regulator / Differential pressure valve

Ordering

Type	Rated liquid capacity in [kW] / [TR] [1]								Rated hot gas capacity in [kW] / [TR] [1]								Connection type	Connection size		Code no.
	R22		R134a		R404A / R507		R407C		R22		R134a		R404A / R507		R407C					
	[kW]	[TR]	[kW]	[TR]	[kW]	[TR]	[kW]	[TR]	[kW]	[TR]	[kW]	[TR]	[kW]	[TR]	[kW]	[TR]		[in]	[mm]	
KVR 12	50.4	12.7	47.3	11.8	36.6	8.2	54.4	13.8	13.2	4.13	11.6	3.03	12.0	3.27	14.3	4.50	Flare [2] [3]	1/2	12	034L0091
	50.4	12.7	47.3	11.8	36.6	8.2	54.4	13.8	13.2	4.13	11.6	3.03	12.0	3.27	14.3	4.50	Solder, ODF [3]	1/2	–	034L0093
	50.4	12.7	47.3	11.8	36.6	8.2	54.4	13.8	13.2	4.13	11.6	3.03	12.0	3.27	14.3	4.50	Solder, ODF [3]	–	12	034L0096
KVR 15	50.4	12.7	47.3	11.8	36.6	8.2	54.4	13.8	13.2	4.13	11.6	3.03	12.0	3.27	14.3	4.50	Flare [2] [3]	5/8	16	034L0092
	50.4	12.7	47.3	11.8	36.6	8.2	54.4	13.8	13.2	4.13	11.6	3.03	12.0	3.27	14.3	4.50	Solder, ODF [3]	5/8	16	034L0097
KVR 22	50.4	12.7	47.3	11.8	36.6	8.2	54.4	13.8	13.2	4.13	11.6	3.03	12.0	3.27	14.3	4.50	Solder, ODF [3]	7/8	22	034L0094
KVR 28	129	32.6	121	30.2	93.7	20.9	139.3	35.5	34.9	10.93	30.6	8.04	34.9	8.66	37.7	11.91	Solder, ODF [3]	1 1/8	–	034L0095
	129	32.6	121	30.2	93.7	20.9	139.3	35.5	34.9	10.93	30.6	8.04	34.9	8.66	37.7	11.91	Solder, ODF [3]	–	28	034L0099
KVR 35	129	32.6	121	30.2	93.7	20.9	139.3	35.5	34.9	10.93	30.6	8.04	34.9	8.66	37.7	11.91	Solder, ODF [3]	1 3/8	35	034L0100
NRD	–	–	–	–	–	–	–	–	–	–	–	–	–	–	–	–	Solder, ODF [3]	1/2	–	020-1132
	–	–	–	–	–	–	–	–	–	–	–	–	–	–	–	–	Solder, ODF [3]	–	12	020-1136

[1]) Rated capacity is based on:
– evaporating temperature t_e = -10 °C / 14 °F
– condensing temperature t_c = 30 °C / 110 °F
– pressure drop across the valve Δp = 0.2 bar / 3 psi for liquid capacity, Δp = 0.4 bar / 6 psi for hot gas capacity, offset = 3 bar / 45 psi
[2]) KVR are delivered without flare nuts. Separate flare nuts can be supplied: 1/2 in / 12 mm - code no. 011L1103, 5/8 in / 16 mm – code no. 011L1167.
[3]) The connection dimensions chosen must not be too small, as gas velocities in excess of 130 ft/s at the inlet of the regulator can give flow noise.

To select the product for other conditions or refrigerants, use Danfoss Coolselector®2.

Application example

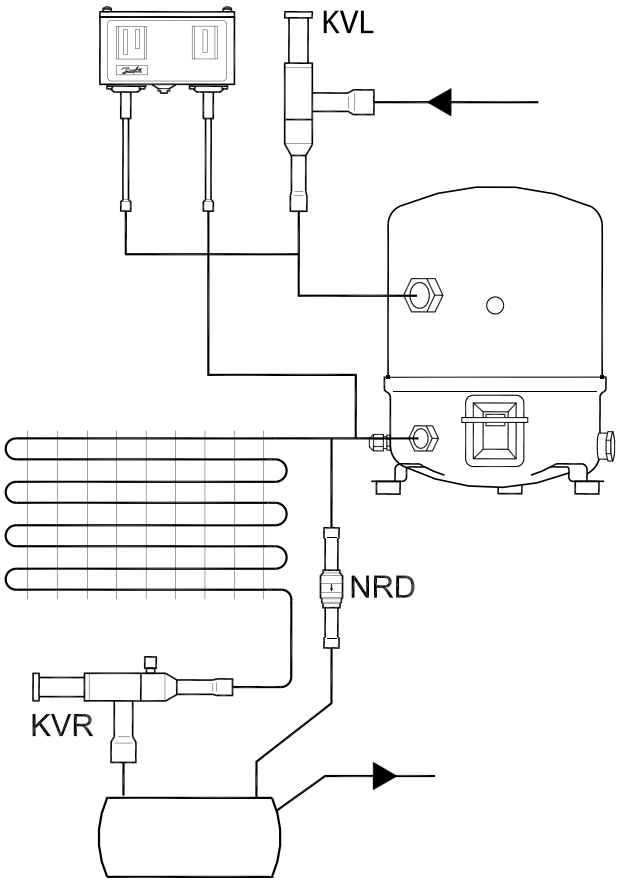

KVP, Evaporator pressure regulator

KVP evaporating pressure regulators are mounted in the suction line of refrigeration and air conditioning systems.
They are used to maintain a constant pressure corresponding to a constant temperature on the evaporator.

They also protect against too low an evaporating pressure by throttling down when the pressure falls below the set value.

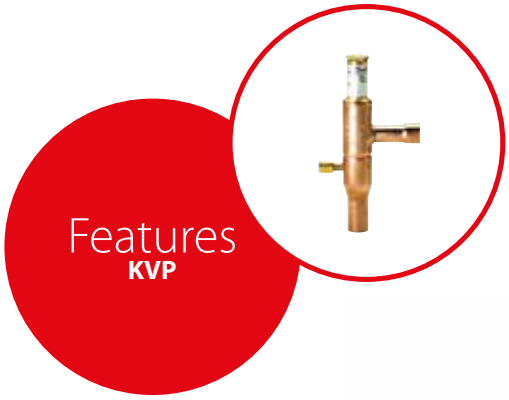

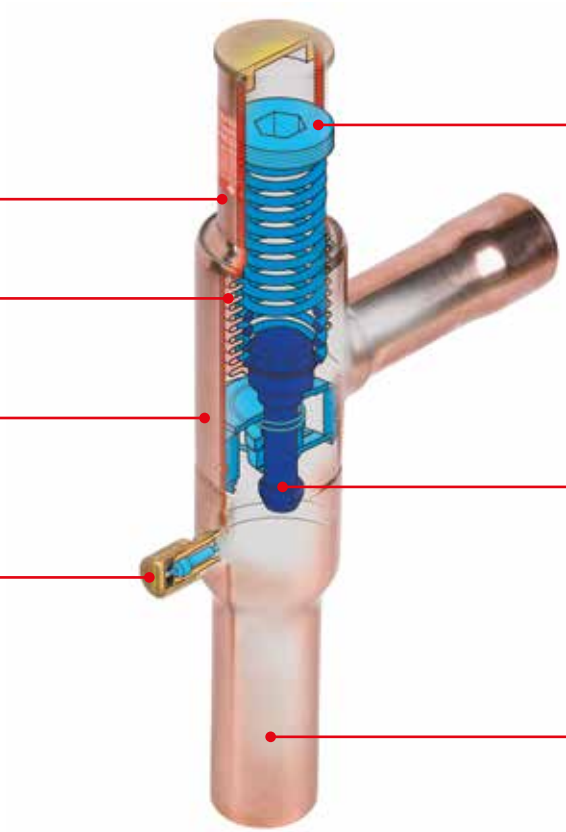

Facts

Application:
- Traditional refrigeration
- Air conditioning units
- Cold rooms
- Display cabinets

- The KVP can be used to differentiate the evaporating pressures in two or more evaporators in systems with one compressor
- Protection against a too low evaporating pressure: the regulator closes when the pressure in the evaporator falls below the set value
- Wide capacity and operating range

- Regulation range: 0 – 5.5 bar / 0 – 80 psig
- KVP 12 – 22: applicable to R22, R1270, R134a, R290, R404A, R407A, R407C, R407F, R448A, R449A, R450A, R452A, R507A, R513A, R600, R600a
- KVP 12 – 22: May be used in the following EX range: Category 3 (Zone 2)
- KVP 28 – 35: applicable to R22, R134a, R404A, R407A, R407C, R407F, R448A, R449A, R450A, R452A, R507A, R513A
- Maximum working pressure: PS / MWP = 18 bar / 260 psig

Technical data and ordering

KVP - Evaporator pressure regulator

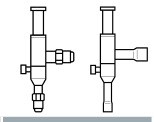

Ordering

Type	Rated capacity in [kW] / [TR] [1]								Connection type	Connection size		Code no.
	R22		R134a		R404A / R507		R407C					
	[kW]	[TR]	[kW]	[TR]	[kW]	[TR]	[kW]	[TR]		[in]	[mm]	
KVP 12	4.0	1.3	2.8	0.9	3.6	1.2	3.7	1.2	Flare [2] [3]	1/2	12	034L0021
	4.0	1.3	2.8	0.9	3.6	1.2	3.7	1.2	Solder, ODF [3]	1/2	–	034L0023
	4.0	1.3	2.8	0.9	3.6	1.2	3.7	1.2	Solder, ODF [3]	–	12	034L0028
KVP 15	4.0	1.3	2.8	0.9	3.6	1.2	3.7	1.2	Flare [2] [3]	5/8	16	034L0022
	4.0	1.3	2.8	0.9	3.6	1.2	3.7	1.2	Solder, ODF [3]	5/8	16	034L0029
KVP 22	4.0	1.3	2.8	0.9	3.6	1.2	3.7	1.2	Solder, ODF [3]	7/8	22	034L0025
KVP 28	8.6	2.8	6.1	1.9	7.7	2.6	7.9	2.6	Solder, ODF [3]	1 1/8	–	034L0026
	8.6	2.8	6.1	1.9	7.7	2.6	7.9	2.6	Solder, ODF [3]	–	28	034L0031
KVP 35	8.6	2.8	6.1	1.9	7.7	2.6	7.9	2.6	Solder, ODF [3]	1 3/8	35	034L0032

[1]) Rated capacity is the capacity of the regulator at
– Evaporating temperature t_e = -10 °C / 14 °F
– Condensing temperature t_c = 25 °C / 100 °F
– Pressure drop in regulator Δp = 0.2 bar / 2 psi, offset = 0.6 bar / 9 psi
[2]) Supplied without flare nuts. Separate flare nuts can be supplied: 1/2 in / 12 mm - code no. 011L1103, 5/8 in / 16 mm - code no. 011L1167.
[3]) The connection dimensions chosen must not be too small, since gas velocities in excess of 40 m/s at the inlet of the regulator can give flow noise.

To select the product for other conditions or refrigerants, use Danfoss Coolselector®2.

Application example

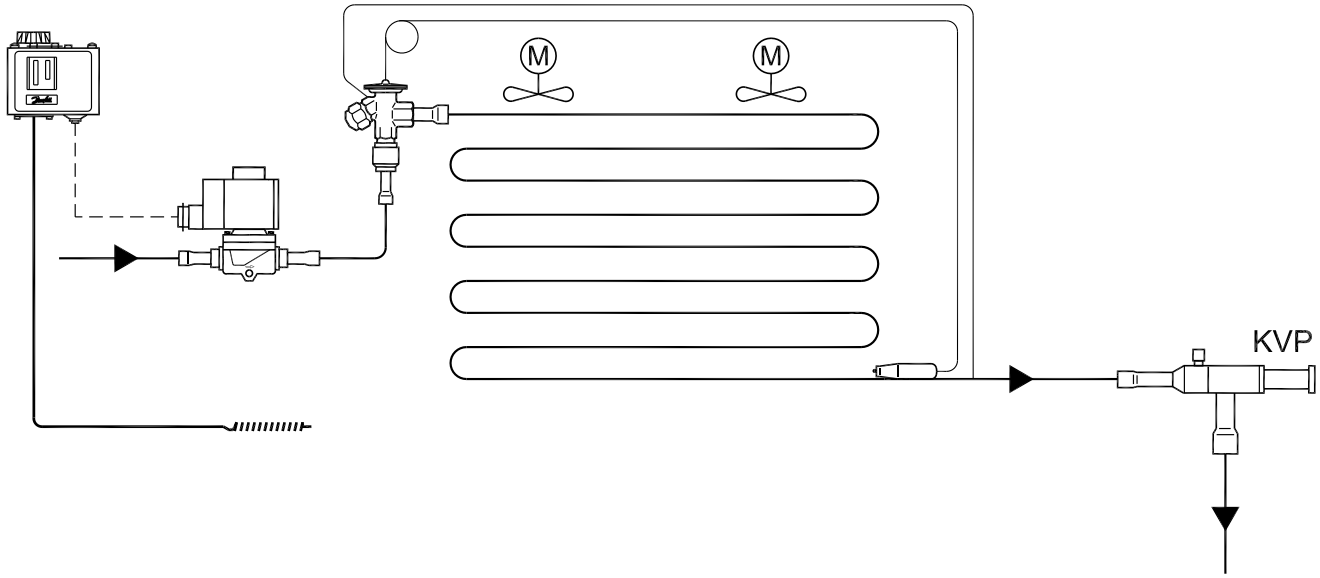

KVL, Crankcase pressure regulator

KVL crankcase pressure regulators valves are installed in the suction line ahead of the compressor.

KVL protects the compressor motor against overload during start-up after long standstill periods or after defrost periods (high pressure in evaporator).

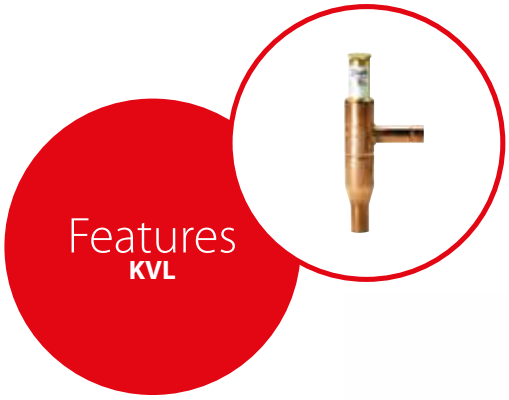

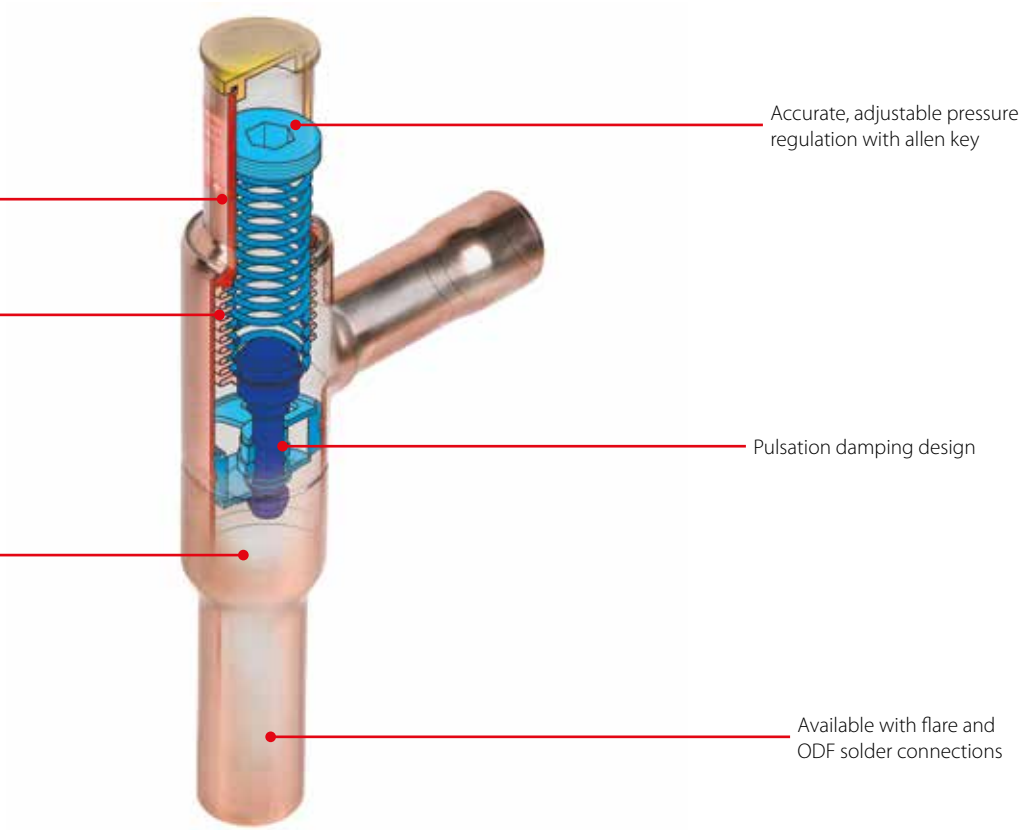

Facts

Application:
- Traditional refrigeration
- Air conditioning units
- Transport refrigeration

- Unaffected by ambient pressure variations
- Bellows welded to the body for long lifetime
- Accurate, adjustable pressure regulation
- Easy adjustment before start up
- Protects the compressor against electrical motor overloading
- Wide capacity and operating range
- Regulation range: 0.2 – 6 bar / 3 – 87 psig

- KVL 12 – 22: applicable to R22, R1270, R134a, R290, R404A, R407A, R407C, R407F, R448A, R449A, R450A, R452A, R507A, R513A, R600, R600a
- KVL 12 – 22: may be used in the following EX range: Category 3 (Zone 2)
- KVL 28 – 35: applicable to R22, R134a, R404A, R407A, R407C, R407F, R448A, R449A, R450A, R452A, R507A, R513A
- Maximum working pressure: PS / MWP = 18 bar / 261 psig

Technical data and ordering

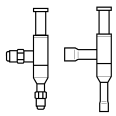

KVL - Crankcase pressure regulator

Ordering

Type	Rated capacity in [kW] / [TR] [1]								Connection type	Connection size		Code no.
	R22		R134a		R404A / R507		R407C					
	[kW]	[TR]	[kW]	[TR]	[kW]	[TR]	[kW]	[TR]		[in]	[mm]	
KVL 12	7.1	1.2	5.3	0.8	6.3	1.0	6.4	1.1	Flare [2][3]	1/2	12	034L0041
	7.1	1.2	5.3	0.8	6.3	1.0	6.4	1.1	Solder, ODF [3]	1/2	–	034L0043
	7.1	1.2	5.3	0.8	6.3	1.0	6.4	1.1	Solder, ODF [3]	–	12	034L0048
KVL 15	7.1	1.2	5.3	0.8	6.3	1.0	6.5	1.1	Flare [2][3]	5/8	16	034L0042
	7.1	1.2	5.3	0.8	6.3	1.0	6.5	1.1	Solder, ODF [3]	5/8	16	034L0049
KVL 22	7.1	1.2	5.3	0.8	6.3	1.0	6.5	1.1	Solder, ODF [3]	7/8	22	034L0045
KVL 28	17.8	4.1	13.2	2.6	15.9	3.4	16.4	3.8	Solder, ODF [3]	1 1/8	–	034L0046
	17.8	4.1	13.2	2.6	15.9	3.4	16.4	3.8	Solder, ODF [3]	–	28	034L0051
KVL 35	17.8	4.1	13.2	2.6	15.9	3.4	16.4	3.8	Solder, ODF [3]	1 3/8	35	034L0052

[1]) Rated capacity is the capacity of the regulator at
– Evaporating temperature t_e = -10 °C / 14 °F
– Condensing temperature t_c = 25 °C / 100 °F
– Pressure drop in regulator Δp = 0.2 bar / 2 psi
[2]) Supplied without flare nuts. Separate flare nuts can be supplied: 1/2 in / 12 mm - code no. 011L1103, 5/8 in / 16 mm - code no. 011L1167.
[3]) The connection dimensions chosen must not be too small, since gas velocities in excess of 40 m / s at the inlet of the regulator can give flow noise.

To select the product for other conditions or refrigerants, use Danfoss Coolselector®2.

Application example

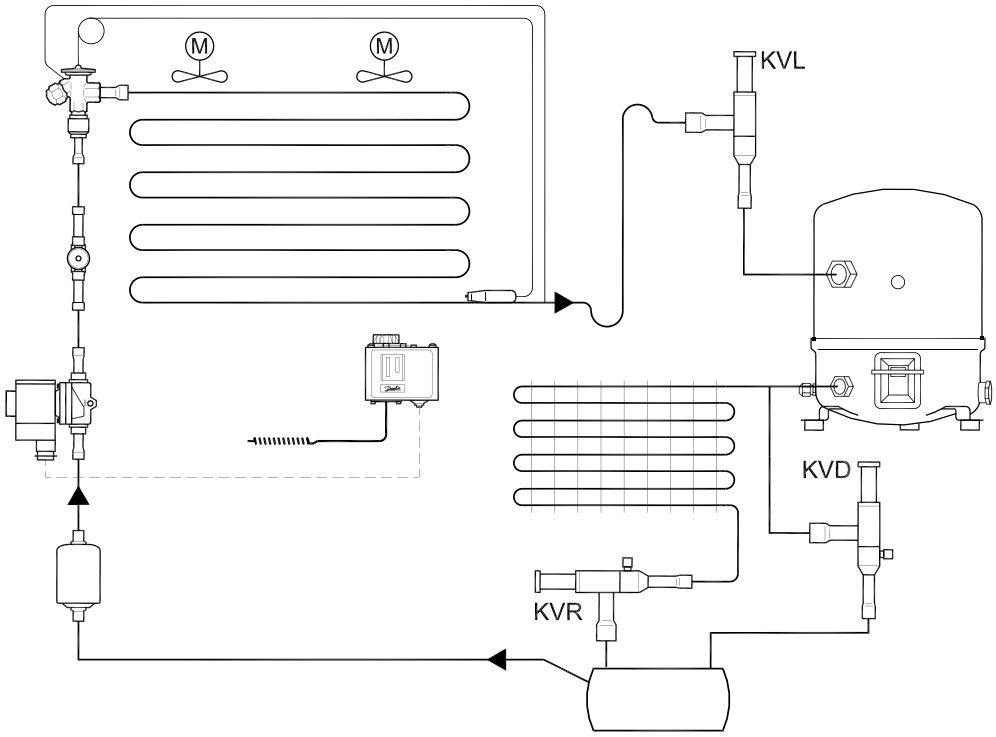

KVD, Receiver pressure regulator

KVD receiver pressure regulators open on falling receiver pressure and bypasses hot gas to maintain the receiver pressure at the regulator setting (adjustable).

KVD and KVR form a regulating system, used to maintain constant and adequately high condensing and receiver pressure in plant with heat-recovery, and in refrigeration and air conditioning plant with air-cooled condensers.

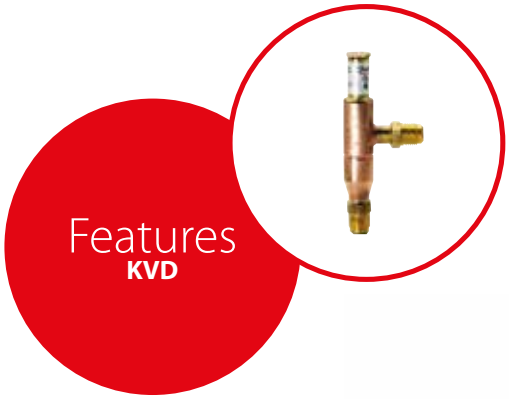

Features
KVD

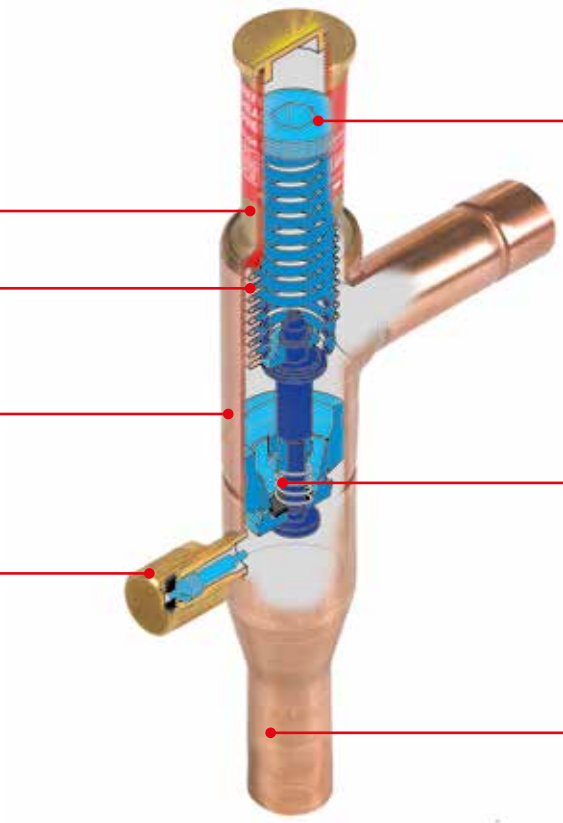

Facts

Application:
- Traditional refrigeration
- Air conditioning units
- Commercial refrigeration

- The regulator is equipped with an effective damping device against pulsations which can normally arise in a refrigeration plant
- KVD regulations is only dependent upon the outlet pressure. Pressure variations on the inlet side of the regulator do not affect the degree of opening since KVD is equipped with an equalization bellows

- Wide capacity and operating range
- Regulation range:
  3 – 20 bar / 44 – 290 psig
- Max. working pressure
  PS MWP = 28 bar / 406 psig
- Can be used as a relief valve from high pressure to suction side
- Applicable to R22, R1270, R134a, R290, R404A, R407A, R407C, R407F, R448A, R449A, R450A, R452A, R507A, R513A, R600, R600a
- May be used in the following EX range:
  Category 3 (Zone 2)

Technical data and ordering

KVD - Receiver pressure regulator

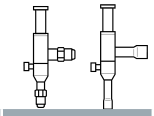

Ordering

Type	K_v value [m^3/h] [1]	Connection type	Connection size		Code no.
			[in]	[mm]	
KVD 12	1.75	Flare [2] [3]	1/2	12	034L0171
	1.75	Solder, ODF [3]	1/2	–	034L0173
	1.75	Solder, ODF [3]	–	12	034L0176
KVD 15	1.75	Flare [2] [3]	5/8	16	034L0172
	1.75	Solder, ODF [3]	5/8	16	034L0177

[1] The K_v value is the flow of water in [m^3/h] at a pressure drop across valve of 1 bar, ρ = 1000 kg / m^3.
[2] Supplied without flare nuts. Separate flare nuts can be supplied: 1/2 in / 12 mm - code no. 011L1103, 5/8 in / 16 mm - code no. 011L1167.
[3] The connection dimensions chosen must not be too small, since gas velocities in excess of 40 m/s at the inlet of the regulator can give flow noise.

Application example

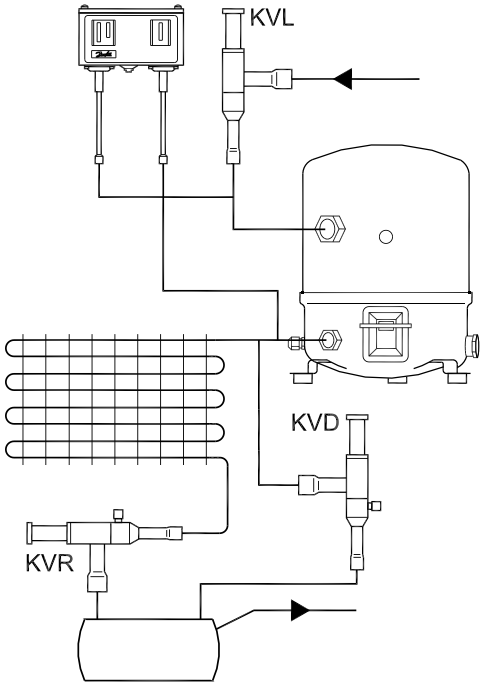

KVC, Hot gas bypass regulator

KVC are hot gas bypass regulators used for the adaption of the compressor capacity to the actual evaporator load.
Placed in a bypass between high and low pressure sides of the refrigeration system, KVC imposes a lower limit on the compressor suction pressure by supplying the low pressure side with replacement capacity in the form of hot gas/cool gas from the high pressure side.



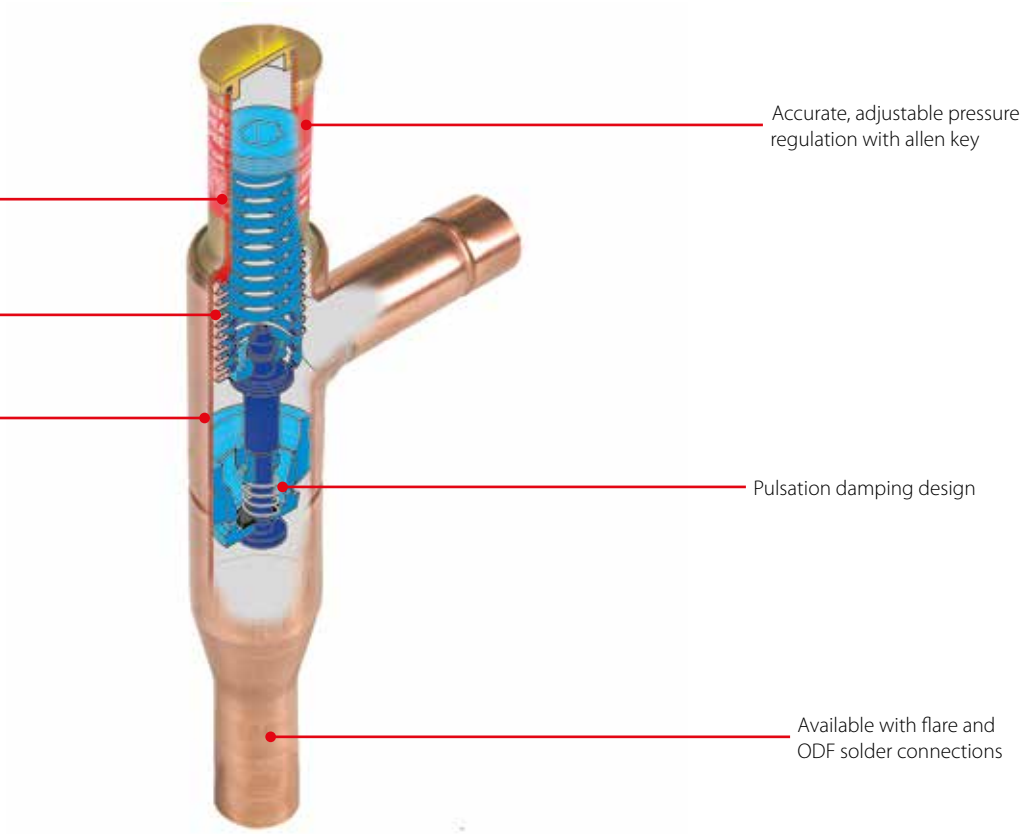

Facts

Application:
- Traditional refrigeration
- Air conditioning units
- Transport refrigeration
- Commercial refrigeration
- Compressed air driers

- KVC regulations is only dependent upon the outlet pressure. Pressure variations on the inlet side of the regulator do not affect the degree of opening since KVC is equipped with an equalization bellows
- The regulator is also equipped with an effective damping device against pulsations which can normally arise in a refrigeration plant

- Compact angle design for easy installation
- Wide capacity and operating range
- Regulation range: 0.2 – 6 bar / 3 – 87 psig
- Maximum working pressure PS / MWP = 28 bar / 406 psig
- Applicable to R22, R1270, R134a, R290, R404A, R407A, R407C, R407F, R448A, R449A, R450A, R452A, R507A, R513A, R600, R600a
- May be used in the following EX range: Category 3 (Zone 2)
- Medium temperature: -45 – 130 °C / -49 – 266 °F

Technical data and ordering

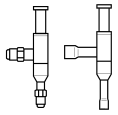

KVC - Hot gas bypass regulator

Ordering

Type	Rated capacity in [kW] / [TR] [4]								Connection type	Connection size		Code no.
	R22		R134a		R404A / R507		R407C					
	[kW]	[TR]	[kW]	[TR]	[kW]	[TR]	[kW]	[TR]		[in]	[mm]	
KVC 12 [3]	7.6	2.14	4.8	1.36	6.9	2.02	8.4	2.31	Flare [2] [3]	1/2	12	034L0141
	7.6	2.14	4.8	1.36	6.9	2.02	8.4	2.31	Solder, ODF [3]	1/2	–	034L0143
	7.6	2.14	4.8	1.36	6.9	2.02	8.4	2.31	Solder, ODF [3]	–	12	034L0146
KVC 15 [3]	14.9	4.17	9.4	2.65	13.6	3.93	16.4	4.50	Flare [2] [3]	5/8	16	034L0142
	14.9	4.17	9.4	2.65	13.6	3.93	16.4	4.50	Solder, ODF [3]	5/8	16	034L0147
KVC 22 [3]	19.1	5.35	12.0	3.41	17.4	5.04	21.0	5.78	Solder, ODF [3]	7/8	22	034L0144

[1] Supplied without flare nuts. Separate flare nuts can be supplied: 1/2 in / 12 mm - code no. 011L1103, 5/8 in / 16 mm - code no. 011L1167.
[2] The connection dimensions chosen must not be too small, since gas velocities in excess of 40 m/s at the inlet of the regulator can give flow noise.
[3] If the discharge temperature becomes too high in relation to the compressor specification, the installation of an injection valve in a bypass between liquid line and compressor suction line is recommended.
[4] Rated capacity is the capacity of the regulator at:
– Evaporating temperature t_e = -10 °C / 14 °F
– Condensing temperature t_c = 25 °C / 77 °F

Application example

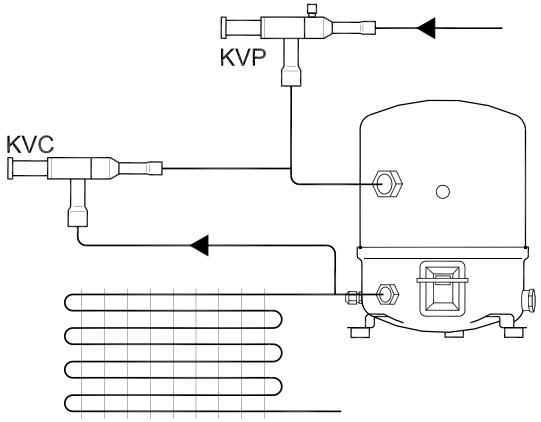

CPCE, Hot gas bypass regulator / LG, Liquid gas mixer (accessory)

CPCE hot gas bypass regulators adapt compressor capacity to actual evaporator load, and are designed for installation in a bypass line between the low and high pressure sides of the refrigeration system, for hot gas injection between evaporator and thermo-static expansion valve.

Injection is through an LG liquid-gas mixer.



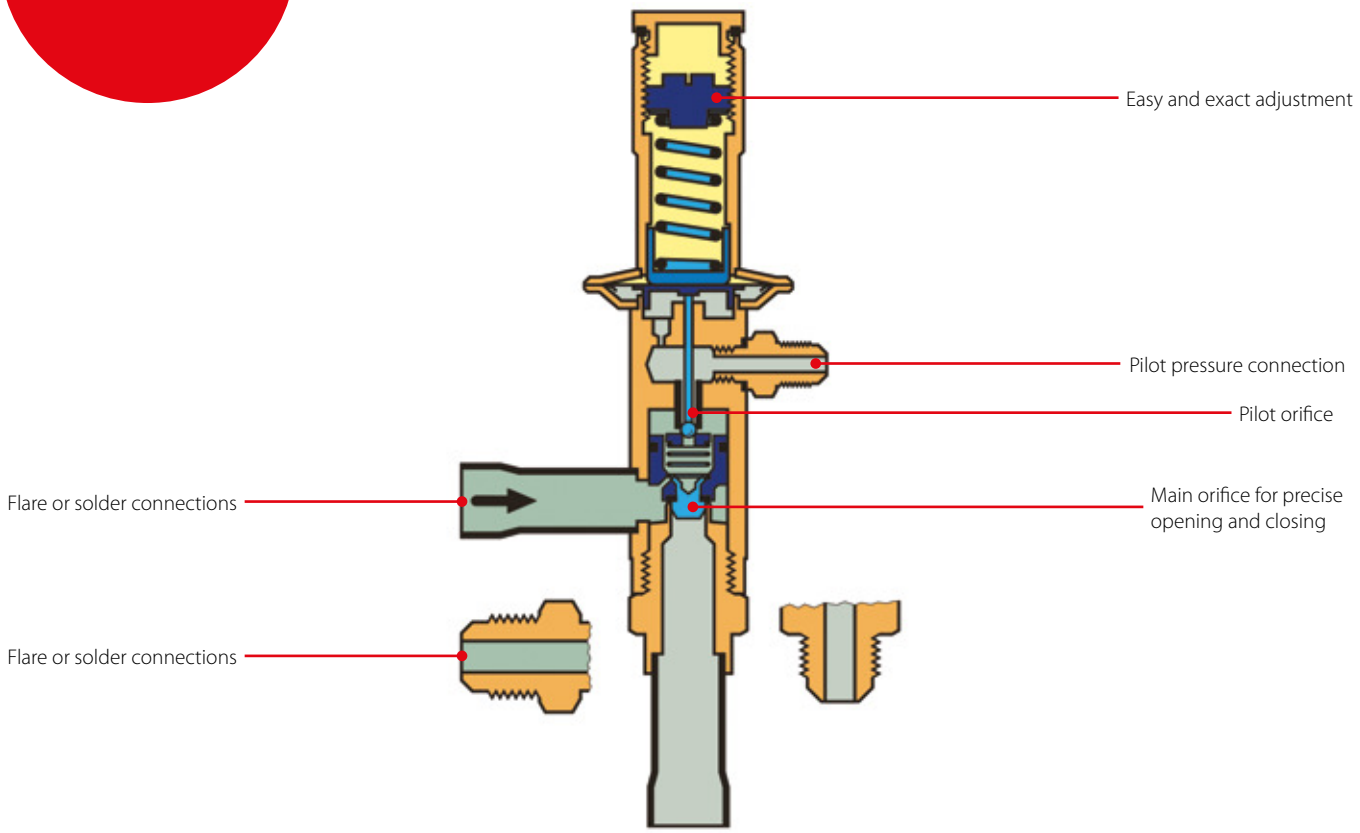

Facts

Application:
- Traditional refrigeration
- Air conditioning units
- Commercial refrigeration
- Compressed air dryers
- Transport refrigeration

- Prevents high suction superheats by combining hot gas injection with expansion valve characteristics
- Can also protect against too low an evaporating temperature, i.e. to prevent evaporator icing
- LG Liquid-gax mixer can be used for hot gas defrosting or reverse cycle systems
- Superior control accuracy
- The regulator increases evaporator gas velocity thus ensuring better oil return to compressor
- Direct connection to system suction line regulates hot gas injection independent of evaporator pressure drop
- LG Liquid-gax mixer provides homogenous mixing of the liquid and hot gas refrigerant injected into the evaporator
- Applicable to R22, R1234ze *), R1270 *), R134a, R290 *), R404A, R407A, R407C, R407F, R448A, R449A, R450A, R452A, R507A, R513A, R600 *), R600a *)

) only LG 12 – 16 and LG 16 – 22
- May be used in the following EX range: Category 3 (Zone 2)
- Max. working pressure: PS / MWP = 28 bar / 406 psig

Technical data and ordering

CPCE - Hot gas bypass regulator

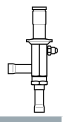

Ordering

Type	Rated capacity in [kW] / [TR] [1]								Connection type	Connection size		Code no.
	R22		R134a		R404A / R507		R407C					
	[kW]	[TR]	[kW]	[TR]	[kW]	[TR]	[kW]	[TR]		[in]	[mm]	
CPCE 12	17.4	6.2	7.9	4.3	16.4	6.3	19.0	6.7	Flare [2] [3]	1/2	12	034N0081
	17.4	6.2	7.9	4.3	16.4	6.3	19.0	6.7	Solder, ODF [3]	1/2	12	034N0082
CPCE 15	25.6	9.2	11.6	6.3	24.2	9.1	27.9	9.9	Solder, ODF [3]	5/8	16	034N0083
CPCE 22	34.0	12.2	15.2	8.4	32.0	12.1	37.1	13.2	Solder, ODF [3]	7/8	22	034N0084

[1]) *Rated capacity is the capacity of the regulator at:*
- *Evaporating temperature t_e = -10 °C / 14 °F*
- *Condensing temperature t_c = 30 °C / 100 °F*
- *Reduction of suction temperature / pressure Δt_s = CPCE: 4 K*

LG - Liquid-gas mixer (accessory)



Ordering

Type	Connection						Code no.
	Expansion valve Solder, ODM		Hot gas Solder, ODF		Liquid distributor Solder, ODF		
	[in]	[mm]	[in]	[mm]	[in]	[mm]	
LG 12 – LG 16	5/8	16	1/2	12	5/8	16	069G4001
LG 12 – LG 22	7/8	22	1/2	12	7/8	22	069G4002
LG 16 – LG 28	1 1/8	28	5/8	16	1 1/8	28	069G4003
LG 22 – LG 35	1 3/8	35	7/8	22	1 3/8	35	069G4004

Application example

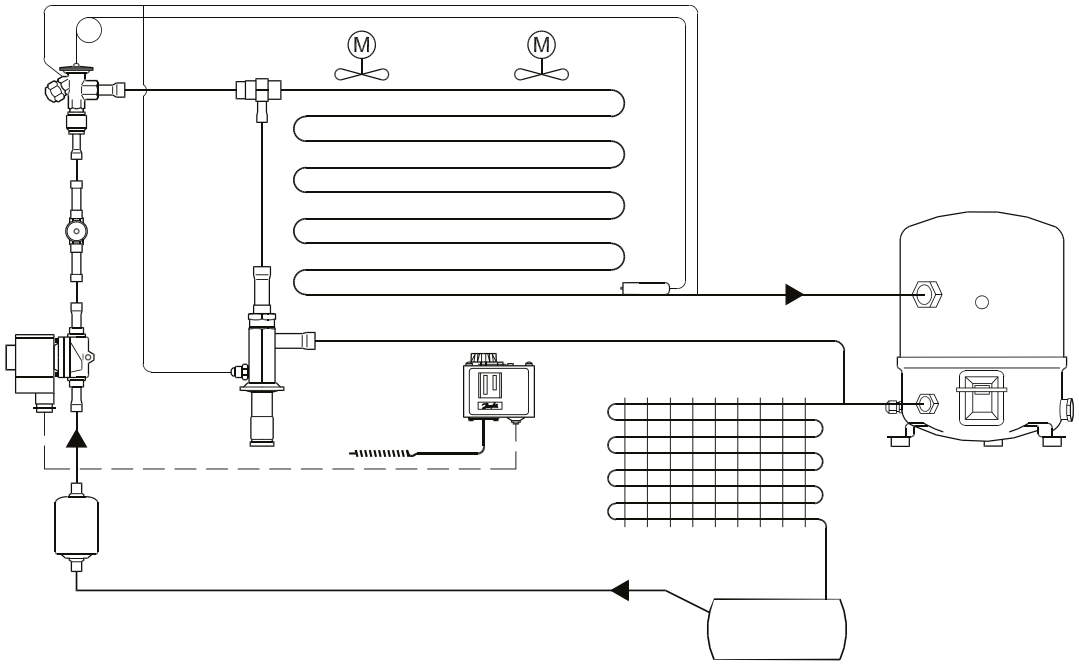

WVFX / WVO / WVS, Pressure operated water valves

WVFX, WVO and WVS pressure operated water valves are used to regulate the flow of water in refrigeration plant with water-cooled condensers in order to ensure constant proportional regulation of condensing pressure. The water valve modulates the water flow to maintain the condensing pressure at a constant level during operation.

When the refrigeration plant is stopped, the cooling water flow is shut off automatically. Media: fresh water and neutral brine.
For use with aggressive media such as sea water, WVFX 15, WVFX 20 and WVFX 25 are available in stainless steel versions.



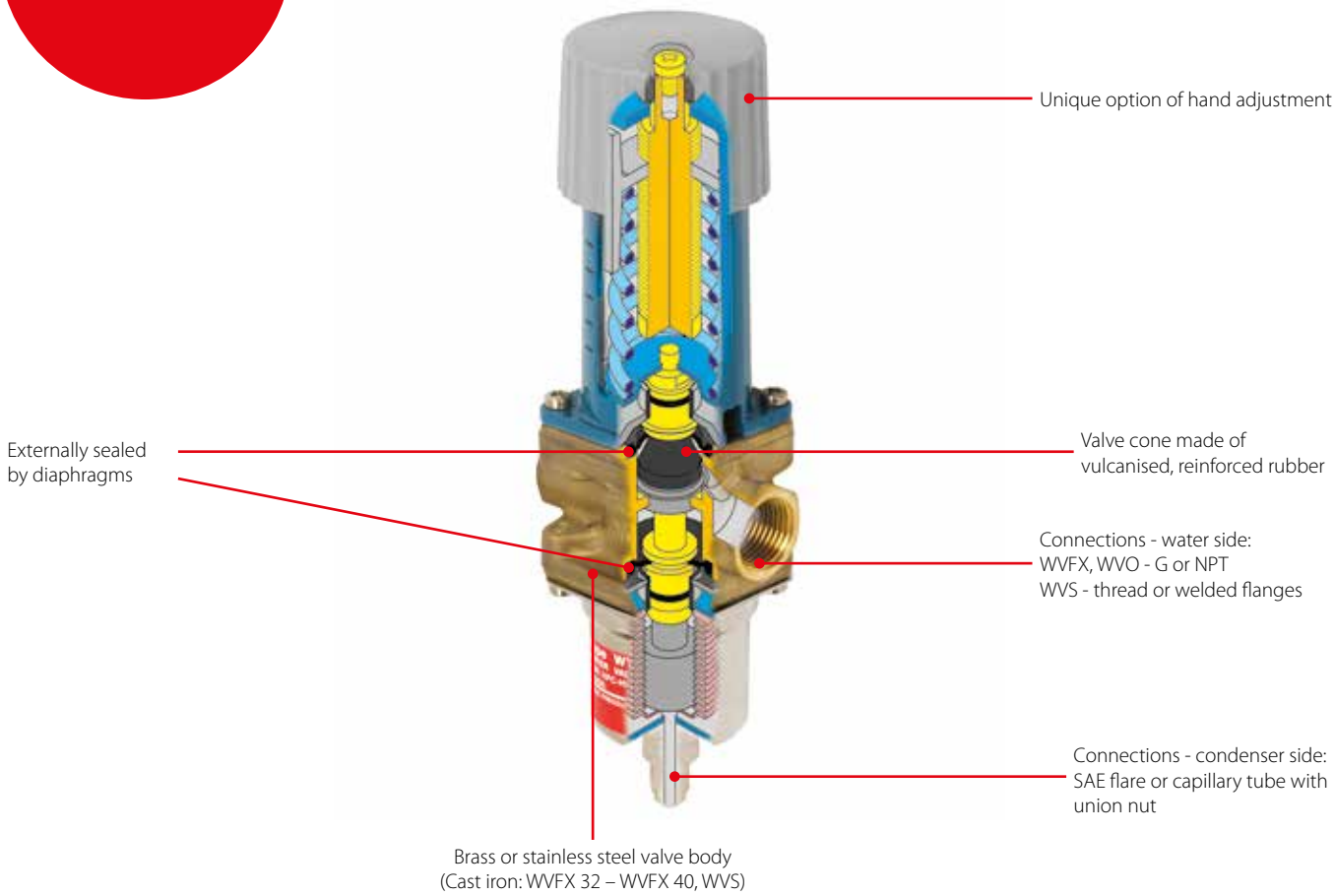

Facts

Applications:
- Traditional refrigeration
- Air conditioning units
- Other applications with water-cooled condenser
- Ice making machines
- Ice cream machines
- IT cooling
- Water chillers

- WVFX 10 – WVFX 25 can be supplied in stainless steel housing for sea water applications

- Exact pressure control - high accuracy of WVO valves up to 0.2 bar
- Reliable design - factory setting is maintained during whole life cycle
- Insensitive to dirt - fit and forget solution
- High permissible water pressure (PS) = 16 bar - can be used with water towers
- Low flow version - 0.63 m³/h (available on request)
- WVFX 10 – WVFX 40 are direct actuated valves
- WVS 32 – WVS 100 are servo-operated valves

- Very wide media temperature range: -25 – 130 °C
- Versions with capillary tube available on request
- Applicable to R22, R1270, R134a, R290, R404A, R407A, R407C, R407F, R410A [1], R448A, R449A, R450A, R452A, R507A, R513A, R600, R600a, R717 [2]

[1] High pressure refrigerants version (45.2 MWP) only
[2] WVS, WVFX 10 – 25 and WVO with flare connection only; versions with capillary tube or with solder connections are not compatible with R717. WVFX 32 and WVFX 40 are not compatible with R717

- May be used in the following EX range: Category 3 (Zone 2)

Technical data

WVFX / WVO / WVS, Pressure operated water valve

Technical data

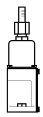

Type				Liquid side			K_v value [1] [m³/h]
	Control press. adjustable closing press. [bar]	Max. working pressure PS [bar]	Max. test pressure PB [bar]	Media	Max. working pressure PS [bar]	Max. test pressure PS [bar]	
WVO 10	8.0 – 22 [2]	26.4	29	Fresh water, neutral brine, sea water [3]	16	24	1.4
WVFX 10	3.5 – 16	26.4	29		16	24	1.4
	4.0 – 23	26.4	29		16	24	1.4
	15.0 – 29.0	45.2	60		16	24	1.4
WVO 15	14.0 – 18.0	26.4	29		16	24	1.9
WVFX 15	3.5 – 16.0	26.4	29		16	24	1.9
	4.0 – 23.0	26.4	29		16	24	1.9
	15.0 – 29.0	45.2	60		16	24	1.9
WVFX 20	3.5 – 16.0	26.4	29		16	24	3.4
	4.0 – 23.0	26.4	29		16	24	3.4
	15.0 – 29.0	45.2	60		16	24	3.4
WVFX 25	3.5 – 16.0	26.4	29		16	24	5.5
	4.0 – 23.0	26.4	29		16	24	5.5
	15.0 – 29.0	45.2	60		16	24	5.5
WVFX 32	4.0 – 17.0	24.1	26.5		10	10	11.0
WVFX 40	4.0 – 17.0	24.1	26.5		10	10	11.0
WVS 32	2.2 – 19.0	26.4	29	Fresh water, neutral brine	10	16	12.5
	15.0 – 29.0	45.2	60		10	16	12.5
WVS 40	2.2 – 19.0	26.4	29		10	16	21.0
	15.0 – 29.0	45.2	60		10	16	21.0
WVS 50	2.2 – 19.0	26.4	29		10	16	32.0
	15.0 – 29.0	45.2	60		10	16	32.0
WVS 65	2.2 – 19.0	26.4	29		10	16	45.0
	15.0 – 29.0	45.2	60		10	16	45.0
WVS 80	2.2 – 19.0	26.4	29		10	16	80.0
	15.0 – 29.0	45.2	60		10	16	80.0
WVS 100	2.2 – 19.0	26.4	29		10	16	125.0
	15.0 – 29.0	45.2	60		10	16	125.0

[1]) The K_v value is the flow of water in [m³/h] with a pressure drop across the valve of 1 bar, ρ = 1000 kg/m³.
[2]) Pressure control range width max. 6 bar.
[3]) WVFX 15 – WVFX 25 with stainless steel housing only.

Media temperature range
WVFX 10 – WVFX 25: -25 – 130 °C
WVFX 32 – WVFX 40: -25 – 90 °C
WVS 50 – WVS 100: -25 – 90 °C

Opening differential pressure
WVO 10 – 25: 0 – 10 bar
WVFX 10 – WVFX 40: 0 – 10 bar
WVS 32 – WVFX 40: 0.5 – 4 bar
WVS 50 – WVS 100: 0.3 – 4 bar

Technical data and ordering

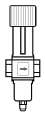

WVFX - Pressure operated water valves, commercial applications

Ordering

Type	Connection			Range (refrigerant) [bar]	Code no.
	Water side ISO 228-1	Condenser side			
		[in]	[mm]		
WVFX 10	G 3/8	1/4	6 flare	3.5 – 16	003N1100
	G 3/8	1/4	6 flare	4.0 – 23	003N1105
	G 3/8	1/4	6 flare	15.0 – 29.0	003N1410
WVFX 15	G 1/2	1/4	6 flare	3.5 – 16	003N2100
	G 1/2	1/4	6 flare nut	4.0 – 23	003N2205
	G 1/2	1/4	6 flare	4.0 – 23	003N2105
	G 1/2	1/4	6 flare	15.0 – 29.0	003N2410
WVFX 20	G 3/4	1/4	6 flare	3.5 – 16	003N3100
	G 3/4	1/4	6 flare	4.0 – 23	003N3105
	G 3/4	1/4	6 flare nut	4.0 – 23	003N3205
	G 3/4	1/4	6 flare	15.0 – 29.0	003N3410
WVFX 25	G 1	1/4	6 flare	3.5 – 16	003N4100
	G 1	1/4	6 flare	4.0 – 23	003N4105
	G 1	1/4	6 flare	15.0 – 29.0	003N4410
WVFX 32	G 1 1/4	1/4	6 flare	4.0 – 17	003F1232
WVFX 40	G 1 1/2	1/4	6 flare	4.0 – 17	003F1240

WVFX - Pressure operated water valves, with stainless steel housing

WVFX 15	G 1/2	1/4	6 flare	3.5 – 16	003N2101
	G 1/2	1/4	6 flare	4.0 – 23	003N2104
WVFX 20	G 3/4	1/4	6 flare	4.0 – 23	003N3104
WVFX 25	G 1	1/4	6 flare	3.5 – 16	003N4101
	G 1	1/4	6 flare	4.0 – 23	003N4104

WVO - Pressure operated water valves, commercial applications

WVO 10	G 3/8	1/4	6 flare	8 – 12	003N5203
	G 3/8	1/4	6 flare	14 – 18	003N5206
	G 3/8	1/4	6 flare	16 – 20	003N5207
WVO 15	G 1/2	1/4	6 flare	14 – 18	003N5216

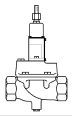

WVS - Pressure operated water valve parts programme

Type	Connection ISO 228-1	Code no.				
		Valve body	Pilot unit [2]	Pilot unit for R410A and R744 (CO_2) [2]	Flange set [3]	Servo spring for differential pressure range: 1 – 10 bar
WVS 32	G 1 1/4	016D5032	016D1017	016D1018	–	016D1327
WVS 40	G 1 1/2	016D5040	016D1017	016D1018	–	016D0575
WVS 50	2 in. weld flange	016D5050 [1]	016D1017	016D1018	027N3050	016D0576
WVS 65	2 1/2 in. weld flange	016D5065 [1]	016D1017	016D1018	027N3065	016D0577
WVS 80	3 in. weld flange	016D5080 [1]	016D1017	016D1018	027N3080	016D0578
WVS 100	4 in. weld flange	016D5100 [1]	016D1017	016D1018	027N3100	016D0579

[1] Code numbers cover valve body, flange gaskets, flange bolts and screws for pilot valve.
[2] Code numbers cover control element and spring housing.
[3] Code numbers cover an inlet and an outlet flange.

Accessories

Description	Code no.
1 m capillary tube 1/4 in., 6 mm flare coupling nuts at each end	060-017166
Bracket for do WVFX 10 – WVFX 25	003N0388

Quick Selection Notes:

AVTA, Thermostatic operated water valve

AVTA thermostatic operated water valves are used for proportional regulation of water flow quantity in refrigeration plant with water-cooled condensers for condensing pressure regulation purposes. AVTA valves give modulating regulation of the condensing temperature and so maintain it constant during operation.

When the refrigeration plant is stopped, the cooling water flow is shut off automatically. Media: Fresh water or neutral brine.
For use with aggressive media such as sea water, special versions in stainless steel are available.
AVTA opens on rising bulb temperatures.

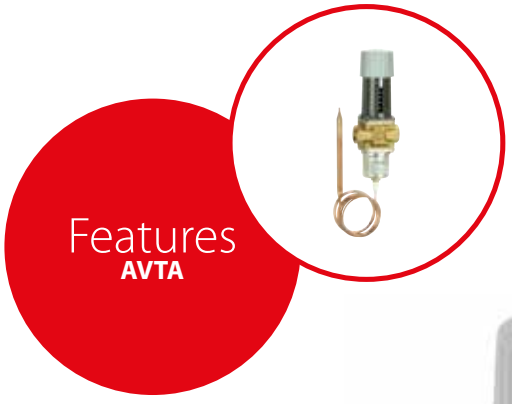

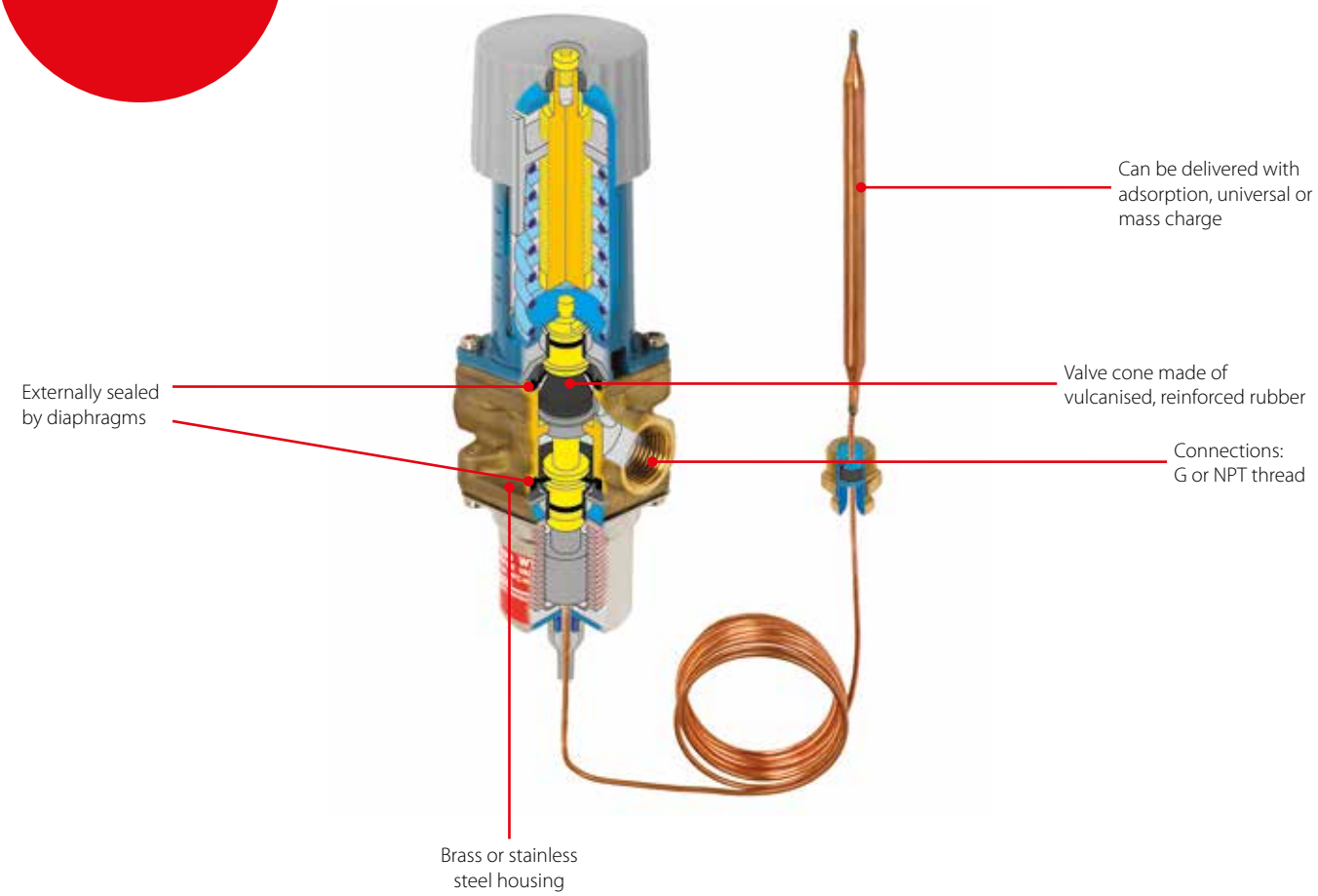

Facts

Applications:
- Traditional refrigeration with water cooled condenser
- Cooling of industrial processes

- Insensitive to dirt – fit and forget solution
- Insensitive to pressure variations
- Needs no power supply - self acting
- The valve can be placed in any position
- Operates from zero differential pressure
- Unique option of hand regulation
- Differential pressure: 0 – 10 bar

- Max. working pressure PS = 16 bar
- Max. pressure on sensor: 25 bar
- Opens on rising sensor temperature
- The regulation range is defined for the point at which the valve begins to open
- AVTA are direct actuated valves

Technical data and ordering

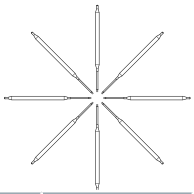

AVTA with adsorption charge (sensor ø9.5 × 150 mm)

Ordering

Type	Connection ISO 228-1	Regulating range [°C]	Max. temperature sensor [°C]	K_v value at Δp = 1 bar [m³/h]	Capillary tube length [m]	Code no. [1]
AVTA 10	G 3/8	10 – 80	130	1.4	2.3	003N1144
AVTA 15	G 1/2	10 – 80	130	1.9	2.3	003N0107
AVTA 20	G 3/4	10 – 80	130	3.4	2.3	003N0108
AVTA 25	G 1	10 – 80	130	5.5	2.3	003N0109

[1]) Code no. covers complete valve including capillary tube gland.

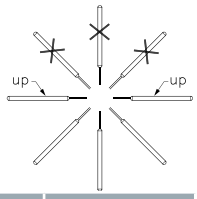

AVTA with universal charge (sensor ø18 × 210 mm)

Ordering

Type	Connection ISO 228-1	Regulating range [°C]	Max. temperature sensor [°C]	K_v value at Δp = 1 bar [m³/h]	Capillary tube length [m]	Code no. [1]
AVTA 10	G 3/8	0 – 30	57	1.4	2.0	003N1132
AVTA 15	G 1/2	0 – 30	57	1.9	2.0	003N2132
AVTA 20	G 3/4	0 – 30	57	3.4	2.0	003N3132
AVTA 25	G 1	0 – 30	57	5.5	2.0	003N4132
AVTA 10	G 3/8	25 – 65	90	1.4	2.0	003N1162
AVTA 15	G 1/2	25 – 65	90	1.9	2.0	003N2162
	G 1/2	25 – 65	90	1.9	2.0 (armoured)	003N0041
AVTA 20	G 3/4	25 – 65	90	3.4	2.0	003N3162
	G 3/4	25 – 65	90	3.4	5.0	003N3165
	G 3/4	25 – 65	90	3.4	2.0 (armoured)	003N0031
AVTA 25	G 1	25 – 65	90	5.5	2.0	003N4162
	G 1	25 – 65	90	5.5	2.0 (armoured)	003N0032
	G 1	25 – 65	90	5.5	5.0	003N4165
AVTA 10	G 3/8	50 – 90	125	1.4	2.0	003N1182
AVTA 15	G 1/2	50 – 90	125	1.9	2.0	003N2182
AVTA 20	G 3/4	50 – 90	125	3.4	2.0	003N3182
AVTA 25	G 1	50 – 90	125	5.5	2.0	003N4182

[1]) Code no. covers complete valve including capillary tube gland.

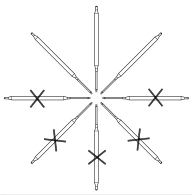

AVTA with mass charge (sensor ø9.5 × 180 mm)

Ordering

Type	Connection ISO 228-1	Regulating range [°C]	Max. temperature sensor [°C]	K_v value at Δp = 1 bar [m³/h]	Capillary tube length [m]	Code no. [1]
AVTA 15	G 1/2	0 – 30	57	1.9	2.0	003N0042
AVTA 20	G 3/4	0 – 30	57	3.4	2.0	003N0043
AVTA 15	G 1/2	25 – 65	90	1.9	2.0	003N0045
	G 1/2	25 – 65	90	1.9	2.0 (armoured)	003N0299
	G 1/2	25 – 65	90	1.9	5.0	003N0034
AVTA 20	G 3/4	25 – 65	90	3.4	2.0	003N0046
AVTA 25	G 1	25 – 65	90	5.5	2.0	003N0047

[1]) Code no. covers complete valve including capillary tube gland.

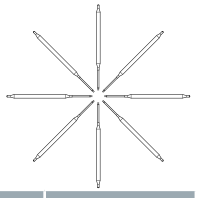

AVTA in stainless steel with adsorption charge (sensor ø9.5 × 150 mm)

Ordering

Type	Connection ISO 228-1	Regulating range [°C]	Max. temperature sensor [°C]	K_v value at Δp = 1 bar [m³/h]	Capillary tube length [m]	Code no. [1]
AVTA 15	G 1/2	10 – 80	130	1.9	2.3	003N2150
AVTA 20	G 3/4	10 – 80	130	3.4	2.3	003N3150
AVTA 25	G 1	10 – 80	130	5.5	2.3	003N4150

[1]) Code no. covers complete valve including capillary tube gland.

TUH / TCHE, Capacity regulator (hot gas bypass)

TUH / TCHE capacity regulators adapt compressor capacity to actual evaporator load in applications operating at an evaporating temperature of around 0 °C. Fitted in a bypass between the high and low-pressure sides of air-drier systems, TUH / TCHE maintain compressor suction pressure by injecting hot gas / cool gas from the high-pressure side.

TUH has internal pressure equalization and opens when pressure drops at the valve outlet.
TCHE have external pressure equalization and open directly when compressor suction pressure drops.



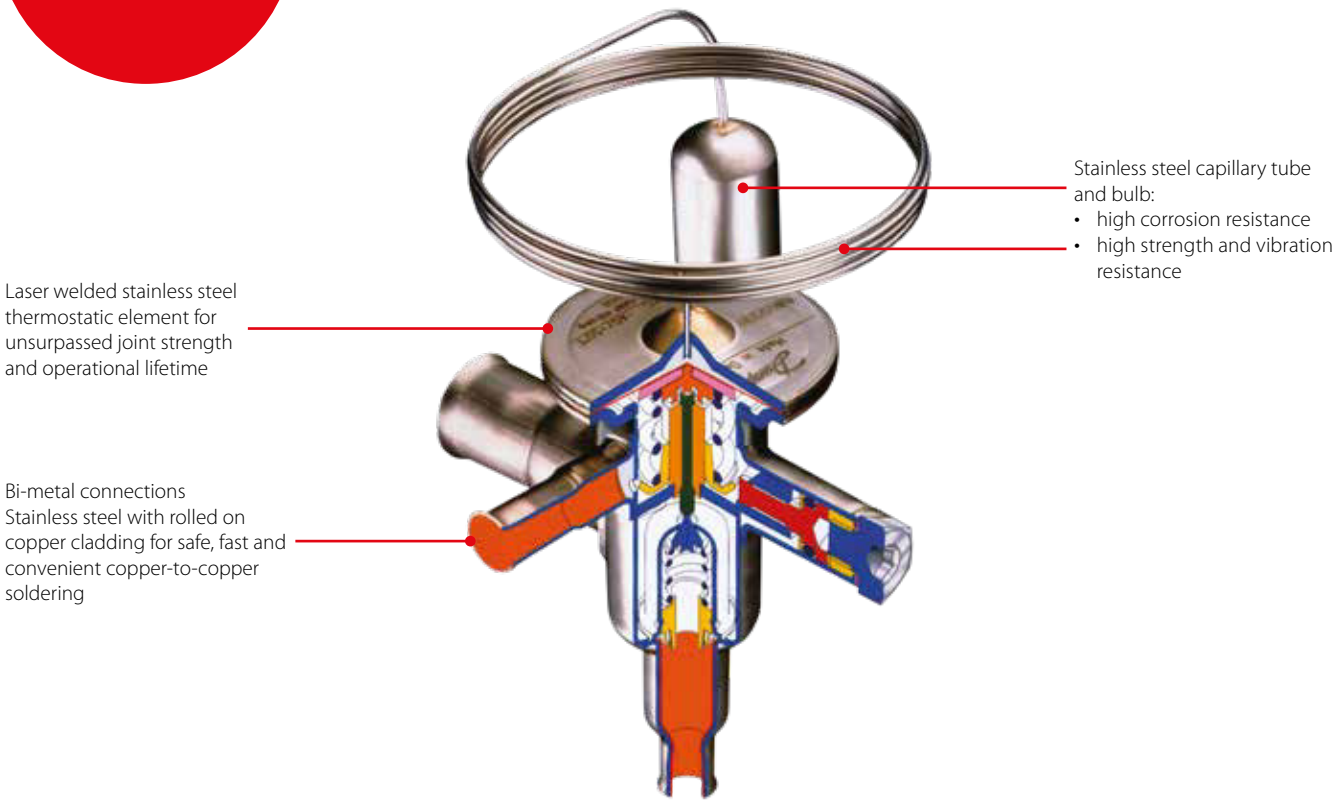

Facts

Application:
- Air driers and water chillers

- Bimetal connections for TUH and TCHE straightforward and fast soldering (no wet cloth or refrigeration pliers required)

- Refrigerants
  - R410A, R134a, R404A / R507, R407C, R22 and other refrigerants on request.
- Replacement capacities up to 12.9 kW (3.7 TR) for R410A
- Compact design
  - Small dimensions and low weight
- Hermetically tight design
  - Capillary tube joints of high strength and vibration resistance

- Laser-welded, stainless steel diaphragm element
  - Optimum function
  - Long diaphragm life
  - High pressure resistance
- Adjustable setting
  - accurate setting
  - fine tuning possible
- Low p-band
- Low hysteresis

Technical data and ordering

TUH / TCHE - Capacity regulator (hot gas bypass)

Technical data

Type	Refrigerant	Capillary tube length		Pressure equalization	Max. permissible working pressure		Max. P-band	
		[m]	[ft]		[bar]	[psig]	[bar]	[psig]
TUH	R134a	0.8	2.6	int.	34	500	0.5	7.3
	R22 / R407C	0.8	2.6	int.	34	500	0.5	7.3
	R404A	0.8	2.6	int.	34	500	0.5	7.3
	R410A	0.8	2.6	int.	45.5	660	0.5	7.3
TCHE	R134a	0.9	2.9	ext.	34	500	0.5	7.3
	R22 / R407C	0.9	2.9	ext.	34	500	0.5	7.3
	R404A	0.9	2.9	ext.	34	500	0.5	7.3
	R410A	0.9	2.9	ext.	45.5	660	0.5	7.3

TUH

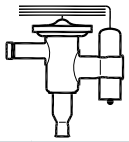

TCHE

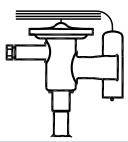

TUH / TCHE - Capacity regulator (hot gas bypass)

Ordering (Supplied with bulb strap)

Type	Refrigerant	Orifice no.	Rated replacement capacity [1]		Adjustment range for start opening		Connection Inlet × Outlet				
							Code no.		[mm] [3]	Code no.	
			[kW]	[TR]	[°C]	[°F]	[in] [2]	Industrial pack	Multi pack		Industrial pack	Multi pack
TUH	R134a	9	1.8	0.5	-1 – 10	30 – 50	3/8 × 1/2	068U2953	068U3748	10 × 12	068U2950	068U3746
	R134a	9	1.8	0.5	-1 – 10	30 – 50	–	–	–	6 × 10	068U2961	068U3751
	R134a	9	1.8	0.5	-6 – 5	-21 – 41	3/8 × 1/2	–	–	10 × 12	068U2966	–
	R404A / R507	9	4.5	1.3	-1 – 12	30 – 54	3/8 × 1/2	068U2954	–	10 × 12	068U2951	068U3747
	R22 / R407C	9	2.8	0.8	-4 – 8	25 – 46	3/8 × 1/2	068U2959	068U3749	10 × 12	–	–
	R410A	9	7.3	2.1	-1 – 10	30 – 50	3/8 × 1/2	068U2960	068U3750	10 × 12	068U2958	–
TCHE	R134a	3	2.6	0.8	-1 – 12	30 – 54	3/8 × 1/2	068U4540	–	10 × 12	068U4530	068U4578
	R134a	4	3.4	1	-1 – 12	30 – 54	3/8 × 1/2	068U4537	068U4583	10 × 12	068U4534	068U4580
	R134a	4	3.4	1	-5 – 5	30 – 54	3/8 × 1/2	–	–	10 × 12	068U4560	068U4589
	R404A / R507	3	5.9	1.7	0 – 6	32 – 43	3/8 × 1/2	–	–	10 × 12	068U4531	068U4579
	R404A / R507	4	7.6	2.2	0 – 6	32 – 43	3/8 × 1/2	–	–	10 × 12	068U4535	068U4581
	R22 / R407C	3	4.1	1.2	0 – 8	32 – 46	3/8 × 1/2	068U4546	068U4584	10 × 12	–	–
	R22 / R407C	4	5.3	1.5	-1 – 8	30 – 46	3/8 × 1/2	068U4547	–	10 × 12	–	–
	R410A	3	10.0	2.9	-1 – 9	30 – 48	3/8 × 1/2	068U4548	068U4585	10 × 12	068U4528	068U4576
	R410A	4	12.9	3.7	-1 – 9	30 – 48	3/8 × 1/2	068U4549	068U4586	10 × 12	068U4529	068U4577
	R410A	3	10.0	2.9	-5 – 5	23 – 41	3/8 × 1/2	068U4558	068U4587	10 × 12	–	–
	R410A	4	12.9	3.7	-5 – 5	23 – 41	3/8 × 1/2	068U4559	068U4588	10 × 12	–	–

[1] The rated replacement capacity is the regulator capacity at
evaporating temperature t_e = -2 °C / 28 °F
condensing temperature t_c = 40 °C / 104 °F
reduction of suction temperature / suction pressure Δt_s = 4 K / 7 °F

[2] Valves with inch connections have 1/4 in. pressure-equalization.

[3] Valves with mm connections have 6 mm pressure-equalization.

TGHE, Capacity regulator (hot gas bypass)

TGHE capacity regulators adapt compressor capacity to actual evaporator load in applications operating at an evaporating temperature of around 0 °C. TGHE valves are typically used in applications such as:

- Air driers
- Water chillers

Fitted in a bypass between the high and low-pressure sides of the air-drier system, TGHE maintain compressor suction pressure by injecting hot gas / cool gas from the high-pressure side.
TGHE has external pressure equalization and open directly when compressor suction pressure drops.

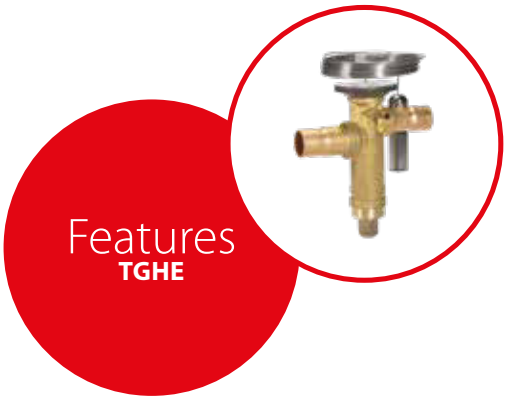



Facts

- Replacement capacities up to 28.9 kW (8.3 TR) for R410A
- Laser-welded, stainless steel diaphragm element
  - optimum function
  - long diaphragm life
  - high pressure resistance
- Adjustable setting
  - accurate setting
  - fine tuning possible
- Refrigerants
  R410A, R134a, and other refrigerants on request.
- Stable regulation
- Tight across the seat
- Hermetically tight design
- Low p-band
- Low hysteresis
- All valves react only on to suction pressure variations.
- Max. permissible working pressure
  PS = 46 bar / MWP = 667 psig

Technical data and ordering

TGHE - Capacity regulator (hot gas bypass)

Ordering (Supplied with bulb strap)

Type	Refrigerant	Orifice no.	Rated replacement capacity [1]		Pressure equalization [¼ in]	Connection Inlet × Outlet	Code no.
			[kW]	[TR]		[in]	Multi pack
TGHE 10	R134a	11	3.2	0.9	ext.	⅝ × ⅝	067N8312
TGHE 20	R134a	20	5.6	1.6	ext.	⅝ × ⅝	067N8301
TGHE 10	R410A	11	8.4	2.4	ext.	⅝ × ⅝	067N8315
TGHE 20	R410A	20	14.5	4.1	ext.	⅝ × ⅝	067N8305
TGHE 40	R410A	40	28.9	8.3	ext.	⅞ × ⅞	067N8311

[1] *The rated replacement capacity is the regulator capacity at evaporating temperature t_e = -2 °C / 28 °F, condensing temperature t_c = 40 °C / 104 °F, reduction of suction temperature / suction pressure Δt_s = 4 K / 7 °F.*

Adjustment range for start opening

Type	Refrigerant	Adjustment range for start opening		Capillary tube length [m / ft]
		[°C]	[°F]	
TGHE 10	R134a	-1 – 12	30 – 54	1.5 / 5.0
	R410A	-1 – 12	30 – 54	1.5 / 5.0
TGHE 20	R134a	-1 – 13	30 – 55	1.5 / 5.0
	R410A	-1 – 7	30 – 45	1.5 / 5.0
TGHE 40	R410A	-1 – 8	30 – 46	3.0 / 10

Application

Note:
The bulb serves only as a reservoir for the charge, however, it is recommended to mount it in a position where the temperature variation during running conditions is limited.

1. Evaporator
2. Condenser
3. Receiver
4. Solenoid valve
5. Discharge bypass valve with adjustable setting
6. Compressor

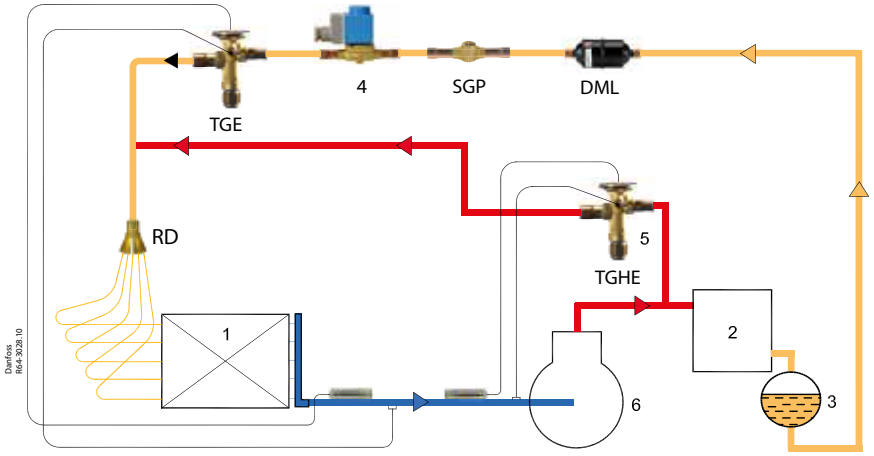

System with thermostatic expansion valve and external pressure-equalized hot gas bypass valve TGHE

KVS, Electric suction modulating control valve

KVS are electrically operated suction modulating control valves for transport and refrigeration applications. Accurate temperature or pressure control is obtained by modulating the refrigerant flow in the evaporator with a current or voltage driver.

With an EKC 368 controller (current driver) and an AKS sensor placed in the media to be controlled, an accuracy better than ± 0.5 K / ± 0.9 °F can be obtained. The balanced design provides bi-flow operation as well as solenoid shut-off function in both flow directions at MOPD 33 bar / 479 psi.



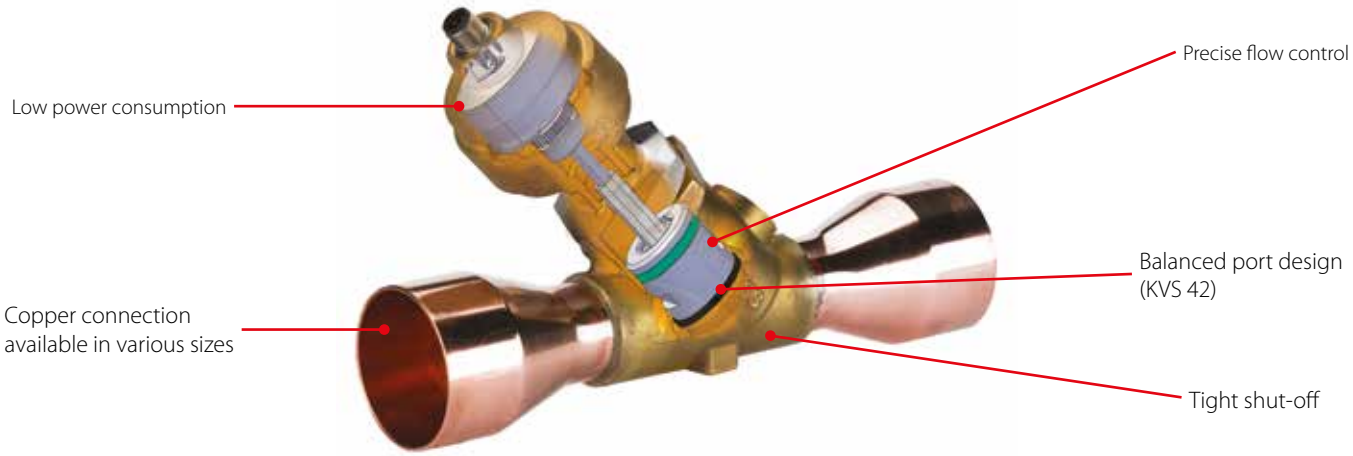

Facts

Application:
- Traditional refrigeration
- Air conditioning units
- Transport refrigeration
- Supermarkets
- Applicable to R410A, R407C, R404A, R134a, R507, R22
  For a fully updated list of approved refrigerants, visit www.products.danfoss.com and search for individual code numbers, where refrigerants are listed as part of product specification.

- Biflow
- High resolution for precise control
- Low power consumption
- Corrosion resistant design external as well as internal
- Solenoid tight shut-off

- Balanced port design (KVS 42)
- Cable and connector assemblies as accessories
- Controller: Electronic controller EKC 368, temperature sensors and pressure transmitters

Technical data and ordering

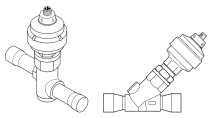

KVS - Electric suction modulating control valve

Technical data

Parameter	KVS 15	KVS 42
Refrigerant oil	All mineral and ester oils	All mineral and ester oils
CE marking	No	Yes
MOPD	33 bar / 479 psi	33 bar / 479 psi
Max. working pressure	45.5 bar / 660 psi	34 bar / 493 psi
Refrigerant temperature range	-40 – 65 °C / -40 – 149 °F	-40 – 65 °C / -40 – 149 °F
Ambient temperature	-40 – 60 °C / -40 – 140 °F	-40 – 60 °C / -40 – 140 °F
Total stroke	13 mm / 1/2 in	17.2 mm / 11/16 in
Motor enclosure	IP67	IP67
Material of Construction	Body and AST enclosure: Brass; Connector: Copper	Body and AST enclosure: Brass; Connector: Copper

KVS - Electric suction modulating control valve

Electrical data

Parameter	KVS 15 and KVS 42
Stepper motor type	Bi-polar - permanent magnet
Step mode	2 phase full step
Phase resistance	52 Ω ± 10%
Phase inductance	85 mH
Holding current	Depends on application. Full current allowed (100% duty cycle).
Step angle	7.5° (motor), 0.9° (lead screw), Gearing ration 8.5:1. (38 / 13)2:1
Nominal voltage	(Constant voltage drive) 12 V DC -4% – 15%
Phase current	(Using chopper drive) 100 mA RMS -4% – 15%
Max. total power	Voltage/current drive: 5.5 / 1.3 W (UL: NEC class 2)
Step rate	150 steps / second (constant voltage drive) 0 – 300 steps / second 300 recommended (chopper current drive)
Total steps	KVS 15: 2625 (160 – 0) steps KVS 42: 3810 (160 – 0) steps
Full travel time	KVS 15: 17 / 8.5 second (voltage / current) KVS 42: 25.4 / 12.7 second (voltage / current)
Lifting height	KVS 15: 13 mm / 1/2 in KVS 42: 17.2 mm / 5/16 in
Reference position	Overdriving against the full close position
Electrical connection	M12 connector

Related products
Electronic controller
Type EKC 368
Temperature sensors
Type AKS
Service driver
Type AST-G

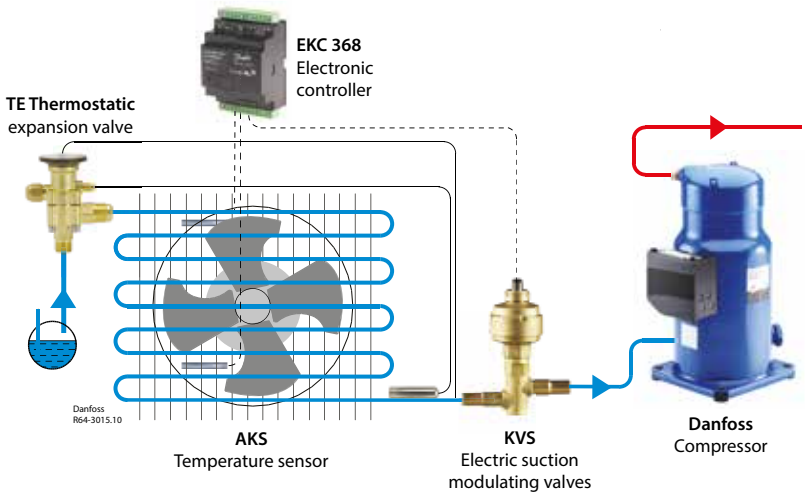

Technical data and ordering

KVS - Electric suction modulating control valve

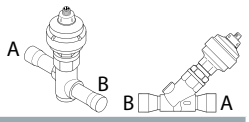

Ordering, valves in single pack

Type	Rated capacity [1]						KVS valve		
	R22		R134a		R404A/R507		Connection A × B		Code no. single pack
	[kW]	[TR]	[kW]	[TR]	[kW]	[TR]	[mm]	[in]	
KVS 15	5.15	1.31	3.78	0.94	4.58	1.07	16	5/8	034G4252
	5.15	1.31	3.78	0.94	4.58	1.07	22	7/8	034G4253
KVS 42	40.4	11.4	29.3	8.3	35.3	10.0	22	7/8	034G2858
	40.4	11.4	29.3	8.3	35.3	10.0	28	1 1/8	034G2850
	40.4	11.4	29.3	8.3	35.3	10.0	35	1 3/8	034G2851
	40.4	11.4	29.3	8.3	35.3	10.0	–	1 5/8	034G2852

[1]) *Rated capacity is the valve capacity at:*
- evaporating temperature t_e = -10 °C / 14 °F
- condensing temperature t_c = 25 °C / 77 °F
- pressure drop across valve Δp = 0.2 bar / 2.9 psi

M12 Female - Connector Cable

Ordering

Cable quality	Temperature range	Cable length (L)		Design	Code no. single pack
Jacket: PVC	-50 – 80 °C / -58 – 176 °F	2 m	6.6 ft	M12, 4 pins to actuator and flying wires for driver connection	034G2201
	-50 – 80 °C / -58 – 176 °F	8 m	26.2 ft		034G2200
Jacket: CPE	-40 – 80 °C / -40 – 176 °F	2 m	6.6 ft		034G2202

KVS - Electric suction modulating control valve

Accessory

Type	Description	Type designation	Code no. Multipack
Cable filter	Cable filter for KVS valve	AKA 211	084B2238

M12 angle cable

Specification

Jacket	PVC - black
Cable outer sheath	Oil - resistant
Water proof rating	IP 67
Operating temperature range	-40 – 80 °C
Wire type	Twisted pair, cross section 20 AWG / 0.5 mm²
Cable outer diameter	7.0 mm
Minimum bending radius	10 x cable diameter
Cable combustibility / test	Flame retardant / VW-1 / CSA FT - 1
M12 standard	EN 61076-2-101
Reference standard	UL style 2464 and DIN VDE 0812
LVD directive	2014/35/EU
Approval	CE, RoHS, UL, EAC, LLC CDC EURO TYSK



Ordering

Cable	Cable length (L)	Insulation	Packing format	Code no.
PVC - Black	2 m / 6.6 ft	SR-PVC	Single pack	034G7073
	8 m / 26.2 ft	SR-PVC	Single pack	034G7074

Caution: M12 angle cable is not approved for flammable applications.

Dimensions

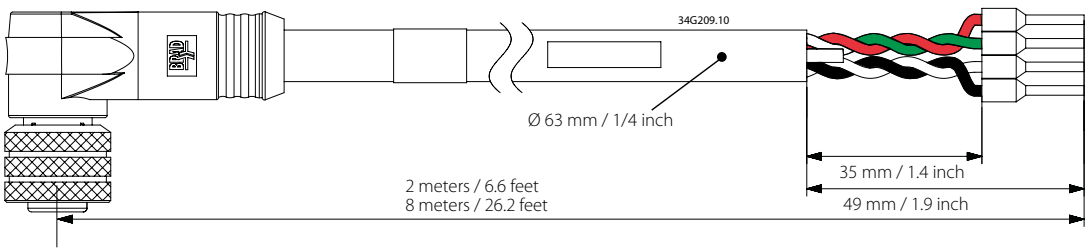

Quick Selection Notes:

ICM 20-150, Motor operated valve

ICM are direct operated motorized valves driven by actuator type ICAD (Industrial Control Actuator with Display).
The motor valve is based on four main components - valve body, top cover, function module and actuator - and is available both as complete valves and as parts programme.
ICM valves are designed to regulate an expansion process in liquid lines with or without phase change or control pressure or temperature in dry and wet suction lines and hot gas lines.
ICM valves are designed so that the opening and closing forces are balanced. Therefore only three sizes of ICAD actuators are needed for the complete range of ICM from DN 20 to DN 150.
The ICM motorized valve and ICAD actuator assembly offers a very compact unit with small dimensions.



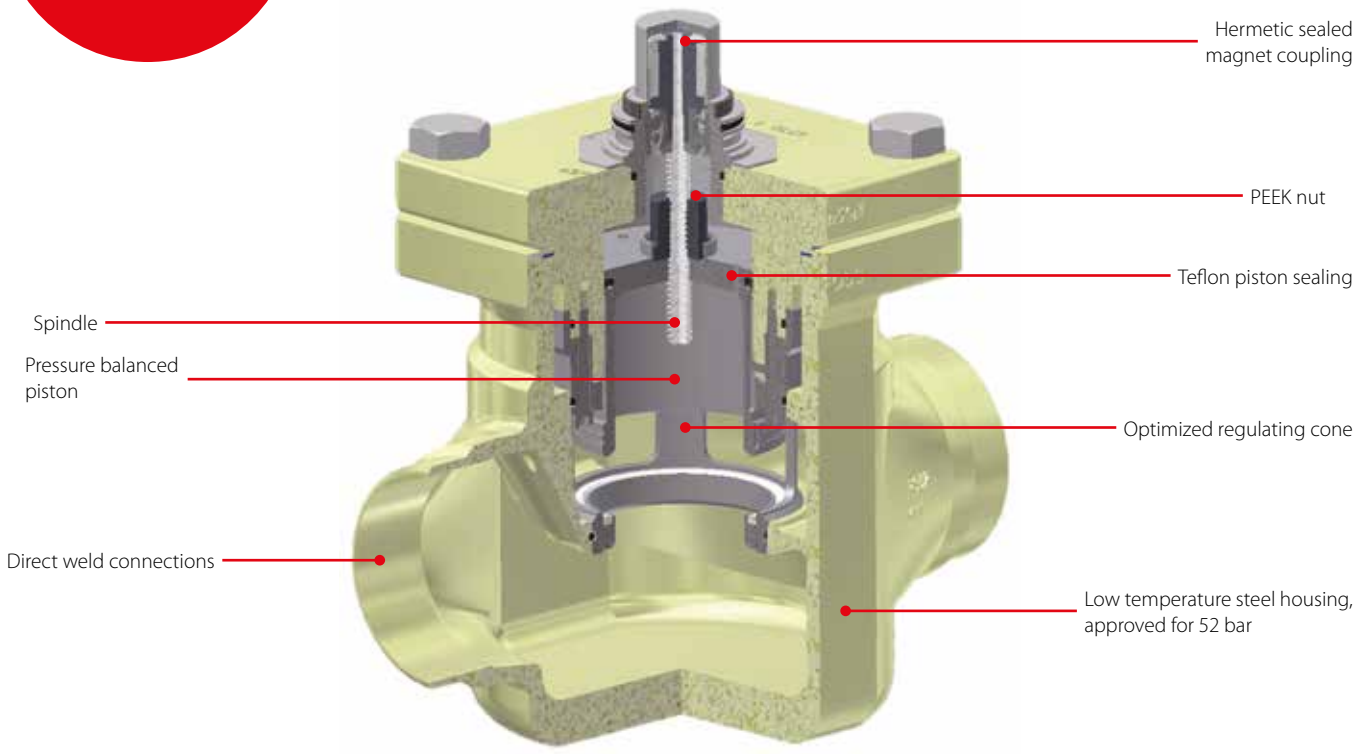

Facts

Application:
- Industrial refrigeration for a maximum working pressure of 52 bar / 754 psig

- Modular Concept
  - Each valve body is available with several different connection types and sizes
  - Valve overhaul is performed by replacing the function module
  - Possible to convert ICM motor operated valve to ICS pilot operated servo valve
- Low weight and compact design
- Low temperature steel body
- Direct coupled connections, connection types include butt weld, socket weld, solder and threaded connections
- V-port regulating cone ensures optimum regulating accuracy particularly at part load
- Manual opening possible via ICAD or service tool
- Cavitation resistant valve seat
- Magnet coupling - real hermetic sealing
- Applicable to R717, R744, R401A, R402A, R404A, R407A, R407B, R407C, R407F, R409A, R410A, R421A, R502, R507, R1234ze, R134a and R22
  For a fully updated list of approved refrigerants, visit www.products.danfoss.com and search for individual code numbers, where refrigerants are listed as part of product specifications.
- Temperature range:
  -60 – 120 °C / -76 – 248 °F
- Surface protection:
  The external surface is zinc-chromated to provide good corrosion protection
- Max. working pressure: 52 bar g / 754 psig
- Max. opening pressure differential (MOPD):
  - ICM 20 – 32: 52 bar / 750 psi
  - ICM 40: 40 bar / 580 psi
  - ICM 50: 30 bar / 435 psi
  - ICM 65: 20 bar / 290 psi
  - ICM 100: 20 bar / 290 psi
  - ICM 125: 20 bar / 290 psi
  - ICM 150: 20 bar / 290 psi

The ICM concept

The ICM concept is developed around a modular principle. This gives the possibility of combining function modules and top covers with special valve body size that is available in a variety of connection possibilities.

The valve body

There are nine valve bodies available.

ICV 20	ICV 25	ICV 32	ICV 40	ICV 50	ICV 65
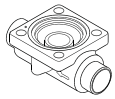			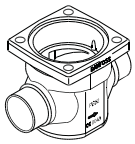	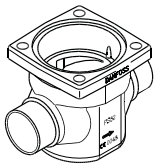	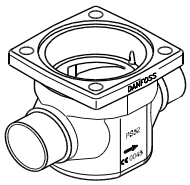

ICV 100	ICV 125	ICV 150
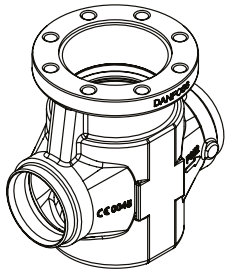	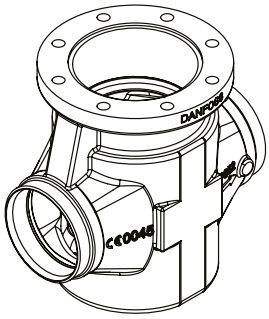	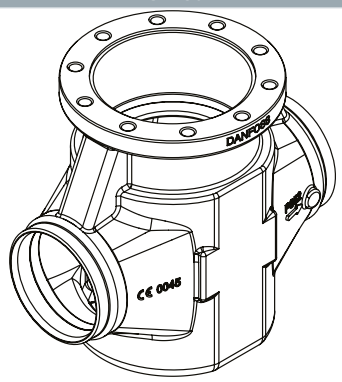

Valve bodies in the sizes ICV 20 – ICV 65 are available with a range of undersizes through oversized connection sizes and types.
ICV 100 – ICV 150 are available in butt-weld DIN and butt-weld ANSI nominal sizes.

D	A	J	SOC	SD	SA	FPT
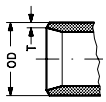	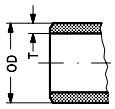	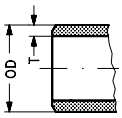	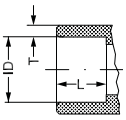	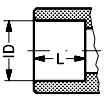	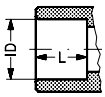	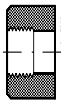
Butt-weld DIN	Butt-weld ANSI	Butt-weld JIS	Socket weld ANSI	Solder DIN	Solder ANSI	Female Pipe Thread

Type	Valve body size	K_V [m³/h]	C_V [US gal/min]
ICM 20A-33	20	0.2	0.23
ICM 20-A	20	0.6	0.7
ICM 20-B66	20	1.6	1.9
ICM 20-B	20	2.4	2.8
ICM 20-C	20	4.6	5.3
ICM 25-A	25	6	7
ICM 25-A33	25	2	2.3
ICM 25-B	25	12	13.9
ICM 32-A	32	9	10.4
ICM 32-B	32	17	20
ICM 40-A	40	15	17
ICM 40-B	40	26	30
ICM 50-A	50	23	27
ICM 50-B	50	40	46
ICM 65-A	65	35	41
ICM 65-B	65	70	81
ICM 100-B	100	142	167
ICM 125-B	125	223	260
ICM 150-B	150	370	430

Top / function module

The multiple top / function modules have different capacities.

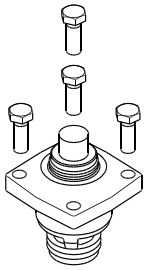

The actuator

A magnetic coupled actuator is easily installed. Two actuators cover the entire ICM program.

ICAD 600A	ICAD 1200A
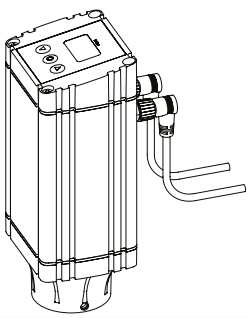	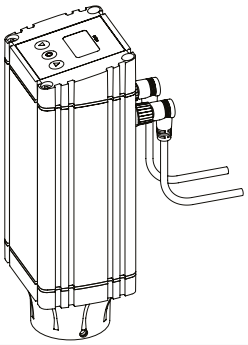

Technical data and ordering

ICM - Motor operated valve

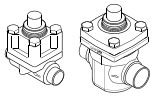

Ordering factory assembled valve (valve body and top / function module)

Type	Connection size		Connection type	Connection designation	Code no.
	[in]	[mm]			
ICM 20 – A	3/4	20	Butt weld, EN 10220	D	027H1030
	3/4	20	Butt weld, ANSI (B 36.10)	A	027H1035
	3/4	20	Socket weld, ANSI (B 16.11	SOC	027H1040
	7/8	22	Solder connection, ANSI (B 16.22)	SA	027H1050
	7/8	22	Solder connection, DIN (2856)	SD	027H1045
	1	25	Butt weld, EN 10220	D	027H1020
ICM 20 – B	3/4	20	Butt weld, EN 10220	D	027H1031
	3/4	20	Butt weld, ANSI (B 36.10)	A	027H1036
	3/4	20	Socket weld, ANSI (B 16.11	SOC	027H1041
	7/8	22	Solder connection, ANSI (B 16.22)	SA	027H1051
	7/8	22	Solder connection, DIN (2856)	SD	027H1046
	1	25	Butt weld, EN 10220	D	027H1021
ICM 20 – C	3/4	20	Butt weld, EN 10220	D	027H1032
	7/8	22	Solder connection, ANSI (B 16.22)	SA	027H1052
	7/8	22	Solder connection, DIN (2856)	SD	027H1047
	1	25	Butt weld, EN 10220	D	027H1022
	1	25	Butt weld, ANSI (B 36.10)	A	027H1025
ICM 25 – A	7/8	22	Solder connection, ANSI (B 16.22)	SA	027H2010
	7/8	22	Solder connection, DIN (2856)	SD	027H2006
	1	25	Butt weld, EN 10220	D	027H2000
	1	25	Butt weld, ANSI (B 36.10)	A	027H2002
	1	25	Socket weld, ANSI (B 16.11	SOC	027H2004
	1 1/8	28	Solder connection, ANSI (B 16.22)	SA	027H2012
	1 1/8	28	Solder connection, DIN (2856)	SD	027H2008
	1 1/8	35	Solder connection, DIN (2856)	SD	027H2014
	1 1/2	40	Butt weld, EN 10220	D	027H2016
ICM 25 – B	7/8	22	Solder connection, ANSI (B 16.22)	SA	027H2011
	7/8	22	Solder connection, DIN (2856)	SD	027H2007
	1	25	Butt weld, EN 10220	D	027H2001
	1	25	Butt weld, ANSI (B 36.10)	A	027H2003
	1	25	Socket weld, ANSI (B 16.11	SOC	027H2005
	1 1/8	28	Solder connection, ANSI (B 16.22)	SA	027H2013
	1 1/8	28	Solder connection, DIN (2856)	SD	027H2009
	1 1/8	35	Solder connection, DIN (2856)	SD	027H2015
ICM 32 – A	1 1/4	32	Butt weld, EN 10220	D	027H3000
	1 1/4	32	Butt weld, ANSI (B 36.10)	A	027H3002
	1 1/4	32	Socket weld, ANSI (B 16.11	SOC	027H3004
	1 1/8	35	Solder connection, DIN (2856)	SD	027H3006
	1 1/2	40	Butt weld, EN 10220	D	027H3012
	1 5/8	42	Solder connection, ANSI (B 16.22)	SA	027H3008
ICM 32 – B	1 1/4	32	Butt weld, EN 10220	D	027H3001
	1 1/4	32	Butt weld, ANSI (B 36.10)	A	027H3003
	1 1/4	32	Socket weld, ANSI (B 16.11	SOC	027H3005
	1 3/8	35	Solder connection, DIN (2856)	SD	027H3007
ICM 40 – A	1 1/2	40	Butt weld, EN 10220	D	027H4000
	1 5/8	40	Butt weld, ANSI (B 36.10)	A	027H4002
	1 5/8	40	Socket weld, ANSI (B 16.11	SOC	027H4004
	1 5/8	42	Solder connection, ANSI (B 16.22)	SA	027H4006
	1 5/8	42	Solder connection, DIN (2856)	SD	027H4008
	2	50	Butt weld, EN 10220	D	027H4010
ICM 40 – B	1 1/2	40	Butt weld, EN 10220	D	027H4001
	1 1/2	40	Butt weld, ANSI (B 36.10)	A	027H4003
	1 1/2	40	Socket weld, ANSI (B 16.11	SOC	027H4005
	1 5/8	42	Solder connection, ANSI (B 16.22)	SA	027H4007
	1 5/8	42	Solder connection, DIN (2856)	SD	027H4009
ICM 50 – A	2	50	Butt weld, EN 10220	D	027H5000
	2	50	Butt weld, ANSI (B 36.10)	A	027H5002
	2	50	Socket weld, ANSI (B 16.11	SOC	027H5004
	2 1/8	54	Solder connection, DIN (2856)	SD	027H5006
	2 1/2	65	Butt weld, EN 10220	D	027H5008
ICM 50 – B	2	50	Butt weld, EN 10220	D	027H5001
	2	50	Butt weld, ANSI (B 36.10)	A	027H5003
	2	50	Socket weld, ANSI (B 16.11	SOC	027H5005
	2 1/8	54	Solder connection, DIN (2856)	SD	027H5007
ICM 65 – A	2 1/2	65	Butt weld, EN 10220	D	027H6010
	2 1/2	65	Butt weld, ANSI (B 36.10)	A	027H6012
ICM 65 – B	2 1/2	65	Butt weld, EN 10220	D	027H6001
	2 1/2	65	Butt weld, ANSI (B 36.10)	A	027H6003
	2 1/2	65	Socket weld, ANSI (B 16.11	SOC	027H6005
	2 5/8	67	Solder connection, ANSI (B 16.22)	SA	027H6007
	3	76	Solder connection, DIN (2856)	SD	027H6009

Technical data and ordering

ICM - Motor operated valve

Ordering factory assembled valve (valve body and top / function module)

Type	Connection size		Connection type	Connection designation	Code no.
	[in]	[mm]			
ICM 100	4	100	Butt weld, EN 10220	D	027H7130
	4	100	Butt weld, ANSI (B 36.10)	A	027H7131
ICM 125	5	125	Butt weld, EN 10220	D	027H7150
	5	125	Butt weld, ANSI (B 36.10)	A	027H7151
ICM 150	6	150	Butt weld, EN 10220	D	027H7170
	6	150	Butt weld, ANSI (B 36.10)	A	027H7171

ICAD actuator

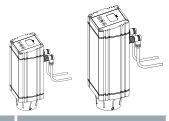

Ordering

Type	Cable	Supply voltage	Load	Analog Input	Digital Input	Output	Code no.
ICAD 600A	1.5 m (60 in)	24 V DC	1.2 A	0 / 4 – 20 mA 0 / 2 – 10 V	ON / OFF Volt free contact	0 / 4 – 20 mA	027H9075
	None	24 V DC	1.2 A	0 / 4 – 20 mA 0 / 2 – 10 V	ON / OFF Volt free contact	0 / 4 – 20 mA	027H9120
ICAD 1200A	1.5 m (60 in)	24 V DC	3.0 A	0 / 4 – 20 mA 0 / 2 – 10 V	ON / OFF Volt free contact	0 / 4 – 20 mA	027H9077
	None	24 V DC	3.0 A	0 / 4 – 20 mA 0 / 2 – 10 V	ON / OFF Volt free contact	0 / 4 – 20 mA	027H9122

ICAD - Service tool



Ordering

Type	Function	Code no.
ICM 20–32	Featuring a magnetic coupling for manual operation of the ICM and a threaded end for dismounting of the ICS function module and other useful functions.	027H0180
ICM 40–150		027H0181

ICV-PM valve housings

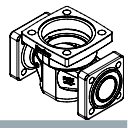

Ordering

Type		Code no.
ICV 25 (H)A4A Valve housing		027H2304 *)
ICV 32 A4A Valve housing		027H3130 *)
ICV 32 HA4A Valve housing		027H3131 *)
ICV 40 (H)A4A Valve housing		027H4129 *)
ICV 50 (H)A4A Valve housing		027H5128 **)
ICV 65 (H)A4A Valve housing		027H6129 **)

*) *Includes ICV PM valve housing, flange gaskets and flange bolts.*
**) *Includes ICV PM valve housing, flange gaskets, flange bolts and flange nuts.*

Technical data and ordering

Ordering from the parts programme (valve body + top / function module + actuator)

Example:



Valve body 32 D (1 ¼ in)
027H2129

+

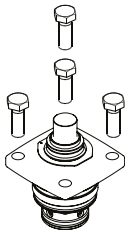

Top / function module
ICM 25-B
027H2181

+

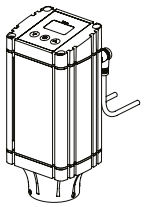

Actuator
027H9075
(For ICAD code numbers; please see the section "Ordering ICAD actuators)

=

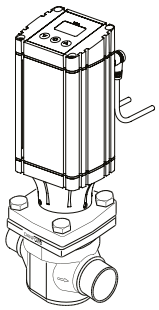

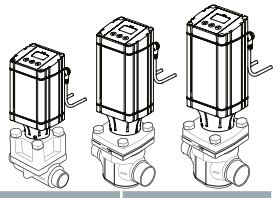

ICM 20 / ICV 20 Valve body

Type	Connection size		Connection type	Connection designation	Code no.
	[in]	[mm]			
ICV 20	5/8	16	Solder connection, ANSI (B 16.22)	SA	027H1129
	5/8	16	Solder connection, DIN (2856)	SD	027H1132
	3/4	20	Butt weld, EN 10220	D	027H1145
	3/4	20	Butt weld, ANSI (B 36.10)	A	027H1148
	3/4	20	Socket weld, ANSI (B 16.11)	SOC	027H1151
	3/4	20	Female pipe thread (ANSI/ASME B 1.20.1)	FTP	027H1157
	7/8	22	Solder connection, ANSI (B 16.22)	SA	027H1160
	7/8	22	Solder connection, DIN (2856)	SD	027H1154
	1	25	Butt weld, EN 10220	D	027H1163
	1	25	Butt weld, ANSI (B 36.10)	A	027H1166

ICM 20 top / function module [1])

Type	C_v value [gal/min]	K_v value [m^3/h]		Code no.
ICM 20 – A33	0.23	0.2		027H1186
ICM 20 – A	0.7	0.6		027H1180
ICM 20 – B66	1.9	1.6		027H1194
ICM 20 – B	2.8	2.4		027H1181
ICM 20 – C	5.3	4.6		027H1182

ICM 25 / ICV 25 Valve body

Type	Connection size		Connection type	Connection designation	Code no.
	[in]	[mm]			
ICV 25	3/4	20	Butt weld, EN 10220	D	027H2128
	3/4	20	Butt weld, ANSI (B 36.10)	A	027H2131
	3/4	20	Socket weld, ANSI (B 16.11	SOC	027H2132
	3/4	20	Female pipe thread (ANSI/ASME B 1.20.1)	FTP	027H2133
	7/8	22	Solder connection, ANSI (B 16.22)	SA	027H2125
	7/8	22	Solder connection, DIN (2856)	SD	027H2123
	1	25	Butt weld, EN 10220	D	027H2120
	1	25	Butt weld, ANSI (B 36.10)	A	027H2121
	1	25	Socket weld, ANSI (B 16.11	SOC	027H2122
	1	25	Female pipe thread (ANSI/ASME B 1.20.1)	FTP	027H2127
	1 1/8	28	Solder connection, ANSI (B 16.22)	SA	027H2126
	1 1/8	28	Solder connection, DIN (2856)	SD	027H2124
	1 1/4	32	Butt weld, EN 10220	D	027H2129
	1 1/4	32	Butt weld, ANSI (B 36.10)	A	027H2130
	1 3/8	35	Solder connection, DIN (2856)	SD	027H2134
	1 1/2	40	Butt weld, EN 10220	D	027H2135

ICM 25 top / function module [2])

Type	C_v value [gal/min]	K_v value [m^3/h]		Code no.
ICM 25 – A	7	6		027H2180
ICM 25-A33	2.3	2.3		027H2190
ICM 25 – B	13.9	12		027H2181

[1]) Including bolts and O-ring (for assembly with ICV valve body). Seat and O-ring (for seat to be mounted in ICV valve body).
[2]) Including gasket and O-rings.

Technical data and ordering

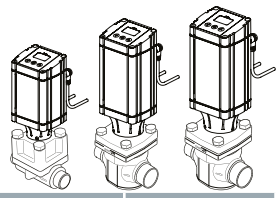

ICM 32 / ICV 32 Valve body

Type	Connection size		Connection type	Connection designation	Code no.
	[in]	[mm]			
ICV 32	1 1/4	32	Butt weld, EN 10220	D	027H3120
	1 1/4	32	Butt weld, ANSI (B 36.10)	A	027H3121
	1 1/4	32	Socket weld, ANSI (B 16.11	SOC	027H3122
	1 3/8	35	Solder connection, DIN (2856)	SD	027H3123
	1 1/2	40	Butt weld, EN 10220	D	027H3125
	1 1/2	40	Butt weld, ANSI (B 36.10)	A	027H3126
	1 5/8	42	Solder connection, ANSI (B 16.22)	SA	027H3127
	1 5/8	42	Solder connection, DIN (2856)	SD	027H3128

ICM 32 top / function module [2])

Type	C_v value [gal/min]	K_v value [m^3/h]		Code no.
ICM 32 – A	10.4	9		027H3180
ICM 32 – B	20	17		027H3181

ICM 40 / ICV 40 Valve body

Type	Connection size		Connection type	Connection designation	Code no.
	[in]	[mm]			
ICV 40	1 1/2	40	Butt weld, EN 10220	D	027H4120
	1 1/2	40	Butt weld, ANSI (B 36.10)	A	027H4121
	1 1/2	40	Socket weld, ANSI (B 16.11	SOC	027H4122
	1 5/8	42	Solder connection, ANSI (B 16.22)	SA	027H4124
	1 5/8	42	Solder connection, DIN (2856)	SD	027H4123
	2	50	Butt weld, EN 10220	D	027H4126
	2	50	Butt weld, ANSI (B 36.10)	A	027H4127

ICM 40 top / function module [2])

Type	C_v value [gal/min]	K_v value [m^3/h]		Code no.
ICM 40 – A	17	15		027H4180
ICM 40 – B	30	26		027H4181

ICM 50 / ICV 50 Valve body

Type	Connection size		Connection type	Connection designation	Code no.
	[in]	[mm]			
ICV 50	2	50	Butt weld, EN 10220	D	027H5120
	2	50	Butt weld, ANSI (B 36.10)	A	027H5121
	2	50	Socket weld, ANSI (B 16.11	SOC	027H5122
	2 1/8	54	Solder connection, DIN (2856)	SD	027H5123
	2 1/2	65	Butt weld, EN 10220	D	027H5124
	2 1/2	65	Butt weld, ANSI (B 36.10)	A	027H5125

ICM 50 top / function module [2])

Type	C_v value [gal/min]	K_v value [m^3/h]		Code no.
ICM 50 – A	27	23		027H5180
ICM 50 – B	46	40		027H5181

ICM 65 / ICV 65 Valve body

Type	Connection size		Connection type	Connection designation	Code no.
	[in]	[mm]			
ICV 65 – 80	2 1/2	65	Butt weld, EN 10220	D	027H6120
	2 1/2	65	Butt weld, ANSI (B 36.10)	A	027H6121
	2 1/2	65	Socket weld, ANSI (B 16.11	SOC	027H6123
	2 1/2	65	Butt weld, JIS (B S 602)	J	027H6122
	2 5/8	67	Solder connection, ANSI (B 16.22)	SA	027H6125
	3	76	Solder connection, DIN (2856)	SD	027H6124
	3	80	Butt weld, EN 10220	D	027H6126
	3	80	Butt weld, ANSI (B 36.10)	A	027H6127

ICM 65 top / function module [2])

Type	C_v value [gal/min]	K_v value [m^3/h]		Code no.
ICM 65 – A	41	35		027H6180
ICM 65 – B	80	70		027H6181

[1]) Including bolts and O-ring (for assembly with ICV valve body). Seat and O-ring (for seat to be mounted in ICV valve body).
[2]) Including gasket and O-rings.
Note: Converting old PM valve to new ICV solution (ICS, ICM or ICLX) can be done with the ICV PM flanged valve housing.
The ICV PM flanged valve housing is designed for a max. working pressure of 28 bar g / 406 psig and therefore a suitable replacement for PM valves in the service market.
For ordering; please see the spare part documentation on PM valves.

ICS 25-150, Pilot-operated servo valve

ICS are compact, servo operated multi-function control valves based on three main components – valve body, function module and top cover - and are available both as complete valves and as parts programme.
ICS valve functions are defined by the pilot valves connected.
ICS 1 pilot has one pilot pressure connection and ICS 3 pilot has three pilot pressure connections. With pilots, ICS can be used for regulating pressure, temperature and ON / OFF function in refrigeration systems.

ICS valves are designed for low and high-pressure.
ICS valves can be used on the high and low-pressure sides, in wet and dry suction lines and in liquid lines without phase change (i.e. where no expansion takes place in the valve). The associated Danfoss pilot valves can be either screwed directly into the ICS valve or connected via an external pilot line.

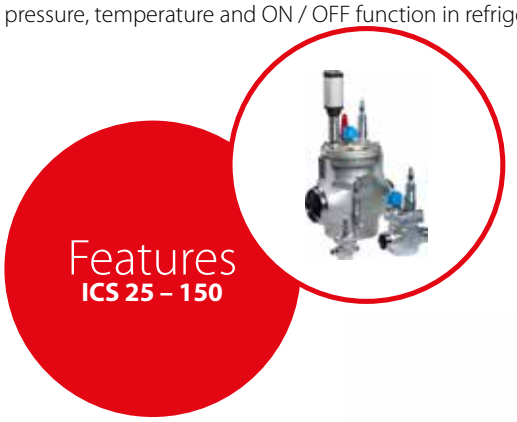

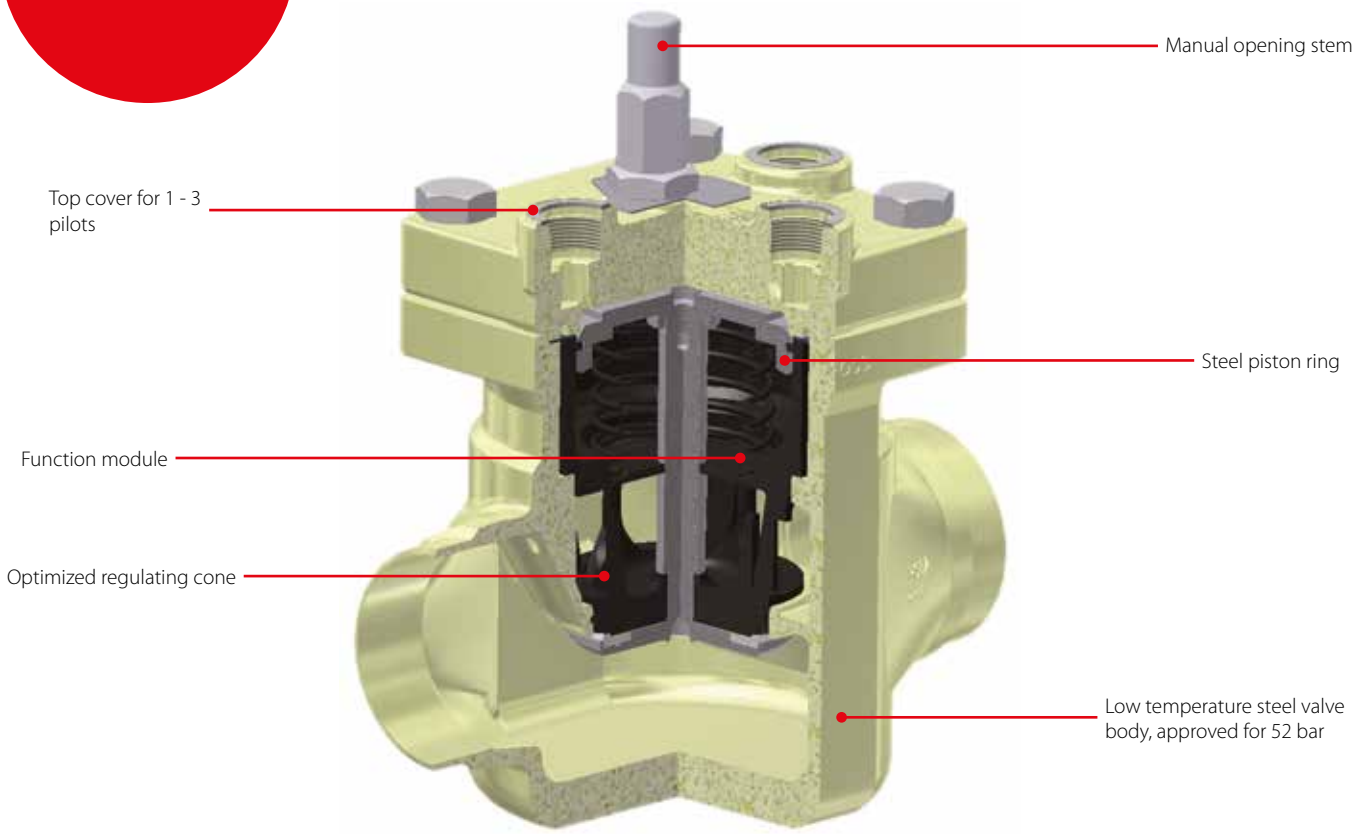

Facts

Application:
- Industrial refrigeration for a maximum working pressure of 52 bar / 754 psig

- Modular Concept:
  - Each valve body is available with several different connection types and sizes
  - Valve overhaul is performed by replacing the function module
  - Possible to convert ICS pilot-operated servo valve to ICM motor operated valve
- Low weight and compact design
- Low temperature steel body
- Direct coupled connections: connection types include butt weld, socket weld, solder and threaded connections
- V-port regulating cone ensures optimum regulating accuracy particularly at part load
- Manual operating spindle
- The ICS valve is a multifunction valve where 1 or up to 3 pilot valves can be mounted into the pilot ports
- Applicable to R717, R744, R401A, R402A, R404A, R407A, R407B, R407C, R407F, R409A, R410A, R421A, R502, R507, R1234ze, R134a and R22.
  For a fully updated list of approved refrigerants, visit www.products.danfoss.com and search for individual code numbers, where refrigerants are listed as part of product specifications.
- Temperature range:
  -60 – 120 °C / -76 – 248 °F
- Surface protection:
  The external surface is zinc-chromated to provide good corrosion protection
- Max. working pressure: 52 bar g / 754 psig

The ICS concept

The ICS concept is developed around a modular principle. This gives the possibility of combining function modules and top covers with valve bodies, which are available in many different sizes and with a variety of connection possibilities.

The valve body

There are eight valve bodies available.

ICV 25	ICV 32	ICV 40	ICV 50	ICV 65
	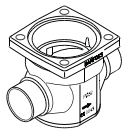	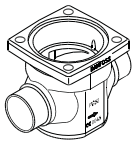	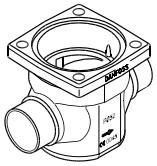	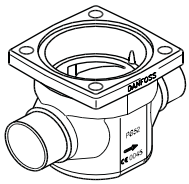

ICV 100	ICV 125	ICV 150
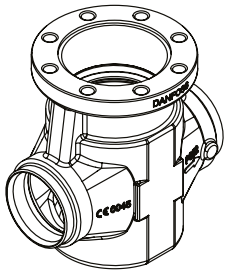	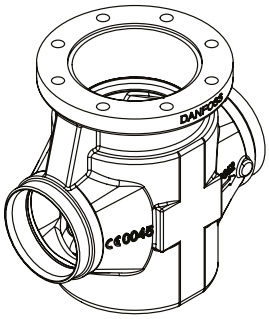	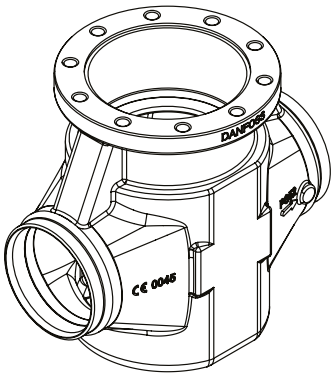

Valve bodies in the sizes ICV 25 – ICV 65 are available with a range of undersizes through oversized connection sizes and types.
ICV 100 – ICV 150 are available in butt-weld DIN and butt-weld ANSI nominal sizes.

D	A	J	SOC	SD	SA	FPT
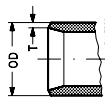	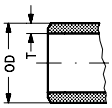	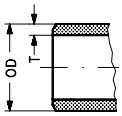	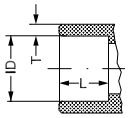	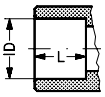	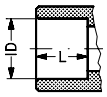	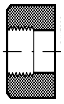
Butt-weld DIN	Butt-weld ANSI	Butt-weld JIS	Socket weld ANSI	Solder DIN	Solder ANSI	Female Pipe Thread

The top cover

Each valve body may be fitted with a 1 pilot or 3 pilot top cover (except ICS 100 – ICS 150 - only available as 3 pilots version).

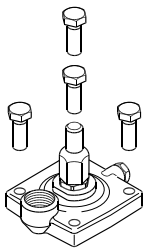

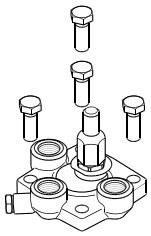

The function module

Multiple function modules are available to give different capacities.

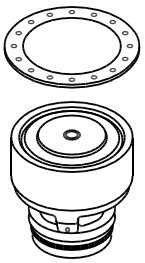

Type	Valve body size	K_v value [m^3/h]
ICS 25 – 5	25	1.7
ICS 25 – 10	25	3.5
ICS 25 – 15	25	6.0
ICS 25 – 20	25	8
ICS 25 – 25	25	11.5
ICS 32	32	17
ICS 40	40	27
ICS 50	50	44
ICS 65	65	70
ICS 80	80	85
ICS 100	100	142
ICS 125	125	207
ICS 150	150	354

Ordering

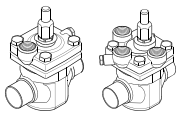

ICS - Pilot-operated servo valve

Ordering factory assembled valve (valve body and top / function module)

Type		Connection size [in]	Connection size [mm]	Connection type	Connection designation	Code no.
ICS 25 – 5	1 pilot	3/4	20	Butt weld, EN 10220	D	027H2028
		3/4	20	Butt weld, ANSI (B 36.10)	A	027H2029
		3/4	20	Socket weld, ANSI (B 16.11)	SOC	027H2140
		7/8	22	Solder connection, ANSI (B 16.22)	SA	027H2025
		7/8	22	Solder connection, DIN (2856)	SD	027H2023
		1	25	Butt weld, EN 10220	D	027H2020
		1	25	Butt weld, ANSI (B 36.10)	A	027H2021
		1 1/8	28	Solder connection, ANSI (B 16.22)	SA	027H2026
		1 1/8	28	Solder connection, DIN (2856)	SD	027H2024
	3 pilots [1]	3/4	20	Butt weld, EN 10220	D	027H2078
		3/4	20	Butt weld, ANSI (B 36.10)	A	027H2079
		3/4	20	Socket weld, ANSI (B 16.11)	SOC	027H2145
		7/8	22	Solder connection, ANSI (B 16.22)	SA	027H2075
		7/8	22	Solder connection, DIN (2856)	SD	027H2073
		1	25	Butt weld, EN 10220	D	027H2070
		1	25	Butt weld, ANSI (B 36.10)	A	027H2071
		1 1/8	28	Solder connection, ANSI (B 16.22)	SA	027H2076
		1 1/8	28	Solder connection, DIN (2856)	SD	027H2074
ICS 25 – 10	1 pilot	3/4	20	Butt weld, EN 10220	D	027H2038
		3/4	20	Butt weld, ANSI (B 36.10)	A	027H2039
		7/8	22	Solder connection, ANSI (B 16.22)	SA	027H2035
		7/8	22	Solder connection, DIN (2856)	SD	027H2033
		1	25	Butt weld, EN 10220	D	027H2030
		1	25	Butt weld, ANSI (B 36.10)	A	027H2031
		1 1/8	28	Solder connection, ANSI (B 16.22)	SA	027H2036
		1 1/8	28	Solder connection, DIN (2856)	SD	027H2034
	3 pilots [1]	3/4	20	Butt weld, EN 10220	D	027H2088
		3/4	20	Butt weld, ANSI (B 36.10)	A	027H2089
		3/4	20	Socket weld, ANSI (B 16.11)	SOC	027H2146
		7/8	22	Solder connection, ANSI (B 16.22)	SA	027H2085
		7/8	22	Solder connection, DIN (2856)	SD	027H2083
		1	25	Butt weld, EN 10220	D	027H2080
		1	25	Butt weld, ANSI (B 36.10)	A	027H2081
		1 1/8	28	Solder connection, ANSI (B 16.22)	SA	027H2086
		1 1/8	28	Solder connection, DIN (2856)	SD	027H2084
ICS 25 – 15	1 pilot	3/4	20	Butt weld, EN 10220	D	027H2048
		3/4	20	Butt weld, ANSI (B 36.10)	A	027H2049
		3/4	20	Socket weld, ANSI (B 16.11)	SOC	027H2142
		7/8	22	Solder connection, ANSI (B 16.22)	SA	027H2045
		7/8	22	Solder connection, DIN (2856)	SD	027H2043
		1	25	Butt weld, EN 10220	D	027H2040
		1	25	Butt weld, ANSI (B 36.10)	A	027H2041
		1 1/8	28	Solder connection, ANSI (B 16.22)	SA	027H2046
		1 1/8	28	Solder connection, DIN (2856)	SD	027H2044
	3 pilots [1]	3/4	20	Butt weld, EN 10220	D	027H2098
		3/4	20	Butt weld, ANSI (B 36.10)	A	027H2099
		7/8	22	Solder connection, ANSI (B 16.22)	SA	027H2095
		7/8	22	Solder connection, DIN (2856)	SD	027H2093
		1	25	Butt weld, EN 10220	D	027H2090
		1	25	Butt weld, ANSI (B 36.10)	A	027H2091
		1 1/8	28	Solder connection, ANSI (B 16.22)	SA	027H2096
		1 1/8	28	Solder connection, DIN (2856)	SD	027H2094
ICS 25 – 20	1 pilot	3/4	20	Butt weld, EN 10220	D	027H2058
		3/4	20	Butt weld, ANSI (B 36.10)	A	027H2059
		3/4	20	Socket weld, ANSI (B 16.11)	SOC	027H2143
		7/8	22	Solder connection, ANSI (B 16.22)	SA	027H2055
		7/8	22	Solder connection, DIN (2856)	SD	027H2053
		1	25	Butt weld, EN 10220	D	027H2050
		1	25	Butt weld, ANSI (B 36.10)	A	027H2051
		1 1/8	28	Solder connection, ANSI (B 16.22)	SA	027H2056
		1 1/8	28	Solder connection, DIN (2856)	SD	027H2054
	3 pilots [1]	3/4	20	Butt weld, EN 10220	D	027H2108
		3/4	20	Butt weld, ANSI (B 36.10)	A	027H2109
		3/4	20	Socket weld, ANSI (B 16.11)	SOC	027H2148
		7/8	22	Solder connection, ANSI (B 16.22)	SA	027H2105
		7/8	22	Solder connection, DIN (2856)	SD	027H2103
		1	25	Butt weld, EN 10220	D	027H2100
		1	25	Butt weld, ANSI (B 36.10)	A	027H2101
		1 1/8	28	Solder connection, ANSI (B 16.22)	SA	027H2106
		1 1/8	28	Solder connection, DIN (2856)	SD	027H2104

[1]) Including one blanking plug (A+B)
[2]) Including two blanking plugs (A) and one sealing plug (B)

Ordering

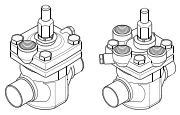

ICS - Pilot-operated servo valve

Ordering factory assembled valve (valve body and top / function module) (continued)

Type		Connection size [in]	Connection size [mm]	Connection type	Connection designation	Code no.
ICS 25 – 25	1 pilot	3/4	20	Butt weld, EN 10220	D	027H2068
		7/8	22	Solder connection, ANSI (B 16.22)	SA	027H2065
		7/8	22	Solder connection, DIN (2856)	SD	027H2063
		1	25	Butt weld, EN 10220	D	027H2060
		1	25	Butt weld, ANSI (B 36.10)	A	027H2061
		1	25	Socket weld, ANSI (B 16.11)	SOC	027H2062
		1 1/8	28	Solder connection, ANSI (B 16.22)	SA	027H2066
		1 1/8	28	Solder connection, DIN (2856)	SD	027H2064
	3 pilots [1]	3/4	20	Butt weld, EN 10220	D	027H2118
		7/8	22	Solder connection, ANSI (B 16.22)	SA	027H2115
		7/8	22	Solder connection, DIN (2856)	SD	027H2113
		1	25	Butt weld, EN 10220	D	027H2110
		1	25	Butt weld, ANSI (B 36.10)	A	027H2111
		1	25	Socket weld, ANSI (B 16.11)	SOC	027H2112
		1 1/8	28	Solder connection, ANSI (B 16.22)	SA	027H2116
		1 1/8	28	Solder connection, DIN (2856)	SD	027H2114
ICS 32	1 pilot	1 1/4	32	Butt weld, EN 10220	D	027H3020
		1 1/4	32	Butt weld, ANSI (B 36.10)	A	027H3021
		1 1/4	32	Socket weld, ANSI (B 16.11)	SOC	027H3022
		1 3/8	35	Solder connection, DIN (2856)	SD	027H3023
	3 pilots [1]	1 1/4	32	Butt weld, EN 10220	D	027H3030
		1 1/4	32	Butt weld, ANSI (B 36.10)	A	027H3031
		1 1/4	32	Socket weld, ANSI (B 16.11)	SOC	027H3032
		1 3/8	35	Solder connection, DIN (2856)	SD	027H3033
ICS 40	1 pilot	1 1/2	40	Butt weld, EN 10220	D	027H4020
		1 1/2	40	Butt weld, ANSI (B 36.10)	A	027H4021
		1 1/2	40	Socket weld, ANSI (B 16.11)	SOC	027H4022
		1 5/8	42	Solder connection, ANSI (B 16.22)	SA	027H4024
		1 5/8	42	Solder connection, DIN (2856)	SD	027H4023
	3 pilots [1]	1 1/2	40	Butt weld, EN 10220	D	027H4030
		1 1/2	40	Butt weld, ANSI (B 36.10)	A	027H4031
		1 1/2	40	Socket weld, ANSI (B 16.11)	SOC	027H4032
		1 5/8	42	Solder connection, ANSI (B 16.22)	SA	027H4034
		1 5/8	42	Solder connection, DIN (2856)	SD	027H4033
ICS 50	1 pilot	2	50	Butt weld, EN 10220	D	027H5020
		2	50	Butt weld, ANSI (B 36.10)	A	027H5021
		2	50	Socket weld, ANSI (B 16.11)	SOC	027H5022
		2 1/8	54	Solder connection, DIN (2856)	SD	027H5023
	3 pilots [1]	2	50	Butt weld, EN 10220	D	027H5030
		2	50	Butt weld, ANSI (B 36.10)	A	027H5031
		2	50	Socket weld, ANSI (B 16.11)	SOC	027H5032
		2 1/8	54	Solder connection, DIN (2856)	SD	027H5033
ICS 65	1 pilot	2 1/2	65	Butt weld, EN 10220	D	027H6020
		2 1/2	65	Butt weld, ANSI (B 36.10)	A	027H6021
		2 1/2	65	Socket weld, ANSI (B 16.11)	SOC	027H6023
		2 5/8	67	Solder connection, ANSI (B 16.22)	SA	027H6025
		3	76	Solder connection, DIN (2856)	SD	027H6024
	3 pilots [1]	2 1/2	65	Butt weld, EN 10220	D	027H6030
		2 1/2	65	Butt weld, ANSI (B 36.10)	A	027H6031
		2 1/2	65	Socket weld, ANSI (B 16.11)	SOC	027H6033
		2 5/8	67	Solder connection, ANSI (B 16.22)	SA	027H6035
		3	76	Solder connection, DIN (2856)	SD	027H6034
ICS 80	1 pilot	3	80	Butt weld, EN 10220	D	027H8020
		3	80	Butt weld, ANSI (B 36.10)	A	027H8021
	3 pilots [1]	3	80	Butt weld, EN 10220	D	027H8030
		3	80	Butt weld, ANSI (B 36.10)	A	027H8031
ICS 100	3 pilots [2]	4	100	Butt weld, EN 10220	D	027H7120
		4	100	Butt weld, ANSI (B 36.10)	A	027H7121
		4	100	Butt weld, ANSI (B 36.10)	A [2]	027H7122
ICS 125	3 pilots [2]	5	125	Butt weld, EN 10220	D	027H7140
		5	125	Butt weld, ANSI (B 36.10)	A	027H7141
		5	125	Butt weld, ANSI (B 36.10)	A [2]	027H7142
ICS 150	3 pilots [2]	6	150	Butt weld, EN 10220	D	027H7160
		6	150	Butt weld, ANSI (B 36.10)	A	027H7161
		6	150	Butt weld, ANSI (B 36.10)	A [2]	027H7162

[1] *Including one blanking plug (A+B).*
[2] *Including two blanking plugs (A) and one sealing plug (B).*

Ordering

ICV-PM valve housings

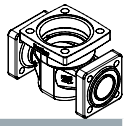

Ordering

Type		Code no.
ICV 25 PM Valve housing		027H2119 *)
ICV 32 PM Valve housing		027H3129 *)
ICV 40 PM Valve housing		027H4128 *)
ICV 50 PM Valve housing		027H5127 **)
ICV 65 PM Valve housing		027H6128 **)

**) Includes ICV PM valve housing, flange gaskets and flange bolts.*
***) Includes ICV PM valve housing, flange gaskets, flange bolts and flange nuts.*

Ordering

Ordering from the parts programme (valve body + function module + top cover)

Example:

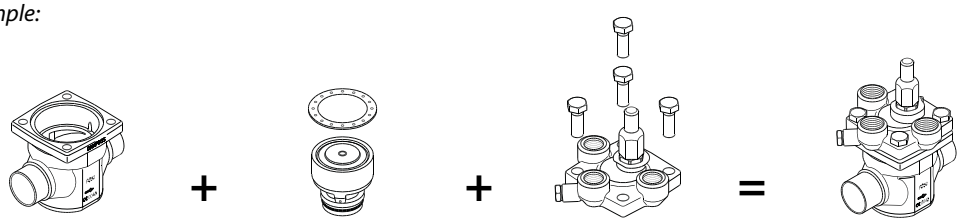

Valve body 25 D (1 in)
027H2120

Function module
ICS 25 – 15
027H2203

Top cover 3 pilots
027H2173

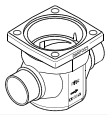

ICS 25 / ICV 25 Valve body

Type	Connection size		Connection type	Connection designation	Code no.
	[in]	[mm]			
ICV 25	3/4	20	Butt weld, EN 10220	D	027H2128
	3/4	20	Butt weld, ANSI (B 36.10)	A	027H2131
	3/4	20	Socket weld, ANSI (B 16.11)	SOC	027H2132
	3/4	20	Female pipe thread (ANSI/ASME B 1.20.1)	FTP	027H2133
	7/8	22	Solder connection, ANSI (B 16.22)	SA	027H2125
	7/8	22	Solder connection, DIN (2856)	SD	027H2123
	1	25	Butt weld, EN 10220	D	027H2120
	1	25	Butt weld, ANSI (B 36.10)	A	027H2121
	1	25	Socket weld, ANSI (B 16.11)	SOC	027H2122
	1	25	Female pipe thread (ANSI/ASME B 1.20.1)	FTP	027H2127
	1 1/8	28	Solder connection, ANSI (B 16.22)	SA	027H2126
	1 1/8	28	Solder connection, DIN (2856)	SD	027H2124
	1 1/4	32	Butt weld, EN 10220	D	027H2129
	1 1/4	32	Butt weld, ANSI (B 36.10)	A	027H2130
	1 3/8	35	Solder connection, DIN (2856)	SD	027H2134
	1 1/2	40	Butt weld, EN 10220	D	027H2135

ICS 25 function module

Type	C_v value [gal/min]	K_v value [m^3/h]		Code no.
ICS 25 – 5	13.30	11.500		027H2201 [1]
ICS 25 – 10	2.00	1.700		027H2202 [1]
ICS 25 – 15	4.10	3.500		027H2203 [1]
ICS 25 – 20	7.00	6.000		027H2204 [1]
ICS 25 – 25	13.90	12.000		027H2200 [1]

ICS 25 top cover

Type		Code no.
ICS 25	1 Pilot	027H2172 [2]
	3 Pilots	027H2173 [3]

ICS 32 / ICV 32 Valve body

Type	Connection size		Connection type	Connection designation	Code no.
	[in]	[mm]			
ICV 32	1 1/4	32	Butt weld, EN 10220	D	027H3120
	1 1/4	32	Butt weld, ANSI (B 36.10)	A	027H3121
	1 1/4	32	Socket weld, ANSI (B 16.11)	SOC	027H3122
	1 3/8	35	Solder connection, DIN (2856)	SD	027H3123
	1 1/2	40	Butt weld, EN 10220	D	027H3125
	1 1/2	40	Butt weld, ANSI (B 36.10)	A	027H3126
	1 5/8	42	Solder connection, ANSI (B 16.22)	SA	027H3127
	1 5/8	42	Solder connection, DIN (2856)	SD	027H3128

ICS 32 function module

Type		Code no.
ICS 32		027H3200 [1]

ICS 32 top cover

Type		Code no.
ICS 32	1 Pilot	027H3172 [2]
	3 Pilots	027H3173 [3]

[1] *Including gasket and O-rings*
[2] *Including bolts*
[3] *Including bolts and one blanking plug*

Ordering

Ordering from the parts programme (valve body + function module + top cover) (continued)



ICS 40 / ICV 40 Valve body

Type	Connection size		Connection type	Connection designation	Code no.
	[in]	[mm]			
ICV 40	1 1/2	40	Butt weld, EN 10220	D	027H4120
	1 1/2	40	Butt weld, ANSI (B 36.10)	A	027H4121
	1 1/2	40	Socket weld, ANSI (B 16.11)	SOC	027H4122
	1 5/8	42	Solder connection, ANSI (B 16.22)	SA	027H4124
	1 5/8	42	Solder connection, DIN (2856)	SD	027H4123
	2	50	Butt weld, EN 10220	D	027H4126
	2	50	Butt weld, ANSI (B 36.10)	A	027H4127

ICS 40 function module

Type		Code no.
ICS 40		027H4200 [1]

ICS 40 top cover

Type		Code no.
ICS 40	1 Pilot	027H4172 [2]
	3 Pilots	027H4173 [3]

ICS 50 / ICV 50 Valve body

Type	Connection size		Connection type	Connection designation	Code no.
	[in]	[mm]			
ICV 50	2	50	Butt weld, EN 10220	D	027H5120
	2	50	Butt weld, ANSI (B 36.10)	A	027H5121
	2	50	Socket weld, ANSI (B 16.11)	SOC	027H5122
	2 1/8	54	Solder connection, DIN (2856)	SD	027H5123
	2 1/2	65	Butt weld, EN 10220	D	027H5124
	2 1/2	65	Butt weld, ANSI (B 36.10)	A	027H5125

ICS 50 function module

Type		Code no.
ICS 50		027H5200 [1]

ICS 50 top cover

Type		Code no.
ICS 50	1 Pilot	027H5172 [2]
	3 Pilots	027H5173 [3]

ICS 65 – 80 / ICV 65-80 Valve body

Type	Connection size		Connection type	Connection designation	Code no.
	[in]	[mm]			
ICV 65 – 80	2 1/2	65	Butt weld, EN 10220	D	027H6120
	2 1/2	65	Butt weld, ANSI (B 36.10)	A	027H6121
	2 1/2	65	Socket weld, ANSI (B 16.11)	SOC	027H6123
	2 1/2	65	Butt weld, JIS (B S 602)	J	027H6122
	2 5/8	67	Solder connection, ANSI (B 16.22)	SA	027H6125
	3	76	Solder connection, DIN (2856)	SD	027H6124
	3	80	Butt weld, EN 10220	D	027H6126
	3	80	Butt weld, ANSI (B 36.10)	A	027H6127

ICS 65 – 80 function module

Type		Code no.
ICS 65		027H6200 [1]
ICS 80		027H8200 [1]

ICS 65 – 80 top cover

Type		Code no.
ICS 65 – 80	1 Pilot	027H6172 [2]
	3 Pilots	027H6173 [3]

[1]) Including gasket and O-rings.
[2]) Including bolts.
[3]) Including bolts and one blanking plug.
Note: Converting old PM valve to new ICV solution (ICS, ICM or ICLX) can be done with the ICV PM flanged valve housing.
The ICV PM flanged valve housing is designed for a max. working pressure of 28 bar g / 406 psig and therefore a suitable replacement for PM valves in the service market.
For ordering; please see the spare part documentation on PM valves

ICS application examples

Example no. 1-1

Constant pressure regulation

- CVP-L (-0.66 – 7 bar g) (19.5 in. Hg to 102 psig)
- CVP-M 4 – 28 bar g / 58 – 406 psig
- CVP-H 25 – 52 bar g / 363 – 754 psig

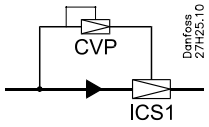

Products		Products	
1 × ICS 1 Pilot 1 × CVP-L/M/H	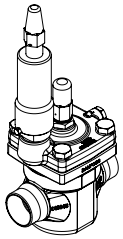	1 × ICS 3 Pilots 1 × CVP-L/M/H 2 × Blanking plugs SI: A + B SII: A	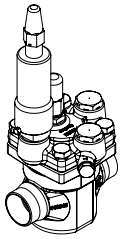

Example no. 1-2

Differential pressure regulation

- CVPP-L (0.66 – 7 bar g) (19.5 in. Hg to 102 psig)
- CVPP-M 4 – 28 bar g / 58 – 406 psig

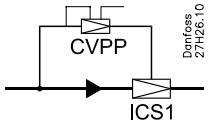

Products		Products	
1 × ICS 1 Pilot 1 × CVPP-L/M	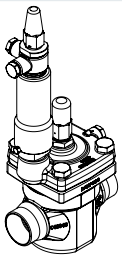	1 × ICS 3 Pilots 1 × CVPP-L/M 2 × Blanking plugs SI: A + B SII: A	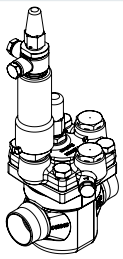

Example no. 1-3

On / off regulation (solenoid valve)

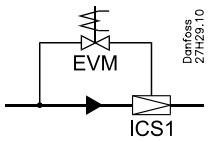

Products		Products	
1 × ICS 1 Pilot 1 × EVM 1 × coil	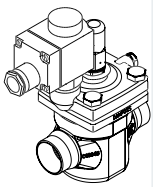	1 × ICS 3 Pilots 1 × EVM 1 × coil 2 × Blanking plugs SI: A + B SII: A	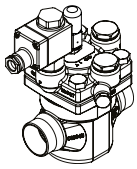

Example no. 1-4

Regulation with external control pressure

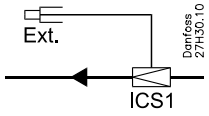

Products		Products	
1 × ICS 1 Pilot 1 × nipple for external control pressure	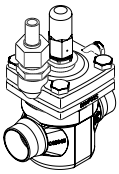	1 × ICS 3 Pilots 1 × nipple for external control pressure 2 × Blanking plugs SI: A + B SII: A	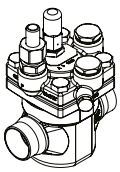

Example no. 1-5

On / off regulation (solenoid valve)

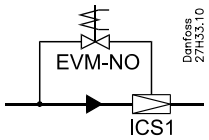

Products		Products	
1 × ICS 1 Pilot 1 × EVM-NO (12 W coil)	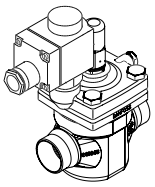	1 × ICS 3 Pilots 1 × EVM-NO (12 W coil) 2 × Blanking plugs SI: A + B SII: A	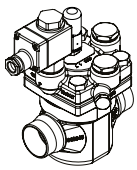

ICS application examples (continued)

Example no. 1-6

Crankcase pressure regulation. (Max. suction pressure regulation)

- -0.45 – 7 bar g (13.3 in. Hg to 102 psig)

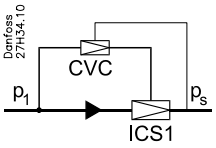

Products

1 × ICS 1 Pilot
1 × CVC-L

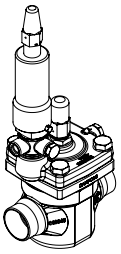

Products

1 × ICS 3 Pilots
1 × CVC-L
2 × Blanking plugs
SI: A + B
SII: A

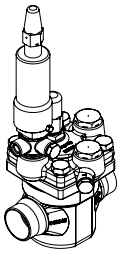

Example no. 1-7

Electronically controlled media temperature regulation

- -0.66 – 8 bar g (19.5 in. Hg to 116 psig)

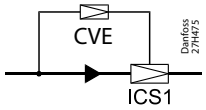

Products

1 × ICS 1 Pilot
1 × CVE

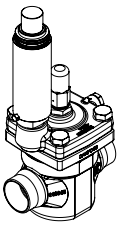

Products

1 × ICS 3 Pilots
1 × CVE
2 × Blanking plugs
SI: A + B
SII: A

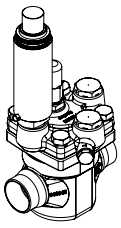

ICS application examples (continued)

Example no. 2-1

Constant pressure regulation combined with electrical shut off

- -0.66 – 7 bar g (19.5 in. Hg to 102 psig)

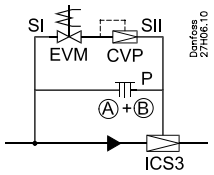

Products

1 × ICS 3 Pilots
1 × blanking plug (A + B)
1 × CVP-L
1 × EVM
1 × coil

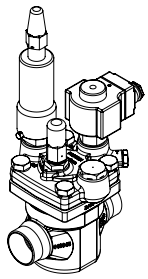

Example no. 2-2

Constant pressure regulation combined with electrical wide open

- -0.66 – 7 bar g (19.5 in. Hg to 102 psig)

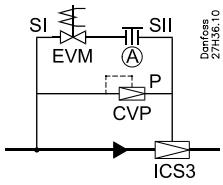

Products

1 × ICS 3 Pilots
1 × blanking plug (A)
1 × CVP-L
1 × EVM

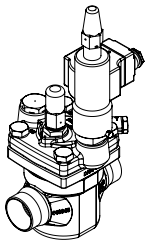

Example no. 2-3

Constant pressure regulation combined with electrical shut off and wide open

- -0.66 – 7 bar g (19.5 in. Hg to 102 psig)

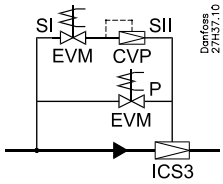

Products

1 × ICS 3 Pilots
1 × CVP-L
2 × EVM
2 × coils

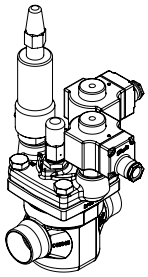

Example no. 2-4

Constant pressure regulation with change-over between two preset evaporating pressures

- -0.66 – 7 bar g (19.5 in. Hg to 102 psig)

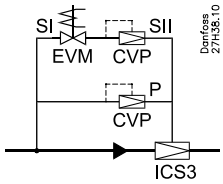

Products

1 × ICS 3 Pilots
2 × CVP-L
1 × EVM
1 × coil

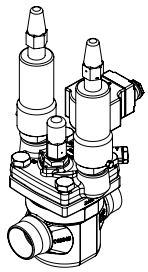

Example no. 2-5

External control pressure with electrical shut off combined with constant pressure regulation

- -0.66 – 7 bar g (19.5 in. Hg to 102 psig)

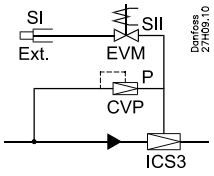

Products

1 × ICS 3 Pilots
1 × nipple for external control pressure
1 × CVP-L
1 × EVM
1 × coil

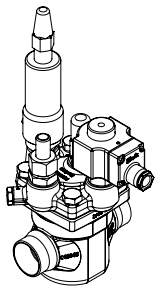

ICS application examples (continued)

Example no. 2-6

Constant pressure regulation with external control pressure combined with electrical wide open

- -0.66 – 7 bar g (19.5 in. Hg to 102 psig)

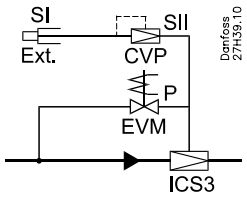

Products

1 × ICS 3 Pilots
1 × nipple for external control pressure
1 × CVP-L
1 × EVM
1 × coil

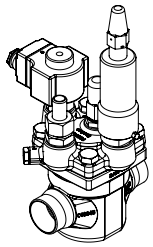

Example no. 2-7

Constant pressure regulation with electrical shut off combined with external control pressure

- -0.66 – 7 bar g (19.5 in. Hg to 102 psig)

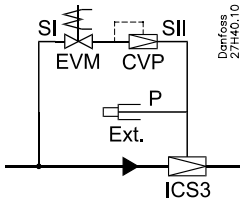

Products

1 × ICS 3 Pilots
1 × nipple for external control pressure
1 × CVP-L
1 × EVM
1 × coil

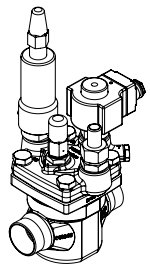

Example no. 2-8

Solenoid valve with external control pressure for small pressure drops

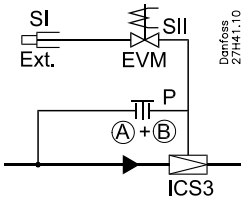

Products

1 × ICS 3
1 × blanking plug (A + B)
1 × nipple for external control pressure
1 × EVM
1 × coil

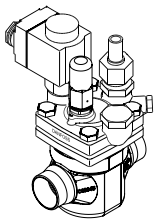

Example no. 2-9

Differential pressure regulation combined with electrical shut off

- CVPP-L (0.66 – 7 bar g) (19.5 in. Hg to 102 psig)

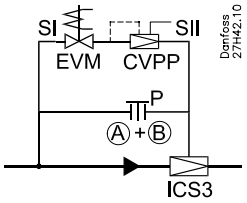

Products

1 × ICS 3
1 × blanking plug (A + B)
1 × CVPP-L
1 × EVM
1 × coil

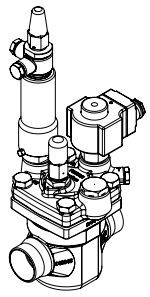

ICS application examples (continued)

Example no. 2-10

Differential pressure regulation combined with electrical wide open

- CVPP-L (0.66 – 7 bar g) (19.5 in. Hg to 102 psig)

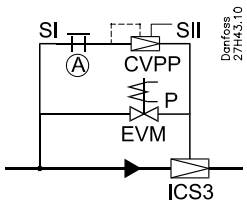

Products

1 × ICS 3 Pilots
1 × blanking plug (A)
1 × CVPP-L
1 × EVM
1 × coil

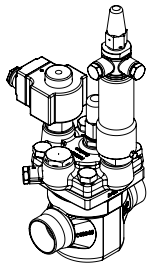

Example no. 2-11

Differential pressure regulation combined with electrical wide open and shut off

- CVPP-L (0.66 – 7 bar g) (19.5 in. Hg to 102 psig)

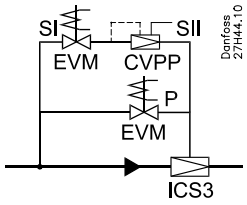

Products

1 × ICS 3 Pilots
1 × CVPP-L
2 × EVM
2 × coils

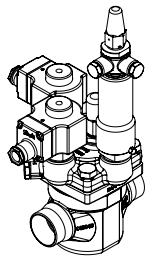

Example no. 2-12

Constant pressure regulation combined with electrical shut off

- CVP-L (-0.66 – 7 bar g) (19.5 in. Hg to 102 psig)
- CVP-M 4 – 28 bar g / 58 – 406 psig
- CVP-H 25 – 52 bar g / 363 – 754 psig

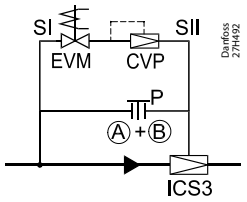

Products

1 × ICS 3 Pilots
1 × blanking plug (A + B)
1 × CVP-L/M/H
1 × EVM
1 × coil

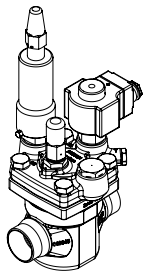

Example no. 2-13

Constant pressure regulation combined with electrical wide open

- CVP-L (-0.66 – 7 bar g) (19.5 in. Hg to 102 psig)
- CVP-M 4 – 28 bar g / 58 – 406 psig
- CVP-H 25 – 52 bar g / 363 – 754 psig

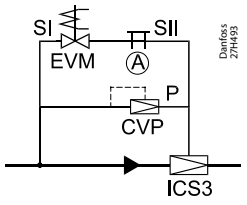

Products

1 × ICS 3 Pilots
1 × blanking plug (A)
1 × CVP-L/M/H
1 × EVM
1 × coil

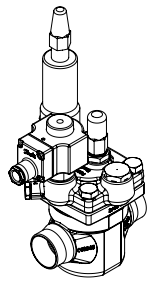

Example no. 2-14

Constant pressure regulation combined with electrical shut off and wide open

- CVP-L (-0.66 – 7 bar g) (19.5 in. Hg to 102 psig)
- CVP-M 4 – 28 bar g / 58 – 406 psig
- CVP-H 25 – 52 bar g / 363 – 754 psig

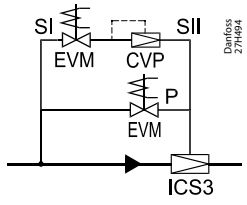

Products

1 × ICS 3 Pilots
1 × CVP-L/M/H
2 × EVM
2 × coils

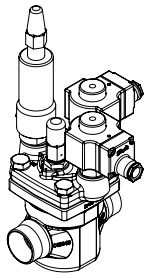

ICS application examples (continued)

Example no. 2-15

Constant pressure regulation with change-over between two preset evaporating pressures

- CVP-L (-0.66 – 7 bar g) (19.5 in. Hg to 102 psig)
- CVP-M 4 – 28 bar g / 58 to 406 psig
- CVP-H 25 – 52 bar g / 363 – 754 psig

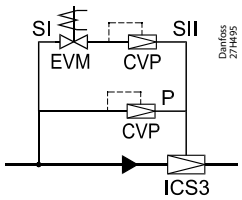

Products

1 × ICS 3 Pilots
2 × CVP-L/M/H
1 × EVM
1 × coil

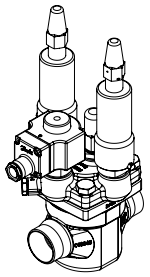

Example no. 2-16

Differential pressure regulation combined with electrical shut off

CVPP-L (-0.66 – 7 bar g) (19.5 in. Hg to 102 psig)

- CVPP-M 4 – 28 bar g / 58 – 406 psig

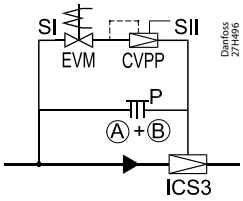

Products

1 × ICS 3 Pilots
1 × blanking plug (A + B)
1 × CVPP-L/M
1 × EVM
1 × coil

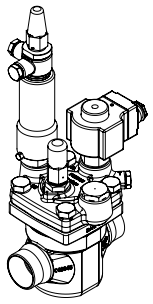

Example no. 2-17

Differential pressure regulation combined with electrical wide open

- CVPP-L (-0.66 – 7 bar g) (19.5 in. Hg to 102 psig)
- CVPP-M 4 – 28 bar g / 58 – 406 psig

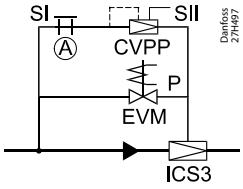

Products

1 × ICS 3 Pilots
1 × blanking plug (A)
1 × CVPP-L/M
1 × EVM
1 × coil

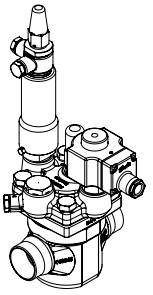

Example no. 2-18

Differential pressure regulation combined with electrical wide open and shut off

- CVPP-L (-0.66 – 7 bar g) (19.5 in. Hg to 102 psig)
- CVPP-M 4 – 28 bar g / 58 – 406 psig

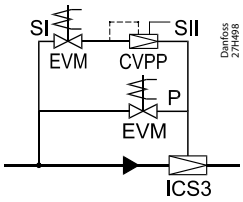

Products

1 × ICS 3 Pilots
1 × CVPP-L/M
2 × EVM
2 × coils

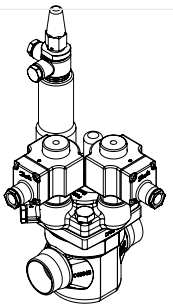

Example no. 2-19

Constant pressure regulation combined with electrical wide open and shut off

- CVP-L (-0.66 – 7 bar g) (19.5 in. Hg to 102 psig)
- CVP-M 4 – 28 bar g / 58 – 406 psig
- CVP-H 25 – 52 bar g / 363 – 754 psig

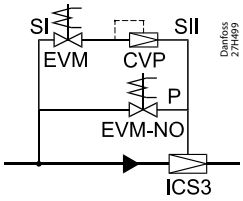

Products

1 × ICS 3 Pilots
1 × CVP-L/M/H
1 × EVM
1 × EVM-NO (12 W coil)
2 × coils

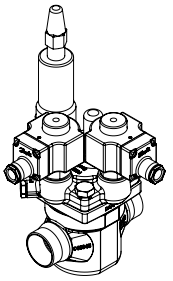

ICS application examples (continued)

Example no. 2-20

Crankcase pressure regulation (max. suction pressure regulation) combined with shut off

- -0.45 – 7 bar g (13.3 in. Hg to 102 psig)

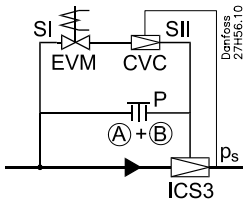

Products

1 × ICS 3 Pilots
1 × blanking plug (A + B)
1 × CVC-L
1 × EVM
1 × coil

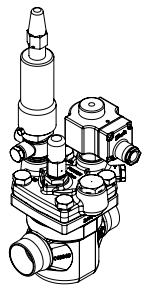

Example no. 2-21

Crankcase pressure regulation (max. suction pressure regulation) combined with evaporating pressure regulation

- -0.66 – 28 bar g (19.5 in. Hg to 406 psig).

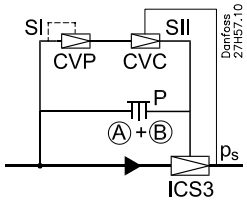

Products

1 × ICS 3 Pilots
1 × blanking plug (A + B)
1 × CVC-L/M
1 × CVP-L/M

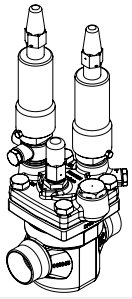

Example no. 2-22

Crankcase pressure regulation (max. suction pressure regulation) at low pressure drops across the valve

- -0.45 – 7 bar g (13.3 in. Hg to 102 psig)

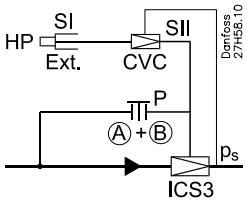

Products

1 × ICS 3 Pilots
1 × blanking plug (A + B)
1 × nipple for external control pressure
1 × CVC-L

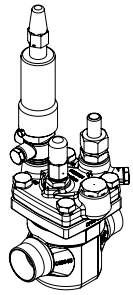

Example no. 2-23

Crankcase pressure regulation (max. suction pressure regulation) combined with constant pressure regulation and electrical shut off.

- -0.66 – 7 bar g (19.5 in. Hg to 102 psig).

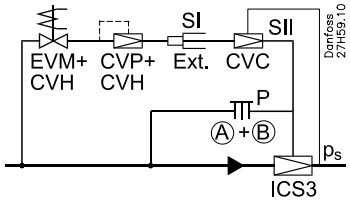

Products

1 × ICS 3 Pilots
1 × blanking plug (A + B)
1 × nipple for external control pressure
1 × CVP-L
1 × EVM
1 × coil
2 × CVH
1 × CVC-L

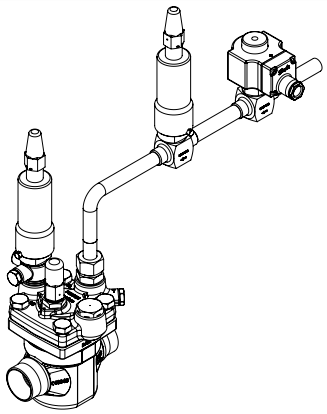

Example no. 2-24

Hot gas bypass regulation combined with electrical shut off

- -0.45 – 7 bar g (13.3 in. Hg to 102 psig)

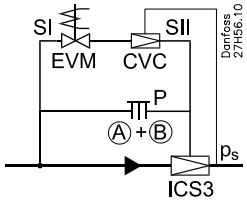

Products

1 × ICS 3 Pilots
1 × blanking plug (A + B)
1 × CVC-L
1 × EVM
1 × coil

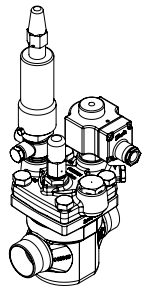

ICS application examples (continued)

Example no. 2-25

Constant pressure regulation with electrical shut off and protection against high pressure when suction line is closed

- -0.66 – 28 bar g (19.5 in. Hg to 406 psig).

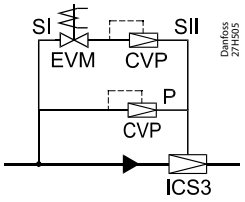

Products

1 × ICS 3 Pilots
1 × CVP-L
1 × EVM
1 × coil
1 × CVP-M

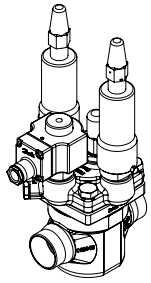

Example no. 2-26

Electronically controlled media temperature regulation combined with electrical shut off

- -1 – 8 bar g (0 in. Hg to 116 psig).

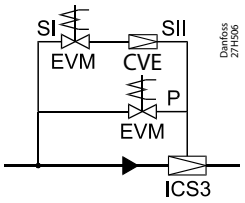

Products

1 × ICS 3 Pilots
1 × blanking plug (A + B)
1 × CVE
1 × EVM
1 × coil

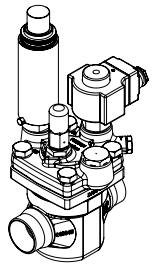

Example no. 2-27

Electronically controlled media temperature regulation combined with electrical shut off and wide open

- -1 – 8 bar g (0 in. Hg to 116 psig).

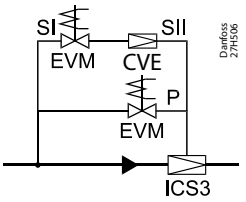

Products

1 × ICS 3 Pilots
1 × CVE
2 × EVM
2 × coils

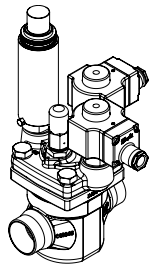

Example no. 2-28

Electronically controlled media temperature regulation combined with electrical shut off and changeover to constant pressure regulation

- -1 – 8 bar g (0 in. Hg to 116 psig).

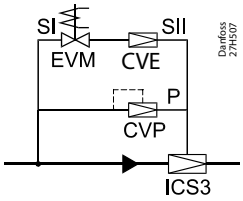

Products

1 × ICS 3 Pilots
1 × CVQ
1 × CVP-L
1 × EVM
1 × coil

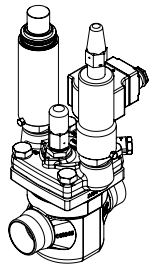

Example no. 2-29

Electronically controlled media temperature regulation with low evaporating pressure protection combined with wide open

- -1 – 8 bar g (0 in. Hg to 116 psig).

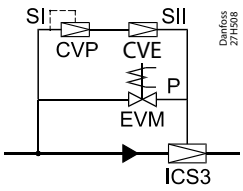

Products

1 × ICS 3 Pilots
1 × CVE
1 × CVP-L
1 × EVM
1 × coil

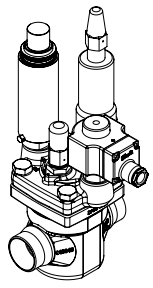

ICS application examples (continued)

Example no. 2-30

Electronically controlled media temperature regulation with low evaporating pressure protection combined with changeover to constant pressure regulation

•-1 – 8 bar g
(0 in. Hg to 116 psig).

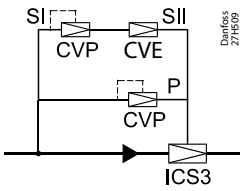

Products

1 × ICS 3 Pilots
1 × CVE
2 × CVP-L

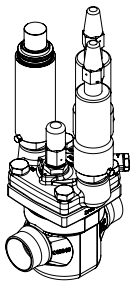

The ICS valve will be fully open if the pilot valve in P is fully open, irrespective of the degree of opening of pilot valves SI and SII.
The ICS valve will be fully closed if the pilot valve in P is fully closed and at least one of the valves in SI or SII is fully closed at the same time.
The relation between the pilot valves in ports SI, SII and P is shown in the table below.

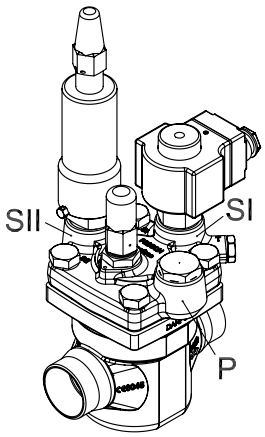

Pilot valve port			ICS valve
SI	SII	P	
Open	Open	Closed	Open
Open	Open	Open	Open
Open	Closed	Closed	Closed
Open	Closed	Open	Open
Closed	Open	Closed	Closed
Closed	Open	Open	Open
Closed	Closed	Closed	Closed
Closed	Closed	Open	Open

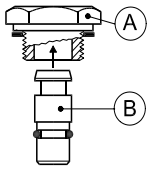

Blanking plug A + B

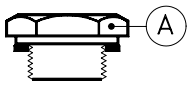

Blanking plug A

CVH / CVP / CVQ / EVM, Pilot valves

Applicable to all common non flammable refrigerants including R717 and non corrosive gases / liquids dependent on sealing material compatability.
The pilot valves can be screwed direct into the main valve, thus avoiding the necessity of welding, soldering and separate pilot lines.

The pilot valves can be mounted direct in a ICS or PM main valve or be connected via an external pilot line and a CVH housing.
Several pilot valves can be connected in series or in parallel to provide many functions in the same ICS or PM main valve.

Features
CVH / CVP / CVQ / EVM

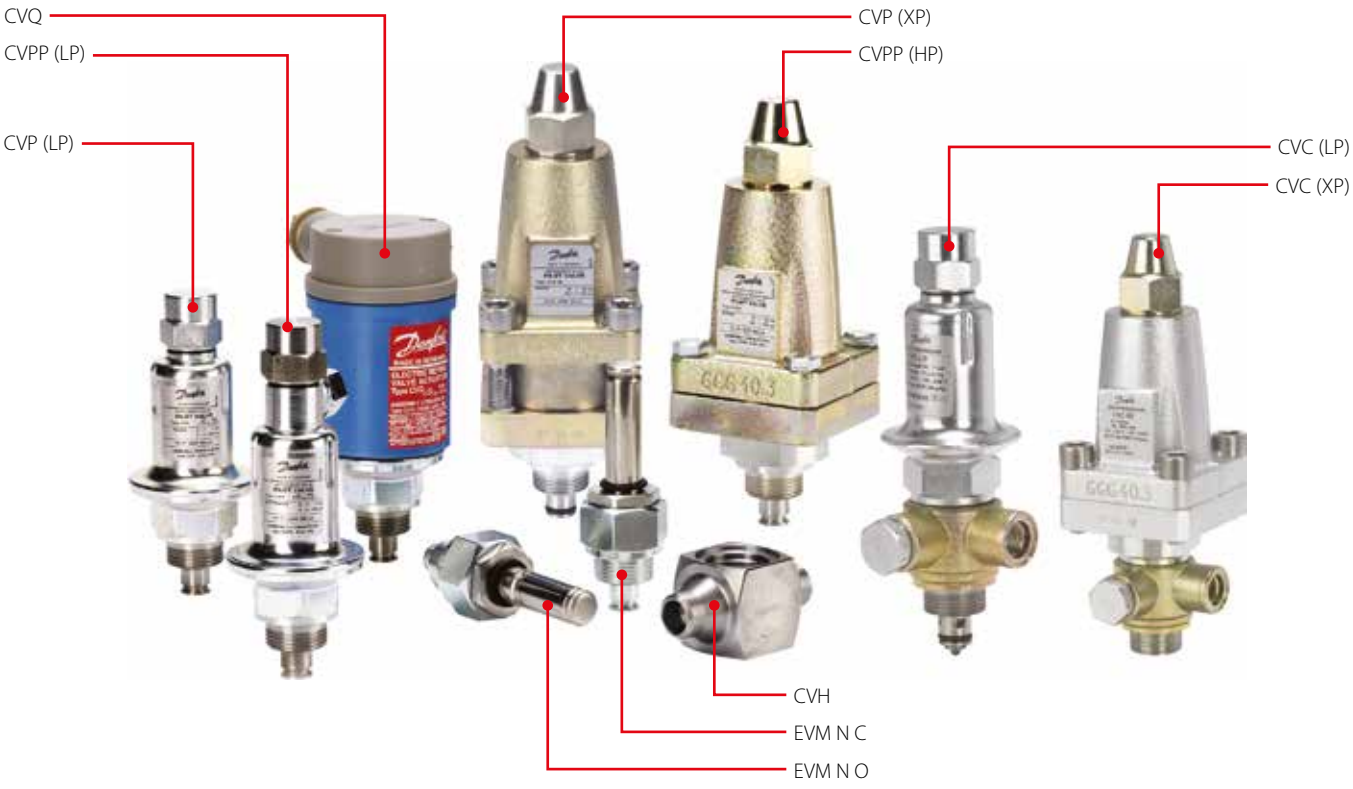

Facts

The range of pilot valves consist of:
- Constant-pressure pilot valve, type CVP (LP) and CVP (HP)
- Differential-pressure pilot valve, type CVPP (LP) and CVPP (HP)
- High pressure pilot valve, type CVP (XP) and CVC (XP) ideal for CO_2 hot gas defrosting
- Pressure-operated pilot valve with reference pressure connection, type CVC
- Electronically operated constant-pressure pilot valve, type CVQ (pressure-dependent)
- Solenoid pilot valve, type EVM (NC)
- Solenoid pilot valve, type EVM (NO)
- Housing, type CVH for pilot valves, for mounting in external pilot lines
- Applicable to all common non flammable refrigerants including R 717 and non corrosive gases / liquids dependent on sealing material compatability
- The pilot valves can be screwed direct into the main valve, thus avoiding the necessity of welding, soldering and separate pilot lines
- The pilot valves can be mounted direct in an ICS or PM main valve or be connected via an external pilot line and a CVH housing
- All pilot valves can be used on all sizes of main valves
- Extremely accurate pressure and temperature control
- Several pilot valves can be connected in series or in parallel to provide many functions in the same ICS or PM main valve

Technical data and ordering

CVP / CVPP / CVC - Pilot valve

Low pressure pilot valves

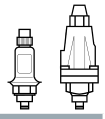

Type	MWP [bar g]	K_v value [m³/h]	Temperature range [°C]	Pressure range [bar g]	Code no.
CVP (LP)	17	0.40	-50 – 120	0 – 7	027B1100
	17	0.40	-50 – 120	-0.66 – 2	027B1101
CVPP (LP)	17	0.40	-50 – 120	0 – 7	027B1102
CVC (LP)	28	0.20	-50 – 120	-0.5 – 9	027B1080

CVP / CVPP / CVC - Pilot valve

High pressure pilot valves

Valve type	MWP [bar g]	K_v value [m³/h]	Temperature range [°C]	Pressure range [bar g]	Code no.
CVP (HP)	28	0.40	-50 – 120	4 – 22	027B1160
	28	0.40	-50 – 120	4 – 28	027B1161
	28	0.40	-50 – 120	-0.66 – 7	027B1164
CVPP (HP)	28	0.40	-50 – 120	0 – 7	027B1162
	40	0.40	-50 – 120	4 – 22	027B1268
CVP (XP)	52	0.45	-50 – 120	25 – 52	027B0080
CVC (XP)	52	0.20	-50 – 120	4 – 28	027B0087

EVM - Pilot valve

Solenoid valves

Valve type	MWP [bar g]	K_v value [m³/h]	MOPD [bar g]	Code no.
EVM (NC)	65	0.37	21	027B1120
EVM (NO)	52	0.12	19	027B1130

CVQ - Pilot valve

Pilot valves

Valve type	MWP [bar g]	K_v value [m³/h]	MOPD [bar g]	Code no.
CVQ	17	0.45	-1 – 5	027B1139
	17	0.45	0 – 6	027B1140
	17	0.45	1.7 – 8	027B1141

CVQ - Pilot valve

Pilot valves - Electrical data

Supply voltage		24 V AC ±10%
Frequency		50 – 60 Hz
Power consumption	operation	50 VA
	start	75 VA
Enclosure		NEMA 3 / IP55
Cable entry		Pg 13.5
Ambient temperature	operation	-30 – 50 °C / -22 – 122 °F
	transport	-50 – 70 °C / -58 – 158 °F
CE-marking		EMC-Directive 89 / 336 / EEC, EMC-Directive 89 / 336 / EN 50081-1 and EN 50082-1

CVH - Pilot valve

Housings

Type	Connection size [in]	Connection size [mm]	Connection type	Connection standard	Material	Code no.
CVH	1/4	6	1/4 in NPT (internal)	ANSI/ASME B1.20.1	DIN 9SMnPb 28, W - no. 1.0718	027F1159
	1/4	6	G1/4 A (external)	ISO 228-1	DIN 9SMnPb 28, W - no. 1.0718	027F1160
	3/8	10	Butt weld	ASME B 36.10M - SCHEDULE 80	DIn CK 15. W - no. 1.1141	027F1047
	1/2	15	Butt weld	ASME B 36.10M - SCHEDULE 80	DIn CK 15. W - no. 1.1141	027F1090
	1/2	15	Socket weld	ASME B 16.11	DIn CK 15. W - no. 1.1141	027F1091

CVP / CVPP / CVC / CVE / EVM, Pilot valves and CVH housing

Pilot valves are intended for mechanical control of a main valve and are ready for direct installation in the top cover of the main valve.

Small capacities can be controlled by the pilot valve directly without a main valve when installed in the matching CVH housing.

Features
CVP / CVPP / CVC / CVE / EVM / CVH

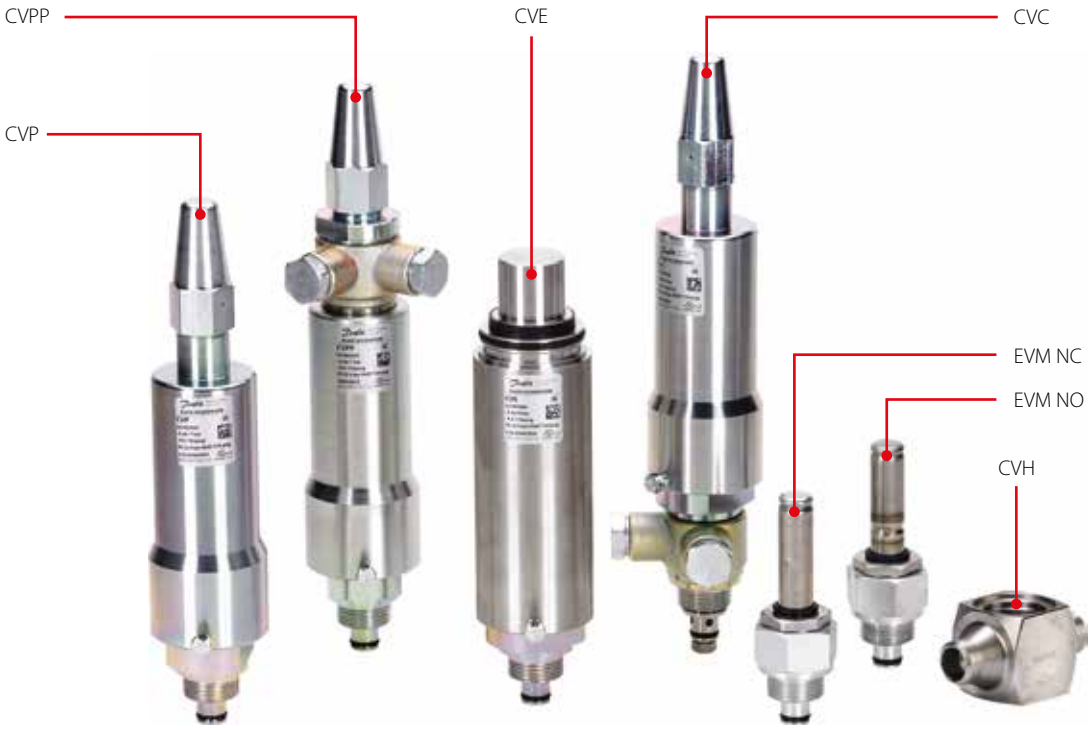

Facts

The range of pilot valves consist of:
- Constant-pressure pilot valve, type CVP
- Differential-pressure pilot valve, type CVPP
- Pressure-operated pilot valve with reference pressure connection, type CVC
- Electronically operated constant-pressure pilot valve, type CVE (to be fitted with the ICAD actuator)
- Solenoid pilot valve, type EVM (NC)
- Solenoid pilot valve, type EVM (NO)
- Housing, type CVH for pilot valves, for mounting in external pilot lines
- Applicable to R717, R744, R401A, R402A, R404A, R407A, R407B, R407C, R407F, R409A, R410A, R421A, R502, R507, R134a and R22. The use of pilots with flammable hydrocarbons is not recommended. *For a fully updated list of approved refrigerants, visit www.products.danfoss.com and search for individual code numbers, where refrigerants are listed as part of product specifications.*
- The pilot valves can be screwed direct into the main valve, thus avoiding the necessity of welding, soldering and separate pilot lines
- The pilot valves can be mounted directly in the ICS, PM or ICF valve or it can be connected via an external pilot line and a CVH housing
- All pilot valves can be used on all sizes of main valves
- Extremely accurate pressure and temperature control
- Several pilot valves can be connected in series or in parallel to provide many functions in the same ICS or ICF valve

Technical data and ordering

CVP

Constant-pressure pilot valve

Valve type	Max. working pressure		k_v / C_v value [1]		Temperature range		Pressure range		Code no.
	[bar]	[psi]	[m³/h]	[US gal/min]	[° C]	[° F]	[bar]	[psi]	
CVP-L	52	754	0.40	0.46	-60 / 120	-76 / 248	-0.66 – 7	19.5 in Hg to 102	027B0920
CVP-M	52	754	0.40	0.46	-60 / 120	-76 / 248	4 – 28	58 – 406	027B0921
CVP-H	52	754	0.40	0.46	-60 / 120	-76 / 248	25 – 52	363 – 754	027B0922

P-band for a valve system regulated by CVP and ICS / PM main valve: < 0.2 bar g / 2.9 psi g
[1]) *The k_v / C_v value is measured with the pilot valve mounted in a CVH housing for external pilot lines. The value can vary slightly, depending on the setting value.*

CVPP

Differential-pressure pilot valve

Valve type	Max. working pressure		k_v / C_v value [1]		Temperature range		Pressure range		Code no.
	[bar]	[psi]	[m³/h]	[US gal/min]	[° C]	[° F]	[bar]	[psi]	
CVPP-L	52	754	0.40	0.46	-60 / 120	-76 / 248	-0.66 – 7	19.5 in Hg to 102	027B0930
CVPP-M	52	754	0.40	0.46	-60 / 120	-76 / 248	4 – 28	58 – 406	027B0931

P-band for a valve system regulated by CVPP and ICS / ICF / PM main valve: <0.2 bar g / 2.9 psi g.
[1]) *The k_v / C_v value is measured with the pilot valve mounted in a CVH housing for external pilot lines. The value can vary slightly, depending on the setting value.*

CVC

Pressure-operated pilot valve with reference pressure connection

Valve type	Max. working pressure		k_v / C_v value [1]		Temperature range		Pressure range		Code no.
	[bar]	[psi]	[m³/h]	[US gal/min]	[° C]	[° F]	[bar]	[psi]	
CVC-L	52	754	0.20	0.23	-60 / 120	-76 / 248	-0.66 – 7	19.5 in Hg to 102	027B0940
CVC-M	52	754	0.20	0.23	-60 / 120	-76 / 248	4 – 28	58 – 406	027B0941

The reference pressure must be connected to the low-pressure side of the system.
P-band for a valve system regulated by CVC and ICS / PM / PMC main valve: < 0.3 bar g / 4.4 psi g
[1]) *The k_v / C_v value is measured with the pilot valve mounted in a CVH housing for external pilot lines. The value can vary slightly, depending on the setting value.*

CVE

Electronically operated constant-pressure (constant pressure difference) pilot valve. To be fitted with the ICAD 600A actuator*

Valve type	Max. working pressure		k_v / C_v value [1]		Temperature range		Pressure range		Code no.
	[bar]	[psi]	[m³/h]	[US gal/min]	[° C]	[° F]	[bar]	[psi]	
CVE	52	754	0.40	0.46	-60 / 120	-76 / 248	-0.66 – 8	19.5 in. Hg to 116	027B0980

[1]) *The k_v / C_v value is measured with the pilot valve mounted in a CVH housing for external pilot lines. The value can vary slightly, depending on the setting value.*

CVE pressure setting

barg	-0.66	0	1	2	3	4	5	6	7	8
psig	19.5 in. Hg	0	14.5	29.0	43.5	58.0	72.5	87.0	101.5	116.0
mA	18.3	17.1	15.9	14.7	13.5	12.3	11.1	9.9	8.7	7.5
ICAD reading %	90%	83%	75%	67%	60%	53%	45%	37%	30%	23%

See the ICAD installation guide for ICAD setup.
** ICAD 600A: 027H9075 and 027H9120*

EVM

Solenoid pilot valve

Valve type	Max. working pressure		k_v / C_v value [1]		Temperature range		Pressure range MOPD/MCPD		Code no.
	[bar]	[psi]	[m³/h]	[US gal/min]	[° C]	[° F]	[bar]	[psi]	
EVM NC	65	940	0.28	0.32	-60 / 120	-76 / 248	21	305	027B1120
EVM NO	52	754	0.12	0.14	-60 / 120	-76 / 248	19	276	027B1130
EVM NO	52	754	0.12	0.14	-60 / 120	-76 / 248	40	580	027B1132 **

MOPD: Maximum opening differential pressure with a 10 W AC coil. With: 20 W AC coil: 40 bar / 580 psi / 20 W DC coil: 14 bar / 203 psi
MCPD: Maximum closing differential pressure with a 10/12 W AC coil or a 20 W DCcoil.
*** For ICLX valve service*
[1]) *The k_v / C_v value is measured with the pilot valve mounted in a CVH housing for external pilot lines. The value can vary slightly, depending on the setting value.*

CVH

Housing for pilot valve (for mounting in external pilot lines)

Type	Connection size		Connection type	Connection standard	Code no.
	[in]	[mm]			
CVH	1/4	6	Internal pipe thread - 1/4 in NPT	ANSI/ASME B1.20.1	027F1159
	1/4	6	Internal pipe thread - G1/4 in A	ISO 228-1	027F1160
	3/8	10	Butt weld	ASME B 36.10M - SCHEDULE 80	027F1047
	1/2	15	Butt weld	ASME B 36.10M - SCHEDULE 80	027F1090
	1/2	15	Socket weld	ASME B 16.11	027F1091

OFV / OFV-SS, Pressure regulating valves

OFV are angle-way over flow valves, which have ajustable opening pressure and cover the differential pressure range (ΔP): 2 – 8 bar / 29 – 116 psi. The valve can be closed manually, e.g. during plant service and have backseating, enabling the spindle seal to be replaced with the valve still under pressure.

The valves are especially designed to prevent fluttering due to low velocity and/or low density. In consequence it is possible to apply the valves with wide fluctuations in capacity demands, i.e. from maximum performance to part load. A flexible O-ring provides perfect sealing over the seat.



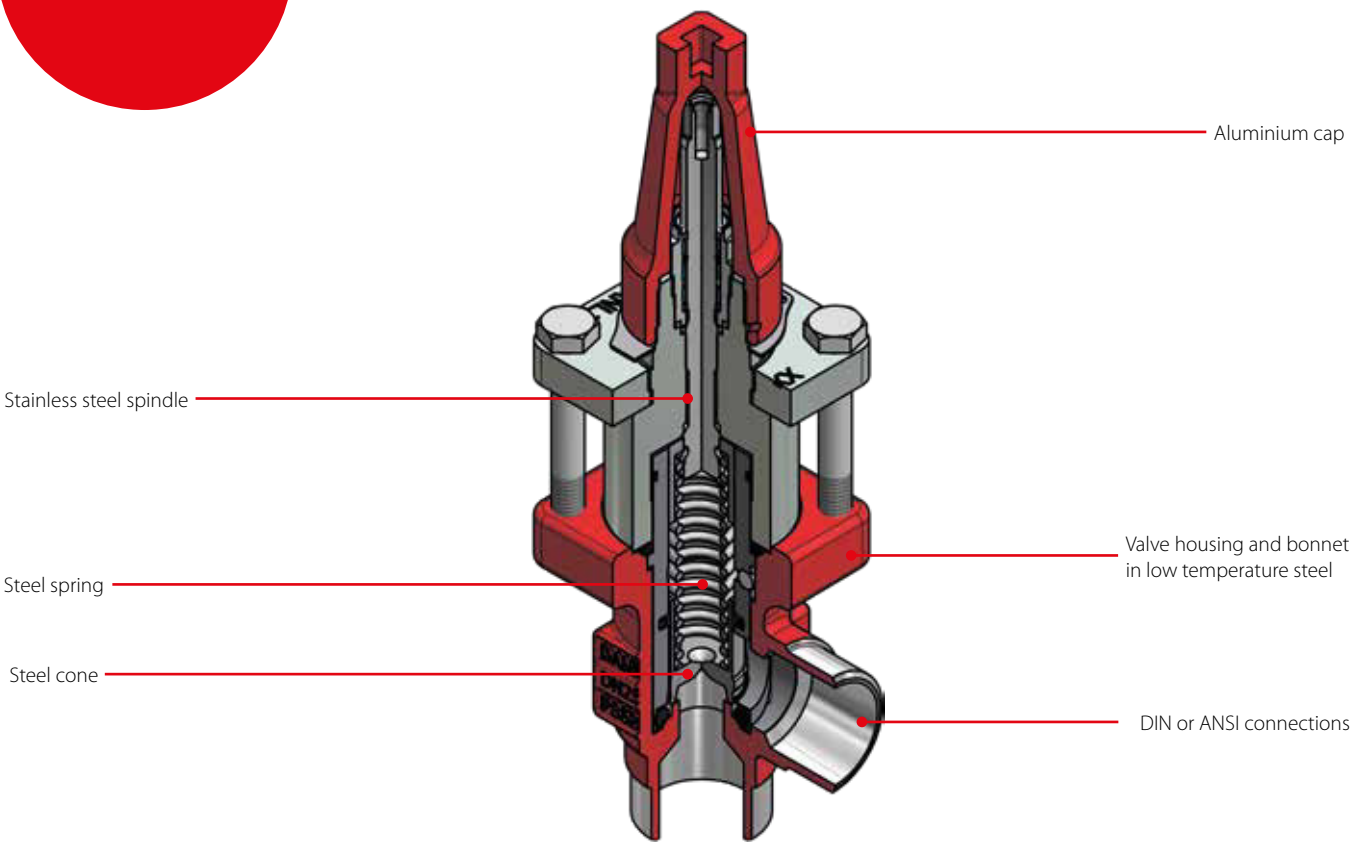

Facts

- Applicable to R717, R744, R401A, R402A, R404A, R407A, R407B, R407C, R407F, R409A, R410A, R421A, R502, R507, R134a and R22. *For a fully updated list of approved refrigerants, visit www.products.danfoss.com and search for individual code numbers, where refrigerants are listed as part of product specifications.*
- Full temperature range packing gland: -50 – 150 °C / -58 – 302 °F
- Maximum operating pressure: 40 bar g / 580 psig
- Three functions in one valve. The OFV valve combines the functions of an overflow valve, a check valve and a stop valve
- Special features for OFV-SS:
  - Low temperature stainless steel housing and bonnet
  - Low temperature packing gland -60 – 150 °C / -76 – 302 °F
  - Maximum operating pressure 52 bar / 754 psi g

Technical data and ordering

OFV / OFV-SS - Pressure regulating valve

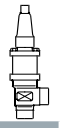

Ordering

Type	Connection size		Execution	Connection type	Connection designation	Code no.
	[in]	[mm]				
OFV 20	3/4	20	Angleway	Butt weld, ANSI (B 36.10)	A	2412+185
	3/4	20	Angleway	Butt weld, EN 10220	D	2412+183
OFV – SS 20	3/4	20	Angleway	Butt weld, EN 10220	D	148G3194
OFV 25	1	25	Angleway	Butt weld, ANSI (B 36.10)	A	2412+186
	1	25	Angleway	Butt weld, EN 10220	D	2412+184
OFV – SS 25	1	25	Angleway	Butt weld, ANSI (B 36.19M)	A	148G3843
	1	25	Angleway	Butt weld, EN 10220	D	148G3195

DCL, Hermetic filter drier

DCL **ELIMINATOR®** hermetic filter driers protect refrigeration and air conditioning systems from moisture, acids and solid particles, eliminating harmful chemical reaction and abrasive impurities.

DCL hermetic filter driers, with a solid core of 80% Molecular Sieve and 20% activated alumina. They are hermetic and available in many sizes and connection types.



Features
DCL

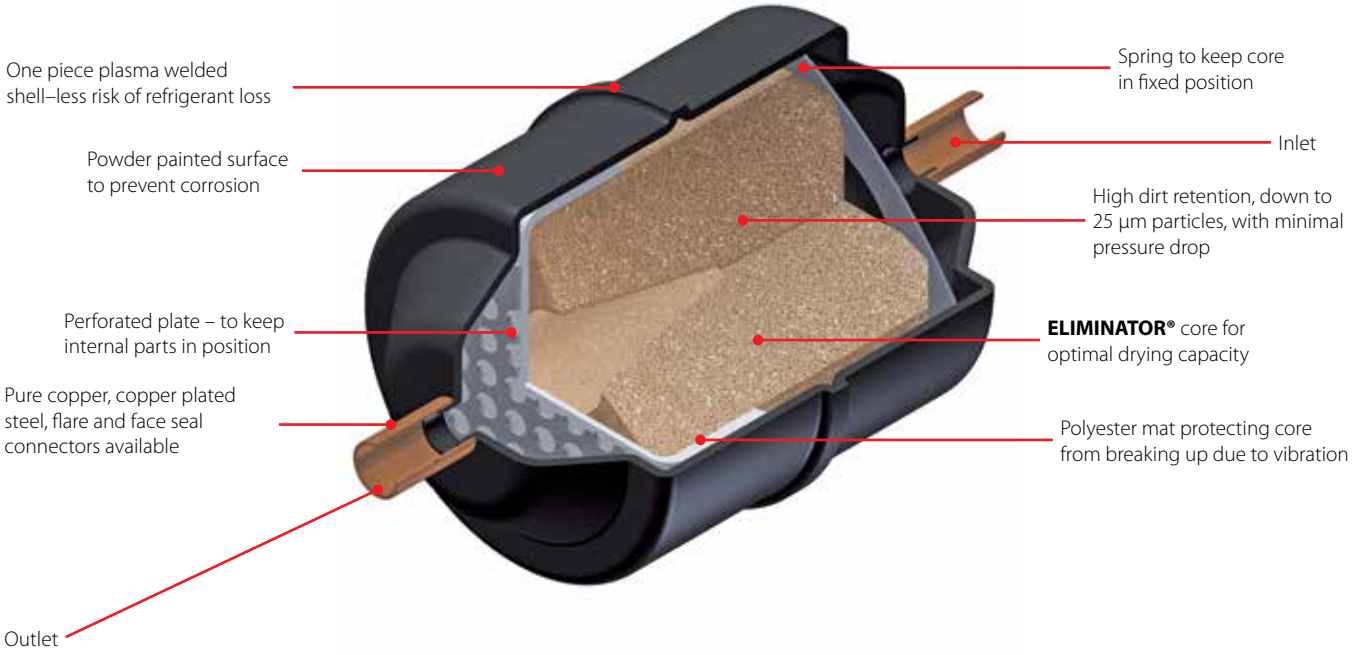

Facts

Application:
- Traditional refrigeration
- Air conditioning units
- Transport refrigeration
- Applicable to R1234ze, R125, R134a, R22/ R407C, R23, R404A, R407A, R407F, R410A, R422B, R422D, R438A, R448A, R449A, R449B, R452A, R455A, R507A,R513A, R290*), R600*), R32*), R454B*), R452B*), R444B*), R454A*), R450A*), R1234yf*)
) Approved for Filter drier models with connection sizes less than 25 mm refrigerants.
- 4 times better moisture adsorption capacity than traditional filter driers with activated alumina, at both high and low humidity levels
- High drying capacity avoiding the risk of acid formation in the refrigeration system
- Solder connections are in copper plated and steel material (flare and face seal)
- Wide range with sizes: 1.5 – 75 cubic inches
- Corrosion resistant powder-painted finish. Special coating for marine applications available upon request
- 80% 3Å molecular sieve with 20% activated alumina core
- Face seal connectors for HFO refrigerants available upon request, please contact your sales representative
- Thermally stable up to 120 °C / 250 °F
- Minimal amount of binder, resistant to systems chemicals, assuring a stable core and long life
- PS / MWP up to 46 bar / 667 psig
- Available with flare, face seal, flare o-ring solder (purecopper, cu-plated) connections

Technical data

DCL - Hermetic filter drier

Drying and liquid capacity (SI units)

Type	Drying capacity [kg] of refrigerant [1]														Liquid capacity [kW] [2]							Max. working pressure PS [bar]
	R134a		R404A		R507		R22		R407C		R410A		R32									
	[°C]																					
	24	52	24	52	24	52	24	52	24	52	24	52	24	52	R134a	R404A	R507	R22	R407C	R410A	R32	
DCL1.52XL / 2.8 mms	2.3	2.1	2.4	2.3	2.5	2.3	2.3	2.1	2.3	2.1	2.1	1.9	2.1	1.9	2.81	1.90	1.85	2.98	2.78	2.73	4.08	46
DCL 032 / 032s	3.65	3.44	3.94	3.72	4.01	3.69	3.70	3.40	3.66	3.36	3.31	3.03	3.42	3.10	6.13	4.15	4.05	6.51	6.08	5.96	8.91	46
DCL 032.5s	3.65	3.44	3.94	3.72	4.01	3.69	3.70	3.40	3.66	3.36	3.31	3.03	3.42	3.10	9.63	6.53	6.36	10.23	9.56	9.36	14.01	46
DCL 033 / 033s	3.65	3.44	3.94	3.72	4.01	3.69	3.70	3.40	3.66	3.36	3.31	3.03	3.42	3.10	11.25	6.68	7.43	10.46	11.17	9.58	16.37	46
DCL 052 / 052s	5.9	5.5	6.3	6.0	6.4	5.9	5.9	5.5	5.9	5.4	5.3	4.9	5.5	5.0	6.51	4.41	4.30	6.91	6.46	6.33	9.47	46
DCL 052.5s	5.86	5.52	6.31	5.96	6.43	5.91	5.93	5.46	5.86	5.38	5.31	4.86	5.48	4.96	12.13	8.21	8.01	12.87	12.03	11.78	17.64	46
DCL 053 / 053s	5.86	5.52	6.31	5.96	6.43	5.91	5.93	5.46	5.86	5.38	5.31	4.86	5.48	4.96	16.52	11.19	10.91	17.54	16.39	16.05	24.02	46
DCL 082 / 082s	9.45	8.90	10.18	9.62	10.37	9.54	9.57	8.80	9.45	8.68	8.56	7.84	8.84	8.00	6.46	4.38	4.27	6.86	6.41	6.28	9.40	46
DCL 082.5s	9.45	8.90	10.18	9.62	10.37	9.54	9.57	8.80	9.45	8.68	8.56	7.84	8.84	8.00	12.42	8.41	8.20	13.19	12.32	12.07	18.06	46
DCL 083 / 083s	9.45	8.90	10.18	9.62	10.37	9.54	9.57	8.80	9.45	8.68	8.56	7.84	8.84	8.00	16.28	11.03	10.75	17.28	16.15	15.82	23.68	46
DCL 084 / 084s	9.45	8.90	10.18	9.62	10.37	9.54	9.57	8.80	9.45	8.68	8.56	7.84	8.84	8.00	21.42	14.51	14.14	22.74	21.25	20.82	31.15	46
DCL 162 / 162s	21.32	20.08	22.98	21.71	23.42	21.52	21.60	19.87	21.33	19.60	19.33	17.70	19.95	18.07	6.75	4.57	4.46	7.17	6.70	6.56	9.82	46
DCL 163 / 163s	21.32	20.08	22.98	21.71	23.42	21.52	21.60	19.87	21.33	19.60	19.33	17.70	19.95	18.07	19.42	13.15	12.82	20.61	19.26	18.87	28.24	46
DCL 164 / 164s	21.32	20.08	22.98	21.71	23.42	21.52	21.60	19.87	21.33	19.60	19.33	17.70	19.95	18.07	27.04	18.32	17.86	28.71	26.83	26.28	39.33	46
DCL 165 / 165s	21.32	20.08	22.98	21.71	23.42	21.52	21.60	19.87	21.33	19.60	19.33	17.70	19.95	18.07	37.81	25.61	24.97	40.14	37.52	36.75	54.99	46
DCL 166 / 166s	21.32	20.08	22.98	21.71	23.42	21.52	21.60	19.87	21.33	19.60	19.33	17.70	19.95	18.07	44.16	29.91	29.16	46.89	43.82	42.92	64.22	46
DCL 167s	21.32	20.08	22.98	21.71	23.42	21.52	21.60	19.87	21.33	19.60	19.33	17.70	19.95	18.07	49.71	33.67	32.83	52.78	49.32	48.31	72.29	46
DCL 303 / 303s	43.83	41.27	47.24	44.62	48.13	44.24	44.40	40.84	43.84	40.29	39.73	36.39	41.00	37.13	20.48	13.87	13.52	21.74	20.32	19.90	29.79	46
DCL 304 / 304s	43.83	41.27	47.24	44.62	48.13	44.24	44.40	40.84	43.84	40.29	39.73	36.39	41.00	37.13	30.67	20.77	20.25	32.56	30.42	29.80	44.60	46
DCL 305 / 305s	43.83	41.27	47.24	44.62	48.13	44.24	44.40	40.84	43.84	40.29	39.73	36.39	41.00	37.13	48.61	32.93	32.10	51.61	48.23	47.24	70.70	46
DCL 306 / 306s	43.83	41.27	47.24	44.62	48.13	44.24	44.40	40.84	43.84	40.29	39.73	36.39	41.00	37.13	60.17	40.75	39.73	63.88	59.69	58.47	87.50	46
DCL 307s	43.83	41.27	47.24	44.62	48.13	44.24	44.40	40.84	43.84	40.29	39.73	36.39	41.00	37.13	69.46	47.05	45.86	73.74	68.91	67.50	101.01	46
DCL 309s	43.83	41.27	47.24	44.62	48.13	44.24	44.40	40.84	43.84	40.29	39.73	36.39	41.00	37.13	79.18	53.63	52.28	84.06	78.55	76.94	115.14	46
DCL 413	59.71	56.23	64.36	60.80	65.58	60.28	60.49	55.64	59.73	54.89	54.13	49.58	55.86	50.60	19.47	13.19	12.86	20.67	19.32	18.92	28.32	46
DCL 414 / 414s	59.71	56.23	64.36	60.80	65.58	60.28	60.49	55.64	59.73	54.89	54.13	49.58	55.86	50.60	31.84	21.56	21.02	33.80	31.59	30.94	46.30	46
DCL 415 / 415s	59.71	56.23	64.36	60.80	65.58	60.28	60.49	55.64	59.73	54.89	54.13	49.58	55.86	50.60	51.58	34.94	34.06	54.76	51.17	50.12	75.01	46
DCL 417s	59.71	56.23	64.36	60.80	65.58	60.28	60.49	55.64	59.73	54.89	54.13	49.58	55.86	50.60	84.69	57.37	55.92	89.91	84.03	82.30	123.17	35
DCL 419s	59.71	56.23	64.36	60.80	65.58	60.28	60.49	55.64	59.73	54.89	54.13	49.58	55.86	50.60	91.01	61.64	60.09	96.62	90.29	88.44	132.35	35
DCL 604s	87.65	82.54	94.48	89.25	96.26	88.49	88.80	81.67	87.67	80.58	79.46	72.78	82.00	74.27	34.80	24.48	23.74	37.93	35.67	36.22	53.05	46
DCL 607s	87.65	82.54	94.48	89.25	96.26	88.49	88.80	81.67	87.67	80.58	79.46	72.78	82.00	74.27	79.42	53.79	52.44	84.31	78.79	77.17	115.49	46
DCL 609s	87.65	82.54	94.48	89.25	96.26	88.49	88.80	81.67	87.67	80.58	79.46	72.78	82.00	74.27	95.42	64.63	63.01	101.30	94.67	92.73	138.77	46
DCL 757s	119.43	112.46	128.72	121.60	131.15	120.56	120.99	111.28	119.46	109.79	108.26	99.16	111.72	101.19	81.75	55.37	53.98	86.79	81.11	79.44	118.88	35
DCL 759s	119.43	112.46	128.72	121.60	131.15	120.56	120.99	111.28	119.46	109.79	108.26	99.16	111.72	101.19	101.79	68.94	67.21	108.06	100.98	98.91	148.02	35

[1]) Drying capacity is based on following moisture content test standards before and after drying:
- *– R32: 990 ppm W – 50 ppm W*
- *– R134a: 1050 – 50 ppm W*
- *– R404A, R507: 1020 – 50 ppm W*
- *– R407C: 1020 – 50 ppm W*
- *– R410A: 1050 – 50 ppm W*
- *– R22: 1050 – 60 ppm W*

In accordance with ARI 710-2004

[2]) Given in accordance with ARI 710-2004 for:
- t_e = -15 °C
- t_c = 30 °C
- Δp = 0.07 bar

Approvals
UL US, file no. SA 6398
PED 2014/68/EU -a4p3

Technical data

DCL - Hermetic filter drier

Drying and liquid capacity (US units)

Type	Drying capacity [lb] of refrigerant [1]														Liquid capacity [TR] [2]							Max. working pressure MWP [psig]
	R134a		R404A		R507		R22		R407C		R410A		R32		R134a	R404A	R507	R22	R407C	R410A	R32	
	[°F]																					
	75	125	75	125	75	125	75	125	75	125	75	125	75	125								
DCL1.52XL 2.8 mm s	5.00	4.71	5.39	5.09	5.49	5.05	5.07	4.66	5.00	4.60	4.53	4.15	4.68	4.24	0.8	0.5	0.5	0.9	0.8	0.8	1.2	667
DCL 032.5s	8.06	7.59	8.68	8.20	8.85	8.13	8.16	7.51	8.06	7.41	7.30	6.69	7.54	6.83	1.75	1.19	1.16	1.86	1.74	1.70	2.55	667
DCL 033 / 033s	8.06	7.59	8.68	8.20	8.85	8.13	8.16	7.51	8.06	7.41	7.30	6.69	7.54	6.83	2.75	1.86	1.82	2.92	2.73	2.67	4.00	667
DCL 052 / 052s	8.06	7.59	8.68	8.20	8.85	8.13	8.16	7.51	8.06	7.41	7.30	6.69	7.54	6.83	3.22	1.91	2.12	2.99	3.19	2.74	4.68	667
DCL 052.5s	12.91	12.16	13.92	13.15	14.18	13.03	13.08	12.03	12.92	11.87	11.70	10.72	12.08	10.94	1.86	1.26	1.23	1.97	1.85	1.81	2.71	667
DCL 053 / 053s	12.91	12.16	13.92	13.15	14.18	13.03	13.08	12.03	12.92	11.87	11.70	10.72	12.08	10.94	3.46	2.35	2.29	3.68	3.44	3.37	5.04	667
DCL 082 / 082s	12.91	12.16	13.92	13.15	14.18	13.03	13.08	12.03	12.92	11.87	11.70	10.72	12.08	10.94	4.72	3.20	3.12	5.01	4.68	4.59	6.86	667
DCL 082.5s	20.82	19.61	22.45	21.20	22.87	21.02	21.10	19.40	20.83	19.14	18.88	17.29	19.48	17.65	1.85	1.25	1.22	1.96	1.83	1.79	2.69	667
DCL 083 / 083s	20.82	19.61	22.45	21.20	22.87	21.02	21.10	19.40	20.83	19.14	18.88	17.29	19.48	17.65	3.55	2.40	2.34	3.77	3.52	3.45	5.16	667
DCL 084 / 084s	20.82	19.61	22.45	21.20	22.87	21.02	21.10	19.40	20.83	19.14	18.88	17.29	19.48	17.65	4.65	3.15	3.07	4.94	4.61	4.52	6.76	667
DCL 162 / 162s	20.82	19.61	22.45	21.20	22.87	21.02	21.10	19.40	20.83	19.14	18.88	17.29	19.48	17.65	6.12	4.15	4.04	6.50	6.07	5.95	8.90	667
DCL 162.5s	47.01	44.26	50.66	47.86	51.62	47.45	47.62	43.80	47.02	43.21	42.61	39.03	43.97	39.83	1.93	1.31	1.27	2.05	1.91	1.88	2.81	667
DCL 163 / 163s	47.01	44.26	50.66	47.86	51.62	47.45	47.62	43.80	47.02	43.21	42.61	39.03	43.97	39.83	5.55	3.76	3.66	5.89	5.50	5.39	8.07	667
DCL 164 / 164s	47.01	44.26	50.66	47.86	51.62	47.45	47.62	43.80	47.02	43.21	42.61	39.03	43.97	39.83	7.73	5.23	5.10	8.20	7.67	7.51	11.24	667
DCL 165 / 165s	47.01	44.26	50.66	47.86	51.62	47.45	47.62	43.80	47.02	43.21	42.61	39.03	43.97	39.83	10.80	7.32	7.13	11.47	10.72	10.50	15.71	667
DCL 166 / 166s	47.01	44.26	50.66	47.86	51.62	47.45	47.62	43.80	47.02	43.21	42.61	39.03	43.97	39.83	12.62	8.55	8.33	13.40	12.52	12.26	18.35	667
DCL 167s	47.01	44.26	50.66	47.86	51.62	47.45	47.62	43.80	47.02	43.21	42.61	39.03	43.97	39.83	14.20	9.62	9.38	15.08	14.09	13.80	20.66	667
DCL 303 / 303s	96.62	90.99	104.14	98.38	106.11	97.54	97.88	90.03	96.64	88.82	87.59	80.22	90.39	81.87	5.85	3.96	3.86	6.21	5.81	5.69	8.51	667
DCL 304 / 304s	96.62	90.99	104.14	98.38	106.11	97.54	97.88	90.03	96.64	88.82	87.59	80.22	90.39	81.87	8.76	5.93	5.79	9.30	8.69	8.51	12.74	667
DCL 305 / 305s	96.62	90.99	104.14	98.38	106.11	97.54	97.88	90.03	96.64	88.82	87.59	80.22	90.39	81.87	13.89	9.41	9.17	14.75	13.78	13.50	20.20	667
DCL 306 / 306s	96.62	90.99	104.14	98.38	106.11	97.54	97.88	90.03	96.64	88.82	87.59	80.22	90.39	81.87	17.19	11.64	11.35	18.25	17.06	16.71	25.00	667
DCL 307s	96.62	90.99	104.14	98.38	106.11	97.54	97.88	90.03	96.64	88.82	87.59	80.22	90.39	81.87	19.84	13.44	13.10	21.07	19.69	19.29	28.86	667
DCL 309s	96.62	90.99	104.14	98.38	106.11	97.54	97.88	90.03	96.64	88.82	87.59	80.22	90.39	81.87	22.62	15.32	14.94	24.02	22.44	21.98	32.90	667
DCL 413	131.65	123.97	141.89	134.04	144.57	132.90	133.36	122.66	131.68	121.02	119.34	109.30	123.15	111.54	5.56	3.77	3.67	5.91	5.52	5.41	8.09	667
DCL 414 / 414s	131.65	123.97	141.89	134.04	144.57	132.90	133.36	122.66	131.68	121.02	119.34	109.30	123.15	111.54	9.10	6.16	6.01	9.66	9.02	8.84	13.23	667
DCL 415 / 415s	131.65	123.97	141.89	134.04	144.57	132.90	133.36	122.66	131.68	121.02	119.34	109.30	123.15	111.54	14.74	9.98	9.73	15.65	14.62	14.32	21.43	667
DCL 417s	131.65	123.97	141.89	134.04	144.57	132.90	133.36	122.66	131.68	121.02	119.34	109.30	123.15	111.54	24.20	16.39	15.98	25.69	24.01	23.52	35.19	507
DCL 419s	131.65	123.97	141.89	134.04	144.57	132.90	133.36	122.66	131.68	121.02	119.34	109.30	123.15	111.54	26.00	17.61	17.17	27.61	25.80	25.27	37.81	507
DCL 604s	193.24	181.97	208.29	196.76	212.22	195.08	195.76	180.05	193.29	177.64	175.17	160.44	180.77	163.73	9.94	6.99	6.78	10.84	10.19	10.35	15.16	667
DCL 607s	193.24	181.97	208.29	196.76	212.22	195.08	195.76	180.05	193.29	177.64	175.17	160.44	180.77	163.73	22.69	15.37	14.98	24.09	22.51	22.05	33.00	667
DCL 609s	193.24	181.97	208.29	196.76	212.22	195.08	195.76	180.05	193.29	177.64	175.17	160.44	180.77	163.73	27.26	18.47	18.00	28.94	27.05	26.49	39.65	667
DCL 757s	263.29	247.94	283.79	268.08	289.15	265.80	266.73	245.32	263.36	242.04	238.67	218.60	246.30	223.09	23.36	15.82	15.42	24.80	23.17	22.70	33.97	507
DCL 759s	263.29	247.94	283.79	268.08	289.15	265.80	266.73	245.32	263.36	242.04	238.67	218.60	246.30	223.09	29.08	19.70	19.20	30.87	28.85	28.26	42.29	507

[1]) Drying capacity is based on following moisture content test standards before and after drying:
– R32: 990 ppm W – 50 ppm W
– R134a: 1050 – 50 ppm W
– R404A, R507: 1020 – 50 ppm W
– R407C: 1020 – 50 ppm W
– R410A: 1050 – 50 ppm W
– R22: 1050 – 60 ppm W
In accordance with ARI 710-2004

[2]) Given in accordance with ARI 710-2004 for:
t_e = 5 °F
t_c = 85 °F
Δp = 1 psig

Approvals
UL US, file no. SA 6398
PED 2014/68/EU -a4p3

Ordering

DCL - Flare

Ordering

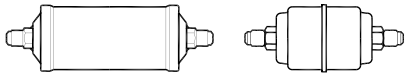

Type	Connection		Multipack Code no.
	[in]	[mm]	
DCL 032	1/4	6	023Z5000 [1])
	1/4	6	023Z5075
DCL 033	3/8	10	023Z5001 [1])
	3/8	10	023Z5089
DCL 052	1/4	6	023Z5002
DCL 053	3/8	10	023Z5003
DCL 082	1/4	6	023Z5004
DCL 083	3/8	10	023Z5005
DCL 084	1/2	12	023Z5006
DCL 162	1/4	6	023Z5007
DCL 163	3/8	10	023Z5008
DCL 164	1/2	12	023Z5009
DCL 165	5/8	16	023Z5010
DCL 166	3/4	19	023Z5011
DCL 303	3/8	10	023Z0012
DCL 304	1/2	12	023Z0013
DCL 305	5/8	16	023Z0014
DCL 306	3/4	19	023Z0156
DCL 414	1/2	12	023Z0102
DCL 415	5/8	16	023Z0103

[1]) Wire mesh in filter drier outlet

Ordering

DCL - Solder (pure copper)

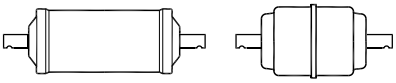

Ordering

Type	Connection [in]	Multipack Code no.	Connection [mm]	Multipack Code no.
DCL 1.52XL / 2.8mm s	1/4	023Z8255	–	–
DCL 032s	1/4	023Z5013 [1])	3	–
DCL 032.5s	5/16	023Z5014	8	–
DCL 033s	3/8	023Z5015	10	023Z5016
DCL 052s	1/4	023Z5018	6	–
DCL 053s	3/8	023Z5019	10	023Z5020
DCL 082s	1/4	023Z5022	6	–
DCL 083s	3/8	023Z5023	10	023Z5024
DCL 084s	1/2	023Z5026	12	023Z5025
DCL 085s	5/8	023Z5145	–	–
DCL 162s	1/4	023Z5028	6	023Z5027
DCL 163s	3/8	023Z5029	10	023Z5030
DCL 164s	1/2	023Z5032	12	023Z5031
DCL 165s	5/8	023Z5033	12	–
DCL 166s	3/4	023Z5070	–	–
DCL 167s	7/8	023Z5034	–	–
DCL 303s	3/8	023Z0030	10	–
DCL 304s	1/2	023Z0031	12	–
DCL 305s	5/8	023Z0032	16	–
DCL 306s	3/4	023Z0033	18	–
DCL 307s	7/8	023Z0034	22	–
DCL 309s	1 1/8	023Z0035	28	–
DCL 414s	1/2	023Z0104	12	–
DCL 415s	5/8	023Z0105	16	–
DCL 417s	7/8	023Z0106	22	–
DCL 419s	1 1/8	023Z0107	28	–
DCL 607s	7/8	023Z0036	22	–
DCL 609s	1 1/8	023Z0037	28	–
DCL 757s	7/8	023Z0115	22	–
DCL 759s	1 1/8	023Z0116	28	–

[1]) Wire mesh in filter drier outlet

This product is approved for R290, R600 and R600a by ignition source assessment in accordance to standard EN13463-1. Only solder versions (cu-plated / pure copper) and connection sizes below 25 mm are approved for flammable refrigerants.

Ordering

DCL - Solder (cu-plated)

Ordering

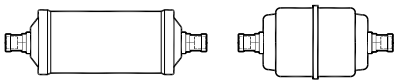

Type	Connection [in]	Multipack Code no.	Connection [mm]	Multipack Code no.
DCL 032s	1/4	023Z4501	6	023Z4500
DCL 032.5s	5/16	023Z4502	8	–
DCL 033s	3/8	023Z4504	10	023Z4503
DCL 052s	1/4	023Z4506	6	023Z4505
	5/16	023Z4507	10	–
DCL 053s	3/8	023Z4509	10	023Z4508
DCL 082s	1/4	023Z4511	6	023Z4510
	5/16	023Z4512	6	–
DCL 083s	3/8	023Z4514	10	023Z4513
DCL 084s	1/2	023Z4516	12	023Z4515
DCL 162s	1/4	023Z4518	6	023Z4517
DCL 163s	3/8	023Z4521	10	023Z4519
DCL 164s	1/2	023Z4523	12	023Z4522
DCL 165s	5/8	023Z4524	12	–
DCL 166s	3/4	023Z4525	–	–
DCL 167s	7/8	023Z4526	–	–
DCL 303s	3/8	023Z4528	10	023Z4527
DCL 304s	1/2	023Z4530	12	023Z4529
DCL 305s	5/8	023Z4531	16	–
DCL 306s	3/4	023Z4533	18	023Z4532
DCL 307s	7/8	023Z4534	22	–
DCL 309s	1 1/8	023Z4536	28	023Z4535
DCL 414s	1/2	023Z4538	12	–
DCL 415s	5/8	023Z4539	16	–
DCL 417s	7/8	023Z4540	22	–
DCL 419s	1 1/8	023Z4542	28	023Z4541
DCL 604s	1/2	023Z4544	22	–
DCL 607s	7/8	023Z4545	22	–
DCL 609s	1 1/8	–	28	023Z4546
DCL 757s	7/8	023Z4548	22	–
DCL 759s	1 1/8	023Z4550	28	023Z4549

This product is approved for R290, R600 and R600a by ignition source assessment in accordance to standard EN13463-1. Only solder versions (cu-plated / pure copper) and connection sizes below 25 mm are approved for flammable refrigerants.

DML, Hermetic filter drier

DML hermetic filter driers are optimised for refrigerants with mineral or benzene oils.
The filter driers are hermetic and approved for up to 46 bar, depending on type.
The filter driers are delivered with flare or copper / copper plated steel connections.

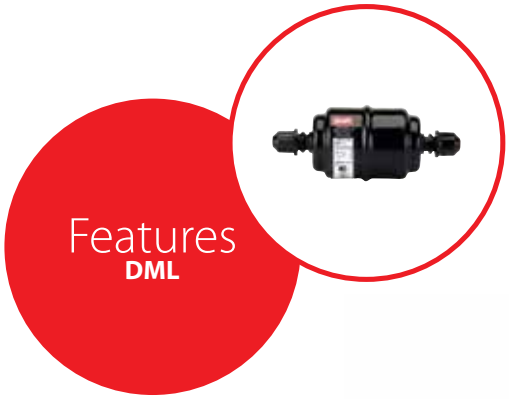

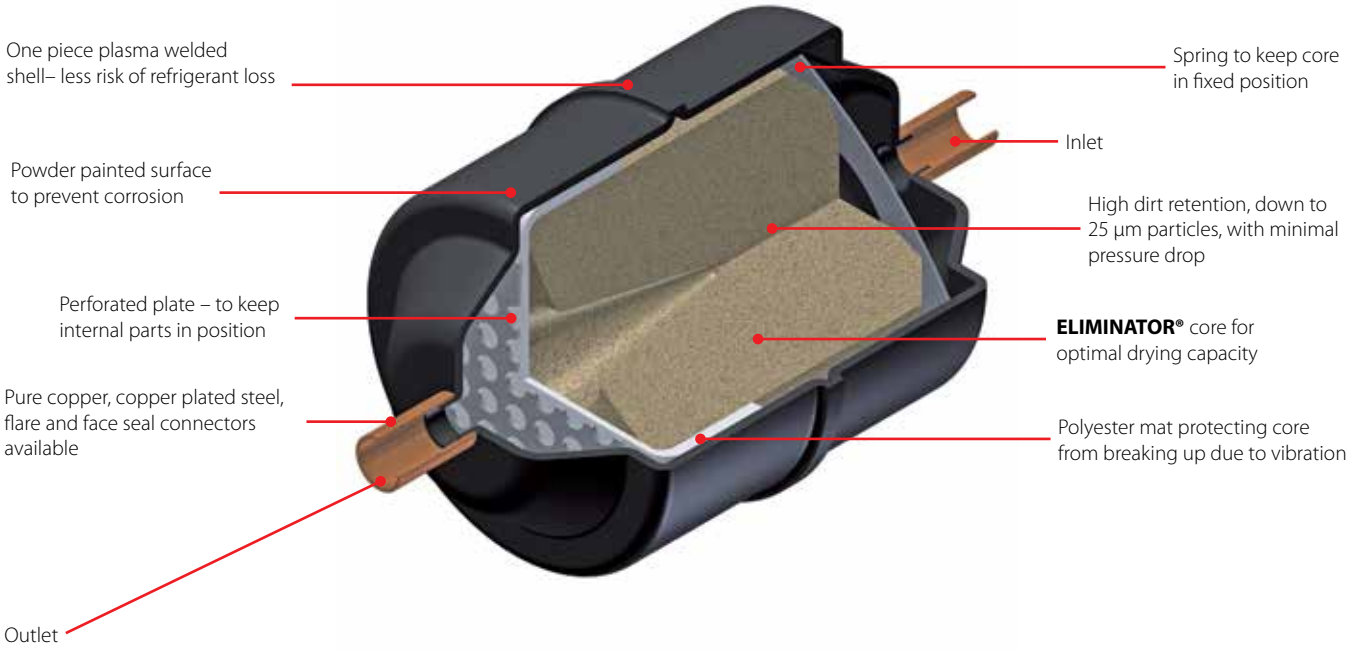

Facts

Application:
- Traditional refrigeration
- Air conditioning units
- Transport refrigeration
- Applicable to R22, R32, R134a, R404A, R410A, R407C, R23, R600, R600a, R744, R1234yf, R1234ze, R407f, R290, R452A, R444B, R449A, R448A and R450A
- This product is approved for R290, R600 and R600a by ignition source assessment in accordance to standard EN13463-1. Only solder versions (cu-plated / pure copper) and connection sizes below 25 mm are approved for flammable refrigerants. *For a fully updated list of approved refrigerants, visit www.products.danfoss.com and search for individual code numbers, where refrigerants are listed as part of product specifications.*
- High drying capacity avoiding the risk of acid formation in the refrigeration system
- All Danfoss filter driers have end caps designed for greater protection and easy removal
- Wide range with sizes: 1.5 – 75 cubic inches
- Corrosion resistant powder-painted finish, tested for 500 hrs in salt spray
- 100% 3Å molecular sieve core
- Face seal connectors for HFO refrigerants available upon request, please contact your sales representative
- PS / MWP up to 46 bar / 667 psig
- Available with flare, solder (purecopper, cu-plated) connections

Technical data

DML - Hermetic filter drier

Drying and liquid capacity (SI units)

Type	Drying capacity [kg] of refrigerant [1]														Liquid capacity [kW] [2]							Max. working pressure PS [bar]
	R134a		R404A		R507		R407C		R410A		R290		R32		R134a	R404A	R507	R407C	R410A	R290	R32	
	[°C]																					
	24	52	24	52	24	52	24	52	24	52	24	52	24	52								
DML 1.52 s	2.9	2.7	3.1	3.0	3.2	2.9	2.9	2.7	2.6	2.4	4.34	3.47	2.7	2.5	2.81	1.90	1.85	2.78	2.73	4.20	4.08	46
DML 032 / 032s	4.58	4.32	4.94	4.67	5.03	4.63	4.58	4.21	4.15	3.80	6.85	5.47	4.29	3.88	6.13	4.15	4.05	6.08	5.96	7.00	8.91	46
DML 032.5s	4.58	4.32	4.94	4.67	5.03	4.63	4.58	4.21	4.15	3.80	6.85	5.47	4.29	3.88	9.63	6.53	6.36	9.56	9.36	11.50	14.01	46
DML 033 / 033s	4.58	4.32	4.94	4.67	5.03	4.63	4.58	4.21	4.15	3.80	6.85	5.47	4.29	3.88	11.25	6.68	7.43	11.17	9.58	13.50	16.37	46
DML 034s	4.58	4.32	4.94	4.67	5.03	4.63	4.58	4.21	4.15	3.80	6.85	5.47	4.29	3.88	16.44	11.56	11.21	16.84	17.10	19.80	25.05	46
DML 052 / 052s	7.49	7.05	8.07	7.63	8.23	7.56	7.49	6.89	6.79	6.22	11.19	8.95	7.01	6.35	6.51	4.41	4.30	6.46	6.33	7.80	9.47	46
DML 052.5s	7.49	7.05	8.07	7.63	8.23	7.56	7.49	6.89	6.79	6.22	11.19	8.95	7.01	6.35	12.13	8.21	8.01	12.03	11.78	14.50	17.64	46
DML 053 / 053s	7.49	7.05	8.07	7.63	8.23	7.56	7.49	6.89	6.79	6.22	11.19	8.95	7.01	6.35	16.52	11.19	10.91	16.39	16.05	19.80	24.02	46
DML 054s	7.49	7.05	8.07	7.63	8.23	7.56	7.49	6.89	6.79	6.22	11.19	8.95	7.01	6.35	21.89	14.83	14.45	21.72	21.27	26.20	31.84	46
DML 055s	7.49	7.05	8.07	7.63	8.23	7.56	7.49	6.89	6.79	6.22	11.19	8.95	7.01	6.35	26.84	18.18	17.72	26.63	26.08	32.10	39.04	46
DML 082 / 082s	12.13	11.42	13.07	12.35	13.32	12.24	12.13	11.15	10.99	10.07	18.12	14.48	11.35	10.28	6.46	4.38	4.27	6.41	6.28	7.70	9.40	46
DML 082.5s	12.13	11.42	13.07	12.35	13.32	12.24	12.13	11.15	10.99	10.07	18.12	14.48	11.35	10.28	12.42	8.41	8.20	12.32	12.07	14.90	18.06	46
DML 083 / 083s	12.13	11.42	13.07	12.35	13.32	12.24	12.13	11.15	10.99	10.07	18.12	14.48	11.35	10.28	16.28	11.03	10.75	16.15	15.82	19.50	23.68	46
DML 084 / 084s	12.13	11.42	13.07	12.35	13.32	12.24	12.13	11.15	10.99	10.07	18.12	14.48	11.35	10.28	21.42	14.51	14.14	21.25	20.82	25.60	31.15	46
DML 085 / 085s	12.13	11.42	13.07	12.35	13.32	12.24	12.13	11.15	10.99	10.07	18.12	14.48	11.35	10.28	25.06	16.98	16.55	24.87	24.36	30.00	36.45	46
DML 162 / 162s	27.09	25.51	29.20	27.58	29.75	27.35	27.10	24.90	24.56	22.49	40.47	32.35	25.34	22.95	6.75	4.57	4.46	6.70	6.56	8.10	9.82	46
DML 163 / 163s	27.09	25.51	29.20	27.58	29.75	27.35	27.10	24.90	24.56	22.49	40.47	32.35	25.34	22.95	19.42	13.15	12.82	19.26	18.87	23.20	28.24	46
DML 164 / 164s	27.09	25.51	29.20	27.58	29.75	27.35	27.10	24.90	24.56	22.49	40.47	32.35	25.34	22.95	27.04	18.32	17.86	26.83	26.28	32.40	39.33	46
DML 165 / 165s	27.09	25.51	29.20	27.58	29.75	27.35	27.10	24.90	24.56	22.49	40.47	32.35	25.34	22.95	37.81	25.61	24.97	37.52	36.75	45.20	54.99	46
DML 166 / 166s	27.09	25.51	29.20	27.58	29.75	27.35	27.10	24.90	24.56	22.49	40.47	32.35	25.34	22.95	44.16	29.91	29.16	43.82	42.92	52.80	64.22	46
DML 167s	27.09	25.51	29.20	27.58	29.75	27.35	27.10	24.90	24.56	22.49	40.47	32.35	25.34	22.95	49.71	33.67	32.83	49.32	48.31	59.50	72.29	46
DML 303 / 303s	55.95	52.69	60.31	56.97	61.45	56.49	55.97	51.44	50.72	46.46	81.59	65.23	52.34	47.41	20.48	13.87	13.52	20.32	19.90	24.50	29.79	46
DML 304 / 304s	55.95	52.69	60.31	56.97	61.45	56.49	55.97	51.44	50.72	46.46	81.59	65.23	52.34	47.41	30.67	20.77	20.25	30.42	29.80	36.70	44.60	46
DML 305 / 305s	55.95	52.69	60.31	56.97	61.45	56.49	55.97	51.44	50.72	46.46	81.59	65.23	52.34	47.41	48.61	32.93	32.10	48.23	47.24	58.20	70.70	46
DML 306 / 306s	55.95	52.69	60.31	56.97	61.45	56.49	55.97	51.44	50.72	46.46	81.59	65.23	52.34	47.41	60.17	40.75	39.73	59.69	58.47	72.00	87.50	46
DML 307s	55.95	52.69	60.31	56.97	61.45	56.49	55.97	51.44	50.72	46.46	81.59	65.23	52.34	47.41	69.46	47.05	45.86	68.91	67.50	83.10	101.01	46
DML 309s	55.95	52.69	60.31	56.97	61.45	56.49	55.97	51.44	50.72	46.46	81.59	65.23	52.34	47.41	79.18	53.63	52.28	78.55	76.94	94.70	115.14	35
DML 413	75.56	71.15	81.44	76.93	82.98	76.28	75.57	69.46	68.49	62.73	110.18	88.08	70.68	64.02	19.47	13.19	12.86	19.32	18.92	23.30	28.32	35
DML 414 / 414s	75.56	71.15	81.44	76.93	82.98	76.28	75.57	69.46	68.49	62.73	110.18	88.08	70.68	64.02	31.84	21.56	21.02	31.59	30.94	38.10	46.30	46
DML 415 / 415S	75.56	71.15	81.44	76.93	82.98	76.28	75.57	69.46	68.49	62.73	110.18	88.08	70.68	64.02	51.58	34.94	34.06	51.17	50.12	61.70	75.01	46
DML 417s	75.56	71.15	81.44	76.93	82.98	76.28	75.57	69.46	68.49	62.73	110.18	88.08	70.68	64.02	84.69	57.37	55.92	84.03	82.30	101.30	123.17	46
DML 419s	75.56	71.15	81.44	76.93	82.98	76.28	75.57	69.46	68.49	62.73	110.18	88.08	70.68	64.02	91.01	61.64	60.09	90.29	88.44	121.80	132.35	35
DML 607s	111.91	105.38	120.62	113.94	122.90	112.97	111.93	102.87	101.44	92.91	163.19	130.46	104.69	94.82	79.42	53.79	52.44	78.79	77.17	95.00	115.49	35
DML 609s	111.91	105.38	120.62	113.94	122.90	112.97	111.93	102.87	101.44	92.91	163.19	130.46	104.69	94.82	95.42	64.63	63.01	94.67	92.73	114.17	138.77	667
DML 757s	151.11	142.30	162.88	153.86	165.95	152.55	151.15	138.91	136.98	125.46	220.36	176.17	141.36	128.04	81.75	55.37	53.98	81.11	79.44	97.81	118.88	507
DML 759s	151.11	142.30	162.88	153.86	165.95	152.55	151.15	138.91	136.98	125.46	220.36	176.17	141.36	128.04	101.79	68.94	67.21	100.98	98.91	121.79	148.02	507

[1]) Drying capacity is based on following moisture content test standards before and after drying:
– R134a: 1050 – 50 ppm W
– R404A, R507: 1020 – 50 ppm W
– R407C: 1020 – 50 ppm W
– R410A: 1050 – 50 ppm W
– R290: 565 – 15 ppm W
– R32: 1040 ppm W – 50 ppm W
In accordance with ARI 710-2004

[2]) Given in accordance with ARI 710-2004 for:
t_e = -15 °C
t_c = 30 °C
Δp = 0.07 bar

Approvals
UL US, file no. SA 6398
PED 2014/68/EU -a4p3

Technical data

DML - Hermetic filter drier

Drying and liquid capacity (US units)

Type	Drying capacity [lb] of refrigerant [1]														Liquid capacity [TR] [2]							Max. working pressure MWP [psig]
	R134a		R404A		R507		R407C		R410A		R290		R32		R134a	R404A	R507	R407C	R410A	R290	R32	
	[°F]																					
	75	125	75	125	75	125	75	125	75	125	75	125	75	125								
DML 1.52 s	6.4	6.0	6.9	6.5	7.0	6.5	6.4	5.9	5.8	5.3	9.58	7.66	6.0	5.4	0.80	0.54	0.53	0.80	0.78	1.20	1.17	667
DML 032 / 032s	10.10	9.51	10.89	10.29	11.10	10.20	10.11	9.29	9.16	8.39	15.09	12.07	9.45	8.56	1.75	1.19	1.16	1.74	1.70	2.00	2.55	667
DML 032.5s	10.10	9.51	10.89	10.29	11.10	10.20	10.11	9.29	9.16	8.39	15.09	12.07	9.45	8.56	2.75	1.86	1.82	2.73	2.67	3.29	4.00	667
DML 033 / 033s	10.10	9.51	10.89	10.29	11.10	10.20	10.11	9.29	9.16	8.39	15.09	12.07	9.45	8.56	3.22	1.91	2.12	3.19	2.74	3.86	4.68	667
DML 034s	10.10	9.51	10.89	10.29	11.10	10.20	10.11	9.29	9.16	8.39	15.09	12.07	9.45	8.56	4.70	3.30	3.20	4.81	4.89	5.66	7.16	667
DML 052 / 052s	16.52	15.55	17.80	16.82	18.14	16.67	16.52	15.18	14.97	13.71	24.67	19.72	15.45	13.99	1.86	1.26	1.23	1.85	1.81	2.23	2.71	667
DML 052.5s	16.52	15.55	17.80	16.82	18.14	16.67	16.52	15.18	14.97	13.71	24.67	19.72	15.45	13.99	3.46	2.35	2.29	3.44	3.37	4.14	5.04	667
DML 053 / 053s	16.52	15.55	17.80	16.82	18.14	16.67	16.52	15.18	14.97	13.71	24.67	19.72	15.45	13.99	4.72	3.20	3.12	4.68	4.59	5.66	6.86	667
DML 054s	16.52	15.55	17.80	16.82	18.14	16.67	16.52	15.18	14.97	13.71	24.67	19.72	15.45	13.99	6.25	4.24	4.13	6.21	6.08	7.49	9.10	667
DML 055s	16.52	15.55	17.80	16.82	18.14	16.67	16.52	15.18	14.97	13.71	24.67	19.72	15.45	13.99	7.67	5.19	5.06	7.61	7.45	9.17	11.15	667
DML 082 / 082s	26.74	25.18	28.82	27.23	29.37	26.99	26.75	24.58	24.24	22.20	39.94	31.93	25.01	22.66	1.85	1.25	1.22	1.83	1.79	2.20	2.69	667
DML 082.5s	26.74	25.18	28.82	27.23	29.37	26.99	26.75	24.58	24.24	22.20	39.94	31.93	25.01	22.66	3.55	2.40	2.34	3.52	3.45	4.26	5.16	667
DML 083 / 083s	26.74	25.18	28.82	27.23	29.37	26.99	26.75	24.58	24.24	22.20	39.94	31.93	25.01	22.66	4.65	3.15	3.07	4.61	4.52	5.57	6.76	667
DML 084 / 084s	26.74	25.18	28.82	27.23	29.37	26.99	26.75	24.58	24.24	22.20	39.94	31.93	25.01	22.66	6.12	4.15	4.04	6.07	5.95	7.31	8.90	667
DML 085 / 085s	26.74	25.18	28.82	27.23	29.37	26.99	26.75	24.58	24.24	22.20	39.94	31.93	25.01	22.66	7.16	4.85	4.73	7.10	6.96	8.57	10.41	667
DML 162 / 162s	59.72	56.24	64.37	60.81	65.59	60.29	59.74	54.90	54.14	49.59	89.22	71.32	55.87	50.60	1.93	1.31	1.27	1.91	1.88	2.31	2.81	667
DML 163 / 163s	59.72	56.24	64.37	60.81	65.59	60.29	59.74	54.90	54.14	49.59	89.22	71.32	55.87	50.60	5.55	3.76	3.66	5.50	5.39	6.63	8.07	667
DML 164 / 164s	59.72	56.24	64.37	60.81	65.59	60.29	59.74	54.90	54.14	49.59	89.22	71.32	55.87	50.60	7.73	5.23	5.10	7.67	7.51	9.26	11.24	667
DML 165 / 165s	59.72	56.24	64.37	60.81	65.59	60.29	59.74	54.90	54.14	49.59	89.22	71.32	55.87	50.60	10.80	7.32	7.13	10.72	10.50	12.91	15.71	667
DML 166 / 166s	59.72	56.24	64.37	60.81	65.59	60.29	59.74	54.90	54.14	49.59	89.22	71.32	55.87	50.60	12.62	8.55	8.33	12.52	12.26	15.09	18.35	667
DML 167s	59.72	56.24	64.37	60.81	65.59	60.29	59.74	54.90	54.14	49.59	89.22	71.32	55.87	50.60	14.20	9.62	9.38	14.09	13.80	17.00	20.66	667
DML 303 / 303s	123.36	116.16	132.96	125.60	135.47	124.53	123.39	113.40	111.82	102.42	179.88	143.81	115.40	104.52	5.85	3.96	3.86	5.81	5.69	7.00	8.51	667
DML 304 / 304s	123.36	116.16	132.96	125.60	135.47	124.53	123.39	113.40	111.82	102.42	179.88	143.81	115.40	104.52	8.76	5.93	5.79	8.69	8.51	10.49	12.74	667
DML 305 / 305s	123.36	116.16	132.96	125.60	135.47	124.53	123.39	113.40	111.82	102.42	179.88	143.81	115.40	104.52	13.89	9.41	9.17	13.78	13.50	16.63	20.20	667
DML 306 / 306s	123.36	116.16	132.96	125.60	135.47	124.53	123.39	113.40	111.82	102.42	179.88	143.81	115.40	104.52	17.19	11.64	11.35	17.06	16.71	20.57	25.00	667
DML 307s	123.36	116.16	132.96	125.60	135.47	124.53	123.39	113.40	111.82	102.42	179.88	143.81	115.40	104.52	19.84	13.44	13.10	19.69	19.29	23.74	28.86	667
DML 309s	123.36	116.16	132.96	125.60	135.47	124.53	123.39	113.40	111.82	102.42	179.88	143.81	115.40	104.52	22.62	15.32	14.94	22.44	21.98	27.06	32.90	667
DML 413	166.57	156.86	179.54	169.60	182.93	168.16	166.61	153.13	151.00	138.30	242.90	194.19	155.82	141.14	5.56	3.77	3.67	5.52	5.41	6.66	8.09	667
DML 414 / 414s	166.57	156.86	179.54	169.60	182.93	168.16	166.61	153.13	151.00	138.30	242.90	194.19	155.82	141.14	9.10	6.16	6.01	9.02	8.84	10.89	13.23	667
DML 415 / 415S	166.57	156.86	179.54	169.60	182.93	168.16	166.61	153.13	151.00	138.30	242.90	194.19	155.82	141.14	14.74	9.98	9.73	14.62	14.32	17.63	21.43	667
DML 417s	166.57	156.86	179.54	169.60	182.93	168.16	166.61	153.13	151.00	138.30	242.90	194.19	155.82	141.14	24.20	16.39	15.98	24.01	23.52	28.94	35.19	667
DML 419s	166.57	156.86	179.54	169.60	182.93	168.16	166.61	153.13	151.00	138.30	242.90	194.19	155.82	141.14	26.00	17.61	17.17	25.80	25.27	34.80	37.81	507
DML 607s	246.71	232.33	265.92	251.20	270.94	249.06	246.77	226.80	223.64	204.84	359.77	287.62	230.79	209.04	22.69	15.37	14.98	22.51	22.05	27.14	33.00	507
DML 609s	246.71	232.33	265.92	251.20	270.94	249.06	246.77	226.80	223.64	204.84	359.77	287.62	230.79	209.04	27.26	18.47	18.00	27.05	26.49	32.62	39.65	667
DML 757s	333.15	313.72	359.08	339.21	365.86	336.32	333.23	306.25	301.99	276.60	485.81	388.38	311.65	282.28	23.36	15.82	15.42	23.17	22.70	27.95	33.97	507
DML 759s	333.15	313.72	359.08	339.21	365.86	336.32	333.23	306.25	301.99	276.60	485.81	388.38	311.65	282.28	29.08	19.70	19.20	28.85	28.26	34.80	42.29	507

[1]) Drying capacity is based on following moisture content test standards before and after drying:
- *– R134a: 1050 – 50 ppm W*
- *– R404A, R507: 1020 – 50 ppm W*
- *– R407C: 1020 – 50 ppm W*
- *– R410A: 1050 – 50 ppm W*
- *– R290: 565 – 15 ppm W*
- *– R32: 1040 ppm W – 50 ppm W*

In accordance with ARI 710-2004

[2]) Given in accordance with ARI 710-2004 for:
- $t_e = 5$ °F
- $t_c = 85$ °F
- $\Delta p = 1$ psig

Approvals
UL US, file no. SA 6398
PED 2014/68/EU -a4p3

Ordering

DML - Flare

Ordering

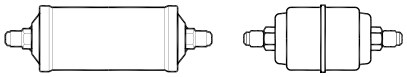

Type	Connection		Multipack no.
	[in]	[mm]	
DML 032	1/4	6	023Z5035 [1])
DML 033	3/8	10	023Z5036 [1])
	3/8	10	023Z5090
DML 052	1/4	6	023Z5037
DML 053	3/8	10	023Z5038
DML 082	1/4	6	023Z5039
DML 083	3/8	10	023Z5040
DML 084	1/2	12	023Z5041
DML 085	5/8	16	023Z5073
DML 162	1/4	6	023Z5042
DML 163	3/8	10	023Z5043
DML 164	1/2	12	023Z5044
DML 165	5/8	16	023Z5045
DML 166	3/4	19	023Z5046
DML 303	3/8	10	023Z0049
DML 304	1/2	12	023Z0050
DML 305	5/8	16	023Z0051
DML 306	3/4	19	023Z0193
DML 385	5/8	16	023Z0189
DML 413	3/8	10	023Z0108
DML 414	1/2	12	023Z0109
DML 415	5/8	16	023Z0110
DML 416	3/4	19	023Z0195

[1]) Wire mesh in filter drier outlet

Ordering

DML - Solder (pure copper)

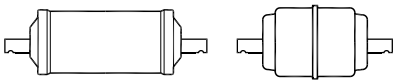

Ordering

Type	Connection [in]	Multipack Code no.	Connection [mm]	Multipack Code no.
DML 1.52s	1/4	023Z8253	–	–
DML 1.52x2 / 2s	1/4	023Z8250	–	–
DML 032s	1/4	023Z5048 [1])	6	–
DML 032.5s	5/16	023Z5049	8	–
DML 033s	3/8	023Z5050	10	023Z5051
DML 034s	1/2	023Z5121	12	–
DML 052s	1/4	023Z5053	6	023Z5052
DML 053s	3/8	023Z5054	10	023Z5055
DML 054s	1/2	023Z5101	3.8	–
DML 082s	1/4	023Z5057	6	–
DML 082.5s	5/16	023Z5117	8	–
DML 083s	3/8	023Z5058	10	023Z5059
DML 084s	1/2	023Z5061	12	023Z5060
DML 085s	5/8	023Z5072	16	–
DML 162s	1/4	023Z5063	6	–
DML 163s	3/8	023Z5064	10	023Z5065
DML 164s	1/2	023Z5067	12	023Z5066
DML 165s	5/8	023Z5068	16	–
DML 166s	3/4	023Z5071	19	–
DML 167s	7/8	023Z5069	22	–
DML 303s	3/8	023Z0067	10	–
DML 304s	1/2	023Z0068	12	–
DML 305s	5/8	023Z0069	16	–
DML 306s	3/4	023Z0070	19	–
DML 307s	7/8	023Z0071	22	–
DML 309s	1 1/8	023Z0072	28	–
DML 414s	1/2	023Z0111	12	–
DML 415s	5/8	023Z0112	16	–
DML 417s	7/8	023Z0113	22	–
DML 419s	1 1/8	023Z0114	28	–
DML 604s	1/2	–	12	–
DML 607s	7/8	023Z0073	22	–
DML 609s	1 1/8	023Z0074	28	–
DML 757s	7/8	023Z0117	22	–
DML 759s	1 1/8	023Z0118	28	–

[1]) Wire mesh in filter drier outlet

This product is approved for R290, R600 and R600a by ignition source assessment in accordance to standard EN13463-1. Only solder versions (cu-plated / pure copper) and connection sizes below 25 mm are approved for flammable refrigerants.

Ordering

DML - Solder (cu-plated)

Ordering

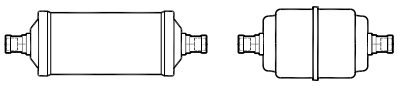

Type	Connection [in]	Multipack Code no.	Connection [mm]	Multipack Code no.
DML 032s	1/4	023Z4552	6	023Z4551
DML 032.5s	5/16	023Z4553	8	–
DML 033s	3/8	023Z4555	10	023Z4554
DML 034s	1/2	023Z4556	12	023Z4557
DML 052s	1/4	023Z4559	6	023Z4558
DML 052.5s	5/16	023Z4560	6	–
DML 053s	3/8	023Z4562	10	023Z4561
DML 054s	1/2	023Z4564	12	023Z4563
DML 055s	5/8	023Z4565	16	–
DML 082s	1/4	023Z4567	6	023Z4566
DML 083s	3/8	023Z4570	10	023Z4569
DML 084s	1/2	023Z4572	12	023Z4571
DML 085s	5/8	023Z4573	16	–
DML 162s	1/4	023Z4575	6	023Z4574
DML 163s	3/8	023Z4578	10	023Z4577
DML 164s	1/2	023Z4580	12	023Z4579
DML 165s	5/8	023Z4581	16	–
DML 166s	3/4	023Z4582	19	–
DML 167s	7/8	023Z4583	22	–
DML 303s	3/8	023Z4585	10	023Z4584
DML 304s	1/2	023Z4587	12	023Z4586
DML 305s	5/8	023Z4588	16	–
DML 306s	3/4	023Z4589	19	–
DML 307s	7/8	023Z4590	22	–
DML 309s	1 1/8	023Z4592	28	023Z4591
DML 414s	1/2	023Z4594	12	023Z4593
DML 415s	5/8	023Z4595	16	–
DML 417s	7/8	023Z4596	22	–
DML 419s	1 1/8	023Z4598	28	023Z4597
DML 604s	1/2	023Z4600	12	023Z4599
DML 605s	1/2	–	18	023Z4601
DML 607s	7/8	023Z4602	22	–
DML 609s	1 1/8	023Z4604	28	023Z4603
DML 757s	7/8	023Z4605	22	–
DML 759s	1 1/8	023Z4607	28	023Z4606

This product is approved for R290, R600 and R600a by ignition source assessment in accordance to standard EN13463-1. Only solder versions (cu-plated / pure copper) and connection sizes below 25 mm are approved for flammable refrigerants.

DMT, Hermetic filter drier for CO_2

DMT **ELIMINATOR®** hermetic filter driers are designed for use in CO_2 systems, and protect the system from moisture, acids and solid particles, eliminating harmful chemical reactions and abrasive impurities. DMT driers have a core composition of 100% Molecular Sieve.

DMT hermetic filter driers are designed for applications requiring the highest moisture capacity, and the lowest possible leak rate. They are available with flare and solder (cu-plated steel) connections and are designed to support max. working pressure as high as 140 bar / 2030 psig.



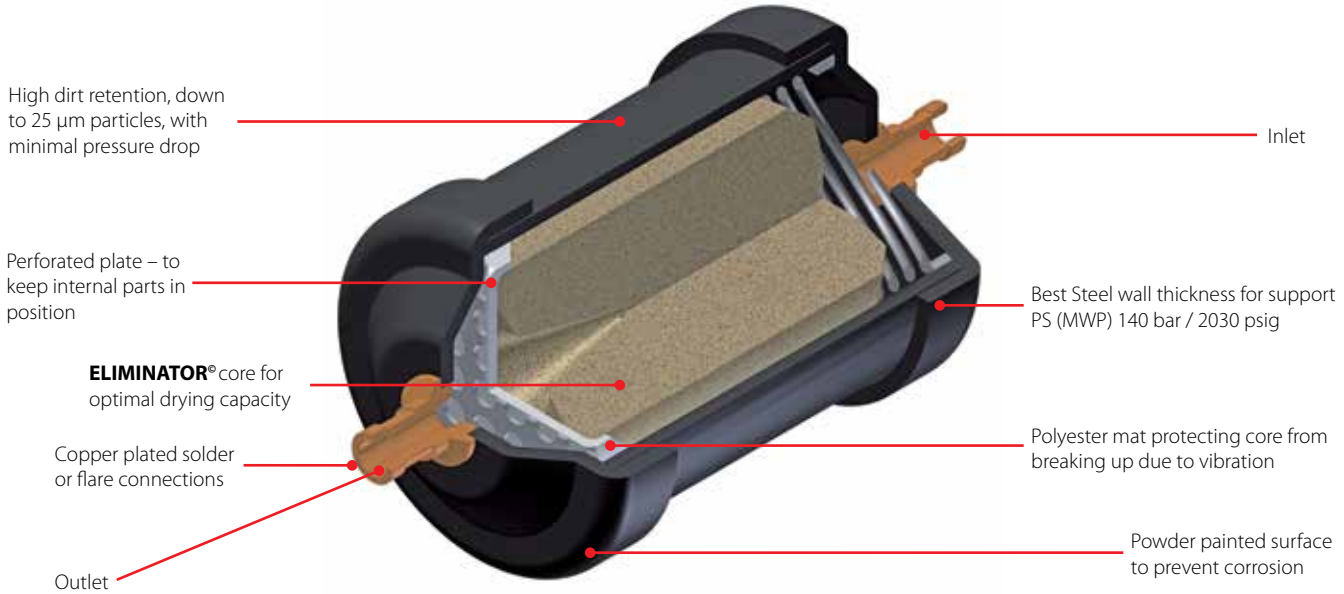

Facts

Application:
- liquid line in CO_2 systems
- Applicable to R744 (CO_2) refrigerants
  For a fully updated list of approved refrigerants, visit www.products.danfoss.com and search for individual code numbers, where refrigerants are listed as part of product specifications.

- Support PS / MWP up to 140 bar / 2030 psig
- 100% 3 Å Molecular Sieve core
- High drying capacity minimizing the risk of acid formation (hydrolysis)
- Will not deplete oil additives
- Available with solder (copper plated) and flare connections (i.e. standard, flare o-ring and NPT)
- Lowest possible leak rate

- Corrosion resistant powder-painted finish. Special coating for marine applications available upon request
- Allows installation with any orientation provided the arrow is in the flow direction,
- Available in sizes from 8 to 13 cubic inches
- 25 µm (0.001 in) filter provides high retention with minimal pressure drop
- No residual moisture when delivered
- Thermally stable up to 120 °C / 250 °F

Technical data and ordering

DMT - Hermetic filter drier for CO_2

Drying and liquid capacity

Type	Drying capacity [1]						Liquid capacity [2]		Max. working pressure PS / MWP [bar / psig]	Additional Data		
	R 744 CO_2 -6.6 °C / 20 °F			R 744 CO_2 24 °C / 75 °F			R 744 CO_2 Flare / Cu-plated			Volume [l]		
	H_2O [g]	Ref [Kg]	Drop Water	H_2O [g]	Ref [Kg]	Drop Water	[kW]	[TR]		Shell	Core	Net
DMT 082 / 082s	10.66	11.35	213.29	9.80	10.43	196.01	4.20	1.20	140 / 2030	0.18	0.06	0.12
DMT 083 / 083s	10.66	11.35	213.29	9.80	10.43	196.01	11.90	3.40	140 / 2030	0.18	0.06	0.12
DMT 084s	10.66	11.35	213.29	9.80	10.43	196.01	16.10	4.60	140 / 2030	0.18	0.06	0.12
DMT 133 / 133s	17.25	18.35	345.03	15.85	16.87	317.08	11.20	3.20	140 / 2030	0.32	0.17	0.15
DMT 134s	17.25	18.35	345.03	15.85	16.87	317.08	14.00	4.00	140 / 2030	0.32	0.17	0.15

The moisture test was performed according with ASHRAE standard on liquid phase

[1] ***Drying capacity***
Drying capacity is based on following moisture content test standards before and after drying:
EPD: From 1110 ppm W to 50 ppm W at 24 °C / 75 °F
EPD: From 445 ppm W to 50 ppm W at -6.6 °C / 20 °F

[2] ***Liquid capacity***
Given in accordance with ARI 710-2004 for:
t_e = -15 °C / 5 °F
t_c = 30 °C / 85 °F
Δp = 0.07 bar / 1 psig

Termperature range:
-40 – 100 °C / -40 – 212 °F

DMT - Flare

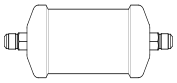

Ordering

Type	Connection [in]	Code no.
DMT 082	1/4	023Z8407
DMT 083	3/8	023Z8406
DMT 133	3/8	023Z8405
DMT 133 NPT	1/4	023Z8410

DMT - Solder (cu-plated)

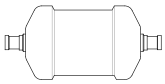

Ordering

Type	Connection [in]	Code no.	Multi-pack Code no.
DMT 082s	1/4	023Z8408	023Z8415
DMT 083s	3/8	023Z8409	023Z8416
DMT 084s	1/2	023Z8412	023Z8417
DMT 133s	3/8	023Z8402	023Z8418
DMT 134s	1/2	023Z8411	023Z8419

DAS, Hermetic burn-out filter drier

DAS **ELIMINATOR®** hermetic burn-out filter driers are used in the suction line to clean up refrigeration and air conditioning systems with flourinated refrigerants after a compressor motor burn-out.

The solid core, which is composed of 70% activated alumina and 30% Molecular Sieve, adsorbs harmful acids as well as moisture, in order to protect the new compressor against failure.

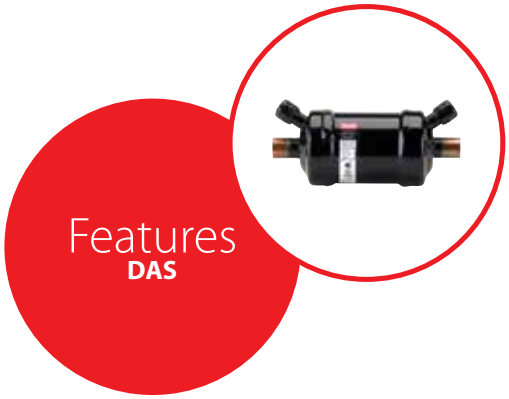

Features
DAS

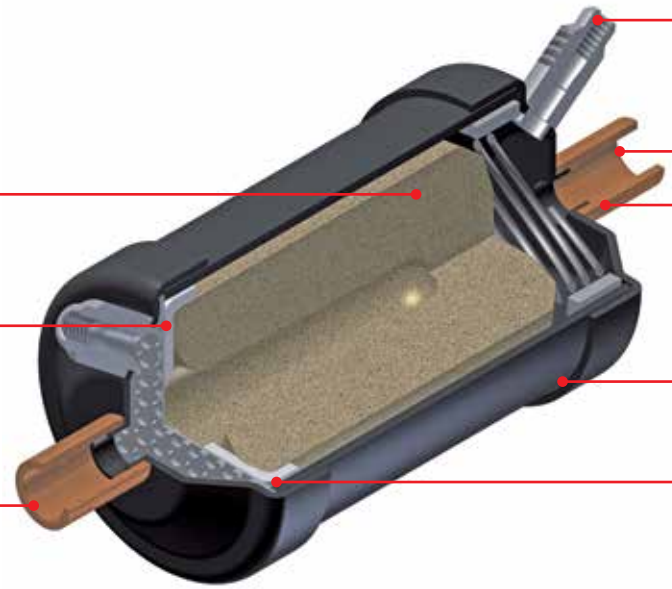

Facts

Application:
- Traditional refrigeration
- Air conditioning units
- Transport refrigeration
- Applicable to R22, R143a, R407C, R410A and R507
  For a fully updated list of approved refrigerants, visit www.products.danfoss.com and search for individual code numbers, where refrigerants are listed as part of product specifications.
- The large diameter of the hermetic burn-out filter drier means that flow velocity is suitably low and the pressure drop minimal
- Bonded solid core grains eliminate powder formation
- Corrosion resistant powder-painted finish, tested for 500 hrs in salt spray
- Installation with any orientation provided the flow is in the arrow direction
- Available in sizes from 8 to 60 cubic inches

Technical data and ordering

DAS - Hermetic burn-out filter drier

Rated acid capacities

Type	Rated capacity, Q_n [1]						Acid capacity [2]	Max. working pressure PS / MWP [bar / psig]
	R407C / R410A		R134a		R404A / R507			
	[TR]	[kW]	[TR]	[kW]	[TR]	[kW]	[g]	
DAS 083	1.5	5.3	1.0	3.5	1.3	4.5	3.8	35 / 507
DAS 084	2.6	9.1	1.6	5.5	2.3	8.0	3.8	35 / 507
DAS 085	4.1	14.5	2.6	9.0	3.6	12.5	3.8	35 / 507
DAS 086	5.4	19.0	3.3	11.5	4.7	16.5	3.8	35 / 507
DAS 164	2.7	9.5	1.7	6.0	2.4	8.5	8.7	35 / 507
DAS 165	4.2	14.7	2.7	9.5	3.7	13.0	8.7	35 / 507
DAS 166	5.6	19.6	3.5	12.2	4.9	17.0	8.7	35 / 507
DAS 167	6.2	21.7	3.9	13.5	5.4	19.0	8.7	35 / 507
DAS 305	5.0	17.5	3.1	11.0	4.3	15.0	17.3	35 / 507
DAS 306	6.3	22.0	4.0	14.0	5.4	19.0	17.3	35 / 507
DAS 307	7.3	25.6	4.6	16.0	6.3	22.0	17.3	35 / 507
DAS 309	8.8	30.7	5.5	19.3	7.6	26.6	17.3	35 / 507
DAS 417	8.1	28.4	5.0	17.5	7.0	24.5	22.6	35 / 507
DAS 419	9.8	34.3	6.1	21.5	8.5	29.8	22.6	35 / 507
DAS 607	5.5	19.2	3.9	13.7	5.5	19.2	34.6	35 / 507

[1]) Rated capacity is stated at:
evaporating temperature t_e = 4 °C / 39.2 °F
pressure drop Δp = 0.07 bar/ 1 psig
[2]) Adsorption capacity of oleic acid at 0.05 TAN (Total Acid Number)

Capacities for other temperatures than 4 °C / 39.2 °F are calculated by use of correction factors. Divide your actual evaporator capacity with the correction factor given for your actual evaporating temperature. Look up the capacity table for the necessary rated capacity
$Q_e / F_e = Q_n$
Q_e = Actual evaporator capacity
Q_n = Nominal capacity
F_e = Correction factor

DAS - Flare

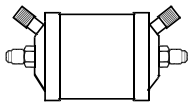

Ordering

Type	Connection [in]	Code no.
DAS 084VV	1/2	023Z1002
DAS 164VV	1/2	023Z1007
DAS 165VV	5/8	023Z1008

DAS - Solder (pure copper)

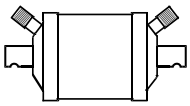

Ordering

Type	Connection [in]	Code no.
DAS 084sVV	1/2	023Z1004
DAS 085sVV	5/8	023Z1005
DAS 086sVV	3/4	023Z1006
DAS 164sVV	1/2	023Z1009
DAS 165sVV	5/8	023Z1010
DAS 166sVV	3/4	023Z1011
DAS 167sVV	7/8	023Z1012
DAS 305sVV	5/8	023Z1013
DAS 306sVV	3/4	023Z1014
DAS 307sVV	7/8	023Z1015
DAS 309sVV	1 1/8	023Z1016
DAS 417sVV	7/8	023Z1017
DAS 419sVV	1 1/8	023Z1018
DAS 607sVV	7/8	023Z1019
DAS 609sVV	1 1/8	023Z1020

Correction factors F_e for evaporating temperatures [°C] / [°F]

[°C] / [°F]	4 / 39.2	0 / 32	-5 / 23	-10 / 14	-15 / 5	-20 / -4	-25 / -13	-30 / -22	-35 / -31	-40 / -40
F_e	1	0.9	0.75	0.6	0.5	0.4	0.35	0.25	0.2	0.15

Example
To select a hermetic burn-out filter drier for a R22 plant with an evaporator capacity at 8.5 kW / 2.41 TR at -20 / -4 °F you may use a hermetic burn-out filter drier with a rated capacity of 8.5 / 0.4 = 21.25 kW / 6.02 TR
For example DAS 306

DCR, Filter drier with replaceable solid core

DCR **ELIMINATOR®** filter driers with replaceable solid core protect refrigeration, freezing and air conditioning systems from moisture, acids and solid particles.
Besides being able to meet the demanding requirements of high working pressure levels when operating with R410A thanks to replaceable solid cores the DCR programme offers flexibility with respect to different applications.

Core types:
- 48-DC for HFC, HCFC systems and mineral or AB oils
- 48-DM for HFC, HCFC systems and POE or PAG oils
- 48 DA for acid adsorption after burnout
- 48-F strainer for retaining dirt

Cores / inserts are ordered separately.



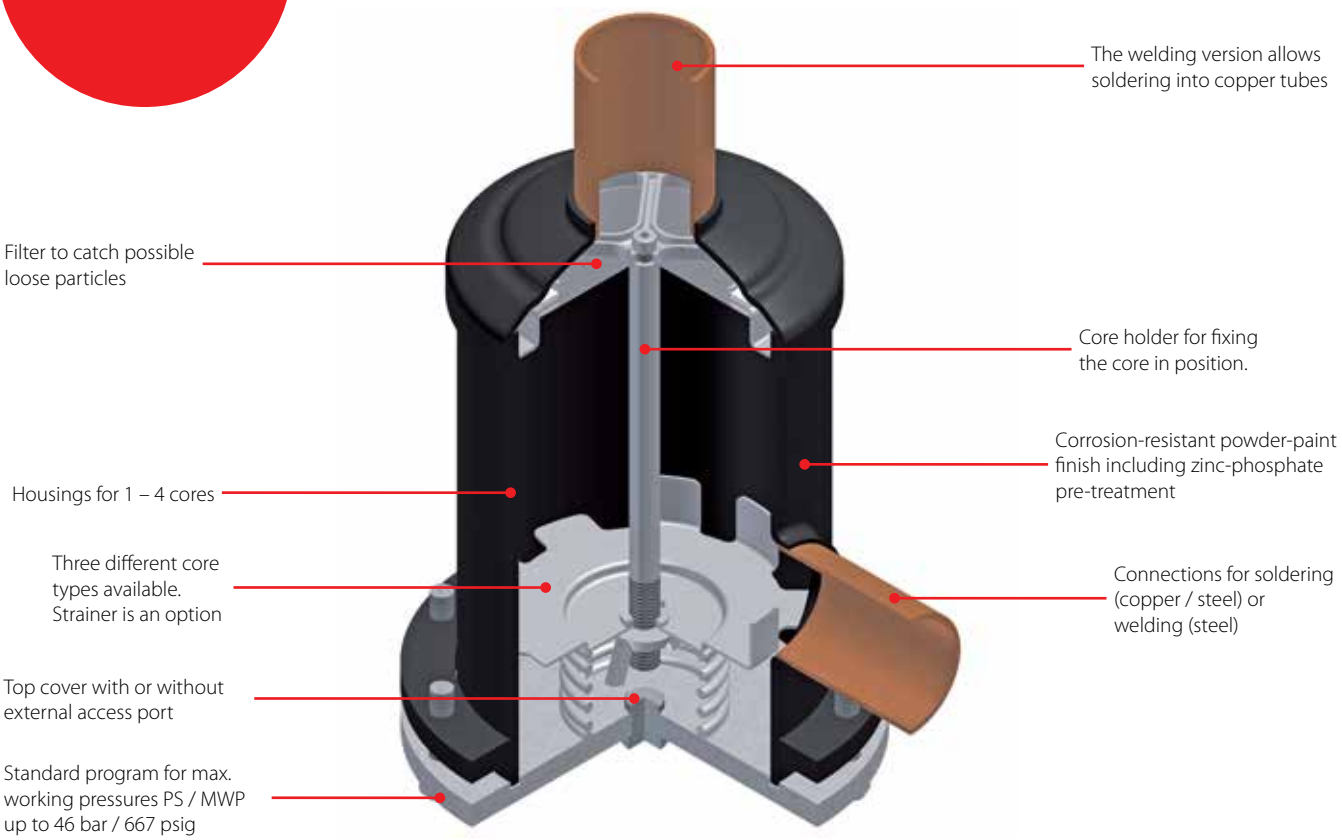

Facts

Application:
- Highly efficient dirt retaining capabilities on both the suction and the liquid line
- Can be used in all environments. Shell is zinc-phosphated, and with corrosion resistant powder-painted finish, tested for 500 hrs in salt spray (acc. to ASTM B117, ISO 12944-6 (blistering))
- The core holder requires minimum free space to remove the core for replacement
- Applicable to R22, R134a, R404A, R410A, R407C, R23, R1234ze, R407f, R452A, R449A, R448A and R450A
- For convenient filter drier commissioning, Shell is designed to remain in place while cores, cover and housing are assembled
- Can be installed in any position
- 48-DM core for liquid line application (100% molecular sieve). Provides high moisture adsorption at low and high condensing temperatures. Effective protection against impurities
- 48-DC core with 80% molecular sieve and 20% activated alumina,adsorbs moisture and acid in the system throughout the entire temperature range
- 48-DA 30% molecular sieve and 70% activated alumina solid core suitable after compressor burn-out: high acid adsorption and standard water adsorption
- 48-F strainer:
  - Retains dirt particles larger than 15 µm
  - For use direct in DCR housings
  - Utilized in the suction or liquid line

Technical data and ordering

DCR - Filter drier with replaceable solid core

Drying and liquid capacity, type 48-DM (SI units)

Type	Number of cores	Drying capacity [kg] of refrigerant [1]										Liquid capacity [kW] [2]					Max. working pressure PS [bar]
		R134a		R404A		R507		R407C		R410A		R134a	R404A	R507	R407C	R410A	
		[°C]															
		24	52	24	52	24	52	24	52	24	52						
DCR 0485	1	80.1	75.4	86.3	81.6	88.0	80.9	81.1	74.6	80.1	73.6	63.59	43.91	42.88	69.82	65.48	46
DCR 0487	1	80.1	75.4	86.3	81.6	88.0	80.9	81.1	74.6	80.1	73.6	89.95	62.11	60.65	98.76	92.62	46
DCR 0489	1	80.1	75.4	86.3	81.6	88.0	80.9	81.1	74.6	80.1	73.6	148.28	102.39	99.98	162.81	152.67	46
DCR 04811	1	80.1	75.4	86.3	81.6	88.0	80.9	81.1	74.6	80.1	73.6	176.70	122.01	119.15	194.01	181.94	46
DCR 04813	1	80.1	75.4	86.3	81.6	88.0	80.9	81.1	74.6	80.1	73.6	172.98	119.44	116.64	189.93	178.11	46
DCR 04817	1	80.1	75.4	86.3	81.6	88.0	80.9	81.1	74.6	80.1	73.6	229.70	158.61	154.88	252.21	236.51	46
DCR 04821	1	80.1	75.4	86.3	81.6	88.0	80.9	81.1	74.6	80.1	73.6	287.09	198.23	193.58	315.22	295.60	46
DCR 0967	2	160.2	150.9	172.7	163.1	175.9	161.7	162.3	149.3	160.2	147.3	121.81	84.11	82.14	133.75	125.42	46
DCR 0969	2	160.2	150.9	172.7	163.1	175.9	161.7	162.3	149.3	160.2	147.3	173.20	119.59	116.78	190.17	178.33	46
DCR 09611	2	160.2	150.9	172.7	163.1	175.9	161.7	162.3	149.3	160.2	147.3	196.80	135.89	132.70	216.08	202.63	46
DCR 09613	2	160.2	150.9	172.7	163.1	175.9	161.7	162.3	149.3	160.2	147.3	234.26	161.75	157.96	257.21	241.20	46
DCR 09617	2	160.2	150.9	172.7	163.1	175.9	161.7	162.3	149.3	160.2	147.3	311.07	214.79	209.75	341.55	320.29	35[3]) / 46[4])
DCR 1449	3	240.3	226.3	259.0	244.7	263.9	242.6	243.4	223.9	240.3	220.9	193.08	133.32	130.19	211.99	198.80	35[3]) / 46[4])
DCR 14411	3	240.3	226.3	259.0	244.7	263.9	242.6	243.4	223.9	240.3	220.9	239.14	165.12	161.24	262.56	246.22	35[3]) / 46[4])
DCR 14413	3	240.3	226.3	259.0	244.7	263.9	242.6	243.4	223.9	240.3	220.9	284.65	196.55	191.93	312.54	293.09	35[3]) / 46[4])
DCR 14417	3	240.3	226.3	259.0	244.7	263.9	242.6	243.4	223.9	240.3	220.9	377.99	261.00	254.87	415.02	389.19	28[3]) / 40[4])
DCR 19211	4	320.4	301.7	345.3	326.2	351.8	323.4	324.6	298.5	320.5	294.5	275.14	189.98	185.52	302.09	283.29	28[3]) / 40[4])
DCR 19213	4	320.4	301.7	345.3	326.2	351.8	323.4	324.6	298.5	320.5	294.5	327.51	226.14	220.83	359.59	337.21	28[3]) / 40[4])
DCR 19217	4	320.4	301.7	345.3	326.2	351.8	323.4	324.6	298.5	320.5	294.5	465.33	321.30	313.76	510.91	479.12	28[3]) / 40[4])

[1]) Drying capacity is based on following moisture content test standards before and after drying:
– R134a: 1050 – 50 ppm W
– R404A, R507: 1020 – 50 ppm W
– R407C: 1020 – 50 ppm W
– R410A: 1050 – 50 ppm W
In accordance with ARI 710-2004

[2]) Given in accordance with ARI 710-2004 for:
t_e = -15 °C
t_c = 30 °C
Δp = 0.07 bar

[3]) For usage with strainer or as a receiver application
[4]) For "drier" application using all the permissible cores

Technical data and ordering

DCR - Filter drier with replaceable solid core

Drying and liquid capacity, type 48-DM (US units)

Type	Number of cores	Drying capacity [lb] of refrigerant [1]										Liquid capacity [TR] [2]					Max. working pressure MWP [psig]
		R134a		R404A		R507		R407C		R410A							
		[°F]															
		75	125	75	125	75	125	75	125	75	125	R134a	R404A	R507	R407C	R410A	
DCR 0485	1	176.6	166.3	190.3	179.8	193.9	178.3	178.9	164.5	176.6	162.3	18.17	12.55	12.25	19.95	18.71	667
DCR 0487	1	176.6	166.3	190.3	179.8	193.9	178.3	178.9	164.5	176.6	162.3	25.70	17.75	17.33	28.22	26.46	667
DCR 0489	1	176.6	166.3	190.3	179.8	193.9	178.3	178.9	164.5	176.6	162.3	42.37	29.25	28.57	46.52	43.62	667
DCR 04811	1	176.6	166.3	190.3	179.8	193.9	178.3	178.9	164.5	176.6	162.3	50.49	34.86	34.04	55.43	51.98	667
DCR 04813	1	176.6	166.3	190.3	179.8	193.9	178.3	178.9	164.5	176.6	162.3	49.42	34.13	33.33	54.27	50.89	667
DCR 04817	1	176.6	166.3	190.3	179.8	193.9	178.3	178.9	164.5	176.6	162.3	65.63	45.32	44.25	72.06	67.57	667
DCR 04821	1	176.6	166.3	190.3	179.8	193.9	178.3	178.9	164.5	176.6	162.3	82.03	56.64	55.31	90.06	84.46	667
DCR 0967	2	353.2	332.6	380.7	359.6	387.8	356.5	357.8	329.1	353.2	324.7	34.80	24.03	23.47	38.21	35.84	667
DCR 0969	2	353.2	332.6	380.7	359.6	387.8	356.5	357.8	329.1	353.2	324.7	49.49	34.17	33.37	54.33	50.95	667
DCR 09611	2	353.2	332.6	380.7	359.6	387.8	356.5	357.8	329.1	353.2	324.7	56.23	38.83	37.91	61.74	57.90	667
DCR 09613	2	353.2	332.6	380.7	359.6	387.8	356.5	357.8	329.1	353.2	324.7	66.93	46.22	45.13	73.49	68.92	667
DCR 09617	2	353.2	332.6	380.7	359.6	387.8	356.5	357.8	329.1	353.2	324.7	88.88	61.37	59.93	97.58	91.51	667
DCR 1449	3	529.7	498.9	571.0	539.4	581.8	534.8	536.7	493.6	529.9	487.0	55.16	38.09	37.20	60.57	56.80	507[3]) / 667[4])
DCR 14411	3	529.7	498.9	571.0	539.4	581.8	534.8	536.7	493.6	529.9	487.0	68.32	47.18	46.07	75.02	70.35	507[3]) / 667[4])
DCR 14413	3	529.7	498.9	571.0	539.4	581.8	534.8	536.7	493.6	529.9	487.0	81.33	56.16	54.84	89.30	83.74	507[3]) / 667[4])
DCR 14417	3	529.7	498.9	571.0	539.4	581.8	534.8	536.7	493.6	529.9	487.0	108.00	74.57	72.82	118.58	111.20	507[3]) / 667[4])
DCR 19211	4	706.3	665.1	761.3	719.2	775.7	713.1	715.5	658.1	706.5	649.3	78.61	54.28	53.01	86.31	80.94	406[3]) / 580[4])
DCR 19213	4	706.3	665.1	761.3	719.2	775.7	713.1	715.5	658.1	706.5	649.3	93.57	64.61	63.09	102.74	96.35	406[3]) / 580[4])
DCR 19217	4	706.3	665.1	761.3	719.2	775.7	713.1	715.5	658.1	706.5	649.3	132.95	91.80	89.65	145.98	136.89	406[3]) / 580[4])

[1]) Drying capacity is based on the following moisture contents before and after drying:
– R134a: 1050 – 50 ppm W
– R404A, R507: 1020 – 50 ppm W
– R407C: 1020 – 50 ppm W
– R410A: 1050 – 50 ppm W
In accordance with ARI 710-2004

[2]) Liquid capacity given in accordance with ARI 710-2002 evaporating temperature:
t_e = 5 °F
t_c = 86 °F
Δp = 1 psig

[3]) For usage with strainer or as a receiver application
[4]) For "drier" application using all the permissible cores

Technical data and ordering

DCR - Filter drier with replaceable solid core

Drying and liquid capacity, type 48-DC (SI units)

Type	Number of cores	Drying capacity [kg] of refrigerant [1]										Liquid capacity [kW] [2]					Max. working pressure PS [bar]
		R134a		R404A		R507		R407C		R410A		R134a	R404A	R507	R22 / R407C	R410A	
		[°C]															
		24	52	24	52	24	52	24	52	24	52						
DCR 0485	1	62.4	58.8	67.3	63.6	68.6	63.0	63.2	58.2	62.4	57.4	63.59	43.91	42.88	69.82	65.48	46
DCR 0487	1	62.4	58.8	67.3	63.6	68.6	63.0	63.2	58.2	62.4	57.4	89.95	62.11	60.65	98.76	92.62	46
DCR 0489	1	62.4	58.8	67.3	63.6	68.6	63.0	63.2	58.2	62.4	57.4	148.28	102.39	99.98	162.81	152.67	46
DCR 04811	1	62.4	58.8	67.3	63.6	68.6	63.0	63.2	58.2	62.4	57.4	176.70	122.01	119.15	194.01	181.94	46
DCR 04813	1	62.4	58.8	67.3	63.6	68.6	63.0	63.2	58.2	62.4	57.4	172.98	119.44	116.64	189.93	178.11	46
DCR 04817	1	62.4	58.8	67.3	63.6	68.6	63.0	63.2	58.2	62.4	57.4	229.70	158.61	154.88	252.21	236.51	46
DCR 04821	1	62.4	58.8	67.3	63.6	68.6	63.0	63.2	58.2	62.4	57.4	287.09	198.23	193.58	315.22	295.60	46
DCR 0967	2	124.9	117.6	134.6	127.1	137.1	126.1	126.5	116.3	124.9	114.8	121.81	84.11	82.14	133.75	125.42	46
DCR 0969	2	124.9	117.6	134.6	127.1	137.1	126.1	126.5	116.3	124.9	114.8	173.20	119.59	116.78	190.17	178.33	46
DCR 09611	2	124.9	117.6	134.6	127.1	137.1	126.1	126.5	116.3	124.9	114.8	196.80	135.89	132.70	216.08	202.63	46
DCR 09613	2	124.9	117.6	134.6	127.1	137.1	126.1	126.5	116.3	124.9	114.8	234.26	161.75	157.96	257.21	241.20	46
DCR 09617	2	124.9	117.6	134.6	127.1	137.1	126.1	126.5	116.3	124.9	114.8	311.07	214.79	209.75	341.55	320.29	35[3]) / 46[4])
DCR 1449	3	187.3	176.4	201.9	190.7	205.7	189.1	189.7	174.5	187.3	172.2	193.08	133.32	130.19	211.99	198.80	35[3]) / 46[4])
DCR 14411	3	187.3	176.4	201.9	190.7	205.7	189.1	189.7	174.5	187.3	172.2	239.14	165.12	161.24	262.56	246.22	35[3]) / 46[4])
DCR 14413	3	187.3	176.4	201.9	190.7	205.7	189.1	189.7	174.5	187.3	172.2	284.65	196.55	191.93	312.54	293.09	35[3]) / 46[4])
DCR 14417	3	187.3	176.4	201.9	190.7	205.7	189.1	189.7	174.5	187.3	172.2	377.99	261.00	254.87	415.02	389.19	28[3]) / 40[4])
DCR 19211	4	249.7	235.2	269.2	254.3	274.3	252.1	253.0	232.7	249.8	229.6	275.14	189.98	185.52	302.09	283.29	28[3]) / 40[4])
DCR 19213	4	249.7	235.2	269.2	254.3	274.3	252.1	253.0	232.7	249.8	229.6	327.51	226.14	220.83	359.59	337.21	28[3]) / 40[4])
DCR 19217	4	249.7	235.2	269.2	254.3	274.3	252.1	253.0	232.7	249.8	229.6	465.33	321.30	313.76	510.91	479.12	28[3]) / 40[4])
DCR 19221	4	258.9	244.7	278.3	263.8	283.2	261.7	259.4	239.7	236.1	217.6	442.5	321.7	311.7	460.2	475.8	28[3]) / 40[4])

[1]) Drying capacity is based on following moisture content test standards before and after drying:
– R134a: 1050 – 50 ppm W
– R404A, R507: 1020 – 50 ppm W
– R407C: 1020 – 50 ppm W
– R410A: 1050 – 50 ppm W
In accordance with ARI 710-2004

[2]) Given in accordance with ARI 710-2004 for:
t_e = -15 °C
t_c = 30 °C
Δp = 0.07 bar

[3]) For usage with strainer or as a receiver application
[4]) For "drier" application using all the permissible cores

Technical data and ordering

DCR - Filter drier with replaceable solid core

Drying and liquid capacity, type 48-DC (US units)

Type	Number of cores	Drying capacity [lb] of refrigerant [1]										Liquid capacity [TR] [2]					Max. working pressure MWP [psig]
		R134a		R404A		R507		R407C		R410A		R134a	R404A	R507	R407C	R410A	
		[°F]															
		75	125	75	125	75	125	75	125	75	125						
DCR 0485	1	137.6	129.6	148.4	140.1	151.2	139.0	139.4	128.2	137.7	126.5	18.17	12.55	12.25	19.95	18.71	667
DCR 0487	1	137.6	129.6	148.4	140.1	151.2	139.0	139.4	128.2	137.7	126.5	25.70	17.75	17.33	28.22	26.46	667
DCR 0489	1	137.6	129.6	148.4	140.1	151.2	139.0	139.4	128.2	137.7	126.5	42.37	29.25	28.57	46.52	43.62	667
DCR 04811	1	137.6	129.6	148.4	140.1	151.2	139.0	139.4	128.2	137.7	126.5	50.49	34.86	34.04	55.43	51.98	667
DCR 04813	1	137.6	129.6	148.4	140.1	151.2	139.0	139.4	128.2	137.7	126.5	49.42	34.13	33.33	54.27	50.89	667
DCR 04817	1	137.6	129.6	148.4	140.1	151.2	139.0	139.4	128.2	137.7	126.5	65.63	45.32	44.25	72.06	67.57	667
DCR 04821	1	137.6	129.6	148.4	140.1	151.2	139.0	139.4	128.2	137.7	126.5	82.03	56.64	55.31	90.06	84.46	667
DCR 0967	2	275.3	259.2	296.7	280.3	302.3	277.9	278.9	256.5	275.4	253.1	34.80	24.03	23.47	38.21	35.84	667
DCR 0969	2	275.3	259.2	296.7	280.3	302.3	277.9	278.9	256.5	275.4	253.1	49.49	34.17	33.37	54.33	50.95	667
DCR 09611	2	275.3	259.2	296.7	280.3	302.3	277.9	278.9	256.5	275.4	253.1	56.23	38.83	37.91	61.74	57.90	667
DCR 09613	2	275.3	259.2	296.7	280.3	302.3	277.9	278.9	256.5	275.4	253.1	66.93	46.22	45.13	73.49	68.92	667
DCR 09617	2	275.3	259.2	296.7	280.3	302.3	277.9	278.9	256.5	275.4	253.1	88.88	61.37	59.93	97.58	91.51	667
DCR 1449	3	412.9	388.9	445.1	420.4	453.5	416.9	418.3	384.7	413.0	379.6	55.16	38.09	37.20	60.57	56.80	507[3]) / 667[4])
DCR 14411	3	412.9	388.9	445.1	420.4	453.5	416.9	418.3	384.7	413.0	379.6	68.32	47.18	46.07	75.02	70.35	507[3]) / 667[4])
DCR 14413	3	412.9	388.9	445.1	420.4	453.5	416.9	418.3	384.7	413.0	379.6	81.33	56.16	54.84	89.30	83.74	507[3]) / 667[4])
DCR 14417	3	412.9	388.9	445.1	420.4	453.5	416.9	418.3	384.7	413.0	379.6	108.00	74.57	72.82	118.58	111.20	507[3]) / 667[4])
DCR 19211	4	550.6	518.5	593.4	560.6	604.6	555.8	557.8	513.0	550.7	506.1	78.61	54.28	53.01	86.31	80.94	406[3]) / 580[4])
DCR 19213	4	550.6	518.5	593.4	560.6	604.6	555.8	557.8	513.0	550.7	506.1	93.57	64.61	63.09	102.74	96.35	406[3]) / 580[4])
DCR 19217	4	550.6	518.5	593.4	560.6	604.6	555.8	557.8	513.0	550.7	506.1	132.95	91.80	89.65	145.98	136.89	406[3]) / 580[4])

[1]) Drying capacity is based on the following moisture contents before and after drying:
– R134a: 1050 – 50 ppm W
– R404A, R507: 1020 – 50 ppm W
– R407C: 1020 – 50 ppm W
– R410A: 1050 – 50 ppm W
In accordance with ARI 710-2004

[2]) Liquid capacity given in accordance with ARI 710-2004
t_e = 5 °F
t_c = 86 °F
Δp = 1 psig

[3]) For usage with strainer or as a receiver application
[4]) For "drier" application using all the permissible cores

Technical data and ordering

DCR - Filter drier with replaceable solid core

Drying capacity [g] of water [3]), type 48-DA (SI units)

Type	Number of cores	Evaporating temperature t_e [°C]												Acid capacity [4]) [g]
		-40	-20	4.4	-30	-20	4.4	-40	-20	4.4	-40	-20	4.4	
		R407C			R134a			R404A / R507			R410A			
DCR 048	1	28	19	12	45	38	27	47	30	19	42	35	25	26.6
DCR 096	2	56	37	24	90	77	54	94	60	37	84	70	50	53.3
DCR 144	3	84	56	36	135	115	81	142	90	56	126	105	75	79.9
DCR 192	4	112	74	48	180	153	108	189	120	75	168	140	100	106.5

[3]) Drying capacity is expressed during drying in:
R134a: EPD = 50 ppm W, corresponding to a dew point temperature = -37 °C
R404A: EPD = 10 ppm W, corresponding to a dew point temperature = -40 °C
R407C: EPD = 10 ppm W, corresponding to a dew point temperature = -40 °C
[4]) Adsorption capacity of oleic acid at 0.05 TAN (Total Acid Number)

DCR - Filter drier with replaceable solid core

Drying capacity [lb] of refrigerant [3]), type 48-DA (US units)

Type	Number of cores	Evaporating temperature t_e [°F]												Acid capacity [4]) [g]
		-40	-4	40	-22	-4	40	-40	-4	40	-40	-4	40	
		R407C			R134a			R404A / R507			R410A			
DCR 048	1	28	19	12	45	38	27	47	30	19	42	35	25	0.94
DCR 096	2	56	37	24	90	77	54	94	60	37	84	70	50	1.88
DCR 144	3	84	56	36	135	115	81	142	90	56	126	105	75	2.82
DCR 192	4	112	74	48	180	153	108	189	120	75	168	140	100	3.76

[3]) Drying capacity is expressed during drying in:
R134a: EPD = 50 ppm W, corresponding to a dew point temperature = -34.6 °F
R404A: EPD = 10 ppm W, corresponding to a dew point temperature = -40 °F
R407C: EPD = 10 ppm W, corresponding to a dew point temperature = -40 °F
[4]) Adsorption capacity of oleic acid at 0.05 TAN (Total Acid Number)

DCR - Filter drier with replaceable solid core

Recommended plant capacity [kW] in suction line - burn-out, type 48-DA (SI units)

Type	Evaporating temperature t_e [°C]											
	-40	-20	4.4	-30	-20	4.4	-40	-20	4.4	-40	-20	4.4
	Pressure drop Δp [bar]											
	0.04	0.10	0.21	0.04	0.07	0.14	0.04	0.10	0.21	0.04	0.10	0.21
	R407C			R134a			R404A / R507			R410A		
DCR 0485	3.1	8.9	21.0	3.0	5.4	13.0	2.4	7.1	17.5	3.1	8.9	21.0
DCR 0487	5.8	16.1	37.8	5.6	9.9	23.4	4.5	12.9	31.2	5.8	16.1	37.8
DCR 0489	7.8	21.6	50.7	7.5	13.3	31.5	6.0	17.2	41.8	7.8	21.6	50.7
DCR 04811	10.0	27.3	63.3	9.6	16.8	39.5	7.7	21.8	51.9	10.0	27.3	63.3
DCR 04813	10.0	27.3	63.3	9.6	16.8	39.5	7.7	21.8	51.9	10.0	27.3	63.3
DCR 04817	10.0	27.3	63.3	9.6	16.8	39.5	7.7	21.8	51.9	10.0	27.3	63.3
DCR 04821	10.0	27.3	63.3	9.6	16.8	39.5	7.7	21.8	51.9	10.0	27.3	63.3
DCR 0965	3.3	9.1	21.4	3.2	5.7	13.4	2.5	7.4	18.0	3.3	9.2	21.6
DCR 0967	5.8	16.2	38.1	5.6	9.9	23.6	4.5	12.9	31.4	5.8	16.2	38.1
DCR 0969	8.7	24.6	58.3	8.4	15.0	35.9	6.8	19.7	48.1	8.7	24.6	58.3
DCR 09611	11.9	33.4	79.3	11.4	20.4	48.9	9.3	26.8	65.4	11.9	33.4	79.3
DCR 09613	14.1	39.9	95.2	13.6	24.3	58.5	11.0	32.0	78.7	14.1	39.9	95.2
DCR 09617	14.1	39.9	95.2	13.6	24.3	58.5	11.0	32.0	78.7	14.1	39.9	95.2
DCR 09621	14.1	39.9	95.2	13.6	24.3	58.5	11.0	32.0	78.7	14.1	39.9	95.2
DCR 1445	3.5	10.0	22.8	3.4	6.0	14.0	2.7	7.7	18.9	3.5	10.0	22.8
DCR 1447	6.6	18.9	42.9	6.3	11.2	26.4	5.1	14.5	35.6	6.6	18.9	42.9
DCR 1449	8.8	25.1	57.2	8.4	15.0	35.2	6.8	19.4	47.5	8.8	25.1	57.2
DCR 14411	13.2	38.1	92.2	12.7	23.0	56.2	10.3	30.7	76.6	13.2	38.1	92.2
DCR 14413	13.2	38.1	92.2	12.7	23.0	56.2	10.3	30.7	76.6	13.2	38.1	92.2
DCR 14417	13.2	38.1	92.2	12.7	23.0	56.2	10.3	30.7	76.6	13.2	38.1	92.2
DCR 14421	13.2	38.1	92.2	12.7	23.0	56.2	10.3	30.7	76.6	13.2	38.1	92.2
DCR 1925	4.2	11.5	27.3	4.0	7.1	16.8	3.2	9.2	22.7	4.2	11.5	27.3
DCR 1927	7.9	21.6	51.4	7.6	13.4	31.6	6.1	17.4	42.7	7.9	21.6	51.4
DCR 1929	10.6	28.9	68.9	10.2	18.0	42.1	8.2	23.3	57.2	10.6	28.9	68.9
DCR 19211	14.8	41.8	99.4	14.3	25.5	61.2	11.6	33.6	82.2	14.8	41.8	99.4
DCR 19213	18.0	51.1	122.1	17.4	31.1	75.0	14.1	41.1	101.0	18.0	51.1	122.1
DCR 19217	18.0	51.1	122.1	17.4	31.1	75.0	14.1	41.1	101.0	18.0	51.1	122.1
DCR 19221	18.0	51.1	122.1	17.4	31.1	75.0	14.1	41.1	101.0	18.0	51.1	122.1

Data given in a accordance with ARI-Standard 710-2004 for:
t_e = 4.4 °C
t_c = 32.2 °C

Technical data and ordering

DCR - Filter drier with replaceable solid core

Recommended plant capacity [TR], type 48-DA (US units)

Type	Evaporating temperature t_e [°F]											
	-40	-4	40	-22	-4	40	-40	-4	40	-40	-4	40
	Pressure drop [psig]											
	0.58	1.45	3.05	0.58	1	2.03	0.58	1.45	3.05	0.58	1.45	3.05
	R407C			R134a			R404A / R507			R410A		
DCR 0485	0.9	2.5	6.0	0.9	1.5	3.7	0.7	2.0	5.0	0.9	2.5	6.0
DCR 0487	1.6	4.6	10.7	1.6	2.8	6.7	1.3	3.7	8.9	1.6	4.6	10.7
DCR 0489	2.2	6.1	14.4	2.1	3.8	9.0	1.7	4.9	11.9	2.2	6.1	14.4
DCR 04811	2.8	7.8	18.0	2.7	4.8	11.2	2.2	6.2	14.8	2.8	7.8	18.0
DCR 04813	2.8	7.8	18.0	2.7	4.8	11.2	2.2	6.2	14.8	2.8	7.8	18.0
DCR 04817	2.8	7.8	18.0	2.7	4.8	11.2	2.2	6.2	14.8	2.8	7.8	18.0
DCR 04821	2.8	7.8	18.0	2.7	4.8	11.2	2.2	6.2	14.8	2.8	7.8	18.0
DCR 0965	0.9	2.6	6.1	0.9	1.6	3.8	0.7	2.1	5.1	0.9	2.6	6.1
DCR 0967	1.6	4.6	10.8	1.6	2.8	6.7	1.3	3.7	8.9	1.6	4.6	10.8
DCR 0969	2.5	7.0	16.6	2.4	4.3	10.2	1.9	5.6	13.7	2.5	7.0	16.6
DCR 09611	3.4	9.5	22.5	3.2	5.8	13.9	2.6	7.6	18.6	3.4	9.5	22.5
DCR 09613	4.0	11.3	27.1	3.9	6.9	16.6	3.1	9.1	22.4	4.0	11.3	27.1
DCR 09617	4.0	11.3	27.1	3.9	6.9	16.6	3.1	9.1	22.4	4.0	11.3	27.1
DCR 09621	4.0	11.3	27.1	3.9	6.9	16.6	3.1	9.1	22.4	4.0	11.3	27.1
DCR 1445	1.0	2.8	6.5	1.0	1.7	4.0	0.8	2.2	5.4	1.0	2.8	6.5
DCR 1447	1.9	5.4	12.2	1.8	3.2	7.5	1.5	4.1	10.1	1.9	5.4	12.2
DCR 1449	2.5	7.1	16.3	2.4	4.3	10.0	1.9	5.5	13.5	2.5	7.1	16.3
DCR 14411	3.8	10.8	26.2	3.6	6.5	16.0	2.9	8.7	21.8	3.8	10.8	26.2
DCR 14413	3.8	10.8	26.2	3.6	6.5	16.0	2.9	8.7	21.8	3.8	10.8	26.2
DCR 14417	3.8	10.8	26.2	3.6	6.5	16.0	2.9	8.7	21.8	3.8	10.8	26.2
DCR 14421	3.8	10.8	26.2	3.6	6.5	16.0	2.9	8.7	21.8	3.8	10.8	26.2
DCR 1925	1.2	3.3	7.8	1.1	2.0	4.8	0.9	2.6	6.5	1.2	3.3	7.8
DCR 1927	2.2	6.1	14.6	2.2	3.8	9.0	1.7	4.9	12.1	2.2	6.1	14.6
DCR 1929	3.0	8.2	19.6	2.9	5.1	12.0	2.3	6.6	16.3	3.0	8.2	19.6
DCR 19211	4.2	11.9	28.3	4.1	7.3	17.4	3.3	9.6	23.4	4.2	11.9	28.3
DCR 19213	5.1	14.5	34.7	4.9	8.8	21.3	4.0	11.7	28.7	5.1	14.5	34.7
DCR 19217	5.1	14.5	34.7	4.9	8.8	21.3	4.0	11.7	28.7	5.1	14.5	34.7
DCR 19221	5.1	14.5	34.7	4.9	8.8	21.3	4.0	11.7	28.7	5.1	14.5	34.7

Data given in accordance with ARI-Standard 710-2002 for:
t_e = 40 °F
t_c = 90 °F

Strainer mounted in suction line, type 48-F (SI units)

Refrigerant	R407C			R134a			R404A / R507			R410A		
Evaporating temperature [°C]	-40	-20	4.4	-30	-20	4.4	-40	-20	4.4	-40	-20	4.4
Pressure drop Δp [bar]	0.04	0.10	0.21	0.04	0.07	0.14	0.04	0.10	0.21	0.04	0.10	0.21
Recommended system capacity [kW]	15	47	113	15	28	69	12	38	93	15	47	113

Strainer mounted in liquid line

Refrigerant	R22 / R407C	R134a	R404A / R507	R410A
Recommended system capacity [kW]	390	350	260	390

The data given apply to DCR 04811 with 48-F-core
Liquid capacity is given in accordance with 710-2004 for:
t_e = -15 °C
t_c = 30 °C
Δp = 0.07 bar

Strainer mounted in suction line, type 48-F (US units)

Refrigerant	R407C			R134a			R404A / R507			R410A		
Evaporating temperature [°F]	-40	-4	40	-22	-4	40	-40	-4	40	-40	-4	40
Pressure drop Δp [psig]	0.59	1.47	3.09	0.59	1.03	2.06	0.59	1.47	3.09	0.59	1.47	3.09
Recommended system capacity [TR]	4	13	32	4	8	20	3	11	26	4	13	32

Strainer mounted in liquid line

Refrigerant	R407C	R134a	R404A / R507	R410A
Recommended system capacity [TR]	111	100	74	111

The data given apply to DCR 04811 with 48-F core
Liquid capacity is given in accordance with ARI 710-2002 for:
t_e = 5 °F
t_c = 86 °F
Δp = 1 psi

Technical data and ordering

DCR - Filter drier with replaceable solid core

Housing + top cover

Type	Number of cores	Steel connectors			Cover type	Max. working pressure PS [bar]	Max. working pressure MWP [psig]	Code no.
		Solder		Butt weld				
		ODF [in]	ODF [mm]	[in]				
DCR 0485	1	5/8	16	1/2	Plug	46	667	023U7050
DCR 0487	1	7/8	22	3/4	Plug	46	667	023U7051
DCR 0487	1	7/8	22	3/4	–	46	667	023U7151
DCR 0489	1	–	28	1	Plug	46	667	023U7052
DCR 0489	1	1 1/8	–	1	Plug	46	667	023U7053
DCR 04811	1	1 3/8	35	1 1/4	Plug	46	667	023U7054
DCR 04813	1	1 5/8	–	1 1/2	Plug	46	667	023U7055
DCR 04813	1	–	42	1 1/2	Plug	46	667	023U7056
DCR 04817	1	2 1/8	54	2	Plug	46	667	023U7057
DCR 04821	1	2 5/8	–	2 1/2	Plug	46	667	023U7076
DCR 0967	2	7/8	22	3/4	Plug	46	667	023U7058
DCR 0969	2	–	28	1	Plug	46	667	023U7059
DCR 0969	2	1 1/8	–	1	Plug	46	667	023U7060
DCR 09611	2	1 3/8	35	1 1/4	Plug	46	667	023U7061
DCR 09611	2	1 3/8	35	1 1/4	–	46	667	023U7161
DCR 09613	2	1 5/8	–	1 1/2	Plug	46	667	023U7062
DCR 09613	2	–	42	1 1/2	Plug	46	667	023U7063
DCR 09617	2	2 1/8	54	2	Plug	46	667	023U7064
DCR 1449	3	–	28	1	Plug	35[1]) / 46[2])	507[1]) / 667[2])	023U7065
DCR 1449	3	1 1/8	–	1	Plug	35[1]) / 46[2])	507[1]) / 667[2])	023U7066
DCR 14411	3	1 3/8	35	1 1/4	Plug	35[1]) / 46[2])	507[1]) / 667[2])	023U7067
DCR 14413	3	1 5/8	–	1 1/2	Plug	35[1]) / 46[2])	507[1]) / 667[2])	023U7068
DCR 14413	3	–	42	1 1/2	Plug	35[1]) / 46[2])	507[1]) / 667[2])	023U7069
DCR 14417	3	2 1/8	54	2	Plug	35[1]) / 46[2])	507[1]) / 667[2])	023U7070
DCR 19211	4	1 3/8	35	1 1/4	Plug	28[1]) / 40[2])	406[1]) / 580[2])	023U7071
DCR 19213	4	1 5/8	–	1 1/2	Plug	28[1]) / 40[2])	406[1]) / 580[2])	023U7072
DCR 19213	4	–	42	1 1/2	Plug	28[1]) / 40[2])	406[1]) / 580[2])	023U7073
DCR 19217	4	2 1/8	54	2	Plug	28[1]) / 40[2])	406[1]) / 580[2])	023U7074
DCR 19221	4	2 5/8	–	2 1/2	Plug	28[1]) / 40[2])	406[1]) / 580[2])	023U7086

[1]) For usage with strainer or as a receiver application
[2]) For "drier" application all the permissible cores

Technical data and ordering

DCR - Filter drier with replaceable solid core

Housing + top cover

Type	Number of cores	Copper connectors		Cover type	Max. working pressure PS [bar]	Max. working pressure MWP [psig]	Code no.
		Solder					
		ODF [in]	ODF [mm]				
DCR 0485s	1	5/8	16	Plug	46	667	023U7250
DCR 0487s	1	7/8	22	Plug	46	667	023U7251
DCR 0487s	1	7/8	22	–	46	667	023U7571
DCR 0489s	1	–	28	Plug	46	667	023U7252
DCR 0489s	1	1 1/8	–	Plug	46	667	023U7253
DCR 0489s	1	–	28	–	46	667	023U7268
DCR 04811s	1	1 3/8	35	Plug	46	667	023U7254
DCR 04813s	1	1 5/8	–	Plug	46	667	023U7255
DCR 04813s	1	–	42	Plug	46	667	023U7256
DCR 04813s	1	–	42	–	46	667	023U7303
DCR 04817s	1	2 1/8	54	Plug	46	667	023U7257
DCR 04821s	1	2 5/8	–	Plug	46	667	023U7276
DCR 0967s	2	7/8	22	Plug	46	667	023U7258
DCR 0969s	2	–	28	Plug	46	667	023U7259
DCR 0969s	2	1 1/8	–	Plug	46	667	023U7260
DCR 0969s	2	1 1/8	–	–	46	667	023U7278
DCR 09611s	2	1 3/8	35	Plug	46	667	023U7261
DCR 09613s	2	1 5/8	–	Plug	46	667	023U7262
DCR 09613s	2	–	42	Plug	46	667	023U7263
DCR 09613s	2	–	42	–	46	667	023U7463
DCR 09617s	2	2 1/8	54	Plug	46	667	023U7264
DCR 09617s	2	2 1/8	54	–	46	667	023U7290
DCR 09621s	2	2 5/8	–	Plug	46	667	023U7281
DCR 1449s	3	–	28	Plug	35[1]) / 46[2])	507[1]) / 667[2])	023U7265
DCR 14411s	3	1 3/8	35	Plug	35[1]) / 46[2])	507[1]) / 667[2])	023U7267
DCR 14411s	3	1 3/8	–	–	35[1]) / 46[2])	507[1]) / 667[2])	023U7275
DCR 14413s	3	1 5/8	–	Plug	35[1]) / 46[2])	507[1]) / 667[2])	023U7282
DCR 14413s	3	–	42	Plug	35[1]) / 46[2])	507[1]) / 667[2])	023U7269
DCR 14413s	3	1 5/8	42	–	35[1]) / 46[2])	507[1]) / 667[2])	023U7297
DCR 14417s	3	2 1/8	54	Plug	35[1]) / 46[2])	507[1]) / 667[2])	023U7270
DCR 19211s	4	1 3/8	–	–	28[1]) / 40[2])	406[1]) / 580[2])	023U7083
DCR 19213s	4	1 5/8	–	Plug	28[1]) / 40[2])	406[1]) / 580[2])	023U7272
DCR 19213s	4	–	42	Plug	28[1]) / 40[2])	406[1]) / 580[2])	023U7273
DCR 19213s	4	1 5/8	–	–	28[1]) / 40[2])	406[1]) / 580[2])	023U7082
DCR 19217s	4	2 1/8	54	Plug	28[1]) / 40[2])	406[1]) / 580[2])	023U7274

[1]) For usage with strainer or as a receiver application
[2]) For "drier" application all the permissible cores

Technical data and ordering


Solid core


Strainer

DCR - Inserts with gasket

Ordering

Type	Material	Code no.		
		Industrial pack		Multi pack
		With gasket	Without gasket	With gasket
48-DM solid core	100% molecular sieve	023U1392	023U1393	023U1391
48-DC solid core	80% molecular sieve and 20% Al_3O_2	023U4381	023U4382	023U4380
48-DA solid core	30% molecular sieve and 70% Al_3O_2	023U5381	023U5382	023U5380
48-F strainer	Felt-gasket, 15 µm	023U1921	–	–

DMB, Hermetic bi-flow filter drier

DMB **ELIMINATOR®** hermetic bi-flow filter drier series are for use in liquid lines on heat pumps, and have built-in check valves to ensure that refrigerant liquid flows through the filter drier from the outer side of the filter core towards the center.
They ensure fast and effective adsorption of moisture as well as organic and inorganic acids, and all dirt particles are retained irrespective of flow direction.

DMB hermetic bi-flow filter driers contain a solid core consisting of 100% 3 Å Molecular Sieve, and are especially suitable for heat pumps with HFC refrigerants and polyolester oil with additives.

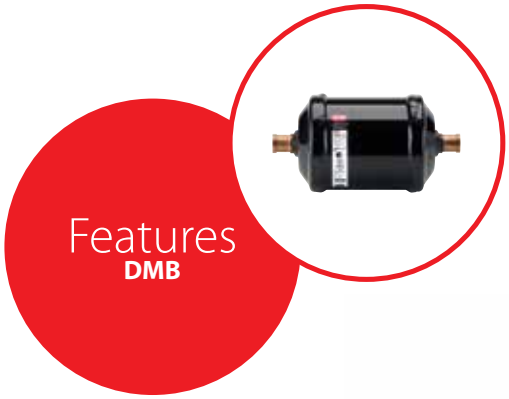

Features
DMB

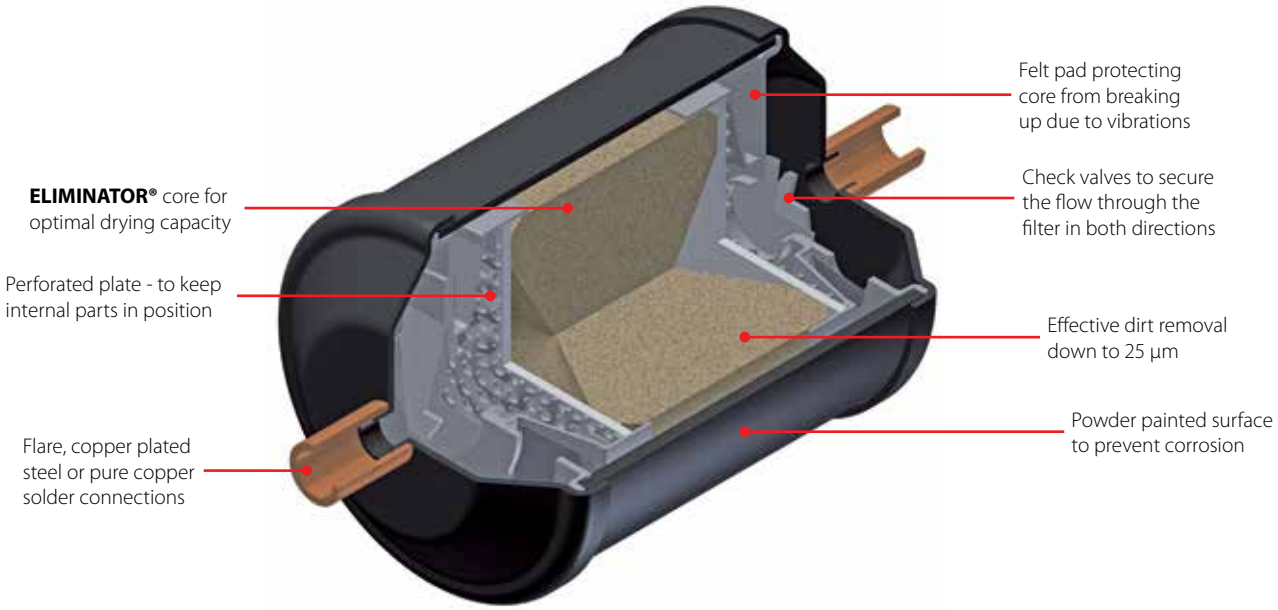

Facts

Application:
- Traditional refrigeration
- Heat pumps
- Air conditioning units
- Applicable to R134A, R22, R404A, R407C, R410A, R407F, R1233zd, R1234ze, R290*), R600*), R32*), R454B*), R452B*), R444B*), R454A*), R450A*), R1234yf*)

**) Approved for Filter drier models with connection sizes less than 25 mm*

- No dirt released by reversing the flow direction
- The check valves are not sensitive to dirt and give minimum restriction, irrespective of flow direction
- When building heat pump systems, the use of hermetic bi-flow filter driers can save up to ten solder connections. This reduces production costs and the number of potential leakage points
- DMB filter driers are especially suitable for heat pumps with HFC refrigerant and polyolester oil with additives
- Optimum flow characteristics and dirt retention
- Available in sizes from 05 to 30 cubic inches
- Available with flare, solder (pure copper, cu-plated) connections

Technical data

DMB - Hermetic bi-flow filter drier

Drying and liquid capacity (SI units)

Type	Drying capacity [kg] of refrigerant [1]														Liquid capacity [kW] [2]							Max working pressure PS [bar]
	R134a		R404A		R507		R407C		R410A		R290		R32		R134a	R404A	R507	R407C	R410A	R290	R32	
	[°C]																					
	24	52	24	52	24	52	24	52	24	52	24	52	24	52								
DMB 053s	4.7	4.4	5.1	4.8	5.2	4.8	4.7	4.3	4.3	3.9	5.71	4.61	4.41	3.99	9.3	6.30	6.14	9.22	9.04	11.12	13.52	46.00
DMB 082 / 082s	8.7	8.1	9.3	8.8	9.5	8.7	8.7	8.0	7.8	7.2	10.49	8.47	8.09	7.33	5.6	3.78	3.68	5.54	5.42	6.68	8.11	46.00
DMB 083 / 083s	8.7	8.1	9.3	8.8	9.5	8.7	8.7	8.0	7.8	7.2	10.49	8.47	8.09	7.33	8.9	6.04	5.88	8.84	8.66	10.10	12.27	46.00
DMB 084 / 084s	8.7	8.1	9.3	8.8	9.5	8.7	8.7	8.0	7.8	7.2	10.49	8.47	8.09	7.33	11.3	7.62	7.43	11.17	10.94	13.30	16.45	46.00
DMB 162	16.3	15.4	17.6	16.6	17.9	16.5	16.3	15.0	14.8	13.6	19.79	15.98	15.27	13.83	6.3	4.27	4.16	6.26	6.13	7.54	9.17	46.00
DMB 163 / 163s	16.3	15.4	17.6	16.6	17.9	16.5	16.3	15.0	14.8	13.6	19.79	15.98	15.27	13.83	15.2	10.30	10.04	15.09	14.78	18.20	22.05	46.00
DMB 164 / 164s	16.3	15.4	17.6	16.6	17.9	16.5	16.3	15.0	14.8	13.6	19.79	15.98	15.27	13.83	21.5	14.54	14.17	21.29	20.86	25.55	31.15	46.00
DMB 165 / 165s	16.3	15.4	17.6	16.6	17.9	16.5	16.3	15.0	14.8	13.6	19.79	15.98	15.27	13.83	27.6	18.69	18.22	27.37	26.81	32.90	40.25	46.00
DMB 303	39.8	37.5	42.9	40.5	43.7	40.2	39.8	36.6	36.1	33.1	48.27	38.97	37.24	33.73	17.7	11.99	11.68	17.56	17.20	21.17	25.73	46.00
DMB 304 / 304s	39.8	37.5	42.9	40.5	43.7	40.2	39.8	36.6	36.1	33.1	48.27	38.97	37.24	33.73	21.4	14.53	14.16	21.28	20.84	25.55	31.15	46.00
DMB 305 / 305s	39.8	37.5	42.9	40.5	43.7	40.2	39.8	36.6	36.1	33.1	48.27	38.97	37.24	33.73	29.2	19.75	19.25	28.93	28.34	34.65	42.00	46.00
DMB 307s	39.8	37.5	42.9	40.5	43.7	40.2	39.8	36.6	36.1	33.1	48.27	38.97	37.24	33.73	41.2	27.91	27.21	40.88	40.04	49.30	59.92	46.00

[1]) Drying capacity is based on following moisture content test standards before and after drying:
– R134a: 1050 – 50 ppm W
– R404A, R507: 1020 – 50 ppm W
– R407C: 1020 – 50 ppm W
– R410A: 1050 – 50 ppm W
– R290: 565 – 15 ppm W
– R32: 1040 – 50 ppm W
In accordance with ARI 710-2004

[2]) Given in accordance with ARI 710-2004 for:
t_e = -15 °C
t_c = 30 °C
Δp = 0.07 bar

DMB - Hermetic bi-flow filter drier

Drying and liquid capacity (US units)

Type	Drying capacity [lb] of refrigerant [1]														Liquid capacity [TR] [2]							Max. working pressure MWP [psig]
	R134a		R404A		R507		R407C		R410A		R290		R32		R134a	R404A	R507	R407C	R410A	R290	R32	
	[°F]																					
	75	125	75	125	75	125	75	125	75	125	75	125	75	125								
DMB 053s	10.4	9.8	11.2	10.6	11.4	10.5	10.4	9.5	9.4	8.6	9.7	8.8	9.4	8.6	2.7	1.80	1.75	2.64	2.58	3.18	3.86	667.00
DMB 082 / 082s	19.1	18.0	20.6	19.4	21.0	19.3	19.1	17.5	17.3	15.8	17.8	16.2	17.3	15.8	1.6	1.08	1.05	1.58	1.55	1.91	2.32	667.00
DMB 083 / 083s	19.1	18.0	20.6	19.4	21.0	19.3	19.1	17.5	17.3	15.8	17.8	16.2	17.3	15.8	2.5	1.72	1.68	2.53	2.47	2.89	3.51	667.00
DMB 084 / 084s	19.1	18.0	20.6	19.4	21.0	19.3	19.1	17.5	17.3	15.8	17.8	16.2	17.3	15.8	3.2	2.18	2.12	3.19	3.12	3.80	4.70	667.00
DMB 162	36.0	33.9	38.8	36.6	39.5	36.3	36.0	33.1	32.6	29.9	33.7	30.5	32.6	29.9	1.8	1.22	1.19	1.79	1.75	2.16	2.62	667.00
DMB 163 / 163s	36.0	33.9	38.8	36.6	39.5	36.3	36.0	33.1	32.6	29.9	33.7	30.5	32.6	29.9	4.3	2.94	2.87	4.31	4.22	5.20	6.30	667.00
DMB 164 / 164s	36.0	33.9	38.8	36.6	39.5	36.3	36.0	33.1	32.6	29.9	33.7	30.5	32.6	29.9	6.1	4.15	4.05	6.08	5.96	7.30	8.90	667.00
DMB 165 / 165s	36.0	33.9	38.8	36.6	39.5	36.3	36.0	33.1	32.6	29.9	33.7	30.5	32.6	29.9	7.9	5.34	5.20	7.82	7.66	9.40	11.50	667.00
DMB 303	87.8	82.7	94.6	89.4	96.4	88.6	87.8	80.7	79.6	72.9	82.1	74.4	79.6	72.9	5.1	3.42	3.34	5.02	4.91	6.05	7.35	667.00
DMB 304 / 304s	87.8	82.7	94.6	89.4	96.4	88.6	87.8	80.7	79.6	72.9	82.1	74.4	79.6	72.9	6.1	4.15	4.05	6.08	5.96	7.30	8.90	667.00
DMB 305 / 305s	87.8	82.7	94.6	89.4	96.4	88.6	87.8	80.7	79.6	72.9	82.1	74.4	79.6	72.9	8.3	5.64	5.50	8.27	8.10	9.90	12.00	667.00
DMB 307s	87.8	82.7	94.6	89.4	96.4	88.6	87.8	80.7	79.6	72.9	82.1	74.4	79.6	72.9	11.8	7.97	7.77	11.68	11.44	14.09	17.12	667.00

[1]) Drying capacity is based on following moisture content test standards before and after drying:
– R134a: 1050 – 50 ppm W
– R404A, R507: 1020 – 50 ppm W
– R407C: 1020 – 50 ppm W
– R410A: 1050 – 50 ppm W
– R290: 565 – 15 ppm W
– R32: 1040 – 50 ppm W
In accordance with ARI 710-2004

[2]) Given in accordance with ARI 710-2004 for:
t_e = 5 °F
t_c = 85 °F
Δp = 1 psig

Ordering

DMB - Flare

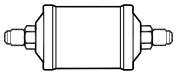

Ordering

Type	Connection		Code no.
	[in]	[mm]	
DMB 082	1/4	6	023Z1412
DMB 083	3/8	10	023Z1411
DMB 084	1/2	12	023Z1410
DMB 163	3/8	10	023Z1415
DMB 164	1/2	12	023Z1414
DMB 165	5/8	16	023Z1413
DMB 303	3/8	10	023Z1419
DMB 304	1/2	12	023Z1418
DMB 305	5/8	16	023Z1417

DMB - Solder (pure copper)

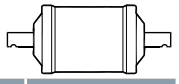

Ordering

Type	Connection	Code no.	Connection	Code no.
	[in]		[mm]	
DMB 082s	1/4	023Z1443	–	–
DMB 083s	3/8	023Z1442	10	023Z1424
DMB 084s	1/2	023Z1441	–	–
DMB 163s	3/8	023Z1446	10	023Z1422
DMB 164s	1/2	023Z1445	–	–
DMB 165s	5/8	023Z1444	–	–
DMB 304s	1/2	023Z1449	–	–
DMB 305s	5/8	023Z1448	–	–
DMB 307s	7/8	023Z1447	–	–

DMB - Solder (cu-plated)

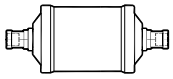

Ordering

Type	Connection	Code no.	Connection	Code no.
	[in]		[mm]	
DMB 082s	1/4	023Z1473	6	023Z1461
DMB 083s	3/8	023Z1472	10	023Z1459
DMB 084s	1/2	023Z1471	12	023Z1457
DMB 163s	3/8	023Z1476	10	023Z1455
DMB 164s	1/2	023Z1475	12	023Z1453
DMB 165s	5/8	023Z1474	–	–
DMB 303s	3/8	023Z1481	–	–
DMB 304s	1/2	023Z1479	12	023Z1451
DMB 305s	5/8	023Z1478	–	–
DMB 307s	7/8	023Z1477	–	–

Quick Selection Notes:

DCB, Hermetic bi-flow filter drier

DCB **ELIMINATOR®** hermetic bi-flow filter driers protect refrigeration and air conditioning systems from moisture, acids and solid particles, eliminating harmful chemical reaction and abrasive impurities.

DCB hermetic bi-flow filter driers, with a solid core of 80 % Molecular Sieve and 20 % activated alumina. They are hermetic and available in many sizes and connection types.

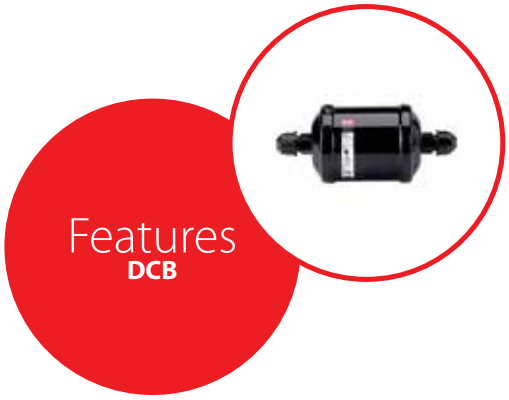

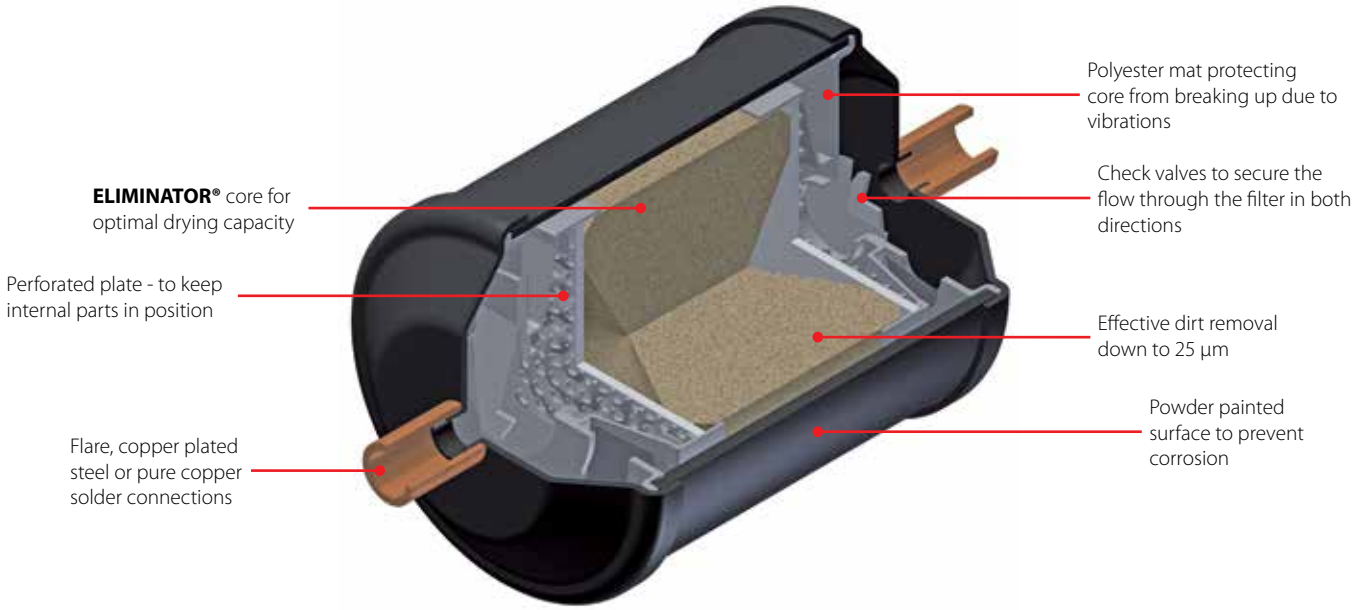

Facts

Application:
- Traditional refrigeration
- Heat pumps
- Air conditioning units
- Applicable to R134A, R22, R404A, R407C, R410A, R407F, R1233zd, R1234ze, R290*), R600*), R32*), R454B*), R452B*), R444B*), R454A*), R450A*), R1234yf*)

**) Approved for Filter drier models with connection sizes less than 25 mm*

- No dirt released by reversing the flow direction
- The check valves are not sensitive to dirt and give minimum restriction, irrespective of flow direction
- When building heat pump systems, the use of hermetic bi-flow filter driers can save up to ten solder connections. This reduces production costs and the number of potential leakage points
- DCB filter driers can be used in heat pumps with HCFC refrigerants and mineral oil, and also with HFC refrigerants and polyolester oil
- Optimum flow characteristics and dirt retention
- Available in sizes from 05 to 30 cubic inches
- Available with flare, solder (pure copper, cu-plated) connections

Technical data

DCB - Hermetic bi-flow filter drier

Drying and liquid capacity (SI units)

Type	Drying capacity [kg] of refrigerant [1]												Liquid capacity [kW] [2]						Max working pressure PS [bar]
	R134a		R404A		R507		R22		R407C		R410A		R134a	R404A	R507	R22	R407C	R410A	
	[°C]																		
	24	52	24	52	24	52	24	52	24	52	24	52							
DCB 053s	3.5	3.3	3.8	3.6	3.9	3.6	3.6	3.3	3.5	3.3	3.2	2.9	9.3	6.30	6.14	9.87	9.22	9.04	46.00
DCB 082 / 082s	6.8	6.4	7.3	6.9	7.5	6.9	6.9	6.3	6.8	6.3	6.2	5.7	5.6	3.78	3.68	5.92	5.54	5.42	46.00
DCB 083 / 083s	6.8	6.4	7.3	6.9	7.5	6.9	6.9	6.3	6.8	6.3	6.2	5.7	8.9	6.04	5.88	9.46	8.84	8.66	46.00
DCB 084 / 084s	6.8	6.4	7.3	6.9	7.5	6.9	6.9	6.3	6.8	6.3	6.2	5.7	11.3	7.62	7.43	11.95	11.17	10.94	46.00
DCB 162	12.8	12.0	13.8	13.0	14.0	12.9	12.9	11.9	12.8	11.7	11.6	10.6	6.3	4.27	4.16	6.69	6.26	6.13	46.00
DCB 163 / 163s	12.8	12.0	13.8	13.0	14.0	12.9	12.9	11.9	12.8	11.7	11.6	10.6	15.2	10.30	10.04	16.14	15.09	14.78	46.00
DCB 164 / 164s	12.8	12.0	13.8	13.0	14.0	12.9	12.9	11.9	12.8	11.7	11.6	10.6	21.5	14.54	14.17	22.78	21.29	20.86	46.00
DCB 165 / 165s	12.8	12.0	13.8	13.0	14.0	12.9	12.9	11.9	12.8	11.7	11.6	10.6	27.6	18.69	18.22	29.29	27.37	26.81	46.00
DCB 303	31.0	29.1	33.4	31.5	34.0	31.2	31.4	28.8	31.0	28.5	28.1	25.7	17.7	11.99	11.68	18.79	17.56	17.20	46.00
DCB 304 / 304s	31.0	29.1	33.4	31.5	34.0	31.2	31.4	28.8	31.0	28.5	28.1	25.7	21.4	14.53	14.16	22.77	21.28	20.84	46.00
DCB 305 / 305s	31.0	29.1	33.4	31.5	34.0	31.2	31.4	28.8	31.0	28.5	28.1	25.7	29.2	19.75	19.25	30.96	28.93	28.34	46.00
DCB 307s	31.0	29.1	33.4	31.5	34.0	31.2	31.4	28.8	31.0	28.5	28.1	25.7	41.2	27.91	27.21	43.74	40.88	40.04	46.00

[1]) Drying capacity is based on following moisture content test standards before and after drying:
– R134a: 1050 – 50 ppm W
– R404A, R507: 1020 – 50 ppm W
– R407C: 1020 – 50 ppm W
– R410A: 1050 – 50 ppm W
– R22: 1050 – 60 ppm W
In accordance with ARI 710-2004

[2]) Given in accordance with ARI 710-2004 for:
t_e = -15 °C
t_c = 30 °C
Δp = 0.07 bar

DCB - Hermetic bi-flow filter drier

Drying and liquid capacity (US units)

Type	Drying capacity [lb] of refrigerant [1]												Liquid capacity [TR] [2]						Max. working pressure MWP [psig]
	R134a		R404A		R507		R22		R407C		R410A		R134a	R404A	R507	R22	R407C	R410A	
	[°F]																		
	75	125	75	125	75	125	75	125	75	125	75	125							
DCB 053s	7.8	7.4	8.4	8.0	8.6	7.9	7.9	7.3	7.8	7.2	7.1	6.5	2.7	1.80	1.75	2.82	2.64	2.58	667.00
DCB 082 / 082s	15.0	14.1	16.2	15.3	16.5	15.2	15.2	14.0	15.0	13.8	13.6	12.5	1.6	1.08	1.05	1.69	1.58	1.55	667.00
DCB 083 / 083s	15.0	14.1	16.2	15.3	16.5	15.2	15.2	14.0	15.0	13.8	13.6	12.5	2.5	1.72	1.68	2.70	2.53	2.47	667.00
DCB 084 / 084s	15.0	14.1	16.2	15.3	16.5	15.2	15.2	14.0	15.0	13.8	13.6	12.5	3.2	2.18	2.12	3.41	3.19	3.12	667.00
DCB 162	28.1	26.5	30.3	28.6	30.9	28.4	28.5	26.2	28.1	25.9	25.5	23.4	1.8	1.22	1.19	1.91	1.79	1.75	667.00
DCB 163 / 163s	28.1	26.5	30.3	28.6	30.9	28.4	28.5	26.2	28.1	25.9	25.5	23.4	4.3	2.94	2.87	4.61	4.31	4.22	667.00
DCB 164 / 164s	28.1	26.5	30.3	28.6	30.9	28.4	28.5	26.2	28.1	25.9	25.5	23.4	6.1	4.15	4.05	6.51	6.08	5.96	667.00
DCB 165 / 165s	28.1	26.5	30.3	28.6	30.9	28.4	28.5	26.2	28.1	25.9	25.5	23.4	7.9	5.34	5.20	8.37	7.82	7.66	667.00
DCB 303	68.2	64.3	73.6	69.5	74.9	68.9	69.1	63.6	68.3	62.7	61.9	56.7	5.1	3.42	3.34	5.37	5.02	4.91	667.00
DCB 304 / 304s	68.2	64.3	73.6	69.5	74.9	68.9	69.1	63.6	68.3	62.7	61.9	56.7	6.1	4.15	4.05	6.51	6.08	5.96	667.00
DCB 305 / 305s	68.2	64.3	73.6	69.5	74.9	68.9	69.1	63.6	68.3	62.7	61.9	56.7	8.3	5.64	5.50	8.85	8.27	8.10	667.00
DCB 307s	68.2	64.3	73.6	69.5	74.9	68.9	69.1	63.6	68.3	62.7	61.9	56.7	11.8	7.97	7.77	12.50	11.68	11.44	667.00

[1]) Drying capacity is based on following moisture content test standards before and after drying:
– R134a: 1050 – 50 ppm W
– R404A, R507: 1020 – 50 ppm W
– R407C: 1020 – 50 ppm W
– R410A: 1050 – 50 ppm W
– R22: 1050 – 60 ppm W
In accordance with ARI 710-2004

[2]) Given in accordance with ARI 710-2004 for:
t_e = 5 °F
t_c = 85 °F
Δp = 1 psig

Ordering

DCB - Flare

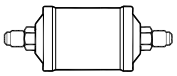

Ordering

Type	Connection		Code no.
	[in]	[mm]	
DCB 082	1/4	6	023Z1402
DCB 083	3/8	10	023Z1401
DCB 084	1/2	12	023Z1400
DCB 162	1/4	6	023Z1406
DCB 163	3/8	10	023Z1405
DCB 164	1/2	12	023Z1404
DCB 165	5/8	16	023Z1403
DCB 303	3/8	10	023Z1409
DCB 304	1/2	12	023Z1408
DCB 305	5/8	16	023Z1407

DCB - Solder (pure copper)

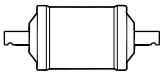

Ordering

Type	Connection	Code no.	Connection	Code no.
	[in]		[mm]	
DCB 082s	1/4	023Z1434	–	–
DCB 083s	3/8	023Z1433	–	–
DCB 084s	1/2	023Z1432	–	–
DCB 163s	3/8	023Z1437	–	–
DCB 164s	1/2	023Z1436	–	–
DCB 165s	5/8	023Z1435	–	–
DCB 304s	1/2	023Z1440	–	–
DCB 305s	5/8	023Z1439	–	–
DCB 307s	7/8	023Z1438	–	–

DCB - Solder (cu-plated)

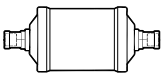

Ordering

Type	Connection	Code no.	Connection	Code no.
	[in]		[mm]	
DMB 082s	1/4	023Z1464	–	–
DMB 083s	3/8	023Z1463	10	023Z1458
DMB 084s	1/2	023Z1462	–	–
DMB 163s	3/8	023Z1467	–	–
DMB 164s	1/2	023Z1466	12	023Z1452
DMB 165s	5/8	023Z1465	–	–
DMB 304s	1/2	023Z1470	–	–
DMB 305s	5/8	023Z1469	–	–
DMB 307s	7/8	023Z1468	–	–

Quick Selection Notes:

DMC, Hermetic receiver filter drier

DMC **ELIMINATOR®** are combined hermetic receiver and filter driers optimized to systems where the condenser is incapable of containing the total quantity of refrigerants.
DMC filters contain a solid core consisting of 100% Molecular Sieve, and are especially suitable for air conditioning systems with HFC, HCFC refrigerants and polyolester oil with additives.

DMC filters contain a solid core consisting of 3 Å Molecular Sieve and activated aluminium oxide, and are especially suitable for air conditioning systems with HCFC refrigerants and mineral oil, and also with HFC refrigerants and polyolester oil.

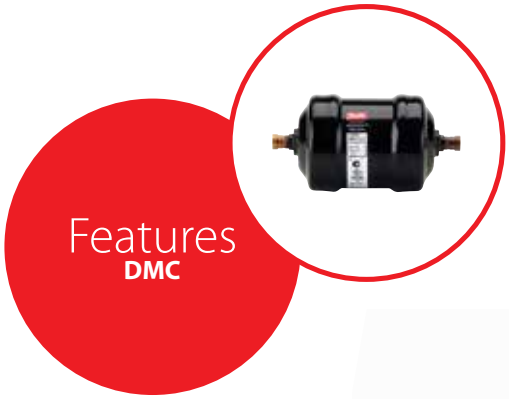

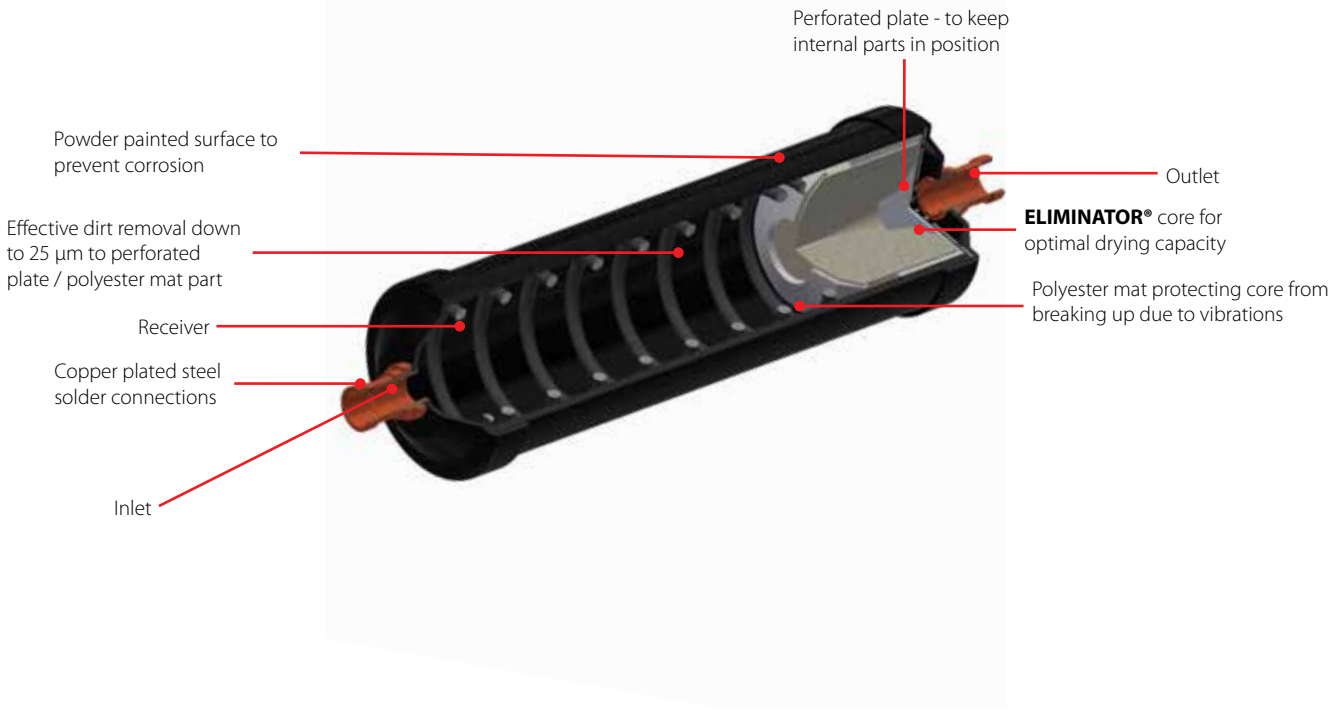

Facts

Application:
- Air conditioning systems
- Heat pumps
- Transport refrigeration
- Applicable to R22, R32, R134a, R404A,R410A, R407C, R23, R600,R1234yf, R1234ze, R407f, R290, R452A,R444B, R449A, R448A and R450A

- Combined filter drier and receiver to keep down number of components
- Space-saving
- Fast installation
- High drying capacity at high and low liquid temperatures
- DMC filters contain a solid core consisting of 100% 3 Å Molecular Sieve
- Available with solder connections (cu-plated steel connectors)

- Optimum flow characteristics and dirt retention
- Approved as HP container according to PED 2014/68/EU -a4p3
- 25 µm (0.001 in) filter provides high retention with minimal pressure drop
- Thermally stable up to 120 °C / 250 °F

Technical data and ordering

DMC - Solder (cu-plated)

Drying and liquid capacity

Type	Drying capacity [kg] of refrigerant [1]										Liquid capacity [kW] [2]					Max working pressure PS [bar]
	R134a		R404A		R507		R407C		R410A							
	[°C]															
	24	52	24	52	24	52	24	52	24	52	R134a	R404A	R507	R407C	R410A	
DMC 0432s	6.1	5.8	6.6	6.2	6.7	6.2	6.1	5.6	5.6	5.1	6.3	4.24	4.14	6.22	6.09	42
DMC 0732s	6.1	5.8	6.6	6.2	6.7	6.2	6.1	5.6	5.6	5.1	6.3	4.24	4.14	6.22	6.09	42
DMC 2032s	6.1	5.8	6.6	6.2	6.7	6.2	6.1	5.6	5.6	5.1	6.3	4.28	4.17	6.26	6.13	42
DMC 2033s	6.1	5.8	6.6	6.2	6.7	6.2	6.1	5.6	5.6	5.1	12.4	8.37	8.16	12.26	12.01	42
DMC 2034s	6.1	5.8	6.6	6.2	6.7	6.2	6.1	5.6	5.6	5.1	19.1	12.97	12.64	18.99	18.60	42
DMC 40163s	27.1	25.5	29.2	27.6	29.8	27.3	27.1	24.9	24.6	22.5	22.0	14.92	14.55	21.86	21.41	42
DMC 40164s	27.1	25.5	29.2	27.6	29.8	27.3	27.1	24.9	24.6	22.5	29.3	19.82	19.32	29.03	28.43	42

[1]) Drying capacity is based on following moisture content test standards before and after drying:
– R134a: 1050 – 50 ppm W
– R404A, R507: 1020 – 50 ppm W
– R407C: 1020 – 50 ppm W
– R410A: 1050 – 50 ppm W
In accordance with ARI 710-2004

[2]) Given in accordance with ARI 710-2004 for:
t_e = -15 °C / 5 °F
t_c = 30 °C / 85 °F
Δp = 0.07 bar / 1 psig

DMC - Solder (cu-plated)



Ordering

Type	Connection [mm]	Connection [in]	Code no.
DMC 0432s	6	–	023Z7019
DMC 0732s	6	–	023Z7020
DMC 2023s	6	–	023Z7021
	–	1/4	023Z7022
DMC 2033s	10	–	023Z7023
	–	3/16	023Z7024
DMC 2034s	–	1/2	023Z7026
DMC 40163s	10	–	023Z7027
	–	3/8	023Z7028
DMC 40164s	12	–	023Z7029
	–	1/2	023Z7030

DCC, Hermetic receiver filter drier

DCC **ELIMINATOR®** are combined hermetic receiver and filter driers optimized to systems where the condenser is incapable of containing the total quantity of refrigerants.

DCC filters contain a solid core consisting of 3 Å Molecular Sieve and activated aluminium oxide, and are especially suitable for air conditioning systems with HCFC refrigerants and mineral oil, and also with HFC refrigerants and polyolester oil.



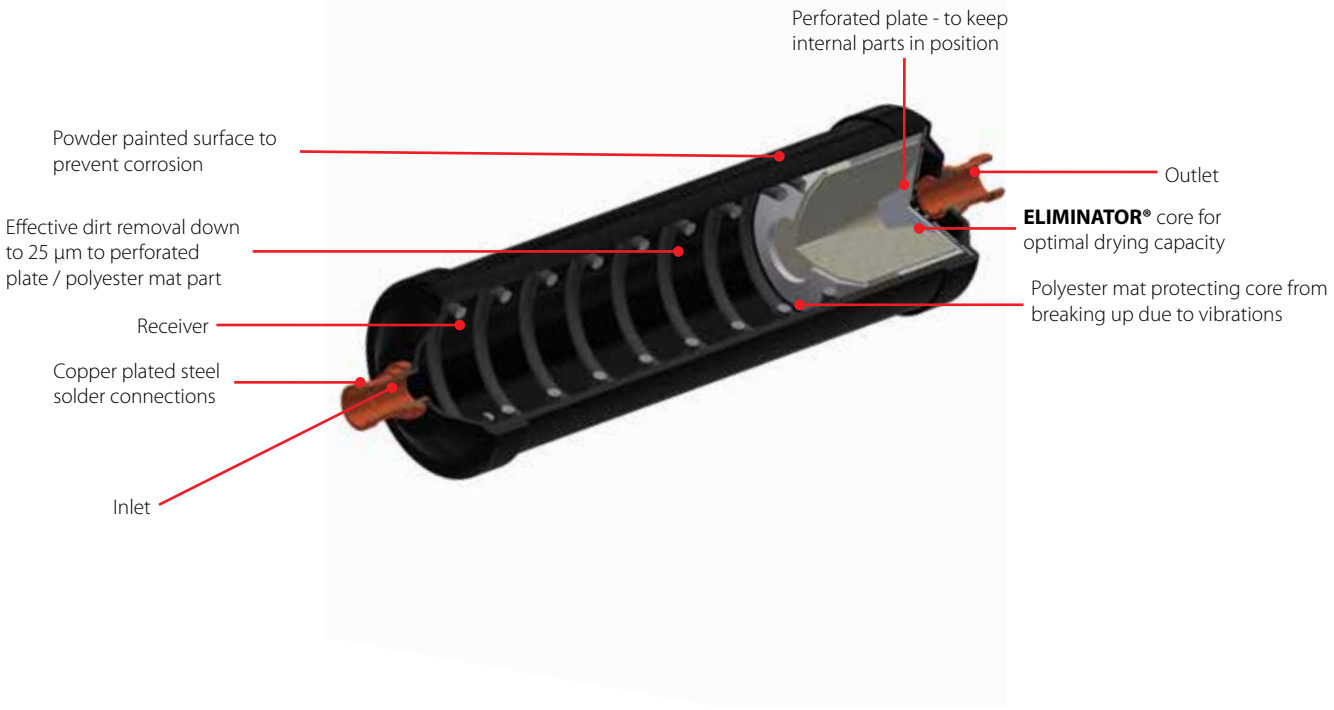

Facts

Application:
- Air conditioning systems
- Heat pumps
- Transport refrigeration
- Applicable to R22, R32, R134a, R404A,R410A, R407C, R23, R600,R1234yf, R1234ze, R407f, R290, R452A,R444B, R449A, R448A and R450A

- Combined filter drier and receiver to keep down number of components
- Space-saving
- Fast installation
- High drying capacity at high and low liquid temperatures
- DCC filters contain a solid core consisting of 80% 3Å molecular sieve with 20% activated alumina core
- Available with solder connections (cu-plated steel connectors)

- Optimum flow characteristics and dirt retention
- Approved as HP container according to PED 2014/68/EU -a4p3
- 25 µm (0.001 in) filter provides high retention with minimal pressure drop
- Thermally stable up to 120 °C / 250 °F

Technical data and ordering

DCC - Solder (cu-plated)

Drying and liquid capacity

Type	Drying capacity [kg] of refrigerant [1]												Liquid capacity [kW] [2]						Max working pressure PS [bar]
	R134a		R404A		R507		R22		R407C		R410A		R134a	R404A	R507	R22	R407C	R410A	
	[°C]																		
	24	52	24	52	24	52	24	52	24	52	24	52							
DCC 0432s	4.7	4.4	5.1	4.8	5.2	4.7	4.8	4.4	4.7	4.3	4.3	3.9	6.3	4.24	4.14	6.65	6.22	6.09	42
DCC 0732s	4.7	4.4	5.1	4.8	5.2	4.7	4.8	4.4	4.7	4.3	4.3	3.9	6.3	4.24	4.14	6.65	6.22	6.09	42
DCC 2032s	4.7	4.4	5.1	4.8	5.2	4.7	4.8	4.4	4.7	4.3	4.3	3.9	6.3	4.24	4.14	6.65	6.22	6.09	42
DCC 2033s	4.7	4.4	5.1	4.8	5.2	4.7	4.8	4.4	4.7	4.3	4.3	3.9	12.4	8.37	8.16	13.12	12.26	12.01	42
DCC 40163s	21.3	20.1	23.0	21.7	23.4	21.5	21.6	19.9	21.3	19.6	19.3	17.7	22.0	14.92	14.55	23.39	21.86	21.41	42

[1]) Drying capacity is based on following moisture content test standards before and after drying:
– R134a: 1050 – 50 ppm W
– R404A, R507: 1020 – 50 ppm W
– R407C: 1020 – 50 ppm W
– R410A: 1050 – 50 ppm W
– R22: 1050 – 60 ppm W
In accordance with ARI 710-2004

[2]) Given in accordance with ARI 710-2004 for:
t_e = -15 °C / 5 °F
t_c = 30 °C / 85 °F
Δp = 0.07 bar / 1 psig

DCC - Solder (cu-plated)

Ordering



Type	Connection [mm]	Connection [in]	Code no.
DCC 0432s	6	–	023Z7000
DCC 0732s	6	–	023Z7001
DCC 2032s	6	–	023Z7002
	–	1/4	023Z7003
DCC 2033s	10	–	023Z7004

SGP, Sight glass (high pressure)

SGP are sight glasses for high pressure applications (Max Working Pressure PS / MWP: 52 bar / 754 psi).
SGP is available with flare, solder and socket connections, and with and without moisture indicators.
SGP I / SGP N and SGP RI / SGP RN are equipped with sensitive indicators that reflects a changes colour, depending on the moisture content in the refrigerant.
SGP X and SGP RX, without moisture indicator, are mainly used to indicate the condition of the refrigerant in the liquid line or the flow in the oil return line from the oil separator.



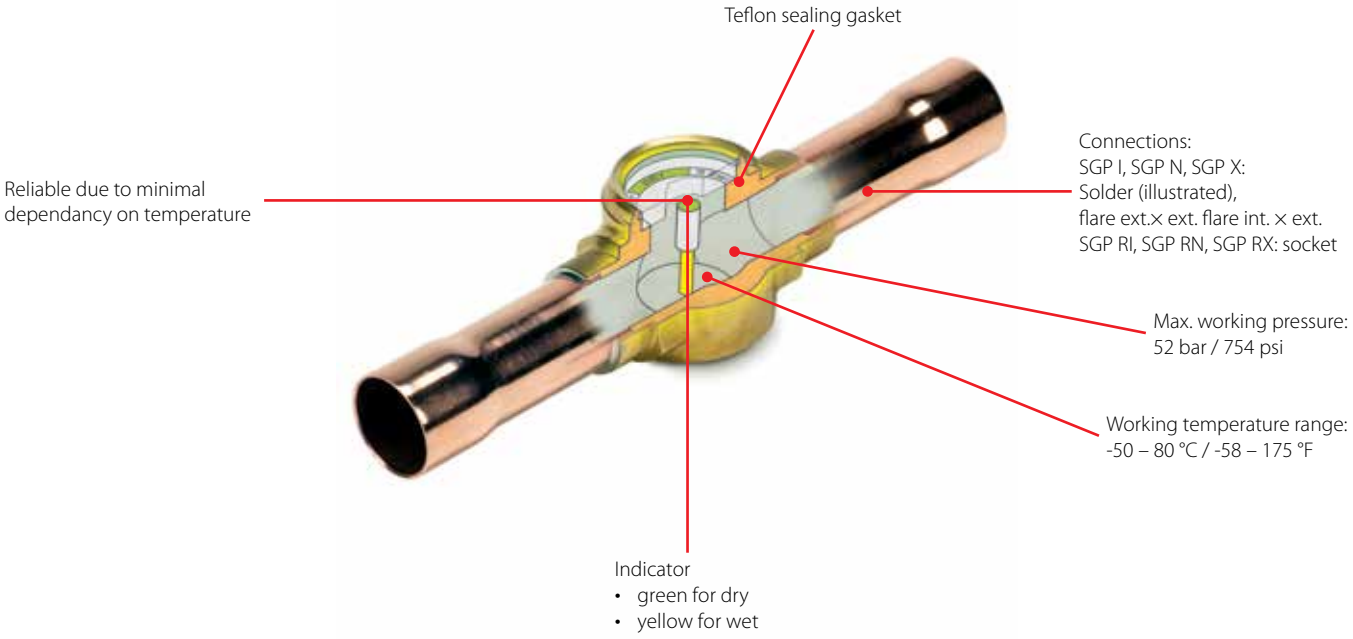

Facts

Application:
- Traditional refrigeration
- Heat pump systems
- Air conditioning units
- Liquid coolers
- Transport refrigeration
- Solder versions are compliant with ATEX hazard zone 2

For a fully updated list of approved refrigerants, visit www.products.danfoss.com and search for individual code numbers, where refrigerants are listed as part of product specifications.

Type SGP X / SGP RX (without indicator)
- Indicates lack of subcooling
- Indicates refrigerant deficiency
- Indicates liquid level in receiver
- Indicates oil level in compressor

Type SGP I / SGP RI (with I type indicator)
- For R22, R290, R600, R600a, R1234yf refrigerants
- Indicates too high moisture content in the refrigeration system
- Indicates lack of subcooling
- Indicates refrigerant deficiency

Type SGP N / SGP RN (with N type indicator)
- For R22, R32, R134a, R404A, R407C, R507, R410A, R1270, R407A, R407F, R448A, R449A, R450A, R452A, R452B, R454B, R513A, R1234ze, R744(CO_2) refrigerants
- Indicates too high moisture content in the refrigeration system
- Indicates lack of subcooling
- Indicates refrigerant deficiency
- Connections:
  - Solder ODF x ODF
  - Solder ODF x ODM
  - Flare ext. x ext.
  - Flare int. x ext.
  - Socket
- Wide range with connection sizes from 6 to 22 mm or $^{1}/_{4}$ to $^{7}/_{8}$ in.

Technical data

Max. working pressure: PS / MWP = 52 bar / 754 psi
Media temperature: -50 – 80 °C / -58 – 175 °F
Approvals: UL, EAC

Available types



Solder version ODF x ODF

SGP X
without indicator

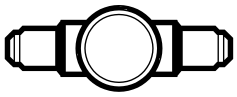

Flare External x External

SGP X
without indicator



Flare Internal x External

SGP I and SGP N
with indicator



Solder version ODF x ODM

SGP I and SGP N
with indicator



Solder version ODF x ODF

SGP I and SGP N
with indicator



Flare External x External

SGP I and SGP N
with indicator

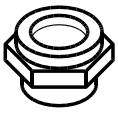

Socket

SGP RX
without indicator



Socket

SGP RI and SGP RN
with indicator



Saddle

SGS

SGP I for R22, R290, R600, R600a, R1234yf refrigerants

Technical data

Refrigerant	Moisture content ppm = parts per million					
	SGP I / SGP RI					
	Media temperature 25 °C / 77 °F			Media temperature 43 °C / 109 °F		
	Green / dry	Intermed. color	Yellow / wet	Green / dry	Intermed. color	Yellow / wet
R22	< 150	150 – 300	> 300	< 250	250 – 500	> 500
R290	< 25	25 – 50	> 50	< 50	50 – 100	> 100
R600	< 10	10 – 20	> 20	< 28	28 – 55	> 55
R600a	< 11	11 – 22	> 22	< 30	30 – 60	> 60
R1234yf	< 93	93 – 130	> 130	< 130	130 – 247	> 247

Technical data and ordering

SGP N for R22, R32, R134a, R404A, R407C, R507, R410A, R1270, R407A, R407F, R448A, R449A, R450A, R452A, R452B, R454B, R513A, R1234ze, R744(CO_2) refrigerants

Technical data

Refrigerant	Moisture content ppm = parts per million					
	SGP N / SGP RN					
	Media temperature 25 °C / 77 °F			Media temperature 43 °C / 109 °F		
	Green / dry	Intermed. color	Yellow / wet	Green / dry	Intermed. color	Yellow / wet
R22	< 30	30 – 120	> 120	< 50	50 – 200	> 200
R32	< 64	64 – 289	> 289	< 116	116 – 459	> 459
R134a	< 30	30 – 100	> 100	< 45	45 – 170	> 170
R404A	< 20	20 – 70	> 70	< 25	25 – 100	> 100
R407C	< 30	30 – 140	> 140	< 60	60 – 225	> 225
R507	< 15	15 – 60	> 60	< 30	30 – 110	> 110
R410A	< 66	66 – 266	> 266	< 135	135 – 540	> 540
R1270	< 16	16 – 62	> 62	< 29	29 – 115	> 115
R407A	< 29	29 – 115	> 115	< 48	48 – 192	> 192
R407F	< 30	30 – 168	> 168	< 60	60 – 240	> 240
R448A	< 28	28 – 110	> 110	< 70	70 – 227	> 227
R449A	< 29	29 – 105	> 105	< 53	53 – 200	> 200
R450A	< 23	23 – 148	> 148	< 46	46 – 245	> 245
R452A	< 20	20 – 79	> 79	< 30	30 – 143	> 143
R452B	< 70	70 – 260	< 260	< 144	144 – 260	>260
R454B	< 29	29 – 161	> 161	< 58	58 – 250	> 250
R513A	< 22	22 – 75	> 75	< 22	22 – 123	> 123
R1234ze	< 26	26 – 132	> 132	< 28	28 – 165	> 165

Note

-This product is approved for R290, R600, R600a and R1270 by ignition source assessment in accordance to standard EN13463-1.
-For colours reflecting moisture values of other refrigerants, please contact Danfoss.

Technical data and ordering

SGP X without indicator

Ordering - Solder / Flare type

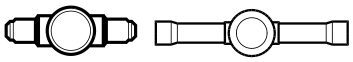

Type	Connection type	Connection [in]	Connection [mm]	Code no.
SGP 10 X	Flare ext. × ext.	3/8 × 3/8	10 × 10	014L0080
SGP 12s X	Solder ODF x ODF	1/2 × 1/2	–	014L0086
SGP 16s X	Solder ODF x ODF	5/8 × 5/8	16 × 16	014L0087
SGP 22s X	Solder ODF x ODF	7/8 × 7/8	22 × 22	014L1207

Note
Only solder versions are allowed for flammable refrigerants.

SGP I with I type indicator

Ordering



Type	Connection type	Connection [in]	Connection [mm]	Code no.
SGP 6 I	Flare ext. × ext.	1/4 × 1/4	6 × 6	014L0007
SGP 10 I	Flare ext. × ext.	3/8 × 3/8	10 × 10	014L0008
SGP 12 I	Flare ext. × ext.	1/2 × 1/2	12 × 12	014L0009
SGP 16 I	Flare ext. × ext.	5/8 × 5/8	16 × 16	014L0024
SGP 19 I	Flare ext. × ext.	3/4 × 3/4	19 × 19	014L0028
SGP 6 I	Flare int. × ext. [1])	1/4 × 1/4	6 × 6	014L0021
SGP 10 I	Flare int. × ext. [1])	3/8 × 3/8	10 × 10	014L0022
SGP 12 I	Flare int. × ext. [1])	1/2 × 1/2	12 × 12	014L0025
SGP 16 I	Flare int. × ext. [1])	5/8 × 5/8	16 × 16	014L0026
SGP 19 I	Flare int. × ext. [1])	3/4 × 3/4	19 × 19	014L0043
SGP 6s I	ODF × ODF solder	1/4 × 1/4	–	014L0034
SGP 10s I	ODF × ODF solder	3/8 × 3/8	–	014L0035
SGP 12s I	ODF × ODF solder	1/2 × 1/2	–	014L0036
SGP 16s I	ODF × ODF solder	5/8 × 5/8	16 × 16	014L0044
SGP 19s I	ODF × ODF solder	3/4 × 3/4	19 × 19	014L0047
SGP 22s I	ODF × ODF solder	7/8 × 7/8	22 × 22	014L0039
SGP 6s I	ODF × ODF solder	–	6 × 6	014L0040
SGP 10s I	ODF × ODF solder	–	10 × 10	014L0041
SGP 12s I	ODF × ODF solder	–	12 × 12	014L0042
SGP 18s I	ODF × ODF solder	–	18 × 18	014L0045
SGP 6s I	ODF × ODM solder	1/4 × 1/4	–	014L0125
SGP 10s I	ODF × ODM solder	3/8 × 3/8	–	014L0126
SGP 12s I	ODF × ODM solder	1/2 × 1/2	–	014L0127
SGP 16s I	ODF × ODM solder	5/8 × 5/8	16 × 16	014L0128
SGP 22s I	ODF × ODM solder	7/8 × 7/8	22 × 22	014L0130

[1]) Can be screwed directly into the filter drier.

Note
Only solder versions are allowed for flammable refrigerants.

Technical data and ordering

SGP N with N type indicator

Ordering



Type	Version	Connection [in]	Connection [mm]	Code no.
SGP 6 N	Flare ext. × ext.	1/4 × 1/4	6 × 6	014L0161
SGP 10 N	Flare ext. × ext.	3/8 × 3/8	10 × 10	014L0162
SGP 12 N	Flare ext. × ext.	1/2 × 1/2	12 × 12	014L0163
SGP 16 N	Flare ext. × ext.	5/8 × 5/8	16 × 16	014L0165
SGP 19 N	Flare ext. × ext.	3/4 × 3/4	19 × 19	014L0166
SGP 6 N	Flare int. × ext. [1]	1/4 × 1/4	6 × 6	014L0171
SGP 10 N	Flare int. × ext. [1]	3/8 × 3/8	10 × 10	014L0172
SGP 12 N	Flare int. × ext. [1]	1/2 × 1/2	12 × 12	014L0173
SGP 16 N	Flare int. × ext. [1]	5/8 × 5/8	16 × 16	014L0174
SGP 19 N	Flare int. × ext. [1]	3/4 × 3/4	19 × 19	014L0175
SGP 6s N	ODF × ODF solder	1/4 × 1/4	–	014L0181
SGP 10s N	ODF × ODF solder	3/8 × 3/8	–	014L0182
SGP 12s N	ODF × ODF solder	1/2 × 1/2	–	014L0183
SGP 16s N	ODF × ODF solder	5/8 × 5/8	16 × 16	014L0184
SGP 19s N	ODF × ODF solder	3/4 × 3/4	19 × 19	014L0185
SGP 22s N	ODF × ODF solder	7/8 × 7/8	22 × 22	014L0186
SGP 22s N [2]	ODF × ODF solder	1 1/8 × 1 1/8	–	014L0187
SGP 6s N	ODF × ODF solder	–	6 × 6	014L0191
SGP 10s N	ODF × ODF solder	–	10 × 10	014L0192
SGP 12s N	ODF × ODF solder	–	12 × 12	014L0193
SGP 18s N	ODF × ODF solder	–	18 × 18	014L0195
SGP 6s N	ODF × ODM solder	1/4 × 1/4	–	014L0201
SGP 10s N	ODF × ODM solder	3/8 × 3/8	–	014L0202
SGP 12s N	ODF × ODM solder	1/2 × 1/2	–	014L0203
SGP 16s N	ODF × ODM solder	5/8 × 5/8	16 × 16	014L0204
SGP 22s N	ODF × ODM solder	7/8 × 7/8	22 × 22	014L0206

[1]) Can be screwed directly into the filter drier.
[2]) Oversize connections.

Note
Only solder versions are allowed for flammable refrigerants.

SGP - socket type and SGS saddle

Ordering

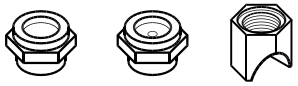

Type	Version	Connection		Floating ball [pc]	O-ring	Code no.
		1	2			
SGP ¾ RX (no indicator)	G thread	G 3/4 A [1]	–	1	No	014L0004
	NPT	3/4 – 14 NPT [2]	–	1	No	014L0005
SGP ½ RX (no indicator)	NPT	1/2 – 14 NPT [2]	–	3	No	014L0002
SGP ½ RI (I type indicator)	NPT	1/2 – 14 NPT [2]	–	3	No	014L0131
SGP 24 RI (I type indicator)	M thread	M24 × 1	–	–	Yes	014L1154
SGP ½ RN (N type indicator)	NPT	1/2 – 14 NPT [2]	–	3	No	014L0006
SGP 24 RN (N type indicator)	M thread	M24 × 1	–	–	Yes	014L1155
SGP 20 RN (N type indicator)	M thread	M20 × 1.5	–	–	No	014L1601
SGS (saddle)	Tube fitting	M20 × 1.5	1 1/8	–	–	014-1071
	Tube fitting	M20 × 1.5	1 3/8	–	–	014-1074
	Tube fitting	M24 × 1	7/8	–	–	014-1059
	Tube fitting	M24 × 1	1 1/8	–	–	014-1056
	Tube fitting	M24 × 1	1 3/8	–	–	014-1057
	Tube fitting	M24 × 1	1 5/8	–	–	014-1058
	Tube fitting	M24 × 1	2 1/8	–	–	014-1067

[1]) ISO 228-1.
[2]) ANSI / ASME B1.20.1

Note
Only solder versions are allowed for flammable refrigerants.

Quick Selection Notes:

LLG, Sight glass

LLG columnar sight glasses are made of ductile steel which meets the strictest requirements on industrial and marine refrigeration installations.

LLG has sufficient flow areas to secure the highest possible degree of synchronous operation, and have a specially hardened reflection glass for quick reading. The recessed bolts makes insulation easy while front access to the bolts facilitates inspection and service.

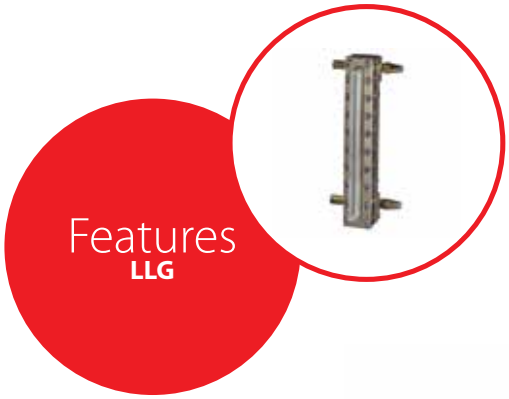

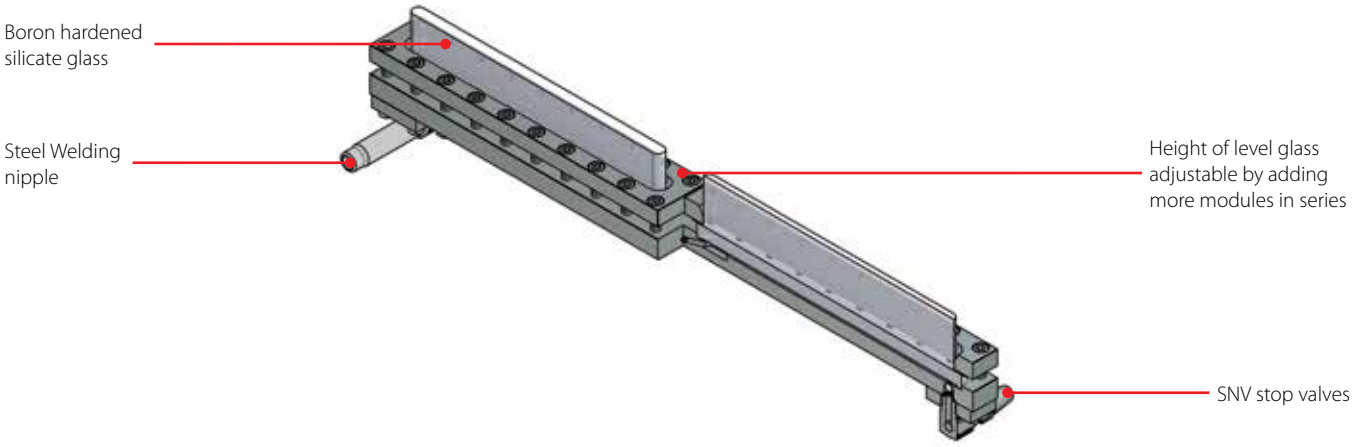

Facts

- All LLG sight glasses are equipped as standard with a built-in safety system (non return device). If a glass is damaged, the pressure of the refrigerant will activate the safety system and refrigerant loss will be limited to an absolute minimum
- Applicable to R717. Flammable hydrocarbons are not recommended. *For a fully updated list of approved refrigerants, visit www.products.danfoss.com and search for individual code numbers, where refrigerants are listed as part of product specifications.*
- Temperature range -10 – 100 °C / -50 – 30 °F
- Maximum operating pressure: 25 bar/psi g. Equipped with boron-silicate glass, hardened by an accurately controlled heat treatment process
- The range of sight glasses is based on 3 basic liquid level glasses: LLG 185, LLG 335 and LLG 740. The other standard lengths are combined by using variations of basic glass lengths. High reliability and durability due to maximum internal and external tightness
- The sight glasses are offered in 4 different versions:
  - with welding nipples (LLG)
  - with stop valves equipped with caps (LLG S)
  - with sight adapter in acrylic glass ready for insulation on site (LLG F)
  - with stop valves and sight adapter in acrylic glass ready for insulation on site (LLG SF)

Place LLG sight glass in CE approved applications with the stop valves in front i.e. LLG S or LLG SF

Technical data and ordering



LLG - Sight glass

Technical data

Temperatur range [°C / °F]	LLG S: -10 – 100 / 14 – 212 LLG SF: -50 – 30 / -58 – 86
Max. operating pressure [bar / psi g]	25 / 363
Strength test pressure [bar / psi g]	50 / 725
Leakage test pressure [bar / psi g]	25 / 363

Ordering

LLG with safety system and welding nipples

Type	Size		Code no.
	[in]	[mm]	
LLG 185	7 1/4	185	2512+049
LLG 335	13 1/4	335	2512+050
LLG 590	23 1/4	590	2512+051
LLG 740	29 1/4	740	2512+052
LLG 995	39 1/4	995	2512+053
LLG 1145	45	1145	2512+054
LLG 1550	61	1550	2512+055

LLG S with safety system and stop valves (SNV-ST)

Type	Size		Code no.
	[in]	[mm]	
LLG 185 S	7 1/4	185	2512+056
LLG 335 S	13 1/4	335	2512+057
LLG 590 S	23 1/4	590	2512+058
LLG 740 S	29 1/4	740	2512+059
LLG 995 S	39 1/4	995	2512+060
LLG 1145 S	45	1145	2512+061
LLG 1550 S	61	1550	2512+062

LLG F with safety system and sight adapter

Type	Size		Code no.
	[in]	[mm]	
LLG 185 F	7 1/4	185	2512+078
LLG 335 F	13 1/4	335	2512+079
LLG 590 F	23 1/4	590	2512+080
LLG 740 F	29 1/4	740	2512+081
LLG 995 F	39 1/4	995	2512+082
LLG 1145 F	45	1145	2512+083
LLG 1550 F	61	1550	2512+084

LLG SF with safety system, stop valves (SNV-ST) and sight adapter

Type	Size		Code no.
	[in]	[mm]	
LLG 185 SF	7 1/4	185	2512+066
LLG 335 SF	13 1/4	335	2512+067
LLG 590 SF	23 1/4	590	2512+068
LLG 740 SF	29 1/4	740	2512+069
LLG 995 SF	39 1/4	995	2512+070
LLG 1145 SF	45	1145	2512+071
LLG 1550 SF	61	1550	2512+072

Important!
Where products need to be certified according to specific certification societies or where higher pressures are required, the relevant information should be included at the time of order.

FIA, Strainer - 52 bar / 754 psi

FIA strainers are a range of angleway and straightway strainers, carefully designed to give favourable flow conditions. The design makes the strainer easy to install, and ensures quick filter inspection and cleaning. The strainer is based on three main components – valve body, top cover, and strainer insert – and is available both as complete strainers and as parts programme.

FIA strainers are members of the SVL modular concept product family, so each valve body is available with several different connection types and sizes, and it is possible to convert FIA to any other product in the SVL family by replacing the complete top part. FIA strainers are used ahead of automatic controls, pumps, compressors etc., for initial plant start-up and where permanent filtration of the refrigerant is required. The strainer reduces the risk of system breakdowns and reduces wear and tear on plant components.



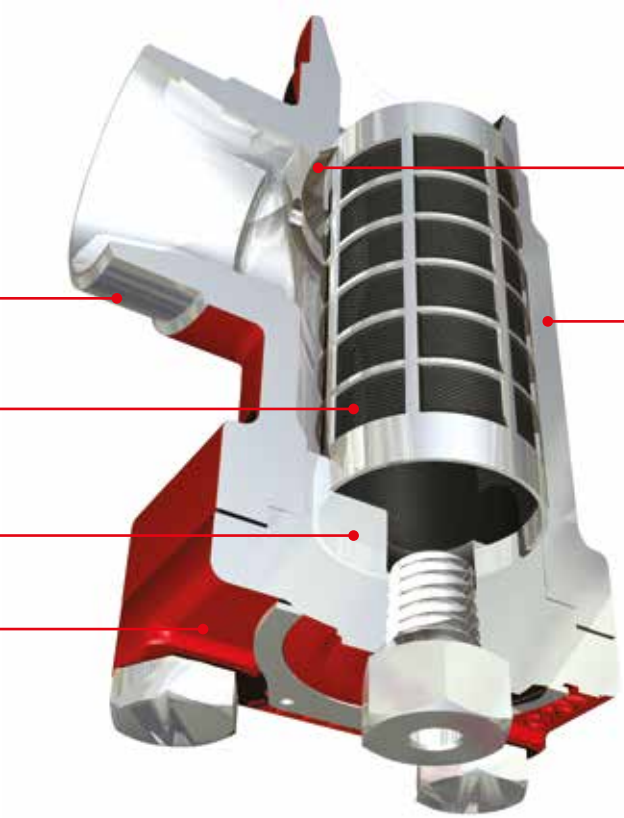

Facts

- Valve body is standard SVL angleway or straightway valve body allowing other inserts from the SVL platform to be installed
- Applicable to R717, R744, R113, R114, R1233zd(E), R1234yf, R1234ze(E), R125, R1270, R1336mzz(Z), R134a, R152a, R170, R22, R227ea, R23, R236fa, R290, R32, R401A, R402A, R402B, R404A, R407A, R407B, R407C, R407F, R407H, R408A, R409A, R410A, R417A, R421A, R422A, R422B, R422D, R427A, R438A, R444B, R447A, R448A, R449A, R449B, R450A, R452A, R454B, R455A, R502, R503, R507, R513A, R600, R600a and RE170
  For a fully updated list of approved refrigerants, visit www.products.danfoss.com and search for individual code numbers, where refrigerants are listed as part of product specifications.
- Strainer insert of stainless steel mounted directly without extra gaskets for easy servicing
- Two types of strainer inserts are available:
  - A plain insert of stainless steel
  - A pleated insert (DN 15 – 200) with extra large surface, which ensures low pressure drop and long intervals between cleaning
- **FIA 15 – 40 (½ – 1 ½ in)**:
  A special insert (50µ) can be used in combination with a standard version when cleaning a plant during commissioning
- **FIA 50 – FIA 200 (2 – 8 in)**:
  A large capacity filter bag (50µ) can be inserted for cleaning plant during commissioning
- **FIA 80 – FIA 300 (3 – 12 in)**:
  can be equipped with a magnetic insert for detention of iron particles and other magnetic particles
- Valve body and bonnet of low temperature steel in accordance with the requirements of the Pressure Equipment Directive and those of other international classification authorities
- Temperature range:
  -60 – 150 °C / -76 – 302 °F
- Max. working pressure:
  FIA 15-200: 52 bar g / 754 psi g
  FIA 250-300: 40 bar g / 580 psi g

Technical data

The Concept

Each valve housing is available with several different connection types and sizes.
It is possible to convert FIA strainers to any other product in the SVL family (shut-off valve, hand regulating valve, check & stop valve or check valve) just by replacing the complete top part.

The valve body

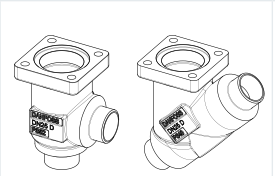

DN 15–65 mm (½ – 2 ½ in)

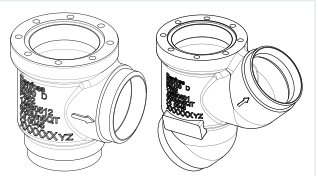

DN 80–125 mm (3 – 5 in)

Connection type

D / F	GOST	A	SOC	FPT
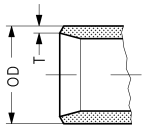	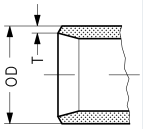	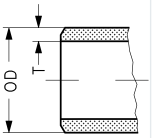	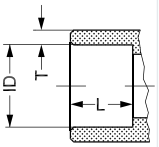	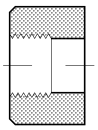
Butt-weld DIN Butt-weld F	Butt-weld GOST	Butt-weld ANSI	Socket weld ANSI	Female Pipe Thread

Selection of strainer size

The mesh aperture size of the strainer must satisfy the requirements stated by the suppliers of the equipment to be protected.
The following recommendations of aperture size apply in general to refrigeration installations:

All lines

First start up: —— 50 µ
(Use strainer insert with removable insert for FIA DN15 – 40 or separate filter bag for FIA DN 50 – 200. 50µ insert should normally be removed after the first 24 hours of operation).

Liquid Lines

Ahead of pumps: —— 500 µ [38 mesh]
After pumps: —— 150 µ [100 mesh] / 250 µ [72 mesh]
In front of AKVA valves: —— 100 µ [150 mesh]

Protection of automatic regulation equipment

Generally: —— 150 µ [100 mesh] / 250 µ [72 mesh]
Sensitive equipment, e.g. suction regulators with low temperature: —— 250 µ [72 mesh]

Suction Lines

Ahead of screw compressor: —— 250 µ [72 mesh]
Ahead of piston compressor: —— 150 µ [100 mesh]

Flow coefficient

(DIN / ANSI)

Connection size (DN) FIA	[µ]	[mesh]	wire [mm]	wire [in]	free space [%]	screen area			
						Plain inserts		Pleated inserts	
						[cm²]	[in²]	[cm²]	[in²]
15 – 20 (½ – ¾ in)	100	–	0.068	0.003	35	25	3.9	45	7.0
	150	100	0.10	0.004	36	25	3.9	45	7.0
	250	72	0.10	0.004	51	25	3.9	45	7.0
	500	38	0.16	0.006	57.6	25	3.9	45	7.0
25 – 40 (1 – 1 ½ in)	100	–	0.068	0.003	35	71	11	160	25.0
	150	100	0.10	0.004	36	71	11	160	25.0
	250	72	0.10	0.004	51	71	11	160	25.0
	500	38	0.16	0.006	57.6	71	11	160	25.0
50 (2 in)	100	–	0.068	0.003	35	71	11	200	31.2
	150	100	0.10	0.004	36	87	13.5	200	31.2
	250	72	0.10	0.004	51	87	13.5	200	31.2
	500	38	0.16	0.006	57.6	87	13.5	200	31.2
65 (2 ½ in)	150	100	0.10	0.004	36	127	19.7	305	47.6
	250	72	0.10	0.004	51	127	19.7	305	47.6
	500	38	0.16	0.006	57.6	127	19.7	305	47.6
80 (3 in)	150	100	0.10	0.004	36	205	31.8	450	70.2
	250	72	0.10	0.004	51	205	31.8	450	70.2
	500	38	0.16	0.006	57.6	205	31.8	450	70.2
100 (4 in)	150	100	0.10	0.004	36	370	57.4	790	123.2
	250	72	0.10	0.004	51	370	57.4	790	123.2
	500	38	0.16	0.006	57.6	370	57.4	790	123.2
125 (5 in)	150	100	0.10	0.004	36	510	79.1	1105	172.4
	250	72	0.10	0.004	51	510	79.1	1105	172.4
	500	38	0.16	0.006	57.6	510	79.1	1105	172.4
150 (6 in)	150	100	0.10	0.004	36	726	112.5	1600	249.6
	250	72	0.10	0.004	51	726	112.5	1600	249.6
	500	38	0.16	0.006	57.6	726	112.5	1600	249.6
200 (8 in)	150	100	0.10	0.004	36	1315	203.8	2900	453.1
	250	72	0.10	0.004	51	1315	203.8	2900	453.1
	500	38	0.16	0.006	57.6	1315	203.8	2900	453.1
250 (10 in)	150	100	0.10	0.004	36	1800	70.9	–	–
300 (12 in)	150	100	0.10	0.004	36	2590	102.0	–	–

Mesh is the number of threads per inch. µ (microns) is the distance between two threads (1 µ = 1/1000 mm).

Technical data

Selection of strainer size

K_v values

DN	FIA angle – plain strainer insert				FIA angle – pleated strainer insert		
	µ 100	µ 150	µ 250	µ 500	µ 150	µ 250	µ 500
15	3.3	3.4	3.5	3.7	4.2	–	–
20	6.9	7.1	7.3	7.7	8.8	–	–
25	13.8	14.0	14.5	15.2	17.2	17.9	–
32	23.0	23.8	24.7	25.5	29.2	30.5	–
40	25.1	25.5	26.4	28.1	31.4	32.6	–
50	45.1	45.9	47.6	50.2	56.7	58.8	62.0
65	–	56.1	57.8	60.4	69.3	71.4	74.6
80	–	104.6	108.0	113.1	129.2	133.4	139.7
100	–	162.4	167.5	176.0	200.6	206.9	217.4
125	–	275.4	283.9	298.4	340.2	350.7	368.6
150	–	362.1	373.2	391.9	447.3	462.9	–
200	–	572.9	590.8	620.5	–	–	–
250	–	784.5	808.9	–	–	–	–
300	–	1062.3	1095.4	–	–	–	–

DN	FIA straight – plain strainer insert				FIA straight – pleated strainer insert		
	µ 100	µ 150	µ 250	µ 500	µ 150	µ 250	µ 500
15	2.5	2.6	2.7	2.8	3.3	–	–
20	5.3	5.4	5.6	5.9	6.9	–	–
25	10.5	10.7	11.1	11.6	13.8	14.5	–
32	17.6	18.2	18.9	19.5	23.9	24.7	–
40	19.2	19.5	20.2	21.5	25.5	26.4	–
50	34.5	35.1	36.4	38.4	45.9	47.6	50.2
65	–	42.9	44.2	46.2	56.1	57.8	60.4
80	–	80.0	82.6	86.5	104.6	108.0	113.1
100	–	124.2	128.1	134.6	162.4	167.5	176.0
125	–	210.6	217.1	228.2	275.4	283.9	298.4
150	–	276.9	285.4	299.7	362.1	374.0	–
200	–	438.1	451.8	474.5	–	–	–

FIA - Strainer - 52 bar / 754 psi

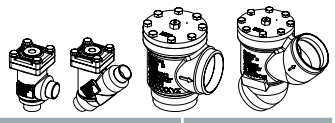

Ordering FIA strainer without strainer insert

Type	Connection size		Connection type	Connection designation	Code no.
	[in]	[mm]			
FIA 15 angleway	1/2	15	Butt weld, EN 10220	D	148B5242
	1/2	15	Butt weld, ANSI (B 36.10)	A	148B5244
	1/2	15	Female pipe thread (ANSI / ASME B 1.20.1)	FPT	148B5246
	1/2	15	Socket weld, ANSI (B 16.11)	SOC	148B5245
FIA 15 straightway	1/2	15	Butt weld, EN 10220	D	148B5243
	1/2	15	Butt weld, ANSI (B 36.10)	A	148B5247
	1/2	15	Female pipe thread (ANSI / ASME B 1.20.1)	FPT	148B5249
	1/2	15	Socket weld, ANSI (B 16.11)	SOC	148B5248
FIA 20 angleway	3/4	20	Butt weld, EN 10220	D	148B5342
	3/4	20	Butt weld, ANSI (B 36.10)	A	148B5344
	3/4	20	Female pipe thread (ANSI / ASME B 1.20.1)	FPT	148B5346
	3/4	20	Socket weld, ANSI (B 16.11)	SOC	148B5345
FIA 20 straightway	3/4	20	Butt weld, EN 10220	D	148B5343
	3/4	20	Butt weld, ANSI (B 36.10)	A	148B5347
	3/4	20	Female pipe thread (ANSI / ASME B 1.20.1)	FPT	148B5349
	3/4	20	Socket weld, ANSI (B 16.11)	SOC	148B5348
FIA 25 angleway	1	25	Butt weld, EN 10220	D	148B5442
	1	25	Butt weld, ANSI (B 36.10)	A	148B5444
	1	25	Female pipe thread (ANSI / ASME B 1.20.1)	FPT	148B5446
	1	25	Socket weld, ANSI (B 16.11)	SOC	148B5445
FIA 25 straightway	1	25	Butt weld, EN 10220	D	148B5443
	1	25	Butt weld, ANSI (B 36.10)	A	148B5447
	1	25	Female pipe thread (ANSI / ASME B 1.20.1)	FPT	148B5449
	1	25	Socket weld, ANSI (B 16.11)	SOC	148B5448
FIA 32 angleway	1 1/4	32	Butt weld, EN 10220	D	148B5543
	1 1/4	32	Butt weld, ANSI (B 36.10)	A	148B5545
	1 1/4	32	Female pipe thread (ANSI / ASME B 1.20.1)	FPT	148B5547
	1 1/4	32	Socket weld, ANSI (B 16.11)	SOC	148B5546

FIA - Strainer - 52 bar / 754 psi (count.)

Ordering FIA strainer without strainer insert

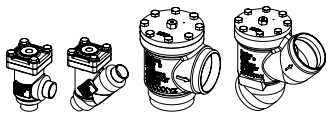

Type	Connection size		Connection type	Connection designation	Code no.
	[in]	[mm]			
FIA 32 straightway	1 1/4	32	Butt weld, EN 10220	D	148B5544
	1 1/4	32	Butt weld, ANSI (B 36.10)	A	148B5552
	1 1/4	32	Female pipe thread (ANSI / ASME B 1.20.1)	FPT	148B5549
	1 1/4	32	Socket weld, ANSI (B 16.11)	SOC	148B5548
FIA 40 angleway	1 1/2	40	Butt weld, EN 10220	D	148B5624
	1 1/2	40	Butt weld, ANSI (B 36.10)	A	148B5642
	1 1/2	40	Socket weld, ANSI (B 16.11)	SOC	148B5643
FIA 40 straightway	1 1/2	40	Butt weld, EN 10220	D	148B5625
	1 1/2	40	Butt weld, ANSI (B 36.10)	A	148B5644
	1 1/2	40	Socket weld, ANSI (B 16.11)	SOC	148B5645
FIA 50 angleway	2	50	Butt weld, EN 10220	D	148B5712
	2	50	Butt weld, ANSI (B 36.10)	A	148B5714
	2	50	Socket weld, ANSI (B 16.11)	SOC	148B5715
FIA 50 straightway	2	50	Butt weld, EN 10220	D	148B5713
	2	50	Butt weld, ANSI (B 36.10)	A	148B5716
	2	50	Socket weld, ANSI (B 16.11)	SOC	148B5717
FIA 65 angleway	2 1/2	65	Butt weld, EN 10220	D	148B5812
	2 1/2	65	Butt weld, ANSI (B 36.10)	A	148B5814
FIA 65 straightway	2 1/2	65	Butt weld, EN 10220	D	148B5813
	2 1/2	65	Butt weld, ANSI (B 36.10)	A	148B5815
FIA 80 angleway	3	80	Butt weld, EN 10220	D	148B5905
	3	80	Butt weld, ANSI (B 36.10)	A	148B5907
FIA 80 straightway	3	80	Butt weld, EN 10220	D	148B5906
	3	80	Butt weld, ANSI (B 36.10)	A	148B5908
FIA 100 angleway	4	100	Butt weld, EN 10220	D	148B6006
	4	100	Butt weld, ANSI (B 36.10)	A	148B6008
FIA 100 straightway	4	100	Butt weld, EN 10220	D	148B6007
	4	100	Butt weld, ANSI (B 36.10)	A	148B6009
FIA 125 angleway	5	125	Butt weld, EN 10220	D	148B6105
	5	125	Butt weld, ANSI (B 36.10)	A	148B6107
FIA 125 straightway	5	125	Butt weld, EN 10220	D	148B6106
	5	125	Butt weld, ANSI (B 36.10)	A	148B6108
FIA 150 angleway	6	150	Butt weld, EN 10220	D	148B6202
	6	150	Butt weld, ANSI (B 36.10)	A	148B6204
	6	150	Butt weld, F	F	148B6442
	6	150	Butt weld, GOST	G	148B6206
FIA 150 straightway	6	150	Butt weld, EN 10220	D	148B6203
	6	150	Butt weld, ANSI (B 36.10)	A	148B6205
	6	150	Butt weld, F	F	148B6444
	6	150	Butt weld, GOST	G	148B6207
FIA 200 angleway	8	200	Butt weld, EN 10220	D	148B6302
	8	200	Butt weld, ANSI (B 36.10)	A	148B6304
	8	200	Butt weld, F	F	148B6443
FIA 200 straightway	8	200	Butt weld, EN 10220	D	148B6303
	8	200	Butt weld, ANSI (B 36.10)	A	148B6305
	8	200	Butt weld, F	F	148B6445
FIA 250 angleway	10	250	Butt weld, EN 10220	D	148H3171
	10	250	Butt weld, ANSI (B 36.10)	A	148H3173
FIA 300 angleway	12	300	Butt weld, EN 10220	D	148H3172
	12	300	Butt weld, ANSI (B 36.10)	A	148H3174

Technical data and ordering

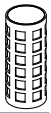

FIA - Strainer - 52 bar / 754 psi

Ordering - plain strainer insert

For strainer	[µ]	[mesh]	Code no.
FIA 15 – 20	100	150	148H3122
	150	100	148H3124
	250	72	148H3126
	500	38	148H3128
FIA 25 – 40	100	150	148H3123
	150	100	148H3125
	250	72	148H3127
	500	38	148H3129
FIA 50	100	150	148H3157
	150	100	148H3130
	250	72	148H3138
	500	38	148H3144
FIA 65	150	100	148H3131
	250	72	148H3139
	500	38	148H3145
FIA 80	150	100	148H3119
	250	72	148H3120
	500	38	148H3121
FIA 100	150	100	148H3132
	250	72	148H3140
	500	38	148H3146
FIA 125	150	100	148H3133
	250	72	148H3141
	500	38	148H3147
FIA 150	150	100	148H3134
	250	72	148H3142
	500	38	148H3148
FIA 200	150	100	148H3135
	250	72	148H3143
	500	38	148H3149
FIA 250	150	100	148H3136
	250	72	148H3175
FIA 300	150	100	148H3137
	250	72	148H3176

Ordering - pleated strainer insert

For strainer	[µ]	[mesh]	Code no.
FIA 15 – 20	150	100	148H3303
	250	72	148H3363
FIA 25 – 40	150	100	148H3304
	250	72	148H3269
FIA 50	150	100	148H3179
	250	72	148H3184
	500	38	148H3189
FIA 65	150	100	148H3180
	250	72	148H3185
	500	38	148H3190
FIA 80	150	100	148H3181
	250	72	148H3186
	500	38	148H3191
FIA 100	150	100	148H3182
	250	72	148H3187
	500	38	148H3192
FIA 125	150	100	148H3183
	250	72	148H3188
	500	38	148H3193
FIA 150	150	100	148H3226
	250	72	148H3293 *)
FIA 200	150	100	148H3297
	250	72	148H3294 *)

*) mesh 60

Technical data and ordering

Acessories

Part	Accessory for	Code no.
Magnet insert	FIA 80 – 100	148H3447
	FIA 125 – 300	148H3448
Strainer insert µ150 with removable insert µ50 for the first start up	FIA 15 – 20	148H3301
	FIA 25 – 40	148H3302
Filter bag	FIA 50	148H3150
	FIA 65	148H3151
	FIA 80	148H3152
	FIA 100	148H3153
	FIA 125	148H3154
	FIA 150	148H3155
	FIA 200	148H3156
Purge valve complete	FIA 50 – 300	148B3745
Blind nut with gasket	FIA 50 – 300	148H3450

Technical data and ordering

Ordering from the parts programme (valve body + top part + strainer insert)

(For strainer insert code numbers; please see the section "*ordering plain strainer inserts*" or "*ordering pleated strainer inserts*")

Example

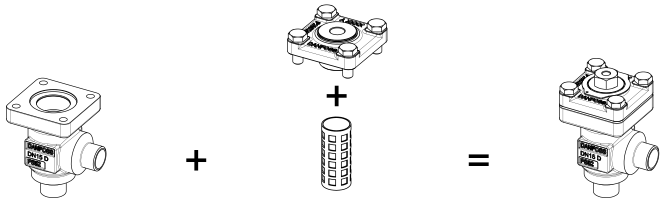

Valve body, size 15 (1/2 in), DIN butt weld, angleway, **148B5452**

Top part, FIA, size 25 (1 in) **148B5476** + Strainer insert 250 µ, 72 mesh **148H3127**

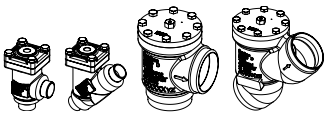

FIA 15 - Valve body - 52 bar / 754 psi

Type	Connection size		Connection type	Connection designation	Code no.
	[in]	[mm]			
FIA 15 angleway	1/2	15	Butt weld, EN 10220	D	148B5252
	1/2	15	Butt weld, ANSI (B 36.10)	A	148B5254
	1/2	15	Female pipe thread (ANSI / ASME B 1.20.1)	FPT	148B5258
	1/2	15	Socket weld, ANSI (B 16.11)	SOC	148B5256
	1/2	15	Butt weld, F	F	148B6414
	1/2	15	Butt weld, GOST	G	148B5391
FIA 15 straightway	1/2	15	Butt weld, EN 10220	D	148B5253
	1/2	15	Butt weld, ANSI (B 36.10)	A	148B5255
	1/2	15	Female pipe thread (ANSI / ASME B 1.20.1)	FPT	148B5259
	1/2	15	Socket weld, ANSI (B 16.11)	SOC	148B5257
	1/2	15	Butt weld, F	F	148B6424
	1/2	15	Butt weld, GOST	G	148B5392

FIA 15 - Top part - 52 bar / 754 psi [1])

Type		Code no.
FIA 15		148B5284

FIA 20 - Valve body - 52 bar / 754 psi

Type	Connection size		Connection type	Connection designation	Code no.
	[in]	[mm]			
FIA 20 angleway	3/4	20	Butt weld, EN 10220	D	148B5352
	3/4	20	Butt weld, ANSI (B 36.10)	A	148B5354
	3/4	20	Female pipe thread (ANSI / ASME B 1.20.1)	FPT	148B5358
	3/4	20	Socket weld, ANSI (B 16.11)	SOC	148B5356
	3/4	20	Butt weld, F	F	148B6415
	3/4	20	Butt weld, GOST	G	148B5393
FIA 20 straightway	3/4	20	Butt weld, EN 10220	D	148B5353
	3/4	20	Butt weld, ANSI (B 36.10)	A	148B5355
	3/4	20	Female pipe thread (ANSI / ASME B 1.20.1)	FPT	148B5359
	3/4	20	Socket weld, ANSI (B 16.11)	SOC	148B5357
	3/4	20	Butt weld, F	F	148B6425
	3/4	20	Butt weld, GOST	G	148B5394

FIA 20 - Top part - 52 bar / 754 psi [1])

Type		Code no.
FIA 20		148B5284

FIA 25 - Valve body - 52 bar / 754 psi

Type	Connection size		Connection type	Connection designation	Code no.
	[in]	[mm]			
FIA 25 angleway	1	25	Butt weld, EN 10220	D	148B5452
	1	25	Butt weld, ANSI (B 36.10)	A	148B5454
	1	25	Female pipe thread (ANSI / ASME B 1.20.1)	FPT	148B5458
	1	25	Socket weld, ANSI (B 16.11)	SOC	148B5456
	1	25	Butt weld, F	F	148B6416
	1	25	Butt weld, GOST	G	148B6498
FIA 25 straightway	1	25	Butt weld, EN 10220	D	148B5453
	1	25	Butt weld, ANSI (B 36.10)	A	148B5455
	1	25	Female pipe thread (ANSI / ASME B 1.20.1)	FPT	148B5459
	1	25	Socket weld, ANSI (B 16.11)	SOC	148B5457
	1	25	Butt weld, F	F	148B6426
	1	25	Butt weld, GOST	G	148B6499

FIA 25 - Top part - 52 bar / 754 psi [1])

Type		Code no.
FIA 25		148B5484

[1]) *Including gaskets and bolts.*

Technical data and ordering

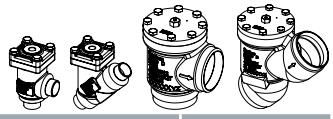

FIA 32 - Valve body - 52 bar / 754 psi

Type	Connection size		Connection type	Connection designation	Code no.
	[in]	[mm]			
FIA 32 angleway	1 ¼	32	Butt weld, EN 10220	D	148B5576
	1 ¼	32	Butt weld, ANSI (B 36.10)	A	148B5578
	1 ¼	32	Female pipe thread (ANSI / ASME B 1.20.1)	FPT	148B5582
	1 ¼	32	Socket weld, ANSI (B 16.11)	SOC	148B5580
	1 ¼	32	Butt weld, F	F	148B6417
	1 ¼	32	Butt weld, GOST	G	148B5593
FIA 32 straightway	1 ¼	32	Butt weld, EN 10220	D	148B5577
	1 ¼	32	Butt weld, ANSI (B 36.10)	A	148B5579
	1 ¼	32	Female pipe thread (ANSI / ASME B 1.20.1)	FPT	148B5583
	1 ¼	32	Socket weld, ANSI (B 16.11)	SOC	148B5581
	1 ¼	32	Butt weld, F	F	148B6427
	1 ¼	32	Butt weld, GOST	G	148B5594

FIA 32 - Top part - 52 bar / 754 psi [1])

Type		Code no.
FIA 32		148B5484

FIA 40 - Valve body - 52 bar / 754 psi

Type	Connection size		Connection type	Connection designation	Code number
	[in]	[mm]			
FIA 40 angleway	1 ½	40	Butt weld, EN 10220	D	148B5652
	1 ½	40	Butt weld, ANSI (B 36.10)	A	148B5654
	1 ½	40	Socket weld, ANSI (B 16.11)	SOC	148B5656
	1 ½	40	Butt weld, F	F	148B6418
	1 ½	40	Butt weld, GOST	G	148B5681
FIA 40 straightway	1 ½	40	Butt weld, EN 10220	D	148B5653
	1 ½	40	Butt weld, ANSI (B 36.10)	A	148B5655
	1 ½	40	Socket weld, ANSI (B 16.11)	SOC	148B5657
	1 ½	40	Butt weld, F	F	148B6428
	1 ½	40	Butt weld, GOST	G	148B5682

FIA 40 - Top part - 52 bar / 754 psi [1])

Type		Code no.
FIA 40		148B5484

FIA 50 - Valve body - 52 bar / 754 psi

Type	Connection size		Connection type	Connection designation	Code no.
	[in]	[mm]			
FIA 50 angleway	2	50	Butt weld, EN 10220	D	148B5741
	2	50	Butt weld, ANSI (B 36.10)	A	148B5743
	2	50	Socket weld, ANSI (B 16.11)	SOC	148B5745
	2	50	Butt weld, F	F	148B6419
	2	50	Butt weld, GOST	G	148B5759
FIA 50 straightway	2	50	Butt weld, EN 10220	D	148B5742
	2	50	Butt weld, ANSI (B 36.10)	A	148B5744
	2	50	Socket weld, ANSI (B 16.11)	SOC	148B5746
	2	50	Butt weld, F	F	148B6429
	2	50	Butt weld, GOST	G	148B5760

FIA 50 - top part - 52 bar / 754 psi [1])

Type		Code no.
FIA 50		148B5748

FIA 65 - Valve body - 52 bar / 754 psi

Type	Connection size		Connection type	Connection designation	Code no.
	[in]	[mm]			
FIA 65 angleway	2 ½	65	Butt weld, EN 10220	D	148B5816
	2 ½	65	Butt weld, ANSI (B 36.10)	A	148B5818
	2 ½	65	Butt weld, F	F	148B6420
	2 ½	65	Butt weld, GOST	G	148B5816
FIA 65 straightway	2 ½	65	Butt weld, EN 10220	D	148B5817
	2 ½	65	Butt weld, ANSI (B 36.10)	A	148B5819
	2 ½	65	Butt weld, F	F	148B6430
	2 ½	65	Butt weld, GOST	G	148B5817

FIA 65 - Top part - 52 bar / 754 psi [1])

Type		Code no.
FIA 65		148B5832

[1]) Including gaskets and bolts.

Technical data and ordering

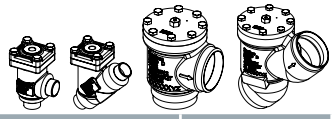

FIA 80 - Valve body - 52 bar / 754 psi

Type	Connection size		Connection type	Connection designation	Code no.
	[in]	[mm]			
FIA 80 angleway	3	80	Butt weld, EN 10220	D	148B5912
	3	80	Butt weld, ANSI (B 36.10)	A	148B5914
	3	80	Butt weld, F	F	148B6421
	3	80	Butt weld, GOST	G	148B5912
FIA 80 straightway	3	80	Butt weld, EN 10220	D	148B5913
	3	80	Butt weld, ANSI (B 36.10)	A	148B5915
	3	80	Butt weld, F	F	148B6431
	3	80	Butt weld, GOST	G	148B5913

FIA 80 - Top part - 52 bar / 754 psi [1])

Type		Code no.
FIA 80		148B5922

FIA 100 - Valve body - 52 bar / 754 psi

Type	Connection size		Connection type	Connection designation	Code no.
	[in]	[mm]			
FIA 100 angleway	4	100	Butt weld, EN 10220	D	148B6014
	4	100	Butt weld, ANSI (B 36.10)	A	148B6016
	4	100	Butt weld, F	F	148B6422
	4	100	Butt weld, GOST	G	148B6033
FIA 100 straightway	4	100	Butt weld, EN 10220	D	148B6015
	4	100	Butt weld, ANSI (B 36.10)	A	148B6017
	4	100	Butt weld, F	F	148B6432
	4	100	Butt weld, GOST	G	148B6034

FIA 100 - Top part - 52 bar / 754 psi [1])

Type		Code no.
FIA 100		148B6024

FIA 125 - Valve body - 52 bar / 754 psi

Type	Connection size		Connection type	Connection designation	Code no.
	[in]	[mm]			
FIA 125 angleway	5	125	Butt weld, EN 10220	D	148B6112
	5	125	Butt weld, ANSI (B 36.10)	A	148B6114
	5	125	Butt weld, F	F	148B6423
	5	125	Butt weld, GOST	G	148B6133
FIA 125 straightway	5	125	Butt weld, EN 10220	D	148B6113
	5	125	Butt weld, ANSI (B 36.10)	A	148B6115
	5	125	Butt weld, F	F	148B6433
	5	125	Butt weld, GOST	G	148B6134

FIA 125 - Top part - 52 bar / 754 psi [1])

Type		Code no.
FIA 125		148B6122

[1]) *Including gaskets and bolts.*

Quick Selection Notes:

FIA, Strainer - 65 bar / 943 psi

FIA strainers are a range of angleway and straightway strainers, carefully designed to give favourable flow conditions. The design makes the strainer easy to install, and ensures quick filter inspection and cleaning. The strainer is based on three main components – valve body, top cover, and strainer insert – and is available both as complete strainers and as parts programme.

FIA strainers are members of the SVL modular concept product family, so each valve body is available with several different connection types and sizes, and it is possible to convert FIA to any other product in the SVL family by replacing the complete top part. FIA strainers are used ahead of automatic controls, pumps, compressors etc., for initial plant start-up and where permanent filtration of the refrigerant is required. The strainer reduces the risk of system breakdowns and reduces wear and tear on plant components.



Features
FIA 65 bar / 943 psi

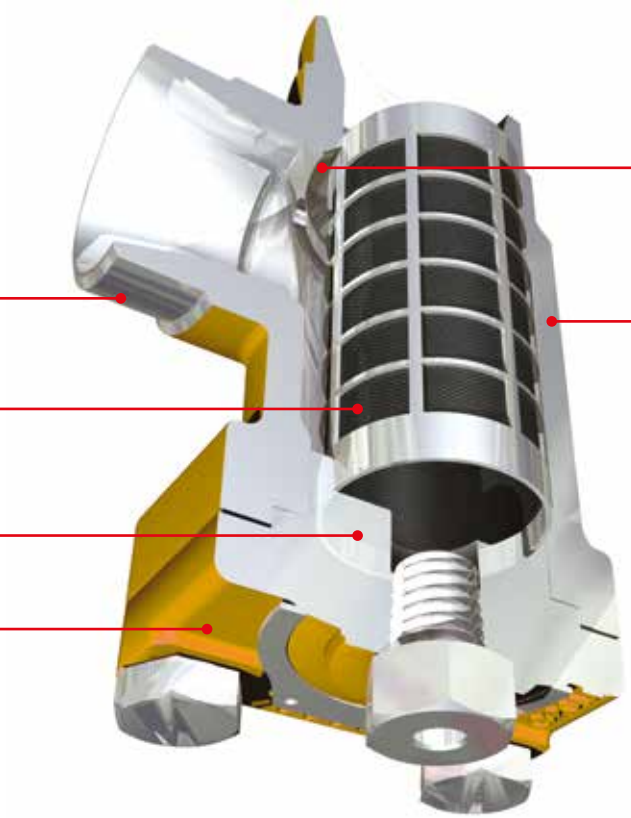

Facts

- Valve body is standard SVL angleway or straightway valve body allowing other inserts from the SVL platform to be installed
- Applicable to R717, R744, R113, R114, R1233zd(E), R1234yf, R1234ze(E), R125, R1270, R1336mzz(Z), R134a, R152a, R170, R22, R227ea, R23, R236fa, R290, R32, R401A, R402A, R402B, R404A, R407A, R407B, R407C, R407F, R407H, R408A, R409A, R410A, R417A, R421A, R422A, R422B, R422D, R427A, R438A, R444B, R447A, R448A, R449A, R449B, R450A, R452A, R454B, R455A, R502, R503, R507, R513A, R600, R600a and RE170
  For a fully updated list of approved refrigerants, visit www.products.danfoss.com and search for individual code numbers, where refrigerants are listed as part of product specifications.
- Strainer insert of stainless steel mounted directly without extra gaskets for easy servicing
- Two types of strainer inserts are available:
  - A plain insert of stainless steel
  - A pleated insert (DN 15 – 200) with extra large surface, which ensures low pressure drop and long intervals between cleaning
- **FIA 15 – 40 (½ – 1 ½ in)**:
  A special insert (50µ) can be used in combination with a standard version when cleaning a plant during commissioning
- **FIA 50 – FIA 200 (2 – 8 in)**:
  A large capacity filter bag (50µ) can be inserted for cleaning plant during commissioning
- **FIA 80 – FIA 200 (3 – 8 in)**:
  can be equipped with a magnetic insert for detention of iron particles and other magnetic particles
- Valve body and bonnet of low temperature steel in accordance with the requirements of the Pressure Equipment Directive and those of other international classification authorities
- Temperature range:
  -60 – 150 °C / -76 – 302 °F
- Max. working pressure:
  65 bar g / 943 psi g
- Equipped with 42CrMo5 bolts to withstand high pressure

Technical data

The Concept

Each valve housing is available with several different connection types and sizes.
It is possible to convert FIA strainers to any other product in the SVL family (shut-off valve, hand regulating valve, check & stop valve or check valve) just by replacing the complete top part.

The valve body

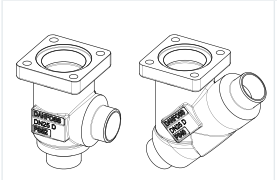

DN 15–65 mm (½ – 2 ½ in)

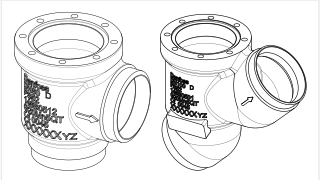

DN 80–125 mm (3 – 5 in)

Connection type

D / F	GOST	A	SOC	FPT
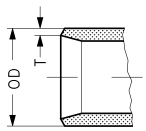	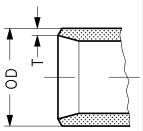	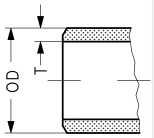	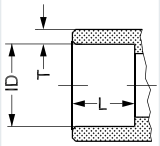	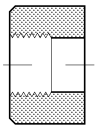
Butt-weld DIN Butt-weld F	Butt-weld GOST	Butt-weld ANSI	Socket weld ANSI	Female Pipe Thread

Selection of strainer size

The mesh aperture size of the strainer must satisfy the requirements stated by the suppliers of the equipment to be protected.
The following recommendations of aperture size apply in general to refrigeration installations:

All lines

First start up: 50 µ
(Use strainer insert with removable insert for FIA DN15 – 40 or separate filter bag for FIA DN 50 – 200. 50µ insert should normally be removed after the first 24 hours of operation).

Liquid Lines

Ahead of pumps: 500 µ [38 mesh]
After pumps: 150 µ [100 mesh] / 250 µ [72 mesh]
In front of AKVA valves: 100 µ [150 mesh]

Protection of automatic regulation equipment

Generally: 150 µ [100 mesh] / 250 µ [72 mesh]
Sensitive equipment, e.g. suction regulators with low temperature: 250 µ [72 mesh]

Suction Lines

Ahead of screw compressor: 250 µ [72 mesh]
Ahead of piston compressor: 150 µ [100 mesh]

Flow coefficient

(DIN / ANSI)

Connection size (DN) FIA	[µ]	[mesh]	wire [mm]	wire [in]	free space [%]	screen area			
						Plain inserts		Pleated inserts	
						[cm²]	[in²]	[cm²]	[in²]
15 – 20 (½ – ¾ in)	100	–	0.068	0.003	35	25	3.9	45	7.0
	150	100	0.10	0.004	36	25	3.9	45	7.0
	250	72	0.10	0.004	51	25	3.9	45	7.0
	500	38	0.16	0.006	57.6	25	3.9	45	7.0
25 – 40 (1 – 1 ½ in)	100	–	0.068	0.003	35	71	11	160	25.0
	150	100	0.10	0.004	36	71	11	160	25.0
	250	72	0.10	0.004	51	71	11	160	25.0
	500	38	0.16	0.006	57.6	71	11	160	25.0
50 (2 in)	100	–	0.068	0.003	35	71	11	200	31.2
	150	100	0.10	0.004	36	87	13.5	200	31.2
	250	72	0.10	0.004	51	87	13.5	200	31.2
	500	38	0.16	0.006	57.6	87	13.5	200	31.2
65 (2 ½ in)	150	100	0.10	0.004	36	127	19.7	305	47.6
	250	72	0.10	0.004	51	127	19.7	305	47.6
	500	38	0.16	0.006	57.6	127	19.7	305	47.6
80 (3 in)	150	100	0.10	0.004	36	205	31.8	450	70.2
	250	72	0.10	0.004	51	205	31.8	450	70.2
	500	38	0.16	0.006	57.6	205	31.8	450	70.2
100 (4 in)	150	100	0.10	0.004	36	370	57.4	790	123.2
	250	72	0.10	0.004	51	370	57.4	790	123.2
	500	38	0.16	0.006	57.6	370	57.4	790	123.2
125 (5 in)	150	100	0.10	0.004	36	510	79.1	1105	172.4
	250	72	0.10	0.004	51	510	79.1	1105	172.4
	500	38	0.16	0.006	57.6	510	79.1	1105	172.4

Mesh is the number of threads per inch. µ (microns) is the distance between two threads (1 µ = 1/1000 mm).

Technical data

Selection of strainer size

K_v values

DN	FIA angle – plain strainer insert				FIA angle – pleated strainer insert		
	µ 100	µ 150	µ 250	µ 500	µ 150	µ 250	µ 500
15	3.3	3.4	3.5	3.7	4.2	–	–
20	6.9	7.1	7.3	7.7	8.8	–	–
25	13.8	14.0	14.5	15.2	17.2	17.9	–
32	23.0	23.8	24.7	25.5	29.2	30.5	–
40	25.1	25.5	26.4	28.1	31.4	32.6	–
50	45.1	45.9	47.6	50.2	56.7	58.8	62.0
65	–	56.1	57.8	60.4	69.3	71.4	74.6
80	–	104.6	108.0	113.1	129.2	133.4	139.7
100	–	162.4	167.5	176.0	200.6	206.9	217.4
125	–	275.4	283.9	298.4	340.2	350.7	368.6

DN	FIA straight – plain strainer insert				FIA straight – pleated strainer insert		
	µ 100	µ 150	µ 250	µ 500	µ 150	µ 250	µ 500
15	2.5	2.6	2.7	2.8	3.3	–	–
20	5.3	5.4	5.6	5.9	6.9	–	–
25	10.5	10.7	11.1	11.6	13.8	14.5	–
32	17.6	18.2	18.9	19.5	23.9	24.7	–
40	19.2	19.5	20.2	21.5	25.5	26.4	–
50	34.5	35.1	36.4	38.4	45.9	47.6	50.2
65	–	42.9	44.2	46.2	56.1	57.8	60.4
80	–	80.0	82.6	86.5	104.6	108.0	113.1
100	–	124.2	128.1	134.6	162.4	167.5	176.0
125	–	210.6	217.1	228.2	275.4	283.9	298.4

Technical data and ordering

Ordering from the parts programme (valve body + top part + strainer insert)

(For strainer insert code numbers; please see the section "*ordering plain strainer inserts*" or "*ordering pleated strainer inserts*")

Example

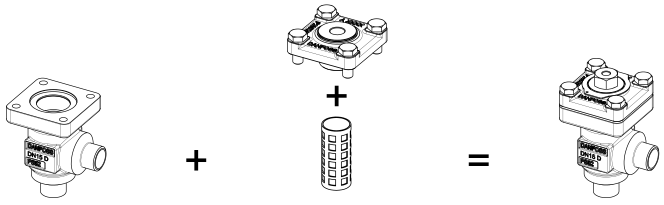

Valve body, size 15 (1/2 in), DIN butt weld, angleway, **148B6622**

Top part, FIA, size 15 (1/2 in) **148B5783** + Strainer insert 250 µ, 72 mesh **148H3126**

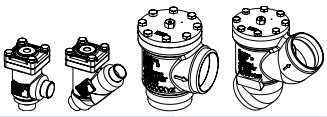

FIA 15 - Valve body - 65 bar / 943 psi

Type	Connection size		Connection type	Connection designation	Code no.
	[in]	[mm]			
FIA 15 angleway	1/2	15	Butt weld, EN 10220	D	148B6622
	1/2	15	Butt weld, ANSI (B 36.10)	A	148B6612
FIA 15 straightway	1/2	15	Butt weld, EN 10220	D	148B6642
	1/2	15	Butt weld, ANSI (B 36.10)	A	148B6632

FIA 15 - Top part - 65 bar / 943 psi [1])

Type	Code no.
FIA 15	148B5783

FIA 20 - Valve body - 65 bar / 943 psi

Type	Connection size		Connection type	Connection designation	Code no.
	[in]	[mm]			
FIA 20 angleway	3/4	20	Butt weld, EN 10220	D	148B6623
	3/4	20	Butt weld, ANSI (B 36.10)	A	148B6613
FIA 20 straightway	3/4	20	Butt weld, EN 10220	D	148B6643
	3/4	20	Butt weld, ANSI (B 36.10)	A	148B6633

FIA 20 - Top part - 65 bar / 943 psi [1])

Type	Code no.
FIA 20	148B5783

FIA 25 - Valve body - 65 bar / 943 psi

Type	Connection size		Connection type	Connection designation	Code no.
	[in]	[mm]			
FIA 25 angleway	1	25	Butt weld, EN 10220	D	148B6624
	1	25	Butt weld, ANSI (B 36.10)	A	148B6614
FIA 25 straightway	1	25	Butt weld, EN 10220	D	148B6644
	1	25	Butt weld, ANSI (B 36.10)	A	148B6634

FIA 25 - Top part - 65 bar / 943 psi [1])

Type	Code no.
FIA 25	148B5784

FIA 32 - Valve body - 65 bar / 943 psi

Type	Connection size		Connection type	Connection designation	Code no.
	[in]	[mm]			
FIA 32 angleway	1 1/4	32	Butt weld, EN 10220	D	148B6625
	1 1/4	32	Butt weld, ANSI (B 36.10)	A	148B6615
FIA 32 straightway	1 1/4	32	Butt weld, EN 10220	D	148B6645
	1 1/4	32	Butt weld, ANSI (B 36.10)	A	148B6635

FIA 32 - Top part - 65 bar / 943 psi [1])

Type	Code no.
FIA 32	148B5784

[1]) *Including gaskets and bolts.*

Technical data and ordering

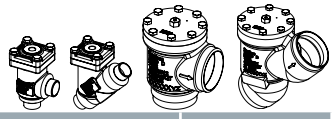

FIA 40 - Valve body - 65 bar / 943 psi

Type	Connection size		Connection type	Connection designation	Code number
	[in]	[mm]			
FIA 40 angleway	1 ½	40	Butt weld, EN 10220	D	148B6626
	1 ½	40	Butt weld, ANSI (B 36.10)	A	148B6616
FIA 40 straightway	1 ½	40	Butt weld, EN 10220	D	148B6646
	1 ½	40	Butt weld, ANSI (B 36.10)	A	148B6636

FIA 40 - Top part - 65 bar / 943 psi [1])

Type		Code no.
FIA 40		148B5784

FIA 50 - Valve body - 65 bar / 943 psi

Type	Connection size		Connection type	Connection designation	Code no.
	[in]	[mm]			
FIA 50 angleway	2	50	Butt weld, EN 10220	D	148B6627
	2	50	Butt weld, ANSI (B 36.10)	A	148B6617
FIA 50 straightway	2	50	Butt weld, EN 10220	D	148B6647
	2	50	Butt weld, ANSI (B 36.10)	A	148B6637

FIA 50 - top part - 65 bar / 943 psi [1])

Type		Code no.
FIA 50		148B5785

FIA 65 - Valve body - 65 bar / 943 psi

Type	Connection size		Connection type	Connection designation	Code no.
	[in]	[mm]			
FIA 65 angleway	2 ½	65	Butt weld, EN 10220	D	148B6628
	2 ½	65	Butt weld, ANSI (B 36.10)	A	148B6618
FIA 65 straightway	2 ½	65	Butt weld, EN 10220	D	148B6648
	2 ½	65	Butt weld, ANSI (B 36.10)	A	148B6638

FIA 65 - Top part - 65 bar / 943 psi [1])

Type		Code no.
FIA 65		148B5786

FIA 80 - Valve body - 65 bar / 943 psi

Type	Connection size		Connection type	Connection designation	Code no.
	[in]	[mm]			
FIA 80 angleway	3	80	Butt weld, EN 10220	D	148B6629
	3	80	Butt weld, ANSI (B 36.10)	A	148B6619
FIA 80 straightway	3	80	Butt weld, EN 10220	D	148B6649
	3	80	Butt weld, ANSI (B 36.10)	A	148B6639

FIA 80 - Top part - 65 bar / 943 psi [1])

Type		Code no.
FIA 80		148B5787

FIA 100 - Valve body - 65 bar / 943 psi

Type	Connection size		Connection type	Connection designation	Code no.
	[in]	[mm]			
FIA 100 angleway	4	100	Butt weld, EN 10220	D	148B6630
	4	100	Butt weld, ANSI (B 36.10)	A	148B6620
FIA 100 straightway	4	100	Butt weld, EN 10220	D	148B6650
	4	100	Butt weld, ANSI (B 36.10)	A	148B6640

FIA 100 - Top part - 65 bar / 943 psi [1])

Type		Code no.
FIA 100		148B5788

[1]) Including gaskets and bolts.

Technical data and ordering

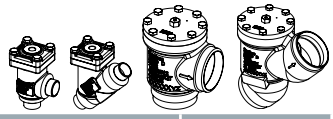

FIA 125 - Valve body - 65 bar / 943 psi

Type	Connection size		Connection type	Connection designation	Code no.
	[in]	[mm]			
FIA 125 angleway	5	125	Butt weld, EN 10220	D	148B6631
	5	125	Butt weld, ANSI (B 36.10)	A	148B6621
FIA 125 straightway	5	125	Butt weld, EN 10220	D	148B6651
	5	125	Butt weld, ANSI (B 36.10)	A	148B6641

FIA 125 - Top part - 65 bar / 943 psi [1])

Type		Code no.
FIA 125		148B5789

[1]) *Including gaskets and bolts.*

FIA - Strainer

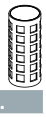

Ordering - plain strainer insert

For strainer	[µ]	[mesh]	Code no.
FIA 15 – 20	100	150	148H3122
	150	100	148H3124
	250	72	148H3126
	500	38	148H3128
FIA 25 – 40	100	150	148H3123
	150	100	148H3125
	250	72	148H3127
	500	38	148H3129
FIA 50	100	150	148H3157
	150	100	148H3130
	250	72	148H3138
	500	38	148H3144
FIA 65	150	100	148H3131
	250	72	148H3139
	500	38	148H3145
FIA 80	150	100	148H3119
	250	72	148H3120
	500	38	148H3121
FIA 100	150	100	148H3132
	250	72	148H3140
	500	38	148H3146
FIA 125	150	100	148H3133
	250	72	148H3141
	500	38	148H3147

Ordering - pleated strainer insert

For strainer	[µ]	[mesh]	Code no.
FIA 15 – 20	150	100	148H3303
	250	72	148H3363
FIA 25 – 40	150	100	148H3304
	250	72	148H3269
FIA 50	150	100	148H3179
	250	72	148H3184
	500	38	148H3189
FIA 65	150	100	148H3180
	250	72	148H3185
	500	38	148H3190
FIA 80	150	100	148H3181
	250	72	148H3186
	500	38	148H3191
FIA 100	150	100	148H3182
	250	72	148H3187
	500	38	148H3192
FIA 125	150	100	148H3183
	250	72	148H3188
	500	38	148H3193

Technical data and ordering

Acessories

Part	Accessory for	Code no.
Magnet insert	FIA 80 – 100	148H3447
	FIA 125	148H3448
Strainer insert µ150 with removable insert µ50 for the first start up	FIA 15 – 20	148H3301
	FIA 25 – 40	148H3302
Filter bag	FIA 50	148H3150
	FIA 65	148H3151
	FIA 80	148H3152
	FIA 100	148H3153
	FIA 125	148H3154
Purge valve complete	FIA 50 – 125	148B3745
Blind nut with gasket	FIA 50 – 125	148H3450

Quick Selection Notes:

FIA SS, Strainer

FIA SS strainers are a range of angle-way and straight-way stainless steel strainers, carefully designed to give favourable flow conditions. The design makes the strainer easy to install, and ensures quick strainer inspection and cleaning.

FIA SS strainers are used ahead of automatic controls, pumps, compressors etc., for initial plant start-up and where permanent filtration of the refrigerant is required.
The strainer reduces the risk of undesirable system breakdowns and reduces wear and tear on plant components.

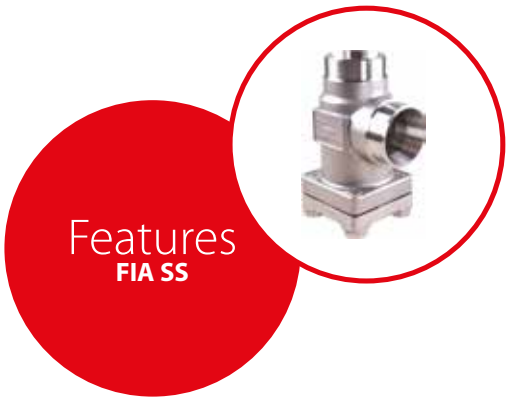

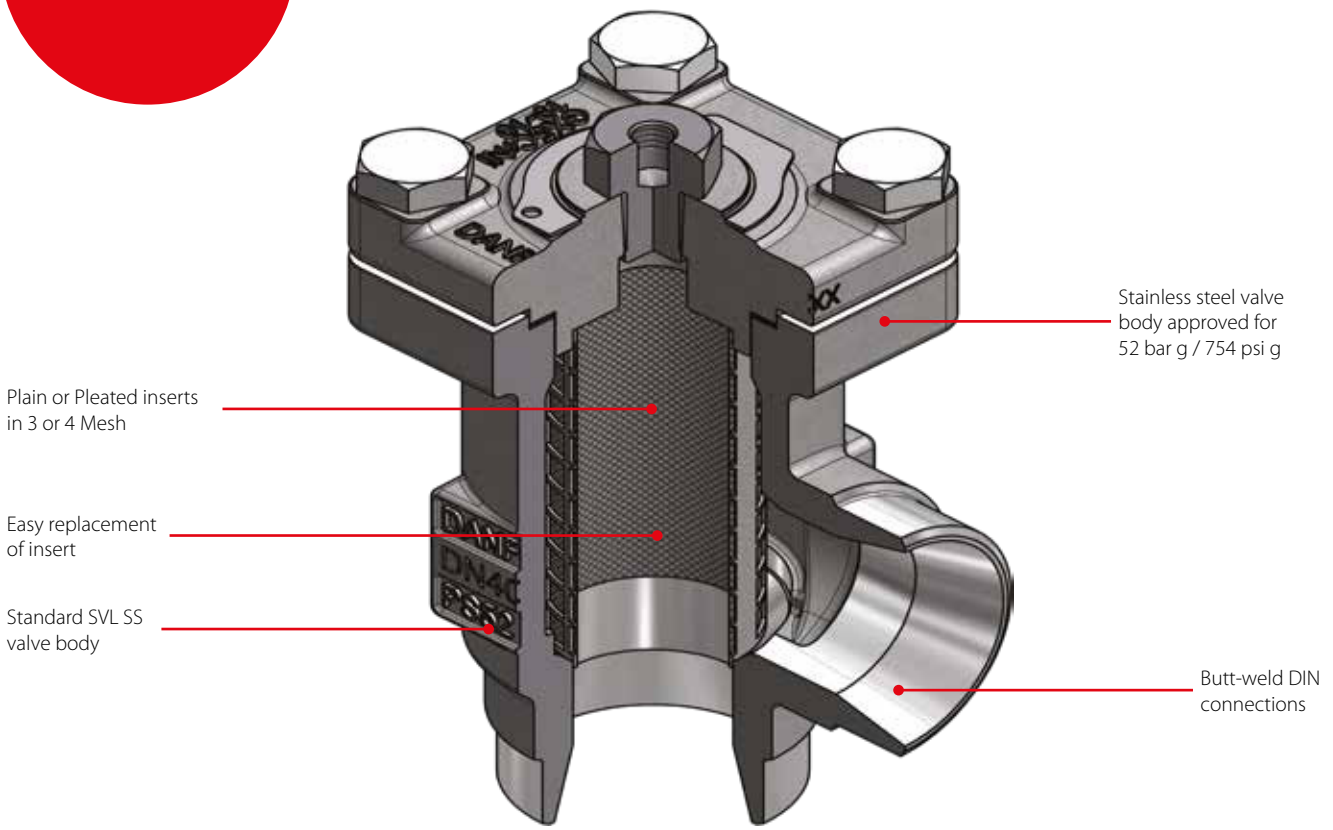

Facts

- Applicable to R717, R744, R113, R114, R1233zd(E), R1234yf, R1234ze(E), R125, R1270, R1336mzz(Z), R134a, R152a, R170, R22, R227ea, R23, R236fa, R290, R32, R401A, R402A, R402B, R404A, R407A, R407B, R407C, R407F, R407H, R408A, R409A, R410A, R417A, R421A, R422A, R422B, R422D, R427A, R438A, R444B, R447A, R448A, R449A, R449B, R450A, R452A, R454B, R455A, R502, R503, R507, R513A, R600, R600a and RE170
  For a fully updated list of approved refrigerants, visit www.products.danfoss.com and search for individual code numbers, where refrigerants are listed as part of product specifications.
- Strainer insert of stainless steel mounted directly without extra gaskets for easy servicing
- Two types of strainer inserts are available:
  - A plain insert of stainless steel
  - A pleated insert (DN 15 – 65) with extra large surface, which ensures low pressure drop and long intervals between cleaning
- **FIA SS 15 – 40 (1/2 – 1 1/2 in)**:
  A special insert (50 µ) can be used in combination with a standard version when cleaning a plant during commissioning
- **FIA SS 50 – 65 (2 – 2 1/2 in)**:
  A large capacity filter bag (50 µ) can be inserted for cleaning plant during commissioning.
- Valve body and bonnet in stainless steel
- Temperature range:
  -60 – 150 °C / -76 – 302 °F
- Max. working pressure:
  52 bar g / 754 psi g

Technical data

Selection of strainer size

The mesh aperture size of the strainer must satisfy the requirements stated by the suppliers of the equipment to be protected.
The following recommendations of aperture size apply in general to refrigeration installations:

All lines

First start up: 50 µ
(Use strainer insert with removable insert for FIA SS DN15 – 40 or separate filter bag for FIA SS DN 50–65. 50µ insert should normally be removed after the first 24 hours of operation)

Liquid Lines

Ahead of pumps: 500 µ [38 mesh]
After pumps: 150 µ [100 mesh] / 250 µ [72 mesh]
In front of AKVA valves: 100 µ [150 mesh]

Protection of automatic regulation equipment

Generally: 150 µ [100 mesh] / 250 µ [72 mesh]
Sensitive equipment, e.g. suction regulators with low temperature: 250 µ [72 mesh]

Suction Lines

Ahead of screw compressor: 250 µ [72 mesh]
Ahead of piston compressor: 150 µ [100 mesh]

Flow coefficient

(DIN / ANSI)

Connection size (DN) FIA SS	[µ]	[mesh]	wire [mm]	wire [in]	free space [%]	screen area			
						Plain inserts		Pleated inserts	
						[cm²]	[in²]	[cm²]	[in²]
15–20 (½ – ¾ in)	100	–	0.068	0.003	35	25	3.9	45	7.0
	150	100	0.10	0.004	36	25	3.9	45	7.0
	250	72	0.10	0.004	51	25	3.9	45	7.0
	500	38	0.16	0.006	57.6	25	3.9	45	7.0
25–40 (1 – 1 ½ in)	100	–	0.068	0.003	35	71	11	160	25.0
	150	100	0.10	0.004	36	71	11	160	25.0
	250	72	0.10	0.004	51	71	11	160	25.0
	500	38	0.16	0.006	57.6	71	11	160	25.0
50 (2 in)	100	–	0.068	0.003	35	71	11	200	31.2
	150	100	0.10	0.004	36	87	13.5	200	31.2
	250	72	0.10	0.004	51	87	13.5	200	31.2
	500	38	0.16	0.006	57.6	87	13.5	200	31.2
65 (2 ½ in)	150	100	0.10	0.004	36	127	19.7	305	47.6
	250	72	0.10	0.004	51	127	19.7	305	47.6
	500	38	0.16	0.006	57.6	127	19.7	305	47.6

Mesh is the number of threads per inch. µ (microns) is the distance between two threads (1 µ = 1/1000 mm).

Selection of strainer size

K_V values

DN	FIA SS angle – plain strainer insert				FIA SS angle – pleated strainer insert		
	µ 100	µ 150	µ 250	µ 500	µ 150	µ 250	µ 500
15	3.3	3.4	3.5	3.7	4.2	–	–
20	6.9	7.1	7.3	7.7	8.8	–	–
25	13.8	14.0	14.5	15.2	17.2	17.9	–
32	23.0	23.8	24.7	25.5	29.2	30.5	–
40	25.1	25.5	26.4	28.1	31.4	32.6	–
50	45.1	45.9	47.6	50.2	56.7	58.8	62.0
65	–	56.1	57.8	60.4	69.3	71.4	74.6

DN	FIA SS straight – plain strainer insert				FIA SS straight – pleated strainer insert		
	µ 100	µ 150	µ 250	µ 500	µ 150	µ 250	µ 500
15	2.5	2.6	2.7	2.8	3.3	–	–
20	5.3	5.4	5.6	5.9	6.9	–	–
25	10.5	10.7	11.1	11.6	13.8	14.5	–
32	17.6	18.2	18.9	19.5	23.9	24.7	–
40	19.2	19.5	20.2	21.5	25.5	26.4	–
50	34.5	35.1	36.4	38.4	45.9	47.6	50.2
65	–	42.9	44.2	46.2	56.1	57.8	60.4

Technical data and ordering

FIA SS - Strainer without strainer insert

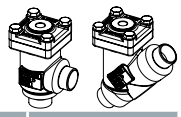

Ordering

Type	Connection size		Connection type	Connection designation	Code number
	[in]	[mm]			
FIA SS 15 angleway	1/2	15	Butt weld DIN, EN 10220	D	148B5295
FIA SS 15 straightway	1/2	15	Butt weld DIN, EN 10220	D	148B5296
FIA SS 15 straightway	1/2	15	Butt weld ANSI, B 36.19M	A	148B6493
FIA SS 20 angleway	3/4	20	Butt weld DIN, EN 10220	D	148B5383
FIA SS 20 straightway	3/4	20	Butt weld DIN, EN 10220	D	148B5384
FIA SS 20 straightway	3/4	20	Butt weld ANSI, B 36.19M	A	148B6494
FIA SS 25 angleway	1	25	Butt weld DIN, EN 10220	D	148B5492
FIA SS 25 straightway	1	25	Butt weld DIN, EN 10220	D	148B5493
FIA SS 25 straightway	1	25	Butt weld ANSI, B 36.19M	A	148B6495
FIA SS 32 angleway	1 1/4	32	Butt weld DIN, EN 10220	D	148B5587
FIA SS 32 straightway	1 1/4	32	Butt weld DIN, EN 10220	D	148B5588
FIA SS 32 straightway	1 1/4	32	Butt weld ANSI, B 36.19M	A	148B6496
FIA SS 40 angleway	1 1/2	40	Butt weld DIN, EN 10220	D	148B5666
FIA SS 40 straightway	1 1/2	40	Butt weld DIN, EN 10220	D	148B5667
FIA SS 40 straightway	1 1/2	40	Butt weld ANSI, B 36.19M	A	148B6497
FIA SS 50 angleway	2	50	Butt weld DIN, EN 10220	D	148B5757
FIA SS 50 straightway	2	50	Butt weld DIN, EN 10220	D	148B5758
FIA SS 65 angleway	2 1/2	65	Butt weld DIN, EN 10220	D	148B5851
FIA SS 65 angleway	2 1/2	65	Butt weld ANSI, B 36.19M	A	148B6498
FIA SS 65 straightway	2 1/2	65	Butt weld DIN, EN 10220	D	148B5852
FIA SS 65 straightway	2 1/2	65	Butt weld ANSI, B 36.19M	A	148B6499

FIA SS - Plain strainer insert



Ordering

For strainer	[µ]	[mesh]	Code number
FIA SS 15–20	100	150	148H3122
	150	100	148H3124
	250	72	148H3126
	500	38	148H3128
FIA SS 25–40	100	150	148H3123
	150	100	148H3125
	250	72	148H3127
	500	38	148H3129
FIA SS 50	100	150	148H3157
	150	100	148H3130
	250	72	148H3138
	500	38	148H3144
FIA SS 65	150	100	148H3131
	250	72	148H3139
	500	38	148H3145

Technical data and ordering

FIA SS - Pleated strainer insert

Ordering

For strainer	[µ]	[mesh]	Code number
FIA SS 15–20	150	100	148H3303
	250	72	148H3363
FIA SS 25–40	150	100	148H3304
	250	72	148H3269
FIA SS 50	150	100	148H3179
	250	72	148H3184
	500	38	148H3189
FIA SS 65	150	100	148H3180
	250	72	148H3185
	500	38	148H3190

Ordering accessories

Part	Accessory for	Code number
Strainer insert µ150 with removable insert µ50 for the first start up	FIA SS 15 – 20	148H3301
	FIA SS 25 – 40	148H3302
Filter bag	FIA SS 50	148H3150
	FIA SS 65	148H3151
Purge valve complete	FIA SS 50 – 65	148B3745
Blind nut with gasket	FIA SS 50 – 65	148H3450

GBC version 2, Shut-off ball valve

GBC v2 shut-off ball valves are manually operated valves suitable for bi-directional flow.
Shut-off ball valves are used in liquid, suction and hot gas lines in refrigeration, freezing and air conditioning systems.

The GBC v2 bi-directional shut-off ball valves can be delivered with or without external access port.
The valves have one-piece wire seal cap to prevent unintentional cap removal or tampering between services.



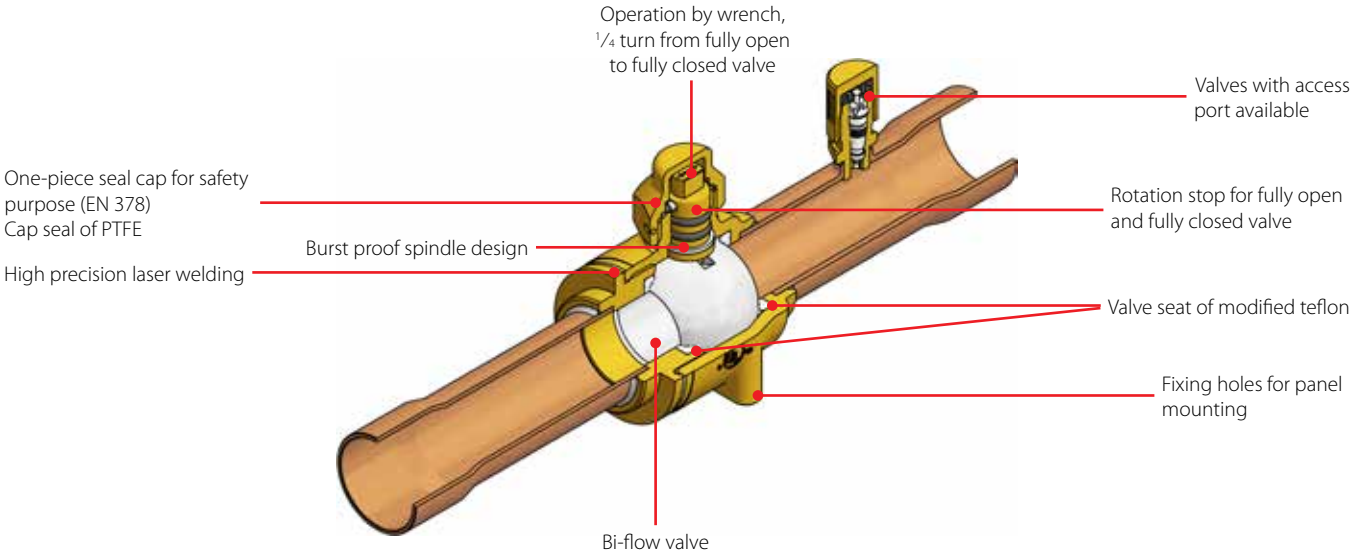

Facts

Application:
- GBC v2 valves are used in liquid, suction and hot gas lines in all refrigeration and air-conditioning systems with fluorinated refrigerants
- Applicable to R134a, R22 / R407C, R404A / R507, R407A, R407F, R410A, R448A, R449A, R450A, R452A, R513A, R1234ze. GBC 6s – GBC 28s can be used with R32, R454B, R452B, R290.
  For a fully updated list of approved refrigerants, visit www.products.danfoss.com and search for individual code numbers, where refrigerants are listed as part of product specifications.
- Full flow with minimum pressure drop
- Bi-directional flow, i.e. valve orientation is unimportant
- ¼ turn from fully open to fully closed
- Burst proof spindle design
- Selected Teflon and O-ring material to secure the best tightness and long lifetime
- Versions with access port helps in reducing cost if service of the system is necessary
- One-piece seal cap for safety purpose

Complies with European Safety Directive EN 378 *(Safety and environmental requirements)*
- Ball status indicator on spindle top indicating open or closed position
- Laser welded construction
- Drilled and tapped for panel mounting
- Double O-ring stem seal design
- Customized brass material ensures consistent performance under aggressive environment
- Approvals: C UL US LISTED, EAC, CE

Technical data and ordering

Type	Media temperature range	Max. working pressure (PS/MWP)
GBC 6s – GBC 42s	-40 – 150 °C / -40 – 300 °F (short term for 150 °C / 300 °F) For long term use in high temperature application, please consult Danfoss.	45 bar / 650 psig
GBC 54s – GBC 79s	-40 – 121 °C / -40 – 250 °F	45 bar / 650 psig

GBC v2 without access port, Solder ODF / ODF

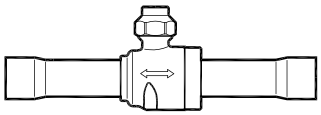

Ordering

Type	Solder ODF / ODF connection		Max. working pressure PS / MWP		K_V value [1] [m³/h]	C_V value [1] [gal/min]	Code no.
	[in]	[mm]	[bar]	[psig]			
GBC 6s	–	6	45	650	1.83	2.12	009L7030
GBC 6s	1/4	–	45	650	1.83	2.12	009L7020
GBC 10s	–	10	45	650	8.04	9.29	009L7031
GBC 10s	3/8	–	45	650	8.04	9.29	009L7021
GBC 12s	–	12	45	650	13.17	15.22	009L7032
GBC 12s	1/2	–	45	650	13.17	15.22	009L7022
GBC 16s	5/8	16	45	650	15.6	18.1	009L7023
GBC 18s	–	18	45	650	21.9	25.3	009L7035
GBC 18s	3/4	–	45	650	21.9	25.3	009L7024
GBC 22s	7/8	22	45	650	33.3	38.5	009L7025
GBC 28s	–	28	45	650	62	71	009L7033
GBC 28s	1 1/8	–	45	650	62	71	009L7026
GBC 35s	1 3/8	35	45	650	92	107	009L7027
GBC 42s	–	42	45	650	134	155	009L7034
GBC 42s	1 5/8	–	45	650	134	155	009L7028
GBC 54s	2 1/8	54	45	650	240	277	009L7029
GBC 67s	2 5/8	–	45	650	367	424	009L7959
GBC 67s RP	2 5/8	–	45	650	203	234	009L7036
GBC 79s	3 1/8	–	45	650	528	611	009L7980
GBC 79s RP	3 1/8	–	45	650	171	198	009L7037

[1]) Calculated based on fluid dynamic equations. RP: Reduced Port

GBC v2 with access port, Solder ODF / ODF

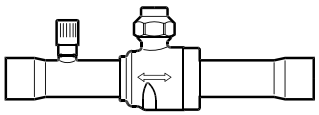

Ordering

Type	Solder ODF / ODF connection		Max. working pressure PS / MWP		K_V value [1] [m³/h]	C_V value [1] [gal/min]	Code no.
	[in]	[mm]	[bar]	[psig]			
GBC 6s	–	6	45	650	1.83	2.12	009L7060
GBC 6s	1/4	–	45	650	1.83	2.12	009L7050
GBC 10s	–	10	45	650	8.04	9.29	009L7061
GBC 10s	3/8	–	45	650	8.04	9.29	009L7051
GBC 12s	–	12	45	650	13.17	15.22	009L7062
GBC 12s	1/2	–	45	650	13.17	15.22	009L7052
GBC 16s	5/8	16	45	650	15.6	18.1	009L7053
GBC 18s	–	18	45	650	21.9	25.3	009L7065
GBC 18s	3/4	–	45	650	21.9	25.3	009L7054
GBC 22s	7/8	22	45	650	33.3	38.5	009L7055
GBC 28s	–	28	45	650	62	71	009L7063
GBC 28s	1 1/8	–	45	650	62	71	009L7056
GBC 35s	1 3/8	35	45	650	92	107	009L7057
GBC 42s	–	42	45	650	134	155	009L7064
GBC 42s	1 5/8	–	45	650	134	155	009L7058
GBC 54s	2 1/8	54	45	650	240	277	009L7059
GBC 67s	2 5/8	–	45	650	367	424	009L7960
GBC 67s RP	2 5/8	–	45	650	203	234	009L7066
GBC 79s	3 1/8	–	45	650	528	611	009L7981
GBC 79s RP	3 1/8	–	45	650	171	198	009L7067

[1]) Calculated based on fluid dynamic equations. RP: Reduced Port

Technical data and ordering

GBC v2 without access port, Solder ODF / ODM

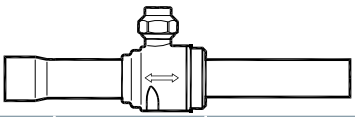

Ordering

Type	Solder ODF / ODM connection		Max. working pressure PS / MWP		K_V value [1] [m³/h]	C_V value [1] [gal/min]	Code no.
	[in]	[mm]	[bar]	[psig]			
GBC 22s	7/8	22	45	650	33.3	38.5	009L7000
GBC 28s	1 1/8	–	45	650	62	71	009L7001
GBC 35s	1 3/8	35	45	650	92	107	009L7002
GBC 42s	1 5/8	–	45	650	134	155	009L7003
GBC 79s	3 1/8	–	45	650	528	611	009L7969

[1]) *Calculated based on fluid dynamic equations.*

GBC v2 with access port, Solder ODF / ODM

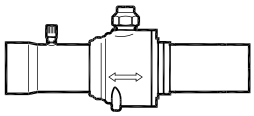

Ordering

Type	Solder ODF / ODM connection		Max. working pressure PS / MWP		K_V value [1] [m³/h]	C_V value [1] [gal/min]	Code no.
	[in]	[mm]	[bar]	[psig]			
GBC 28s	7/8	–	45	650	62	71	009L7097
GBC 35s	1 1/8	35	45	650	92	107	009L7098
GBC 42s	1 3/8	–	45	650	134	155	009L7099
GBC 54s	1 5/8	54	45	650	240	277	009L7069
GBC 67s	3 1/8	–	45	650	367	424	009L7958
GBC 79s	3 1/8	–	45	650	528	611	009L7970

[1]) *Calculated based on fluid dynamic equations.*

Spare parts - Seal cap kit



Ordering

Type	Valve connection size		Industrial pack	Code no.
	[in]	[mm]		
GBC 6s - GBC 12s	1/4 – 1/2	6 – 12	6	009L7209
GBC 16s – GBC 22s	5/8 – 7/8	16 – 22	6	009L7210
GBC 28s – GBC 35s	1 1/8 – 1 3/8	28 – 35	4	009L7211
GBC 42s - GBC 79s	1 5/8 – 3 1/8	42 -79	4	009L7212

Spare parts - Bracket kit

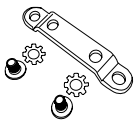

Ordering

Type	Valve connection size		Industrial pack	Code no.
	[in]	[mm]		
GBC 6s - GBC 12s	1/4 – 1/2	6 – 12	12	009G7089
GBC 16s	5/8	16	12	009G7084
GBC 18s - GBC 22s	3/4 – 7/8	18 – 22	12	009G7085
GBC 28s	1 1/8	28	10	009G7086
GBC 35s	1 3/8	35	5	009G7087
GBC 42s	1 5/8	42	4	009G7088

Quick Selection Notes:

GBC version 2, Shut-off ball valve for R744 (CO_2) low pressure

Danfoss shut-off ball valves, type GBC v2 for CO_2 are manually operated shut-off valves only for single-flow direction.
The valves are approved for applications in liquid, suction and hot-gas lines in refrigeration and air conditioning systems.
The valves offer maximum tightness across the seat/seal with minimum pressure drop.

These ball valves give maximum flow in the fully open position. They are designed for operation within a broad temperature range.
The valves are equipped with a one-piece seal cap to prevent tampering.

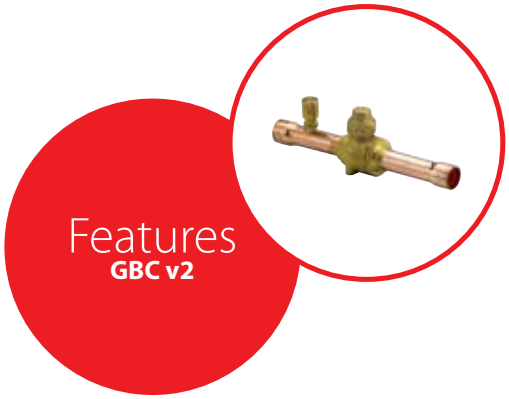

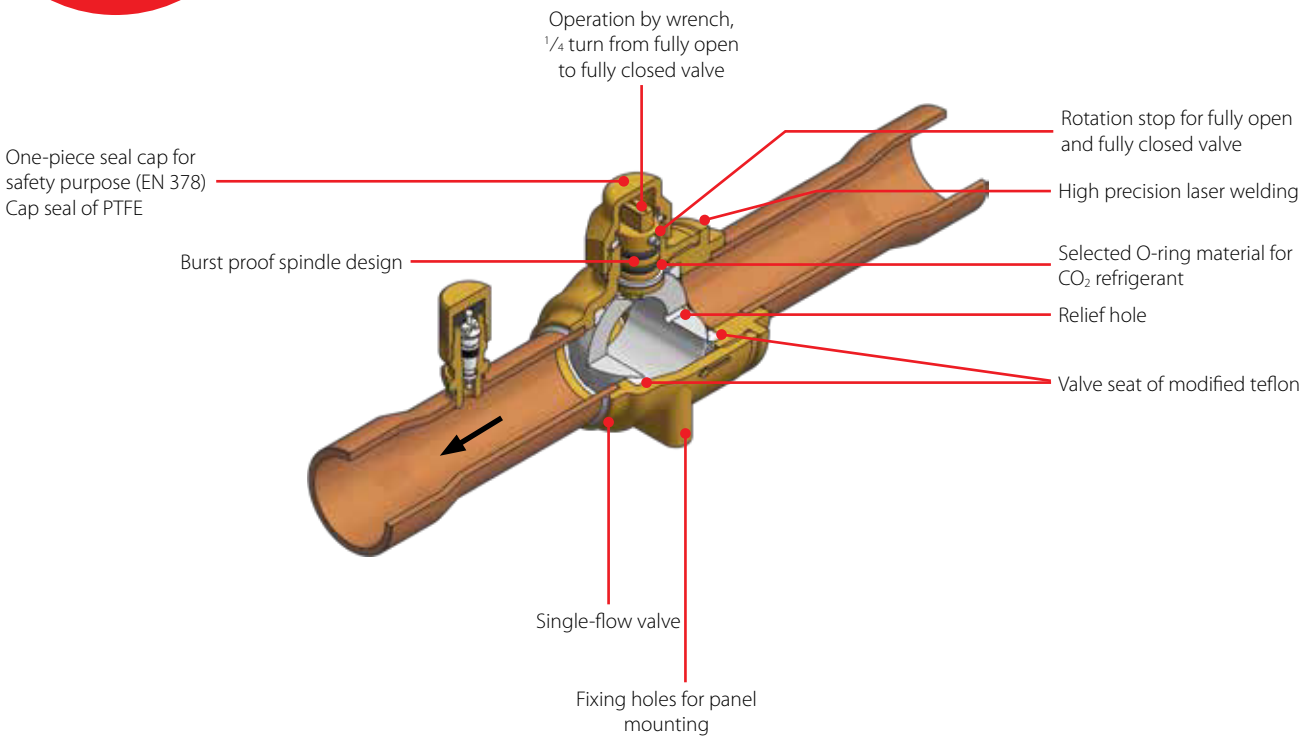

Facts

Application:
- The valves can be used for applications in liquid, suction and hot-gas lines in refrigeration and air-conditioning systems
- Applicable to R744 (CO_2)

- Slimline body - easier to install and service
- ¼ turn from fully open to fully closed
- Rotation stops at fully open and fully closed positions
- Indicator on spindle top shows degree of opening
- Precision laser welded construction
- Burst-proof spindle design
- Valve seal of low friction, tight-sealing modified PTFE Teflon®
- Double O-ring stem seal design
- Selected O-ring material for CO_2 refrigerant

- Customized brass material ensures consistent performance under aggressive environment
- Drilled and tapped for panel mounting
- Relief hole design to release entrapped liquid
- Media temperature range: -40 – 100 °C / -40 – 212 °F
- Max. working pressure (PS / MWP): 45 bar / 650 psig
- Flow direction: Single-flow
- Approval: C UL US LISTED, EAC, CE

Technical data and ordering

GBC v2 without access port, solder ODF / ODF

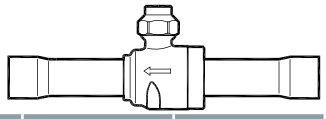

Ordering

Type	Solder ODF / ODF connection		Max. working pressure PS / MWP		K_V value [1] [m^3/h]	C_V value [1] [gal/min]	Code no.
	[in]	[mm]	[bar]	[psig]			
GBC 6s	–	6	45	650	1.74	2.01	009L7570
GBC 6s	1/4	–	45	650	1.74	2.01	009L7520
GBC 10s	–	10	45	650	7.52	8.69	009L7571
GBC 10s	3/8	–	45	650	7.52	8.69	009L7521
GBC 12s	–	12	45	650	12.9	14.9	009L7572
GBC 12s	1/2	–	45	650	12.9	14.9	009L7522
GBC 16s	5/8	16	45	650	15.7	18.1	009L7523
GBC 18s	–	18	45	650	21.9	25.4	009L7574
GBC 18s	3/4	–	45	650	21.9	25.4	009L7524
GBC 22s	7/8	22	45	650	33.3	38.5	009L7525
GBC 28s	–	28	45	650	62	71	009L7576
GBC 28s	1 1/8	–	45	650	62	71	009L7526
GBC 35s	1 3/8	35	45	650	92	107	009L7528
GBC 42s	–	42	45	650	134	155	009L7579
GBC 42s	1 5/8	–	45	650	134	155	009L7529

[1]) *calculated based on fluid dynamic equations*

GBC v2 with access port, solder ODF / ODF

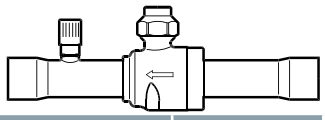

Ordering

Type	Solder ODF / ODF connection		K_V value [1] [m^3/h]	C_V value [1] [gal/min]	Code no.
	[in]	[mm]			
GBC 6s	1/4	–	1.74	2.01	009L7553
GBC 6s	–	6	1.74	2.01	009L7554
GBC 10s	3/8	–	7.52	8.69	009L7555
GBC 10s	–	10	7.52	8.69	009L7556
GBC 12s	1/2	–	12.92	14.94	009L7557
GBC 12s	–	12	12.92	14.94	009L7558
GBC 16s	5/8	16	15.66	18.1	009L7534
GBC 18s	3/4	–	21.93	25.35	009L7563
GBC 18s	–	18	21.93	25.35	009L7564
GBC 22s	7/8	22	33.34	38.54	009L7536
GBC 28s	1 1/8	–	62.25	71.96	009L7565
GBC 28s	–	28	62.25	71.96	009L7566
GBC 35s	1 3/8	35	92.76	107.23	009L7567
GBC 42s	1 5/8	–	134.76	155.78	009L7568
GBC 42s	–	42	134.76	155.78	009L7569

[1]) *calculated based on fluid dynamic equations*

Spare parts - Seal cap kit

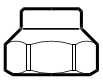

Ordering

Type	Valve connection size		Industrial pack	Code no.
	[in]	[mm]		
GBC 6s - GBC 22s	1/4 – 7/8	6 – 22	6	009L7210
GBC 28s - GBC 35s	1 1/8 – 1 3/8	28 – 35	4	009L7211
GBC 42s	1 5/8	42	4	009L7212

Spare parts - Bracket kit

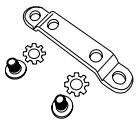

Ordering

Type	Valve connection size		Industrial pack	Code no.
	[in]	[mm]		
GBC 6s - GBC 16s	1/4 – 5/8	6 – 16	12	009G7084
GBC 18s - GBC 22s	3/4 – 7/8	18 – 22	12	009G7085
GBC 28s	1 1/8	28	10	009G7086
GBC 35s	1 3/8	35	5	009G7087
GBC 42s	1 5/8	42	4	009G7088

GBCH version 2, Shut-off ball valve for R744 (CO_2) high pressure

Danfoss shut-off ball valves, type GBCH v2 for CO_2 high pressure are manually operated shut-off valves.
The valves are specifically designed for intrinsic standstill security, meaning that the valves can withstand pressures normally arising when the refrigeration system is shut off, i.e. during servicing or during unexpected power failure.

The valves are approved for use in all parts of the system with pressure ratings lower than the below stated Maximum Working Pressure, typically the liquid, suction, gas-bypass, lines.

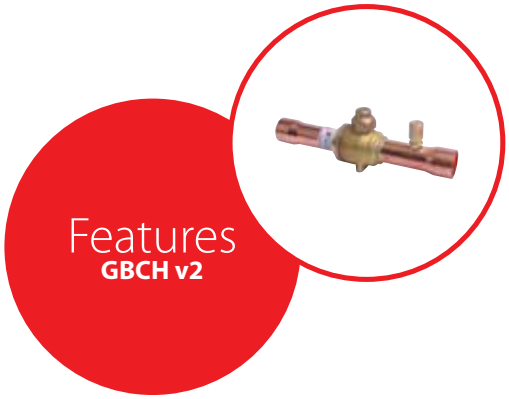

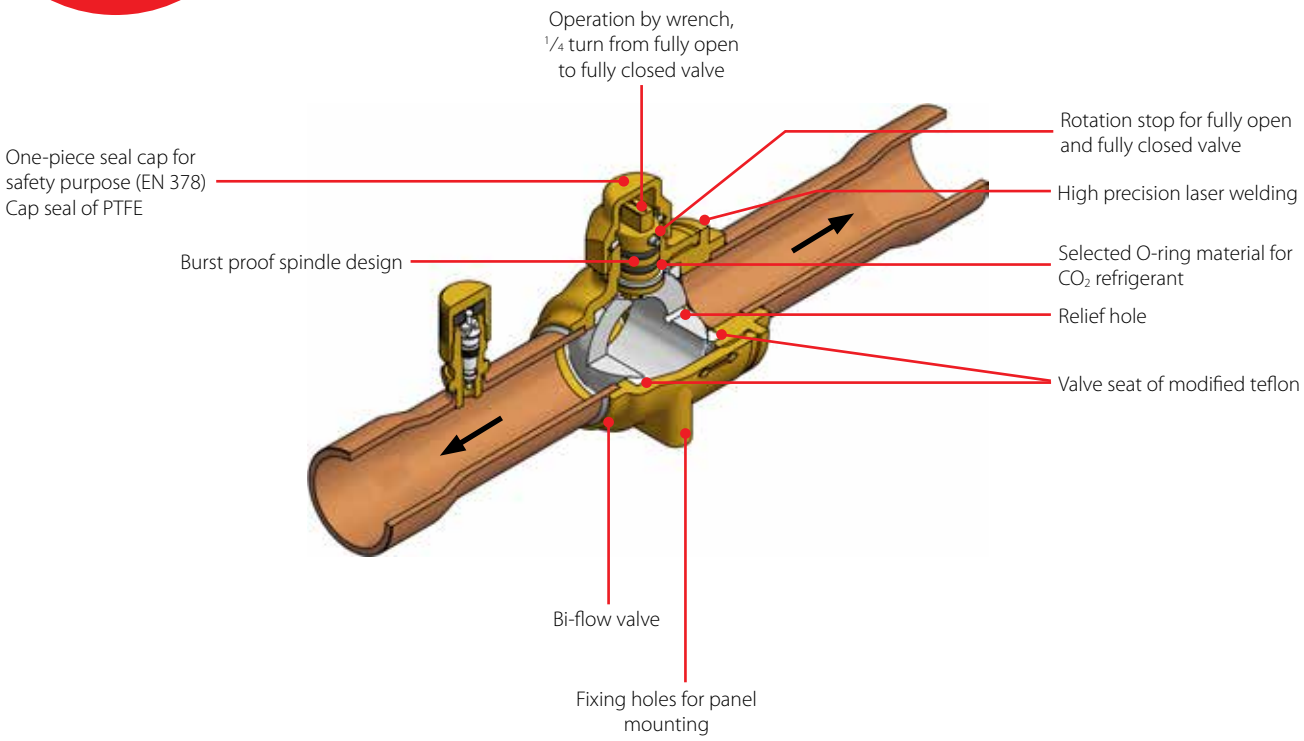

Facts

Application:
- The valves can be used for applications in liquid, suction lines in refrigeration and air-conditioning systems
- Applicable to R744 (CO_2)

- ¼ turn from fully open to fully closed
- Rotation stops at fully open and fully closed positions
- Indicator on spindle top shows degree of opening
- Precision laser welded construction
- Burst-proof spindle design
- Valve seal of low friction, tight-sealing modified PTFE Teflon®
- Selected O-ring material for CO_2 refrigerant
- Double O-ring stem seal design
- Customized brass material ensures consistent performance under aggressive environment

- Advanced design ensures trusted bi-flow function
- Drilled and tapped for panel mounting
- Relief hole design to release entrapped liquid
- Temperature range
  -40 – 100 °C / -40 – 212 °F
- Max. working pressure (PS / MWP)
  GBCH 6s - 28s : 90 bar / 1305 psig
- GBCH 35s - 42s: 75 bar / 1085 psig
- Flow direction: Bi-flow
- Approval: CE, UL, EAC

Technical data and ordering

GBCH v2 without access port, solder ODF/ODF, copper connections

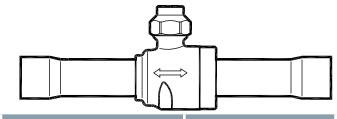

Ordering

Type	Solder ODF / ODF connection		Max. working pressure PS / MWP		K_V value [1] [m^3/h]	C_V value [1] [gal/min]	Code no.
	[in]	[mm]	[bar]	[psig]			
GBCH 6s	1/4	–	90	1305	1.78	2.06	009L7415
	–	6	90	1305	1.78	2.06	009L7395
GBCH 10s	3/8	–	90	1305	6.31	7.29	009L7416
	–	10	90	1305	6.31	7.29	009L7396
GBCH 12s	1/2	–	90	1305	12.8	14.8	009L7417
	–	12	90	1305	12.8	14.8	009L7397
GBCH 16s	5/8	16	90	1305	11.7	13.6	009L7418
GBCH 18s	3/4	–	90	1305	31.0	35.9	009L7419
	–	18	90	1305	31.0	35.9	009L7399
GBCH 22s	7/8	22	90	1305	24.4	28.2	009L7420

[1]) Calculation based on fluid dynamic equations

GBCH v2 with access port, solder ODF/ODF, copper connections

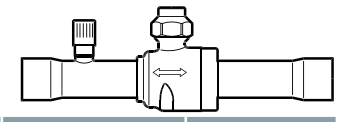

Ordering

Type	Solder ODF / ODF connection		Max. working pressure PS / MWP		K_V value [1] [m^3/h]	C_V value [1] [gal/min]	Code no.
	[in]	[mm]	[bar]	[psig]			
GBCH 6s	1/4	–	90	1305	1.78	2.06	009L7581
	–	6	90	1305	1.78	2.06	009L7580
GBCH 10s	3/8	–	90	1305	6.31	7.29	009L7582
	–	10	90	1305	6.31	7.29	009L7583
GBCH 12s	1/2	–	90	1305	12.8	14.8	009L7585
	–	12	90	1305	12.8	14.8	009L7584
GBCH 16s	5/8	16	90	1305	11.7	13.6	009L7586
GBCH 18s	3/4	–	90	1305	31.0	35.9	009L7588
	–	18	90	1305	31.0	35.9	009L7587
GBCH 22s	7/8	22	90	1305	24.4	28.2	009L7589

[1]) Calculation based on fluid dynamic equations

GBCH v2 without access port, butt weld, stainless steel connections



Ordering

Type	Solder ODF / ODF connection	Max. working pressure PS / MWP		K_V value [1] [m^3/h]	C_V value [1] [gal/min]	Code no.
	[mm]	[bar]	[psig]			
GBC 28s	28	90	1305	96	111	009L7406
GBC 35s	35	75	1085	106	123	009L7410
GBC 42s	42	75	1085	150	174	009L7411

[1]) Calculation based on fluid dynamic equations

Spare parts - Seal cap kit

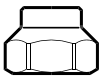

Ordering

Type	Valve connection size		Industrial pack	Code no.
	[in]	[mm]		
GBC 6s - 22s	1/4 – 7/8	6 – 22	6	009L7210
GBC 28s - 35s	1 1/8 – 1 3/8	28 – 35	4	009L7211
GBC 42s	1 5/8	42	4	009L7212

Spare parts - Bracket kit

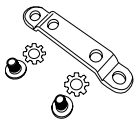

Ordering

Type	Valve connection size		Industrial pack	Code no.
	[in]	[mm]		
GBC 6s - 16s	1/4 – 5/8	6 – 16	12	009G7084
GBC 18s - 22s	3/4 – 7/8	18 – 22	12	009G7085
GBC 28s	1 1/8	28	10	009G7086
GBC 35s	1 3/8	35	5	009G7087
GBC 42s	1 5/8	42	4	009G7088

BML / BMT, Shut-off diaphragm valves

BML are manual shut-off diaphragm valves designed for installation in the liquid, suction and hot gas lines of refrigeration plants.
BML valves can be delivered with flare, ODF solder or ODF solder with extended ends.

In the same product category, BMT 6 is a three-way manual shut-off valve with similar characteristics.



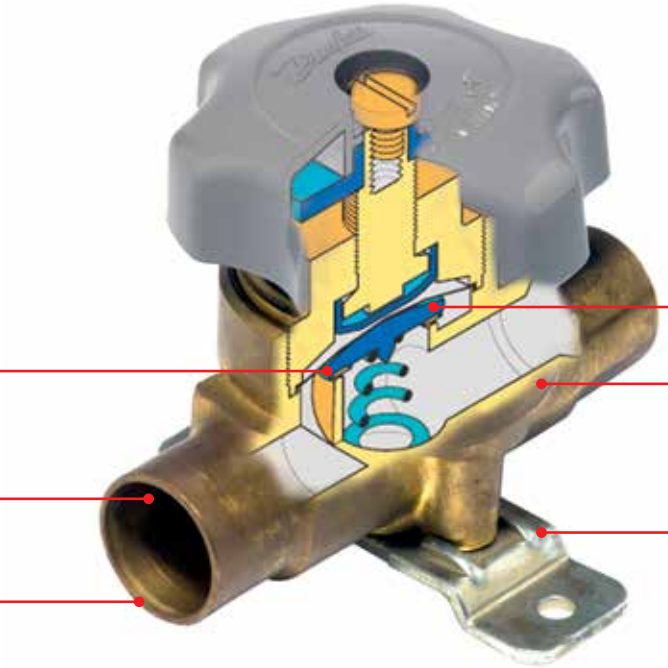

Facts

Application:
- Traditional refrigeration
- Applicable to R134a, R22 / R407C, R404A / R507, R290, R600, R600a, R1270, R513A, R450A, R1234ze, R1234yf
  Only solder versions are allowed for flammable refrigerant.
  For a fully updated list of approved refrigerants, visit www.products.danfoss.com and search for individual code numbers, where refrigerants are listed as part of product specifications.
- Fitted with three stainless steel diaphragms which ensure long operating life
- Valve plate of polyamide nylon to give complete shut-off with minimum torque
- Valve cover with counter-seat to prevent the ingress of moisture in fully open position
- Temperature range:
  -55 – 100 °C / -67 – 212 °F
- Max. working pressure PS / MWP:
  28 bar / 406 psig
- Working range:
  Δp = -1 - 21 bar / -14 - 304 psig
- Approvals: C UL US LISTED, EAC
- Solder versions are compliant with ATEX hazard zone 2

Technical data and ordering

BML flare, with hand wheel

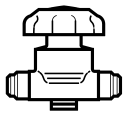

Ordering

Type	Version	Flare connection		Max. working pressure PS / MWP		K_V value [m^3/h]	C_V value [gal/min]	Code no.
		[in]	[mm]	[bar]	[psi]			Flare
BML 6	Straight way	1/4	–	28	406	0.30	0.35	009G0101
BML 10	Straight way	3/8	–	28	406	0.84	0.98	009G0127
BML 12	Straight way	1/2	–	28	406	1.50	1.75	009G0141
BML 15	Straight way	5/8	–	28	406	2.20	2.57	009G0168
BML 18	Straight way	3/4	–	28	406	2.90	3.38	009G0183

BML ODF solder, with hand wheel

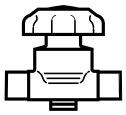

Ordering

Type	Version	[in]	[mm]	Max. working pressure PS / MWP		K_V value [m^3/h]	C_V value [gal/min]	Code no.
				[bar]	[psi]			
BML 6s	Straight way	1/4	–	28	406	0.30	0.35	009G0102
	Straight way	–	6	28	406	0.30	0.35	009G0108
BML 10s	Straight way	3/8	–	28	406	0.84	0.98	009G0122
	Straight way	–	10	28	406	0.84	0.98	009G0128
BML 12s	Straight way	1/2	–	28	406	1.50	1.75	009G0142
	Straight way	–	12	28	406	1.50	1.75	009G0148
BML 15s	Straight way	5/8	16	28	406	2.20	2.57	009G0170
BML 18s	Straight way	3/4	–	28	406	2.90	3.38	009G0181
	Straight way	–	18	28	406	2.90	3.38	009G0184
BML 22s	Straight way	7/8	22	28	406	2.90	3.38	009G0191

BML ODF solder extended connections, with hand wheel

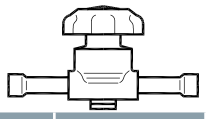

Ordering

Type	Version	[in]	[mm]	Max. working pressure PS / MWP		K_V value [m^3/h]	C_V value [gal/min]	Code no.
				[bar]	[psi]			
BML 6s	Straight way	1/4	–	28	406	0.30	0.35	009G0202
	Straight way	–	6	28	406	0.30	0.35	009G0208
BML 10s	Straight way	3/8	–	28	406	0.84	0.98	009G0222
	Straight way	–	10	28	406	0.84	0.98	009G0228
BML 12s	Straight way	1/2	–	28	406	1.50	1.75	009G0242
	Straight way	–	12	28	406	1.50	1.75	009G0248
BML 15s	Straight way	5/8	16	28	406	2.20	2.57	009G0262
BML 22s	Straight way	7/8	22	28	406	2.90	3.38	009G0291

BMT 3-way flare, with hand wheel

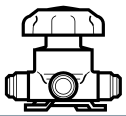

Ordering

Type	Version	Flare connection		Max. working pressure PS / MWP		K_V value [m^3/h]	C_V value [gal/min]	Code no.
		[in]	[mm]	[bar]	[psi]			Flare
BMT 6	Three-way	1/4	–	28	406	0.3	0.35	009G0105

Note

Only solder versions are approved for flammable refrigerants now

Technical data and ordering

Spare parts

Ordering

Type	Pos.	Description	Qty.	Code no.
BML 6	1	Diaphragm assy without Teflon	1	009G0025
	2	Diaphragm	2	
	3	Fag with grease	1	
BMT 6	1	Diaphragm assy without Teflon	1	
	2	Diaphragm	2	
	3	Fag with grease	1	
BML 10	1	Diaphragm assy without Teflon	1	009G0026
	2	Diaphragm	2	
	3	Fag with grease	1	
BML 12	1	Diaphram assy without Teflon	1	009G0027
	2	Diaphragm	2	
	3	Fag with grease	1	
BML 15	1	Diaphram assy without Teflon	2	009G0028
	2	Diaphragm	1	
	3	Fag with grease	2	
BML 18	1	Diaphram assy without Teflon	1	009G0029
	2	Diaphragm	2	
	3	Fag with grease	1	
BML 22	1	Diaphram assy without Teflon	1	
	2	Diaphragm	2	
	3	Fag with grease	1	

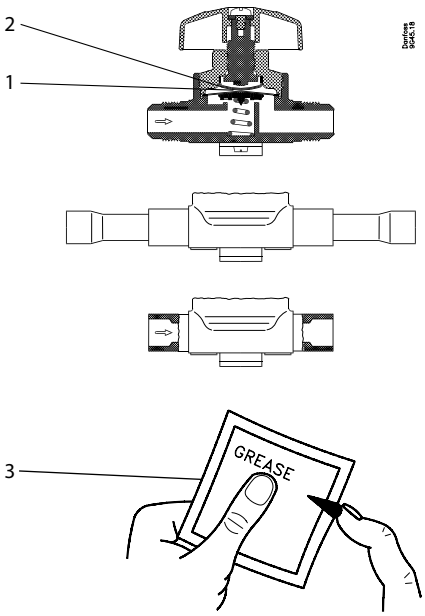

Quick Selection Notes:

SVA-S / SVA-L, Shut-off valves - 52 bar /754 psi

SVA-S / L shut-off valves are available in angleway and straightway versions and with Standard neck (SVA-S) and Long neck (SVA-L). Each valve housing is available with several different connection types and sizes, and it is possible to convert SVA-S or SVA-L to any other product in the SVL family by replacing the complete top part.

The shut-off valves are designed to meet all industrial refrigeration application requirements, to provide favourable flow characteristics, and are easy to dismantle and repair when necessary.
The valve cone is designed to ensure perfect closing and withstand a high system pulsation and vibration, which can be present specifically in the discharge line.



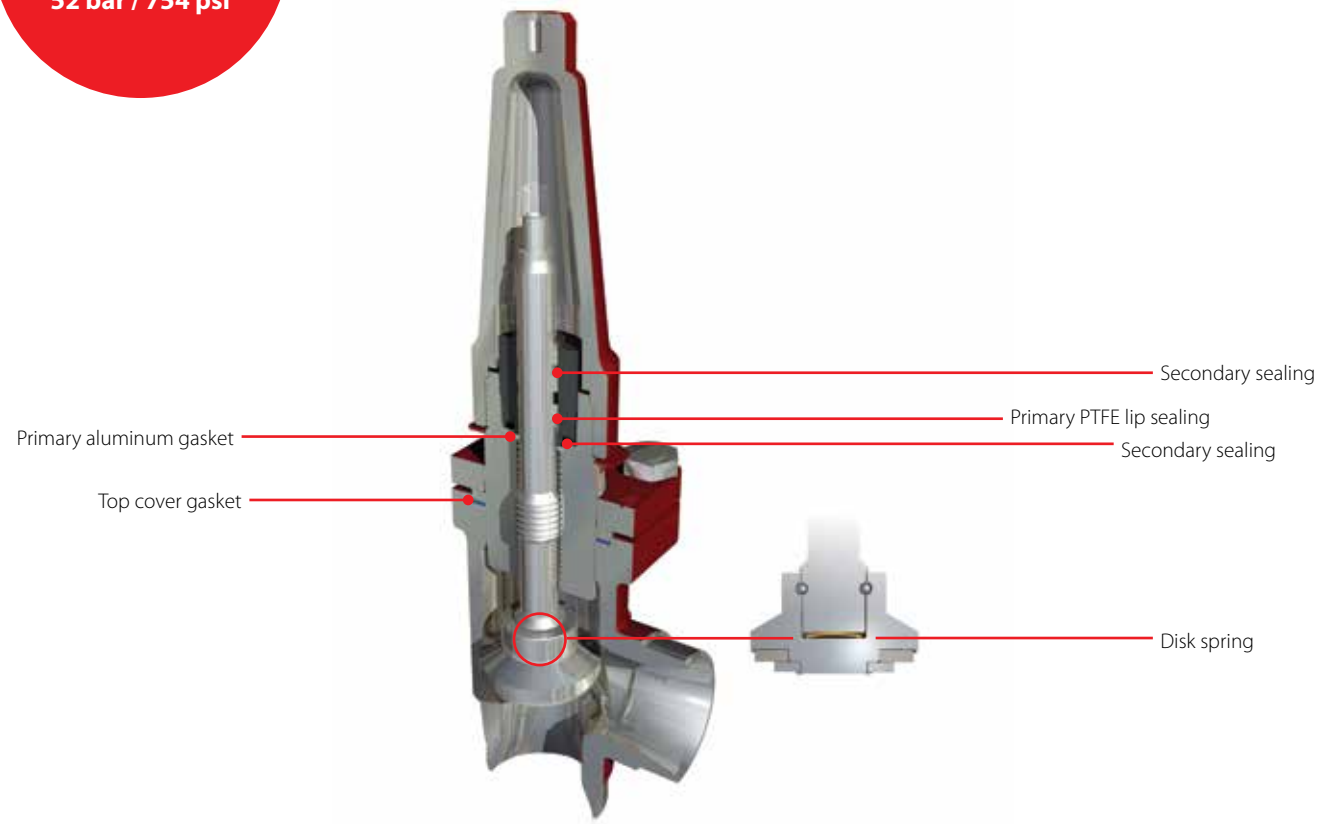

Facts

- Applicable to R717, R744, R113, R114, R1233zd(E), R1234yf, R1234ze(E), R125, R1270, R1336mzz(Z), R134a, R152a, R170, R22, R227ea, R23, R236fa, R290, R32, R401A, R402A, R402B, R404A, R407A, R407B, R407C, R407F, R407H, R408A, R409A, R410A, R417A, R421A, R422A, R422B, R422D, R427A, R438A, R444B, R447A, R448A, R449A, R449B, R450A, R452A, R454B, R455A, R502, R503, R507, R513A, R600, R600a and RE170
  For a fully updated list of approved refrigerants, visit www.products.danfoss.com and search for individual code numbers, where refrigerants are listed as part of product specifications.
- Available in angleway and straightway versions with Standard neck, or Long neck (DN 15 to DN 40) for insulated systems
- Each valve type is clearly marked with type, size and performance range
- The valves and caps are prepared for sealing, to prevent operation by un-authorized persons, using a seal wire
- Internal metal backseating:
  - DN 6 – 65 (1/4 – 2 1/2 in)
- Internal PTFE backseating:
  - DN 80 – 200 (3 – 8 in)
- Can accept flow in both directions
- Housing and bonnet material is low temperature steel according to requirements of the Pressure Equipment Directive and other international classification authorities
- Equipped with stainless steel bolts
- Optional accessories:
  - Heavy duty industrial hand wheel for frequent operation
  - Cap for infrequent operation
- Max. working pressure:
  52 bar g / 754 psig
- Temperature range:
  -60 – 150 °C / -76 – 302 °F
- Classification: DNV, CRN, BV etc

Technical data and ordering

SVA-S / SVA-L, Shut-off valve

Technical data

Type	Description
Pressure range	The valves are designed for max. working pressure 52 bar g / 754 psig
Temperature range	-60 – 150 °C / -76 – 302 °F

Available connection sizes

SVA-S:
The S means Standard bonnet length (sizes from DN50 to DN200 are insulation friendly).

SVA-L:
The L means Long bonnet length (insulation friendly).



Size	SVA-S	SVA-L
DN 6 (¼)	x	–
DN 10 (⅜)	x	–
DN 15 (½)	x	x
DN 20 (¾)	x	x
DN 25 (1)	x	x
DN 32 (1 ¼)	x	x
DN 40 (1 ½)	x	x
DN 50 (2)	x	–
DN 65 (2 ½)	x	–
DN 80 (3)	x	–
DN 100 (4)	x	–
DN 125 (5)	x	–
DN 150 (6)	x	–
DN 200 (8)	x	–

Please note that the type codes only serve to identify the valves, some of which may not form part of the standard product range.
For further information please contact your local Danfoss Sales Company.

Valve type	Connection size		Available connections				
Nominal size [mm]	[mm]	[in]	A / D	SOC	FPT	T	F
	6	DN 6 (¼)	x			x	
	10	DN 10 (⅜)	x				
	15	DN 15 (½)	x	x	x		x
	20	DN 20 (¾)	x	x	x		x
	25	DN 25 (1)	x	x	x		x
	32	DN 32 (1 ¼)	x	x	x		x
	40	DN 40 (1 ½)	x	x			x
	50	DN 50 (2)	x	x			x
	65	DN 65 (2 ½)	x				x
	80	DN 80 (3)	x				x
	100	DN 100 (4)	x				x
	125	DN 125 (5)	x				x
	150	DN 150 (6)	x				x
	200	DN 200 (8)	x				x
Connections	A	Butt-weld connection: ANSI B 36.10 schedule 80, DN 15 - 40 (½ – 1 ½ in)					
		Butt-weld connection: ANSI B 36.10 schedule 40, DN 50 - 200 (2 – 8 in)					
	D	Butt-weld connection: DIN EN 10220					
	G	Butt-weld connection: GOST (8734-75 and 8732-78)					
	SOC	Socket weld: ANSI B 16.11					
	FPT	Female Pipe Thread NPT: ANSI / ASME B 1.20.1					
	T	Outside threaded connections ISO 228/1 Pipe thread					
	F	Butt-weld connection F: Thickness DN 15 – 65 = 2 mm Thickness DN 80 – 200 = 3 mm					
Valve housing	ANG	Angle flow					
	STR	Straight flow					
Equipment	H-WHEEL	Hand wheel					
	CAP	Cap					

Important!
Where products need to be certified according to specific certification societies or where higher pressures are required, the relevant information should be included at the time of order.

Ordering factory assembled SVA-S angleway valve

SVA-S, Shut-off valve - 52 bar / 754 psi



Ordering

Type	Connection size		Execution	Connection type	Connection designation	Equipment	Code no.
	[mm]	[in]					
SVA-S 6	6	1/4	Angleway	Butt weld, EN 10220	D	Hand wheel	148B5000
	6	1/4	Angleway	Butt weld, ANSI (B 36.10)	A	Hand wheel	148B5020
	6	1/4	Angleway	Butt weld, EN 10220	D	Cap	148B5001
	6	1/4	Angleway	Butt weld, ANSI (B 36.10)	A	Cap	148B5021
	6	1/4	Angleway	Outside pipe thread, (ISO 228/1)	T	Cap	148B5032
SVA-S 10	10	3/8	Angleway	Butt weld, EN 10220	D	Hand wheel	148B5100
	10	3/8	Angleway	Butt weld, ANSI (B 36.10)	A	Hand wheel	148B5120
	10	3/8	Angleway	Butt weld, EN 10220	D	Cap	148B5101
	10	3/8	Angleway	Butt weld, ANSI (B 36.10)	A	Cap	148B5121
SVA-S 15	15	1/2	Angleway	Butt weld, EN 10220	D	Hand wheel	148B5200
	15	1/2	Angleway	Butt weld, ANSI (B 36.10)	A	Hand wheel	148B5220
	15	1/2	Angleway	Socket weld, ANSI (B 16.11)	SOC	Hand wheel	148B5222
	15	1/2	Angleway	Female pipe thread (ANSI / ASME B 1.20.1)	FPT	Hand wheel	148B5224
	15	1/2	Angleway	Butt weld, EN 10220	D	Cap	148B5201
	15	1/2	Angleway	Butt weld, ANSI (B 36.10)	A	Cap	148B5221
	15	1/2	Angleway	Socket weld, ANSI (B 16.11)	SOC	Cap	148B5223
	15	1/2	Angleway	Female pipe thread (ANSI / ASME B 1.20.1)	FPT	Cap	148B5225
SVA-S 20	20	3/4	Angleway	Butt weld, EN 10220	D	Hand wheel	148B5300
	20	3/4	Angleway	Butt weld, ANSI (B 36.10)	A	Hand wheel	148B5320
	20	3/4	Angleway	Socket weld, ANSI (B 16.11)	SOC	Hand wheel	148B5322
	20	3/4	Angleway	Female pipe thread (ANSI / ASME B 1.20.1)	FPT	Hand wheel	148B5324
	20	3/4	Angleway	Butt weld, EN 10220	D	Cap	148B5301
	20	3/4	Angleway	Butt weld, ANSI (B 36.10)	A	Cap	148B5321
	20	3/4	Angleway	Socket weld, ANSI (B 16.11)	SOC	Cap	148B5323
	20	3/4	Angleway	Female pipe thread (ANSI / ASME B 1.20.1)	FPT	Cap	148B5325
SVA-S 25	25	1	Angleway	Butt weld, EN 10220	D	Hand wheel	148B5400
	25	1	Angleway	Butt weld, ANSI (B 36.10)	A	Hand wheel	148B5420
	25	1	Angleway	Socket weld, ANSI (B 16.11)	SOC	Hand wheel	148B5422
	25	1	Angleway	Female pipe thread (ANSI / ASME B 1.20.1)	FPT	Hand wheel	148B5424
	25	1	Angleway	Butt weld, EN 10220	D	Cap	148B5401
	25	1	Angleway	Butt weld, ANSI (B 36.10)	A	Cap	148B5421
	25	1	Angleway	Socket weld, ANSI (B 16.11)	SOC	Cap	148B5423
	25	1	Angleway	Female pipe thread (ANSI / ASME B 1.20.1)	FPT	Cap	148B5425
SVA-S 32	32	1 1/4	Angleway	Butt weld, EN 10220	D	Hand wheel	148B5500
	32	1 1/4	Angleway	Butt weld, ANSI (B 36.10)	A	Hand wheel	148B5520
	32	1 1/4	Angleway	Socket weld, ANSI (B 16.11)	SOC	Hand wheel	148B5522
	32	1 1/4	Angleway	Female pipe thread (ANSI / ASME B 1.20.1)	FPT	Hand wheel	148B5524
	32	1 1/4	Angleway	Butt weld, EN 10220	D	Cap	148B5501
	32	1 1/4	Angleway	Butt weld, ANSI (B 36.10)	A	Cap	148B5521
	32	1 1/4	Angleway	Socket weld, ANSI (B 16.11)	SOC	Cap	148B5523
	32	1 1/4	Angleway	Female pipe thread (ANSI / ASME B 1.20.1)	FPT	Cap	148B5525
SVA-S 40	40	1 1/2	Angleway	Butt weld, EN 10220	D	Hand wheel	148B5600
	40	1 1/2	Angleway	Butt weld, ANSI (B 36.10)	A	Hand wheel	148B5620
	40	1 1/2	Angleway	Socket weld, ANSI (B 16.11)	SOC	Hand wheel	148B5622
	40	1 1/2	Angleway	Butt weld, EN 10220	D	Cap	148B5601
	40	1 1/2	Angleway	Butt weld, ANSI (B 36.10)	A	Cap	148B5621
	40	1 1/2	Angleway	Socket weld, ANSI (B 16.11)	SOC	Cap	148B5623
SVA-S 50	50	2	Angleway	Butt weld, EN 10220	D	Hand wheel	148B5700
	50	2	Angleway	Butt weld, ANSI (B 36.10)	A	Hand wheel	148B5720
	50	2	Angleway	Socket weld, ANSI (B 16.11)	SOC	Hand wheel	148B5722
	50	2	Angleway	Butt weld, EN 10220	D	Cap	148B5701
	50	2	Angleway	Butt weld, ANSI (B 36.10)	A	Cap	148B5721
	50	2	Angleway	Socket weld, ANSI (B 16.11)	SOC	Cap	148B5723
SVA-S 65	65	2 1/2	Angleway	Butt weld, EN 10220	D	Hand wheel	148B5800
	65	2 1/2	Angleway	Butt weld, ANSI (B 36.10)	A	Hand wheel	148B5820
	65	2 1/2	Angleway	Butt weld, EN 10220	D	Cap	148B5801
	65	2 1/2	Angleway	Butt weld, ANSI (B 36.10)	A	Cap	148B5821
SVA-S 80	80	3	Angleway	Butt weld, EN 10220	D	Hand wheel	148B5900
	80	3	Angleway	Butt weld, ANSI (B 36.10)	A	Hand wheel	148B5920
	80	3	Angleway	Butt weld, EN 10220	D	Cap	148B5901
	80	3	Angleway	Butt weld, ANSI (B 36.10)	A	Cap	148B5921
SVA-S 100	100	4	Angleway	Butt weld, EN 10220	D	Hand wheel	148B6000
	100	4	Angleway	Butt weld, ANSI (B 36.10)	A	Hand wheel	148B6020
	100	4	Angleway	Butt weld, EN 10220	D	Cap	148B6001
	100	4	Angleway	Butt weld, ANSI (B 36.10)	A	Cap	148B6021
SVA-S 125	125	5	Angleway	Butt weld, EN 10220	D	Hand wheel	148B6100
	125	5	Angleway	Butt weld, ANSI (B 36.10)	A	Hand wheel	148B6120
	125	5	Angleway	Butt weld, EN 10220	D	Cap	148B6101
	125	5	Angleway	Butt weld, ANSI (B 36.10)	A	Cap	148B6121
SVA-S 150	150	6	Angleway	Butt weld, EN 10220	D	Hand wheel	148B6200
	150	6	Angleway	Butt weld, ANSI (B 36.10)	A	Hand wheel	148B6220
	150	6	Angleway	Butt weld, F	F	Hand wheel	148B6434
	150	6	Angleway	Butt weld, GOST	G	Hand wheel	148B6240
	150	6	Angleway	Butt weld, EN 10220	D	Cap	148B6201
	150	6	Angleway	Butt weld, ANSI (B 36.10)	A	Cap	148B6221
	150	6	Angleway	Butt weld, F	F	Cap	148B6436
	150	6	Angleway	Butt weld, GOST	G	Cap	148B6241
SVA-S 200	200	8	Angleway	Butt weld, EN 10220	D	Hand wheel	148B6300
	200	8	Angleway	Butt weld, ANSI (B 36.10)	A	Hand wheel	148B6320
	200	8	Angleway	Butt weld, F	F	Hand wheel	148B6435
	200	8	Angleway	Butt weld, EN 10220	D	Cap	148B6301
	200	8	Angleway	Butt weld, ANSI (B 36.10)	A	Cap	148B6321
	200	8	Angleway	Butt weld, F	F	Cap	148B6437

Ordering factory assembled SVA-S straightway valve

SVA-S, Shut-off valve - 52 bar / 754 psi

Ordering



Type	Connection size		Execution	Connection type	Connection designation	Equipment	Code no.
	[mm]	[in]					
SVA-S 6	6	1/4	Straightway	Butt weld, EN 10220	D	Hand wheel	148B5010
	6	1/4	Straightway	Butt weld, ANSI (B 36.10)	A	Hand wheel	148B5030
	6	1/4	Straightway	Butt weld, EN 10220	D	Cap	148B5011
	6	1/4	Straightway	Butt weld, ANSI (B 36.10)	A	Cap	148B5031
SVA-S 10	10	3/8	Straightway	Butt weld, EN 10220	D	Hand wheel	148B5110
	10	3/8	Straightway	Butt weld, ANSI (B 36.10)	A	Hand wheel	148B5130
	10	3/8	Straightway	Butt weld, EN 10220	D	Cap	148B5111
	10	3/8	Straightway	Butt weld, ANSI (B 36.10)	A	Cap	148B5131
SVA-S 15	15	1/2	Straightway	Butt weld, EN 10220	D	Hand wheel	148B5210
	15	1/2	Straightway	Butt weld, ANSI (B 36.10)	A	Hand wheel	148B5230
	15	1/2	Straightway	Socket weld, ANSI (B 16.11)	SOC	Hand wheel	148B5232
	15	1/2	Straightway	Female pipe thread (ANSI / ASME B 1.20.1)	FPT	Hand wheel	148B5234
	15	1/2	Straightway	Butt weld, EN 10220	D	Cap	148B5211
	15	1/2	Straightway	Butt weld, ANSI (B 36.10)	A	Cap	148B5231
	15	1/2	Straightway	Socket weld, ANSI (B 16.11)	SOC	Cap	148B5233
	15	1/2	Straightway	Female pipe thread (ANSI / ASME B 1.20.1)	FPT	Cap	148B5235
SVA-S 20	20	3/4	Straightway	Butt weld, EN 10220	D	Hand wheel	148B5310
	20	3/4	Straightway	Butt weld, ANSI (B 36.10)	A	Hand wheel	148B5330
	20	3/4	Straightway	Socket weld, ANSI (B 16.11)	SOC	Hand wheel	148B5332
	20	3/4	Straightway	Female pipe thread (ANSI / ASME B 1.20.1)	FPT	Hand wheel	148B5334
	20	3/4	Straightway	Butt weld, EN 10220	D	Cap	148B5311
	20	3/4	Straightway	Butt weld, ANSI (B 36.10)	A	Cap	148B5331
	20	3/4	Straightway	Socket weld, ANSI (B 16.11)	SOC	Cap	148B5333
	20	3/4	Straightway	Female pipe thread (ANSI / ASME B 1.20.1)	FPT	Cap	148B5335
SVA-S 25	25	1	Straightway	Butt weld, EN 10220	D	Hand wheel	148B5410
	25	1	Straightway	Butt weld, ANSI (B 36.10)	A	Hand wheel	148B5430
	25	1	Straightway	Socket weld, ANSI (B 16.11)	SOC	Hand wheel	148B5432
	25	1	Straightway	Female pipe thread (ANSI / ASME B 1.20.1)	FPT	Hand wheel	148B5434
	25	1	Straightway	Butt weld, EN 10220	D	Cap	148B5411
	25	1	Straightway	Butt weld, ANSI (B 36.10)	A	Cap	148B5431
	25	1	Straightway	Socket weld, ANSI (B 16.11)	SOC	Cap	148B5433
	25	1	Straightway	Female pipe thread (ANSI / ASME B 1.20.1)	FPT	Cap	148B5435
SVA-S 32	32	1 1/4	Straightway	Butt weld, EN 10220	D	Hand wheel	148B5510
	32	1 1/4	Straightway	Butt weld, ANSI (B 36.10)	A	Hand wheel	148B5530
	32	1 1/4	Straightway	Socket weld, ANSI (B 16.11)	SOC	Hand wheel	148B5532
	32	1 1/4	Straightway	Female pipe thread (ANSI / ASME B 1.20.1)	FPT	Hand wheel	148B5534
	32	1 1/4	Straightway	Butt weld, EN 10220	D	Cap	148B5511
	32	1 1/4	Straightway	Butt weld, ANSI (B 36.10)	A	Cap	148B5531
	32	1 1/4	Straightway	Socket weld, ANSI (B 16.11)	SOC	Cap	148B5533
	32	1 1/4	Straightway	Female pipe thread (ANSI / ASME B 1.20.1)	FPT	Cap	148B5535
SVA-S 40	40	1 1/2	Straightway	Butt weld, EN 10220	D	Hand wheel	148B5610
	40	1 1/2	Straightway	Butt weld, ANSI (B 36.10)	A	Hand wheel	148B5630
	40	1 1/2	Straightway	Socket weld, ANSI (B 16.11)	SOC	Hand wheel	148B5632
	40	1 1/2	Straightway	Butt weld, EN 10220	D	Cap	148B5611
	40	1 1/2	Straightway	Butt weld, ANSI (B 36.10)	A	Cap	148B5631
	40	1 1/2	Straightway	Socket weld, ANSI (B 16.11)	SOC	Cap	148B5633
SVA-S 50	50	2	Straightway	Butt weld, EN 10220	D	Hand wheel	148B5710
	50	2	Straightway	Butt weld, ANSI (B 36.10)	A	Hand wheel	148B5730
	50	2	Straightway	Socket weld, ANSI (B 16.11)	SOC	Hand wheel	148B5732
	50	2	Straightway	Butt weld, EN 10220	D	Cap	148B5711
	50	2	Straightway	Butt weld, ANSI (B 36.10)	A	Cap	148B5731
	50	2	Straightway	Socket weld, ANSI (B 16.11)	SOC	Cap	148B5733
SVA-S 65	65	2 1/2	Straightway	Butt weld, EN 10220	D	Hand wheel	148B5810
	65	2 1/2	Straightway	Butt weld, ANSI (B 36.10)	A	Hand wheel	148B5830
	65	2 1/2	Straightway	Butt weld, EN 10220	D	Cap	148B5811
	65	2 1/2	Straightway	Butt weld, ANSI (B 36.10)	A	Cap	148B5831
SVA-S 80	80	3	Straightway	Butt weld, EN 10220	D	Hand wheel	148B5910
	80	3	Straightway	Butt weld, ANSI (B 36.10)	A	Hand wheel	148B5930
	80	3	Straightway	Butt weld, EN 10220	D	Cap	148B5911
	80	3	Straightway	Butt weld, ANSI (B 36.10)	A	Cap	148B5931
SVA-S 100	100	4	Straightway	Butt weld, EN 10220	D	Hand wheel	148B6010
	100	4	Straightway	Butt weld, ANSI (B 36.10)	A	Hand wheel	148B6030
	100	4	Straightway	Butt weld, EN 10220	D	Cap	148B6011
	100	4	Straightway	Butt weld, ANSI (B 36.10)	A	Cap	148B6031
SVA-S 125	125	5	Straightway	Butt weld, EN 10220	D	Hand wheel	148B6110
	125	5	Straightway	Butt weld, ANSI (B 36.10)	A	Hand wheel	148B6130
	125	5	Straightway	Butt weld, EN 10220	D	Cap	148B6111
	125	5	Straightway	Butt weld, ANSI (B 36.10)	A	Cap	148B6131
SVA-S 150	150	6	Straightway	Butt weld, EN 10220	D	Hand wheel	148B6210
	150	6	Straightway	Butt weld, ANSI (B 36.10)	A	Hand wheel	148B6230
	150	6	Straightway	Butt weld, F	F	Hand wheel	148B6438
	150	6	Straightway	Butt weld, GOST	G	Hand wheel	148B6250
	150	6	Straightway	Butt weld, EN 10220	D	Cap	148B6211
	150	6	Straightway	Butt weld, ANSI (B 36.10)	A	Cap	148B6231
	150	6	Straightway	Butt weld, F	F	Cap	148B6440
	150	6	Straightway	Butt weld, GOST	G	Cap	148B6251
SVA-S 200	200	8	Straightway	Butt weld, EN 10220	D	Hand wheel	148B6310
	200	8	Straightway	Butt weld, ANSI (B 36.10)	A	Hand wheel	148B6330
	200	8	Straightway	Butt weld, F	F	Hand wheel	148B6439
	200	8	Straightway	Butt weld, EN 10220	D	Cap	148B6311
	200	8	Straightway	Butt weld, ANSI (B 36.10)	A	Cap	148B6331
	200	8	Straightway	Butt weld, F	F	Cap	148B6441

Ordering factory assembled SVA-L angleway valve

SVA-L, Shut-off valve - 52 bar / 754 psi



Ordering

Type	Connection size		Execution	Connection type	Connection designation	Equipment	Code no.
	[mm]	[in]					
SVA-L 15	15	1/2	Angleway	Butt weld, EN 10220	D	Hand wheel	148B5240
	15	1/2	Angleway	Butt weld, ANSI (B 36.10)	A	Hand wheel	148B5260
	15	1/2	Angleway	Socket weld, ANSI (B 16.11)	SOC	Hand wheel	148B5262
	15	1/2	Angleway	Female pipe thread (ANSI / ASME B 1.20.1)	FPT	Hand wheel	148B5264
	15	1/2	Angleway	Butt weld, EN 10220	D	Cap	148B5241
	15	1/2	Angleway	Butt weld, ANSI (B 36.10)	A	Cap	148B5261
	15	1/2	Angleway	Socket weld, ANSI (B 16.11)	SOC	Cap	148B5263
	15	1/2	Angleway	Female pipe thread (ANSI / ASME B 1.20.1)	FPT	Cap	148B5265
SVA-L 20	20	3/4	Angleway	Butt weld, EN 10220	D	Hand wheel	148B5340
	20	3/4	Angleway	Butt weld, ANSI (B 36.10)	A	Hand wheel	148B5360
	20	3/4	Angleway	Socket weld, ANSI (B 16.11)	SOC	Hand wheel	148B5362
	20	3/4	Angleway	Female pipe thread (ANSI / ASME B 1.20.1)	FPT	Hand wheel	148B5364
	20	3/4	Angleway	Butt weld, EN 10220	D	Cap	148B5341
	20	3/4	Angleway	Butt weld, ANSI (B 36.10)	A	Cap	148B5361
	20	3/4	Angleway	Socket weld, ANSI (B 16.11)	SOC	Cap	148B5363
	20	3/4	Angleway	Female pipe thread (ANSI / ASME B 1.20.1)	FPT	Cap	148B5365
SVA-L 25	25	1	Angleway	Butt weld, EN 10220	D	Hand wheel	148B5440
	25	1	Angleway	Butt weld, ANSI (B 36.10)	A	Hand wheel	148B5460
	25	1	Angleway	Socket weld, ANSI (B 16.11)	SOC	Hand wheel	148B5462
	25	1	Angleway	Female pipe thread (ANSI / ASME B 1.20.1)	FPT	Hand wheel	148B5464
	25	1	Angleway	Butt weld, EN 10220	D	Cap	148B5441
	25	1	Angleway	Butt weld, ANSI (B 36.10)	A	Cap	148B5461
	25	1	Angleway	Socket weld, ANSI (B 16.11)	SOC	Cap	148B5463
	25	1	Angleway	Female pipe thread (ANSI / ASME B 1.20.1)	FPT	Cap	148B5465
SVA-L 32	32	1 1/4	Angleway	Butt weld, EN 10220	D	Hand wheel	148B5540
	32	1 1/4	Angleway	Butt weld, ANSI (B 36.10)	A	Hand wheel	148B5560
	32	1 1/4	Angleway	Socket weld, ANSI (B 16.11)	SOC	Hand wheel	148B5562
	32	1 1/4	Angleway	Female pipe thread (ANSI / ASME B 1.20.1)	FPT	Hand wheel	148B5564
	32	1 1/4	Angleway	Butt weld, EN 10220	D	Cap	148B5541
	32	1 1/4	Angleway	Butt weld, ANSI (B 36.10)	A	Cap	148B5561
	32	1 1/4	Angleway	Socket weld, ANSI (B 16.11)	SOC	Cap	148B5563
	32	1 1/4	Angleway	Female pipe thread (ANSI / ASME B 1.20.1)	FPT	Cap	148B5565
SVA-L 40	40	1 1/2	Angleway	Butt weld, EN 10220	D	Hand wheel	148B5640
	40	1 1/2	Angleway	Butt weld, ANSI (B 36.10)	A	Hand wheel	148B5660
	40	1 1/2	Angleway	Socket weld, ANSI (B 16.11)	SOC	Hand wheel	148B5662
	40	1 1/2	Angleway	Butt weld, EN 10220	D	Cap	148B5641
	40	1 1/2	Angleway	Butt weld, ANSI (B 36.10)	A	Cap	148B5661
	40	1 1/2	Angleway	Socket weld, ANSI (B 16.11)	SOC	Cap	148B5663

Ordering factory assembled SVA-L straightway valve

SVA-L, Shut-off valve - 52 bar / 754 psi



Ordering

Type	Connection size		Execution	Connection type	Connection designation	Equipment	Code no.
	[mm]	[in]					
SVA-L 15	15	1/2	Straightway	Butt weld, EN 10220	D	Hand wheel	148B5250
	15	1/2	Straightway	Butt weld, ANSI (B 36.10)	A	Hand wheel	148B5270
	15	1/2	Straightway	Socket weld, ANSI (B 16.11)	SOC	Hand wheel	148B5272
	15	1/2	Straightway	Female pipe thread (ANSI / ASME B 1.20.1)	FPT	Hand wheel	148B5274
	15	1/2	Straightway	Butt weld, EN 10220	D	Cap	148B5251
	15	1/2	Straightway	Butt weld, ANSI (B 36.10)	A	Cap	148B5271
	15	1/2	Straightway	Socket weld, ANSI (B 16.11)	SOC	Cap	148B5273
	15	1/2	Straightway	Female pipe thread (ANSI / ASME B 1.20.1)	FPT	Cap	148B5275
SVA-L 20	20	3/4	Straightway	Butt weld, EN 10220	D	Hand wheel	148B5350
	20	3/4	Straightway	Butt weld, ANSI (B 36.10)	A	Hand wheel	148B5370
	20	3/4	Straightway	Socket weld, ANSI (B 16.11)	SOC	Hand wheel	148B5372
	20	3/4	Straightway	Female pipe thread (ANSI / ASME B 1.20.1)	FPT	Hand wheel	148B5374
	20	3/4	Straightway	Butt weld, EN 10220	D	Cap	148B5351
	20	3/4	Straightway	Butt weld, ANSI (B 36.10)	A	Cap	148B5371
	20	3/4	Straightway	Socket weld, ANSI (B 16.11)	SOC	Cap	148B5373
	20	3/4	Straightway	Female pipe thread (ANSI / ASME B 1.20.1)	FPT	Cap	148B5375
SVA-L 25	25	1	Straightway	Butt weld, EN 10220	D	Hand wheel	148B5450
	25	1	Straightway	Butt weld, ANSI (B 36.10)	A	Hand wheel	148B5470
	25	1	Straightway	Socket weld, ANSI (B 16.11)	SOC	Hand wheel	148B5472
	25	1	Straightway	Female pipe thread (ANSI / ASME B 1.20.1)	FPT	Hand wheel	148B5474
	25	1	Straightway	Butt weld, EN 10220	D	Cap	148B5451
	25	1	Straightway	Butt weld, ANSI (B 36.10)	A	Cap	148B5471
	25	1	Straightway	Socket weld, ANSI (B 16.11)	SOC	Cap	148B5473
	25	1	Straightway	Female pipe thread (ANSI / ASME B 1.20.1)	FPT	Cap	148B5475
SVA-L 32	32	1 1/4	Straightway	Butt weld, EN 10220	D	Hand wheel	148B5550
	32	1 1/4	Straightway	Butt weld, ANSI (B 36.10)	A	Hand wheel	148B5570
	32	1 1/4	Straightway	Socket weld, ANSI (B 16.11)	SOC	Hand wheel	148B5572
	32	1 1/4	Straightway	Female pipe thread (ANSI / ASME B 1.20.1)	FPT	Hand wheel	148B5574
	32	1 1/4	Straightway	Butt weld, EN 10220	D	Cap	148B5551
	32	1 1/4	Straightway	Butt weld, ANSI (B 36.10)	A	Cap	148B5571
	32	1 1/4	Straightway	Socket weld, ANSI (B 16.11)	SOC	Cap	148B5573
	32	1 1/4	Straightway	Female pipe thread (ANSI / ASME B 1.20.1)	FPT	Cap	148B5575
SVA-L 40	40	1 1/2	Straightway	Butt weld, EN 10220	D	Hand wheel	148B5650
	40	1 1/2	Straightway	Butt weld, ANSI (B 36.10)	A	Hand wheel	148B5670
	40	1 1/2	Straightway	Socket weld, ANSI (B 16.11)	SOC	Hand wheel	148B5672
	40	1 1/2	Straightway	Butt weld, EN 10220	D	Cap	148B5651
	40	1 1/2	Straightway	Butt weld, ANSI (B 36.10)	A	Cap	148B5671
	40	1 1/2	Straightway	Socket weld, ANSI (B 16.11)	SOC	Cap	148B5673

Accessories

6T Nipple Kit solution	Code no.
ACCESSORY WELD.NIPPLE DN6 A + UNION NUT	148B4245
ACCESSORY WELD.NIPPLE DN6 D + UNION NUT	148B4184

Technical data and ordering

Ordering from the parts programme (valve body + top part)

Example:

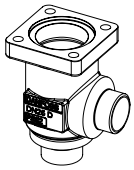

Valve housing, size 25 (1 in),
DIN butt weld, angleway,
148B5452
Table 1

+

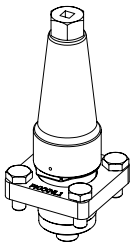

Top part, SVA-S
size 25 (1 in) with cap
148B5476
Table 2

=

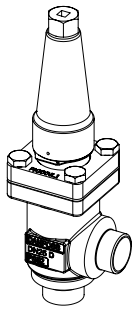



SVA-S 6 - 52 bar / 754 psi

Valve body

Type	Connection size		Execution	Connection type	Connection designation	Code no.
	[in]	[mm]				
SVA-S 6	1/4	6	Angleway	Butt weld, EN 10220	D	148B5002
	1/4	6	Angleway	Butt weld, ANSI (B 36.10)	A	148B5004
	1/4	6	Angleway	Outside pipe thread, (ISO 228 / 1)	T	148B5012
SVA-S 6	1/4	6	Straightway	Butt weld, EN 10220	D	148B5003
	1/4	6	Straightway	Butt weld, ANSI (B 36.10)	A	148B5005

Top part [1])

Type	Equipment	Code no.
SVA-S 6	Cap	148B5013
SVA-S 6	Hand wheel	148B5014

SVA-S 10 - 52 bar / 754 psi

Valve body

Type	Connection size		Execution	Connection type	Connection designation	Code no.
	[in]	[mm]				
SVA-S 10	3/8	10	Angleway	Butt weld, EN 10220	D	148B5122
	3/8	10	Angleway	Butt weld, ANSI (B 36.10)	A	148B5124
	3/8	10	Angleway	Butt weld, GOST	G	148B5134
SVA-S 10	3/8	10	Straightway	Butt weld, EN 10220	D	148B5123
	3/8	10	Straightway	Butt weld, ANSI (B 36.10)	A	148B5125
	3/8	10	Straightway	Butt weld, GOST	G	148B5135

Top part [1])

Type	Equipment	Code no.
SVA-S 10	Cap	148B5013
SVA-S 10	Hand wheel	148B5014

SVA-S / L 15 - 52 bar / 754 psi

Valve body

Type	Connection size		Execution	Connection type	Connection designation	Code no.
	[in]	[mm]				
SVA-S / L 15	1/2	15	Angleway	Butt weld, EN 10220	D	148B5252
	1/2	15	Angleway	Butt weld, ANSI (B 36.10)	A	148B5254
	1/2	15	Angleway	Female pipe thread (ANSI / ASME B 1.20.1)	FPT	148B5258
	1/2	15	Angleway	Socket weld, ANSI (B 16.11)	SOC	148B5256
	1/2	15	Angleway	Butt weld, F	F	148B6414
	1/2	15	Angleway	Butt weld, GOST	G	148B5391
SVA-S / L 15	1/2	15	Straightway	Butt weld, EN 10220	D	148B5253
	1/2	15	Straightway	Butt weld, ANSI (B 36.10)	A	148B5255
	1/2	15	Straightway	Female pipe thread (ANSI / ASME B 1.20.1)	FPT	148B5259
	1/2	15	Straightway	Socket weld, ANSI (B 16.11)	SOC	148B5257
	1/2	15	Straightway	Butt weld, F	F	148B6424
	1/2	15	Straightway	Butt weld, GOST	G	148B5392

Top part [1])

Type	Equipment	Code no.
SVA-S 15	Cap	148B5276
SVA-S 15	Hand wheel	148B5277
SVA-L 15	Cap	148B5278
SVA-L 15	Hand wheel	148B5279

[1]) Including gaskets and bolts

Technical data and ordering

Ordering from the parts programme (valve body + top part)

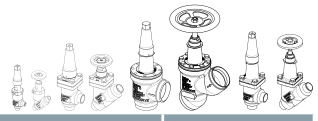

SVA-S / L 20 - 52 bar / 754 psi

Valve body

Type	Connection size		Execution	Connection type	Connection designation	Code no.
	[in]	[mm]				
SVA-S / L 20	3/4	20	Angleway	Butt weld, EN 10220	D	148B5352
	3/4	20	Angleway	Butt weld, ANSI (B 36.10)	A	148B5354
	3/4	20	Angleway	Female pipe thread (ANSI / ASME B 1.20.1)	FPT	148B5358
	3/4	20	Angleway	Socket weld, ANSI (B 16.11)	SOC	148B5356
	3/4	20	Angleway	Butt weld, F	F	148B6415
	3/4	20	Angleway	Butt weld, GOST	G	148B5393
SVA-S / L 20	3/4	20	Straightway	Butt weld, EN 10220	D	148B5353
	3/4	20	Straightway	Butt weld, ANSI (B 36.10)	A	148B5355
	3/4	20	Straightway	Female pipe thread (ANSI / ASME B 1.20.1)	FPT	148B5359
	3/4	20	Straightway	Socket weld, ANSI (B 16.11)	SOC	148B5357
	3/4	20	Straightway	Butt weld, F	F	148B6425
	3/4	20	Straightway	Butt weld, GOST	G	148B5394

Top part [1])

Type	Equipment	Code no.
SVA-S 20	Cap	148B5276
SVA-S 20	Hand wheel	148B5277
SVA-L 20	Cap	148B5278
SVA-L 20	Hand wheel	148B5279

SVA-S / L 25 - 52 bar / 754 psi

Valve body

Type	Connection size		Execution	Connection type	Connection designation	Code no.
	[in]	[mm]				
SVA-S / L 25	1	25	Angleway	Butt weld, EN 10220	D	148B5452
	1	25	Angleway	Butt weld, ANSI (B 36.10)	A	148B5454
	1	25	Angleway	Female pipe thread (ANSI / ASME B 1.20.1)	FPT	148B5458
	1	25	Angleway	Socket weld, ANSI (B 16.11)	SOC	148B5456
	1	25	Angleway	Butt weld, F	F	148B6416
	1	25	Angleway	Butt weld, GOST	G	148B5498
SVA-S / L 25	1	25	Angleway	Butt weld, EN 10220	D	148B5453
	1	25	Straightway	Butt weld, ANSI (B 36.10)	A	148B5455
	1	25	Straightway	Female pipe thread (ANSI / ASME B 1.20.1)	FPT	148B5459
	1	25	Straightway	Socket weld, ANSI (B 16.11)	SOC	148B5457
	1	25	Straightway	Butt weld, F	F	148B6426
	1	25	Straightway	Butt weld, GOST	G	148B5499

Top part [1])

Type	Equipment	Code no.
SVA-S 25	Cap	148B5476
SVA-S 25	Hand wheel	148B5477
SVA-L 25	Cap	148B5478
SVA-L 25	Hand wheel	148B5479

SVA-S / L 32 - 52 bar / 754 psi

Valve body

Type	Connection size		Execution	Connection type	Connection designation	Code no.
	[in]	[mm]				
SVA-S / L 32	1 1/4	32	Angleway	Butt weld, EN 10220	D	148B5576
	1 1/4	32	Angleway	Butt weld, ANSI (B 36.10)	A	148B5578
	1 1/4	32	Angleway	Female pipe thread (ANSI / ASME B 1.20.1)	FPT	148B5582
	1 1/4	32	Angleway	Socket weld, ANSI (B 16.11)	SOC	148B5580
	1 1/4	32	Angleway	Butt weld, F	F	148B6417
	1 1/4	32	Angleway	Butt weld, GOST	G	148B5593
SVA-S / L 32	1 1/4	32	Straightway	Butt weld, EN 10220	D	148B5577
	1 1/4	32	Straightway	Butt weld, ANSI (B 36.10)	A	148B5579
	1 1/4	32	Straightway	Female pipe thread (ANSI / ASME B 1.20.1)	FPT	148B5583
	1 1/4	32	Straightway	Socket weld, ANSI (B 16.11)	SOC	148B5581
	1 1/4	32	Straightway	Butt weld, F	F	148B6427
	1 1/4	32	Straightway	Butt weld, GOST	G	148B5594

Top part [1])

Type	Equipment	Code no.
SVA-S 32	Cap	148B5476
SVA-S 32	Hand wheel	148B5477
SVA-L 32	Cap	148B5478
SVA-L 32	Hand wheel	148B5479

[1]) *Including gaskets and bolts*

Technical data and ordering

Ordering from the parts programme (valve body + top part)



SVA-S / L 40 - 52 bar / 754 psi

Valve body

Type	Connection size		Execution	Connection type	Connection designation	Code no.
	[in]	[mm]				
SVA-S / L 40	1 ½	40	Angleway	Butt weld, EN 10220	D	148B5652
	1 ½	40	Angleway	Butt weld, ANSI (B 36.10)	A	148B5654
	1 ½	40	Angleway	Socket weld, ANSI (B 16.11)	SOC	148B5656
	1 ½	40	Angleway	Butt weld, F	F	148B6418
	1 ½	40	Angleway	Butt weld, GOST	G	148B5681
SVA-S / L 40	1 ½	40	Straightway	Butt weld, EN 10220	D	148B5653
	1 ½	40	Straightway	Butt weld, ANSI (B 36.10)	A	148B5655
	1 ½	40	Straightway	Socket weld, ANSI (B 16.11)	SOC	148B5657
	1 ½	40	Straightway	Butt weld, F	F	148B6428
	1 ½	40	Straightway	Butt weld, GOST	G	148B5682

Top part [1])

Type	Equipment	Code no.
SVA-S 40	Cap	148B5476
SVA-S 40	Hand wheel	148B5477
SVA-L 40	Cap	148B5478
SVA-L 40	Hand wheel	148B5479

SVA-S 50 - 52 bar / 754 psi

Valve body

Type	Connection size		Execution	Connection type	Connection designation	Code no.
	[in]	[mm]				
SVA-S 50	2	50	Angleway	Butt weld, EN 10220	D	148B5741
	2	50	Angleway	Butt weld, ANSI (B 36.10)	A	148B5743
	2	50	Angleway	Socket weld, ANSI (B 16.11)	SOC	148B5745
	2	50	Angleway	Butt weld, F	F	148B6419
	2	50	Angleway	Butt weld, GOST	G	148B5759
SVA-S 50	2	50	Straightway	Butt weld, EN 10220	D	148B5742
	2	50	Straightway	Butt weld, ANSI (B 36.10)	A	148B5744
	2	50	Straightway	Socket weld, ANSI (B 16.11)	SOC	148B5746
	2	50	Straightway	Butt weld, F	F	148B6429
	2	50	Straightway	Butt weld, GOST	G	148B5760

Top part [1])

Type	Equipment	Code no.
SVA-S 50	Cap	148B5728
SVA-S 50	Hand wheel	148B5729

SVA-S 65 - 52 bar / 754 psi

Valve body

Type	Connection size		Execution	Connection type	Connection designation	Code no.
	[in]	[mm]				
SVA-S 65	2 ½	65	Angleway	Butt weld, EN 10220	D	148B5816
	2 ½	65	Angleway	Butt weld, ANSI (B 36.10)	A	148B5818
	2 ½	65	Angleway	Butt weld, F	F	148B6420
	2 ½	65	Angleway	Butt weld, GOST	G	148B5816
SVA-S 65	2 ½	65	Straightway	Butt weld, EN 10220	D	148B5817
	2 ½	65	Straightway	Butt weld, ANSI (B 36.10)	A	148B5819
	2 ½	65	Straightway	Butt weld, F	F	148B6430
	2 ½	65	Straightway	Butt weld, GOST	G	148B5817

Top part [1])

Type	Equipment	Code no.
SVA-S 65	Cap	148B5822
SVA-S 65	Hand wheel	148B5823

[1]) Including gaskets and bolts

Technical data and ordering

Ordering from the parts programme (valve body + top part)



SVA-S 80 - 52 bar / 754 psi

Valve body

Type	Connection size		Execution	Connection type	Connection designation	Code no.
	[in]	[mm]				
SVA-S 80	3	80	Angleway	Butt weld, EN 10220	D	148B5912
	3	80	Angleway	Butt weld, ANSI (B 36.10)	A	148B5914
	3	80	Angleway	Butt weld, F	F	148B6421
	3	80	Angleway	Butt weld, GOST	G	148B5912
SVA-S 80	3	80	Straightway	Butt weld, EN 10220	D	148B5913
	3	80	Straightway	Butt weld, ANSI (B 36.10)	A	148B5915
	3	80	Straightway	Butt weld, F	F	148B6431
	3	80	Straightway	Butt weld, GOST	G	148B5913

Top part [1])

Type	Equipment	Code no.
SVA-S 80	Cap	148B5916
SVA-S 80	Hand wheel	148B5917

SVA-S 100 - 52 bar / 754 psi

Valve body

Type	Connection size		Execution	Connection type	Connection designation	Code no.
	[in]	[mm]				
SVA-S 100	4	100	Angleway	Butt weld, EN 10220	D	148B6014
	4	100	Angleway	Butt weld, ANSI (B 36.10)	A	148B6016
	4	100	Angleway	Butt weld, F	F	148B6422
	4	100	Angleway	Butt weld, GOST	G	148B6033
SVA-S 100	4	100	Straightway	Butt weld, EN 10220	D	148B6015
	4	100	Straightway	Butt weld, ANSI (B 36.10)	A	148B6017
	4	100	Straightway	Butt weld, F	F	148B6432
	4	100	Straightway	Butt weld, GOST	G	148B6034

Top part [1])

Type	Equipment	Code no.
SVA-S 100	Cap	148B6012
SVA-S 100	Hand wheel	148B6018

SVA-S 125 - 52 bar / 754 psi

Valve body

Type	Connection size		Execution	Connection type	Connection designation	Code no.
	[in]	[mm]				
SVA-S 125	5	125	Angleway	Butt weld, EN 10220	D	148B6112
	5	125	Angleway	Butt weld, ANSI (B 36.10)	A	148B6114
	5	125	Angleway	Butt weld, F	F	148B6423
	5	125	Angleway	Butt weld, GOST	G	148B6133
SVA-S 125	5	125	Straightway	Butt weld, EN 10220	D	148B6113
	5	125	Straightway	Butt weld, ANSI (B 36.10)	A	148B6115
	5	125	Straightway	Butt weld, F	F	148B6433
	5	125	Straightway	Butt weld, GOST	G	148B6134

Top part [1])

Type	Equipment	Code no.
SVA-S 125	Cap	148B6116
SVA-S 125	Hand wheel	148B6117

[1]) *Including gaskets and bolts*

SVA-S / SVA-L, Shut-off valves - 65 bar / 943 psi

SVA-S / L shut-off valves are available in angleway and straightway versions and with Standard neck (SVA-S) and Long neck (SVA-L). Each valve housing is available with several different connection types and sizes, and it is possible to convert SVA-S or SVA-L to any other product in the SVL family by replacing the complete top part.

The shut-off valves are designed to meet all industrial refrigeration application requirements, to provide favourable flow characteristics, and are easy to dismantle and repair when necessary.
The valve cone is designed to ensure perfect closing and withstand a high system pulsation and vibration, which can be present specifically in the discharge line.



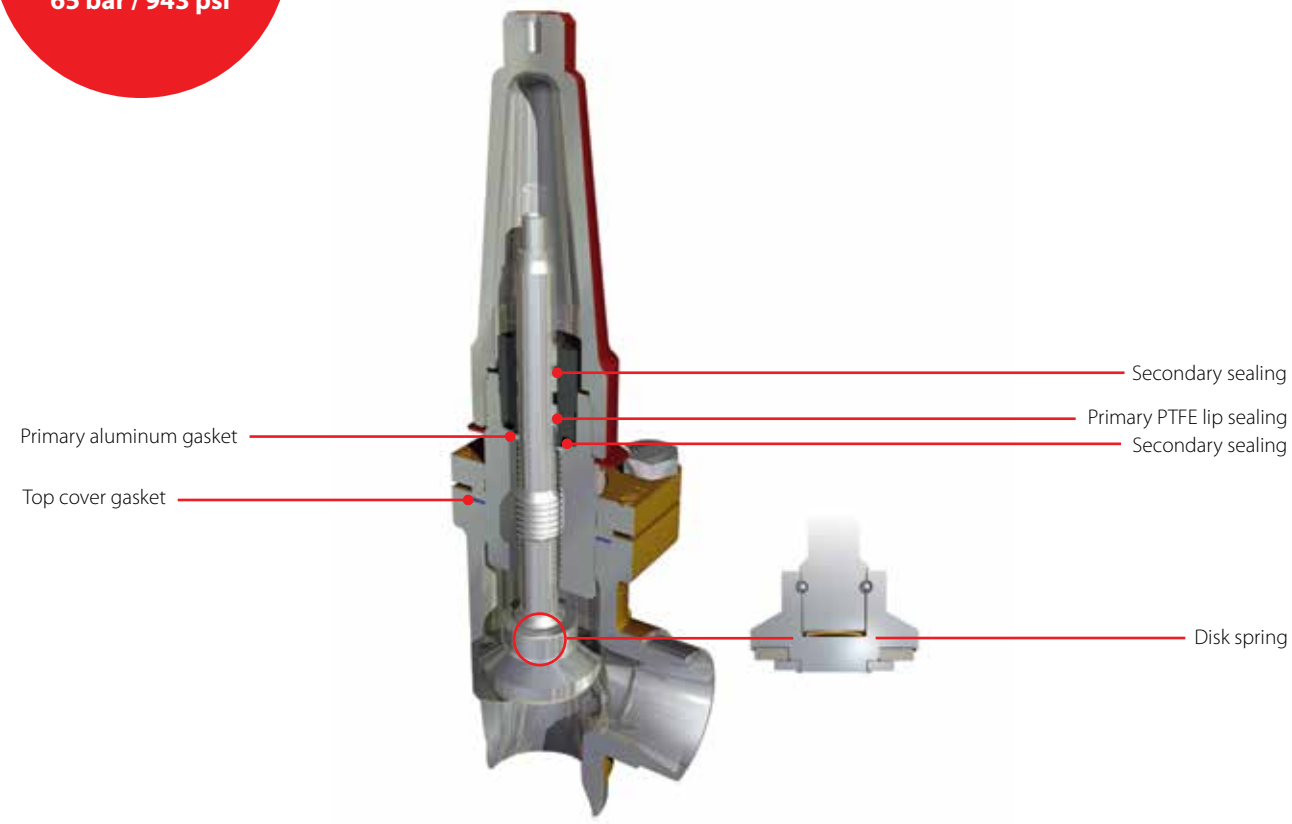

Facts

- Applicable to R717, R744, R113, R114, R1233zd(E), R1234yf, R1234ze(E), R125, R1270, R1336mzz(Z), R134a, R152a, R170, R22, R227ea, R23, R236fa, R290, R32, R401A, R402A, R402B, R404A, R407A, R407B, R407C, R407F, R407H, R408A, R409A, R410A, R417A, R421A, R422A, R422B, R422D, R427A, R438A, R444B, R447A, R448A, R449A, R449B, R450A, R452A, R454B, R455A, R502, R503, R507, R513A, R600, R600a and RE170
  For a fully updated list of approved refrigerants, visit www.products.danfoss.com and search for individual code numbers, where refrigerants are listed as part of product specifications.
- Available in angleway and straightway versions with Standard neck, or Long neck (DN 15 to DN 40) for insulated systems
- Each valve type is clearly marked with type, size and performance range
- The valves and caps are prepared for sealing, to prevent operation by un-authorized persons, using a seal wire
- Internal metal backseating:
  - DN 6 – 65 (1/4 – 2 1/2 in)
- Internal PTFE backseating:
  - DN 80 – 200 (3 – 8 in)
- Can accept flow in both directions
- Housing and bonnet material is low temperature steel according to requirements of the Pressure Equipment Directive and other international classification authorities
- Equipped with 42CrMo5 bolts to withstand hig pressure
- Optional accessories:
  - Heavy duty industrial hand wheel for frequent operation
  - Cap for infrequent operation
- Max. working pressure:
  65 bar g / 943 psig
- Temperature range:
  -60 – 150 °C / -76 – 302 °F
- Classification: DNV, CRN, BV etc

Technical data and ordering

SVA-S / SVA-L, Shut-off valve

Technical data

Type	Description
Pressure range	The valves are designed for max. working pressure 65 bar g / 943 psig
Temperature range	-60 – 150 °C / -76 – 302 °F

Available connection sizes

SVA-S:
The S means Standard bonnet length (sizes from DN50 to DN200 are insulation friendly).

SVA-L:
The L means Long bonnet length (insulation friendly).

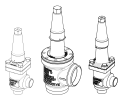

Size	SVA-S	SVA-L
DN 6 (¼)	x	–
DN 10 (⅜)	x	–
DN 15 (½)	x	x
DN 20 (¾)	x	x
DN 25 (1)	x	x
DN 32 (1 ¼)	x	x
DN 40 (1 ½)	x	x
DN 50 (2)	x	–
DN 65 (2 ½)	x	–
DN 80 (3)	x	–
DN 100 (4)	x	–
DN 125 (5)	x	–
DN 150 (6)	x	–
DN 200 (8)	x	–

Valve type	Connection size		Available connections
Nominal size [mm]	[mm]	[in]	A / D
	6	DN 6 (¼)	x
	10	DN 10 (⅜)	x
	15	DN 15 (½)	x
	20	DN 20 (¾)	x
	25	DN 25 (1)	x
	32	DN 32 (1 ¼)	x
	40	DN 40 (1 ½)	x
	50	DN 50 (2)	x
	65	DN 65 (2 ½)	x
	80	DN 80 (3)	x
	100	DN 100 (4)	x
	125	DN 125 (5)	x
	150	DN 150 (6)	x
	200	DN 200 (8)	x
Connections	A	Butt-weld connection: ANSI B 36.10 schedule 80, DN 15 - 40 (½ – 1 ½ in) Butt-weld connection: ANSI B 36.10 schedule 40, DN 50 - 200 (2 – 8 in)	
	D	Butt-weld connection: DIN EN 10220	
Valve housing	ANG STR	Angle flow Straight flow	
Equipment	CAP	Cap	

Important!
Where products need to be certified according to specific certification societies or where higher pressures are required, the relevant information should be included at the time of order.

Technical data and ordering

Ordering from the parts programme (valve body + top part)

Example:

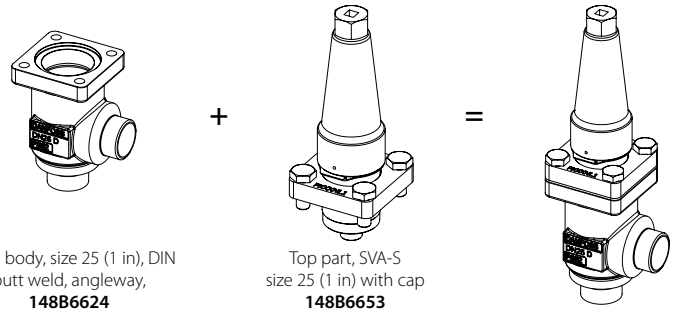

Valve body, size 25 (1 in), DIN butt weld, angleway, **148B6624**

Top part, SVA-S size 25 (1 in) with cap **148B6653**



SVA-S 6 - 65 bar / 943 psi

Valve body

Type	Connection size [in]	Connection size [mm]	Execution	Connection type	Connection designation	Code no.
SVA-S 6	1/4	6	Angleway	Butt weld, EN 10220	D	148B6689
	1/4	6	Angleway	Butt weld, ANSI (B 36.10)	A	148B6687
SVA-S 6	1/4	6	Straightway	Butt weld, EN 10220	D	148B6693
	1/4	6	Straightway	Butt weld, ANSI (B 36.10)	A	148B6691

Top part [1])

Type	Equipment	Code no.
SVA-S 6	Cap	148B6695

SVA-S 10 - 65 bar / 943 psi

Valve body

Type	Connection size [in]	Connection size [mm]	Execution	Connection type	Connection designation	Code no.
SVA-S 10	3/8	10	Angleway	Butt weld, EN 10220	D	148B6690
	3/8	10	Angleway	Butt weld, ANSI (B 36.10)	A	148B6688
SVA-S 10	3/8	10	Straightway	Butt weld, EN 10220	D	148B6694
	3/8	10	Straightway	Butt weld, ANSI (B 36.10)	A	148B6692

Top part [1])

Type	Equipment	Code no.
SVA-S 10	Cap	148B6695

SVA-S / L 15 - 65 bar / 943 psi

Valve body

Type	Connection size [in]	Connection size [mm]	Execution	Connection type	Connection designation	Code no.
SVA-S / L 15	1/2	15	Angleway	Butt weld, EN 10220	D	148B6622
	1/2	15	Angleway	Butt weld, ANSI (B 36.10)	A	148B6612
SVA-S / L 15	1/2	15	Straightway	Butt weld, EN 10220	D	148B6642
	1/2	15	Straightway	Butt weld, ANSI (B 36.10)	A	148B6632

Top part [1])

Type	Equipment	Code no.
SVA-S 15	Cap	148B6652
SVA-L 15	Cap	148B6659

SVA-S / L 20 - 65 bar / 943 psi

Valve body

Type	Connection size [in]	Connection size [mm]	Execution	Connection type	Connection designation	Code no.
SVA-S / L 20	3/4	20	Angleway	Butt weld, EN 10220	D	148B6623
	3/4	20	Angleway	Butt weld, ANSI (B 36.10)	A	148B6613
SVA-S / L 20	3/4	20	Straightway	Butt weld, EN 10220	D	148B6643
	3/4	20	Straightway	Butt weld, ANSI (B 36.10)	A	148B6633

Top part [1])

Type	Equipment	Code no.
SVA-S 20	Cap	148B6652
SVA-L 20	Cap	148B6659

Technical data and ordering

Ordering from the parts programme (valve body + top part)



SVA-S / L 25 - 65 bar / 943 psi

Valve body

Type	Connection size		Execution	Connection type	Connection designation	Code no.
	[in]	[mm]				
SVA-S / L 25	1	25	Angleway	Butt weld, EN 10220	D	148B6624
	1	25	Angleway	Butt weld, ANSI (B 36.10)	A	148B6614
SVA-S / L 25	1	25	Angleway	Butt weld, EN 10220	D	148B6644
	1	25	Straightway	Butt weld, ANSI (B 36.10)	A	148B6634

Top part [1])

Type	Equipment	Code no.
SVA-S 25	Cap	148B6653
SVA-L 25	Cap	148B6660

[1]) *Including gaskets and bolts*

SVA-S / L 32 - 65 bar / 943 psi

Valve body

Type	Connection size		Execution	Connection type	Connection designation	Code no.
	[in]	[mm]				
SVA-S / L 32	1 1/4	32	Angleway	Butt weld, EN 10220	D	148B6625
	1 1/4	32	Angleway	Butt weld, ANSI (B 36.10)	A	148B6615
SVA-S / L 32	1 1/4	32	Straightway	Butt weld, EN 10220	D	148B6645
	1 1/4	32	Straightway	Butt weld, ANSI (B 36.10)	A	148B6635

Top part [1])

Type	Equipment	Code no.
SVA-S 32	Cap	148B6653
SVA-L 32	Cap	148B6660

SVA-S / L 40 - 65 bar / 943 psi

Valve body

Type	Connection size		Execution	Connection type	Connection designation	Code no.
	[in]	[mm]				
SVA-S / L 40	1 1/2	40	Angleway	Butt weld, EN 10220	D	148B6626
	1 1/2	40	Angleway	Butt weld, ANSI (B 36.10)	A	148B6616
SVA-S / L 40	1 1/2	40	Straightway	Butt weld, EN 10220	D	148B6646
	1 1/2	40	Straightway	Butt weld, ANSI (B 36.10)	A	148B6636

Top part [1])

Type	Equipment	Code no.
SVA-S 40	Cap	148B6653
SVA-L 40	Cap	148B6660

SVA-S 50 - 65 bar / 943 psi

Valve body

Type	Connection size		Execution	Connection type	Connection designation	Code no.
	[in]	[mm]				
SVA-S 50	2	50	Angleway	Butt weld, EN 10220	D	148B6627
	2	50	Angleway	Butt weld, ANSI (B 36.10)	A	148B6617
SVA-S 50	2	50	Straightway	Butt weld, EN 10220	D	148B6647
	2	50	Straightway	Butt weld, ANSI (B 36.10)	A	148B6637

Top part [1])

Type	Equipment	Code no.
SVA-S 50	Cap	148B6654

Technical data and ordering

Ordering from the parts programme (valve body + top part)

SVA-S 65 - 65 bar / 943 psi



Valve body

Type	Connection size		Execution	Connection type	Connection designation	Code no.
	[in]	[mm]				
SVA-S 65	2 ½	65	Angleway	Butt weld, EN 10220	D	148B6628
	2 ½	65	Angleway	Butt weld, ANSI (B 36.10)	A	148B6618
SVA-S 65	2 ½	65	Straightway	Butt weld, EN 10220	D	148B6648
	2 ½	65	Straightway	Butt weld, ANSI (B 36.10)	A	148B6638

Top part [1])

Type	Equipment	Code no.
SVA-S 65	Cap	148B6655

[1]) *Including gaskets and bolts*

SVA-S 80 - 65 bar / 943 psi

Valve body

Type	Connection size		Execution	Connection type	Connection designation	Code no.
	[in]	[mm]				
SVA-S 80	3	80	Angleway	Butt weld, EN 10220	D	148B6629
	3	80	Angleway	Butt weld, ANSI (B 36.10)	A	148B6619
SVA-S 80	3	80	Straightway	Butt weld, EN 10220	D	148B6649
	3	80	Straightway	Butt weld, ANSI (B 36.10)	A	148B6639

Top part [1])

Type	Equipment	Code no.
SVA-S 80	Cap	148B6656

SVA-S 100 - 65 bar / 943 psi

Valve body

Type	Connection size		Execution	Connection type	Connection designation	Code no.
	[in]	[mm]				
SVA-S 100	4	100	Angleway	Butt weld, EN 10220	D	148B6630
	4	100	Angleway	Butt weld, ANSI (B 36.10)	A	148B6620
SVA-S 100	4	100	Straightway	Butt weld, EN 10220	D	148B6650
	4	100	Straightway	Butt weld, ANSI (B 36.10)	A	148B6640

Top part [1])

Type	Equipment	Code no.
SVA-S 100	Cap	148B6657

SVA-S 125 - 65 bar / 943 psi

Valve body

Type	Connection size		Execution	Connection type	Connection designation	Code no.
	[in]	[mm]				
SVA-S 125	5	125	Angleway	Butt weld, EN 10220	D	148B6631
	5	125	Angleway	Butt weld, ANSI (B 36.10)	A	148B6621
SVA-S 125	5	125	Straightway	Butt weld, EN 10220	D	148B6651
	5	125	Straightway	Butt weld, ANSI (B 36.10)	A	148B6641

Top part [1])

Type	Equipment	Code no.
SVA-S 125	Cap	148B6658

[1]) *Including gaskets and bolts*

Technical data and ordering

Ordering from the parts programme (valve body + top part)

SVA-S 150 and 200 - 65 bar / 943 psi

Ordering complete factory assembled valves

Type	Connection size		Execution	Connection type	Connection designation	Equipment	Code no.
	[in]	[mm]					
SVA-S 150	6	150	Angleway	Butt weld, EN 10220	D	Cap	148B6665
	6	150	Angleway	Butt weld, ANSI (B 36.10)	A	Cap	148B6667
SVA-S 150	6	150	Straightway	Butt weld, EN 10220	D	Cap	148B6666
	6	150	Straightway	Butt weld, ANSI (B 36.10)	A	Cap	148B6668
SVA-S 200	8	200	Angleway	Butt weld, EN 10220	D	Cap	148B6673
	8	200	Angleway	Butt weld, ANSI (B 36.10)	A	Cap	148B6675
SVA-S 200	8	200	Straightway	Butt weld, EN 10220	D	Cap	148B6674
	8	200	Straightway	Butt weld, ANSI (B 36.10)	A	Cap	148B6676

SVA-S SS / SVA-L SS, Shut-off valves

SVA-S SS and SVA-L SS are angleway and straightway stainless steel shut-off valves, which are designed to meet all industrial refrigeration application requirements.

The valves are designed to give favourable flow characteristics and are easy to dismantle and repair when necessary. The valve cone is designed to ensure perfect closing.



Features
SVA-S SS / SVA-L SS

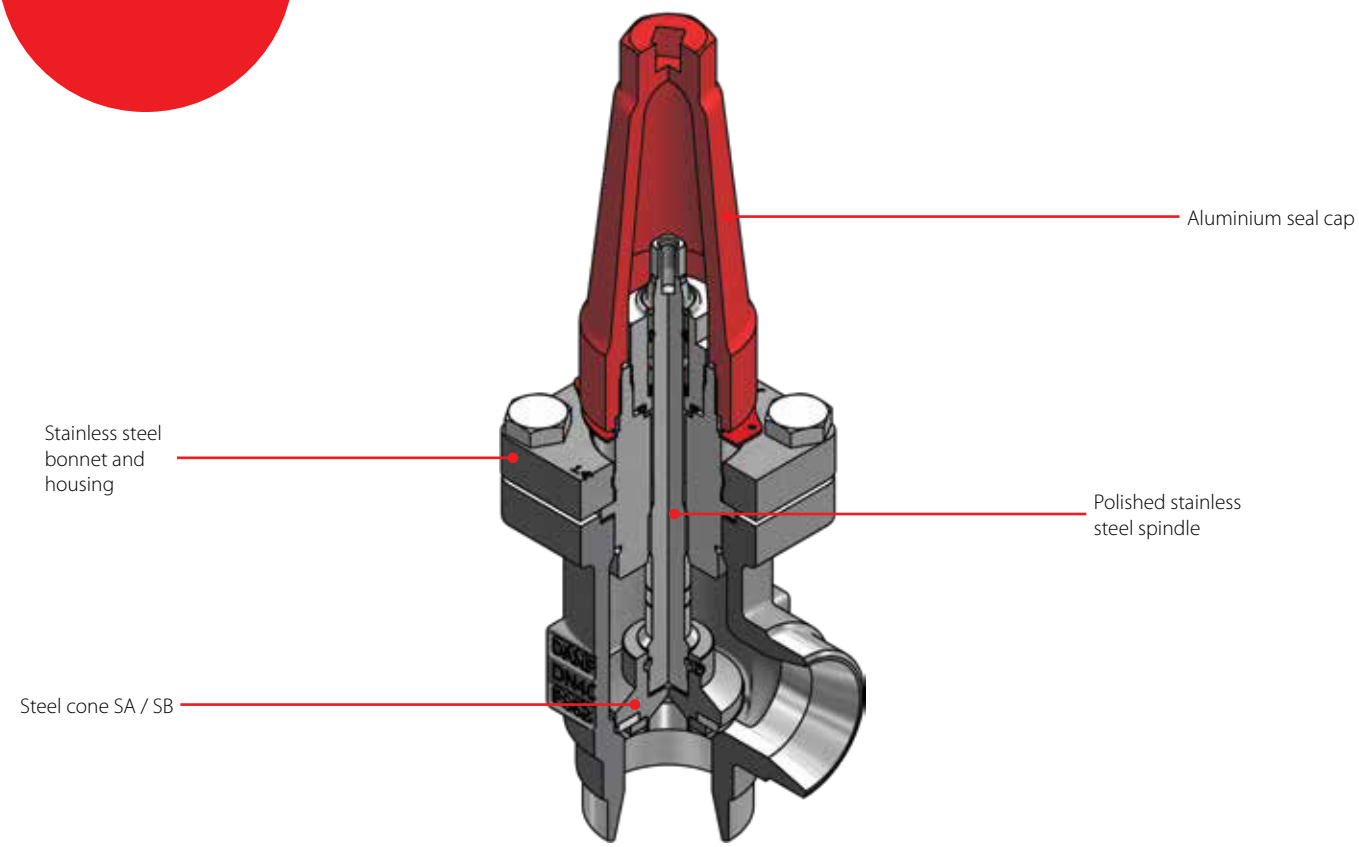

Facts

- Applicable to R717, R744, R113, R114, R1233zd(E), R1234yf, R1234ze(E), R125, R1270, R1336mzz(Z), R134a, R152a, R170, R22, R227ea, R23, R236fa, R290, R32, R401A, R402A, R402B, R404A, R407A, R407B, R407C, R407F, R407H, R408A, R409A, R410A, R417A, R421A, R422A, R422B, R422D, R427A, R438A, R444B, R447A, R448A, R449A, R449B, R450A, R452A, R454B, R455A, R502, R503, R507, R513A, R600, R600a and RE170
  For a fully updated list of approved refrigerants, visit www.products.danfoss.com and search for individual code numbers, where refrigerants are listed as part of product specifications.
- Available in angleway and straightway versions
- Each valve type is clearly marked with type, size and performance range
- Internal backseating enables replacement of the spindle seal whilst the valve is active, i.e. under pressure
- Can accept flow in both directions
- Housing and bonnet material is stainless steel
- Equipped with stainless steel bolts
- Optional accessories:
  - Heavy duty industrial hand wheel for frequent operation
  - Cap for infrequent operation
- Max. working pressure
  DN 15 – 65: 52 bar g / 754 psig
  DN 80 – 125: 50 bar / 725 psig
- Temperature range:
  -60 – 150 °C / -76 – 302 °F

Technical data and ordering

SVA-S SS and SVA-L SS, Shut-off valves

Technical data

Type	Description
Pressure range	DN 15 – 65: Max. working pressure PS / MWP 52 bar g / 754 psig DN 80 – 125: Max. working pressure PS / MWP 50 bar / 725 psig
Temperature range	-60 – 150 °C / –76 – 302 °F

SVA-S SS, Shut-off valves



Ordering angleway valves

Type	Connection size		Execution	Connection type	Connection designation	Equipment	Code no.
	[mm]	[in]					
SVA-S SS 15	15	1/2	Angleway	Butt weld, EN 10220	D	Hand wheel	148B5289
	15	1/2	Angleway	Butt weld, EN 10220	D	Cap	148B5290
	15	1/2	Angleway	Butt weld ANSI, B 36.19M	A	Cap	148B5396
SVA-S SS 20	20	3/4	Angleway	Butt weld, EN 10220	D	Hand wheel	148B5377
	20	3/4	Angleway	Butt weld, EN 10220	D	Cap	148B5378
	20	3/4	Angleway	Butt weld ANSI, B 36.19M	A	Cap	148B5395
SVA-S SS 25	25	1	Angleway	Butt weld, EN 10220	D	Hand wheel	148B5486
	25	1	Angleway	Butt weld, EN 10220	D	Cap	148B5487
	25	1	Angleway	Butt weld ANSI, B 36.19M	A	Cap	148B6477
SVA-S SS 32	32	1 1/4	Angleway	Butt weld, EN 10220	D	Hand wheel	148B5566
	32	1 1/4	Angleway	Butt weld, EN 10220	D	Cap	148B5567
	32	1 1/4	Angleway	Butt weld ANSI, B 36.19M	A	Cap	148B5595
SVA-S SS 40	40	1 1/2	Angleway	Butt weld, EN 10220	D	Hand wheel	148B5646
	40	1 1/2	Angleway	Butt weld, EN 10220	D	Cap	148B5647
	40	1 1/2	Angleway	Butt weld ANSI, B 36.19M	A	Cap	148B5683
SVA-S SS 50	50	2	Angleway	Butt weld, EN 10220	D	Hand wheel	148B5753
	50	2	Angleway	Butt weld, EN 10220	D	Cap	148B5754
	50	2	Angleway	Butt weld ANSI, B 36.19M	A	Cap	148B5754
SVA-S SS 65	65	2 1/2	Angleway	Butt weld, EN 10220	D	Hand wheel	148B5847
	65	2 1/2	Angleway	Butt weld, EN 10220	D	Cap	148B5848
	65	2 1/2	Angleway	Butt weld ANSI, B 36.19M	A	Cap	148B6448
SVA-S SS 80	80	3	Angleway	Butt weld, EN 10220	D	Cap	148B5928
	80	3	Angleway	Butt weld ANSI, B 36.19M	A	Cap	148B5928
SVA-S SS 100	100	4	Angleway	Butt weld, EN 10220	D	Cap	148B6032
	100	4	Angleway	Butt weld ANSI, B 36.19M	A	Cap	148B6035
SVA-S SS 125	125	5	Angleway	Butt weld, EN 10220	D	Cap	148B6126

SVA-S SS, Shut-off valves



Ordering straightway valves

Type	Connection size		Execution	Connection type	Connection designation	Equipment	Code no.
	[mm]	[in]					
SVA-S SS 15	15	1/2	Straightway	Butt weld, EN 10220	D	Hand wheel	148B5291
	15	1/2	Straightway	Butt weld, EN 10220	D	Cap	148B5292
	15	1/2	Straightway	Butt weld ANSI, B 36.19M	A	Cap	148B5397
SVA-S SS 20	20	3/4	Straightway	Butt weld, EN 10220	D	Hand wheel	148B5379
	20	3/4	Straightway	Butt weld, EN 10220	D	Cap	148B5380
	20	3/4	Straightway	Butt weld ANSI, B 36.19M	A	Cap	148B5398
SVA-S SS 25	25	1	Straightway	Butt weld, EN 10220	D	Hand wheel	148B5488
	25	1	Straightway	Butt weld, EN 10220	D	Cap	148B5489
	25	1	Straightway	Butt weld ANSI, B 36.19M	A	Cap	148B5399
SVA-S SS 32	32	1 1/4	Straightway	Butt weld, EN 10220	D	Hand wheel	148B5568
	32	1 1/4	Straightway	Butt weld, EN 10220	D	Cap	148B5569
	32	1 1/4	Straightway	Butt weld ANSI, B 36.19M	A	Cap	148B5596
SVA-S SS 40	40	1 1/2	Straightway	Butt weld, EN 10220	D	Hand wheel	148B5648
	40	1 1/2	Straightway	Butt weld, EN 10220	D	Cap	148B5649
	40	1 1/2	Straightway	Butt weld ANSI, B 36.19M	A	Cap	148B5684
SVA-S SS 50	50	2	Straightway	Butt weld, EN 10220	D	Hand wheel	148B5755
	50	2	Straightway	Butt weld, EN 10220	D	Cap	148B5756
	50	2	Straightway	Butt weld ANSI, B 36.19M	A	Cap	148B5756
SVA-S SS 65	65	2 1/2	Straightway	Butt weld, EN 10220	D	Hand wheel	148B5849
	65	2 1/2	Straightway	Butt weld, EN 10220	D	Cap	148B5850
	65	2 1/2	Straightway	Butt weld ANSI, B 36.19M	A	Cap	148B6449

Technical data and ordering

SVA-L SS, Shut-off valves

Ordering angleway valves



Type	Connection size		Execution	Connection type	Connection designation	Equipment	Code no.
	[mm]	[in]					
SVA-L SS 15	15	1/2	Angleway	Butt weld, EN 10220	D	Hand wheel	148B6546
	15	1/2	Angleway	Butt weld, EN 10220	D	Cap	148B6547
SVA-L SS 20	20	3/4	Angleway	Butt weld, EN 10220	D	Hand wheel	148B6550
	20	3/4	Angleway	Butt weld, EN 10220	D	Cap	148B6551
SVA-L SS 25	25	1	Angleway	Butt weld, EN 10220	D	Hand wheel	148B6554
	25	1	Angleway	Butt weld, EN 10220	D	Cap	148B6555
SVA-L SS 32	32	1 1/4	Angleway	Butt weld, EN 10220	D	Hand wheel	148B6558
	32	1 1/4	Angleway	Butt weld, EN 10220	D	Cap	148B6559
SVA-L SS 40	40	1 1/2	Angleway	Butt weld, EN 10220	D	Hand wheel	148B6562
	40	1 1/2	Angleway	Butt weld, EN 10220	D	Cap	148B6563

SVA-L SS, Shut-off valves

Ordering straightway valves



Type	Connection size		Execution	Connection type	Connection designation	Equipment	Code no.
	[mm]	[in]					
SVA-L SS 15	15	1/2	Straightway	Butt weld, EN 10220	D	Hand wheel	148B6548
	15	1/2	Straightway	Butt weld, EN 10220	D	Cap	148B6549
SVA-L SS 20	20	3/4	Straightway	Butt weld, EN 10220	D	Hand wheel	148B6552
	20	3/4	Straightway	Butt weld, EN 10220	D	Cap	148B6553
SVA-L SS 25	25	1	Straightway	Butt weld, EN 10220	D	Hand wheel	148B6556
	25	1	Straightway	Butt weld, EN 10220	D	Cap	148B6557
SVA-L SS 32	32	1 1/4	Straightway	Butt weld, EN 10220	D	Hand wheel	148B6560
	32	1 1/4	Straightway	Butt weld, EN 10220	D	Cap	148B6561
SVA-L SS 40	40	1 1/2	Straightway	Butt weld, EN 10220	D	Hand wheel	148B6564
	40	1 1/2	Straightway	Butt weld, EN 10220	D	Cap	148B6565

Quick Selection Notes:

QDV, Shut-off valve

QDV are quick closing shut-off valves for oil drain, designed particularly for draining oil from systems containing refrigerant (ammonia) under pressure.
The valve closes immediately on release of the handle, thus protecting user and environment against unnecessary refrigerant leaks.

QDV is applicable to R717 (Ammonia), and is designed to meet the safety demands specified by national and international authorities within industrial refrigeration.



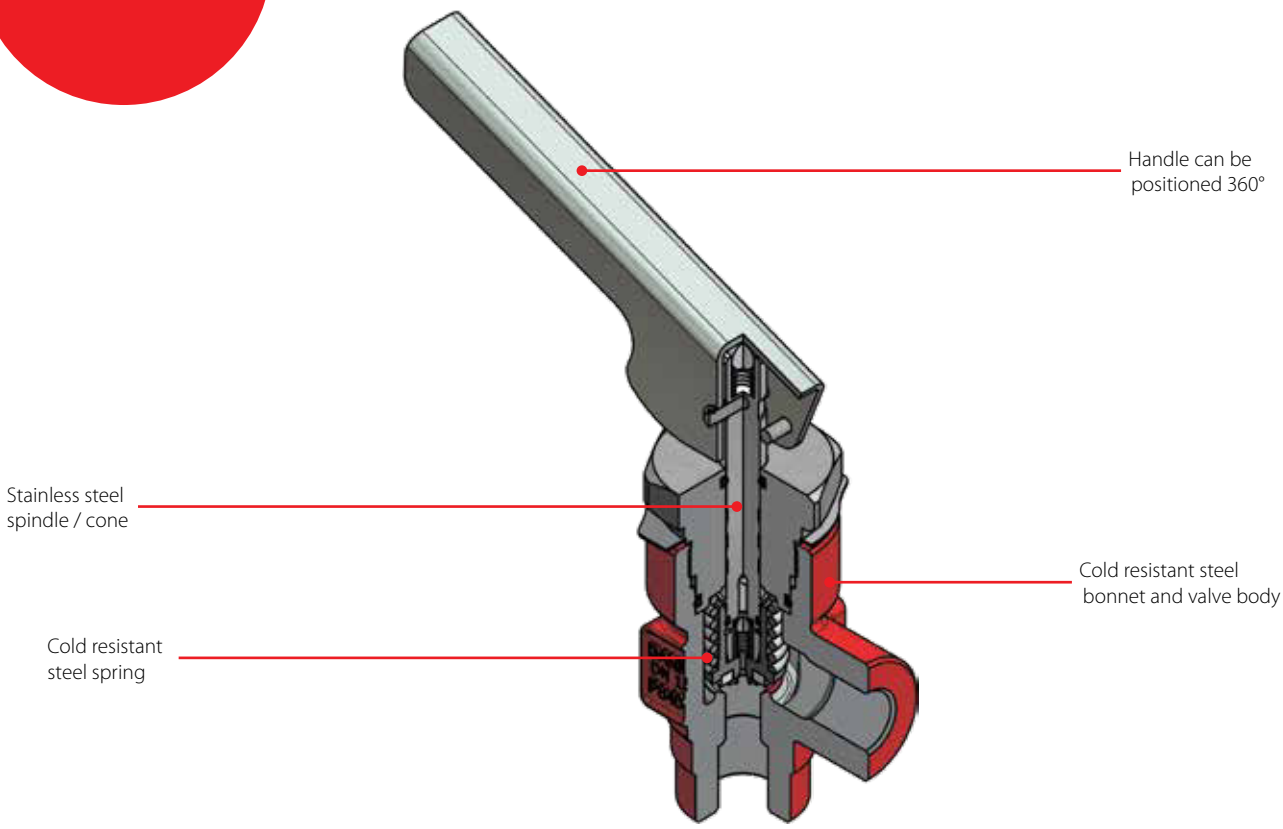

Facts

- QDV is designed for use with R717 (ammonia), but the valve is also applicable to all other common non flammable refrigerants and non corrosive gases / liquids dependent on sealing material compatibility
- QDV is a backpressure dependent valve. If any tube or hose is mounted on the outlet of the QDV it has to be calculated to prevent black pressure building up when relieving.
  For further information please see installation instruction for QDV Flammable hydrocarbons are not recommended.
- Meets the safety demands within industrial refrigeration
- Handle can be positioned 360°
- Built-in integral relief device (opening over 25 bar g to prevent hydraulic pressure building up between stop valve and QDV)
- Can be supplied together with a stop valve for quick on site mounting
- Max. operating pressure: 40 bar g / 580 psig
- Temperature range: -50 – 150 °C / -58 – 302 °F

Technical data and ordering

QDV, Shut-off valve

Technical data

Type	Description
Pressure range	The valve is designed for: Maximum operating pressure of 40 bar g / 580 psig
Temperature range	-50 – 150 °C / -58 – 302 °F

QDV, Shut-off valve

Ordering

Type	Inlet	Outlet	Code no.
QDV 15 DN 15	DN 15	G ¾ in	148H3272
QDV 15 ½ in FPT	½ in FPT	½ in FPT	148H3273
QDV 15 ¾ in FPT	¾ in FPT	¾ in FPT	148H3274
QDV 15 DN 15 + SVA-ST DN 15 H-WHEEL *)	DN 15	G ¾ in	148H3310
QDV 15 ½ in FPT + SVA-ST SOC ½ in H-WHEEL *)	½ in SOC	½ in FPT	148H3311
Fittings for hose connection - G ¾ in	–	–	148H3451
Fittings for welding connection - G ¾ in	–	–	148H3452

**) Two valves are supplied in one box and should be mounted on site. The indicated inlet is for the stop valve - The indicated outlet is for the oil drain valve.*

Important

Where products need to be certified according to specific certification societies or where higher pressures are required, the relevant information should be included at the time of order.

SNV-ST / SNV-SS, Gauge valves

SNV stop gauge are designed as service valves with a very sturdy construction. SNV-ST are made in steel approved for low temperature operations, SVA-SS are stainless steel versions.

SNV valves have internal backseating (metal to metal), enabling the spindle seal to be replaced while the valve is still under pressure.



Features
SNV-ST / SNV-SS

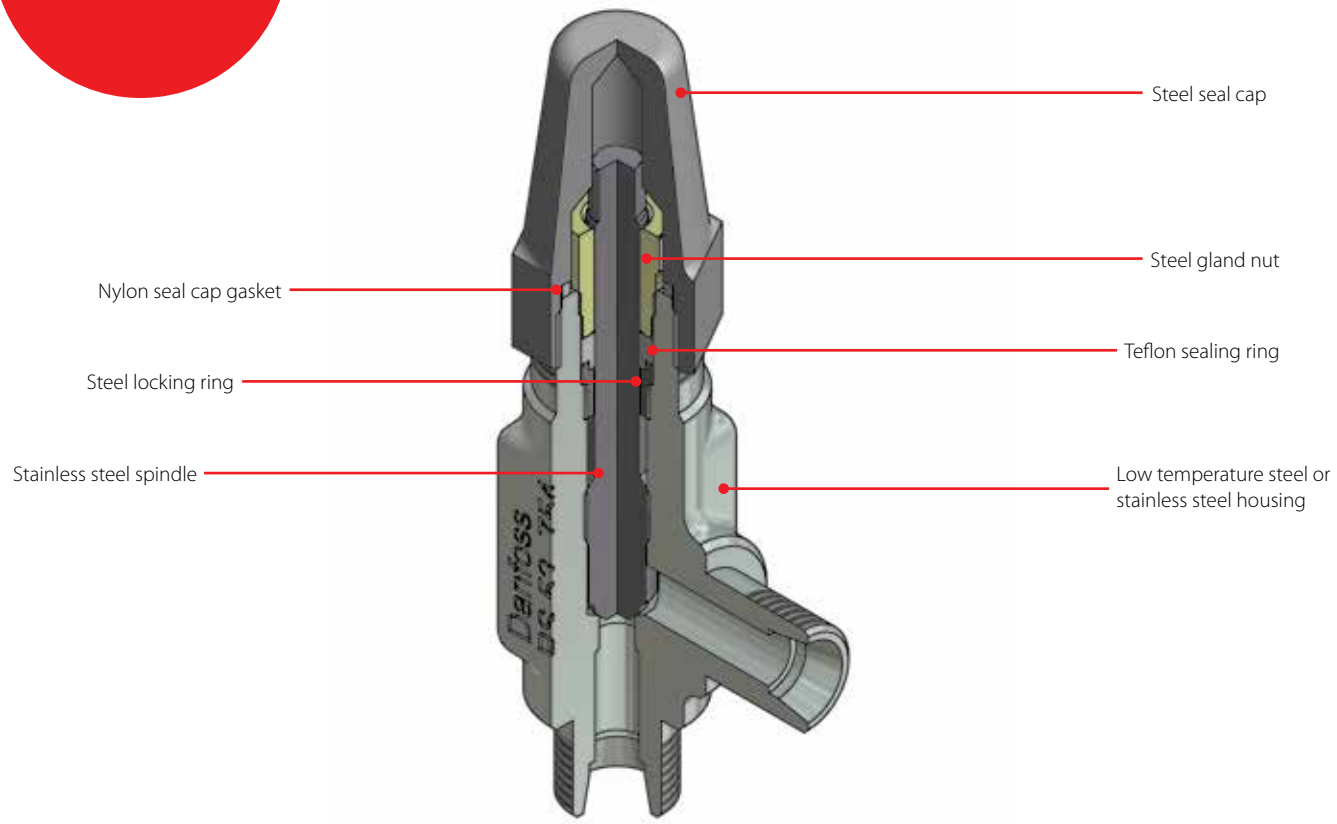

Facts

- Applicable to R717, R744, R113, R114, R1233zd(E), R1234yf, R1234ze(E), R125, R1270, R1336mzz(Z), R134a, R152a, R170, R22, R227ea, R23, R236fa, R290, R32, R401A, R402A, R402B, R404A, R407A, R407B, R407C, R407F, R407H, R408A, R409A, R410A, R417A, R421A, R422A, R422B, R422D, R427A, R438A, R444B, R447A, R448A, R449A, R449B, R450A, R452A, R454B, R455A, R502, R503, R507, R513A, R600, R600a and RE170
  For a fully updated list of approved refrigerants, visit www.products.danfoss.com and search for individual code numbers, where refrigerants are listed as part of product specifications.
- Suitable for "heavy duty" industrial applications having a very sturdy and safe design including high pressures and wide temperature range
- The SNV-ST and SNV-SS valves have backseating (metal to metal)
- Compact and light valve for easy handling and installation
- No special flow direction required
- Provide high flow characteristics
- Each valve type is clearly marked with type and size
- Housing and bonnet material is low temperature steel (stainless steel for SNV-SS) according to requirements of the Pressure Equipment Directive and other international classification authorities
- Valve safety is enhanced with the spindle being secured such that it cannot be unscrewed
- Max. operating pressure:
  52 bar g / 754 psig
  Valves for higher operating pressure available on request
- Temperature range:
  -60 – 150 °C / -76 – 302 °F

Technical data and ordering

SNV-ST / SNV-SS, Gauge valve

Technical data

Type	Description
Pressure range	Maximum operating pressure of 52 bar g / 754 psig. Valves for higher operating pressure available on request.
Temperature range	-60 – 150 °C / -76 – 302 °F

How to order

Please note that the type codes only serve to identify the valves, some of which may not form part of the standard product range. For further information please contact your local Danfoss Sales Company.

Important!

Where products need to be certified according to specific certification societies or where higher pressures are required, the relevant information should be included at the time of order.

SNV-ST, See figure 1

Ordering

Type	Side branch connection Ⓐ	Bottom branch connection Ⓑ	Quantity [pcs.]	Code no.
SNV-ST CD10-CD10	CD 10	CD 10	1	148B3740
SNV-ST CD10-CD10	CD 10	CD 10	30	148B4177
SNV-ST CD10-1/4MPT	CD 10	1/4 MPT	1	148B3741
SNV-ST CD6-1/4MPT	CD 6	1/4 MPT	1	148B3742
SNV-ST CD10-3/8MPT	CD 10	3/8 MPT	1	148B3743
SNV-ST CD6-3/8MPT	CD 6	3/8 MPT	1	148B3744
SNV-ST G1/2-G1/2	G ½ (external)	G ½ (external)	1	148B3745
SNV-ST G1/2-G1/2	G ½ (external)	G ½ (external)	30	148B4179
SNV-ST 1/4FPT-1/4MPT	1/4 FPT	1/4 MPT	1	148B3746
SNV-ST 1/4FPT-1/4MPT	1/4 FPT	1/4 MPT	30	148B4180
SNV-SS 1/4FPT-1/4MPT	1/4 FPT	1/4 MPT	1	148B4771
SNV-ST 1/4FPT-1/4MPT **)	1/4 FPT	1/4 MPT	1	148B4772
SNV-ST 1/4FPT-1/4FPT	1/4 FPT	1/4 FPT	1	148B4568
SNV-ST 1/4FPT-1/4FPT	1/4 FPT	1/4 FPT	30	148B4223
SNV-ST 3/8FPT-3/8MPT	3/8 FPT	3/8 MPT	1	148B3747
SNV-ST 3/8FPT-3/8MPT	3/8 FPT	3/8 MPT	30	148B4181
SNV-SS 3/8FPT-3/8MPT	3/8 FPT	3/8 MPT	1	148B3750
SNV-ST 3/8FPT-1/2MPT	3/8 FPT	½ MPT	1	148B4565
SNV-ST 3/8FPT-1/2MPT	3/8 FPT	½ MPT	30	148B4233
SNV-ST 3/8FPT-3/8FPT	3/8 FPT	3/8 FPT	1	148B4572
SNV-ST 3/8FPT-3/8FPT	3/8 FPT	3/8 FPT	30	148B4225
SNV-ST 1/2MPT-1/2MPT	½ MPT	½ MPT	1	148B4564
SNV-ST 1/2MPT-1/2MPT	½ MPT	½ MPT	30	148B4224
SNV-ST 1/2MPT-3/8FPT	½ MPT	3/8 FPT	30	148B4226
SNV-ST CD6-1/4MPT *)	CD 6	1/4 MPT	30	148B4216
SNV-ST 7/16UNF-1/4MPT	7/16 UNF	1/4 MPT	1	148B4566
SNV-ST 7/16UNF-1/4MPT	7/16 UNF	1/4 MPT	30	148B4230
SNV-ST 3/8RC-3/8R	3/8 RC	3/8 R	30	148B4227
SNV-ST 1/4RC-3/8R	1/4 RC	3/8 R	30	148B4228
SNV-ST 1/4RC-1/4R	1/4 RC	1/4 R	30	148B4229

**) With handwheel.*

***) Including adaptor for connection to ICS/PM/ICFD valve (1/4 in. NPT – G1/4)*

SNV-ST

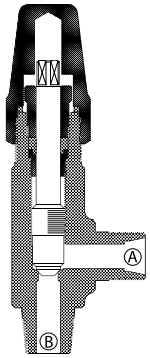

Fig. 1

Technical data and ordering

SNV-ST / SNV-SS (extended Branch) - see figure 2

Ordering

Type	Side branch connection Ⓐ	Bottom branch connection Ⓑ	Quantity [pcs.]	Code no.
SNV-ST CD10-W½ L100	CD10	W½ L100	1	148B3768
SNV-ST CD10-W½ L100	CD10	W½ L100	30	148B4210
SNV-ST G½-W½ L50	G ½ (external)	W½ L50	1	148B4570
SNV-ST G½-W½ L50	G ½ (external)	W½ L50	30	148B4218
SNV-ST G½-W½ L100	G ½ (external)	W½ L100	1	148B3769
SNV-ST G½-W½ L100	G ½ (external)	W½ L100	30	148B4211
SNV-ST G½-W1/2 L125	G ½ (external)	W½ L125	30	148B4219
SNV-ST ¼FPT-¼MPT L100	¼ FPT	¼ MPT L100	1	148B4567
SNV-ST ¼FPT-¼MPT L100	¼ FPT	¼ MPT L100	30	148B4232
SNV-ST ¼FTP-W½ L100	¼ FPT	W½ L100	20	148B4495
SNV-SS G½-W½ L50	G ½ (external)	W½ L50	1	148B4265
SNV-SS G½-W½ L50	G ½ (external)	W½ L50	30	148B4263
SNV-SS G½-W½ L150	G ½ (external)	W½ L150	1	148B4266
SNV-SS G½-W½ L150	G ½ (external)	W½ L150	30	148B4264

L50 = 50 mm / 2 in, L100 = 100 mm / 4 in, L125 = 125 mm / 5 in, L150 = 150 mm / 6 in.

SNV-ST (Manometer connection) - see figure 3

Ordering

Type	Side branch connection Ⓐ	Bottom branch connection Ⓑ	Quantity [pcs.]	Code no.
SNV-ST G½ Man	G ½	G ½	1	148B3778**)
SNV-SS G½ Man	G ½	G ½	1	148B6545***)

***) Including adaptor for connection to ICS / PM valve (G½ – G¼)*
****) Including adaptor for connection to ICF valve (G½ – G⅜).*

Ordering valves for 65 bar

Type	Side branch connection Ⓐ	Bottom branch connection Ⓑ	Quantity [pcs.]	Code no.
SNV-ST CD10-CD10	CD10	CD 10	1	148B6400
SNV-ST CD10-W ½ L100	CD10	W½ L100	30	148B4223
SNV-SS G ½-W ½ L50	G ½ (external)	W½ L50	1	148B4581
SNV-SS G ½-W ½ L150	G ½ (external)	W½ L150	1	148B4582

For additional equipment; please concult the spare parts and accessories documentation.

SNV-ST / SNV-SS (extended branch)	SNV-ST (manometer connection)
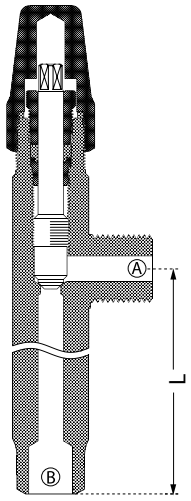	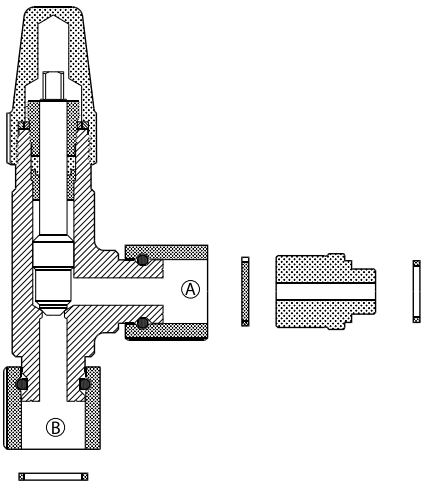
Fig. 2	*Fig. 3*

Quick Selection Notes:

REG-SA / REG-SB, Hand-operated regulating valves - 52 bar / 754 psi

REG-SA and REG-SB are angleway and straightway hand-operated regulating valves, which act as normal shut-off valves in closed position.
REG-SA and REG-SB are members of the SVL modular concept product family, so each valve housing is available with several different connection types and sizes, and it is possible to convert REG-SA or REG-SB to any other product in the SVL family by replacing the complete top part.
The valves are available in four different versions – REG-SA (S = short neck) and REG-LA (L = long neck) is for use in expansion lines (cone type A), while REG-SB and REG-LB is designed for regulation purposes in liquid lines (cone type B).



Features
REG-SA / REG-SB
52 bar / 754 psi

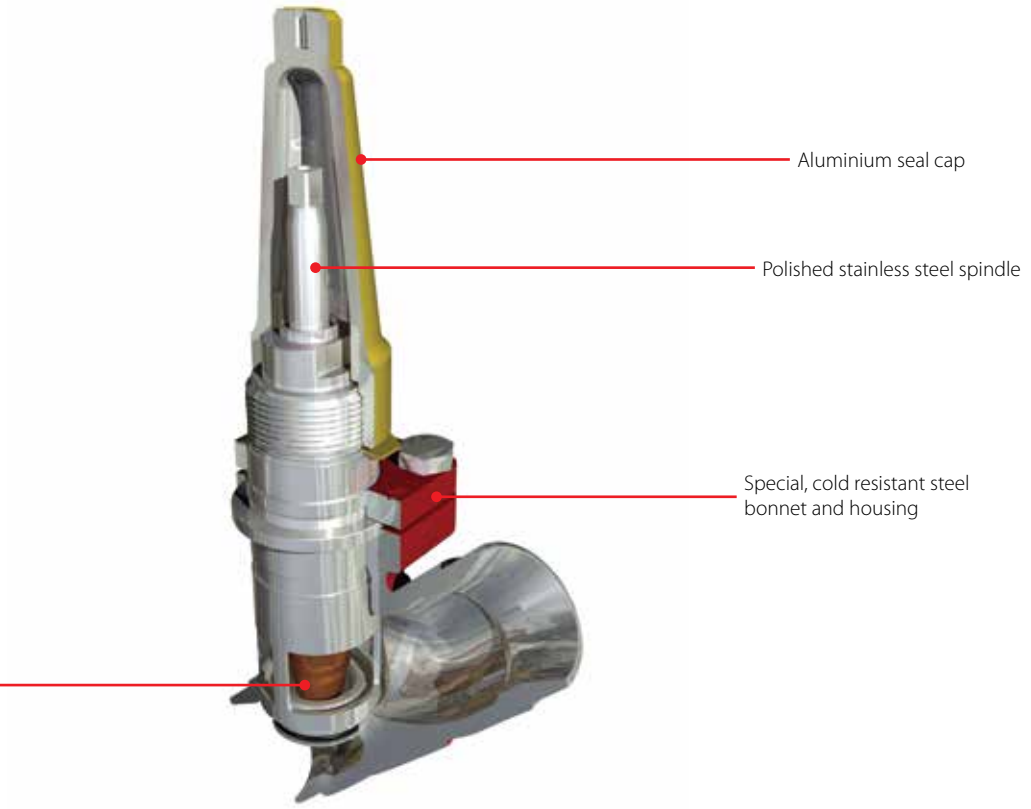

Facts

- Standard SVL angleway or straightway valve body allowing other top parts from the SVL platform to be installed
- Applicable to R717, R744, R134a, R170, R22, R290, R401A, R402A, R404A, R407A, R407B, R407C, R407F, R409A, R410A, R421A, R502, R507, R600 and R600a
  For a fully updated list of approved refrigerants, visit www.products.danfoss.com and search for individual code numbers, where refrigerants are listed as part of product specifications.
- Designed to ensure perfect regulation
- Internal backseating enables replacement of the spindle seal whilst the valve is active, i.e. under pressure
- Easy to disassemble for inspection and possible repair
- Max. operating pressure:
  52 bar g / 754 psig
- Temperature range:
  -60 – 150 °C / -76 – 302 °F
- Acts as a normal shut-off valve in closed position
- Valve body and bonnet material is low temperature steel according to requirements of the Pressure Equipment Directive and other international classification authorities

Technical data and ordering

REG-SA / REG-SB, Hand-operated regulating valve

Technical data

Type	Description
Pressure range	52 bar g / 754 psig
Temperature range	-60 – 150 °C / -76 – 302 °F
Flow coefficients	Flow coefficients for fully opened valves from K_V = 0.15 – 80 m³/h (C_V = 0.17 – 92.5 USgal/min)

REG-SA / REG-SB, Hand-operated regulating valve

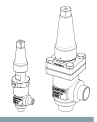

Available combination between valve size, cone type and valve connection

Size	DN 10 (⅜ in)		DN 15 (½ in)		DN 20 (¾ in)		DN 25 (1 in)		DN 32 (1 ¼ in)		DN 40 (1 ½ in)		DN 50 (2 in)		DN 65 (2 ½ in)	
Cone type	A	B	A	B	A	B	A	B	A	B	A	B	A	B	A	B
DIN	×	×	×	×	×	×	×	×	×	×	×	×		×		×
ANSI	×	×	×	×	×	×	×	×	×	×	×	×		×		×
GOST	×	×	×	×	×	×	×	×	×	×	×	×		×		×
SOC			×	×	×	×	×	×	×	×	×	×		×		
FPT			×	×	×	×	×	×	×	×						
F			×	×	×	×	×	×	×	×	×	×		×		×

× = *available*

How to order

Please note that the type codes only serve to identify the valves, some of which may not form part of the standard product range. For further information please contact your local Danfoss Sales Company.

Important!

Where products need to be certified according to specific certification societies or where higher pressures are required, the relevant information should be included at the time of order.

REG-SA / REG-SB - Hand-operated regulating valve

Type codes

Valve type	REG	Regulating Valves					
			Available connection types				
			A	D	SOC	FPT	F
Nominal size in [mm] (Valve size measured on the connection diameter)	10	DN 10	x	x			
	15	DN 15	x	x	x	x	x
	20	DN 20	x	x	x	x	x
	22	DN 22					
	25	DN 25	x	x	x	x	x
	32	DN 32	x	x	x	x	x
	40	DN 40	x	x	x		x
	50	DN 50	x	x	x		x
	65	DN 65	x	x			x
Connections	A	Welding branches: ANSI B 36.10 schedule 80, 15 – 40 (1/2 – 1 1/2 in) Welding branches: ANSI B 36.10 schedule 40, 50 – 65 (2 – 2 1/2 in)					
	D	Welding branches: EN 10220					
	G	Butt-weld connection: GOST (8734-75 and 8732-78)					
	SOC	Socket weld: ANSI B 16.11					
	FPT	NPT inside pipe thread: ANSI / ASME B1.20.1					
	F	Butt-weld connection F: Thickness DN 15 – 65 = 2 mm					
Valve housing	ANG	Angle flow					
	STR	Straight flow					
Cone A	Size: DN 10 DN 15 DN 20 DN 25 DN 32 DN 40	Flow area [mm²] 3.02 36.5 36.5 178 178 178					
Cone B	Size: DN 10 DN 15 DN 20 DN 25 DN 32 DN 40 DN 50 DN 65	Flow area [mm²] 16 115 115 531 531 531 822 1978					

Technical data and ordering

REG-SA - 52 bar / 754 psi (Cone type A - for expansion lines)

Ordering factory assembled angleway valves

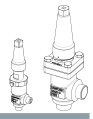

Type	Connection size		Execution	Connection type	Connection designation	Code no.
	[mm]	[in]				
REG-SA 10	10	3/8	Angleway	Butt weld, EN 10220	D	148B5102
	10	3/8	Angleway	Butt weld, ANSI (B 36.10)	A	148B5106
REG-SA 15	15	1/2	Angleway	Butt weld, EN 10220	D	148B5226
	15	1/2	Angleway	Butt weld, ANSI (B 36.10)	A	148B5202
	15	1/2	Angleway	Socket weld, ANSI (B 16.11)	SOC	148B5204
	15	1/2	Angleway	Female pipe thread (ANSI / ASME B 1.20.1)	FPT	148B5206
REG-SA 20	20	3/4	Angleway	Butt weld, EN 10220	D	148B5326
	20	3/4	Angleway	Butt weld, ANSI (B 36.10)	A	148B5302
	20	3/4	Angleway	Socket weld, ANSI (B 16.11)	SOC	148B5304
	20	3/4	Angleway	Female pipe thread (ANSI / ASME B 1.20.1)	FPT	148B5306
REG-SA 25	25	1	Angleway	Butt weld, EN 10220	D	148B5426
	25	1	Angleway	Butt weld, ANSI (B 36.10)	A	148B5402
	25	1	Angleway	Socket weld, ANSI (B 16.11)	SOC	148B5404
	25	1	Angleway	Female pipe thread (ANSI / ASME B 1.20.1)	FPT	148B5406
REG-SA 32	32	1 1/4	Angleway	Butt weld, EN 10220	D	148B5527
	32	1 1/4	Angleway	Butt weld, ANSI (B 36.10)	A	148B5502
	32	1 1/4	Angleway	Socket weld, ANSI (B 16.11)	SOC	148B5504
	32	1 1/4	Angleway	Female pipe thread (ANSI / ASME B 1.20.1)	FPT	148B5506
REG-SA 40	40	1 1/2	Angleway	Butt weld, EN 10220	D	148B5627
	40	1 1/2	Angleway	Butt weld, ANSI (B 36.10)	A	148B5602
	40	1 1/2	Angleway	Socket weld, ANSI (B 16.11)	SOC	148B5604

REG-SA - 52 bar / 754 psi (Cone type A - for expansion lines)

Ordering factory assembled straightway valves

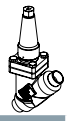

Type	Connection size		Execution	Connection type	Connection designation	Code no.
	[mm]	[in]				
REG-SA 10	10	3/8	Straightway	Butt weld, EN 10220	D	148B5104
	10	3/8	Straightway	Butt weld, ANSI (B 36.10)	A	148B5116
REG-SA 15	15	1/2	Straightway	Butt weld, EN 10220	D	148B5228
	15	1/2	Straightway	Butt weld, ANSI (B 36.10)	A	148B5212
	15	1/2	Straightway	Socket weld, ANSI (B 16.11)	SOC	148B5214
	15	1/2	Straightway	Female pipe thread (ANSI / ASME B 1.20.1)	FPT	148B5216
REG-SA 20	20	3/4	Straightway	Butt weld, EN 10220	D	148B5328
	20	3/4	Straightway	Butt weld, ANSI (B 36.10)	A	148B5312
	20	3/4	Straightway	Socket weld, ANSI (B 16.11)	SOC	148B5314
	20	3/4	Straightway	Female pipe thread (ANSI / ASME B 1.20.1)	FPT	148B5316
REG-SA 25	25	1	Straightway	Butt weld, EN 10220	D	148B5428
	25	1	Straightway	Butt weld, ANSI (B 36.10)	A	148B5412
	25	1	Straightway	Socket weld, ANSI (B 16.11)	SOC	148B5414
	25	1	Straightway	Female pipe thread (ANSI / ASME B 1.20.1)	FPT	148B5416
REG-SA 32	32	1 1/4	Straightway	Butt weld, EN 10220	D	148B5528
	32	1 1/4	Straightway	Butt weld, ANSI (B 36.10)	A	148B5512
	32	1 1/4	Straightway	Socket weld, ANSI (B 16.11)	SOC	148B5514
	32	1 1/4	Straightway	Female pipe thread (ANSI / ASME B 1.20.1)	FPT	148B5516
REG-SA 40	40	1 1/2	Straightway	Butt weld, EN 10220	D	148B5629
	40	1 1/2	Straightway	Butt weld, ANSI (B 36.10)	A	148B5612
	40	1 1/2	Straightway	Socket weld, ANSI (B 16.11)	SOC	148B5614

Technical data and ordering

REG-SB - 52 bar / 754 psi (Cone type B - for liquid lines)

Ordering factory assembled angleway

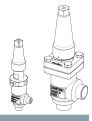

Type	Connection size		Execution	Connection type	Connection designation	Code no.
	[mm]	[in]				
REG-SB 10	10	3/8	Angleway	Butt weld, EN 10220	D	148B5103
	10	3/8	Angleway	Butt weld, ANSI (B 36.10)	A	148B5107
REG-SB 15	15	1/2	Angleway	Butt weld, EN 10220	D	148B5227
	15	1/2	Angleway	Butt weld, ANSI (B 36.10)	A	148B5203
	15	1/2	Angleway	Socket weld, ANSI (B 16.11)	SOC	148B5205
	15	1/2	Angleway	Female pipe thread (ANSI / ASME B 1.20.1)	FPT	148B5207
REG-SB 20	20	3/4	Angleway	Butt weld, EN 10220	D	148B5327
	20	3/4	Angleway	Butt weld, ANSI (B 36.10)	A	148B5303
	20	3/4	Angleway	Socket weld, ANSI (B 16.11)	SOC	148B5305
	20	3/4	Angleway	Female pipe thread (ANSI / ASME B 1.20.1)	FPT	148B5307
REG-SB 25	25	1	Angleway	Butt weld, EN 10220	D	148B5427
	25	1	Angleway	Butt weld, ANSI (B 36.10)	A	148B5403
	25	1	Angleway	Socket weld, ANSI (B 16.11)	SOC	148B5405
	25	1	Angleway	Female pipe thread (ANSI / ASME B 1.20.1)	FPT	148B5407
REG-SB 32	32	1 1/4	Angleway	Butt weld, EN 10220	D	148B5526
	32	1 1/4	Angleway	Butt weld, ANSI (B 36.10)	A	148B5503
	32	1 1/4	Angleway	Socket weld, ANSI (B 16.11)	SOC	148B5505
	32	1 1/4	Angleway	Female pipe thread (ANSI / ASME B 1.20.1)	FPT	148B5507
REG-SB 40	40	1 1/2	Angleway	Butt weld, EN 10220	D	148B5626
	40	1 1/2	Angleway	Butt weld, ANSI (B 36.10)	A	148B5603
	40	1 1/2	Angleway	Socket weld, ANSI (B 16.11)	SOC	148B5605
REG-SB 50	50	2	Angleway	Butt weld, EN 10220	D	148B5726
	50	2	Angleway	Butt weld, ANSI (B 36.10)	A	148B5706
	50	2	Angleway	Socket weld, ANSI (B 16.11)	SOC	148B5727
REG-SB 65	65	2 1/2	Angleway	Butt weld, EN 10220	D	148B5826
	65	2 1/2	Angleway	Butt weld, ANSI (B 36.10)	A	148B5806

REG-SB - 52 bar / 754 psi (Cone type B - for liquid lines)

Ordering factory assembled straightway valves

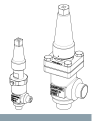

Type	Connection size		Execution	Connection type	Connection designation	Code no.
	[mm]	[in]				
REG-SB 10	10	3/8	Straightway	Butt weld, EN 10220	D	148B5105
	10	3/8	Straightway	Butt weld, ANSI (B 36.10)	A	148B5117
REG-SB 15	15	1/2	Straightway	Butt weld, EN 10220	D	148B5229
	15	1/2	Straightway	Butt weld, ANSI (B 36.10)	A	148B5213
	15	1/2	Straightway	Socket weld, ANSI (B 16.11)	SOC	148B5215
	15	1/2	Straightway	Female pipe thread (ANSI / ASME B 1.20.1)	FPT	148B5217
REG-SB 20	20	3/4	Straightway	Butt weld, EN 10220	D	148B5329
	20	3/4	Straightway	Butt weld, ANSI (B 36.10)	A	148B5313
	20	3/4	Straightway	Socket weld, ANSI (B 16.11)	SOC	148B5315
	20	3/4	Straightway	Female pipe thread (ANSI / ASME B 1.20.1)	FPT	148B5317
REG-SB 25	25	1	Straightway	Butt weld, EN 10220	D	148B5429
	25	1	Straightway	Butt weld, ANSI (B 36.10)	A	148B5413
	25	1	Straightway	Socket weld, ANSI (B 16.11)	SOC	148B5415
	25	1	Straightway	Female pipe thread (ANSI / ASME B 1.20.1)	FPT	148B5417
REG-SB 32	32	1 1/4	Straightway	Butt weld, EN 10220	D	148B5529
	32	1 1/4	Straightway	Butt weld, ANSI (B 36.10)	A	148B5513
	32	1 1/4	Straightway	Socket weld, ANSI (B 16.11)	SOC	148B5515
	32	1 1/4	Straightway	Female pipe thread (ANSI / ASME B 1.20.1)	FPT	148B5517
REG-SB 40	40	1 1/2	Straightway	Butt weld, EN 10220	D	148B5628
	40	1 1/2	Straightway	Butt weld, ANSI (B 36.10)	A	148B5613
	40	1 1/2	Straightway	Socket weld, ANSI (B 16.11)	SOC	148B5615
REG-SB 50	50	2	Straightway	Butt weld, ANSI (B 36.10)	A	148B5724
REG-SB 65	65	2 1/2	Straightway	Butt weld, ANSI (B 36.10)	A	148B5809
REG-SB 50	50	2	Straightway	Socket weld, ANSI (B 16.11)	SOC	148B5725

Technical data and ordering

Ordering from the parts programme (valve body + top part)

Example:

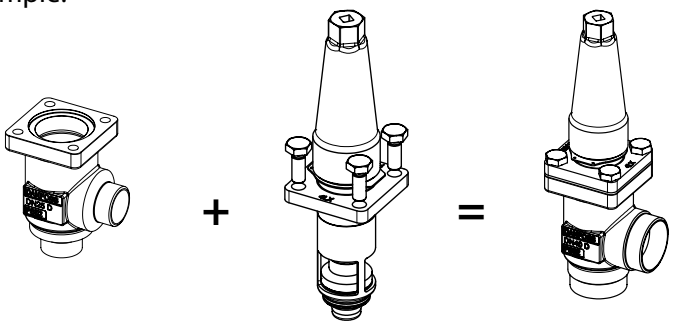

Valve housing, size 25 (1 in), DIN butt weld, angleway, **148B5452**

Top part, REG-SA size 25 (1 in) **148B5480**



REG-SA / SB 10 - 52 bar / 754 psi

Valve body

Type	Connection size [in]	Connection size [mm]	Execution	Connection type	Connection designation	Code no.
REG-SA / SB 10	3/8	10	Angleway	Butt weld, EN 10220	D	148B5122
	3/8	10	Angleway	Butt weld, ANSI (B 36.10)	A	148B5124
	3/8	10	Angleway	Butt weld, GOST	G	148B5134
REG-SA / SB 10	3/8	10	Straightway	Butt weld, EN 10220	D	148B5123
	3/8	10	Straightway	Butt weld, ANSI (B 36.10)	A	148B5125
	3/8	10	Straightway	Butt weld, GOST	G	148B5135

Top part [1])

Type	Code no.
REG-SA 10	148B5112
REG-SB 10	148B5113

REG-SA / SB / LA / LB 15 - 52 bar / 754 psi

Valve body

Type	Connection size [in]	Connection size [mm]	Execution	Connection type	Connection designation	Code no.
REG-SA / SB / LA / LB 15	1/2	15	Angleway	Butt weld, EN 10220	D	148B5252
	1/2	15	Angleway	Butt weld, ANSI (B 36.10)	A	148B5254
	1/2	15	Angleway	Female pipe thread (ANSI / ASME B 1.20.1)	FPT	148B5258
	1/2	15	Angleway	Socket weld, ANSI (B 16.11)	SOC	148B5256
	3/8	10	Angleway	Butt weld, F	F	148B6414
	1/2	15	Angleway	Butt weld, GOST	G	148B5391
REG-SA / SB / LA / LB 15	1/2	15	Straightway	Butt weld, EN 10220	D	148B5253
	1/2	15	Straightway	Butt weld, ANSI (B 36.10)	A	148B5255
	1/2	15	Straightway	Female pipe thread (ANSI / ASME B 1.20.1)	FPT	148B5259
	1/2	15	Straightway	Socket weld, ANSI (B 16.11)	SOC	148B5257
	3/8	10	Straightway	Butt weld, F	F	148B6424
	1/2	15	Straightway	Butt weld, GOST	G	148B5392

Top part [1])

Type	Code no.
REG-SA 15	148B5280
REG-SB 15	148B5281
REG-LA 15	148B6401
REG-LB 15	148B6402

[1]) *Including gaskets and bolts*

Technical data and ordering

Ordering from the parts programme (valve body + top part)



REG-SA / SB / LA / LB 20 - 52 bar / 754 psi

Valve body

Type	Connection size [in]	Connection size [mm]	Execution	Connection type	Connection designation	Code no.
REG-SA / SB / LA / LB 20	3/4	20	Angleway	Butt weld, EN 10220	D	148B5352
	3/4	20	Angleway	Butt weld, ANSI (B 36.10)	A	148B5354
	3/4	20	Angleway	Female pipe thread (ANSI / ASME B 1.20.1)	FPT	148B5358
	3/4	20	Angleway	Socket weld, ANSI (B 16.11)	SOC	148B5356
	3/4	20	Angleway	Butt weld, F	F	148B6415
	3/4	20	Angleway	Butt weld, GOST	G	148B5393
REG-SA / SB / LA / LB 20	3/4	20	Straightway	Butt weld, EN 10220	D	148B5353
	3/4	20	Straightway	Butt weld, ANSI (B 36.10)	A	148B5355
	3/4	20	Straightway	Female pipe thread (ANSI / ASME B 1.20.1)	FPT	148B5359
	3/4	20	Straightway	Socket weld, ANSI (B 16.11)	SOC	148B5357
	3/4	20	Straightway	Butt weld, F	F	148B6425
	3/4	20	Straightway	Butt weld, GOST	G	148B5394

Top part [1])

Type	Code no.
REG-SA 20	148B5280
REG-SB 20	148B5281
REG-LA 20	148B6401
REG-LB 20	148B6402

REG-SA / SB / LA / LB 25 - 52 bar / 754 psi

Valve body

Type	Connection size [in]	Connection size [mm]	Execution	Connection type	Connection designation	Code no.
REG-SA / SB / LA / LB 25	1	25	Angleway	Butt weld, EN 10220	D	148B5452
	1	25	Angleway	Butt weld, ANSI (B 36.10)	A	148B5454
	1	25	Angleway	Female pipe thread (ANSI / ASME B 1.20.1)	FPT	148B5458
	1	25	Angleway	Socket weld, ANSI (B 16.11)	SOC	148B5456
	1	25	Angleway	Butt weld, F	F	148B6416
	1	25	Angleway	Butt weld, GOST	G	148B5498
REG-SA / SB / LA / LB 25	1	25	Straightway	Butt weld, EN 10220	D	148B5453
	1	25	Straightway	Butt weld, ANSI (B 36.10)	A	148B5455
	1	25	Straightway	Female pipe thread (ANSI / ASME B 1.20.1)	FPT	148B5459
	1	25	Straightway	Socket weld, ANSI (B 16.11)	SOC	148B5457
	1	25	Straightway	Butt weld, F	F	148B6426
	1	25	Straightway	Butt weld, GOST	G	148B5499

Top part [1])

Type	Code no.
REG-SA 25	148B5480
REG-SB 25	148B5481
REG-LA 25	148B6403
REG-LB 25	148B6404

REG-SA / SB / LA / LB 32 - 52 bar / 754 psi

Valve body

Type	Connection size [in]	Connection size [mm]	Execution	Connection type	Connection designation	Code no.
REG-SA / SB / LA / LB 32	1 1/4	32	Angleway	Butt weld, EN 10220	D	148B5576
	1 1/4	32	Angleway	Butt weld, ANSI (B 36.10)	A	148B5578
	1 1/4	32	Angleway	Female pipe thread (ANSI / ASME B 1.20.1)	FPT	148B5582
	1 1/4	32	Angleway	Socket weld, ANSI (B 16.11)	SOC	148B5580
	1 1/4	32	Angleway	Butt weld, F	F	148B6417
	1 1/4	32	Angleway	Butt weld, GOST	G	148B5593
REG-SA / SB / LA / LB 32	1 1/4	32	Straightway	Butt weld, EN 10220	D	148B5577
	1 1/4	32	Straightway	Butt weld, ANSI (B 36.10)	A	148B5579
	1 1/4	32	Straightway	Female pipe thread (ANSI / ASME B 1.20.1)	FPT	148B5583
	1 1/4	32	Straightway	Socket weld, ANSI (B 16.11)	SOC	148B5581
	1 1/4	32	Straightway	Butt weld, F	F	148B6427
	1 1/4	32	Straightway	Butt weld, GOST	G	148B5594

Top part [1])

Type	Code no.
REG-SA 32	148B5480
REG-SB 32	148B5481
REG-LA 32	148B6403
REG-LB 32	148B6404

[1]) *Including gaskets and bolts*

Technical data and ordering

REG-SA / SB / LA / LB 40 - 52 bar / 754 psi

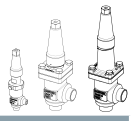

Valve body

Type	Connection size		Execution	Connection type	Connection designation	Code no.
	[in]	[mm]				
REG-SA / SB / LA / LB 40	1 ½	40	Angleway	Butt weld, EN 10220	D	148B5652
	1 ½	40	Angleway	Butt weld, ANSI (B 36.10)	A	148B5654
	1 ½	40	Angleway	Socket weld, ANSI (B 16.11)	SOC	148B5656
	1 ½	40	Angleway	Butt weld, F	F	148B6418
	1 ½	40	Angleway	Butt weld, GOST	G	148B5681
REG-SA / SB / LA / LB 40	1 ½	40	Straightway	Butt weld, EN 10220	D	148B5653
	1 ½	40	Straightway	Butt weld, ANSI (B 36.10)	A	148B5655
	1 ½	40	Straightway	Socket weld, ANSI (B 16.11)	SOC	148B5657
	1 ½	40	Straightway	Butt weld, F	F	148B6428
	1 ½	40	Straightway	Butt weld, GOST	G	148B5682

Top part [1])

Type	Code no.
REG-SA 40	148B5480
REG-SB 40	148B5481
REG-LA 40	148B6403
REG-LB 40	148B6404

REG-SA / SB 50 - 52 bar / 754 psi

Valve body

Type	Connection size		Execution	Connection type	Connection designation	Code no.
	[in]	[mm]				
REG-SA / SB 50	2	50	Angleway	Butt weld, EN 10220	D	148B5741
	2	50	Angleway	Butt weld, ANSI (B 36.10)	A	148B5743
	2	50	Angleway	Socket weld, ANSI (B 16.11)	SOC	148B5745
	2	50	Angleway	Butt weld, F	F	148B6419
	2	50	Angleway	Butt weld, GOST	G	148B5759
REG-SA / SB 50	2	50	Straightway	Butt weld, EN 10220	D	148B5742
	2	50	Straightway	Butt weld, ANSI (B 36.10)	A	148B5744
	2	50	Straightway	Socket weld, ANSI (B 16.11)	SOC	148B5746
	2	50	Straightway	Butt weld, F	F	148B6429
	2	50	Straightway	Butt weld, GOST	G	148B5760

Top part [1])

Type	Code no.
REG-SB 50	148B5734

REG-SA / SB 65 - 52 bar / 754 psi

Valve body

Type	Connection size		Execution	Connection type	Connection designation	Code no.
	[in]	[mm]				
REG-SA / SB 65	2 ½	65	Angleway	Butt weld, EN 10220	D	148B5816
	2 ½	65	Angleway	Butt weld, ANSI (B 36.10)	A	148B5818
	2 ½	65	Angleway	Butt weld, F	F	148B6420
	2 ½	65	Angleway	Butt weld, GOST	G	148B5816
REG-SA / SB 65	2 ½	65	Straightway	Butt weld, EN 10220	D	148B5817
	2 ½	65	Straightway	Butt weld, ANSI (B 36.10)	A	148B5819
	2 ½	65	Straightway	Butt weld, F	F	148B6430
	2 ½	65	Straightway	Butt weld, GOST	G	148B5817

Top part [1])

Type	Code no.
REG-SB 65	148B5824

[1]) *Including gaskets and bolts*

Quick Selection Notes:

REG-SA / REG-SB, Hand-operated regulating valves, 65 bar / 943 psi

REG-SA and REG-SB are angleway and straightway hand-operated regulating valves, which act as normal shut-off valves in closed position.
REG-SA and REG-SB are members of the SVL modular concept product family, so each valve housing is available with several different connection types and sizes, and it is possible to convert REG-SA or REG-SB to any other product in the SVL family by replacing the complete top part.
The valves are available in two different versions – REG-SA and REG-SB designed for regulation purposes in liquid and expansion lines.



Features
REG-SA / REG-SB
65 bar / 943 psi

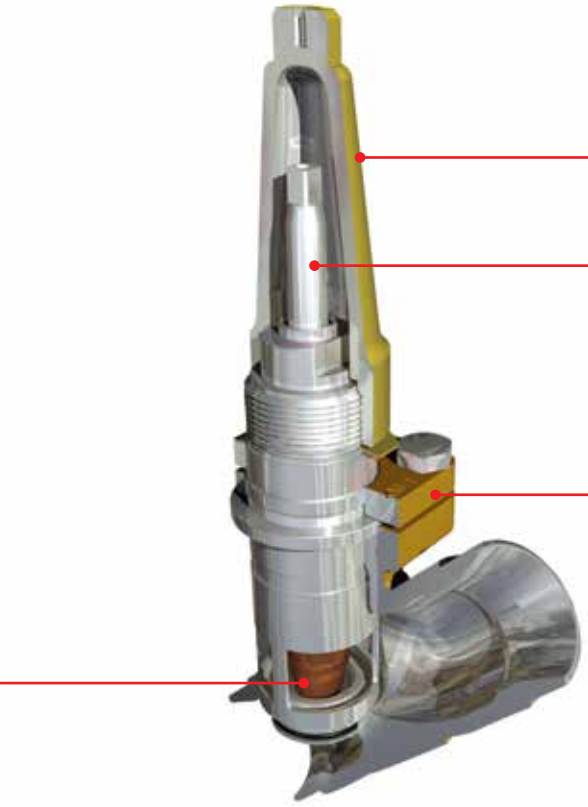

Facts

- Standard SVL angleway or straightway valve body allowing other top parts from the SVL platform to be installed
- Applicable to R717, R744, R134a, R170, R22, R290, R401A, R402A, R404A, R407A, R407B, R407C, R407F, R409A, R410A, R421A, R502, R507, R600 and R600a
  For a fully updated list of approved refrigerants, visit www.products.danfoss.com and search for individual code numbers, where refrigerants are listed as part of product specifications.
- Designed to ensure perfect regulation
- Internal backseating enables replacement of the spindle seal whilst the valve is active, i.e. under pressure
- Easy to disassemble for inspection and possible repair
- Max. operating pressure:
  65 bar g / 943 psig
- Temperature range:
  -60 – 150 °C / -76 – 302 °F
- Equipped with 42CrMo5 bolts to withstand high pressure.
- Acts as a normal shut-off valve in closed position
- Valve body and bonnet material is low temperature steel according to requirements of the Pressure Equipment Directive and other international classification authorities

Technical data and ordering

REG-SA / REG-SB, Hand-operated regulating valve

Technical data

Type	Description
Pressure range	65 bar g / 943 psig
Temperature range	-60 – 150 °C / -76 – 302 °F
Flow coefficients	Flow coefficients for fully opened valves from K_V = 0.15 – 80 m³/h (C_V = 0.17 – 92.5 USgal/min)

REG-SA / REG-SB, Hand-operated regulating valve

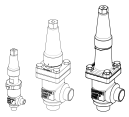

Available combination between valve size, cone type and valve connection

Size	DN 10 (⅜ in)		DN 15 (½ in)		DN 20 (¾ in)		DN 25 (1 in)		DN 32 (1 ¼ in)		DN 40 (1 ½ in)		DN 50 (2 in)		DN 65 (2 ½ in)	
Cone type	A	B	A	B	A	B	A	B	A	B	A	B	A	B	A	B
DIN	×	×	×	×	×	×	×	×	×	×	×	×	–	×	–	×
ANSI	×	×	×	×	×	×	×	×	×	×	×	×	–	×	–	×

× = *available*

How to order

Please note that the type codes only serve to identify the valves, some of which may not form part of the standard product range. For further information please contact your local Danfoss Sales Company.

Important!

Where products need to be certified according to specific certification societies or where higher pressures are required, the relevant information should be included at the time of order.

REG-SA / REG-SB - Hand-operated regulating valve

Type codes

Valve type	REG	Regulating Valves		
			Available connection types	
			A	D
Nominal size in [mm] (Valve size measured on the connection diameter)	10	DN 10	x	x
	15	DN 15	x	x
	20	DN 20	x	x
	22	DN 22		
	25	DN 25	x	x
	32	DN 32	x	x
	40	DN 40	x	x
	50	DN 50	x	x
	65	DN 65	x	x
Connections	A	Welding branches: ANSI B 36.10 schedule 80, 15 – 40 (½ – 1 ½ in) Welding branches: ANSI B 36.10 schedule 40, 50 – 65 (2 – 2 ½ in)		
	D	Welding branches: EN 10220		
Valve housing	ANG	Angle flow		
	STR	Straight flow		
Cone A	Size: DN 10 DN 15 DN 20 DN 25 DN 32 DN 40	Flow area [mm²] 3.02 36.5 36.5 178 178 178		
Cone B	Size: DN 10 DN 15 DN 20 DN 25 DN 32 DN 40 DN 50 DN 65	Flow area [mm²] 16 115 115 531 531 531 822 1978		

Technical data and ordering

Ordering from the parts programme (valve body + top part)

Example:

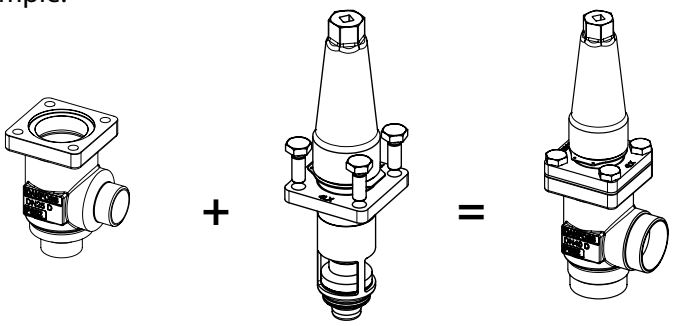

Valve housing, size 25 (1 in), DIN butt weld, angleway, **148B6624**

Top part, REG-SA size 25 (1 in) **148B5763**

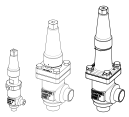

REG-SA / SB 10, 65 bar (943 psi)

Valve body

Type	Connection size [in]	Connection size [mm]	Execution	Connection type	Connection designation	Code no.
REG-SA / SB 10	3/8	10	Angleway	Butt weld, EN 10220	D	148B6690
	3/8	10	Angleway	Butt weld, ANSI (B 36.10)	A	148B6688
REG-SA / SB 10	3/8	10	Straightway	Butt weld, EN 10220	D	148B6694
	3/8	10	Straightway	Butt weld, ANSI (B 36.10)	A	148B6692

Top part [1])

Type	Code no.
REG-SA 10	148B5761
REG-SB 10	148B5764

REG-SA / SB 15, 65 bar (943 psi)

Valve body

Type	Connection size [in]	Connection size [mm]	Execution	Connection type	Connection designation	Code no.
REG-SA / SB 15	1/2	15	Angleway	Butt weld, EN 10220	D	148B6622
	1/2	15	Angleway	Butt weld, ANSI (B 36.10)	A	148B6612
REG-SA / SB 15	1/2	15	Straightway	Butt weld, EN 10220	D	148B6642
	1/2	15	Straightway	Butt weld, ANSI (B 36.10)	A	148B6632

Top part [1])

Type	Code no.
REG-SA 15	148B5762
REG-SB 15	148B5765

REG-SA / SB 20, 65 bar (943 psi)

Valve body

Type	Connection size [in]	Connection size [mm]	Execution	Connection type	Connection designation	Code no.
REG-SA / SB 20	3/4	20	Angleway	Butt weld, EN 10220	D	148B6623
	3/4	20	Angleway	Butt weld, ANSI (B 36.10)	A	148B6613
REG-SA / SB 20	3/4	20	Straightway	Butt weld, EN 10220	D	148B6643
	3/4	20	Straightway	Butt weld, ANSI (B 36.10)	A	148B6633

Top part [1])

Type	Code no.
REG-SA 20	148B5762
REG-SB 20	148B5765

[1]) Including gaskets and bolts

Technical data and ordering

Ordering from the parts programme (valve body + top part)

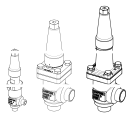

REG-SA / SB 25

Valve body

Type	Connection size		Execution	Connection type	Connection designation	Code no.
	[in]	[mm]				
REG-SA / SB 25	1	25	Angleway	Butt weld, EN 10220	D	148B6624
	1	25	Angleway	Butt weld, ANSI (B 36.10)	A	148B6614
REG-SA / SB 25	1	25	Straightway	Butt weld, EN 10220	D	148B6644
	1	25	Straightway	Butt weld, ANSI (B 36.10)	A	148B6634

Top part [1])

Type	Code no.
REG-SA 25	148B5763
REG-SB 25	148B5766

REG-SA / SB 32

Valve body

Type	Connection size		Execution	Connection type	Connection designation	Code no.
	[in]	[mm]				
REG-SA / SB 32	1 1/4	32	Angleway	Butt weld, EN 10220	D	148B6625
	1 1/4	32	Angleway	Butt weld, ANSI (B 36.10)	A	148B6615
REG-SA / SB 32	1 1/4	32	Straightway	Butt weld, EN 10220	D	148B6645
	1 1/4	32	Straightway	Butt weld, ANSI (B 36.10)	A	148B6635

Top part [1])

Type	Code no.
REG-SA 32	148B5763
REG-SB 32	148B5766

REG-SA / SB 40.65 bar / 943 psi

Valve body

Type	Connection size		Execution	Connection type	Connection designation	Code no.
	[in]	[mm]				
REG-SA / SB 40	1 1/2	40	Angleway	Butt weld, EN 10220	D	148B6626
	1 1/2	40	Angleway	Butt weld, ANSI (B 36.10)	A	148B6616
REG-SA / SB 40	1 1/2	40	Straightway	Butt weld, EN 10220	D	148B6646
	1 1/2	40	Straightway	Butt weld, ANSI (B 36.10)	A	148B6636

Top part [1])

Type	Code no.
REG-SA 40	148B5763
REG-SB 40	148B5766

REG-SB 50.65 bar / 943 psi

Valve body

Type	Connection size		Execution	Connection type	Connection designation	Code no.
	[in]	[mm]				
REG-SA / SB 50	2	50	Angleway	Butt weld, EN 10220	D	148B6627
	2	50	Angleway	Butt weld, ANSI (B 36.10)	A	148B6617
REG-SA / SB 50	2	50	Straightway	Butt weld, EN 10220	D	148B6647
	2	50	Straightway	Butt weld, ANSI (B 36.10)	A	148B6637

Top part [1])

Type	Code no.
REG-SB 50	148B5767

[1]) *Including gaskets and bolts*

Technical data and ordering

REG-SB 65.65 bar / 943 psi

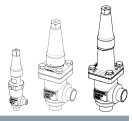

Valve body

Type	Connection size		Execution	Connection type	Connection designation	Code no.
	[in]	[mm]				
REG-SA / SB 65	2 ½	65	Angleway	Butt weld, EN 10220	D	148B6628
	2 ½	65	Angleway	Butt weld, ANSI (B 36.10)	A	148B6618
REG-SA / SB 65	2 ½	65	Straightway	Butt weld, EN 10220	D	148B6648
	2 ½	65	Straightway	Butt weld, ANSI (B 36.10)	A	148B6638

Top part [1])

Type		Code no.
REG-SB 65		148B5768

[1]) *Including gaskets and bolts*

Quick Selection Notes:

REG-SA SS / REG-SB SS, Hand-operated regulating valves

REG-SA SS and REG-SB SS are angle-way and straight-way stainless steel hand-operated regulating valves, acting as normal shut-off valves in closed position.
The valves are designed to meet the strict quality requirements on refrigerating installations specified by the international classification societies and are carefully designed to present favourable flowconditions and accurate linear characteristics.
The valves are equipped with vented cap and have internal backseating enabling the spindle seal to be replaced with the valve still under pressure.



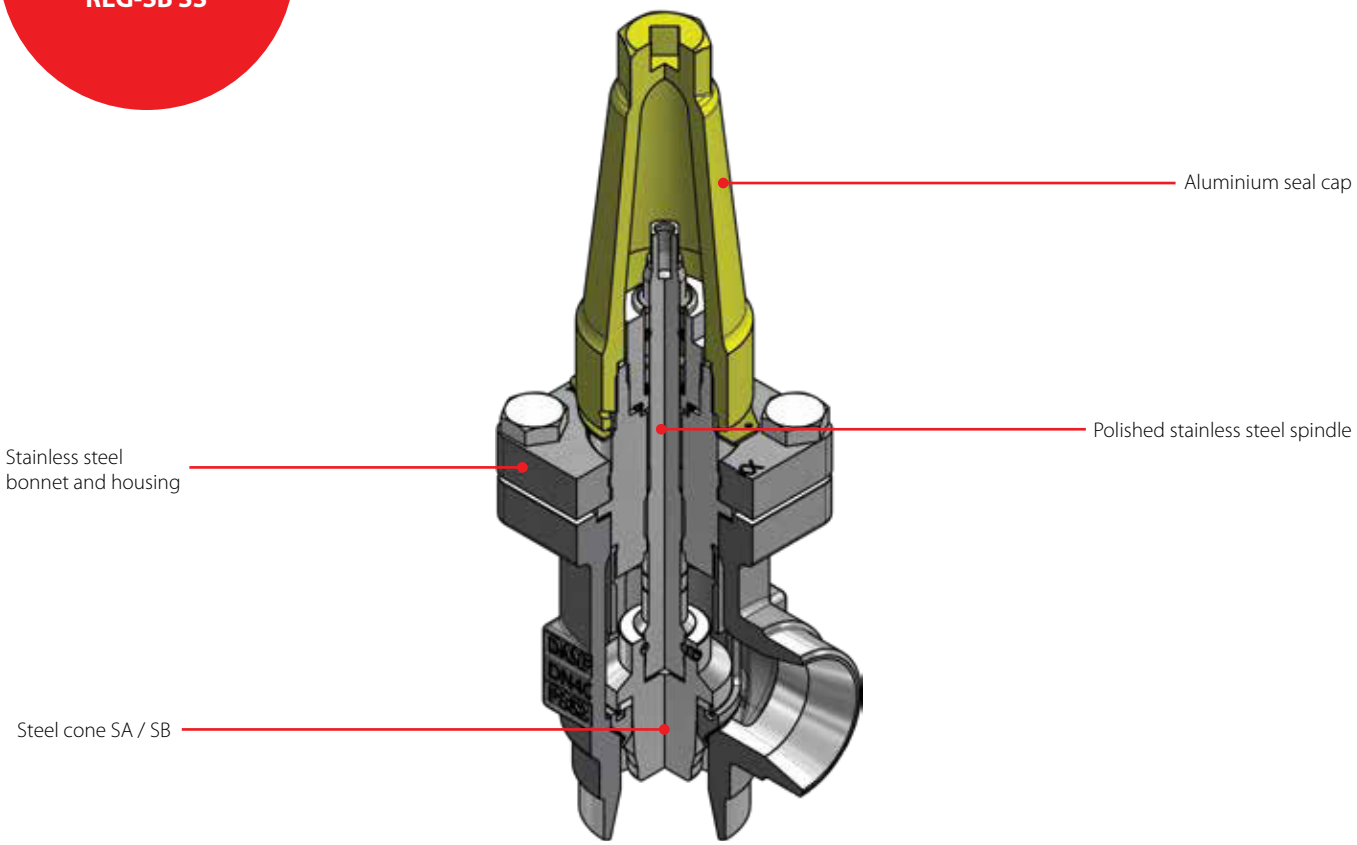

Facts

- Applicable to R717, R744, R134a, R170, R22, R290, R401A, R402A, R404A, R407A, R407B, R407C, R407F, R409A, R410A, R421A, R502, R507, R600 and R600a
  For a fully updated list of approved refrigerants, visit www.products.danfoss.com and search for individual code numbers, where refrigerants are listed as part of product specifications.
- Internal backseating enables replacement of the spindle seal whilst the valve is active, i.e. under pressure
- Compact and light valves for easy handling and installation
- Max. operating pressure:
  52 bar g / 754 psig
- Temperature range:
  -60 – 150 °C / -76 – 302 °F
- Acts as a normal shut-off valve in closed position
- Valve body and bonnet material is stainless steel

Technical data and ordering

REG-SA SS / REG-SB SS, Hand-operated regulating valves

Technical data

Type	Description
Pressure range	52 bar g / 754 psig
Temperature range	-60 – 150 °C / -76 – 302 °F
Flow coefficients	Flow coefficients for fully opened valves from K_V = 0.15 to 80 m^3/h (C_V = 0.17 – 92.5 USgal/min)



REG-SA SS (Cone type A - for expansion lines)

Ordering angleway valves

Type	Connection size		Execution	Connection type	Connection designation	Code no.
	[mm]	[in]				
REG-SA SS 15	15	1/2	Angleway	Butt weld, EN 10220	D	148B5297
	15	1/2	Angleway	Butt weld ANSI, B 36.19M	A	148B6482
REG-SA SS 20	20	3/4	Angleway	Butt weld, EN 10220	D	148B5385
REG-SA SS 25	25	1	Angleway	Butt weld, EN 10220	D	148B5494
	25	1	Angleway	Butt weld ANSI, B 36.19M	A	148B6483
REG-SA SS 32	32	1 1/4	Angleway	Butt weld, EN 10220	D	148B5589
	32	1 1/4	Angleway	Butt weld ANSI, B 36.19M	A	148B6484
REG-SA SS 40	40	1 1/2	Angleway	Butt weld, EN 10220	D	148B5674

REG-SB SS (Cone type B - for liquid lines)

Type	Connection size		Execution	Connection type	Connection designation	Code no.
	[mm]	[in]				
REG-SB SS 15	15	1/2	Angleway	Butt weld, EN 10220	D	148B5387
REG-SB SS 20	20	3/4	Angleway	Butt weld, EN 10220	D	148B5389
	20	3/4	Angleway	Butt weld ANSI, B 36.19M	A	148B6487
REG-SB SS 25	25	1	Angleway	Butt weld, EN 10220	D	148B5496
REG-SB SS 32	32	1 1/4	Angleway	Butt weld, EN 10220	D	148B5591
REG-SB SS 40	40	1 1/2	Angleway	Butt weld, EN 10220	D	148B5676
	40	1 1/2	Angleway	Butt weld ANSI, B 36.19M	A	148B5686



REG-SA SS (Cone type A - for expansion lines)

Ordering straightway valves

Type	Connection size		Execution	Connection type	Connection designation	Code no.
	[mm]	[in]				
REG-SA SS 15	15	1/2	Straightway	Butt weld, EN 10220	D	148B5298
	15	1/2	Straightway	Butt weld ANSI, B 36.19M	A	148B5299
REG-SA SS 20	20	3/4	Straightway	Butt weld, EN 10220	D	148B5386
REG-SA SS 25	25	1	Straightway	Butt weld, EN 10220	D	148B5495
	25		Straightway	Butt weld ANSI, B 36.19M	A	148B6485
REG-SA SS 32	32	1 1/4	Straightway	Butt weld, EN 10220	D	148B5590
	32		Straightway	Butt weld ANSI, B 36.19M	A	148B6486
REG-SA SS 40	40	1 1/2	Straightway	Butt weld, EN 10220	D	148B5675

REG-SB (Cone type B - for liquid lines)

Type	Connection size		Execution	Connection type	Connection designation	Code no.
	[mm]	[in]				
REG-SB 15	15	1/2	Straightway	Butt weld, EN 10220	D	148B5388
REG-SB 20	20	3/4	Straightway	Butt weld, EN 10220	D	148B5390
	20	3/4	Straightway	Butt weld ANSI, B 36.19M	A	148B6488
REG-SB 25	25	1	Straightway	Butt weld, EN 10220	D	148B5497
	25	1	Straightway	Butt weld ANSI, B 36.19M	A	148B6479
REG-SB 32	32	1 1/4	Straightway	Butt weld, EN 10220	D	148B5592
REG-SB 40	40	1 1/2	Straightway	Butt weld, EN 10220	D	148B5677
	40	1 1/2	Straightway	Butt weld ANSI, B 36.19M	A	148B5685

NRV / NRVH, Check valves

NRV and NRVH check valves can be used in liquid, suction and hot gas lines in refrigeration and air conditioning plants. Special versions, with a max. working pressure of 90 bar / 1305 psig are available for CO_2 applications. The valves ensure the correct flow direction and prevent back-condensation from a warm part of the system to the cold evaporator.

The hermetic tight design of solder versions meet the environmental demands for today and future. A built-in damping piston makes the valves suitable for installation in lines where pulsation can occur, e. g. in the discharge line from the compressor.



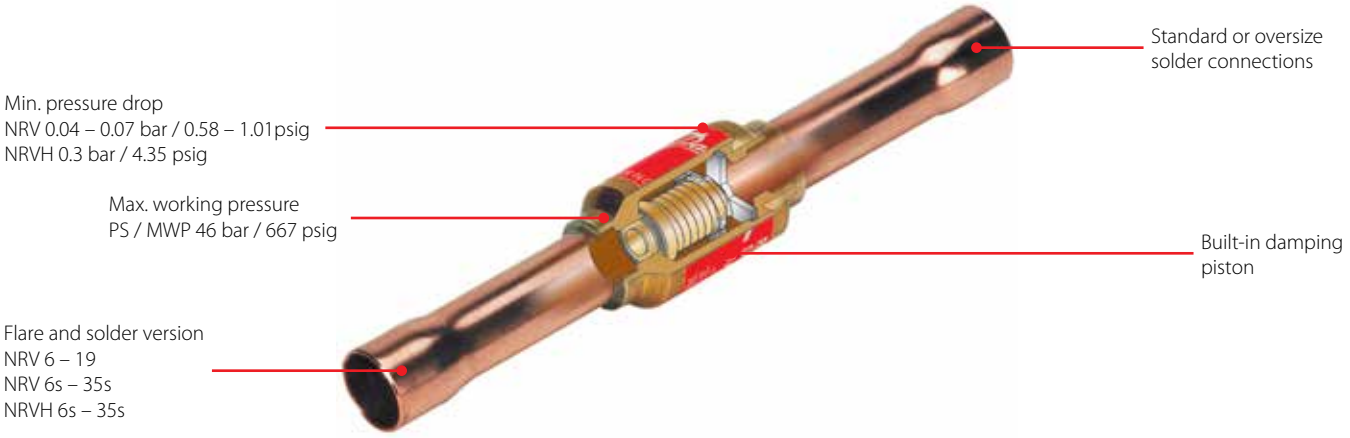

Facts

Application:

- Traditional refrigeration
- Heat pump systems
- Air conditioning units
- Liquid coolers
- Transport refrigeration
- Applicable to R134a, R22/R407C, R404A/R507, R407A, R407F,R410A, R32, R290, R600, R600a, R1270, R448A, R449A, R450A, R452A, R452B, R454B, R513A, R1234ze, R1234yf
  For a fully updated list of approved refrigerants, visit www.products.danfoss.com and search for individual code numbers, where refrigerants are listed as part of product specifications.
- Resonance problems can be avoided at partial load in the refrigeration plant
- Oversize connections provide flexibility in use
- Prevents back-condensation from warm to cold system part
- Ensures correct flow direction
- Hermetic tight design for solder versions.
- Built-in damping piston that makes the valves suitable for installation in lines where pulsation can occur, e.g. in the discharge line from the compressor.
- Available in both straightway and angleway versions
- Solder versions are compliant with ATEX hazard zone 2
- NRVH type check valve is with stronger spring and it's recommended to use for compressors in parallel (i.e. power packs) where higher level of pulsation and vibration are expected.

Technical data and ordering

NRV / NRVH - Check valves

Technical data

Type	Description
Temperature range	-50 – 140 °C / -58 – 285 °F
Max. working pressure (PS / MWP)	46 bar / 667 psig
Approvals	C UL US LISTED, EAC

Note
-Only solder version, connection sizes from 6 s to 22 s are allowed for flammable refrigerant.
-R1234ze can be used for NRV size up to 35s according to the PED category I, Fluid II.

NRV - Check valve, straight-way, flare



Ordering

Type	Connection type	Connection		Pressure drop across valve		K_V - value [2]	C_V - value [2]	Code no.
		[in]	[mm]	Δp [bar] [1]	Δp [psig] [1]	[m³/h]	[gal/min]	
NRV6	Straight-way - flare	1/4	6	0.07	1.01	0.56	0.65	020-1040
NRV 10	Straight-way - flare	3/8	10	0.07	1.01	1.20	1.39	020-1041
NRV 12	Straight-way - flare	1/2	12	0.05	0.72	2.05	2.37	020-1042
NRV 16	Straight-way - flare	5/8	16	0.05	0.72	3.60	4.16	020-1043
NRV 19	Straight-way - flare	3/4	19	0.05	0.72	5.50	6.36	020-1044

[1]) Δp = the minimum pressure at which the valve is completely open.
[2]) The K_V / C_V value is the flow of water in [m³/h] / [gal/min] at a pressure drop across valve of 1 bar / 14.5 psig, ρ = 1000 kg/m³ / 2205 lbs/G.

NRV - Check valve, straight-way, solder ODF



Ordering

Type	Connection type	Connection		Pressure drop across valve		K_V - value [2]	C_V - value [2]	Code no.
		[in]	[mm]	Δp [bar] [1]	Δp [psig] [1]	[m³/h]	[gal/min]	
NRV 6s	Straight-way - Solder	1/4	–	0.07	1.01	0.56	0.65	020-1010
	Straight-way - Solder	–	6	0.07	1.01	0.56	0.65	020-1014
NRV 6s [3])	Straight-way - Solder	3/8	–	0.07	1.01	0.56	0.65	020-1057
	Straight-way - Solder	–	10	0.07	1.01	0.56	0.65	020-1050
NRV 10s	Straight-way - Solder	3/8	–	0.07	1.01	1.20	1.39	020-1011
	Straight-way - Solder	–	10	0.07	1.01	1.20	1.39	020-1015
NRV 10s [3])	Straight-way - Solder	1/2	–	0.07	1.01	1.20	1.39	020-1058
	Straight-way - Solder	–	12	0.07	1.01	1.20	1.39	020-1051
NRV 12s	Straight-way - Solder	1/2	–	0.05	0.72	2.05	2.37	020-1012
	Straight-way - Solder	–	12	0.05	0.72	2.05	2.37	020-1016
NRV 12s [3])	Straight-way - Solder	5/8	16	0.05	0.72	2.05	2.37	020-1052
NRV 16s	Straight-way - Solder	5/8	16	0.05	0.72	3.60	4.16	020-1018
NRV 16s [3])	Straight-way - Solder	–	18	0.05	0.72	3.60	4.16	020-1053
	Straight-way - Solder	3/4	19	0.05	0.72	3.60	4.16	020-1059
NRV 19s	Straight-way - Solder	–	18	0.05	0.72	5.50	6.36	020-1017
	Straight-way - Solder	3/4	19	0.05	0.72	5.50	6.36	020-1019
NRV 19s [3])	Straight-way - Solder	7/8	22	0.05	0.72	5.50	6.36	020-1054

[1]) Δp = the minimum pressure at which the valve is completely open.
[2]) The K_V / C_V value is the flow of water in [m³/h] / [gal/min] at a pressure drop across valve of 1 bar / 14.5 psig, ρ = 1000 kg/m³ / 2205 lbs/G.
[3]) Oversize connections.
This product is approved for R290, R600, R600a and R1270 by ignition source assessment in accordance to standard EN13463-1.

NRV - Check valve, angle-way, solder ODF

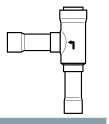

Ordering

Type	Connection type	Connection		Pressure drop across valve		K_V - value [2]	C_V - value [2]	Code no.
		[in]	[mm]	Δp [bar] [1]	Δp [psig] [1]	[m³/h]	[gal/min]	
NRV 22s	Angle-way - solder	7/8	22	0.04	0.58	8.5	9.83	020-1020
NRV 22s [3])	Angle-way - solder	1 1/8	–	0.04	0.58	8.5	9.83	020-1060
	Angle-way - solder	–	28	0.04	0.58	8.5	9.83	020-1055
NRV 28s	Angle-way - solder	1 1/8	–	0.04	0.58	16.5	19.07	020-1021
	Angle-way - solder	–	28	0.04	0.58	16.5	19.07	020-1025
NRV 28s [3])	Angle-way - solder	1 3/8	35	0.04	0.58	16.5	19.07	020-1056
NRV 35s	Angle-way - solder	1 3/8	35	0.04	0.58	29.0	33.52	020-1026
NRV 35s [3])	Angle-way - solder	1 5/8	–	0.04	0.58	29.0	33.52	020-1061
	Angle-way - solder	–	42	0.04	0.58	29.0	33.52	020-1027

[1]) Δp = the minimum pressure at which the valve is completely open.
[2]) The K_V / C_V value is the flow of water in [m³/h] / [gal/min] at a pressure drop across valve of 1 bar / 14.5 psig, ρ = 1000 kg/m³ / 2205 lbs/G.
[3]) Oversize connections.

Technical data and ordering

NRVH - Check valve, straight-way, solder ODF



Ordering

Type	Version	Connection		Pressure drop across valve		K_V - value [2]	C_V - value [2]	Code no.
		[in]	[mm]	Δp [bar] [1]	Δp [psig] [1]	[m³/h]	[gal/min]	
NRVH 6s [3]	Straight-way - solder	3/8	–	0.30	4.35	0.56	0.65	020-1069
	Straight-way - solder	–	10	0.30	4.35	0.56	0.65	020-1062
NRVH 10s	Straight-way - solder	3/8	–	0.30	4.35	1.20	1.39	020-1046
	Straight-way - solder	–	10	0.30	4.35	1.20	1.39	020-1036
NRVH 10s [3]	Straight-way - solder	1/2	–	0.30	4.35	1.20	1.39	020-1070
	Straight-way - solder	–	12	0.30	4.35	1.20	1.39	020-1063
NRVH 12s	Straight-way - solder	1/2	–	0.30	4.35	2.05	2.37	020-1039
	Straight-way - solder	–	12	0.30	4.35	2.05	2.37	020-1037
NRVH 12s [3]	Straight-way - solder	5/8	16	0.30	4.35	2.05	2.37	020-1064
NRVH 16s	Straight-way - solder	5/8	16	0.30	4.35	3.60	4.16	020-1038
NRVH 16s [3]	Straight-way - solder	–	18	0.30	4.35	3.60	4.16	020-1065
	Straight-way - solder	3/4	19	0.30	4.35	3.60	4.16	020-1071
NRVH 19s	Straight-way - solder	–	18	0.30	4.35	5.50	6.36	020-1008
	Straight-way - solder	3/4	19	0.30	4.35	5.50	6.36	020-1023
NRVH 19s [3]	Straight-way - solder	7/8	22	0.30	4.35	5.50	6.36	020-1066

[1] Δp = the minimum pressure at which the valve is completely open. The NRVH with a stronger spring is used in the discharge line from compressors connected in parallel.
[2] The K_V / C_V value is the flow of water in [m³/h] / [gal/min] at a pressure drop across valve of 1 bar / 14.5 psig, ρ = 1000 kg/m³ / 2205 lbs/G.
[3] Oversize connections.
This product is approved for R290, R600, R600a and R1270 by ignition source assessment in accordance to standard EN13463-1.

NRVH - Check valve, angle-way, solder ODF

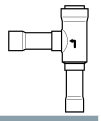

Ordering

Type	Connection type	Connection		Pressure drop across valve		K_V - value [2]	C_V - value [2]	Code no.
		[in]	[mm]	Δp [bar] [1]	Δp [psig] [1]	[m³/h]	[gal/min]	
NRVH 22s	Angle-way - solder	7/8	22	0.30	4.35	8.5	9.83	020-1032
NRVH 22s [3]	Angle-way - solder	1 1/8	–	0.30	4.35	8.5	9.83	020-1072
	Angle-way - solder	–	28	0.30	4.35	8.5	9.83	020-1067
NRVH 28s	Angle-way - solder	1 1/8	–	0.30	4.35	16.5	19.07	020-1029
	Angle-way - solder	–	28	0.30	4.35	16.5	19.07	020-1033
NRVH 28s [3]	Angle-way - solder	1 3/8	35	0.30	4.35	16.5	19.07	020-1068
NRVH 35s	Angle-way - solder	1 3/8	35	0.30	4.35	29.0	33.52	020-1034
NRVH 35s [3]	Angle-way - solder	1 5/8	–	0.30	4.35	29.0	33.52	020-1073
	Angle-way - solder	–	42	0.30	4.35	29.0	33.52	020-1035

[1] Δp = the minimum pressure at which the valve is completely open. The NRVH with a stronger spring is used in the discharge line from compressors connected in parallel.
[2] The K_V / C_V value is the flow of water in [m³/h] / [gal/min] at a pressure drop across valve of 1 bar / 14.5 psig, ρ = 1000 kg/m³ / 2205 lbs/G.
[3] Oversize connections.

NRV 10s H - Check valve for R744 (CO_2)

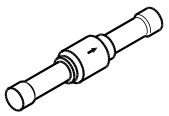

Technical data

Type	Description
Refrigerants	R744 (CO_2)
Oil	POE, PAG
Temperature range	-50 – 140 °C / -58 – 285 °F
Max. working pressure (PS / MWP)	90 bar / 1305 psig
Approvals	C UL US LISTED, EAC

NRV 10s H - Check valve, straight-way - solder ODF

Ordering

Type	Connection type	Connection size		Differential pressure to start opening the valve		Pressure drop across valve ΔP_2		K_V - value [2]	C_V - value [2]	Code no.
		[in]	[mm]	[bar] [1]	[psi] [1]	[bar] [1]	[psi] [1]	[m³/h]	[gal/min]	
NRV 10s H	Straightway Solder ODF	3/8	–	0.4	5.8	1.0	14.5	0.9	1.04	020-4000
	Straightway Solder ODF	–	10	0.4	5.8	1.0	14.5	0.9	1.04	020-4300

[1] ΔP_1 = the minimum pressure at which the valve start opening.
ΔP_2 = the minimum pressure at which the valve is completely open.
[2] The K_V / C_V value is the flow of water in [m³/h] / [gal/min] at a pressure drop across valve of 1 bar / 14.5 psig, ρ = 1000 kg/m³ / 2205 lbs/G.

Quick Selection Notes:

NRVA, Check valve

NRVA check valves can be used in liquid, suction and hot gas lines in refrigeration and air conditioning plants.

The valves ensure the correct flow direction and prevent back-condensation from a warm part of the system to the cold evaporator.



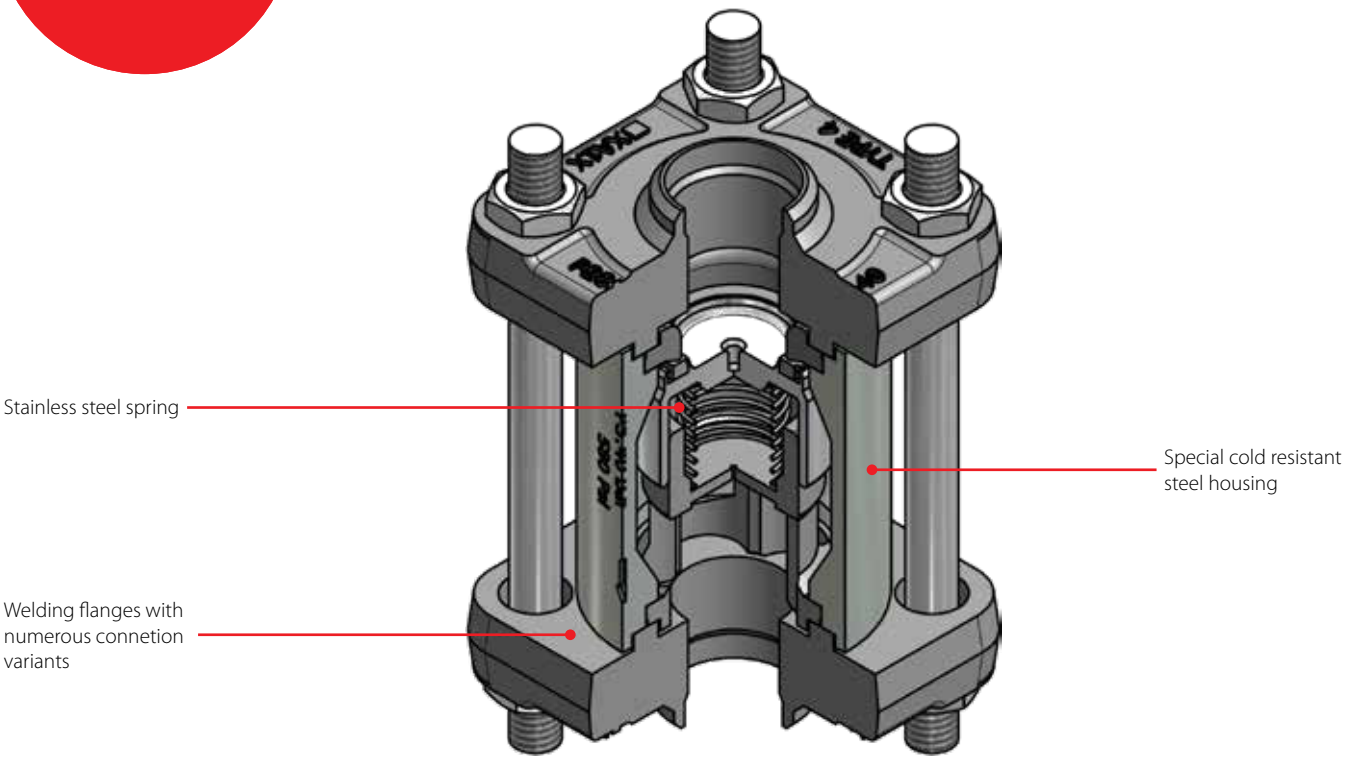

Facts

- Applicable to R717, R134a, R22, R401A, R402A, R404A, R407A, R407B, R407C, R407F, R409A, R410A, R421A, R502 and R507
  For a fully updated list of approved refrigerants, visit www.products.danfoss.com and search for individual code numbers, where refrigerants are listed as part of product specifications.
- Ensures correct direction of flow
- Valve housing made of steel
- Available for 40 bar g / 580 psig working pressure
- Large range of flanges with connection dimensions in accordance with standards: DIN, ANSI, SOC, SA and FPT
- Fitted with damping piston that makes the valves suitable for installation in lines where pulsation can occur, e.g. in the discharge line from the compressor

Technical data and ordering

NRVA - Check valve

Technical data

Type	Description
Pressure range	Max. working pressure PS / MWP: 40 bar g / 580 psig
Temperature range	-50 – 140 °C / -58 – 284 °F

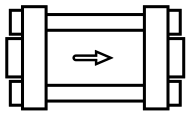

NRVA - Complete valves incl. DIN 2448 flange

Ordering

Type	Weld flange connection	Δp [1]				K_V value [2]	C_V value [3]	Code no.
		With standard spring		With special spring				
	[in]	[bar]	[psig]	[bar]	[psig]	[m³/h]	[gal/min]	
NRVA 15	1/2	0.12	1.7	0.3	4.4	5	6	020-2000
NRVA 20	3/4	0.12	1.7	0.3	4.4	6	7	020-2001
NRVA 25	1	0.12	1.7	0.3	4.4	19	22	020-2002
NRVA 32	1 1/4	0.12	1.7	0.3	4.4	20	23	020-2003
NRVA 40	1 1/2	0.07	1.0	0.4	5.8	44	51	020-2004
NRVA 50	2	0.07	1.0	0.4	5.8	44	51	020-2005
NRVA 65	2 1/2	0.07	1.0	0.4	5.8	75	87	020-2006

[1] Δp = the minimum pressure differential at which the valve is completely open.
[2] The K_V value is the flow of water in [m³/h] at a pressure drop across valve of 1 [bar, ρ] = 1000 [kg/m³].
[3] The C_V value is the flow of water in [gal/min] at a pressure drop across valve of 1 [psig, ρ] = 10 [lbs/gal].

Special spring for NRVA used in liquid lines where cold, thick oil or impurities may be present

Ordering

For type		Code no.
NRVA 15		020-2307
NRVA 20		020-2307
NRVA 25		020-2317
NRVA 32		020-2317
NRVA 40		020-2327
NRVA 50		020-2327
NRVA 65		020-2337

Valve body without flanges

Ordering

Type		Code no.
NRVA 15		020-2020
NRVA 20		020-2020
NRVA 25		020-2022
NRVA 32		020-2022
NRVA 40		020-2024
NRVA 50		020-2024
NRVA 65		020-2026

For ordering flanges; please consult the spare parts and accessories documentation.

Staybolts and gaskets

Ordering

Type	Dimensions	Code no.
NRVA 15 / 20	M 12 × 115 mm	006-1107
NRVA 25 / 32	M 12 × 148 mm	006-1135
NRVA 40 / 50	M 12 × 167 mm	006-1137
NRVA 65	M 16 × 200 mm	006-1138

SCA-X, Check and stop valve / CHV-X, Check valve - 52 bar / 754 psi

SCA-X are check valves with a built-in shut-off valve function. SCA-X valves are available in angleway versions.
CHV-X are check valves only. CHV-X are available in both angleway and straightway versions.
The SCA-X is equipped with vented cap and has internal backseating enabling the spindle seal to be replaced whilst the valve still under pressure.

SCA-X and CHV-X are members of the SVL modular concept product family, so each valve housing is available with several different connection types and sizes, and it is possible to convert SCA-X or CHV-X to any other product in the SVL family by replacing the complete top part.
The valves are designed to open at very low differential pressures, allow favourable flow conditions and are easy to disassemble for inspection and service.





CHV-X SCA-X

Facts

- Applicable to R717, R744, R134a, R170, R22, R290, R401A, R402A, R404A, R407A, R407B, R407C, R407F, R409A, R410A, R421A, R502, R507, R600 and R600a
  For a fully updated list of approved refrigerants, visit www.products.danfoss.com and search for individual code numbers, where refrigerants are listed as part of product specifications.
- Housing is Standard SVL angleway housing allowing other inserts from the SVL platform to be installed
- Designed to open at a very low differential pressure of 0.04 bar / 0.58 psig
- Designed with a built-in damping chamber preventing valve flutter in case of low refrigerant velocity and / or low density
- Each valve is clearly marked with type, size and performance range
- Easy to disassemble for inspection and service
- Internal backseating enables replacement of the spindle seal whilst the valve is active, i.e. under pressure
- Optimal flow characteristics ensuring quick opening to the fully open position
- Protection against pulsation by built-in damping facility
- Housing and bonnet material is low temperature steel according to requirements of the Pressure Equipment Directive and other international classification authorities
- Equipped with Stainless steel bolts
- Max. working pressure PS / MWP: 52 bar g / 754 psi g
- Temperature range: -60 – 150 °C / -76 – 302 °F

Technical data and ordering

SCA-X / CHV-X, Check valves

Technical data

Type	Description
Pressure range	52 bar g / 754 psig
Temperature range	-60 – 150 °C / -76 – 302 °F

For installation in heat pump applications, please contact Danfoss.

SCA-X, Check and stop valve, factory assembled - 52 bar / 754 psi

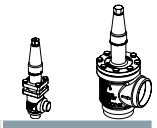

Ordering

Type	Connection size		Execution	Connection type	Connection designation	Code no.
	[in]	[mm]				
SCA-X 15	1/2	15	Angleway	Butt weld, EN 10220	D	148B5208
	1/2	15	Angleway	Butt weld, ANSI (B 36.10)	A	148B5209
SCA-X 20	3/4	20	Angleway	Butt weld, EN 10220	D	148B5308
	3/4	20	Angleway	Butt weld, ANSI (B 36.10)	A	148B5309
SCA-X 25	1	25	Angleway	Butt weld, EN 10220	D	148B5408
	1	25	Angleway	Butt weld, ANSI (B 36.10)	A	148B5409
SCA-X 32	1 1/4	32	Angleway	Butt weld, EN 10220	D	148B5508
	1 1/4	32	Angleway	Butt weld, ANSI (B 36.10)	A	148B5509
SCA-X 40	1 1/2	40	Angleway	Butt weld, EN 10220	D	148B5608
	1 1/2	40	Angleway	Butt weld, ANSI (B 36.10)	A	148B5609
SCA-X 50	2	50	Angleway	Butt weld, EN 10220	D	148B5702
	2	50	Angleway	Butt weld, ANSI (B 36.10)	A	148B5703
	2	50	Angleway	Socket weld, ANSI (B 16.11)	SOC	148B5704
SCA-X 65	2 1/2	65	Angleway	Butt weld, EN 10220	D	148B5803
	2 1/2	65	Angleway	Butt weld, ANSI (B 36.10)	A	148B5802
SCA-X 80	3	80	Angleway	Butt weld, EN 10220	D	148B5902
	3	80	Angleway	Butt weld, ANSI (B 36.10)	A	148B5903
SCA-X 100	4	100	Angleway	Butt weld, EN 10220	D	148B6002
	4	100	Angleway	Butt weld, ANSI (B 36.10)	A	148B6004
SCA-X 125	5	125	Angleway	Butt weld, EN 10220	D	148B6102
	5	125	Angleway	Butt weld, ANSI (B 36.10)	A	148B6103

CHV-X, Check valve, factory assembled - 52 bar / 754 psi

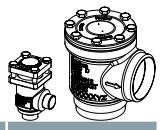

Ordering angleway valves

Type	Connection size		Execution	Connection type	Connection designation	Code no.
	[in]	[mm]				
CHV-X 15	1/2	15	Angleway	Butt weld, EN 10220	D	148B5236
	1/2	15	Angleway	Butt weld, ANSI (B 36.10)	A	148B5237
CHV-X 20	3/4	20	Angleway	Butt weld, EN 10220	D	148B5336
	3/4	20	Angleway	Butt weld, ANSI (B 36.10)	A	148B5337
CHV-X 25	1	25	Angleway	Butt weld, EN 10220	D	148B5436
	1	25	Angleway	Butt weld, ANSI (B 36.10)	A	148B5437
CHV-X 32	1 1/4	32	Angleway	Butt weld, EN 10220	D	148B5536
	1 1/4	32	Angleway	Butt weld, ANSI (B 36.10)	A	148B5537
	1 1/4	32	Angleway	Socket weld, ANSI (B 16.11)	SOC	148B5539
CHV-X 40	1 1/2	40	Angleway	Butt weld, EN 10220	D	148B5636
	1 1/2	40	Angleway	Butt weld, ANSI (B 36.10)	A	148B5637
CHV-X 50	2	50	Angleway	Butt weld, EN 10220	D	148B5736
	2	50	Angleway	Butt weld, ANSI (B 36.10)	A	148B5737
	2	50	Angleway	Socket weld, ANSI (B 16.11)	SOC	148B5740
CHV-X 65	2 1/2	65	Angleway	Butt weld, EN 10220	D	148B5838
	2 1/2	65	Angleway	Butt weld, ANSI (B 36.10)	A	148B5837
CHV-X 80	3	80	Angleway	Butt weld, EN 10220	D	148B5936
	3	80	Angleway	Butt weld, ANSI (B 36.10)	A	148B5937
CHV-X 100	4	100	Angleway	Butt weld, EN 10220	D	148B6036
	4	100	Angleway	Butt weld, ANSI (B 36.10)	A	148B6037
CHV-X 125	5	125	Angleway	Butt weld, EN 10220	D	148B6136
	5	125	Angleway	Butt weld, ANSI (B 36.10)	A	148B6137

Ordering



CHV-X, Check valve, factory assembled - 52 bar / 754 psi

Ordering straightway valves

Type	Connection size		Execution	Connection type	Connection designation	Code no.
	[in]	[mm]				
CHV-X 15	1/2	15	Straightway	Butt weld, EN 10220	D	148B6581
	1/2	15	Straightway	Butt weld, ANSI (B 36.10)	A	148B6582
	1/2	15	Straightway	Socket weld, ANSI (B 16.11)	SOC	148B6601
CHV-X 20	3/4	20	Straightway	Butt weld, EN 10220	D	148B6583
	3/4	20	Straightway	Butt weld, ANSI (B 36.10)	A	148B6584
	3/4	20	Straightway	Socket weld, ANSI (B 16.11)	SOC	148B6602
CHV-X 25	1	25	Straightway	Butt weld, EN 10220	D	148B6585
	1	25	Straightway	Butt weld, ANSI (B 36.10)	A	148B6586
	1	25	Straightway	Socket weld, ANSI (B 16.11)	SOC	148B6603
CHV-X 32	1 1/4	32	Straightway	Butt weld, EN 10220	D	148B6587
	1 1/4	32	Straightway	Butt weld, ANSI (B 36.10)	A	148B6588
	1 1/4	32	Straightway	Socket weld, ANSI (B 16.11)	SOC	148B6604
CHV-X 40	1 1/2	40	Straightway	Butt weld, EN 10220	D	148B6589
	1 1/2	40	Straightway	Butt weld, ANSI (B 36.10)	A	148B6590
	1 1/2	40	Straightway	Socket weld, ANSI (B 16.11)	SOC	148B6605
CHV-X 50	2	50	Straightway	Butt weld, EN 10220	D	148B6591
	2	50	Straightway	Butt weld, ANSI (B 36.10)	A	148B6592
	2	50	Straightway	Socket weld, ANSI (B 16.11)	SOC	148B6606
CHV-X 65	2 1/2	65	Straightway	Butt weld, EN 10220	D	148B6593
	2 1/2	65	Straightway	Butt weld, ANSI (B 36.10)	A	148B6594
CHV-X 80	3	80	Straightway	Butt weld, EN 10220	D	148B6595
	3	80	Straightway	Butt weld, ANSI (B 36.10)	A	148B6596
CHV-X 100	4	100	Straightway	Butt weld, EN 10220	D	148B6597
	4	100	Straightway	Butt weld, ANSI (B 36.10)	A	148B6598
CHV-X 125	5	125	Straightway	Butt weld, EN 10220	D	148B6599
	5	125	Straightway	Butt weld, ANSI (B 36.10)	A	148B6600

Ordering

Ordering SCA-X from the parts programme (valve body + top part)
Example:

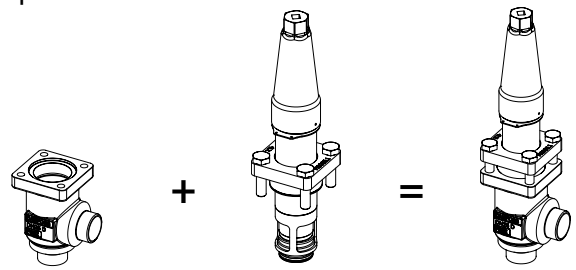

Valve body, size 25 (1 in), DIN butt weld, angleway, **148B5452**

Top part, SCA-X size 25 (1 in) **148B5482**

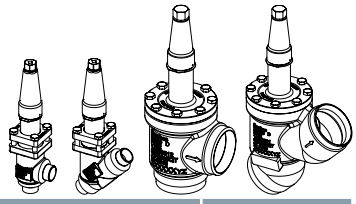

SCA-X 15 - 52 bar / 754 psi

Valve body

Type	Connection size [in]	Connection size [mm]	Execution	Connection type	Connection designation	Code no.
SCA-X 15	1/2	15	Angleway	Butt weld, EN 10220	D	148B5252
	1/2	15	Angleway	Butt weld, ANSI (B 36.10)	A	148B5254
	1/2	15	Angleway	Female pipe thread (ANSI / ASME B 1.20.1)	FPT	148B5258
	1/2	15	Angleway	Socket weld, ANSI (B 16.11)	SOC	148B5256
	1/2	15	Angleway	Butt weld, F	F	148B6414
	1/2	15	Angleway	Butt weld, GOST	G	148B5391
SCA-X 15	1/2	15	Straightway	Butt weld, EN 10220	D	148B5253
	1/2	15	Straightway	Butt weld, ANSI (B 36.10)	A	148B5255
	1/2	15	Straightway	Female pipe thread (ANSI / ASME B 1.20.1)	FPT	148B5259
	1/2	15	Straightway	Socket weld, ANSI (B 16.11)	SOC	148B5257
	1/2	15	Straightway	Butt weld, F	F	148B6424
	1/2	15	Straightway	Butt weld, GOST	G	148B5392

Top part [1])

Type	Code no.
SCA-X 15	148B5282

SCA-X 20 - 52 bar / 754 psi

Valve body

Type	Connection size [in]	Connection size [mm]	Execution	Connection type	Connection designation	Code no.
SCA-X 20	3/4	20	Angleway	Butt weld, EN 10220	D	148B5352
	3/4	20	Angleway	Butt weld, ANSI (B 36.10)	A	148B5354
	3/4	20	Angleway	Female pipe thread (ANSI / ASME B 1.20.1)	FPT	148B5358
	3/4	20	Angleway	Socket weld, ANSI (B 16.11)	SOC	148B5356
	3/4	20	Angleway	Butt weld, F	F	148B6415
	3/4	20	Angleway	Butt weld, GOST	G	148B5393
SCA-X 20	3/4	20	Straightway	Butt weld, EN 10220	D	148B5353
	3/4	20	Straightway	Butt weld, ANSI (B 36.10)	A	148B5355
	3/4	20	Straightway	Female pipe thread (ANSI / ASME B 1.20.1)	FPT	148B5359
	3/4	20	Straightway	Socket weld, ANSI (B 16.11)	SOC	148B5357
	3/4	20	Straightway	Butt weld, F	F	148B6425
	3/4	20	Straightway	Butt weld, GOST	G	148B5394

Top part [1])

Type	Code no.
SCA-X 20	148B5282

SCA-X 25 - 52 bar / 754 psi

Valve body

Type	Connection size [in]	Connection size [mm]	Execution	Connection type	Connection designation	Code no.
SCA-X 25	1	25	Angleway	Butt weld, EN 10220	D	148B5452
	1	25	Angleway	Butt weld, ANSI (B 36.10)	A	148B5454
	1	25	Angleway	Female pipe thread (ANSI / ASME B 1.20.1)	FPT	148B5458
	1	25	Angleway	Socket weld, ANSI (B 16.11)	SOC	148B5456
	1	25	Angleway	Butt weld, F	F	148B6416
	1	25	Angleway	Butt weld, GOST	G	148B5498
SCA-X 25	1	25	Angleway	Butt weld, EN 10220	D	148B5453
	1	25	Straightway	Butt weld, ANSI (B 36.10)	A	148B5455
	1	25	Straightway	Female pipe thread (ANSI / ASME B 1.20.1)	FPT	148B5459
	1	25	Straightway	Socket weld, ANSI (B 16.11)	SOC	148B5457
	1	25	Straightway	Butt weld, F	F	148B6426
	1	25	Straightway	Butt weld, GOST	G	148B5499

Top part [1])

Type	Code no.
SCA-X 25	148B5482

[1]) Including gaskets and bolts.

Ordering

Ordering SCA-X from the parts programme (valve body + top part)

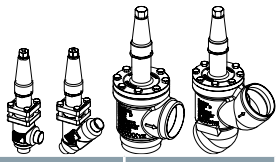

SCA-X 32 - 52 bar / 754 psi

Valve body

Type	Connection size		Execution	Connection type	Connection designation	Code no.
	[in]	[mm]				
SCA-X 32	1 1/4	32	Angleway	Butt weld, EN 10220	D	148B5576
	1 1/4	32	Angleway	Butt weld, ANSI (B 36.10)	A	148B5578
	1 1/4	32	Angleway	Female pipe thread (ANSI / ASME B 1.20.1)	FPT	148B5582
	1 1/4	32	Angleway	Socket weld, ANSI (B 16.11)	SOC	148B5580
	1 1/4	32	Angleway	Butt weld, F	F	148B6417
	1 1/4	32	Angleway	Butt weld, GOST	G	148B5593
SCA-X 32	1 1/4	32	Straightway	Butt weld, EN 10220	D	148B5577
	1 1/4	32	Straightway	Butt weld, ANSI (B 36.10)	A	148B5579
	1 1/4	32	Straightway	Female pipe thread (ANSI / ASME B 1.20.1)	FPT	148B5583
	1 1/4	32	Straightway	Socket weld, ANSI (B 16.11)	SOC	148B5581
	1 1/4	32	Straightway	Butt weld, F	F	148B6427
	1 1/4	32	Straightway	Butt weld, GOST	G	148B5594

Top part [1])

Type	Code no.
SCA-X 32	148B5482

SCA-X 40 - 52 bar / 754 psi

Valve body

Type	Connection size		Execution	Connection type	Connection designation	Code no.
	[in]	[mm]				
SCA-X 40	1 1/2	40	Angleway	Butt weld, EN 10220	D	148B5652
	1 1/2	40	Angleway	Butt weld, ANSI (B 36.10)	A	148B5654
	1 1/2	40	Angleway	Socket weld, ANSI (B 16.11)	SOC	148B5656
	1 1/2	40	Angleway	Butt weld, F	F	148B6418
	1 1/2	40	Angleway	Butt weld, GOST	G	148B5681
SCA-X 40	1 1/2	40	Straightway	Butt weld, EN 10220	D	148B5653
	1 1/2	40	Straightway	Butt weld, ANSI (B 36.10)	A	148B5655
	1 1/2	40	Straightway	Socket weld, ANSI (B 16.11)	SOC	148B5657
	1 1/2	40	Straightway	Butt weld, F	F	148B6428
	1 1/2	40	Straightway	Butt weld, GOST	G	148B5682

Top part [1])

Type	Code no.
SCA-X 40	148B5482

SCA-X 50 - 52 bar / 754 psi

Valve body

Type	Connection size		Execution	Connection type	Connection designation	Code no.
	[in]	[mm]				
SCA-X 50	2	50	Angleway	Butt weld, EN 10220	D	148B5741
	2	50	Angleway	Butt weld, ANSI (B 36.10)	A	148B5743
	2	50	Angleway	Socket weld, ANSI (B 16.11)	SOC	148B5745
	2	50	Angleway	Butt weld, F	F	148B6419
	2	50	Angleway	Butt weld, GOST	G	148B5759
SCA-X 50	2	50	Straightway	Butt weld, EN 10220	D	148B5742
	2	50	Straightway	Butt weld, ANSI (B 36.10)	A	148B5744
	2	50	Straightway	Socket weld, ANSI (B 16.11)	SOC	148B5746
	2	50	Straightway	Butt weld, F	F	148B6429
	2	50	Straightway	Butt weld, GOST	G	148B5760

Top part [1])

Type	Code no.
SCA-X 50	148B5735

SCA-X 65 - 52 bar / 754 psi

Valve body

Type	Connection size		Execution	Connection type	Connection designation	Code no.
	[in]	[mm]				
SCA-X 65	2 1/2	65	Angleway	Butt weld, EN 10220	D	148B5816
	2 1/2	65	Angleway	Butt weld, ANSI (B 36.10)	A	148B5818
	2 1/2	65	Angleway	Butt weld, F	F	148B6420
	2 1/2	65	Angleway	Butt weld, GOST	G	148B5816
SCA-X 65	2 1/2	65	Straightway	Butt weld, EN 10220	D	148B5817
	2 1/2	65	Straightway	Butt weld, ANSI (B 36.10)	A	148B5819
	2 1/2	65	Straightway	Butt weld, F	F	148B6430
	2 1/2	65	Straightway	Butt weld, GOST	G	148B5817

Top part [1])

Type	Code no.
SCA-X 65	148B5825

[1]) *Including gaskets and bolts.*

Ordering

Ordering SCA-X from the parts programme (valve body + top part)

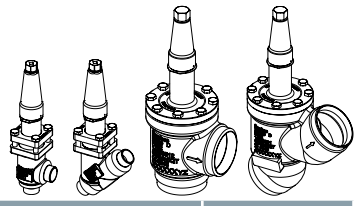

SCA-X 80 - 52 bar / 754 psi

Valve body

Type	Connection size		Execution	Connection type	Connection designation	Code no.
	[in]	[mm]				
SCA-X 80	3	80	Angleway	Butt weld, EN 10220	D	148B5912
	3	80	Angleway	Butt weld, ANSI (B 36.10)	A	148B5914
	3	80	Angleway	Butt weld, F	F	148B6421
	3	80	Angleway	Butt weld, GOST	G	148B5912
SCA-X 80	3	80	Straightway	Butt weld, EN 10220	D	148B5913
	3	80	Straightway	Butt weld, ANSI (B 36.10)	A	148B5915
	3	80	Straightway	Butt weld, F	F	148B6431
	3	80	Straightway	Butt weld, GOST	G	148B5913

Top part [1])

Type						Code no.
SCA-X 80						148B5918

SCA-X 100 - 52 bar / 754 psi

Valve body

Type	Connection size		Execution	Connection type	Connection designation	Code no.
	[in]	[mm]				
SCA-X 100	4	100	Angleway	Butt weld, EN 10220	D	148B6014
	4	100	Angleway	Butt weld, ANSI (B 36.10)	A	148B6016
	4	100	Angleway	Butt weld, F	F	148B6422
	4	100	Angleway	Butt weld, GOST	G	148B6033
SCA-X 100	4	100	Straightway	Butt weld, EN 10220	D	148B6015
	4	100	Straightway	Butt weld, ANSI (B 36.10)	A	148B6017
	4	100	Straightway	Butt weld, F	F	148B6432
	4	100	Straightway	Butt weld, GOST	G	148B6034

Top part [1])

Type						Code no.
SCA-X 100						148B6019

SCA-X 125 - 52 bar / 754 psi

Valve body

Type	Connection size		Execution	Connection type	Connection designation	Code no.
	[in]	[mm]				
SCA-X 125	5	125	Angleway	Butt weld, EN 10220	D	148B6112
	5	125	Angleway	Butt weld, ANSI (B 36.10)	A	148B6114
	5	125	Angleway	Butt weld, F	F	148B6423
	5	125	Angleway	Butt weld, GOST	G	148B6133
SCA-X 125	5	125	Straightway	Butt weld, EN 10220	D	148B6113
	5	125	Straightway	Butt weld, ANSI (B 36.10)	A	148B6115
	5	125	Straightway	Butt weld, F	F	148B6433
	5	125	Straightway	Butt weld, GOST	G	148B6134

Top part [1])

Type						Code no.
SCA-X 125						148B6118

[1]) Including gaskets and bolts.

Ordering

Ordering CHV-X from the parts programme (valve body + top part)
Example:

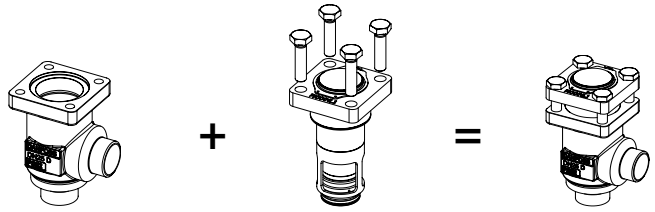

Valve body, size 25 (1 in), DIN butt weld, angleway, **148B5452**

Top part, CHV-X size 25 (1 in) **148B5483**

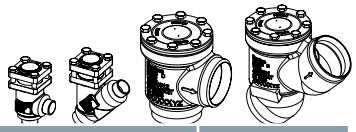

CHV-X 15 - 52 bar / 754 psi

Valve body

Type	Connection size		Execution	Connection type	Connection designation	Code no.
	[in]	[mm]				
CHV-X 15	1/2	15	Angleway	Butt weld, EN 10220	D	148B5252
	1/2	15	Angleway	Butt weld, ANSI (B 36.10)	A	148B5254
	1/2	15	Angleway	Female pipe thread (ANSI / ASME B 1.20.1)	FPT	148B5258
	1/2	15	Angleway	Socket weld, ANSI (B 16.11)	SOC	148B5256
	1/2	15	Angleway	Butt weld, F	F	148B6414
	1/2	15	Angleway	Butt weld, GOST	G	148B5391
CHV-X 15	1/2	15	Straightway	Butt weld, EN 10220	D	148B5253
	1/2	15	Straightway	Butt weld, ANSI (B 36.10)	A	148B5255
	1/2	15	Straightway	Female pipe thread (ANSI / ASME B 1.20.1)	FPT	148B5259
	1/2	15	Straightway	Socket weld, ANSI (B 16.11)	SOC	148B5257
	1/2	15	Straightway	Butt weld, F	F	148B6424
	1/2	15	Straightway	Butt weld, GOST	G	148B5392

Top part [1])

Type	Code no.
CHV-X 15	148B5283

CHV-X 20 - 52 bar / 754 psi

Valve body

Type	Connection size		Execution	Connection type	Connection designation	Code no.
	[in]	[mm]				
CHV-X 20	3/4	20	Angleway	Butt weld, EN 10220	D	148B5352
	3/4	20	Angleway	Butt weld, ANSI (B 36.10)	A	148B5354
	3/4	20	Angleway	Female pipe thread (ANSI / ASME B 1.20.1)	FPT	148B5358
	3/4	20	Angleway	Socket weld, ANSI (B 16.11)	SOC	148B5356
	3/4	20	Angleway	Butt weld, F	F	148B6415
	3/4	20	Angleway	Butt weld, GOST	G	148B5393
CHV-X 20	3/4	20	Straightway	Butt weld, EN 10220	D	148B5353
	3/4	20	Straightway	Butt weld, ANSI (B 36.10)	A	148B5355
	3/4	20	Straightway	Female pipe thread (ANSI / ASME B 1.20.1)	FPT	148B5359
	3/4	20	Straightway	Socket weld, ANSI (B 16.11)	SOC	148B5357
	3/4	20	Straightway	Butt weld, F	F	148B6425
	3/4	20	Straightway	Butt weld, GOST	G	148B5394

Top part [1])

Type	Code no.
CHV-X 20	148B5283

CHV-X 25 - 52 bar / 754 psi

Valve body

Type	Connection size		Execution	Connection type	Connection designation	Code no.
	[in]	[mm]				
CHV-X 25	1	25	Angleway	Butt weld, EN 10220	D	148B5452
	1	25	Angleway	Butt weld, ANSI (B 36.10)	A	148B5454
	1	25	Angleway	Female pipe thread (ANSI / ASME B 1.20.1)	FPT	148B5458
	1	25	Angleway	Socket weld, ANSI (B 16.11)	SOC	148B5456
	1	25	Angleway	Butt weld, F	F	148B6416
	1	25	Angleway	Butt weld, GOST	G	148B5498
CHV-X 25	1	25	Angleway	Butt weld, EN 10220	D	148B5453
	1	25	Straightway	Butt weld, ANSI (B 36.10)	A	148B5455
	1	25	Straightway	Female pipe thread (ANSI / ASME B 1.20.1)	FPT	148B5459
	1	25	Straightway	Socket weld, ANSI (B 16.11)	SOC	148B5457
	1	25	Straightway	Butt weld, F	F	148B6426
	1	25	Straightway	Butt weld, GOST	G	148B5499

Top part [1])

Type	Code no.
CHV-X 25	148B5483

[1]) Including gaskets and bolts.

Ordering

Ordering CHV-X from the parts programme (valve body + top part)

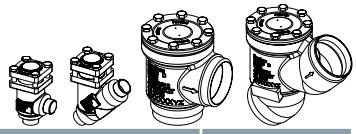

CHV-X 32 - 52 bar / 754 psi

Valve body

Type	Connection size [in]	Connection size [mm]	Execution	Connection type	Connection designation	Code no.
CHV-X 32	1 ¼	32	Angleway	Butt weld, EN 10220	D	148B5576
	1 ¼	32	Angleway	Butt weld, ANSI (B 36.10)	A	148B5578
	1 ¼	32	Angleway	Female pipe thread (ANSI / ASME B 1.20.1)	FPT	148B5582
	1 ¼	32	Angleway	Socket weld, ANSI (B 16.11)	SOC	148B5580
	1 ¼	32	Angleway	Butt weld, F	F	148B6417
	1 ¼	32	Angleway	Butt weld, GOST	G	148B5593
CHV-X 32	1 ¼	32	Straightway	Butt weld, EN 10220	D	148B5577
	1 ¼	32	Straightway	Butt weld, ANSI (B 36.10)	A	148B5579
	1 ¼	32	Straightway	Female pipe thread (ANSI / ASME B 1.20.1)	FPT	148B5583
	1 ¼	32	Straightway	Socket weld, ANSI (B 16.11)	SOC	148B5581
	1 ¼	32	Straightway	Butt weld, F	F	148B6427
	1 ¼	32	Straightway	Butt weld, GOST	G	148B5594

Top part [1])

Type	Code no.
CHV-X 32	148B5483

CHV-X 40 - 52 bar / 754 psi

Valve body

Type	Connection size [in]	Connection size [mm]	Execution	Connection type	Connection designation	Code no.
CHV-X 40	1 ½	40	Angleway	Butt weld, EN 10220	D	148B5652
	1 ½	40	Angleway	Butt weld, ANSI (B 36.10)	A	148B5654
	1 ½	40	Angleway	Socket weld, ANSI (B 16.11)	SOC	148B5656
	1 ½	40	Angleway	Butt weld, F	F	148B6418
	1 ½	40	Angleway	Butt weld, GOST	G	148B5681
CHV-X 40	1 ½	40	Straightway	Butt weld, EN 10220	D	148B5653
	1 ½	40	Straightway	Butt weld, ANSI (B 36.10)	A	148B5655
	1 ½	40	Straightway	Socket weld, ANSI (B 16.11)	SOC	148B5657
	1 ½	40	Straightway	Butt weld, F	F	148B6428
	1 ½	40	Straightway	Butt weld, GOST	G	148B5682

Top part [1])

Type	Code no.
CHV-X 40	148B5483

CHV-X 50 - 52 bar / 754 psi

Valve body

Type	Connection size [in]	Connection size [mm]	Execution	Connection type	Connection designation	Code no.
CHV-X 50	2	50	Angleway	Butt weld, EN 10220	D	148B5741
	2	50	Angleway	Butt weld, ANSI (B 36.10)	A	148B5743
	2	50	Angleway	Socket weld, ANSI (B 16.11)	SOC	148B5745
	2	50	Angleway	Butt weld, F	F	148B6419
	2	50	Angleway	Butt weld, GOST	G	148B5759
CHV-X 50	2	50	Straightway	Butt weld, EN 10220	D	148B5742
	2	50	Straightway	Butt weld, ANSI (B 36.10)	A	148B5744
	2	50	Straightway	Socket weld, ANSI (B 16.11)	SOC	148B5746
	2	50	Straightway	Butt weld, F	F	148B6429
	2	50	Straightway	Butt weld, GOST	G	148B5760

Top part [1])

Type	Code no.
CHV-X 50	148B5747

CHV-X 65 - 52 bar / 754 psi

Valve body

Type	Connection size [in]	Connection size [mm]	Execution	Connection type	Connection designation	Code no.
CHV-X 65	2 ½	65	Angleway	Butt weld, EN 10220	D	148B5816
	2 ½	65	Angleway	Butt weld, ANSI (B 36.10)	A	148B5818
	2 ½	65	Angleway	Butt weld, F	F	148B6420
	2 ½	65	Angleway	Butt weld, GOST	G	148B5816
CHV-X 65	2 ½	65	Straightway	Butt weld, EN 10220	D	148B5817
	2 ½	65	Straightway	Butt weld, ANSI (B 36.10)	A	148B5819
	2 ½	65	Straightway	Butt weld, F	F	148B6430
	2 ½	65	Straightway	Butt weld, GOST	G	148B5817

Top part [1])

Type	Code no.
CHV-X 65	148B5827

[1]) *Including gaskets and bolts.*

Ordering

Ordering CHV-X from the parts programme (valve body + top part)

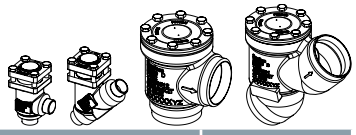

CHV-X 80 - 52 bar / 754 psi

Valve body

Type	Connection size		Execution	Connection type	Connection designation	Code no.
	[in]	[mm]				
CHV-X 80	3	80	Angleway	Butt weld, EN 10220	D	148B5912
	3	80	Angleway	Butt weld, ANSI (B 36.10)	A	148B5914
	3	80	Angleway	Butt weld, F	F	148B6421
	3	80	Angleway	Butt weld, GOST	G	148B5912
CHV-X 80	3	80	Straightway	Butt weld, EN 10220	D	148B5913
	3	80	Straightway	Butt weld, ANSI (B 36.10)	A	148B5915
	3	80	Straightway	Butt weld, F	F	148B6431
	3	80	Straightway	Butt weld, GOST	G	148B5913

Top part [1])

Type	Code no.
CHV-X 80	148B5919

CHV-X 100 - 52 bar / 754 psi

Valve body

Type	Connection size		Execution	Connection type	Connection designation	Code no.
	[in]	[mm]				
CHV-X 100	4	100	Angleway	Butt weld, EN 10220	D	148B6014
	4	100	Angleway	Butt weld, ANSI (B 36.10)	A	148B6016
	4	100	Angleway	Butt weld, F	F	148B6422
	4	100	Angleway	Butt weld, GOST	G	148B6033
CHV-X 100	4	100	Straightway	Butt weld, EN 10220	D	148B6015
	4	100	Straightway	Butt weld, ANSI (B 36.10)	A	148B6017
	4	100	Straightway	Butt weld, F	F	148B6432
	4	100	Straightway	Butt weld, GOST	G	148B6034

Top part [1])

Type	Code no.
CHV-X 100	148B6022

CHV-X 125 - 52 bar / 754 psi

Valve body

Type	Connection size		Execution	Connection type	Connection designation	Code no.
	[in]	[mm]				
CHV-X 125	5	125	Angleway	Butt weld, EN 10220	D	148B6112
	5	125	Angleway	Butt weld, ANSI (B 36.10)	A	148B6114
	5	125	Angleway	Butt weld, F	F	148B6423
	5	125	Angleway	Butt weld, GOST	G	148B6133
CHV-X 125	5	125	Straightway	Butt weld, EN 10220	D	148B6113
	5	125	Straightway	Butt weld, ANSI (B 36.10)	A	148B6115
	5	125	Straightway	Butt weld, F	F	148B6433
	5	125	Straightway	Butt weld, GOST	G	148B6134

Top part [1])

Type	Code no.
CHV-X 125	148B6119

[1]) *Including gaskets and bolts.*

Quick Selection Notes:

SCA-X, Check and stop valve / CHV-X, Check valve - 65 bar / 943 psi

SCA-X are check valves with a built-in shut-off valve function. SCA-X valves are available in angleway versions.
CHV-X are check valves only. The SCA-X is equipped with vented cap and has internal backseating enabling the spindle seal to be replaced whilst the valve still under pressure.
SCA-X and CHV-X are members of the SVL modular concept product family, so each valve housing is available with several different connection types and sizes, and it is possible to convert SCA-X or CHV-X to any other product in the SVL family by replacing the complete top part.
The valves are designed to open at very low differential pressures, allow favourable flow conditions and are easy to disassemble for inspection and service.

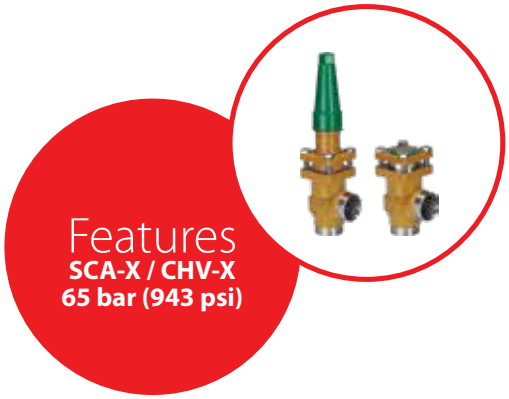

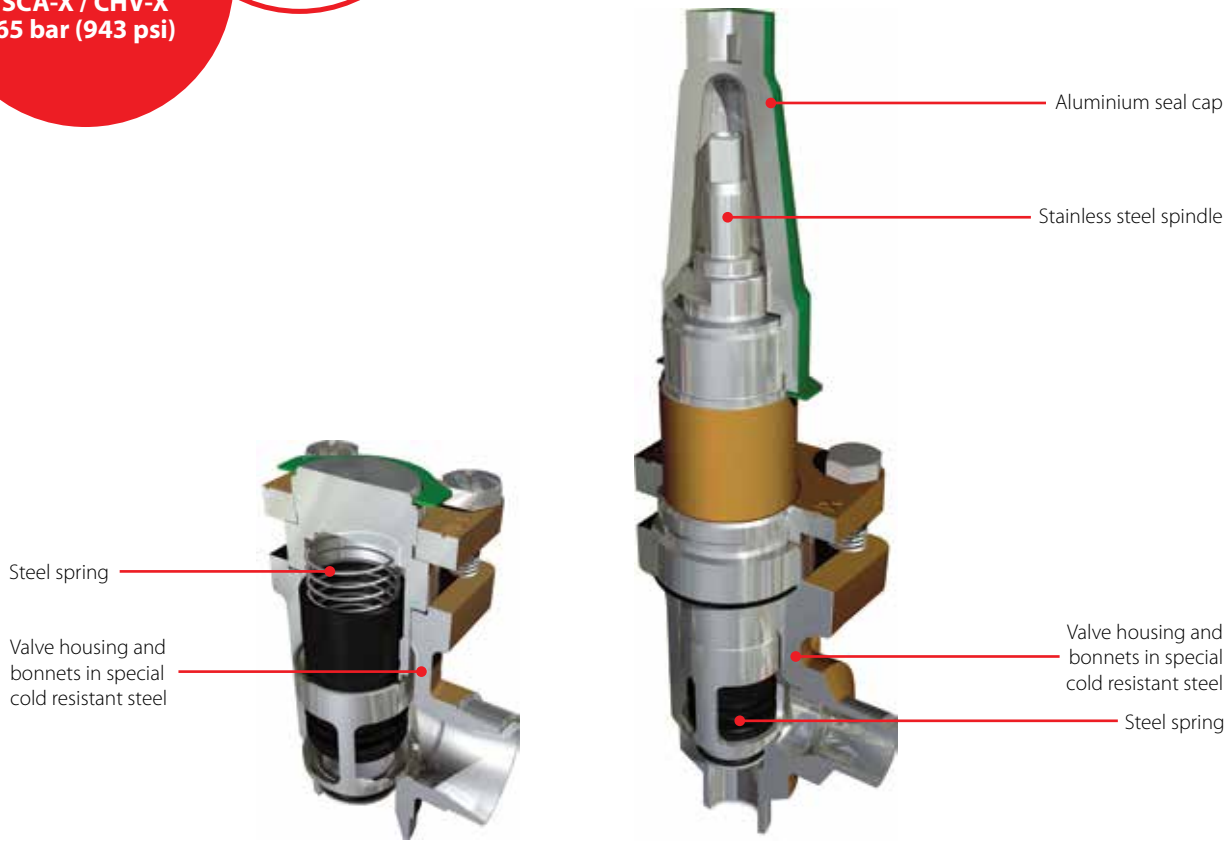

CHV-X SCA-X

Facts

- Applicable to R717, R744, R134a, R170, R22, R290, R401A, R402A, R404A, R407A, R407B, R407C, R407F, R409A, R410A, R421A, R502, R507, R600 and R600a
  For a fully updated list of approved refrigerants, visit www.products.danfoss.com and search for individual code numbers, where refrigerants are listed as part of product specifications.
- Housing is Standard SVL angleway housing allowing other inserts from the SVL platform to be installed
- Designed to open at a very low differential pressure of 0.04 bar / 0.58 psig
- Designed with a built-in damping chamber preventing valve flutter in case of low refrigerant velocity and / or low density
- Each valve is clearly marked with type, size and performance range
- Easy to disassemble for inspection and service
- Internal backseating enables replacement of the spindle seal whilst the valve is active, i.e. under pressure
- Optimal flow characteristics ensuring quick opening to the fully open position
- Protection against pulsation by built-in damping facility
- Housing and bonnet material is low temperature steel according to requirements of the Pressure Equipment Directive and other international classification authorities
- Equipped with Stainless steel bolts
- Max. working pressure PS / MWP: 65 bar g / 943 psi g
- Temperature range: -60 – 150 °C / -76 – 302 °F

Technical data and ordering

SCA-X Check and Stop valves / CHV-X, Check valves

Technical data

Type	Description
Pressure range	65 bar g / 943 psig
Temperature range	-60 – 150 °C / -76 – 302 °F

For installation in heat pump applications, please contact Danfoss.

Ordering

Ordering SCA-X from the parts programme (valve body + top part)
Example:

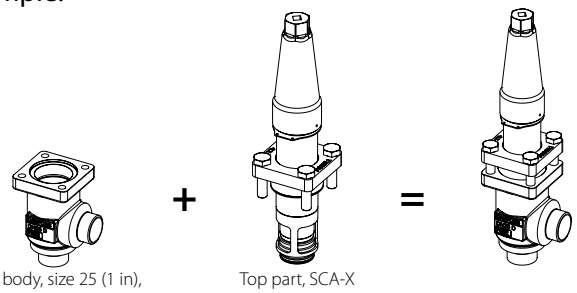

Valve body, size 25 (1 in), DIN butt weld, angleway, **148B6624**

Top part, SCA-X size 25 (1 in) **148B5770**

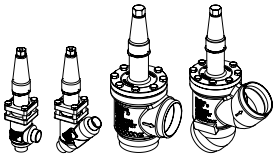

SCA-X 15 - 65 bar / 943 psi

Valve body

Type	Connection size [in]	Connection size [mm]	Execution	Connection type	Connection designation	Code no.
SCA-X 15	1/2	15	Angleway	Butt weld, EN 10220	D	148B6622
	1/2	15	Angleway	Butt weld, ANSI (B 36.10)	A	148B6612
SCA-X 15	1/2	15	Straightway	Butt weld, EN 10220	D	148B6642
	1/2	15	Straightway	Butt weld, ANSI (B 36.10)	A	148B6632

Top part [1])

Type	Code no.
SCA-X 15	148B5769

SCA-X 20 - 65 bar / 943 psi

Valve body

Type	Connection size [in]	Connection size [mm]	Execution	Connection type	Connection designation	Code no.
SCA-X 20	3/4	20	Angleway	Butt weld, EN 10220	D	148B6623
	3/4	20	Angleway	Butt weld, ANSI (B 36.10)	A	148B6613
SCA-X 20	3/4	20	Straightway	Butt weld, EN 10220	D	148B6643
	3/4	20	Straightway	Butt weld, ANSI (B 36.10)	A	148B6633

Top part [1])

Type	Code no.
SCA-X 20	148B5769

SCA-X 25 - 65 bar / 943 psi

Valve body

Type	Connection size [in]	Connection size [mm]	Execution	Connection type	Connection designation	Code no.
SCA-X 25	1	25	Angleway	Butt weld, EN 10220	D	148B6624
	1	25	Angleway	Butt weld, ANSI (B 36.10)	A	148B6614
SCA-X 25	1	25	Angleway	Butt weld, EN 10220	D	148B6644
	1	25	Straightway	Butt weld, ANSI (B 36.10)	A	148B6634

Top part [1])

Type	Code no.
SCA-X 25	148B5770

[1]) *Including gaskets and bolts.*

Ordering

Ordering SCA-X from the parts programme (valve body + top part)

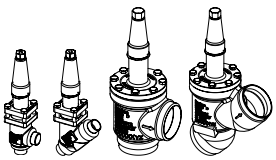

SCA-X 32 - 65 bar / 943 psi

Valve body

Type	Connection size		Execution	Connection type	Connection designation	Code no.
	[in]	[mm]				
SCA-X 32	1 1/4	32	Angleway	Butt weld, EN 10220	D	148B6625
	1 1/4	32	Angleway	Butt weld, ANSI (B 36.10)	A	148B6615
SCA-X 32	1 1/4	32	Straightway	Butt weld, EN 10220	D	148B6645
	1 1/4	32	Straightway	Butt weld, ANSI (B 36.10)	A	148B6635

Top part [1])

Type	Code no.
SCA-X 32	148B5770

SCA-X 40 - 65 bar / 943 psi

Valve body

Type	Connection size		Execution	Connection type	Connection designation	Code no.
	[in]	[mm]				
SCA-X 40	1 1/2	40	Angleway	Butt weld, EN 10220	D	148B6626
	1 1/2	40	Angleway	Butt weld, ANSI (B 36.10)	A	148B6616
SCA-X 40	1 1/2	40	Straightway	Butt weld, EN 10220	D	148B6646
	1 1/2	40	Straightway	Butt weld, ANSI (B 36.10)	A	148B6636

Top part [1])

Type	Code no.
SCA-X 40	148B5770

SCA-X 50 - 65 bar / 943 psi

Valve body

Type	Connection size		Execution	Connection type	Connection designation	Code no.
	[in]	[mm]				
SCA-X 50	2	50	Angleway	Butt weld, EN 10220	D	148B6627
	2	50	Angleway	Butt weld, ANSI (B 36.10)	A	148B6617
SCA-X 50	2	50	Straightway	Butt weld, EN 10220	D	148B6647
	2	50	Straightway	Butt weld, ANSI (B 36.10)	A	148B6637

Top part [1])

Type	Code no.
SCA-X 50	148B5771

SCA-X 65 - 65 bar / 943 psi

Valve body

Type	Connection size		Execution	Connection type	Connection designation	Code no.
	[in]	[mm]				
SCA-X 65	2 1/2	65	Angleway	Butt weld, EN 10220	D	148B6628
	2 1/2	65	Angleway	Butt weld, ANSI (B 36.10)	A	148B6618
SCA-X 65	2 1/2	65	Straightway	Butt weld, EN 10220	D	148B6648
	2 1/2	65	Straightway	Butt weld, ANSI (B 36.10)	A	148B6638

Top part [1])

Type	Code no.
SCA-X 65	148B5772

SCA-X 80 - 65 bar / 943 psi

Valve body

Type	Connection size		Execution	Connection type	Connection designation	Code no.
	[in]	[mm]				
SCA-X 80	3	80	Angleway	Butt weld, EN 10220	D	148B6629
	3	80	Angleway	Butt weld, ANSI (B 36.10)	A	148B6619
SCA-X 80	3	80	Straightway	Butt weld, EN 10220	D	148B6649
	3	80	Straightway	Butt weld, ANSI (B 36.10)	A	148B6639

Top part [1])

Type	Code no.
SCA-X 80	148B5773

[1]) Including gaskets and bolts.

Ordering

Ordering SCA-X from the parts programme (valve body + top part)

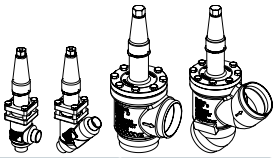

SCA-X 100 - 65 bar / 943 psi

Valve body

Type	Connection size		Execution	Connection type	Connection designation	Code no.
	[in]	[mm]				
SCA-X 32	1 1/4	32	Angleway	Butt weld, EN 10220	D	148B6630
	1 1/4	32	Angleway	Butt weld, ANSI (B 36.10)	A	148B6620
SCA-X 32	1 1/4	32	Straightway	Butt weld, EN 10220	D	148B6650
	1 1/4	32	Straightway	Butt weld, ANSI (B 36.10)	A	148B6640

Top part [1])

Type	Code no.
SCA-X 32	148B5774

SCA-X 125 - 65 bar / 943 psi

Valve body

Type	Connection size		Execution	Connection type	Connection designation	Code no.
	[in]	[mm]				
SCA-X 40	1 1/2	40	Angleway	Butt weld, EN 10220	D	148B6631
	1 1/2	40	Angleway	Butt weld, ANSI (B 36.10)	A	148B6621
SCA-X 40	1 1/2	40	Straightway	Butt weld, EN 10220	D	148B6651
	1 1/2	40	Straightway	Butt weld, ANSI (B 36.10)	A	148B6641

Top part [1])

Type	Code no.
SCA-X 40	148B5775

[1]) *Including gaskets and bolts.*

Ordering

Ordering CHV-X from the parts programme (valve body + top part)
Example:

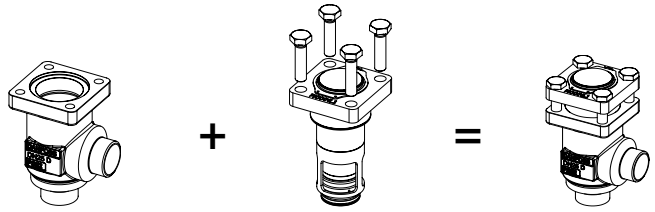

Valve body, size 25 (1 in), DIN butt weld, angleway,
148B6624

Top part, CHV-X size 25 (1 in)
148B5777

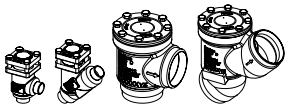

CHV-X 15 - 65 bar / 943 psi

Valve body

Type	Connection size [in]	Connection size [mm]	Execution	Connection type	Connection designation	Code no.
CHV-X 15	1/2	15	Angleway	Butt weld, EN 10220	D	148B6622
	1/2	15	Angleway	Butt weld, ANSI (B 36.10)	A	148B6612
CHV-X 15	1/2	15	Straightway	Butt weld, EN 10220	D	148B6642
	1/2	15	Straightway	Butt weld, ANSI (B 36.10)	A	148B6632

Top part [1])

Type	Code no.
CHV-X 15	148B5776

CHV-X 20 - 65 bar / 943 psi

Valve body

Type	Connection size [in]	Connection size [mm]	Execution	Connection type	Connection designation	Code no.
CHV-X 20	3/4	20	Angleway	Butt weld, EN 10220	D	148B6623
	3/4	20	Angleway	Butt weld, ANSI (B 36.10)	A	148B6613
CHV-X 20	3/4	20	Straightway	Butt weld, EN 10220	D	148B6643
	3/4	20	Straightway	Butt weld, ANSI (B 36.10)	A	148B6633

Top part [1])

Type	Code no.
CHV-X 20	148B5776

CHV-X 25 - 65 bar / 943 psi

Valve body

Type	Connection size [in]	Connection size [mm]	Execution	Connection type	Connection designation	Code no.
CHV-X 25	1	25	Angleway	Butt weld, EN 10220	D	148B6624
	1	25	Angleway	Butt weld, ANSI (B 36.10)	A	148B6614
CHV-X 25	1	25	Angleway	Butt weld, EN 10220	D	148B6644
	1	25	Straightway	Butt weld, ANSI (B 36.10)	A	148B6634

Top part [1])

Type	Code no.
CHV-X 25	148B5777

CHV-X 32 - 65 bar / 943 psi

Valve body

Type	Connection size [in]	Connection size [mm]	Execution	Connection type	Connection designation	Code no.
CHV-X 32	1 1/4	32	Angleway	Butt weld, EN 10220	D	148B6625
	1 1/4	32	Angleway	Butt weld, ANSI (B 36.10)	A	148B6615
CHV-X 32	1 1/4	32	Straightway	Butt weld, EN 10220	D	148B6645
	1 1/4	32	Straightway	Butt weld, ANSI (B 36.10)	A	148B6635

Top part [1])

Type	Code no.
CHV-X 32	148B5777

[1]) *Including gaskets and bolts.*

Ordering

Ordering CHV-X from the parts programme (valve body + top part)



CHV-X 40 - 65 bar / 943 psi

Valve body

Type	Connection size		Execution	Connection type	Connection designation	Code no.
	[in]	[mm]				
CHV-X 40	1 1/2	40	Angleway	Butt weld, EN 10220	D	148B6626
	1 1/2	40	Angleway	Butt weld, ANSI (B 36.10)	A	148B6616
CHV-X 40	1 1/2	40	Straightway	Butt weld, EN 10220	D	148B6646
	1 1/2	40	Straightway	Butt weld, ANSI (B 36.10)	A	148B6636

Top part [1])

Type	Code no.
CHV-X 40	148B5777

CHV-X 50 - 65 bar / 943 psi

Valve body

Type	Connection size		Execution	Connection type	Connection designation	Code no.
	[in]	[mm]				
CHV-X 50	2	50	Angleway	Butt weld, EN 10220	D	148B6627
	2	50	Angleway	Butt weld, ANSI (B 36.10)	A	148B6617
CHV-X 50	2	50	Straightway	Butt weld, EN 10220	D	148B6647
	2	50	Straightway	Butt weld, ANSI (B 36.10)	A	148B6637

Top part [1])

Type	Code no.
CHV-X 50	148B5778

CHV-X 65 - 65 bar / 943 psi

Valve body

Type	Connection size		Execution	Connection type	Connection designation	Code no.
	[in]	[mm]				
CHV-X 65	2 1/2	65	Angleway	Butt weld, EN 10220	D	148B6628
	2 1/2	65	Angleway	Butt weld, ANSI (B 36.10)	A	148B6618
CHV-X 65	2 1/2	65	Straightway	Butt weld, EN 10220	D	148B6648
	2 1/2	65	Straightway	Butt weld, ANSI (B 36.10)	A	148B6638

Top part [1])

Type	Code no.
CHV-X 65	148B5779

CHV-X 80 - 65 bar / 943 psi

Valve body

Type	Connection size		Execution	Connection type	Connection designation	Code no.
	[in]	[mm]				
CHV-X 80	3	80	Angleway	Butt weld, EN 10220	D	148B6629
	3	80	Angleway	Butt weld, ANSI (B 36.10)	A	148B6619
CHV-X 80	3	80	Straightway	Butt weld, EN 10220	D	148B6649
	3	80	Straightway	Butt weld, ANSI (B 36.10)	A	148B6639

Top part [1])

Type	Code no.
CHV-X 80	148B5780

CHV-X 100 - 65 bar / 943 psi

Valve body

Type	Connection size		Execution	Connection type	Connection designation	Code no.
	[in]	[mm]				
CHV-X 100	4	100	Angleway	Butt weld, EN 10220	D	148B6630
	4	100	Angleway	Butt weld, ANSI (B 36.10)	A	148B6620
CHV-X 100	4	100	Straightway	Butt weld, EN 10220	D	148B6650
	4	100	Straightway	Butt weld, ANSI (B 36.10)	A	148B6640

Top part [1])

Type	Code no.
CHV-X 100	148B5781

[1]) *Including gaskets and bolts.*

Ordering

Ordering CHV-X from the parts programme (valve body + top part)

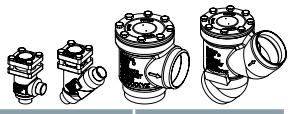

CHV-X 125 - 65 bar / 943 psi

Valve body

Type	Connection size		Execution	Connection type	Connection designation	Code no.
	[in]	[mm]				
CHV-X 125	5	125	Angleway	Butt weld, EN 10220	D	148B6631
	5	125	Angleway	Butt weld, ANSI (B 36.10)	A	148B6621
CHV-X 125	5	125	Straightway	Butt weld, EN 10220	D	148B6651
	5	125	Straightway	Butt weld, ANSI (B 36.10)	A	148B6641

Top part [1])

Type						Code no.
CHV-X 125						148B5782

[1]) *Including gaskets and bolts.*

Quick Selection Notes:

SCA-X SS, Check and stop valve / CHV-X SS, Check valve

SCA-X SS are check valves in stainless steel with a built-in stop valve function. CHV-X SS are stainless steel check valves only.
The valves are designed to open at very low differential pressures, allow favourable flow conditions and are easy to disassemble for inspection and service.

The valve cone has a built-in flexibility to ensure a precise and tight closing towards the valve seat.
A well balanced dampening effect between the piston and the cylinder gives an optimal protection during low loads and against pulsations.

Features
SCA-X SS / CHV-X SS



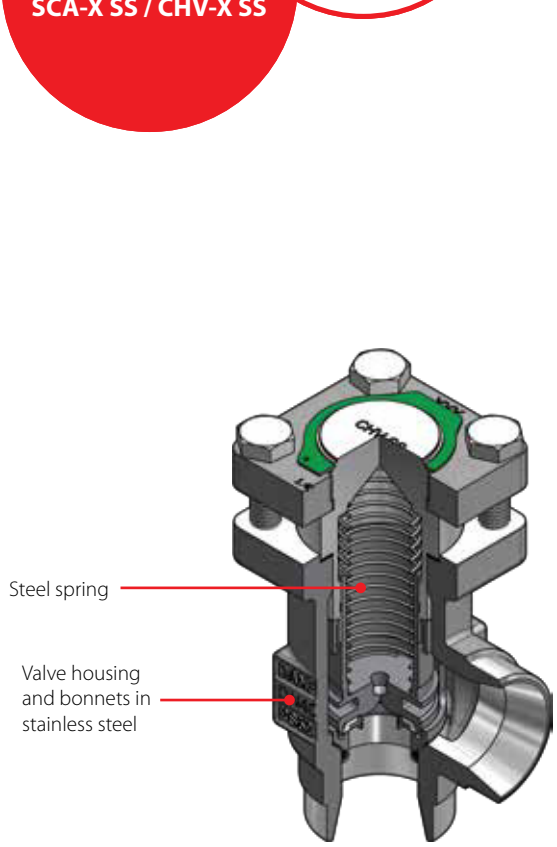

CHV-X SS

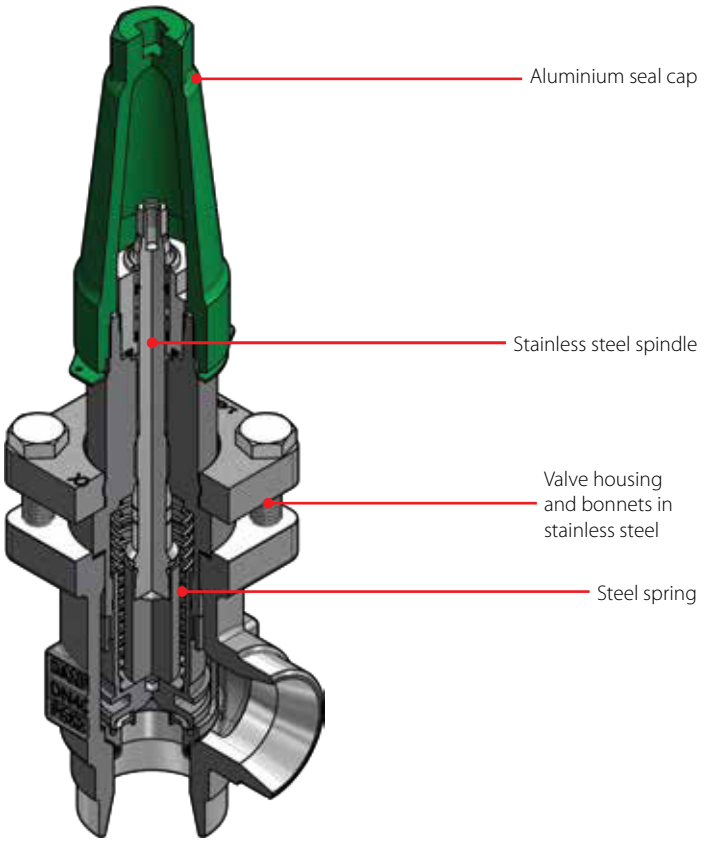

SCA-X SS

Facts

- Applicable to R717, R744, R134a, R170, R22, R290, R401A, R402A, R404A, R407A, R407B, R407C, R407F, R409A, R410A, R421A, R502, R507, R600 and R600a
  For a fully updated list of approved refrigerants, visit www.products.danfoss.com and search for individual code numbers, where refrigerants are listed as part of product specifications.
- Designed to open at a very low differential pressure of 0.04 bar / 0.58 psig
- Designed with a built-in damping chamber preventing valve flutter in case of low refrigerant velocity and / or low density
- Each valve is clearly marked with type, size and performance range
- Easy to disassemble for inspection and service
- Internal backseating enables replacement of the spindle seal whilst the valve is active, i.e. under pressure
- Optimal flow characteristics ensuring quick opening to the fully open position
- Protection against pulsation by built-in damping facility
- Housing and bonnet material is stainless steel
- Equipped with Stainless steel bolts.
- Max. working pressure PS / MWP:
  52 bar g / 754 psi g
- Temperature range:
  -60 – 150 °C / -76 – 302 °F

Technical data and ordering

SCA-X SS / CHV-X SS, Check valves

Technical data

Type	Description
Pressure range	52 bar g / 754 psig
Temperature range	-60 – 150 °C / -76 – 302 °F

SCA-X SS, Check and Stop valve



Ordering angleway valves

Type	Connection size		Execution	Connection type	Connection designation	Code no.
	[in]	[mm]				
SCA-X SS 15	1/2	15	Angleway	Butt weld, EN 10220	D	148B5293
SCA-X SS 20	3/4	20	Angleway	Butt weld, EN 10220	D	148B5381
	3/4	20	Angleway	Butt weld ANSI, B 36.19M	A	148B6489
SCA-X SS 25	1	25	Angleway	Butt weld, EN 10220	D	148B5490
	1	25	Angleway	Butt weld ANSI, B 36.19M	A	148B6480
SCA-X SS 32	1 1/4	32	Angleway	Butt weld, EN 10220	D	148B5585
	1 1/4	32	Angleway	Butt weld ANSI, B 36.19M	A	148B6490
SCA-X SS 40	1 1/2	40	Angleway	Butt weld, EN 10220	D	148B5664
	1 1/2	40	Angleway	Butt weld ANSI, B 36.19M	A	148B5687

CHV-X SS, Check valve

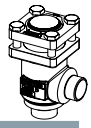

Ordering angleway valves

Type	Connection size		Execution	Connection type	Connection designation	Code no.
	[in]	[mm]				
CHV-X SS 15	1/2	15	Angleway	Butt weld, EN 10220	D	148B5294
CHV-X SS 20	3/4	20	Angleway	Butt weld, EN 10220	D	148B5382
	3/4	20	Angleway	Butt weld ANSI, B 36.19M	A	148B6491
CHV-X SS 25	1	25	Angleway	Butt weld, EN 10220	D	148B5491
	1	25	Angleway	Butt weld ANSI, B 36.19M	A	148B6481
CHV-X SS 32	1 1/4	32	Angleway	Butt weld, EN 10220	D	148B5586
	1 1/4	32	Angleway	Butt weld ANSI, B 36.19M	A	148B6492
CHV-X SS 40	1 1/2	40	Angleway	Butt weld, EN 10220	D	148B5665
	1 1/2	40	Angleway	Butt weld ANSI, B 36.19M	A	148B5688

CHV-X SS, Check valve



Ordering straightway valves

Type	Connection size		Execution	Connection type	Connection designation	Code no.
	[in]	[mm]				
CHV-X SS 15	1/2	15	Straightway	Butt weld, EN 10220	D	148B5678
CHV-X SS 20	3/4	20	Straightway	Butt weld, EN 10220	D	148B5679
	3/4	20	Straightway	Butt weld ANSI, B 36.19M	A	148B6608
CHV-X SS 25	1	25	Straightway	Butt weld, EN 10220	D	148B5680
	1	25	Straightway	Butt weld ANSI, B 36.19M	A	148B6609
CHV-X SS 32	1 1/4	32	Straightway	Butt weld, EN 10220	D	148B6544
	1 1/4	32	Straightway	Butt weld ANSI, B 36.19M	A	148B6610
CHV-X SS 40	1 1/2	40	Straightway	Butt weld, EN 10220	D	148B6566
	1 1/2	40	Straightway	Butt weld ANSI, B 36.19M	A	148B6611

SFA 15 / SFA 15-50, Safety relief valves

SFA 15 and SFA 15-50 are standard, back pressure dependent safety relief valves in angleway execution, specially designed for protection of vessels and other components against excessive pressure.
SFA 15-50 has a 50% reduced capacity compared to SFA 15.

The valve is designed to meet the strict quality demands and safety requirements for refrigeration installations, specified by the international classification societies.
The valve is recommended as an external and internal safety relief valve in refrigeration plants.



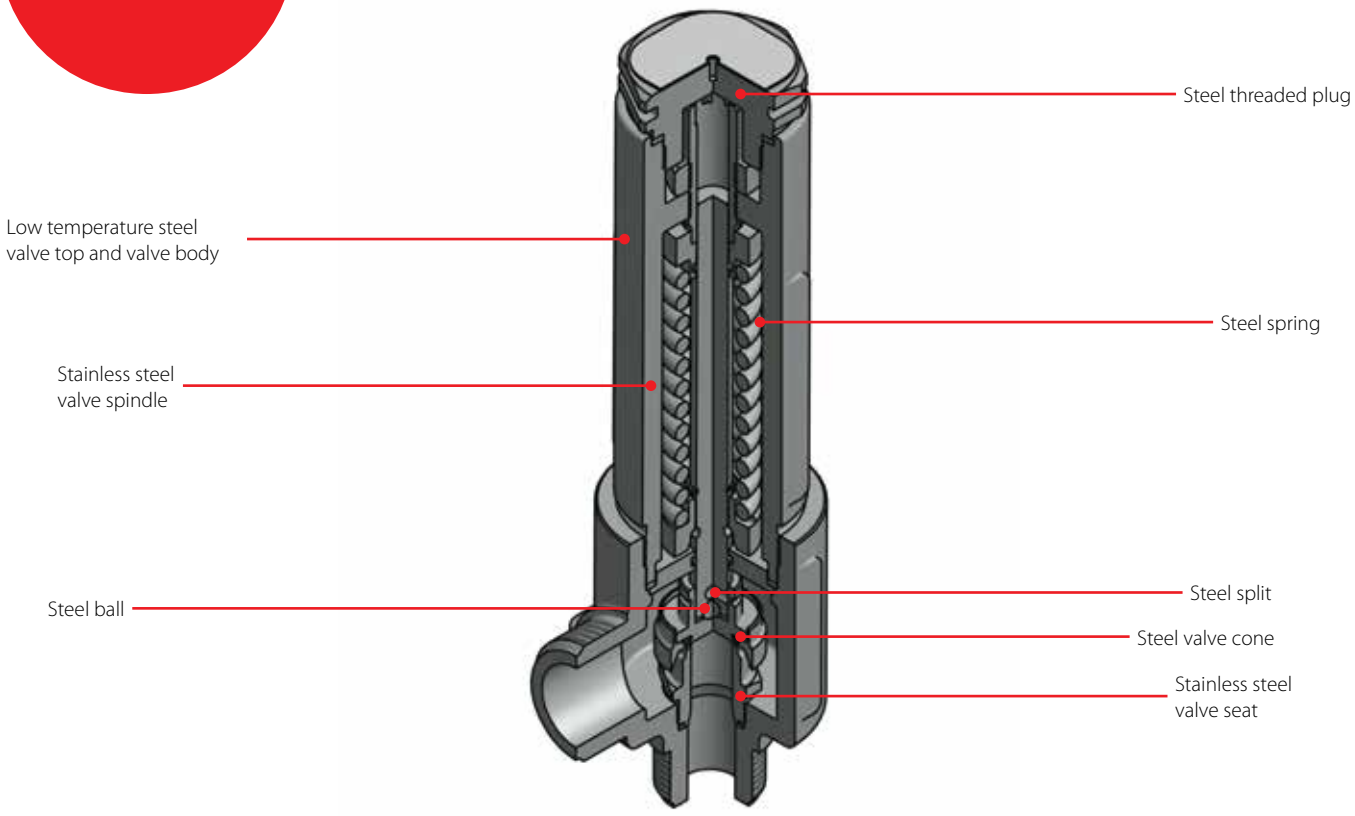

Facts

- Applicable to R717, R744, R134a, R170, R22, R290, R401A, R402A, R404A, R407A, R407B, R407C, R407F, R409A, R410A, R421A, R502, R507, R600 and R600a within a temperature range of -50 °C* / 100 °C (-58 °F* / 212 °F)
- The spring housing is closed tightly to avoid refrigerant leakage
- The valves can be delivered with set pressures between:
  10 – 40 bar g / 145 – 580 psi g

**) Below 30 °C / -22 °F full tightness can only be guaranteed when refrigerant pressure is equal to or lower than 0.5 × P_{set}.*

Technical data and ordering

SFA 15 and SFA 15-50, Safety relief valve

Technical data

Type	Description
Pressure setting range	10 – 40 bar g / 145 – 580 psi g
Pressure setting	The operating pressure of the plant should be at least 15% below the set pressure. This allows a perfect re-seating of the safety relief valve after having been activated.
Temperature range	-50 °C* / 100 °C (-58 °F* / 212 °F)

**) Below 30 °C / -22 °F full tightness can only be guaranteed when refrigerant pressure is equal to or lower than 0.5 × P_{set}.*

Important:
The SFA safety relief valve is dependent on the back pressure (if the back pressure is higher than the atmospheric pressure, the opening pressure will be higher than stated set pressure).
Special circumstances such as vibrations (which should be avoided) and oscillating pressure may require an increased difference between the operational pressure and the closing pressure.

Certified SFA valves with standard set pressure

Ordering

Type	Size		Set pressure		Code no.
	[mm]	[in]	[bar g]	[psi g]	
SFA 15 T 210	15	1/2	10	145	148F3210
SFA 15 T 211	15	1/2	11	160	148F3211
SFA 15 T 212	15	1/2	12	174	148F3212
SFA 15 T 213	15	1/2	13	189	148F3213
SFA 15 T 214	15	1/2	14)	203	148F3214
SFA 15 T 215	15	1/2	15	218	148F3215
SFA 15 T 216	15	1/2	16	232	148F3216
SFA 15 T 217	15	1/2	17	247	148F3217
SFA 15 T 218	15	1/2	18	261	148F3218
SFA 15 T 219	15	1/2	19	276	148F3219
SFA 15 T 220	15	1/2	20	290	148F3220
SFA 15 T 221	15	1/2	21	305	148F3221
SFA 15 T 222	15	1/2	22	319	148F3222
SFA 15 T 223	15	1/2	23	334	148F3223
SFA 15 T 224	15	1/2	24	348	148F3224
SFA 15 T 225	15	1/2	25	363	148F3225
SFA 15 T 226	15	1/2	26	377	148F3226
SFA 15 T 227	15	1/2	27	392	148F3227
SFA 15 T 228	15	1/2	28	406	148F3228
SFA 15 T 229	15	1/2	29	421	148F3229
SFA 15 T 230	15	1/2	30	435	148F3230
SFA 15 T 231	15	1/2	31	450	148F3231
SFA 15 T 232	15	1/2	32	464	148F3232
SFA 15 T 233	15	1/2	33	479	148F3233
SFA 15 T 234	15	1/2	34	493	148F3234
SFA 15 T 235	15	1/2	35	508	148F3235
SFA 15 T 236	15	1/2	36	522	148F3236
SFA 15 T 237	15	1/2	37	537	148F3237
SFA 15 T 238	15	1/2	38	551	148F3238
SFA 15 T 239	15	1/2	39	566	148F3239
SFA 15 T 240	15	1/2	40	580	148F3240

Technical data and ordering

Certified SFA valves with standard set pressure

Ordering

Type	Size		Set pressure		Code no.
	[mm]	[in]	[bar g]	[psi g]	
SFA 15-50 T 210	15	½	10	145	148F4000
SFA 15-50 T 211	15	½	11	160	148F4001
SFA 15-50 T 212	15	½	12	174	148F4002
SFA 15-50 T 213	15	½	13	189	148F4003
SFA 15-50 T 214	15	½	14	203	148F4004
SFA 15-50 T 215	15	½	15	218	148F4005
SFA 15-50 T 216	15	½	16	232	148F4006
SFA 15-50 T 217	15	½	17	247	148F4007
SFA 15-50 T 218	15	½	18	261	148F4008
SFA 15-50 T 219	15	½	19	276	148F4009
SFA 15-50 T 220	15	½	20	290	148F4010
SFA 15-50 T 221	15	½	21	305	148F4011
SFA 15-50 T 222	15	½	22	319	148F4012
SFA 15-50 T 223	15	½	23	334	148F4013
SFA 15-50 T 224	15	½	24	348	148F4014
SFA 15-50 T 225	15	½	25	363	148F4015
SFA 15-50 T 226	15	½	26	377	148F4016
SFA 15-50 T 227	15	½	27	392	148F4017
SFA 15-50 T 228	15	½	28	406	148F4018
SFA 15-50 T 229	15	½	29	421	148F4019
SFA 15-50 T 230	15	½	30	435	148F4020
SFA 15-50 T 231	15	½	31	450	148F4021
SFA 15-50 T 232	15	½	32	464	148F4022
SFA 15-50 T 233	15	½	33	479	148F4023
SFA 15-50 T 234	15	½	34	493	148F4024
SFA 15-50 T 235	15	½	35	508	148F4025
SFA 15-50 T 236	15	½	36	522	148F4026
SFA 15-50 T 237	15	½	37	537	148F4027
SFA 15-50 T 238	15	½	38	551	148F4028
SFA 15-50 T 239	15	½	39	566	148F4029
SFA 15-50 T 240	15	½	40	580	148F4030

Technical data and ordering

Certified SFA valves with standard set pressure and TÜV pressure setting certificate with each valve

Ordering

Type	Size		Set pressure		Code no.
	[mm]	[in]	[bar g]	[psi g]	
SFA 15 T 310	15	1/2	10	145	148F3310
SFA 15 T 311	15	1/2	11	160	148F3311
SFA 15 T 312	15	1/2	12	174	148F3312
SFA 15 T 313	15	1/2	13	189	148F3313
SFA 15 T 314	15	1/2	14	203	148F3314
SFA 15 T 315	15	1/2	15	218	148F3315
SFA 15 T 316	15	1/2	16	232	148F3316
SFA 15 T 317	15	1/2	17	247	148F3317
SFA 15 T 318	15	1/2	18	261	148F3318
SFA 15 T 319	15	1/2	19	276	148F3319
SFA 15 T 320	15	1/2	20	290	148F3320
SFA 15 T 321	15	1/2	21	305	148F3321
SFA 15 T 322	15	1/2	22	319	148F3322
SFA 15 T 323	15	1/2	23	334	148F3323
SFA 15 T 324	15	1/2	24	348	148F3324
SFA 15 T 325	15	1/2	25	363	148F3325
SFA 15 T 326	15	1/2	26	377	148F3326
SFA 15 T 327	15	1/2	27	392	148F3327
SFA 15 T 328	15	1/2	28	406	148F3328
SFA 15 T 329	15	1/2	29	421	148F3329
SFA 15 T 330	15	1/2	30	435	148F3330
SFA 15 T 331	15	1/2	31	450	148F3331
SFA 15 T 332	15	1/2	32	464	148F3332
SFA 15 T 333	15	1/2	33	479	148F3333
SFA 15 T 334	15	1/2	34	493	148F3334
SFA 15 T 335	15	1/2	35	508	148F3335
SFA 15 T 336	15	1/2	36	522	148F3336
SFA 15 T 337	15	1/2	37	537	148F3337
SFA 15 T 338	15	1/2	38	551	148F3338
SFA 15 T 339	15	1/2	39	566	148F3339
SFA 15 T 340	15	1/2	40	580	148F3340
SFA 15-50 T 210	15	1/2	10	145	148F4100
SFA 15-50 T 211	15	1/2	11	160	148F4101
SFA 15-50 T 212	15	1/2	12	174	148F4102
SFA 15-50 T 213	15	1/2	13	189	148F4103
SFA 15-50 T 214	15	1/2	14	203	148F4104
SFA 15-50 T 215	15	1/2	15	218	148F4105
SFA 15-50 T 216	15	1/2	16	232	148F4106
SFA 15-50 T 217	15	1/2	17	247	148F4107
SFA 15-50 T 218	15	1/2	18	261	148F4108
SFA 15-50 T 219	15	1/2	19	276	148F4109
SFA 15-50 T 220	15	1/2	20	290	148F4110
SFA 15-50 T 221	15	1/2	21	305	148F4111
SFA 15-50 T 222	15	1/2	22	319	148F4112
SFA 15-50 T 223	15	1/2	23	334	148F4113
SFA 15-50 T 224	15	1/2	24	348	148F4114
SFA 15-50 T 225	15	1/2	25	363	148F4115
SFA 15-50 T 226	15	1/2	26	377	148F4116
SFA 15-50 T 227	15	1/2	27	392	148F4117
SFA 15-50 T 228	15	1/2	28	406	148F4118
SFA 15-50 T 229	15	1/2	29	421	148F4119
SFA 15-50 T 230	15	1/2	30	435	148F4120
SFA 15-50 T 231	15	1/2	31	450	148F4121
SFA 15-50 T 232	15	1/2	32	464	148F4122
SFA 15-50 T 233	15	1/2	33	479	148F4123
SFA 15-50 T 234	15	1/2	34	493	148F4124
SFA 15-50 T 235	15	1/2	35	508	148F4125
SFA 15-50 T 236	15	1/2	36	522	148F4126
SFA 15-50 T 237	15	1/2	37	537	148F4127
SFA 15-50 T 238	15	1/2	38	551	148F4128
SFA 15-50 T 239	15	1/2	39	566	148F4129
SFA 15-50 T 240	15	1/2	40	580	148F4130

SFV, Safety relief valve

SFV 20 – SFV 25 are standard, back pressure dependent safety relief valves in angleway execution, specially designed for protection of vessels and other components against excessive pressure.

The valve is designed to meet the strict quality demands and safety requirements for refrigeration installations, specified by the international classification societies.

Features
SFV



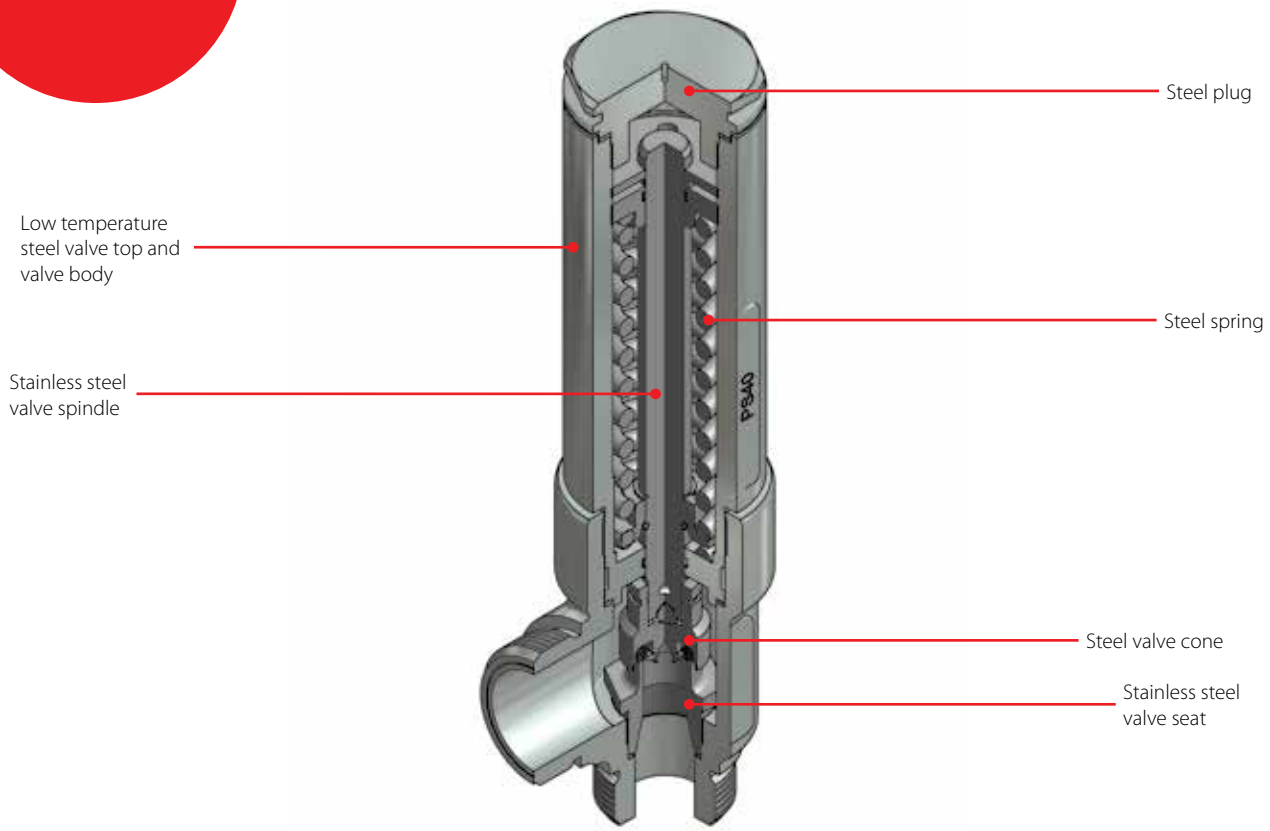

Facts

- Applicable to R717, R744, R134a, R170, R22, R290, R401A, R402A, R404A, R407A, R407B, R407C, R407F, R409A, R410A, R421A, R502, R507, R600 and R600a within a temperature range:
  -30 – 100 °C / -22 – 212 °F
- The inlet flow diameters of the valves are:
  - 18 mm (¾ in) for SFV 20
  - 23 mm (1 in) for SFV 25
- The valves can be delivered with set pressures between:
  10 – 25 bar g / 145 – 363 psi g

Technical data and ordering

SFV - Safety relief valve

Technical data

Type	Description
Pressure	Pressure setting range: 10 – 40 bar g / 145 – 580 psi g
Pressure setting	The operating pressure of the plant should be at least 15% below the set pressure. This allows a perfect re-seating of the safety relief valve after having been activated.
Temperature range	-30 – 100 °C / -22 – 212 °F

Important:
the SFA safety relief valve is dependent on the back pressure (if the back pressure is higher than the atmospheric pressure, the opening pressure will be higher than stated set pressure).
Special circumstances such as vibrations (which should be avoided) and oscillating pressure may require an increased difference between the operational pressure and the closing pressure.

Certified SFV valves with standard set pressure

Ordering

Type	Size		Set pressure		Code no.
	[mm]	[in]	[bar g]	[psi g]	
SFV 20 T 210	20	3/4	10	145	2416+254
SFV 20 T 211	20	3/4	11	160	2416+255
SFV 20 T 212	20	3/4	12	174	2416+256
SFV 20 T 213	20	3/4	13	189	2416+150
SFV 20 T 214	20	3/4	14	203	2416+257
SFV 20 T 215	20	3/4	15	218	2416+258
SFV 20 T 216	20	3/4	16	232	2416+259
SFV 20 T 217	20	3/4	17	247	2416+260
SFV 20 T 218	20	3/4	18	261	2416+151
SFV 20 T 219	20	3/4	19	276	2416+261
SFV 20 T 220	20	3/4	20	290	2416+262
SFV 20 T 221	20	3/4	21	305	2416+152
SFV 20 T 222	20	3/4	22	319	2416+241
SFV 20 T 223	20	3/4	23	334	2416+263
SFV 20 T 224	20	3/4	24	348	2416+264
SFV 20 T 225	20	3/4	25	363	2416+183

Certified SFV valves with standard set pressure

Ordering

Type	Size		Set pressure		Code no.
	[mm]	[in]	[bar g]	[psi g]	
SFV 25 T 210	25	1	10	145	2416+265
SFV 25 T 211	25	1	11	160	2416+266
SFV 25 T 212	25	1	12	174	2416+267
SFV 25 T 213	25	1	13	189	2416+153
SFV 25 T 214	25	1	14	203	2416+268
SFV 25 T 215	25	1	15	218	2416+269
SFV 25 T 216	25	1	16	232	2416+270
SFV 25 T 217	25	1	17	247	2416+271
SFV 25 T 218	25	1	18	261	2416+154
SFV 25 T 219	25	1	19	276	2416+272
SFV 25 T 220	25	1	20	290	2416+273
SFV 25 T 221	25	1	21	305	2416+155
SFV 25 T 222	25	1	22	319	2416+242
SFV 25 T 223	25	1	23	334	2416+274
SFV 25 T 224	25	1	24	348	2416+275
SFV 25 T 225	25	1	25	363	2416+184

Technical data and ordering

Certified SFV valves with standard set pressure and TÜV pressure setting certificate with each valve

Ordering

Type	Size		Set pressure		Code no.
	[mm]	[in]	[bar g]	[psi g]	
SFV 20 T 310	20	3/4	10	145	2416+285
SFV 20 T 311	20	3/4	11	160	2416+286
SFV 20 T 312	20	3/4	12	174	2416+287
SFV 20 T 313	20	3/4	13	189	2416+160
SFV 20 T 314	20	3/4	14	203	2416+288
SFV 20 T 315	20	3/4	15	218	2416+289
SFV 20 T 316	20	3/4	16	232	2416+290
SFV 20 T 317	20	3/4	17	247	2416+291
SFV 20 T 318	20	3/4	18	261	2416+161
SFV 20 T 319	20	3/4	19	276	2416+292
SFV 20 T 320	20	3/4	20	290	2416+293
SFV 20 T 321	20	3/4	21	305	2416+162
SFV 20 T 322	20	3/4	22	319	2416+294
SFV 20 T 323	20	3/4	23	334	2416+295
SFV 20 T 324	20	3/4	24	348	2416+296
SFV 20 T 325	20	3/4	25	363	2416+186

Certified SFV valves with standard set pressure and TÜV pressure setting certificate with each valve

Ordering

Type	Size		Set pressure		Code no.
	[mm]	[in]	[bar g]	[psi g]	
SFV 25 T 310	25	1	10	145	2416+297
SFV 25 T 311	25	1	11	160	2416+298
SFV 25 T 312	25	1	12	174	2416+299
SFV 25 T 313	25	1	13	189	2416+163
SFV 25 T 314	25	1	14	203	2416+300
SFV 25 T 315	25	1	15	218	2416+301
SFV 25 T 316	25	1	16	232	2416+302
SFV 25 T 317	25	1	17	247	2416+303
SFV 25 T 318	25	1	18	261	2416+164
SFV 25 T 319	25	1	19	276	2416+304
SFV 25 T 320	25	1	20	290	2416+305
SFV 25 T 321	25	1	21	305	2416+165
SFV 25 T 322	25	1	22	319	2416+306
SFV 25 T 323	25	1	23	334	2416+307
SFV 25 T 324	25	1	24	348	2416+308
SFV 25 T 325	25	1	25	363	2416+187

Quick Selection Notes:

DSV, Change-over valve

DSV are 3-way valves designed specifically for use with double safety valve systems, but also suitable for other purposes. The valves are equipped with threads for nipple / flange connection for easy inspection or replacement of safety valves.
DSV are designed to meet the strict quality demands on industrial refrigeration installations specified by the international classification societies.

DSV valves are carefully designed to establish favourable flow conditions. The valve cone is designed to ensure perfect closing. Even a light tightening of the valve will close the valve effectively. All valves are equipped with vented cap.

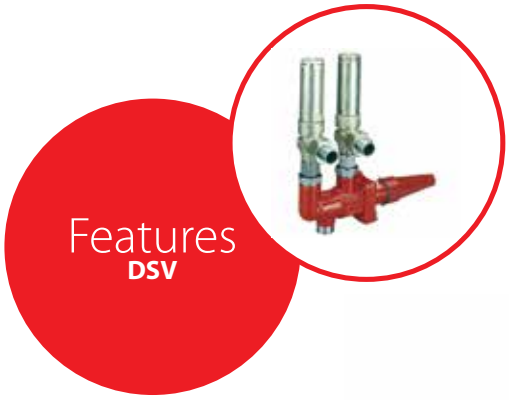

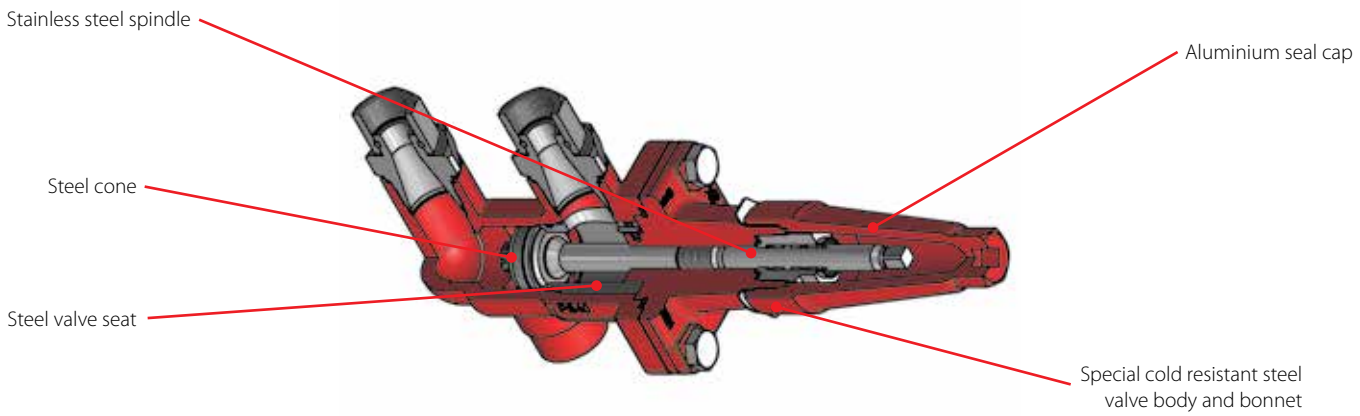

Facts

- Applicable to R717, R744, R134a, R170, R22, R290, R401A, R402A, R404A, R407A, R407B, R407C, R407F, R409A, R410A, R421A, R502, R507, R600 and R600a
- Each valve type is clearly marked with type, size and performance range
- The valves and caps are prepared for sealing, to prevent operation by unauthorised persons, using a seal wire
- Accepts flow in both directions
- Housing and bonnet are made from low temperature steel according to requirements of the Pressure Equipment Directive and other international classification authorities
- Max. operating pressure:
  0 bar g / 580 psi g
- Temperature range:
  -50 – 100 °C / -58 – 212 °F
- DSV 1 when fitted with 2 × SFA 15 or DSV 2 when fitted with a combination of either 2 × SFA 15, or 2 × SFV 20, or 2 × SFV 25, meet the requirements according to EN13136 "*Safety Valves Calculations*" regarding max. 3% pressure drop in upstream line

Technical data

DSV, Change-over valve

Technical data

Type	Description	
Temperature range	-50 – 100 °C / -58 – 212 °F	
Pressure	Pressure setting range: 10 – 40 bar g / 145 – 580 psi g	
Capacity	K_v - value [m^3/h]	C_v - value [gal/min]
DSV 1	17.5	20.3
DSV 2	30.0	34.8

DSV, Change-over valve

Ordering

Please note that the type codes only serve to identify the valves, some of which may not form part of the standard product range.

Valve type	DSV inlet connection [in]	DSV outlet connection [in]	SFV outlet connection [in]	Safety valve combination	Code no.
DSV 1	D25 (1)	G ¾ Union	ND20 (¾)	SFA15	148F3005
DSV 2	FD20 (¾)	G ¾ thread flange	ND20 (¾)	SFA15	148F3006
DSV 2	FD25 (1)	G ¾ thread flange	ND20 (¾)	SFA15	148F3007
DSV 2	FD32 (1 ¼)	G ¾ thread flange	ND20 (¾)	SFA15	148F3008
DSV 2	FD25 (1)	G 1 ¼ thread flange	FD25 (1)	SFV20	148F3009
DSV 2	FD32 (1 ¼)	G 1 ¼ thread flange	FD25 (1)	SFV20	148F3010
DSV 2	FD32 (1 ¼)	G 1 ¼ thread flange	FD32 (1 ¼)	SFV25	148F3011
Connection fittings:	Weld branches DIN 2448	DSV valves are supplied with DSV inlet connection fittings, DSV outlet connection fittings, and SFA / SFV outlet connection fittings.			
	Weld nipples DIN 2448				
	Weld flanges DIN 2448				

Important:

Where products need to be certified according to specific certification societies or where higher pressures are required, the relevant information should be included at the time of order.

ICF / ICF SS, Valve stations

ICF and ICF SS (Stainless Steel) valve stations can substitute a series of conventional mechanical, electro-mechanical and electronically operated valves, thereby providing a number of advantages in the design phase of a refrigeration plant as well as in the installation, service and maintenance. ICF valve stations consist of valve housing plus a maximum of four or six function modules.

The ICF valve stations are designed for low and high pressure refrigerants and can be used in liquid lines, compressor injection lines and hot gas lines ICF is Supplied as a complete assembly, it is fully tested at high pressure and its functions are tested under factory controlled conditions.



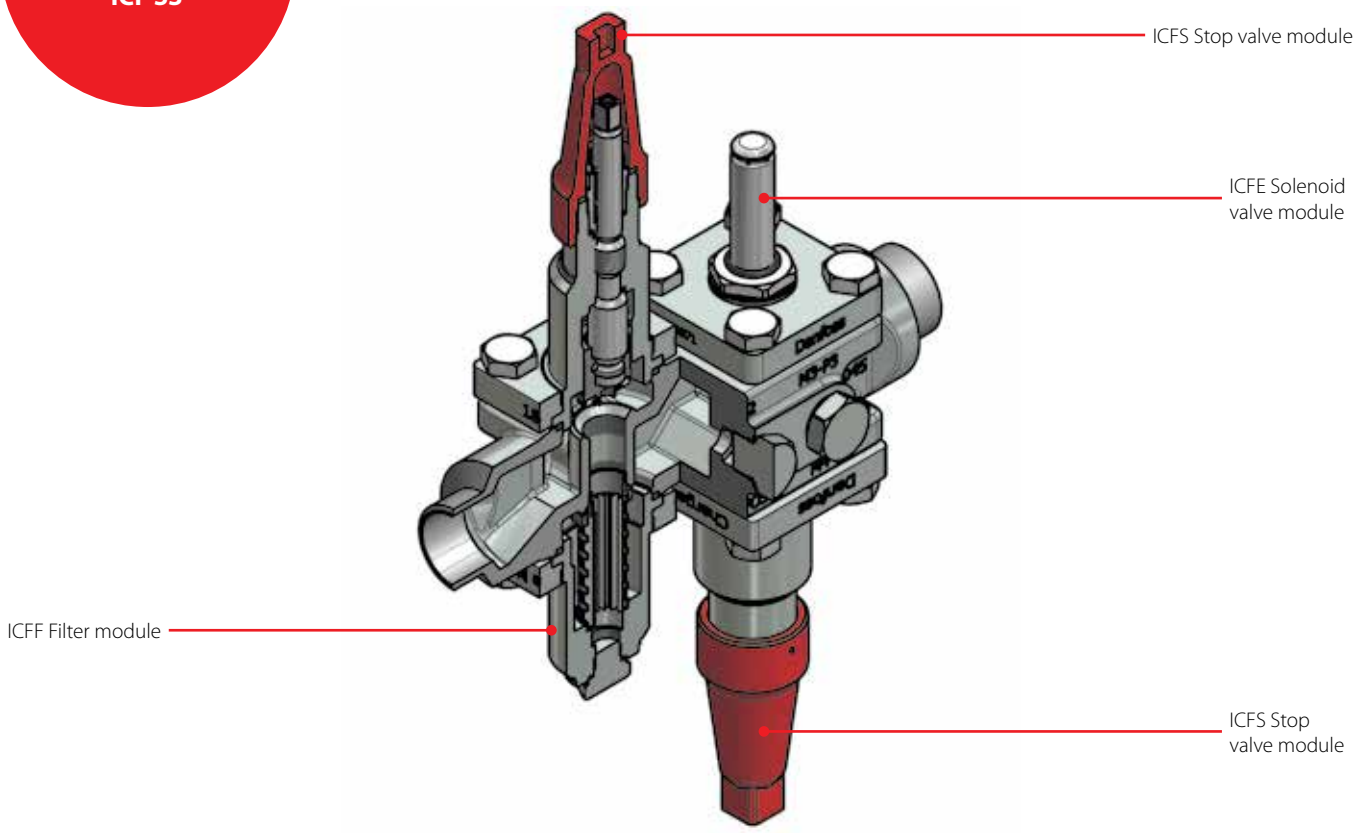

Configuration example
ICF 20-4-9

Facts

- Applicable to R717, R744, R134a, R22, R401A, R402A, R404A, R407A, R407B, R407C, R407F, R409A, R410A, R421A, R502 and R507
  Exception: ICFD is released for ammonia and land-based applications only. For CO_2, please contact the local Danfoss Sales company.
  For a fully updated list of approved refrigerants, visit www.products.danfoss.com and search for individual code numbers, where refrigerants are listed as part of product specifications.
- The main components of the ICF valve station are:
  - A valve housing
  - A maximum of four or six function modules
- Designed for low and high pressure refrigerants and can be used in liquid lines, compressor injection and hotgas lines
- The ICF concept is designed to fulfil global refrigeration requirements. For specific approval information, please contact Danfoss
- One code number equals one application solution
- Modular concept:
  Each housing is available with several different connection types and sizes
- The ICF is leak tested at high pressure and its functions are tested under factory controlled conditions
- The ICF valve is a compact valve train ready for the jobsite. No need to disassembly prior to installation under normal welding procedures
- Down time during service is reduced to a fraction compared to conventional valve trains. The unique design of the ICF ensures a quick pump down and faster access to valve modules
- Valve service is performed by replacing the function module
- Standard side ports to fit service valves, pressure transmitters and sight glasses
- Direct weld connections (no leaks through flanges)
- Available with DIN and ANSI connections
- Low temperature steel housing
- High capacities, low pressure drop
- Compact design
- Low weight design

Technical data and application examples

ICF and ICF SS - Valve stations

Technical data

Temperature range	-60 – 120 °C / -76 – 248 °F *Exceptions:* *ICM: If the ICM module is going to be used in liquid refrigerant with a temperature above 75 °C / 167 °F, please contact Danfoss.* *ICFD: -50 – 50 °C / -58 – 122 °F at 28 bar / 406 psig in ammonia*
Presssure range	The ICF is designed for max. working pressure: 52 bar g / 754 psig For ICF with ICFD module the max. working pressure is 28 bar g / 406 psi g. If the refrigeration system include ICFD module, a test pressure of the system must not exceed 28 bar / 406 psig, unless the ICFD float is temporarily taken out before test. *ICFD is released for ammonia and land-based applications only. For CO_2, please contact the local Danfoss Sales company.* *Max. working pressure for ICFD without float: 52 bar / 754 psig.*
Modules	3, 4 or 6, depending on housing version
Connection types (ICF SS available with DIN connections only)	Butt weld, DIN (EN 10220): 15D (1/2 in) to 80D (3 in) Butt weld, ANSI (B 36.10) : 15A (1/2 in) to 80A (3 in) Socket welding ANSI (B 16.11): 15S (1/2 in) to 50S (2 in) Soldering (DIN 2856): 22Y (7/8 in) Soldering (ANSI B 16.22): 7/8 in (22 mm) Pipe thread (ANSI B 1.20.1): 15F (1/2 in)

The ICF and ICF SS concept

The main components of the ICF valve station are:

- A housing
- A maximum of four or six function modules (ICF 65 – max. 3)
  - In all ICF 15 the modules M1 and M2 are predefined as shut-off valve and strainer module
  - In all ICF 50 the modules M1 and M2 are predefined as shut-off valve and blind cover (prepared for strainer)
  - In all ICF 65 the module M1 is predefined as shut-off valve

The valve body

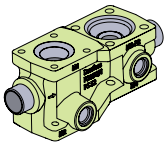

ICF 15-4

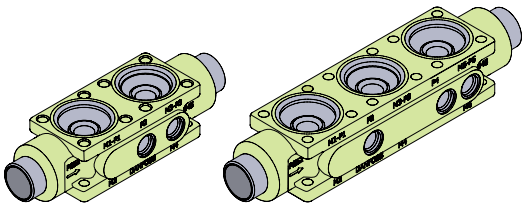

ICF 20-4 | ICF 20-6

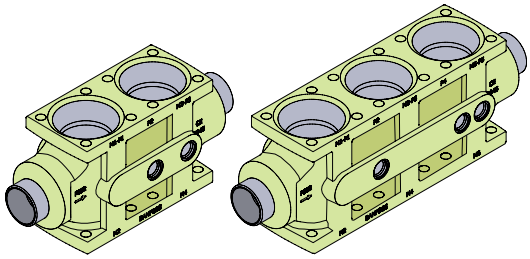

ICF 25-4 | ICF 25-6

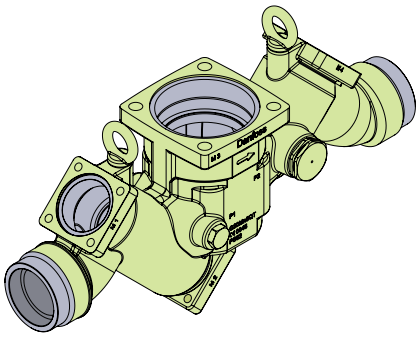

ICF 50-4

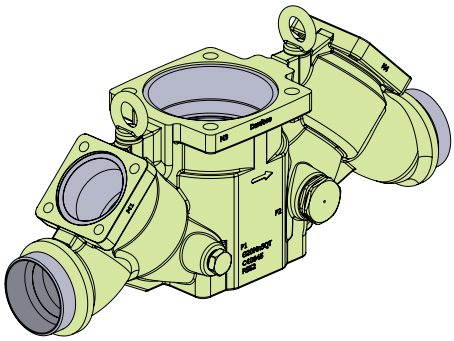

ICF 65-3

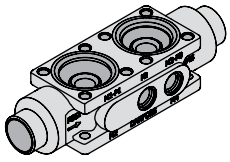

ICF SS 20-4

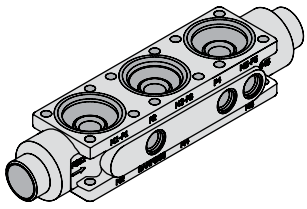

ICF SS 20-6

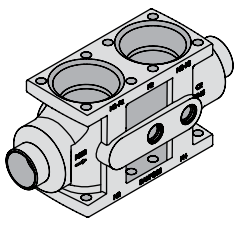

ICF SS 25-4

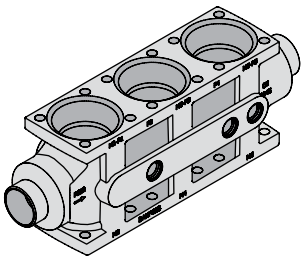

ICF SS 25-6

The function modules for ICF 15 and ICF 20

ICF 15 and ICF 20 have the same function modules except for the two fixed modules M1 (stop valve ICFS 15) and M2 (filter ICFF 15) in ICF 15.

ICFS 15 / ICFS 20
Shut-off valve module
This module has the function of a stop valve, and has a red cap.

ICFR 20A
Manual regulating valve module
This module has the function of a hand regulating valve, and has a yellow cap.

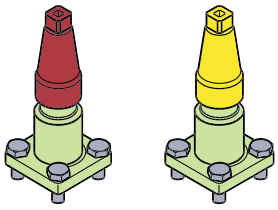

ICFS 15/ICFS 20 ICFR 20A

ICFC 20
Check valve module
This module has the function of a check valve.

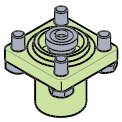

ICFC 20

ICFF 15/20 / ICFF 20E
Strainer module
This module functions as a strainer.

ICF 15, all connections:
Strainer element 150µ (100 mesh) 60 cm² (9.3 in²)
ICF 20, with DIN/ANSI connections:
Pleated 150µ (100 mesh) 45 cm² (7.0 in²)

ICF 20 with SOC connections (ICFF 20E):
Pleated 150µ (100 mesh) / 160 cm² (24.8 in²)

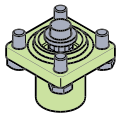

ICFF 15/20 / ICFF 20E

ICFN 20
Stop & check valve module
This module has the function of a combined stop and check valve, and has a green cap.

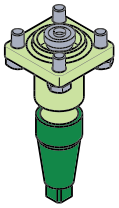

ICFN 20

ICFE 20
Solenoid valve module
This module has the function of a normally closed solenoid valve for controlling the refrigerant flow.

ICFA 20
Electronic expansion valve module
This module has the function of an electronic pulse width modulating (PWM) expansion valve.

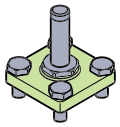

ICFE 20 / ICFA 20

ICM 20-A, B or C
Motor operated valve module
This module is a stepper motor actuator valve for on/off and modulating control of the refrigerant flow.

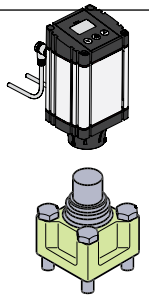

ICM 20-A, B or C

ICFO 20
Manual opening module
This module facilitates the manual opening of the solenoid valve (type ICFE).

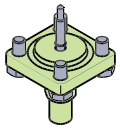

ICFO 20

ICFB 20
Blind top cover
This provides a blanking cover for unused module ports.

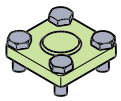

ICFB 20

ICFE 20H
Solenoid valve module with integrated manual opener
This module has the function of a normally closed solenoid valve for controlling the refrigerant flow.

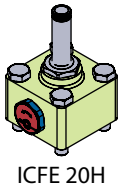

ICFE 20H

ICFW 20
Welding module 20 DIN or ¾" SOC
This module is used for drain connection during hot-gas defrosting - in case of high capacity.

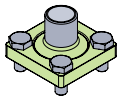

ICFW 20

ICFD 20
Float operated valve module. This module opens for liquid flow when the float is lifted by the internal liquid level.

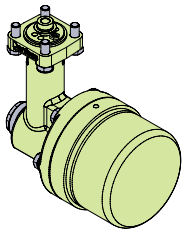

ICFD 20

Note:
At about 10% of maximum mass flow of ICFE 20H, the pressure differential correspond to about 0.07 Bar / 1 psi.
ICFE 20H will start to open at these conditions. At a pressure differential of minimum 0.2 Bar / 2.9 psi ICFE 20H will be 100% open.

The function modules for ICF 25

ICFS 25
Shut-off valve module
This module has the function of a stop valve, and has a red cap.

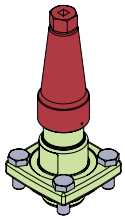
ICFS 25

ICFR 25, A or B
Manual regulating valve module
This module has the function of a hand regulating valve, and has a yellow cap.

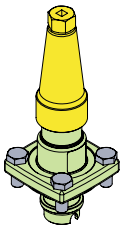
ICFR 25

ICFC 25
Check valve module
This module has the function of a check valve.

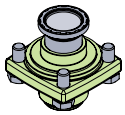
ICFC 25

ICFF 25 / ICFF 25E
Strainer module
This module functions as a strainer.

Strainer size:
ICF with DIN and ANSI (ICFF 25) connections: Pleated 150µ (100 mesh) / 160 cm^2 (24.8 in^2)

ICF with SOC connections (ICF 25E):
Pleated 150µ (100 mesh) / 330 cm^2 (51.2 in^2)

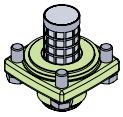
ICFF 25 / ICFF 25E

ICFN 25
Stop & check valve module
This module has the function of a combined stop and check valve, and has a green cap.

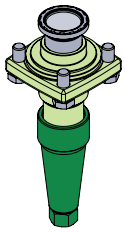
ICFN 25

ICFE 25
Solenoid valve module
This module has the function of a normally closed solenoid valve for controlling the refrigerant flow.

It has a built-in manual opening function.

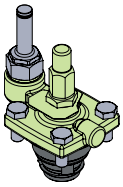
ICFE 25

Please note:
At about 10% of maximum mass flow of ICFE 25, the pressure differential correspond to about 0.07 Bar (1 psi). ICFE 25 will start to open at these conditions.

At a pressure differential of minimum 0.2 Bar (2.9 psi) ICFE 25 will be 100% open.

ICM 25-A or B
Motor operated valve module
This module is a stepper motor actuator valve for on/off and modulating control of the refrigerant flow.

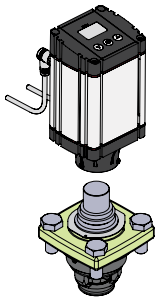
ICM 25-A or B

ICFW 25
Welding module, 25 DIN or 25 (1 in) SOC
This module is used for drain connection during hot-gas defrosting - in case of high capacity.

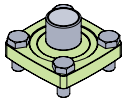
ICFW 25

ICFB 25
Blind top cover
This provides a blanking cover for unused module ports.

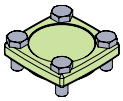
ICFB 25

The function modules for ICF 50 and ICF 65

SVA-S 50 / SVA 65
Shut-off valve module
This module has the function of a stop valve, and has a red cap.

SVA-S 50 / SVA-S 65

REG-SB 50 / REG-SB 65
Manual regulating valve module
This module has the function of a hand regulating valve, and has a yellow cap.

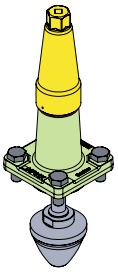

REG-SB 50 / REG-SB 65

ICFB 50
Blind cover
Prepared for insert of strainer (see below)

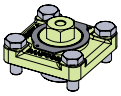

ICFB 50

FIA 50 (option)
Strainer insert
Please order FIA 50 strainer insert and element from the FIA part programme. For further information please consult the data sheet for FIA strainers.

Available elements:
See below.

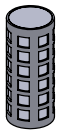

FIA 50

Strainer insert 100µ 150 mesh	Strainer insert 150µ 100 mesh	Strainer insert 250µ 72 mesh	Strainer insert 500µ 38 mesh	Pleated Strainer insert 150µ 100 mesh	Pleated Strainer insert 250µ 72 mesh	Pleated Strainer insert 500µ 38 mesh
148H3157	**148H3130**	**148H3138**	**148H3144**	**148H3179**	**148H3184**	**148H3189**

ICS 50 / ICS 65
Pilot-oprated valve module
This module has the function of a pilot-operated valve for on/off and modulating control of the refrigerant flow.

All ICS modules are 3-pilot versions. They are supplied with two blanking plugs (A) and one sealing plug (B).

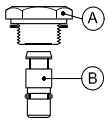

ICS 50 and 65 inserts are available in different capacities:

ICS 50:	**ICS 65:**
ICS 50	ICS 65
ICS 50-32	ICS 65-40
ICS 50-40	ICS 80

For K_v values please see the ordering section.

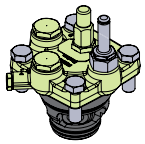

ICS 50 / ICS 65

ICM 50 / ICM 65 - A or B
Motor operated valve module
This module is a stepper motor actuator valve for on/off and modulating control of the refrigerant flow.

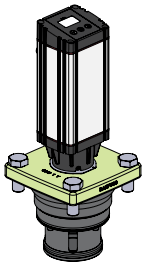

ICM 50 / ICM 65 - A or B

ICLX 50 / ICLX 65
2-step solenoid valve module
This module has the function of a normally closed gas powered solenoid valve for controlling the refrigerant flow.
It has a built-in manual opening function.
ICLX is used in suction lines for opening after hot gas defrost in 2 steps.

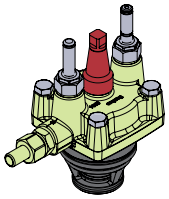

ICLX 50 / ICLX 65

ICSH 50/ICSH 65
2-step solenoid valve module
This module has the function of a normally closed solenoid valve for controlling the refrigerant flow.
It has a built-in manual opening function.
ICSH is used in hot gas lines for the opening of hot gas defrost flow to the evaporator in 2 steps.

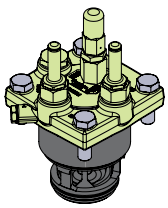

ICSH 50 / ICSH 65

The function modules for ICF SS 20 (Stainless Steel)

ICFS SS 20
Shut-off valve module
This module has the function of a stop valve, and has a red cap.

ICFR SS 20, A or B
Manual regulating valve module
This module has the function of a hand regulating valve, and has a yellow cap.

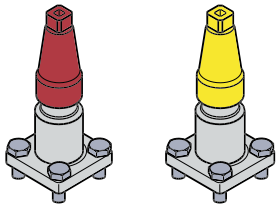

ICFS SS 20 ICFR SS 20

ICFC SS 20
Check valve module
This module has the function of a check valve.

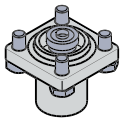

ICFC SS 20

ICFF SS 20 / ICFF SS 20E
Strainer module
This module functions as a strainer.

ICF SS 20:
Pleated 150µ (100 mesh) / 45 cm^2 (7.0 in^2)

ICF SS 20E:
Pleated 150µ (100 mesh) / 160 cm^2 (24.8 in^2)

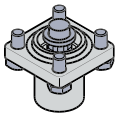

ICFF SS 20 / ICFF SS 20E

ICFN SS 20
Stop & check valve module
This module has the function of a combined stop and check valve, and has a green cap.

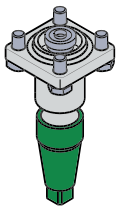

ICFN SS 20

ICFE SS 20
Solenoid valve module
This module has the function of a normally closed solenoid valve for controlling the refrigerant flow.

ICFA SS 20
Electronic expansion valve module
This module has the function of an electronic pulse width modulating (PWM) expansion valve.

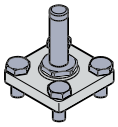

ICFE SS 20 / ICFA SS 20

ICM SS 20-A, 20-B, 20-C, 20-A33 or 20-B66
Motor operated valve module
This module is a stepper motor actuator valve for on/off and modulating control of the refrigerant flow.

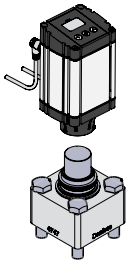

ICM SS 20-A, 20-B, 20-C, 20-A33 or 20-B66

ICFO SS 20
Manual opening module
This module facilitates the manual opening of the solenoid valve (type ICFE SS).

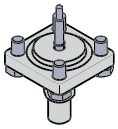

ICFO SS 20

ICFB SS 20
Blind top cover
This provides a blanking cover for unused module ports.

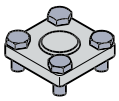

ICFB SS 20

ICFE SS 20H
Solenoid valve module with integrated manual opener
This module has the function of a normally closed solenoid valve for controlling the refrigerant flow.

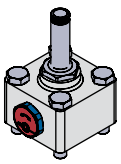

ICFE SS 20H

ICFW SS 20
Welding module 20 DIN
This module is used for drain connection during hot-gas defrosting - in case of high capacity.

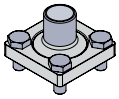

ICFW SS 20

Note:
At about 10% of maximum mass flow of ICFE SS 20H, the pressure differential correspond to about 0.07 Bar / 1 psi.
ICFE SS 20H will start to open at these conditions. At a pressure differential of minimum 0.2 Bar / 2.9 psi ICFE SS 20H will be 100% open.

The function modules for ICF SS 25 (Stainless Steel)

ICFS SS 25
Shut-off valve module
This module has the function of a stop valve, and has a red cap.

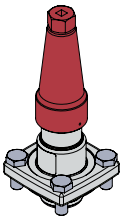

ICFS SS 25

ICFN SS 25
Stop & check valve module
This module has the function of a combined stop and check valve, and has a green cap.

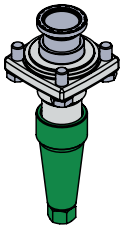

ICFN SS 25

ICFR SS 25, A or B
Manual regulating valve module
This module has the function of a hand regulating valve, and has a yellow cap.

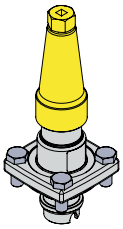

ICFR SS 25

ICM SS 25-A or B
Motor operated valve module
This module is a stepper motor actuator valve for on/off and modulating control of the refrigerant flow.

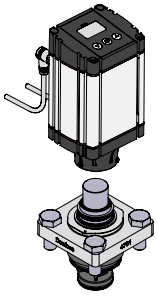

ICM SS 25-A or B

ICFF SS 25
Strainer module
This module functions as a strainer.

ICFF SS 25:
Pleated 150µ (100 mesh) / 160 cm^2 (24.8 in^2)

ICFF SS 25E:
Pleated 150µ (100 mesh) / 330 cm^2 (51.2 in^2)

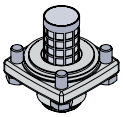

ICFF SS 25 / ICFF SS 25E

ICFB SS 25
Blind top cover
This provides a blanking cover for unused module ports.

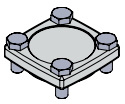

ICFB SS 25

Please note:
At about 10% of maximum mass flow of ICFE SS 25, the pressure differential correspond to about 0.07 Bar (1 psi). ICFE SS 25 will start to open at these conditions.

At a pressure differential of minimum 0.2 Bar (2.9 psi) ICFE SS 25 will be 100% open.

ICFE SS 25
Solenoid valve module
This module has the function of a normally closed solenoid valve for controlling the refrigerant flow.

It has a built-in manual opening function.

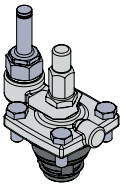

ICFE SS 25

ICFC SS 25
Check valve module
This module has the function of a check valve.

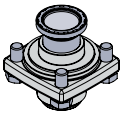

ICFC SS 25

ICFW SS 25
Welding module, 25 DIN
This module is used for drain connection during hot-gas defrosting - in case of high capacity.



ICFW SS 25

Selection

To determine the correct ICF valve station follow steps 1 through 4.

Step 1

Determine application and function requirements:

- Line: Pumped liquid, Liquid Injection, Hot gas defrost, Liquid DX, Return line etc.
- Control: On/off solenoid valve, motorised valve
- Defrost: Electric or hot gas

From the above determine the application reference number (see below)

Step 2

Selection criteria
(Please use Danfoss calculation software)
Download the software from: http://refrigerationandairconditioning.danfoss.com/support-center/apps-and-software/coolselector/

- Refrigerant
- Capacity
- Temperature
- Circulation rate

From the above determine the valve station required, e.g.: ICF 20 complete with ICM 20-C

Step 3

Establish connection sizes and type

- DIN butt-weld, ANSI butt-weld or SOC weld
- 15 (1/2 in), 20 (3/4 in.), 25 (1 in.), 32 (1 1/4 in.) or , 40 (1 1/2 in.), 50 (2 in.), 65 (2 1/2 in.) or 80 (3 in.)

Step 4

Establish code number
(see the ordering section)

Application example

Example of application: Liquid feed line

A valve combination for a flooded evaporator operating on / off from a thermostat and with electric defrost is required.
Manual override of the solenoid valve is requested. Common ICF configurations for this kind of application is shown here:

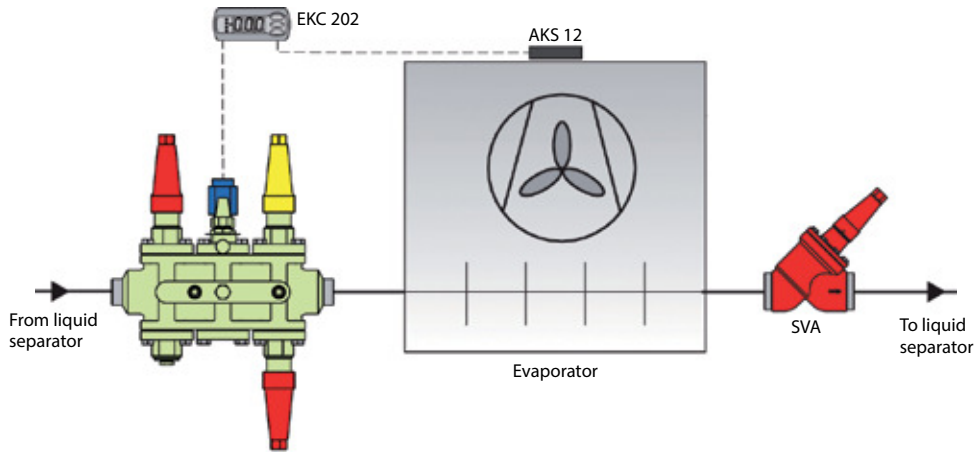

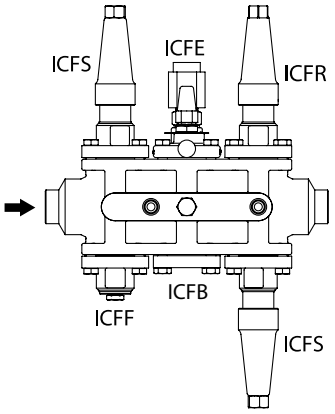

Not all valves are shown. Not to be used for construction purposes.

Example of application: Liquid feed line / Hot gas defrost line

Evaporator with soft opening gas powered valve ICLX in the suction line and hot gas defrost featuring:
ICF liquid feed station and ICF Hot gas station with side port to power ICLX.
ICS+CVP as a defrost regulator
(OFV optional depending on capacity).

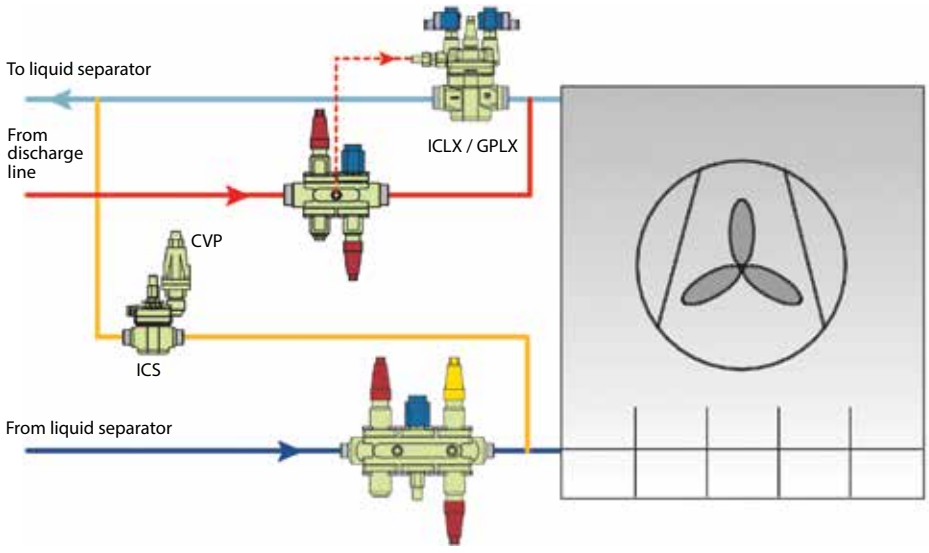

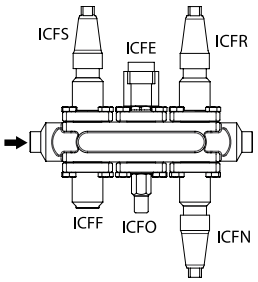

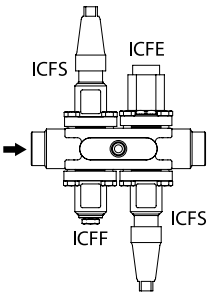

Not all valves are shown. Not to be used for construction purposes.

Application example

Example of application: Liquid injection line

A valve combination for liquid injection to separator with electronic injection valve is required. It is requested to have a solenoid valve in front of the control valve.

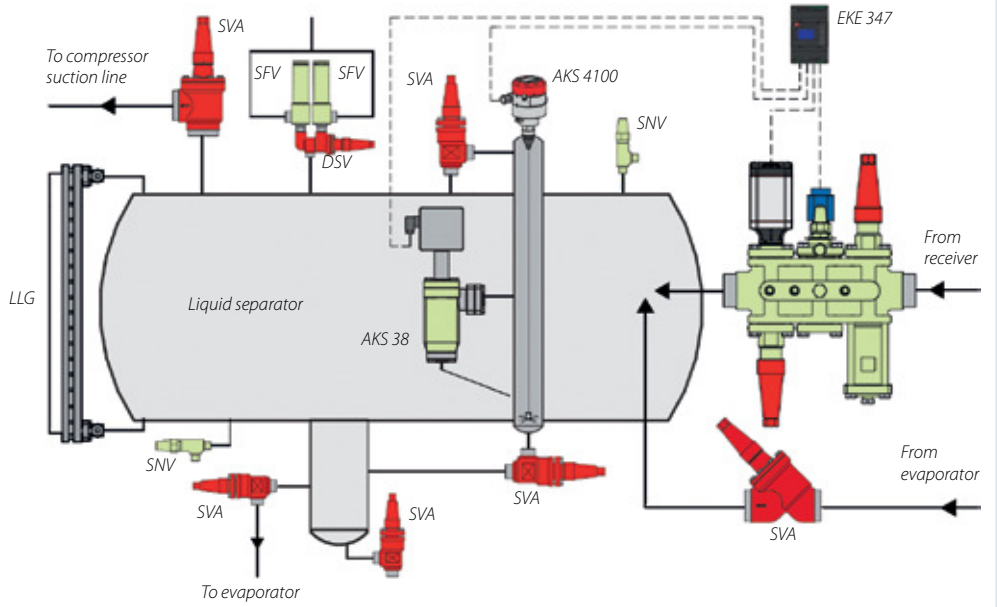

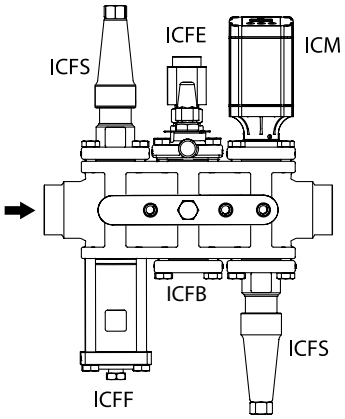

Not all valves are shown. Not to be used for construction purposes.

Example of application: Liquid injection line

A valve combination for compressor liquid injection with electronic injection valve is required. It is a required to have a solenoid valve in front of the control valve.

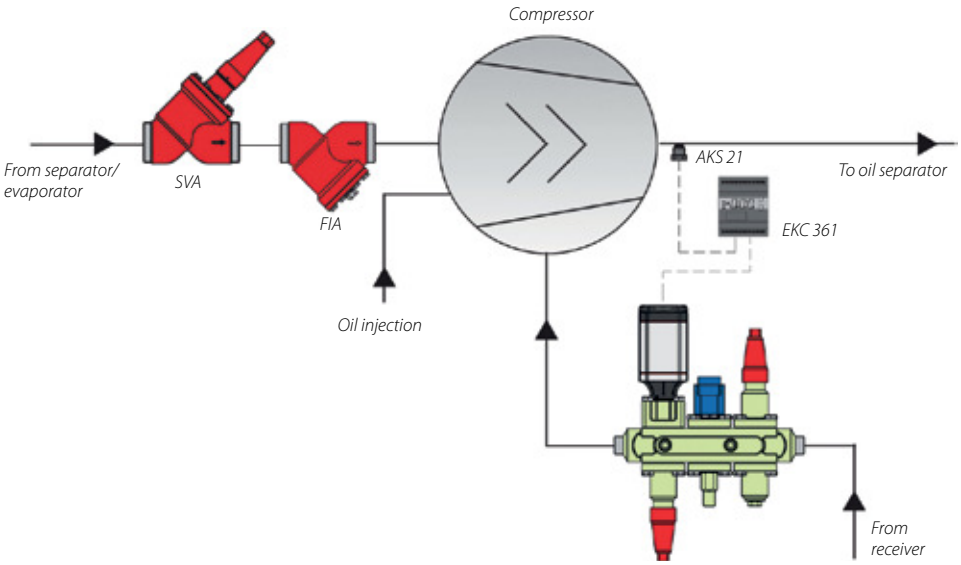

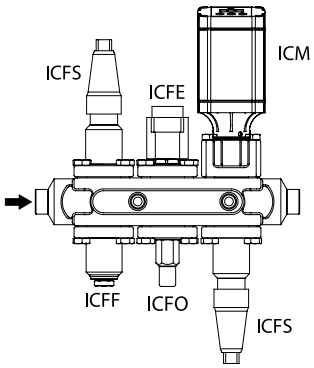

Not all valves are shown. Not to be used for construction purposes.

Application example

Example of application: Liquid feed line/Hotgas defrost line/ Return line

Evaporator with 2 stage gas powered ICLX module in suction line ICF and hot gas defrost featuring: ICF liquid feed valve station and ICF Hot gas valve station with side port to power ICLX module.
Defrost drain through liquid feed ICF weld connection to suction line ICF side port.
ICS+CVP as a defrost pressure regulator.

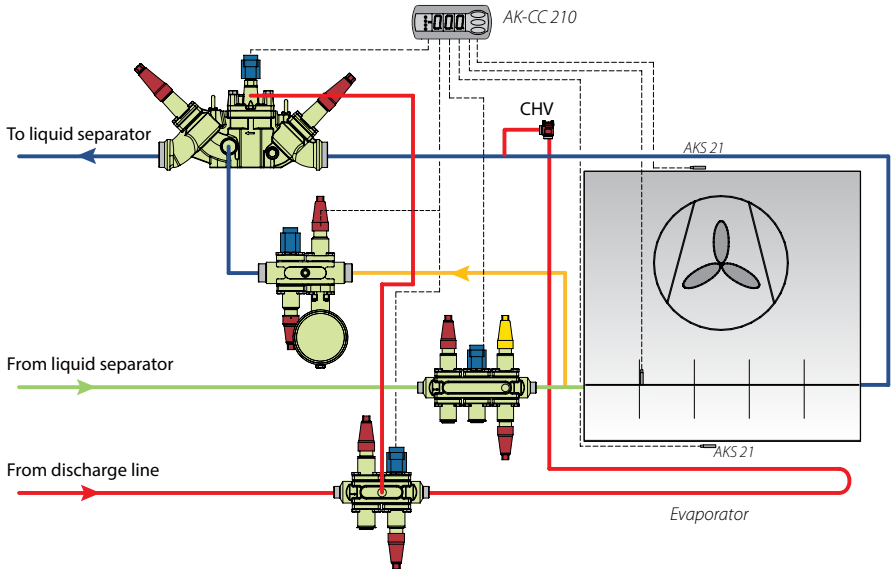

Not all valves are shown. Not to be used for construction purposes.
Note: *Restrictions to ICF drain station piping - please see DKRCI.PA.FT1.A*

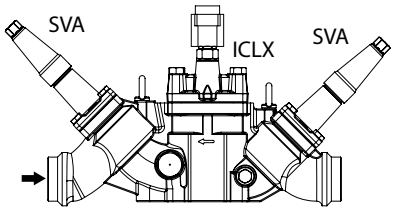

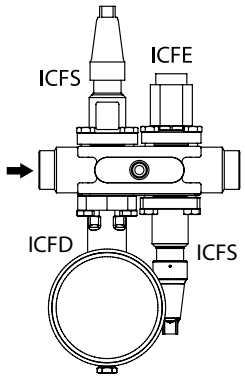

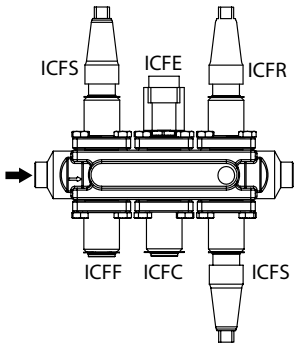

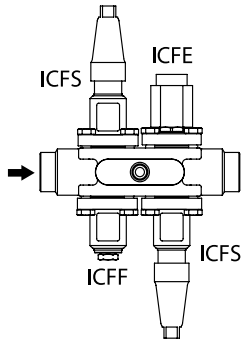

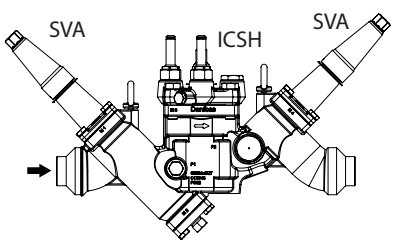

Ordering

Below Nomenclature show the generic configuration and application by identification of housing size, type and application group.

This designation is often used for discussion on possible solutions and will be the final identification on the valve label (see label example).

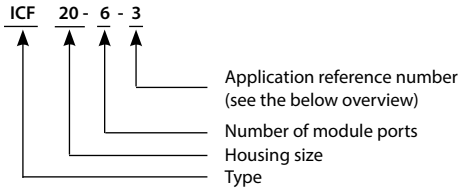

For ordering, connection size and type must be chosen to get the final identification.
The final identification is done by code number only (see next pages).

Label example:



Application overview (generic configuration - connection type and size excluded)

Application #		Sequence of functions					
Liquid feed							
1	Liquid feed (No hotgas defrost)	Shut-off	Strainer	Solenoid	Man Open	Regul.	Shut-off
2	Liquid feed	Shut-off	Strainer	Solenoid	Man Open	Regul.	Stop & check
3	Liquid feed	Shut-off	Strainer	Solenoid	Check	Regul.	Shut-off
10	Liquid feed (No hotgas defrost)	Shut-off	Strainer	Solenoid	Regul.		
15	Liquid feed w. external Conn.	Shut-off	Strainer	Solenoid	Check	Welding	Regul.
Solenoid common							
4	Solenoid - Liquid & Hot gas lines	Shut-off	Strainer	Solenoid	Man Open	Shut-off	
8	Solenoid - Liquid & Hot gas lines	Shut-off	Strainer	Solenoid	Man Open		
Liquid injection							
5	Liquid injection (expansion)	Shut-off	Strainer	Solenoid	Man Open	Motor	Shut-off
12	Liquid injection (expansion) PWM	Shut-off	Strainer	El. Exp.	Shut-off		
14	Liquid injection (expansion)	Shut-off	Strainer	Motor	Shut-off		
Hot gas defrost							
9	Hot gas defrost	Shut-off	Strainer	Solenoid	Shut-off		
Hot gas defrost (ICF 50 only)							
47	Hot gas defrost - On/Off 2-step solenoid	Shut-off	Strainer option*	Solenoid	Shut-off		
48	Hot gas defrost - On/Off 2-step solenoid + manual Regulating	Shut-off	Strainer option*	Solenoid	Regul.		
*** ICF 50 only**							
Solenoid multiple evaporators							
11	Solenoid - Multiple evaporators	Shut-off	Strainer	Solenoid	Check		
18	Solenoid - Multiple evaporators	Shut-off	Strainer	Solenoid	Stop & check		
Liquid PWM							
13	Liquid injection & liquid feed PWM	Shut-off	Strainer	El. Exp.	Stop & check		
Return line (ICF 50 and ICF 65 only)							
41	ON/OFF 2-step solenoid	Shut-off	Strainer option*	Solenoid	Shut-off		
42	Pressure (temperature) Mechanical control	Shut-off	Strainer option*	ICS options**	Shut-off		
43	Pressure (temperature) Electronic control	Shut-off	Strainer option*	Motor	Shut-off		
44	ON/OFF 2-step solenoid + Manuel Regulating	Shut-off	Strainer option*	Solenoid	Regul.		
45	Pressure (temperature) Mechanical control + Manuel Regulating	Shut-off	Strainer option*	ICS options**	Regul.		
46	Pressure (temperature) Electronic control + Manuel Regulating	Shut-off	Strainer option*	Motor	Regul.		
Miscellaneous							
90	Multipurpose configurations						
Defrost drain line							
102	Liquid drain M2 with solenoid - 2 shut-off	Shut-off	Liquid drain	Solenoid	Shut-off		
103	Liquid drain M4 with solenoid - 1 shut-off	Shut-off	Solenoid	Liquid drain			
104	Liquid drain M4 with strainer and solenoid - 1 shut-off	Shut-off	Strainer	Solenoid	Liquid drain		
105	Liquid drain M2 with solenoid - 1 shut-off	Shut-off	Liquid drain	Solenoid			

* ICF 50 only
** ICS typical options: On/Off solenoid, Pressure or Temperature control (see ICS data sheet)

Ordering ICF

Liquid feed

Application 1: Liquid feed (no hot gas defrost)

Type	No. of modules	Appl. no.	Connection size		Connection type	Module location						Weight		Code number
			[in.]	[mm]		M1	M2	M3	M4	M5	M6	kg	lbs	
ICF 20	6	1RA	¾	20	Butt-weld ANSI (B 36.10)	ICFS 20	ICFF 20	ICFE 20	ICFO 20	ICFR 20A	ICFS 20	9.5	20.9	027L3004
ICF 20	6	1RA	1	25	Butt-weld ANSI (B 36.10)	ICFS 20	ICFF 20	ICFE 20	ICFO 20	ICFR 20A	ICFS 20	10.1	22.2	027L3373
ICF 25	6	1RB	1 ¼	32	Butt-weld ANSI (B 36.10)	ICFS 25	ICFF 25	ICFE 25	ICFB 25	ICFR 25B	ICFS 25	23.8	52.4	027L4012
ICF 20	6	1RA	¾	20	Butt-weld DIN-EN 10220	ICFS 20	ICFF 20	ICFE 20	ICFO 20	ICFR 20A	ICFS 20	9.5	20.9	027L3000
ICF 20	6	1RA	1	25	Butt-weld DIN-EN 10220	ICFS 20	ICFF 20	ICFE 20	ICFO 20	ICFR 20A	ICFS 20	9.7	21.3	027L3002
ICF 20	6	1HRB	1	25	Butt-weld DIN-EN 10220	ICFS 20	ICFF 20	ICFE 20H	ICFB 20	ICFR 20B	ICFS 20	10.3	22.7	027L3406
ICF 25	6	1RA	1	25	Butt-weld DIN-EN 10220	ICFS 25	ICFF 25	ICFE 25	ICFB 25	ICFR 25A	ICFS 25	23.6	51.9	027L4002
ICF 20	6	1RA	1 ¼	32	Butt-weld DIN-EN 10220	ICFS 20	ICFF 20	ICFE 20	ICFO 20	ICFR 20A	ICFS 20	9.7	21.3	027L3003
ICF 20	6	1HRB	1 ¼	32	Butt-weld DIN-EN 10220	ICFS 20	ICFF 20	ICFE 20H	ICFB 20	ICFR 20B	ICFS 20	10.3	22.7	027L3407
ICF 25	6	1RA	1 ¼	32	Butt-weld DIN-EN 10220	ICFS 25	ICFF 25	ICFE 25	ICFB 25	ICFR 25A	ICFS 25	23.6	51.9	027L4006
ICF 25	6	1RB	1 ¼	32	Butt-weld DIN-EN 10220	ICFS 25	ICFF 25	ICFE 25	ICFB 25	ICFR 25B	ICFS 25	23.6	51.9	027L4011
ICF 25	6	1RB	1 ½	40	Butt-weld DIN-EN 10220	ICFS 25	ICFF 25	ICFE 25	ICFB 25	ICFR 25B	ICFS 25	22.7	49.9	027L4016
ICF 20	6	1RA	¾	20	Socket weld, ANSI (B 16.11)	ICFS 20	ICFF 20	ICFE 20	ICFO 20	ICFR 20A	ICFS 20	10.4	22.9	027L3005
ICF 20	6	1RA	1	25	Socket weld, ANSI (B 16.11)	ICFS 20	ICFF 20E	ICFE 20	ICFO 20	ICFR 20A	ICFS 20	9.9	21.8	027L3007
ICF 20	6	1HRB	1	25	Socket weld, ANSI (B 16.11)	ICFS 20	ICFF 20E	ICFE 20H	ICFB 20	ICFR 20B	ICFS 20	10.9	24.0	027L3408
ICF 25	6	1RA	1	25	Socket weld, ANSI (B 16.11)	ICFS 25	ICFF 25E	ICFE 25	ICFB 25	ICFR 25A	ICFS 25	24.1	53.0	027L4003
ICF 20	6	1RA	1 ¼	32	Socket weld, ANSI (B 16.11)	ICFS 20	ICFF 20E	ICFE 20	ICFO 20	ICFR 20A	ICFS 20	10.1	22.2	027L3008
ICF 20	6	1HRB	1 ¼	32	Socket weld, ANSI (B 16.11)	ICFS 20	ICFF 20E	ICFE 20H	ICFB 20	ICFR 20B	ICFS 20	10.9	24.0	027L3409
ICF 25	6	1RA	1 ¼	32	Socket weld, ANSI (B 16.11)	ICFS 25	ICFF 25E	ICFE 25	ICFB 25	ICFR 25A	ICFS 25	23.8	52.4	027L4008
ICF 25	6	1RB	1 ¼	32	Socket weld, ANSI (B 16.11)	ICFS 25	ICFF 25E	ICFE 25	ICFB 25	ICFR 25B	ICFS 25	24.2	53.2	027L4013
ICF 25	6	1RB	1 ½	40	Socket weld, ANSI (B 16.11)	ICFS 25	ICFF 25E	ICFE 25	ICFB 25	ICFR 25B	ICFS 25	23.8	52.4	027L4017

Application 2: Liquid feed

Type	No. of modules	Appl. no.	Connection size		Connection type	Module location						Weight		Code number
			[in.]	[mm]		M1	M2	M3	M4	M5	M6	kg	lbs	
ICF 20	6	2RA	¾	20	Butt-weld ANSI (B 36.10)	ICFS 20	ICFF 20	ICFE 20	ICFO 20	ICFR 20A	ICFN 20	9.8	21.6	027L3013
ICF 20	6	2RA	¾	20	Butt-weld DIN-EN 10220	ICFS 20	ICFF 20	ICFE 20	ICFO 20	ICFR 20A	ICFN 20	9.7	21.3	027L3009
ICF 20	6	2RB	¾	20	Butt-weld DIN-EN 10220	ICFS 20	ICFF 20	ICFE 20	ICFO 20	ICFR 20B	ICFN 20	10.2	22.9	027L3398
ICF 20	6	2RB	1	25	Butt-weld DIN-EN 10220	ICFS 20	ICFF 20	ICFE 20	ICFO 20	ICFR 20B	ICFN 20	10.2	22.9	027L3422
ICF 20	6	2RA	1	25	Butt-weld DIN-EN 10220	ICFS 20	ICFF 20	ICFE 20	ICFO 20	ICFR 20A	ICFN 20	9.7	21.3	027L3011
ICF 20	6	2HRB	1	25	Butt-weld DIN-EN 10220	ICFS 20	ICFF 20	ICFE 20H	ICFB 20	ICFR 20B	ICFN 20	9.2	20.2	027L3410
ICF 20	6	2RA	1¼	32	Butt-weld DIN-EN 10220	ICFS 20	ICFF 20	ICFE 20	ICFO 20	ICFR 20A	ICFN 20	9.7	21.3	027L3012
ICF 20	6	2HRB	1¼	32	Butt-weld DIN-EN 10220	ICFS 20	ICFF 20	ICFE 20H	ICFB 20	ICFR 20B	ICFN 20	9.2	20.2	027L3411
ICF 25	6	2RA	1¼	32	Butt-weld DIN-EN 10220	ICFS 25	ICFF 25	ICFE 25	ICFB 25	ICFR 25A	ICFN 25	23.3	51.3	027L4135
ICF 20	6	2RA	¾	20	Socket weld, ANSI (B 16.11)	ICFS 20	ICFF 20E	ICFE 20	ICFO 20	ICFR 20A	ICFN 20	10.1	22.2	027L3014
ICF 20	6	2RA	1	25	Socket weld, ANSI (B 16.11)	ICFS 20	ICFF 20E	ICFE 20	ICFO 20	ICFR 20A	ICFN 20	9.9	21.8	027L3016
ICF 20	6	2HRB	1	25	Socket weld, ANSI (B 16.11)	ICFS 20	ICFF 20E	ICFE 20H	ICFB 20	ICFR 20B	ICFN 20	8.8	19.4	027L3412
ICF 20	6	2RA	1¼	32	Socket weld, ANSI (B 16.11)	ICFS 20	ICFF 20E	ICFE 20	ICFO 20	ICFR 20A	ICFN 20	9.9	21.8	027L3017
ICF 20	6	2HRB	1¼	32	Socket weld, ANSI (B 16.11)	ICFS 20	ICFF 20E	ICFE 20H	ICFB 20	ICFR 20B	ICFN 20	10.9	24.0	027L3413

ICAD and coils are not included and must be ordered separately.
***Please Note**: When used in systems with CO_2, the o-rings on the ICM module can swell (grow). At service, it is therefore recommended to install new o-rings, before the ICM function module is re-installed in the ICF valve body.*

Ordering ICF

Liquid feed

Application 3: Liquid feed

Type	No. of modules	Appl. no.	Connection size		Connection type	Module location						Weight		Code number
			[in.]	[mm]		M1	M2	M3	M4	M5	M6	kg	lbs	
ICF 20	6	3RA	¾	20	Butt-weld ANSI (B 36.10)	ICFS 20	ICFF 20	ICFE 20	ICFC 20	ICFR 20A	ICFS 20	9.9	21.8	027L3022
ICF 20	6	3RA	1	25	Butt-weld ANSI (B 36.10)	ICFS 20	ICFF 20	ICFE 20	ICFC 20	ICFR 20A	ICFS 20	9.9	21.8	027L3419
ICF 20	6	3RA	¾	20	Butt-weld DIN-EN 10220	ICFS 20	ICFF 20	ICFE 20	ICFC 20	ICFR 20A	ICFS 20	9.6	21.1	027L3018
ICF 20	6	3RB	¾	20	Butt-weld DIN-EN 10220	ICFS 20	ICFF 20	ICFE 20	ICFC 20	ICFR 20B	ICFS 20	10.4	22.9	027L3433
ICF 20	6	3RA	1	25	Butt-weld DIN-EN 10220	ICFS 20	ICFF 20E	ICFE 20	ICFC 20	ICFR 20A	ICFS 20	10.0	22.0	027L3437
ICF 20	6	3HRB	1	25	Butt-weld DIN-EN 10220	ICFS 20	ICFF 20	ICFE 20H	ICFC 20	ICFR 20B	ICFS 20	10.6	23.3	027L3414
ICF 25	6	3RA	1	25	Butt-weld DIN-EN 10220	ICFS 25	ICFF 25	ICFE 25	ICFC 25	ICFR 25A	ICFS 25	23.4	51.5	027L4020
ICF 20	6	3RA	1 ¼	32	Butt-weld DIN-EN 10220	ICFS 20	ICFF 20	ICFE 20	ICFC 20	ICFR 20A	ICFS 20	10.4	22.9	027L3021
ICF 20	6	3HRB	1 ¼	32	Butt-weld DIN-EN 10220	ICFS 20	ICFF 20	ICFE 20H	ICFC 20	ICFR 20B	ICFS 20	10.6	23.3	027L3415
ICF 25	6	3RA	1 ¼	32	Butt-weld DIN-EN 10220	ICFS 25	ICFF 25	ICFE 25	ICFC 25	ICFR 25A	ICFS 25	23.2	51.0	027L4024
ICF 20	6	3RB	1 ¼	32	Butt-weld DIN-EN 10220	ICFS 20	ICFF 20	ICFE 20	ICFC 20	ICFR 20B	ICFS 20	10.4	22.9	027L3430
ICF 25	6	3RB	1 ¼	32	Butt-weld DIN-EN 10220	ICFS 25	ICFF 25	ICFE 25	ICFC 25	ICFR 25B	ICFS 25	23.8	52.4	027L4029
ICF 25	6	3RB	1 ½	40	Butt-weld DIN-EN 10220	ICFS 25	ICFF 25	ICFE 25	ICFC 25	ICFR 25B	ICFS 25	24.0	52.8	027L4034
ICF 20	6	3RA	¾	20	Socket weld, ANSI (B 16.11)	ICFS 20	ICFF 20E	ICFE 20	ICFC 20	ICFR 20A	ICFS 20	10.0	22.0	027L3023
ICF 20	6	3HRB	¾	20	Socket weld, ANSI (B 16.11)	ICFS 20	ICFF 20E	ICFE 20H	ICFC 20	ICFR 20B	ICFS 20	10.7	23.5	027L3418
ICF 20	6	3RA	1	25	Socket weld, ANSI (B 16.11)	ICFS 20	ICFF 20E	ICFE 20	ICFC 20	ICFR 20A	ICFS 20	10.0	22.0	027L3025
ICF 20	6	3HRB	1	25	Socket weld, ANSI (B 16.11)	ICFS 20	ICFF 20E	ICFE 20H	ICFC 20	ICFR 20B	ICFS 20	11.2	24.6	027L3416
ICF 25	6	3RA	1	25	Socket weld, ANSI (B 16.11)	ICFS 25	ICFF 25E	ICFE 25	ICFC 25	ICFR 25A	ICFS 25	24.2	53.2	027L4021
ICF 20	6	3RA	1 ¼	32	Socket weld, ANSI (B 16.11)	ICFS 20	ICFF 20E	ICFE 20	ICFC 20	ICFR 20A	ICFS 20	10.1	22.2	027L3026
ICF 20	6	3HRB	1 ¼	32	Socket weld, ANSI (B 16.11)	ICFS 20	ICFF 20E	ICFE 20H	ICFC 20	ICFR 20B	ICFS 20	11.3	24.9	027L3417
ICF 25	6	3RA	1 ¼	32	Socket weld, ANSI (B 16.11)	ICFS 25	ICFF 25E	ICFE 25	ICFC 25	ICFR 25A	ICFS 25	24.1	53.0	027L4026
ICF 25	6	3RB	1 ¼	32	Socket weld, ANSI (B 16.11)	ICFS 25	ICFF 25E	ICFE 25	ICFC 25	ICFR 25B	ICFS 25	24.1	53.0	027L4031
ICF 25	6	3RB	1 ½	40	Socket weld, ANSI (B 16.11)	ICFS 25	ICFF 25E	ICFE 25	ICFC 25	ICFR 25B	ICFS 25	24.2	53.2	027L4035

ICAD and coils are not included and must be ordered separately.

***Please Note**: When used in systems with CO_2, the o-rings on the ICM module can swell (grow). At service, it is therefore recommended to install new o-rings, before the ICM function module is re-installed in the ICF valve body.*

Ordering ICF

Liquid feed

Application 10: Liquid feed (no hot gas defrost)

Type	No. of modules	Appl. no.	Connection size		Connection type	Module location						Weight		Code number
			[in.]	[mm]		M1	M2	M3	M4	M5	M6	kg	lbs	
ICF 20	4	10RA	¾	20	Butt-weld ANSI (B 36.10)	ICFS 20	ICFF 20	ICFE 20	ICFR 20A	–	–	6.6	14.5	027L3077
ICF 25	4	10RA	1 ¼	32	Butt-weld ANSI (B 36.10)	ICFS 25	ICFF 25	ICFE 25	ICFR 25A	–	–	16.1	35.4	027L4081
ICF 15	4	10RA	½	15	Butt-weld DIN-EN 10220	ICFS 15*)	ICFF 15*)	ICFE 20	ICFR 20A	–	–	6.3	13.8	027L4548
ICF 15	4	10RB	½	15	Butt-weld DIN-EN 10220	ICFS 15*)	ICFF 15*)	ICFE 20	ICFR 20B	–	–	6.3	13.8	027L4544
ICF 15	4	10HRA	½	15	Butt-weld DIN-EN 10220	ICFS 15*)	ICFF 15*)	ICFE 20H	ICFR 20A	–	–	7.0	15.4	027L4552
ICF 15	4	10HRB	½	15	Butt-weld DIN-EN 10220	ICFS 15*)	ICFF 15*)	ICFE 20H	ICFR 20B	–	–	7.0	15.4	027L4549
ICF 15	4	10RA	¾	20	Butt-weld DIN-EN 10220	ICFS 15*)	ICFF 15*)	ICFE 20	ICFR 20A	–	–	6.3	13.8	027L4545
ICF 15	4	10RB	¾	20	Butt-weld DIN-EN 10220	ICFS 15*)	ICFF 15*)	ICFE 20	ICFR 20B	–	–	6.3	13.8	027L4540
ICF 15	4	10HRB	¾	20	Butt-weld DIN-EN 10220	ICFS 15*)	ICFF 15*)	ICFE 20H	ICFR 20B	–	–	7.0	15.4	027L4524
ICF 20	4	10RA	¾	20	Butt-weld DIN-EN 10220	ICFS 20	ICFF 20	ICFE 20	ICFR 20A	–	–	6.7	14.7	027L3073
ICF 20	4	10HRB	¾	20	Butt-weld DIN-EN 10220	ICFS 20	ICFF 20	ICFE 20H	ICFR 20B	–	–	7.9	17.4	027L3383
ICF 20	4	10RA	1	25	Butt-weld DIN-EN 10220	ICFS 20	ICFF 20	ICFE 20	ICFR 20A	–	–	7.2	15.8	027L3075
ICF 20	4	10RB	1	25	Butt-weld DIN-EN 10220	ICFS 20	ICFF 20	ICFE 20	ICFR 20B	–	–	7.2	15.8	027L3431
ICF 20	4	10HRB	1	25	Butt-weld DIN-EN 10220	ICFS 20	ICFF 20	ICFE 20H	ICFR 20B	–	–	7.9	17.4	027L3400
ICF 25	4	10RA	1	25	Butt-weld DIN-EN 10220	ICFS 25	ICFF 25	ICFE 25	ICFR 25A	–	–	15.9	35.0	027L4076
ICF 25	4	10RB	1	25	Butt-weld DIN-EN 10220	ICFS 25	ICFF 25	ICFE 25	ICFR 25B	–	–	15.9	35.0	027L4169
ICF 25	4	10RB	1	25	Butt-weld DIN-EN 10220	ICFS 25	ICFF 25E	ICFE 25	ICFR 25B	–	–	16.2	35.6	027L4187
ICF 20	4	10RA	1 ¼	32	Butt-weld DIN-EN 10220	ICFS 20	ICFF 20	ICFE 20	ICFR 20A	–	–	6.7	14.7	027L3076
ICF 20	4	10HRB	1 ¼	32	Butt-weld DIN-EN 10220	ICFS 20	ICFF 20	ICFE 20H	ICFR 20B	–	–	7.9	17.4	027L3401
ICF 25	4	10RA	1 ¼	32	Butt-weld DIN-EN 10220	ICFS 25	ICFF 25	ICFE 25	ICFR 25A	–	–	15.8	34.8	027L4080
ICF 25	4	10RB	1 ¼	32	Butt-weld DIN-EN 10220	ICFS 25	ICFF 25	ICFE 25	ICFR 25B	–	–	15.4	33.9	027L4085
ICF 25	4	10RB	1 ½	40	Butt-weld DIN-EN 10220	ICFS 25	ICFF 25	ICFE 25	ICFR 25B	–	–	15.8	34.8	027L4090
ICF 15	4	10HRB	½	15	Socket weld, ANSI (B 16.11)	ICFS 15*)	ICFF 15*)	ICFE 20H	ICFR 20B	–	–	7.0	15.4	027L4530
ICF 20	4	10RA	¾	20	Socket weld, ANSI (B 16.11)	ICFS 20	ICFF 20E	ICFE 20	ICFR 20A	–	–	7.0	15.4	027L3078
ICF 20	4	10HRB	¾	20	Socket weld, ANSI (B 16.11)	ICFS 20	ICFF 20E	ICFE 20H	ICFR 20B	–	–	8.4	18.5	027L3404
ICF 20	4	10RA	1	25	Socket weld, ANSI (B 16.11)	ICFS 20	ICFF 20E	ICFE 20	ICFR 20A	–	–	6.9	15.2	027L3080
ICF 20	4	10HRB	1	25	Socket weld, ANSI (B 16.11)	ICFS 20	ICFF 20E	ICFE 20H	ICFR 20B	–	–	7.8	17.2	027L3402
ICF 25	4	10RA	1	25	Socket weld, ANSI (B 16.11)	ICFS 25	ICFF 25E	ICFE 25	ICFR 25A	–	–	15.8	34.8	027L4077
ICF 20	4	10RA	1 ¼	32	Socket weld, ANSI (B 16.11)	ICFS 20	ICFF 20E	ICFE 20	ICFR 20A	–	–	7.0	15.4	027L3081
ICF 20	4	10HRB	1 ¼	32	Socket weld, ANSI (B 16.11)	ICFS 20	ICFF 20E	ICFE 20H	ICFR 20B	–	–	8.1	17.8	027L3403
ICF 25	4	10RA	1 ¼	32	Socket weld, ANSI (B 16.11)	ICFS 25	ICFF 25E	ICFE 25	ICFR 25A	–	–	12.7	27.9	027L4082
ICF 25	4	10RB	1 ¼	32	Socket weld, ANSI (B 16.11)	ICFS 25	ICFF 25E	ICFE 25	ICFR 25B	–	–	16.2	35.6	027L4087
ICF 25	4	10RB	1 ½	40	Socket weld, ANSI (B 16.11)	ICFS 25	ICFF 25E	ICFE 25	ICFR 25B	–	–	16.2	35.6	027L4091

**) Fixed module*
ICAD and coils are not included and must be ordered separately.
***Please Note**: When used in systems with CO_2, the o-rings on the ICM module can swell (grow). At service, it is therefore recommended to install new o-rings, before the ICM function module is re-installed in the ICF valve body.*

Ordering ICF

Liquid feed

Application 15: Liquid feed with external connection

Type	No. of modules	Appl. no.	Connection size		Connection type	Module location						Weight		Code number
			[in.]	[mm]		M1	M2	M3	M4	M5	M6	kg	lbs	
ICF 20	6	15RA	1	25	Butt-weld DIN-EN 10220	ICFS 20	ICFF 20	ICFE 20	ICFC 20	ICFW 20D	ICFR 20A	9.1	20.0	027L3157
ICF 20	6	15RB	1	25	Butt-weld DIN-EN 10220	ICFS 20	ICFF 20	ICFE 20	ICFC 20	ICFW 20D	ICFR 20B	9.1	20.0	027L3434
ICF 25	6	15RA	1	25	Butt-weld DIN-EN 10220	ICFS 25	ICFF 25	ICFE 25	ICFC 25	ICFW 25D	ICFR 25A	21.8	48.0	027L4121
ICF 25	6	15RB	1¼	32	Butt-weld DIN-EN 10220	ICFS 25	ICFF 25	ICFE 25	ICFC 25	ICFW 25D	ICFR 25B	22.7	49.9	027L4126
ICF 25	6	15RB	1½	40	Butt-weld DIN-EN 10220	ICFS 25	ICFF 25	ICFE 25	ICFC 25	ICFW 25D	ICFR 25B	21.9	48.2	027L4130
ICF 25	6	15RA	1	25	Socket weld, ANSI (B 16.11)	ICFS 25	ICFF 25E	ICFE 25	ICFC 25	ICFW 25S	ICFR 25A	23.5	51.7	027L4122
ICF 25	6	15RB	1¼	32	Socket weld, ANSI (B 16.11)	ICFS 25	ICFF 25E	ICFE 25	ICFC 25	ICFW 25S	ICFR 25B	23.6	51.9	027L4127
ICF 25	6	15RB	1½	40	Socket weld, ANSI (B 16.11)	ICFS 25	ICFF 25E	ICFE 25	ICFC 25	ICFW 25S	ICFR 25B	23.7	52.1	027L4131

Solenoid common

Application 4: Solenoid - Liquid & hot gas lines

Type	No. of modules	Appl. no.	Connection size		Connection type	Module location						Weight		Code number
			[in.]	[mm]		M1	M2	M3	M4	M5	M6	kg	lbs	
ICF 20	6	4	1	25	Butt-weld DIN-EN 10220	ICFS 20	ICFF 20	ICFE 20	ICFO 20	ICFB 20	ICFS 20	9.2	20.2	027L3028
ICF 20	6	4	1¼	32	Butt-weld DIN-EN 10220	ICFS 20	ICFF 20	ICFE 20	ICFO 20	ICFB 20	ICFS 20	9.2	20.2	027L3029
ICF 20	6	4	¾	20	Socket weld, ANSI (B 16.11)	ICFS 20	ICFF 20E	ICFE 20	ICFO 20	ICFB 20	ICFS 20	9.4	20.7	027L3124
ICF 20	6	4	1	25	Socket weld, ANSI (B 16.11)	ICFS 20	ICFF 20E	ICFE 20	ICFO 20	ICFB 20	ICFS 20	9.3	20.5	027L3032
ICF 20	6	4	1¼	32	Socket weld, ANSI (B 16.11)	ICFS 20	ICFF 20E	ICFE 20	ICFO 20	ICFB 20	ICFS 20	9.5	20.9	027L3033

Application 8: Solenoid - Liquid & hot gas lines

Type	No. of modules	Appl. no.	Connection size		Connection type	Module location						Weight		Code number
			[in.]	[mm]		M1	M2	M3	M4	M5	M6	kg	lbs	
ICF 15	4	8	½	15	Butt-weld ANSI (B 36.10)	ICFS 15*)	ICFF 15*)	ICFE 20	ICFO 20	–	–	5.7	12.6	027L4533
ICF 15	4	8	¾	20	Butt-weld ANSI (B 36.10)	ICFS 15*)	ICFF 15*)	ICFE 20	ICFO 20	–	–	5.7	12.6	027L4535
ICF 20	4	8	¾	20	Butt-weld ANSI (B 36.10)	ICFS 20	ICFF 20	ICFE 20	ICFO 20	–	–	6.3	13.9	027L3062
ICF 15	4	8	½	15	Butt-weld DIN-EN 10220	ICFS 15*)	ICFF 15*)	ICFE 20	ICFO 20	–	–	5.7	12.6	027L4532
ICF 15	4	8	½	15	Butt-weld DIN-EN 10220	ICFS 15*)	ICFF 15*)	ICFE 20	ICFN 20	–	–	6.8	15.0	027L4579
ICF 15	4	8	¾	20	Butt-weld DIN-EN 10220	ICFS 15*)	ICFF 15*)	ICFE 20	ICFO 20	–	–	5.7	12.6	027L4520
ICF 15	4	8	¾	20	Butt-weld DIN-EN 10220	ICFS 15*)	ICFF 15*)	ICFE 20	ICFN 20	–	–	6.8	15.0	027L4574
ICF 20	4	8	1	25	Butt-weld DIN-EN 10220	ICFS 20	ICFF 20	ICFE 20	ICFO 20	–	–	7.2	15.8	027L3060
ICF 25	4	8	1	25	Butt-weld DIN-EN 10220	ICFS 25	ICFF 25	ICFE 25	ICFB 25	–	–	12.4	27.3	027L4054
ICF 20	4	8	1¼	32	Butt-weld DIN-EN 10220	ICFS 20	ICFF 20	ICFE 20	ICFO 20	–	–	6.3	13.9	027L3061
ICF 25	4	8	1¼	32	Butt-weld DIN-EN 10220	ICFS 25	ICFF 25	ICFE 25	ICFB 25	–	–	14.5	31.9	027L4133
ICF 25	4	8	1½	40	Butt-weld DIN-EN 10220	ICFS 25	ICFF 25	ICFE 25	ICFB 25	–	–	14.5	31.9	027L4059
ICF 15	4	8	½	15	Pipe thread (ANSI B 1.20.1)	ICFS 15*)	ICFF 15*)	ICFE 20	ICFO 20	–	–	5.7	12.6	027L4534
ICF 15	4	8	½	15	Socket weld, ANSI (B 16.11)	ICFS 15*)	ICFF 15*)	ICFE 20	ICFO 20	–	–	5.7	12.6	027L4526
ICF 20	4	8	¾	20	Socket weld, ANSI (B 16.11)	ICFS 20	ICFF 20E	ICFE 20	ICFO 20	–	–	6.6	14.5	027L3366
ICF 20	4	8	1	25	Socket weld, ANSI (B 16.11)	ICFS 20	ICFF 20E	ICFE 20	ICFO 20	–	–	6.7	14.7	027L3064
ICF 20	4	8	1¼	32	Socket weld, ANSI (B 16.11)	ICFS 20	ICFF 20E	ICFE 20	ICFO 20	–	–	6.7	14.7	027L3065
ICF 15	4	8	7/8	22	Solder ANSI B 16.22	ICFS 15*)	ICFF 15*)	ICFE 20	ICFO 20	–	–	5.7	12.6	027L4536
ICF 15	4	8	7/8	22	Solder DIN-EN1254-1	ICFS 15*)	ICFF 15*)	ICFE 20	ICFO 20	–	–	5.7	12.6	027L4537

**) Fixed module*
ICAD and coils are not included and must be ordered separately.
***Please Note**: When used in systems with CO_2, the o-rings on the ICM module can swell (grow). At service, it is therefore recommended to install new o-rings, before the ICM function module is re-installed in the ICF valve body.*

Ordering ICF

Liquid injection

Application 5: Liquid injection (expansion)

Type	No. of modules	Appl. no.	Connection size		Connection type	Module location						Weight		Code number
			[in.]	[mm]		M1	M2	M3	M4	M5	M6	kg	lbs	
ICF 20	6	5MA	¾	20	Butt-weld ANSI (B 36.10)	ICFS 20	ICFF 20	ICFE 20	ICFO 20	ICM 20-A	ICFS 20	9.6	21.1	027L3037
ICF 20	6	5MB	¾	20	Butt-weld ANSI (B 36.10)	ICFS 20	ICFF 20	ICFE 20	ICFO 20	ICM 20-B	ICFS 20	9.9	21.8	027L3043
ICF 25	6	5MA	1¼	32	Butt-weld ANSI (B 36.10)	ICFS 25	ICFF 25	ICFE 25	ICFB 25	ICM 25-A	ICFS 25	23.0	50.6	027L4043
ICF 20	6	5MA33	¾	20	Butt-weld DIN-EN 10220	ICFS 20	ICFF 20	ICFE 20	ICFO 20	ICM 20-A33	ICFS 20	10.1	22.2	027L3367
ICF 20	6	5MA33	¾	20	Butt-weld DIN-EN 10220	ICFS 20	ICFF 20-74	ICFE 20	ICFO 20	ICM 20-A33	ICFS 20	9.8	21.6	027L3151
ICF 20	6	5MA	¾	20	Butt-weld DIN-EN 10220	ICFS 20	ICFF 20	ICFE 20	ICFO 20	ICM 20-A	ICFS 20	9.8	21.6	027L3034
ICF 20	6	5MA	¾	20	Butt-weld DIN-EN 10220	ICFS 20	ICFF 20-74	ICFE 20	ICFO 20	ICM 20-A	ICFS 20	9.8	21.6	027L3147
ICF 20	6	5MB	¾	20	Butt-weld DIN-EN 10220	ICFS 20	ICFF 20	ICFE 20	ICFO 20	ICM 20-B	ICFS 20	9.8	21.6	027L3145
ICF 20	6	5MB66	¾	20	Butt-weld DIN-EN 10220	ICFS 20	ICFF 20	ICFE 20	ICFO 20	ICM 20-B66	ICFS 20	9.6	21.1	027L3161
ICF 20	6	5MC	¾	20	Butt-weld DIN-EN 10220	ICFS 20	ICFF 20	ICFE 20	ICFO 20	ICM 20-C	ICFS 20	9.9	21.8	027L3432
ICF 20	6	5MA33	1	25	Butt-weld DIN-EN 10220	ICFS 20	ICFF 20	ICFE 20	ICFO 20	ICM 20-A33	ICFS 20	10.1	22.2	027L3388
ICF 20	6	5MA33	1	25	Butt-weld DIN-EN 10220	ICFS 20	ICFF 20-74	ICFE 20	ICFO 20	ICM 20-A33	ICFS 20	9.6	21.1	027L3153
ICF 20	6	5MA	1	25	Butt-weld DIN-EN 10220	ICFS 20	ICFF 20	ICFE 20	ICFO 20	ICM 20-A	ICFS 20	9.8	21.6	027L3036
ICF 20	6	5HMA	1	25	Butt-weld DIN-EN 10220	ICFS 20	ICFF 20	ICFE 20H	ICFB 20	ICM 20-A	ICFS 20	10.4	22.9	027L3322
ICF 20	6	5MA	1	25	Butt-weld DIN-EN 10220	ICFS 20	ICFF 20-74	ICFE 20	ICFO 20	ICM 20-A	ICFS 20	9.8	21.6	027L3148
ICF 20	6	5MB	1	25	Butt-weld DIN-EN 10220	ICFS 20	ICFF 20	ICFE 20	ICFO 20	ICM 20-B	ICFS 20	9.6	21.1	027L3042
ICF 20	6	5MB	1	25	Butt-weld DIN-EN 10220	ICFS 20	ICFF 20-74	ICFE 20	ICFO 20	ICM 20-B	ICFS 20	9.8	21.6	027L3149
ICF 20	6	5HMB	1	25	Butt-weld DIN-EN 10220	ICFS 20	ICFF 20	ICFE 20H	ICFB 20	ICM 20-B	ICFS 20	11.4	25.1	027L3325
ICF 20	6	5MB66	1	25	Butt-weld DIN-EN 10220	ICFS 20	ICFF 20	ICFE 20	ICFO 20	ICM 20-B66	ICFS 20	10.5	23.1	027L3389
ICF 20	6	5MC	1	25	Butt-weld DIN-EN 10220	ICFS 20	ICFF 20	ICFE 20	ICFO 20	ICM 20-C	ICFS 20	9.9	21.8	027L3047
ICF 20	6	5HMC	1	25	Butt-weld DIN-EN 10220	ICFS 20	ICFF 20	ICFE 20H	ICFB 20	ICM 20-C	ICFS 20	11.4	25.1	027L3328
ICF 25	6	5MA	1	25	Butt-weld DIN-EN 10220	ICFS 25	ICFF 25	ICFE 25	ICFB 25	ICM 25-A	ICFS 25	22.8	50.2	027L4038
ICF 25	6	5MA33	1¼	32	Butt-weld DIN-EN 10220	ICFS 25	ICFF 25	ICFE 25	ICFB 25	ICM 25-A33	ICFS 25	23.0	50.6	027L4171
ICF 20	6	5MB66	1¼	32	Butt-weld DIN-EN 10220	ICFS 20	ICFF 20	ICFE 20	ICFO 20	ICM 20-B66	ICFS 20	9.6	21.1	027L3374
ICF 20	6	5MC	1¼	32	Butt-weld DIN-EN 10220	ICFS 20	ICFF 20	ICFE 20	ICFO 20	ICM 20-C	ICFS 20	9.8	21.6	027L3048
ICF 20	6	5HMB	1¼	32	Butt-weld DIN-EN 10220	ICFS 20	ICFF 20	ICFE 20-H	ICFB 20	ICM 20-B	ICFS 20	10.3	22.7	027L3390
ICF 20	6	5HMC	1¼	32	Butt-weld DIN-EN 10220	ICFS 20	ICFF 20	ICFE 20H	ICFB 20	ICM 20-C	ICFS 20	10.3	22.7	027L3329
ICF 25	6	5MA	1¼	32	Butt-weld DIN-EN 10220	ICFS 25	ICFF 25	ICFE 25	ICFB 25	ICM 25-A	ICFS 25	23.0	50.6	027L4042
ICF 25	6	5MB	1¼	32	Butt-weld DIN-EN 10220	ICFS 25	ICFF 25	ICFE 25	ICFB 25	ICM 25-B	ICFS 25	22.0	48.5	027L4047
ICF 25	6	5MA	1½	40	Butt-weld DIN-EN 10220	ICFS 25	ICFF 25E	ICFE 25	ICFB 25	ICM 25-A	ICFS 25	21.9	48.2	027L4148
ICF 25	6	5MA	1½	40	Butt-weld DIN-EN 10220	ICFS 25	ICFF 25	ICFE 25	ICFB 25	ICM 25-A	ICFS 25	22.2	48.9	027L4174
ICF 25	6	5MA33	1½	40	Butt-weld DIN-EN 10220	ICFS 25	ICFF 25	ICFE 25	ICFB 25	ICM 25-A33	ICFS 25	22.2	48.9	027L4170
ICF 25	6	5MB	1½	40	Butt-weld DIN-EN 10220	ICFS 25	ICFF 25	ICFE 25	ICFB 25	ICM 25-B	ICFS 25	22.2	48.9	027L4052
ICF 20	6	5MA33	¾	20	Socket weld, ANSI (B 16.11)	ICFS 20	ICFF 20E	ICFE 20	ICFO 20	ICM 20-A33	ICFS 20	10.1	22.2	027L3154
ICF 20	6	5MA	¾	20	Socket weld, ANSI (B 16.11)	ICFS 20	ICFF 20E	ICFE 20	ICFO 20	ICM 20-A	ICFS 20	10.0	22.0	027L3038
ICF 20	6	5MB66	¾	20	Socket weld, ANSI (B 16.11)	ICFS 20	ICFF 20E	ICFE 20	ICFO 20	ICM 20-B66	ICFS 20	10.5	23.1	027L3159
ICF 20	6	5MB	¾	20	Socket weld, ANSI (B 16.11)	ICFS 20	ICFF 20E	ICFE 20	ICFO 20	ICM 20-B	ICFS 20	9.8	21.6	027L3127
ICF 20	6	5MA33	1	25	Socket weld, ANSI (B 16.11)	ICFS 20	ICFF 20-E	ICFE 20	ICFO 20	ICM 20-A33	ICFS 20	10.1	22.2	027L3391
ICF 20	6	5MA	1	25	Socket weld, ANSI (B 16.11)	ICFS 20	ICFF 20E	ICFE 20	ICFO 20	ICM 20-A	ICFS 20	10.1	22.2	027L3040
ICF 20	6	5HMA	1	25	Socket weld, ANSI (B 16.11)	ICFS 20	ICFF 20E	ICFE 20H	ICFB 20	ICM 20-A	ICFS 20	11.4	25.1	027L3323
ICF 20	6	5MB66	1	25	Socket weld, ANSI (B 16.11)	ICFS 20	ICFF 20E	ICFE 20	ICFO 20	ICM 20-B66	ICFS 20	10.5	23.1	027L3160
ICF 20	6	5MB	1	25	Socket weld, ANSI (B 16.11)	ICFS 20	ICFF 20E	ICFE 20	ICFO 20	ICM 20-B	ICFS 20	10.0	22.0	027L3045
ICF 20	6	5HMB	1	25	Socket weld, ANSI (B 16.11)	ICFS 20	ICFF 20E	ICFE 20H	ICFB 20	ICM 20-B	ICFS 20	11.0	24.2	027L3326
ICF 20	6	5MC	1	25	Socket weld, ANSI (B 16.11)	ICFS 20	ICFF 20E	ICFE 20	ICFO 20	ICM 20-C	ICFS 20	10.0	22.0	027L3051
ICF 20	6	5HMC	1	25	Socket weld, ANSI (B 16.11)	ICFS 20	ICFF 20E	ICFE 20H	ICFB 20	ICM 20-C	ICFS 20	10.0	22.0	027L3330
ICF 25	6	5MA	1	25	Socket weld, ANSI (B 16.11)	ICFS 25	ICFF 25E	ICFE 25	ICFB 25	ICM 25-A	ICFS 25	23.1	50.8	027L4039
ICF 25	6	5MA33	1¼	32	Socket weld, ANSI (B 16.11)	ICFS 25	ICFF 25-E	ICFE 25	ICFB 25	ICM 25-A33	ICFS 25	22.0	48.5	027L4173
ICF 25	6	5MA	1¼	32	Socket weld, ANSI (B 16.11)	ICFS 25	ICFF 25E	ICFE 25	ICFB 25	ICM 25-A	ICFS 25	23.2	51.0	027L4044
ICF 20	6	5MB66	1¼	32	Socket weld, ANSI (B 16.11)	ICFS 20	ICFF 20-E	ICFE 20	ICFO 20	ICM 20-B66	ICFS 20	10.5	23.1	027L3392
ICF 25	6	5MB	1¼	32	Socket weld, ANSI (B 16.11)	ICFS 25	ICFF 25-E	ICFE 25	ICFB 25	ICM 25-B	ICFS 25	23.2	51.1	027L4049
ICF 20	6	5MC	1¼	32	Socket weld, ANSI (B 16.11)	ICFS 20	ICFF 20E	ICFE 20	ICFO 20	ICM 20-C	ICFS 20	10.1	22.2	027L3052
ICF 20	6	5HMB	1¼	32	Socket weld, ANSI (B 16.11)	ICFS 20	ICFF 20-E	ICFE 20-H	ICFB 20	ICM 20-B	ICFS 20	11.0	24.2	027L3393
ICF 25	6	5MA	1½	40	Socket weld, ANSI (B 16.11)	ICFS 20	ICFF 20E	ICFE 20H	ICFB 20	ICM 20-C	ICFS 20	11.0	24.2	027L3331
ICF 25	6	5MA33	1½	40	Socket weld, ANSI (B 16.11)	ICFS 25	ICFF 25-E	ICFE 25	ICFB 25	ICM 25-A33	ICFS 25	22.0	48.5	027L4172
ICF 25	6	5MA	1½	40	Socket weld, ANSI (B 16.11)	ICFS 25	ICFF 25-E	ICFE 25	ICFB 25	ICM 25-A33	ICFS 25	23.1	50.8	027L4132
ICF 25	6	5MB	1½	40	Socket weld, ANSI (B 16.11)	ICFS 25	ICFF 25-E	ICFE 25	ICFB 25	ICM 25-B	ICFS 25	23.2	51.1	027L4053

ICAD and coils are not included and must be ordered separately.

***Please Note**: When used in systems with CO_2, the o-rings on the ICM module can swell (grow). At service, it is therefore recommended to install new o-rings, before the ICM function module is re-installed in the ICF valve body.*

Ordering ICF

Liquid injection

Application 12: Liquid injection (expansion) PWM

Type	No. of modules	Appl. no.	Connection size		Connection type	Module location						Weight		Code number
			[in.]	[mm]		M1	M2	M3	M4	M5	M6	kg	lbs	
ICF 15	4	12	¾	20	Butt-weld ANSI (B 36.10)	ICFS 15*)	ICFF 15*)	ICFA 20	ICFS 20	–	–	6.2	13.7	027L4556
ICF 15	4	12	½	15	Butt-weld DIN-EN 10220	ICFS 15*)	ICFF 15*)	ICFA 20	ICFS 20	–	–	6.2	13.7	027L4573
ICF 15	4	12	¾	20	Butt-weld DIN-EN 10220	ICFS 15*)	ICFF 15*)	ICFA 20	ICFS 20	–	–	6.2	13.7	027L4522
ICF 20	4	12	¾	20	Butt-weld DIN-EN 10220	ICFS 20	ICFF 20	ICFA 20	ICFS 20	–	–	6.8	15.0	027L3089
ICF 15	4	12	½	15	Socket weld, ANSI (B 16.11)	ICFS 15*)	ICFF 15*)	ICFA 20	ICFS 20	–	–	6.2	13.7	027L4528
ICF 20	4	12	¾	20	Socket weld, ANSI (B 16.11)	ICFS 20	ICFF 20E	ICFA 20	ICFS 20	–	–	6.8	15.0	027L3091

Application 14: Liquid injection (expansion)

Type	No. of modules	Appl. no.	Connection size		Connection type	Module location						Weight		Code number
			[in.]	[mm]		M1	M2	M3	M4	M5	M6	kg	lbs	
ICF 15	4	14MA	½	15	Butt-weld DIN-EN 10220	ICFS 15*)	ICFF 15*)	ICM 20-A	ICFS 20	–	–	6.8	15.0	027L4551
ICF 15	4	14MB	½	15	Butt-weld DIN-EN 10220	ICFS 15*)	ICFF 15*)	ICM 20-B	ICFS 20	–	–	6.8	15.0	027L4559
ICF 20	4	14MA33	¾	20	Butt-weld DIN-EN 10220	ICFS 20	ICFF 20	ICM 20-A33	ICFS 20	–	–	7.3	16.1	027L3394
ICF 15	4	14MA	¾	20	Butt-weld DIN-EN 10220	ICFS 15*)	ICFF 15*)	ICM 20-A	ICFS 20	–	–	6.8	15.0	027L4525
ICF 20	4	14MA	¾	20	Butt-weld DIN-EN 10220	ICFS 20	ICFF 20	ICM 20-A	ICFS 20	–	–	7.3	16.1	027L3095
ICF 15	4	14MB66	¾	20	Butt-weld DIN-EN 10220	ICFS 15*)	ICFF 15*)	ICM 20-B66	ICFS 20	–	–	6.8	15.0	027L4553
ICF 20	4	14MB66	¾	20	Butt-weld DIN-EN 10220	ICFS 20	ICFF 20	ICM 20-B66	ICFS 20	–	–	7.2	15.8	027L4155
ICF 15	4	14MB	¾	20	Butt-weld DIN-EN 10220	ICFS 15*)	ICFF 15*)	ICM 20-B	ICFS 20	–	–	6.8	15.0	027L4560
ICF 20	4	14 MA33	1	25	Butt-weld DIN-EN 10220	ICFS 20	ICFF 20	ICM 20-A33	ICFS 20	–	–	6.6	14.5	027L3365
ICF 20	4	14MA	1	25	Butt-weld DIN-EN 10220	ICFS 20	ICFF 20	ICM 20-A	ICFS 20	–	–	7.3	16.1	027L3097
ICF 20	4	14MB66	1	25	Butt-weld DIN-EN 10220	ICFS 20	ICFF 20	ICM 20-B66	ICFS 20	–	–	7.2	15.8	027L3356
ICF 20	4	14MB	1	25	Butt-weld DIN-EN 10220	ICFS 20	ICFF 20	ICM 20-B	ICFS 20	–	–	7.2	15.8	027L3103
ICF 20	4	14MC	1	25	Butt-weld DIN-EN 10220	ICFS 20	ICFF 20	ICM 20-C	ICFS 20	–	–	7.2	15.8	027L3108
ICF 25	4	14MA	1	25	Butt-weld DIN-EN 10220	ICFS 25	ICFF 25	ICM 25-A	ICFS 25	–	–	15.5	34.1	027L4103
ICF 20	4	14MC	1¼	32	Butt-weld DIN-EN 10220	ICFS 20	ICFF 20	ICM 20-C	ICFS 20	–	–	7.3	16.1	027L3109
ICF 25	4	14MB	1¼	32	Butt-weld DIN-EN 10220	ICFS 25	ICFF 25	ICM 25-B	ICFS 25	–	–	14.4	31.7	027L4112
ICF 25	4	14MA	1¼	32	Butt-weld DIN-EN 10220	ICFS 25	ICFF 25	ICM 25-A	ICFS 25	–	–	15.4	33.9	027L4107
ICF 25	4	14MA	1½	40	Butt-weld DIN-EN 10220	ICFS 25	ICFF 25	ICM 25-A	ICFS 25	–	–	15.3	33.7	027L4182
ICF 25	4	14MB	1½	40	Butt-weld DIN-EN 10220	ICFS 25	ICFF 25	ICM 25-B	ICFS 25	–	–	15.3	33.7	027L4117
ICF 15	4	14MA	½	15	Socket weld, ANSI (B 16.11)	ICFS 15*)	ICFF 15*)	ICM 20-A	ICFS 20	–	–	6.8	15.0	027L4531
ICF 15	4	14MB	½	15	Socket weld, ANSI (B 16.11)	ICFS 15*)	ICFF 15*)	ICM 20-B	ICFS 20	–	–	6.8	15.0	027L4583
ICF 20	4	14MA	¾	20	Socket weld, ANSI (B 16.11)	ICFS 20	ICFF 20E	ICM 20-A	ICFS 20	–	–	7.5	16.5	027L3099
ICF 20	4	14MA	1	25	Socket weld, ANSI (B 16.11)	ICFS 20	ICFF 20E	ICM 20-A	ICFS 20	–	–	6.7	14.7	027L3101
ICF 20	4	14MB	1	25	Socket weld, ANSI (B 16.11)	ICFS 20	ICFF 20E	ICM 20-B	ICFS 20	–	–	6.7	14.7	027L3106
ICF 25	4	14MB	1	25	Socket weld, ANSI (B 16.11)	ICFS 25	ICFF 25	ICM 25-B	ICFS 25	–	–	14.4	31.7	027L4188
ICF 25	4	14MB	1¼	32	Socket weld, ANSI (B 16.11)	ICFS 25	ICFF 25E	ICM 25-B	ICFS 25	–	–	17.3	38.1	027L4114
ICF 25	4	14MB	1½	40	Socket weld, ANSI (B 16.11)	ICFS 25	ICFF 25E	ICM 25-B	ICFS 25	–	–	16.6	36.6	027L4118
ICF 20	4	14MC	1	25	Socket weld, ANSI (B 16.11)	ICFS 20	ICFF 20E	ICM 20-C	ICFS 20	–	–	6.7	14.7	027L3112
ICF 25	4	14MA	1	25	Socket weld, ANSI (B 16.11)	ICFS 25	ICFF 25E	ICM 25-A	ICFS 25	–	–	15.8	34.8	027L4104
ICF 20	4	14MC	1¼	32	Socket weld, ANSI (B 16.11)	ICFS 20	ICFF 20E	ICM 20-C	ICFS 20	–	–	7.4	16.3	027L3113
ICF 25	4	14MA	1¼	32	Socket weld, ANSI (B 16.11)	ICFS 25	ICFF 25E	ICM 25-A	ICFS 25	–	–	15.6	34.3	027L4109
ICF 25	4	14MA	1½	40	Socket weld, ANSI (B 16.11)	ICFS 25	ICFF 25E	ICM 25-A	ICFS 25	–	–	15.8	34.8	027L4140

**) Fixed module*
ICAD and coils are not included and must be ordered separately.
***Please Note**: When used in systems with CO_2, the o-rings on the ICM module can swell (grow). At service, it is therefore recommended to install new o-rings, before the ICM function module is re-installed in the ICF valve body.*

Ordering ICF

Hot gas defrost

Application 9: Hot gas defrost

Type	# of Modules	Appl. #	Connection size		Connection type	Module location						Weight		Code number
			[in.]	[mm]		M1	M2	M3	M4	M5	M6	kg	lbs	
ICF 20	4	9	¾	20	Butt-weld ANSI (B 36.10)	ICFS 20	ICFF 20	ICFE 20	ICFS 20	–	–	7.2	15.8	027L3069
ICF 15	4	9H	¾	20	Butt-weld ANSI (B 36.10)	ICFS 15*	ICFF 15*	ICFE 20H	ICFS 20	–	–	7.2	15.4	027L4554
ICF 15	4	9	½	15	Butt-weld DIN-EN 10220	ICFS 15*	ICFF 15*	ICFE 20	ICFS 20	–	–	6.3	13.9	027L4543
ICF 15	4	9H	½	15	Butt-weld DIN-EN 10220	ICFS 15*	ICFF 15*	ICFE 20H	ICFS 20	–	–	7.2	15.4	027L4541
ICF 15	4	9	¾	20	Butt-weld DIN-EN 10220	ICFS 15*	ICFF 15*	ICFE 20	ICFS 20	–	–	6.3	13.9	027L4571
ICF 20	4	9	¾	20	Butt-weld DIN-EN 10220	ICFS 20	ICFF 20	ICFE 20	ICFS 20	–	–	6.7	14.7	027L3120
ICF 15	4	9H	¾	20	Butt-weld DIN-EN 10220	ICFS 15*	ICFF 15*	ICFE 20H	ICFS 20	–	–	7.2	15.4	027L4521
ICF 20	4	9	1	25	Butt-weld DIN-EN 10220	ICFS 20	ICFF 20	ICFE 20	ICFS 20	–	–	7.2	15.8	027L3067
ICF 20	4	9H	1	25	Butt-weld DIN-EN 10220	ICFS 20	ICFF 20	ICFE 20H	ICFS 20	–	–	8.2	18.0	027L3333
ICF 25	4	9	1	25	Butt-weld DIN-EN 10220	ICFS 25	ICFF 25	ICFE 25	ICFS 25	–	–	15.8	34.8	027L4063
ICF 20	4	9	1¼	32	Butt-weld DIN-EN 10220	ICFS 20	ICFF 20	ICFE 20	ICFS 20	–	–	6.8	15.0	027L3068
ICF 20	4	9H	1¼	32	Butt-weld DIN-EN 10220	ICFS 20	ICFF 20	ICFE 20H	ICFS 20	–	–	7.6	16.7	027L3334
ICF 25	4	9	1¼	32	Butt-weld DIN-EN 10220	ICFS 25	ICFF 25	ICFE 25	ICFS 25	–	–	15.7	34.5	027L4067
ICF 25	4	9	1½	40	Butt-weld DIN-EN 10220	ICFS 25	ICFF 25	ICFE 25	ICFS 25	–	–	15.7	34.5	027L4072
ICF 15	4	9	½	15	Socket weld, ANSI (B 16.11)	ICFS 15*	ICFF 15*	ICFE 20	ICFS 20	–	–	6.3	13.9	027L4538
ICF 15	4	9H	½	15	Socket weld, ANSI (B 16.11)	ICFS 15*	ICFF 15*	ICFE 20H	ICFS 20	–	–	7.2	15.4	027L4527
ICF 20	4	9H	¾	20	Socket weld, ANSI (B 16.11)	ICFS 20	ICFF 20E	ICFE 20H	ICFS 20	–	–	8.0	17.6	027L3351
ICF 20	4	9	1	25	Socket weld, ANSI (B 16.11)	ICFS 20	ICFF 20E	ICFE 20	ICFS 20	–	–	7.0	15.4	027L3071
ICF 20	4	9H	1	25	Socket weld, ANSI (B 16.11)	ICFS 20	ICFF 20E	ICFE 20H	ICFS 20	–	–	8.1	17.8	027L3336
ICF 25	4	9	1	25	Socket weld, ANSI (B 16.11)	ICFS 25	ICFF 25E	ICFE 25	ICFS 25	–	–	16.0	35.2	027L4064
ICF 20	4	9	1¼	32	Socket weld, ANSI (B 16.11)	ICFS 20	ICFF 20E	ICFE 20	ICFS 20	–	–	7.4	16.3	027L3072
ICF 20	4	9H	1¼	32	Socket weld, ANSI (B 16.11)	ICFS 20	ICFF 20E	ICFE 20H	ICFS 20	–	–	7.9	17.4	027L3337
ICF 25	4	9	1¼	32	Socket weld, ANSI (B 16.11)	ICFS 25	ICFF 25E	ICFE 25	ICFS 25	–	–	16.0	35.2	027L4069
ICF 25	4	9	1½	40	Socket weld, ANSI (B 16.11)	ICFS 25	ICFF 25E	ICFE 25	ICFS 25	–	–	16.1	35.4	027L4073

** Fixed module*
ICAD and coils are not included and must be ordered separately.
Please Note: *When used in systems with CO2, the o-rings on the ICM module can swell (grow). At service, it is therefore recommended to install new o-rings, before the ICM function module is re-installed in the ICF valve body.*

Hot gas defrost (ICF 50 only)

Application 47: Hot gas defrost - On/Off 2-step solenoid (ICF 50 only)

Type	# of Modules	Appl. #	Connection size		Connection type	Module location						Weight		Code number
			[in.]	[mm]		M1	M2	M3	M4	M5	M6	kg	lbs	
ICF 50	4	47	1½	40	Socket weld, ANSI (B 16.11)	SVA-S 50*	FIA 50	ICSH 50-32	SVA-S 50	–	–	25.8	56.8	027L5070
ICF 50	4	47	1½	40	Socket weld, ANSI (B 16.11)	SVA-S 50*	FIA 50	ICSH 50-40	SVA-S 50	–	–	25.8	56.8	027L5071
ICF 50	4	47	2	50	Socket weld, ANSI (B 16.11)	SVA-S 50*	FIA 50	ICSH 50-40	SVA-S 50	–	–	25.8	56.8	027L5072
ICF 50	4	47	2	50	Socket weld, ANSI (B 16.11)	SVA-S 50*	FIA 50	ICSH 50	SVA-S 50	–	–	25.8	56.8	027L5073

Application 48: Hot gas defrost - On/Off 2-step solenoid + manual Regulating (ICF 50 only)

Type	# of Modules	Appl. #	Connection size		Connection type	Module location						Weight		Code number
			[in.]	[mm]		M1	M2	M3	M4	M5	M5	kg	lbs	
ICF 50	4	48	1½	40	Socket weld, ANSI (B 16.11)	SVA-S 50*	FIA 50	ICSH 50-32	REG-SB 50	–	–	25.8	56.8	027L5074

Ordering ICF

Solenoid multiple evaporators

Application 11: Solenoid - Multiple evaporators

Type	No. of modules	Appl. no.	Connection size		Connection type	Module location						Weight		Code number
			[in.]	[mm]		M1	M2	M3	M4	M5	M6	kg	lbs	
ICF 20	4	11	¾	20	Butt-weld ANSI (B 36.10)	ICFS 20	ICFF 20	ICFE 20	ICFC 20	–	–	6.5	14.3	027L3085
ICF 15	4	11	½	15	Butt-weld DIN-EN 10220	ICFS 15*)	ICFF 15*)	ICFE 20	ICFC 20	–	–	6.5	14.3	027L4539
ICF 15	4	11	¾	20	Butt-weld DIN-EN 10220	ICFS 15*)	ICFF 15*)	ICFE 20	ICFC 20	–	–	6.5	14.3	027L4547
ICF 15	4	11H	¾	20	Butt-weld DIN-EN 10220	ICFS 15*)	ICFF 15*)	ICFE 20-H	ICFC 20	–	–	7.2	15.8	027L4546
ICF 20	4	11	¾	20	Butt-weld DIN-EN 10220	ICFS 20	ICFF 20	ICFE 20	ICFC 20	–	–	6.4	14.1	027L4580
ICF 20	4	11	1	25	Butt-weld DIN-EN 10220	ICFS 20	ICFF 20	ICFE 20	ICFC 20	–	–	6.4	14.1	027L3083
ICF 20	4	11H	1	25	Butt-weld DIN-EN 10220	ICFS 20	ICFF 20	ICFE 20H	ICFC 20	–	–	8.0	17.6	027L3345
ICF 20	4	11	1 ¼	32	Butt-weld DIN-EN 10220	ICFS 20	ICFF 20	ICFE 20	ICFC 20	–	–	6.5	14.3	027L3084
ICF 20	4	11H	1 ¼	32	Butt-weld DIN-EN 10220	ICFS 20	ICFF 20	ICFE 20H	ICFC 20	–	–	7.4	16.3	027L3346
ICF 25	4	11	1 ¼	32	Butt-weld DIN-EN 10220	ICFS 25	ICFF 25	ICFE 25	ICFC 25	–	–	14.9	32.8	027L4094
ICF 25	4	11	1 ½	40	Butt-weld DIN-EN 10220	ICFS 25	ICFF 25	ICFE 25	ICFC 25	–	–	13.7	30.1	027L4099
ICF 20	4	11	1	25	Socket weld, ANSI (B 16.11)	ICFS 20	ICFF 20E	ICFE 20	ICFC 20	–	–	6.9	15.2	027L3087
ICF 20	4	11H	1	25	Socket weld, ANSI (B 16.11)	ICFS 20	ICFF 20E	ICFE 20H	ICFC 20	–	–	8.0	17.6	027L3348
ICF 20	4	11	1 ¼	32	Socket weld, ANSI (B 16.11)	ICFS 20	ICFF 20E	ICFE 20	ICFC 20	–	–	6.7	14.7	027L3088
ICF 20	4	11H	1 ¼	32	Socket weld, ANSI (B 16.11)	ICFS 20	ICFF 20E	ICFE 20H	ICFC 20	–	–	7.4	16.3	027L3349
ICF 25	4	11	1 ¼	32	Socket weld, ANSI (B 16.11)	ICFS 25	ICFF 25E	ICFE 25	ICFC 25	–	–	13.0	28.6	027L4096
ICF 25	4	11	1 ½	40	Socket weld, ANSI (B 16.11)	ICFS 25	ICFF 25E	ICFE 25	ICFC 25	–	–	14.3	31.5	027L4100

Application 18: Solenoid - Multiple evaporators

Type	No. of modules	Appl. no.	Connection size		Connection type	Module location						Weight		Code number
			[in.]	[mm]		M1	M2	M3	M4	M5	M6	kg	lbs	
ICF 15	4	18H	¾	20	Butt-weld ANSI (B 36.10)	ICFS 15*)	ICFF 15*)	ICFE 20-H	ICFN 20	–	–	7.2	15.8	027L4572
ICF 15	4	18H	½	15	Butt-weld DIN-EN 10220	ICFS 15*)	ICFF 15*)	ICFE 20-H	ICFN 20	–	–	7.2	15.8	027L4542
ICF 15	4	18H	¾	20	Butt-weld DIN-EN 10220	ICFS 15*)	ICFF 15*)	ICFE 20-H	ICFN 20	–	–	7.2	15.8	027L4550
ICF 20	4	18	1	25	Butt-weld DIN-EN 10220	ICFS 20	ICFF 20E	ICFE 20	ICFN 20	–	–	7.3	16.0	027L3438
ICF 25	4	18	1	25	Butt-weld DIN-EN 10220	ICFS 25	ICFF 25	ICFE 25	ICFN 25	–	–	15.8	34.8	027L4175
ICF 25	4	18	1 ¼	32	Butt-weld DIN-EN 10220	ICFS 25	ICFF 25	ICFE 25	ICFN 25	–	–	16.6	36.5	027L4164
ICF 25	4	18	1 ¼	32	Butt-weld DIN-EN 10220	ICFS 25	ICFF 25E	ICFE 25	ICFN 25	–	–	16.6	36.5	027L4575
ICF 25	4	18	1 ½	40	Butt-weld DIN-EN 10220	ICFS 25	ICFF 25	ICFE 25	ICFN 25	–	–	16.6	36.5	027L4165
ICF 25	4	18	1 ½	40	Butt-weld DIN-EN 10220	ICFS 25	ICFF 25E	ICFE 25	ICFN 25	–	–	16.6	36.6	027L4177
ICF 15	4	18	½	15	Socket weld, ANSI (B 16.11)	ICFS 15*)	ICFF 15*)	ICFE 20	ICFN 20	–	–	6.5	14.3	027L4558
ICF 15	4	18H	½	15	Socket weld, ANSI (B 16.11)	ICFS 15*)	ICFF 15*)	ICFE 20-H	ICFN 20	–	–	7.2	15.8	027L4557
ICF 15	4	18	¾	20	Socket weld, ANSI (B 16.11)	ICFS 20	ICFF 20E	ICFE 20H	ICFN 20	–	–	8.0	17.6	027L3353
ICF 25	4	18	1	25	Socket weld, ANSI (B 16.11)	ICFS 25	ICFF 25E	ICFE 25	ICFN 25	–	–	16.9	37.2	027L4136
ICF 20	4	18H	1	25	Socket weld, ANSI (B 16.11)	ICFS 20	ICFF 20E	ICFE 20H	ICFN 20	–	–	8.0	17.6	027L3354
ICF 20	4	18H	1 ¼	32	Socket weld, ANSI (B 16.11)	ICFS 20	ICFF 20E	ICFE 20H	ICFN 20	–	–	8.0	17.6	027L3355
ICF 25	4	18	1 ¼	32	Socket weld, ANSI (B 16.11)	ICFS 25	ICFF 25E	ICFE 25	ICFN 25	–	–	16.0	35.2	027L4137
ICF 25	4	18	1 ½	40	Socket weld, ANSI (B 16.11)	ICFS 25	ICFF 25E	ICFE 25	ICFN 25	–	–	16.2	35.6	027L4138

Liquid PWM

Application 13: Liquid injection & liquid feed PWM

Type	No. of modules	Appl. no.	Connection size		Connection type	Module location						Weight		Code number
			[in.]	[mm]		M1	M2	M3	M4	M5	M6	kg	lbs	
ICF 15	4	13	¾	20	Butt-weld ANSI (B 36.10)	ICFS 15*)	ICFF 15*)	ICFA 20	ICFN 20	–	–	6.2	13.7	027L4555
ICF 15	4	13	¾	20	Butt-weld DIN-EN 10220	ICFS 15*)	ICFF 15*)	ICFA 20	ICFN 20	–	–	6.2	13.7	027L4523
ICF 20	4	13	¾	20	Butt-weld DIN-EN 10220	ICFS 20	ICFF 20	ICFA 20	ICFN 20	–	–	6.8	15.0	027L3092
ICF 15	4	13	½	15	Socket weld, ANSI (B 16.11)	ICFS 15*)	ICFF 15*)	ICFA 20	ICFN 20	–	–	6.2	13.7	027L4529
ICF 20	4	13	¾	20	Socket weld, ANSI (B 16.11)	ICFS 20	ICFF 20E	ICFA 20	ICFN 20	–	–	6.8	15.0	027L3094
ICF 15	4	13	7/8	22	Solder DIN-EN1254-1	ICFS 15*)	ICFF 15*)	ICFA20	ICFN20	–	–	6.2	13.7	027L4582

**) Fixed module*
ICAD and coils are not included and must be ordered separately.
***Please Note**: When used in systems with CO_2, the o-rings on the ICM module can swell (grow). At service, it is therefore recommended to install new o-rings, before the ICM function module is re-installed in the ICF valve body.*

Ordering ICF

Return lines

Application 41: Return lines - ON/OFF

Type	No. of modules	Appl. no.	Connection size		Connection type	Module location						Weight		Code number
			[in.]	[mm]		M1	M2	M3	M4	M5	M6	kg	lbs	
ICF 50	4	41	1 ½	40	Butt-weld DIN-EN 10220	SVA-S 50*)	ICFB 50	ICLX 50	SVA-S 50	–	–	25.5	56.1	027L5021
ICF 50	4	41	2	50	Butt-weld DIN-EN 10220	SVA-S 50*)	ICFB 50	ICLX 50	SVA-S 50	–	–	25.5	56.1	027L5023
ICF 50	4	41	1 ½	40	Socket weld, ANSI (B 16.11)	SVA-S 50*)	ICFB 50	ICLX 50	SVA-S 50	–	–	25.5	56.1	027L5022
ICF 50	4	41	2	50	Socket weld, ANSI (B 16.11)	SVA-S 50*)	ICFB 50	ICLX 50	SVA-S 50	–	–	25.5	56.1	027L5024
ICF 65	3	41	2 ½	65	Butt-weld ANSI (B 36.10)	SVA-S 65*)	–	ICLX 65	SVA-S 65	–	–	32.7	71.9	027L6522
ICF 65	3	41	3	80	Butt-weld ANSI (B 36.10)	SVA-S 65*)	–	ICLX 65	SVA-S 65	–	–	32.7	71.9	027L6524
ICF 65	3	41	2 ½	65	Butt-weld DIN-EN 10220	SVA-S 65*)	–	ICLX 65	SVA-S 65	–	–	32.7	71.9	027L6521
ICF 65	3	41	3	80	Butt-weld DIN-EN 10220	SVA-S 65*)	–	ICLX 65	SVA-S 65	–	–	32.7	71.9	027L6523

Application 42: Return lines - Pressure (temperature) - Mechanical control

Type	No. of modules	Appl. no.	Connection size		Connection type	Module location						Weight		Code number
			[in.]	[mm]		M1	M2	M3	M4	M5	M6	kg	lbs	
ICF 50	4	42S50	1 ½	40	Butt-weld DIN-EN 10220	SVA-S 50*)	ICFB 50	ICS 50	SVA-S 50	–	–	25.8	56.8	027L5001
ICF 50	4	42S32	1 ½	40	Butt-weld DIN-EN 10220	SVA-S 50*)	ICFB 50	ICS 50-32	SVA-S 50	–	–	25.8	56.8	027L5005
ICF 50	4	42S40	1 ½	40	Butt-weld DIN-EN 10220	SVA-S 50*)	ICFB 50	ICS 50-40	SVA-S 50	–	–	25.8	56.8	027L5009
ICF 50	4	42S50	2	50	Butt-weld DIN-EN 10220	SVA-S 50*)	ICFB 50	ICS 50	SVA-S 50	–	–	25.8	56.8	027L5003
ICF 50	4	42S32	2	50	Butt-weld DIN-EN 10220	SVA-S 50*)	ICFB 50	ICS 50-32	SVA-S 50	–	–	25.8	56.8	027L5007
ICF 50	4	42S40	2	50	Butt-weld DIN-EN 10220	SVA-S 50*)	ICFB 50	ICS 50-40	SVA-S 50	–	–	25.8	56.8	027L5011
ICF 50	4	42S50	1 ½	40	Socket weld. ANSI (B 16.11)	SVA-S 50*)	ICFB 50	ICS 50	SVA-S 50	–	–	25.8	56.8	027L5002
ICF 50	4	42S32	1 ½	40	Socket weld. ANSI (B 16.11)	SVA-S 50*)	ICFB 50	ICS 50-32	SVA-S 50	–	–	25.8	56.8	027L5006
ICF 50	4	42S50	2	50	Socket weld. ANSI (B 16.11)	SVA-S 50*)	ICFB 50	ICS 50	SVA-S 50	–	–	25.8	56.8	027L5004
ICF 50	4	42S32	2	50	Socket weld. ANSI (B 16.11)	SVA-S 50*)	ICFB 50	ICS 50-32	SVA-S 50	–	–	25.8	56.8	027L5008
ICF 50	4	42S40	2	50	Socket weld. ANSI (B 16.11)	SVA-S 50*)	ICFB 50	ICS 50-40	SVA-S 50	–	–	25.8	56.8	027L5012
ICF 65	3	42S65	2 ½	65	Butt-weld ANSI (B 36.10)	SVA-S 65*)	–	ICS 65	SVA-S 65	–	–	33.3	73.3	027L6502
ICF 65	3	42S40	2 ½	65	Butt-weld ANSI (B 36.10)	SVA-S 65*)	–	ICS 65-40	SVA-S 65	–	–	33.3	73.3	027L6506
ICF 65	3	42S80	2 ½	65	Butt-weld ANSI (B 36.10)	SVA-S 65*)	–	ICS 80	SVA-S 65	–	–	33.3	73.3	027L6510
ICF 65	3	42S65	3	80	Butt-weld ANSI (B 36.10)	SVA-S 65*)	–	ICS 65	SVA-S 65	–	–	33.3	73.3	027L6504
ICF 65	3	42S40	3	80	Butt-weld ANSI (B 36.10)	SVA-S 65*)	–	ICS 65-40	SVA-S 65	–	–	33.3	73.3	027L6508
ICF 65	3	42S80	3	80	Butt-weld ANSI (B 36.10)	SVA-S 65*)	–	ICS 80	SVA-S 65	–	–	33.3	73.3	027L6512
ICF 65	3	42S65	2 ½	65	Butt-weld DIN-EN 10220	SVA-S 65*)	–	ICS 65	SVA-S 65	–	–	33.3	73.3	027L6501
ICF 65	3	42S40	2 ½	65	Butt-weld DIN-EN 10220	SVA-S 65*)	–	ICS 65-40	SVA-S 65	–	–	33.3	73.3	027L6505
ICF 65	3	42S80	2 ½	65	Butt-weld DIN-EN 10220	SVA-S 65*)	–	ICS 80	SVA-S 65	–	–	33.3	73.3	027L6509
ICF 65	3	42S65	3	80	Butt-weld DIN-EN 10220	SVA-S 65*)	–	ICS 65	SVA-S 65	–	–	33.3	73.3	027L6503
ICF 65	3	42S40	3	80	Butt-weld DIN-EN 10220	SVA-S 65*)	–	ICS 65-40	SVA-S 65	–	–	33.3	73.3	027L6507
ICF 65	3	42S80	3	80	Butt-weld DIN-EN 10220	SVA-S 65*)	–	ICS 80	SVA-S 65	–	–	33.3	73.3	027L6511

All ICS modules are 3-pilot versions. They are supplied with two blanking plugs and one sealing plug.
**) Fixed module*
ICAD and coils are not included and must be ordered separately.
***Please Note**: When used in systems with CO_2, the o-rings on the ICM module can swell (grow). At service, it is therefore recommended to install new o-rings, before the ICM function module is re-installed in the ICF valve body.*

Ordering ICF

Return lines

Application 43: Return lines - Pressure (temperature) - Electronic control

Type	No. of modules	Appl. no.	Connection size		Connection type	Module location						Weight		Code number
			[in.]	[mm]		M1	M2	M3	M4	M5	M6	kg	lbs	
ICF 50	4	43MA	1½	40	Butt-weld DIN-EN 10220	SVA-S 50*)	ICFB 50	ICM 50 - A	SVA-S 50	–	–	24.8	54.6	027L5013
ICF 50	4	43MB	1½	40	Butt-weld DIN-EN 10220	SVA-S 50*)	ICFB 50	ICM 50 - B	SVA-S 50	–	–	24.8	54.6	027L5017
ICF 50	4	43MA	2	50	Butt-weld DIN-EN 10220	SVA-S 50*)	ICFB 50	ICM 50 - A	SVA-S 50	–	–	24.8	54.6	027L5015
ICF 50	4	43MB	2	50	Butt-weld DIN-EN 10220	SVA-S 50*)	ICFB 50	ICM 50 - B	SVA-S 50	–	–	24.8	54.6	027L5019
ICF 50	4	43MA	1½	40	Socket weld, ANSI (B 16.11)	SVA-S 50*)	ICFB 50	ICM 50 - A	SVA-S 50	–	–	24.8	54.6	027L5014
ICF 50	4	43MB	1½	40	Socket weld, ANSI (B 16.11)	SVA-S 50*)	ICFB 50	ICM 50 - B	SVA-S 50	–	–	24.8	54.6	027L5018
ICF 50	4	43MA	2	50	Socket weld, ANSI (B 16.11)	SVA-S 50*)	ICFB 50	ICM 50 - A	SVA-S 50	–	–	24.8	54.6	027L5016
ICF 50	4	43MB	2	50	Socket weld, ANSI (B 16.11)	SVA-S 50*)	ICFB 50	ICM 50 - B	SVA-S 50	–	–	24.8	54.6	027L5020
ICF 65	3	43MA	2½	65	Butt-weld ANSI (B 36.10)	SVA-S 65*)	–	ICM 65 - A	SVA-S 65	–	–	32.9	72.4	027L6514
ICF 65	3	43MB	2½	65	Butt-weld ANSI (B 36.10)	SVA-S 65*)	–	ICM 65 - B	SVA-S 65	–	–	32.9	72.4	027L6518
ICF 65	3	43MA	3	80	Butt-weld ANSI (B 36.10)	SVA-S 65*)	–	ICM 65 - A	SVA-S 65	–	–	32.9	72.4	027L6516
ICF 65	3	43MB	3	80	Butt-weld ANSI (B 36.10)	SVA-S 65*)	–	ICM 65 - B	SVA-S 65	–	–	32.9	72.4	027L6520
ICF 65	3	43MA	2½	65	Butt-weld DIN-EN 10220	SVA-S 65*)	–	ICM 65 - A	SVA-S 65	–	–	32.9	72.4	027L6513
ICF 65	3	43MB	2½	65	Butt-weld DIN-EN 10220	SVA-S 65*)	–	ICM 65 - B	SVA-S 65	–	–	32.9	72.4	027L6517
ICF 65	3	43MA	3	80	Butt-weld DIN-EN 10220	SVA-S 65*)	–	ICM 65 - A	SVA-S 65	–	–	32.9	72.4	027L6515
ICF 65	3	43MB	3	80	Butt-weld DIN-EN 10220	SVA-S 65*)	–	ICM 65 - B	SVA-S 65	–	–	32.9	72.4	027L6519

Application 44: ON/OFF 2-step solenoid + Manuel Regulating

Type	No. of modules	Appl. no.	Connection size		Connection type	Module location						Weight		Code number
			[in.]	[mm]		M1	M2	M3	M4	M5	M6	kg	lbs	
ICF 50	4	44	1½	40	Butt-weld DIN-EN 10220	SVA-S 50*)	ICFB 50	ICLX 50	REG 50-B	–	–	25.5	56.1	027L5045
ICF 50	4	44	2	50	Butt-weld DIN-EN 10220	SVA-S 50*)	ICFB 50	ICLX 50	REG 50-B	–	–	25.5	56.1	027L5046
ICF 50	4	44	1½	40	Socket weld, ANSI (B 16.11)	SVA-S 50*)	ICFB 50	ICLX 50	REG 50-B	–	–	25.5	56.1	027L5047
ICF 50	4	44	2	50	Socket weld, ANSI (B 16.11)	SVA-S 50*)	ICFB 50	ICLX 50	REG 50-B	–	–	25.5	56.1	027L5048

Application 45: Pressure (temperature) Mechanical control + Manuel Regulating

Type	No. of modules	Appl. no.	Connection size		Connection type	Module location						Weight		Code number
			[in.]	[mm]		M1	M2	M3	M4	M5	M6	kg	lbs	
ICF 50	4	45S50	1½	40	Butt-weld DIN-EN 10220	SVA-S 50*)	ICFB 50	ICS 50	REG 50-B	–	–	25.8	56.8	027L5025
ICF 50	4	45S32	1½	40	Butt-weld DIN-EN 10220	SVA-S 50*)	ICFB 50	ICS 50-32	REG 50-B	–	–	25.8	56.8	027L5029
ICF 50	4	45S40	1½	40	Butt-weld DIN-EN 10220	SVA-S 50*)	ICFB 50	ICS 50-40	REG 50-B	–	–	25.8	56.8	027L5033
ICF 50	4	45S50	2	50	Butt-weld DIN-EN 10220	SVA-S 50*)	ICFB 50	ICS 50	REG 50-B	–	–	25.8	56.8	027L5027
ICF 50	4	45S32	2	50	Butt-weld DIN-EN 10220	SVA-S 50*)	ICFB 50	ICS 50-32	REG 50-B	–	–	25.8	56.8	027L5031
ICF 50	4	45S40	2	50	Butt-weld DIN-EN 10220	SVA-S 50*)	ICFB 50	ICS 50-40	REG 50-B	–	–	25.8	56.8	027L5035
ICF 50	4	45S50	1½	40	Socket weld, ANSI (B 16.11)	SVA-S 50*)	ICFB 50	ICS 50	REG 50-B	–	–	25.8	56.8	027L5026
ICF 50	4	45S32	1½	40	Socket weld, ANSI (B 16.11)	SVA-S 50*)	ICFB 50	ICS 50-32	REG 50-B	–	–	25.8	56.8	027L5030
ICF 50	4	45S40	1½	40	Socket weld, ANSI (B 16.11)	SVA-S 50*)	ICFB 50	ICS 50-40	REG 50-B	–	–	25.8	56.8	027L5034
ICF 50	4	45S50	2	50	Socket weld, ANSI (B 16.11)	SVA-S 50*)	ICFB 50	ICS 50	REG 50-B	–	–	25.8	56.8	027L5028
ICF 50	4	45S32	2	50	Socket weld, ANSI (B 16.11)	SVA-S 50*)	ICFB 50	ICS 50-32	REG 50-B	–	–	25.8	56.8	027L5032
ICF 50	4	45S40	2	50	Socket weld, ANSI (B 16.11)	SVA-S 50*)	ICFB 50	ICS 50-40	REG 50-B	–	–	25.8	56.8	027L5036
ICF 65	3	45S65	3	65	Butt-weld DIN-EN 10220	SVA-S 65*)		ICS 65	REG 65-B	–	–	33.3	73.3	027L6525
ICF 65	3	45S65	3	65	Butt-weld DIN-EN 10220	SVA-S 65*)		ICS 80	REG 65-B	–	–	33.3	73.3	027L6526

Application 46: Pressure (temperature) Electronic control + Manual Regulating

Type	No. of modules	Appl. no.	Connection size		Connection type	Module location						Weight		Code number
			[in.]	[mm]		M1	M2	M3	M4	M5	M6	kg	lbs	
ICF 50	4	46MA	1½	40	Butt-weld DIN-EN 10220	SVA-S 50*)	ICFB 50	ICM 50-A	REG 50-B	–	–	24.8	54.6	027L5037
ICF 50	4	46MB	1½	40	Butt-weld DIN-EN 10220	SVA-S 50*)	ICFB 50	ICM 50-B	REG 50-B	–	–	24.8	54.6	027L5041
ICF 50	4	46MA	2	50	Butt-weld DIN-EN 10220	SVA-S 50*)	ICFB 50	ICM 50-A	REG 50-B	–	–	24.8	54.6	027L5039
ICF 50	4	46MB	2	50	Butt-weld DIN-EN 10220	SVA-S 50*)	ICFB 50	ICM 50-B	REG 50-B	–	–	24.8	54.6	027L5043
ICF 50	4	46MA	1½	40	Socket weld, ANSI (B 16.11)	SVA-S 50*)	ICFB 50	ICM 50-A	REG 50-B	–	–	24.8	54.6	027L5038
ICF 50	4	46MB	1½	40	Socket weld, ANSI (B 16.11)	SVA-S 50*)	ICFB 50	ICM 50-B	REG 50-B	–	–	24.8	54.6	027L5042
ICF 50	4	46MA	2	50	Socket weld, ANSI (B 16.11)	SVA-S 50*)	ICFB 50	ICM 50-A	REG 50-B	–	–	24.8	54.6	027L5040
ICF 50	4	46MB	2	50	Socket weld, ANSI (B 16.11)	SVA-S 50*)	ICFB 50	ICM 50-B	REG 50-B	–	–	24.8	54.6	027L5044

All ICS modules are 3-pilot versions. They are supplied with two blanking plugs and one sealing plug.
**) Fixed module*
ICAD and coils are not included and must be ordered separately.
***Please Note**: When used in systems with CO_2, the o-rings on the ICM module can swell (grow). At service, it is therefore recommended to install new o-rings, before the ICM function module is re-installed in the ICF valve body.*

Ordering ICF

Miscellaneous

Application 90: Miscellaneous

Type	No. of Modules	Appl. no.	Connection size		Connection type	Module location						Weight		Code number
			[in]	[mm]		M1	M2	M3	M4	M5	M6	[kg]	[lbs]	
ICF 20	4	90	¾	20	Butt-weld ANSI (B 36.10)	ICFS 20	ICFF 20E	ICFE 20	ICFN 20	–	–	7.2	15.8	027L3371
ICF 20	6	90	1	25	Butt-weld ANSI (B 36.10)	ICFS 20	ICFF 20	ICFE 20	ICFC 20	ICFB 20	ICFB 20	10.2	22.5	027L3420
ICF 20	6	90	1	25	Butt-weld ANSI (B 36.10)	ICFS 20	ICFF 20	ICFE 20	ICFS 20	ICFB 20	ICFB 20	9.7	21.4	027L3421
ICF 20	4	90	¾	20	Butt-weld DIN-EN 10220	ICFR 20A	ICFF 20	ICFA 20	ICFN 20	–	–	6.4	14.1	027L3156
ICF 20	4	90	¾	20	Butt-weld DIN-EN 10220	ICFR 20A	ICFF 20	ICFE 20	ICFN 20	–	–	6.4	14.1	027L3155
ICF 20	4	90	¾	20	Butt-weld DIN-EN 10220	ICFS 20	ICFF 20	ICFE 20	ICFN 20	–	–	7.2	15.8	027L3379
ICF 20	4	90	¾	20	Butt-weld DIN-EN 10220	ICFS 20	ICFW 20-D	ICFE 20	ICFS 20	–	–	5.9	13.0	027L3385
ICF 20	4	90	¾	20	Butt-weld DIN-EN 10220	ICFS 20	ICFF 20	ICFB 20	ICFC 20	–	–	5.9	13.0	027L3141
ICF 20	4	99	¾	20	Butt-weld DIN-EN 10220	ICFS 20	ICFF 20	ICFE 20	ICFB 20	–	–	6.2	13.7	027L3122
ICF 20	4	99	¾	20	Butt-weld DIN-EN 10220	ICFS 20	ICFF 20	ICFE 20	ICFO 20	–	–	6.1	13.4	027L3359
ICF 20	4	99	¾	20	Butt-weld DIN-EN 10220	ICFS 20	ICFF 20	ICFE 20	ICFR 20A	–	–	6.7	14.8	027L3700
ICF 20	4	90	¾	20	Butt-weld DIN-EN 10220	ICFS 20	ICFF 20	ICFB 20	ICFN 20	–	–	6.7	14.8	027L3405
ICF 15	4	90	½	15	Butt-weld DIN-EN 10220	ICFS 15*)	ICFF 15*)	ICFB 20	ICFN 20	–	–	6.7	14.8	027L4581
ICF 15	4	90	¾	20	Butt-weld DIN-EN 10220	ICFS 15*)	ICFF 15*)	ICFR 20A	ICFN 20	–	–	7.2	15.8	027L4576
ICF 20	6	90	¾	20	Butt-weld DIN-EN 10220	ICFS 20	ICFF 20	ICFE 20	ICFO 20	ICFA 20	ICFS 20	9.4	20.7	027L3053
ICF 20	6	90	¾	20	Butt-weld DIN-EN 10220	ICFS 20	ICFF 20	ICFA 20	ICFC 20	ICFB 20	ICFS 20	9.9	21.8	027L3056
ICF 20	6	90	¾	20	Butt-weld DIN-EN 10220	ICFS 20	ICFF 20	ICFE 20	ICFO 20	ICM 20-A	ICFN 20	9.7	21.3	027L3372
ICF 20	6	90	¾	20	Butt-weld DIN-EN 10220	ICFS 20	ICFF 20	ICFE 20	ICFB 20	ICFR 20-A	ICFN 20	9.7	21.3	027L3133
ICF 20	6	90	¾	20	Butt-weld DIN-EN 10220	ICFS 20	ICFF 20	ICFE 20	ICFC 20	ICFB 20	ICFR 20A	9.4	20.7	027L3144
ICF 20	6	90	¾	20	Butt-weld DIN-EN 10220	ICFS 20	ICFF 20	ICFE 20	ICFC 20	ICM 20-C	ICFS 20	9.7	21.3	027L3152
ICF 20	6	90	¾	20	Butt-weld DIN-EN 10220	ICFS 20	ICFF 20	ICFE 20	ICFO 20	ICFS 20	ICFC 20	9.8	21.6	027L3360
ICF 20	6	90	¾	20	Butt-weld DIN-EN 10220	ICFB 20	ICFC 20	ICFE 20	ICFO 20	ICFS 20	ICFB 20	6.2	13.6	027L3121
ICF 20	6	90	¾	20	Butt-weld DIN-EN 10220	ICFS 20	ICFF 20	ICFE 20H	ICFC 20	ICFB 20	ICFS 20	9.6	21.1	027L3387
ICF 20	6	90	¾	20	Butt-weld DIN-EN 10220	ICFS 20	ICFF 20	ICFE 20	ICFC 20	ICFR 20A	ICFW 20D	9.1	20.1	027L3368
ICF 20	6	90	¾	20	Butt-weld DIN-EN 10220	ICFS 20	ICFF 20	ICFE 20H	ICFC 20	ICFR 20A	ICFS 20	10.2	22.5	027L3386
ICF 20	6	90	¾	20	Butt-weld DIN-EN 10220	ICFS 20	ICFF 20	ICFE 20	ICFC 20	ICM 20B	ICFS 20	9.7	21.4	027L3397
ICF 20	6	90	¾	20	Butt-weld DIN-EN 10220	ICFS 20	ICFF 20	ICFE 20	ICFC 20	ICFB 20	ICFS 20	9.4	20.7	027L3424
ICF 20	6	90	¾	20	Butt-weld DIN-EN 10220	ICFS 20	ICFF 20	ICFE 20	ICFO 20	ICM 20B	ICFN 20	9.6	21.1	027L3425
ICF 20	6	99	¾	20	Butt-weld DIN-EN 10220	ICFS 20	ICFF 20	ICFE 20	ICFC 20	ICFB 20	ICFR 20A	9.4	20.7	027L3701
ICF 20	6	90	¾	20	Butt-weld DIN-EN 10220	ICFS 20	ICFF 20E	ICFE 20	ICFN 20	ICFR 20B	ICFW 20D	9.1	20.1	027L3439
ICF 20	6	90	¾	20	Butt-weld DIN-EN 10220	ICFS 20	ICFF 20	ICFE 20	ICFC 20	ICFW 20D	ICFS 20	9.1	20.1	027L3441
ICF 20	6	90	¾	20	Butt-weld DIN-EN 10220	ICFS 20	ICFF 20	ICFE 20	ICFO 20	ICFB 20	ICFN 20	9.4	20.7	027L3446
ICF 20	6	90	¾	20	Butt-weld DIN-EN 10220	ICFS 20	ICFF 20	ICFE 20	ICFC 20	ICFR 20B	ICFW 20D	9.1	20.1	027L3447
ICF 20	4	90	1	25	Butt-weld DIN-EN 10220	ICFS 20	ICFF 20	ICFE 20	ICFN 20	–	–	6.7	14.7	027L3134
ICF 20	4	90	1	25	Butt-weld DIN-EN 10220	ICFS 20	ICFF 20	ICFE 20	ICFB 20	–	–	5.9	13.0	027L3364
ICF 20	4	90	1	25	Butt-weld DIN-EN 10220	ICFS 20	ICFF 20	ICFE 20H	ICFN 20	–	–	7.2	15.8	027L3380
ICF 20	6	90	1	25	Butt-weld DIN-EN 10220	ICFS 20	ICFF 20	ICFE 20	ICFO 20	ICFA 20	ICFS 20	9.8	21.6	027L3361
ICF 20	6	90	1	25	Butt-weld DIN-EN 10220	ICFS 20	ICFF 20	ICFE 20	ICFC 20	ICFR 20A	ICFB 20	9.1	20.0	027L3363
ICF 20	6	90	1	25	Butt-weld DIN-EN 10220	ICFS 20	ICFF 20	ICFE 20H	ICFC 20	ICFR 20B	ICFW 20D	12.0	26.4	027L3376
ICF 20	6	90	1	25	Butt-weld DIN-EN 10220	ICFS 20	ICFF 20E	ICFE 20H	ICFC 20	ICFR 20B	ICFW 20D	11.5	25.3	027L3375

**) Fixed module*
ICAD and coils are not included and must be ordered separately.
***Please Note**: When used in systems with CO_2, the o-rings on the ICM module can swell (grow). At service, it is therefore recommended to install new o-rings, before the ICM function module is re-installed in the ICF valve body.*

Ordering ICF

Miscellaneous (Continued)

Application 90: Miscellaneous

Type	No. of Modules	Appl. no.	Connection size		Connection type	Module location						Weight		Code number
			[in]	[mm]		M1	M2	M3	M4	M5	M6	[kg]	[lbs]	
ICF 20	6	90	1	25	Butt-weld DIN-EN 10220	ICFS 20	ICFF 20	ICFE 20	ICFC 20	ICFB 20	ICFS 20	9.4	20.7	027L3123
ICF 25	6	90	1	25	Butt-weld DIN-EN 10220	ICFS 25	ICFF 25	ICFE 25	ICFC 25	ICFR 25B	ICFW 25D	23.6	51.9	027L4168
ICF 25	6	90	1	25	Butt-weld DIN-EN 10220	ICFS 25	ICFF 25	ICFE 25	ICFC 25	ICFS 25	ICFB 25	22.0	48.4	027L4151
ICF 20	6	90	1	25	Butt-weld DIN-EN 10220	ICFS 20	ICFF 20	ICFE 20	ICFC 20	ICFR 20A	ICFW 20D	9.0	19.8	027L3369
ICF 20	6	90	1	25	Butt-weld DIN-EN 10220	ICFS 20	ICFF 20	ICFE 20	ICFO 20	ICFA 20	ICFC 20	9.6	21.1	027L3396
ICF 20	6	90	1	25	Butt-weld DIN-EN 10220	ICFS 20	ICFF 20E	ICFE 20H	ICFC 20	ICFR 20A	ICFB 20	9.7	21.4	027L3423
ICF 20	6	90	1	25	Butt-weld DIN-EN 10220	ICFS 20	ICFF 20	ICFE 20	ICFO 20	ICM 20B	ICFN 20	9.6	21.1	027L3426
ICF 25	6	90	1	25	Butt-weld DIN-EN 10220	ICFS 25	ICFF 25E	ICFE 25	ICFC 25	ICFR 25B	ICFB 25	23.6	52.0	027L4176
ICF 25	6	90	1	25	Butt-weld DIN-EN 10220	ICFS 25	ICFF 25E	ICFE 25	ICFC 25	ICFR 25B	ICFF 25	23.8	52.4	027L4577
ICF 25	6	90	1	25	Butt-weld DIN-EN 10220	ICFS 25	ICFF 25E	ICFE 25	ICFN 25	ICFR 25B	ICFW 25D	22.7	49.9	027L4186
ICF 25	6	90	1¼	32	Butt-weld DIN-EN 10220	ICFS 25	ICFF 25	ICFE 25	ICFC 25	ICFR 25B	ICFB 25	21.7	47.7	027L4143
ICF 25	6	90	1¼	32	Butt-weld DIN-EN 10220	ICFS 25	ICFF 25E	ICFE 25	ICFC 25	ICFR 25B	ICFW 25D	22.7	49.9	027L4160
ICF 25	6	90	1¼	32	Butt-weld DIN-EN 10220	ICFS 25	ICFF 25	ICFE 25	ICFC 25	ICFR 25B	ICFW 25D	21.9	48.2	027L4161
ICF 25	6	90	1¼	32	Butt-weld DIN-EN 10220	ICFS 25	ICFF 25E	ICFE 25	ICFC 25	ICFB 25	ICFS 25	21.9	48.2	027L4162
ICF 25	6	90	1¼	32	Butt-weld DIN-EN 10220	ICFS 25	ICFF 25-E	ICFE 25	ICFC 25	ICFR 25B	ICFB 25	22.7	49.9	027L4178
ICF 25	6	90	1½	40	Butt-weld DIN-EN 10220	ICFS 25	ICFF 25	ICFE 25	ICFC 25	ICFR 25A	ICFW 25D	23.6	51.9	027L4157
ICF 25	6	90	1½	40	Butt-weld DIN-EN 10220	ICFS 25	ICFF 25E	ICFE 25	ICFC 25	ICFR 25B	ICFW 25D	23.6	51.9	027L4166
ICF 25	6	90	1½	40	Butt-weld DIN-EN 10220	ICFS 25	ICFF 25	ICFE 25	ICFC 25	ICFR 25B	ICFW 25D	21.7	47.7	027L4167
ICF 25	4	90	1½	40	Butt-weld DIN-EN 10220	ICFS 25	ICFF 25	ICM 25A	ICFB 25	–	–	14.9	32.8	027L4185
ICF 25	4	90	1½	40	Butt-weld DIN-EN 10220	ICFS 25	ICFF 25	ICFE 25	ICFR 25A	–	–	16.1	35.4	027L4192
ICF 20	4	90	¾	20	Socket weld, ANSI (B 16.11)	ICFS 20	ICFF 20E	ICM 20-A33	ICFB 20	–	–	7.2	15.8	027L3362
ICF 20	4	90	1	25	Socket weld, ANSI (B 16.11)	ICFR 20A	ICFF 20E	ICFE 20	ICFN 20	–	–	7.2	15.8	027L4179
ICF 20	4	90	1	25	Socket weld, ANSI (B 16.11)	ICFR 20B	ICFF 20E	ICFE 20H	ICFN 20	–	–	7.9	17.4	027L4578
ICF 20	4	90	1	25	Socket weld, ANSI (B 16.11)	ICFB 20	ICFF 20	ICFE 20	ICFN 20	–	–	7.0	15.4	027L3357
ICF 25	4	90	1	25	Socket weld, ANSI (B 16.11)	ICFB 25	ICFF 25E	ICFE 25	ICFN 25	–	–	14.1	31.0	027L4149
ICF 25	4	90	1	25	Socket weld, ANSI (B 16.11)	ICFS 25	ICFF 25E	ICFB 25	ICFR 25A	–	–	16.1	35.5	027L4180
ICF 25	6	90	1½	40	Socket weld, ANSI (B 16.11)	ICFS 25	ICFF 25E	ICFB 25	ICFR 25A	–	–	16.1	35.5	027L4181
ICF 20	6	90	¾	20	Socket weld, ANSI (B 16.11)	ICFS 20	ICFF 20E	ICFE 20	ICFO 20	ICFA 20	ICFS 20	9.3	20.5	027L3055
ICF 20	6	90	¾	20	Socket weld, ANSI (B 16.11)	ICFS 20	ICFF 20E	ICFA 20	ICFC 20	ICFB 20	ICFS 20	9.9	21.8	027L3058
ICF 20	6	90	¾	20	Socket weld, ANSI (B 16.11)	ICFS 20	ICFF 20E	ICFE 20	ICFO 20	ICFB 20	ICFN 20	9.4	20.7	027L3150
ICF 20	6	90	¾	20	Socket weld, ANSI (B 16.11)	ICFS 20	ICFF 20E	ICFE 20H	ICFC 20	ICFW 20S	ICFS 20	10.4	22.9	027L4153
ICF 20	6	90	1	25	Socket weld, ANSI (B 16.11)	ICFS 20	ICFF 20E	ICFE 20H	ICFC 20	ICFW 20S	ICFS 20	11.5	25.3	027L3377
ICF 25	6	90	1	25	Socket weld, ANSI (B 16.11)	ICFS 25	ICFF 25E	ICFE 25	ICFC 25	ICFB 25	ICFS 25	23.1	50.8	027L4156
ICF 25	6	90	1	25	Socket weld, ANSI (B 16.11)	ICFS 25	ICFF 25E	ICFE 25	ICFC 25	ICFW 25S	ICFS 25	25.1	55.2	027L4158
ICF 20	6	90	1¼	32	Socket weld, ANSI (B 16.11)	ICFS 20	ICFF 20E	ICFE 20H	ICFC 20	ICFB 20	ICFS 20	10.5	23.1	027L3378
ICF 20	6	90	1¼	32	Socket weld, ANSI (B 16.11)	ICFS 20	ICFF 20E	ICFE 20H	ICFC 20	ICFW 20S	ICFS 20	10.5	23.1	027L4152
ICF 25	6	90	1¼	32	Socket weld, ANSI (B 16.11)	ICFS 25	ICFF 25E	ICFE 25	ICFC 25	ICFW 25S	ICFS 25	25.1	55.2	027L4154
ICF 25	6	90	1½	40	Socket weld, ANSI (B 16.11)	ICFS 25	ICFF 25E	ICFE 25	ICFC 25	ICFW 25S	ICFS 25	25.1	55.2	027L4159
ICF 20	4	90	¾	20	Butt-weld DIN-EN 10220	ICFB 20	ICFD 20	ICFE 20	ICFB 20	–	–	12.4	27.3	027L3483
ICF 20	4	90	1	25	Butt-weld DIN-EN 10220	ICFB 20	ICFD 20	ICFE 20	ICFB 20	–	–	12.4	27.3	027L3484
ICF 20	4	90	1¼	32	Butt-weld DIN-EN 10220	ICFB 20	ICFD 20	ICFE 20	ICFB 20	–	–	12.4	27.3	027L3485
ICF 20	6	90	¾	20	Socket weld, ANSI (B 16.11)	ICFS 20	ICFB 20	ICFE 20	ICFD 20	ICFB 20	ICFS 20	15.0	33.1	027L3463
ICF 20	6	90	1	25	Socket weld, ANSI (B 16.11)	ICFS 20	ICFB 20	ICFE 20	ICFD 20	ICFB 20	ICFS 20	15.0	33.1	027L3464
ICF 20	6	90	1¼	32	Socket weld, ANSI (B 16.11)	ICFS 20	ICFB 20	ICFE 20	ICFD 20	ICFB 20	ICFS 20	15.0	33.1	027L3465

Note:
For special applications that cannot be covered by our predefined ICF code numbers please consult Coolselector®2 or your local Danfoss Sales company.
http://refrigerationandairconditioning.danfoss.com/support-center/apps-and-software/coolselector/
Prior to designing „non standard" configurations there are some basic restrictions to the location of the function modules that must be followed.

When used in systems with CO_2, the o-rings on the ICM module can swell (grow). At service, it is therefore recommended to install new o-rings, before the ICM function module is re-installed in the ICF valve body.

Ordering ICF SS (Stainless Steel)

Liquid feed

Application 1: Liquid feed (no hot gas defrost)

Type	No. of Modules	Appl. no.	Connection size		Connection type	Module location						K_v total	Weight		Code number
			[in]	[mm]		M1	M2	M3	M4	M5	M6		[kg]	[lbs]	
ICF SS 20	6	1RA	¾	20	Butt-weld DIN-EN 10220	ICFS 20	ICFF 20	ICFE 20	ICFO 20	ICFR 20A	ICFS 20	2.1	9.5	20.9	027L4700
ICF SS 20	6	1RA	1	25	Butt-weld DIN-EN 10220	ICFS 20	ICFF 20	ICFE 20	ICFO 20	ICFR 20A	ICFS 20	2.1	9.7	21.3	027L4701

Application 2: Liquid feed

Type	No. of Modules	Appl. no.	Connection size		Connection type	Module location						K_v total	Weight		Code number
			[in]	[mm]		M1	M2	M3	M4	M5	M6		[kg]	[lbs]	
ICF SS 20	6	2RA	¾	20	Butt-weld DIN-EN 10220	ICFS 20	ICFF 20	ICFE 20	ICFO 20	ICFR 20A	ICFN 20	2.4	10.0	22.1	027L3428
ICF SS 20	6	2RA	1	25	Butt-weld DIN-EN 10220	ICFS 20	ICFF 20E	ICFE 20	ICFO 20	ICFR 20A	ICFN 20	2.4	10.0	22.1	027L3445
ICF SS 20	6	2RA	1	25	Butt-weld DIN-EN 10220	ICFS 20	ICFF 20	ICFE 20	ICFO 20	ICFR 20A	ICFN 20	2.1	9.7	21.3	027L4758
ICF SS 20	6	2HRB	1¼	32	Butt-weld DIN-EN 10220	ICFS 20	ICFF 20	ICFE 20H	ICFB 20	ICFR 20B	ICFN 20	2.6	9.2	20.2	027L4759
ICF SS 25	6	2RB	1¼	32	Butt-weld DIN-EN 10220	ICFS 25	ICFF 25	ICFE 25	ICFB 25	ICFR 25B	ICFN 25	8.5	23.9	52.6	027L4766

Application 3: Liquid feed

Type	No. of Modules	Appl. no.	Connection size		Connection type	Module location						K_v total	Weight		Code number
			[in]	[mm]		M1	M2	M3	M4	M5	M6		[kg]	[lbs]	
ICF SS 20	6	3RA	¾	20	Butt-weld DIN-EN 10220	ICFS 20	ICFF 20	ICFE 20	ICFC 20	ICFR 20A	ICFS 20	2.1	9.6	21.1	027L4702
ICF SS 20	6	3RA	1	25	Butt-weld DIN-EN 10220	ICFS 20	ICFF 20	ICFE 20	ICFC 20	ICFR 20A	ICFS 20	2.1	9.7	21.3	027L4703
ICF SS 20	6	3HRA	1	25	Butt-weld DIN-EN 10220	ICFS 20	ICFF 20	ICFE 20H	ICFC 20	ICFR 20A	ICFS 20	2.3	10.6	23.3	027L4717
ICF SS 25	6	3RA	1	25	Butt-weld DIN-EN 10220	ICFS 25	ICFF 25	ICFE 25	ICFC 25	ICFR 25A	ICFS 25	5.3	23.4	51.5	027L4724
ICF SS 25	6	3RA	1¼	32	Butt-weld DIN-EN 10220	ICFS 25	ICFF 25	ICFE 25	ICFC 25	ICFR 25A	ICFS 25	5.3	23.2	51.0	027L4760
ICF SS 25	6	3RB	1¼	32	Butt-weld DIN-EN 10220	ICFS 25	ICFF 25	ICFE 25	ICFC 25	ICFR 25B	ICFS 25	7.2	23.8	52.4	027L4725
ICF SS 25	6	3RB	1½	40	Butt-weld DIN-EN 10220	ICFS 25	ICFF 25	ICFE 25	ICFC 25	ICFR 25B	ICFS 25	7.2	24.0	52.8	027L4761
ICF SS 25	6	3RB	1½	40	Butt-weld DIN-EN 10220	ICFS 25	ICFF 25E	ICFE 25	ICFC 25	ICFR 25B	ICFS 25	8.5	24.7	54.3	027L4191

Application 10: Liquid feed (no hot gas defrost)

Type	No. of Modules	Appl. no.	Connection size		Connection type	Module location						K_v total	Weight		Code number
			[in]	[mm]		M1	M2	M3	M4	M5	M6		[kg]	[lbs]	
ICF SS 20	4	10RA	¾	20	Butt-weld DIN-EN 10220	ICFS 20	ICFF 20	ICFE 20	ICFR 20B	–	–	2.6	7.4	16.2	027L3440
ICF SS 20	4	10RA	1	25	Butt-weld DIN-EN 10220	ICFS 20	ICFF 20	ICFE 20	ICFR 20A	–	–	2.3	7.2	15.8	027L4709
ICF SS 25	4	10RA	1	25	Butt-weld DIN-EN 10220	ICFS 25	ICFF 25	ICFE 25	ICFR 25A	–	–	5.5	15.9	35.0	027L4731
ICF SS 25	4	10RB	1¼	32	Butt-weld DIN-EN 10220	ICFS 25	ICFF 25	ICFE 25	ICFR 25B	–	–	7.9	15.4	33.9	027L4732
ICF SS 25	4	10RA	1	25	Butt-weld DIN-EN 10220	ICFS 25	ICFF 25E	ICFE 25	ICFR 25A	–	–	5.5	16.2	35.7	027L4590

Application 15: Liquid feed with external connection

Type	No. of Modules	Appl. no.	Connection size		Connection type	Module location						K_v total	Weight		Code number
			[in]	[mm]		M1	M2	M3	M4	M5	M6		[kg]	[lbs]	
ICF SS 25	6	15RA	1	25	Butt-weld DIN-EN 10220	ICFS 25	ICFF 25	ICFE 25	ICFC 25	ICFW 25D	ICFR 25A	5.3	21.8	48.0	027L4733
ICF SS 25	6	15RB	1¼	32	Butt-weld DIN-EN 10220	ICFS 25	ICFF 25	ICFE 25	ICFC 25	ICFW 25D	ICFR 25B	7.3	22.7	49.9	027L4734

***Please Note**: When used in systems with CO_2, the o-rings on the ICM module can swell (grow). At service, it is therefore recommended to install new o-rings, before the ICM function module is re-installed in the ICF valve body. ICAD and coils are not included and must be ordered separately.*

Ordering ICF SS (Stainless Steel)

Liquid injection

Application 5: Liquid injection (expansion)

Type	No. of Modules	Appl. no.	Connection size		Connection type	Module location						K_v total	Weight		Code number
			[in]	[mm]		M1	M2	M3	M4	M5	M6		[kg]	[lbs]	
ICF SS 20	6	5MA33	¾	20	Butt-weld DIN-EN 10220	ICFS 20	ICFF 20-74	ICFE 20	ICFO 20	ICM 20-A33	ICFS 20	0.2	9.8	21.6	027L4714
ICF SS 20	6	5MB66	¾	20	Butt-weld DIN-EN 10220	ICFS 20	ICFF 20	ICFE 20	ICFO 20	ICM 20-B	ICFS 20	1.9	10.1	22.3	027L3443
ICF SS 20	6	5MA	1	25	Butt-weld DIN-EN 10220	ICFS 20	ICFF 20	ICFE 20	ICFO 20	ICM 20-A	ICFS 20	0.6	9.8	21.6	027L4704
ICF SS 20	6	5MB	1	25	Butt-weld DIN-EN 10220	ICFS 20	ICFF 20	ICFE 20	ICFO 20	ICM 20-B	ICFS 20	1.9	9.6	21.1	027L4705
ICF SS 20	6	5HMB	1	25	Butt-weld DIN-EN 10220	ICFS 20	ICFF 20	ICFE 20H	ICFB 20	ICM 20-B	ICFS 20	2.0	11.4	25.1	027L4718
ICF SS 20	6	5MA33	1	25	Butt-weld DIN-EN 10220	ICFS 20	ICFF 20	ICFE 20	ICFO 20	ICM 20-A33	ICFS 20	0.2	9.6	21.1	027L4755
ICF SS 25	6	5MA	1	25	Butt-weld DIN-EN 10220	ICFS 25	ICFF 25	ICFE 25	ICFB 25	ICM 25-A	ICFS 25	5.0	22.8	50.2	027L4726
ICF SS 20	6	5MB66	1¼	32	Butt-weld DIN-EN 10220	ICFS 20	ICFF 20	ICFE 20	ICFO 20	ICM 20-B66	ICFS 20	1.4	9.6	21.1	027L4754
ICF SS 20	6	5HMB	1¼	32	Butt-weld DIN-EN 10220	ICFS 20	ICFF 20	ICFE 20H	ICFB 20	ICM 20-B	ICFS 20	2.0	10.2	22.4	027L4756
ICF SS 20	6	5MC	1½	32	Butt-weld DIN-EN 10220	ICFS 20	ICFF 20	ICFE 20	ICFO 20	ICM 20-C	ICFS 20	2.5	9.8	21.6	027L4706
ICF SS 20	6	5HMC	1¼	32	Butt-weld DIN-EN 10220	ICFS 20	ICFF 20	ICFE 20H	ICFB 20	ICM 20-C	ICFS 20	3.0	10.3	22.7	027L4719
ICF SS 25	6	5MB	1¼	32	Butt-weld DIN-EN 10220	ICFS 25	ICFF 25	ICFE 25	ICFB 25	ICM 25-B	ICFS 25	7.3	22.3	49.0	027L4727
ICF SS 25	6	5MB	1½	40	Butt-weld DIN-EN 10220	ICFS 25	ICFF 25	ICFE 25	ICFB 25	ICM 25-B	ICFS 25	7.3	22.3	49.0	027L4728
ICF SS 25	6	5MA	1½	40	Butt-weld DIN-EN 10220	ICFS 25	ICFF 25	ICFE 25	ICFB 25	ICM 25-A	ICFS 25	5.0	22.3	49.0	027L4735

Application 14: Liquid injection (expansion)

Type	No. of Modules	Appl. no.	Connection size		Connection type	Module location						K_v total	Weight		Code number
			[in]	[mm]		M1	M2	M3	M4	M5	M6		[kg]	[lbs]	
ICF SS 20	4	14MA	¾	20	Butt-weld DIN-EN 10220	ICFS 20	ICFF 20	ICM 20-A	ICFS 20	–	–	0.6	7.3	16.1	027L4710
ICF SS 20	4	14MA	¾	20	Butt-weld DIN-EN 10220	ICFS 20	ICFF 20E	ICM 20-A	ICFS 20	–	–	0.6	6.9	15.1	027L3444
ICF SS 20	4	14MB	1	25	Butt-weld DIN-EN 10220	ICFS 20	ICFF 20	ICM 20-B	ICFS 20	–	–	2.1	7.2	15.8	027L4711
ICF SS 20	4	14MB66	1	25	Butt-weld DIN-EN 10220	ICFS 20	ICFF 20	ICM 20-B66	ICFS 20	–	–	1.5	7.0	15.4	027L4722
ICF SS 20	4	14MC	1¼	32	Butt-weld DIN-EN 10220	ICFS 20	ICFF 20	ICM 20-C	ICFS 20	–	–	3.3	7.3	16.1	027L4712
ICF SS 25	4	14MB	1	25	Butt-weld DIN-EN 10220	ICFS 25	ICFF 25	ICM 25-B	ICFS 25	–	–	8.5	14.8	32.5	027L4765
ICF SS 25	4	14MB	1¼	32	Butt-weld DIN-EN 10220	ICFS 25	ICFF 25	ICM 25-B	ICFS 25	–	–	8.5	14.8	32.5	027L4764

Hot gas defrost

Application 9: Hot gas defrost

Type	No. of Modules	Appl. no.	Connection size		Connection type	Module location						K_v total	Weight		Code number
			[in]	[mm]		M1	M2	M3	M4	M5	M6		[kg]	[lbs]	
ICF SS 20	4	9	1	25	Butt-weld DIN-EN 10220	ICFS 20	ICFF 20	ICFE 20	ICFS 20	–	–	3.3	7.2	15.8	027L4707
ICF SS 20	4	9H	1	25	Butt-weld DIN-EN 10220	ICFS 20	ICFF 20	ICFE 20H	ICFS 20	–	–	4.1	8.2	18.0	027L4720
ICF SS 20	4	9	1¼	32	Butt-weld DIN-EN 10220	ICFS 20	ICFF 20	ICFE 20	ICFS 20	–	–	3.3	6.8	15.0	027L4708
ICF SS 20	4	9H	1¼	32	Butt-weld DIN-EN 10220	ICFS 20	ICFF 20	ICFE 20H	ICFS 20	–	–	4.1	7.6	16.7	027L4721
ICF SS 25	4	9	1	25	Butt-weld DIN-EN 10220	ICFS 25	ICFF 25	ICFE 25	ICFS 25	–	–	9.7	16.2	35.7	027L3429
ICF SS 25	4	9	1¼	32	Butt-weld DIN-EN 10220	ICFS 25	ICFF 25	ICFE 25	ICFS 25	–	–	9.7	15.7	34.5	027L4729
ICF SS 25	4	9	1½	40	Butt-weld DIN-EN 10220	ICFS 25	ICFF 25	ICFE 25	ICFS 25	–	–	9.7	15.7	34.5	027L4730
ICF SS 25	4	9	1½	40	Butt-weld DIN-EN 10220	ICFS 25	ICFW 25D	ICM 25-B	ICFS 25	–	–	8.5	16.6	36.6	027L4190

ICAD and coils are not included and must be ordered separately.

***Please Note**: When used in systems with CO_2, the o-rings on the ICM module can swell (grow). At service, it is therefore recommended to install new o-rings, before the ICM function module is re-installed in the ICF valve body.*

Ordering ICF SS (Stainless Steel)

Miscellaneous

Application 90: Miscellaneous

Type	No. of Modules	Appl. no.	Connection size		Connection type	Module location						K_V total	Weight		Code number
			[in]	[mm]		M1	M2	M3	M4	M5	M6		[kg]	[lbs]	
ICF SS 20	4	90	¾	20	Butt-weld DIN-EN 10220	ICFR 20A	ICFF 20	ICFA 20	ICFN 20	–	–	0.3	6.4	14.1	027L4716
ICF SS 20	6	90	¾	20	Butt-weld DIN-EN 10220	ICFS 20	ICFF 20	ICFE 20	ICFB 20	ICFR 20-A	ICFN 20	2.1	9.7	21.3	027L4713
ICF SS 20	6	90	¾	20	Butt-weld DIN-EN 10220	ICFS 20	ICFF 20	ICFE 20	ICFC 20	ICM 20-C	ICFS 20	2.5	9.7	21.3	027L4715
ICF SS 20	6	90	¾	20	Butt-weld DIN-EN 10220	ICFS 20	ICFF 20	ICFE 20	ICFC 20	ICFR 20A	ICFW 20D	2.5	8.9	17.8	027L4740
ICF SS 20	6	90	¾	20	Butt-weld DIN-EN 10220	ICFS 20	ICFF 20	ICFE 20	ICFC 20	ICFR 20B	ICFW 20D	2.5	8.9	17.8	027L4741
ICF SS 20	6	90	¾	20	Butt-weld DIN-EN 10220	ICFS 20	ICFF 20	ICFE 20H	ICFC 20	ICFR 20A	ICFW 20D	2.5	9.8	21.5	027L4748
ICF SS 20	6	90	¾	20	Butt-weld DIN-EN 10220	ICFS 20	ICFF 20	ICFE 20H	ICFC 20	ICFR 20B	ICFW 20D	2.5	9.8	21.5	027L4749
ICF SS 20	6	90	¾	20	Butt-weld DIN-EN 10220	ICFS 20	ICFF 20	ICFE 20	ICFC 20	ICFW 20D	ICFS 20	2.8	9.3	20.6	027L4768
ICF SS 20	6	90	¾	20	Butt-weld DIN-EN 10220	ICFS 20	ICFF 20	ICFE 20	ICFB 20	ICFR 20A	ICFS 20	2.1	9.9	21.8	027L3427
ICF SS 20	6	90	1	25	Butt-weld DIN-EN 10220	ICFS 20	ICFF 20E	ICFE 20H	ICFC 20	ICFR 20B	ICFW 20D	2.6	11.5	25.3	027L4723
ICF SS 20	6	90	1	25	Butt-weld DIN-EN 10220	ICFS 20	ICFF 20	ICFE 20	ICFC 20	ICFR 20A	ICFW 20D	2.6	8.9	17.8	027L4742
ICF SS 20	6	90	1	25	Butt-weld DIN-EN 10220	ICFS 20	ICFF 20	ICFE 20	ICFC 20	ICFR 20B	ICFW 20D	2.6	8.9	17.8	027L4743
ICF SS 20	6	90	1	25	Butt-weld DIN-EN 10220	ICFS 20	ICFF 20	ICFE 20H	ICFC 20	ICFR 20A	ICFW 20D	2.6	9.8	21.5	027L4750
ICF SS 20	6	90	1	25	Butt-weld DIN-EN 10220	ICFS 20	ICFF 20	ICFE 20H	ICFC 20	ICFR 20B	ICFW 20D	2.6	9.8	21.5	027L4751
ICF SS 20	6	90	1	25	Butt-weld DIN-EN 10220	ICFS 20	ICFF 20	ICFE 20	ICFC 20	ICFW 20D	ICFS 20	2.8	9.3	20.6	027L4767
ICF SS 20	6	90	1¼	32	Butt-weld DIN-EN 10220	ICFS 20	ICFF 20	ICFE 20	ICFC 20	ICFR 20A	ICFW 20D	2.6	8.9	17.8	027L4746
ICF SS 20	6	90	1¼	32	Butt-weld DIN-EN 10220	ICFS 20	ICFF 20	ICFE 20	ICFC 20	ICFR 20B	ICFW 20D	2.6	8.9	17.8	027L4747
ICF SS 20	6	90	1¼	32	Butt-weld DIN-EN 10220	ICFS 20	ICFF 20	ICFE 20H	ICFC 20	ICFR 20A	ICFW 20D	2.6	9.8	21.5	027L4752
ICF SS 20	6	90	1¼	32	Butt-weld DIN-EN 10220	ICFS 20	ICFF 20	ICFE 20H	ICFC 20	ICFR 20B	ICFW 20D	2.6	9.8	21.5	027L4753
ICF SS 25	6	90	1	25	Butt-weld DIN-EN 10220	ICFS 25	ICFF 25	ICFE 25	ICFN 25	ICFR 25B	ICFW 25D	7.3	24.2	53.2	027L4189
ICF SS 25	6	90	1	25	Butt-weld DIN-EN 10220	ICFS 25	ICFF 25	ICM 25-A	ICFC 25	ICFB 25	ICFS 25	5.2	23.6	51.9	027L4763
ICF SS 25	6	90	1¼	32	Butt-weld DIN-EN 10220	ICFS 25	ICFF 25	ICM 25-B	ICFC 25	ICFB 25	ICFS 25	7.7	23.6	51.9	027L4762

ICAD and coils are not included and must be ordered separately.
***Please Note**: When used in systems with CO_2, the o-rings on the ICM module can swell (grow). At service, it is therefore recommended to install new o-rings, before the ICM function module is re-installed in the ICF valve body.*

Quick Selection Notes:

OUB, Oil separator

OUB oil separators are for use in all refrigeration plants where the compressor lubricating oil must be returned direct to the compressor oil sump under all operation conditions.

In this way lubricating oil from the compressor is prevented from circulating with the refrigerant in the refrigeration system itself.



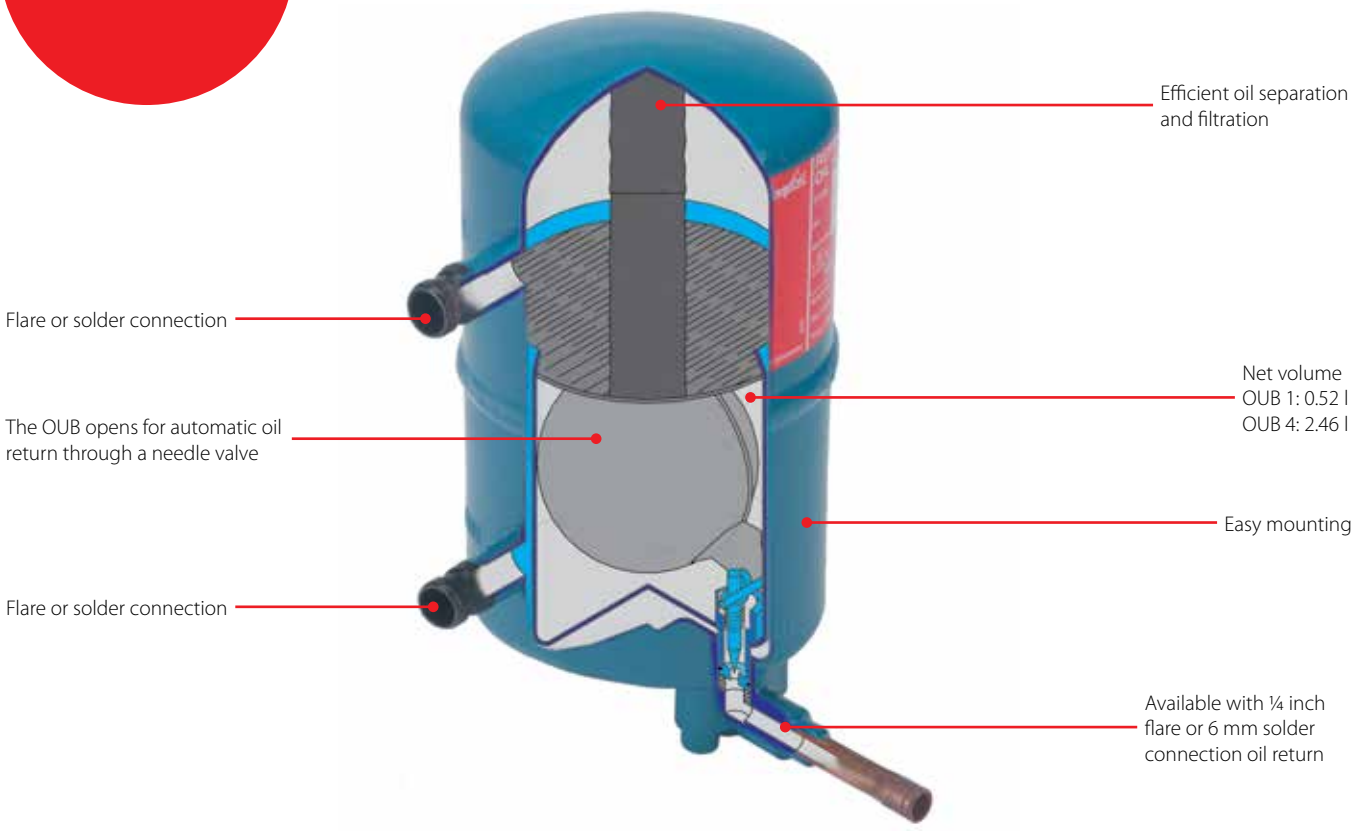

Facts

Application:
- Traditional refrigeration
- Air conditioning units

- High efficiency due to the interaction of reduced flow and a change of flow direction for oil concentration, and due to the collection of the separated oil at high temperature and the automatic return of the oil to the crankcase
- High efficiency protects against liquid hammer in compressor
- Better utilisation of condenser and evaporator capacity (no oil-gas collection)
- Prevents compressor breakdown caused by lack of lubrication
- Increases compressor operating life
- Ensures oil return to compressor oil sump
- Pulsation and noise damping on high- pressure side of system
- Max. working pressure:
  PS 28 bar
- OUB 1: applicable to R22, R1270, R134a, R290, R404A, R407A, R407C, R407F, R438A, R448A, R449A, R450A, R452A, R507A, R513A, R600, R600a
- OUB 1 may be used in the following EX range: Category 3 (Zone 2)
- OUB 4: applicable to R22, R134a, R404A, R407A, R407C, R407F, R438A, R448A, R449A, R450A, R452A, R507A, R513A
- Temperature of medium:
  -40 – 120 °C
- Net volume:
  - OUB 1: 0.52 l
  - OUB 4: 2.46 l

Technical data and ordering

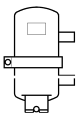
OUB 1s

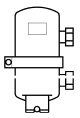
OUB 1/OUB 4

OUB - Oil separator

Ordering

Type	Connection			Rated plant capacity [kW]					Code no. for OUB + unions (straightway)
	[in]	[mm]	Version	R22	R134a	R404A	R507	R407C	
OUB 1	3/8	10	Flare	3.1	2.5	3.5	3.5	4.4	040B0010 + 2 × 040B0132
	3/8	–	Solder	3.1	2.5	3.5	3.5	4.4	040B0010 + 2 × 040B0140
	1/2	12	Flare	3.1	2.5	3.5	3.5	4.4	040B0010 + 2 × 040B0134
	1/2	–	Solder	3.1	2.5	3.5	3.5	4.4	040B0010 + 2 × 040B0142
	5/8	16	Flare	3.1	2.5	3.5	3.5	4.4	040B0010 + 2 × 040B0136
	5/8	16	Solder	3.1	2.5	3.5	3.5	4.4	040B0010 + 2 × 040B0144
	Without connection unions								040B0010
OUB 1s 1)	–	10	Solder	3.1	2.5	3.5	3.5	4.4	040B0023
OUB 1s 2)	–	10	Solder	3.1	2.5	3.5	3.5	4.4	040B0029
OUB 4	5/8	16	Flare	11.6	9.6	12.8	12.8	16.0	040B0040 + 2 × 040B0256
	5/8	16	Solder	11.6	9.6	12.8	12.8	16.0	040B0040 + 2 × 040B0266
	3/4	–	Solder	11.6	9.6	12.8	12.8	16.0	040B0040 + 2 × 040B0268
	7/8	–	Solder	11.6	9.6	12.8	12.8	16.0	040B0040 + 2 × 040B0270
	–	22	Solder	11.6	9.6	12.8	12.8	16.0	040B0040 + 2 × 040B0264
	1 1/8	–	Solder	11.6	9.6	12.8	12.8	16.0	040B0040 + 2 × 040B0274
	Without connection unions								040B0040

1) ¼ inch flare connection to oil return line.
2) 6 mm ODF solder connection to oil return line.

HE, Tube-in-tube heat exchanger

HE tube-in-tube heat exchangers are used primarily for heat transfer between the liquid and suction lines of the refrigeration plant.

The purpose is to utilize the cooling effect which without a heat exchanger is otherwise lost to the ambient air via uninsulated suction lines. In the heat exchanger, this effect is used to subcool the refrigerant liquid.

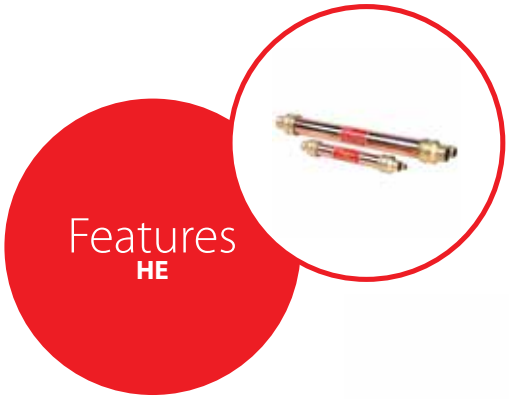

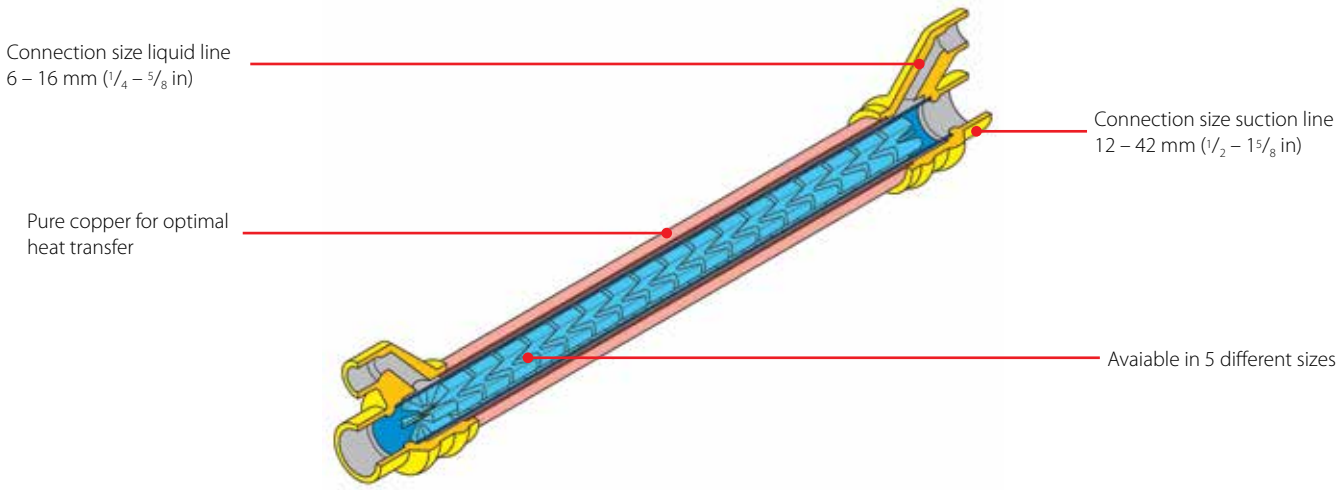

Facts

Application:
- Traditional refrigeration
- Air conditioning units

- The design is such that normal suction gas velocities are achieved, with a sub-sequent small pressure drop. Thus the heat exchanger capacity will match plant capacity
- At the same time, oil return to the compressor is ensured
- Helps ensure vapour-free liquid ahead of expansion valve
- Helps prevent sweating and iced-up suction lines
- Maximum utilisation of evaporator on setting the thermostatic expansion valve for minimum superheat

- HE 0.5 – 1.5: applicable to R22, R1270, R134a, R290, R404A, R407A, R407C, R407F, R448A, R449A, R450A, R452A, R507A, R513A, R600, R600a
- HE 0.5 – 1.5: May be used in the following EX range: Category 3 (Zone 2)
- HE 4.0 – 8.0: applicable to R22, R1270, R134a, R290, R404A, R407A, R407C, R407F, R448A, R449A, R450A, R452A, R507A, R513A
- Max. working pressure:
  HE 0.5, 1.0, 1.5, 4.0: PS 28 bar
  HE 8.0: PS 21.5 bar
- Operating temperature:
  -60 – 120 °C

Technical data and ordering

HE, Tube-in-tube heat exchanger

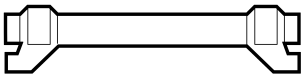

Ordering

Type	Solder connection ODF				Code no.
	Liquid line		Suction line		
	[in]	[mm]	[in]	[mm]	
HE 0.5	–	6	–	12	015D0001
	1/4	–	1/2	–	015D0002
HE 1.0	–	10	–	16	015D0003
	3/8	–	5/8	–	015D0004
HE 1.5	–	12	–	18	015D0005
	1/2	–	3/4	–	015D0006
HE 4.0	–	12	–	28	015D0007
	1/2	–	1 1/8	–	015D0008
HE 8.0	–	16	–	42	015D0009
	5/8	–	1 5/8	–	015D0010

Selection

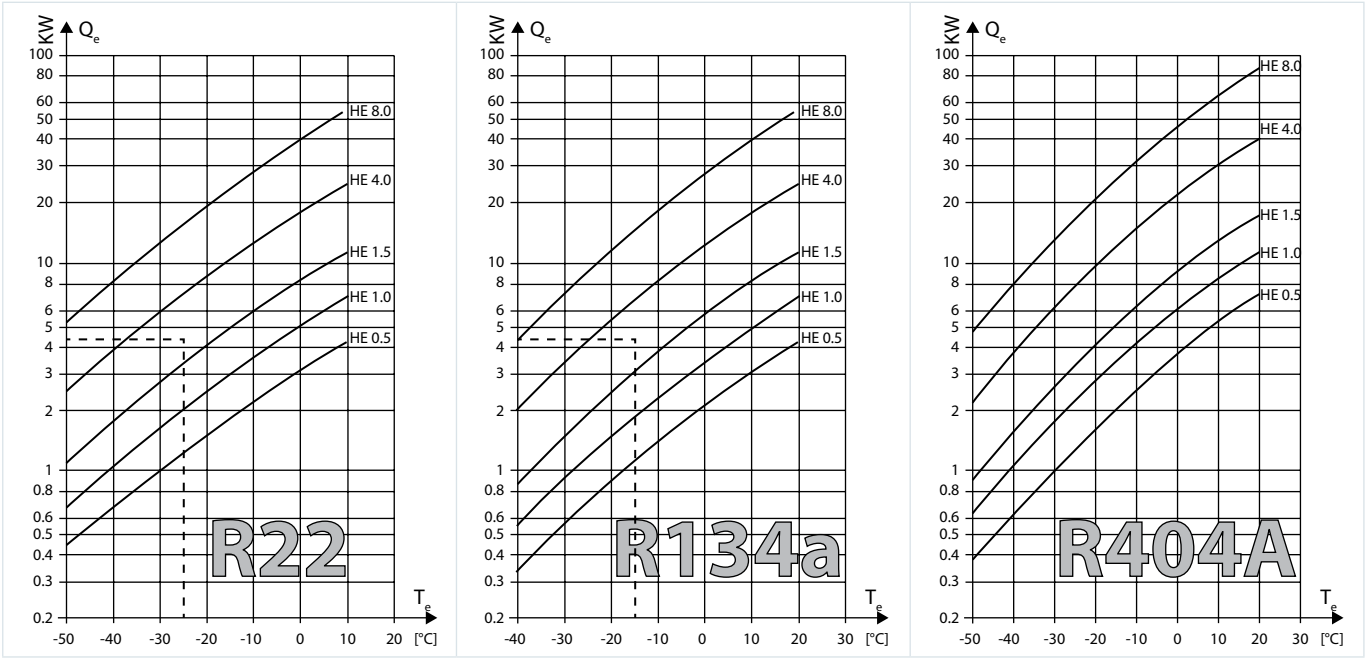

The curve for R134a shows that an HE 4.0 is suitable.
The curve for HE 4.0 lies immediately above the intersection of the lines through Q_e = 4.5 kW and t_e = -15 °C

The heat flow Q during heat exchange is calculated from the formula:
$Q = k \times A \times \Delta t_m$

Q) heat flow in [W]
k) heat transfer coefficient in [W] / [m²] [°C]
A) transfer area of the heat exchanger in [m²]
Δt_m) the average temperature difference in [°C], calculated from the formula

$$\Delta t_m = \frac{\Delta t_{max.} - t_{min.}}{\ln \frac{\Delta t_{max.}}{\Delta t_{min.}}}$$

k × A values determined by experiment (see table)

Type	k × A [1]) Dry suction gas / refrigerant liquid (normal use in refrigeration plant with fluorinated refrigerants) [W] / [°C]
HE 0.5	2.3
HE 1.0	3.1
HE 1.5	4.9
HE 4.0	11.0
HE 8.0	23.0

[1]) These figures apply to dry gas only. Even if a thermostatic expansion valve is used, the suction gas will carry very small liquid drops into the suction line. The fins of the HE catch these drops which then evaporate. This may result in a smaller superheat than the theoretically calculated value.

Precise heat exchanger sizing can be obtained from the curves which show plant capacity Q_e for R22, R134a and R404A depending on evaporating temperature t_e.

BPHE, Brazed plate heat exchanger

A brazed plate heat exchanger, consists of a series of thin, corrugated metal plates that are brazed together to improve heat transfer efficiency. The plates are compressed together in a rigid frame to create an arrangement of parallel flow channels. BPHE provides the ability to remove and transfer heat from one medium to another, brazed plate heat exchangers are a cost-saving alternative to conventional condensers and evaporators.
BPHE work with water, brine and oil etc.

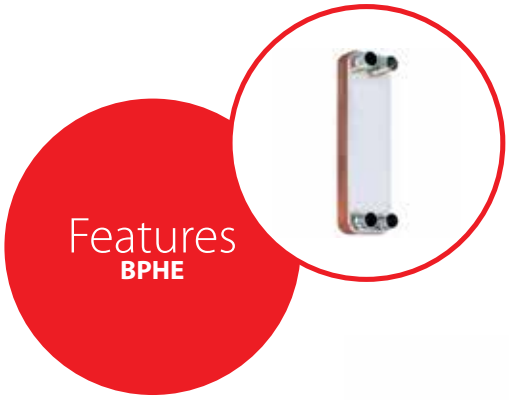

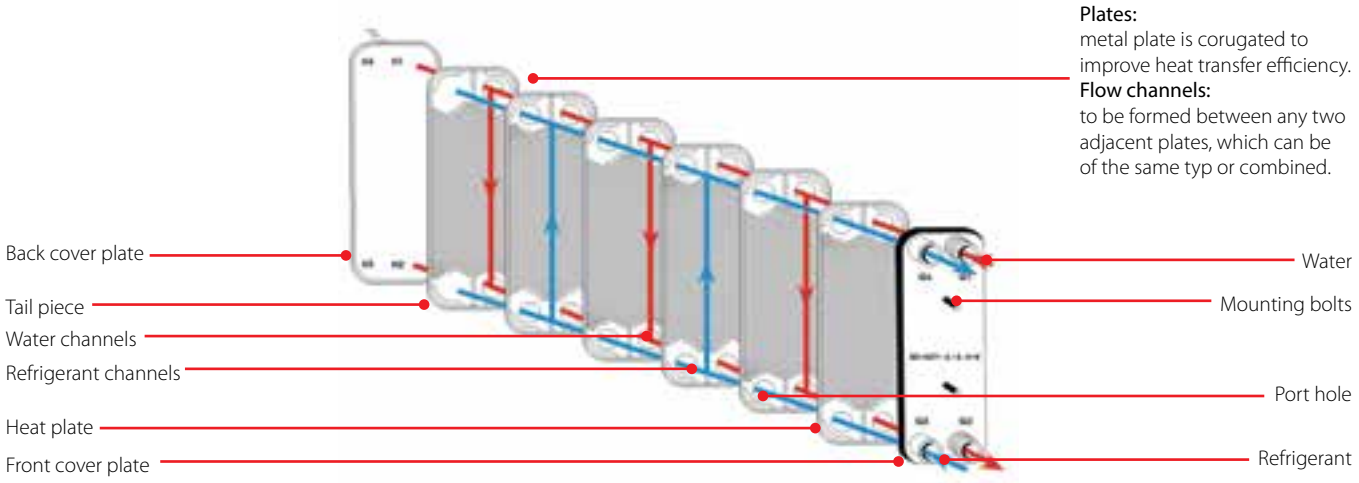

Facts

Application:
- The brazed plate heat exchanger is the ideal choice for chillers, heat pumps, economizers, desuperheaters and can be used for numerous other applications
- Applicable to R410A, R134a, R407C, R407A, R407F, R448A, R452A, R513A, R290, etc.

Features
- Compact design
- Low fouling
- High corrosion resistance
- Easy to service
- NPT or BSP connection of water / brine side

- Design temperature: -196 / 200 °C
- Standard design pressure: 30 bar
- High design pressure: 45 bar
- Standard plate material: AISI 316L
- Brazing material: copper
- Approval: PED, UL

Technical data and ordering

BPHE - Brazed plate heat exchanger

Rated capacity

Type	Model	Rated capacity / Water side pressure drop, Evaporator						Rated capacity / Water side pressure drop, Condenser					
		R22		R134a		R407C		R22		R134a		R407C	
		[kW]	[kPa]	[kW]	[kPa]	[kW]	[kPa]	[kW]	[kPa]	[kW]	[kPa]	[kW]	[kPa]
PHE B3-030	B3-030-10-3.0-HQ	3.5	47	2.5	25	3.5	47	5	82	4.4	65	2.6	25
PHE B-3030	B3-030-20-3.0-HQ	7	47	5.5	31	7	47	11	98	9	68	5.4	27
PHE B3-030	B3-030-30-3.0-HQ	10.5	47	8.5	33	10.5	47	16.5	99	13.2	66	8	26
PHE B3-030	B3-030-50-3.0-HQ	17.5	49	15	37	17.5	49	27	98	18.5	49	13	26
PHE B3-030	B3-030-70-3.0-HQ	26.3	57	21.5	40	25	52	37	98	30	66	18.2	27
PHE B3-052	B3-052-54-3.0-HQ	35	46	31	36	33.5	42	38	55	29	32	18.5	14
PHE B3-052	B3-052-70-3.0-HQ	43.8	44	38	34	42	41	48	54	37	32	24	14
PHE B3-052	B3-052-88-3.0-HQ	52.5	42	45.5	32	50	39	61	58	47	35	30	15
PHE B3-095	B3-095-44-3.0-HQ	52.5	31	44	22	52.5	31	56	33	44	21	29	10
PHE B3-095	B3-095-60-3.0-HQ	70	30	60	23	70	30	75	33	59	21	39	10
PHE B3-095	B3-095-74-3.0-HQ	87.5	31	73	24	87.5	31	92	33	72	21	48	10
PHE B3-095	B3-095-92-3.0-HQ	105	31	94	25	105	31	114	34	89	22	59	10
PHE B3-095	B3-095-122-3.0-HQ	140	33	125	27	140	33	148	36	116	23	78	11
PHE B3-210	B3-210-74-3.0-HQ	175	35	165	32	168	33	190	42	152	27	100	12
PHE B3-210	B3-210-90-3.0-HQ	210	36	200	32	205	34	235	44	188	28	122	12

BPHE - Brazed plate heat exchanger

Rated conditions

Refrigerant	Evaporator						Condenser			
	Evaporating temperature [°C]	Super heat [K]	Condensing temperature [°C]	Sub cool [K]	Water-in temperature [°C]	Water-out temperature [°C]	Hot gas temperature [°C]	Condensing temperature [°C]	Water-in temperature [°C]	Water-out temperature [°C]
R22	2	5	40	5	12	7	85	50	40	45
R134a	2	5	40	5	12	7	85	50	40	45
R407C	4.5	5	40	5	12	7	85	50	40	45

Nomenclature and Dimensions

Nomenclature

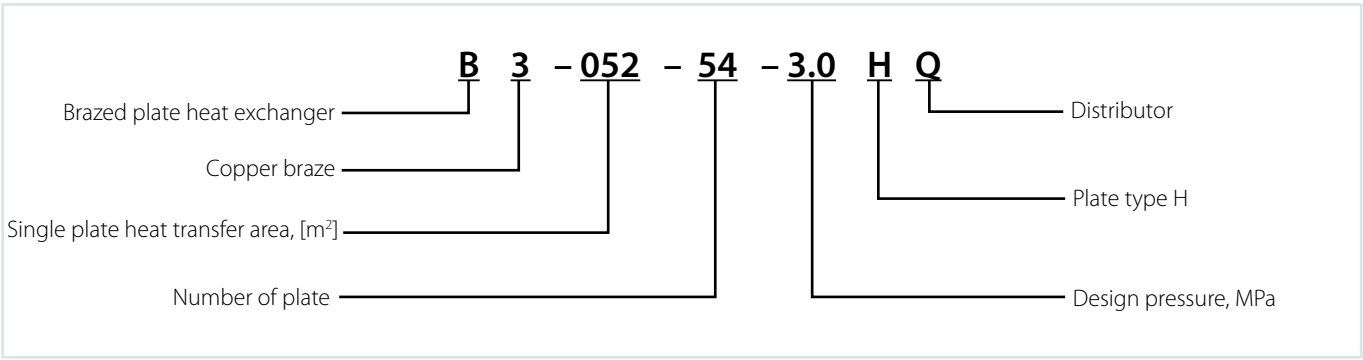

BPHE - Brazed plate heat exchanger

Ordering

Model	Connection type 1			Code no.	Connection type 2			Code no.
	Ref. in [in]	Ref. out [in]	Water / brine [in]		Ref. in [in]	Ref. out [in]	Water / brine [in]	
B3-030-10-3.0-HQ	H 1/2	H 7/8	G 3/4	021B2060	H 1/2	H 7/8	NPT 3/4	021B2055
B3-030-20-3.0-HQ	H 1/2	H 7/8	G 3/4	021B2061	H 1/2	H 7/8	NPT 3/4	021B2056
B3-030-30-3.0-HQ	H 1/2	H 7/8	G 3/4	021B2062	H 1/2	H 7/8	NPT 3/4	021B2057
B3-030-50-3.0-HQ	H 5/8	H1 1/8	G 3/4	021B2063	H 5/8	H1 1/8	NPT 3/4	021B2058
B3-030-70-3.0-HQ	H 5/8	H1 1/8	G 3/4	021B2064	H 5/8	H1 1/8	NPT 3/4	021B2059
B3-052-54-3.0-HQ	H 5/8	H1 1/8	G1 1/4	021B3706	H 5/8	H1 1/8	NPT1	021B3709
B3-052-70-3.0-HQ	H 5/8	H1 1/8	G1 1/4	021B3707	H 5/8	H1 1/8	NPT1	021B3710
B3-052-88-3.0-HQ	H 5/8	H1 1/8	G1 1/4	021B3708	–	–	–	–
B3-095-44-3.0-HQ	–	–	–	–	H 7/8	H1 3/8	NPT2	021B6352
B3-095-60-3.0-HQ	H 7/8	H1 3/8	G2	021B6321	H 7/8	H1 3/8	NPT2	021B6324
B3-095-74-3.0-HQ	H 7/8	H1 3/8	G2	021B6322	H 7/8	H1 3/8	NPT2	021B6325
B3-095-92-3.0-HQ	H 7/8	H1 3/8	G2	021B6323	H 7/8	H1 3/8	NPT2	021B6326
B3-095-122-3.0-HQ	–	–	–	–	H1 1/8	H2 1/8	NPT2	021B6358
B3-210-74-3.0-HQ	–	–	–	–	H1 1/8	H2" 1/8	NPT2	021B7595
B3-210-90-3.0-HQ	–	–	–	–	H1 1/8	H2" 1/8	NPT2	021B7596

Danfoss offers customized products to meet your requirements. Please contact Danfoss for more information.

***Media**: R407C, R22, R134a, R404A, R407F, R513A, R1234ze, R452A. For applications with flammable refrigerants, please contact your Danfoss sales representative.*
Use only for system in compliance with ATEX. Ignition risk is evaluated in accordance to ATEX. BPHE can be applied on systems with R290 and R600a as the working fluid. For countries where safety standards are not an indispensable part of the safety system Danfoss recommend the installer to get a third party approval of the system containing flammable refrigerant.
***Note**: Please follow specific selection criteria stated in the data sheet for these particular refrigerants.*

Quick Selection Notes:

MPHE, Micro plate heat exchanger

Featuring patented dimple-based design heat exchangers ensure more uniform and reliable liquid distribution, therefore maximize the heat transfer surface and higher system performances. The unique designs – from first dimple design to asymmetric X design for condensers and Z design for evaporators - offer long lasting performance through well-defined brazing areas even with high working pressures.

MPHE are applicable to main refrigerants including those with lower GWP: R410A, R32, R452/4B, R454C, R134a, R513A, R404A, R407C, R407A/F, R448/9A, R290 etc.

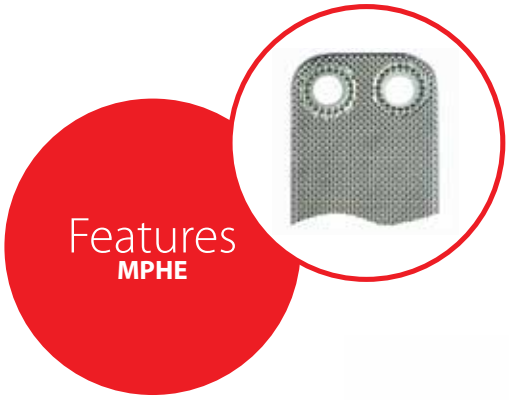

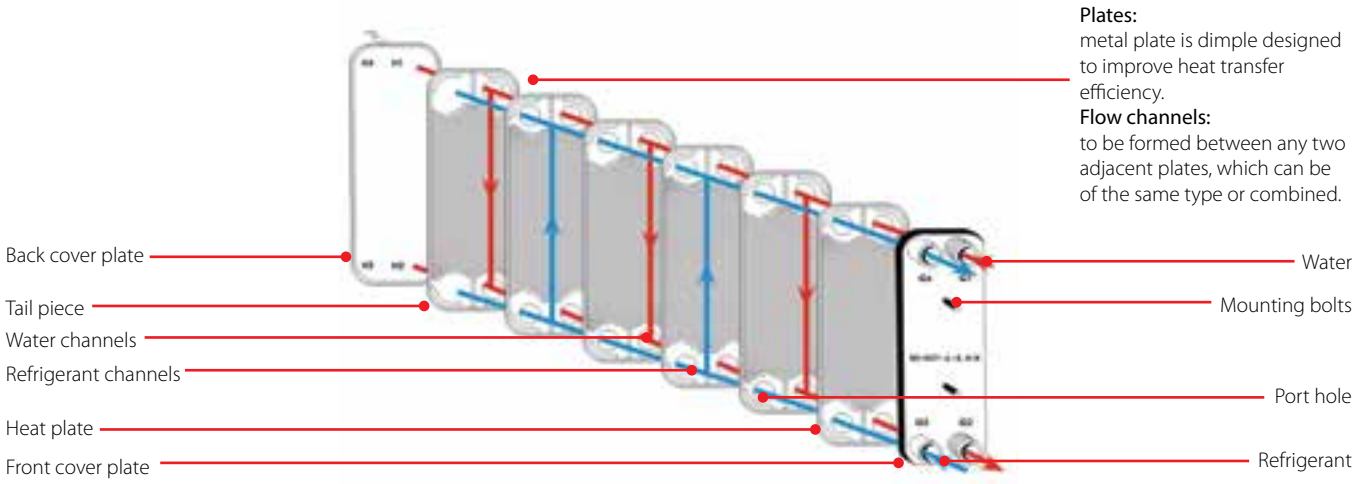

Facts

Application:
- The Micro Plate Heat Exchanger with M and Z design are dedicated to chillers and heat pumps, economizers or close controls.
- High efficiency and compatibility with many refrigerants help meet European Ecodesign and F-Gas targets.
- MPHE are applicable to main refrigerants including those with lower GWP: R410A, R32, R452/4B, R454C, R134a, R513A, R404A, R407C, R407A/F, R448/9A, R290 etc.

Features
- Dimple-based design ensure high system efficiency with optimized heat transfer
- Standard and high-pressure designs are compatible even with high density refrigerants
- Design temperatures -196 / 200 °C
- Standard design pressure: 30 bar
- High design pressure 45 bar
- Approval: PED, UL

Nomenclature and Dimensions

Nomenclature

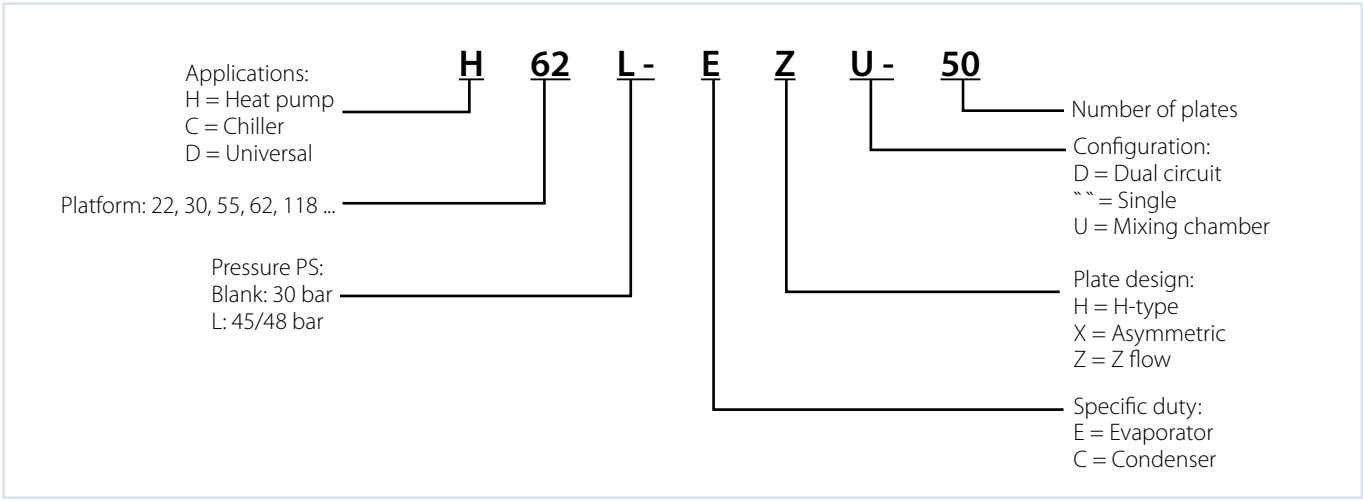

MPHE - Micro plate heat exchanger

Ordering

Application	Platform	Pressure PS		Specific duty	Plate design	Configuration		Number of plates
H	30	L	–	C	–	–	–	50
D	55	L	–	E	–	U	–	70
H	62	L	–	E	Z	U	–	50
H	62	L	–	C	X	–	–	60
C	118	L	–	E	Z	–	–	100

Technical data and ordering

MPHE - Micro plate heat exchanger

With distributor 45 bar

Model	Capacity [kW]	Height [mm]	Width [mm]	Weight [kg]	Q3 (ref. in) Combo conn.	Q4 (ref. out) Combo conn.	Q1 Combo conn.	Q2 Combo conn.	Studbolt	Code no.
					SOLDER [in]	SOLDER [in]	THREAD [in] / SOLDER [in]	THREAD [in] / SOLDER [in]	Front	
D55L-EU-10	4	525	109	4.27	1/2	7/8	G1 1/4 / 1 1/8	G1 1/4 / 1 1/8	YES	021H7470
D55L-EU-16	7	525	109	5.08	1/2	7/8	G1 1/4 / 1 1/8	G1 1/4 / 1 1/8	YES	021H7471
D55L-EU-20	9	525	109	5.62	1/2	7/8	G1 1/4 / 1 1/8	G1 1/4 / 1 1/8	YES	021H7472
D55L-EU-26	12	525	109	6.43	1/2	7/8	G1 1/4 / 1 1/8	G1 1/4 / 1 1/8	YES	021H7473
D55L-EU-30	14	525	109	6.97	1/2	7/8	G1 1/4 / 1 1/8	G1 1/4 / 1 1/8	YES	021H7474
D55L-EU-36	17	525	109	7.78	1/2	7/8	G1 1/4 / 1 1/8	G1 1/4 / 1 1/8	YES	021H7475
D55L-EU-40	19	525	109	8.32	1/2	7/8	G1 1/4 / 1 1/8	G1 1/4 / 1 1/8	YES	021H7476
D55L-EU-46	22	525	109	9.13	1/2	7/8	G1 1/4 / 1 1/8	G1 1/4 / 1 1/8	YES	021H7477
D55L-EU-50	24	525	109	9.67	5/8	7/8	G1 1/4 / 1 1/8	G1 1/4 / 1 1/8	YES	021H7478
D55L-EU-60	30	525	109	11.02	5/8	7/8	G1 1/4 / 1 1/8	G1 1/4 / 1 1/8	YES	021H7479
D55L-EU-70	35	525	109	12.37	5/8	1 1/8	G1 1/4 / 1 1/8	G1 1/4 / 1 1/8	YES	021H7480
D55L-EU-80	40	525	109	13.72	5/8	1 1/8	G1 1/4 / 1 1/8	G1 1/4 / 1 1/8	YES	021H7481
D55L-EU-90	45	525	109	15.07	5/8	1 1/8	G1 1/4 / 1 1/8	G1 1/4 / 1 1/8	YES	021H7482
D55L-EU-100	50	525	109	16.42	5/8	1 1/8	G1 1/4 / 1 1/8	G1 1/4 / 1 1/8	YES	021H7483
D62L-E -16	6	525	119	5.67	3/8	5/8	G1 1/4 / 1 1/8	G1 1/4 / 1 1/8	YES	021H0840
D62L-E -20	8	525	119	6.25	3/8	5/8	G1 1/4 / 1 1/8	G1 1/4 / 1 1/8	YES	021H0841
D62L-E - 26	10	525	119	7.12	3/8	3/4	G1 1/4 / 1 1/8	G1 1/4 / 1 1/8	YES	021H0842
D62L-E - 30	12	525	119	7.7	3/8	3/4	G1 1/4 / 1 1/8	G1 1/4 / 1 1/8	YES	021H0843
D62L-E - 36	15	525	119	8.57	1/2	3/4	G1 1/4 / 1 1/8	G1 1/4 / 1 1/8	YES	021H0844
D62L-E - 40	17	525	119	9.15	1/2	3/4	G1 1/4 / 1 1/8	G1 1/4 / 1 1/8	YES	021H0845
D62L-E - 46	20	525	119	10.02	1/2	7/8	G1 1/4 / 1 1/8	G1 1/4 / 1 1/8	YES	021H0846
D62L-E - 50	22	525	119	10.6	1/2	7/8	G1 1/4 / 1 1/8	G1 1/4 / 1 1/8	YES	021H0847
D62L-E - 60	25	525	119	12.05	5/8	1 1/8	G1 1/4 / 1 1/8	G1 1/4 / 1 1/8	YES	021H0848
D62L-E - 70	30	525	119	13.5	5/8	1 1/8	G1 1/4 / 1 1/8	G1 1/4 / 1 1/8	YES	021H0849
D62L-E - 80	35	525	119	14.95	5/8	1 1/8	G1 1/4 / 1 1/8	G1 1/4 / 1 1/8	YES	021H0850
D62L-E - 90	40	525	119	16.4	3/4	1 1/8	G1 1/4 / 1 1/8	G1 1/4 / 1 1/8	YES	021H0851
D62L-E - 100	45	525	119	17.85	3/4	1 3/8	G1 1/4 / 1 1/8	G1 1/4 / 1 1/8	YES	021H0852
D62L-E - 110	50	525	119	19.3	3/4	1 3/8	G1 1/4 / 1 1/8	G1 1/4 / 1 1/8	YES	021H0853
D62L-E - 120	55	525	119	20.75	3/4	1 3/8	G1 1/4 / 1 1/8	G1 1/4 / 1 1/8	YES	021H0854
D118L-E - 20	20	613	186	13.14	5/8	1 1/8	G 2 / 1 5/8	G 2 / 1 5/8	YES	021H2718
D118L-E - 26	26	613	186	14.7	5/8	1 1/8	G 2 / 1 5/8	G 2 / 1 5/8	YES	021H2719
D118L-E - 30	30	613	186	15.74	5/8	1 1/8	G 2 / 1 5/8	G 2 / 1 5/8	YES	021H2720
D118L-E - 36	36	613	186	17.3	5/8	1 1/8	G 2 / 1 5/8	G 2 / 1 5/8	YES	021H2721
D118L-E - 40	40	613	186	18.34	5/8	1 1/8	G 2 / 1 5/8	G 2 / 1 5/8	YES	021H2722
D118L-E - 46	46	613	186	19.9	3/4	1 1/8	G 2 / 1 5/8	G 2 / 1 5/8	YES	021H2723
D118L-E - 50	50	613	186	20.94	3/4	1 1/8	G 2 / 1 5/8	G 2 / 1 5/8	YES	021H2724
D118L-E - 56	56	613	186	22.5	3/4	1 1/8	G 2 / 1 5/8	G 2 / 1 5/8	YES	021H2725
D118L-E - 60	60	613	186	23.54	3/4	1 1/8	G 2 / 1 5/8	G 2 / 1 5/8	YES	021H2726
D118L-E - 70	70	613	186	26.14	7/8	1 3/8	G 2 / 1 5/8	G 2 / 1 5/8	YES	021H2727
D118L-E - 80	80	613	186	28.74	7/8	1 3/8	G 2 / 1 5/8	G 2 / 1 5/8	YES	021H2728
D118L-E - 90	90	613	186	31.34	7/8	1 5/8	G 2 / 1 5/8	G 2 / 1 5/8	YES	021H2729
D118L-E - 100	100	613	186	33.94	7/8	1 5/8	G 2 / 1 5/8	G 2 / 1 5/8	YES	021H2730
D118L-E - 110	110	613	186	36.54	1 1/8	1 5/8	G 2 / 1 5/8	G 2 / 1 5/8	YES	021H2731
D118L-E - 120	120	613	186	39.14	1 1/8	2 1/8	G 2 / 1 5/8	G 2 / 1 5/8	YES	021H2732
D118L-E - 130	130	613	186	41.74	1 1/8	2 1/8	G 2 / 1 5/8	G 2 / 1 5/8	YES	021H2733
D118L-E - 140	140	613	186	44.34	1 1/8	2 1/8	G 2 / 1 5/8	G 2 / 1 5/8	YES	021H2734
D118L-E - 150	150	613	186	46.94	1 1/8	2 1/8	G 2 / 1 5/8	G 2 / 1 5/8	YES	021H2735
D118L-E - 160	160	613	186	49.54	1 1/8	2 1/8	G 2 / 1 5/8	G 2 / 1 5/8	YES	021H2736

Technical data and ordering

MPHE - Micro plate heat exchanger

With distributor 30 bar

Model	Capacity [kW]	Height [mm]	Width [mm]	Weight [kg]	Q3 (ref. in) Combo conn.	Q4 (ref. out) Combo conn.	Q1 Combo conn.	Q2 Combo conn.	Studbolt	Code no.
					SOLDER [in]	SOLDER [in]	THREAD [in] / SOLDER [in]	THREAD [in] / SOLDER [in]	Front	
D62-E-16	6	525	118	5.24	1/2	7/8	G1 1/4 / 1 1/8	G1 1/4 / 1 1/8	YES	021H0870
D62-E-20	8	525	118	5.82	1/2	7/8	G1 1/4 / 1 1/8	G1 1/4 / 1 1/8	YES	021H0871
D62-E-26	10	525	118	6.69	1/2	7/8	G1 1/4 / 1 1/8	G1 1/4 / 1 1/8	YES	021H0872
D62-E-30	12	525	118	7.27	5/8	1 1/8	G1 1/4 / 1 1/8	G1 1/4 / 1 1/8	YES	021H0873
D62-E-36	15	525	118	8.14	5/8	1 1/8	G1 1/4 / 1 1/8	G1 1/4 / 1 1/8	YES	021H0874
D62-E-40	17	525	118	8.72	5/8	1 1/8	G1 1/4 / 1 1/8	G1 1/4 / 1 1/8	YES	021H0875
D62-E-46	20	525	118	9.59	3/4	1 1/8	G1 1/4 / 1 1/8	G1 1/4 / 1 1/8	YES	021H0876
D62-E-50	22	525	118	10.17	3/4	1 1/8	G1 1/4 / 1 1/8	G1 1/4 / 1 1/8	YES	021H0877
D62-E-60	25	525	118	11.62	3/4	1 1/8	G1 1/4 / 1 1/8	G1 1/4 / 1 1/8	YES	021H0878
D62-E-70	30	525	118	13.07	7/8	1 3/8	G1 1/4 / 1 1/8	G1 1/4 / 1 1/8	YES	021H0879
D62-E-80	35	525	118	14.52	7/8	1 3/8	G1 1/4 / 1 1/8	G1 1/4 / 1 1/8	YES	021H0880
D62-E-90	40	525	118	15.97	7/8	1 3/8	G1 1/4 / 1 1/8	G1 1/4 / 1 1/8	YES	021H0881
D62-E-100	45	525	118	17.42	1 1/8	1 5/8	G1 1/4 / 1 1/8	G1 1/4 / 1 1/8	YES	021H0882
D62-E-110	50	525	118	18.87	1 1/8	1 5/8	G1 1/4 / 1 1/8	G1 1/4 / 1 1/8	YES	021H0883
D62-E-120	55	525	118	20.32	1 1/8	1 5/8	G1 1/4 / 1 1/8	G1 1/4 / 1 1/8	YES	021H0884
D118-E-20	20	613	186	11.15	5/8	1 1/8	G 2 / 1 5/8	G 2 / 1 5/8	YES	021H2756
D118-E-26	26	613	186	12.71	5/8	1 1/8	G 2 / 1 5/8	G 2 / 1 5/8	YES	021H2757
D118-E-30	30	613	186	13.75	3/4	1 3/8	G 2 / 1 5/8	G 2 / 1 5/8	YES	021H2758
D118-E-36	36	613	186	15.31	3/4	1 3/8	G 2 / 1 5/8	G 2 / 1 5/8	YES	021H2759
D118-E-40	40	613	186	16.35	3/4	1 3/8	G 2 / 1 5/8	G 2 / 1 5/8	YES	021H2760
D118-E-46	46	613	186	17.91	7/8	1 5/8	G 2 / 1 5/8	G 2 / 1 5/8	YES	021H2761
D118-E-50	50	613	186	18.95	7/8	1 5/8	G 2 / 1 5/8	G 2 / 1 5/8	YES	021H2762
D118-E-56	56	613	186	20.51	7/8	1 5/8	G 2 / 1 5/8	G 2 / 1 5/8	YES	021H2763
D118-E-60	60	613	186	21.55	1 1/8	2 1/8	G 2 / 1 5/8	G 2 / 1 5/8	YES	021H2764
D118-E-70	70	613	186	24.15	1 1/8	2 1/8	G 2 / 1 5/8	G 2 / 1 5/8	YES	021H2765
D118-E-80	80	613	186	26.75	1 1/8	2 1/8	G 2 / 1 5/8	G 2 / 1 5/8	YES	021H2766
D118-E-90	90	613	186	29.35	1 1/8	2 1/8	G 2 / 1 5/8	G 2 / 1 5/8	YES	021H2767
D118-E-100	100	613	186	31.95	1 1/8	2 1/8	G 2 / 1 5/8	G 2 / 1 5/8	YES	021H2768
D118-E-110	110	613	186	34.55	1 1/8	2 1/8	G 2 / 1 5/8	G 2 / 1 5/8	YES	021H2769
D118-E-120	120	613	186	37.15	1 1/8	2 1/8	G 2 / 1 5/8	G 2 / 1 5/8	YES	021H2770
D118-E-130	130	613	186	39.75	1 1/8	2 1/8	G 2 / 1 5/8	G 2 / 1 5/8	YES	021H2771
D118-E-140	140	613	186	42.35	1 1/8	2 1/8	G 2 / 1 5/8	G 2 / 1 5/8	YES	021H2772
D118-E-150	150	613	186	44.95	1 1/8	2 1/8	G 2 / 1 5/8	G 2 / 1 5/8	YES	021H2773
D118-E-160	160	613	186	47.55	1 1/8	2 1/8	G 2 / 1 5/8	G 2 / 1 5/8	YES	021H2774

Technical data and ordering

MPHE - Micro plate heat exchanger

45 bar

Model	Capacity [kW]	Height [mm]	Width [mm]	Weight [kg]	Q3 (ref. in) Combo conn.	Q4 (ref. out) Combo conn.	Q1 Combo conn.	Q2 Combo conn.	Studbolt	Code no.
					SOLDER [in]	SOLDER [in]	THREAD [in] / SOLDER [in]	THREAD [in] / SOLDER [in]	Front	
D22L-10	3	312	76	1.22	G ¾ / ⅝	G ¾ / ⅝	G ¾ / ⅝	G ¾ / ⅝	NO	021H1287
D22L-16	4	312	76	1.49	G ¾ / ⅝	G ¾ / ⅝	G ¾ / ⅝	G ¾ / ⅝	NO	021H1288
D22L-20	5	312	76	1.67	G ¾ / ⅝	G ¾ / ⅝	G ¾ / ⅝	G ¾ / ⅝	NO	021H1289
D22L-26	6	312	76	1.94	G ¾ / ⅝	G ¾ / ⅝	G ¾ / ⅝	G ¾ / ⅝	NO	021H1290
D22L-30	7	312	76	2.12	G ¾ / ⅝	G ¾ / ⅝	G ¾ / ⅝	G ¾ / ⅝	NO	021H1291
D22L-36	8	312	76	2.39	G ¾ / ⅝	G ¾ / ⅝	G ¾ / ⅝	G ¾ / ⅝	NO	021H1292
D22L-40	9	312	76	2.57	G ¾ / ⅝	G ¾ / ⅝	G ¾ / ⅝	G ¾ / ⅝	NO	021H1293
D22L-50	10	312	76	3.02	G ¾ / ⅝	G ¾ / ⅝	G ¾ / ⅝	G ¾ / ⅝	NO	021H1294
D22L-60	12	312	76	3.47	G ¾ / ⅝	G ¾ / ⅝	G ¾ / ⅝	G ¾ / ⅝	NO	021H1295
D55L-H-10	3	525	109	4.02	G1 / ⅞	G1 / ⅞	G1 / ⅞	G1 / ⅞	YES	021H3593
D55L-H-16	6	525	109	4.83	G1 / ⅞	G1 / ⅞	G1 / ⅞	G1 / ⅞	YES	021H3594
D55L-H-20	8	525	109	5.37	G1 / ⅞	G1 / ⅞	G1 / ⅞	G1 / ⅞	YES	021H3595
D55L-H-26	10	525	109	6.18	G1 / ⅞	G1 / ⅞	G1 / ⅞	G1 / ⅞	YES	021H3596
D55L-H-30	12	525	109	6.72	G1 / ⅞	G1 / ⅞	G1 / ⅞	G1 / ⅞	YES	021H3597
D55L-H-36	15	525	109	7.53	G1 / ⅞	G1 / ⅞	G1 / ⅞	G1 / ⅞	YES	021H3598
D55L-H-40	17	525	109	8.07	G1 / ⅞	G1 / ⅞	G1 / ⅞	G1 / ⅞	YES	021H3599
D55L-H-46	20	525	109	8.88	G1 / ⅞	G1 / ⅞	G1 / ⅞	G1 / ⅞	YES	021H3600
D55L-H-50	22	525	109	9.42	G1 / ⅞	G1 / ⅞	G1 / ⅞	G1 / ⅞	YES	021H3601
D55L-H-60	25	525	109	10.77	G1 / ⅞	G1 / ⅞	G1 / ⅞	G1 / ⅞	YES	021H3602
D55L-H-70	30	525	109	12.12	G1 / ⅞	G1 / ⅞	G1 / ⅞	G1 / ⅞	YES	021H3603
D55L-H-80	35	525	109	13.47	G1 / ⅞	G1 / ⅞	G1 / ⅞	G1 / ⅞	YES	021H3604
D62L-H-16	6	525	118	5.67	G1 ¼ / 1 ⅛	G1 ¼ / 1 ⅛	G1 ¼ / 1 ⅛	G1 ¼ / 1 ⅛	YES	021H0855
D62L-H-20	8	525	118	6.25	G1 ¼ / 1 ⅛	G1 ¼ / 1 ⅛	G1 ¼ / 1 ⅛	G1 ¼ / 1 ⅛	YES	021H0856
D62L-H-26	10	525	118	7.12	G1 ¼ / 1 ⅛	G1 ¼ / 1 ⅛	G1 ¼ / 1 ⅛	G1 ¼ / 1 ⅛	YES	021H0857
D62L-H-30	12	525	118	7.7	G1 ¼ / 1 ⅛	G1 ¼ / 1 ⅛	G1 ¼ / 1 ⅛	G1 ¼ / 1 ⅛	YES	021H0858
D62L-H-36	15	525	118	8.57	G1 ¼ / 1 ⅛	G1 ¼ / 1 ⅛	G1 ¼ / 1 ⅛	G1 ¼ / 1 ⅛	YES	021H0859
D62L-H-40	17	525	118	9.15	G1 ¼ / 1 ⅛	G1 ¼ / 1 ⅛	G1 ¼ / 1 ⅛	G1 ¼ / 1 ⅛	YES	021H0860
D62L-H-46	20	525	118	10.02	G1 ¼ / 1 ⅛	G1 ¼ / 1 ⅛	G1 ¼ / 1 ⅛	G1 ¼ / 1 ⅛	YES	021H0861
D62L-H-50	22	525	118	10.6	G1 ¼ / 1 ⅛	G1 ¼ / 1 ⅛	G1 ¼ / 1 ⅛	G1 ¼ / 1 ⅛	YES	021H0862
D62L-H-60	25	525	118	12.05	G1 ¼ / 1 ⅛	G1 ¼ / 1 ⅛	G1 ¼ / 1 ⅛	G1 ¼ / 1 ⅛	YES	021H0863
D62L-H-70	30	525	118	13.5	G1 ¼ / 1 ⅛	G1 ¼ / 1 ⅛	G1 ¼ / 1 ⅛	G1 ¼ / 1 ⅛	YES	021H0864
D62L-H-80	35	525	118	14.95	G1 ¼ / 1 ⅛	G1 ¼ / 1 ⅛	G1 ¼ / 1 ⅛	G1 ¼ / 1 ⅛	YES	021H0865
D62L-H-90	40	525	118	16.4	G1 ¼ / 1 ⅛	G1 ¼ / 1 ⅛	G1 ¼ / 1 ⅛	G1 ¼ / 1 ⅛	YES	021H0866
D62L-H-100	45	525	118	17.85	G1 ¼ / 1 ⅛	G1 ¼ / 1 ⅛	G1 ¼ / 1 ⅛	G1 ¼ / 1 ⅛	YES	021H0867
D62L-H-110	50	525	118	19.3	G1 ¼ / 1 ⅛	G1 ¼ / 1 ⅛	G1 ¼ / 1 ⅛	G1 ¼ / 1 ⅛	YES	021H0868
D62L-H-120	55	525	118	20.75	G1 ¼ / 1 ⅛	G1 ¼ / 1 ⅛	G1 ¼ / 1 ⅛	G1 ¼ / 1 ⅛	YES	021H0869
D118L-20	20	613	186	13.14	G2 / 1 ⅝	G2 / 1 ⅝	G2 / 1 ⅝	G2 / 1 ⅝	YES	021H2737
D118L-26	26	613	186	14.7	G2 / 1 ⅝	G2 / 1 ⅝	G2 / 1 ⅝	G2 / 1 ⅝	YES	021H2738
D118L-30	30	613	186	15.74	G2 / 1 ⅝	G2 / 1 ⅝	G2 / 1 ⅝	G2 / 1 ⅝	YES	021H2739
D118L-36	36	613	186	17.3	G2 / 1 ⅝	G2 / 1 ⅝	G2 / 1 ⅝	G2 / 1 ⅝	YES	021H2740
D118L-40	40	613	186	18.34	G2 / 1 ⅝	G2 / 1 ⅝	G2 / 1 ⅝	G2 / 1 ⅝	YES	021H2741
D118L-46	46	613	186	19.9	G2 / 1 ⅝	G2 / 1 ⅝	G2 / 1 ⅝	G2 / 1 ⅝	YES	021H2742
D118L-50	50	613	186	20.94	G2 / 1 ⅝	G2 / 1 ⅝	G2 / 1 ⅝	G2 / 1 ⅝	YES	021H2743
D118L-56	56	613	186	22.5	G2 / 1 ⅝	G2 / 1 ⅝	G2 / 1 ⅝	G2 / 1 ⅝	YES	021H2744
D118L-60	60	613	186	23.54	G2 / 1 ⅝	G2 / 1 ⅝	G2 / 1 ⅝	G2 / 1 ⅝	YES	021H2745
D118L-70	70	613	186	26.14	G2 / 1 ⅝	G2 / 1 ⅝	G2 / 1 ⅝	G2 / 1 ⅝	YES	021H2746
D118L-80	80	613	186	28.74	G2 / 1 ⅝	G2 / 1 ⅝	G2 / 1 ⅝	G2 / 1 ⅝	YES	021H2747
D118L-90	90	613	186	31.34	G2 / 1 ⅝	G2 / 1 ⅝	G2 / 1 ⅝	G2 / 1 ⅝	YES	021H2748
D118L-100	100	613	186	33.94	G2 / 1 ⅝	G2 / 1 ⅝	G2 / 1 ⅝	G2 / 1 ⅝	YES	021H2749
D118L-110	110	613	186	36.54	G2 / 1 ⅝	G2 / 1 ⅝	G2 / 1 ⅝	G2 / 1 ⅝	YES	021H2750
D118L-120	120	613	186	39.14	G2 / 1 ⅝	G2 / 1 ⅝	G2 / 1 ⅝	G2 / 1 ⅝	YES	021H2751
D118L-130	130	613	186	41.74	G2 / 1 ⅝	G2 / 1 ⅝	G2 / 1 ⅝	G2 / 1 ⅝	YES	021H2752
D118L-140	140	613	186	44.34	G2 / 1 ⅝	G2 / 1 ⅝	G2 / 1 ⅝	G2 / 1 ⅝	YES	021H2753
D118L-150	150	613	186	46.94	G2 / 1 ⅝	G2 / 1 ⅝	G2 / 1 ⅝	G2 / 1 ⅝	YES	021H2754
D118L-160	160	613	186	49.54	G2 / 1 ⅝	G2 / 1 ⅝	G2 / 1 ⅝	G2 / 1 ⅝	YES	021H2755

Technical data and ordering

MPHE - Micro plate Heat Exchanger

30 bar

Model	Capacity [kW]	Height [mm]	Width [mm]	Weight [kg]	Q3 (ref. in) Combo conn.	Q4 (ref. out) Combo conn.	Q1 Combo conn.	Q2 Combo conn.	Studbolt	Code no.
					SOLDER [in]	SOLDER [in]	THREAD [in] / SOLDER [in]	THREAD [in] / SOLDER [in]	Front	
D22-10	3	312	76	1.03	G 3/4 / 5/8	G 3/4 / 5/8	G 3/4 / 5/8	G 3/4 / 5/8	NO	021H1296
D22-16	4	312	76	1.3	G 3/4 / 5/8	G 3/4 / 5/8	G 3/4 / 5/8	G 3/4 / 5/8	NO	021H1297
D22-20	5	312	76	1.48	G 3/4 / 5/8	G 3/4 / 5/8	G 3/4 / 5/8	G 3/4 / 5/8	NO	021H1298
D22-26	6	312	76	1.75	G 3/4 / 5/8	G 3/4 / 5/8	G 3/4 / 5/8	G 3/4 / 5/8	NO	021H1299
D22-30	7	312	76	1.93	G 3/4 / 5/8	G 3/4 / 5/8	G 3/4 / 5/8	G 3/4 / 5/8	NO	021H1300
D22-36	8	312	76	2.2	G 3/4 / 5/8	G 3/4 / 5/8	G 3/4 / 5/8	G 3/4 / 5/8	NO	021H4801
D22-40	9	312	76	2.38	G 3/4 / 5/8	G 3/4 / 5/8	G 3/4 / 5/8	G 3/4 / 5/8	NO	021H4802
D22-50	10	312	76	2.83	G 3/4 / 5/8	G 3/4 / 5/8	G 3/4 / 5/8	G 3/4 / 5/8	NO	021H4803
D22-60	12	312	76	3.28	G 3/4 / 5/8	G 3/4 / 5/8	G 3/4 / 5/8	G 3/4 / 5/8	NO	021H4804
D55-H-10	3	525	109	3.67	G1 / 7/8	G1 / 7/8	G1 / 7/8	G1 / 7/8	YES	021H3617
D55-H-16	6	525	109	4.48	G1 / 7/8	G1 / 7/8	G1 / 7/8	G1 / 7/8	YES	021H3618
D55-H-20	8	525	109	5.02	G1 / 7/8	G1 / 7/8	G1 / 7/8	G1 / 7/8	YES	021H3619
D55-H-26	10	525	109	5.83	G1 / 7/8	G1 / 7/8	G1 / 7/8	G1 / 7/8	YES	021H3620
D55-H-30	12	525	109	6.37	G1 / 7/8	G1 / 7/8	G1 / 7/8	G1 / 7/8	YES	021H3621
D55-H-36	15	525	109	7.18	G1 / 7/8	G1 / 7/8	G1 / 7/8	G1 / 7/8	YES	021H3622
D55-H-40	17	525	109	7.72	G1 / 7/8	G1 / 7/8	G1 / 7/8	G1 / 7/8	YES	021H3623
D55-H-46	20	525	109	8.53	G1 / 7/8	G1 / 7/8	G1 / 7/8	G1 / 7/8	YES	021H3624
D55-H-50	22	525	109	9.07	G1 / 7/8	G1 / 7/8	G1 / 7/8	G1 / 7/8	YES	021H3625
D55-H-60	25	525	109	10.42	G1 / 7/8	G1 / 7/8	G1 / 7/8	G1 / 7/8	YES	021H3626
D55-H-70	30	525	109	11.77	G1 / 7/8	G1 / 7/8	G1 / 7/8	G1 / 7/8	YES	021H3627
D55-H-80	35	525	109	13.12	G1 / 7/8	G1 / 7/8	G1 / 7/8	G1 / 7/8	YES	021H3628
D62-16	6	525	118	5.24	G1 1/4 / 1 1/8	G1 1/4 / 1 1/8	G1 1/4 / 1 1/8	G1 1/4 / 1 1/8	YES	021H0885
D62-20	8	525	118	5.82	G1 1/4 / 1 1/8	G1 1/4 / 1 1/8	G1 1/4 / 1 1/8	G1 1/4 / 1 1/8	YES	021H0886
D62-26	10	525	118	6.69	G1 1/4 / 1 1/8	G1 1/4 / 1 1/8	G1 1/4 / 1 1/8	G1 1/4 / 1 1/8	YES	021H0887
D62-30	12	525	118	7.27	G1 1/4 / 1 1/8	G1 1/4 / 1 1/8	G1 1/4 / 1 1/8	G1 1/4 / 1 1/8	YES	021H0888
D62-36	15	525	118	8.14	G1 1/4 / 1 1/8	G1 1/4 / 1 1/8	G1 1/4 / 1 1/8	G1 1/4 / 1 1/8	YES	021H0889
D62-40	17	525	118	8.72	G1 1/4 / 1 1/8	G1 1/4 / 1 1/8	G1 1/4 / 1 1/8	G1 1/4 / 1 1/8	YES	021H0890
D62-46	20	525	118	9.59	G1 1/4 / 1 1/8	G1 1/4 / 1 1/8	G1 1/4 / 1 1/8	G1 1/4 / 1 1/8	YES	021H0891
D62-50	22	525	118	10.17	G1 1/4 / 1 1/8	G1 1/4 / 1 1/8	G1 1/4 / 1 1/8	G1 1/4 / 1 1/8	YES	021H0892
D62-60	25	525	118	11.62	G1 1/4 / 1 1/8	G1 1/4 / 1 1/8	G1 1/4 / 1 1/8	G1 1/4 / 1 1/8	YES	021H0893
D62-70	30	525	118	13.07	G1 1/4 / 1 1/8	G1 1/4 / 1 1/8	G1 1/4 / 1 1/8	G1 1/4 / 1 1/8	YES	021H0894
D62-80	35	525	118	14.52	G1 1/4 / 1 1/8	G1 1/4 / 1 1/8	G1 1/4 / 1 1/8	G1 1/4 / 1 1/8	YES	021H0895
D62-90	40	525	118	15.97	G1 1/4 / 1 1/8	G1 1/4 / 1 1/8	G1 1/4 / 1 1/8	G1 1/4 / 1 1/8	YES	021H0896
D62-100	45	525	118	17.42	G1 1/4 / 1 1/8	G1 1/4 / 1 1/8	G1 1/4 / 1 1/8	G1 1/4 / 1 1/8	YES	021H0897
D62-110	50	525	118	18.87	G1 1/4 / 1 1/8	G1 1/4 / 1 1/8	G1 1/4 / 1 1/8	G1 1/4 / 1 1/8	YES	021H0898
D62-120	55	525	118	20.32	G1 1/4 / 1 1/8	G1 1/4 / 1 1/8	G1 1/4 / 1 1/8	G1 1/4 / 1 1/8	YES	021H0899
D118-20	20	613	186	11.15	G2 / 1 5/8	G2 / 1 5/8	G2 / 1 5/8	G2 / 1 5/8	YES	021H2775
D118-26	26	613	186	12.71	G2 / 1 5/8	G2 / 1 5/8	G2 / 1 5/8	G2 / 1 5/8	YES	021H2776
D118-30	30	613	186	13.75	G2 / 1 5/8	G2 / 1 5/8	G2 / 1 5/8	G2 / 1 5/8	YES	021H2777
D118-36	36	613	186	15.31	G2 / 1 5/8	G2 / 1 5/8	G2 / 1 5/8	G2 / 1 5/8	YES	021H2778
D118-40	40	613	186	16.35	G2 / 1 5/8	G2 / 1 5/8	G2 / 1 5/8	G2 / 1 5/8	YES	021H2779
D118-46	46	613	186	17.91	G2 / 1 5/8	G2 / 1 5/8	G2 / 1 5/8	G2 / 1 5/8	YES	021H2780
D118-50	50	613	186	18.95	G2 / 1 5/8	G2 / 1 5/8	G2 / 1 5/8	G2 / 1 5/8	YES	021H2781
D118-56	56	613	186	20.51	G2 / 1 5/8	G2 / 1 5/8	G2 / 1 5/8	G2 / 1 5/8	YES	021H2782
D118-60	60	613	186	21.55	G2 / 1 5/8	G2 / 1 5/8	G2 / 1 5/8	G2 / 1 5/8	YES	021H2783
D118-70	70	613	186	24.15	G2 / 1 5/8	G2 / 1 5/8	G2 / 1 5/8	G2 / 1 5/8	YES	021H2784
D118-80	80	613	186	26.75	G2 / 1 5/8	G2 / 1 5/8	G2 / 1 5/8	G2 / 1 5/8	YES	021H2785
D118-90	90	613	186	29.35	G2 / 1 5/8	G2 / 1 5/8	G2 / 1 5/8	G2 / 1 5/8	YES	021H2786
D118-100	100	613	186	31.95	G2 / 1 5/8	G2 / 1 5/8	G2 / 1 5/8	G2 / 1 5/8	YES	021H2787
D118-110	110	613	186	34.55	G2 / 1 5/8	G2 / 1 5/8	G2 / 1 5/8	G2 / 1 5/8	YES	021H2788
D118-120	120	613	186	37.15	G2 / 1 5/8	G2 / 1 5/8	G2 / 1 5/8	G2 / 1 5/8	YES	021H2789
D118-130	130	613	186	39.75	G2 / 1 5/8	G2 / 1 5/8	G2 / 1 5/8	G2 / 1 5/8	YES	021H2790
D118-140	140	613	186	42.35	G2 / 1 5/8	G2 / 1 5/8	G2 / 1 5/8	G2 / 1 5/8	YES	021H2791
D118-150	150	613	186	44.95	G2 / 1 5/8	G2 / 1 5/8	G2 / 1 5/8	G2 / 1 5/8	YES	021H2792
D118-160	160	613	186	47.55	G2 / 1 5/8	G2 / 1 5/8	G2 / 1 5/8	G2 / 1 5/8	YES	021H2793

Danfoss offers customized products to meet your requirements. Please contact Danfoss for more information.

***Media**: R410A, R407C, R22, R134a, R404A, R407F, R513A, R1234ze, R452A. For applications with flammable refrigerants, please contact Danfoss sales representative.*
Use only for system in compliance with ATEX. Ignition risk is evaluated in accordance to ATEX. BPHE can be applied on systems with R290 and R600a as the working fluid. For countries where safety standards are not an indispensable part of the safety system Danfoss recommend the installer to get a third party approval of the system containing flammable refrigerant.
***Note**: Please follow specific selection criteria stated in the data sheet for these particular refrigerants.*

Technical data and ordering

MPHE - Micro plate heat exchanger

45 bar (30 bar secondary side)

Model	Capacity *) [kW]	Height [mm]	Width [mm]	Weight [kg]	Q3 (ref. in) Combo conn.	Q4 (ref. out) Combo conn.	Q1 Combo conn.	Q2 Combo conn.	Studbolt	Code no.
					Solder [in]	Solder [in]	Thread [in] / Solder [in]	Thread [in] / Solder [in]	Front	
H62L-EZU-20	4.4	525	118	6.1	3/8	7/8	G1 1/4 / 1 1/8	G1 1/4 / 1 1/8	YES	111B2112
H62L-EZU-26	6	525	118	6.97	3/8	7/8	G1 1/4 / 1 1/8	G1 1/4 / 1 1/8	YES	111B2113
H62L-EZU-30	7	525	118	7.55	3/8	7/8	G1 1/4 / 1 1/8	G1 1/4 / 1 1/8	YES	111B2114
H62L-EZU-36	8.5	525	118	8.42	3/8	7/8	G1 1/4 / 1 1/8	G1 1/4 / 1 1/8	YES	111B2115
H62L-EZU-40	9.5	525	118	9	3/8	7/8	G1 1/4 / 1 1/8	G1 1/4 / 1 1/8	YES	111B2116
H62L-EZU-46	11	525	118	9.87	1/2	7/8	G1 1/4 / 1 1/8	G1 1/4 / 1 1/8	YES	111B2117
H62L-EZU-50	12.5	525	118	10.45	1/2	1 1/8	G1 1/4 / 1 1/8	G1 1/4 / 1 1/8	YES	111B2118
H62L-EZU-60	14.5	525	118	11.9	1/2	1 1/8	G1 1/4 / 1 1/8	G1 1/4 / 1 1/8	YES	111B2119
H62L-EZU-70	17	525	118	13.35	1/2	1 1/8	G1 1/4 / 1 1/8	G1 1/4 / 1 1/8	YES	111B2120
H62L-EZU-80	19.5	525	118	14.8	1/2	1 1/8	G1 1/4 / 1 1/8	G1 1/4 / 1 1/8	YES	111B2121
H62L-EZU-90	22	525	118	16.25	5/8	1 3/8	G1 1/4 / 1 1/8	G1 1/4 / 1 1/8	YES	111B2122
H62L-EZU-100	24	525	118	17.7	5/8	1 3/8	G1 1/4 / 1 1/8	G1 1/4 / 1 1/8	YES	111B2123
H62L-EZU-110	27	525	118	19.15	5/8	1 3/8	G1 1/4 / 1 1/8	G1 1/4 / 1 1/8	YES	111B2124
H62L-EZU-120	29	525	118	20.6	5/8	1 3/8	G1 1/4 / 1 1/8	G1 1/4 / 1 1/8	YES	111B2125

**) Design conditions:*
Side 1: R410A, Tevap=-5°C, Tsh=3K, Tliq=30 °C
Side 2: 30% Ethylene Glycol, Tin=0 °C, Tout=-3 °C, dPw=30 kPa

MPHE - Micro plate heat exchanger

48 bar

Model	Capacity *) [kW]	Height [mm]	Width [mm]	Weight [kg]	Q3 (ref. out) Combo conn.	Q4 (ref. in) gas Combo conn.	Q1(Brine out) Combo conn.	Q2 (Brine in) Combo conn.	Studbolt	Code no.
					Solder [in]	Solder [in]	Thread [in] / Solder [in]	Thread [in] / Solder [in]	Front	
H62L-CX-20	7,5	525	118	5.68	3/8	5/8	G1 1/4 / 1 1/8	G1 1/4 / 1 1/8	YES	021H0373
H62L-CX-26	10	525	118	6.51	3/8	5/8	G1 1/4 / 1 1/8	G1 1/4 / 1 1/8	YES	021H0374
H62L-CX-30	11,5	525	118	7.06	3/8	5/8	G1 1/4 / 1 1/8	G1 1/4 / 1 1/8	YES	021H0375
H62L-CX-36	14	525	118	7.89	3/8	5/8	G1 1/4 / 1 1/8	G1 1/4 / 1 1/8	YES	021H0376
H62L-CX-40	15,5	525	118	8.44	3/8	5/8	G1 1/4 / 1 1/8	G1 1/4 / 1 1/8	YES	021H0377
H62L-CX-46	18	525	118	9.27	1/2	7/8	G1 1/4 / 1 1/8	G1 1/4 / 1 1/8	YES	021H0378
H62L-CX-50	19,5	525	118	9.82	1/2	7/8	G1 1/4 / 1 1/8	G1 1/4 / 1 1/8	YES	021H0379
H62L-CX-60	23,5	525	118	11.2	1/2	7/8	G1 1/4 / 1 1/8	G1 1/4 / 1 1/8	YES	021H0380
H62L-CX-70	28	525	118	12.6	5/8	1 1/8	G1 1/4 / 1 1/8	G1 1/4 / 1 1/8	YES	021H0381
H62L-CX-80	32	525	118	14	5/8	1 1/8	G1 1/4 / 1 1/8	G1 1/4 / 1 1/8	YES	021H0382
H62L-CX-90	36	525	118	15.3	5/8	1 1/8	G1 1/4 / 1 1/8	G1 1/4 / 1 1/8	YES	021H0383
H62L-CX-100	40	525	118	16.7	5/8	1 1/8	G1 1/4 / 1 1/8	G1 1/4 / 1 1/8	YES	021H0384
H62L-CX-110	44	525	118	18.1	5/8	1 1/8	G1 1/4 / 1 1/8	G1 1/4 / 1 1/8	YES	021H0385
H62L-CX-120	48	525	118	19.5	5/8	1 1/8	G1 1/4 / 1 1/8	G1 1/4 / 1 1/8	YES	021H0386

**) Design conditions:*
Side 1: R410A, Tc=36 °C, Tsub=3K, Tinlet=70 °C
Side 2: Water, Tin=30 °C, Tout=35 °C, dPw=30 kPa

MPHE - Micro plate heat exchanger

45 bar

Model	Capacity *) [kW]	Height [mm]	Width [mm]	Weight [kg]	Q3 (ref. out) Combo conn.	Q4 (ref. in) gas Combo conn.	Q1 (Brine out) Combo conn.	Q2 (Brine in) Combo conn.	Studbolt	Code no.
					Solder [in]	Solder [in]	Thread [in] / Solder [in]	Thread [in] / Solder [in]	Front	
H30L-C-20	3,1	320	95	2.35	3/8"	5/8"	G1	G1	YES	021H4171
H30L-C-30	4,8	320	95	3.08	3/8"	5/8"	G1	G1	YES	021H4172
H30L-C-40	6,5	320	95	3.81	3/8"	5/8"	G1	G1	YES	021H4173
H30L-C-50	8,3	320	95	4.54	3/8"	5/8"	G1	G1	YES	021H4174
H30L-C-60	10	320	95	5.27	1/2"	7/8"	G1	G1	YES	021H4175
H30L-C-70	12	320	95	6	1/2"	7/8"	G1	G1	YES	021H4176
H30L-C-80	13,5	320	95	6.73	1/2"	7/8"	G1	G1	YES	021H4177

**) Design conditions:*
Side 1: R410A, Tc=36 °C, Tsub=3K, Tinlet=70 °C
Side 2: Water, Tin=30 °C, Tout=35 °C, dPw=30 kPa

Technical data and ordering

MPHE - Micro plate heat exchanger

With distributor 45 bar (30 bar secondary side)

Model	Capacity *) [kW]	Height [mm]	Width [mm]	Weight [kg]	Q3 (ref. in) Combo conn.	Q4 (ref. out) Combo conn.	Q1 Combo conn.	Q2 Combo conn.	Studbolt	Code no.
					Solder [in]	Thread [in] / Solder [in]	Thread [in] / Solder [in]	Thread [in] / Solder [in]	Front	
C62L-EZ-20	14	525	119	7.5	1/2	7/8	G1 1/4	G1 1/4	YES	111B2126
C62L-EZ-30	22	525	119	9.1	5/8	1 1/8	G1 1/4	G1 1/4	YES	111B2127
C62L-EZ-40	30	525	119	10.6	5/8	1 1/8	G1 1/4	G1 1/4	YES	111B2128
C62L-EZ-50	38	525	119	12.2	3/4	1 1/8	G1 1/4	G1 1/4	YES	111B2129
C62L-EZ-60	45	525	119	13.7	3/4	1 1/8	G1 1/4	G1 1/4	YES	111B2130
C62L-EZ-70	52	525	119	15.3	7/8	1 3/8	G1 1/4	G1 1/4	YES	111B2131
C62L-EZ-80	58.7	525	119	16.8	7/8	1 3/8	G1 1/4	G1 1/4	YES	111B2132
C62L-EZ-90	65	525	119	18.4	7/8	1 3/8	G1 1/4	G1 1/4	YES	111B2133
C62L-EZ-100	70.5	525	119	19.9	1 1/8	1 5/8	G1 1/4	G1 1/4	YES	111B2134
C62L-EZ-110	75.5	525	119	21.5	1 1/8	1 5/8	G1 1/4	G1 1/4	YES	111B2135
C62L-EZ-120	80	525	119	23.0	1 1/8	1 5/8	G1 1/4	G1 1/4	YES	111B2136
C62L-EZ-140	89	525	119	26.1	1 1/8	1 5/8	G1 1/4	G1 1/4	YES	111B2137

**) Design conditions:*
Side 1: R410A, Tevap=4 °C, Tliq=43 °C, Tsh=5 K
Side 2: Water, Tin=12 °C, Tout=7 °C, dPw=35 kPa

MPHE - Micro plate heat exchanger

With distributor 45 bar (25 bar secondary side)

Model	Capacity *) [kW]	Height [mm]	Width [mm]	Weight [kg]	Q3 (ref. in) Combo conn.	Q4 (ref. out) Combo conn.	Q1 Combo conn.	Q2 Combo conn.	Studbolt	Code no.
					Solder [in]	Thread [in] / Solder [in]	Thread [in] / Solder [in]	Thread [in] / Solder [in]	Front	
C118L-EZ-40	42	613	186	22.6	3/4	1 3/8	ISO-G 2	ISO-G 2	YES	111B1817
C118L-EZ-50	53	613	186	25.4	7/8	1 5/8	ISO-G 2	ISO-G 2	YES	111B1818
C118L-EZ-60	64	613	186	28.3	1 1/8	2 1/8	ISO-G 2	ISO-G 2	YES	111B1819
C118L-EZ-70	75	613	186	31.1	1 1/8	2 1/8	ISO-G 2	ISO-G 2	YES	111B1820
C118L-EZ-80	87	613	186	33.9	1 1/8	2 1/8	ISO-G 2	ISO-G 2	YES	111B1821
C118L-EZ-90	97	613	186	36.8	1 1/8	2 1/8	ISO-G 2	ISO-G 2	YES	111B1822
C118L-EZ-100	108	613	186	39.6	1 1/8	2 1/8	ISO-G 2	ISO-G 2	YES	111B1823
C118L-EZ-110	118	613	186	42.4	1 1/8	2 1/8	ISO-G 2	ISO-G 2	YES	111B1824
C118L-EZ-120	129	613	186	45.3	1 1/8	2 1/8	ISO-G 2	ISO-G 2	YES	111B1825
C118L-EZ-130	139	613	186	48.1	1 1/8	2 1/8	ISO-G 2	ISO-G 2	YES	111B1826
C118L-EZ-140	149	613	186	50.9	1 1/8	2 1/8	ISO-G 2	ISO-G 2	YES	111B1827
C118L-EZ-150	159	613	186	53.8	1 1/8	2 1/8	ISO-G 2	ISO-G 2	YES	111B1828
C118L-EZ-160	168	613	186	56.6	1 1/8	2 1/8	ISO-G 2	ISO-G 2	YES	111B1829
C118L-EZ-180	186	613	186	62.3	1 1/8	2 1/8	ISO-G 2	ISO-G 2	YES	111B1830
C118L-EZ-200	203	613	186	67.9	1 1/8	2 1/2	ISO-G 2	ISO-G 2	YES	111B1831
C118L-EZ-220	220	613	186	73.6	1 1/8	2 1/2	ISO-G 2	ISO-G 2	YES	111B1832
C118L-EZ-250	241	613	186	82.1	1 1/8	2 1/2	ISO-G 2	ISO-G 2	YES	111B1833

**) Design conditions:*
Side 1: R410A, Tevap=4 °C, Tliq=43 °C, Tsh=5 K
Side 2: Water, Tin=12 °C, Tout=7 °C, dPw=35 kPa

Technical data and ordering

MPHE - Micro plate heat exchanger

With distributor 45 bar (25 bar secondary side)

Model	Capacity *) [kW]	Height [mm]	Width [mm]	Weight [kg]	Q3 (ref. in) Combo conn.	Q4 (ref. out) Combo conn.	Q1/H1 Combo conn.	Q2/H2 Combo conn.	Studbolt	Code no.
					Solder [in]	Thread [in] / Solder [in]	Thread [in] / Solder [in]	Thread [in] / Solder [in]	Front	
C118L-EZ-40	42	613	186	19.6	3/4	1 3/8	ISO-G 2	ISO-G 2	YES	111B1837
C118L-EZ-50	53	613	186	22.4	7/8	1 5/8	ISO-G 2	ISO-G 2	YES	111B1838
C118L-EZ-60	64	613	186	25.3	1 1/8	2 1/8	ISO-G 2	ISO-G 2	YES	111B1839
C118L-EZ-70	75	613	186	28.2	1 1/8	2 1/8	ISO-G 2	ISO-G 2	YES	111B1840
C118L-EZ-80	87	613	186	31.1	1 1/8	2 1/8	ISO-G 2	ISO-G 2	YES	111B1841
C118L-EZ-90	97	613	186	34.0	1 1/8	2 1/8	ISO-G 2	ISO-G 2	YES	111B1842
C118L-EZ-100	108	613	186	36.9	1 1/8	2 1/8	ISO-G 2	ISO-G 2	YES	111B1843
C118L-EZ-110	118	613	186	39.8	1 1/8	2 1/8	ISO-G 2	ISO-G 2	YES	111B1844
C118L-EZ-120	129	613	186	42.7	1 1/8	2 1/8	ISO-G 2	ISO-G 2	YES	111B1845
C118L-EZ-130	139	613	186	45.6	1 1/8	2 1/8	ISO-G 2	ISO-G 2	YES	111B1846
C118L-EZ-140	149	613	186	48.5	1 1/8	2 1/8	ISO-G 2	ISO-G 2	YES	111B1847
C118L-EZ-150	159	613	186	51.4	1 1/8	2 1/8	ISO-G 2	ISO-G 2	YES	111B1848
C118L-EZ-160	168	613	186	54.3	1 1/8	2 1/8	ISO-G 2	ISO-G 2	YES	111B1849
C118L-EZ-180	186	613	186	60.1	1 1/8	2 1/8	ISO-G 2	ISO-G 2	YES	111B1850
C118L-EZ-200	203	613	186	66.0	1 1/8	2 1/2	ISO-G 2	ISO-G 2	YES	111B1851
C118L-EZ-220	220	613	186	71.8	1 1/8	2 1/2	ISO-G 2	ISO-G 2	YES	111B1852
C118L-EZ-250	241	613	186	80.5	1 1/8	2 1/2	ISO-G 2	ISO-G 2	YES	111B1853

**) Design conditions:*
Side 1: R410A, Tevap=4 °C, Tliq=43 °C, Tsh=5 K
Side 2: Water, Tin=12 °C, Tout=7 °C, dPw=35 kPa

Quick Selection Notes:

XGE / RGE, Fan speed controllers

RGE and XGE are fan speed controllers made by Danfoss Saginomiya. RGE is available in single and three phase versions.
RGE is a simple and efficient all-in-one pressure sensor and fan speed control, featuring a reliable sensing mechanism using bellows.
For compact units, the XGE provides the ideal solution for reliable fan control.

It can be mounted directly onto the refrigeration line, adjustment is made by the turn of a setting screw, and electrical connection is very versatile. It can also be panel mounted where space is insufficient on the refrigeration line.
RGE and XGE can be used for all commonly used refrigerants, including R410A.
XGE-EC version for EC fan motors.



Features
XGE / RGE

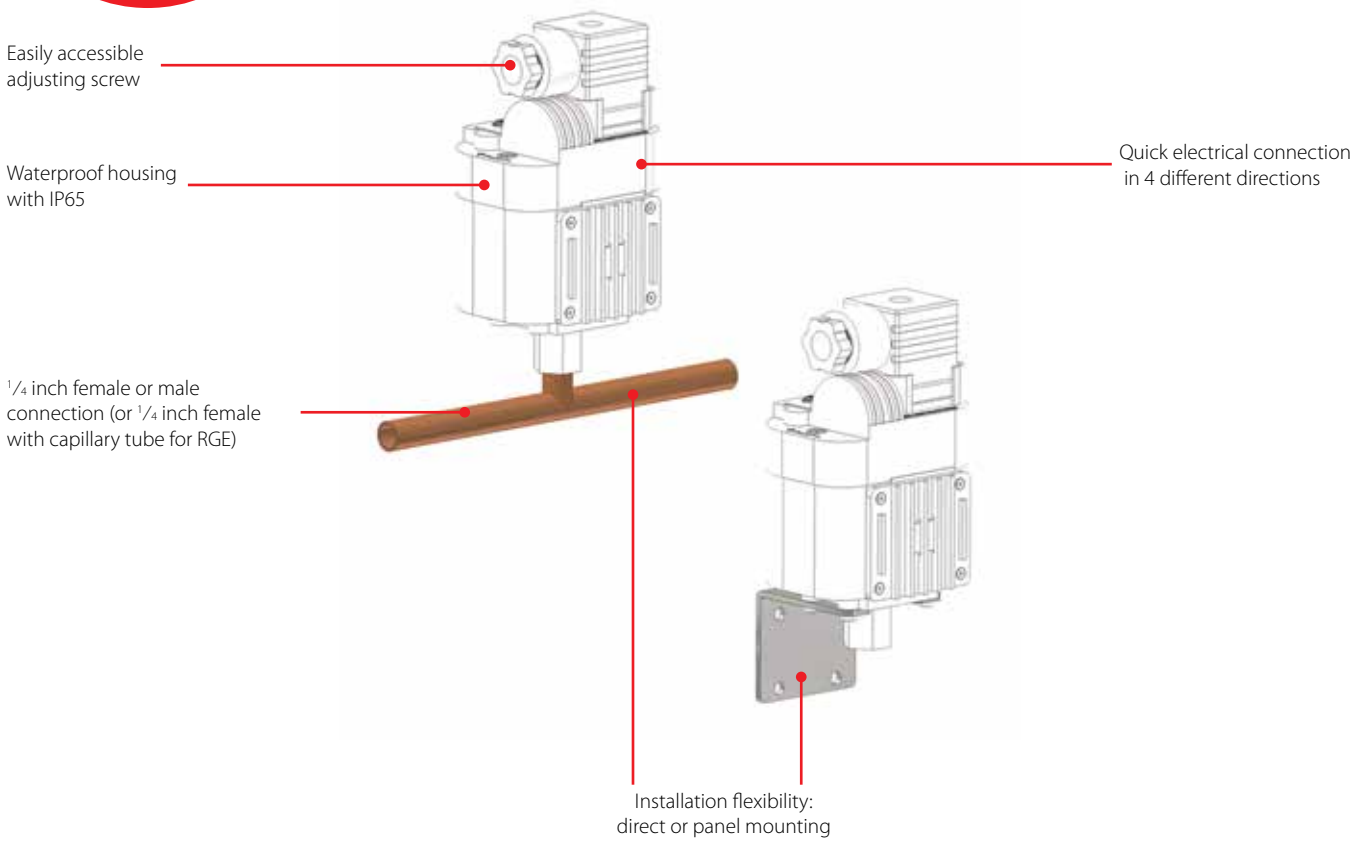

Facts

Application:
- Freezing and refrigeration condensing units
- Packaged air conditioners
- Chillers

- Simple to install and easy setting *"All in one"*: senses pressure and controls fan speed
- Reliable sensing mechanism

- XGE:
  - Compact and light weight (length: 112 mm, diameter: 66 mm weight: 180 g)
  - Can be directly mounted onto the refrigeration line or fixed onto a simple bracket (accessory) and screwed to a panel
  - Easily accessible adjusting screw on the top surface
  - Easy wiring and electrical connection
  - Specially designed heat dissipation radiator to prevent overheating
- Electrical rating from 3 – 8 A (single phase) and 5 – 7 A (3 phase)

- Applicable to R22, R134a, R404A, R407A, R407C, R407F, R410A*), R448A, R449A, R450A, R452A, R513A
  **) only high pressure models with adjusting range*
- 22 – 39 bar for XGE and 16 – 39 bar for RGE
- Enclosure: IP65 (XGE) and IP54 (RGE)
- Full CE / EMC approved
- UL recognized
- Dual frequency: 50/60 Hz
- Max. working pressure: 47 bar
- With low speed operation it is possible to select either minimum speed operation or cut-off operation -60 – 120 °C

Technical data and ordering

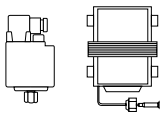

XGE / RGE - Fan speed controllers

Ordering

Type	Mode [1])	Pressure connection [in]	Adjusting range [bar]	P-band [bar]	Pre-setting [bar]	Rated motor rating [A]	No. of phase / voltage [V AC]	Box qty	Code no.
XGE-2C	C	1/4 female flare	8 – 18	4.5	8	0.2 – 3	1 / 200 – 240	50	061H3144
XGE-4C	C	1/4 female flare	10 – 25	6	19	0.2 – 3	1 / 200 – 240	50	061H3140
XGE-4CB	C	1/4 male flare	10 – 25	6	19	0.2 – 3	1 / 200 – 240	50	061H3142
XGE-6C	C	1/4 female flare	22 – 39	7	28	0.2 – 3	1 / 200 – 240	50	061H3160
XGE-6CB	C	1/4 male flare	22 – 39	7	28	0.2 – 3	1 / 200 – 240	50	061H3162
XGE-4M	M	1/4 female flare	10 – 25	6	19	0.2 – 3	1 / 200 – 240	50	061H3240
XGE-4MB	M	1/4 male flare	10 – 25	6	19	0.2 – 3	1 / 200 – 240	50	061H3242
XGE-6M	M	1/4 female flare	22 – 39	7	28	0.2 – 3	1 / 200 – 240	50	061H3260
RGE-Z1N4-7DS	C or M	1/4 female flare	8 – 28	4	19	0.2 – 4	1 / 200 – 240	20	061H3005
RGE-Z1N6-7DS	C or M	1/4 female flare	16 – 39	8	32	0.2 – 4	1 / 200 – 240	20	061H3021
RGE-Z1P4-7DS	C or M	1/4 female flare	8 – 28	4	19	0.2 – 6	1 / 200 – 240	16	061H3008
RGE-Z1P6-7DS	C or M	1/4 female flare	16 – 39	8	32	0.2 – 6	1 / 200 – 240	16	061H3022
RGE-Z1Q4-7DS	C or M	1/4 female flare	8 – 28	4	19	0.2 – 8	1 / 200 – 240	16	061H3009
RGE-Z1Q6-7DS	C or M	1/4 female flare	16 – 39	8	32	0.2 – 8	1 / 200 – 240	16	061H3023
RGE-Z3R4-7DS	C or M	1/4 female flare	8 – 28	4	16	0.2 – 5	3 / 200 – 240	6	061H3003
RGE-X3R4-7DS	C or M	1/4 female flare	8 – 28	4	16	0.2 – 5	3 / 380 – 415	6	061H3006
RGE-X3R6-7DS	C or M	1/4 female flare	16 – 39	8	32	0.2 – 5	3 / 380 – 415	6	061H3028
RGE-Z3T4-7DS	C or M	1/4 female flare	8 – 28	4	16	0.2 – 7	3 / 200 – 240	6	061H3050

[1]) *C = Cut-off*
M = Min. speed

XGE-EC - Fan speed controllers for EC fan motors

Ordering

Type	Pressure connection [in]	Adjusting range [bar]	P-band [bar]	Pre-setting [bar]	Rated motor rating [A]	No. of phase / voltage [V DC]	Box qty	Code no.
XGE-2S-E	1/4 female flare	8 – 18	4.5	8	.001	0 – 10	50	061H3245
XGE-4S-E	1/4 female flare	10 – 25	6	19	.001	0 – 10	50	061H3246
XGE-6S-E	1/4 female flare	22 – 39	7	28	.001	0 – 10	50	061H3247

Accessory

Type	Description	Dimensions	Box qty	Code no.
XGE-AE01	Fixing bracket accessory for panel mount	H: 38 mm, W: 42 mm, D: 45 mm	50	061H3102

Function

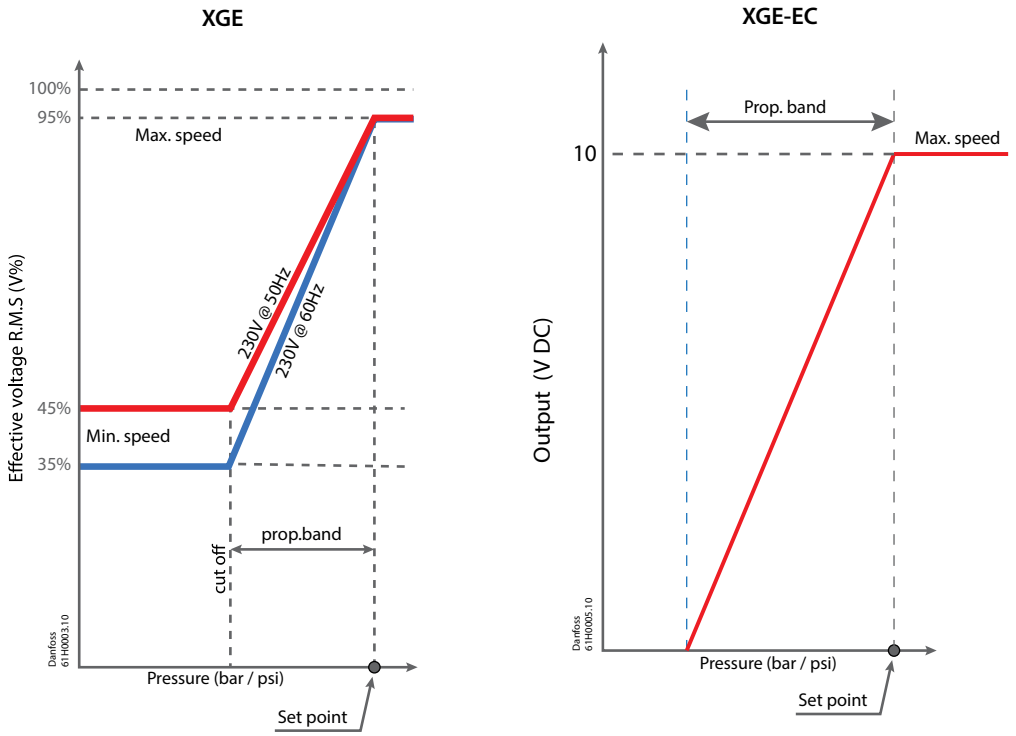

Electronic controls – Overview

Type	Relay / temperature sensor	Defrost heating	Cooling or heating function	Rail heat	Fan	Alarm / light / misc.	2nd compressor	DI / DO / AI / AO	Batterie for clock (optional)	HACCP via system / HACCP integrated	Application module	Definition and waiting of thermostat sensors	Defrost / defrost on demand / defrost on demand via bus	Voltage 230 V	Voltage 115 V	Voltage 24 V	With screw terminals	With plug connection	Valve control	Room thermostat	UPS connection	Pressure controls	0-10 V / 4-20 mA input	0-10 V / 4-20 mA output	Superheat regulation	Reference displacement	External display	Data communication optional / on board	Note – language	Code number
Case controller																														
EKC 202A	3/2	x				x/-/-		x/x/-/-	x	x/-			x/-/x	x					TEV	x						x		x/-		084B8521
EKC 202B	4/2	x			x	x/-/-		x/x/-/-	x	x/-			x/-/x	x					TEV	x						x		x/-		084B8522
EKC 202C	4/2	x			x	x/x/-		x/x/-/-	x	x/-			x/-/x	x					TEV	x						x		x/-		084B8523
EKC 202C-MS	4/2	x			x	x/x/-		x/x/-/-	x	-/-			x/-/x	x					TEV	x						x		x/-	NTC	084B8543
EKC 202D1	4/3	x		x	x	x/x/x		x/x/-/-	x	x/-	x	x	x/x/x	x					TEV	x						x		x/-		084B8554
EKC 302A	2/2					x/-/-		x/x/-/-		x/-			x/-/x	x				x	TEV	x								x/+		084B4162
EKC 302B	3/2	x			x			x/x/-/-		x/-			x/-/x	x				x	TEV	x								x/+		084B4163
EKC 302D	4/3	x		x	x	x/x/x		x/x/-/-		x/-	x		x/-/x	x				x	TEV	x								x/+		084B4164
AK-CC 210	4/3	x		x	x	x/x/x	x	x/x/-/-	x	x/x	x	x	x/x/x	x					TEV	x						x		x/-		084B8520
AK-CC 250A	4/3	x		x	x	x/x/x	x	x/x/-/-	x	x/x	x	x	x/x/x	x					TEV	x						x		-/x		084B8528
AK-CC 350	4/3	x		x	x	x/x/x	x	x/x/-/-		x/x	x	x	x/x/x	x				x	TEV	x						x		+/+		084B4165
AK-CC 450	6/5	x		x	x	x/x/x		x/x/-/-		x/x	x	x	x/x/x	x			x		TEV	x							x	+/+		084B8022
AK-CC 550A	6/5	x		x	x	x/x/x		x/x/-/-		x/-	x	x	x/x/x	x			x		AKV	x					x		x	+/+		084B8030
AK-CC 750A	9/5	x		x	x	x/x/x		x/x/ x/x		x/-	x	x	x/x/x	x		x		x	4xAKV 4xStrep 4xTEV	x					x		x	-/x	EN, DE, FR, IT, NL, EN, ES, PT, PL, RU, CZ, CH, DK, FI	080Z0140
Superheat Controller																														
EKE 1A	1/1					x/x/-		x/-/x/-					-/-/x			x	x		stepper		x	x	x/-	-/-	x	x		-/x	EN, CN, PT, RU, SP, FR, IT, GER	080G5300
EKE 1B	1/2					x/x/-		x/-/x/-					-/-/x			x	x		stepper	x	x	x	x/-	-/-	x	x		-/x	EN, CN, PT, RU, SP, FR, IT, GER	080G5350
EKE 1C	1/3					x/x/-		x/-/x/-					-/-/x			x	x		stepper	x	x	x	x/x	-/-	x	x		-/x	EN, CN, PT, RU, SP, FR, IT, GER	080G5400
EKC 315A	2/2					x/-/-										x	x		AKV/ ICM	x	x	x	-/x	-/x	x	x		x/-		084B7086
EKC 312	1/2					x/-/-										x	x		ETS			x	-/-	-/-	x			x/-		084B7250
EKC 316A	2/2					x/-/-										x	x		ETS	x	x	x	-/x	-/x	x	x		x/-		084B7088
EKD 316	1/2					x/-/-										x	x		ETS		x	x	x/x	-/-	x			x/-		084B8040
Temperature Controller																														
EKC 368	4/2	x			x	x/-/-											x		KVS		x		-/x			x		-/x		084B7079
ERC 211	1/1		x					x/x/x/-					x/-/-		x		x			x						x		x/-		080G3290
ERC 211	1/1		x					x/x/x/-					x/-/-	x			x			x						x		x/-		080G3293
ERC 213	3/2	x			x	x/-/-		x/x/x/-					x/x/-		x		x			x						x		x/-		080G3291
ERC 213	3/2	x			x	x/-/-		x/x/x/-					x/x/-	x			x			x						x		x/-		080G3294
ERC 214	4/2	x			x	x/x/-		x/x/x/-					x/x/-		x		x			x						x		x/-		080G3292
ERC 214	4/2	x			x	x/x/-		x/x/x/-					x/x/-	x			x			x						x		x/-		080G3295

Electronic controls – Overview

Type	Relay / temperature sensor	Defrost heating	Cooling or heating function	Rail heat	Fan	Alarm / light / misc.	2nd compressor	DI / DO / AI / AO	Batterie for clock (optional)	HACCP via system / HACCP integrated	Application module	Definition and waiting of thermostat sensors	Defrost / defrost on demand / defrost on demand via bus	Voltage 230 V	Voltage 115 V	Voltage 24 V	With screw terminals	With plug connection	Valve control	Room thermostat	UPS connection	Pressure controls	0-10 V / 4-20 mA input	0-10 V / 4-20 mA output	Superheat regulation	Reference displacement	External display	Data communication optional / on board	Note – language	Code number
Liquid level Controller																														
EKE 347																	x		ICM, AKV/A									-/x	EN, CN, PT, RU, SP, FR, IT, GER, ARAB	080G5000
Capacity Controller																														
AK-PC 351	6/4				x	x		x/x/ x/x								x		x						x				-/x	EN, PT, IT, CH, RU	080G0289
AK-PC 551	8/8				x	x		x/x/ x/x						x				x						x				-/x	EN, DE, FR, DK, ES, IT, PT, NL, RU, PL, CZ, TR, UY, HR, SR, RO	080G0281
AK-PC 551	8/8				x	x		x/x/ x/x								x		x						x				-/x	EN, DE, FR, DK, ES, IT, PT, NL, RU, PL, CZ, TR, UY, HR, SR, RO	080G0283
AK-PC 651	15/10				x	x		x/x/ x/x						x				x						x				-/x	EN, DE, FR, DK, ES, IT, PT, NL, RU, PL, CZ, TR, UY, HR, SR, RO	080G0312
AK-PC 772A	8/11				4x			x/x/ x/x								x		x										-/x	EN, DE, FR, IT, NL	080Z0201
AK-PC 781A	8/11				8x			x/x/ x/x								x		x										-/x	EN, DE, FR, IT, NL, ES, PT, RU, CZ, DK, FI, PL, CN	080Z0191
AK-PC 782A	8/11				8x			x/x/ x/x								x		x										-/x	EN, DE, FR, IT, NL, ES, PT, RU, CZ, DK, FI, PL, CN	080Z0192
AK-PC 783A	8/11				8x			x/x/ x/x								x		x										-/x	EN, DE, FR, IT, NL, ES, PT	080Z0193
Condensing unit Controller																														
AK-RC 101	Single-phase																											-/x		080Z3200
AK-RC 103	Three-phase (3 kW), 4.5-6.3 A																											-/x		080Z3201
AK-RC 103	Three-phase (3 kW), 7-10 A																											-/x		080Z3202
AK-RC 103	Three-phase (5 kW), 11-16 A																											-/x		080Z3206
AK-RC 103	Three-phase (5 kW), 14-20 A																											-/x		080Z3207
Front end full store solution																														
AK-SM 810	System Manager for Small Stores																													080Z4006
AK-SM 820	System Manager for Small Stores w / Display / Keypad																													080Z4004
AK-SM 850	System Manager for Refrigeration Only w / Display / Keypad																													080Z4001
AK-SM 880	System Manager for Total Store Control w / Display / Keypad																													080Z4008
AK-SM 800AL	Alarm logger w/Display																													080Z4014

Electronic controls – Overview

Accessory for SM800

Extension modules

AK-XM 101A	8 AI	080Z0007
AK-XM 102A	8 DI Low voltage	080Z0008
AK-XM 102B	8 DI High voltage	080Z0013
AK-XM 103A	4 AI + 4 AO	080Z0032
AK-XM 204A	8 Relay SPDT	080Z0011
AK-XM 204B	8 Relay SPDT, Override	080Z0018
AK-XM 205A	8 AI, 8 Relay SPDT	080Z0010
AK-XM 205B	8 AI, 8 Relay SPDT, Override	080Z0017
AK-XM 208C	8 AI, 4 stepper	080Z0023

Communication module

AK-CM101C	LON RS485	080Z0063

Quick Selection Notes:

EKC 202, Refrigeration controller

The series of EKC 202 controllers can be used for a wide range of different refrigeration applications - from control of air temperatures and defrost to more advanced applications, including control of light and fans.

Features
EKC 202

Thermostat
- ON / OFF heating or cooling thermostat
- Sensors: Danfoss Pt1000, PTC1000 or NTC
- Day / night control
- Thermostat band
- Alarm thermostat with delay

DI input
- Multi purpose DI input for defrost start, door function, night setback, main switch, appliance cleaning, general alarm, defrost coordination and thermostat band



Fan
- Fan delay during defrost
- Fan stop when compressor cuts out
- Fan stop at high S5 temperature

Light control
- Light control of day / night, door, or via network

Defrost
- Electrical, natural or hot gas defrost
- Start via DI input, time interval or schedule (RTC)
- Defrost on demand
- Stop on time or temperature
- Coordinated defrost

Compressor
- Anti cycle timers for optimum compressor protection
- High-effect 16 A relays for connection of compressors without use of intermediate relay

Facts

- Integrated refrigeration-technical functions
- Defrost on demand in 1:1 systems
- Buttons and seal imbedded in the front
- IP65 density from the front panel
- Digital input for either:
  - door contact function with alarm
  - defrost start
  - start/stop of regulation
  - night operation
  - change-over between two temperature reference
  - case cleaning function
- Instant programming via programming key
- HACCP
  Factory calibration that will guarantee a better measuring accuracy than stated in the standard EN 441-13 without subsequent calibration
  (Pt 1000 ohm sensor)

Technical data and ordering

EKC 202 - Refrigeration controller

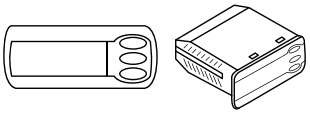

Technical data

Features	Description		
Supply voltage	230 V AC 10 – 15%. 1.5 V A		
Sensors for EKC 202A, 202B, 202C	Pt 1000 ohm (0 °C)		
	PTC 1000 ohm (25 °C)		
	NTC 5000 ohm (25 °C) M 2020		
Sensors for EKC 202C-MS	NTC 2000 ohm (25 °C)		
	NTC 2500 ohm (0 °C)		
	NTC 3000 ohm (25 °C)		
	NTC 5000 ohm (25 °C) M 2020		
	NTC 10000 ohm (25 °C)		
	NTC 10000 ohm (25 °C) Beta 3435		
Accuracy	Measuring range: -60 – 99 °C		
	Controller: ± 1 K below -35 °C, ± 0,5 K between -35 – 25 °C, ± 1 K above 25 °C		
	Pt 1000 sensor: ± 0.3 K at 0 °C, ± 0.005 K per grad		
Display	LED, 3 digits		
Digital inputs	Signal from contact functions		
	Requirements to contacts: gold plating		
	Cable length must be max. 15 m		
	Use auxiliary relays when the cable is longer		
Electrical connection cable	Max. 1.5 mm² multi-core cable on supply and relays		
	Power current terminals are mounted on the circuit board		
	Max. 1 mm² on sensors - and DI inputs		
Relays *)	DO1 DO2 DO3 DO4	CE (250 V AC)	UL ***) (240 V AC)
	DO1. Refrigeration	8 (6) A	10 A Resistive 5 FLA, 30 LRA
	DO2. Defrost	8 (6) A	10 A Resistive 5 FLA, 30 LRA
	DO3. Fan	6 (3) A	6 A Resistive 3 FLA, 18 LRA - 131 V A Pilot duty
	DO4. Alarm or light	4 (1) A Min. 100 mA **)	4 A Resistive 131 V A Pilot duty
Environments	0 – 55 °C, During operations, -40 – 70 °C, During transport		
	20 – 80% Rh, not condensed		
	No shock influence / vibrations		
Enclosure	IP65 from front Buttons and packing are imbedded in the front		
Escapement reserve for the clock	4 hours		
Approvals	EU Low Voltage Directive and EMC demands re CE-marking complied with LVD tested acc. EN 60730-1 og EN 60730-2-9, A1, A2 EMC tested acc. EN50082-1 og EN 60730-2-9, A2		

**) DO1 and DO2 are 16 A relays. DO3 and DO4 are 8 A relays. Max. load must be keept*
***) Gold plating ensures make function with small contact loads*
****) UL-approval based on 30000 couplings*

Ordering

Type	Description	Code no.
EKC 202A	Refrigeration controller	084B8521
EKC 202B	Refrigeration controller with fan function	084B8522
EKC 202C	Refrigeration controller for electric defrost	084B8523
EKC 202C-MS	Refrigeration controller multi sensor (only NTC)	084B8543

Accessory

Type	Description	Code no.
EKA 178A	Data communication module MODBUS	084B8564
EKA 179A	RS485 LON	084B8565
EKA 181C	Battery module that will protect the clock in case of lengthy power failure	084B8577
EKA 182A	Copy key EKC - EKC	084B8567
EKA 183A	Programming key EKC	084B8582
AKS 12	Pt 1000 Sensor, 1.5 m	084N0036
EKS 111	PTC 1000 Sensor, 1.5 m	084N1178
EKS 211	NTC 5000 Sensor, 1.5 m	084N1220
EKS 221	NTC 10000 Beta 3435 Sensor, 3.5 m	084N3206

EKC 202D1, Refrigeration controller

The controller is used for evaporator control refrigeration appliances in supermarkets. With many predefined applications one unit will offer you many options. Flexibility has been planned both for new installations and for service in the refrigeration trade.

Features
EKC 202D1

Thermostat
- ON / OFF heating or cooling thermostat
- Sensors: Danfoss Pt1000, PTC1000 or NTC5000
- Day / night control
- Thermostat band
- Alarm thermostat with delay

DI input
- Multi purpose DI input for defrost start, door function, night setback, main switch, appliance cleaning, general alarm, defrost coordination and thermostat band

Fan
- Fan delay during defrost
- Fan stop when compressor cuts out
- Fan stop at high "S5" temperature



Light control
- Light control of day / night, door, or via network
  Other functions:
- Door function with alarm monitoring
- Manual control of outputs
- Case cleaning function

Supplementary options
- RS 485 network card for connection to network
- Battery back-up card for real time clock
- "Copy key" programming key

Defrost
- Electrical, natural or hot gas defrost
- Start via DI input, time interval or schedule (RTC)
- Defrost on demand
- Stop on time or temperature
- Coordinated defrost

Compressor
- Anti cycle timers for optimum protection
- High-effect 16 A relays for connection of compressors without use of intermediate relays

Facts

- 3 applications in the same unit
- The controller has integrated refrigeration-technical functions, so that it can replace a whole collection of thermostats and timers
- Buttons and seal imbedded in the front
- Easy to remount data communication
- Quick setup
- Two temperature references
- Digital inputs for various functions
- Clock function with backup

Technical data and ordering

EKC 202D1, Refrigeration controller

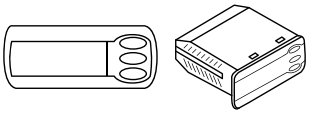

Technical data

Features	Description	
Supply voltage	230 V AC 10 – 15%. 2.5 V A	
Sensors 3 pcs off either	Pt 1000 ohm (0 °C) PTC (1000 ohm / 25 °C)	
	NTC-M2020 (5000 ohm / 25 °C)	
Accuracy	Measuring range: -60 – 99 °C	
	Controller: ± 1 K below -35 °C, ± 0.5 K between -35 – 25 °C, ± 1 K above +25 °C	
	Pt 1000 sensor: ± 0.3 K at 0 °C, ± 0.005 K per grad	
Display	LED, 3 digits	
Digital inputs	Signal from contact functions	
	Requirements to contacts: gold plating	
	Cable length must be max. 15 m	
	Use auxiliary relays when the cable is longer	
Electrical connection cable	Max. 1.5 mm² multi-core cable	
Relays *)		CE (250 V AC)
	DO1. Refrigeration	8 (6) A
	DO2. Defrost	8 (6) A
	DO3. Fan	6 (3) A
	DO4. Alarm	4 (1) A Min. 100 mA **)
Environments	0 – 55 °C, During operations	
	-40 – 70 °C, During transport	
	20 – 80% Rh, not condensed	
	No shock influence / vibrations	
Enclosure	IP65 from front Buttons and packing are embedded in the front	
Escapement reserve for the clock	4 hours	
Approvals	EU Low Voltage Directive and EMC demands re CE-marking complied with LVD tested acc. EN 60730-1 og EN 60730-2-9, A1, A2 EMC tested acc. EN50082-1 og EN 60730-2-9, A2	

***) DO1 and DO2 are 16 A relays. DO3 and DO4 are 8 A relays. Max. load must be keept*
***) Gold plating ensures make function wiht small contact loads*

Ordering

Type	Description	Code no.
EKC 202D1	Refrigeration controller without data communication but prepared for a module	084B8554

Accessory

Type	Description	Code no.
EKA 163A	External display for EKC 202D1	084B8562
EKA 178A	Data communication module MODBUS	084B8564
EKA 179A	Data communication module Lon RS 485	084B8565
EKA 181C	Battery module that will protect the clock in case of lengthy power failure	084B8577
EKA 182A	Copy key EKC - EKC	084B8567
AKS 12	Pt 1000 Sensor 1.5 m	084N0036
EKS 111	PTC 1000 Sensor 1.5 m	084N1178
EKS 211	NTC 5000 Sensor 1.5 m	084N1220

EKC 302, Refrigeration controller

The series of EKC 302 controllers can be used for a wide range of different refrigeration applications - from control of air temperatures and defrost to more advanced applications, including control of light and fans. For DIN rail mounting.

Features
EKC 302

DI input
- Multi purpose DI input for defrost start, door function, night setback, main switch, appliance cleaning, general alarm, defrost coordination and thermostat band

Thermostat
- ON / OFF heating or cooling thermostat
- Sensors: Danfoss Pt1000, PTC1000 or NTC
- Day / night control
- Thermostat band
- Alarm thermostat with delay



Light control
- Light control of day / night, door, or via network

Defrost
- Electrical, natural or hot gas defrost
- Start via DI input, time interval or schedule (RTC)
- Defrost on demand
- Stop on time or temperature
- Coordinated defrost

Compressor
- Anti cycle timers for optimum compressor protection
- High-effect 16 A relays for connection of compressors without use of intermediate relay

Fan
- Fan delay during defrost
- Fan stop when compressor cuts out
- Fan stop at high "*S5*" temperature

Facts

- Integrated refrigeration-technical functions
- Defrost on demand in 1:1 systems
- Buttons and seal imbedded in the front
- Digital input for either:
  - door contact function with alarm
  - defrost start
  - start / stop of regulation
  - night operation
  - change-over between two temperature reference
  - case cleaning function
- Fixed MODBUS data communication
- Instant programming via programming key
- HACCP
  Factory calibration that will guarantee a better measuring accuracy than stated in the standard EN 441-13 without subsequent calibration
  (Pt 1000 ohm sensor)
- EKC 302D: Several applications in the same unit

Technical data and ordering

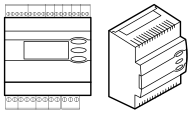

EKC 302 - Refrigeration controller

Technical data

Features	Description		
Supply voltage	230 V AC 10 – 15%. 1.5 V A		
Sensors for EKC 302	Pt 1000 ohm (0 °C)		
	PTC 1000 ohm (25 °C)		
	NTC 5000 ohm (25 °C) M 2020		
Accuracy	Measuring range: -60 – 99 °C		
	Controller: ± 1 K below -35 °C, ± 0.5 K between -35 – 25 °C, ± 1 K above 25 °C		
	Pt 1000 sensor: ± 0.3 K at 0 °C, ± 0.005 K per grad		
Display	LED, 3 digits		
Digital inputs	Signal from contact functions		
	Requirements to contacts: gold plating		
	Cable length must be max. 15 m		
	Use auxiliary relays when the cable is longer		
Electrical connection cable	Max. 1.5 mm² multi-core cable on supply and relays		
	Power current terminals are mounted on the circuit board		
	Max. 1 mm² on sensors - and DI inputs		
Relays *)	DO1 DO2 DO3 DO4	IEC 60 730	
	DO1. Refrigeration	10 (6) A and (5 FLA, 30 LRA)	1)
		16 (8) A and (10 FLA, 60 LRA)	2)
	DO2. Defrost	6 (3) A and (3 FLA, 18 LRA)	1)
		10 (6) A and (3 FLA, 30 LRA)	2)
	DO3. Fan	6 (3) A and (3 FLA, 18 LRA)	1)
		10 (6) A and (5 FLA, 30 LRA)	2)
	DO4. Alarm	4 (1) A Min. 100 mA **)	
Environments	0 – 55 °C, During operations, -40 – 70 °C, During transport		
	20 – 80% Rh, not condensed		
	No shock influence / vibrations		
Enclosure	IP20		
Escapement reserve for the clock	4 hours		
Approvals	EU Low Voltage Directive and EMC demands re CE-marking complied with LVD tested acc. EN 60730-1 og EN 60730-2-9, A1, A2 EMC tested acc. EN50082-1 og EN 60730-2-9, A2		

**) DO1 and DO2 are 16 A relays. DO3 and DO4 are 8 A relays. Max. load must be keept*
***) Gold plating ensures make function with small contact loads*

Ordering

Type	Description	Code no.
EKC 302A	Refrigeration controller	084B4162
EKC 302B	Refrigeration controller with fan and defrost function	084B4163
EKC 302D	Refrigeration controller with fan and defrost function	084B4164

Accessory

Type	Description	Code no.
EKA 178B	Data communication module MODBUS	084B8571
EKA 175	RS485 LON	084B8579
EKA 183A	Programming key EKC	084B8582
AKS 12	Pt 1000 Sensor 1.5 m	084N0036
EKS 111	PTC 1000 Sensor 1.5 m	084N1178
EKS 211	NTC 5000 Sensor 1.5 m	084N1220

AK-CC 210, Universal refrigeration controller

The controller is used for evaporator control refrigeration appliances in supermarkets. With many predefined applications one unit will offer you many options. Flexibility has been planned both for new installations and for service in the refrigeration trade.

Features
AK-CC 210

Thermostat
- ON / OFF heating or cooling thermostat
- Sensors: Danfoss Pt1000, PTC1000 or NTC5000
- Day / night control
- Thermostat band
- Alarm thermostat with delay

DI input
- Multi purpose DI input for defrost start, door function, night setback, main switch, appliance cleaning, general alarm, defrost coordination and thermostat band

Fan
- Fan delay during defrost
- Fan stop when compressor cuts out
- Fan stop at high "S5" temperature



Light control
- Light control of day / night, door, or via network
  Other functions:
- "S5" sensor can be used for monitoring of condenser temperature or as product sensor
- Door function with alarm monitoring
- Manual control of outputs
- Case cleaning function

Supplementary options
- RS 485 network card for connection to network
- Battery back-up card for real time clock
- "Copy key" programming key

Defrost
- Electrical, natural or hot gas defrost
- Start via DI input, time interval or schedule (RTC)
- Defrost on demand
- Stop on time or temperature
- Coordinated defrost

Compressor
- Anti cycle timers for optimum protection
- High-effect 16 A relays for connection of compressors without use of intermediate relays

Facts

- Many applications in the same unit
- The controller has integrated refrigeration-technical functions, so that it can replace a whole collection of thermostats and timers
- Buttons and seal imbedded in the front
- Can control two compressors
- Easy to remount data communication
- Quick setup
- Two temperature references
- IBExU approved relays
- HACCP
  (Hazard Analysis and Critical Control Points):
  - temperature monitoring and registration of period with too high temperature
  - factory calibration that will guarantee a better measuring accuracy than stated in the standard EN 441-13 without subsequent calibration
    (Pt 1000 ohm sensor)
- Digital inputs for various functions
- Clock function with backup

Technical data and ordering

AK-CC 210, Universal refrigeration controller

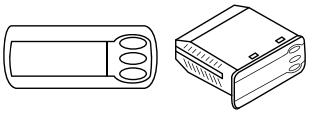

Technical data

Features	Description		
Supply voltage	230 V AC 10 – 15%. 2.5 V A		
Sensors 3 pcs off either	Pt 1000 ohm (0 °C) PTC (1000 ohm / 25 °C)		
	NTC-M2020 (5000 ohm / 25 °C)		
Accuracy	Measuring range: -60 – 99 °C		
	Controller: ± 1 K below -35 °C, ± 0.5 K between -35 – 25 °C, ± 1 K above +25 °C		
	Pt 1000 sensor: ± 0.3 K at 0 °C, ± 0.005 K per grad		
Display	LED, 3 digits		
Digital inputs	Signal from contact functions		
	Requirements to contacts: gold plating		
	Cable length must be max. 15 m		
	Use auxiliary relays when the cable is longer		
Electrical connection cable	Max. 1.5 mm² multi-core cable		
Relays *)		CE (250 V AC)	UL ***) (240 V AC)
	DO1. Refrigeration	8 (6) A	10 A Resistive 5 FLA, 30 LRA
	DO2. Defrost	8 (6) A	10 A Resistive 5 FLA, 30 LRA
	DO3. Fan	6 (3) A	6 A Resistive 3 FLA, 18 LRA - 131 VA Pilot duty
	DO4. Alarm	4 (1) A Min. 100 mA **)	4 A Resistive 131 VA Pilot duty
Environments	0 – 55 °C, During operations		
	-40 – 70 °C, During transport		
	20 – 80% Rh, not condensed		
	No shock influence / vibrations		
Enclosure	IP65 from front Buttons and packing are embedded in the front		
Escapement reserve for the clock	4 hours		
Approvals	EU Low Voltage Directive and EMC demands re CE-marking complied with LVD tested acc. EN 60730-1 og EN 60730-2-9, A1, A2 EMC tested acc. EN50082-1 og EN 60730-2-9, A2 Relays are tested acc. to IEC 60079-15		

***) DO1 and DO2 are 16 A relays. DO3 and DO4 are 8 A relays. Max. load must be keept*
***) Gold plating ensures make function wiht small contact loads*
****) UL-approval based on 30000 couplings*

Ordering

Type	Description	Code no.
AK-CC 210	Refrigeration controller without data communication but prepared for a module	084B8520

Accessory

Type	Description	Code no.
EKA 163A	External display for AK-CC 210	084B8562
EKA 178A	Data communication module MODBUS	084B8564
EKA 179A	Data communication module Lon RS 485	084B8565
EKA 181C	Battery module that will protect the clock in case of lengthy power failure	084B8577
EKA 182A	Copy key EKC - EKC	084B8567
AKS 12	Pt 1000 Sensor 1.5 m	084N0036
EKS 111	PTC 1000 Sensor 1.5 m	084N1178
EKS 211	NTC 5000 Sensor 1.5 m	084N1220

AK-CC 250A, Universal refrigeration controller

The controller is used for evaporator control refrigeration appliances in supermarkets. With many predefined applications one unit will offer you many options. Flexibility has been planned both for new installations and for service in the refrigeration trade.

Features AK-CC 250A

Thermostat
- ON / OFF heating or cooling thermostat
- Sensors: Danfoss Pt1000, PTC1000 or NTC5000
- Day / night control
- Thermostat band
- Alarm thermostat with delay

DI input
- Multi purpose DI input for defrost start, door function, night setback, main switch, appliance cleaning, general alarm, defrost coordination and thermostat band

Fan
- Fan delay during defrost
- Fan stop when compressor cuts out
- Fan stop at high "S5" temperature



Light control
- Light control of day / night, door, or via network

Other functions:
- "S5" sensor can be used for monitoring of condenser temperature or as product sensor
- Door function with alarm monitoring
- Manual control of outputs
- Case cleaning function

Supplementary options
- Battery back-up card for real time clock
- "Copy key" programming key

Defrost
- Electrical, natural or hot gas defrost
- Start via DI input, time interval or schedule (RTC)
- Defrost on demand
- Stop on time or temperature
- Coordinated defrost

Compressor
- Anti cycle timers for optimum protection
- High-effect 16 A relays for connection of compressors without use of intermediate relays

Facts

- Many applications in the same unit
- The controller has integrated refrigeration-technical functions, so that it can replace a whole collection of thermostats and timers
- Buttons and seal imbedded in the front
- Can control two compressors
- Fixed MODBUS data communication
- Easy to remount data communication
- Quick setup
- Two temperature references
- HACCP (Hazard Analysis and Critical Control Points):
  - temperature monitoring and registration of period with too high temperature
  - factory calibration that will guarantee a better measuring accuracy than stated in the standard EN 441-13 without subsequent calibration (Pt 1000 ohm sensor)
- Digital inputs for various functions
- Clock function with backup

Technical data and ordering

AK-CC 250A, Universal refrigeration controller

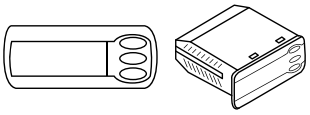

Technical data

Features	Description		
Supply voltage	230 V AC 10 – 15%. 2.5 V A		
Sensors for AK-CC 250A, 3 pcs off either	Pt 1000 ohm (0 °C) PTC (1000 ohm / 25 °C)		
	NTC-M2020 (5000 ohm / 25 °C)		
Accuracy	Measuring range: -60 – 99 °C		
	Controller: ± 1 K below -35 °C, ± 0.5 K between -35 – 25 °C, ± 1 K above +25 °C		
	Pt 1000 sensor: ± 0.3 K at 0 °C, ± 0.005 K per grad		
External display	EKA 163 A (only in stand alone)		
Digital inputs	Signal from contact functions		
	Requirements to contacts: Gold plating		
	Cable length must be max. 15 m		
	Use auxiliary relays when the cable is longer		
Electrical connection cable	Max. 1.5 mm² multi-core cable		
Relays *)		CE (250 V AC)	UL *** (240 V AC)
	DO1. Refrigeration	8 (6) A	10 A Resistive 5 FLA, 30 LRA
	DO2. Defrost	8 (6) A	10 A Resistive 5 FLA, 30 LRA
	DO3. Fan	6 (3) A	6 A Resistive 3 FLA, 18 LRA - 131 VA Pilot duty
	DO4. Alarm	4 (1) A Min. 100 mA **)	4 A Resistive 131 VA Pilot duty
Environments	0 – 55 °C, During operations		
	-40 – 70 °C, During transport		
	20 – 80% Rh, not condensed		
	No shock influence / vibrations		
Enclosure	IP65 from front Buttons and packing are embedded in the front		
Escapement reserve for the clock	4 hours		
Approvals	EU Low Voltage Directive and EMC demands re CE-marking complied with LVD tested acc. EN 60730-1 og EN 60730-2-9, A1, A2 EMC tested acc. EN50082-1 og EN 60730-2-9, A2		

**) DO1 and DO2 are 16 A relays. DO3 and DO4 are 8 A relays. Max. load must be keept*
***) Gold plating ensures make function wiht small contact loads*
****) UL-approval based on 30000 couplings*

Ordering

Type	Description	Code no.
AK-CC 250A	Refrigeration controller with MODBUS data communication for Pt or PTC sensors	084B8528

Accessory

Type	Description	Code no.
EKA 163A	External display for AK-CC 250	084B8562
EKA 181C	Battery module that will protect the clock in case of lengthy power failure	084B8577
EKA 182A	Copy key EKC - EKC	084B8567
AKS 12	Pt 1000 Sensor 1.5 m	084N0036
EKS 111	PTC 1000 Sensor 1.5 m	084N1178

AK-CC 350, Universal refrigeration controller

The controller is used for evaporator control refrigeration appliances in supermarkets. With many predefined applications one unit will offer you many options.

Flexibility has been planned both for new installations and for service in the refrigeration trade. For DIN rail mounting.

Features
AK-CC 350

Thermostat
- ON / OFF heating or cooling thermostat
- Sensors: Danfoss Pt1000, PTC1000 or NTC5000
- Day / night control
- Thermostat band
- Alarm thermostat with delay

DI input
- Multi purpose DI input for defrost start, door function, night setback, main switch, appliance cleaning, general alarm, defrost coordination and thermostat band



Fan
- Fan delay during defrost
- Fan stop when compressor cuts out
- Fan stop at high "*S5*" temperature

Light control
- Light control of day / night, door, or via network
  Other functions:
- "S5" sensor can be used for monitoring of condenser temperature or as product sensor
- Door function with alarm monitoring
- Manual control of outputs
- Case cleaning function

Supplementary options
- Programming key

Defrost
- Electrical, natural or hot gas defrost
- Start via DI input, time interval or schedule (RTC)
- Defrost on demand
- Stop on time or temperature
- Coordinated defrost

Compressor
- Anti cycle timers for optimum protection
- High-effect 20 A relay for connection of compressor without use of intermediate relays

Facts

- Many applications in the same unit
- The controller has integrated refrigeration-technical functions, so that it can replace a whole collection of thermostats and timers
- Buttons and seal imbedded in the front
- Can control two compressors
- Fixed MODBUS data communication
- Quick setup
- Two temperature references
- HACCP(Hazard Analysis and Critical Control Points):
  - temperature monitoring and registration of period with too high temperature
  - factory calibration that will guarantee a better measuring accuracy than stated in the standard EN 441-13 without subsequent calibration (Pt 1000 ohm sensor)
- Digital inputs for various functions
- Clock function with backup

Technical data and ordering

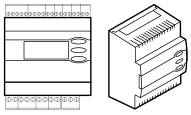

AK-CC 350, Universal refrigeration controller

Technical data

Features	Description		
Supply voltage	230 V AC 10 – 15%. 2.5 V A		
Sensors for AK-CC 350A, 3 pcs off either	Pt 1000		
	PTC (1000 ohm / 25 °C)		
Accuracy	Measuring range: -60 – 99 °C		
	Controller: ±1 K below -35 °C, ± 0.5 K between -35 – 25 °C, ± 1 K above 25 °C		
	Pt 1000 sensor: ± 0.3 K at 0 °C, ± 0.005 K per grad		
Display	LED, 3-digits		
External display	EKA 163 A (only in stand alone)		
Digital inputs	Signal from contact functions		
	Requirements to contacts: Gold plating		
	Cable length must be max. 15 m		
	Use auxiliary relays when the cable is longer		
Electrical connection cable	Max. 1.5 mm² multi-core cable		
Relays *)		IEC 60 730	
	DO1. Refrigeration	10 (6) A and (5 FLA, 30 LRA)	1)
		16 (8) A and (10 FLA, 60 LRA)	2)
	DO2. Defrost	6 (3) A and (3 FLA, 18 LRA)	1)
		10 (6) A and (3 FLA, 30 LRA)	2)
	DO3. Fan	6 (3) A and (3 FLA, 18 LRA)	1)
		10 (6) A and (5 FLA, 30 LRA)	2)
	O4. Alarm	4 (1) A Min. 100 mA **)	
Environments	0 – 55 °C, During operations -40 – 70 °C, During transport		
	20 – 80% Rh, not condensed		
	No shock influence / vibrations		
Enclosure	IP20		
Escapement reserve for the clock	4 hours		
Approvals	EU Low Voltage Directive and EMC demands re CE-marking complied with LVD tested acc. EN 60730-1 og EN 60730-2-9, A1, A2 EMC tested acc. EN50082-1 og EN 60730-2-9, A2		

**) DO1 is a 20 A relay. DO2 and DO3 are 16 A relays. DO4 is a 10 A relay. The max. load listed above must be observed when connecting without zero-crossing control. When connecting with zero-crossing, the load must be increased to the value indicated by 2)*

***) Gold plating ensures make function with small contact loads*

Ordering

Type	Description	Code no.
AK-CC 350	Refrigeration controller with MODBUS data communication	084B4165

Accessory

Type	Description	Code no.
EKA 163A	External display for AK-CC 350	084B8562
EKA 183A	Programming key	084B8582
AKS 12	Pt 1000 Sensor 1.5 m	084N0036
EKS 111	PTC 1000 Sensor 1.5 m	084N1178

AK-CC 450, Controller for appliance control

Complete refrigeration appliance control with great flexibility to adapt to all types of refrigeration appliances and cold storage rooms.

- For cooling with brine
- For use with a thermostatic expansion valve

Features AK-CC 450

Thermostat
- ON / OFF or modulating control
- Product sensor "S6" with separate alarm limits
- Day / night control
- Switch between thermostat settings via digital input
- Pulsing of fans when thermostat is satisfied
- Heat thermostat

Calibration
- Factory calibration that will guarantee a better measuring accuracy than stated in the standard EN 441-13 without subsequent calibration (Pt 1000 ohm sensor)

Light control

Supplementary options
- Rail heat control via day / night load or dew point
- Door function
- Control of night blinds
- Integrated MODBUS communication with the option of mounting a LonWorks communication card

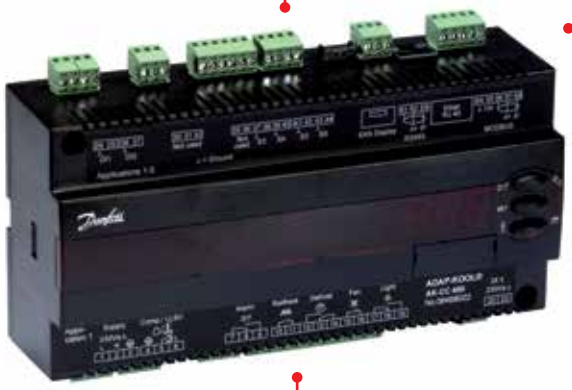

Compressor
- Control of two compressors

Defrost
- Electrical, natural or hot gas defrost
- Start of defrost via schedule, digital input or network
- Coordination of defrost across several controls
- Case cleaning function for documentation of HACCP procedure
- Stop of defrost on time and / or temperature

Facts

- Energy optimisation of the whole refrigeration appliance
- One controller for several different refrigeration appliances
- Integrated display at the front of the controller
- Quick set-up with predefined settings
- Built-in data communication
- Built-in clock function with power reserve
- IBExU approved relays

Technical data and ordering

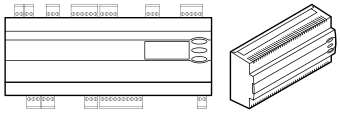

AK-CC 450, Controller for appliance control

Technical data

Features	Description	
Supply voltage	230 V AC 10 – 15%. 5 V A, 50 / 60 Hz	
Sensors	Pt 1000	
	PTC 1000 ohm / 25 °C (All 4 must be of the same type)	
Accuracy	Measuring range: -60 – 120 °C	
	Controller: ± 1 K below -35 °C, ± 0.5 K between -35 – 25 °C, ± 1 K above + 25 °C	
	Pt 1000 sensor: ± 0.3 K at 0 °C, ± 0.005 K per grad	
Display	LED, 3-digits	
External display	EKA 163B or 164B. (any EKA 163A or 164A)	
Digital inputs DI1, DI2	Signal from contact functions	
	Requirements to contacts: gold plating	
	Cable length must be max. 15 m	
	Use auxiliary relays when the cable is longer	
Digital input DI3	230 V AC	
Electrical connection cable	Max.1.5 mm² multi-core cable	
Solid state output	DO1 (for solenoid coil)	Max. 240 V AC, Min. 28 V AC Max. 0.5 A Leak < 1 mA Max. 1 pcs. coil
Relays *)		CE (250 V AC)
	DO3, DO4	4 (3) A
	DO2, DO5, DO6	4 (3) A
Environments	0 – 55 °C, During operations	
	-40 – 70 °C, During transport	
	20 – 80% Rh, not condensed	
	No shock influence / vibrations	
Enclosure	IP20	
Mounting	DIN-rail or wall	
Weight	0.4 Kg	
Data communication	Fixed / Build-in: MODBUS	
	Extension options: LON RS485 / DANBUSS / TCP / IP(OEM) / MODBUS	
	The controller cannot be hooked up with a monitoring unit type m2	
Power reserve for the clock	4 hours	
Approvals	EU Low Voltage Directive and EMC demands re CE-marking complied with LVD tested acc. EN 60730-1 and EN 60730-2-9, A1, A2 - EMC tested acc. EN50082-1 and EN 60730-2-9, A2 Relays are tested acc. to IEC 60079-15	

**) DO3 and DO4 are 16 A relays. DO2, DO5 and DO6 are 8 A relays. Max. load must be observed*

Ordering

Type	Description	Code no.
AK-CC 450	Case controller with MODBUS data communication	084B8022

Accessory

Type	Description	Code no.
EKA 175	Data communication module LON RS 485	084B8579
EKA 176	Data communication module DANBUSS	084B8583
EKA 178B	Data communication module MODBUS	084B8571
EKA 163B	External display with plug for direct connection	084B8574
EKA 164B	External display with operation buttons and plug for direct connections	084B8575
EKA 163A	External display with screw terminals	084B8562
EKA 164A	External display with operation buttons and screw terminals	084B8563

AK-CC 550A, Controller for appliance control

AK-CC 550A is a complete refrigeration appliance control with great flexibility to adapt to all types of refrigeration appliances and cold storage rooms.

Features
AK-CC 550A

Thermostat
- ON / OFF or modulating control
- Product sensor "S6" with separate alarm limits
- Day / night control
- Switch between thermostat settings via digital input
- Pulsing of fans when thermostat is satisfied
- Heat thermostat

Calibration
- Factory calibration that will guarantee a better measuring accuracy than stated in the standard EN 441-13 without subsequent calibration (Pt 1000 ohm sensor)

Light control



Supplementary options
- Rail heat control via day / night load or dew point
- Door function
- Control of night blinds
- Integrated MODBUS communication with the option of mounting a LonWorks communication card
- Adaptive control of superheat

Compressor
- Control of two compressors

Defrost
- Electrical, natural or hot gas defrost
- Start of defrost via schedule, digital input or network
- Coordination of defrost across several controls
- Case cleaning function for documentation of HACCP procedure
- Stop of defrost on time and / or temperature
- Adaptive defrosting based on evaporator performance

Facts

- Energy optimisation of the whole refrigeration appliance
- One controller for several different refrigeration appliances
- Integrated display at the front of the controller
- Quick set-up with predefined settings
- Built-in data communication
- Built-in clock function with power reserve
- Can be used on CO_2 systems

Technical data and ordering

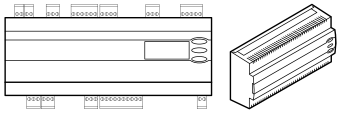

AK-CC 550A, Controller for appliance control

Technical data

Features	Description	
Supply voltage	230 V AC 10 – 15%. 5 V A, 50 / 60 Hz	
Sensor S2	Pt 1000	
Sensor S3, S4, S5, S6	Pt 1000	
	PTC 1000 ohm / 25 °C (All 4 must be of the same type)	
Accuracy	Measuring range: -60 – 120 °C	
	Controller: ± 1 K below -35 °C, ± 0.5 K between -35 – 25 °C, ± 1 K above 25 °C	
	Pt 1000 sensor: ± 0.3 K at 0 °C, ± 0.005 K per grad	
Measuring of Pe	Pressure transmitter: AKS 32R	
Display	LED, 3-digits	
External display	EKA 163B or 164B. (any EKA 163A or 164A)	
Digital inputs DI1, D2	Signal from contact functions	
	Requirements to contacts: Gold plating	
	Cable length must be max. 15 m	
	Use auxiliary relays when the cable is longer	
Digital input DI3	230 V AC	
Electrical connection cable	Max.1.5 mm² multi-core cable	
Solid state output	DO1 (for AKV coil)	Max. 240 V AC, Min. 28 V AC
		Max. 0.5 A
		Leak < 1 mA
		Max. 1 pcs. AKV
Relays *)		CE (250 V AC)
	DO3, DO4	4 (3) A
	DO2, DO5, DO6	4 (3) A
Environments	0 – 55 °C, During operations	
	-40 – 70 °C, During transport	
	20 – 80% Rh, not condensed	
	No shock influence / vibrations	
Enclosure	IP20	
Mounting	DIN-rail or wall	
Weight	0.4 Kg	
Data communication	Fixed: MODBUS	
	Extension options: LON RS485 / DANBUSS / TCP / IP(OEM) / MODBUS	
	The controller cannot be hooked up with a monitoring unit type m2	
Power reserve for the clock	4 hours	
Approvals	EU Low Voltage Directive and EMC demands re CE-marking complied with LVD tested acc. EN 60730-1 and EN 60730-2-9, A1, A2 - EMC tested acc. EN50082-1 and EN 60730-2-9, A2	

**) DO3 and DO4 are 16 A relays. DO2, DO5 and DO6 are 8 A relays. Max. load must be observed*

Ordering

Type	Description	Code no.
AK-CC 550A	Case controller with MODBUS data communication	084B8030

Accessory

Type	Description	Code no.
EKA 175	Data communication module LON RS 485	084B8579
EKA 176	Data communication module DANBUSS	084B8583
EKA 178B	Data communication module MODBUS	084B8571
EKA 163B	External display with plug for direct connection	084B8574
EKA 164B	External display with operation buttons and plug for direct connections	084B8575
EKA 163A	External display with screw terminals 084B8562 EKA	084B8562
EKA 164A	External display with operation buttons and screw terminals	084B8563

AK-CC 750A, Controller for evaporator control

AK-CC 750A controllers are complete regulating units which together with valves and sensors constitute complete evaporator controls for refrigeration appliances and freezing rooms within commercial refrigeration.

Generally speaking they replace all other automatic controls containing, inter alia, day and night thermostats, defrost, fan control, rail heat control, alarm functions, light control, thermo valve control, solenoid valve, etc.

Features
AK-CC 750A

Energy optimisation
- Adaptive superheat via the AKV electronic expansion valve
  Optimum utilisation of evaporator at all load conditions, precondition for major energy savings via optimised suction pressure and floating condensing pressure control
- Adaptive defrost
  Intelligent defrost skip based on performance monitoring of evaporator
- Dew point pulsing of rail heat
  Pulsing of rail heat according to the actual load condition
- Pulsing of fans
  Pulsing of fans at thermostat cut out

Service and commissioning
- Easy performance check
  Provides vital info for performance check
- Versatile controller
- A single controller covering several applications
- Flexible IO configuration
- Built-in LON communication
- Fast and easy commissioning
- Preset setup for fast start-up
- Only 5 settings required



Food quality / HACCP compliance
- Modulating temperature control
  Accurate temperature control
- **Measuring accuracy**
  Factory calibration guarantees a better measuring accuracy than required in the EN 12830 and EN 13485 standards without subsequent calibration on site (Pt 1000 ohms sensor)
- **Product temperature**
  Separate product temperature for compliance with EN 12830 and EN 13485
- **Case cleaning**
  Case cleaning function for documentation of case cleanings carried out according to HACCP procedures

Facts

- Control of 1 to 4 evaporator sections
- Adaptive superheat control ensures optimum evaporator usage in all operational circumstances
- Electronic injection with AKV valve
- Traditional temperature regulation using ON / OFF or modulating control of solenoid valve for both DX and indirect brine system
- Weighted thermostat and alarm thermostat
- Defrost on demand based on evaporator capacity
- Appliance cleaning function
- Light control using door switch or network signal depending on day / night operation
- Rail heat pulsing depending on day / night operation or dew point
- Monitoring of door alarm and control of light / refrigeration depending on location of door switch
- Log function for registration of historical parameter values and alarm modes
- Full energy optimisation functions (dew point, fans, defrost, blinds etc.)
- Remote display connections (up to 4 displays)
- Built in RS 485 LON communication
- Flexible I/O configuration

Technical data and ordering

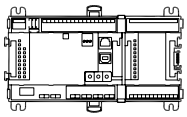

AK-CC 750A, Controller for evaporator control

Technical data

Features	Description	
Supply voltage	24 V DC / AC ± 20%	
Power consumption	8 V A	
Analogue inputs	Pt 1000 ohm / 0 °C	Dissolution: 0.1 °C, Accuracy: ± 0.5 °C
	Pressure transmitter type AKS 32R/AKS 32 (1 – 5 V) Voltage signal 0 – 10 V	Dissolution 1 mV
		Accuracy ± 10 mV
		Max. connection of 5 pressure transmitters on one module
	Contact function (ON / OFF)	ON at R < 20 ohm, OFF at R > 2 K ohm (Gold plated contacts not necessary)
ON/OFF supply voltage inputs	Low voltage 0 / 80 V DC / AC	OFF : U < 2 V ON: U > 10 V
	High voltage 0 / 260 V AC	OFF : U < 24 V ON: U > 80 V
Relay outputs SPDT	AC-1 (ohmic)	5 A
	AC-15 (inductive)	3 A
	U	Min. 24 V - Max. 230 V Low and high voltage must not be connected to the same output group
	Fuse	5 A (F)
Solid state outputs	Can be used for loads that are frequently cut in and out e.g. decompression, rail heating, fans and AKV valve	Max. 240 V AC, Min. 48 V AC - Max. 0.5 A,
		Leak < 1 mA
		Max. 1 AKV
Ambient temperature	During transport	-40 – 70 °C
	During operation	-20 – 55 °C, 0 – 95% RH (non condensing) - No shock infl uences / vibrations
Enclosure	Material	PC / ABS
	Enclosure	IP10, VBG 4
	Mounting	For mounting on wall or DIN rail
Weight with screw terminals	Modules in100- / 200- / controller series	Approx. 200 g / 500 g / 600 g
Approvals	Complies with EU low voltage directive and EMC requirements	LVD tested according to EN 60730 EMC tested - Immunity according to EN 61000-6-2, Emission according to EN 50081-1
	UL file number	E166834

Ordering

Type	Language	Code no.
AK-CC 750A	English, Danish, Swedish, Finnish, Russian, Chech, Polish, Chinese , German, French, Italian, Dutch, Spanish, Portuguese	080Z0140

Ordering Accessory - Extension modules and survey for inputs and outputs

Type	Analog inputs	ON / OFF outputs		ON / OFF supply voltage (DI signal)		Analog outputs	Stepper outputs	Module with switches	Code no.
	For sensors, pressure transmitters	Relay (SPDT)	Solid state	Low voltage (max. 80 V)	High voltage (max. 260 V)	0 -10 V d. c.	For valves with step control	For override of relay outputs	
Controller	11	4	4	–	–	–	–	–	–
AK-XM 101A	8	–	–	–	–	–	–	–	080Z0007
AK-XM 102A	–	–	–	8	–	–	–	–	080Z0008
AK-XM 102B	–	–	–	–	8	–	–	–	080Z0013
AK-XM 103A	4	–	–	–	–	4	–	–	080Z0032
AK-XM 204A	–	8	–	–	–	–	–	–	080Z0011
AK-XM 204B	–	8	–	–	–	–	–	x	080Z0018
AK-XM 205A	8	8	–	–	–	–	–	–	080Z0010
AK-XM 205B	8	8	–	–	–	–	–	x	080Z0017
AK-XM 208C	8	–	–	–	–	–	4	–	080Z0023

Software

AK-ST 500	Software for operation of AK controllers	080Z0161

Remote displays

EKA 163B	Display unit	084B8574
EKA 164B	Display unit with operation buttons	084B8575
MMIGRS2	Graphic display with operation	080G0294
	Remote display, Wall, S	080G0295
	Remote display, Panel, I	080G0297

Miscellaneous

AK-CM 102	Communication modules for controllers where modules cannot be connected continuously	080Z0064

EKC 315A, Refrigeration control

The controller and valve can be used where there are requirements to accurate control of superheat and temperature in connection with refrigeration:

- Cold store (air coolers)
- Processing plant (water chillers)
- A/C plant

Features
EKC 315A

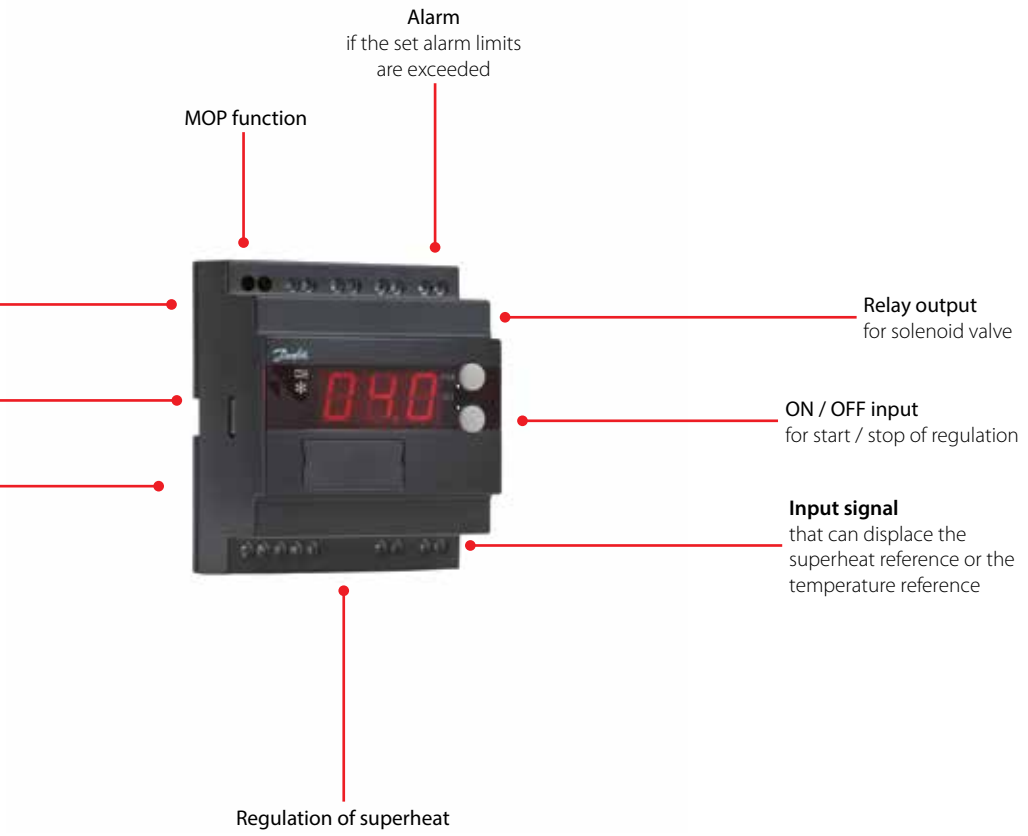

Facts

- The evaporator is charged optimally - even when there are great variations of load and suction pressure
- Energy savings - the adaptive regulation of the refrigerant injection ensures optimum utilisation of the evaporator and hence a high suction pressure
- Exact temperature control - the combination of adaptive evaporator and temperature control ensures great temperature accuracy for the media
- The superheating is regulated to the lowest possible value at the same time as the media temperature is controlled by the thermostat function

Technical data and ordering

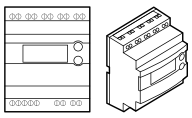

EKC 315A - Refrigeration control

Technical data

Features	Description
Supply voltage	24 V AC ± 15%, 50 / 60 Hz, 80 V A (the supply voltage is galvanically separated from the input and output signals)
Power consumption	Controller: 5 V A
	AKV coil: 55 V A
Input signal	Current signal: 4 – 20 mA or 0 – 20 mA
	Pressure transmitter: 4-20 mA from AKS 33
	Digital input from external contact function
Sensor input	2 pcs. Pt 1000 ohm
Output signal	Current signal: 4 – 20 mA or 0 – 20 mA
	Load: Max. 200 ohm
Relay output	1 pcs. SPST: AC-1: 4 A (ohmic)
Alarm relay	1 pcs. SPST: AC-15: 3 A (inductive)
ICAD	ICAD mounted on ICM Current signal: 4 – 20 mA or 0 – 20 mA
Data communication	Possible to connect a data communication module
Environments	-10 – 55 °C, during operations
	-40 – 70 °C, during transport
	20 – 80% Rh, not condensed
	No shock influence / vibrations
Enclosure	IP20
Weight	300 g
Mounting	DIN rail
Display	LED, 3 digits
Terminals	max. 2.5 mm^2 multicore
Approvals	EU Low Voltage Directive and EMC demands re CE-marking complied with LVD-tested acc. to EN 60730-1 and EN 60730-2-9 EMC-tested acc. to EN50081-1 and EN 50082-2

The installation of data communications must comply with the requirements described in literature sheet no. RC8AC

Ordering

Type	Description	Code no.
EKC 315A	Superheat controller	084B7086
EKC 315A	Superheat controller, pressure transmitter signal from AKS 32R	084B7085
EKC 315A	I-pack of 084B7085	084B7128

Accessory

Type	Description	Code no.
EKA 174	Data communication module (accessories), (RS 485 module) with galvanic separation	084B7124
EKA 175	RS485 LON	084B8579
AKS 11	Pt 1000 Sensor	084N0003
AKS 32R	Pressure transmitter -1/12 bar	060G1036
AKS 33	Pressure transmitter -1/12 bar, 0.3%	060G2049
AKS 3000	Pressure transmitter -1/12 bar, 1%	060G1323

EKE 1A / EKE 1B / EKE 1C, Superheat controllers

The flexible pre-programmed EKE 1 series of superheat controllers from Danfoss provides ultimate software control, allowing you to tailor the performance of your system to your exact requirements. EKE is ideal for controlling a wide range of commercial air conditioning and refrigeration applications, such control helps you to achieve the highest efficiency in the system reducing the operational cost by up to 20% with minimal effort. EKE is generally used where there is a requirement for accurate control of superheat or temperature control in connection with air conditioning and refrigeration.
The superheat is regulated to the lowest possible value in the shortest period. It regulates the superheat of the evaporator by charging optimally even when there are great variations of load resulting in a reduction of energy consumption and operational cost.

Features
EKE 1 Series

Efficiency

- Adaptive Superheat Control
  Several control algorithms available to match your application that guarantee low and stable superheat.
- Compressor Feed Forward
  Provides proper superheat by synchronizing valve reactivity to compressor speed.
- Heating & Cooling Selection Mode
- Optimizes evaporator performance by allowing 2 different sets of superheat settings
- **Fast Start-Up**
  Ensures optimal superheat in the shortest period of time by quickly opening the valve and avoiding low pressure cut-out during start-up.



System Protection

- **Fail Safe Operation**
  In case of sensor error, system can continue cooling in emergency.
- **Low Operating Pressure (LOP)**
  Allows applications to start-up at lower ambient conditions to prevent compressor from stopping.
  High Condensing Temperature Protection (HCTP)
  Ensures that the load on the condenser is reduced, in cases where the condensing temperature gets too high
- **Superheat Close**
  When the superheat is below a set minimum value, the valve will close faster in order to protect the compressor
- **Max Operating Pressure (MOP)**
  Keeps evaporating pressure below the MOP set point.

Ease of Use/Installation/Applied Costs

- **Share Power Supply**
  Galvanic isolation eliminates the need of one transformer for every EKE.
- **Share Pressure Signal**
  1 sensor can be used with multiple controllers.
- **Valves & Sensors**
  Compatible with a wide range of valves and sensors.
- **Commutation Filter**
  The filter is inside the EKE and eliminates the need of external filter for greater cable lengths.
- **KoolProg**
  The Koolprog wizard tool will guide the user to set up the controller in a fast and easy way.

Facts

Applications:
- Chillers
- Processing plant / Cabinet cooling
- Cold store (air coolers)
- A/C plant / Air conditioning
- Heat pumps. Residential Heat Pump
- Transport cooling

- Power Supply
  - 24 V AC or 24 V power supply, Easy wiring layout
- Drives bipolar and unipolar valves with selectable driving method
- Plug and Play installation. Easy and fast configuration via Wizard
- Analog and Digital Inputs
  - Various programmable Analog and digital inputs available
- External and flexible large graphical display
- Connectivity available with
  - CAN / CAN RJ / MODbus RS485 RTU

- Key Software
  - Energy saving Superheat Control logic: Minimum stable superheat, LoadAp, Fixed SH, Delta Temperature
  - Safety protection: MOP, LOP, min. S4, HCTP, SH close
  - Improved and fast starts up with rapid temperature pull down time
  - Feature focus on specific application e.g Heat pump, chiller
  - Ensure longevity of the stepper valve

Technical data and ordering

EKE 1A / EKE 1B / EKE 1C

Hardware comparison

		EKE 1A	EKE 1B	EKE 1C
Power supply				
Power supply type	24 V AC / DC ± 20%	•	•	•
Share power supply		•	•	•
Battery backup input	18 – 24 V DC	•	•	•
Data Communication				
MODbus	RS 485 RTU	–	•	•
Wired CANbus	To link Danfoss products	–	–	•
CANbus RJ	Danfoss MMI service port	•	•	•
Inputs				
Temperature Sensor Type	PT1000	–	–	•
	NTC 10 K, type EKS	•	•	•
	NTC 10 K, type ACCPBT	•	•	•
	NTC 10 K, type Sensata	•	•	•
No of temperature sensors		1	2	3
Pressure Transmitter types	Ratiometric 0.5 – 4.5 V DC	•	•	•
	0 – 20 mA signal	–	–	•
	1 – 5 V / 0 – 10 V	•	•	•
No of pressure sensors		1	1	2 or (1 P and 1 ext. ref.)
Share Pressure Signal	Up to 5 devices	•	•	–
	Via wired CANbus	–	–	•
Read external sensor value	Via MODbus	–	•	•
External reference	4 – 20 mA	–	–	•
	0 – 20 mA	–	–	•
	User defined current	–	–	•
	0 – 10 V	•	•	•
	1 – 5 V	•	•	•
	User defined voltage	•	•	•
No. of external reference		1	1	1
Digital Input Dry contact	(4 possible functions)	3	2	2
Outputs				
Digital output		1	1	1
Class of insulation	Class II	•	•	•
Relay	SPDT	1	1	1
Relay functions	Alarm or NC function	•	•	•

Ordering

Type	Description	Code no. single pack
EKE 1A	Superheat controller 1 temperature sensor	080G5300
EKE 1B	Superheat controller 2 temperature sensor	080G5350
EKE 1C	Superheat controller 3 temperature sensor	080G5400

Accessories

Type	Description	Code no. single pack
MMIGRS2 Remote Display	Graphic display with operation	080G0294
MMIMYK gateway	Interface to KoolProg PC software	080G0073

EKE 347, Liquid level controller

The EKE347 controller is used for regulation of the liquid level in pump reservoirs, separators, intermediate coolers, economisers, condensers and receivers.
The controller is communicating with a transmitter that continuously measures the liquid level in the actual reservoir.

By comparing the measured value with the level setpoint entered by the customer, the controller dictates the valve to increase or decrease the liquid flow to or from the reservoir.

Features
EKE 347



Facts

- User friendly and easy setup Wizard for first time configuration
- Programming menu with 3 access levels and separate passwords
- With the AKS 4100 / 4100U liquid level transmitter it is possible to set the refrigerant level within a wide range
- EKE 347 can be used with ICM or AKV / A expansion valves
- ICM are direct operated motor valves driven by digital stepper motor type ICAD
- AKVA or AKV are pulse-width modulating expansion valves
- EKE 347 include as standard RS 485 based MODBUS-RTU bus communication interface to third party equipment like PLC
- Connection to other EKE347 controllers possible
- Wired remote display possible

Technical data and ordering

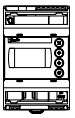

EKE 347 - Liquid level controller

Technical data

Features	Description	
Supply voltage	24 V AC ± 20%, 50 / 60 Hz or 24 V DC ± 20% (the supply voltage is galvanically separated from the input and output signals. Input / output are not individual galvanic isolated)	
Power consumption	Controller 20 W coil for AKV	15 VA / 10 W 55 VA
Input signal ***) Ri =0(4)-20 mA: 33 ohm** **0(2)-10 V: 100 kohm**	Level signal *)	4 – 20 mA or 0 – 10 V
	ICM valve feedback signal *)	From ICAD 0 / 4 – 20 mA
	Contact function start / stop of regulation	
Relay output	3 pcs. SPDT (Lower level alarm, Upper level alarm, Common alarm / NC Solenoid)	3 A (ohmic) 1 A (inductive) Max 240 V AC or 24 V AC / DC. can be used, but same voltage type must be used on DO3 and DO2
Current output	0 – 20 mA or 4 – 20 mA Max. load: 500 ohm	
Valve connection	ICM - via current output AKV / A- via 24 V AC. Pulse-Width Modulating output	
Data communication	MODBUS RTU: Communication to system controller, MODBUS on RS485: galvanic isolation (500 V DC) CAN: Communication to other EKE controllers	
Environments	-20 – 55 °C, during operation -30 – 80 °C, during storage	
	90% Rh, not condensed	
	No shock influence / vibrations	
Enclosure	IP20 / IP40 for the front mounted into a panel	
Weight	193 g	
Mounting	DIN rail	
Display	Graphical LCD display	
Terminals	plugs 1.5 or 2.5 mm^2 multicore	
Approvals	EU Low Voltage Directive and EMC demands re CE-marking complied with LVD-tested acc. to EN 60730-1 and EN 60730-2-9 EMC-tested acc. to EN61000-6-3 and EN 61000-6-2	

Ordering

Type	Description	Code no.
EKE 347	Liquid level controller	080G5000
MMIGRS2	Remote display, Panel, S	080G0294

EKC 368, Controller for temperature control of unpacked food products

Controller and valve are used where there are high requirements to refrigeration of unpacked food products:

- Delicatessen appliances
- Cold rooms for meat products
- Cold rooms for fruits and vegetables
- Containers
- Air conditioning plants.

Features
EKC 368



Modulating temperature control

Alarm
if the set alarm limits are exceeded

Input signal
that can displace the temperature reference

Defrost function
electric, hotgas or natural

Relay outputs
for defrost function, solenoid valve, fan and alarm

Facts

- Wastage is reduced because the air humidity around the products is kept as high as possible
- The temperature is kept within an accuracy of ± 0.25 °C or better after a transient phenomenon
- A transient phenomenon can be controlled with the adaptive function so that temperature variations is kept on a minimum
- Defrost sensor, so that the defrost time will be as short as possible
- PID regulation

Technical data and ordering

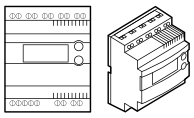

EKC 368 - Controller for temperature control of unpacked food products

Technical data

Features	Description
Supply voltage	24 V AC ± 15%, 50 / 60 Hz, 10 V A (the supply voltage is galvanically separated from the input and output signals)
Power consumption	Controller: 5 V A
	KVS 15 - KVS 42 step motor: 1.3 V A
Input signal	Voltage signal: 0 – 10 V or 2 – 10 V
	Digital input from external contact function
	Short-circuit (pulse signal) of 18 – 20 will start a defrost
Sensor input	2 pcs. Pt 1000 ohm
Relay output	3 pcs. SPST: AC-1: 4 A (ohmic)
Alarm relay	1 pcs. SPST: AC-15: 3 A (inductive)
Step motor output	Pulsating 100 mA
Data communication	Possible to connect a data communication module
Ambient temperature	During operation: -10 – 55 °C / 14 –131 °F
	During transport: -40 – 70 °C / -40 – 158 °F
Enclosure	IP20
Weight	320 g / 28 oz
Mounting	DIN rail
Display	LED, 3 digits
Terminals	max. 2.5 mm² / 12 AWG multicore
Approvals	EU Low Voltage Directive and EMC demands re CE-marking complied with LVD-tested acc. to EN 60730-1 and EN 60730-2-9 EMC-tested acc. to EN50081-1 and EN 50082-2

If battery backup is used: battery requirements: 18 V DC min. 100 mAh

Ordering

Type	Description	Code no.
EKC 368	Media temperature controller	084B7079

Accessory

Type	Description	Code no.
EKA 172	Realtime clock	084B7069
EKA 175	Data communication module (accessories), (RS485 module)	084B8579
EKA 174	Data communicationsmodule (accessories), (RS485 module) with galvanic separation	084B7124

Related products

Electric suction modulating valves
Type KVS 15 - KVS 42
Temperature sensors and pressure transmitters
Type AKS

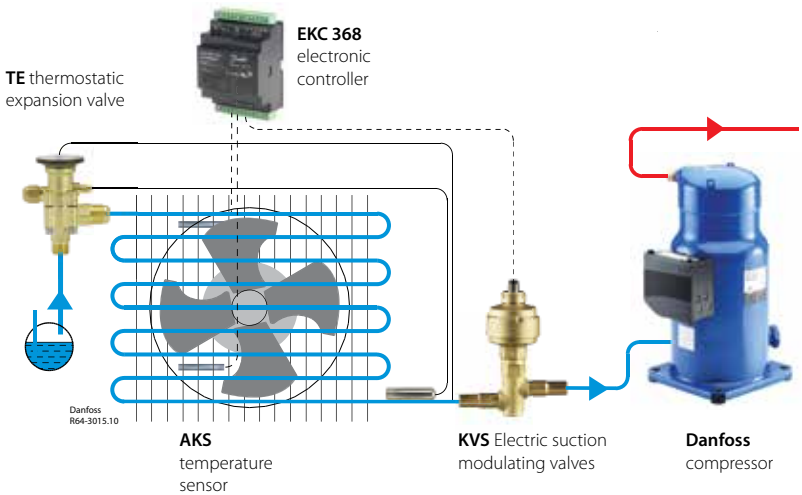

ERC 211 / ERC 213 / ERC 214, Temperature controllers

ERC 21X is a smart multipurpose refrigeration controller with temperature and defrost management.

The controller has been designed to fulfill today's requirements of advanced commercial Refrigeration applications.

Features
ERC 211 / 213 / 214

Ease of Use
four push buttons, easy menu structure, pre-installed application solutions ensure superior usability

Simple Installation
high effect 16 A relay enable direct connection of heavy loads, without use of intermediate relays. A wide range of compatible types of sensors, screw connection terminals ensure high flexibility in installation



Unit Protection
special software features like compressor protection from fluctuation in power supply or from high condensing temperature ensure the safety & reliability operation of the unit

Energy efficiency
defrost on demand
Day / Night mode, and smart evaporator fan management ensure energy efficiency

Facts

- Thermostat
  - ON / OFF thermostat
  - day / night, continuous cycle, emergency mode
  - pre-installed applications
  - compatible with wide range of sensors (NTC 5 K and 10 K, Pt1000, PTC)
- Defrost
  - natural, electrical and hot gas defrost
  - defrost on demand
  - start via push button, DI input or time interval
  - stop on time, temperature or push button
- Compressor
  - voltage protection
  - anti-cycle timers for optimum compressor protection
  - high-effect 16 A relays for connection of compressors
- Evaporator Fan
  - fan delay function
  - smart evaporator fan management for energy saving
  - fan stop at high evaporator temperature
- Alarms
  - high and low temperature alarm
  - sensor failure alarm
  - high and low voltage alarm
  - condenser cleaning alarm
  - door open alarm
  - external alarm input
- Multi-purpose DI input
  - two multipurpose DI input for defrost start, Day / night control, main switch, reference displacement and continuous cycle control
- Display & programming
  - bigger and High efficient LED Display
  - display temperatures in °C / °F
  - parameter settings/readouts and alarm conditions can be read on the display
- Other functions
  - zero cross switching in all relays
  - three levels password protection
  - door function with alarm monitoring
  - delay of outputs at power up
  - keypad lock and unlock feature
  - galvanic Isolation

Technical data and ordering

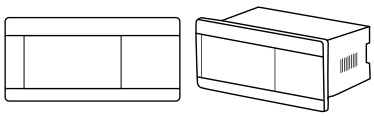

ERC 211 / ERC 213 / ERC 214 - Temperature controllers

Technical data

Features	Description
Power supply	115 V AC / 230 V AC 50 – 60 Hz, galvanic isolated low voltage regulated power supply
Rated power	Less than 0.7 W
Input	4 inputs: 2 analogue, 1 analogue / digital and 1 digital
Sensors	NTC 5000 Ohm at 25 °C NTC 10000 Ohm at 25 °C PTC 1000 Ohm at 25 °C PT1000
Accuracy	Measuring range: -40 – 105 °C / -40 – 221 °F
	Controller: ± 1 K below -35 °C, ± 0,5 K between -35 – 25 °C, ± 1 K above 25 °C
Output	1 Compressor relay: 16 (16 A) EN60730 16 (16 A) CQC; 16 A (60 FLA / 10 LRA) UL60730
	Aux relay 1: 8 A, 2 FLA / 12 LRA, UL60730 8 A, 2 (2 A), EN60730
	Aux relay 2: 3 A, 2 FLA / 12 LRA, UL60730 3 A, 2 (2 A), EN60730
	Aux relay 3: 2 A
Display	LED display, 3 digits, decimal point and multi functionality icons, °C + °F scale
Operating conditions	-10 – 55 °C / 14 – 131 °F, 90% Rh
Storage conditions	-40 – 70 °C / -40 – 158 °F, 90% Rh
Protection	Front: IP65 Rear: water and dust protection corresponds to IP31, accessibility of connectors limit rear part rating to IP00
Environmental	Pollution degree III (can be mounted inside a refrigerated cabinet), non-condensing
Resistance to heat and fire	Category D (UL94-V0)
EMC category	Category I
Approvals	UL (recognition) CB certification (ENEC, CE, CQC)

Ordering

Type	Description	Code no.
ERC 211	Red LED, 120 V, 1 relay	080G3290
	Red LED, 240 V, 1 relay	080G3293
ERC 213	Red LED, 120 V, 3 relay	080G3291
	Red LED, 240 V, 3 relay	080G3294
ERC 214	Red LED, 120 V, 4 relay	080G3292
	Red LED, 240 V, 4 relay	080G3295

AK-PC 351, Capacity controller

AK-PC 351 is used for capacity regulation of compressors and condensers in small refrigeration applications.
A maximum of 4 compressors and one condenser can be regulated:

- One suction group + one condenser group, max. 6 steps
- One compressor group, max. 4 steps
- One condenser group, max. 4 steps

Features
AK-PC 351

Solid state
output 1 pcs
control of bypass on a digital scroll or for controlling unloader on a stream compressor.
If the output is not used for the function, it can be used as ordinary relay output

Analogue inputs
max. 4 pcs signal from pressure transmitters, temperature sensors

Analogue outputs
max. 2 pcs
speed control of compressors and condenser fans



Digital inputs
max. 8 pcs signal from automatic safety control, day / night signal

Relay outputs
max. 5 pcs connection of compressors, condenser fans

Facts

- Energy savings via:
  - optimisation of suction pressure
  - night time increase
  - floating condensing pressure

Technical data and ordering

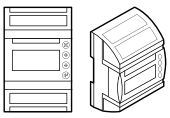

AK-PC 351, Capacity controller

Technical data

Features	Description	
Supply voltage	24 V AC ± 15%, 50 / 60 Hz, 17 V A	
	24 V DC (20 – 60 V), 17 V A	
4 analog Input	Pressure measuring: Ratiometric pressure transmitter type AKS 32R 1 – 5 volt pressure transmitter type AKS 32 0 – 20 (4 – 20) mA pressure transmitter type AKS 33	
	Temperature measurement Pt 1000 ohm / 0 °C NTC - 86 K from digital scroll / stream	
8 digital input	From contact function E.g. to: Start / stop of regulation Monitoring of safety circuits General alarm function	
Relay output to capacity control	5 pcs. SPST (5 A): AC-1: 5 A (ohmic)	
	5 pcs. SPST (5 A): AC-15: 2 (inductive)	
	1 pc. Solid State PWM for scroll -unload	Imax. = 0.5 A
		Imin. = 50 mA
		Leak<1.5 mA
2 Voltage output	0-10 V DC Ri = 1 kohm	
Display output	For type MMIGRS2	
Data communication	Modbus for AK-SM 850	
Environments	-20 – 60 °C, During operations	
	-40 – 70 °C, During transport	
	20 – 80% Rh, not condensed	
	No shock influence / vibrations	
Enclosure	IP40	
Weight	0.2 kg	
Mounting	DIN-rail	
Connection terminals	max. 2.5 mm^2 multi core	
Approvals	EU Low Voltage Directive and EMC demands re CE-marking complied with LVD tested acc. EN 60730-1 and EN 60730-2-9 EMC-tested acc. EN61000-6-2 and 3	

Ordering

Type	Description	Code no.
AK-PC 351	24 V AC / 20 – 60 V DC, LCD, RS485, 1SSR S	080G0289

AK-PC 551, Capacity controller

AK-PC 551 is used for capacity regulation of compressors and condensers in small refrigeration applications.
A maximum of 8 compressors and one condenser can be regulated:

- One suction group + one condenser group
- Two suction groups + one shared condenser, max. 4 + 4 steps
- One compressor group, max. 8 steps
- One condenser group, max. 8 steps

Features
AK-PC 551

Solid state outputs
max. 2 pcs.
- Control of capacity valve on a Copeland digital scroll
- Control of unloaders on a
- Copeland stream compressor.
- Control of unloaders on a Bitzer CRII Ecoline compressor.

If the outputs are not used for these functions, they can be used as ordinary relay outputs

Analogue inputs
max. 8 pcs signal from pressure transmitters, temperature sensors, voltage signal

Analogue outputs
max. 2 pcs speed control of compressors and condenser fans



Digital inputs
max. 8 pcs signal from automatic safety control, day / night signal

Relay outputs
max. 6 pcs connection of compressors, condenser fans

Facts

- Energy savings via:
  - optimisation of suction pressure
  - night time increase
  - floating condensing pressure
  - load limitation

Technical data and ordering

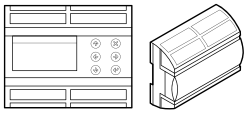

AK-PC 551, Capacity controller

Technical data

Features	Description	
Supply voltage	24 V AC ± 15%, 50 / 60 Hz, 17 V A	
	24 V DC (20 – 60 V), 17 V A	
	230 V AC (85 – 265 V) 50 / 60 Hz, 20 V A	
8 analog Input	Pressure measuring: Ratiometric pressure transmitter type AKS 32R 1 – 5 volt pressure transmitter type AKS 32 0 – 20 (4 – 20) mA pressure transmitter type AKS 33	
	Temperature measurement Pt 1000 ohm / 0 °C NTC - 86 K from digital scroll / stream	
8 digital input	From contact function E.g. to: Start / stop of regulation Monitoring of safety circuits General alarm function	
Relay output to capacity control	4 pcs. SPDT (8 A): AC-1: 6 A (ohmic)	
	4 pcs. SPDT (8 A): AC-15: 4 A (inductive)	
	2 pcs. SPST (16 A): AC-1: 10 A (ohmic)	
	2 pcs. SPST (16 A): AC-15: 3.5 A (inductive)	
	2 pcs. Solid State. PWM for scroll -unload	Imax. = 0.5 A
		Imin. = 50 mA
		Leak<1.5 mA
2 Voltage output	0-10 V DC Ri = 1kohm, Separate 24 V supply required	
Display output	For type MMIGRS2	
Data communication	Modbus for AK-SM 850	
Environments	-20 – 60 °C, During operations	
	-40 – 70 °C, During transport	
	20 – 80% Rh, not condensed	
	No shock influence / vibrations	
Enclosure	IP20	
Weight	0.4 kg	
Mounting	DIN-rail	
Connection terminals	max. 2.5 mm^2 multi core	
Approvals	EU Low Voltage Directive and EMC demands re CE-marking complied with LVD tested acc. EN 60730-1 and EN 60730-2-9 EMC-tested acc. EN61000-6-2 and 3	

Ordering - AK-PC 551

Type	Description	Code no.
AK-PC 551	230 V, LCD, 2SSR, RS485, S	080G0281
AK-PC 551	24 V, LCD, 2SSR, RS485, S	080G0283

Ordering - AK-PC 551 kit

Type	Description	Code no.
AK-PC 551 kit	230 V, for remote display, 2SSR, RS485, S + MMIGRS2 + 1.5m CABLE	080G0282
AK-PC 551 kit	24 V, for remote display, 2SSR, RS485, S + MMIGRS2 + 1.5m CABLE	080G0288

Accessories

Type	Description	Code no.
MMIGRS2	MMIGRS2, REMOTE DISPLAY, PANEL, S	080G0294
ACCCBI	TELEPHONE CABLE USER INTERFACE CONNECTOR, 1.5 M CABLE	080G0075
ACCCBI	TELEPHONE CABLE USER INTERFACE CONNECTOR, 3 M CABLE	080G0076

AK-PC 651, Capacity controller

AK-PC 651 is used for capacity regulation of compressors and condensers in small refrigeration applications.
A maximum of 10 compressors and one condenser can be regulated:

- One suction group + one condenser group
- One compressor group, max. 10 steps
- One condenser group, max. 8 steps

Features
AK-PC 651

Solid state outputs
max. 2 pcs.
- Control of capacity valve on a Copeland digital scroll
- Control of unloaders on a
- Copeland stream compressor.
- Control of unloaders on a Bitzer CRII Ecoline compressor.

If the outputs are not used for these functions, they can be used as ordinary relay outputs

Analogue inputs
max. 10 pcs signal from pressure transmitters, temperature sensors, voltage signal

Analogue outputs
max. 4 pcs speed control of compressors and condenser fans



Digital inputs
max. 18 pcs signal from automatic safety control, day / night signal

Relay outputs
max. 13 pcs connection of compressors, condenser fans

Facts

- Energy savings via:
  - optimisation of suction pressure
  - night time increase
  - floating condensing pressure
  - load limitation

Technical data and ordering

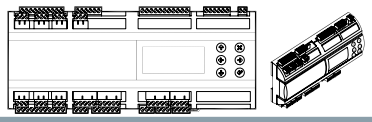

AK-PC 651, Capacity controller

Technical data

Features	Description	
Supply voltage	230 V AC (85 – 265 V) 50 / 60 Hz, 26 V A	
10 analog Input	Pressure measuring: Ratiometric pressure transmitter type AKS 32R 1 – 5 volt pressure transmitter type AKS 32 0 – 20 (4 – 20) mA pressure transmitter type AKS 33	
	Temperature measurement Pt 1000 ohm / 0 °C NTC - 86 K from digital scroll / stream	
18 digital input (14 for low voltage + 4 for high voltage or low voltage)	From contact function E.g. to: Start / stop of regulation Monitoring of safety circuits General alarm function	
Relay output to capacity control	7 pcs. SPST (8 A): AC-1: 6 A (ohmic), AC-15: 4 A (inductive)	
	4 pcs. SPDT (8 A): AC-1: 6 A (ohmic), AC-15: 4 A (inductive)	
	2 pcs. SPDT (16 A): AC-1: 7 A (ohmic), AC-15: 3.5 A (inductive)	
	2 pcs. Solid State. PWM for scroll -unload	Imax. = 0.5 A
		Imin. = 50 mA
		Leak<1.5 mA
4 Voltage output	0-10 V DC Ri = 1 kohm, Separate 24 V supply required	
Display output	For type MMIGRS2	
Data communication	Modbus for AK-SM 850	
Environments	-20 – 60 °C, During operations	
	-40 – 70 °C, During transport	
	20 – 80% Rh, not condensed	
	No shock influence/vibrations	
Enclosure	IP20	
Weight	0.8 kg	
Mounting	DIN-rail	
Connection terminals	max. 2.5 mm^2 multi core	
Approvals	EU Low Voltage Directive and EMC demands re CE-marking complied with LVD tested acc. EN 60730-1 and EN 60730-2-9 EMC-tested acc. EN61000-6-2 and 3	

Ordering - AK-PC 651

Type	Description	Code no.
AK-PC 651	230 V, LCD,2SSR, RS485, S	080G0312

Accessories

Type	Description	Code no.
MMIGRS2	MMIGRS2, REMOTE DISPLAY, PANEL, S	080G0294
ACCCBI	TELEPHONE CABLE USER INTERFACE CONNECTOR, 1.5M CABLE	080G0075
ACCCBI	TELEPHONE CABLE USER INTERFACE CONNECTOR, 3M CABLE	080G0076

AK-PC 772A, Capacity controller for small CO_2 booster

The controller is a complete regulating unit for capacity control of compressors and gas cooler in a small CO_2 booster system.

The controller is with oil management, heat recovery function and CO_2 gas pressure control.

Features
AK-PC 772A



Condenser optimisation
with regard to ambient temperature

Speed control
of 2 compressors

Can handle various compressor sizes

Controls
up to 4 fans

Fan speed control

Control:
up to 3 compressors on high pressure
up to 2 compressors on low pressure
up to 3 unloaders for each compressor

Separate functions
independent of control

Start-up coordination
ensures optimum interaction between the high pressure and low pressure circuits

Optimisation
of suction pressure for the most heavily loaded refrigeration area

Start / stop signal
for injection in cascade heat exchanger

Facts

- Integrated oil equalization
- Up to 8 compressor step
- 1 or 2 speed controlled compressors
- Heat recovery functions
- CO_2 gas cooler control and receiver control
- Built in RS485 Lon communication

Technical data and ordering

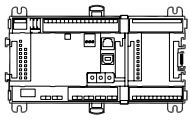

AK-PC 772A, Capacity controller for small CO_2 booster

Technical data

Features	Description	
Supply voltage	24 V DC / AC ± 20%	
Power consumption	8 V A	
Analogue inputs	Pt 1000 ohm / 0 °C	Dissolution: 0.1 °C, Accuracy: ± 0.5 °C
	Pressure transmitter type AKS 32R / AKS 2050 / AKS 32 (1-5 V)	Dissolution 1 mV, Accuracy ± 10 mV Max. connection of 5 pressure transmitters on one module
	Contact function (ON / OFF)	On at R < 20 ohm, Off at R > 2K ohm (Gold plated contacts not necessary)
ON / OFF supply voltage inputs	Low voltage 0 / 80 V DC / AC	OFF : U < 2 V ON: U > 10 V
	High voltage 0 / 260 V AC	OFF : U < 24 V ON: U > 80 V
Relay outputs SPDT	AC-1 (ohmic)	5 A
	AC-15 (inductive)	3 A
	U	Min. 24 V - Max. 230 V Low and high voltage must not be connected to the same output group
Solid state outputs	Can be used for loads that are frequently cut in and out e.g. unloaders, solenoid valve	Max. 240 V AC, Min. 48 V AC - Max. 0.5 A Leak < 1 mA Max. 1 AKV
Ambient temperature	During transport	-40 – 70 °C
	During operation	-20 – 55 °C, 0 – 95% RH (non condensing) - No shock influences / vibrations
Enclosure	Material	PC / ABS
	Enclosure	IP10, VBG 4
	Mounting	For mounting on wall or DIN rail
Weight with screw terminals	Modules in100- / 200- / controller series	Approx. 200 g / 500 g / 600 g
Approvals	Complies with EU low voltage directive and EMC requirements	LVD tested according to EN 60730 EMC tested - Immunity according to EN 61000-6-2, Emission according to EN 50081-1
	UL file number	E166834

Ordering

Type	Language	Code no.
AK-PC 772A	English, German, French, Italian, Dutch	080Z0201

Ordering Accessory - Extension modules and survey for inputs and outputs

Type	Analog inputs	ON / OFF outputs		ON / OFF supply voltage (DI signal)		Analog outputs	Stepper outputs	Module with switches	Code no.
	For sensors, pressure transmitters	Relay (SPDT)	Solid state	Low voltage (max. 80 V)	High voltage (max. 260 V)	0 -10 V d. c.	For valves with step control	For override of relay outputs	
Controller	11	4	4	–	–	–	–	–	–
AK-XM 101A	8	–	–	–	–	–	–	–	080Z0007
AK-XM 102A	–	–	–	8	–	–	–	–	080Z0008
AK-XM 102B	–	–	–	–	8	–	–	–	080Z0013
AK-XM 103A	4	–	–	–	–	4	–	–	080Z0032
AK-XM 204A	–	8	–	–	–	–	–	–	080Z0011
AK-XM 204B	–	8	–	–	–	–	–	x	080Z0018
AK-XM 205A	8	8	–	–	–	–	–	–	080Z0010
AK-XM 205B	8	8	–	–	–	–	–	x	080Z0017
AK-XM 208C	8	–	–	–	–	–	4	–	080Z0023

Software

AK-ST 500	Software for operation of AK controllers	080Z0161

Remote displays

EKA 163B	Display unit	084B8574
EKA 164B	Display unit with operation buttons	084B8575
MMIGRS2	Graphic display with operation	080G0294

Miscellaneous

AK-CM 102	Communication modules for controllers where modules cannot be connected continuously	080Z0064

AK-PC 781A, Capacity controller

The controller is a complete regulating unit for capacity control of compressors and condensers in commercial refrigeration systems. These controllers are particularly well suited to capacity control of cascade or booster systems.

Full capacity control of both circuits can be obtained by using two controllers.

Features
AK-PC 781A



Condenser optimisation
with regard to ambient temperature

Speed control
of 2 compressors

Can handle various compressor sizes

Dirty condenser fault detection

Controls
up to 8 fans

Separate functions
independent of control

Fan speed control

Start-up coordination
ensures optimum interaction between the high pressure and low pressure circuits in cascade / booster systems

Control
of up to 10 compressors with up to three unloaders each

Optimisation
of suction pressure for the most heavily loaded refrigeration area

Start / stop signal
for injection in cascade heat exchanger

Facts

- Integrated oil management
- Also suitable for use in CO_2 systems
- Heat recovery functions
- CO_2 gas pressure control
- Parallel compression for a transcritical CO_2 systems
- Built in RS485 Lon communication

Technical data and ordering

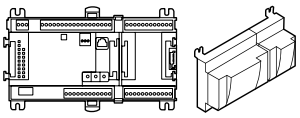

AK-PC 781A, Capacity controller

Technical data

Features	Description	
Supply voltage	24 V DC / AC ± 20%	
Power consumption	8 V A	
Analogue inputs	Pt 1000 ohm / 0 °C	Dissolution: 0.1 °C, Accuracy: ± 0.5 °C
	Pressure transmitter type AKS 32R / AKS 2050 / AKS 32 (1 – 5 V)	Dissolution 1 mV, Accuracy ± 10 mV Max. connection of 5 pressure transmitters on one module
	Contact function (ON / OFF)	On at R < 20 ohm
		Off at R > 2K ohm
		(Gold plated contacts not necessary)
ON / OFF supply voltage inputs	Low voltage 0 / 80 V AC / DC	OFF : U < 2 V ON: U > 10 V
	High voltage 0 / 260 V AC	OFF : U < 24 V
		ON: U > 80 V
Relay outputs SPDT	AC-1 (ohmic)	5 A
	AC-15 (inductive)	3 A
	U	Min. 24 V - Max. 230 V Low and high voltage must not be connected to the same output group
Solid state outputs	Can be used for loads that are frequently cut in and out e.g. unloaders, solenoid valve	Max. 240 V AC, Min. 48 V AC - Max. 0.5 A
		Leak < 1 mA
		Max. 1 AKV
Ambient temperature	During transport	-40 – 70 °C
	During operation	-20 – 55 °C, 0 – 95% RH (non condensing) - No shock influences / vibrations
Enclosure	Material	PC / ABS
	Enclosure	IP10, VBG 4
	Mounting	For mounting on wall or DIN rail
Weight with screw terminals	Modules in100- / 200- / controller series	Approx. 200 g / 500 g / 600 g
Approvals	Complies with EU low voltage directive and EMC requirements	LVD tested according to EN 60730 EMC tested - Immunity according to EN 61000-6-2, Emission according to EN 50081-1
	UL file number	E166834

Ordering

Type	Language	Code no.
AK-PC 781A	English, German, French, Italian, Dutch, Spanish, Portuguese, Danish, Finnish, Russian, Chech, Polish, Chinese	080Z0191

Ordering Accessory - Extension modules and survey for inputs and outputs

Type	Analog inputs	ON / OFF outputs		ON / OFF supply voltage (DI signal)		Analog outputs	Stepper outputs	Module with switches	Code no.
	For sensors, pressure transmitters	Relay (SPDT)	Solid state	Low voltage (max. 80 V)	High voltage (max. 260 V)	0 -10 V d. c.	For valves with step control	For override of relay outputs	
Controller	11	4	4	–	–	–	–	–	–
AK-XM 101A	8	–	–	–	–	–	–	–	080Z0007
AK-XM 102A	–	–	–	8	–	–	–	–	080Z0008
AK-XM 102B	–	–	–	–	8	–	–	–	080Z0013
AK-XM 103A	4	–	–	–	–	4	–	–	080Z0032
AK-XM 204A	–	8	–	–	–	–	–	–	080Z0011
AK-XM 204B	–	8	–	–	–	–	–	x	080Z0018
AK-XM 205A	8	8	–	–	–	–	–	–	080Z0010
AK-XM 205B	8	8	–	–	–	–	–	x	080Z0017
AK-XM 208C	8	–	–	–	–	–	4	–	080Z0023

Software

AK-ST 500	Software for operation of AK controllers	080Z0161

Remote displays

EKA 163B	Display unit	084B8574
EKA 164B	Display unit with operation buttons	084B8575
MMIGRS2	Graphic display with operation	080G0294

Miscellaneous

AK-CM 102	Communication modules for controllers where modules cannot be connected continuously	080Z0064

AK-PC 782A, Capacity controller

AK-PC 782A is a powerful and flexible controller that provides precise regulation, improved efficiency, and enhanced user friendliness for pack control in transcritical CO_2 booster packs.

The controller flexibility and efficiency makes it the obvious choice for all sizes of packs in all climates.

Features
AK-PC 782A



Condenser optimisation
with regard to ambient temperature

Speed control
of 2 compressors

Can handle various compressor sizes

Receiver pressure optimisation with regards to reaching the optimal efficiency

High Pressure optimisation with Danfoss Multi Ejector™

General purpose functions
with Quick Application Selection for independent control functions

Easy first-time use with wizard-like set-up

Robust algorithms warrant safe initial start up and powerful operation

Scalable
to control large booster packs with up to 12 compressorseach

Optimisation
of suction pressure for the most heavily loaded refrigeration area

Start / stop signal
Best in class robustness ensures highest up-time by managing extreme operational conditions and fault situations

Facts

- One controller for the entire CO_2 booster pack
- High pressure control
- Danfoss Multi Ejectortm control
- Parallel compressor control
- Heat recovery functions
- Floating receiver pressure control
- Built in RS485 Lon communication
- Oil system pressurisation and flow management

Technical data and ordering

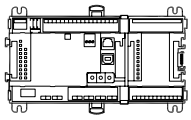

AK-PC 782A, Capacity controller

Technical data

Features	Description	
Supply voltage	24 V DC / AC ± 20%	
Power consumption	8 V A	
Analogue inputs	Pt 1000 ohm / 0 °C	Dissolution: 0.1 °C
		Accuracy: ± 0.5 °C
	Pressure transmitter type AKS 32R / AKS 2050 / AKS 32 (1 – 5 V)	Dissolution 1 mV Accuracy ± 10 mV Max. connection of 5 pressure transmitters on one module
	Contact function (ON / OFF)	On at R < 20 ohm
		Off at R > 2K ohm
		(Gold plated contacts not necessary)
ON / OFF supply voltage inputs	Low voltage 0 / 80 V AC / DC	OFF : U < 2 V ON: U > 10 V
	High voltage 0 / 260 V AC	OFF : U < 24 V
		ON: U > 80 V
Relay outputs SPDT	AC-1 (ohmic)	5 A
	AC-15 (inductive)	3 A
	U	Min. 24 V - Max. 230 V Low and high voltage must not be connected to the same output group
Solid state outputs	Can be used for loads that are frequently cut in and out e.g. unloaders, solenoid valve	Max. 240 V AC, Min. 48 V AC - Max. 0.5 A
		Leak < 1 mA
		Max. 1 AKV
Ambient temperature	During transport	-40 – 70 °C
	During operation	-20 – 55 °C, 0 – 95% RH (non condensing) - No shock influences / vibrations
Enclosure	Material	PC / ABS
	Enclosure	IP10, VBG 4
	Mounting	For mounting on wall or DIN rail
Weight with screw terminals	Modules in100- / 200- / controller series	Approx. 200 g / 500 g / 600 g
Approvals	Complies with EU low voltage directive and EMC requirements	LVD tested according to EN 60730 EMC tested - Immunity according to EN 61000-6-2, Emission according to EN 50081-1
	UL file number	E166834

Ordering

Type	Language	Code no.
AK-PC 782A	English, German, French, Italian, Dutch, Spanish, Portuguese, Danish, Finnish, Russian, Chech, Polish, Chinese	080Z0192

Ordering Accessory - Extension modules and survey for inputs and outputs

Type	Analog inputs	ON / OFF outputs		ON / OFF supply voltage (DI signal)		Analog outputs	Stepper outputs	Module with switches	Code no.
	For sensors, pressure transmitters	Relay (SPDT)	Solid state	Low voltage (max. 80 V)	High voltage (max. 260 V)	0 -10 V d. c.	For valves with step control	For override of relay outputs	
Controller	11	4	4	–	–	–	–	–	–
AK-XM 101A	8	–	–	–	–	–	–	–	080Z0007
AK-XM 102A	–	–	–	8	–	–	–	–	080Z0008
AK-XM 102B	–	–	–	–	8	–	–	–	080Z0013
AK-XM 103A	4	–	–	–	–	4	–	–	080Z0032
AK-XM 204A	–	8	–	–	–	–	–	–	080Z0011
AK-XM 204B	–	8	–	–	–	–	–	x	080Z0018
AK-XM 205A	8	8	–	–	–	–	–	–	080Z0010
AK-XM 205B	8	8	–	–	–	–	–	x	080Z0017
AK-XM 208C	8	–	–	–	–	–	4	–	080Z0023

Software

AK-ST 500	Software for operation of AK controllers	080Z0161

Remote displays

EKA 163B	Display unit	084B8574
EKA 164B	Display unit with operation buttons	084B8575
MMIGRS2	Graphic display with operation	080G0294

Miscellaneous

AK-CM 102	Communication modules for controllers where modules cannot be connected continuously	080Z0064

AK-PC 783A, Capacity controller with cascade control

The controller is a complete regulating unit for capacity control of compressors and condensers in refrigeration plants with cascade function.

The controller controls the high-pressure circuit, low-pressure circuit and cascade circuit.

Features
AK-PC 783A



Condenser optimisation
with regard to ambient temperature

Speed control
of 2 compressors

Can handle various
compressor sizes

Dirty condenser
fault detection

Separate functions
independent of control

Start-up coordination
ensures optimum interaction between the high pressure and low pressure circuits

Controls
up to 8 fans

Fan speed control

Control
of up to 12 compressors with up to 3 unloaders each.
Max 6 MT + 6 LT or 8 MT + 4 LT

Optimisation
of suction pressure for the most heavily loaded refrigeration area

Start / stop signal
for injection in cascade heat exchanger

Facts

- Integrated oil equalization on MT
- Heat recovery functions
- Up to 3 screw compressors
- Built in RS485 Lon communication
- Digital scroll compressors

Technical data and ordering

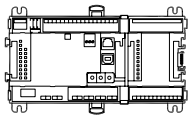

AK-PC 783A, Capacity controller with cascade control

Technical data

Features	Description	
Supply voltage	24 V DC / AC ± 20%	
Power consumption	8 V A	
Analogue inputs	Pt 1000 ohm / 0 °C	Dissolution: 0.1 °C, Accuracy: ± 0.5 °C
	Pressure transmitter type AKS 32R / AKS 2050 / AKS 32 (1 – 5 V)	Dissolution 1 mV, Accuracy ± 10 mV Max. connection of 5 pressure transmitters on one module
	Contact function (ON / OFF)	On at R < 20 ohm, Off at R > 2K ohm (Gold plated contacts not necessary)
ON / OFF supply voltage inputs	Low voltage 0 / 80 V AC / DC	OFF : U < 2 V ON: U > 10 V
	High voltage 0 / 260 V AC	OFF : U < 24 V ON: U > 80 V
Relay outputs SPDT	AC-1 (ohmic)	5 A
	AC-15 (inductive)	3 A
	U	Min. 24 V - Max. 230 V Low and high voltage must not be connected to the same output group
Solid state outputs	Can be used for loads that are frequently cut in and out e.g. unloaders, solenoid valve	Max. 240 V AC, Min. 48 V AC - Max. 0.5 A Leak < 1 mA Max. 1 AKV
Ambient temperature	During transport	-40 – 70 °C
	During operation	-20 – 55 °C, 0 – 95% RH (non condensing) - No shock influences / vibrations
Enclosure	Material	PC / ABS
	Enclosure	IP10, VBG 4
	Mounting	For mounting on wall or DIN rail
Weight with screw terminals	Modules in100- / 200- / controller series	Approx. 200 g / 500 g / 600 g
Approvals	Complies with EU low voltage directive and EMC requirements	LVD tested according to EN 60730 EMC tested - Immunity according to EN 61000-6-2, Emission according to EN 50081-1
	UL file number	E166834

Ordering

Type	Language	Code no.
AK-PC 783A	English, German, French, Italian, Dutch, Spanish, Portuguese	080Z0193

Ordering Accessory - Extension modules and survey for inputs and outputs

Type	Analog inputs	ON / OFF outputs		ON / OFF supply voltage (DI signal)		Analog outputs	Stepper outputs	Module with switches	Code no.
	For sensors, pressure transmitters	Relay (SPDT)	Solid state	Low voltage (max. 80 V)	High voltage (max. 260 V)	0 -10 V d. c.	For valves with step control	For override of relay outputs	
Controller	11	4	4	–	–	–	–	–	–
AK-XM 101A	8	–	–	–	–	–	–	–	080Z0007
AK-XM 102A	–	–	–	8	–	–	–	–	080Z0008
AK-XM 102B	–	–	–	–	8	–	–	–	080Z0013
AK-XM 103A	4	–	–	–	–	4	–	–	080Z0032
AK-XM 204A	–	8	–	–	–	–	–	–	080Z0011
AK-XM 204B	–	8	–	–	–	–	–	x	080Z0018
AK-XM 205A	8	8	–	–	–	–	–	–	080Z0010
AK-XM 205B	8	8	–	–	–	–	–	x	080Z0017
AK-XM 208C	8	–	–	–	–	–	4	–	080Z0023

Software

AK-ST 500	Software for operation of AK controllers	080Z0161

Remote displays

EKA 163B	Display unit	084B8574
EKA 164B	Display unit with operation buttons	084B8575
MMIGRS2	Graphic display with operation	080G0294
	Remote display, Wall, S	080G0295
	Remote display, Panel, I	080G0297

Miscellaneous

AK-CM 102	Communication modules for controllers where modules cannot be connected continuously	080Z0064

Optyma™ Control, Single-phase

The Optyma™ Control is particularly suitable for the Optyma™ and Optyma™ **Plus** condensing units from Danfoss but is also compatible with other condensing units on the market.
The control features an attractive new design and simple flexible programming.

It offers both control and protection in a single unit, thanks to the unique built-in differential magnetothermic circuit breaker, which guarantees safety by cutting the general power supply.

Features Optyma™



Stylish new design

Simple wiring
and live outputs

Transparent cover
for access to magnetothermic breaker, all with IP65 protection rating

New hinged cover
ease of installation and opening

Integration of control
and protection in a single room dedicated unit reduces installation time and costs

Simple, flexible programming
for optimum versatility

Compressor
can be run in pump-down stop mode

RS485 Modbus
for data communication and integration into a complete ADAP-KOOL® system

Guaranteed certified safety and protection
thanks to incorporated differential magnetothermic circuit breaker, which cuts the general power supply

Facts

- Direct control of defrosting elements, evaporator fans, room light with outputs directly connectable to the various units
- Automatic fuse protect the refrigeration unit
- Stylish ABS housing with transparent cover for access to the automatic fuse, all with an IP65 protection rating so that panel can be used outside the room
- LED indicators and large display show system status
- User-friendly keypad
- Display resolution to 0.1 °C
- Standard and ADAP-KOOL® compatible Modbus data communication

Technical data and ordering

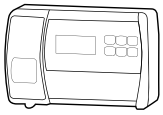

Optyma™ Control, Single phase

Technical data

Features	Description	
Power supply	Voltage	230 V AC ± 10%, 50 / 60 Hz
	Max absorbed power (electronic control)	~ 7 V A
Ambient conditions	Operating temperature	-5 – 50 °C
	Storage temperature	-30 – 70 °C
	Relative humidity	< 90% RH
General characteristics	Connectable sensor types	NTC 10 K 1%
	Resolution	0.1 °K
	Probe read precision	± 0.5 °K
	Read range	-45 – 45 °C
Output characteristics max. applicable load (230 V AC)	Compressor	1500 W (AC3)
	Defrost	3000 W (AC1)
	Fans	500 W (AC3)
	Room light	800 W (AC1)
	Configurable alarm contact / aux (voltage-free contact)	100 W
General electric protection	Bipolar differential magnetothermic circuit breaker	16 A Id = 300 mA switching power 4.5 kA Id = 30 mA (on request)
Insulation and mechanical characteristics	Cover protection rating	IP65
	Cover material	self-extinguishing ABS
	Type of insulation	Class II
	Box dimensions	262 x 168 x 97

Connection diagram

AK-RC 101

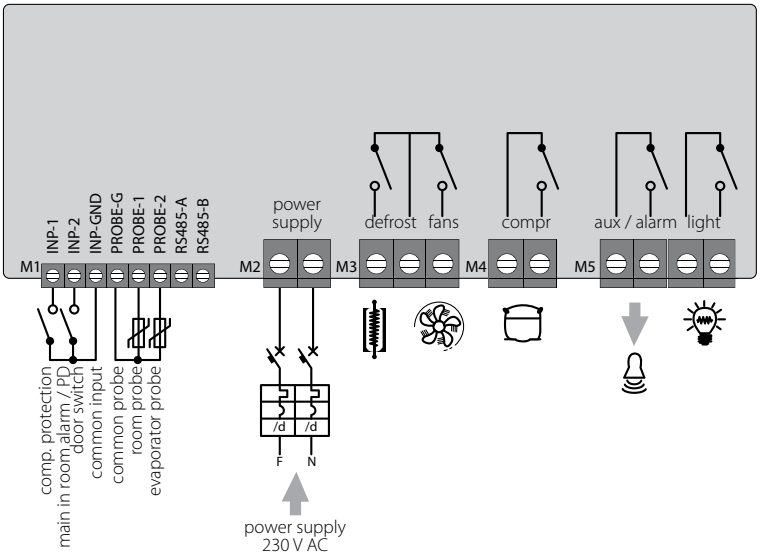

Ordering

Type	Description	Code no.
AK-RC 101	Optyma™ Control, single-phase	080Z3200

Optyma™ Control, Three-phase

The Optyma™ Control is particularly suitable for the Optyma™ and Optyma™ **Plus** condensing units from Danfoss but is also compatible with other condensing units on the market. The control features an attractive new design and simple flexible programming.

It offers both control and protection in a single unit, thanks to the unique built-in differential magnetothermic circuit breaker, which guarantees safety by cutting the general power supply.

Features Optyma™

Direct control
of the compressor, condenser fans, compressor oil heater, defrosting heaters, evaporator fans, solenoid valve, room light and all standard-compliant electrical safeguards

Transparent cover
for access to magnetothermic circuit breaker, all with IP65 protection rating

Electronic control
with wide LED display and easy-to-use buttons

Auxiliary relay
with activation configurable by parameter

RS485 Modbus
for data communication and integration into a complete ADAP-KOOL® system



Differential
magnetothermic circuit breaker (for cutting the general power supply) accessible from the front panel

Adjustable motor circuit
breaker for compressor protection accessible from the front panel

Status signaling
with LED icons

Easy wiring
on the internal terminal block

Facts

- LED icons to signal plant status
- Electronic control with wide LED display and easy to use buttons
- Display and adjustment of cold room temperature accurate to 0.1 °C
- Display of evaporator temperature from parameter
- System control activation / deactivation
- Alarm signalling: sensor errors, minimum and maximum temperature alarm, compressor protection (man-in-cold-room alarm in preset models)
- Evaporator fan control
- Automatic and manual defrost control (static, heating element)
- Direct or pump-down control of motor compressor unit (selectable by terminal block connection in preset models)
- Room light activation, via panel key or door switch
- Auxiliary relay with activation configurable by parameter
- Parameter access with password (4 different selectable restriction levels)
- General automatic fuse accessible from the front panel, which cuts the general power supply
- Adjustable motor protector for compressor protection accessible from the front panel (in preset models)
- Standard and ADAP-KOOL® compatible Modbus data communication

Technical data and ordering



Optyma™ Control, three phase

Technical data

Features	Optyma™ Control AK-RC 103, three-phase (3 kW)	Optyma™ Control AK-RC 103, three-phase (5 kW)
Case dimensions	400 × 300 × 135 mm	400 × 300 × 135 mm
Protection rating	IP65	IP65
Power supply (3F + N + T)	400 V AC ± 10% 50 / 60 Hz	400 V AC ± 10% 50 / 60 Hz
Load type	three-phase	three-phase
Operating temperature	-5 – 40 °C	-5 – 40 °C
Storage temperature	-25 – 55 °C	-25 – 55 °C
Relative ambient humidity	< 90% RH	< 90% RH
Main switch / general protection	4 poles magnetothermic 16 A	4 poles magnetothermic 25 A
Compressor protection	motor circuit breaker	motor circuit breaker
Defrosting	electrical	electrical
Status indicators	LED + display	LED + display
Alarm signals	LED + buzzer	LED + buzzer
Ambient probe	NTC 10 K 1%	NTC 10 K 1%
Evaporator probe	NTC 10 K 1%	NTC 10 K 1%
Door switch	present	present
High/low pressure switch	present	present
Kriwan® connection	present	present
Compressor functioning mode selection	pump-down / thermostat	pump-down / thermostat
Compressor	370 W – 3000 W	3000 W – 5500 W
Condenser fans output 1	800 W (1 ph)	800 W (1 ph)
Condenser fans output 2 (separated)		total (1 ph)
Evaporator fans	500 W (1 ph)	2000 W (1 ph/3 ph)
Defrosting heaters	6000 W	9000 W
Room light	800 W (AC1) resistive load	800 W (AC1) resistive load
Solenoid valve	present	present
Compressor oil heater	present	present
Alarm relay	100 W	100 W

Connection diagram

AK-RC 103 - three-phase (3 kW)

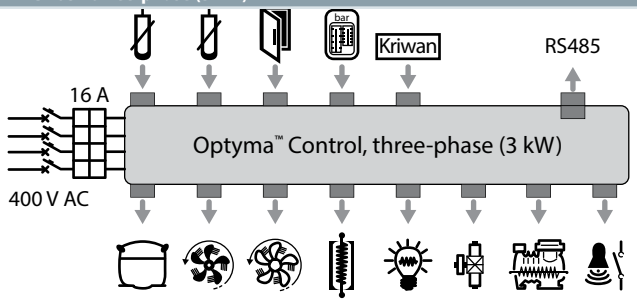

AK-RC 103 - three-phase (5 kW)

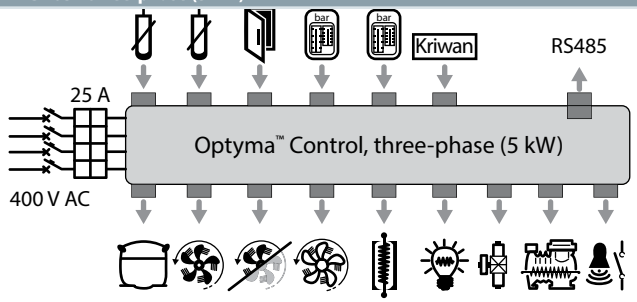

Ordering

Type	Description	Code no.
AK-RC 103	Optyma™ Control, three-phase (3 kW) 4.5-6.3 A	080Z3201
AK-RC 103	Optyma™ Control, three-phase (3 kW) 7-10 A	080Z3202
AK-RC 103	Optyma™ Control, three-phase (5 kW) 11-16 A	080Z3206
AK-RC 103	Optyma™ Control, three-phase (5 kW) 14-20 A	080Z3207

AK-SM 800 series, System manager

The System Manager controller from Danfoss is the global control and supervisory solution for the food retail industry.
The System Manager uses the latest technology to provide the maximum benefit to the end user, both in terms of energy saving optimization, control options and full web useraccess.

Designed specifically for the food retail and food processing / handling market, the System Manager provides comprehensive functionality and support tools to cover small to large stores.

Features AK-SM 800



3 main versions
AK-SM 820 (C-Store), AK-SM 850 (Refrigeration) and AK-SM 880 (Full store)

Configuration
web based wizards to assist in initial setup

Available support tool
Remote Management Tool (RMT) that facilitates full offline programming, remote software updating and graphical screen creation

Full
web browser navigation

Custom graphic screen
(seen in web and local screen)

SVGA 800x600
local color screen

Support of Service Tool
via tunnelling over IP (AK2 only)

Site Service App
for Remote access from tablet or smart phone for service technitians

Seamless view
of multiple System Manager units that are interconnected (host network)

Automatically created plant
view screens showing main refrigeration systems in one screen

All new hardware casing
providing easy access to power and field bus connections, designed for wall or panel door mounting

Facts

- Product highlights:
  - direct support to EM-800 (AKM not supported / needed)
  - supports centralized and decentralized control strategy; compatible with Danfoss case and pack controllers and Danfoss I/O
  - open XML data transfer allowing remote access to key system parameters
- Design features:
  - active TFT SVGA color screen 800x600
  - front alarm status LED
  - removable keyboard panel (revealing connections)
  - easy access to USB flash drive
  - wall and panel mounting options
  - built in alarm relay output
- Hardware capability features:
  - built in web server
  - no back up battery required
  - RS485 LonWorks®
  - ethernet
  - EKC Modbus
  - USB

Technical data and ordering

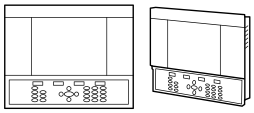

AK-SM 800 series, System manager

Technical data

SM800 version comparison	AK-SM 810, SM820 - C-Store Version	SM850 - Refrig version	SM880 - Full version
Refrigeration Control			
All SM800 variants come with Centralized I/O and Pack / Case control options. EKC AK2 SLV FC102	Max 32 generic device support	Max 120 generic support	Max 120 generic support
Lighting Control			
All SM800 variants come with built in lighting control via I/O modules. The number of zones differ	10	30	30
HVAC			
Only the SM820 and SM880 support built in HVAC control via I/O	10	n/a	45
Alarms			
Capacity	250	250	250
Miscellaneous points (via IO modules)			
Relay (R), Sensor (S), ON / OFF (O / F), Variable (V)	R=20, S=20, O / F=20, V=20	R=70, S=80, O / F=70, V=70	R=70, S=80, O / F=70, V=70
Master control			
Po Optimization, Master Schedules, AKC ON *Note: Adaptive Defrost not currently supported*	X	X	X
Misc Calculations			
Boolean Logic statements	96	96	96
History			
The SM800 has the ability to record datapoints for history and view	600 points	600 points	600 points
Leak Detectors			
Refrigerant gas detectors (connected via AK I/O)	10	50	50
Energy Meters			
Pulse Input (via I/O module), Carlo Garvazi, Wattnode, Wattnode Plus Modbus, Veris Modbus	32	80	80
Service Tool Support			
Tunneling via front end (IP connection only)	X	X	X

Ordering

Type	Description	Options	Code no.
AK-SM 810	C-Store Refrigeration/HVAC/Lightning,No display, No buttons	Convienience Store with 32 device capacity	080Z4006
AK-SM 820	C-Store (Refrigertion / HVAC / Lighting)	Convienience Store version with 32 device capacity	080Z4004
AK-SM 850	Refrigeration (including lighting)	Refrigeration version with 120 device capacity	080Z4001
AK-SM 880	Full (Refrigertion / HVAC / Lighting)	Full store version with 120 device capacity	080Z4008
AK-SM 800AL	Alarm logger	AK-SM 8xx accessory	080Z4014

GD, Gas detector for Industrial Refrigeration

The Danfoss gas detectors are based on a digital platform that delivers multiple communication and integration options for improved operational reliability, easy calibration and maintenance efficiency, cost effectiveness, and regulatory compliance.

To meet the relevant safety requirements for refrigeration systems and to protect people, produce and property from the adverse effects of a potential leak of toxic and/or flammable refrigerants, having a gas detection system that you trust, is essential. With the new Gas Detection solution Danfoss offers a series of fixed gas detector units that are not only reliable and accurate – but also much easier and intuitive to work with – from initial specification to long term operation.





For further information; please visit
GDIR.danfoss.com

Facts

- All gas detection units come factory pre-configured to match refrigerant and typical PPM settings required.
- Integrated calibration routine:
  - calibration with gas no longer involves the use of potentiometers and multimeters.
- Easy replaceable and pre-calibrated sensors for plug & play replacement.
- Service due information and service alerts support optimized maintenance planning.
- Digital interface provides improved accuracy and simplified operator handling, which help minimize risk of settings, calibration and service errors.
- Automatic self-diagnostics ensure correct communication and operation between units and system.
- To guarantee the proper functioning of the units and to prevent human error, the sensor head can only be replaced by the same type and ppm range.
- Password protected setting allows authorized access only.
- Reduced risk of false alarms due to temperature compensated sensors (EC, P, IR).
- For improved operational safety, degenerated sensors with too little life-time expectancy (<30% sensitivity) are rejected during calibration process.

Technical data

The Gas Detection System

Controller solution

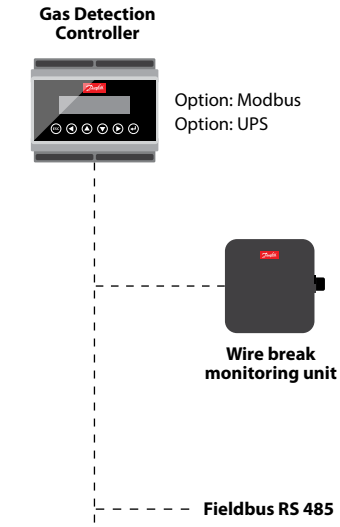

The Danfoss Gas Detection Solution provides a high degree of flexibility when designing and building your gas detection system.

The portfolio ranges from basic to heavy duty models complemented by a range of accessories. The gas detection units (GDU) can detect a wide range of refrigerant gases including Ammonia (R717), CO_2 (R744), fluorinated refrigerants (HCFC and HFCs), and Propane (R290). They come with various sensor technologies to match the specific refrigerant, application, and safety requirements of the refrigeration system including electrochemical (EC), semiconductor (SC), Pellistor (P), and Infrared (IR) sensors.

The analog or RS485 Modbus connection enables easy communication to a central system. Stand-alone gas detection units with integrated relays are available and can be connected to external systems directly to activate alarm devices.

To provide a strong plug and play solution, all gas detection units come factory pre-configured to match refrigerant and typical PPM setting requirements. Depending on national regulations PPM settings may be subject to change.

Basic GDU
2 units

Premium GDU
6 units

Heavy Duty GDU
1 unit

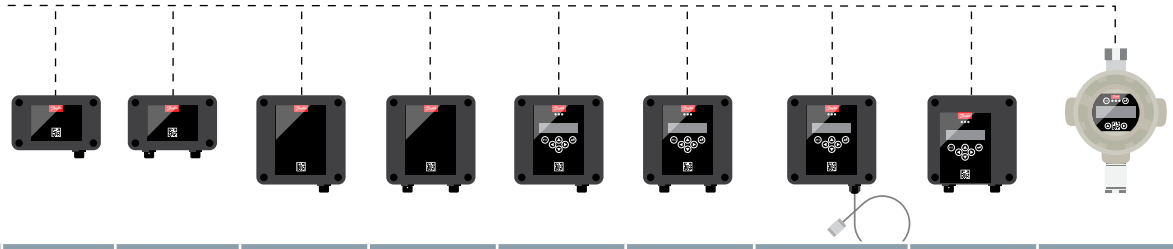

Name	Basic	Basic+	Premium	Premium+	Premium Flex	Premium Duplex	Premium Remote	Premium Uptime	Heavy Duty
Features			3 relays						2 relays
		Buzzer & light		Buzzer & light				Buzzer & light	
					LCD display	LCD display	LCD display	LCD display	LCD display
						2 different sensors	Remote sensor 5 m (16.4 ft.) cable	UPS	Explosion proof (ATEX/IEC)
Protection	IP 65								
Communication	Analog (4-20 mA) and RS 485 Modbus communication								
Power supply	24 V AC/DC		24 V DC					90-240 V AC	24 V DC
Ammonia	✓	✓	✓	✓	✓	✓	✓	✓	✓
CO_2					✓				
Fluorinated	✓	✓	✓	✓	✓				
Hydrocarbons			✓	✓	✓				

Service tools

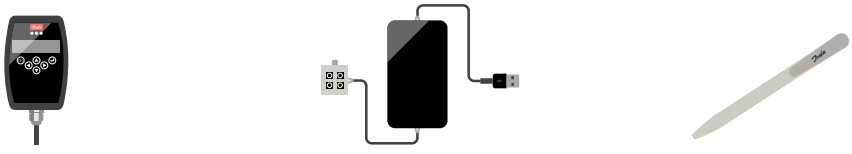

Service Tool
(handheld)

PC tool

Magnetic Pen
(for Heavy Duty display communication)

Technical data

Basic and Basic+

The Basic and Basic+ gas detection units are used for monitoring and warning of hazardous gas concentrations.

They are intended to be connected to a central system like the Danfoss gas detection controller, or a PLC, by either Analog or RS485 open Modbus communications. The central system converts the alarm signal from the gas detection unit to activation of alarm devices.

The basic units have a factory default set-up with two (2) alarm set-points ready for use. The integrated software enables the user to configure two individual alarm ranges. Alarm 1, a pre-alarm indicating the gas level has passed a predefined threshold 1, and – if the gas level passes predefined threshold 2 – the final alarm 2. Adjustment, calibration, and maintenance are done via the dedicated Service tool or the PC tool

The basic units come with sensors for Ammonia and selected HFC's. Depending on the application, they are available with an electrochemical or a semiconductor sensor.

Basic: Gas detection unit with one sensor
Basic+: In addition to the Basic model, this unit Includes a buzzer & light function for local alarm (visual and audio)

Basic



Basic+



Gas types and thresholds - Basic and Basic+

Sensor	Sensor Type	ppm range	Alarm 1	Alarm 2	Hysteresis
Ammonia EC 100	Electrochemical	0-100	25 ppm	35 ppm	2 ppm
Ammonia EC 300	Electrochemical	0-300	25 ppm	150 ppm	2 ppm
Ammonia EC 1000	Electrochemical	0-1000	500 ppm	900 ppm	25 ppm
Ammonia SC 1000	Semiconductor	0-1000	500 ppm	900 ppm	25 ppm
HFC R404A, R507 SC2000	Semiconductor	0-2000	500 ppm	900 ppm	25 ppm

Hysteresis = 5% of Alarm1 (rounded up to the next higher integer)

Technical data

Basic and Basic+

Electrical	
Power supply	19 – 29 V AC / DC, DC reverse-polarity protected
Power consumption (24 V DC)	Max. 250 mA (6 VA)

Outgoing line local bus	
Power supply	5 V DC, 250 mA max., overload, short-circuit and reverse-polarity protected

Serial interface	
Local bus	1-wire / 19200 baud
Fieldbus	RS 485 / 19200 baud
Tool bus	2-wire / 19200 baud

General	
Temperature range	-30 – 50 °C / -22 – 122 °F
Humidity range	15 – 90% RH not-condensing
Storage temperature	5 – 30 °C / 41 – 86 °F
Storage time	12 months

Physical	
Housing	Type A
Material	Polycarbonate
Burning behaviour	UL 94 V2
Housing colour	Black
Dimensions (W x H x D in mm)	94 x 130 x 57
Weight (kg)	Approx. 0.3kg / 0.8 lbs.
Protection class	IP 65
Installation	Wall mounting
Cable entry	2 x M12 / 3 x M20
Wire connection: Power supply, fieldbus Analog output Local bus for sensor	 Screw-type terminals 0.25 – 2.5 mm^2 (25 AWG to 14 AWG) Screw-type terminals 0.25 – 1.3 mm^2 (25 AWG to 17 AWG) 3-pin plug connector
Cable lengths local bus for remote sensor board	Max. 5 m / 16.4 ft.

Directives
EMC directives 2014/30/EU
CE
Conformity to EN 50271, EN 61010-1 ETL listed to UL 61010-1 and CSA C22.2 No.61010-1 Enables regulatory compliance with EN 378:2016, ISO 5149:2014, IIAR 2-2017, and ASHRAE 15:2016

Analog output signal
Proportional, overload and short-circuit proof, load ≤ 500 Ohm 4 - 20 mA = measuring range 3.0 < 4 mA = underrange > 20 - 21.2 mA = overrange 2.0 mA = fault

Status LED / Buzzer & light (only Basic+)	
Colour	3 color light: Green, yellow, red
Acoustic pressure	> 85 dB (A) (0.1 m distance)
Frequency	2300 Hz
Protection class	IP 65

Technical data and ordering

Ordering Basic and Basic+

Basic = Standard
Basic+ = Standard + Buzzer & light warning device

Type	Model	Refrigerant	Sensor	ppm range	Alarm ppm	Temp. Range [°C]	Temp. Range [°F]	Code number
GDA	Basic	Ammonia	Electrochemical	0 – 100	25 / 35	-30 – 50	-22 – 122	148H6000
GDA	Basic+*	Ammonia	Electrochemical	0 – 100	25 / 35	-30 – 50	-22 – 122	148H6001
GDA	Basic	Ammonia	Electrochemical	0 – 300	25 / 150	-30 – 50	-22 – 122	148H6008
GDA	Basic+*	Ammonia	Electrochemical	0 – 300	25 / 150	-30 – 50	-22 – 122	148H6009
GDA	Basic	Ammonia	Electrochemical	0 – 1000	500 / 900	-30 – 50	-22 – 122	148H6014
GDA	Basic+*	Ammonia	Electrochemical	0 – 1000	500 / 900	-30 – 50	-22 – 122	148H6015
GDA	Basic	Ammonia	Semiconductor	0 – 1000	500 / 900	-10 – 50	14 – 122	148H6023
GDA	Basic+*	Ammonia	Semiconductor	0 – 1000	500 / 900	-10 – 50	14 – 122	148H6024
GDHF	Basic	R404a, R507a, R32, R125, R407c, R434a, R488a, R125	Semiconductor	0 – 2000	500 / 900	-10 – 50	14 – 122	148H6045
GDHF	Basic+*	R404a, R507a, R32, R125, R407c, R434a, R488a, R125	Semiconductor	0 – 2000	500 / 900	-10 – 50	14 – 122	148H6046

** incl buzzer & Light*

Ordering spare parts and accessories for Basic and Basic+

Description	Code number
Replacement sensor - Ammonia EC 100	148H6200
Replacement sensor - Ammonia EC 300	148H6201
Replacement sensor - Ammonia EC 1000	148H6202
Replacement sensor - Ammonia SC 1000	148H6203
Replacement sensor - HFC R404A, R507 SC 2000	148H6210
Controller unit	148H6231
Controller solution (controller + enclosure)	148H6221
Warning module (wire break monitoring module)	148H6223
Controller expansion module	148H6222
Service tool	148H6224
PC tool	148H6235
Calibration adapter	148H6232
Buzzer & light - acoustic buzzer and optic led	148H6225
Air duct set	148H6236
Gateway for controller	148H6228
Seal cap	148H6227
Splash guard	148H6226

Controller unit:
Used for a centralized monitoring and warning.
The input signals for the controller are collected via RS485 Modbus or analog communication. The controller can handle up to 96 digital sensors via Fieldbus and four (4) analog input. An additional 28 analog input is possible using seven (7) expansion modules (4-20 mA signal interface). The total number of connected sensors should not exceed 128 sensors. The controller unit can be employed as pure analog controller, as analog/digital, or as digital controller. Configuration is menu-driven via the keypad. For fast and easy configuration, the PC Tool is recommended.

Controller solution:
Controller unit placed in an enclosure ready to be connected to a power source. A separate UPS for the controller is available.

Warning module (wire break monitoring module):
The warning module is used for monitoring the circuiting to the warning/alarm devices on a centrally controlled gas detection system. Wire breaks or wire interruptions in the alarm device loop will be reported to the central control.

Controller expansion module:
The gas detection Controller Expansion module is used for expansion of the cable coverage in terms of number of loops and the total wire length. Each Controller Unit can handle up to 7 Expansion modules allowing additional 7 segments with a total of 7200 meters (23622 ft.) wiring and a total of 32 relays for alarm device circuits.

Service tool:
For interface with units with no display (Basic, Basic+, Premium, Premium+). Acts as a portable display and can be connected to all Danfoss gas detection units. (Heavy Duty w. adapter).

PC tool:
The PC tool is a menu-driven and standalone software used for easy addressing, parameter setting, calibration, and data logging of the Basic, Premium and Heavy Duty gas detection units, and the controller unit.

Calibration adapter
The calibration adapter is required for connecting the calibration gas container, via the flow regulator, to the sensor head on the gas detection units. (Two variants, One for Basic and Premium plastic head sensors; one for heavy duty and Premium remote metal head sensors.).

Buzzer & light - acoustic buzzer and optic led:
Can be installed in Basic or Premium units providing a local alarm.

Air duct set:
The air duct set is specially designed to capture the airflow in air ducts. It can be connected to the standard sensor heads, except from Heavy Duty gas detection units.

Gateway for controller
The gateway is an addition to the controller and used for communicating via Modbus TCP/IP.

Seal cap:
Airtight seal cap to protect the sensor head against premature exposure during installation. The seal cap is mounted on new sensors (complete units and replacement sensors) but is also available as an accessory.

Splash guard:
To protect the sensor head against water exposure during wash-down cleaning and rinsing operations.

Technical data

Premium range

The Premium range of gas detection units are used for monitoring and warning of hazardous gas concentrations. They can be used for detecting most commonly used refrigerants.

They are intended as stand-alone or connected to a central system like the Danfoss gas detection controller or a PLC. As stand-alone, the on-board relays can be used for activation of alarm devices, while the analog or RS485 Modbus connection to a central system allows centralized monitoring and alarm activation. Four out of the six Premium variants have integrated display/keypad for direct access to the user-interface. This means that alarm level adjustments, calibration and parameter adjustments can be made directly on the menu in the display. For models without display (Premium & Premium+) the interface is via the dedicated Service or PC tool.

The Premium gas detection units have a factory default setup with two (2) alarm set-points ready for use. The user-interface enables the user to configure two individual alarm settings. Alarm 1, a pre-alarm indicating the gas level has passed a predefined threshold 1 and – if the gas level passes predefined threshold 2 – the final alarm 2. A total of four (4) alarm set-points on each gas detection unit is possible.

The Premium variants come with sensors for Ammonia, CO_2 and selected HC's and HFC's. Depending on the application and model, each unit is available with one or two different sensors (Premium Duplex). Sensor technologies include semiconductor, electrochemical, Pellistor or infrared.

Premium Duplex can have two different sensors. A Pellistor in combination with either an electrochemical or a semiconductor sensor can be mounted on the unit to detect Ammonia concentrations at very low and very high levels. This may be relevant in compressor rooms with requirements for low alarm set points (e.g. 25 PPM) and very high alarm set-points (e.g. 30000 PPM).

Premium Remote is applicable for vent line applications for the continuous monitoring of refrigeration system relief valves.

Premium Uptime has an integrated UPS to stay operational during power failure. Operating time > 60 minutes; wide range input (90 – 240 V AC – 50/60 Hz), and rechargeable battery.

Premium



Premium+



Premium Flex



Premium Remote



Premium Duplex



Premium Uptime



Gas types and thresholds - Premium range

Sensor	Sensor Type	ppm range	Alarm1	Alarm2	Hysteresis
Ammonia EC 100	Electrochemical	0 – 100	25 ppm	35 ppm	2 ppm
Ammonia EC 300	Electrochemical	0 – 300	25 ppm	150 ppm	2 ppm
Ammonia EC 1000	Electrochemical	0 – 1000	500 ppm	900 ppm	25 ppm
Ammonia EC 5000	Electrochemical	0 – 5000	1000 ppm	4500 ppm	50 ppm
Ammonia SC 1000	Semiconductor	0 – 1000	500 ppm	900 ppm	25 ppm
Ammonia SC 10000	Semiconductor	0 – 10000	5000 ppm	9000 ppm	250 ppm
Ammonia P LEL	Pellistor	0 – 140000	21% LEL (30000 ppm)	21% LEL (30000 ppm)	1%
CO_2 IR 20000 (2% Vol)	Infrared	0 – 20000	5000 ppm	9000 ppm	250 ppm
CO_2 IR 50000 (5% Vol)	Infrared	0 – 50000	10000 ppm	18000 ppm	500 ppm
HCFC R123 SC 2000	Semiconductor	0 – 2000	500 ppm	900 ppm	25 ppm
HFC R404A, R507 SC 2000	Semiconductor	0 – 2000	500 ppm	900 ppm	25 ppm
HFC R134A SC 2000	Semiconductor	0 – 2000	500 ppm	900 ppm	25 ppm
HC R290/Propane P 5000	Pellistor	0 – 5000	800 ppm	2500 ppm	40 ppm

Hysteresis = 5% of Alarm1 (rounded up to the next higher integer)
Alarm thresholds can have the same value, therefore the relays and/or the buzzer and LED can be triggered together.

Technical data

Premium range

Electrical		
Power supply	24 V DC ± 20 %, reverse-polarity protected	
Power consumption (24 V DC)	Max. 210 mA (5.1 VA)	
Alarm relays (3)	250 V AC, 5 A, potential-free, contacts (SPDT)	
Transistor output (2) (connector X13)	24 V DC / 0.1 A (switching to plus) (only at 24 V DC power supply)	
Analog output signal (1)	Proportional, overload and short-circuit proof, load ≤ 500 Ohm 4 – 20 mA = measuring range 3.0 < 4 mA = underrange > 20 – 21.2 mA = overrange 2.0 mA = fault	
Output for local bus	5 V DC, 250 mA max. Overload, short-circuit and reverse-polarity protected	

Ambient conditions		
Temperature range	Sensor dependant. See ordering section.	
Humidity range	15 – 95 % RH not-condensing	
Storage temperature	5 – 30 °C (41 – 86 °F	
Storage time	12 months	

Serial interface		
Local bus	1-wire / 19200 Baud	
Fieldbus	RS 485 / 19200 Baud	
Tool bus	2-wire / 19200 Baud	

Physical		
Housing	Type C	Type E (Premium Uptime)
Material	Polycarbonate	
Combustion	UL 94 V2	
Housing colour	Black	
Dimensions (W x H x D in mm)	130 x 130 x 75	130 x 130 x 99
Weight (kg)	Approx. 0.6 kg	Approx. 0.7 kg
Protection class	IP 65	
Installation	Wall mounting	
Cable entry	Standard 6 x M20/25	
Wire connection: Local bus (SC2) Digital input, analog output Power supply, relays	 3-pin connector Screw-type terminal min. 0.25 mm^2, max. 1.3 mm^2 (min. 25 AWG, max. 17 AWG) Screw-type terminal min. 0.25 mm^2, max. 2.5 mm^2 (min. 25 AWG, max. 14 AWG)	
Cable lengths local bus for Remote Sensor Board	Max. 5 m / 16.4 ft.	

Directives
EMC directives 2014/30/EU
Low voltage directive 2014/35/EU
CE
Conformity to EN 50271, EN 61010-1 ETL listed to UL 61010-1 and CSA C22.2 No.61010-1 Enables regulatory compliance with EN 378:2016, ISO 5149:2014, IIAR 2-2017, and ASHRAE 15:2016

Display (not Premium and Premium+)	
Temperature range	-20 – 50 °C / -4 – 122 °F
LCD	Two lines, 16 characters each, background highlighted in two colours
Operation	Menu driven via six push-buttons
Power consumption	5 V, 60 mA, 0.3 VA

Status LED	
Colour / Mode	Red / yellow / green (alarm – fault – operation - service)
Protection class	IP 65

Warning buzzer	
Acoustic pressure	> 85 dB (A) (0.1 m distance)
Frequency	2300 Hz
Protection class	IP 65

UPS (only Premium Uptime)	
Power unit with wide range input	90 – 240 V AC - 50/60 Hz
Output rating	15 VA
Rechargeable battery	12 V, 0.8 Ah
Operating time	> 60 min

Technical data and ordering

Ordering Premium range

Premium = Standard
Premium+ = Standard + Buzzer & light warning device
Premium Duplex = Standard + 2nd sensor + Display and keyboard
Premium Remote = Remote sensor (stainless steel) with 5m cable (2nd cable gland needed) not mounted but enclosed + Display and keyboard
Premium Flex = Standard + Display and keyboard
Premium Uptime = Standard + Buzzer & light warning device + Display and keyboard + UPS

Type	Model	Refrigerant	Sensor	ppm range	Alarm ppm	2nd Sensor ppm (Alarm ppm)	Remote sensor ppm (Alarm ppm)	Buzzer & Light	Display	UPS	Temp. Range [°C]	Temp. Range [°F]	Code number
GDA	Premium	Ammonia	Electrochemical	0 – 100	25 / 35						-30 – 50	-22 – 122	148H6002
GDA	Premium+	Ammonia	Electrochemical	0 – 100	25 / 35			x			-30 – 50	-22 – 122	148H6003
GDA	Premium Duplex	Ammonia	Electrochemical Pellistor	0 – 100	25 / 35	0 – 140000 (30000)			x		-20 – 50	-4 – 122	148H6004
GDA	Premium Remote	Ammonia	Electrochemical				0 – 100 (25 / 35)		x		-20 – 50	-4 – 122	148H6005
GDA	Premium Flex	Ammonia	Electrochemical	0 – 100	25 / 35				x		-20 – 50	-4 – 122	148H6006
GDA	Premium Uptime	Ammonia	Electrochemical	0 – 100	25 / 35			x	x	x	0 – 40	32 – 104	148H6007
GDA	Premium	Ammonia	Electrochemical	0 – 300	25 / 150						-30 – 50	-22 – 122	148H6010
GDA	Premium+	Ammonia	Electrochemical	0 – 300	25 / 150			x			-30 – 50	-22 – 122	148H6011
GDA	Premium Duplex	Ammonia	Electrochemical Pellistor	0 – 300	25 / 150	0 – 140000 (30000)			x		-20 – 50	-4 – 122	148H6012
GDA	Premium Flex	Ammonia	Electrochemical	0 – 300	25 / 150				x		-20 – 50	-4 – 122	148H6013
GDA	Premium	Ammonia	Electrochemical	0 – 1000	500 / 900						-30 – 50	-22 – 122	148H6016
GDA	Premium+	Ammonia	Electrochemical	0 – 1000	500 / 900			x			-30 – 50	-22 – 122	148H6017
GDA	Premium Duplex	Ammonia	Electrochemical Pellistor	0 – 1000	500 / 900	0 – 140000 (30000)			x		-20 – 50	-4 – 122	148H6018
GDA	Premium Remote	Ammonia	Electrochemical				0 – 1000 (500 / 900)		x		-20 – 50	-4 – 122	148H6019
GDA	Premium Flex	Ammonia	Electrochemical	0 – 1000	500 / 900				x		-20 – 50	-4 – 122	148H6020
GDA	Premium Uptime	Ammonia	Electrochemical	0 – 1000	500 / 900			x	x	x	0 – 40	32 – 104	148H6021
GDA	Premium	Ammonia	Semiconductor	0 – 1000	500 / 900						-10 – 50	14 – 122	148H6025
GDA	Premium+	Ammonia	Semiconductor	0 – 1000	500 / 900			x			-10 – 50	14 – 122	148H6026
GDA	Premium Flex	Ammonia	Semiconductor	0 – 1000	500 / 900				x		-10 – 50	14 – 122	148H6027
GDA	Premium+	Ammonia	Electrochemical	0 – 5000	1000 / 4500			x			-30 – 50	-22 – 122	148H6028
GDA	Premium Remote	Ammonia	Electrochemical				0 – 5000 (1000 / 4500)		x		-20 – 50	-4 – 122	148H6029
GDA	Premium Uptime	Ammonia	Electrochemical	0 – 5000	1000 / 4500			x	x	x	0 – 40	32 – 104	148H6030
GDA	Premium	Ammonia	Semiconductor	0 – 10000	5000 / 9000						-10 – 50	14 – 122	148H6032
GDA	Premium+	Ammonia	Semiconductor	0 – 10000	5000 / 9000			x			-10 – 50	14 – 122	148H6033
GDA	Premium Remote	Ammonia	Semiconductor				0 – 10000 (5000 / 9000)		x		-10 – 50	14 – 122	148H6034
GDA	Premium+	Ammonia	Pellistor	0 – 140000	30000			x			-25 – 50	-13 – 122	148H6036
GDA	Premium Duplex	Ammonia	Semiconductor Pellistor	0 – 1000	500 / 900	0 – 140000 (30000)			x		-10 – 50	14 – 122	148H6037
GDA	Premium Flex	Ammonia	Pellistor	0 – 140000	30000				x		-20 – 50	-4 – 122	148H6038
GDC	Premium Flex	CO_2	Infrared	0 – 20000	5000 / 9000				x		-20 – 50	-4 – 122	148H6040
GDC	Premium Flex	CO_2	Infrared	0 – 50000	10000 / 18000				x		-20 – 50	-4 – 122	148H6041
GDHC	Premium	R123	Semiconductor	0 – 2000	500 / 900						-10 – 50	14 – 122	148H6042
GDHC	Premium+	R123	Semiconductor	0 – 2000	500 / 900			x	x		-10 – 50	14 – 122	148H6043
GDHC	Premium Flex	R123	Semiconductor	0 – 2000	500 / 900				x		-10 – 50	14 – 122	148H6044
GDHF	Premium	R404a, R507a, R32, R125, R407c, R434a, R488a, R125	Semiconductor	0 – 2000	500 / 900						-10 – 50	14 – 122	148H6047
GDHF	Premium+	R404a, R507a, R32, R125, R407c, R434a, R488a, R125	Semiconductor	0 – 2000	500 / 900			x			-10 – 50	14 – 122	148H6048
GDHF	Premium Flex	R404a, R507a, R32, R125, R407c, R434a, R488a, R125	Semiconductor	0 – 2000	500 / 900				x		-10 – 50	14 – 122	148H6049
GDHF	Premium	R134a, R407a, R416a, R417a, R422a, R422d, R427a, R437a, R438a, R449a, R407f, R450a	Semiconductor	0 – 2000	500 / 900						-10 – 50	14 – 122	148H6050
GDHF	Premium+	R134a, R407a, R416a, R417a, R422a, R422d, R427a, R437a, R438a, R449a, R407f, R450a	Semiconductor	0 – 2000	500 / 900			x			-10 – 50	14 – 122	148H6051
GDHF	Premium Flex	R134a, R407a, R416a, R417a, R422a, R422d, R427a, R437a, R438a, R449a, R407f, R450a	Semiconductor	0 – 2000	500 / 900				x		-10 – 50	14 – 122	148H6052
GDH	Premium	R290 / Propane	Pellistor	0 – 5000	800 / 2500						-30 – 50	-22 – 122	148H6053
GDH	Premium+	R290 / Propane	Pellistor	0 – 5000	800 / 2500			x			-30 – 50	-22 – 122	148H6054
GDH	Premium Flex	R290 / Propane	Pellistor	0 – 5000	800 / 2500				x		-20 – 50	-4 – 122	148H6055

Technical data and ordering

Ordering spare parts and accessories for Premium range

Description	Code number
Replacement sensor - Ammonia EC 100	148H6200
Replacement sensor - Ammonia EC 300	148H6201
Replacement sensor - Ammonia EC 1000	148H6202
Replacement sensor - Ammonia SC 1000	148H6203
Replacement sensor - Ammonia EC 5000	148H6204
Replacement sensor - Ammonia SC 10000	148H6205
Replacement sensor - Ammonia P LEL	148H6206
Replacement sensor - CO_2 IR 20000	148H6207
Replacement sensor - CO_2 IR 50000	148H6208
Replacement sensor - HCFC R123 SC 2000	148H6209
Replacement sensor - HFC R404A, R507 SC 2000	148H6210
Replacement sensor - HFC R134a SC 2000	148H6211
Replacement sensor - HC R290/Propane P 5000	148H6212
Remote sensor - Ammonia EC 100	148H6213
Remote sensor - Ammonia EC 1000	148H6214
Remote sensor - Ammonia EC 5000	148H6215
Remote sensor - Ammonia SC 10000	148H6216

Description	Code number
Controller unit	148H6231
Controller solution (controller + enclosure)	148H6221
Controller solution Uptime	148H6237
Warning module (wire break monitoring module)	148H6223
Controller expansion module	148H6222
Service tool	148H6224
PC Tool	148H6235
Calibration adapter	148H6232
Calibration adapter for Remote sensors	148H6233
Buzzer & light - acoustic buzzer and optic led	148H6225
Air duct set	148H6236
Gateway for controller	148H6228
Seal cap	148H6227
Remote kit	148H6238
Splash guard	148H6226
NPT adapter	148H6234

Controller unit:
Used for a centralized monitoring and warning.
The input signals for the controller are collected via RS485 Modbus or analog communication. The controller can handle up to 96 digital sensors via Fieldbus and four (4) analog input. An additional 28 analog input is possible using seven (7) expansion modules (4 – 20 mA signal interface). The total number of connected sensors should not exceed 128 sensors. The controller unit can be employed as pure analog controller, as analog/digital, or as digital controller. Configuration is menu-driven via the keypad. For fast and easy configuration, the PC Tool is recommended.

Controller solution:
Controller unit placed in an enclosure ready to be connected to a power source. A separate UPS for the controller is available.

Warning module (wire break monitoring module):
The warning module is used for monitoring the circuiting to the warning/alarm devices on a centrally controlled gas detection system. Wire breaks or wire interruptions in the alarm device loop will be reported to the central control.

Controller expansion module:
The gas detection Controller Expansion module is used for expansion of the cable coverage in terms of number of loops and the total wire length. Each Controller Unit can handle up to 7 Expansion modules allowing additional 7 segments with a total of 7200 meters (23622 ft.) wiring and a total of 32 relays for alarm device circuits.

Service tool:
For interface with units with no display (Basic, Basic+, Premium, Premium+). Acts as a portable display and can be connected to all Danfoss gas detection units. (Heavy Duty w. adapter).

PC tool:
The PC tool is a menu-driven and standalone software used for easy addressing, parameter setting, calibration, and data logging of the Basic, Premium and Heavy Duty gas detection units, and the controller unit.

Calibration adapter:
The calibration adapter is required for connecting the calibration gas container, via the flow regulator, to the sensor head on the gas detection units. (Two variants, One for Basic and Premium plastic head sensors; one for heavy duty and Premium remote metal head sensors.).

Buzzer & light - acoustic buzzer and optic led:
Can be installed in Basic or Premium units providing a local alarm.

Air duct set:
The air duct set is specially designed to capture the airflow in air ducts. It can be connected to the standard sensor heads, except from Heavy Duty gas detection units.

Gateway for controller
The gateway is an addition to the controller and used for communicating via Modbus TCP/IP.

Seal cap:
Airtight seal cap to protect the sensor head against premature exposure during installation. The seal cap is mounted on new sensors (complete units and replacement sensors) but is also available as an accessory.

Remote kit:
Enabling installation of a sensor head in plastic housing 5m / 16.4 ft. from the unit. This means that the gas detection unit can be placed outside the room where the sensor is placed to detect hazardous gases, allowing reading of and interfacing with the unit without entering the dedicated space. Basic and Premium gas detection units.

Splash guard:
To protect the sensor head against water exposure during wash-down cleaning and rinsing operations.

NPT adapter:
The NPT adapter is a steel fitting for installation of remote sensors into NPT threads; it converts the standards M30 X 1.5 thread of the Stainless Steel remote sensor head into an External NPT ¾" thread for more convenient installation.

Technical data

Heavy Duty

The Heavy Duty gas detection model is used for monitoring and warning of hazardous Ammonia gas concentrations. It is intended for ATEX/ IECEx applications and consists of a robust flameproof metal enclosure that can be kept closed after wiring, as configuration is performed by magnetic field to the display via a magnetic pen.

The Heavy Duty is intended as stand-alone or connected to a central system like the Danfoss gas detection controller or a PLC. As stand-alone, the on-board relays can be used for activation of alarm devices, while the Analog or RS485 Modbus connection to a central system allows centralized monitoring and alarm activation.

The gas detection unit come with a factory default setup including two (2) alarm set-points ready for use. The integrated software enables the user to configure two individual alarm ranges. Alarm 1, a pre-alarm indicating the gas level has passed a predefined threshold 1, and – if the gas level passes predefined threshold 2 – the final alarm 2.

The unit comes with sensors for Ammonia. Depending on the application, it's available with an electrochemical, a semiconductor or a Pellistor sensor.

Heavy Duty



Gas types and thresholds - Heavy Duty

Sensor	Sensor Type	ppm range	Alarm 1	Alarm 2	Hysteresis
Ammonia EC 1000	Electrochemical	0-1000	500 ppm	900 ppm	25 ppm
Ammonia EC 5000	Electrochemical	0-5000	1000 ppm	4500 ppm	50 ppm
Ammonia SC 10000	Semiconductor	0-10000	5000 ppm	9000 ppm	250 ppm
Ammonia P LEL	Pellistor	0-140000 (0-100% LEL)	21% LEL (30000 ppm)	21% LEL (30000 ppm)	1% LEL

Hysteresis = 5% of Alarm1 (rounded up to the next higher integer)
Alarm thresholds can have the same value, therefore the relays and LED can be triggered together.

Technical data

Heavy Duty

Electrical	
Power supply	16 – 28 V DC
Power consumption (24 V DC)	90 mA, max. 130 mA
Control unit	Microprocessor with 12 bit converter resolution
Digital filter	Averaging in order to increase the EMC immunity
Visual indications	2 LEDs for operation, alarm and communication
Analog output signal (active)	Proportional, overload and short-circuit proof, load ≤ 500 Ω 4 – 20 mA = measuring range 3.0 < 4 mA = underrange > 20 – 21.2 mA = overrange 2 mA = fault > 21.8 mA = fault High
Serial interface	Serial data bus
Fault relay	Max. 30 V AC/DC, 1 A
Alarm relay	Max. 30 V AC/DC, 1 A
LCD	2 x 16 characters, 3 status LEDs, 4 menu operating elements

Sensor data			
Gas type	**Flammable gases**	**Toxic gases**	**HCFC, HFC, HFO**
Sensor element	Pellistor	Electro Chemical	Semiconductor
Measuring range	0 – 100 % LEL	0 – 1000 ppm / 0 – 5000 ppm	0 – 10000 ppm
Response time	t_{90} < 20 sec. NH_3	t_{90} < 40 sec. for NH_3	t_{90} > 120 sec. for NH_3

Sensor head housing	
Material	CrNi Stahl: 1.4404
Dimensions (d x H)	30 x 56 mm (1.18 x 2.20 in.)
Protection class	Gas inlet IP64, with option splash-proof IP65
Thread	External thread NPT ¾" ANSI/ B1.20.1

Environmental conditions	
Humidity	15 to 90% r.H.
Operating temperature	P: -25 °C to +60 °C / EC: -25 °C to +50 °C / SC: -10 °C to +50 °C

Physical characteristics	
Case / colour	Aluminium pressure die-casting / light grey RAL 7032, epoxy coating
Dimensions (d x H)	95 x 82 mm
Weight	Ca. 1.3 kg
Protection class	Housing protection IP66 to IP68 (depending on the cable glands used)
Mounting	Wall mounting (sensor head downwards)
Cable entry	1 x ¾ in. (Ansi B1.20.1)
Wire connection	Spring-type terminal, 0.08 to 2.5 mm^2 AWG 28 - 12
Wire length	Max. load 500 Ω (= wire resistance + controller input resistance)

ATEX marking
II2G Ex d IIC T4 Gb, CE 0158

Options: LCD display	
LCD	Two lines, 16 characters each, background highlighted in two colours
Operation	Menu driven via four magnetic buttons
Power consumption	5 V, 60 mA, 0.3 VA

Status LED	
Colour / Mode	Red / yellow / green (alarm – fault – operation - service)
Protection class	IP 65

Technical data and ordering

Heavy Duty

Type	Model	Refrigerant	Sensor	ppm range	Alarm ppm	Temp. Range		Code number
						[°C]	[°F]	
GDA	Heavy Duty	Ammonia	Electrochemical	0 – 1000	500 / 900	-25 – 50	-13 – 122	148H6022
GDA	Heavy Duty	Ammonia	Electrochemical	0 – 5000	1000 / 4500	-25 – 50	-13 – 122	148H6031
GDA	Heavy Duty	Ammonia	Semiconductor	0 – 10000	5000 / 9000	-10 – 50	14 – 122	148H6035
GDA	Heavy Duty	Ammonia	Pellistor	0 – 140000	30000	-25 – 60	-13 – 140	148H6039

Ordering spare parts and accessories for Heavy Duty

Description	Code number
Replacement sensor - Heavy Duty Ammonia EC 1000	148H6217
Replacement sensor - Heavy Duty Ammonia EC 5000	148H6218
Replacement sensor - Heavy Duty Ammonia SC 10000	148H6219
Replacement sensor - Heavy Duty Ammonia P LEL	148H6220
Controller unit	148H6231
Controller solution (controller + enclosure)	148H6221
Warning module (wire break monitoring module)	148H6223
Controller expansion module	148H6222
Service tool	148H6224
PC Tool	148H6235
Calibration adapter Heavy duty	148H6233
Magnetic pen	148H6229
Gateway for controller	148H6228

Controller unit:
Used for a centralized monitoring and warning.
The input signals for the controller are collected via RS485 Modbus or analog communication. The controller can handle up to 96 digital sensors via Fieldbus and four (4) analog input. An additional 28 analog input is possible using seven (7) expansion modules (4-20 mA signal interface). The total number of connected sensors should not exceed 128 sensors. The controller unit can be employed as pure analog controller, as analog/digital, or as digital controller. Configuration is menu-driven via the keypad. For fast and easy configuration, the PC Tool is recommended.

Controller solution:
Controller unit placed in an enclosure ready to be connected to a power source. A separate UPS for the controller is available.

Warning module (wire break monitoring module):
The warning module is used for monitoring the circuiting to the warning/alarm devices on a centrally controlled gas detection system. Wire breaks or wire interruptions in the alarm device loop will be reported to the central control.

Controller expansion module:
The gas detection Controller Expansion module is used for expansion of the cable coverage in terms of number of loops and the total wire length. Each Controller Unit can handle up to 7 Expansion modules allowing additional 7 segments with a total of 7200 meters (23622 ft.) wiring and a total of 32 relays for alarm device circuits.

Service tool:
For interface with units with no display (Basic, Basic+, Premium, Premium+). Acts as a portable display and can be connected to all Danfoss gas detection units. (Heavy Duty w. adapter).

PC tool:
The PC tool is a menu-driven and standalone software used for easy addressing, parameter setting, calibration, and data logging of the Basic, Premium and Heavy Duty gas detection units, and the controller unit.

Calibration adapter:
The calibration adapter is required for connecting the calibration gas container, via the flow regulator, to the sensor head on the gas detection units. (Two variants, One for Basic and Premium plastic head sensors; one for heavy duty and Premium remote metal head sensors.).

Magnetic pen:
The pen is used to operate the Heavy Duty unit display. The Heavy Duty enclosure does not permit direct touch.

Gateway for controller
The gateway is an addition to the controller and used for communicating via Modbus TCP/IP.

DGS, Gas sensor

DGS helps to comply to environmental F-Gas Regulations and / or Health and Safety requirements, on new or existing systems in:

- Supermarkets
- Process refrigeration plants
- Refrigerated storage and warehousing
- Special applications areas / zones



RS485 Modbus
for data communication and integration into a complete ADAP-KOOL® system

Utilizing
either Semi-Conductor (SC) or Infrared (IR) technologies

Gives
quick and immediate response in detecting a wide range of different gases typically applied in Refrigeration and Air Conditioning systems

Can be used
in stand-alone or integrated systems, where continuous real-time, automatic monitoring with Danfoss ADAP-KOOL® Refrigeration Control and Monitoring System and / or Building Management Systems is applied



Facts

- Typical Refrigerant gas applications include:
  - Halocarbons: HFC's, HCFC's, CFCs
  - Carbon Dioxide (R744 / CO_2)
  - R404A, R507, R134a, R407A, R407F, R410A
  - Other special application gases to customer request

Technical data and ordering

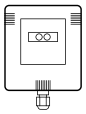

DGS - Gas Sensors

Technical data

Features	Description
Power Supply	12 / 24 V AC / DC ± 20%
Power Consumption	SC:153 mA / IR: 136 mA
Power Monitoring	Green LED indication
Visual Alarm	RED LED indication
Audible Alarm	Sounder, enabled / disabled
Fault Monitoring	Red LED ON ~ Green LED OFF
Fault State	0 – 0.5 V (1 – 5 V), 0 – 1 V (2 – 10 V), 0 – 2 mA (4 – 20 mA)
Analogue Outputs	0 – 5 V, 1 – 5 V, 0 – 10 V, 2 – 10 V, 4 – 20 mA
Digital Outputs	1-Relay 1 A / 24 V DC / 120 V AC Selectable Delay: 0.1 min., 5 min., 10 min.
IP Enclosure rating	IP41 or IP66
Standard Compliance	WEEE RoHS EuP

Sensor Information	Value	Semi-Conductor with filter (multigas) SC Halocarbons	Semi-Conductor (multigas) SC Hydrocarbons	Infrared IR CO_2
Typical Measurement Range	–	0 – 1.000 ppm	0 – 1.000 ppm	0 – 10.000 ppm 0 – 20.000 ppm 0 – 50.000 ppm
Temperature Range	IP41	-20 – 50 °C / -4 – 122 °F	20 – 50 °C / -4 – 122 °F	20 – 50 °C / -4 – 122 °F
	IP66	-40 – 50 °C / -40 – 122 °F	-40 – 50 °C / -40 – 122 °F	-40 – 50 °C / -40 – 122 °F
Relay Factory Default Setting	–	50% of Range	50% of Range	50% of Range
Humidity Range non-condensing	–	0 – 95%	0 – 95%	0 – 95%
Typical sensor life	–	5-years	5-years	5-years
Alarm threshold	T50	76 sec (filtered)	50 sec (filtered)	50 sec
Recovery time	T90	215 sec (filtered) 600 sec	90 sec (filtered) 200 sec	120 sec 235 sec
Linearity	–	Linear over calibrated range		
Calibration requirements	–	Standards generally require annual test and calibration See Danfoss Manual for Instructions *Note: Semi-Conductor sensors are non-selective, but calibrated to a specfic gas*		

Danfoss DGS - IP41 Enclosure Versions

Ordering

Type	Refrigerant	Description	Code no.
DGS-SC	R404A, R507	Gas Detector (IP41) Std. default R404A / R507 (min. -20 °C)	080Z2998
DGS-SC	R134a	Gas Detector (IP41) std. default R134a (min. -20 °C)	080Z2942
DGS-SC	R407A	Gas Detector (IP41) std. default R407A (min. -20 °C)	080Z2943
DGS-SC	R407F	Gas Detector (IP41) std. default R407F (min. -20 °C)	080Z2956
DGS-SC	R410A	Detector (IP41) std. default R410 (min. -20 °C)	080Z2988
DGS-IR-CO_2	CO_2 (R744)	Gas Detector (IP41) for CO_2 std. (min.-20 °C)	080Z2995
DGS-IR-CO_2-FS		Fail safe. Gas Detector (IP41) for CO_2 std. (min. -20 °C)	080Z2994

Note: For R448A / R449A, Please Contact Danfoss

Danfoss DGS - IP66 Enclosure Versions

Ordering

Type	Refrigerant	Description	Code no.
DGS-SC	R404A, R507	Gas Detector (IP66) Std. default R404A / R507 (min. -40 °C)	080Z2999
DGS-SC	R134a	Gas Detector (IP66) std. default R134a (min. -40 °C)	080Z2989
DGS-SC	R407A	Gas Detector (IP66) std. default R407A (min. -40 °C)	080Z2944
DGS-SC	R407F	Gas Detector (IP66) std. default R407F (min. -40 °C)	080Z2957
DGS-SC	R410A	Detector (IP66) std. default R410 (min. -40 °C)	080Z2987
DGS-IR-CO_2	CO_2 (R744)	Gas Detector (IP66) for CO_2 std. (min.-40 °C)	080Z2996
DGS-IR-CO_2		Remote, 3 m. Gas Detector (IP66) for CO_2 std. (min. -40 °C)	080Z2997
DGS-IR-CO_2-FS		Fail safe. Gas Detector (IP66) for CO_2 std. (min. -40 °C)	080Z2993
DGS-IR-CO_2-FS		Remote, 3 m. Fail safe. Gas Detector (IP66) for CO_2 std. (min. -40 °C)	080Z2992
DGS-IR-CO_2-FS		Duct mounted sensor	080Z2958

Note: For R448A / R449A, Please Contact Danfoss

AKS 4100 / AKS 4100U - Liquid level sensors

The AKS 4100 / AKS 4100U liquid level sensor is designed specifically to measure liquid levels in a wide range of refrigeration applications. The liquid level sensor is based on a proven techhology called Time Domain Reflectometry (TDR) or Guided Micro Wave.

AKS 4100 / AKS 4100U liquid level sensor can be used to measure the liquid level of many different refrigerants in vessels, accumulators, receivers, standpipes, etc.

Features
AKS 4100 / 4100U

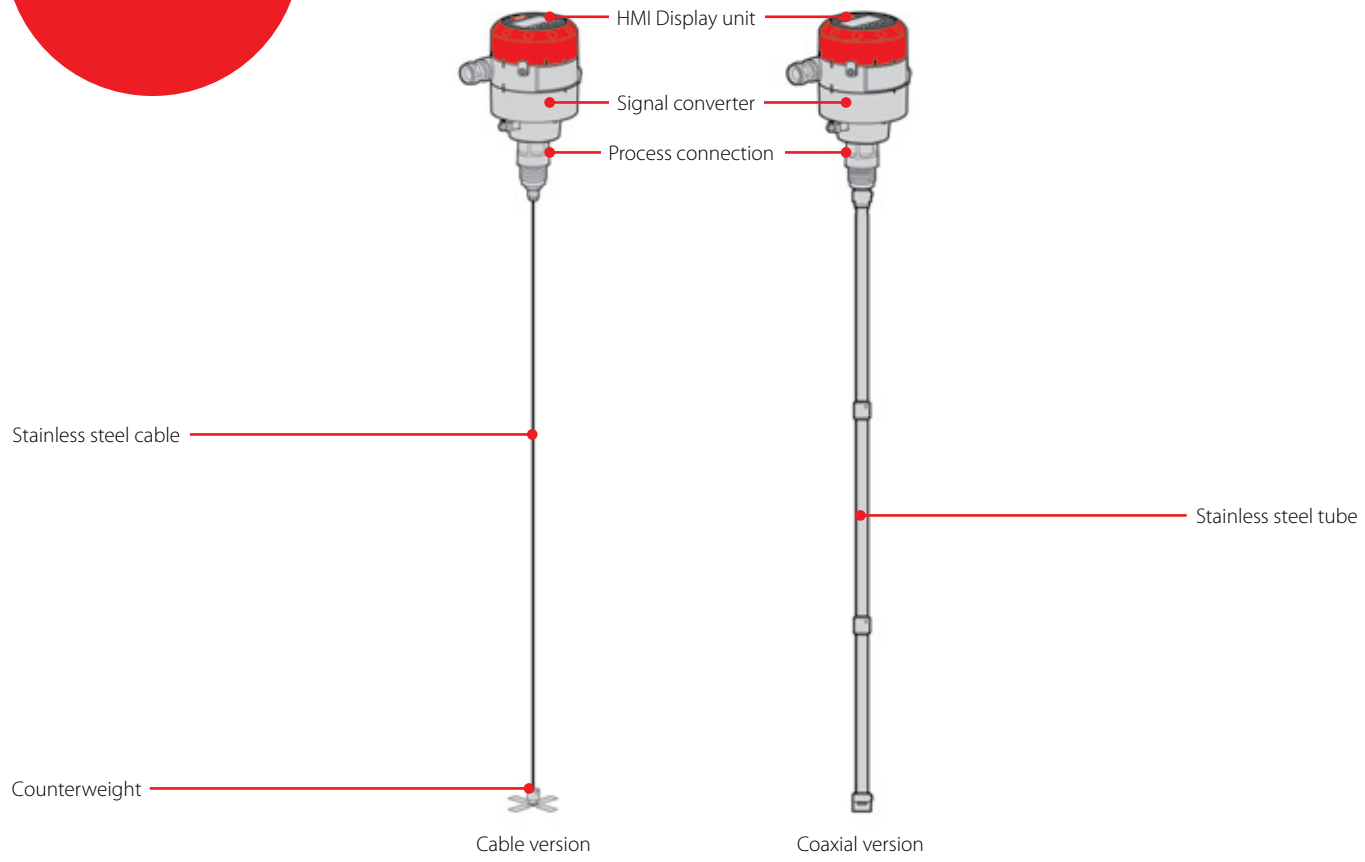

Facts

- Applicable to R717, R744, R134a, R22, R401A, R402A, R404A, R407A, R407B, R407C, R407F, R409A, R410A, R421A, R502 and R507
  For a fully updated list of approved refrigerants, visit www.products.danfoss.com and search for individual code numbers, where refrigerants are listed as part of product specifications.
- Approved and qualified by Danfoss for refrigeration applications
- One product covering several probe lengths (cable version)
- A single product for all commonly used refrigerants (cable version)
- Cable version requires less top-end clearance for installation and service
- Proven operation with all refrigerants in combination with oil
- No need to clean cable version when fully covered by oil
- The cable version is very compact and easy to handle, ship, install and use with different lengths and refrigerants
- Changes of the liquid dielectric constant (εr) does not affect operation
- Up to 5000 mm / 197 inch probe length with cable version
- 2-wire loop powered; no separate transformer needed
  Please Note: if used together with Danfoss EKC 347 Level Controller, a 14 – 30 V DC supply is required
- Multi language HMI
- Level and setting readout in [mm], [cm], [m] / [ft], [in]

The AKS 4100 / AKS 4100U concept

AKS 4100 / AKS 4100U is available in two different versions:
- Cable version
- Coaxial version

Both cable and coaxial versions are available with two different mechanical process connections:
- AKS 4100: G1 inch pipe thread. Aluminium gasket included
- AKS 4100U: ¾ inch NPT

CABLE version:	COAXIAL D14 version:	COAXIAL D22 version:
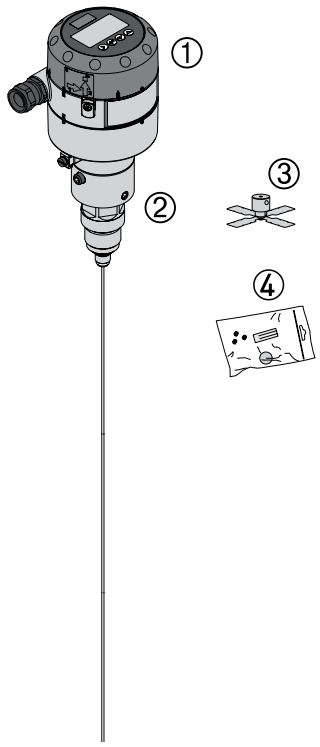	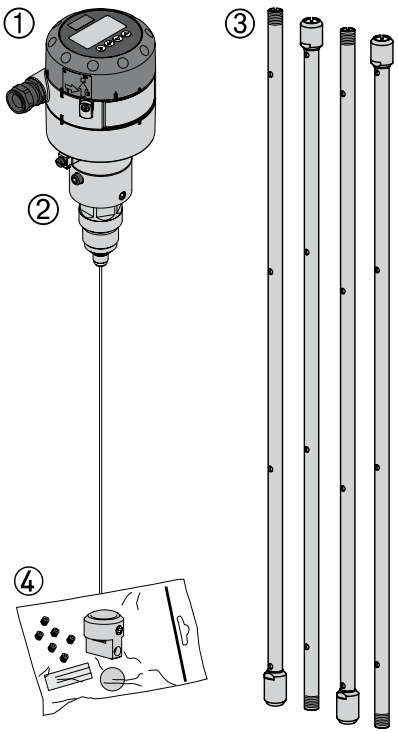	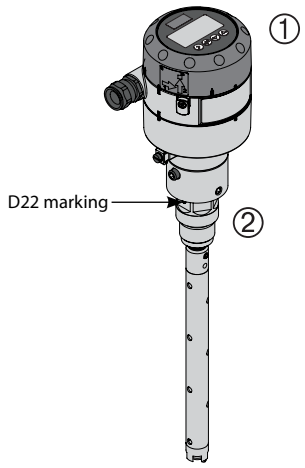

Cable version
The cable version consists of:
1. Signal converter, which can be supplied with or without HMI
2. Process connection with 5 m / 197 in., ø2 mm / 0.08 in. stainless cable
3. Counterweight
4. Accessory bag comprising:
   - 3 mm set screws
   - Red cover to protect process connection (2) prior to mounting signal converter
   - Setting label

With the cable version it is possible to adapt the AKS 4100 / AKS 4100U to any length:
800 mm / 31.5 in. – 5000 mm / 196.9 in.

Coaxial D14 version
The Coaxial D14 version consists of:
1. Signal Converter (with or without HMI)
2. Process connection with 5 m / 197 in., ø2 mm / 0.08 in. stainless wire
3. Tube(s) depending on required length
4. Accessory bag comprising:
   - End Connector (incl. 3 mm / 0.12 in. set screws)
   - 3 mm / 0.12 in. set crews (1 set screw pr. tube)
   - Red cover to protect mechanical process connection (2), before Signal Converter is mounted
   - Setting label

The coaxial D14 version is available in the following probe lengths:
500 mm, 800 mm, 1000 mm, 1200 mm, 1500 mm, 1700 mm, 2200 mm

Coaxial D22 version
The Coaxial D22 version consists of:
1. Signal Converter (with or without HMI)
2. Process connection 280 mm / 11 in., 8 mm / 0.3 in. inner rod

Technical data

Measuring system

Measuring principle	2-wire loop-powered level transmitter; Time Domain Reflectometry (TDR)
Application range	Level measurement of liquid refrigerants Approved refrigerants: R717, R744, R134a, R22, R401A, R402A, R404A, R407A, R407B, R407C, R407F, R409A, R410A, R421A, R502 and R507
Primary measured value	Time between the emitted and received signal
Secondary measured value	Distance or level

Display and User interface	
Display	Integrated LCD display
	128 × 64 pixels in 8-step greyscale with 4-button keypad
Interface languages	English (default), German, French, Spanish, Japanese, Chinese, Russian

Operating conditions

Ambient temperature	-40 – 80 °C / -40 – 175 °F For HMI: -20 – 60 °C / -4 – 140 °F
Storage temperature	-40…85 °C / -40…185 °F
Process connection temperature	Standard -60 – 100 °C / -76 – 212 °F

Operating pressure	Standard: -1 – 100 barg / -14.5 – 1450 psig

Liquid dielectric constant (εr)	Cable version to be used in R717 / NH_3, HCFC and HFC εr, liquid > 5.6 Coaxial version is mandatory in R744 / CO_2 εr, liquid > 1.3
Vibration resistance	EN 60721-3-4 (1...9 Hz: 3 mm / 10...200 Hz:1g; 10g shock half-wave sinusoidal: 11 ms)
Enclosure rating	IP66 / IP67 equivalent to NEMA type 4X (housing) and type 6P (probe)

Process connections

Thread	
Cable Ø2 mm / 0.08 in	AKS 4100: G1 inch pipe thread. Aluminium gasket included AKS 4100U: ¾ inch NPT
Coaxial	AKS 4100: G1 inch pipe thread. Aluminium gasket included AKS 4100U: ¾ inch NPT

Electrical connections

Power supply	Terminals output: 14 – 30 V DC. Min. / Max. Value for an output of 22 mA at the terminal Ambient temperature limitations: -40 – 80 °C / -40 – 176 °F: 16 – 30 V DC -20 – 80 °C / -4 – 176 °F: 14 – 30 V DC
Current output load	RL [Ω] ≤ ((Uext -14 V) / 20 mA) – Default (Error output set to 3.6 mA) RL [Ω] ≤ ((Uext -14 V) / 22 mA) – (Error output set to 22 mA)
Cable gland	AKS 4100: PG 13, M20×1.5; (cable diameter: 6 – 8 mm / 0.24 – 0.31 in AKS 4100U: ½ inch NPT
Cable entry capacity (terminal)	0.5 – 1.5 mm^2 (~20 – 15 AWG)

Input and output

Current output	
Output signal	4…20 mA or 3.8…20.5 mA acc. to NAMUR NE 43
Resolution	±3 µA
Temperature drift	Typically 75 ppm / K
Error signal	High: 22 mA; Low: 3.6 mA acc. to NAMUR NE 43; Hold (frozen value - not available with NAMUR NE 43 compliant output)

Technical data Ordering

When ordering without HMI please note:
Each AKS 4100 / AKS 4100 must always be programmed via the HMI display unit.

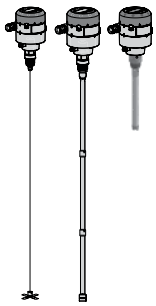

The HMI display unit can be ordered separately:

- **084H4540 / 084H4590**
  AKS 4100 / AKS 4100U HMI display unit with rear cover and mounting bracket for easy programming.
  The same AKS 4100 / AKS 4100U HMI display unit can be used to programme more AKS 4100 / AKS 4100U.
- **084H4548 / 084H4598**
  AKS 4100 / AKS 4100U HMI display unit (usually spare part).

AKS 4100 / AKS 4100U - Cable version

Technical data

Type	Description	Languages	HMI with / without	Code no.
AKS 4100	with 5 m (197 in) ø2 mm (ø0.08 in) stainless cable and counterweight	English (default), German, French, Spanish	with	084H4501
AKS 4100	with 5 m (197 in) ø2 mm (ø0.08 in) stainless cable and counterweight	English (default), Japanese, Chinese, Russian	with	084H4550
AKS 4100	with 5 m (197 in) ø2 mm (ø0.08 in) stainless cable and counterweight	–	without	084H4500
AKS 4100U	with 5 m (197 in) ø2 mm (ø0.08 in) stainless cable and counterweight	English (default), German, French, Spanish	with	084H4521
AKS 4100U	with 5 m (197 in) ø2 mm (ø0.08 in) stainless cable and counterweight	English (default), Japanese, Chinese, Russian	with	084H4571
AKS 4100U	with 5 m (197 in) ø2 mm (ø0.08 in) stainless cable and counterweight	–	without	084H4520

AKS 4100 / AKS 4100U - Coaxial version

Technical data

Type	Description	Languages	Probe length		HMI	Code no.
			[mm]	[in]	with / without	
AKS 4100	Coaxial D22 [1])	English (default), German, French, Spanish	280	–	with	084H4517
AKS 4100	Coaxial D22 [1])	English (default), Japanese, Chinese, Russian	280	–	with	084H4567
AKS 4100	Coaxial D22 [1])	–	280	–	without	084H4518
AKS 4100	Coaxial D14	English (default), German, French, Spanish	500	–	with	084H4510
AKS 4100	Coaxial D14	English (default), Japanese, Chinese, Russian	500	–	with	084H4560
AKS 4100	Coaxial D14	–	500	–	without	084H4503
AKS 4100	Coaxial D14	English (default), German, French, Spanish	800	–	with	084H4511
AKS 4100	Coaxial D14	English (default), Japanese, Chinese, Russian	800	–	with	084H4561
AKS 4100	Coaxial D14	–	800	–	without	084H4504
AKS 4100	Coaxial D14	English (default), German, French, Spanish	1000	–	with	084H4512
AKS 4100	Coaxial D14	English (default), Japanese, Chinese, Russian	1000	–	with	084H4562
AKS 4100	Coaxial D14	–	1000	–	without	084H4505
AKS 4100	Coaxial D14	English (default), German, French, Spanish	1200	–	with	084H4513
AKS 4100	Coaxial D14	English (default), Japanese, Chinese, Russian	1200	–	with	084H4563
AKS 4100	Coaxial D14	–	1200	–	without	084H4506
AKS 4100	Coaxial D14	English (default), German, French, Spanish	1500	–	with	084H4514
AKS 4100	Coaxial D14	English (default), Japanese, Chinese, Russian	1500	–	with	084H4564
AKS 4100	Coaxial D14	–	1500	–	without	084H4507
AKS 4100	Coaxial D14	English (default), German, French, Spanish	1700	–	with	084H4515
AKS 4100	Coaxial D14	English (default), Japanese, Chinese, Russian	1700	–	with	084H4565
AKS 4100	Coaxial D14	–	1700	–	without	084H4508
AKS 4100	Coaxial D14	English (default), German, French, Spanish	2200	–	with	084H4516
AKS 4100	Coaxial D14	English (default), Japanese, Chinese, Russian	2200	–	with	084H4566
AKS 4100	Coaxial D14	–	2200	–	without	084H4509
AKS 4100U	Coaxial D22 [1])	English (default), German, French, Spanish	-	11	with	084H4536
AKS 4100U	Coaxial D22 [1])	English (default), Japanese, Chinese, Russian	-	11	with	084H4586
AKS 4100U	Coaxial D22 [1])	–	-	11	without	084H4537
AKS 4100U	Coaxial D14	English (default), German, French, Spanish	–	19.2	with	084H4530
AKS 4100U	Coaxial D14	English (default), Japanese, Chinese, Russian	–	19.2	with	084H4580
AKS 4100U	Coaxial D14	–	–	19.2	without	084H4524
AKS 4100U	Coaxial D14	English (default), German, French, Spanish	–	30	with	084H4531
AKS 4100U	Coaxial D14	English (default), Japanese, Chinese, Russian	–	30	with	084H4581
AKS 4100U	Coaxial D14	–	–	30	without	084H4525
AKS 4100U	Coaxial D14	English (default), German, French, Spanish	–	45	with	084H4532
AKS 4100U	Coaxial D14	English (default), Japanese, Chinese, Russian	–	45	with	084H4582
AKS 4100U	Coaxial D14	–	–	45	without	084H4526
AKS 4100U	Coaxial D14	English (default), German, French, Spanish	–	55	with	084H4533
AKS 4100U	Coaxial D14	English (default), Japanese, Chinese, Russian	–	55	with	084H4583
AKS 4100U	Coaxial D14	–	–	55	without	084H4527
AKS 4100U	Coaxial D14	English (default), German, French, Spanish	–	65	with	084H4534
AKS 4100U	Coaxial D14	English (default), Japanese, Chinese, Russian	–	65	with	084H4584
AKS 4100U	Coaxial D14	–	–	65	without	084H4528
AKS 4100U	Coaxial D14	English (default), German, French, Spanish	–	85	with	084H4535
AKS 4100U	Coaxial D14	English (default), Japanese, Chinese, Russian	–	85	with	084H4585
AKS 4100U	Coaxial D14	–	–	85	without	084H4529

[1]) AKS 4100 Coaxial 280mm and AKS 4100U Coaxial 11 in. are only released for R717/NH_3

Technical data Ordering

AKS 4100 / AKS 4100U - HMI

Accessories

Type	Description	Languages	Code no.
AKS 4100 / AKS 4100U HMI	Service / Display unit with rear cover and mounting bracket	English (default), German, French, Spanish	084H4540
AKS 4100 / AKS 4100U HMI	Service / Display unit with rear cover and mounting bracket	English (default), Japanese, Chinese, Russian	084H4590
AKS 4100 / AKS 4100U HMI	Display	English (default), German, French, Spanish	084H4548
AKS 4100 / AKS 4100U HMI	Display	English (default), Japanese, Chinese, Russian	084H4598
AKS 4100 / AKS 4100U	Signal Converter without HMI, excluding cable gland	–	084H4541

For spare parts (service kits and gaskets) please see the spare parts documentation.

Quick Selection Notes:

AKS and DST P100, Pressure transmitters

AKS and DST P100 pressure transmitters are used for commercial air-conditioning and for commercial and industrial refrigeration applications.
They are made in stainless steel to be compatible with fluorinated and natural refrigerants and laser welding with no soft seals ensure hermetic tightness for decades.

AKS and DST P100 pressure transmitters utilize temperature calibrations methods and sensing technologies optimized for the refrigeration and
air-conditioning segments.

Features
AKS and DST P100

Compact AKS 32R; AKS 3000 and DST P100 with solder or female flare pressure ports

Dedicated temperature calibration to increase accuracy when used for suction or discharge pressure regulation



Parts in touch with refrigerants are all laserwelded, free of soft gaskets

Facts

- Designed for precise and energy optimized control
- Robust design optimized for
  - air-conditioning
  - refrigeration plant
  - supermarket installation
  - natural refrigerants like CO_2 and R717
- Pressure ranges up to 159 bar
- High test pressure, ≥ 33 bar
- Available with 4 – 20 mA, 1 – 5 V DC or 10 – 90% Vs ratiometric signals
- Available with a variety of pressure connection, incl. 1/4 inch female flare with valve depressor and 3/8 inch solder connection, ensuring a 100% hermetic installation

Technical data and ordering

AKS 32R and AKS 2050 - With 10 – 90% ratiometric output signal

Ordering

4.75 – 8 V DC supply voltage, accuracy 0.3% FS (typical), pressure reference gauge (relative)

Type	Pressure rang [bar]	Max. overload pressure [bar]	Electrical connection	Pressure connection	Code no.
AKS 32R	-1 – 12	33	EN 175301-803-A without plug	7/16 – 20 UNF flare 1/4 in	060G1036
	-1 – 12	33	EN 175301-803-A with Pg 9 plug	7/16 – 20 UNF flare 1/4 in	060G6339
	-1 – 34	55	EN 175301-803-A without plug	7/16 – 20 UNF flare 1/4 in	060G0090
	-1 – 34	55	EN 175301-803-A with Pg 9 plug	7/16 – 20 UNF flare 1/4 in	060G6340
	-1 – 12	33	EN 175301-803-A without plug	7/16 – 20 UNF 1/4 in female flare	060G6323 [3]
	-1 – 12	33	EN 175301-803-A with Pg 9 plug	7/16 – 20 UNF 1/4 in female flare	060G5961 [3]
	0 – 32	55	EN 175301-803-A with Pg 9 plug	7/16 – 20 UNF 1/4 in female flare	060G5962 [3]
	-1 – 34	55	EN 175301-803-A without plug	7/16 – 20 UNF 1/4 in female flare	060G6341 [3]
	-1 – 12	33	EN 175301-803-A without plug	Solder, ODF, 3/8 in	060G3551
	-1 – 34	55	EN 175301-803-A without plug	Solder, ODF, 3/8 in	060G3552
	0 – 16	33	EN 175301-803-A with Pg 9 plug	Solder, ODF, 3/8 in	060G6156 [1]
	0 – 50	55	EN 175301-803-A with Pg 9 plug	Solder, ODF, 3/8 in	060G6157 [1]
	-1 – 12	33	EN 175301-803-A without plug	Thread ISO 228/1 – G 3/8 A (BSP)	060G1038
AKS 2050	-1 – 59	100	EN 175301-803-A without plug	Thread ISO 228/1 – G 3/8 A (BSP)	060G5750 [2]
	-1 – 99	150	EN 175301-803-A without plug	Thread ISO 228/1 – G 3/8 A (BSP)	060G5751 [2]
	-1 – 159	250	EN 175301-803-A without plug	Thread ISO 228/1 – G 3/8 A (BSP)	060G5752 [2]

[1] Pressure reference Aboslute
[2] With pulse-snubber
[3] With deflator

AKS 32 and AKS 2050

Accessory

Type	Electrical connection	Comments	Code no.
Cable with plug	Plug 3 + E (female)	5 m cable	060G1034
Plug	EN 175301-803-A	Pg 9	060G0008

AKS 32 with 1 – 5 V output signal

Ordering

9 – 30 V DC supply voltage, accuracy 0.3% FS (typical), pressure reference gauge (relative)

Type	Pressure range [bar]	Max. overload pressure [bar]	Electrical connection	Pressure connection	Code no.
AKS 32	-1 – 12	33	EN175301-803-A Pg9 plug	7/16 – 20 UNF flare 1/4 in	060G2069
	-1 – 34	40	EN175301-803-A Pg9 plug	7/16 – 20 UNF flare 1/4 in	060G2071

AKS 33 with 4 – 20 mA output signal

Ordering

10 – 30 V DC supply voltage, accuracy 0.3% FS (typical), pressure reference gauge (relative)

Type	Pressure range [bar]	Max. overload pressure [bar]	Electrical connection	Pressure connection	Code no.
AKS 33	-1 – 6	33	EN175301-803-A Pg9 plug	7/16 – 20 UNF flare 1/4 in	060G2048
	-1 – 12	33	EN175301-803-A Pg9 plug	7/16 – 20 UNF flare 1/4 in	060G2049
	0 – 25	33	EN175301-803-A Pg 9 plug	7/16 – 20 UNF flare 1/4 in	060G2045
	-1 – 34	55	EN175301-803-A Pg 9 plug	7/16 – 20 UNF flare 1/4 in	060G2051
	-1 – 6	33	EN175301-803-A Pg 9 plug	G 3/8 EN 837	060G2104
	-1 – 12	33	EN175301-803-A Pg 9 plug	G 3/8 EN 837	060G2105
	-1 – 34	55	EN175301-803-A Pg 9 plug	G 3/8 EN 837	060G2107

AKS 3000 with 4 – 20 mA output signal

Ordering

10 – 30 V DC supply voltage, accuracy 1% FS (typical), pressure reference gauge (relative)

Type	Pressure range [bar]	Max. overload pressure [bar]	Electrical connection	Pressure connection	Code no.
AKS 3000	-1 – 12	33	EN175301-803-A Pg9 plug	7/16 – 20 UNF flare 1/4 in	060G1323
	0 – 30	55	EN175301-803-A Pg9 plug	7/16 – 20 UNF flare 1/4 in	060G1327
	-1 – 12	33	EN175301-803-A Pg 9 plug	G 1/2 EN 837	060G1896
	0 – 25	40	EN175301-803-A Pg 9 plug	G 3/8 EN 837	060G1041
	0 – 40	100	EN175301-803-A Pg 9 plug	G 3/8 EN 837	060G1066
	-1 – 12	33	EN175301-803-A Pg 9 plug	7/16 – 20 UNF 1/4 in female flare	060G5846
	-1 – 6	33	EN175301-803-A Pg 9 plug	7/16 – 20 UNF 1/4 in female flare	060G3899
	0 – 30	55	EN175301-803-A Pg 9 plug	7/16 – 20 UNF 1/4 in female flare	060G3958

Technical data Ordering

DST P100 Pressure Transmitter for cooling applications

Ordering

DST P100 with 10 – 90% ratiometric output signal
5V±10% supply voltage, accuracy ± 1% FS (within specified temperature range)

Type	Operating range [bar sg]	Units	Colour code electrical connector	Focus temperature range (1% TEB) [°C]	Pressure port [flare]	Code no.
DST P100	0 – 150	psia	Green	-20 – 40	7/16 UNF, female [1]	075G17014
	0 – 200	psia	Green	-20 – 40		075G17016
	0 – 400	psi sg	Black	0 – 80		075G17019
	0 – 500	psi sg	Black	0 – 80		075G17021
	-1 – 12	bar sg	Green	-20 – 40		075G17013
	-1 – 34	bar sg	Black	0 – 80		075G17018
	0 – 10	bar sg	Green	0 – 80		075G17012
	0 – 20	bar sg	Green	-20 – 40		075G17015
	0 – 30	bar sg	Black	0 – 80		075G17017
	0 – 50	bar sg	Black	0 – 80		075G17020

[1]) ¼ in. flare with a deflator pin

Electrical connector colour coding:
Black: High pressure profile
Green: Low pressure profile

Quick Selection Notes:

EKS / AKS, Temperature sensors

AKS temperature sensors are used for exacting applications within air-conditioning as well as commercial and industrial refrigeration applications.
The Pt 1000 sensor element meets the DIN/EN 60751 class B requirements and ensures an accurate and reliable temperature signal applicable for regulation, safety and data logging.

EKS temperature sensors are a family of cost efficient temperature sensors based on thermistors with NTC or PTC characteristics which are used with Danfoss EKC controllers.

Features
EKS / AKS



EN441 certified AK-HS 1000 HACCP sensors

AKS21 sensor system for controlling extreme high and low temperatures

AKS 11 temperature sensor for reliable super heat control to optimize accuracy and process efficiency

Facts

- AKS 11 is designed for easy installation and optimized for demanding control functions like liquid injection control in evaporators where a reliable sensor is a must
- AKS 12 is the all-round cable temperature sensor to be used for plain temperature monitoring and control purposes
- AKS 21 is the ultimate sensor for -70 – 180 °C anywhere in the refrigeration plant and is available in various designs (cable and B-head) and with various accessories like sensor pockets
- AK-HS 1000 is the first choice for a temperature sensor for monitoring and HACCP data logging. The sensor design makes it simulate a refrigerated product what enable a realistic temperature signal is transmitted to a HACCP data logger
- EKS comes with PTC 1000 Ω (EKS 111), NTC 5000 Ω (EKS 211), or NTC 1000 Ω (EKS 221) with various cable lengths

Technical data and ordering

AK-HS - Temperature sensors for monitoring and data logging in HACCP systems

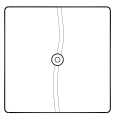

Ordering

Type	Signal	Temperature range [°C]	Measuring accuracy	Enclosure	Cable length [m]	Code no.
AK-HS 1000	Pt 1000	-30 – 50	EN 60751 Class B	IP 54	5.5	084N1007

EKS - Temperature sensors for measuring air temperatures



PTC characteristics matches controllers types EKC 101, EKC 201, EKC 301, CC and AK.
NTC characteristics matches controllers, types EKC and CC.

Type	Signal	Temperature range [°C]	Sensor tube	Electrical connection	Cable length [m]	Code no.
EKS 111	PTC 1000	-55 – 100	Round	Cable with pins	1.5	084N1178
	PTC 1000	-55 – 100	Round	Cable with pins	3.5	084N1179
	PTC 1000	-55 – 100	Round	Cable with AMP-plug	1.5	084N1181
	PTC 1000	-55 – 100	Round	Cable with AMP-plug	3.5	084N1182
EKS 211	NTC 5000	-40 – 80	Round	Cable	1.5	084N1220
	NTC 5000	-40 – 80	Round	Cable	3.5	084N1221

May not be used for food safety logs and regulation of superheat

EKS - Temperature sensors for measuring temperatures

The sensor characteristics matches to OPTYMA room controllers and MCX unit controllers.

Type	Signal	Temperature range [°C]	Sensor tube	Electrical connection	Cable length [m]	Code no.
EKS 221	NTC 10000	-50 – 120	Round	Cable	3.5	084N3210
	NTC 10000	-50 – 120	Round	Cable	8.5	084N3209

Sensor house in thermo plastic rubber

AKS - Temperature sensors for measuring temperature

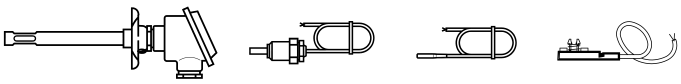

Recommended for accurate temperature measurement in superheating, food safety logs and other important applications

Type	Signal	Measure range [°C]	Sensor tube	Electrical connection	Cable length [m]	Code no.
AKS 12	Pt 1000	-40 – 80	Round	Cable	1.5	084N0036
	Pt 1000	-40 – 80	Round	AMP plug	5.5	084N0045
AKS 11	Pt 1000	-50 – 100	Concave	Cable	3.5	084N0003
	Pt 1000	-50 – 100	Concave	Cable	5.5	084N0005
	Pt 1000	-50 – 100	Concave	Cable	8.5	084N0008
AKS 21A	Pt 1000	-70 – 180	Round	Cable	3.5	084N2007
	Pt 1000	-70 – 180	Round	Cable with AMP-plug	3.5	084N2008
	Pt 1000	-70 – 180	Round	Cable	2.0	084N2024
AKS 21M	Pt 1000	-70 – 180	Round	Cable	2.5	084N2003
AKS 21W	Pt 1000	-70 – 180	Sensor pipe	Cable	2.5	084N2017
AKS 21D	Pt 1000	-40 – 80	Channel bulb	Terminal socket Type B	–	084N2035

NSK, Pressure sensor

Saginomiya type NSK pressure sensors are compact, light weight, high reliability double diaphragm sensors in which pressure is conducted to the silicon chip through high purity silicone oil that is in turn sealed in place by the stainless steel diaphragm.

This structure allows NSK sensors to be used in a wide variety of fluids.
The diffusion silicon chip contains a bridge circuit and a unique temperature- compensated

Features
NSK



Facts

Application:
- Sensing pressure in room and packaged air-conditioning systems
- Chillers
- Boiler water and vapour
- Air, water, and oil pumping and circulation systems

- UL and cUL recognized, UL File No. E43867
- CE approval: EMC
- Ratiometric: 0.5 – 4.5 V DC
- Pressure range: 0 – 150 bar / 0 – 725 psi (gauge pressure)

Technical data and ordering

Packard connector

Ordering

Standard models with 1/4 inch Female Flare connections with schrader depressor

Type	Pressure rang [bar]	Max. working pressure [bar]	Total accuracy [%FS]	Output voltage [VDC]	Body color	Catalog no.	Code no.
NSK	–	–	± 2.5 [1])	0.5 – 4.5	Green	NSK-BE010I-U106	061H5132
	–	–	± 2.5 [1])	0.5 – 4.5	Green	NSK-BE014I-U106	061H5133
	–	–	± 2.5 [1])	0.5 – 4.5	Green	NSK-BE021I-U106	061H5134
	–	–	± 2.0 [1])	0.5 – 4.5	Black	NSK-BE034I-U106	061H5135
	–	–	± 2.5 [1])	0.5 – 4.5	Black	NSK-BE050I-U106	061H5136

[1]) at -4 – 248 °F / -20 – 120 °C
Note: For other pressure connections, please contact Danfoss

Packard connector

Ordering

Standard models with 1/4 inch Female Flare connections with schrader depressor

Type	Pressure rang [bar]	Max. working pressure [bar]	Total accuracy [%FS]	Output voltage [VDC]	Body color	Catalog no.	Code no.
NSK	–	–	± 2.5 [1])	0.5 – 4.5	Brown	NSK-BC010I-U002	061H5115
	–	–	± 2.5 [1])	0.5 – 4.5	Brown	NSK-BC014I-U002	061H5116
	–	–	± 2.5 [1])	0.5 – 4.5	Brown	NSK-BC021I-U002	061H5117
	–	–	± 2.0 [1])	0.5 – 4.5	Black	NSK-BC034I-U002	061H5118
	–	–	± 2.5 [1])	0.5 – 4.5	Black	NSK-BC050I-U002	061H5119

[1]) at -4 – 248 °F / -20 – 120 °C
Note: For other pressure connections, please contact Danfoss

Danfoss Light commercial compressors - Direct current - BD series

BD range is the leading and widest AC / DC compressor range tailored for cooling on the move.
The excellent performance of the BD series safeguards food, medical and telecommunication.

Some models are available with variable speed technology for higher energy efficiency and accurate cooling and a longer lifetime of the batteries.





Facts

Applications:
- 12 / 24 V DC mobile refrigerators and freezers
- 12 V DC LBP / MBP van cooling boxes
- 12 / 24 V DC HBP mobile spot cooling systems
- 48 V DC HBP telecommunication applications

- Operation under extreme conditions
- Minimal energy consumption
- Portable beyond traditional limits

- Safety against destructive battery discharge, electronic thermostat and fan speed control
- Low sound emission
- Application possible at extreme voltage rate

Technical data and ordering

Compressors R134a R404A/R507 * R600a ** R290 ***	Electronic units (voltages and code numbers)													Code numbers
	Standard 12 – 24 V DC 101N0212	High Speed 12 – 24 V DC 101N0390	AEO 12 – 24 V DC 101N0340	AEO High Start 12 – 24 V DC 101N0330	Solar 10 – 45 V DC 101N0420	Solar 20 – 45 V DC 101N0410	AC/DC converter 12 – 24 V DC & 100 – 240 V AC 101N0510	Automotive 12 – 24 V DC 101N0650	101N8xxx 12 V DC 101N0820+0800 (alt.: 101N0830)	101N8xxx 24 V DC 101N0820+0810	101N07xx 24 V DC 101N0715	Telecom 48 V DC 101N0720	Telecom 48 V DC 101N0732	
BD35F	x	–	x	–	x	x	x	x	–	–	–	–	–	101Z0200
BD35F (inch con.)	x	–	x	–	x	x	x	x	–	–	–	–	–	101Z0204
BD35F-B	x	–	x	–	–	–	x	x	–	–	–	–	–	101Z0205
BD35F-HD.2	x	–	x	–	–	–	–	x	–	–	–	–	–	101Z0216
BD50F	x	–	x	x	–	–	x	x	–	–	–	–	–	101Z1220
BD50F (inch con.)	x	–	x	x	–	–	x	–	–	–	–	–	–	101Z0203
BD80F	–	x	–	–	–	–	–	–	–	–	–	–	–	101Z0280
BD250GH.2	–	x	–	–	–	–	–	–	–	–	–	–	–	101Z0406
BD250GH.2 (48V)	–	–	–	–	–	–	–	–	–	–	–	–	x	101Z0405
BD350GH (12V)	–	–	–	–	–	–	–	–	x+x	–	–	–	–	102Z3015
BD350GH (24V)	–	–	–	–	–	–	–	–	–	x+x	x	–	–	102Z3016
BD350GH (48V)	–	–	–	–	–	–	–	–	–	–	–	x	–	102Z3031
BD350GH Twin (12V)	–	–	–	–	–	–	–	–	x+x x	–	–	–	–	102Z3018
BD350GH Twin (24V)	–	–	–	–	–	–	–	–	–	x+x	x x	–	–	102Z3017
BD220CL *	–	–	–	–	–	–	–	–	x+x	–	–	–	–	102Z3020
BD35K **	x	–	–	–	x	x	–	–	–	–	–	–	–	101Z0211
BD80CN ***	–	–	–	x	–	–	–	–	–	–	–	–	–	101Z0403
BD100CN ***	–	x	–	–	–	–	–	–	–	–	–	–	–	101Z0401
TOOL4COOL® applicable	–	–	–	–	–	–	–	–	x	–	x	x	x	–

Compressors R134a	Electronic units (voltages and code numbers)					Code numbers
	Variable Speed (VSD) 12 – 24 V DC 101N2100	Fixed Speed (FSD) 12 – 24 V DC 101N2600	VSD w. AC/DC converter 12 – 24 V DC & 100 – 240 V AC 101N5100	FSD w. AC/DC converter 12 – 24 V DC & 100 – 240 V AC 101N5200	Automotive 12 V DC 101N1010	
BD1.4F-AUTO.3	–	–	–	–	x	109Z0104
BD1.4F-VSD.2	x	–	x	–	–	109Z0204
BD1.4F-VSD-HD	x	–	–	–	–	109Z0250
BD1.4F-VSD.2 (inch connectors)	x	–	x	–	–	109Z0206
BD1.4F-VSD-HD (inch connectors)	x	–	–	–	–	109Z0251
TOOL4COOL® applicable	x	x	x	x	x	–

Applications	Compressors													
	BD1.4F-AUTO.3	BD1.4F-VSD.2	BD1.4F-VSD-HD	BD35F	BD35F-B	BD35F-HD.2	BD35K	BD50F	BD80F	BD80CN	BD100CN	BD150F	BD250GH.2	BD350GH	BD220CL
Truck refrigerators	–	x	x	x	–	x	–	x	–	–	–	–	–	–	–
Boat refrigerators	–	x	–	x	–	–	–	x	x	–	–	–	–	–	–
Bus refrigerators	–	x	–	x	x	–	–	–	–	–	–	–	–	–	–
Portable boxes	–	x	–	x	–	–	–	x	x	–	–	–	–	–	–
Car minbars (high end)	x	x	–	x	–	–	–	–	–	–	–	–	–	–	–
Car minibars (SUV, MPV)	–	x	–	x	–	–	–	–	–	–	–	–	–	–	–
Spot cooling (e.g. trucks)	–	–	–	–	–	–	–	–	–	–	–	–	x	x	–
Van boxes	–	–	–	–	–	–	–	x	x	–	–	x	x	x	x
Battery cooling	–	–	–	–	–	–	–	–	–	–	–	–	x	x	–
Solar cabinets	–	–	–	x	–	–	x	x	–	x	x	–	–	–	–

Technical data and ordering

Compressors R134a R404A/R507 * R600a **, R290 ***	Capacity [W] at max. speed **** EN12900 Household/CECOMAF | ASHRAE Evaporating temperature [°C]													
	-40	-35	-30	-25	-23.3	-20	-15	-10	-5	0	5	7.2	10	15
BD35F /-B /-HD.2	–	–	27 | 34	36 | 45	40 | 51	50 | 63	70 | 87	94 | 117	122 | 153	–	–	–	–	–
BD50F	–	–	37 | 45	52 | 64	58 | 72	71 | 88	95 | 117	123 | 152	157 | 194	–	–	–	–	–
BD80F	–	–	55 | 68	78 | 96	87 | 107	105 | 130	138 | 170	176 | 218	221 | 274	–	–	–	–	–
BD250GH.2	–	–	–	61 | 76	69 | 86	87 | 108	119 | 148	156 | 194	200 | 248	251 | 311	308 | 383	336 | 418	373 | 464	446 | 556
BD250GH.2 (48V)	–	–	–	64 | 80	73 | 91	91 | 113	124 | 153	162 | 201	208 | 257	261 | 323	322 | 400	352 | 437	392 | 488	472 | 589
BD350GH (12V)	–	–	–	126 | 156	139 | 173	169 | 209	220 | 273	282 | 349	355 | 440	440 | 546	540 | 670	588 | 731	654 | 814	786 | 979
BD350GH (24V)	–	–	–	126 | 156	139 | 173	169 | 209	220 | 273	282 | 349	355 | 440	440 | 546	540 | 670	588 | 731	654 | 814	786 | 979
BD350GH (48V)	–	–	–	121 | 150	135 | 167	164 | 203	216 | 267	277 | 343	350 | 434	436 | 540	535 | 664	584 | 725	650 | 808	781 | 973
BD220CL *	83 | 96	121 | 140	166 | 193	220 | 255	240 | 279	283 | 328	355 | 413	439 | 511	535 | 624	–	–	–	–	–
BD35K **	–	–	25 | 30	36 | 44	41 | 49	49 | 60	65 | 79	84 | 102	106 | 129	–	–	–	–	–
BD80CN ***	31 | 35	45 | 51	62| 69	82 | 91	90 | 100	105 | 118	133 | 148	164 | 184	–	–	–	–	–	–
BD100CN ***	45 | 50	62 | 70	83 | 93	108 | 121	117 | 131	137 | 153	170 | 190	209 | 233	–	–	–	–	–	–
BD1.4F-VSD.2/-HD	–	–	12 | 15	23 | 29	27 | 34	36 | 45	52 | 65	71 | 88	92 | 114	116 | 144	144 | 179	158 | 197	178 | 222	218 | 272
BD1.4F-AUTO.3	–	–	–	14 | 18	18 | 22	24 | 31	36 | 45	50 | 62	66 | 83	86 | 106	108 | 134	–	–	–

Compressors R134a R404A/R507 * R600a **, R290 ***	Power consumption [W] at max. speed **** Evaporating temperature [°C]														Code numbers
	-40	-35	-30	-25	-23.3	-20	-15	-10	-5	0	5	7.2	10	15	
BD35F /-B /-HD.2	–	–	35	41	44	49	57	66	75	–	–	–	–	–	101Z0200 /0204 /0205 /0206
BD50F	–	–	47	59	63	71	83	95	108	–	–	–	–	–	101Z1220 /0203
BD80F	–	–	69	87	93.0	105	123	144	168	–	–	–	–	–	101Z0280
BD250GH.2	–	–	–	68	72	82	95	108	122	138	156	165	177	202	101Z0406
BD250GH.2 (48V)	–	–	–	72	77	85	99	113	128	143	160	167	177	196	101Z0405
BD350GH (12V)	–	–	–	140	149	168	197	228	259	292	325	340	358	391	102Z3015
BD350GH (24V)	–	–	–	122	129	144	169	194	221	248	276	288	303	330	102Z3016
BD350GH (48V)	–	–	–	131	139	155	181	208	236	265	294	307	323	352	102Z3031
BD220CL *	121	147	173	200	209	227	255	284	314	–	–	–	–	–	102Z3020
BD35K **	–	–	35	43	45	50	56	63	70	–	–	–	–	–	101Z0211
BD80CN ***	47	55	63	72	75	81	89	97	–	–	–	–	–	–	101Z0403
BD100CN ***	57	69	81	93	96	104	115	125	–	–	–	–	–	–	101Z0401
BD1.4F-VSD.2/-HD	–	–	27	34	36	41	48	55	61	68	76	79	83	90	109Z0200 /0202 /0250 /0251
BD1.4F-AUTO.3	–	–	–	26	28	30	35	40	45	50	56	–	–	–	109Z0102

Quick Selection Notes:

Danfoss Light commercial compressors - PL / TL / DL / NL / FR / SC and GS series

Specially optimised for use in household and light commercial applications, hermetic reciprocating compressors provide high cooling capacity in an energy saving design.

Compressor models are available for R134a, R290, R404A / R507A and R600a as well as R452A and R513A, for cooling needs from 20 W to 6 kW.



Features
Reciprocating compressors



- Compact construction
- Durable housing
- Optimised motor technology
- Wide voltage range
- Low GWP refrigerant possible
- Variable speed models available

Facts

Applications:
- Laboratory and medical equipment
- Compressed air dryers
- Glass door merchandisers
- Display cabinets
- Fridges and freezers
- Ice cream cabinets
- Vending machines
- Drink dispensers
- Ice making machines
- Bottle coolers
- Heat pumps
- Milk cooling tanks
- Wine cellars

- Easy installation
- Low noise and high energy efficiency
- Robust in tough operating conditions
- Immune to unstable power supply
- Environmentally friendly solutions

Danfoss Light commercial compressors - Variable speed DLV / NLV and SLV series

Cut a slice out of your energy bill with variable speed techology in supermarket and convenience store cabinets with DLV, NLV and SLV compressors.
DLV, NLV and SLV inverter compressors with intelligent controller are the natural choice when you need a versatile package for a wide range of light commercial LBP and MBP applications like freezers and cabinets.
Variable speed compressors are available for R404A / R507 and the environmentally friendly refrigerant, R290.



Features
Inverter reciprocating compressors



Tight temperature control

Built-in data logging and failure detection

High temperature stability

Compressor, speed control, cabinet control functions, display and monitoring, all in one integrated solution

Low average motor speed and wide voltage range

Facts

Applications:
- Freezers
- Display cabinets

- Advanced efficiency reduces energy consumption dramatically
- Reduces food loss and increases food quality
- Environmentally friendly
- Enables shop owners to comply with the HACCP standard on food quality

- Simpler installation, less room for errors, easier field service
- Lower noise level

For technical data, please refer to Coolselector ® 2 at coolselector.danfoss.com or contact Danfoss.

Technical data and ordering

Reciprocating compressors - Light Commercial

R134a - 220 – 240 V | 50 Hz

S.No.	Compressor	Application	ASHRAE Tcond = 54.4 °C, Tliq = 32.2 °C, Tsuc = 32.2 °C Capacity [W] Evaporating temp. [°C]						ASHRAE LBP rating point -23.3 °C / 54.4 °C		ASHRAE MBP rating point -6.7 °C / 54.4 °C		ASHRAE HBP rating point 7.2 °C / 54.4 °C		Displacement	Voltage and frequencies	Compressor cooling	Dimensions Height [mm]	
			-35	-15	-5	0	10	15	Cooling capacity [W]	COP [W/W]	Cooling capacity [W]	COP [W/W]	Cooling capacity [W]	COP [W/W]	[cm³]			A	B
1	PL20F	MBP	–	45	81	103	–	–	24	0.55	66	1.08	–	–	1.41	198 – 254 V, 50 Hz	S	129	127
2	PL35F	MBP	–	75	125	156	–	–	45	0.86	103	1.34	–	–	2.00	198 – 254 V, 50 Hz	S	134	132
3	PL35G	L/M/HBP	–	66	111	140	214	261	39	0.79	91	1.27	170	1.83	2.00	198 – 254 V, 50 Hz *)	F1	137	135
4	PL50F	LBP	18	92	–	–	–	–	56	0.89	–	–	–	–	2.50	198 – 254 V, 50 Hz	S	137	135
5	PL50F	MBP	–	92	149	184	–	–	56	0.92	123	1.37	–	–	2.50	198 – 254 V, 50 Hz	F1	137	135
6	PLE50F	L/MBP	–	95	152	187	–	–	59	1.08	126	1.58	–	–	2.50	198 – 254 V, 50 Hz	S	140	138
7	TFS4.5FT	LBP	56	193	309		–	–	123	1.12	256	1.65	–	–	4.63	176 – 242 V, 50 Hz	S	173	169
8	TL2.5F	L/MBP	–	81	136	170	–	–	46	0.80	112	1.31	–	–	2.61	198 – 254 V, 50 Hz	S	163	159
9	TL2.5G	L/M/HBP	14	86	144	181	273	331	51	0.82	119	1.32	218	1.86	2.61	187 – 254 V, 50 Hz *)	S	163	159
10	TL3F	L/MBP	–	101	171	214			59	0.85	141	1.32	–	–	3.13	198 – 254 V, 50 Hz	S	163	159
11	TL3G	L/M/HBP	–	100	169	212	322	390	58	0.85	139	1.34	257	1.86	3.13	187 – 254 V, 50 Hz *)	S	163	159
12	TLES3F	L/MBP	–	115	192	240	–	–	70	1.07	158	1.57	–	–	3.13	198 – 254 V, 50 Hz	S	173	169
13	TLS3FT	LBP	26	115	–	–	–	–	69	1.07	–	–	–	–	3.13	187 – 254 V, 50 Hz	S	173	169
14	TL4F	LBP	38	133	–	–	–	–	84	0.98	–	–	–	–	3.86	198 – 254 V, 50 Hz	S	163	159
15	TL4G	L/M/HBP	–	133	223	280	425	515	81	0.94	184	1.46	340	2.15	3.86	187 – 254 V, 50 Hz *)	S	173	169
16	TL4GH	HBP	–	130	226	286	440	535	–	–	185	1.44	350	2.14	3.86	198 – 254 V, 50 Hz *)	F2	173	169
17	TLES4F	LBP	41	154	–	–	–	–	97	1.16	–	–	–	–	3.86	198 – 254 V, 50 Hz	S	173	169
18	TLS4FT	LBP	34	145	–	–	–	–	88	0.97	–	–	–	–	3.86	187 – 254 V, 50 Hz	S	173	169
19	TL5F	LBP	53	178	–	–	–	–	113	1.06	–	–	–	–	5.08	198 – 254 V, 50 Hz	S	173	169
20	TL5G	L/M/HBP	–	173	278	345	515	619	109	1.03	230	1.43	412	1.94	5.08	187 – 254 V, 50 Hz *)	S	173	169
21	TLES5F	LBP	62	210	–	–	–	–	134	1.22	–	–	–	–	5.08	198 – 254 V, 50 Hz	S	173	169
22	TLS5F	LBP	59	210	–	–	–	–	134	1.15	–	–	–	–	5.08	198 – 254 V, 50 Hz	S	173	169
23	TLS5FT	LBP	59	210	–	–	–	–	134	1.12	–	–	–	–	5.08	187 – 254 V, 50 Hz	S	173	169
24	TLES5.7FT.3	LBP	82	248	–	–	–	–	163	1.36	–	–	–	–	5.70	187 – 254 V, 50 Hz	S	173	169
25	TLES6F	LBP	72	227	–	–	–	–	143	1.20	–	–	–	–	5.70	198 – 254 V, 50 Hz	S	173	169
26	TLS6F	LBP	72	227	–	–	–	–	143	1.14	–	–	–	–	5.70	198 – 254 V, 50 Hz	S	173	169
27	TLES6.5FT.3	LBP	89	283	–	–	–	–	183	1.33	–	–	–	–	6.49	187 – 254 V, 50 Hz *)	S	173	169
28	TLES7FT.4	LBP	89	283	–	–	–	–	183	1.33	–	–	–	–	6.49	187 – 254 V, 50 Hz *)	S	173	169
29	TLS7F	LBP	82	257	–	–	–	–	164	1.15	–	–	–	–	6.49	198 – 254 V, 50 Hz	S	173	169
30	FR6G	L/M/HBP	–	212	360	453	687	–	120	1.04	296	1.59	548	2.20	6.23	187 – 254 V, 50 Hz *)	F1	196	191
31	FR7.5G	L/M/HBP	–	240	403	506	769	–	140	1.06	331	1.57	613	2.18	6.93	187 – 254 V, 50 Hz *)	F1	196	191
32	FR7GH	HBP	–	247	407	519	817	1007	–	–	334	1.60	645	2.44	6.93	198 – 254 V, 50 Hz *)	F2	196	191
33	FR8.5G	L/M/HBP	–	283	473	594	898	–	172	1.08	389	1.56	718	2.15	7.95	187 – 254 V, 50 Hz *)	F1	196	191
34	FR10G	L/M/HBP	–	309	511	640	969	–	189	1.01	421	1.48	773	2.07	9.05	187 – 254 V, 50 Hz *)	F1	196	191
35	FR11G	L/M/HBP	–	380	621	780	–	–	236	1.10	513	1.50	–	–	11.15	187 – 254 V, 50 Hz	F1	196	191
36	NF7FX	L/MBP	97	324	522	646	–	–	205	1.12	432	1.66	766	2.35	7.27	198 – 242 V, 50 Hz	S	203	197
37	NF9FX	L/MBP	113	356	575	715	–	–	229	1.09	475	1.59	856	2.28	8.34	198 – 242 V, 50 Hz	F1	203	197
38	NF10FX	L/MBP	127	418	671	832	–	–	267	0.94	556	1.42	991	2.06	10.09	198 – 242 V, 50 Hz *)	F1	203	197
39	NF11FX	L/MBP	141	454	725	898	–	–	294	0.97	600	1.41	1070	2.02	11.15	198 – 242 V, 50 Hz	F2	203	197
40	NL6.1FT	LBP	74	245	–	–	–	–	157	1.21	–	–	–	–	6.13	187 – 254 V, 50 Hz	S	188	182
41	NL6.1FT	LBP	74	245	–	–	–	–	157	1.21	–	–	–	–	6.13	187 – 254 V, 50 Hz	S	190	184
42	NL6.1MF	MBP	–	234	388	485	732	885	–	–	320	1.61	585	2.33	6.13	187 – 254 V, 50 Hz *)	S	190	184
43	NL6F	LBP	64	247	–	–	–	–	152	1.22	–	–	–	–	6.13	198 – 254 V, 50 Hz	S	188	181
44	NL6FT	LBP	74	245	–	–	–	–	157	1.21	–	–	–	–	6.13	187 – 254 V, 50 Hz *)	S	197	191
45	NL7.3FT	LBP	88	290	–	–	–	–	186	1.22	–	–	–	–	7.27	187 – 254 V, 50 Hz	S	188	182
46	NL7.3MF	MBP	–	293	477	596	895	1081	–	–	394	1.64	716	2.32	7.27	187 – 254 V, 50 Hz *)	F1	197	191
47	NL7F	LBP	87	294	–	–	–	–	187	1.21	–	–	–	–	7.27	198 – 254 V, 50 Hz	S	190	183

Applications
LBP = Low Back Pressure
MBP = Medium Back Pressure
HBP = High Back Pressure

Motor types
RSIR = Resistant Start Induction Run
RSCR = Resistant Start Capacitor Run
CSIR = Capacitor Start Induction Run
CSR = Capacitor Start Run

Voltage and frequencies
**) Dual frequencies*

Electrical Equipment
[1]) see data sheets for details
[2]) alt. cable lenghts available
[3]) compulsory

Compressor cooling
S *= Static cooling normally sufficient*
O *= Oil cooling*
F_1 *= Fan cooling 1.5 m/s (compressor compartment temp. equal to ambient temperature)*
F_2 *= Fan cooling 3.0 m/s necessary*
** = O / F1 possible at 220 V nominal (187 – 242 V)*

Starting devices
LST *= Low Starting Torque*
LST is used with capillary tube control and pressure equalizing. (Pressure equalizing may exceed 10 minutes). The PTC starting device requires 5 minutes cooling before each start.
HST *= HST consisting of relay and starting capacitor is used for expansion valve control or for capillary tube control without pressure equalizing.*

For more information and performance with other refrigerants, please refer to Coolselector ® 2 at coolselector.danfoss.com or contact Danfoss.

S.No.	Dimensions			Electrical equipment - codes											Compressor - code no.		
				LST (RSIR & RSCR)					Run capacitor		HST (CSIR & CSR)			LST / HST				
	Connectors location			PTC starting device without RC connector		PTC starting device with RC connector		ePTC	optional or compulsory		Starting relay	Starting capacitor	Starting device	Cord relief	Cover	Compressor w/o accessories	Single pack Compressor with LST accessories	Single pack Compressor with HST accessories
	[mm]			Spades [mm]														
	Suction C	Process D	Dis-charge E	6.3	4.8	6.3	4.8	4.8	6.3	4.8	6.3	4.8	6.3					
1	6.2	6.2	5	103N0011	103N0018	–	–	–	–	–	–	–	–	103N1010	103N0491	101G0100	195B0098	–
2	6.2	6.2	5	103N0011	103N0018	–	–	–	–	–	–	–	–	103N1010	103N0491	101G0202	195B0277	–
3	6.2	6.2	5	103N0011	103N0018	–	–	–	–	–	117U6021	117U5014	–	103N1010	103N0491	101G0250	195B0248	195B0245
4	6.2	6.2	5	103N0011	103N0018	–	–	–	–	–	–	–	–	103N1010	103N0491	101G0220	195B0117	–
5	6.2	6.2	5	–	–	–	–	–	–	–	117U6021	117U5014	–	103N1010	103N0491	101G0222	–	195B0001
6	6.2	6.2	5	–	–	103N0016	103N0021	–	117-7117 [3]	117-7119 [2]	–	–	–	103N1010	103N0491	101G0221	–	–
7	6.5	6.5	5	–	–	–	–	–	–	–	–	–	–	117U0349	117U1023	102G4433	–	195B0498
8	6.2	6.2	5	103N0011	103N0018	–	–	–	–	–	–	–	–	103N1010	103N2010	102G4200	195B0004	–
9	6.2	6.2	5	103N0011	103N0018	–	–	–	–	–	117U6007	117U5014	–	103N1010	103N2011	102G4251		195B0268
10	6.2	6.2	5	103N0011	103N0018	–	–	–	–	–	117U6007	117U5014	–	103N1010	103N2010	102G4300	195B0005	195B0254
11	6.2	6.2	5	103N0011	103N0018	–	–	–	–	–	117U6009	117U5014	–	103N1010	103N2010	102G4350	195B0214	195B0006
12	6.2	6.2	5	103N0011	103N0018	103N0016	103N0021	–	117-7117	117-7119	–	–	–	103N1010	103N2010	102G4310	195B0219	–
13	6.2	6.2	5	103N0011	103N0018	–	–	–	–	–	117U6007	117U5014	–	103N1010	103N2010	102G4325	–	–
14	6.2	6.2	5	103N0011	103N0018	–	–	–	–	–	117U6009	117U5014	–	103N1010	103N2010	102G4400	–	–
15	6.2	6.2	5	103N0011	103N0018	–	–	–	–	–	117U6004	117U5014	–	103N1010	103N2010	102G4452	–	195B0008
16	6.2	6.2	5	–	–	–	–	–	–	–	117U6000	117U5014	–	103N1010	103N2011	102G4455	–	195B0122
17	6.2	6.2	5	103N0011	103N0018	103N0016	103N0021	–	117-7117	117-7119	–	–	–	103N1010	103N2010	102G4410	195B0216	–
18	6.2	6.2	5	103N0011	103N0018	–	–	–	–	–	117U6004	117U5014	–	103N1010	103N2010	102G4424	–	–
19	6.2	6.2	5	103N0011	103N0018	–	–	–	–	–	117U6004	117U5014	–	103N1010	103N2010	102G4501	195B0009	195B0241
20	6.2	6.2	5	103N0011	103N0018	–	–	–	–	–	117U6000	117U5014	–	103N1010	103N2010	102G4550	195B0222	195B0011
21	6.2	6.2	5	103N0011	103N0018	103N0016	103N0021	–	117-7117	117-7119	–	–	–	103N1010	103N2010	102G4510	195B0218	–
22	6.2	6.2	5	103N0011	103N0018	–	–	–	–	–	117U6004	117U5014	–	103N1010	103N2010	102G4520	195B0516	195B0010
23	6.2	6.2	5	103N0011	103N0018	–	–	–	–	–	117U6000	117U5014	–	103N1010	103N2010	102G4524	–	–
24	6.2	6.2	5	103N0011	103N0018	103N0016	103N0021	103N0050	117-7117	117-7119	117U6004	117U5014	–	103N1010	103N2010	102G4573	–	–
25	6.2	6.2	5	103N0011	103N0018	103N0016	103N0021	–	117-7117	117-7119	–	–	–	103N1010	103N2010	102G4610	–	–
26	6.2	6.2	5	103N0011	103N0018	–	–	–	–	–	117U6004	117U5014	–	103N1010	103N2010	102G4620	–	–
27	6.2	6.2	5	103N0011	103N0018	103N0016	103N0021	–	117-7117	117-7119	117U6016	117U5014	–	103N1010	103N2010	102G4724	–	–
28	6.5	6.5	5	103N0011	103N0018	103N0016	103N0021	–	117-7117	117-7119	117U6016	117U5014	–	103N1010	103N2010	102G4708	–	–
29	6.2	6.2	5	103N0011	103N0018	103N0016	103N0021	–	117-7117	117-7119	117U6000	117U5014	–	103N1010	103N2010	102G4720	195B0224	195B0255
30	8.2	6.2	6.2	103N0011	103N0018	–	–	–	–	–	117U6000	117U5015	–	103N1010	103N2010	103G6660	195B0191	195B0023
31	8.2	6.2	6.2	103N0011	103N0018	–	–	–	–	–	117U6001	117U5015	–	103N1010	103N2010	103G6680	195B0192	195B0024
32	8.2	6.2	8.2	–	–	–	–	–	–	–	117U6016	117U5015	–	103N1010	103N2011	103G6683	–	195B0167
33	8.2	6.2	6.2	103N0011	103N0018	–	–	–	–	–	117U6015	117U5015	–	103N1010	103N2010	103G6780	195B0193	195B0026
34	8.2	6.2	6.2	103N0011	103N0018	–	–	–	–	–	117U6010	117U5015	–	103N1010	103N2010	103G6880	195B0194	195B0027
35	8.2	6.2	6.2	103N0011	103N0018	–	–	–	–	–	117U6010	117U5015	–	103N1010	103N2010	103G6980	195B0195	195B0028
36	8.2	6.5	6.5	–	–	–	–	–	–	–	117U4140	117U5018	–	117U0349	117U1023	105G6743	–	195B0496
37	8.2	6.5	6.5	–	–	–	–	–	–	–	117U4140	117U5018	–	117U0349	117U1021	105G6841	–	–
38	8.2	6.5	6.5	–	–	–	–	–	–	–	117U4139	117U5018	–	117U0349	117U1021	105G6846	–	195B0396
39	8.2	6.5	6.5	–	–	–	–	–	–	–	117U4139	117U5018	–	117U0349	117U1023	105G6944	–	195B0492
40	6.2	6.2	5	103N0011	103N0018	–	–	–	–	–	117U6000	117U5015	–	103N1010	103N2010	105G6620	–	–
41	6.2	6.2	5	103N0011	103N0018	–	–	–	–	–	117U6000	117U5015	–	103N1010	103N2010	105G6621	–	–
42	8.2	6.2	6.2	103N0011	103N0018	–	–	–	–	–	117U6015	117U5015	–	103N1010	103N2011	105G6660	195B0415	195B0411
43	6.2	6.2	5	103N0011	103N0018	–	–	–	–	–	117U6004	117U5015	–	103N1010	103N2010	105G6606	195B0090	195B0165
44	6.2	6.2	5	103N0011	103N0018	–	–	–	–	–	117U6000	117U5015	–	103N1010	103N2010	105G6628	–	–
45	6.2	6.2	5	103N0011	103N0018	–	–	–	–	–	117U6001	117U5015	–	103N1010	103N2010	105G6726	–	–
46	8.2	6.2	6.2	103N0011	103N0018	–	–	–	–	–	117U6016	117U5015	–	103N1010	103N2011	105G6772	–	195B0370
47	6.2	6.2	5	103N0011	103N0018	–	–	–	–	–	117U6000	117U5015	–	103N1010	103N2010	105G6706	195B0091	195B0176

For more information and performance with other refrigerants, please refer to Coolselector ® 2 at coolselector.danfoss.com or contact Danfoss.

Technical data and ordering

Reciprocating compressors - Light Commercial (Count.)

R134a - 220 – 240 V | 50 Hz

S.No.	Compressor	Application	ASHRAE Tcond = 54.4 °C, Tliq = 32.2 °C, Tsuc = 32.2 °C Capacity [W] Evaporating temp. [°C]						ASHRAE LBP rating point -23.3 °C / 54.4 °C		ASHRAE MBP rating point -6.7 °C / 54.4 °C		ASHRAE HBP rating point 7.2 °C / 54.4 °C		Displacement	Voltage and frequencies	Compressor cooling	Dimensions Height [mm]	
			-35	-15	-5	0	10	15	Cooling capacity [W]	COP [W/W]	Cooling capacity [W]	COP [W/W]	Cooling capacity [W]	COP [W/W]	[cm³]			A	B
48	NL7FT	LBP	88	290	–	–	–	–	186	1.22	–	–	–	–	7.27	187 – 254 V, 50 Hz	S	197	191
49	NL8F	LBP	100	307	–	–	–	–	201	1.24	–	–	–	–	7.95	198 – 254 V, 50 Hz	S	197	191
50	NL8.4FT	LBP	107	340	–	–	–	–	220	1.23	–	–	–	–	8.35	187 – 254 V, 50 Hz	F1	190	184
51	NL8.4MF	MBP	–	343	551	686	1028	1240	–	–	456	1.64	822	2.27	8.35	187 – 254 V, 50 Hz *)	F1	197	191
52	NL9F	LBP	92	332	–	–	–	–	213	1.21	–	–	–	–	8.35	198 – 254 V, 50 Hz	S	197	191
53	NL9FT	LBP	107	340	–	–	–	–	220	1.23	–	–	–	–	8.35	187 – 254 V, 50 Hz *)	S	197	191
54	NL9FT	LBP	107	340	–	–	–	–	220	1.23	–	–	–	–	8.35	187 – 254 V, 50 Hz *)	S	197	191
55	NLE9F	LBP	101	335	–	–	–	–	211	1.33	–	–	–	–	8.35	198 – 254 V, 50 Hz	S	197	191
56	NL10FT	LBP	141	434	–	–	–	–	284	1.25	–	–	–	–	10.09	187 – 254 V, 50 Hz	S	203	197
57	NL10MF	MBP	–	428	687	853	1273	1534	–	–	569	1.64	1019	2.27	10.09	187 – 254 V, 50 Hz *)	F1	203	197
58	NLE10MF	MBP	110	425	687	854	–	–	268	1.28	568	1.71	1023	2.32	10.09	198 – 254 V, 50 Hz	F1	203	197
59	NLE10MF.2	L/MBP	116	457	734	913	1371	–	289	1.53	608	2.05	1096	2.75	10.09	198 – 254 V, 50 Hz	F2	203	197
60	NL11F	LBP	126	435	–	–	–	–	274	1.22	–	–	–	–	11.15	198 – 254 V, 50 Hz	F2	203	197
61	NL11MF	M/HBP	–	471	756	938	1400	1687	–	–	626	1.61	1121	2.19	11.15	187 – 254 V, 50 Hz	F2	203	197
62	NLE11MF.2	MBP	–	513	821	1018	1509	–	331	1.41	680	1.88	1211	2.50	11.15	198 – 242 V, 50 Hz	F2	203	197
63	NLE12.6MF.2	L/MBP	245	554	909	1137	1697	–	361	1.55	750	2.07	1362	2.78	12.55	198 – 254 V, 50 Hz *)	F2	203	197
64	NLE12.6MFT	L/MBP	245	554	909	1137	1697	–	361	1.55	750	2.07	1362	2.78	12.55	187 – 254 V, 50 Hz *)	F2	203	197
65	SC10G	L/M/HBP	30	333	603	766	1149	1368	168	0.87	493	1.59	923	2.35	10.29	187 – 254 V, 50 Hz *)	F2	199	193
66	SC10GH	HBP	–	289	592	761	1156	1392	–	–	481	1.56	925	2.28	10.29	198 – 254 V, 50 Hz *)	F2	209	203
67	SC12FT	LBP	129	506	802	–	–	–	321	1.15	666	1.64	–	–	12.87	187 – 254 V, 50 Hz *)	F1	209	203
68	SC12G	L/M/HBP	81	433	749	954	1471	1791	248	1.03	614	1.60	1170	2.29	12.87	187 – 254 V, 50 Hz *)	F2	209	203
69	SC12GH	HBP	–	377	718	936	1489	1835	–	–	583	1.51	1175	2.34	12.87	198 – 254 V, 50 Hz *)	F2	209	203
70	SC15F	LBP	126	545	901	–	–	–	324	1.11	745	1.59	–	–	15.28	198 – 254 V, 50 Hz	F1	209	203
71	SC15FT	LBP	157	606	958	–	–	–	386	1.18	796	1.65	–	–	15.28	187 – 254 V, 50 Hz *)	F2	209	203
72	SC15G	L/M/HBP	–	527	904	1127	1669	1998	260	1.01	745	1.56	1341	2.20	15.28	187 – 254 V, 50 Hz *)	F2	209	203
73	SC15GH	HBP	–	518	898	1137	1741	2117	–	–	737	1.60	1386	2.41	15.28	198 – 254 V, 50 Hz *)	F2	209	203
74	SC15MFX	MBP	–	569	951	1185	1749	–	326	1.10	785	1.66	1408	2.31	15.28	198 – 254 V, 50 Hz	F2	209	203
75	SC18F	LBP	159	640	1041	–	–	–	389	1.17	863	1.62	–	–	17.69	198 – 254 V, 50 Hz	F1	209	203
76	SC18FTX	LBP	181	703	1113	–	–	–	448	1.17	924	1.68	–	–	17.69	187 – 254 V, 50 Hz *)	F2	219	213
77	SC18G	L/M/HBP	–	658	1081	1348	2011	2417	397	1.13	893	1.58	1612	2.21	17.69	187 – 254 V, 50 Hz *)	F2	219	213
78	SC18GH	HBP	–	666	1061	1338	2048	2482	–	–	875	1.62	1632	2.27	17.69	198 – 254 V, 50 Hz	F2	219	213
79	SC18GH	HBP	–	602	1025	1302	2015	2465	–	–	841	1.74	1599	2.57	17.69	198 – 254 V, 50 Hz *)	F2	219	213
80	SC18MFX	MBP	–	697	1131	1410	2122		440	1.21	934	1.73	1696	2.51	17.69	187 – 254 V, 50 Hz *)	F2	219	213
81	SC21F	LBP	228	742	1218	–	–	–	458	1.14	1007	1.54	–	–	20.95	198 – 254 V, 50 Hz	F1	219	213
82	SC21FTX	LBP	241	884	1391	–	–	–	569	1.27	1156	1.76	–	–	20.95	187 – 254 V, 50 Hz	F2	219	213
83	SC21G	L/M/HBP	–	755	1261	1579	2352	2810	461	1.23	1039	1.68	1889	2.40	20.95	187 – 254 V, 50 Hz *)	F2	219	213
84	SC21MFX	MBP	–	845	1344	1665	2481		549	1.29	1114	1.76	1988	2.46	20.95	187 – 254 V, 50 Hz	F2	219	213
85	SC12/12G	L/M/HBP	162	865	1498	1907	2942	3582	497	1.03	1228	1.60	2340	2.29	25.74	187 – 254 V, 50 Hz	F2	249	244
86	SC15/15G	L/M/HBP	–	1054	1808	2255	3338	3996	521	1.01	1491	1.56	2682	2.20	30.56	187 – 254 V, 50 Hz	F2	249	244
87	SC18/18G	L/M/HBP	–	1298	2150	2688	4026	4843	782	1.12	1774	1.63	3225	2.24	35.38	187 – 254 V, 50 Hz	F2	259	254
88	SC21/21G	L/M/HBP	–	1508	2520	3156	4704	5621	921	1.13	2076	1.67	3777	2.29	41.90	187 – 254 V, 50 Hz	F2	259	254
89	GS26GHX	HBP	–	1087	1746	2172	3268	3960	–	–	1445	1.79	2611	2.50	26.30	198 – 254 V, 50 Hz	F2	259	247
90	GS26MFX	MBP	–	1078	1747	2170	–	–	–	–	1446	1.82	–	–	26.30	198 – 254 V, 50 Hz	F2	259	247
91	GS34MFX	MBP	–	1400	2284	2848	–	–	–	–	1888	1.80	3424	2.44	33.80	198 – 254 V, 50 Hz	F2	259	247

Applications
LBP = Low Back Pressure
MBP = Medium Back Pressure
HBP = High Back Pressure

Motor types
RSIR = Resistant Start Induction Run
RSCR = Resistant Start Capacitor Run
CSIR = Capacitor Start Induction Run
CSR = Capacitor Start Run

Voltage and frequencies
**) Dual frequencies*

Electrical Equipment
[1]) see data sheets for details
[2]) alt. cable lenghts available
[3]) compulsory

Compressor cooling
S *= Static cooling normally sufficient*
O *= Oil cooling*
F_1 *= Fan cooling 1.5 m/s*
(compressor compartment temp. equal to ambient temperature)
F_2 *= Fan cooling 3.0 m/s necessary*
** = O / F1 possible at 220 V nominal (187 – 242 V)*

Starting devices
LST *= Low Starting Torque*
LST is used with capillary tube control and pressure equalizing. (Pressure equalizing may exceed 10 minutes). The PTC starting device requires 5 minutes cooling before each start.
HST *= HST consisting of relay and starting capacitor is used for expansion valve control or for capillary tube control without pressure equalizing.*

For more information and performance with other refrigerants, please refer to Coolselector ® 2 at coolselector.danfoss.com or contact Danfoss.

S.No.	Dimensions			Electrical equipment - codes											Compressor - code no.		
				LST (RSIR & RSCR)					Run capacitor		HST (CSIR & CSR)			LST / HST				
	Connectors location			PTC starting device without RC connector		PTC starting device with RC connector		ePTC	optional or compulsory		Starting relay	Starting capacitor	Starting device	Cord relief	Cover	Compressor w/o accessories	Single pack Compressor with LST accessories	Single pack Compressor with HST accessories
	[mm]			Spades [mm]														
	Suction C	Process D	Dis-charge E	6.3	4.8	6.3	4.8	4.8	6.3	4.8	6.3	4.8	6.3					
48	6.2	6.2	5	103N0011	103N0018	–	–	–	–	–	117U6001	117U5015	–	103N1010	103N2010	105G6718	195B0299	195B0487
49	6.2	6.2	5	103N0011	103N0018	–	–	–	–	–	117U6001	117U5015	–	103N1010	103N2010	105G6822	–	–
50	6.2	6.2	5	103N0011	103N0018	–	–	–	–	–	117U6001	117U5015	–	103N1010	103N2010	105G6055	–	–
51	8.2	6.2	6.2	103N0011	103N0018	–	–	–	–	–	117U6016	117U5015	–	103N1010	103N2011	105G6879	–	195B0371
52	8.2	6.2	6.2	103N0011	103N0018	–	–	–	–	–	117U6001	117U5015	–	103N1010	103N2010	105G6802	195B0092	195B0178
53	6.2	6.2	5	103N0011	103N0018	–	–	–	–	–	117U6015	117U5015	–	103N1010	103N2010	105G6059	–	–
54	6.2	6.2	5	103N0011	103N0018	–	–	–	–	–	117U6015	117U5015	–	103N1010	103N2010	105G6828	–	195B0313
55	6.2	6.2	5	103N0011	103N0018	103N0016	103N0021	–	117-7117	117-7119	–	–	–	103N1010	103N2010	105G6805	–	–
56	8.2	6.2	6.2	103N0011	103N0018	–	–	103N0050	–	117-7119	117U6002	117U5015	–	103N1010	103N2010	105G6188	195B0327	–
57	8.2	6.2	6.2	103N0011	103N0018	–	–	–	–	–	117U6022	117U5018	–	103N1010	103N2011	105G6885	195B0274	195B0275
58	8.2	6.2	6.2	103N0011	103N0018	–	–	–	–	–	117U6003	117U5015	–	103N1010	103N2010	105G6888	–	–
59	8.2	6.2	6.2	–	–	–	–	103N0050	–	117-7119	117U6002	117U5015	–	103N1010	103N2010	105G6187	–	–
60	8.2	6.2	6.2	103N0011	103N0018	–	–	–	–	–	117U6002	117U5015	–	103N1010	103N2010	105G6900	195B0093	195B0182
61	8.2	6.2	6.2	103N0011	103N0018	–	–	–	–	–	117U6022	117U5018	–	103N1010	103N2011	105G6156	–	195B0432
62	8.2	6.2	6.2	–	–	–	–	103N0050	–	117-7119	117U6003	117U5015	–	103N1010	103N2010	105G6197	–	–
63	8.2	6.2	6.2	–	–	–	–	103N0050	–	117-7119	117U6005	117U5015	–	103N1010	103N2010	105G6387	–	–
64	8.2	6.2	6.2	–	–	–	–	103N0050	–	117-7119	117U6005	117U5015	–	103N1010	103N2010	105G6388	–	–
65	8.2	6.2	6.2	103N0011	–	–	–	–	–	–	117U6002	117U5017	–	103N1004	103N2009	104G8000	–	195B0043
66	10.2	6.2	8.2	–	–	–	–	–	–	–	117U6005	117U5017	–	103N1004	103N2008	104G8041	–	195B0142
67	8.2	6.2	6.2	103N0011	–	–	–	–	–	–	117U6003	117U5017	–	103N1004	103N2009	104G8205	–	–
68	8.2	6.2	6.2	103N0011	–	–	–	–	–	–	117U6003	117U5017	–	103N1004	103N2009	104G8240	195B0201	195B0050
69	10.2	6.2	8.2	–	–	–	–	–	–	–	117U6011	117U5017	–	103N1004	103N2008	104G8261	–	195B0249
70	8.2	6.2	6.2	103N0011	–	–	–	–	–	–	117U6003	117U5017	–	103N1004	103N2009	104G8500	195B0202	195B0052
71	10.2	6.2	6.2	103N0011	–	–	–	–	–	–	117U6005	117U5017	–	103N1004	103N2009	104G8505	–	195B0407
72	10.2	6.2	6.2	–	–	–	–	–	–	–	117U6005	117U5017	–	103N1004	103N2009	104G8520	–	195B0053
73	10.2	6.2	8.2	–	–	–	–	–	–	–	117U6011	117U5017	–	103N1004	103N2008	104G8561	–	–
74	10.2	6.2	6.2	–	–	–	–	–	–	–	117U6005	117U5017	–	103N1004	103N2008	104G8501	–	–
75	10.2	6.2	6.2	–	–	–	–	–	–	–	117U6005	117U5017	–	103N1004	103N2009	104G8800	–	195B0057
76	10.2	6.2	6.2	–	–	–	–	–	–	–	117U6019	117U5017	–	103N1004	103N2009	104G8805	–	195B0408
77	10.2	6.2	6.2	–	–	–	–	–	–	–	117U6019	117U5017	–	103N1004	103N2009	104G8820	–	195B0059
78	10.2	6.2	8.2	–	–	–	–	–	–	–	117U6019	117U5017		103N1004	103N2009	104G8860	–	195B0246
79	10.2	6.2	8.2	–	–	–	–	–	[3]	[3]	–	117U5373	117-7039	103N1004	103N2008	104G8861	–	195B0648
80	10.2	6.2	6.2	–	–	–	–	–	–	–	117U6019	117U5017	117-7027	103N1004	103N2008	104G8804	–	–
81	10.2	6.2	6.2	–	–	–	–	–	–	–	117U6019	117U5017	–	103N1004	103N2009	104G8100	–	195B0047
82	10.2	6.2	6.2	–	–	–	–	–	–	–	117U6019	117U5017	–	103N1004	103N2009	104G8105	–	195B0514
83	10.2	6.2	6.2	–	–	–	–	–	[3]	[3]	–	117U5373	117-7029	103N1004	103N2009	104G8140	–	195B0752
84	10.2	6.2	6.2	–	–	–	–	–	–	–	117U6019	117U5017	117-7039	103N1004	103N2009	104G8120	–	195B0682
85	12	6.2	6.2	–	–	–	–	–	–	–	117U6003	117U5017	–	103N1004	103N2009	104G8280	–	195B0051
86	12	6.2	6.2	–	–	–	–	–	–	–	117U6005	117U5017	–	103N1004	103N2009	104G8580	–	195B0056
87	16	6.2	6.2	–	–	–	–	–	–	–	117U6019	117U5017	–	103N1004	103N2009	104G8880	–	195B0060
88	16	6.2	6.2	–	–	–	–	–	[3]	[3]	–	117U5373	117-7029	103N1004	103N2009	104G8180	–	195B0637
89	12.9	6.5	8.2	–	–	–	–	–	[3]	[3]	–		117-7070	–	107B9101	107B0702	–	195B0434
90	12.9	6.5	8.2	–	–	–	–	–	[3]	[3]	–	–	117-7055	–	107B9101	107B0700	–	195B0433
91	12.9	6.5	8.2	–	–	–	–	–	[3]	[3]	–	–	117-7056	–	107B9101	107B0701	–	195B0435

For more information and performance with other refrigerants, please refer to Coolselector ® 2 at coolselector.danfoss.com or contact Danfoss.

Technical data and ordering

Reciprocating compressors - Light Commercial

R134a - 220 V | 60 Hz

S.No.	Compressor	Application	ASHRAE Tcond = 130 °F, Tliq = 90 °F, Tsuc = 90 °F Capacity [BTU/h] Evaporating temp. [°F]						ASHRAE LBP rating point -10 °F / 130 °F		ASHRAE MBP rating point 20 °F / 130 °F		ASHRAE HBP rating point 45 °F / 130 °F		Displacement	Voltage and frequencies	Compressor cooling	Dimensions Height [in]	
			-31	5	23	32	50	59	Cooling capacity [BTU/h]	EER [BTU/Wh]	Cooling capacity [BTU/h]	EER [BTU/Wh]	Cooling capacity [BTU/h]	EER [BTU/Wh]	[cu.in]			A	B
1	PL35G	L/M/HBP	–	261	438	553	849	1034	115	2.71	368	4.47	689	6.45	0.12	– V, Hz *)	0	5.4	5.3
2	TL2.5G	L/M/HBP	60	342	570	715	–	–	202	2.88	471	4.55	864	6.35	0.16	198 – 254 V, 60 Hz *)	S	6.4	6.3
3	TL3G	L/M/HBP	–	402	682	–	–	–	231	3.15	562	4.59	–	–	0.19	198 – 254 V, 60 Hz *)	S	6.4	6.3
4	TL4G	L/M/HBP	–	539	891	–	–	–	329	3.60	737	5.05	–	–	0.24	198 – 254 V, 60 Hz *)	S	6.8	6.7
5	TL4GH	HBP	–	507	886	1123	–	–	–	–	728	4.86	1368	6.80	0.24	198 – 254 V, 60 Hz *)	F2	6.8	6.7
6	TL5G	L/M/HBP	–	683	1099	–	–	–	429	3.84	911	4.93	–	–	0.31	198 – 254 V, 60 Hz *)	S	6.8	6.7
7	TLES6.5FT.3	LBP	303	964	–	–	–	–	622	4.21	–	–	–	–	0.40	187 – 254 V, 50 Hz *)	S	6.8	6.7
8	TLES7FT.4	LBP	303	964	–	–	–	–	622	4.21	–	–	–	–	0.40	187 – 254 V, 50 Hz *)	S	6.8	6.7
9	FR6G	L/M/HBP	–	842	1458	–	–	–	459	3.60	1199	5.58	–	–	0.38	198 – 254 V, 60 Hz *)	F1	7.7	7.5
10	FR7.5G	L/M/HBP	–	962	1625	–	–	–	547	3.71	1340	5.38	–	–	0.42	198 – 254 V, 60 Hz *)	F1	7.7	7.5
11	FR7GH	HBP	–	952	1606	2047	–	–	–	–	1320	5.53	2537	7.71	0.42	198 – 254 V, 60 Hz *)	F2	7.7	7.5
12	FR8.5G	L/M/HBP	–	1113	1866	–	–	–	661	3.79	1539	5.13	–	–	0.49	198 – 254 V, 60 Hz *)	F1	7.7	7.5
13	FR10G	L/M/HBP	–	1235	2053	–	–	–	731	3.57	1696	4.93	–	–	0.55	198 – 254 V, 60 Hz *)	F1	7.7	7.5
14	NF7FX	L/MBP	331	1107	1782	2206	–	–	700	3.81	1478	5.66	–	–	0.44	198 – 242 V, 50 Hz	S	8.0	7.8
15	NF10FX	L/MBP	512	1529	2405	2988	–	–	1021	3.90	1996	5.23	–	–	0.62	198 – 242 V, 60 Hz *)	F2	8.0	7.8
16	NL6.1MF	MBP	185	947	1586	1994	–	–	562	3.97	1308	5.54	–	–	0.37	187 – 254 V, 60 Hz *)	S	7.5	7.2
17	NL6FT	LBP	248	841	–	–	–	–	551	4.16			–	–	0.37	198 – 254 V, 60 Hz *)	S	7.8	7.5
18	NL7.3MF	MBP	313	1199	1943	2418	–	–	751	4.06	1609	5.42	–	–	0.44	187 – 254 V, 60 Hz *)	F1	7.8	7.5
19	NL8.4MF	MBP	329	1377	2257	2819	–	–	847	4.20	1867	5.53	–	–	0.51	187 – 254 V, 60 Hz *)	F1	7.8	7.5
20	NL9FT	LBP	384	1441	–	–	–	–	921	4.72	–	–	–	–	0.51	198 – 254 V, 60 Hz *)	F1	7.8	7.5
21	NL10MF	MBP	465	1716	2753	3417	–	–	1090	4.40	2283	5.66	–	–	0.62	187 – 254 V, 60 Hz *)	F1	8.0	7.8
22	NLE12.6MF.2	L/MBP	1009	2276	3737	4677	–	–	1481	5.34	3088	7.14	–	–	0.77	198 – 254 V, 60 Hz *)	F2	8.0	7.8
23	NLE12.6MFT	L/MBP	1009	2276	3737	4677	–	–	1481	5.34	3088	7.14	–	–	0.77	198 – 254 V, 60 Hz *)	F2	8.0	7.8
24	SC10G	L/M/HBP	119	1331	2408	–	–	–	670	2.95	1972	5.43	–	–	0.63	198 – 254 V, 60 Hz *)	F2	7.8	7.6
25	SC10GH	HBP	–	1361	2305	2909	–	–	–	–	1899	5.08	3544	6.89	0.63	198 – 254 V, 60 Hz *)	F2	8.2	8.0
26	SC12FT	LBP	531	2020	3229	–	–	–	1276	4.04	2680	5.44	–	–	0.79	198 – 254 V, 60 Hz *)	F1	8.2	8.0
27	SC12G	L/M/HBP	318	1722	2987	–	–	–	983	3.50	2451	5.47	–	–	0.79	198 – 254 V, 60 Hz *)	F2	8.2	8.0
28	SC12G	MBP	–	1573	2953	3852	–	–	–	–	2401	5.65	4860	8.38	0.79	187 – 254 V, 60 Hz	F2	8.2	8.0
29	SC12GH	HBP	–	1573	2882	3734	–	–	–	–	2350	5.52	4680	8.13	0.79	198 – 254 V, 60 Hz *)	F2	8.2	8.0
30	SC15FT	LBP	655	2417	3832	–	–	–	1542	4.09	3185	5.54	–	–	0.93	198 – 254 V, 60 Hz *)	F2	8.2	8.0
31	SC15G	L/M/HBP	–	2182	3652	–	–	–	1263	3.64	3020	5.58	–	–	0.93	198 – 254 V, 60 Hz *)	F2	8.2	8.0
32	SC15G	MBP	–	1988	3534	4449	–	–	–	–	2907	5.69	5348	8.11	0.93	187 – 254 V, 60 Hz	F2	8.2	8.0
33	SC15GH	HBP	–	1792	3286	4292	–	–	–	–	2673	5.70	5449	8.17	0.93	198 – 254 V, 60 Hz *)	F2	8.2	8.0
34	SC18FTX	LBP	796	2857	4544	–	–	–	1823	4.11	3774	5.69	–	–	1.08	198 – 254 V, 60 Hz *)	F2	8.6	8.4
35	SC18G	L/M/HBP	–	2632	4316	–	–	–	1596	3.86	3572	5.41	–	–	1.08	198 – 254 V, 60 Hz *)	F2	8.6	8.4
36	SC18G	MBP	–	2426	4049	5122	–	–	–	–	3336	6.03	6282	8.57	1.08	187 – 254 V, 60 Hz	F2	8.6	8.4
37	SC18GH	HBP	–	2426	4049	5122	–	–	–	–	3336	6.03	6282	8.57	1.08	198 – 254 V, 60 Hz *)	F2	8.6	8.4
38	SC18MFX	MBP	–	2822	4513	5598	–	–	–	–	3744	5.96	6697	8.09	1.08	187 – 254 V, 60 Hz *)	F2	8.6	8.4
39	SC21FTX	LBP	1017	3379	5337	–	–	–	2184	4.39	4437	5.77	–	–	1.28	187 – 254 V, 60 Hz	F2	8.6	8.4
40	SC21G	L/M/HBP	–	2780	4845	–	–	–	1516	3.67	3980	5.69	–	–	1.28	198 – 254 V, 60 Hz *)	F2	8.6	8.4
41	SC21G	L/M/HBP	–	2780	4845	–	–	–	1516	3.67	3980	5.69	–	–	1.28	198 – 254 V, 60 Hz	F2	8.6	8.4

Applications
LBP = Low Back Pressure
MBP = Medium Back Pressure
HBP = High Back Pressure

Motor types
RSIR = Resistant Start Induction Run
RSCR = Resistant Start Capacitor Run
CSIR = Capacitor Start Induction Run
CSR = Capacitor Start Run

Voltage and frequencies
**) Dual frequencies*

Electrical Equipment
[1]) see data sheets for details
[2]) alt. cable lenghts available
[3]) compulsory

Compressor cooling
S *= Static cooling normally sufficient*
O *= Oil cooling*
F_1 *= Fan cooling 1.5 m/s (compressor compartment temp. equal to ambient temperature)*
F_2 *= Fan cooling 3.0 m/s necessary*
** = O / F1 possible at 220 V nominal (187 – 242 V)*

Starting devices
LST *= Low Starting Torque*
LST is used with capillary tube control and pressure equalizing. (Pressure equalizing may exceed 10 minutes). The PTC starting device requires 5 minutes cooling before each start.
HST *= HST consisting of relay and starting capacitor is used for expansion valve control or for capillary tube control without pressure equalizing.*

For more information and performance with other refrigerants, please refer to Coolselector ® 2 at coolselector.danfoss.com or contact Danfoss.

S.No.	Dimensions			Electrical equipment - codes												Compressor - code no.		
	Connectors location			LST (RSIR & RSCR) - refer to data sheet for ePTC code no.					Run capacitor		HST (CSIR & CSR)			LST / HST				
				PTC starting device		PTC starting device with RC connector		Protector (external)	optional or compulsory		Starting relay	Starting capacitor	Starting device [2]	Cord relief	Cover	Compressor w/o accessories	Single pack Compressor with LST accessories	Single pack Compressor with HST accessories
	[in]			Spades [in]														
	Suction C	Process D	Dis-charge E	¼	3/16	¼	3/16	¼	¼	3/16	¼	¼	¼					
1	0.24	0.24	0.20	103N0011	103N0018	–	–	–	–	–	117U6021	117U5014	–	103N1010	103N0491	101G0250	195B0248	195B0245
2	0.24	0.24	0.20	103N0011	103N0018	–	–	–	–	–	117U6007	117U5014	–	103N1010	103N2011	102G4251	–	195B0347
3	0.24	0.24	0.20	103N0011	103N0018	–	–	–	–	–	117U6009	117U5014	–	103N1010	103N2010	102G4350	195B0214	195B0006
4	0.24	0.24	0.20	103N0011	103N0018	–	–	–	–	–	117U6004	117U5014	–	103N1010	103N2010	102G4452	–	195B0008
5	0.24	0.24	0.20	–	–	–	–	–	–	–	117U6000	117U5014	–	103N1010	103N2011	102G4455	–	195B0122
6	0.24	0.24	0.20	103N0011	103N0018	–	–	–	–	–	117U6000	117U5014	–	103N1010	103N2010	102G4550	195B0222	195B0011
7	0.24	0.24	0.20	103N0011	103N0018	103N0016	103N0021	–	117-7117	117-7119	117U6016	117U5014	–	103N1010	103N2010	102G4724	–	–
8	0.26	0.26	0.20	103N0011	103N0018	103N0016	103N0021	–	117-7117	117-7119	117U6016	117U5014	–	103N1010	103N2010	102G4708	–	–
9	0.32	0.24	0.24	103N0011	103N0018	–	–	–	–	–	117U6000	117U5015	–	103N1010	103N2010	103G6660	195B0191	195B0023
10	0.32	0.24	0.24	103N0011	103N0018	–	–	–	–	–	117U6001	117U5015	–	103N1010	103N2010	103G6680	195B0192	195B0024
11	0.32	0.24	0.32	–	–	–	–	–	–	–	117U6016	117U5015	–	103N1010	103N2011	103G6683	–	195B0167
12	0.32	0.24	0.24	103N0011	103N0018	–	–	–	–	–	117U6015	117U5015	–	103N1010	103N2010	103G6780	195B0193	195B0026
13	0.32	0.24	0.24	103N0011	103N0018	–	–	–	–	–	117U6010	117U5015	–	103N1010	103N2010	103G6880	195B0194	195B0027
14	0.32	0.26	0.26	–	–	–	–	–	–	–	117U4140	117U5018	–	117U0349	117U1023	105G6743	–	195B0496
15	0.32	0.26	0.26	–	–	–	–	–	–	–	117U4139	117U5018	–	117U0349	117U1021	105G6846	–	195B0396
16	0.32	0.24	0.24	103N0011	103N0018	–	–	–	–	–	117U6015	117U5015	–	103N1010	103N2011	105G6660	195B0415	195B0411
17	0.24	0.24	0.20	103N0011	103N0018	–	–	–	–	–	117U6000	117U5015	–	103N1010	103N2010	105G6628	–	–
18	0.32	0.24	0.24	103N0011	103N0018	–	–	–	–	–	117U6016	117U5015	–	103N1010	103N2011	105G6772	–	195B0370
19	0.32	0.24	0.24	103N0011	103N0018	–	–	–	–	–	117U6016	117U5015	–	103N1010	103N2011	105G6879	–	195B0371
20	0.24	0.24	0.20	103N0011	103N0018	–	–	–	–	–	117U6015	117U5015	–	103N1010	103N2010	105G6059	–	–
21	0.32	0.24	0.24	103N0011	103N0018	–	–	–	–	–	117U6022	117U5018	–	103N1010	103N2011	105G6885	195B0274	195B0275
22	0.32	0.24	0.24	–	–	–	–	117L0585	–	117-7119	117U6005	117U5015	–	103N1010	103N2010	105G6387	–	–
23	0.32	0.24	0.24	–	–	–	–	117L0585	–	117-7119	117U6005	117U5015	–	103N1010	103N2010	105G6388	–	–
24	0.32	0.24	0.24	103N0011	–	–	–	–	–	–	117U6002	117U5017	–	103N1004	103N2009	104G8000	–	195B0043
25	0.40	0.24	0.32		–	–	–	–	–	–	117U6005	117U5017	–	103N1004	103N2008	104G8041	–	195B0142
26	0.32	0.24	0.24	103N0011	–	–	–	–	–	–	117U6003	117U5017	–	103N1004	103N2009	104G8205	–	–
27	0.32	0.24	0.24	103N0011	–	–	–	–	–	–	117U6003	117U5017	–	103N1004	103N2009	104G8240	195B0201	195B0050
28	0.40	0.26	0.26	–	–	–	–	–	–	–	117U6011	117U5017	–	103N1004	103N2008	104G8245	–	195B0457
29	0.40	0.24	0.32	–	–	–	–	–	–	–	117U6011	117U5017	–	103N1004	103N2008	104G8261	–	195B0249
30	0.40	0.24	0.24	103N0011	–	–	–	–	–	–	117U6005	117U5017	–	103N1004	103N2009	104G8505	–	195B0407
31	0.40	0.24	0.24	–	–	–	–	–	–	–	117U6005	117U5017	–	103N1004	103N2009	104G8520	–	195B0053
32	0.40	0.26	0.26	–	–	–	–	–	–	–	117U6011	117U5017	–	103N1004	103N2008	104G8526	–	195B0453
33	0.40	0.24	0.32	–	–	–	–	–	–	–	117U6011	117U5017	–	103N1004	103N2008	104G8561	–	195B0144
34	0.40	0.24	0.24	–	–	–	–	–	–	–	117U6019	117U5017	–	103N1004	103N2009	104G8805	–	195B0408
35	0.40	0.24	0.24	–	–	–	–	–	–	–	117U6019	117U5017	–	103N1004	103N2009	104G8820	–	195B0059
36	0.40	0.26	0.26	–	–	–	–	–	–	–	–	117U5373	117-7039	103N1004	103N2008	104G8823	–	195B0651
37	0.40	0.24	0.32	–	–	–	–	–	–	–	–	117U5373	117-7039	103N1004	103N2008	104G8861	–	195B0648
38	0.40	0.24	0.24	–	–	–	–	–	–	–	117U6019	117U5017	117-7027	103N1004	103N2008	104G8804	–	–
39	0.40	0.24	0.24	–	–	–	–	–	–	–	–	117U5373	117-7039	103N1004	103N2008	104G8106	–	195B0659
40	0.40	0.24	0.24	–	–	–	–	–	–	–	–	117U5373	117-7029	103N1004	103N2009	104G8140	–	195B0752
41	0.40	0.24	0.24	–	–	–	–	–	117-7121	–	117-7427	117U5373	117-7039	103N1004	103N2008	104G8143	–	–

For more information and performance with other refrigerants, please refer to Coolselector ® 2 at coolselector.danfoss.com or contact Danfoss.

Technical data and ordering

Reciprocating compressors - Light Commercial

R134a - 115 V | 60 Hz

S.No.	Compressor	Application	ASHRAE Tcond = 130 °F, Tliq = 90 °F, Tsuc = 90 °F Capacity [BTU/h] Evaporating temp. [°F]						ASHRAE LBP rating point -10 °F / 130 °F		ASHRAE MBP rating point 20 °F / 130 °F		ASHRAE HBP rating point 45 °F / 130 °F		Displacement	Voltage and frequencies	Compressor cooling	Dimensions Height [in]	
			-31	5	23	32	50	59	Cooling capacity [BTU/h]	EER [BTU/Wh]	Cooling capacity [BTU/h]	EER [BTU/Wh]	Cooling capacity [BTU/h]	EER [BTU/Wh]	[cu.in]			A	B
1	PL30F	L/M/HBP	–	187	329	422	–	–	103	2.03	270	4.07	522	6.41	0.09	90 – 127 V, 60 Hz *)	S	5.3	5.2
2	PL50F	L/MBP	–	290	472	585	–	–	175	2.70	391	4.42	–	–	0.12	103 – 127 V, 60 Hz	S	5.3	5.2
3	TF3.5F	LBP	128	502	–	–	–	–	305	3.26	–	–	–	–	0.22	95 – 135 V, 60 Hz	S	6.8	6.7
4	TFS4F	LBP	149	600	–	–	–	–	356	3.66	–	–	–	–	0.24	95 – 135 V, 60 Hz	S	6.8	6.7
5	TFS4.5FT	L/MBP	238	760	1227	1514	–	–	477	3.75	1018	5.17	–	–	0.28	95 – 135 V, 60 Hz	S	6.8	6.7
6	TL2.5F	LBP	–	339	569	–	–	–	202	3.12	470	4.53	–	–	0.16	103 – 127 V, 60 Hz	S	6.4	6.3
7	TL2.5G	L/M/HBP	–	336	610	788	–	–	190	2.65	498	4.91	976	7.46	0.16	103 – 127 V, 60 Hz	S	6.4	6.3
8	TL3F	LBP	–	411	693	–	–	–	253	3.29	571	4.58	–	–	0.19	103 – 127 V, 60 Hz	S	6.4	6.3
9	TL4G	L/M/HBP	–	522	895	1135	–	–	306	3.19	736	5.00	1383	7.02	0.24	90 – 135 V, 60 Hz *)	S	6.8	6.7
10	TLS4.5F	LBP	238	760	1227	–	–	–	477	3.70	1018	5.11	–	–	0.28	103 – 127 V, 60 Hz	S	6.4	6.3
11	FF6GK	L/M/HBP	–	796	1464	1886	–	–	415	3.15	1195	5.40	2320	7.86	0.38	103 – 127 V, 60 Hz	F1	7.7	7.5
12	FF7.5GK	L/M/HBP	–	934	1654	2105	–	–	516	3.48	1356	5.41	2556	7.51	0.42	103 – 127 V, 60 Hz	F1	7.7	7.5
13	FF8.5GX	L/M/HBP	–	1133	1921	2407	–	–	662	3.17	1584	4.94	2871	6.87	0.49	103 – 127 V, 60 Hz	F2	7.7	7.5
14	FF10GX	L/M/HBP	–	1235	2109	2652	–	–	715	3.08	1737	4.84	3179	6.79	0.55	103 – 127 V, 60 Hz	F2	7.7	7.5
15	NF5.5FX	L/MBP	281	1098	1751	2165	–	–	696	4.12	1454	5.71	–	–	0.37	95 – 135 V, 60 Hz	F2	7.8	7.5
16	NF6.1FX.2	L/MBP	293	1161	1873	2315	–	–	721	4.06	1554	6.09	–	–	0.37	95 – 135 V, 60 Hz	F1	7.8	7.5
17	NF6FK	L/MBP	270	1054	1681	2079	–	–	668	3.88	1396	5.38	–	–	0.37	95 – 135 V, 60 Hz	F2	8.0	7.8
18	NF7.3FX.2	L/MBP	387	1413	2254	2776	–	–	893	3.95	1872	5.81	–	–	0.44	95 – 135 V, 60 Hz	F1	7.8	7.5
19	NF7FK	L/MBP	383	1275	2002	2468	–	–	834	4.09	1665	5.48	–	–	0.44	95 – 135 V, 60 Hz	F2	8.0	7.8
20	NF7FX	L/MBP	395	1314	2064	2545	–	–	860	4.00	1717	5.54	–	–	0.44	95 – 135 V, 60 Hz	F2	7.8	7.5
21	NF8.4FX.2	L/MBP	–	1613	2553	3138	–	–	1031	4.16	2123	5.88	–	–	0.51	95 – 135 V, 60 Hz	F1	7.8	7.5
22	NF9FX	L/MBP	–	1454	2316	2864	–	–	937	3.83	1923	5.54	–	–	0.51	95 – 135 V, 60 Hz	F2	7.8	7.5
23	NF10FX	L/MBP	–	1625	2577	3184	–	–	1048	4.01	2140	5.48	–	–	0.62	95 – 135 V, 60 Hz	F2	7.8	7.5
24	NF11FX	MBP	477	1726	2759	3419	–	–	1100	3.72	2290	5.19	–	–	0.68	95 – 135 V, 60 Hz	F2	8.0	7.8
25	NF11FX.2	MBP	–	2054	3269	4025	–	–	–	–	2717	5.62	–	–	0.69	95 – 135 V, 60 Hz	F2	8.0	7.8
26	NTY7FK	LBP	479	1365	–	–	–	–	886	5.25	–	–	–	–	0.44	103 – 127 V, 60 Hz	S	8.0	7.8
27	SC12G	L/M/HBP	203	1799	3099	3927	–	–	1007	3.38	2548	5.33	4795	7.64	0.79	103 – 127 V, 60 Hz	F1	8.2	8.0
28	SC15FTX	LBP	677	2412	3797	–	–	–	1552	3.83	3160	5.00	–	–	0.93	90 – 135 V, 60 Hz	F2	8.2	8.0
29	SC15G	L/M/HBP	–	2183	3724	4663	–	–	1237	3.76	3071	5.43	5551	7.24	0.93	103 – 127 V, 60 Hz	F1	8.2	8.0
30	SC18G	L/M/HBP	–	2522	4226	5255	–	–	1356	3.36	3496	5.06	6255	6.86	1.08	95 – 135 V, 60 Hz	F2	8.6	8.4

Applications
LBP = Low Back Pressure
MBP = Medium Back Pressure
HBP = High Back Pressure

Motor types
RSIR = Resistant Start Induction Run
RSCR = Resistant Start Capacitor Run
CSIR = Capacitor Start Induction Run
CSR = Capacitor Start Run

Voltage and frequencies
**) Dual frequencies*

Electrical Equipment
[1]) see data sheets for details
[2]) alt. cable lenghts available
[3]) compulsory

Compressor cooling
***S** = Static cooling normally sufficient*
***O** = Oil cooling*
***F$_1$** = Fan cooling 1.5 m/s*
(compressor compartment temp. equal to ambient temperature)
***F$_2$** = Fan cooling 3.0 m/s necessary*
****** = O / F1 possible at 220 V nominal (187 – 242 V)*

Starting devices
***LST** = Low Starting Torque*
LST is used with capillary tube control and pressure equalizing. (Pressure equalizing may exceed 10 minutes). The PTC starting device requires 5 minutes cooling before each start.
***HST** = HST consisting of relay and starting capacitor is used for expansion valve control or for capillary tube control without pressure equalizing.*

For more information and performance with other refrigerants, please refer to Coolselector ® 2 at coolselector.danfoss.com or contact Danfoss.

S.No.	Dimensions			Electrical equipment - codes												Compressor - code no.		
	Connectors location			LST (RSIR & RSCR) - refer to data sheet for ePTC code no.					Run capacitor		HST (CSIR & CSR)			LST / HST				
				PTC starting device		PTC starting device with RC connector		Protector (external)	optional or compulsory		Starting relay	Starting capacitor	Starting device [2]	Cord relief	Cover	Compressor w/o accessories	Single pack Compressor with LST accessories	Single pack Compressor with HST accessories
	[in]			Spades [in]														
	Suction C	Process D	Discharge E	¼	3/16	¼	3/16	¼	¼	3/16	¼	¼	¼					
1	0.26	0.26	0.20	103N0026	103N0023	–	–	–	–	–	117U6000	117U5015	–	103N1010	103N0492	101G9100	195B0530	–
2	0.26	0.26	0.20	103N0026	103N0023	–	–	–	–	–	117U6000	117U5015	–	103N1010	103N0492	101G9202	–	195B0320
3	0.26	0.26	0.20	–	–	–	–	–	–	–	–	–	–	117U0349	117U1021	102G3304	–	–
4	0.26	0.26	0.20	–	–	–	–	–	–	–	–	–	–	117U0349	117U1021	102G3431	–	–
5	0.26	0.26	0.19	–	–	–	–	–	–	–	117U4126	117U5022	–	117U0349	117U1021	102G3432	–	195B0673
6	0.26	0.26	0.20	103N0026	103N0023	–	–	–	–	–	–	–	–	103N1010	103N2011	102G3206	–	195B0300
7	0.26	0.26	0.20	103N0026	103N0023	–	–	–	–	–	–	–	–	103N1010	103N2011	102G3255	195B0592	–
8	0.26	0.26	0.20	103N0026	103N0023	–	–	–	–	–	–	–	–	103N1010	103N2011	102G3300	195B0002	–
9	0.26	0.26	0.20	103N0026	103N0023	–	–	–	–	–	117U6003	117U5023	–	103N1010	103N2011	102G3460	–	195B0003
10	0.26	0.26	0.20	103N0026	103N0023	–	–	–	–	–	117U6003	117U5023	–	103N1010	103N2011	102G3425	–	–
11	0.32	0.26	0.26	–	–	–	–	–	–	–	–	–	–	117U0349	117U1021	103G5680	–	195B0121
12	0.32	0.26	0.26	–	–	–	–	–	–	–	–	–	–	117U0349	117U1021	103G5780	–	195B0022
13	0.32	0.26	0.26	–	–	–	–	–	–	–	117U4060	117U5041	–	117U0349	117U1021	103G5880	–	195B0125
14	0.32	0.26	0.26	–	–	–	–	–	–	–	117U4061	117U5040	–	117U0349	117U1021	103G5980	–	195B0186
15	0.32	0.26	0.26	–	–	–	–	–	–	–	117U4127	117U5025	–	117U0349	117U1021	105G5623	–	195B0259
16	0.32	0.26	0.26	–	–	–	–	–	–	–	117U4127	117U5025	–	117U0349	117U1021	105G5631	–	195B0560
17	0.32	0.26	0.26	–	–	–	–	–	–	–	117U4132	117U5022	–	117U0349	117U1021	105G5628	–	–
18	0.32	0.26	0.26	–	–	–	–	–	–	–	117U4061	117U5025	–	117U0349	117U1021	105G5722	–	195B0586
19	0.32	0.26	0.26	–	–	–	–	–	–	–	117U4132	117U5022	–	117U0349	117U1021	105G5728	–	–
20	0.32	0.26	0.26	–	–	–	–	–	–	–	117U4061	117U5025	–	117U0349	117U1021	105G5723	–	195B0467
21	0.32	0.26	0.26	–	–	–	–	–	–	–	117U4129	117U5025	–	117U0349	117U1021	105G5918	–	–
22	0.32	0.26	0.26	–	–	–	–	–	–	–	117U4129	117U5025	–	117U0349	117U1021	105G5920	–	195B0552
23	0.32	0.26	0.26	–	–	–	–	–	–	–	117U4129	117U5022	–	117U0349	117U1021	105G5941	–	195B0330
24	0.32	0.26	0.26	–	–	–	–	–	–	–	117U4123	117U5028	–	117U0349	117U1021	105G5945	–	195B0388
25	0.32	0.26	0.26	–	–	–	–	–	–	–	117U4151	117U5028	–	117U0349	117U1021	105G5916	–	–
26	0.32	0.26	0.26	–	–	117U6102	–	117U3306	117-7118	–	–	–	–	–	117U1026	105G5720	–	–
27	0.32	0.26	0.26	–	–	–	–	–	–	–	117U6020	117U5023	–	103N1004	103N2008	104G7250	–	195B0042
28	0.32	0.26	0.26	–	–	–	–	–	–	–	117U6020	117U5023	–	103N1004	103N2008	104G7505	–	195B0500
29	0.32	0.26	0.26	–	–	–	–	–	–	–	117U6020	117U5023		103N1004	103N2008	104G7550	–	195B0099
30	0.38	0.26	0.26	–	–	–	–	–	–	–	117-7441	117U5042	117-7053	–	117U1021	104G7800	–	195B0694

For more information and performance with other refrigerants, please refer to Coolselector ® 2 at coolselector.danfoss.com or contact Danfoss.

Technical data and ordering

Reciprocating compressors - Light Commercial

R404A - 220 – 240 V | 50 Hz

S.No.	Compressor	Application	ASHRAE Tcond = 54.4 °C, Tliq = 32.2 °C, Tsuc = 32.2 °C Capacity [W] Evaporating temp. [°C]						ASHRAE LBP rating point -23.3 °C / 54.4 °C		ASHRAE MBP rating point -6.7 °C / 54.4 °C		ASHRAE HBP rating point 7.2 °C / 54.4 °C		Displacement	Voltage and frequencies	Compressor cooling	Dimensions Height [mm]	
			-35	-15	-5	0	10	15	Cooling capacity [W]	COP [W/W]	Cooling capacity [W]	COP [W/W]	Cooling capacity [W]	COP [W/W]	[cm³]			A	B
1	TL4CL	LBP	75	240	390	–	–	–	152	1.03	310	1.39	–	–	3.86	198 – 254 V, 50 Hz	F2	173	169
2	TL4DL	M/HBP	–	227	362	454	670	–	–	–	287	1.26	519	1.81	3.86	198 – 254 V, 50 Hz	F2	173	169
3	TL4.5CLX	LBP	102	301	–	–	–	–	198	1.05	–	–	–	–	4.63	198 – 254 V, 50 Hz	F2	173	169
4	FR6CL	LBP	149	393	605	–	–	–	268	1.04	484	1.19	–	–	6.23	198 – 254 V, 50 Hz	F2	196	191
5	FR6DL	M/HBP	–	403	599	730	1058	–	–	–	481	1.20	819	1.57	6.23	198 – 254 V, 50 Hz	F2	196	191
6	FR7.5CL	LBP	158	433	657	–	–	–	294	1.03	528	1.15	–	–	6.93	198 – 254 V, 50 Hz	F2	196	191
7	FR8.5CL	LBP	171	492	–	–	–	–	332	0.98	–	–	–	–	7.95	198 – 254 V, 50 Hz	F2	196	191
8	NF7MLX	MBP	–	547	851	1039	1503	–	–	–	682	1.49	1164	2.12	7.27	187 – 254 V, 50 Hz *)	F2	203	197
9	NL6.1MLX	MBP	–	455	711	869	–	–	291	1.14	569	1.61	975	2.31	6.13	187 – 254 V, 50 Hz *)	F2	203	197
10	NL7CLX	LBP	200	576	876	–	–	–	388	1.31	704	1.60	–	–	7.27	198 – 254 V, 50 Hz	F2	203	197
11	NL8.4CLX	LBP	218	627	953	–	–	–	422	1.28	765	1.54	–	–	8.35	198 – 254 V, 50 Hz	F2	203	197
12	NL9CLX	LBP	236	674	–	–	–	–	457	1.34	–	–	–	–	8.35	198 – 254 V, 50 Hz	F2	203	197
13	SC10CL	LBP	132	664	1079	–	–	–	402	1.13	859	1.45	–	–	10.29	198 – 254 V, 50 Hz	F2	209	203
14	SC10CLX	L/MBP	130	655	1064	1316	–	–	396	1.11	847	1.51	–	–	10.29	198 – 254 V, 50 Hz *)	F2	209	203
15	SC10MLX	MBP	–	722	1127	1380	–	–	–	–	902	1.54	1553	2.18	10.29	187 – 254 V, 50 Hz *)	F2	209	203
16	SC10DL	M/HBP	–	644	1051	1300	1916	2295	–	–	837	1.51	1478	2.15	10.29	198 – 254 V, 50 Hz	F2	209	203
17	SC12CL	LBP	165	857	1397	–	–	–	516	1.10	1112	1.50	–	–	12.87	198 – 254 V, 50 Hz	F2	209	203
18	SC12CLX.2	LBP	278	899	–	–	–	–	593	1.15	–	–	–	–	12.87	198 – 254 V, 50 Hz *)	F2	219	213
19	SC12MLX	MBP	–	886	1369	1670	–	–	584	1.15	1096	1.56	1873	2.18	12.87	187 – 254 V, 50 Hz *)	F2	219	213
20	SC12DL	M/HBP	–	865	1407	1728	2508	2984	–	–	1122	1.57	1942	2.26	12.87	198 – 254 V, 50 Hz	F2	219	213
21	SC15CLX.2	LBP	339	1097	–	–	–	–	724	1.18	–	–	–	–	15.28	198 – 254 V, 50 Hz	F2	219	213
22	SC15CLX.2	LBP	339	1097	–	–	–	–	724	1.18	–	–	–	–	15.28	198 – 254 V, 50 Hz	F2	219	213
23	SC15MLX	MBP	–	1117	1718	2102	–	–	762	1.20	1375	1.56	2371	2.16	15.28	198 – 254 V, 50 Hz	F2	219	213
24	SC15DL	M/HBP	–	1034	1641	2012	2928	3492	–	–	1311	1.56	2265	2.25	15.28	198 – 254 V, 50 Hz	F2	219	213
25	SC18CL	LBP	374	1220	1882	–	–	–	803	1.22	1508	1.50	–	–	17.69	198 – 254 V, 50 Hz	F2	219	213
26	SC18MLX	MBP	–	1306	2001	2446	–	–	894	1.27	1603	1.64	2757	2.27	17.69	198 – 254 V, 50 Hz	F2	219	213
27	SC18CLX.2	LBP	415	1343	–	–	–	–	886	1.20	–	–	–	–	17.69	198 – 254 V, 50 Hz	F2	219	213
28	SC18MLX.3	MBP	–	1384	2097	2552	–	–	959	1.34	1683	1.67	2862	2.28	17.68	198 – 254 V, 50 Hz	F2	219	213
29	SC21CL	LBP	442	1386	–	–	–	–	905	1.18	–	–	–	–	20.95	198 – 254 V, 50 Hz	F2	219	213
30	SC10/10CL	LBP	264	1327	2157	–	–	–	803	1.13	1717	1.45	–	–	20.58	198 – 254 V, 50 Hz	F2	249	244
31	SC10/10DL	M/HBP	–	1288	2103	2601	3832	4590	–	–	1674	1.51	2955	2.15	20.58	198 – 254 V, 50 Hz	F2	249	244
32	SC12/12CL	LBP	330	1715	2794	–	–	–	1032	1.10	2224	1.50	–	–	25.74	198 – 254 V, 50 Hz	F2	249	244
33	SC12/12DL	M/HBP	–	1730	2814	3456	5016	5967	–	–	2244	1.57	3885	2.26	25.74	198 – 254 V, 50 Hz	F2	259	254
34	SC15/15CL	LBP	360	2202	3356	–	–	–	1395	1.20	2699	1.50	–	–	30.56	198 – 254 V, 50 Hz	F2	259	254
35	SC15/15DL	M/HBP	–	2068	3282	4024	5856	6983	–	–	2622	1.56	4529	2.25	30.56	198 – 254 V, 50 Hz	F2	259	254
36	SC18/18CLX.2	LBP	823	2670	–	–	–	–	1761	1.20	–	–	–	–	35.36	198 – 254 V, 50 Hz	F2	259	254
37	SC18/18CL	LBP	748	2440	3762	–	–	–	1606	1.22	3016	1.50	–	–	35.38	198 – 254 V, 50 Hz	F2	259	254
38	SC21/21CL	LBP	884	2773	–	–	–	–	1810	1.18	–	–	–	–	41.90	198 – 254 V, 50 Hz	F2	259	254
39	GS21MLX	MBP	–	1578	2486	3070	–	–	–	–	1984	1.79	3514	2.53	21.20	198 – 254 V, 50 Hz	F2	259	247
40	GS26CLX	LBP	614	2017	–	–	–	–	1323	1.35	–	–	–	–	26.30	198 – 254 V, 50 Hz	F2	259	247
41	GS26MLX	MBP	–	2069	3229	3954	–	–	–	–	2584	1.86	4467	2.56	26.30	198 – 254 V, 50 Hz	F2	279	267
42	GS34CLX	LBP	943	2874	4412	–	–	–	1917	1.45	3537	1.74	–	–	33.80	198 – 254 V, 50 Hz	F2	279	267
43	GS34MLX	MBP	–	2766	4178	5053	–	–	–	–	3359	1.71	5626	2.25	33.80	198 – 254 V, 50 Hz	F2	279	267

Applications
LBP = Low Back Pressure
MBP = Medium Back Pressure
HBP = High Back Pressure

Motor types
RSIR = Resistant Start Induction Run
RSCR = Resistant Start Capacitor Run
CSIR = Capacitor Start Induction Run
CSR = Capacitor Start Run

Voltage and frequencies
**) Dual frequencies*

Electrical Equipment
[1]) see data sheets for details
[2]) alt. cable lenghts available
[3]) compulsory

Compressor cooling
***S** = Static cooling normally sufficient*
***O** = Oil cooling*
***F*$_1$** *= Fan cooling 1.5 m/s (compressor compartment temp. equal to ambient temperature)*
***F*$_2$** *= Fan cooling 3.0 m/s necessary*
** = O / F1 possible at 220 V nominal (187 – 242 V)*

Starting devices
***LST** = Low Starting Torque*
LST is used with capillary tube control and pressure equalizing. (Pressure equalizing may exceed 10 minutes). The PTC starting device requires 5 minutes cooling before each start.
***HST** = HST consisting of relay and starting capacitor is used for expansion valve control or for capillary tube control without pressure equalizing.*

For more information and performance with other refrigerants, please refer to Coolselector ® 2 at coolselector.danfoss.com or contact Danfoss.

S.No.	Dimensions			Electrical equipment - codes											Compressor - code no.	
	Connectors location			LST (RSIR & RSCR)					Run capacitor		HST (CSIR & CSR)			LST / HST			
				PTC starting device without RC connector		PTC starting device with RC connector		ePTC			Starting relay	Starting capacitor	Starting device	Cord relief	Cover	Compressor w/o accessories	Single pack Compressor with HST accessories
	[mm]			Spades [mm]													
	Suction C	Process D	Discharge E	6.3	4.8	6.3	4.8	4.8	6.3	4.8	6.3	4.8	6.3				
1	6.2	6.2	5	–	–	–	–	–	–	–	117U6000	117U5014	–	103N1010	103N2010	–	195B0021
2	6.2	6.2	5	–	–	–	–	–	–	–	117U6001	117U5014	–	103N1010	103N2010	–	195B0166
3	6.2	6.2	5	–	–	–	–	–	–	–	117U6001	117U5014	–	103N1010	103N2010	–	195B0465
4	8.2	6.2	6.2	–	–	–	–	–	–	–	117U6015	117U5015	–	103N1010	103N2010	–	195B0031
5	8.2	6.2	6.2	–	–	–	–	–	–	–	117U6010	117U5015	–	103N1010	103N2010	–	195B0032
6	8.2	6.2	6.2	–	–	–	–	–	–	–	117U6016	117U5015	–	103N1010	103N2010	–	195B0398
7	8.2	6.2	6.2	–	–	–	–	–	–	–	117U6010	117U5015	–	103N1010	103N2010	–	195B0038
8	9.7	6.5	6.5	–	–	–	–	–	–	–	117U4139	117U5018	–	117U0349	117U1021	–	195B0443
9	8.2	6.5	6.5	–	–	–	–	–	–	–	117U6022	117U5015	–	103N1010	103N2011	–	195B0599
10	8.2	6.2	6.2	–	–	–	–	–	–	–	117U6002	117U5015	–	103N1010	103N2010	–	195B0350
11	8.2	6.2	6.2	103N0011	103N0018	–	–	–	–	–	117U6003	117U5015	–	103N1010	103N2010	–	195B0481
12	8.2	6.2	6.2	–	–	–	–	–	–	–	117U6003	117U5015	–	103N1010	103N2010	–	–
13	8.2	6.2	6.2	–	–	–	–	–	–	–	117U6003	117U5017	–	103N1004	103N2009	–	195B0074
14	8.2	6.2	6.2	–	–	–	–	–	–	–	117U6005	117U5017	–	103N1004	103N2008	–	195B0151
15	8.2	6.5	6.5	–	–	–	–	–	–	–	117U6011	117U5017	–	103N1004	103N2008	–	195B0345
16	8.2	6.2	6.2	–	–	–	–	–	–	–	117U6005	117U5017	–	103N1004	103N2009	–	195B0075
17	8.2	6.2	6.2	–	–	–	–	–	–	–	117U6005	117U5017	–	103N1004	103N2009	–	195B0076
18	8.2	6.2	6.2	–	–	–	–	–	–	–	117U6019	117U5017	–	103N1004	103N2008	–	195B0379
19	8.2	6.5	6.5	–	–	–	–	–	–	–	117U6011	117U5017	–	103N1004	103N2008	–	195B0323
20	10.2	6.2	6.2	–	–	–	–	–	–	–	117U6019	117U5017	–	103N1004	103N2009	–	195B0077
21	9.63	6.5	6.5	–	–	–	–	–	–	–	117U6019	117U5017	–	103N1004	103N2009	–	–
22	10.2	6.2	6.2	–	–	–	–	–	–	–	117U6019	117U5017	–	103N1004	103N2009	–	195B0399
23	10.2	6.2	6.2	–	–	–	–	–	–	–	117U6013	117U5012	–	103N1004	103N2009	–	195B0391
24	10.2	6.2	6.2	–	–	–	–	–	[3]	[3]	–	117U5373	117-7029	103N1004	103N2009	–	195B0641
25	10.2	6.2	6.2	–	–	–	–	–	[3]	[3]	–	117U5373	117-7027	103N1004	103N2009	–	195B0066
26	10.2	6.2	6.2	–	–	–	–	–	[3]	[3]	–	117U5373	117-7027	103N1004	103N2009	–	195B0652
27	10.2	6.2	6.2	–	–	–	–	–			117U6013	117U5012	–	103N1004	103N2009	–	195B0332
28	10.2	6.2	6.2	–	–	–	–	–	[3]	[3]	–	–	117-7027	103N1004	103N2009	–	195B0653
29	10.2	6.2	6.2	–	–	–	–	–	[3]	[3]	–	117U5373	117-7027	103N1004	103N2009	–	195B0640
30	12	6.2	6.2	–	–	–	–	–	–	–	117U6003	117U5017	–	103N1004	103N2009	–	195B0108
31	12	6.2	6.2	–	–	–	–	–	–	–	117U6005	117U5017	–	103N1004	103N2009	–	195B0111
32	12	6.2	6.2	–	–	–	–	–	–	–	117U6005	117U5017	–	103N1004	103N2009	–	195B0119
33	12	6.2	6.2	–	–	–	–	–	–	–	117U6019	117U5017	–	103N1004	103N2009	–	195B0112
34	12	6.2	6.2	–	–	–	–	–	–	–	117U6019	117U5017	–	103N1004	103N2009	–	195B0109
35	16	6.2	6.2	–	–	–	–	–	[3]	[3]	–	117U5373	117-7029	103N1004	103N2009	–	195B0643
36	12	6.2	6.2	–	–	–	–	–	–	–	117U6013	117U5012	–	103N1004	103N2009	–	195B0527
37	16	6.2	6.2	–	–	–	–	–	[3]	[3]	–	–	117-7027	103N1004	103N2009	–	195B0642
38	16	6.2	6.2	–	–	–	–	–	[3]	[3]	–	117U5373	117-7027	103N1004	103N2009	–	195B0644
39	16.1	6.5	9.7	–	–	–	–	–	[3]	[3]	–	–	117-7070	–	107B9101	–	195B0436
40	12.9	6.5	8.2	–	–	–	–	–	[3]	[3]	–	–	117-7056	–	107B9101	–	195B0427
41	16.1	6.5	9.7	–	–	–	–	–	[3]	[3]	–	–	117-7072	–	107B9101	–	195B0437
42	12.9	6.5	8.2	–	–	–	–	–	[3]	[3]	–	–	117-7074	–	107B9101	–	195B0439
43	16.1	6.5	9.7	–	–	–	–	–	[3]	[3]	–	–	117-7056	–	107B9101	–	195B0438

For more information and performance with other refrigerants, please refer to Coolselector ® 2 at coolselector.danfoss.com or contact Danfoss.

Technical data and ordering

Reciprocating compressors - Light Commercial

R404A - 220 V | 60 Hz

S.No.	Compressor	Application	ASHRAE Tcond = 130 °F, Tliq = 90 °F, Tsuc = 90 °F Capacity [BTU/h] Evaporating temp. [°F]						ASHRAE LBP rating point -10 °F / 130 °F		ASHRAE MBP rating point 20 °F / 130 °F		ASHRAE HBP rating point 45 °F / 130 °F		Displacement	Voltage and frequencies	Compressor cooling	Dimensions Height [in]	
			-31	5	23	32	50	59	Cooling capacity [BTU/h]	EER [BTU/Wh]	Cooling capacity [BTU/h]	EER [BTU/Wh]	Cooling capacity [BTU/h]	EER [BTU/Wh]	[cu.in]			A	B
1	NF7MLX	MBP	–	2260	3516	4291	–	–	–	–	2819	5.33	–	–	0.44	187 – 254 V, 60 Hz *)	F2	8.0	7.8
2	NL6.1MLX	MBP	–	1853	2883	3518	–	–	–	–	2311	5.52	–	–	0.37	187 – 254 V, 60 Hz *)	F2	8.0	7.8
3	SC10CLX	L/MBP	529	2786	–	–	–	–	1763	3.95	–	–	–	–	0.63	198 – 254 V, 60 Hz *)	F2	8.2	8.0
4	SC10MLX	MBP	–	2874	4545	5578	–	–	1805	3.91	3636	5.22	–	–	0.63	187 – 254 V, 60 Hz *)	F2	8.2	8.0
5	SC12CLX	LBP	771	3744	–	–	–	–	2378	4.20	–	–	–	–	0.79	198 – 254 V, 60 Hz	F2	8.6	8.4
6	SC12CLX.2	LBP	1081	3704	–	–	–	–	2408	4.07	–	–	–	–	0.79	198 – 254 V, 60 Hz *)	F2	8.6	8.4
7	SC12CLX.2	LBP	1081	3704	–	–	–	–	2408	4.33	–	–	–	–	0.79	187 – 254 V, 60 Hz	F2	8.6	8.4
8	SC12MLX	MBP	–	3445	5372	6563	–	–	2212	4.02	4305	5.18	–	–	0.79	187 – 254 V, 60 Hz *)	F2	8.6	8.4
9	SC15CLX.2	LBP	1409	4564	–	–	–	–	3005	4.53	–	–	–	–	0.93	187 – 254 V, 60 Hz	F2	8.6	8.4
10	SC15CLX	LBP	800	4141	–	–	–	–	2636	4.20	–	–	–	–	0.93	198 – 254 V, 60 Hz	F2	8.6	8.4
11	SC15MLX.2	MBP	–	4210	6472	7918	–	–	–	0.00	5188	5.32	–	–	0.93	187 – 254 V, 60 Hz	F2	8.6	8.4
12	SC18CLX.2	LBP	1774	5306	–	–	–	–	3797	4.76	–	–	–	–	1.08	187 – 254 V, 60 Hz	F2	8.6	8.4
13	SC18MLX	MBP	–	5191	7947	9691	–	–	–	0.00	6378	5.03	–	–	1.08	187 – 254 V, 60 Hz	F2	8.6	8.4
14	SC12/12CLX	LBP	1533	7450	–	–	–	–	4733	4.18	–	–	–	–	1.57	198 – 254 V, 60 Hz	F2	10.2	10.0
15	GS21CLX	LBP	1993	6548	–	–	–	–	4286	4.60	–	–	–	–	1.29	187 – 254 V, 60 Hz	F2	10.2	9.7
16	GS21MLX	MBP	–	6973	10697	13036	–	–	–	–	8587	6.34	–	–	1.29	187 – 254 V, 60 Hz	F2	11.0	10.5
17	GS26CLX	LBP	2453	7216	–	–	–	–	4854	4.14	–	–	–	–	1.60	187 – 254 V, 60 Hz	F2	11.0	10.5

Reciprocating compressors - Light Commercial

R404A - 220 – 240 V | 50 – 60 Hz

S.No.	Compressor	Application	ASHRAE Tcond = 54.4 °C, Tliq = 32.2 °C, Tsuc = 32.2 °C Capacity [W] Evaporating temp. [°C]						ASHRAE LBP rating point -23.3 °C / 54.4 °C		ASHRAE MBP rating point -6.7 °C / 54.4 °C		ASHRAE HBP rating point 7.2 °C / 54.4 °C		Displacement	Voltage and frequencies	Compressor cooling	Dimensions Height [mm]	
			-35	-15	-5	0	10	15	Cooling capacity [W]	COP [W/W]	Cooling capacity [W]	COP [W/W]	Cooling capacity [W]	COP [W/W]	[cm³]			A	B
1	NL6.1MLX	MBP	–	543	844	1031	–	–	350	1.24	676	1.62	1155	2.20	6.13	187 – 254 V, 60 Hz *)	F2	203	197
2	NF7MLX	MBP	–	662	1030	1257	–	–	426	1.16	825	1.56	1409	2.04	7.27	187 – 254 V, 60 Hz *)	F2	203	197
3	SC10CLX	L/MBP	155	816	–	–	–	–	518	1.16	–	–	–	–	10.29	198 – 254 V, 60 Hz *)	F2	209	203
4	SC10MLX	MBP	–	842	1332	1634	–	–	530	1.15	1064	1.53	1842	2.01	10.29	187 – 254 V, 60 Hz *)	F2	209	203
5	SC12CLX.2	LBP	317	1085	–	–	–	–	707	1.19	–	–	–	–	12.87	198 – 254 V, 60 Hz *)	F2	219	213
6	SC12MLX	MBP	–	1009	1574	1923	–	–	650	1.18	1260	1.52	2157	1.98	12.87	187 – 254 V, 60 Hz *)	F2	219	213

Applications
LBP = Low Back Pressure
MBP = Medium Back Pressure
HBP = High Back Pressure

Motor types
RSIR = Resistant Start Induction Run
RSCR = Resistant Start Capacitor Run
CSIR = Capacitor Start Induction Run
CSR = Capacitor Start Run

Voltage and frequencies
**) Dual frequencies*

Electrical Equipment
[1]) see data sheets for details
[2]) alt. cable lenghts available
[3]) compulsory

Compressor cooling
***S** = Static cooling normally sufficient*
***O** = Oil cooling*
***F$_1$** = Fan cooling 1.5 m/s*
(compressor compartment temp. equal to ambient temperature)
***F$_2$** = Fan cooling 3.0 m/s necessary*
****** = O / F1 possible at 220 V nominal (187 – 242 V)*

Starting devices
***LST** = Low Starting Torque*
LST is used with capillary tube control and pressure equalizing. (Pressure equalizing may exceed 10 minutes). The PTC starting device requires 5 minutes cooling before each start.
***HST** = HST consisting of relay and starting capacitor is used for expansion valve control or for capillary tube control without pressure equalizing.*

For more information and performance with other refrigerants, please refer to Coolselector ® 2 at coolselector.danfoss.com or contact Danfoss.

S.No.	Dimensions			Electrical equipment - codes												Compressor - code no.		
				LST (RSIR & RSCR) - refer to data sheet for ePTC code no.					Run capacitor		HST (CSIR & CSR)			LST / HST				
	Connectors location			PTC starting device		PTC starting device with RC connector		Protector (external)	optional or compulsory		Starting relay	Starting capacitor	Starting device [2]	Cord relief	Cover	Compressor w/o accessories	Single pack Compressor with LST accessories	Single pack Compressor with HST accessories
	[in]			Spades [in]														
	Suction C	Process D	Dis-charge E	¼	3/16	¼	3/16	¼	¼	3/16	¼	¼	¼					
1	0.38	0.26	0.26	–	–	–	–	–	–	–	117U4139	117U5018	–	117U0349	117U1021	105F3720	–	195B0443
2	0.32	0.26	0.26	–	–	–	–	–	–	–	117U6022	117U5015	–	103N1010	103N2011	105F3611	–	195B0599
3	0.32	0.24	0.24	–	–	–	–	–	–	–	117U6005	117U5017	–	103N1004	103N2008	104L2533	–	195B0151
4	0.32	0.26	0.26	–	–	–	–	–	–	–	117U6011	117U5017	–	103N1004	103N2008	104L2506	–	195B0345
5	0.32	0.24	0.24	–	–	–	–	–	–	–	117U6019	117U5017	–	103N1004	103N2008	104L2695	–	195B0247
6	0.32	0.24	0.24	–	–	–	–	–	–	–	117U6019	117U5017	–	103N1004	103N2008	104L2697	–	195B0379
7	0.38	0.26	0.26	–	–	–	–	–	–	–	–	–	117-7027	103N1004	103N2008	104L2699	–	195B0721
8	0.32	0.26	0.26	–	–	–	–	–	–	–	117U6011	117U5017	–	103N1004	103N2008	104L2606	–	195B0323
9	0.38	0.26	0.26	–	–	–	–	–	–	–	–	117U5373	117-7039	103N1004	103N2008	104L2897	–	195B0650
10	0.40	0.24	0.24	–	–	–	–	–	–	–	–	117U5373	117-7039	103N1004	103N2008	104L2854	–	195B0646
11	0.38	0.26	0.26	–	–	–	–	–	–	–	–	–	117-7058	103N1004	103N2008	104L2803	–	195B0358
12	0.38	0.26	0.26	–	–	–	–	–	–	–	–	117U5373	117-7066	103N1004	103N2008	104L2195	–	195B0428
13	0.38	0.26	0.26	–	–	–	–	–	–	–	–	–	117-7066	103N1004	103N2008	104L2138	–	195B0656
14	0.47	0.24	0.24	–	–	–	–	–	–	–	117U6019	117U5017	–	103N1004	103N2009	104L4034	–	–
15	0.51	0.26	0.32	–	–	–	–	–	–	–	–	–	117-7073	–	107B9101	107B0506	–	195B0502
16	0.51	0.26	0.38	–	–	–	–	–	–	–	–	–	117-7073	–	107B9106	107B0509	–	195B0503
17	0.51	0.26	0.32	–	–	–	–	–	–	–	–	–	117-7073	–	107B9101	107B0505	–	195B0501

S.No.	Dimensions			Electrical equipment - codes												Compressor - code no.	
				LST (RSIR & RSCR)					Run capacitor		HST (CSIR & CSR)			LST / HST			
	Connectors location			PTC starting device without RC connector		PTC starting device with RC connector		ePTC			Starting relay	Starting capacitor	Starting device	Cord relief	Cover	Compressor w/o accessories	Single pack Compressor with HST accessories
	[mm]			Spades [mm]													
	Suction C	Process D	Dis-charge E	6.3	4.8	6.3	4.8	4.8	6.3	4.8	6.3	4.8	6.3				
1	8.2	6.5	6.5	–	–	–	–	–	–	–	117U6022	117U5015	–	103N1010	103N2011	105F3611	195B0599
2	9.7	6.5	6.5	–	–	–	–	–	–	–	117U4139	117U5018	–	117U0349	117U1021	105F3720	195B0443
3	8.2	6.2	6.2	–	–	–	–	–	–	–	117U6005	117U5017	–	103N1004	103N2008	104L2533	195B0151
4	8.2	6.5	6.5	–	–	–	–	–	–	–	117U6011	117U5017	–	103N1004	103N2008	104L2506	195B0345
5	8.2	6.2	6.2	–	–	–	–	–	–	–	117U6019	117U5017	–	103N1004	103N2008	104L2697	195B0379
6	8.2	6.5	6.5	–	–	–	–	–	–	–	117U6011	117U5017	–	103N1004	103N2008	104L2606	195B0323

For more information and performance with other refrigerants, please refer to Coolselector ® 2 at coolselector.danfoss.com or contact Danfoss.

Technical data and ordering

Reciprocating compressors - Light Commercial

R404A - 115 V | 60 Hz

S.No.	Compressor	Application	ASHRAE Tcond = 130 °F, Tliq = 90 °F, Tsuc = 90 °F Capacity [BTU/h] Evaporating temp. [°F]						ASHRAE LBP rating point -10 °F / 130 °F		ASHRAE MBP rating point 20 °F / 130 °F		ASHRAE HBP rating point 45 °F / 130 °F		Displacement	Voltage and frequencies	Compressor cooling	Dimensions Height [in]	
			-31	5	23	32	50	59	Cooling capacity [BTU/h]	EER [BTU/Wh]	Cooling capacity [BTU/h]	EER [BTU/Wh]	Cooling capacity [BTU/h]	EER [BTU/Wh]	[cu. in]			A	B
1	TF4CLX	L/MBP	340	1059	1620	1965	–	–	703	3.83	1302	4.77	–	–	0.24	103-135 V, 60 Hz	F2	6.8	–
2	TFS4.5CLX	LBP	477	1369	–	–	–	–	927	4.07	–	–	–	–	0.28	103-135 V, 60 Hz	F2	6.8	–
3	NF5.5CLX	L/MBP	653	1837	2775	3354	–	–	1247	4.20	2233	5.22	–	–	0.37	95-135 V, 60 Hz	F2	8.0	7.8
4	NF7CLX	L/MBP	776	2300	3507	4254	–	–	1541	4.19	2819	5.33	–	–	0.44	95-135 V, 60 Hz	F2	7.8	7.5
5	SC10CL	L/MBP	443	2388	3942	4914	–	–	1422	3.37	3135	4.86	–	–	0.63	103-127 V, 60 Hz	F2	8.2	8.0
6	SC12CLX.2	LBP	1036	3771	–	–	–	–	2470	3.89	–	–	–	–	0.79	103-127 V, 60 Hz	F2	8.2	8.0
7	SC12CL	LBP	771	3744	–	–	–	–	2378	3.78	–	–	–	–	0.79	103-127 V, 60 Hz	F2	8.2	8.0
8	SC12MLX	MBP	–	3551	5559	6829	–	–	–	–	4448	5.14	–	–	0.79	95-135 V, 60 Hz	F2	8.6	8.4
9	SC15CLX.2	LBP	1409	4564	–	–	–	–	3005	4.12	–	–	–	–	0.93	103-127 V, 60 Hz	F2	8.6	8.4
10	SC15MLX	MBP	–	4101	6419	7886	–	–	–	–	5136	4.80	–	–	0.93	95-135 V, 60 Hz	F2	8.6	8.4
11	SC15MLX.2	MBP	–	4212	6466	7892	–	–	–	–	5187	5.14	–	–	0.93	103-127 V, 60 Hz	F2	8.6	8.4
12	SC18CLX.2	LBP	1712	5121	–	–	–	–	3664	4.48	–	–	–	–	1.08	103-127 V, 60 Hz	F2	8.6	8.4
13	SC18MLX	MBP	–	5191	7947	9691	–	–	–	–	6378	5.03	–	–	1.08	103-127 V, 60 Hz	F2	8.6	8.4

Reciprocating compressors - Light Commercial

R407C - 220 – 240 V | 50/60 Hz

S.No.	Compressor	Application	ASHRAE Tcond = 54.4 °C, Tliq = 32.2 °C, Tsuc = 32.2 °C Capacity [W] Evaporating temp. [°C]						ASHRAE LBP rating point -23.3 °C / 54.4 °C		ASHRAE MBP rating point -6.7 °C / 54.4 °C		ASHRAE HBP rating point 7.2 °C / 54.4 °C		Displacement	Voltage and frequencies	Compressor cooling	Dimensions Height [mm]	
			-35	-15	-5	0	10	15	Cooling capacity [W]	COP [W/W]	Cooling capacity [W]	COP [W/W]	Cooling capacity [W]	COP [W/W]	[cm³]			A	B
1	SC10DL	M/HBP	–	469	842	1074	1653	2013	–	–	685	1.57	1308	2.32	10.29	198 – 254 V, 50 Hz	F2	209	203
2	SC12DL	M/HBP	–	621	1087	1385	2144	2620	–	–	886	1.58	1692	2.38	12.87	198 – 254 V, 50 Hz	F2	219	213
3	SC15DL	M/HBP	–	782	1351	1709	2612	3174	–	–	1104	1.70	2069	2.59	15.28	198 – 254 V, 50 Hz	F2	219	213
4	SC10/10DL	M/HBP	–	937	1685	2148	3307	4026	–	–	1371	1.57	2615	2.32	20.58	198 – 254 V, 50 Hz	F2	249	244
5	SC12/12DL	M/HBP	–	1241	2174	2769	4287	5239	–	–	1772	1.58	3384	2.38	25.74	198 – 254 V, 50 Hz	F2	259	254
6	SC15/15DL	M/HBP	–	1563	2703	3419	5224	6348	–	–	2208	1.70	4137	2.59	30.56	198 – 254 V, 50 Hz	F2	259	254

Applications
LBP = Low Back Pressure
MBP = Medium Back Pressure
HBP = High Back Pressure

Motor types
RSIR = Resistant Start Induction Run
RSCR = Resistant Start Capacitor Run
CSIR = Capacitor Start Induction Run
CSR = Capacitor Start Run

Voltage and frequencies
**) Dual frequencies*

Electrical Equipment
[1]) see data sheets for details
[2]) alt. cable lenghts available
[3]) compulsory

Compressor cooling
***S** = Static cooling normally sufficient*
***O** = Oil cooling*
***F*$_1$** *= Fan cooling 1.5 m/s (compressor compartment temp. equal to ambient temperature)*
***F*$_2$** *= Fan cooling 3.0 m/s necessary*
** = O / F1 possible at 220 V nominal (187 – 242 V)*

Starting devices
***LST** = Low Starting Torque*
LST is used with capillary tube control and pressure equalizing. (Pressure equalizing may exceed 10 minutes). The PTC starting device requires 5 minutes cooling before each start.
***HST** = HST consisting of relay and starting capacitor is used for expansion valve control or for capillary tube control without pressure equalizing.*

For more information and performance with other refrigerants, please refer to Coolselector ® 2 at coolselector.danfoss.com or contact Danfoss.

S.No.	Dimensions			Electrical equipment - codes											Compressor - code no.		
				LST (RSIR & RSCR) - refer to data sheet for ePTC code no.					Run capacitor		HST (CSIR & CSR)			LST / HST				
	Connectors location			PTC starting device		PTC starting device with RC connector		Protector (external)	optional or compulsory		Starting relay	Starting capacitor	Starting device [2]	Cord relief	Cover	Compressor w/o accessories	Single pack Compressor with LST accessories	Single pack Compressor with HST accessories
	[in]			Spades [in]														
	Suction C	Process D	Discharge E	¼	3/16	¼	3/16	¼	¼	3/16	¼	¼	¼					
1	0.26	0.26	0.26	–	–	–	–	–	–	–	–	–	–	–	–	102U2114	–	195B0666
2	0.26	0.26	0.26	–	–	–	–	–	–	–	–	–	–	–	–	102U2115	–	195B0667
3	0.32	0.26	0.26	–	–	–	–	–	–	–	117U4061	117U5025	–	117U0349	117U1021	105F1621	–	195B0348
4	0.32	0.26	0.26	–	–	–	–	–	–	–	117U4129	117U5022	–	117U0349	117U1021	105F1721	–	195B0304
5	0.32	0.26	0.26	–	–	–	–	–	–	–	117U6020	117U5023	–	103N1004	103N2008	104L1503	–	195B0147
6	0.32	0.26	0.26	–	–	–	–	–	–	–	117U6020	117U5023	–	103N1004	103N2008	104L1696	–	195B0491
7	0.32	0.26	0.26	–	–	–	–	–	–	–	117U6020	117U5023	–	103N1004	103N2008	104L1603	–	195B0061
8	0.32	0.26	0.26	–	–	–	–	–	–	–	117-7441	117U5042	117-7053	–	117U1021	104L1606	–	195B0323
9	0.38	0.26	0.26	–	–	–	–	–	117-7114	–	117-7441	117U5043	117-7045	–	117U1021	104L1853	–	195B0701
10	0.38	0.26	0.26	–	–	–	–	–	117-7114	–	117-7441	117U5043	117-7045	–	117U1021	104L1805	–	195B0375
11	0.38	0.26	0.26	–	–	–	–	–	117-7114	–	117-7441	117U5043	117-7045	–	117U1021	104L1807	–	195B0447
12	0.38	0.26	0.26	–	–	–	–	–	117-7114	–	117-7441	117U5043	117-7045	–	117U1021	104L2198	–	195B0464
13	0.38	0.26	0.26	–	–	–	–	–	117-7114	–	117-7441	117U5043	117-7045	–	117U1021	104L2105	–	195B0702

S.No.	Dimensions			Electrical equipment - codes											Compressor - code no.	
				LST (RSIR & RSCR)					Run capacitor		HST (CSIR & CSR)			LST / HST			
	Connectors location			PTC starting device without RC connector		PTC starting device with RC connector		ePTC			Starting relay	Starting capacitor	Starting device	Cord relief	Cover	Compressor w/o accessories	Single pack Compressor with HST accessories
	[mm]			Spades [mm]													
	Suction C	Process D	Discharge E	6.3	4.8	6.3	4.8	4.8	6.3	4.8	6.3	4.8	6.3				
1	8.2	6.2	6.2	–	–	–	–	–	–	–	117U6005	117U5017	–	103N1004	103N2009	104L2525	195B0075
2	10.2	6.2	6.2	–	–	–	–	–	–	–	117U6019	117U5017	–	103N1004	103N2009	104L2625	195B0077
3	10.2	6.2	6.2	–	–	–	–	–	[3]	[3]	–	117U5373	117-7029	103N1004	103N2009	104L2856	195B0641
4	12	6.2	6.2	–	–	–	–	–	–	–	117U6005	117U5017	–	103N1004	103N2009	104L4091	195B0111
5	12	6.2	6.2	–	–	–	–	–	–	–	117U6019	117U5017	–	103N1004	103N2009	104L4092	195B0112
6	16	6.2	6.2	–	–	–	–	–	[3]	[3]	–	117U5373	117-7029	103N1004	103N2009	104L4093	195B0643

For more information and performance with other refrigerants, please refer to Coolselector ® 2 at coolselector.danfoss.com or contact Danfoss.

Technical data and ordering

Reciprocating compressors - Light Commercial

R290 - 220 – 240 V | 50 Hz

S.No.	Compressor	Application	ASHRAE Tcond = 54.4 °C, Tliq = 32.2 °C, Tsuc = 32.2 °C Capacity [W] Evaporating temp. [°C]						ASHRAE LBP rating point -23.3 °C / 54.4 °C		ASHRAE MBP rating point -6.7 °C / 54.4 °C		ASHRAE HBP rating point 7.2 °C / 54.4 °C		Displacement	Voltage and frequencies	Compressor cooling	Dimensions Height [mm]	
			-35	-15	-5	0	10	15	Cooling capacity [W]	COP [W/W]	Cooling capacity [W]	COP [W/W]	Cooling capacity [W]	COP [W/W]	[cm³]			A	B
1	TL3CN	L/MBP	49	161	249	303	–	–	105	0.91	208	1.38	–	–	3.13	198 – 254 V, 50 Hz	F1	163	159
2	TL4CN	L/MBP	76	212	316	379	–	–	146	1.07	265	1.46	–	–	3.86	198 – 254 V, 50 Hz	F1	173	169
3	TL5CN	L/MBP	109	296	436	521	–	–	205	1.18	367	1.53	–	–	5.08	198 – 254 V, 50 Hz	F1	173	169
4	DLE4CN	L/MBP	104	279	404	473	–	–	193	1.58	341	2.15	516	2.92	4.00	198 – 254 V, 50 Hz	F2	175	169
5	DLE4.8CN	L/MBP	129	341	500	601	–	–	242	1.65	420	2.15	696	3.04	4.80	198 – 254 V, 50 Hz	F2	175	169
6	DLE5.7CN	L/MBP	169	419	609	730	–	–	301	1.59	512	2.05	840	2.82	5.70	198 – 254 V, 50 Hz	F2	175	169
7	DLE6.5CN	L/MBP	170	450	659	790	–	–	318	1.66	554	2.12	911	2.86	6.50	198 – 254 V, 50 Hz	F2	175	169
8	DLE7.5CN	L/MBP	209	519	765	918	–	–	366	1.47	643	1.91	1055	2.56	7.48	198 – 254 V, 50 Hz	F2	175	169
9	NL7CN	L/MBP	174	474	712	859	–	–	325	1.35	597	1.81	–	–	7.27	198 – 254 V, 50 Hz	F1	203	197
10	NL9CN	L/MBP	205	548	815	979	–	–	380	1.39	684	1.80	–	–	8.35	198 – 254 V, 50 Hz	F1	203	197
11	NLE8.8CN	L/MBP	238	617	902	1078	1512	–	435	1.65	759	2.08	1232	2.83	8.76	198 – 254 V, 50 Hz	F2	203	197
12	NLE10CN	L/MBP	270	709	1048	1252	1739	–	491	1.54	881	1.99	1423	2.68	10.09	198 – 254 V, 50 Hz	F2	203	197
13	NLE11CNL	LBP	300	778	1143			–	540	1.52	962	1.92	–	–	11.15	198 – 254 V, 50 Hz	F2	203	197
14	NLE11MN	MBP	–	798	1171	1399	1947	–	564	1.66	985	2.11	1592	2.85	11.15	198 – 254 V, 50 Hz	F2	203	197
15	NLE12.6CNL	LBP	353	867	1280			–	614	1.69	1074	2.10	–	–	12.55	198 – 254 V, 50 Hz	F2	203	197
16	NLE12.6MN	MBP	–	862	1272	1525	2135	–	605	1.64	1069	2.08	1742	2.72	12.55	198 – 254 V, 50 Hz	F2	203	197
17	SC10CNX	L/MBP	175	547	853	1042	–	–	358	1.27	711	1.79	–	–	10.29	198 – 254 V, 50 Hz	F2	209	203
18	SC10MNX	MBP	–	575	921	1132	–	–	351	1.19	766	1.70	1329	2.57	10.29	198 – 254 V, 50 Hz	F2	209	203
19	SC12CNX	L/MBP	227	711	1110	1372	–	–	475	1.31	923	1.79	–	–	12.87	198 – 254 V, 50 Hz	F2	209	203
20	SC12CNX.2	LBP	230	742	–	–	–	–	491	1.20	–	–	–	–	12.87	198 – 254 V, 50 Hz	F2	209	203
21	SC12MNX	MBP	–	757	1195	1461	–	–	474	1.13	995	1.77	1707	2.61	12.87	198 – 254 V, 50 Hz	F2	219	213
22	SC15CNX	L/MBP	251	918	1415	1717	–	–	597	1.35	1183	1.83	–	–	15.28	198 – 254 V, 50 Hz	F2	209	203
23	SC15CNX.2	LBP	345	928	–	–	–	–	624	1.32	–	–	–	–	15.28	198 – 254 V, 50 Hz	F2	209	203
24	SC15MNX	MBP	–	967	1409	1679	–	–	680	1.51	1187	1.75	1907	2.40	15.28	198 – 254 V, 50 Hz	F2	219	213
25	SC18CNX	L/MBP	315	1106	1684	2032	–	–	727	1.36	1410	1.74	–	–	17.69	198 – 254 V, 50 Hz	F2	209	203
26	SC18CNX.2	LBP	342	1194	–	–	–	–	797	1.31	–	–	–	–	17.69	198 – 254 V, 50 Hz	F2	219	213
27	SC18MNX	MBP	–	1109	1622	1943	–	–	777	1.31	1364	1.71	2237	2.33	17.69	198 – 254 V, 50 Hz	F2	219	213
28	SC21CNX.2	LBP	462	1399	–	–	–	–	962	1.45	–	–	–	–	20.95	198 – 254 V, 50 Hz	F2	219	213
29	SCE21CNLX	LBP	548	1387	2074	–	–	–	953	1.61	1741	2.04	–	–	20.95	198 – 254 V, 50 Hz	F2	219	213
30	SCE21MNX	MBP	–	1443	2091	2492	–	–	1002	1.64	1762	2.11	2852	2.91	20.95	198 – 254 V, 50 Hz	F2	219	213
31	DLE4CNT	L/MBP	104	279	404	473	–	–	193	1.58	341	2.15	516	2.92	4.00	187 – 254 V, 50 Hz	F2	175	169
32	DLE4.8CNT	L/MBP	130	334	498	601	–	–	232	1.41	417	2.01	695	2.91	4.80	187 – 254 V, 50 Hz *)	F2	175	169
33	DLE4.8CNT	L/MBP	129	341	500	601	–	–	242	1.65	420	2.15	696	3.04	4.80	187 – 254 V, 50 Hz	F2	175	169
34	DLE5.7CNT	L/MBP	166	415	607	727	–	–	296	1.49	510	2.02	836	2.86	5.70	187 – 254 V, 50 Hz *)	F2	175	169
35	NLE8.0CNT	L/MBP	183	554	827	993	–	–	378	1.55	694	2.16	1140	3.13	7.96	187 – 242 V, 50 Hz *)	F2	203	197
36	NLE10CNT	L/MBP	274	748	1094	–	–	–	519	1.54	922	1.99	–	–	10.09	187 – 242 V, 50 Hz *)	F2	203	197

Applications
LBP = Low Back Pressure
MBP = Medium Back Pressure
HBP = High Back Pressure

Motor types
RSIR = Resistant Start Induction Run
RSCR = Resistant Start Capacitor Run
CSIR = Capacitor Start Induction Run
CSR = Capacitor Start Run

Voltage and frequencies
**) Dual frequencies*

Electrical Equipment
[1]) see data sheets for details
[2]) alt. cable lenghts available
[3]) compulsory

Compressor cooling
S *= Static cooling normally sufficient*
O *= Oil cooling*
F_1 *= Fan cooling 1.5 m/s (compressor compartment temp. equal to ambient temperature)*
F_2 *= Fan cooling 3.0 m/s necessary*
** = O / F1 possible at 220 V nominal (187 – 242 V)*

Starting devices
LST *= Low Starting Torque*
LST is used with capillary tube control and pressure equalizing. (Pressure equalizing may exceed 10 minutes). The PTC starting device requires 5 minutes cooling before each start.
HST *= HST consisting of relay and starting capacitor is used for expansion valve control or for capillary tube control without pressure equalizing.*

For more information and performance with other refrigerants, please refer to Coolselector ® 2 at coolselector.danfoss.com or contact Danfoss.

S.No.	Dimensions			Electrical equipment - codes											Compressor - code no.		
				LST (RSIR & RSCR)							HST (CSIR & CSR)			LST / HST				
	Connectors location			PTC starting device without RC connector		PTC starting device with RC connector		ePTC	Run capacitor		Starting relay	Starting capaci-tor	Starting device	Cord relief	Cover	Compressor w/o accessories	Single pack Compressor with LST accessories	Single pack Compressor with HST accessories
	[mm]			Spades [mm]														
	Suction C	Process D	Dis-charge E	6.3	4.8	6.3	4.8	4.8	6.3	4.8	6.3	4.8	6.3					
1	6.2	6.2	5	103N0011	103N0018	–	–	–	–	–	117U7004	117U5014	–	103N1010	103N2010	102H4380	–	195B0435
2	6.2	6.2	5	103N0011	103N0018	–	–	–	–	–	117U7004	117U5014	–	103N1010	103N2010	102H4490	–	195B0589
3	6.2	6.2	5	103N0011	103N0018	103N0016	103N0021	–	117-7117	117-7119	117U7000	117U5014	–	103N1010	103N2010	102H4590	195B0420	195B0450
4	6.2	6.2	5	–	–	–	–	103N0050	–	117-7129	117U7000	117U5014	–	103N1010	103N0491	102H4465	–	195B0727
5	8.2	6.2	6.2	–	–	–	–	103N0050	–	117-7129	117U7001	117U5014	–	103N1010	103N0491	102H4565	–	195B0729
6	8.2	6.2	6.2	–	–	–	–	103N0050	–	117-7129	117U7015	117U5015	–	103N1010	103N0491	102H4653	–	195B0726
7	8.2	6.2	6.2	–	–	–	–	103N0050	–	117-7129	117U7016	117U5015	–	103N1010	103N0491	102H4765	–	195B0730
8	8.2	6.2	6.2	–	–	–	–	103N0050	–	–	117U7002	117U5015	–	103N1010	103N0491	102H4853	–	195B0728
9	8.2	6.2	6.2	103N0011	103N0018	103N0016	103N0021	–	117-7117	117-7119	117U7002	117U5015	–	103N1010	103N2010	105H6756	195B0346	195B0451
10	8.2	6.2	6.2	103N0011	103N0018	103N0016	103N0021	–	117-7117	117-7119	117U7002	117U5015	–	103N1010	103N2010	105H6856	195B0265	195B0499
11	8.2	6.2	6.2	–	–	–	–	103N0050	–	117-7119	117U7002	117U5015	–	103N1010	103N2010	105H6880	–	195B0716
12	8.2	6.2	6.2	–	–	–	–	103N0050	–	117-7119	117U7002	117U5015	–	103N1010	103N2010	105H6175	–	195B0717
13	8.2	6.2	6.2	–	–	–	–	103N0050	–	–	117U7003	117U5015	–	103N1010	103N2010	105H6174	–	195B0718
14	8.2	6.2	6.2	–	–	–	–	103N0050	–	117-7119	117U7005	117U5015	–	103N1010	103N2010	105H6177	–	195B0749
15	8.2	6.2	6.2	–	–	–	–	103N0050	–	117-7119	117U7003	117U5015	–	103N1010	103N2010	105H6378	–	195B0751
16	8.2	6.2	6.2	–	–	–	–	103N0050	–	117-7119	117U7011	117U5015	–	103N1010	103N2010	105H6377	–	195B0750
17	8.2	6.2	6.2	–	–	–	–	–	[3]	[3]	–	117U5372	117-7025	103N1004	103N2009	104H8065	–	195B0655
18	8.2	6.2	6.2	–	–	–	–	–	–	–	117U7005	117U5017	–	103N1004	103N2008	104H8075	–	195B0676
19	8.2	6.2	6.2	–	–	–	–	–	[3]	[3]	–	117U5372	117-7025	103N1004	103N2009	104H8265	–	195B0649
20	8.2	6.2	6.2	–	–	–	–	–	–	–	117U7003	117U5017	–	103N1004	103N2009	104H8266	–	195B0458
21	8.2	6.2	6.2	–	–	–	–	–	–	–	117U7019	117U5017	–	103N1004	103N2008	104H8275	–	195B0692
22	10.2	6.2	6.2	–	–	–	–	–	[3]	[3]	–	117U5373	117-7031	103N1004	103N2009	104H8565	–	195B0645
23	8.2	6.2	6.2	–	–	–	–	–	–	–	117U7005	117U5017	–	103N1004	103N2009	104H8566	–	195B0505
24	8.2	6.2	6.2	–	–	–	–	–	–	–	117U7019	117U5017	–	103N1004	103N2008	104H8575	–	195B0695
25	10.2	6.2	6.2	–	–	–	–	–	[3]	[3]	–	117U5373	117-7052	103N1004	103N2009	104H8865	–	195B0654
26	10.2	6.2	6.2	–	–	–	–	–	–	–	117U7011	117U5017	–	103N1004	103N2009	104H8866	–	195B0489
27	8.2	6.2	6.2	–	–	–	–	–	–	–	117U7011	117U5017	–	103N1004	103N2008	104H8875	–	195B0693
28	10.2	6.2	6.2	–	–	–	–	–	–	–	117U7013	117U5012	–	103N1004	103N2009	104H8166	–	195B0459
29	10.2	6.2	6.2	–	–	–	–	–	[3]	117-7112 [2]	117-7600	117U5373	117-7806	–	117U1028	104H8163	–	–
30	10.2	6.2	6.2	–	–	–	–	–	[3]	117-7112 [2]	117-7425	117U5373	117-7800	–	117U1028	104H8160	–	–
31	6.2	6.2	5	–	–	–	–	103N0050	–	117-7129	117U7000	117U5014	–	103N1010	103N0491	102H4460	–	–
32	8.2	6.5	6.5	–	–	–	–	103N0050	–	117-7129	117U7002	117U5015	–	103N1010	103N0491	102H4587	–	–
33	8.2	6.2	6.2	–	103N0050	–	–	103N0050	–	117-7129	117U7001	117U5014	–	103N1010	103N0491	102H4588	–	–
34	8.2	6.5	6.5	–	–	–	–	103N0050	–	117-7129	117U7002	117U5015	–	103N1010	103N0491	102H4678	–	–
35	8.2	6.5	6.5	–	–	–	–	103N0050	–	117-7119	117U7003	117U5014	–	103N1010	103N2011	105H6073	–	–
36	8.2	6.5	6.5	–	–	–	–	103N0050	–	117-7119	117U7050	117U5014	–	103N1010	103N2011	105H6179	–	–

For more information and performance with other refrigerants, please refer to Coolselector ® 2 at coolselector.danfoss.com or contact Danfoss.

Technical data and ordering

Reciprocating compressors - Light Commercial

R290 - 115V | 60 Hz

S.No.	Compressor	Application	ASHRAE Tcond = 130 °F, Tliq = 90 °F, Tsuc = 90 °F Capacity [BTU/h] Evaporating temp. [°F]						ASHRAE LBP rating point -10 °F / 130 °F		ASHRAE MBP rating point 20 °F / 130 °F		ASHRAE HBP rating point 45 °F / 130 °F		Displacement	Voltage and frequencies	Compressor cooling	Dimensions Height [in]	
			-31	5	23	32	50	59	Cooling capacity [BTU/h]	EER [BTU/Wh]	Cooling capacity [BTU/h]	EER [BTU/Wh]	Cooling capacity [BTU/h]	EER [BTU/Wh]	[cu.in]			A	B
1	TL4CNX.2	L/MBP	365	1058	1594	1929	–	–	722	4.31	1336	6.12	–	–	0.24	95 – 135 V, 60 Hz	F2	6.8	6.7
2	TL4.8CNX.2	L/MBP	468	1296	1908	2276	–	–	895	4.57	1607	6.14	–	–	0.29	95 – 135 V, 60 Hz	F2	6.8	6.7
3	DLE4CN	L/MBP	445	1152	1719	2070	–	–	799	5.40	1443	7.48	–	–	0.24	95 – 135 V, 60 Hz	F2	6.9	6.7
4	DLE4.8CN	L/MBP	536	1420	2086	2495	–	–	991	5.34	1756	7.32	–	–	0.29	95 – 135 V, 60 Hz	F2	6.9	6.7
5	DLE5.7CN	L/MBP	665	1709	2496	2973	–	–	1200	5.46	2104	7.22	–	–	0.35	95 – 135 V, 60 Hz	F2	6.9	6.7
6	DLE6.5CN	L/MBP	712	1859	2753	3319	–	–	1303	5.48	2313	7.19	–	–	0.40	95 – 135 V, 60 Hz	F2	6.9	6.7
7	NL7.3CNX.2	L/MBP	831	2085	3125	3759	–	–	1436	4.89	2624	6.68	–	–	0.44	95 – 135 V, 60 Hz	F2	8.0	7.8
8	NLE8.0CN	L/MBP	845	2266	3343	4016	–	–	1583	5.81	2811	7.74	–	–	0.49	95 – 135 V, 60 Hz	F2	8.0	7.8
9	NL8.4CNX.2	L/MBP	909	2384	3541	4259	–	–	1658	5.01	2975	6.55	–	–	0.51	95 – 135 V, 60 Hz	F2	8.0	7.8
10	NLE8.8CN	L/MBP	1024	2549	3755	4478	–	–	1775	5.72	3162	7.66	–	–	0.53	95 – 135 V, 60 Hz	F2	8.0	7.8
11	NLE10CN	L/MBP	1203	3011	4401	5228	–	–	2107	5.72	3711	7.69	–	–	0.62	103 – 127 V, 60 Hz	F2	8.0	7.8
12	NLY10CN	L/MBP	1281	2948	4394	5249	–	–	2040	5.76	3696	7.84	–	–	0.62	95 – 135 V, 60 Hz	F2	8.0	7.8
13	NLE11CNL	LBP	1336	3361	–	–	–	–	2340	6.04	–	–	–	–	0.68	95 – 135 V, 60 Hz	F2	8.0	7.8
14	NLE11MN	MBP	–	3389	4944	5875	–	–	–	–	4170	7.51	6651	10.09	0.68	95 – 135 V, 60 Hz	F2	8.0	7.8
15	SC10CNX.2	L/MBP	531	2480	3964	4868	–	–	1525	3.98	3302	6.38	–	–	0.63	95 – 135 V, 60 Hz	F2	8.2	8.0
16	SC12CNX.2	L/MBP	961	3171	4853	5876	–	–	2088	4.40	4065	6.39	–	–	0.79	95 – 135 V, 60 Hz	F2	8.2	8.0
17	SCE15CNLX	LBP	966	4169	6272	–	–	–	2731	5.38	5269	7.36	–	–	0.93	95 – 135 V, 60 Hz	F2	8.6	8.4
18	SC15MNX	MBP	–	3991	5742	6826	–	–	2480	4.49	4856	6.42	–	–	0.93	100 – 127 V, 60 Hz	F2	8.6	8.4
19	SCE15MNX	MBP	–	4119	6325	7621	–	–	–	–	5301	7.38	–	–	0.93	103 – 127 V, 60 Hz	F2	8.6	8.4
20	SCE18CNLX	LBP	1257	4824	7447	–	–	–	3223	5.56	6209	7.36	–	–	1.08	95 – 135 V, 60 Hz	F2	8.6	8.4
21	SC18MNX	MBP	–	4323	6340	7656	–	–	3001	4.29	5331	5.81	–	–	1.08	103 – 127 V, 60 Hz	F2	8.6	8.4
22	SCE18MNX	MBP	–	4854	7295	8728	–	–	–	–	6134	7.26	–	–	1.08	95 – 135 V, 60 Hz	F2	8.6	8.4
23	SCE21CNLX	LBP	1615	5530	8323	–	–	–	3720	5.47	6981	7.12	–	–	1.28	103 – 127 V, 60 Hz	F2	8.6	8.4

Applications
LBP = Low Back Pressure
MBP = Medium Back Pressure
HBP = High Back Pressure

Motor types
RSIR = Resistant Start Induction Run
RSCR = Resistant Start Capacitor Run
CSIR = Capacitor Start Induction Run
CSR = Capacitor Start Run

Voltage and frequencies
**) Dual frequencies*

Electrical Equipment
[1]) see data sheets for details
[2]) alt. cable lenghts available
[3]) compulsory

Compressor cooling
S *= Static cooling normally sufficient*
O *= Oil cooling*
F_1 *= Fan cooling 1.5 m/s*
(compressor compartment temp. equal to ambient temperature)
F_2 *= Fan cooling 3.0 m/s necessary*
** = O / F1 possible at 220 V nominal (187 – 242 V)*

Starting devices
LST *= Low Starting Torque*
LST is used with capillary tube control and pressure equalizing. (Pressure equalizing may exceed 10 minutes). The PTC starting device requires 5 minutes cooling before each start.
HST *= HST consisting of relay and starting capacitor is used for expansion valve control or for capillary tube control without pressure equalizing.*

For more information and performance with other refrigerants, please refer to Coolselector ® 2 at coolselector.danfoss.com or contact Danfoss.

S.No.	Dimensions			Electrical equipment - codes												Compressor - code no.		
	Connectors location			LST (RSIR & RSCR) - refer to data sheet for ePTC code no.					Run capacitor		HST (CSIR & CSR)			LST / HST				
				PTC starting device		PTC starting device with RC connector		Protector (external)	optional or compulsory		Starting relay	Starting capacitor	Starting device [2]	Cord relief	Cover	Compressor w/o accessories	Single pack Compressor with LST accessories	Single pack Compressor with HST accessories
	[in]			Spades [in]														
	Suction C	Process D	Discharge E	¼	3/16	¼	3/16	¼	¼	3/16	¼	¼	¼					
1	0.26	0.26	0.20	–	–	–	–	–	–	–	117U7005	117U5023	–	103N1010	103N2011	102H3490	–	195B0706
2	0.26	0.26	0.20	–	–	–	–	–	–	–	117U7005	117U5023	–	103N1010	103N2011	102H3590	–	195B0707
3	0.32	0.26	0.26	–	–	–	–	–	117-7118	117-7120	117U7022	117U5023	–	103N1010	103N0492	102H3482	–	195B0737
4	0.32	0.26	0.26	–	–	–	–	–	117-7118	117-7120	117U7011	117U5023	–	103N1010	103N0492	102H3582	–	195B0738
5	0.32	0.26	0.26	–	–	–	–	–	117-7118	117-7120	117U7011	117U5023	–	103N1010	103N0492	102H3682	–	195B0739
6	0.32	0.26	0.26	–	–	–	–	–	117-7118	–	117U7013	117U5023	–	103N1010	103N0492	102H3792	–	195B0740
7	0.32	0.26	0.26	–	–	–	–	–	–	–	117U7013	117U5035	–	103N1010	103N2011	105H6790	–	195B0708
8	0.32	0.26	0.26	–	–	–	–	117L0586	117-7147	–	117U7013	117U5023	–	103N1010	103N2011	105H6093	–	195B0741
9	0.32	0.26	0.26	–	–	–	–	–	–	–	117U7013	117U5035	–	103N1010	103N2011	105H6090	–	195B0709
10	0.32	0.26	0.26	–	–	–	–	117L0533	117-7114	–	117U7014	117U5025	–	103N1010	103N2011	105H6094	–	–
11	0.32	0.26	0.26	–	–	–	–	117L0534	117-7118	117-7120	117U7018	117U5025	–	103N1010	103N2011	105H6194	–	–
12	0.32	0.26	0.26	–	–	–	–	117L0533	117-7118	117-7120	117U7020	117U5035	–	103N1010	103N2011	105H6164	–	–
13	0.32	0.26	0.26	–	–	–	–	117L0534	117-7114	–	117U7020	117U5039	–	103N1010	–	105H5981	–	–
14	0.32	0.26	0.26	–	–	–	–	117L0533	117-7114	–	117U7020	117U5023	–	103N1010	–	105H5980	–	–
15	0.38	0.26	0.26	–	–	–	–	–	–	–	117U7020	117U5023	–	103N1004	103N2008	104H7070	–	195B0710
16	0.38	0.26	0.26	–	–	–	–	–	–	–	117U7020	117U5023	–	103N1004	103N2008	104H7270	–	195B0711
17	0.38	0.26	0.26	–	–	–	–	–	–	117-7133	117-7441	117U5350	117-7801	–	117U1021	104H7578	–	–
18	0.38	0.26	0.26	–	–	–	–	–	117-7114		117-7441	117U5043	117-7053	–	117U1021	104H7570	–	–
19	0.38	0.26	0.26	–	–	–	–	–	–	117-7133	117-7441	117U5350	117-7801	–	117U1021	104H7579	–	–
20	0.38	0.26	0.26	–	–	–	–	–	–	117-7133	117-7441	117U5350	117-7801	–	117U1021	104H7878	–	–
21	0.38	0.26	0.26	–	–	–	–	–	–	–	–	–	117-7053	–	117U1021	104H7870	–	–
22	0.38	0.26	0.26	–	–	–	–	–	–	117-7133	117-7443	117U5379	117-7805	–	117U1021	104H7879	–	–
23	0.38	0.26	0.26	–	–	–	–	–	–	117-7133	117-7443	117U5379	117-7805	–	117U1021	104H7178	–	–

For more information and performance with other refrigerants, please refer to Coolselector ® 2 at coolselector.danfoss.com or contact Danfoss.

Technical data and ordering

Reciprocating compressors - Light Commercial

R600 - 220 – 240 V | 50 Hz

S.No.	Compressor	Application	ASHRAE Tcond = 54.4 °C, Tliq = 32.2 °C, Tsuc = 32.2 °C Capacity [W] Evaporating temp. [°C]						ASHRAE LBP rating point -23.3 °C / 54.4 °C		ASHRAE MBP rating point -6.7 °C / 54.4 °C		ASHRAE HBP rating point 7.2 °C / 54.4 °C		Displacement	Voltage and frequencies	Compressor cooling	Dimensions Height [mm]	
			-35	-15	-5	0	10	15	Cooling capacity [W]	COP [W/W]	Cooling capacity [W]	COP [W/W]	Cooling capacity [W]	COP [W/W]	[cm³]			A	B
1	PLE35K	MBP	–	63	106	133	–	–	38	0.91	88	1.56	–	–	2.50	198 – 254 V, 50 Hz	S	137	135
2	TLES4KTK	LBP	22	91	150	188	–	–	55	1.10	125	1.82	–	–	3.86	187 – 254 V, 50 Hz	S	173	169
3	TLES4KK.3	LBP	23	91	–	–	–	–	57	1.18	–	–	–	–	4.01	198 – 254 V, 50 Hz	S	163	159
4	TLY4KK.3	LBP	23	91	–	–	–	–	57	1.29	–	–	–	–	4.01	198 – 254 V, 50 Hz	S	163	159
5	TLX4KK.3	LBP	25	92	–	–	–	–	60	1.49	–	–	–	–	4.01	198 – 254 V, 50 Hz	S	173	169
6	TLY4.8KK.3	LBP	34	115	–	–	–	–	74	1.37	–	–	–	–	4.78	198 – 254 V, 50 Hz	S	163	159
7	TLES4.8KK.3	LBP	34	115	–	–	–	–	74	1.30	–	–	–	–	4.78	198 – 254 V, 50 Hz	S	163	159
8	TLES4.8KK.3	LBP	34	115	–	–	–	–	74	1.30	–	–	–	–	4.78	198 – 254 V, 50 Hz	S	163	159
9	TLES5KTK	LBP	34	121	194	240	–	–	77	1.22	162	1.78	–	–	5.08	187 – 254 V, 50 Hz	S	173	169
10	TLES6KTK	LBP	38	136	–	–	–	–	89	1.23	–	–	–	–	5.70	187 – 254 V, 50 Hz	S	173	169
11	TLY5.7KK.3	LBP	45	139	–	–	–	–	91	1.37	–	–	–	–	5.70	198 – 254 V, 50 Hz	S	163	159
12	TLX5.7KK.3	LBP	46	140	–	–	–	–	94	1.64	–	–	–	–	5.70	198 – 254 V, 50 Hz	S	173	169
13	TLES5.7KK.3	LBP	45	139	–	–	–	–	91	1.32	–	–	–	–	5.70	198 – 254 V, 50 Hz	S	163	159
14	TLES7KTK	LBP	49	158	–	–	–	–	103	1.22	–	–	–	–	6.49	187 – 254 V, 50 Hz	S	173	169
15	TLY6.5KK.3	LBP	56	165	–	–	–	–	109	1.47	–	–	–	–	6.49	198 – 254 V, 50 Hz	S	163	159
16	TLX6.5KK.3	LBP	57	163	–	–	–	–	110	1.66	–	–	–	–	6.49	198 – 254 V, 50 Hz	S	173	169
17	TLES6.5KK.3	LBP	55	163	–	–	–	–	108	1.31	–	–	–	–	6.49	198 – 254 V, 50 Hz	S	163	159
18	TLES7.5KK.3	LBP	64	189	–	–	–	–	125	1.38	–	–	–	–	7.48	198 – 254 V, 50 Hz	S	163	159
19	TLX7.5KK.3	LBP	67	192	–	–	–	–	130	1.68	–	–	–	–	7.48	198 – 254 V, 50 Hz	S	173	169
20	TLES8KTK	LBP	59	182	–	–	–	–	119	1.22	–	–	–	–	7.76	187 – 254 V, 50 Hz	S	173	169
21	TLES8.7KTK.3	LBP	71	217	–	–	–	–	143	1.27	–	–	–	–	8.67	187 – 254 V, 50 Hz	S	173	169
22	TLES8.7KK.3	LBP	75	221	–	–	–	–	147	1.39	–	–	–	–	8.67	198 – 254 V, 50 Hz	S	163	159
23	TLX8.7KK.3	LBP	79	224	–	–	–	–	153	1.67	–	–	–	–	8.67	198 – 254 V, 50 Hz	S	173	169
24	TLY10 KK.3	LBP	90	254	–	–	–	–	170	1.55	–	–	–	–	10.13	198 – 254 V, 50 Hz	S	173	169
25	TLES10 KTK.3	LBP	89	249	–	–	–	–	168	1.36	–	–	–	–	10.13	187 – 254 V, 50 Hz	S	173	169
26	DLX4KK	LBP	28	97	–	–	–	–	62	1.86	–	–	–	–	4.01	198 – 254 V, 50 Hz	S	175	169
27	DLX4KK.1	LBP	28	97	–	–	–	–	62	1.86	–	–	–	–	4.01	198 – 254 V, 50 Hz	S	175	169
28	DLX5.7KK.1	LBP	50	151	–	–	–	–	100	1.88	–	–	–	–	5.70	198 – 254 V, 50 Hz	S	175	169
29	DLE8.7KK	LBP	76	219	–	–	–	–	148	1.56	–	–	–	–	8.67	198 – 254 V, 50 Hz	S	175	169
30	DLX9.4KK.1	LBP	85	253	–	–	–	–	168	1.89	–	–	–	–	9.38	198 – 254 V, 50 Hz	S	175	169
31	DLE9.4KK	LBP	87	238	–	–	–	–	161	1.64	–	–	–	–	9.38	198 – 254 V, 50 Hz	S	175	169
32	DLE10 KK	LBP	96	265	–	–	–	–	182	1.65	–	–	–	–	10.14	198 – 254 V, 50 Hz	S	175	169
33	NLU8.0 KK.1	LBP	62	193	–	–	–	–	127	1.94	–	–	–	–	8.05	198 – 254 V, 50 Hz	S	203	197
34	NLX8.0 KK.2	LBP	64	204	–	–	–	–	133	1.88	–	–	–	–	8.05	198 – 254 V, 50 Hz	S	203	197
35	NLE9KTK	LBP	66	202	–	–	–	–	131	1.33	–	–	–	–	8.35	187 – 254 V, 50 Hz *)	S	197	190
36	NLU8.8KK.1	LBP	71	219	–	–	–	–	145	1.96	–	–	–	–	8.76	198 – 254 V, 50 Hz	S	203	197
37	NLX8.8KK.2	LBP	76	228	–	–	–	–	151	1.89	–	–	–	–	8.76	198 – 254 V, 50 Hz	S	203	197
38	NLU8.8KK.1	LBP	71	219	–	–	–	–	145	1.96	–	–	–	–	8.76	198 – 254 V, 50 Hz	S	203	197
39	NLX10 KK.2	LBP	91	265	–	–	–	–	177	1.89	–	–	–	–	10.09	198 – 254 V, 50 Hz	S	203	197
40	NLX10 KK.1	LBP	82	262	–	–	–	–	172	1.74	–	–	–	–	10.09	198 – 254 V, 50 Hz	S	203	197
41	NLU10 KK.1	LBP	86	267	–	–	–	–	176	1.98	–	–	–	–	10.09	198 – 254 V, 50 Hz	S	203	197
42	NLE10 KK.4	LBP	90	252	–	–	–	–	170	1.57	–	–	–	–	10.09	198 – 254 V, 50 Hz	S	190	183
43	NLE11KTK.2	LBP	102	295	–	–	–	–	198	1.51	–	–	–	–	11.15	187 – 254 V, 50 Hz	S	203	197
44	NLX11KK.3	LBP	97	288	–	–	–	–	195	1.86	–	–	–	–	11.15	198 – 254 V, 50 Hz	S	203	197
45	NLU11KK.1	LBP	99	301	–	–	–	–	200	1.97	–	–	–	–	11.15	198 – 254 V, 50 Hz	S	203	197
46	NLE11KTK	LBP	88	251	–	–	–	–	168	1.31	–	–	–	–	11.15	187 – 254 V, 50 Hz *)	S	197	190
47	NLE11KK.4	LBP	100	283	–	–	–	–	190	1.56	–	–	–	–	11.15	198 – 254 V, 50 Hz	S	190	183

Applications
LBP = Low Back Pressure
MBP = Medium Back Pressure
HBP = High Back Pressure

Motor types
RSIR = Resistant Start Induction Run
RSCR = Resistant Start Capacitor Run
CSIR = Capacitor Start Induction Run
CSR = Capacitor Start Run

Voltage and frequencies
**) Dual frequencies*

Electrical Equipment
[1]) see data sheets for details
[2]) alt. cable lenghts available
[3]) compulsory

Compressor cooling
***S** = Static cooling normally sufficient*
***O** = Oil cooling*
***F*$_1$** *= Fan cooling 1.5 m/s (compressor compartment temp. equal to ambient temperature)*
***F*$_2$** *= Fan cooling 3.0 m/s necessary*
** = O / F1 possible at 220 V nominal (187 – 242 V)*

Starting devices
***LST** = Low Starting Torque*
LST is used with capillary tube control and pressure equalizing. (Pressure equalizing may exceed 10 minutes). The PTC starting device requires 5 minutes cooling before each start.
***HST** = HST consisting of relay and starting capacitor is used for expansion valve control or for capillary tube control without pressure equalizing.*

For more information and performance with other refrigerants, please refer to Coolselector ® 2 at coolselector.danfoss.com or contact Danfoss.

S.No.	Dimensions			Electrical equipment - codes											Compressor - code no.	
				LST (RSIR & RSCR)					Run capacitor		HST (CSIR & CSR)			LST / HST			
	Connectors location			PTC starting device without RC connector		PTC starting device with RC connector		ePTC			Starting relay	Starting capacitor	Starting device	Cord relief	Cover	Compressor w/o accessories	Single pack Compressor with LST accessories
	[mm]			Spades [mm]													
	Suction C	Process D	Dis-charge E	6.3	4.8	6.3	4.8	4.8	6.3	4.8	6.3	4.8	6.3				
1	6.2	6.2	5	–	–	103N0016	103N0021	–	117-7117 [2]	117-7119 [2]	–	–	–	103N1010	103N0491	101H0360	–
2	6.2	6.2	5	103N0011	103N0018	103N0016	103N0021	103N0050	117-7117	117-7119	–	–	–	103N1010	103N2010	102H4436	–
3	6.2	6.2	5	103N0011	103N0018	103N0016	103N0021	103N0050	117-7117	117-7119	–	–	–	103N1010	103N2010	102H4438	195B0386
4	6.2	6.2	5	103N0011	103N0018	103N0016	103N0021	103N0050	117-7117	117-7119	–	–	–	103N1010	103N2010	102H4442	–
5	6.2	6.2	5	–	–	103N0016	103N0021	103N0050	117-7117 [2]	117-7119 [2]	–	–	–	103N1010	103N2010	102H4447	195B0341
6	6.2	6.2	5	103N0011	103N0018	103N0016	103N0021	103N0050	117-7117	117-7119	–	–	–	103N1010	103N2010	102H4542	–
7	6.2	6.2	5	103N0011	103N0018	103N0016	103N0021	103N0050	117-7117	117-7119	–	–	–	103N1010	103N2010	102H4579	–
8	6.2	4.5	5	103N0011	103N0018	103N0016	103N0021	103N0050	117-7117	117-7119	–	–	–	103N1010	103N2010	102H4596	–
9	6.2	6.2	5	103N0011	103N0018	103N0016	103N0021	103N0050	117-7117	117-7119	–	–	–	103N1010	103N2010	102H4536	–
10	6.2	6.2	5	103N0011	103N0018	103N0016	103N0021	103N0050	117-7117	117-7119	–	–	–	103N1010	103N2010	102H4636	–
11	6.2	6.2	5	103N0011	103N0018	103N0016	103N0021	103N0050	117-7117	117-7119	–	–	–	103N1010	103N2010	102H4642	–
12	6.2	6.2	5	–	–	103N0016	103N0021	103N0050	117-7117 [2]	117-7119 [2]	–	–	–	103N1010	103N2010	102H4647	–
13	6.2	6.2	5	103N0011	103N0018	103N0016	103N0021	103N0050	117-7117	117-7119	–	–	–	103N1010	103N2010	102H4694	195B0366
14	6.2	6.2	5	103N0011	103N0018	103N0016	103N0021	103N0050	117-7117	117-7119	–	–	–	103N1010	103N2010	102H4737	–
15	6.2	6.2	5	103N0011	103N0018	103N0016	103N0021	103N0050	117-7117	117-7119	–	–	–	103N1010	103N2010	102H4742	195B0526
16	6.2	6.2	5	–	–	103N0016	103N0021	103N0050	117-7117 [2]	117-7119 [2]	–	–	–	103N1010	103N2010	102H4747	–
17	6.2	6.2	5	103N0011	103N0018	103N0016	103N0021	103N0050	117-7117	117-7119	–	–	–	103N1010	103N2010	102H4783	–
18	6.2	6.2	5	103N0011	103N0018	103N0016	103N0021	103N0050	117-7131	117-7132	–	–	–	103N1010	103N2010	102H4838	195B0368
19	6.2	6.2	5	–	–	103N0016	103N0021	103N0050	117-7131 [2]	117-7132 [2]	–	–	–	103N1010	103N2010	102H4847	195B0359
20	6.2	6.2	5	103N0011	103N0018	103N0016	103N0021	103N0050	117-7117	117-7119	–	–	–	103N1010	103N2010	102H4836	195B0618
21	6.2	6.2	5	103N0011	103N0018	–	–	–	–	–	–	–	–	103N1010	103N2010	102H4834	–
22	6.2	6.2	5	103N0011	103N0018	103N0016	103N0021	103N0050	117-7117	117-7119	–	–	–	103N1010	103N2010	102H4939	–
23	6.2	6.2	5	–	–	103N0016	103N0021	103N0050	117-7117 [2]	117-7119 [2]	–	–	–	103N1010	103N2010	102H4947	195B0361
24	6.2	6.2	5	103N0011	103N0018	103N0016	103N0021	103N0050	117-7117	117-7119	–	–	–	103N1010	103N2010	102H4042	–
25	6.2	6.2	5	103N0011	103N0018	103N0016	103N0021	103N0050	117-7117	117-7119	–	–	–	103N1010	103N2010	102H4050	–
26	6.2	6	5	–	–	103N0016	103N0021	103N0055	[3]	117-7136 [2]	–	–	–	103N1010	103N0491	102H3453	–
27	6.2	6	5	–	–	103N0016	103N0021	103N0055	[3]	117-7136 [2]	–	–	–	103N1010	103N0491	102H3459	–
28	6.2	6	5	–	–	–	103N0021	103N0055	[3]	117-7136 [2]	–	–	–	103N1010	103N0491	102H3659	–
29	6.2	4.5	5	–	–	103N0016	103N0021	103N0050	117-7117	117-7119	–	–	–	103N1010	103N0491	102H4950	–
30	6.2	6	5	–	–	–	103N0021	103N0055	[3]	117-7140 [2]	–	–	–	103N1010	103N0491	102H4159	–
31	6.2	4.5	5	–	–	103N0016	103N0021	103N0050	117-7117	117-7119	–	–	–	103N1010	103N0491	102H4952	–
32	6.2	6	5	–	–	103N0016	103N0021	103N0050	117-7117	117-7119	–	–	–	103N1010	103N0491	102H4082	–
33	6.2	6.2	5	–	–	–	103N0021	103N0055	[3]	117-7139 [2]	–	–	–	103N1010	103N2010	105H6008	–
34	6.2	6.2	5	–	–	103N0016	103N0021	103N0050	117-7131 [3]	117-7132 [2]	–	–	–	103N1010	103N2010	105H6010	–
35	6.2	6.2	5	103N0011	103N0018	103N0016	103N0021		117-7117	117-7119	–	–	–	103N1010	103N2010	105H6071	–
36	6.2	6.2	5	–	–	–	103N0021	103N0055	[3]	117-7139 [2]	–	–	–	103N1010	103N2010	105H6009	–
37	6.2	6.2	5	–	–	–	103N0021	103N0050	[3]	117-7136 [2]	–	–	–	103N1010	103N2010	105H6011	–
38	6.2	4.5	5	–	–	–		103N0055	[3]	117-7139 [2]	–	–	–	103N1010	103N2010	105H6020	–
39	6.2	6.2	5	–	–	–	103N0021	103N0050	[3]	117-7136 [2]	–	–	–	103N1010	103N2010	105H6101	195B0405
40	6.2	6.2	5	–	–	103N0016	103N0021	103N0050	117-7131 [3]	117-7132 [2]	–	–	–	103N1010	103N2010	105H6104	–
41	6.2	6.2	5	–	–	–	103N0021	103N0055	[3]	117-7139 [2]	–	–	–	103N1010	103N2010	105H6193	–
42	6.2	6.2	5	103N0011	103N0018	103N0016	103N0021	103N0050	117-7117	117-7119	–	–	–	103N1010	103N2010	105H6867	–
43	6.2	6.2	5	103N0011	103N0018	103N0016	103N0021	103N0050	117-7117	117-7119	–	–	–	103N1010	103N2010	105H6173	–
44	6.2	6.2	5	–	–	–	103N0021	103N0050	[3]	117-7119 [2]	–	–	–	103N1010	103N2010	105H6184	–
45	6.2	6.2	5	–	–	–	103N0021	103N0055	[3]	117-7139 [2]	–	–	–	103N1010	103N2010	105H6198	–
46	6.2	6.2	5	103N0011	103N0018	103N0016	103N0021	–	117-7117	117-7119	–	–	–	103N1010	103N2010	105H6948	195B0577
47	6.2	6.2	5	103N0011	103N0018	103N0016	103N0021	103N0050	117-7117	117-7119	–	–	–	103N1010	103N2010	105H6952	–

For more information and performance with other refrigerants, please refer to Coolselector ® 2 at coolselector.danfoss.com or contact Danfoss.

Technical data and ordering

Reciprocating compressors - Light Commercial (Count.)

R600 - 220 – 240 V | 50 Hz

S.No.	Compressor	Application	ASHRAE Tcond = 54.4 °C, Tliq = 32.2 °C, Tsuc = 32.2 °C Capacity [W] Evaporating temp. [°C]						ASHRAE LBP rating point -23.3 °C / 54.4 °C		ASHRAE MBP rating point -6.7 °C / 54.4 °C		ASHRAE HBP rating point 7.2 °C / 54.4 °C		Displacement	Voltage and frequencies	Compressor cooling	Dimensions Height [mm]	
			-35	-15	-5	0	10	15	Cooling capacity [W]	COP [W/W]	Cooling capacity [W]	COP [W/W]	Cooling capacity [W]	COP [W/W]	[cm³]			A	B
48	NLX11KK.2	LBP	104	292	–	–	–	–	197	1.87	–	–	–	–	11,15	198 – 254 V, 50 Hz	S	203	197
49	NLX13KK.2	LBP	114	331	–	–	–	–	222	1.87	–	–	–	–	13,25	198 – 254 V, 50 Hz	S	203	197
50	NLX13KK.1	LBP	111	337	–	–	–	–	223	1.75	–	–	–	–	13,25	198 – 254 V, 50 Hz	S	203	197
51	NLX13KK.3	LBP	113	345	–	–	–	–	225	1.85	–	–	–	–	13,25	198 – 254 V, 50 Hz	S	203	197
52	NLU13KK.1	LBP	114	348	–	–	–	–	230	1.98	–	–	–	–	13,25	198 – 254 V, 50 Hz	S	203	197
53	NLU13KTK.1	LBP	116	347	–	–	–	–	231	1.87	–	–	–	–	13,25	187 – 254 V, 50 Hz	S	203	197
54	NLE13KTK.2	LBP	117	338	–	–	–	–	227	1.52	–	–	–	–	13,25	187 – 254 V, 50 Hz	S	203	197
55	NLE13KK.4	LBP	121	334	–	–	–	–	226	1.56	–	–	–	–	13,25	198 – 254 V, 50 Hz	S	190	183
56	NLX15KK.1	LBP	121	376	–	–	–	–	248	1.71	–	–	–	–	14,65	198 – 254 V, 50 Hz	S	203	197
57	NLX15KK.3	LBP	132	388	–	–	–	–	254	1.85	–	–	–	–	14,65	198 – 254 V, 50 Hz	S	203	197
58	NLE15MKK	MBP	–	375	586	718	–	–	248	1.49	491	1.99	852	2.50	14,65	198 – 254 V, 50 Hz	S	203	197
59	NLU15KK.1	LBP	129	390	–	–	–	–	259	1.96	–	–	–	–	14,65	198 – 254 V, 50 Hz	S	203	197
60	NLU15KTK.1	LBP	130	391	–	–	–	–	260	1.84	–	–	–	–	14,65	187 – 254 V, 50 Hz	S	203	197
61	NLE15KTK.2	LBP	129	383	–	–	–	–	254	1.52	–	–	–	–	14,65	187 – 254 V, 50 Hz	S	203	197
62	NLE15KK.4	LBP	134	374	–	–	–	–	253	1.59	–	–	–	–	14,65	198 – 254 V, 50 Hz	S	197	190
63	NLX15KK.2	LBP	135	377	–	–	–	–	255	1.87	–	–	–	–	14,65	198 – 254 V, 50 Hz	S	203	197

Reciprocating compressors - Light Commercial

R600a - 220 V | 60 Hz

S.No.	Compressor	Application	ASHRAE Tcond = 130 °F, Tliq = 90 °F, Tsuc = 90 °F Capacity [BTU/h] Evaporating temp. [°F]						ASHRAE LBP rating point -10 °F / 130 °F		ASHRAE MBP rating point 20 °F / 130 °F		ASHRAE HBP rating point 45 °F / 130 °F		Displacement	Voltage and frequencies	Compressor cooling	Dimensions Height [in]	
			-31	5	23	32	50	59	Cooling capacity [BTU/h]	EER [BTU/Wh]	Cooling capacity [BTU/h]	EER [BTU/Wh]	Cooling capacity [BTU/h]	EER [BTU/Wh]	[cu.in]			A	B
1	HTD30AG	LBP	73	280	447	–	–	–	176	4.94	374	7.26	–	–	0.18	187 – 264 V, 60 Hz *)	S	5.2	–
2	HXK80AT	LBP	291	851	–	–	–	–	573	6.04	–	–	–	–	0.49	198 – 253 V, 60 Hz *)	S	6.8	6.6
3	HXK87AT	LBP	365	934	–	–	–	–	627	6.04	–	–	–	–	0.54	198 – 253 V, 60 Hz *)	S	6.8	6.6
4	HXK95AT	LBP	399	1020	–	–	–	–	685	6.04	–	–	–	–	0.59	198 – 253 V, 60 Hz *)	S	6.8	6.6
5	HXK12AT	LBP	468	1196	–	–	–	–	805	6.04	–	–	–	–	0.68	198 – 253 V, 60 Hz *)	S	6.8	6.6
6	NLE11KTK	LBP	349	992	–	–	–	–	662	4.39	–	–	–	–	0.68	198 – 254 V, 60 Hz *)	S	7.8	7.5

Reciprocating compressors - Light Commercial

R600a - 115V | 60 Hz

S.No.	Compressor	Application	ASHRAE Tcond = 130 °F, Tliq = 90 °F, Tsuc = 90 °F Capacity [BTU/h] Evaporating temp. [°F]						ASHRAE LBP rating point -10 °F / 130 °F		ASHRAE MBP rating point 20 °F / 130 °F		ASHRAE HBP rating point 45 °F / 130 °F		Displacement	Voltage and frequencies	Compressor cooling	Dimensions Height [in]	
			-31	5	23	32	50	59	Cooling capacity [BTU/h]	EER [BTU/Wh]	Cooling capacity [BTU/h]	EER [BTU/Wh]	Cooling capacity [BTU/h]	EER [BTU/Wh]	[cu.in]			A	B
1	HTD30AE	LBP	96	306	485	–	–	–	198	5.49	406	7.29	–	–	0.18	80 – 135 V, 60 Hz	S	5.2	–
2	NLE11KTK	L/MBP	360	1059	1645	1959	–	–	665	4.18	1390	5.70	–	–	0.68	95 – 135 V, 60 Hz	F1	7.8	7.5
3	NLE13KTK	L/MBP	415	1182	1836	2227	–	–	773	4.13	1545	5.52	–	–	0.81	95 – 135 V, 60 Hz	F1	7.8	7.5

Applications
LBP = Low Back Pressure
MBP = Medium Back Pressure
HBP = High Back Pressure

Motor types
RSIR = Resistant Start Induction Run
RSCR = Resistant Start Capacitor Run
CSIR = Capacitor Start Induction Run
CSR = Capacitor Start Run

Voltage and frequencies
**) Dual frequencies*

Electrical Equipment
[1]) see data sheets for details
[2]) alt. cable lenghts available
[3]) compulsory

Compressor cooling
***S** = Static cooling normally sufficient*
***O** = Oil cooling*
***F*$_1$** *= Fan cooling 1.5 m/s (compressor compartment temp. equal to ambient temperature)*
***F*$_2$** *= Fan cooling 3.0 m/s necessary*
** = O / F1 possible at 220 V nominal (187 – 242 V)*

Starting devices
***LST** = Low Starting Torque*
LST is used with capillary tube control and pressure equalizing. (Pressure equalizing may exceed 10 minutes). The PTC starting device requires 5 minutes cooling before each start.
***HST** = HST consisting of relay and starting capacitor is used for expansion valve control or for capillary tube control without pressure equalizing.*

For more information and performance with other refrigerants, please refer to Coolselector ® 2 at coolselector.danfoss.com or contact Danfoss.

S.No.	Dimensions			Electrical equipment - codes											Compressor - code no.	
				LST (RSIR & RSCR)					Run capacitor		HST (CSIR & CSR)			LST / HST		
	Connectors location			PTC starting device without RC connector		PTC starting device with RC connector		ePTC			Starting relay	Starting capacitor	Starting device	Cord relief	Cover	Compressor w/o accessories	Single pack Compressor with LST accessories
	[mm]			Spades [mm]													
	Suction C	Process D	Dis-charge E	6.3	4.8	6.3	4.8	4.8	6.3	4.8	6.3	4.8	6.3				
48	6.2	6.2	5	–	–	103N0016	103N0021	103N0050	[3]	117-7136 [2]	–	–	–	103N1010	103N2010	105H6970	195B0455
49	6.2	6.2	5	–	–	103N0016	103N0021	103N0050	[3]	117-7132 [2]	–	–	–	103N1010	103N2010	105H6300	195B0456
50	6.2	6.2	5	–	–	103N0016	103N0021	103N0050	117-7117 [3]	117-7119 [2]	–	–	–	103N1010	103N2010	105H6304	–
51	6.2	6.2	5	–	–	–	103N0021	103N0050	[3]	117-7119 [2]	–	–	–	103N1010	103N2010	105H6306	–
52	6.2	6.2	5	–	–	–	103N0021	103N0055	117-7131 [3]	117-7132 [2]	–	–	–	103N1010	103N2010	105H6372	–
53	6.2	6.2	5	–	–	–	103N0021	103N0055	[3]	117-7129 [2]	–	–	–	103N1010	103N2010	105H6381	–
54	6.2	6.2	5	103N0011	103N0018	103N0016	103N0021	103N0050	117-7117	117-7119	–	–	–	103N1010	103N2010	105H6929	–
55	6.2	6.2	5	103N0011	103N0018	103N0016	103N0021	103N0050	117-7117	117-7119	–	–	–	103N1010	103N2010	105H6939	195B0444
56	6.2	6.2	5	–	–	103N0016	103N0021	103N0050	[3]	117-7136 [2]	–	–	–	103N1010	103N2010	105H6502	–
57	6.2	6.2	5	–	–	–	103N0021	103N0050	[3]	117-7140 [2]	–	–	–	103N1010	103N2010	105H6506	–
58	6.2	6.2	5	103N0011	103N0018	103N0016	103N0021	103N0050	117-7117	117-7119	–	–	–	103N1010	103N2010	105H6533	–
59	6.2	6.2	5	–	–	–	103N0021	103N0055	117-7131 [3]	117-7132 [2]	–	–	–	103N1010	103N2010	105H6553	–
60	6.2	6.2	5	–	–	–	103N0021	103N0055	[3]	117-7119 [2]	–	–	–	103N1010	103N2010	105H6554	–
61	6.2	6.2	5	103N0011	103N0018	103N0016	103N0021	–	117-7117	117-7119	–	–	–	103N1010	103N2010	105H6966	–
62	6.2	6.2	5	103N0011	103N0018	103N0016	103N0021	103N0050	117-7117	117-7119	–	–	–	103N1010	103N2010	105H6968	195B0374
63	8.2	6.2	6.2	–	–	103N0016	103N0021	103N0050	117-7117 [2]	117-7119 [2]	–	–	–	103N1010	103N2010	105H6977	195B0454

S.No.	Dimensions			Electrical equipment - codes											Compressor - code no.		
				LST (RSIR & RSCR) - refer to data sheet for ePTC code no.					Run capacitor		HST (CSIR & CSR)			LST / HST			
	Connectors location			PTC starting device		PTC starting device with RC connector		Protector (external)	optional or compulsory		Starting relay	Starting capacitor	Starting device [2]	Cord relief	Cover	Compressor w/o accessories	Single pack Compressor with LST accessories	Single pack Compressor with HST accessories
	[in]			Spades [in]														
	Suction C	Process D +: Di -: Do	Dis-charge E	¼	3⁄16	¼	3⁄16	¼	¼	3⁄16	¼	¼	¼					
1	0.24	-0.24	0.20	–	–	–	–	–	–	–	–	–	BN	–	–	CDO00118	–	–
2	0.24	-0.24	0.20	DCF5	ZCF5	DCF5	ZCF5	AE18FUX	–	–	–	–	K100	–	–	CDO00135	–	–
3	0.24	-0.24	0.20	DCFC	ZCFC	DCFC	ZCFC	AE15BUX	–	–	–	–	K100	–	–	CDO00136	–	–
4	0.24	-0.24	0.20	DCFP	ZCFP	DCFP	ZCFP	AE72FUX	–	–	–	–	K100	–	–	CDO00137	–	–
5	0.24	-0.24	0.20	DCFP	ZCFP	DCFP	ZCFP	AE72FUX	–	–	–	–	K100	–	–	CDO00138	–	–
6	0.24	0.24	0.20	103N0011	103N0018	103N0016	103N0021	–	117-7117	117-7119	–	–	–	103N1010	103N2010	105H6948	195B0577	–

S.No.	Dimensions			Electrical equipment - codes											Compressor - code no.		
				LST (RSIR & RSCR) - refer to data sheet for ePTC code no.					Run capacitor		HST (CSIR & CSR)			LST / HST			
	Connectors location			PTC starting device		PTC starting device with RC connector		Protector (external)	optional or compulsory		Starting relay	Starting capacitor	Starting device [2]	Cord relief	Cover	Compressor w/o accessories	Single pack Compressor with LST accessories	Single pack Compressor with HST accessories
	[in]			Spades [in]														
	Suction C	Process D +: Di -: Do	Dis-charge E	¼	3⁄16	¼	3⁄16	¼	¼	3⁄16	¼	¼	¼					
1	0.24	-0.24	0.20	–	BK E1	–	–	AE25FJ6	–	–	–	–	BK	–	163806_	CDO00120	–	–
2	0.32	0.26	0.26	103N0026	103N0023	103N0027	103N0024	–	117-7118	117-7120	–	–	–	103N1010	103N2011	105H5942	–	–
3	0.32	0.26	0.26	103N0026	103N0023	103N0027	103N0024	–	117-7118	117-7120	–	–	–	103N1010	103N2011	105H5949	–	–

For more information and performance with other refrigerants, please refer to Coolselector ® 2 at coolselector.danfoss.com or contact Danfoss.

Diagram and dimensions

PL / PLE

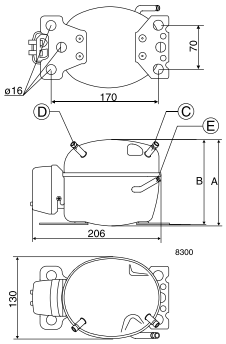

TL

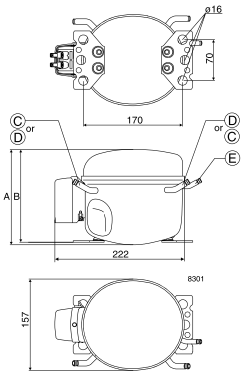

TLS / tLES / tLX

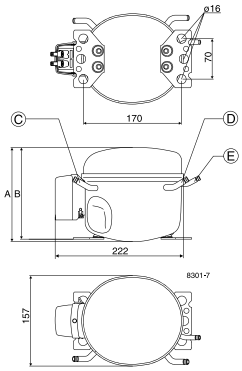

SLV

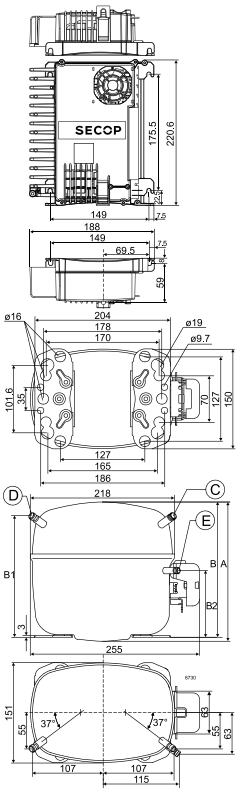

NL / NLE / NLX

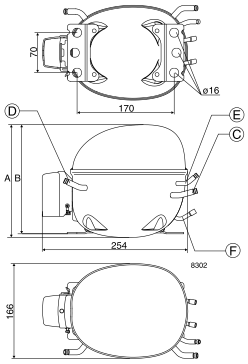

NF

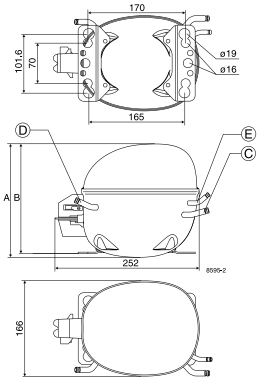

FR

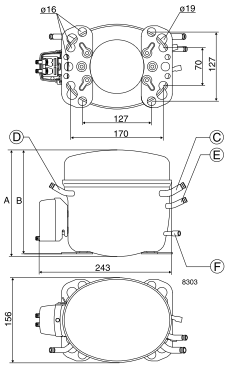

SC

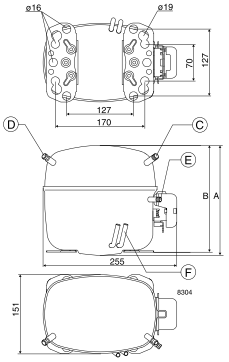

GS

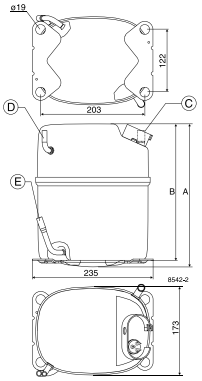

BD

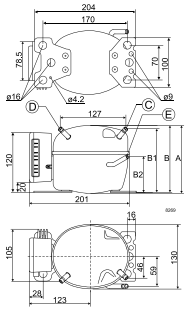

Mounting accessories

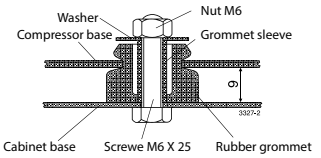

Bolt joint for
one compressor: 118-1917
in quantities: 118-1918

Bolt joint for
one GS compressor: 107B9150 (M8 × 40, base plate distance: 17 mm)

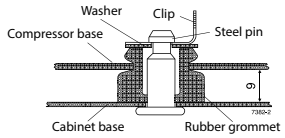

Snap-on
in quantities: 118-1919

Protection Screen for PTC

Note:
to fulfil the requirements of EN 60355-2-34 the protection screen 103N0476 must be applied to the PTC starting device

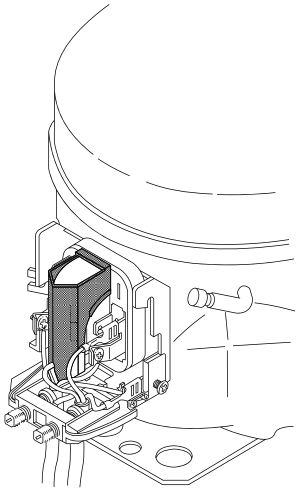

Compressor design	Optimization level	Compressor size	Application range	Start characteristics	Generation
PL TL NL FR SC GS	***Blank*** Standard energy level ***S*** Semi-direct intake ***E*** Energy-optimized	***Nominal*** displacement in cm^3 ***Exception***: For PL compressors the capacity at rating point is stated	***CL R404A / R507*** LBP ***CN R290*** LBP (MBP) ***DL R404A / R507*** HBP ***F R134a*** LBP / (MBP) ***FT R134a*** LBP tropical ***G R134a*** LBP / MBP/hBP ***GH R134a*** Heat Pumps ***GHH R134a*** Heat Pumps optimized ***K R600a*** LBP / (MBP) ***MF R134a*** MBP ***ML R404A / R507*** MBP	***Blank =>*** universal (principal rule) ***X = HST*** characteristics (expansion valve)	***Blank =>*** first generation ***.2 =>*** second generation ***.3 =>*** third generation etc.

Examples					
TL	ES	5.7	FT		.3
NL	E	10	MF		
SC		15	CN	X	.2

Diagram and dimensions

LST / RSIR - PL	LST / RSIR - TL-TLS-TLES-NL-NLE-FR	LST / RSIR - SC
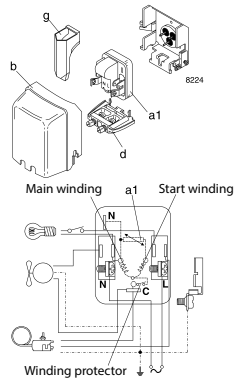	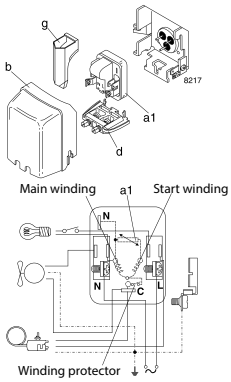	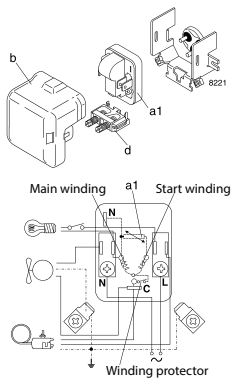
HST / CSIR - PL	**HST / CSIR - TL-TLS-TLES-NL-NLE-FR**	**HST / CSIR - SC**
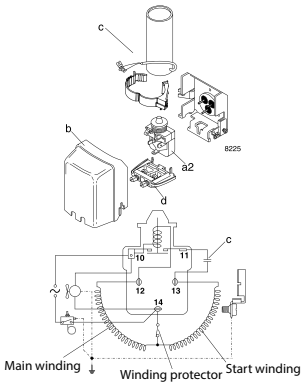	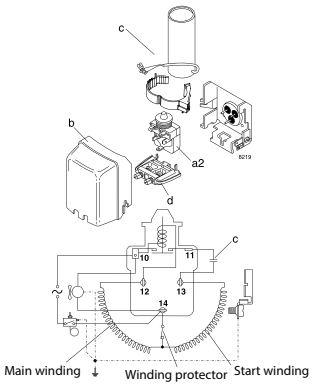	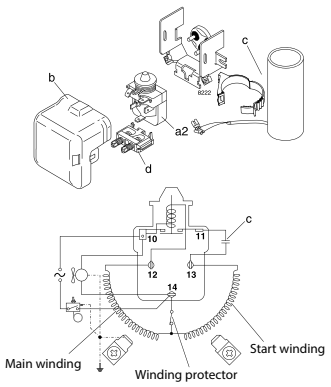
HST / CSIR - NF	**HST / CSR - SC**	**HST / CSR - GS**
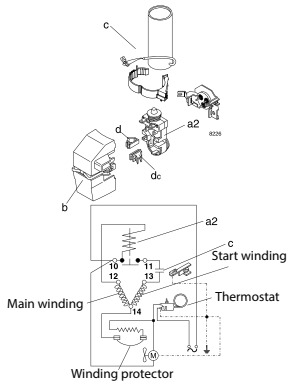	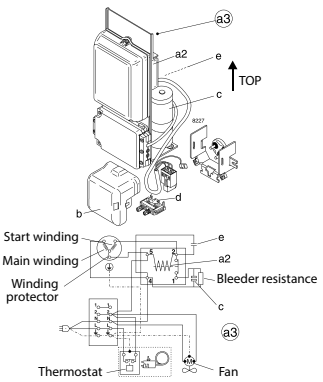	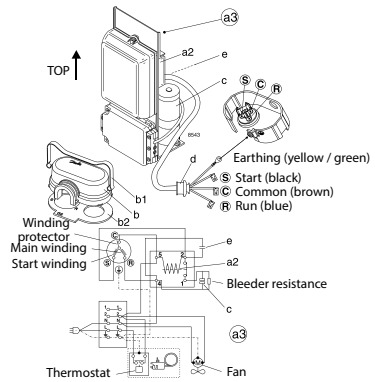

Legend

a1) PTC starting device
a2) Starting relay
a3) Starting device
b) Cover
b1) Clamp (part of compressor)
b2) Gasket (part of compressor)
c) Starting capacitor
d) Cord relief
e) Run capacitor
g) Protection screen for PTC

Diagram and dimensions

SC Twin

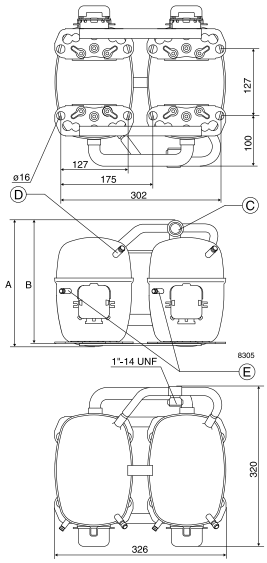

Accessories for SC Twin

SC10 / 10, SC12 / 12 and SC15 / 15:

Service valve for 12 mm tube	*118-7350*
Solder connector for 12 mm tube	*104B0584*

SC18 / 18 and SC21 / 21:

Service valve for 16 mm tube	*118-7351*
Solder connector for 16 mm tube	*118-7405*

SC10 / 10, SC12 / 12, SC15 / 15, SC18 / 18 and SC21 / 21:

Seal ring for service valve and solder connector	*118-3638*
Time-delay relay	*117N0001*
Check valve (to be used with time-delay relay)	*020-1014*

HST / CSR - SC Twin

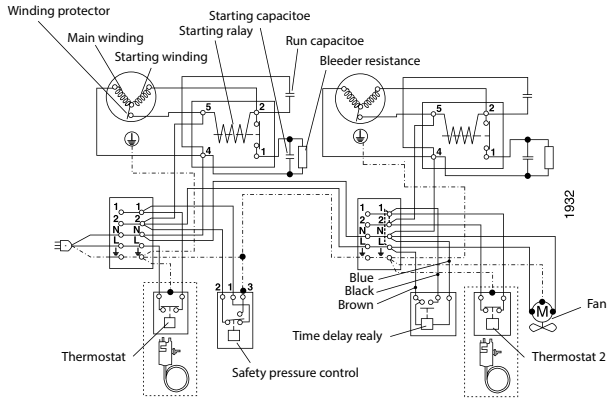

HST / CSIR - SC Twin

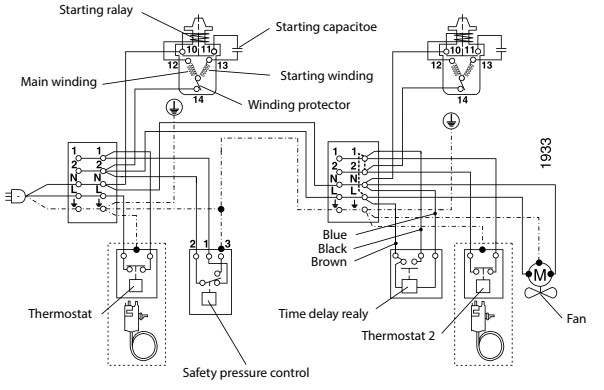

Applications
LBP: Low Back Pressure
MBP: Medium Back Pressure
HBP: High Back Pressure

Motor types
RSIR: Resistant Start Induction Run
RSCR: Resistant Start Capacitor Run
CSIR: Capacitor Start Induction Run
CSR: Capacitor Start Run

Starting devices
LST: Low Starting Torque
LST is used with capillary tube control and pressure equalizing. (Pressure equalizing may exceed 10 minutes)
The PTC starting device requires 5 minutes cooling before each start
HST: High Starting Torque
HST consisting of relay and starting capacitor, is used for expansion valve control or for capillary tube control without pressure equalizing

Test conditions EN 12900 (CECOMAF)
PL / tL / tLS / NL / FR / SC / BD

Application	*R134a*	*R404A / R507*
	R600a	*R290*
Condensing temperature	*55 °C*	*45 °C*
Ambient temperature	*32 °C*	*32 °C*
Suction gas temperature	*32 °C*	*32 °C*

No subcooling
PL / TL / TLS / NL / FR / SC: 220 V 50 Hz
BD: 12 V, 24 V or 56 V DC

Test conditions ASHRAE
BD

Application	*R600a*	*R404A / R507*
	R134a	*R290*
Condensing temperature	*54.4 °C*	*45 °C*
Ambient temperature	*32 °C*	*32 °C*
Suction gas temperature	*32 °C*	*32 °C*
Liquid temperature	*32 °C*	*32 °C*

12 V, 24 V or 56 V DC

Test conditions EN 12900
GS

Application	*LBP*	*MBP*	*HBP*
Condensing temperature	*40 °C*	*45 °C*	*50 °C*
Ambient temperature	*32 °C*	*32 °C*	*32 °C*
Suction gas temperature	*20 °C*	*20 °C*	*20 °C*
Liquid temperature	*no subcooling*		

220 V, 50 Hz

Electrical equipment GS compressors
**) Gasket / cover / clamp are parts of compressor*

Compressor cooling
S) Static cooling normally sufficient
O) Oil cooling
F_1) Fan cooling 1.5 m/s
(compressor compartment temperature equal to ambient temperature)
F_2) Fan cooling 3.0 m/s necessary
***) run capacitor 4 µF compulsory*

Voltages and frequencies
1) 198 – 254 V, 50 Hz
2) 187 – 254 V, 50 Hz, LBP
3) 198 – 254 V, 60 Hz, LBP
4) 198 – 254 V, 60 Hz, HBP
5) 198 – 254 V, 60 Hz, MBP
6) 207 – 254 V, 60 Hz, HBP
7) 187 – 254 V, 50 Hz, MBP
8) 187 – 254 V, 60 Hz, MBP
9) 187 – 254 V, 60 Hz, LBP

1 Watt = 0.86 kcal/h
1 Watt = 3.41 Btu/h

Quick Selection Notes:

Light commercial compressors - B / U / L / P / X / S series

Specially optimised for use in household and light commercial applications, hermetic reciprocating compressors provide high cooling capacity in an energy saving design.

Compressor models are available for R134a, R290, R404A / R507A, R449A, R450A, R513A and R600a, for cooling needs from 20 W to 6 kW.





B range U range L range



P range X range S range

Facts

Applications:
- Laboratory and medical equipment
- Compressed air dryers
- Glass door merchandisers
- Display cabinets
- Fridges and freezers
- Ice cream cabinets
- Vending machines
- Drink dispensers
- Ice making machines
- Bottle coolers
- Heat pumps
- Milk cooling tanks
- Wine cellars

- Easy installation
- Low noise and high energy efficiency
- Robust in tough operating conditions
- Immune to unstable power supply
- Environmentally friendly solutions

Technical data and ordering

Light Commercial Refrigeration Compressors

R134a*) LBP - 50 Hz

Model	Displacement	Power	Application	CPR Cooling	Voltage Frequency	Motor	Starting	Expansion	Refrigeration capacity COP in [w/w] Evaporating temperature [°C] CECOMAF [W] -35	-30	-25 [W]	-25 [COP]	-10	ASHRAE -23.3 [W]	ASHRAE -23.3 [COP]	Weight	Design	Code no. [3]
	[cm³]	[hp]														[Kg]		
L22HL [2]	2.20	1/20	LBP	S	220 – 240 V 50 Hz	RSIR	P	C	16	24	34	0.63	75	46	0.82	3.7	SLb	123B8101
L30HL [2]	3.10	1/12	LBP	S	220 – 240 V 50/60 Hz	RSIR	P	C	23	35	49	0.69	108	67	0.9	4.2	SLc	123B8102
B38H [2]	3.80	1/12	LBP	S	220 – 240 V 50 Hz	RSIR	P	C	30	45	63	0.73	139	86	0.95	4.6	Bb	123B8103
B43H [2]	4.30	1/10	LBP	S	220 – 240 V 50/60 Hz	RSIR	P	C	34	50	71	0.77	156	96	1	5.4	Bc	123B8104
B43HB [2]	4.30	1/10	LBP	S	220 – 240 V 50 Hz	RSCR	P	C	35	51	72	0.92	158	97	1.2	5	Bc	123B8105
B48H [2]	4.80	1/8	LBP	S	220 – 240 V 50 Hz	RSIR	P	C	38	56	79	0.81	174	108	1.05	5	Bc	123B8106
GL45AAa	4.56	1/8	LBP	S	220 – 240 V 50 Hz	RSIR	P	C	37	57	81	0.81	184	111	1.06	7.91	Lb	123B1111
GL45AAb	4.56	1/8	LBP	S	220 – 240 V 50 Hz	CSIR	R	C-V	37	57	81	0.81	184	111	1.06	8.06	Lb	123B1112
GL45ANa	4.56	1/8	LBP	S	200 – 240/220 – 230 V 50/60 Hz	RSIR	P	C	36	56	80	0.78	184	110	1.03	8.42	Lb	123B1113
GLY45AAa [1]	4.56	1/8	LBP	S	220 – 240 V 50 Hz	RSIR	P	C	46	65	89	1.01	192	120	1.3	9.08	Lb	123B1109
GLY45AAb [1]	4.56	1/8	LBP	S	220 – 240 V 50 Hz	RSCR	P	C	47	66	90	1.05	193	122	1.36	9.19	Lb	123B1110
GL60AAa	5.98	1/6	LBP	S	220 – 240 V 50 Hz	RSIR	P	C	50	75	107	0.85	239	146	1.1	8.45	Lb	123B1116
GL60AAb	5.98	1/6	LBP	S	220 – 240 V 50 Hz	CSIR	R	C-V	50	75	107	0.85	239	146	1.1	8.6	Lb	123B1117
GL60ANa	5.98	1/6	LBP	S	200 – 240/220 – 230 V 50/60 Hz	RSIR	P	C	57	82	114	0.83	244	154	1.09	9.11	Lc	123B1118
GL60ANb	5.98	1/6	LBP	F	200 – 240/220 – 230 V 50/60 Hz	CSIR	R	C-V	82	94	116	0.84	244	154	1.09	9.26	Lc	123B1119
GL60ANc	5.98	1/6	LBP	S	200 – 240/220 – 230 V 50/60 Hz	CSIR	R	C-V	82	94	116	0.84	244	154	1.09	9.26	Lc	123B1120
GLY60AAa [1]	5.98	1/6	LBP	S	220 – 240 V 50 Hz	RSIR	P	C	58	85	119	1.04	255	161	1.34	8.49	Lb	123B1114
GLY60AAb [1]	5.98	1/6	LBP	S	220 – 240 V 50 Hz	RSCR	P	C	59	86	120	1.1	255	162	1.42	8.6	Lb	123B1115
GLY70AAa [1]	6.65	1/5	LBP	S	220 – 240 V 50 Hz	RSIR	P	C	66	96	133	1.03	289	181	1.33	9.09	Lc	123B1170
GLY70AAb [1]	6.65	1/5	LBP	S	220 – 240 V 50 Hz	RSCR	P	C	66	96	133	1.08	289	181	1.4	9.2	Lc	123B1171
GL80AAa	8.10	1/5	LBP	S	220 – 240 V 50 Hz	RSIR	P	C	68	102	144	0.89	326	197	1.15	8.98	Lc	123B1123
GL80AAb	8.10	1/5	LBP	S	220 – 240 V 50 Hz	CSIR	R	C-V	68	102	144	0.89	326	197	1.15	9.13	Lc	123B1124
GL80ANa	8.10	1/5	LBP	S	200 – 240/220 – 230 V 50/60 Hz	RSIR	P	C	76	107	148	0.83	331	201	1.09	9.75	Lc	123B1125
GL80ANb	8.10	1/5	LBP	F	200 – 240/220 – 230 V 50/60 Hz	CSIR	R	C-V	76	107	148	0.83	331	201	1.09	9.9	Lc	123B1126
GL80ANc	8.10	1/5	LBP	S	200 – 240/220 – 230 V 50/60 Hz	CSIR	R	C-V	76	107	148	0.83	331	201	1.09	9.9	Lc	123B1127
GLY80AAa [1]	8.10	1/5	LBP	S	220 – 240 V 50 Hz	RSIR	P	C	92	123	164	1.07	349	221	1.37	9.51	Lc	123B1121
GLY80AAb [1]	8.10	1/5	LBP	S	220 – 240 V 50 Hz	RSCR	P	C	93	124	165	1.13	351	222	1.45	9.62	Lc	123B1122
GL90AAa	9.09	1/4	LBP	S	220 – 240 V 50 Hz	RSIR	P	C	82	120	165	0.9	351	223	1.15	9.39	Lc	123B1130
GL90AAb	9.09	1/4	LBP	S	220 – 240 V 50 Hz	CSIR	R	C-V	82	120	165	0.9	351	223	1.15	9.54	Lc	123B1131
GL90ANa	9.09	1/4	LBP	S	200 – 240/220 – 230 V 50/60 Hz	RSIR	P	C	85	118	163	0.84	366	221	1.1	10.33	Ld	123B1132
GL90ANb	9.09	1/4	LBP	F	200 – 240/220 – 230 V 50/60 Hz	CSIR	R	C-V	85	118	163	0.84	366	221	1.1	10.48	Ld	123B1133
GL90ANc	9.09	1/4	LBP	S	200 – 240/220 – 230 V 50/60 Hz	CSIR	R	C-V	85	118	163	0.84	366	221	1.1	10.48	Ld	123B1134
GLY90AAa [1]	9.09	1/4	LBP	S	220 – 240 V 50 Hz	RSIR	P	C	104	140	186	1.07	387	250	1.37	9.43	Lc	123B1128
GLY90AAb [1]	9.09	1/4	LBP	S	220 – 240 V 50 Hz	RSCR	P	C	104	140	187	1.13	388	251	1.45	9.54	Lc	123B1129
GL99AAa	9.95	1/4	LBP	S	220 – 240 V 50 Hz	RSIR	P	C	83	125	175	0.92	377	237	1.19	9.64	Ld	123B1165
GL99AAb	9.95	1/4	LBP	S	220 – 240 V 50 Hz	CSIR	R	C-V	83	125	175	0.92	377	237	1.19	9.79	Ld	123B1166
GLM12LAa [1] [2]	10.7	3/8	LBP	F	220 – 240 V 50 Hz	CSIR	R	C-V	98	143	200	0.92	445	272	1.19	10.06	Ld	123B1168
GLM12LAb [1] [2]	10.7	3/8	LBP	F	220 – 240 V 50 Hz	CSR	R	C-V	98	145	204	0.99	451	278	1.29	10.16	Ld	123B1169
GPY12AAa [1]	12.10	3/8	LBP	S	220 – 240 V 50 Hz	RSIR	P	C	128	178	241	0.96	500	324	1.23	12.07	Pd	123B1135
GPY12AAb [1]	12.10	3/8	LBP	S	220 – 240 V 50 Hz	RSCR	P	C	128	178	241	1.04	500	324	1.33	12.18	Pd	123B1136
GPY12LAa [1]	12.10	3/8	LBP	F	220 – 240 V 50 Hz	CSIR	R	C-V	113	162	225	1	509	307	1.3	12.78	Pd	123B1137
GPY12LAb [1]	12.10	3/8	LBP	F	220 – 240 V 50 Hz	CSR	R	C-V	113	162	225	1.06	509	307	1.38	12.89	Pd	123B1138
GP14CG	14.17	3/8	LBP	F	200 – 240/220 – 230 V 50/60 Hz	RSIR	R	C	99	158	228	0.83	509	313	1.08	10.62	Pc	123B1142
GP14FB	14.17	3/8	LBP	F	220 – 240 V 50 Hz	CSIR	R	C-V	99	157	228	0.9	509	311	1.16	10.36	Pc	123B1143
GPY14NGa [1] [2]	14.32	3/8	LMBP	F	200 – 240/220 – 230 V 50/60 Hz	CSIR	R	C-V	147	205	283	0.92	636	374	1.14	12.59	Pd	123B1313
GPY14NGb [1] [2]	14.32	3/8	LMBP	F	200 – 240/220 – 230 V 50/60 Hz	CSR	R	C-V	148	206	284	0.97	636	387	1.27	12.69	Pd	123B1314
GP16FB	16.15	3/8	LBP	F	220 – 240 V 50 Hz	CSIR	R	C-V	109	182	266	0.89	585	365	1.14	11.79	Pd	123B1148
GPY16LAa [1]	16.15	3/8	LBP	F	220 – 240 V 50 Hz	CSIR	R	C-V	151	220	306	1.02	677	417	1.32	11.73	Pd	123B1145
GPY16LAb [1]	16.15	3/8	LBP	F	220 – 240 V 50 Hz	CSR	R	C-V	151	220	306	1.09	677	417	1.42	11.83	Pd	123B1146
GX21FB	20.72	2/3	LBP	F	220 – 240 V 50 Hz	CSIR	R	C-V	151	243	351	0.93	778	480	1.2	15.75	Xc	123B1167

*) Or HFO1234yf
[1]) Green Cooling Models
[2]) New Models
[3]) Ordering code for single compressors. For pallet packed compressors, please use 123F instead of 123B

Conditions	CECOMAF		ASHRAE	
	LBP	HMBP/HBP	LBP	HMBP/HBP
Evaporating temperature [°C]	-25	5	-23.3	7.2
Condensing temperature [°C]	55	55	55	55
Liquid temperature [°C]	55	55	32	46
Suction temperature [°C]	32	32	32	35
Ambient temperature [°C]	32	32	32	35

For more information and performance with other refrigerants, please refer to Coolselector ® 2 at coolselector.danfoss.com or contact Danfoss.

Technical data and ordering

Light Commercial Refrigeration Compressors

R134a*) HMBP | HBP - 50 Hz

Model	Displacement	Power	Application	CPR Cooling	Voltage Frequency	Motor	Starting	Expansion	Refrigeration capacity COP in [w/w] Evaporating temperature [°C] CECOMAF [W] -25	-15	5 [W]	5 [COP]	10	ASHRAE 7.2 [W]	ASHRAE 7.2 [COP]	Weight	Design	Code no. [3]
	[cm³]	[hp]														[Kg]		
B22G	2.2	1/14	HBP	S-F	220-240 V 50 Hz	RSIR	P	C	–	60	152	1.64	192	185	1.94	4.6	Bb	123B8115
B25G	2.6	1/14	HBP	S-F	220-240 V 50/60 Hz	RSIR	P	C	–	76	202	1.53	243	241	2.08	4.65	Bb	123B8117
B25GL [2]	2.6	1/14	HBP	S-F	220-240 V 50 Hz	CSIR	R	C-V	–	70	190	1.84	228	227	2.16	5.5	Be	123B8118
B30G	3.1	1/10	HBP	S-F	220-240 V 50 Hz	RSIR	P	C	–	83	229	1.77	270	271	2.06	4.8	Bc	123B8121
B30G	3.1	1/10	HBP	S-F	220-240 V 50 Hz	CSIR	R	C-V	–	83	229	1.77	270	271	2.06	4.8	Bc	123B8120
B35GL [2]	3.5	1/10	HBP	S-F	220-240 V 50 Hz	CSIR	R	C-V	–	100	269	1.87	323	322	2.34	5.5	Be	123B8123
B38G	3.8	1/8	HBP	S-F	220-240 V 50 Hz	CSIR	R	C-V	–	129	291	1.91	347	345	2.23	5	Bc	123B8125
B38G	3.8	1/8	HBP	S-F	220-240 V 50/60 Hz	CSIR	R	C-V	–	129	288	1.87	359	348	2.22	5.4	Bd	123B8125
B43GL	4.3	1/6	HBP	S-F	220-240 V 50 Hz	RSIR	P	C	–	122	348	1.75	422	417	2.06	5.3	Be	123B8127
GL45MG	4.56	1/6	HBP	S	230 V 50/60 Hz	CSIR	R	C-V	–	175	340	1.67	415	407	1.95	9.37	Lb	123B1704
GL45PB	4.56	1/6	HMBP	F	220-240 V 50 Hz	RSIR	R	C	76	134	341	1.61	412	407	1.86	7.76	Lb	123B1515
GL45TB	4.56	1/6	HMBP	F	220-240 V 50 Hz	CSIR	R	C-V	76	134	341	1.61	412	407	1.86	8.04	Lb	123B1516
GL45TG	4.56	1/6	HMBP	F	200-240/220-230 V 50/60 Hz	CSIR	R	C-V	76	134	341	1.67	412	407	1.95	9.15	Lb	123B1517
GLY45RAa [1]	4.56	1/6	HMBP	F	220-240 V 50 Hz	CSIR	R	C-V	71	139	373	1.93	452	446	2.25	8.75	Lb	123B1513
GLY45RAb [1]	4.56	1/6	HMBP	F	220-240 V 50 Hz	CSR	R	C-V	71	139	373	2.1	452	446	2.45	8.85	Lb	123B1514
GL60MG	5.98	1/5	HBP	S	230 V 50/60 Hz	CSIR	R	C-V	–	206	427	1.7	530	515	1.99	9	Lc	123B1705
GL60PB	5.68	1/5	HMBP	F	220-240 V 50 Hz	RSIR	R	C	95	170	436	1.81	527	521	2.09	8.34	Lb	123B1520
GL60TB	5.68	1/5	HMBP	F	220-240 V 50 Hz	CSIR	R	C-V	95	170	436	1.81	527	521	2.09	8.65	Lb	123B1521
GL60TG	5.68	1/5	HMBP	F	200-240/220-230 V 50/60 Hz	CSIR	R	C-V	95	170	436	1.81	527	521	2.09	9.07	Lc	123B1522
GLY60RAa [1]	5.98	1/5	HMBP	F	220-240 V 50 Hz	CSIR	R	C-V	106	190	485	2.04	585	579	2.36	10.47	Lc	123B1518
GLY60RAb [1]	5.98	1/5	HMBP	F	220-240 V 50 Hz	CSR	R	C-V	106	190	485	2.24	585	579	2.6	10.58	Lc	123B1519
GUY60RAa [1] [2]	6	1/5	HMBP	F	220-240 V 50 Hz	CSIR	R	C-V	126	221	540	2.32	646	641	2.7	9.04	Ub	123B1608
GUY60RAb [1] [2]	6	1/5	HMBP	F	220-240 V 50 Hz	CSR	R	C-V	126	222	545	2.53	653	648	2.95	9.16	Ub	123B1609
GL80MG	7.57	1/5	HBP	S	230 V 50/60 Hz	CSIR	R	C-V	–	286	576	1.78	714	694	2.1	9.53	Lc	123B1706
GL80PB	7.57	1/5	HMBP	F	220-240 V 50 Hz	RSIR	R	C	111	212	553	1.81	667	660	2.1	8.88	Lc	123B1526
GL80TB	7.57	1/5	HMBP	F	220-240 V 50 Hz	CSIR	R	C-V	111	212	553	1.81	667	660	2.1	9.19	Lc	123B1527
GL80TG	7.57	1/5	HMBP	F	200-240/220-230 V 50/60 Hz	CSIR	R	C-V	111	212	553	1.81	667	660	2.1	9.53	Lc	123B1528
GLY80RAa	8.1	1/5	HMBP	F	220-240 V 50 Hz	CSIR	R	C-V	159	275	680	2.16	818	810	2.51	10.1	Lc	123B1524
GLY80RAb [1]	8.1	1/5	HMBP	F	220-240 V 50 Hz	CSR	R	C-V	159	275	680	2.33	818	810	2.71	10.21	Lc	123B1525
GUY80RAa [1] [2]	8.1	1/4	HMBP	F	220-240 V 50 Hz	CSIR	R	C-V	174	302	720	2.22	859	854	2.56	9.7	Ub	123B1610
GUY80RAb [1] [2]	8.1	1/4	HMBP	F	220-240 V 50 Hz	CSR	R	C-V	177	304	727	2.38	868	862	2.75	9.8	Ub	123B1611
GL90MG	8.85	1/4	HBP	S	230 V 50/60 Hz	CSIR	R	C-V	–	328	661	1.79	810	793	2.1	10.61	Ld	123B1707
GL90PB	8.85	1/4	HMBP	F	220-240 V 50 Hz	RSIR	R	C	143	259	660	1.9	796	787	2.2	9.12	Ld	123B1532
GL90TB	8.85	1/4	HMBP	F	220-240 V 50 Hz	CSIR	R	C-V	143	259	660	1.9	796	787	2.2	9.66	Lc	123B1533
GL90TG	8.85	1/4	HMBP	F	200-240/220-230 V 50/60 Hz	CSIR	R	C-V	143	259	660	1.8	796	787	2.08	9.7	Ld	123B1534
GLY90RAa [1]	9.09	1/4	HMBP	F	220-240 V 50 Hz	CSIR	R	C-V	169	298	748	2.05	901	891	2.37	10.74	Lc	123B1530
GLY90RAb [1]	9.09	1/4	HMBP	F	220-240 V 50 Hz	CSR	R	C-V	169	298	748	2.25	901	891	2.61	10.84	Lc	123B1531
GUY90RAa [1] [2]	8.8	1/4	HMBP	F	220-240 V 50 Hz	CSIR	R	C-V	182	317	775	2.21	929	921	2.56	9.7	Ub	123B1612
GUY90RAb [1] [2]	8.8	1/4	HMBP	F	220-240 V 50 Hz	CSR	R	C-V	180	319	783	2.35	938	931	2.73	9.8	Ub	123B1613
GL11TB	9.95	1/3	HMBP	F	220-240 V 50 Hz	CSIR	R	C-V	190	330	817	1.92	981	972	2.23	9.97	Ld	123B1591
GLY12RAa [1] [2]	10.7	3/8	HBP	F	220-240 V 50 Hz	CSIR	R	C-V	–	349	867	1.97	1064	1042	2.3	10.23	Ld	123B1708
GLY12RAb [1] [2]	10.7	3/8	HBP	F	220-240 V 50 Hz	CSR	R	C-V	–	349	867	2.2	1064	1042	2.57	10.33	Ld	123B1709
GLY12RGa [1] [2]	10.7	3/8	HBP	F	200-240/220-230 V 50/60 Hz	CSIR	R	C-V	–	349	867	1.87	1064	1042	2.19	10.43	Ld	123B1710
GLY12RGb [1] [2]	10.7	3/8	HBP	F	200-240/220-230 V 50/60 Hz	CSR	R	C-V	–	349	867	1.98	1064	1042	2.32	10.53	Ld	123B1711
GPY12RAa [1]	12.1	3/8	HMBP	F	220-240 V 50 Hz	CSIR	R	C-V	228	401	992	2.03	1191	1181	2.35	13.31	Pd	123B1536
GPY12RAb [1]	12.1	3/8	HMBP	F	220-240 V 50 Hz	CSR	R	C-V	228	401	992	2.23	1191	1181	2.58	13.42	Pd	123B1537
GP14TB	14.17	3/8	HBP	F	220-240 V 50 Hz	CSIR	R	C-V	191	373	998	1.76	1208	1192	2.03	11.29	Pd	123B1712
GP14TG	14.17	3/8	HMBP	F	200-240/220-230 V 50/60 Hz	CSIR	R	C-V	190	373	998	1.76	1208	1192	2.03	11.98	Pd	123B1539
GPY14RAa [1]	14.32	3/8	HMBP	F	220-240 V 50 Hz	CSIR	R	C-V	296	492	1161	1.97	1386	1377	2.27	12.2	Pd	123B1540
GPY14RAb [1]	14.32	3/8	HMBP	F	220-240 V 50 Hz	CSR	R	C-V	296	492	1161	2.16	1386	1377	2.5	12.3	Pd	123B1541
GP16TB	16.15	3/8	HBP	F	220-240 V 50 Hz	CSIR	R	C-V	–	476	1204	1.8	1451	1435	2.09	11.93	Pd	123B1713
GP16TG	16.15	3/8	HBP	F	200-220/230 V 50/60 Hz	CSIR	R	C-V	–	476	1204	1.81	1451	1435	2.09	11.93	Pd	123B1714
GPM16RA [1]	16.15	1/2	HBP	F	220-240 V 50 Hz	CSIR	R	C-V	–	543	1317	1.79	1574	1564	2.09	12.29	Pd	123B1719
GPY16RAa [1]	16.15	1/2	HMBP	F	220-240 V 50 Hz	CSIR	R	C-V	307	542	1317	2.02	1574	1564	2.34	12.84	Pd	123B1542
GPY16RAb [1]	16.15	1/2	HMBP	F	220-240 V 50 Hz	CSR	R	C-V	307	542	1317	2.15	1574	1564	2.5	12.94	Pd	123B1543
GPT16RG [1]	16.15	1/2	HBP	F	200-240/220-230 V 50/60 Hz	CSR	R	C-V	–	552	1323	2.13	1600	1579	2.5	12.16	Pd	123B1715

For more information and performance with other refrigerants, please refer to Coolselector ® 2 at coolselector.danfoss.com or contact Danfoss.

Technical data and ordering

Light Commercial Refrigeration Compressors (count.)

R134a*) HMBP | HBP - 50 Hz

Model	Displacement	Power	Application	CPR Cooling	Voltage Frequency	Motor	Starting	Expansion	Refrigeration capacity COP in [w/w] Evaporating temperature [°C] CECOMAF [W] -25	-15	5 [W]	5 [COP]	10	ASHRAE 7.2 [W]	ASHRAE 7.2 [COP]	Weight	Design	Code no. [3]
	[cm³]	[hp]														[Kg]		
GPT18RA [1] [2]	18	1/2	HBP	F	220-240V 50Hz	CSR	R	C-V	–	618	1482	2.06	1783	1765	2.39	12.68	Pd	123B1716
GPT18RG [1] [2]	18	1/2	HBP	F	200-220/230V 50/60Hz	CSR	R	C-V	–	596	1429	2	1719	1701	2.32	12.7	Pd	123B1720
GX18TB	18.4	1/2	HMBP	F	220-240V 50Hz	CSIR	R	C-V	286	539	1389	1.9	1673	1655	2.2	15.44	Xc	123B1544
GX18TG	18.4	1/2	HMBP	F	200-240/220-230V 50/60Hz	CSIR	R	C-V	286	539	1389	1.9	1673	1655	2.2	16.08	Xc	123B1545
GX21TB	20.72	5/8	HMBP	F	220-240V 50Hz	CSIR	R	C-V	323	603	1549	1.88	1866	1846	2.18	16.13	Xd	123B1546
GX23TB	23.2	5/8	HMBP	F	220-240V 50Hz	CSIR	R	C-V	368	677	1729	1.88	2082	2060	2.18	16.33	Xd	123B1547
GX23TG	23.2	5/8	HMBP	F	200-240/220-230V 50/60Hz	CSIR	R	C-V	368	677	1729	1.79	2082	2060	2.08	16.34	Xd	123B1548
GS26T3	25.93	3/4	HMBP	F	400/440V 50/60Hz	3PHASE	P	C-V	265	703	2070	2.19	2514	2477	2.55	22.7	Sc	123B1551
GS26TB	25.93	3/4	HMBP	F	220-240V 50Hz	CSIR	R	C-V	265	703	2070	2.08	2514	2477	2.42	22.7	Sc	123B1549
GS26TG	25.93	3/4	HMBP	F	200-240/220-230V 50/60Hz	CSIR	R	C-V	265	703	2070	2.14	2514	2477	2.49	22.7	Sc	123B1550
GS30TB	29.95	7/8	HMBP	F	220-240V 50Hz	CSR	R	C-V	317	785	2451	2.31	3019	2951	2.7	22.7	Sd	123B1552
GS30TG	29.95	7/8	HMBP	F	200-240/220-230V 50/60Hz	CSR	R	C-V	317	785	2451	2.31	3019	2951	2.7	23	Sd	123B1553
GS34TB	34.42	1	HMBP	F	220-240V 50Hz	CSR	R	C-V	476	1068	2850	2.26	3420	3391	2.62	21.35	Sd	123B1554
GS34TG	34.42	1	HMBP	F	200-240/220-230V 50/60Hz	CSR	R	C-V	467	992	2829	2.24	3453	3392	2.64	22.27	Sd	123B1614
GL60TC	5.68	1/5	HMBP	F	100V 50/60Hz	CSIR	R	C-V	95	170	436	1.72	527	521	2.01	10.38	Lc	123B1523
GUY72RCa [1] [2]	7.2	1/4	HMBP	F	100V 50/60Hz	CSIR	R	C-V	153	262	646	2.24	777	770	2.6	9.52	Uc	123B1617
GUY72RCb [1] [2]	7.2	1/4	HMBP	F	100V 50/60Hz	CSR	R	C-V	153	264	650	2.39	782	774	2.78	9.59	Uc	123B1618
GL80TC	7.57	1/5	HMBP	F	100V 50/60Hz	CSIR	R	C-V	111	212	553	1.85	667	660	2.21	10.98	Lc	123B1529
GL90TC	8.85	1/4	HMBP	F	100V 50/60Hz	CSIR	R	C-V	143	259	660	1.75	796	787	2.08	11.48	Ld	123B1535

**) Or HFO1234yf*
[1]) Green Cooling Models
[2]) New Models
[3]) Ordering code for single compressors. For pallet packed compressors, please use 123F instead of 123B

Conditions	CECOMAF		ASHRAE	
	LBP	HMBP/HBP	LBP	HMBP/HBP
Evaporating temperature [°C]	-25	5	-23.3	7.2
Condensing temperature [°C]	55	55	55	55
Liquid temperature [°C]	55	55	32	46
Suction temperature [°C]	32	32	32	35
Ambient temperature [°C]	32	32	32	35

For more information and performance with other refrigerants, please refer to Coolselector ® 2 at coolselector.danfoss.com or contact Danfoss.

Technical data and ordering

Light Commercial Refrigeration Compressors

R404A - R507 LBP - 50 Hz

Model	Displacement	Power	Application	CPR Cooling	Voltage Frequency	Motor	Starting	Expansion	Refrigeration capacity COP in [w/w] Evaporating temperature [°C] CECOMAF [W] -40	-30	-25 [W]	-25 [COP]	-10	ASHRAE -23.3 [W]	ASHRAE -23.3 [COP]	Weight	Design	Code no. [3]
	[cm³]	[hp]														[Kg]		
ML45FB	4.56	1/6	LBP	F	220 – 240 V 50 Hz	CSIR	R	C-V	52	100	133	0.66	274	197	0.94	8.57	Lb	123B2103
ML45FG	4.56	1/6	LBP	F	200 – 240/220 – 230 V 50/60 Hz	CSIR	R	C-V	52	100	133	0.68	274	197	0.96	10.87	Lc	123B2104
MLY45LAa [1]	4.56	1/6	LBP	F	220 – 240 V 50 Hz	CSIR	R	C-V	61	118	157	0.92	317	231	1.3	9.55	Lc	123B2105
MLY45LAb [1]	4.56	1/6	LBP	F	220 – 240 V 50 Hz	CSR	R	C-V	61	118	157	0.98	317	231	1.38	9.65	Lc	123B2106
ML60FB	5.98	1/5	LBP	F	220 – 240 V 50 Hz	CSIR	R	C-V	69	139	186	0.85	371	273	1.2	8.88	Lc	123B2107
ML60FG	5.98	1/5	LBP	F	200 – 240/220 – 230 V 50/60 Hz	CSIR	R	C-V	69	134	177	0.71	351	260	1.01	10.87	Lc	123B2108
MLY60LAa [1]	5.98	1/5	LBP	F	220 – 240 V 50 Hz	CSIR	R	C-V	86	168	221	0.9	428	324	1.26	10.02	Lc	123B2109
MLY60LAb [1]	5.98	1/5	LBP	F	220 – 240 V 50 Hz	CSR	R	C-V	86	168	221	0.96	428	324	1.36	10.12	Lc	123B2110
ML80FB	8.1	1/4	LBP	F	220 – 240 V 50 Hz	CSIR	R	C-V	99	189	251	0.77	505	369	1.09	9.47	Lc	123B2111
ML80FG	8.1	1/4	LBP	F	200 – 240/220 – 230 V 50/60 Hz	CSIR	R	C-V	99	190	252	0.77	505	369	1.08	12.2	Ld	123B2112
MLY80LAa [1]	8.1	1/4	LBP	F	220 – 240 V 50 Hz	CSIR	R	C-V	104	207	275	0.91	548	405	1.28	11	Ld	123B2113
MLY80LAb [1]	8.1	1/4	LBP	F	220 – 240 V 50 Hz	CSR	R	C-V	104	207	275	0.98	548	405	1.38	11.1	Ld	123B2114
ML90FB	8.85	1/3	LBP	F	220 – 240 V 50 Hz	CSIR	R	C-V	104	207	275	0.83	548	405	1.16	9.74	Ld	123B2115
ML90FG	8.85	1/3	LBP	F	200 – 220/230 V 50/60 Hz	CSIR	R	C-V	104	207	275	0.8	548	405	1.13	10.78	Ld	123B2116
MLY90LAa [1]	9.09	1/3	LBP	F	220 – 240 V 50 Hz	CSIR	R	C-V	121	236	311	0.91	612	457	1.28	10.35	Ld	123B2117
MLY90LAb [1]	9.09	1/3	LBP	F	220 – 240 V 50 Hz	CSR	R	C-V	121	236	311	0.98	612	457	1.38	10.45	Ld	123B2118
MLY12LAa [1] [2]	10.7	3/8	LBP	F	220 – 240 V 50 Hz	CSIR	R	C-V	156	294	387	0.94	762	567	1.33	10.85	Ld	123B2119
MLY12LAb [1] [2]	10.7	3/8	LBP	F	220 – 240 V 50 Hz	CSR	R	C-V	156	294	387	1	762	567	1.41	10.95	Ld	123B2120
MLY12LGa [1] [2]	10.7	3/8	LBP	F	200 – 220/230 V 50/60 Hz	CSIR	R	C-V	165	297	387	0.83	756	567	1.17	11.06	Ld	123B2121
MLY12LGb [1] [2]	10.7	3/8	LBP	F	200 – 220/230 V 50/60 Hz	CSR	R	C-V	165	302	394	0.9	768	578	1.28	11.16	Ld	123B2122
MPT12LA [1]	12.1	3/8	LBP	F	220 – 240 V 50 Hz	CSR	R	C-V	194	347	451	1.01	873	660	1.42	12.23	Pd	123B2123
MP14FB	14.17	1/2	LBP	F	220 – 240 V 50 Hz	CSIR	R	C-V	121	304	421	0.79	877	625	1.12	12.07	Pd	123B2124
MP14FG	14.17	1/2	LBP	F	200 – 220/230 V 50/60 Hz	CSIR	R	C-V	121	303	420	0.79	877	624	1.12	12.03	Pd	123B2125
MPT14LA [1]	14.32	1/2	LBP	F	220 – 240 V 50 Hz	CSR	R	C-V	242	419	534	0.99	984	775	1.38	12.25	Pd	123B2126
MPT16LA [1]	16.15	1/2	LBP	F	220 – 240 V 50 Hz	CSR	R	C-V	245	462	605	1	1168	885	1.4	12.37	Pd	123B2127
MPT18LA [1]	18	1/2	LBP	F	220 – 240 V 50 Hz	CSR	R	C-V	269	504	657	0.96	1260	961	1.35	12.81	Pd	123B2128
MX18FBa	18.4	5/8	LBP	F	220 – 240 V 50 Hz	CSR	R	C-V	173	396	546	0.96	1147	810	1.36	16.29	Xd	123B2129
MX21FBa	20.72	3/4	LBP	F	220 – 240 V 50 Hz	CSR	R	C-V	212	463	630	0.96	1296	932	1.35	16.66	Xd	123B2130
MX21FGa [2]	20.72	3/4	LBP	F	200 – 240/220 – 230 V 50/60 Hz	CSR	R	C-V	212	463	630	0.96	1296	932	1.35	17.32	Xd	123B2186
MX23FBa	23.2	7/8	LBP	F	220 – 240 V 50 Hz	CSR	R	C-V	259	534	718	0.96	1455	1059	1.35	16.61	Xd	123B2132
MX23FGa [2]	23.2	7/8	LBP	F	200 – 240/220 – 230 V 50/60 Hz	CSR	R	C-V	259	534	718	0.95	1455	1059	1.34	17.5	Xd	123B2183
MS26FB	25.93	3/4	LBP	F	220 – 240 V 50 Hz	CSR	R	C-V	182	571	814	0.97	1737	1215	1.37	21.63	Sd	123B2134
MS26FG	25.93	3/4	LBP	F	200 – 220/230 V 50/60 Hz	CSR	R	C-V	173	548	777	0.95	1626	1157	1.35	22.6	Sd	123B2135
MS30FB	29.95	7/8	LBP	F	220 – 240 V 50 Hz	CSR	R	C-V	207	656	932	0.95	1969	1390	1.35	22.7	Sd	123B2137
MS34FB	34.42	1	LBP	F	220 – 240 V 50 Hz	CSR	R	C-V	242	759	1083	0.95	2311	1617	1.35	22.13	Sd	123B2139
MS26F3	25.93	3/4	LBP	F	400/440 V 50/60 Hz	3PHASE	P	C-V	173	548	777	0.95	1626	1157	1.35	20.8	Sd	123B2136
MS30F3	29.95	7/8	LBP	F	400/440 V 50/60 Hz	3PHASE	P	C-V	207	655	931	0.93	1968	1389	1.32	24	Sd	123B2138
MS34F3	34.42	1	LBP	F	400/440 V 50/60 Hz	3PHASE	P	C-V	242	762	1085	0.99	2311	1620	1.4	22.9	Sd	123B2140

[1]) Green Cooling Models
[2]) New Models
[3]) Ordering code for single compressors. For pallet packed compressors, please use 123F instead of 123B

Conditions	*CECOMAF*		*ASHRAE*	
	LBP	*HMBP/HBP*	*LBP*	*HMBP/HBP*
Evaporating temperature [°C]	*-25*	*5*	*-23.3*	*7.2*
Condensing temperature [°C]	*55*	*55*	*55*	*55*
Liquid temperature [°C]	*55*	*55*	*32*	*46*
Suction temperature [°C]	*32*	*32*	*32*	*35*
Ambient temperature [°C]	*32*	*32*	*32*	*35*

For more information and performance with other refrigerants, please refer to Coolselector ® 2 at coolselector.danfoss.com or contact Danfoss.

Technical data and ordering

Light Commercial Refrigeration Compressors

R404A - R507 HMBP | HBP - 50 Hz

Model	Displacement	Power	Application	CPR Cooling	Voltage Frequency	Motor	Starting	Expansion	Refrigeration capacity COP in [w/w] Evaporating temperature [°C] CECOMAF [W] -25	-15	5 [W]	5 [COP]	10	ASHRAE 7.2 [W]	ASHRAE 7.2 [COP]	Weight	Design	Code no. [3]
	[cm³]	[hp]														[Kg]		
ML40TB	4.05	1/6	HMBP	F	220 – 240 V 50 Hz	CSIR	R	C-V	132	212	470	1.41	555	590	1.74	9.47	Lc	123B2501
ML40TG	4.05	1/6	HMBP	F	200 – 240/220 – 230 V 50/60 Hz	CSIR	R	C-V	132	212	470	1.41	555	590	1.74	9.12	Lc	123B2502
ML45TB	4.56	1/5	HMBP	F	220 – 240 V 50 Hz	CSIR	R	C-V	150	237	525	1.47	621	660	1.82	9.1	Lc	123B2503
ML45TG	4.56	1/5	HMBP	F	200 – 240/220 – 230 V 50/60 Hz	CSIR	R	C-V	150	237	525	1.47	621	660	1.82	10.57	Lc	123B2504
MLT45RG [1] [2]	4.56	1/5	HMBP	F	200 – 240/220 – 230 V 50/60 Hz	CSR	R	C-V	169	268	594	1.88	702	747	2.33	10.6	Ld	123B2546
ML60TB	5.68	1/4	HMBP	F	220 – 240 V 50 Hz	CSIR	R	C-V	165	276	643	1.5	765	810	1.85	9.29	Lc	123B2507
ML60TG	5.68	1/4	HMBP	F	200 – 220/230 V 50/60 Hz	CSIR	R	C-V	165	276	643	1.5	765	810	1.85	10.57	Lc	123B2508
MLY60RAa [1]	5.98	1/4	HMBP	F	220 – 240 V 50 Hz	CSIR	R	C-V	210	344	761	1.74	896	955	2.15	10.49	Lc	123B2505
MLY60RAb [1]	5.98	1/4	HMBP	F	220 – 240 V 50 Hz	CSR	R	C-V	210	344	761	1.91	896	955	2.36	10.59	Lc	123B2506
MLY60RGa [1] [2]	5.98	–	HMBP	F	200 – 220/220 – 230 V 50/60 Hz	CSIR	R	C-V	215	341	765	1.85	907	963	2.29	10.24	Lc	123B2550
MLY60RGb [1] [2]	5.98	–	HMBP	F	200 – 220/220 – 230 V 50/60 Hz	CSR	R	C-V	216	352	778	2	916	976	2.48	10.34	Lc	123B2551
ML80TB	7.57	3/8	HMBP	F	220 – 240 V 50 Hz	CSIR	R	C-V	225	383	875	1.61	1034	1100	1.99	9.68	Ld	123B2511
ML80TG	7.57	3/8	HMBP	F	200 – 240/220 – 230 V 50/60 Hz	CSIR	R	C-V	225	383	875	1.61	1034	1100	1.99	11.81	Ld	123B2512
MLY80RAa [1]	8.1	3/8	HMBP	F	220 – 240 V 50 Hz	CSIR	R	C-V	280	461	1049	1.84	1243	1319	2.27	11.29	Ld	123B2509
MLY80RAb [1]	8.1	3/8	HMBP	F	220 – 240 V 50 Hz	CSR	R	C-V	280	461	1049	1.99	1243	1319	2.46	11.39	Ld	123B2510
ML90TB	8.85	3/8	HMBP	F	220 – 240 V 50 Hz	CSIR	R	C-V	280	461	1049	1.61	1243	1319	1.98	12.31	Ld	123B2515
ML90TG	8.85	3/8	HMBP	F	200 – 220/230 V 50/60 Hz	CSIR	R	C-V	280	461	1049	1.61	1243	1319	1.98	11.29	Ld	123B2516
MLY90RAa [1]	9.09	3/8	HMBP	F	220 – 240 V 50 Hz	CSIR	R	C-V	316	509	1125	1.73	1327	1412	2.13	11.34	Ld	123B2513
MLY90RAb [1]	9.09	3/8	HMBP	F	220 – 240 V 50 Hz	CSR	R	C-V	316	508	1129	1.89	1333	1418	2.34	11.44	Ld	123B2514
MLT12RA [1]	10.7	3/8	HMBP	F	220 – 240 V 50 Hz	CSR	R	C-V	396	632	1379	1.88	1622	1729	2.31	11.59	Ld	123B2540
MLT12RG [1]	10.7	3/8	HMBP	F	200 – 240/220 – 230 V 50/60 Hz	CSR	R	C-V	365	601	1337	1.83	1576	1678	2.26	12.24	Ld	123B2532
MPT12RA [1]	12.1	3/8	HMBP	F	220 – 240 V 50 Hz	CSR	R	C-V	437	723	1559	1.91	1823	1950	2.35	12.2	Pd	123B2518
MPT12RG [1]	12.1	3/8	HBP	F	200 – 240/220 – 230 V 50/60 Hz	CSR	R	C-V	–	689	1489	1.87	1769	1875	2.33	12.89	Pd	123B2703
MPT14RA [1]	14.32	1/2	HBP	F	220 – 240 V 50 Hz	CSR	R	C-V	–	789	1750	1.78	2068	2199	2.2	12.25	Pd	123B2704
MX16TBa	16.03	7/8	HMBP	F	220 – 240 V 50 Hz	CSR	R	C-V	481	814	1868	1.74	2212	2350	2.15	16.33	Xd	123B2706
MX18TBa	18.4	7/8	HMBP	F	220 – 240 V 50 Hz	CSR	R	C-V	551	932	2143	1.76	2540	2697	2.18	16.33	Xd	123B2707
MX18TGa [2]	18.4	7/8	HMBP	F	200 – 240/220 – 230 V 50/60 Hz	CSR	R	C-V	551	932	2143	1.76	2540	2697	2.18	16.24	Xd	123B2541
MX21TBa	20.72	1	HMBP	F	220 – 240 V 50 Hz	CSR	R	C-V	620	1046	2410	1.74	2856	3032	2.15	16.52	Xd	123B2708
MX21TGa	20.72	1	HMBP	F	200 – 220/230 V 50/60 Hz	CSR	R	C-V	621	1047	2409	1.74	2857	3032	2.15	17.16	Xd	123B2714
MS22TB [2]	21.75	1	HMBP	F	220 – 240 V 50 Hz	CSR	R	C-V	451	967	2550	2.02	3060	3228	2.5	20.51	Sc	123B2521
MS26TB	25.93	1 3/8	HMBP	F	220 – 240 V 50 Hz	CSR	R	C-V	671	1288	3164	2	3767	3991	2.46	22.12	Sd	123B2523
MS26TG	25.93	1 3/8	HMBP	F	200 – 220/230 V 50/60 Hz	CSR	R	C-V	671	1289	3166	2	3769	3993	2.46	23	Sd	123B2524
MS34TB	34.42	1 5/8	HBP	F	220 – 240 V 50 Hz	CSR	R	C-V	–	1850	4205	1.89	4930	5266	2.3	22.21	Sd	123B2710
MS34TG	34.42	1 5/8	HBP	F	200 – 220/230 V 50/60 Hz	CSR	R	C-V	–	1850	4205	1.89	4930	5266	2.3	22.78	Sd	123B2711
MS18T3	18.1	7/8	HMBP	F	400/440 V 50/60 Hz	3PHASE	P	C-V	421	834	2124	1.89	2543	2685	2.35	20	Sb	123B2520
MS22T3	21.75	1	HMBP	F	400/440 V 50/60 Hz	3PHASE	P	C-V	451	970	2560	1.98	3072	3241	2.45	20	Sb	123B2522
MS26T3	25.93	1 3/8	HMBP	F	400/440 V 50/60 Hz	3PHASE	P	C-V	671	1289	3166	1.98	3769	3993	2.45	18.6	Sd	123B2525
MS34T3	34.42	1 5/8	HMBP	F	400/440 V 50/60 Hz	3PHASE	P	C-V	1002	1850	4205	1.79	4930	5266	2.2	22.8	Sd	123B2526

[1]) Green Cooling Models
[2]) New Models
[3]) Ordering code for single compressors. For pallet packed compressors, please use 123F instead of 123B

Conditions	CECOMAF		ASHRAE	
	LBP	HMBP/HBP	LBP	HMBP/HBP
Evaporating temperature [°C]	-25	5	-23.3	7.2
Condensing temperature [°C]	55	55	55	55
Liquid temperature [°C]	55	55	32	46
Suction temperature [°C]	32	32	32	35
Ambient temperature [°C]	32	32	32	35

For more information and performance with other refrigerants, please refer to Coolselector ® 2 at coolselector.danfoss.com or contact Danfoss.

Technical data and ordering

Light Commercial Refrigeration Compressors

Natural Refrigerant - R290 LBP - 50 Hz

Model [1]	Displacement	Power	Application	CPR Cooling	Voltage Frequency	Motor	Starting	Expansion	Refrigeration capacity COP in [w/w] Evaporating temperature [°C] CECOMAF [W] -40	-30	-25 [W]	-25 [COP]	-10	ASHRAE -23.3 [W]	ASHRAE -23.3 [COP]	Weight	Design	Code no. [3]
	[cm³]	[hp]														[Kg]		
NBC25CA [2] [4]	2.6	1/12	LBP	S	220 – 240 V/50 Hz	RSIR	R	C	32	57	74	1	143	100	1.3	5.9	Be	123B8301
NBG25CA [2] [4]	2.6	1/12	LBP	S	220 – 240 V/50 Hz	RSCR	R	C	32	57	74	1.17	143	100	1.52	6	Be	123B8302
NBC35NA [2]	3.5	1/8	LMBP	S	220 – 240 V/50 Hz	RSIR	R	C	47	83	108	1	209	145	1.3	5.9	Be	123B8303
NBG35CA [2] [4]	3.5	1/8	LBP	S	220 – 240 V/50 Hz	RSCR	R	C	47	83	108	1.2	209	145	1.55	6	Be	123B8304
NBC41NA [2] [4]	4.1	1/7	LBP	S	220 – 240 V/50 Hz	RSIR	R	C	58	103	134	1	259	179	1.3	5.9	Be	123B8305
NBG41CA [2] [4]	4.1	1/7	LMBP	S	220 – 240 V/50 Hz	RSCR	R	C	58	103	134	1.2	259	181	1.55	6	Be	123B8306
NLY45LAa	4.56	1/6	LBP	F	220 – 240 V 50 Hz	CSIR	R	C-V	62	116	152	1.04	298	204	1.35	10.25	Lc	123B3102
NLY45LAb	4.56	1/6	LBP	F	220 – 240 V 50 Hz	CSR	R	C-V	62	116	152	1.11	298	204	1.44	10.35	Lc	123B3103
NUY45LAa [2]	4.5	1/5	LBP	F	220 – 240 V 50 Hz	CSIR	R	C-V	65	122	159	1.21	306	213	1.57	9.3	Ub	123B3143
NUY45LAb [2]	4.5	1/5	LBP	F	220 – 240 V 50 Hz	CSR	R	C-V	66	123	161	1.26	311	215	1.64	9.45	Ub	123B3144
NUT55CAa	5.5	1/5	LBP	F	220 – 240 V 50 Hz	RSIR	P	C	88	152	196	1.27	382	263	1.64	9.1	Ub	123B3104
NUT55CAb	5.5	1/5	LBP	F	220 – 240 V 50 Hz	RSCR	P	C	88	152	196	1.39	382	263	1.8	9.21	Ub	123B3105
NUT55CAc	5.5	1/5	LBP	S	220 – 240 V 50 Hz	RSIR	P	C	88	152	196	1.27	382	263	1.64	9.1	Ub	123B3141
NUT55CAd	5.5	1/5	LBP	S	220 – 240 V 50 Hz	RSCR	P	C	88	152	196	1.39	382	263	1.8	9.21	Ub	123B3142
NLY60LAa	5.98	1/5	LBP	F	220 – 240 V 50 Hz	CSIR	R	C-V	85	152	198	1.03	389	266	1.33	9.67	Lc	123B3106
NLY60LAb	6	1/5	LBP	F	220 – 240 V 50 Hz	CSR	R	C-V	85	152	198	1.1	389	266	1.42	9.77	Lc	123B3107
NUY60LAa [2]	6	1/5	LBP	F	220 – 240 V 50 Hz	CSIR	R	C-V	92	165	215	1.21	420	289	1.56	9.67	Lc	123B3157
NUY60LAb [2]	6	1/5	LBP	F	220 – 240 V 50 Hz	CSR	R	C-V	97	160	220	1.27	425	295	1.64	9.77	Lc	123B3158
NUT60CAa	6	1/4	LBP	F	220 – 240 V 50 Hz	RSIR	P	C	101	175	226	1.3	431	302	1.68	9.2	Ub	123B3110
NUT60CAb	6	1/4	LBP	F	220 – 240 V 50 Hz	RSCR	P	C	101	175	226	1.41	431	302	1.82	9.31	Ub	123B3111
NUT60CAc	6	1/4	LBP	S	220 – 240 V 50 Hz	RSIR	P	C	101	175	226	1.3	431	302	1.68	9.2	Ub	123B3145
NUT60CAd	6	1/4	LBP	S	220 – 240 V 50 Hz	RSCR	P	C	101	175	226	1.41	431	302	1.82	9.31	Ub	123B3146
NUT70CAa	6.7	1/4	LBP	F	220 – 240 V 50 Hz	RSIR	P	C	109	195	250	1.3	463	333	1.68	9.2	Ub	123B3112
NUT70CAb	6.7	1/4	LBP	F	220 – 240 V 50 Hz	RSCR	P	C	109	195	250	1.39	463	333	1.8	9.41	Ub	123B3113
NLY75LAa	7.36	1/4	LBP	F	220 – 240 V 50 Hz	CSIR	R	C-V	109	199	255	1.07	467	339	1.38	10.24	Ld	123B3153
NLY75LAb	7.36	1/4	LBP	F	220 – 240 V 50 Hz	CSR	R	C-V	110	196	254	1.17	490	340	1.52	10.34	Ld	123B3154
NLY75NGa [2]	7.36	1/4	LMBP	F	200 – 220/220 – 230 V 50/60 Hz	CSIR	R	C-V	91	149	200	1.01	443	272	1.3	10.41	Ld	123B3307
NLY75NGb [2]	7.36	1/4	LMBP	F	200 – 220/220 – 230 V 50/60 Hz	CSR	R	C-V	91	174	231	1.09	464	311	1.33	10.51	Ld	123B3308
NLY80LAa	8.1	1/4	LBP	F	220 – 240 V 50 Hz	CSIR	R	C-V	113	201	264	1.04	525	354	1.35	10.27	Ld	123B3114
NLY80LAb	8.1	1/4	LBP	F	220 – 240 V 50 Hz	CSR	R	C-V	113	201	264	1.1	525	354	1.43	10.37	Ld	123B3115
NUY80LAa [2]	8.1	1/4	LBP	F	220 – 240 V 50 Hz	CSIR	R	C-V	122	217	285	1.15	566	382	1.5	10.28	Uc	123B3171
NLY90LAa	9.09	1/3	LBP	F	220 – 240 V 50 Hz	CSIR	R	C-V	130	236	307	1.06	591	411	1.37	10.32	Ld	123B3116
NLY90LAb	9.09	1/3	LBP	F	220 – 240 V 50 Hz	CSR	R	C-V	130	236	307	1.11	591	411	1.44	10.42	Ld	123B3117
NLY90CAa [2]	9.09	1/3	LBP	F	220 – 240 V 50 Hz	RSIR	P	C	130	236	307	1.06	591	411	1.37	10.32	Ld	123B3173
NLY90CAb [2]	9.09	1/3	LBP	F	220 – 240 V 50 Hz	RSCR	P	C	130	236	307	1.11	591	411	1.44	10.42	Ld	123B3174
NUY90LAa [2]	8.9	1/3	LBP	F	220 – 240 V 50 Hz	CSIR	R	C-V	157	267	338	1.21	614	449	1.55	10.32	Uc	123B3159
NUY90LAb [2]	8.9	1/3	LBP	F	220 – 240 V 50 Hz	CSR	R	C-V	158	270	342	1.28	625	455	1.64	10.32	Uc	123B3160
NUY90CAa [2]	8.9	1/3	LBP	F	220 – 240 V 50 Hz	RSIR	P	C-V	157	267	338	1.21	614	449	1.55	10.32	Uc	123B3163
NUY90CAb [2]	8.9	1/3	LBP	F	220 – 240 V 50 Hz	RSCR	P	C-V	158	270	342	1.28	625	455	1.64	10.32	Uc	123B3164
NLY12LAa [2]	10.7	3/8	LBP	F	220 – 240 V 50 Hz	CSIR	R	C-V	163	283	364	0.96	689	486	1.24	11.21	Ld	123B3118
NLY12LAb [2]	10.7	3/8	LBP	F	220 – 240 V 50 Hz	CSR	R	C-V	163	283	364	1.01	689	486	1.31	11.31	Ld	123B3119
NLY12NGa [2]	10.7	3/8	LMBP	F	200 – 220/220 – 230 V 50/60 Hz	CSIR	R	C-V	168	288	371	0.98	715	497	1.28	11.04	Ld	123B3305
NLY12NGb [2]	10.7	3/8	LMBP	F	200 – 220/220 – 230 V 50/60 Hz	CSR	R	C-V	171	287	371	1.06	726	497	1.31	11.14	Ld	123B3306
NPY12LAa	12.1	3/8	LBP	F	220 – 240 V 50 Hz	CSIR	R	C-V	174	309	402	1.05	783	538	1.35	12.13	Pd	123B3120
NPY12LAb	12.1	3/8	LBP	F	220 – 240 V 50 Hz	CSR	R	C-V	174	309	402	1.15	783	538	1.49	12.23	Pd	123B3121
NPY14LAa	14.32	1/2	LBP	F	220 – 240 V 50 Hz	CSIR	R	C-V	217	376	485	1.05	928	648	1.35	12.17	Pd	123B3122
NPY14LAb	14.32	1/2	LBP	F	220 – 240 V 50 Hz	CSR	R	C-V	217	376	485	1.14	928	648	1.48	12.27	Pd	123B3123
NPT16LA	16.15	1/2	LBP	F	220 – 240 V 50 Hz	CSR	R	C-V	254	440	564	1.16	1062	752	1.5	12.17	Pd	123B3124
NPT18LA [2]	18	1/2	LBP	F	220 – 240 V 50 Hz	CSR	R	C-V	269	473	611	1.13	1165	816	1.46	12.3	Pd	123B3125
NX18FBa	18.4	3/4	LBP	F	220 – 240 V 50 Hz	CSR	R	C-V	243	471	611	1.11	1137	816	1.44	16.41	Xd	123B3126
NX21FBa	20.72	3/4	LBP	F	220 – 240 V 50 Hz	CSR	R	C-V	267	517	675	1.11	1275	903	1.44	16.99	Xd	123B3127
NX23FBa	23.2	7/8	LBP	F	220 – 240 V 50 Hz	CSR	R	C-V	297	572	746	1.09	1411	998	1.41	16.75	Xd	123B3128
NS26FB [2]	25.93	7/8	LBP	F	220 – 240 V 50 Hz	CSR	R	C-V	199	580	765	1.04	1448	1024	1.35	22.6	Sd	123B3166
NS34FB [2]	34.42	1	LBP	F	220 – 240 V 50 Hz	CSR	R	C-V	257	750	990	1.04	1873	1325	1.35	23	Sd	123B3167

[1] Green Cooling Models
[2] New Models
[3] Ordering code for single compressors. For pallet packed compressors, please use 123F instead of 123B
[4] Model under development. Provisional performance/data.

Conditions	CECOMAF		ASHRAE	
	LBP	HMBP/HBP	LBP	HMBP/HBP
Evaporating temperature [°C]	-25	5	-23.3	7.2
Condensing temperature [°C]	55	55	55	55
Liquid temperature [°C]	55	55	32	46
Suction temperature [°C]	32	32	32	35
Ambient temperature [°C]	32	32	32	35

For more information and performance with other refrigerants, please refer to Coolselector ® 2 at coolselector.danfoss.com or contact Danfoss.

Technical data and ordering

Light Commercial Refrigeration Compressors

Natural Refrigerant - R290 HMBP | HBP - 50 Hz

Model [1]	Displacement	Power	Application	CPR Cooling	Voltage Frequency	Motor	Starting	Expansion	Refrigeration capacity COP in [w/w] Evaporating temperature [°C] CECOMAF [W] -25	-15	5 [W]	5 [COP]	10	ASHRAE 7.2 [W]	ASHRAE 7.2 [COP]	Weight	Design	Code no. [3]
	[cm³]	[hp]														[Kg]		
NBC22RA [2]	2.2	1/12	HMBP	F	220 – 240 V 50 Hz	CSIR	R	C-V	64	101	224	2.24	265	266	2.3	6	Bc	123B8309
NBC30RA [2]	3.1	1/10	HMBP	F	220 – 240 V 50 Hz	CSIR	R	C-V	100	157	354	2.21	421	421	2.61	6	Bd	123B8310
NLY45RAa	4.56	1/5	HMBP	F	220 – 240 V 50 Hz	CSIR	R	C-V	148	237	518	2.13	609	613	2.51	10.42	Lc	123B3504
NLY45RAb	4.56	1/5	HMBP	F	220 – 240 V 50 Hz	CSR	R	C-V	148	237	518	2.34	609	613	2.75	10.52	Lc	123B3505
NUY45RAa [2]	4.56	1/5	HMBP	F	220 – 240 V 50 Hz	CSIR	R	C-V	142	231	516	2.36	610	612	2.77	9.3	Lc	123B3704
NUY55RAa [2]	5.5	1/5	HMBP	F	220 – 240 V 50 Hz	CSIR	R	C-V	189	304	665	2.4	781	787	2.82	9.87	Lc	123B3705
NLY60RAa	5.98	1/4	HMBP	F	220 – 240 V 50 Hz	CSIR	R	C-V	211	325	703	2.2	829	833	2.58	10.99	Lc	123B3506
NLY60RAb	5.98	1/4	HMBP	F	220 – 240 V 50 Hz	CSR	R	C-V	211	325	703	2.38	829	833	2.79	11.14	Lc	123B3507
NUY60RAa [2]	5.98	1/4	HMBP	F	220 – 240 V 50 Hz	CSIR	R	C-V	217	334	723	2.33	860	856	2.75	9.75	Lc	123b3708
NUY70RAa [2]	6.7	1/4	HMBP	F	220 – 240 V 50 Hz	CSIR	R	C-V	248	382	817	2.34	961	968	2.75	9.6	Ub	123B3527
NUY70RAb [2]	6.7	1/4	HMBP	F	220 – 240 V 50 Hz	CSR	R	C-V	248	382	817	2.47	961	968	2.9	9.7	Ub	123B3528
NLY75RAa	7.36	3/8	HMBP	F	220 – 240 V 50 Hz	CSIR	R	C-V	243	390	862	2.25	1017	1022	2.64	10.49	Ld	123B3508
NLY75RAb	7.36	3/8	HMBP	F	220 – 240 V 50 Hz	CSR	R	C-V	243	390	862	2.42	1017	1022	2.84	10.59	Ld	123B3509
NLY80RAa	8.1	3/8	HMBP	F	220 – 240 V 50 Hz	CSIR	R	C-V	258	411	930	2.21	1104	1105	2.6	10.54	Ld	123B3510
NLY80RAb	8.1	3/8	HMBP	F	220 – 240 V 50 Hz	CSR	R	C-V	258	411	930	2.38	1104	1105	2.8	10.64	Ld	123B3511
NLY90RAa	9.09	3/8	HMBP	F	220 – 240 V 50 Hz	CSIR	R	C-V	306	480	1054	2.18	1245	1250	2.56	11.19	Ld	123B3512
NLY90RAb	9.09	3/8	HMBP	F	220 – 240 V 50 Hz	CSR	R	C-V	306	480	1054	2.36	1245	1250	2.78	11.29	Ld	123B3513
NLY12RAa [2]	10.7	3/8	HMBP	F	220 – 240 V 50 Hz	CSIR	R	C-V	379	584	1224	2.06	1432	1446	2.41	11.44	Ld	123B3529
NLY12RAb [2]	10.7	3/8	HMBP	F	220 – 240 V 50 Hz	CSR	R	C-V	379	597	1249	2.28	1457	1473	2.66	11.54	Ld	123B3530
NLY12RGa [2]	10.7	3/8	HMBP	F	200 – 220/220 – 230 V 50/60 Hz	CSIR	R	C-V	341	553	1217	2.03	1432	1441	2.39	12.1	Ld	123B3531
NLY12RGb [2]	10.7	3/8	HMBP	F	200 – 220/220 – 230 V 50/60 Hz	CSR	R	C-V	355	554	1226	2.2	1450	1455	2.58	12.2	Ld	123B3532
NPY12RAa	12.1	1/2	HBP	F	220 – 240 V 50 Hz	CSIR	R	C-V	-	635	1460	2.08	1735	1736	2.45	12.16	Pd	123B3701
NPY12RAb	12.1	1/2	HBP	F	220 – 240 V 50 Hz	CSR	R	C-V	-	635	1460	2.28	1735	1736	2.7	12.26	Pd	123B3702
NPT14RA	14.32	1/2	HBP	F	220 – 240 V 50 Hz	CSR	R	C-V	-	763	1709	2.26	2085	2056	2.69	12.25	Pd	123B3703
NPT16RA [2]	16.1	2/3	HBP	F	220 – 240 V 50 Hz	CSR	R	C-V	-	853	1911	2.18	2331	2299	2.55	12.3	Pd	123B3712
NX18TBa	18.4	3/4	HMBP	F	220 – 240 V 50 Hz	CSR	R	C-V	511	852	2039	2.22	2440	2433	2.61	16.14	Xd	123B3514
NX21TBa	20.72	7/8	HMBP	F	220 – 240 V 50 Hz	CSR	R	C-V	601	973	2267	2.18	2705	2701	2.55	16.09	Xd	123B3515

[1]) Green Cooling Models
[2]) New Models
[3]) Ordering code for single compressors. For pallet packed compressors, please use 123F instead of 123B

Conditions	CECOMAF		ASHRAE	
	LBP	HMBP/HBP	LBP	HMBP/HBP
Evaporating temperature [°C]	-25	5	-23.3	7.2
Condensing temperature [°C]	55	55	55	55
Liquid temperature [°C]	55	55	32	46
Suction temperature [°C]	32	32	32	35
Ambient temperature [°C]	32	32	32	35

For more information and performance with other refrigerants, please refer to Coolselector ® 2 at coolselector.danfoss.com or contact Danfoss.

Technical data and ordering

Light Commercial Refrigeration Compressors

Natural refrigerant - R600a LBP - 50 Hz

Model [1]	Displacement	Power	Application	CPR Cooling	Voltage Frequency	Motor	Starting	Expansion	Refrigeration capacity COP in [w/w] Evaporating temperature [°C] CECOMAF [W] 35	-30	-25 [W]	-25 [COP]	-10	ASHRAE -23.3 [W]	ASHRAE -23.3 [COP]	Weight	Design	Code no. [3]
	[cm³]	[hp]														[Kg]		
L22CL [2]	2.2	1/18	LBP	S	220-240V 50Hz	RSIR	P	C	12	31	23	0.69	48	30	0.86	3.6	SLb	123B8401
L30CL [2]	3.1	1/16	LBP	S	220-240V 50/60Hz	RSIR	P	C	19	49	36	0.78	75	47	0.99	3.8	SLc	123B8402
B35C [2]	3.5	1/15	LBP	S	220-240V 50/60Hz	RSIR	P	C	17	26	37	0.77	79	50	1	4.5	Bb	123B8425
B35C [2]	3.5	1/15	LBP	S	220-240V 50Hz	RSIR	P	C	16	28	41	0.95	89	56	1.23	4.5	Bb	123B8403
B35CA [2]	3.5	1/15	LBP	S	220-240V 50Hz	RSCR	P	C	21	31	43	1.13	96	58	1.45	5.1	Bc	123B8404
B43CB [2]	4.3	1/12	LBP	S	220-240V 50Hz	RSIR	P	C	29	39	51	0.91	108	68	1.16	4.6	Bc	123B8405
B43CB [2]	4.3	1/12	LBP	S	220-240V 50Hz	RSCR	P	C	29	39	51	1.02	108	68	1.29	4.6	Bc	123B8406
B43CB [2]	4.3	1/12	LBP	S	220-240V 50/60Hz	RSIR	P	C	25	33	44	0.87	92	58	1.1	4.6	Bc	123B8419
B52CL [2]	5.2	1/10	LBP	S	220-240V 50/60Hz	RSIR	P	C	35	45	60	0.91	127	80	1.16	4.6	Bc	123B8408
B52CL [2]	5.2	1/10	LBP	S	220-240V 50Hz	RSIR	P	C	34	44	58	1.11	124	78	1.42	5.2	Bd	123B8409
B60CBL [2]	6	1/8	LBP	S	220-240V 50Hz	RSIR	P	C	40	54	71	1.03	153	95	1.31	5	Bc	123B8411
B60CBL [2]	6	1/8	LBP	S	220-240V 50Hz	RSIR	P	C	38	96	71	1.1	149	95	1.4	5	Bd	123B8412
B65CL [2]	6.5	1/8	LBP	S	220-240V 50Hz	RSIR	P	C	42	105	79	0.87	163	104	1.1	5	Bc	123B8413
B65CL [2]	6.5	1/8	LBP	S	220-240V 50Hz	RSCR	P	C	42	105	79	1.1	163	104	1.4	5.2	Be	123B8414
HLY80AAa	8.1	1/7	LBP	S	220-240V 50Hz	RSIR	P	C	54	74	99	1.11	201	131	1.41	9.45	Lb	123B4108
HLY80AAb	8.1	1/7	LBP	S	220-240V 50Hz	RSCR	P	C	54	74	99	1.18	203	131	1.49	9.56	Lb	123B4109
HLY90AAa	9.09	1/6	LBP	S	220-240V 50Hz	RSIR	P	C	67	84	109	1.11	231	145	1.41	9.85	Lb	123B4110
HLY90AAb	9.09	1/6	LBP	S	220-240V 50Hz	RSCR	P	C	65	85	111	1.18	234	147	1.49	9.96	Lb	123B4111
HLY99AAa	9.95	1/6	LBP	S	220-240V 50Hz	RSIR	P	C	69	90	119	1.1	249	157	1.4	10.95	Lc	123B4112
HLY99AAb	9.95	1/6	LBP	S	220-240V 50Hz	RSCR	P	C	67	90	120	1.16	250	159	1.48	11.06	Lc	123B4113
HPY12AAa	12.1	1/5	LBP	S	220-240V 50Hz	RSIR	P	C	79	107	144	1.13	301	191	1.43	11.13	Pc	123B4114
HPY12AAb	12.1	1/5	LBP	S	220-240V 50Hz	RSCR	P	C	79	107	144	1.18	301	191	1.5	11.24	Pc	123B4115
HPY12AGa	12.1	1/4	LBP	S	200-220/220-230V 50/60Hz	RSIR	P	C	79	107	144	1.1	301	191	1.4	10.9	Pc	123B4116
HPY12AGb	12.1	1/4	LBP	S	200-220/220-230V 50/60Hz	RSCR	P	C	79	107	144	1.1	301	191	1.4	11.01	Pc	123B4117
HPY14AAa	14.32	1/5	LBP	S	220-240V 50Hz	RSIR	P	C	92	124	166	1.13	345	220	1.43	11.41	Pc	123B4118
HPY14AAb	14.32	1/5	LBP	S	220-240V 50Hz	RSCR	P	C	92	124	166	1.19	345	220	1.5	11.52	Pc	123B4119
HPY16AAa	16.15	1/4	LBP	S	220-240V 50Hz	RSIR	P	C	102	136	181	1.14	381	241	1.44	10.64	Pc	123B4122
HPY16AAb	16.15	1/4	LBP	S	220-240V 50Hz	RSCR	P	C	102	136	181	1.19	381	241	1.51	10.75	Pc	123B4123
B43C0 [2]	4.3	1/12	LBP	S	100V 50/60Hz	RSIR	P	C	27	69	51	0.93	107	68	1.18	4.6	Bb	123B8407
B52C0L [2]	5.2	1/10	LBP	S	100V 50/60Hz	RSIR	P	C	31	78	58	0.86	121	78	1.1	4.8	Bc	123B8410
HPY14AJa	14.32	1/5	LBP	S	100V 50/60Hz	RSIR	P	C	86	116	157	1.01	336	208	1.28	10.75	Pd	123B4120
HPY14AJb	14.32	1/5	LBP	S	100V 50/60Hz	RSCR	P	C	86	116	157	1.07	336	208	1.35	10.86	Pd	123B4121

[1]) Green Cooling Models
[2]) New Models
[3]) Ordering code for single compressors. For pallet packed compressors, please use 123F instead of 123B

Conditions	CECOMAF		ASHRAE	
	LBP	HMBP/HBP	LBP	HMBP/HBP
Evaporating temperature [°C]	-25	5	-23.3	7.2
Condensing temperature [°C]	55	55	55	55
Liquid temperature [°C]	55	55	32	46
Suction temperature [°C]	32	32	32	35
Ambient temperature [°C]	32	32	32	35

For more information and performance with other refrigerants, please refer to Coolselector ® 2 at coolselector.danfoss.com or contact Danfoss.

Technical data and ordering

Light Commercial Refrigeration Compressors

Natural refrigerant - R600a HMBP | HBP - 50 Hz

Model [1]	Displacement	Power	Application	CPR Cooling	Voltage Frequency	Motor	Starting	Expansion	Refrigeration capacity COP in [w/w] Evaporating temperature [°C] CECOMAF [W] -25	-15	5 [W]	5 [COP]	10	ASHRAE 7.2 [W]	ASHRAE 7.2 [COP]	Weight	Design	Code no. [3]
	[cm³]	[hp]														[Kg]		
HLY55MAa	5.46	1/10	HMBP	S	220-240 V 50 Hz	RSIR	P	C	48	96	250	2.18	300	295	2.51	9.8	Lb	123B4502
HLY55MAb	5.46	1/10	HMBP	S	220-240 V 50 Hz	RSCR	P	C	48	96	250	2.31	300	295	2.67	9.91	Lb	123B4503
HUY55MAa	5.5	1/10	HMBP	S	220-240 V 50 Hz	RSIR	P	C	64	110	272	2.47	327	322	2.86	8.95	Ub	123B4505
HUY55MAb	5.5	1/10	HMBP	S	220-240 V 50 Hz	RSCR	P	C	64	110	272	2.58	327	322	2.99	9.05	Ub	123B4506
HLY70MAa	6.65	1/8	HMBP	S	220-240 V 50 Hz	RSIR	P	C	66	121	307	2.17	370	363	2.5	8.8	Lb	123B4507
HLY70MAb	6.65	1/8	HMBP	S	220-240 V 50 Hz	RSCR	P	C	66	121	307	2.33	370	363	2.69	8.91	Lb	123B4508
HUY70MAa	6.7	1/8	HMBP	S	220-240 V 50 Hz	RSIR	P	C	80	137	338	2.47	406	399	2.87	8.9	Ub	123B4511
HUY70MAb	6.7	1/8	HMBP	S	220-240 V 50 Hz	RSCR	P	C	80	137	338	2.59	406	399	2.99	9.01	Ub	123B4512
HLY99RAa	9.95	1/6	HMBP	F	220-240 V 50 Hz	CSIR	R	C-V	103	178	458	2.03	555	544	2.35	9.31	Lc	123B4513
HLY99RAb	9.95	1/6	HMBP	F	220-240 V 50 Hz	CSR	R	C-V	103	178	458	2.21	555	544	2.57	9.41	Lc	123B4514
HPY12RAa	12.1	1/5	HMBP	F	220-240 V 50 Hz	CSIR	R	C-V	135	236	583	2.15	700	689	2.5	10.5	Pc	123B4515
HPY12RAb	12.1	1/5	HMBP	F	220-240 V 50 Hz	CSR	R	C-V	135	236	583	2.32	700	689	2.7	10.6	Pc	123B4516
HPY14RAa	14.32	1/5	HBP	F	220-240 V 50 Hz	CSIR	R	C-V	-	281	668	2.08	797	787	2.4	9.74	Pc	123B4517
HPY14RAb	14.32	1/5	HBP	F	220-240 V 50 Hz	CSR	R	C-V	-	281	668	2.26	797	787	2.61	9.84	Pc	123B4518
HPY16RAa	16.15	1/4	HMBP	F	220-240 V 50 Hz	CSIR	R	C-V	179	310	755	2.12	904	891	2.45	10.99	Pd	123B4519
HPY16RAb	16.15	1/4	HMBP	F	220-240 V 50 Hz	CSR	R	C-V	179	310	755	2.29	904	891	2.64	11.09	Pd	123B4520

[1]) Green Cooling Models
[2]) New Models
[3]) Ordering code for single compressors. For pallet packed compressors, please use 123F instead of 123B

Conditions	CECOMAF		ASHRAE	
	LBP	HMBP/HBP	LBP	HMBP/HBP
Evaporating temperature [°C]	-25	5	-23.3	7.2
Condensing temperature [°C]	55	55	55	55
Liquid temperature [°C]	55	55	32	46
Suction temperature [°C]	32	32	32	35
Ambient temperature [°C]	32	32	32	35

For more information and performance with other refrigerants, please refer to Coolselector ® 2 at coolselector.danfoss.com or contact Danfoss.

Technical data and ordering

Light Commercial Refrigeration Compressors

R134a*) LBP | LMBP - 60 Hz

Model	Displacement	Power	Application	CPR Cooling	Voltage Frequency	Motor	Starting	Expansion	Refrigeration capacity COP in [w/w] Evaporating temperature [°C] CECOMAF [W] -35	-30	-25 [W]	-25 [COP]	-10	ASHRAE -23.3 [W]	ASHRAE -23.3 [COP]	Weight	Design	Code no. [3]
	[cm³]	[hp]														[Kg]		
L30HL [2]	3.1	1/12	LBP	S	220 – 240 V 50/60 Hz	RSIR	P	C	26	39	55	0.8	123	74	1.04	4.2	SLc	123B8102
B38H [2]	3.8	1/12	LBP	S	220 – 240 V 60 Hz	RSIR	P	C	34	50	71	0.96	158	96	1.1	4.6	Bb	123B8109
B43H [2]	4.3	1/10	LBP	S	220 – 240 V 50/60 Hz	RSIR	P	C	39	58	81	0.96	181	110	1.1	5.4	Bc	123B8104
B43HB [2]	4.3	1/10	LBP	S	220 – 240 V 50/60 Hz	RSCR	P	C	39	58	81	1	181	110	1.3	5.2	Bc	123B8105
GL45ANa	4.56	1/8	LBP	S	200 – 240/220 – 230 V 50/60 Hz	RSIR	P	C	43	65	93	0.83	213	127	1.09	8.42	Lb	123B1113
GL60ANa	5.98	1/6	LBP	S	200 – 240/220 – 230 V 50/60 Hz	RSIR	P	C	95	108	133	0.89	285	177	1.15	9.11	Lc	123B1118
GL60ANb	5.98	1/6	LBP	F	200 – 240/220 – 230 V 50/60 Hz	CSIR	R	C-V	95	108	133	0.89	285	177	1.15	9.26	Lc	123B1119
GL60ANc	5.98	1/6	LBP	S	200 – 240/220 – 230 V 50/60 Hz	CSIR	R	C-V	95	108	133	0.89	285	177	1.15	9.26	Lc	123B1120
GL80ANa	8.1	1/5	LBP	S	200 – 240/220 – 230 V 50/60 Hz	RSIR	P	C	87	124	172	0.92	385	234	1.19	9.75	Lc	123B1125
GL80ANb	8.1	1/5	LBP	F	200 – 240/220 – 230 V 50/60 Hz	CSIR	R	C-V	87	124	172	0.92	385	234	1.19	9.9	Lc	123B1126
GL80ANc	8.1	1/5	LBP	S	200 – 240/220 – 230 V 50/60 Hz	CSIR	R	C-V	87	124	172	0.92	385	234	1.19	9.9	Lc	123B1127
GL90ANa	9.09	1/4	LBP	S	200 – 240/220 – 230 V 50/60 Hz	RSIR	P	C	96	134	185	0.93	421	252	1.2	10.33	Ld	123B1132
GL90ANb	9.09	1/4	LBP	F	200 – 240/220 – 230 V 50/60 Hz	CSIR	R	C-V	96	134	185	0.93	421	252	1.2	10.48	Ld	123B1133
GL90ANc	9.09	1/4	LBP	S	200 – 240/220 – 230 V 50/60 Hz	CSIR	R	C-V	96	134	185	0.93	421	252	1.2	10.48	Ld	123B1134
GP14CG	14.17	3/8	LBP	F	200 – 240/220 – 230 V 50/60 Hz	RSIR	R	C	113	181	262	0.91	589	359	1.18	10.62	Pc	123B1142
GPY14NGa [1] [2]	14.32	3/8	LMBP	F	200 – 240/220 – 230 V 50/60 Hz	CSIR	R	C-V	173	241	330	0.98	728	448	1.27	12.59	Pd	123B1313
GPY14NGb [1] [2]	14.32	3/8	LMBP	F	200 – 240/220 – 230 V 50/60 Hz	CSR	R	C-V	173	242	332	1.03	729	450	1.33	12.69	Pd	123B1314
L22H5 [2]	2.2	1/20	LBP	S	110 – 120 V 60 Hz	RSIR	P	C	19	28	39	0.56	87	53	0.75	3.6	SLb	123B8107
L30H5L [2]	3.1	1/12	LBP	S	110 – 120 V 60 Hz	RSIR	P	C	27	40	57	0.73	127	78	0.95	3.85	SLc	123B8108
B38H5 [2]	3.8	1/12	LBP	S	110 – 120 V 60 Hz	RSIR	P	C	34	50	71	0.96	158	96	1.1	5	Bc	123B8110
B38H5L [2]	3.8	1/12	LBP	S	110 – 120 V 60 Hz	RSIR	P	C	34	50	71	0.81	158	96	1.05	4.6	Bc	123B8111
B43H5L [2]	4.3	1/10	LBP	S	110 – 120 V 60 Hz	RSIR	P	C	39	58	81	0.81	181	110	1.05	5	Bc	123B8114
GL45ADa	4.56	1/8	LBP	S	115 V 60 Hz	RSIR	P	C	42	65	95	0.8	215	130	1.05	8.19	Lb	123B1153
GL45ADb	4.56	1/8	LBP	S	115 V 60 Hz	CSIR	R	C-V	42	65	95	0.8	215	130	1.05	8.34	Lb	123B1154
GL60ADa	5.98	1/6	LBP	S	115 V 60 Hz	RSIR	P	C	65	95	132	0.85	290	179	1.1	9.48	Lb	123B1155
GL60ADb	5.98	1/6	LBP	S	115 V 60 Hz	CSIR	R	C-V	65	95	132	0.85	290	179	1.1	9.63	Lb	123B1156
GUY60NRc [1] [2]	6	1/5	LMBP	S	115 – 127 V 60 Hz	CSIR	R	C-V	80	113	158	1.15	362	214	1.49	9	Ub	123B1308
GUY70NRb [1] [2]	6.7	1/5	LMBP	F	115 – 127 V 60 Hz	CSIR	R	C	86	121	166	1.15	386	225	1.49	9.3	Ub	123B1307
GUY70NRc [1] [2]	6.7	1/5	LMBP	S	115 – 127 V 60 Hz	CSIR	R	C	86	121	166	1.15	386	225	1.49	9.3	Ub	123B1309
GUY80NRb [1] [2]	8.1	1/4	LMBP	F	115 – 127 V 60 Hz	CSIR	R	C-V	107	151	209	1.14	480	284	1.49	9.6	Ub	123B1303
GUY80NRc [1] [2]	8.1	1/4	LMBP	S	115 – 127 V 60 Hz	CSIR	R	C-V	107	151	209	1.14	480	284	1.49	9.6	Ub	123B1310
GL99ADa	9.95	1/4	LBP	S	115 V 60 Hz	RSIR	P	C	102	148	205	0.89	439	278	1.15	11.44	Ld	123B1161
GL99ADb	9.95	1/4	LBP	S	115 V 60 Hz	CSIR	R	C-V	102	148	205	0.89	439	278	1.15	11.59	Ld	123B1162
GLY12NRa [1] [2]	10.7	3/8	LMBP	F	115 – 127 V 60 Hz	CSIR	R	C-V	119	168	234	1.02	531	318	1.33	10.55	Ld	123B1304
GLY12NRb [1] [2]	10.7	3/8	LMBP	F	115 – 127 V 60 Hz	CSR	R	C-V	119	168	234	1.07	531	318	1.39	10.65	Ld	123B1305
GP14FE	14.17	3/8	LBP	F	115 V 60 Hz	CSIR	R	C-V	119	186	267	0.84	603	366	1.11	12.35	Pd	123B1163
GPY14NDa [1] [2]	14.32	3/8	LMBP	F	115 V 60 Hz	CSIR	R	C-V	166	234	322	0.9	715	438	1.17	12.04	Pd	123B1311
GPY14NDb [1] [2]	14.32	3/8	LMBP	F	115 V 60 Hz	CSR	R	C-V	168	235	324	1.02	722	440	1.26	12.14	Pd	123B1312

*) Or HFO1234yf
[1]) Green Cooling Models
[2]) New Models
[3]) Ordering code for single compressors. For pallet packed compressors, please use 123F instead of 123B

Conditions	CECOMAF		ASHRAE	
	LBP	HMBP/HBP	LBP	HMBP/HBP
Evaporating temperature [°C]	-25	5	-23.3	7.2
Condensing temperature [°C]	55	55	55	55
Liquid temperature [°C]	55	55	32	46
Suction temperature [°C]	32	32	32	35
Ambient temperature [°C]	32	32	32	35

For more information and performance with other refrigerants, please refer to Coolselector ® 2 at coolselector.danfoss.com or contact Danfoss.

Technical data and ordering

Light Commercial Refrigeration Compressors (count.)

R134a*) HMBP | HBP - 60 Hz

Model	Displacement	Power	Application	CPR Cooling	Voltage Frequency	Motor	Starting	Expansion	Refrigeration capacity COP in [w/w] Evaporating temperature [°C] CECOMAF [W] -25	-15	5 [W]	5 [COP]	10	ASHRAE 7.2 [W]	ASHRAE 7.2 [COP]	Weight	Design	Code no. [3]
	[cm³]	[hp]														[Kg]		
B25G [2]	2.6	1/14	HBP	S-F	220 – 240 V 50/60 Hz	RSIR	P	C	–	86	224	1.8	274	269	2.1	4.65	Bb	123B8117
B38G [2]	3.8	1/8	HBP	S-F	220 – 240 V 50/60 Hz	CSIR	R	C-V	–	150	339	1.98	410	404	2.31	5.4	Bd	123B8125
GL45TG	4.56	1/6	HMBP	F	200 – 240/220 – 230 V 50/60 Hz	CSIR	R	C-V	89	157	400	1.65	483	477	1.92	9.15	Lb	123B1517
GL45MG	4.56	1/6	HBP	S	230 V 50/60 Hz	CSIR	R	C-V	–	204	398	1.65	487	477	1.92	9.37	Lb	123B1704
GL60MG	5.98	1/5	HBP	S	230 V 50/60 Hz	CSIR	R	C-V	–	243	499	1.73	619	602	2.02	9	Lc	123B1705
GL60TG	5.68	1/5	HMBP	F	200 – 240/220 – 230 V 50/60 Hz	CSIR	R	C-V	111	199	510	1.76	616	609	2.04	9.07	Lc	123B1522
GL80MG	7.57	1/5	HBP	S	230 V 50/60 Hz	CSIR	R	C-V	–	344	674	1.84	836	813	2.15	9.53	Lc	123B1706
GL80TG	7.57	1/5	HMBP	F	200 – 220/220 – 230 V 50/60 Hz	CSIR	R	C-V	130	248	647	1.78	781	772	2.04	9.53	Lc	123B1528
GL90MG	8.85	1/4	HBP	S	230 V 50/60 Hz	CSIR	R	C-V	–	391	772	1.83	947	926	2.11	10.61	Ld	123B1707
GL90TG	8.85	1/4	HMBP	F	200 – 220/220 – 230 V 50/60 Hz	CSIR	R	C-V	168	303	773	1.71	932	921	1.97	9.7	Ld	123B1534
GLY12RGa [1] [2]	10.7	3/8	HBP	F	200 – 220/220 – 230 V 50/60 Hz	CSIR	R	C-V	–	405	1007	1.9	1216	1201	2.22	10.43	Ld	123B1710
GLY12RGb [1] [2]	10.7	3/8	HBP	F	200 – 220/220 – 230 V 50/60 Hz	CSR	R	C-V	–	405	1007	2.07	1216	1201	2.4	10.53	Ld	123B1711
GP14TG	14.17	3/8	HMBP	F	200 – 220/220 – 230 V 50/60 Hz	CSIR	R	C-V	222	437	1168	1.76	1413	1395	2.03	11.98	Pd	123B1539
GP16TG	16.15	3/8	HBP	F	200 – 220/230 V 50/60 Hz	CSIR	R	C-V	–	556	1408	1.74	1697	1678	2	11.93	Pd	123B1714
GPT16RG [1]	16.15	1/2	HBP	F	200 – 220/220 – 230 V 50/60 Hz	CSR	R	C-V	–	650	1515	2.02	1827	1806	2.33	12.16	Pd	123B1715
GPT18RG [1] [2]	18	1/2	HBP	F	200 – 220/230 V 50/60 Hz	CSR	R	C-V	–	642	1586	1.91	1904	1887	2.21	12.7	Pd	123B1720
GX18TG	18.4	1/2	HMBP	F	200 – 220/220 – 230 V 50/60 Hz	CSIR	R	C-V	333	630	1625	1.87	1957	1936	2.17	16.08	Xc	123B1545
GX23TG	23.2	5/8	HMBP	F	200 – 220/220 – 230 V 50/60 Hz	CSIR	R	C-V	429	792	2021	1.71	2433	2407	1.98	16.34	Xd	123B1548
GS26T3	25.93	3/4	HMBP	F	400/440 V 50/60 Hz	3PHASE	P	C-V	307	824	2419	2.07	2935	2894	2.4	22.7	Sc	123B1551
GS26TG	25.93	3/4	HMBP	F	200 – 220/220 – 230 V 50/60 Hz	CSIR	R	C-V	307	824	2419	2.06	2935	2894	2.4	22.7	Sc	123B1550
GS30TG	29.95	7/8	HMBP	F	200 – 220/220 – 230 V 50/60 Hz	CSR	R	C-V	370	920	2865	2.23	3527	3449	2.61	23	Sd	123B1553
GS34TF	34.42	1	HMBP	F	220 – 230 V 60 Hz	CSR	R	C-V	550	1247	3327	2.17	3990	3958	2.5	22.7	Sd	123B1590
GS34TG	34.42	1	HMBP	F	200 – 220/220 – 230 V 50/60 Hz	CSR	R	C-V	440	1093	3248	2.11	3963	3895	2.44	22.27	Sd	123B1614
B22G5 [2]	2.2	1/16	HBP	S-F	110 – 115 V 60 Hz	RSIR	P	C	–	72	188	1.83	229	225	2.13	4.6	Bb	123B8116
B25G5L [2]	2.6	1/14	HBP	S-F	110 – 115 V 60 Hz	CSIR	R	C-V	–	88	231	1.93	283	278	2.27	5.7	Be	123B8119
B30G5 [2]	3.1	1/12	HBP	S-F	110 – 115 V 60 Hz	RSIR	P	C	–	100	262	1.55	317	313	1.8	5	Bb	123B8122
B35G5 [2]	3.5	1/10	HBP	S-F	110 – 115 V 60 Hz	CSIR	R	C-V	–	120	304	1.8	371	365	2.12	5	Bb	123B8124
B38G5L [2]	3.8	1/8	HBP	S-F	110 – 115 V 60 Hz	CSIR	R	C-V	–	136	353	1.83	424	420	2.13	5.7	Be	123B8126
GL45PE	4.56	1/6	HMBP	F	115 V 60 Hz	RSIR	R	C	89	157	400	1.59	483	477	1.84	8.87	Lb	123B1568
GL45TE	4.56	1/6	HMBP	F	115 V 60 Hz	CSIR	R	C-V	89	157	400	1.59	483	477	1.84	9.18	Lb	123B1569
GL60PE	5.68	1/5	HMBP	F	115 V 60 Hz	RSIR	R	C	111	199	510	1.73	616	609	2.01	9.97	Lc	123B1570
GL80PE	7.57	1/5	HMBP	F	115 V 60 Hz	RSIR	R	C	130	248	647	1.78	781	772	2.04	9.97	Lc	123B1574
GL80TE	7.57	1/5	HMBP	F	115 V 60 Hz	CSIR	R	C-V	130	248	647	1.78	781	772	2.04	10.68	Lc	123B1575
GL60TE	5.68	1/5	HMBP	F	115 V 60 Hz	CSIR	R	C-V	111	199	510	1.73	616	609	2.01	10.28	Lc	123B1571
GLY80RDa [1]	8.1	1/5	HMBP	F	115 V 60 Hz	CSIR	R	C-V	169	299	775	2.02	939	926	2.34	10.33	Lc	123B1572
GLY80RDb [1]	8.1	1/5	HMBP	F	115 V 60 Hz	CSR	R	C-V	169	299	775	2.17	939	926	2.51	10.43	Lc	123B1573
GL90PE	8.85	1/4	HMBP	F	115 V 60 Hz	RSIR	R	C	167	303	773	1.78	932	921	2.06	11.27	Ld	123B1578
GL90TE	8.85	1/4	HMBP	F	115 V 60 Hz	CSIR	R	C-V	167	303	773	1.78	932	921	2.06	9.75	Ld	123B1579
GLY90RDa [1]	9.09	1/4	HMBP	F	115 V 60 Hz	CSIR	R	C-V	198	348	874	1.95	1053	1042	2.25	10.59	Lc	123B1576
GLY90RDb [1]	9.09	1/4	HMBP	F	115 V 60 Hz	CSR	R	C-V	198	348	874	2.1	1053	1042	2.42	10.69	Lc	123B1577
GLY12RRa [1] [2]	10.7	3/8	HMBP	F	115 – 127 V 60 Hz	CSIR	R	C-V	222	402	1015	1.9	1221	1208	2.2	11.14	Ld	123B1601
GLY12RRb [1] [2]	10.7	3/8	HMBP	F	115 – 127 V 60 Hz	CSR	R	C-V	222	402	1015	2.01	1221	1208	2.32	11.24	Ld	123B1599
GPY12RDa [1]	12.1	3/8	HMBP	F	115 V 60 Hz	CSIR	R	C-V	280	480	1150	1.95	1375	1366	2.25	12.03	Pd	123B1580
GPY12RDb [1]	12.1	3/8	HMBP	F	115 V 60 Hz	CSR	R	C-V	280	480	1150	2.11	1375	1366	2.44	12.13	Pd	123B1581
GPY14RDa [1]	14.32	1/2	HBP	F	115 V 60 Hz	CSIR	R	C-V	–	317	1234	1.78	2012	1698	2.22	12.03	Pd	123B1584
GPY14RDb [1]	14.32	1/2	HBP	F	115 V 60 Hz	CSR	R	C-V	–	317	1234	1.89	2012	1698	2.36	12.13	Pd	123B1585
GP16TE	16.15	3/8	HBP	F	115 V 60 Hz	CSIR	R	C-V	–	556	1408	1.69	1697	1678	1.96	12.2	Pd	123B1718
GPY16RDa [1]	16.15	1/2	HBP	F	115 V 60 Hz	CSIR	R	C-V	–	614	1518	1.88	1822	1806	2.17	12.05	Pd	123B1588
GPY16RDb [1]	16.15	1/2	HBP	F	115 V 60 Hz	CSR	R	C-V	–	614	1518	2	1822	1806	2.31	12.15	Pd	123B1589
GL60TC	5.68	1/5	HMBP	F	100 V 50/60 Hz	CSIR	R	C-V	111	199	510	1.74	616	609	2.01	10.38	Lc	123B1523
GL80TC	7.57	1/5	HMBP	F	100 V 50/60 Hz	CSIR	R	C-V	130	248	647	1.92	781	772	2.22	10.98	Lc	123B1529
GL90TC	8.85	1/4	HMBP	F	100 V 50/60 Hz	CSIR	R	C-V	167	303	773	1.82	932	921	2.1	11.48	Ld	123B1535
GUY72RCa [1] [2]	7.2	1/4	HMBP	F	100 V 50/60 Hz	CSIR	R	C-V	184	319	765	2.18	913	907	2.51	9.52	Uc	123B1617
GUY72RCb [1] [2]	7.2	1/4	HMBP	F	100 V 50/60 Hz	CSR	R	C-V	181	318	772	2.35	923	917	2.72	9.59	Uc	123B1618

*) Or HFO1234yf
[1]) Green Cooling Models
[2]) New Models
[3]) Ordering code for single compressors. For pallet packed compressors, please use 123F instead of 123B

Conditions	CECOMAF		ASHRAE	
	LBP	HMBP/HBP	LBP	HMBP/HBP
Evaporating temperature [°C]	-25	5	-23.3	7.2
Condensing temperature [°C]	55	55	55	55
Liquid temperature [°C]	55	55	32	46
Suction temperature [°C]	32	32	32	35
Ambient temperature [°C]	32	32	32	35

For more information and performance with other refrigerants, please refer to Coolselector ® 2 at coolselector.danfoss.com or contact Danfoss.

Technical data and ordering

Light Commercial Refrigeration Compressors

R404A - R507 LBP - 60 Hz

Model	Displacement	Power	Application	CPR Cooling	Voltage Frequency	Motor	Starting	Expansion	Refrigeration capacity COP in [w/w] Evaporating temperature [°C] CECOMAF [W] -40	-30	-25 [W]	-25 [COP]	-10	ASHRAE -23.3 [W]	ASHRAE -23.3 [COP]	Weight	Design	Code no. [3]
	[cm³]	[hp]														[Kg]		
ML45FG	4.56	1/6	LBP	F	200-240/220-230 V 50/60 Hz	CSIR	R	C-V	61	117	157	0.68	321	231	0.97	10.87	Lc	123B2104
ML60FG	5.98	1/5	LBP	F	200-220/220-230 V 50/60 Hz	CSIR	R	C-V	81	157	207	0.7	411	304	0.99	10.87	Lc	123B2108
ML80FG	8.1	1/4	LBP	F	200-220/220-230 V 50/60 Hz	CSIR	R	C-V	117	223	296	0.76	590	435	1.07	12.2	Ld	123B2112
ML90FG	8.85	1/3	LBP	F	200-220/230 V 50/60 Hz	CSIR	R	C-V	121	242	323	0.8	642	475	1.12	10.78	Ld	123B2116
MLY12LFa [1] [2]	10.7	3/8	LBP	F	208-230 V 60 Hz	CSIR	R	C-V	179	343	451	0.92	882	662	1.29	11.06	Ld	123B2179
MLY12LFb [1] [2]	10.7	3/8	LBP	F	208-230 V 60 Hz	CSR	R	C-V	179	343	451	0.94	882	662	1.33	11.16	Ld	123B2180
MLY12LGa [1] [2]	10.7	3/8	LBP	F	200-220/230 V 50/60 Hz	CSIR	R	C-V	190	351	458	0.86	884	670	1.22	11.06	Ld	123B2121
MLY12LGb [1] [2]	10.7	3/8	LBP	F	200-220/230 V 50/60 Hz	CSR	R	C-V	190	357	466	0.91	889	681	1.29	11.16	Ld	123B2122
MP14FG	14.17	1/2	LBP	F	200-220/230 V 50/60 Hz	CSIR	R	C-V	142	355	492	0.82	1026	730	1.15	12.03	Pd	123B2125
MPT14LF [1]	14.32	1/2	LBP	F	208-230 V 60 Hz	CSR	R	C-V	262	474	621	0.96	1223	891	1.36	12.3	Pd	123B2156
MX21FGa [2]	20.72	3/4	LBP	F	200-220/220-230 V 50/60 Hz	CSR	R	C-V	247	540	735	0.94	1515	1088	1.32	17.32	Xd	123B2186
MX23FGa [2]	23.2	7/8	LBP	F	200-220/220-230 V 50/60 Hz	CSR	R	C-V	303	627	843	0.93	1711	1244	1.32	17.5	Xd	123B2183
MS26FF	25.93	3/4	LBP	F	208-230 V 60 Hz	CSR	R	C-V	202	641	909	0.91	1902	1354	1.3	22.6	Sd	123B2157
MS26FG	25.93	3/4	LBP	F	200-220/230 V 50/60 Hz	CSR	R	C-V	202	641	909	0.92	1902	1354	1.31	22.6	Sd	123B2135
MS30FF	29.95	7/8	LBP	F	208-230 V 60 Hz	CSR	R	C-V	242	763	1086	0.92	2302	1620	1.31	22.7	Sd	123B2158
MS34FF	34.42	1	LBP	F	208V 60 Hz	CSR	R	C-V	272	838	1216	0.91	2738	1829	1.3	22.9	Sd	123B2174
MS26F3	25.93	3/4	LBP	F	400/440 V 50/60 Hz	3PHASE	P	C-V	202	641	909	0.92	1902	1354	1.31	20.8	Sd	123B2136
MS30F3	29.95	7/8	LBP	F	400/440 V 50/60 Hz	3PHASE	P	C-V	242	763	1086	0.94	2302	1620	1.32	24	Sd	123B2138
MS34F3	34.42	1	LBP	F	400/440 V 50/60 Hz	3PHASE	P	C-V	277	885	1263	0.96	2696	1887	1.35	22.9	Sd	123B2140
ML45FR	4.56	1/6	LBP	F	115-127V 60 Hz	CSIR	R	C-V	61	117	157	0.72	321	231	1.01	9.21	Lc	123B2160
MLY45LRa [1]	4.56	1/6	LBP	F	115-127V 60 Hz	CSIR	R	C-V	64	143	192	0.87	379	282	1.23	9.2	Lc	123B2141
MLY45LRb [1]	4.56	1/6	LBP	F	115-127V 60 Hz	CSR	R	C-V	64	143	192	0.9	379	282	1.27	9.3	Lc	123B2142
ML60FR	5.98	1/5	LBP	F	115-127V 60 Hz	CSIR	R	C-V	81	157	207	0.72	411	304	1.01	9.54	Lc	123B2143
MLY60LDa [1]	5.98	1/5	LBP	F	115V 60 Hz	CSIR	R	C-V	102	197	259	0.89	501	380	1.25	10.4	Lc	123B2144
MLY60LDb [1]	5.98	1/5	LBP	F	115V 60 Hz	CSR	R	C-V	102	197	259	0.95	501	380	1.34	10.5	Lc	123B2145
ML80FR	8.1	1/4	LBP	F	115-127V 60 Hz	CSIR	R	C-V	117	223	296	0.75	590	435	1.05	11.97	Ld	123B2146
ML90FR	8.85	1/3	LBP	F	115-127V 60 Hz	CSIR	R	C-V	121	242	323	0.79	642	475	1.11	11.97	Ld	123B2147
MLT90CD [1]	9.09	1/3	LBP	F	115V 60 Hz	RSCR	P	C	164	290	382	1.03	770	561	1.45	11.4	Ld	123B2149
MLT90CDc [1]	9.09	1/3	LBP	S	115V 60 Hz	CSR	R	C-V	159	284	373	0.99	750	549	1.4	11.55	Ld	123B2150
MLT90LD [1]	9.09	1/4	LBP	F	115V 60 Hz	CSR	R	C-V	159	284	373	0.99	750	549	1.4	11.8	Ld	123B2148
MLY12LRa [1] [2]	10.7	3/8	LBP	F	115-127V 60 Hz	CSIR	R	C-V	199	373	478	0.96	866	694	1.34	11.01	Ld	123B2181
MLY12LRb [1] [2]	10.7	3/8	LBP	F	115-127V 60 Hz	CSR	R	C-V	200	369	476	1	890	694	1.41	11.11	Ld	123B2182
MPT12CD [1]	12.1	3/8	LBP	F	115V 60 Hz	RSCR	P	C	225	397	515	1.01	993	752	1.41	12.35	Pd	123B2153
MPT12LD [1]	12.1	3/8	LBP	F	115V 60 Hz	CSR	R	C-V	225	397	515	1.01	993	752	1.41	13.5	Pd	123B2152
MPT14LD [1]	14.32	1/2	LBP	F	115V 60 Hz	CSR	R	C-V	258	453	590	0.96	1156	863	1.35	12.17	Pd	123B2155
MPT16LD [1] [2]	16.1	1/2	LBP	F	115V 60 Hz	CSR	R	C-V	272	492	645	0.91	1270	926	1.3	12.5	Pd	123B2184
MX21FR [2]	20.72	3/4	LBP	F	115-127V 60 Hz	CSR	R	C-V	247	627	768	0.98	1001	1088	1.32	17.56	Xd	123B2185

[1] Green Cooling Models
[2] New Models
[3] Ordering code for single compressors. For pallet packed compressors, please use 123F instead of 123B

Conditions	CECOMAF		ASHRAE	
	LBP	HMBP/HBP	LBP	HMBP/HBP
Evaporating temperature [°C]	-25	5	-23.3	7.2
Condensing temperature [°C]	55	55	55	55
Liquid temperature [°C]	55	55	32	46
Suction temperature [°C]	32	32	32	35
Ambient temperature [°C]	32	32	32	35

For more information and performance with other refrigerants, please refer to Coolselector ® 2 at coolselector.danfoss.com or contact Danfoss.

Technical data and ordering

Light Commercial Refrigeration Compressors

R404A - R507 HMBP | HBP - 60 Hz

Model	Displacement	Power	Application	CPR Cooling	Voltage Frequency	Motor	Starting	Expansion	Refrigeration capacity COP in [w/w] Evaporating temperature [°C] CECOMAF [W] -25	-15	5 [W]	5 [COP]	10	ASHRAE 7.2 [W]	ASHRAE 7.2 [COP]	Weight	Design	Code no. [3]
	[cm³]	[hp]														[Kg]		
ML40TG	4.05	1/6	HMBP	F	200 – 240/220 – 230 V 50/60 Hz	CSIR	R	C-V	155	248	553	1.39	653	694	1.7	9.12	Lc	123B2502
ML45TG	4.56	1/5	HMBP	F	200 – 240/220 – 230 V 50/60 Hz	CSIR	R	C-V	176	277	614	1.42	726	772	1.74	10.57	Lc	123B2504
MLT45RG [1] [2]	4.56	1/5	HMBP	F	200 – 240/220 – 230 V 50/60 Hz	CSIR	R	C-V	197	310	687	1.8	812	865	2.21	10.6	Ld	123B2546
ML60TG	5.68	1/4	HMBP	F	200 – 220/230 V 50/60 Hz	CSIR	R	C-V	193	323	753	1.49	896	949	1.83	10.57	Lc	123B2508
MLY60RGa [1] [2]	5.98	–	HMBP	F	200 – 220/220 – 230 V 50/60 Hz	CSIR	R	C-V	257	407	889	2.05	1048	1108	2.14	10.24	Lc	123B2550
MLY60RGb [1] [2]	5.98	–	HMBP	F	200 – 220/220 – 230 V 50/60 Hz	CSR	R	C-V	258	416	897	1.89	1051	1123	2.33	10.34	Lc	123B2551
ML80TG	7.57	3/8	HMBP	F	200 – 240/220 – 230 V 50/60 Hz	CSIR	R	C-V	263	448	1022	1.59	1208	1285	1.96	11.81	Ld	123B2512
ML90TG	8.85	3/8	HMBP	F	200 – 220/230 V 50/60 Hz	CSIR	R	C-V	329	539	1227	1.54	1454	1544	1.89	11.29	Ld	123B2516
MLT12RG [1] [2]	10.7	3/8	HMBP	F	200 – 240/220 – 230 V 50/60 Hz	CSR	R	C-V	441	702	1553	1.75	1833	1950	2.16	12.24	Ld	123B2532
MPT12RG [1] [2]	12.1	3/8	HBP	F	200 – 240/220 – 230 V 50/60 Hz	CSR	R	C-V	–	795	1725	1.79	2043	2169	2.22	12.89	Pd	123B2703
MPT14RF [1] [2]	14.32	1/2	HBP	F	208 – 230 V 60 Hz	CSR	R	C-V	–	912	1979	1.58	2344	2488	1.95	12.5	Pd	123B2543
MX18TGa [2]	18.4	7/8	HMBP	F	200 – 240/220 – 230 V 50/60 Hz	CSR	R	C-V	644	1090	2507	1.74	2972	3155	2.15	16.24	Xd	123B2541
MX21TGa	20.72	1	HMBP	F	200 – 220/230 V 50/60 Hz	CSR	R	C-V	726	1211	2781	1.72	3299	3501	2.12	17.16	Xd	123B2714
MS18T3	18.1	7/8	HMBP	F	400/440 V 50/60 Hz	3PHASE	P	C-V	491	971	2471	1.82	2959	3125	2.25	20	Sb	123B2520
MS22T3	21.75	1	HMBP	F	400/440 V 50/60 Hz	3PHASE	P	C-V	527	1135	2995	1.94	3595	3792	2.4	20	Sb	123B2522
MS26T3	25.93	1 3/8	HMBP	F	400/440 V 50/60 Hz	3PHASE	P	C-V	785	1508	3705	1.84	4411	4672	2.25	18.6	Sd	123B2525
MS26TG	25.93	1 3/8	HMBP	F	200 – 220/230 V 50/60 Hz	CSR	R	C-V	785	1508	3705	1.93	4411	4672	2.37	23	Sd	123B2524
MS34T3	34.42	1 5/8	HMBP	F	400/440 V 50/60 Hz	3PHASE	P	C-V	1172	2164	4916	1.71	5764	6157	2.1	22.8	Sd	123B2526
MS34TG	34.42	1 5/8	HBP	F	200 – 220/230 V 50/60 Hz	CSR	R	C-V	–	1170	4385	1.63	6578	6157	2.1	22.78	Sd	123B2711
ML60TR	5.68	1/4	HMBP	F	115 – 127 V 60 Hz	CSIR	R	C-V	193	323	753	1.48	896	949	1.83	10.58	Lc	123B2529
MLY60RDa [1]	5.98	1/4	HMBP	F	115 V 60 Hz	CSIR	R	C-V	250	408	900	1.7	1059	1128	2.1	10.55	Lc	123B2527
MLY60RDb [1]	5.98	1/4	HMBP	F	115 V 60 Hz	CSR	R	C-V	250	408	900	1.83	1059	1128	2.27	10.65	Lc	123B2528
MLY80RDa [1]	8.1	3/8	HMBP	F	115 V 60 Hz	CSIR	R	C-V	329	541	1224	1.75	1449	1539	2.15	11.21	Ld	123B2530
MLY80RDb [1]	8.1	3/8	HMBP	F	115 V 60 Hz	CSR	R	C-V	329	541	1224	1.81	1449	1539	2.22	11.31	Ld	123B2531
MLT12RR [1] [2]	10.7	1/2	HMBP	F	115 – 127 V 60 Hz	CSR	R	C-V	463	736	1560	1.75	1825	1951	2.15	11.96	Ld	123B2547
MPT14RD [1] [2] [4]	14.32	1/2	HBP	F	115 – 127 V 60 Hz	CSR	R	C-V	–	957	2028	1.55	2372	2537	1.9	12.1	Pd	123B2544
MX16TE [1] [2]	16.03	7/8	HMBP	F	115 V 60 Hz	CSR	R	C-V	561	949	2185	1.62	2589	2749	2	17.2	Xd	123B2548
MX18TE [1] [2]	18.4	7/8	HMBP	F	115 V 60 Hz	CSR	R	C-V	644	1090	2507	1.62	2972	3155	2	17.2	Xd	123B2545

[1] *Green Cooling Models*
[2] *New Models*
[3] *Ordering code for single compressors. For pallet packed compressors, please use 123F instead of 123B*
[4] *Model under development. Provisional performance/data.*

Conditions	*CECOMAF*		*ASHRAE*	
	LBP	*HMBP/HBP*	*LBP*	*HMBP/HBP*
Evaporating temperature [°C]	*-25*	*5*	*-23.3*	*7.2*
Condensing temperature [°C]	*55*	*55*	*55*	*55*
Liquid temperature [°C]	*55*	*55*	*32*	*46*
Suction temperature [°C]	*32*	*32*	*32*	*35*
Ambient temperature [°C]	*32*	*32*	*32*	*35*

For more information and performance with other refrigerants, please refer to Coolselector ® 2 at coolselector.danfoss.com or contact Danfoss.

Technical data and ordering

Light Commercial Refrigeration Compressors

Natural Refrigerant - R290 LBP | LMBP - 60 Hz

Model [1]	Displacement	Power	Application	CPR Cooling	Voltage Frequency	Motor	Starting	Expansion	Refrigeration capacity COP in [w/w] Evaporating temperature [°C] CECOMAF [W] -40	-30	-25 [W]	-25 [COP]	-10	ASHRAE -23.3 [W]	ASHRAE -23.3 [COP]	Weight	Design	Code no. [3]
	[cm³]	[hp]														[Kg]		
NBC30NR [2]	3.1	1/10	LMBP	F	115 – 127 V 60 Hz	CSIR	R	C-V	46	88	117	1.07	241	159	1.39	5.8	Bd	123B8311
NLY45LRa	4.56	1/6	LBP	F	115 – 127 V 60 Hz	CSIR	R	C-V	70	133	177	1	364	240	1.3	9.21	Lc	123B3129
NLY45LRb	4.56	1/6	LBP	F	115 – 127 V 60 Hz	CSR	R	C-V	68	149	184	1.07	263	240	1.38	9.31	Lc	123B3130
NUY45NRa [2]	4.5	1/6	LMBP	F	115 – 127 V 60 Hz	CSIR	R	C-V	73	159	196	1.13	280	255	1.46	8	Ub	123B3170
NUY45NRb [2]	4.5	1/6	LMBP	F	115 – 127 V 60 Hz	CSIR	R	C-V	73	137	182	1.23	369	245	1.6	9.19	Ub	123B3314
NUT55LRa [2]	5.5	1/5	LBP	F	115 – 127 V 60 Hz	CSIR	R	C-V	110	189	243	1.24	460	324	1.6	9.47	Ub	123B3147
NUT55LRb [2]	5.5	1/5	LBP	F	115 – 127 V 60 Hz	CSR	R	C-V	110	193	247	1.34	463	330	1.73	9.54	Ub	123B3148
NUT55LRc [2]	5.5	1/5	LBP	S	115 – 127 V 60 Hz	CSIR	R	C-V	110	189	243	1.24	460	324	1.6	9.47	Ub	123B3155
NUT55LRd [2]	5.5	1/5	LBP	S	115 – 127 V 60 Hz	CSR	R	C-V	110	193	247	1.34	463	330	1.73	9.54	Ub	123B3156
NLY60LRa	5.98	1/5	LBP	F	115 – 127 V 60 Hz	CSIR	R	C-V	106	200	260	1.1	492	347	1.42	10.07	Lc	123B3131
NLY60LRb	5.98	1/5	LBP	F	115 – 127 V 60 Hz	CSR	R	C-V	106	200	260	1.18	492	347	1.53	10.17	Lc	123B3132
NUT60LRa [2]	6	1/3	LBP	F	115 – 127 V 60 Hz	CSIR	R	C-V	122	207	266	1.24	508	355	1.6	9.4	Ub	123B3149
NUT60LRb [2]	6	1/3	LBP	F	115 – 127 V 60 Hz	CSR	R	C-V	122	213	273	1.34	513	365	1.73	9.5	Ub	123B3150
NUT60LRc [2]	6	1/3	LBP	S	115 – 127 V 60 Hz	CSIR	R	C-V	122	207	266	1.24	508	355	1.6	9.4	Ub	123B3151
NUT60LRd [2]	6	1/3	LBP	S	115 – 127 V 60 Hz	CSR	R	C-V	122	213	273	1.34	513	365	1.73	9.5	Ub	123B3152
NLY75NRa [2]	7.36	1/4	LMBP	F	115 – 127 V 60 Hz	CSIR	R	C-V	129	230	295	1.05	546	394	1.32	10.34	Ld	123B3301
NLY75NRb [2]	7.36	1/4	LMBP	F	115 – 127 V 60 Hz	CSR	R	C-V	137	240	308	1.13	601	411	1.46	10.27	Ld	123B3302
NLY80LRa	8.1	1/4	LBP	F	115 – 127 V 60 Hz	CSIR	R	C-V	139	246	322	1.06	636	432	1.37	9.57	Lc	123B3133
NLY80LRb	8.1	1/4	LBP	F	115 – 127 V 60 Hz	CSR	R	C-V	139	246	322	1.13	636	432	1.46	9.67	Lc	123B3134
NLY90NRa [2]	9.09	1/3	LMBP	F	115 – 127 V 60 Hz	CSIR	R	C-V	153	275	359	1.05	704	483	1.36	11.2	Ld	123B3309
NLY90NRb [2]	9.09	1/3	LMBP	F	115 – 127 V 60 Hz	CSR	R	C-V	153	275	359	1.12	704	483	1.44	11.2	Ld	123B3310
NLY12NRa [2]	12.1	3/8	LMBP	F	115 – 127 V 60 Hz	CSIR	R	C-V	185	328	430	1.12	843	579	1.45	11.65	Ld	123B3303
NLY12NRb [2]	12.1	3/8	LMBP	F	115 – 127 V 60 Hz	CSR	R	C-V	193	342	448	1.2	843	602	1.51	11.65	Ld	123B3304
NPY12LRa	12.1	3/8	LBP	F	115 – 127 V 60 Hz	CSIR	R	C-V	199	362	473	1.04	927	634	1.35	11.77	Pd	123B3137
NPY12LRb	12.1	3/8	LBP	F	115 – 127 V 60 Hz	CSR	R	C-V	199	362	473	1.11	927	634	1.44	11.87	Pd	123B3138
NPT16LR [2]	16.15	3/4	LBP	F	115 – 127 V 60 Hz	CSR	R	C-V	276	478	618	1.08	1204	828	1.41	12.7	Pd	123B3165
NLY75NGa [2]	7.36	1/4	LMBP	F	200 – 220/220 – 230 V 50/60 Hz	CSIR	R	C-V	111	204	270	1.03	544	363	1.34	10.4	Ld	123B3307
NLY75NGb [2]	7.36	1/4	LMBP	F	200 – 220/220 – 230 V 50/60 Hz	CSR	R	C-V	111	205	271	1.11	551	366	1.45	10.5	Ld	123B3308
NLY12NGa [2]	10.7	3/8	LMBP	F	200 – 220/220 – 230 V 50/60 Hz	CSIR	R	C-V	197	339	439	1.09	848	587	1.41	11	Ld	123B3305
NLY12NGb [2]	10.7	3/8	LMBP	F	200 – 220/220 – 230 V 50/60 Hz	CSR	R	C-V	207	342	439	1.15	850	587	1.49	11.1	Ld	123B3306

[1]) Green Cooling Models
[2]) New Models
[3]) Ordering code for single compressors. For pallet packed compressors, please use 123F instead of 123B

Conditions	CECOMAF		ASHRAE	
	LBP	HMBP/HBP	LBP	HMBP/HBP
Evaporating temperature [°C]	-25	5	-23.3	7.2
Condensing temperature [°C]	55	55	55	55
Liquid temperature [°C]	55	55	32	46
Suction temperature [°C]	32	32	32	35
Ambient temperature [°C]	32	32	32	35

For more information and performance with other refrigerants, please refer to Coolselector ® 2 at coolselector.danfoss.com or contact Danfoss.

Technical data and ordering

Light Commercial Refrigeration Compressors

Natural Refrigerant - R290 HMBP | HBP - 60 Hz

Model [1]	Displacement	Power	Application	CPR Cooling	Voltage Frequency	Motor	Starting	Expansion	Refrigeration capacity COP in [w/w] Evaporating temperature [°C] CECOMAF [W] -25	-15	5 [W]	5 [COP]	10	ASHRAE 7.2 [W]	7.2 [COP]	Weight	Design	Code no. [3]
	[cm³]	[hp]														[Kg]		
NLY45RRa	4.56	1/5	HMBP	F	115-127V 60 Hz	CSIR	R	C-V	180	282	618	2.08	729	733	2.41	9.19	Lc	123B3516
NLY45RRb	4.56	1/5	HMBP	F	115-127V 60 Hz	CSR	R	C-V	180	282	618	2.25	729	733	2.61	9.29	Lc	123B3517
NLY60RRa	5.98	1/5	HMBP	F	115-127V 60 Hz	CSIR	R	C-V	245	385	827	2.11	971	978	2.43	9.68	Lc	123B3518
NLY60RRb	5.98	1/5	HMBP	F	115-127V 60 Hz	CSR	R	C-V	245	385	827	2.29	971	978	2.65	9.78	Lc	123B3519
NLY75RRa	7.57	3/8	HMBP	F	115-127V 60 Hz	CSIR	R	C-V	278	445	1010	2.14	1200	1201	2.5	10.07	Ld	123B3520
NLY75RRb	7.57	3/8	HMBP	F	115-127V 60 Hz	CSR	R	C-V	278	454	1034	2.36	1227	1229	2.76	10.17	Ld	123B3521
NLY80RRa	8.1	1/4	HMBP	F	115-127V 60 Hz	CSIR	R	C-V	314	497	1098	2.12	1297	1302	2.45	10.03	Ld	123B3522
NLY80RRb	8.1	1/4	HMBP	F	115-127V 60 Hz	CSR	R	C-V	314	497	1098	2.31	1297	1302	2.67	10.13	Ld	123B3523
NLY90RRa	9.09	1/3	HMBP	F	115-127V 60 Hz	CSIR	R	C-V	353	563	1239	2.03	1462	1469	2.35	10.55	Ld	123B3524
NLY90RRb	9.09	1/3	HMBP	F	115-127V 60 Hz	CSR	R	C-V	353	563	1239	2.21	1462	1469	2.56	10.65	Ld	123B3525
NLT12RR [2]	10.7	1/8	HBP	F	115-127V 60 Hz	CSR	R	C-V	428	683	1504	2.12	1775	1782	2.45	11.2	Ld	123B3533
NLY12RGa [2]	10.7	3/8	HMBP	F	200-220/220-230 V 50/60 Hz	CSIR	R	C-V	418	669	1445	2.07	1696	1709	2.41	12.1	Ld	123B3531
NLY12RGb [2]	10.7	3/8	HMBP	F	200-220/220-230 V 50/60 Hz	CSR	R	C-V	429	679	1469	2.25	1727	1738	2.63	12.2	Ld	123B3532

[1] Green Cooling Models
[2] New Models
[3] Ordering code for single compressors. For pallet packed compressors, please use 123F instead of 123B

Light Commercial Refrigeration Compressors

Natural refrigerant - R600a LBP - 60 Hz

Model [1]	Displacement	Power	Application	CPR Cooling	Voltage Frequency	Motor	Starting	Expansion	Refrigeration capacity COP in [w/w] Evaporating temperature [°C] CECOMAF [W] 35	-30	-25 [W]	-25 [COP]	-10	ASHRAE -23.3 [W]	-23.3 [COP]	Weight	Design	Code no. [3]
	[cm³]	[hp]														[Kg]		
L30CL [2]	3.1	1/14	LBP	S	220 – 240 V 50 / 60 Hz	RSIR	P	C	22	30	41	0.9	86	54	1.14	3.6	SLc	123B8402
B35C [2]	3.5	1/15	LBP	S	220 – 240 V 50 / 60 Hz	RSIR	P	C	24	33	45	0.93	94	60	1.21	4.6	Bc	123B8425
B43CB [2]	4.3	1/12	LBP	S	220 – 240 V 50 / 60 Hz	RSIR	P	C	30	39	52	0.98	110	69	1.25	4.6	Bc	123B8419
B60CBL [2]	6	1/8	LBP	S	220 – 240 V 60 Hz	RSIR	P	C	44	61	83	1.03	174	110	1.32	4.6	Bc	123B8423
HPY12AGa	12.1	1/4	LBP	S	200 – 220 / 220 – 230 V 50 / 60 Hz	RSIR	P	C	92	126	168	1.08	351	223	1.37	10.9	Pc	123B4116
HPY12AGb	12.1	1/4	LBP	S	200 – 220 / 220 – 230 V 50 / 60 Hz	RSCR	P	C	92	126	168	1.08	351	223	1.37	11.01	Pc	123B4117
L22C5L [2]	2.2	1/16	LBP	S	110 – 120 V 60 Hz	RSIR	P	C	16	22	30	0.86	63	39	1.1	3.6	SLb	123B8415
B35C5B [2]	3.5	1/12	LBP	S	110 – 115 60 Hz	RSIR	P	C	26	36	49	0.95	403	65	1.21	4.6	Bb	123B8417
B35C5BL [2]	3.5	1/12	LBP	S	110 – 115 60 Hz	RSCR	P	C	26	36	49	1.1	103	65	1.4	4.6	Bc	123B8418
B43C5B [2]	4.3	1/10	LBP	S	110 – 115V 60 Hz	RSIR	P	C	31	43	58	1.02	121	78	1.3	4.6	Bb	123B8421
B52C5BL [2]	5.2	1/8	LBP	S	110 – 120 V 60 Hz	RSCR	P	C	38	53	71	1.18	149	95	1.5	5.2	Be	123B8422
B60C5BL [2]	6	1/8	LBP	S	110 – 120 V 60 Hz	RSCR	P	C	44	61	82	1.1	172	109	1 2/5	5.2	Bd	123B8424
B43C0 [2]	4.3	1/10	LBP	S	100 V 50 / 60 Hz	RSIR	P	C	31	43	58	0.93	121	78	1 1/6	4.6	Bb	123B8407
B52C0L [2]	5.2	1/8	LBP	S	100 V 50 / 60 Hz	RSIR	P	C	38	53	71	0.86	149	95	1 1/9	4.8	Bc	123B8410
HPY14AJa	14.32	1/5	LBP	S	100 V 50 / 60 Hz	RSIR	P	C	101	139	187	1.06	393	249	1 1/3	10.75	Pd	123B4120
HPY14AJb	14.32	1/5	LBP	S	100 V 50 / 60 Hz	RSCR	P	C	101	139	187	1.12	393	249	1.41	10.86	Pd	123B4121

[1] Green Cooling Models
[2] New Models
[3] Ordering code for single compressors. For pallet packed compressors, please use 123F instead of 123B

Conditions	CECOMAF		ASHRAE	
	LBP	HMBP/HBP	LBP	HMBP/HBP
Evaporating temperature [°C]	-25	5	-23.3	7.2
Condensing temperature [°C]	55	55	55	55
Liquid temperature [°C]	55	55	32	46
Suction temperature [°C]	32	32	32	35
Ambient temperature [°C]	32	32	32	35

For more information and performance with other refrigerants, please refer to Coolselector ® 2 at coolselector.danfoss.com or contact Danfoss.

Diagram and dimensions

Small L range

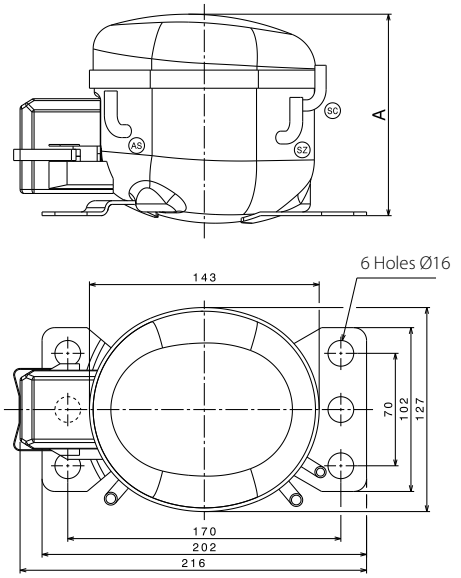

	Designation	Internal diam.
AS	Suction	6.2
SC	Discharge	4.9
SZ	Service	6.2

	A [mm]
Lb	125.5
Lc	129
Ld	138
Le	141

B range

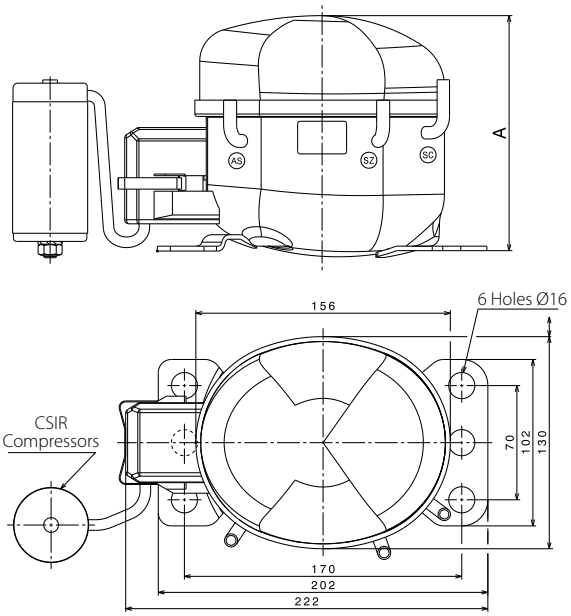

	Designation	Internal diam.
AS	Suction	6.2
SC	Discharge	4.9
SZ	Service	6.2

	A [mm]
Bb	141
Bc	145
Bd	153
Be	159

U range

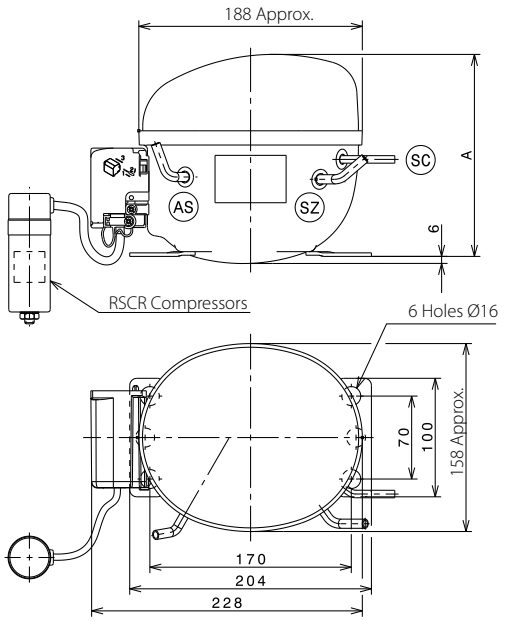

	A [mm]
Ub	173.5
Uc	176.5

Legend	
AS	Suction/Service
SC	Discharge
SZ	Service/Suction

L range

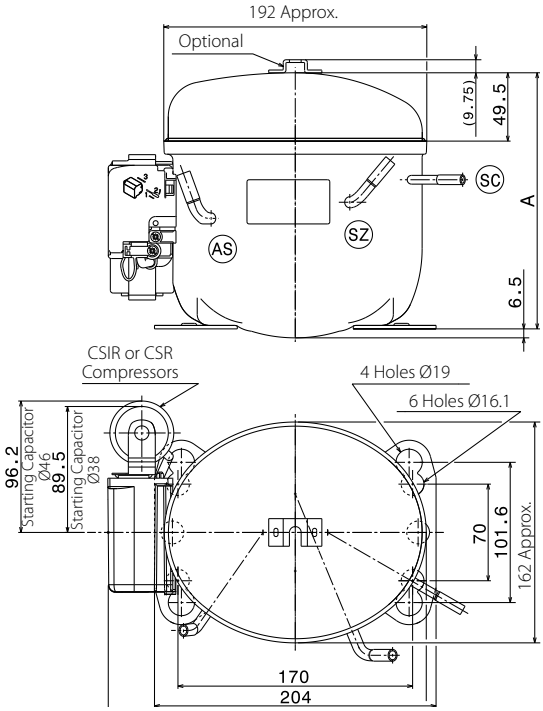

	A [mm]
Lb	175
Lc	185.6
Ld	198

Legend	
AS	Suction/Service
SC	Discharge
SZ	Service/Suction

Diagram and dimensions

P range

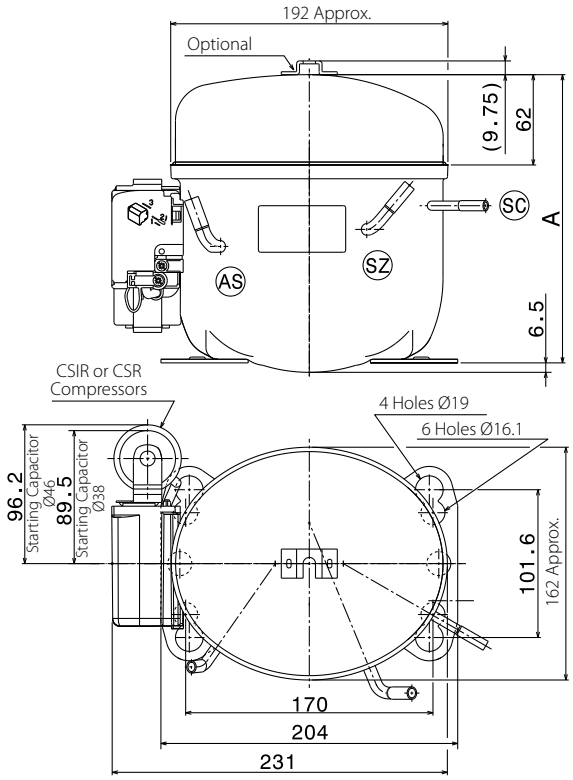

	A [mm]
Pc	198.1
Pd	210.5

Legend	
AS	Suction/Service
SC	Discharge
SZ	Service/Suction

X range

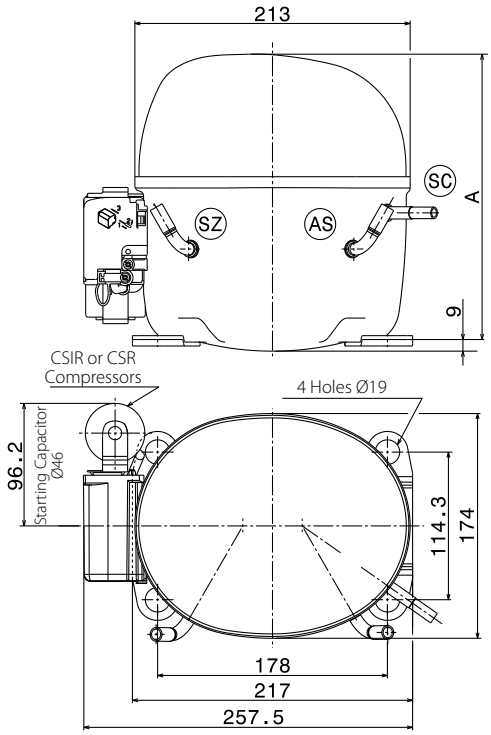

	A [mm]
Xc	215
Xd	221

Legend	
AS	Suction/Service
SC	Discharge
SZ	Service/Suction

S range (Tube)

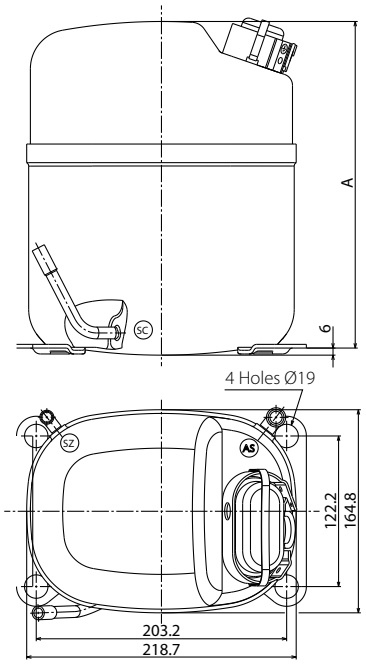

	A [mm]
Sb	252
Sc	265
Sd	276

Legend (Tube)	
AS	Suction/Service
SC	Discharge
SZ	Service/Suction

S range (Valve)

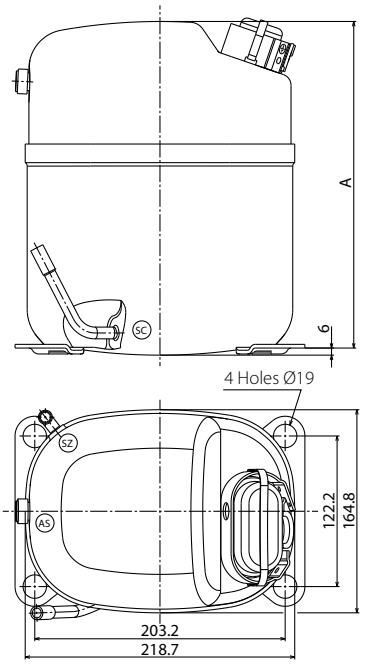

	A [mm]
Sb	252
Sc	265
Sd	276

Legend (Valve)	
AS	Valve Service
SC	Discharge
SZ	Service/Suction

Wiring diagram and electrical assembly

RSIR connection (PTC) small L & B

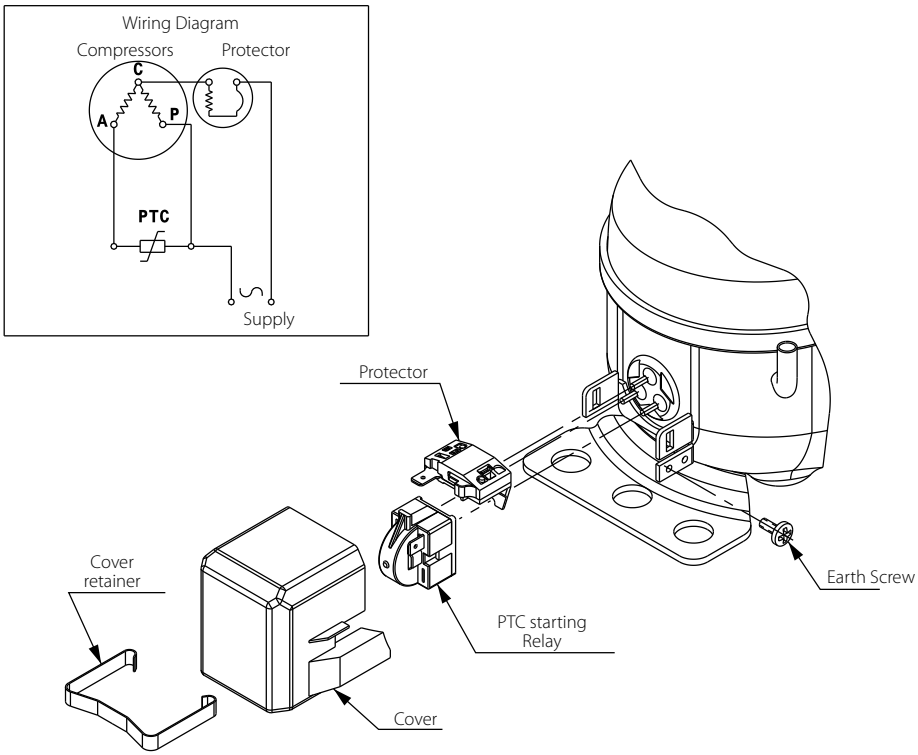

RSIR connection (PTC)

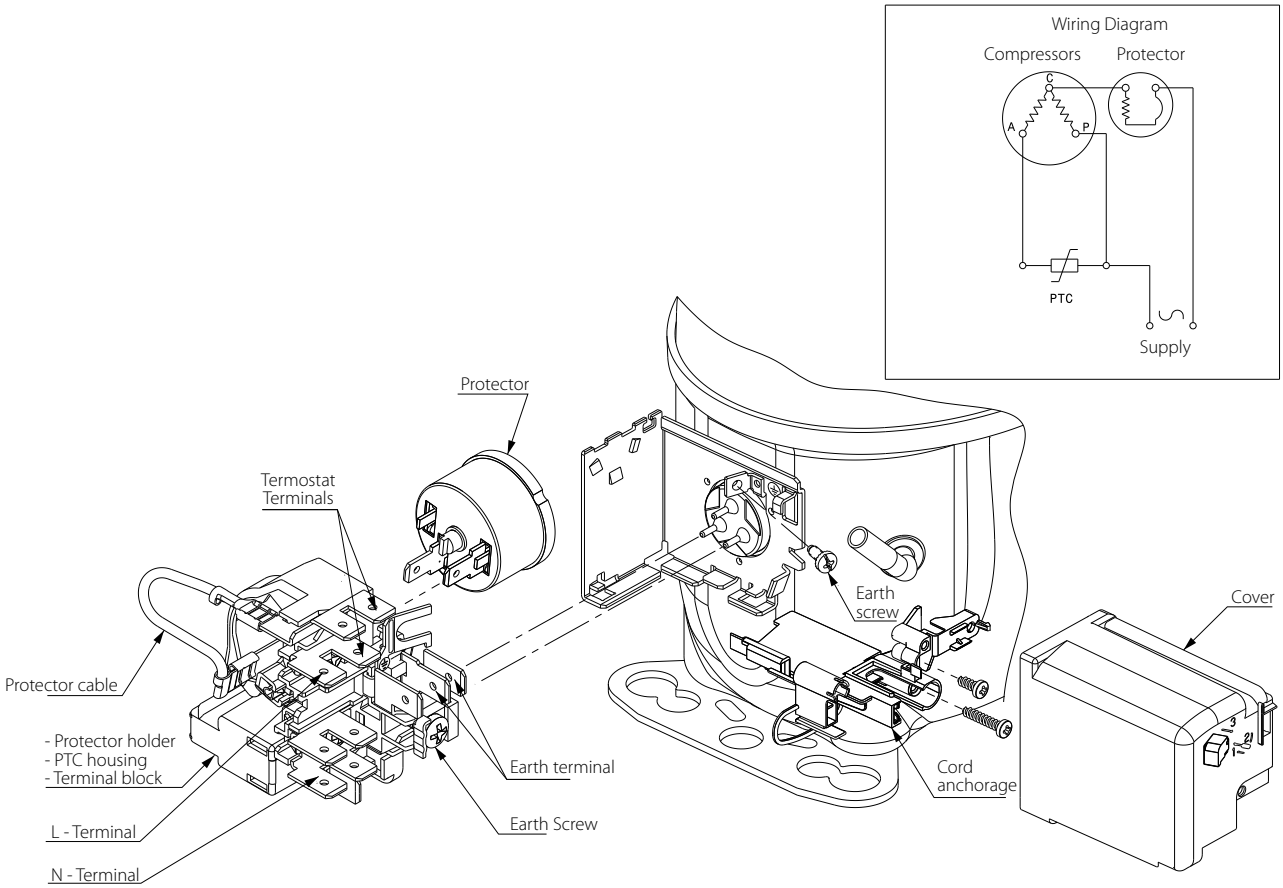

Wiring Diagrams and electrical assembly

RSIR connection (RELAY)

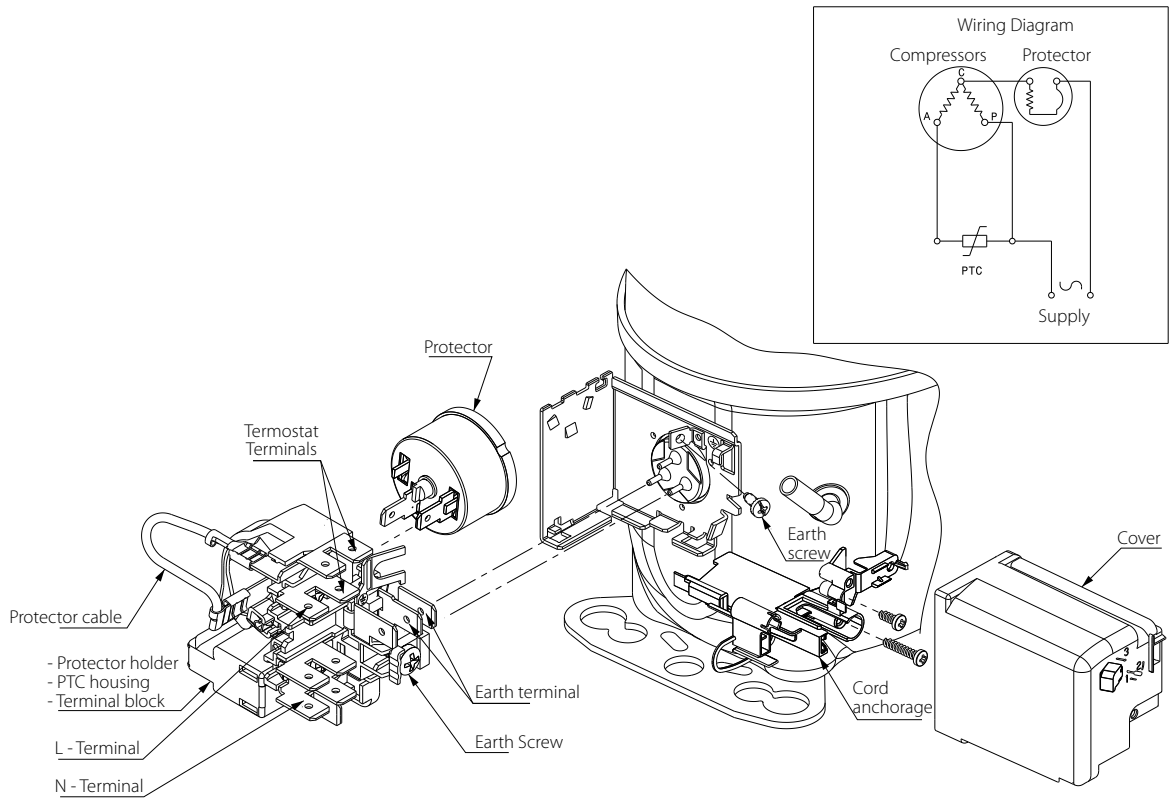

RSCR connection (PTC) small L & B

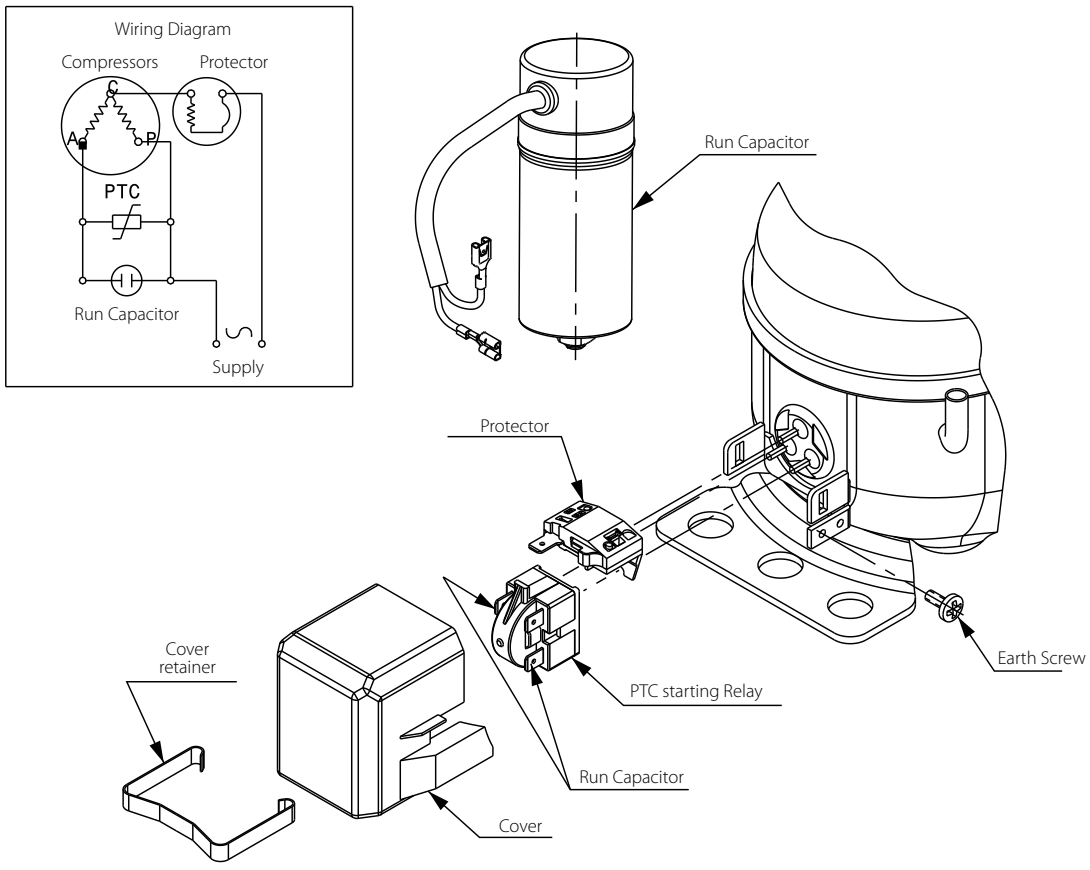

Wiring Diagrams and electrical assembly

RSCR connection

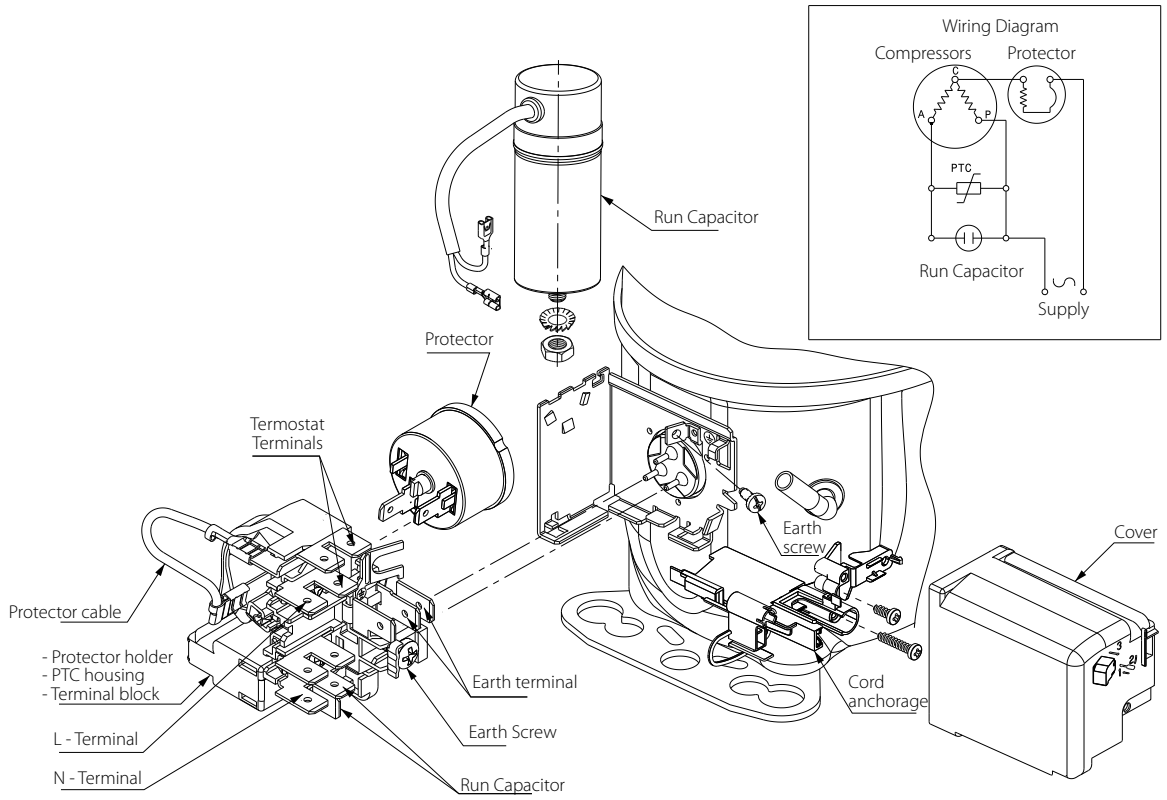

CSIR connection small L & B

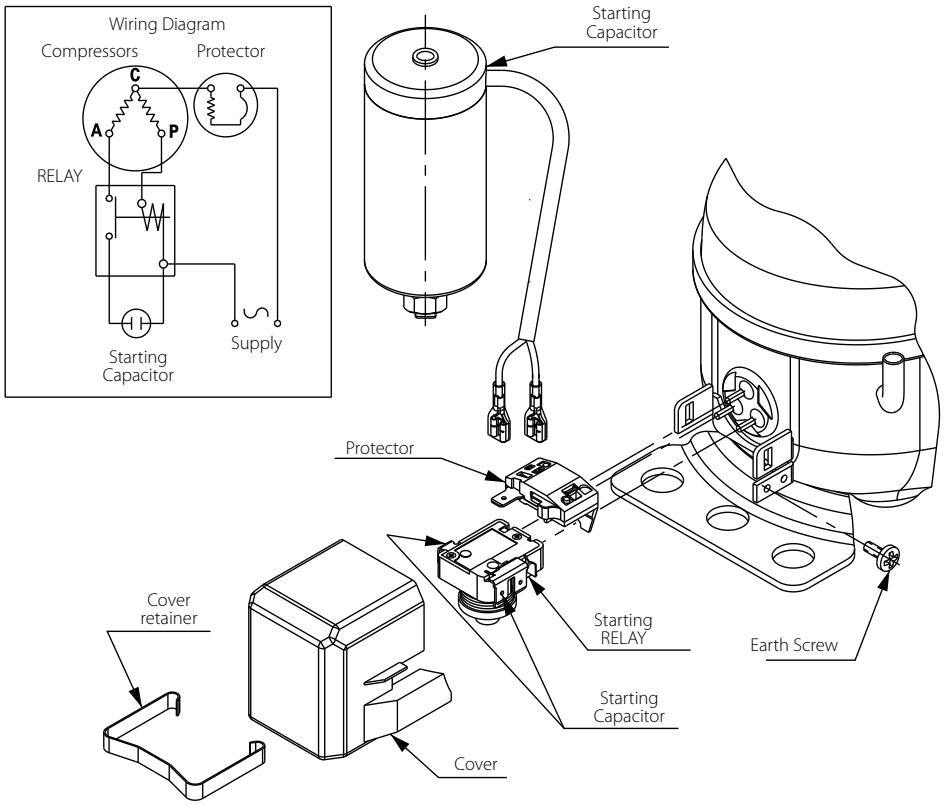

Wiring Diagrams and electrical assembly

CSIR connection

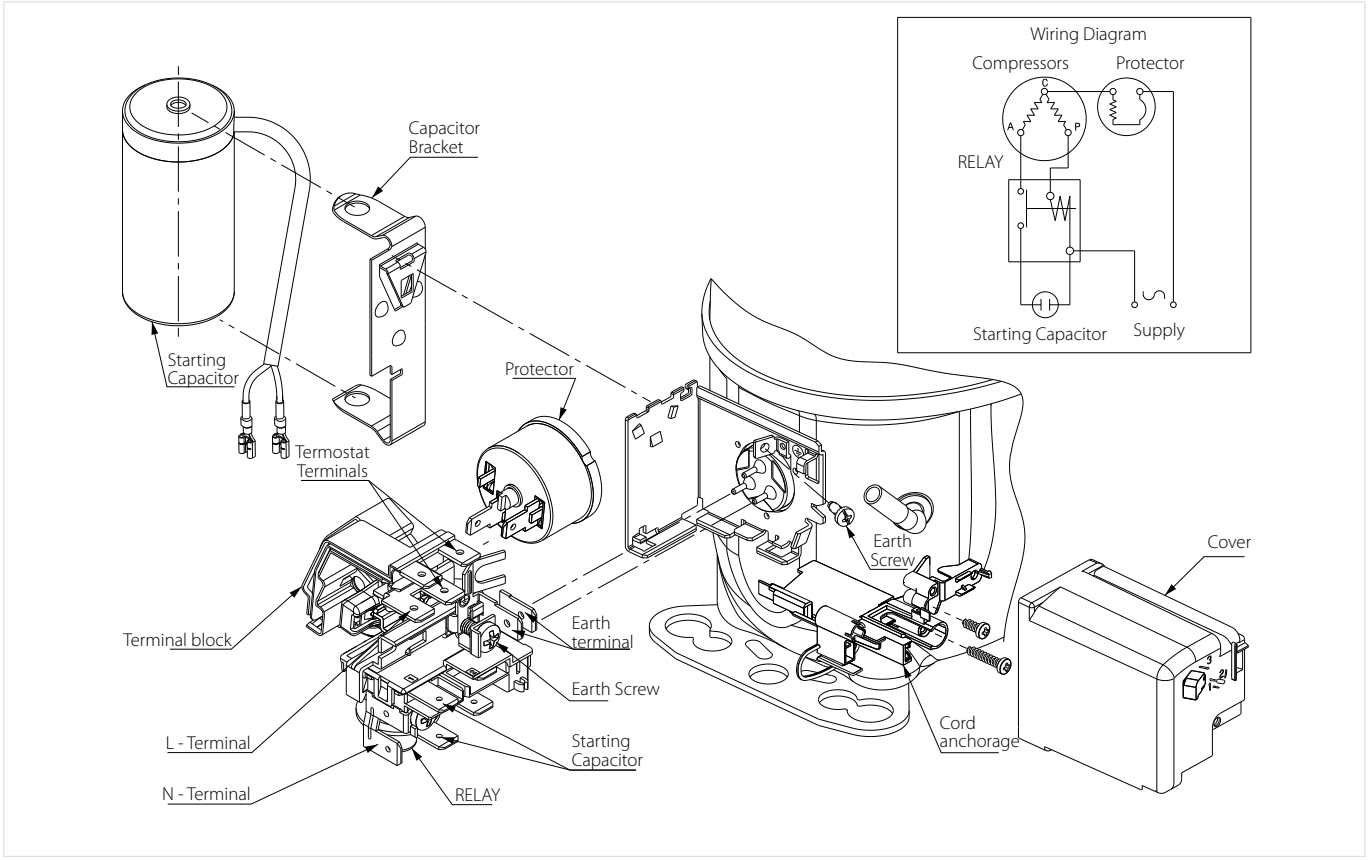

CSIR connection (external connecting box) (S range)

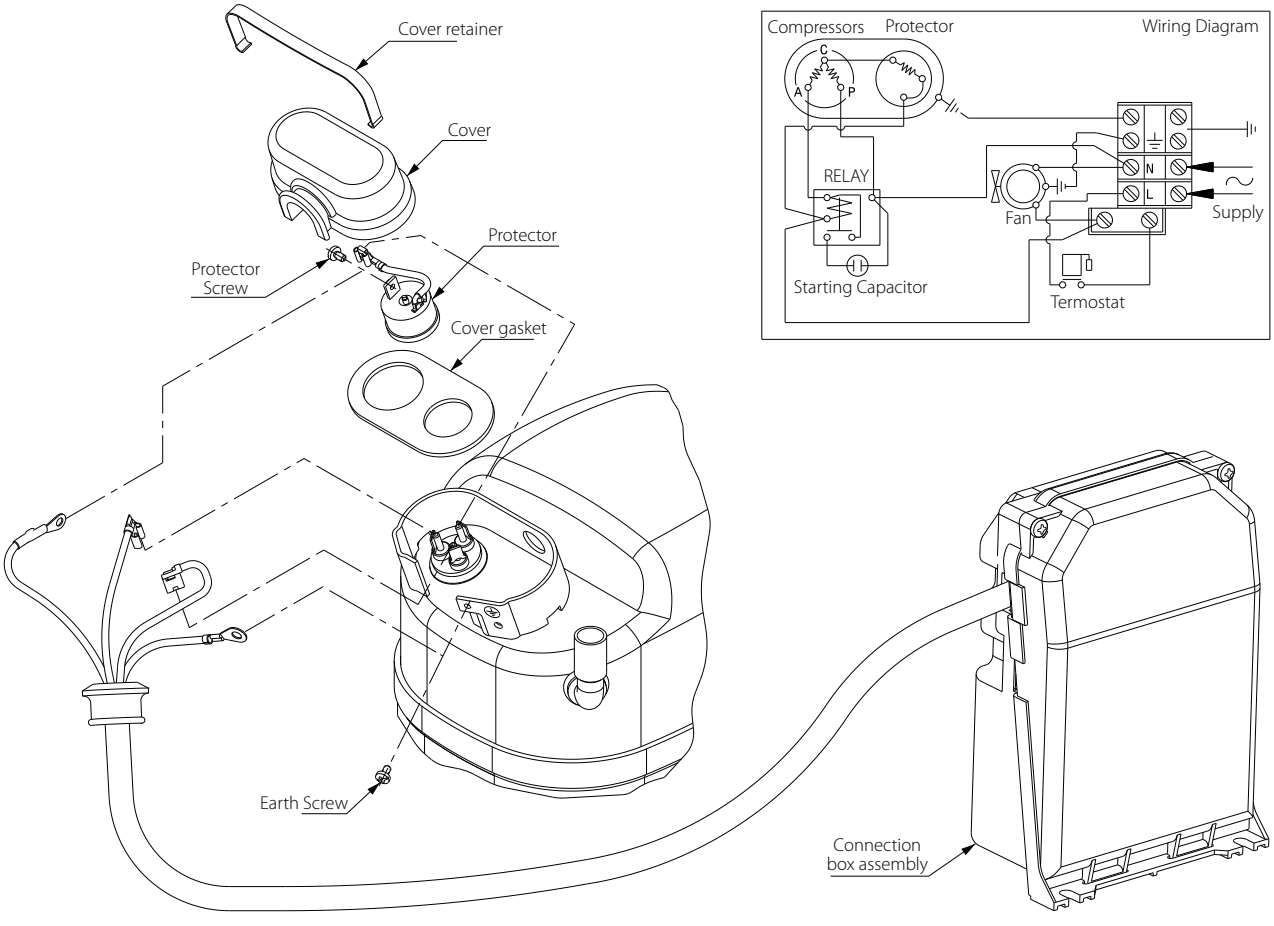

Wiring Diagrams and electrical assembly

CSR connection (current RELAY + NTC)

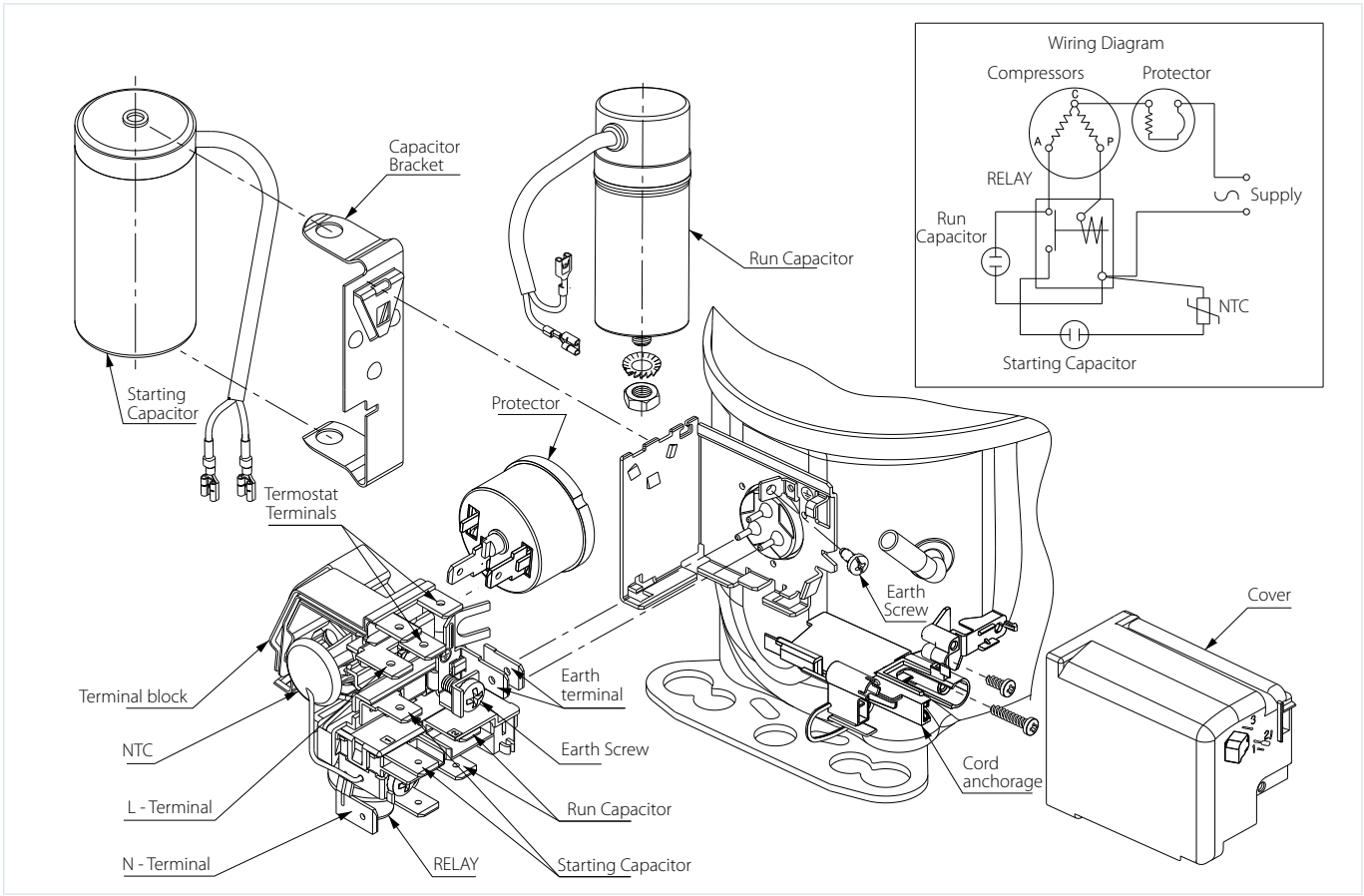

CSR connection (external connecting box) (P, X ranges)

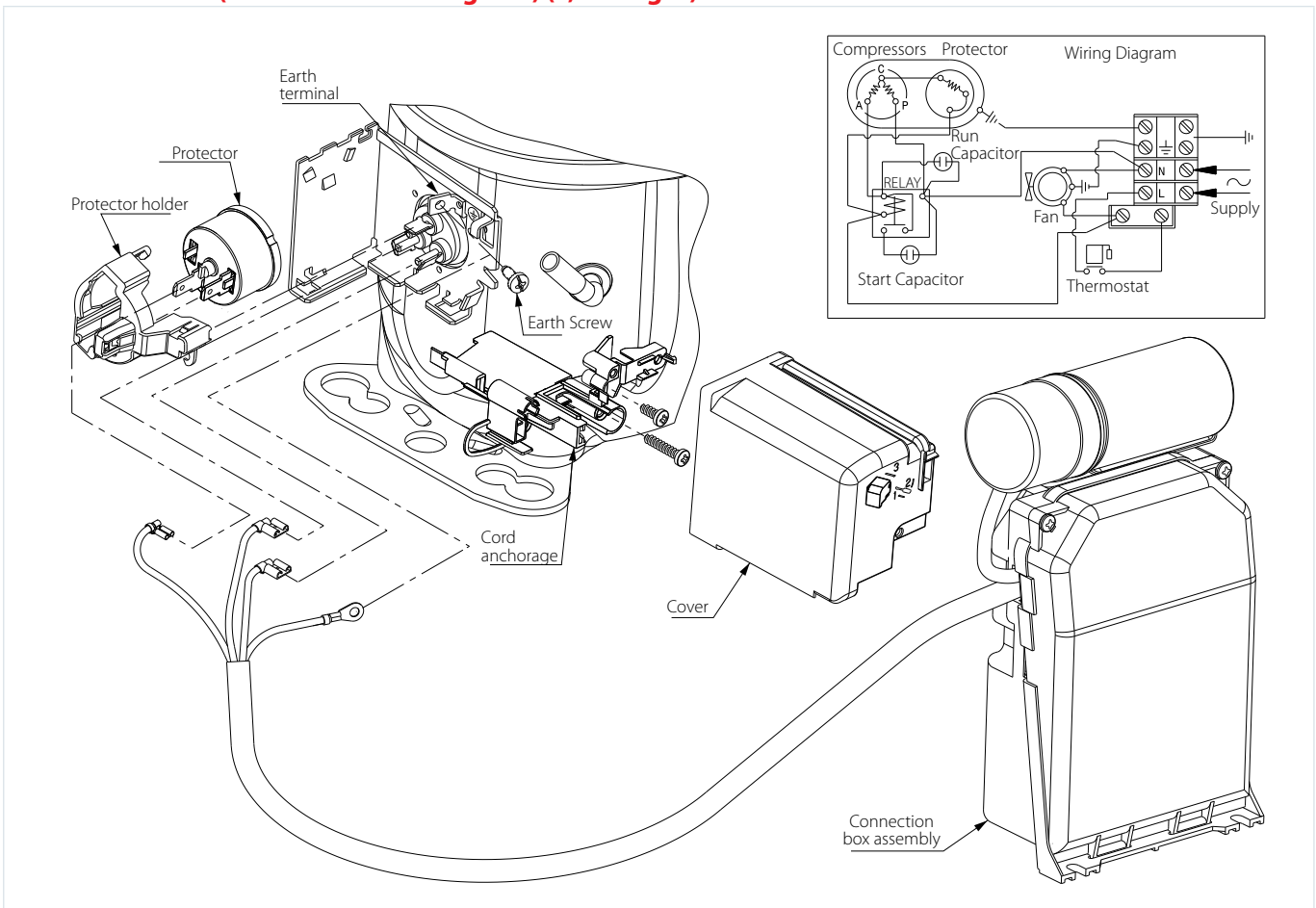

Wiring Diagrams and electrical assembly

CSR connection (external connecting box) (S range)

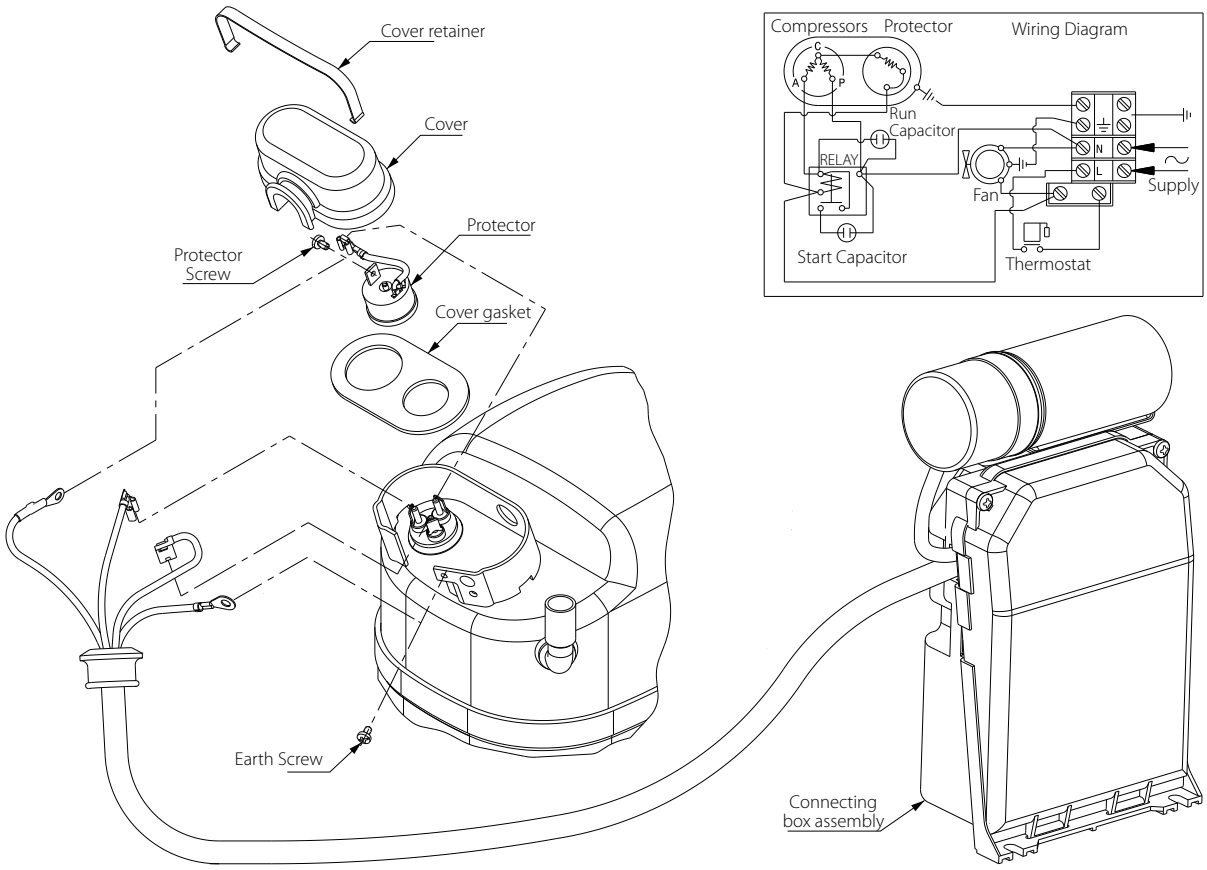

3PH connection (S range)

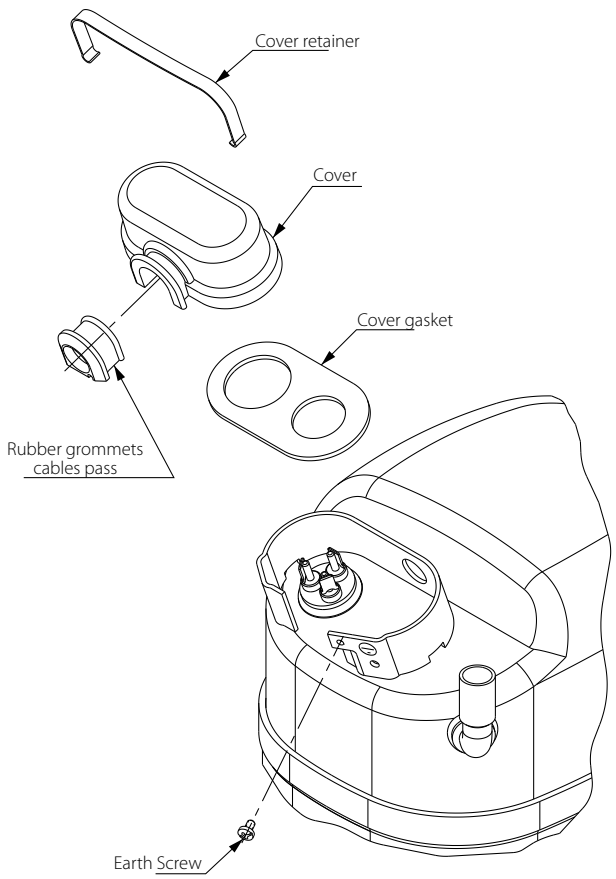

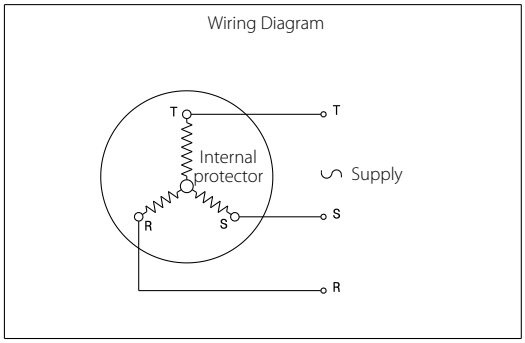

MTZ / NTZ, Reciprocating compressors

Maneurop® MTZ series compressors are of the hermetic reciprocating type and are designed for medium and high evaporating temperature applications.
NTZ are designed for low evaporating temperature applications.

Available in a large variety of single and tandem models for refrigerants R404A, R134a, R407A/F, R407C, R448A, R449A, R452A and R513A, the compressors fit in lots of different applications.



Features
MTZ / NTZ

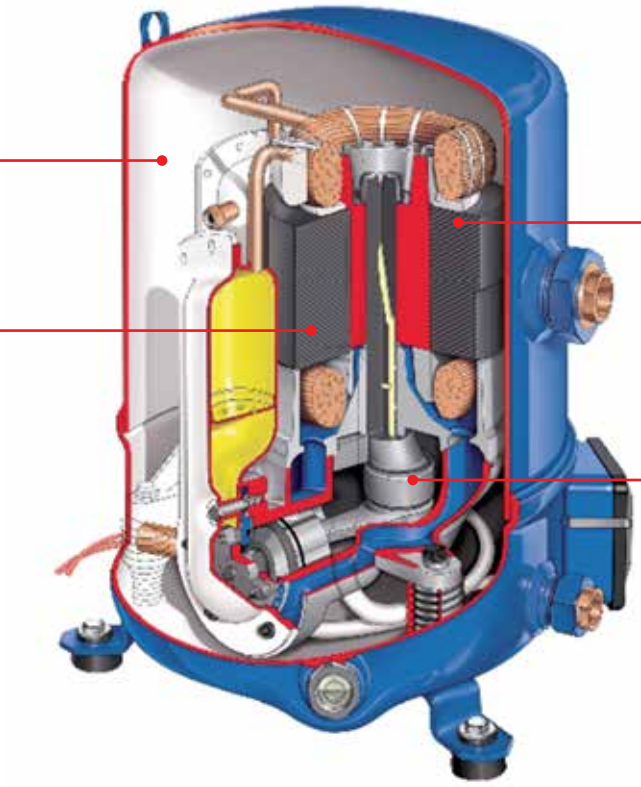

Facts

Applications:
- Walk-in freezers and cold rooms
- Frozen food processing and storage
- Blast freezers
- Low temperature racks
- Ice cream machines
- Display cabinets
- Water chillers
- Large packaged air conditioners
- Operation under extreme conditions
- Versatile
- No need for air circulation around the compressor
- Long lifetime expectancy and reliability

Technical data and ordering

NTZ - Reciprocating compressors

Technical data

Compressor model	Swept volume [cm³/rev]	Displacement		Nominal ratings *)				Number of cylinders	Oil charge litre	Net weight [kg]
				50 Hz		60 Hz				
		50 Hz 2900 rpm [m³/h]	60 Hz 3500 rpm [m³/h]	Cooling capacity [W]	COP [W/W]	Cooling capacity [W]	COP [W/W]			
NTZ048	48	8.40	10.1	995	1.15	1190	1.13	1	0.95	21
NTZ068	68	11.8	14.3	1749	1.15	2065	1.15	1	0.95	23
NTZ096	96	16.7	20.2	2002	1.15	2395	1.16	2	1.8	35
NTZ108	108	18.7	22.6	2465	1.16	2788	1.10	2	1.8	35
NTZ136	136	23.6	28.5	3225	1.11	3739	1.12	2	1.8	35
NTZ215	215	37.5	45.2	4948	1.19	5886	1.19	4	3.9	62
NTZ271	271	47.3	57.0	6955	1.24	8058	1.21	4	3.9	64

*) Motor code 4 operating conditions: R404A, Evap. temp.: -35°C, Cond. temp.: 40°C, RGT: 20°C, SC: 0 K
For full NTZ data details and capacity tables refer to Online Datasheet Generator: www.danfoss.com/odsg

NTZ - Reciprocating compressors

Ordering single pack *)

Compressor model	Motor voltage code				
	1	3	4	5	9
	208-230/1/60	200-230/3/60	460/3/60 400/3/50	230/1/50	380/3/60
NTZ048	120F0293	120F0279	120F0226	120F0228	120F0302
NTZ068	120F0294	120F0280	120F0230	120F0232	120F0303
NTZ096	120F0295	120F0281	120F0234	–	–
NTZ108	120F0296	120F0282	120F0238	–	120F0304
NTZ136	120F0297	120F0283	120F0236	–	120F0305
NTZ215	–	120F0284	120F0240	–	120F0306
NTZ271	–	120F0285	120F0242	–	120F0307

*) Single pack: one compressor packed in a cardboard box 4 cyl.: cardboard box on 1/4 euro pallet

NTZ compressors

Industrial pack***)

Compressor model	Motor voltage code		
	3	4	5
	200-230/3/60	460/3/60 400/3/50	230/1/50
NTZ048	120F0286	120F0227	120F0229
NTZ068	120F0287	120F0231	120F0233
NTZ096	120F0288	120F0235	
NTZ108	120F0289	120F0239	
NTZ136	120F0290	120F0237	
NTZ215	120F0291	120F0241	
NTZ271	120F0292	120F0243	

***) Industrial pack: a full pallet of unpacked compressors

Technical data and ordering

MTZ - Reciprocating compressors

Technical data

Compressor model	Displacement			Nominal		Net weight [kg]	Available motor voltage codes						
	Code	[cm³/rev]	[m³/h] at 2900 rpm	Cyl. number	Oil charge [dm³]		1	3	4	5	6	7	9
MTZ018	JA	30.23	5.26	1	0.95	21	●	●	●	●	–	–	–
MTZ022	JC	38.12	6.63	1	0.95	21	●	●	●	●	●	–	●
MTZ028	JE	48.06	8.36	1	0.95	23	●	●	●	●	●	–	●
MTZ032	JF	53.86	9.37	1	0.95	24	●	●	●	●	●	●	●
MTZ036	JG	60.47	10.52	1	0.95	24	●	●	●	●	●	●	●
MTZ040	JH	67.89	11.81	1	0.95	24	●	●	●	–	●	–	–
MTZ044	HJ	76.22	13.26	2	1.80	35	●	●	●	–	●	●	●
MTZ050	HK	85.64	14.9	2	1.80	35	●	●	●	–	●	●	●
MTZ056	HL	96.13	16.73	2	1.80	37	●	●	●	–	●	●	●
MTZ064	HM	107.71	18.74	2	1.80	37	●	●	●	–	●	–	●
MTZ072	HN	120.94	21.04	2	1.80	40	–	●	●	–	●	–	●
MTZ080	HP	135.78	23.63	2	1.80	40	–	●	●	–	●	–	●
MTZ100	HS	171.26	29.8	4	3.90	60	–	●	●	–	●	●	●
MTZ125	HU	215.44	37.49	4	3.90	64	–	●	●	–	●	●	●
MTZ144	HV	241.87	42.09	4	3.90	67	–	●	●	–	●	●	●
MTZ160	HW	271.55	47.25	4	3.90	67	–	●	●	–	●	●	●

● Available in MTZ

MTZ - Reciprocating compressors

Ordering single pack for R404A / R507 / R134a / R407A / C / F / R448A*) / R449A*) / R452A*)

Compressor model	Code no.						
	1	3	4	5	6	7	9
	208-230/1/60	200-230/3/60	460/3/60 400/3/50	230/1/50	230/3/50	575/3/60 500/3/50	380/3/60
MTZ018	MTZ18-1VI	MTZ18-3VI	MTZ18-4VI	MTZ18-5VI	–	–	–
MTZ022	MTZ22-1VI	MTZ22-3VI	MTZ22-4VI	MTZ22-5VI	MTZ22-6VI	–	MTZ22-9VI
MTZ028	MTZ28-1VI	MTZ28-3VI	MTZ28-4VI	MTZ28-5VI	MTZ28-6VI	–	MTZ28-9VI
MTZ032	MTZ32-1VI	MTZ32-3VI	MTZ32-4VI	MTZ32-5VI	MTZ32-6VI	MTZ32-7VI	MTZ32-9VI
MTZ036	MTZ36-1VI	MTZ36-3VI	MTZ36-4VI	MTZ36-5VI	MTZ36-6VI	MTZ36-7VI	MTZ36-9VI
MTZ040	MTZ40-1VI	MTZ40-3VI	MTZ40-4VI	–	MTZ40-6VI	–	–
MTZ044	MTZ44-1VI	MTZ44-3VI	MTZ44-4VI	–	MTZ44-6VI	MTZ44-7VI	MTZ44-9VI
MTZ050	MTZ50-1VI	MTZ50-3VI	MTZ50-4VI	–	MTZ50-6VI	MTZ50-7VI	MTZ50-9VI
MTZ056	MTZ56-1VI	MTZ56-3VI	MTZ56-4VI	–	MTZ56-6VI	MTZ56-7VI	MTZ56-9VI
MTZ064	MTZ64-1VI	MTZ64-3VI	MTZ64-4VI	–	MTZ64-6VI	–	MTZ64-9VI
MTZ072	–	MTZ72-3VI	MTZ72-4VI	–	MTZ72-6VI	–	MTZ72-9VI
MTZ080	–	MTZ80-3VI	MTZ80-4VI	–	MTZ80-6VI	–	MTZ80-9VI
MTZ100	–	MTZ100-3VI	MTZ100-4VI	–	MTZ100-6VI	MTZ100-7VI	MTZ100-9VI
MTZ125	–	MTZ125-3VI	MTZ125-4VI	–	MTZ125-6VI	MTZ125-7VI	MTZ125-9VI
MTZ144	–	MTZ144-3VI	MTZ144-4VI	–	–	MTZ144-7VI	MTZ144-9VI
MTZ160	–	MTZ160-3VI	MTZ160-4VI	–	MTZ160-6VI	MTZ160-7VI	MTZ160-9VI

VI = Single compressor, threaded oil sight glass, ⅜" oil equalisation connection
**) For the availability, please contact Danfoss.*

Technical data and ordering

MTZ - Reciprocating compressors

Ordering industrial pack for R404A / R507 / R134a / R407A / C / F / R448A*) / R449A*) / R452A*)

Compressor model	Code no.				
	1	3	4	5	9
	208-230/1/60	200-230/3/60	460/3/60 400/3/50	230/1/50	380/3/60
MTZ018	MTZ18-1VM	MTZ18-3VM	MTZ18-4VM	MTZ18-5VM	–
MTZ022	MTZ22-1VM	MTZ22-3VM	MTZ22-4VM	MTZ22-5VM	MTZ22-9VM
MTZ028	MTZ28-1VM	MTZ28-3VM	MTZ28-4VM	MTZ28-5VM	MTZ28-9VM
MTZ032	MTZ32-1VM	MTZ32-3VM	MTZ32-4VM	MTZ32-5VM	MTZ32-9VM
MTZ036	MTZ36-1VM	MTZ36-3VM	MTZ36-4VM	MTZ36-5VM	MTZ36-9VM
MTZ040	MTZ40-1VM	MTZ40-3VM	MTZ40-4VM	–	–
MTZ044	MTZ44-1VM	MTZ44-3VM	MTZ44-4VM	–	MTZ44-9VM
MTZ050	MTZ50-1VM	MTZ50-3VM	MTZ50-4VM	–	MTZ50-9VM
MTZ056	MTZ56-1VM	MTZ56-3VM	MTZ56-4VM	–	MTZ56-9VM
MTZ064	MTZ64-1VM	MTZ64-3VM	MTZ64-4VM	–	MTZ64-9VM
MTZ072	–	MTZ72-3VM	MTZ72-4VM	–	MTZ72-9VM
MTZ080	–	MTZ80-3VM	MTZ80-4VM	–	MTZ80-9VM
MTZ100	–	MTZ100-3VM	MTZ100-4VM	–	MTZ100-9VM
MTZ125	–	MTZ125-3VM	MTZ125-4VM	–	MTZ125-9VM
MTZ144	–	MTZ144-3VM	MTZ144-4VM	–	MTZ144-9VM
MTZ160	–	MTZ160-3VM	MTZ160-4VM	–	MTZ160-9VM

VM = Compressor, threaded oil sight glass, 3/8" oil equalisation connection
**) For the availability, please contact Danfoss.*

MTZ - Reciprocating compressors

Ordering single pack for R22

Compressor model	Code no.						
	1	3	4	5	6	7	9
	208-230/1/60	200-230/3/60	460/3/60 400/3/50	230/1/50	230/3/50	575/3/60 500/3/50	380/3/60
MTZ018	MTZ18-1VI	MTZ18-3VI	MTZ18-4VI	MTZ18-5VI	–	–	–
MTZ022	MTZ22-1VI	MTZ22-3VI	MTZ22-4VI	MTZ22-5VI	MTZ22-6VI	–	MTZ22-9VI
MTZ028	MTZ28-1VI	MTZ28-3VI	MTZ28-4VI	MTZ28-5VI	MTZ28-6VI	–	MTZ28-9VI
MTZ032	MTZ32-1VI	MTZ32-3VI	MTZ32-4VI	MTZ32-5VI	MTZ32-6VI	–	–
MTZ036	MTZ36-1VI	MTZ36-3VI	MTZ36-4VI	MTZ36-5VI	MTZ36-6VI	–	MTZ36-9VI
MTZ040	MTZ40-1VI	MTZ40-3VI	MTZ40-4VI	–	MTZ40-6VI	–	–
MTZ044	–	MTZ44-3VI	MTZ44-4VI	–	–	–	MTZ44-9VI
MTZ050	MTZ50-1VI	MTZ50-3VI	MTZ50-4VI	–	MTZ50-6VI	–	MTZ50-9VI
MTZ056	MTZ56-1VI	MTZ56-3VI	MTZ56-4VI	–	MTZ56-6VI	MTZ56-7VI	MTZ56-9VI
MTZ064	MTZ64-1VI	MTZ64-3VI	MTZ64-4VI	–	MTZ64-6VI	–	MTZ64-9VI
MTZ072	–	MTZ72-3VI	MTZ72-4VI	–	–	–	MTZ72-9VI
MTZ080	–	MTZ80-3VI	MTZ80-4VI	–	MTZ80-6VI	–	MTZ80-9VI
MTZ100	–	MTZ100-3VI	MTZ100-4VI	–	MTZ100-6VI	MTZ100-7VI	MTZ100-9VI
MTZ125	–	MTZ125-3VI	MTZ125-4VI	–	MTZ125-6VI	MTZ125-7VI	MTZ125-9VI
MTZ144	–	MTZ144-3VI	MTZ144-4VI	–	–	MTZ144-7VI	MTZ144-9VI
MTZ160	–	MTZ160-3VI	MTZ160-4VI	–	MTZ160-6VI	MTZ160-7VI	MTZ160-9VI

VI = Single compressor, threaded oil sight glass, 3/8" oil equalisation connection

Technical data and ordering



For more information and performance with other refrigerants, please refer to Coolselector ® 2 at coolselector.danfoss.com or contact Danfoss.

Technical data and ordering

MTZ - R134a - Reciprocating compressors - 50 Hz

Nominal performance data

Compressor model	To	-25		-20		-15		-10		-5		0		5		10		15	
	Tc	Qo	Pe	Qo	Pe	Qo	Pe	Qo	Pe	Qo	Pe	Qo	Pe	Qo	Pe	Qo	Pe	Qo	Pe
MTZ018	45	250	0.46	470	0.54	740	0.61	1070	0.69	1480	0.76	1980	0.82	2570	0.87	3260	0.91	4060	0.93
MTZ022	45	400	0.52	660	0.62	990	0.72	1410	0.81	1920	0.91	2550	0.99	3310	1.06	4210	1.11	5270	1.15
MTZ028	45	600	0.70	930	0.80	1330	0.91	1820	1.02	2440	1.13	3200	1.23	4130	1.34	5250	1.43	6600	1.51
MTZ032	45	670	0.77	1040	0.93	1500	1.09	2080	1.25	2800	1.40	3690	1.54	4790	1.66	6110	1.76	7700	1.83
MTZ036	45	940	0.99	1440	1.14	2030	1.29	2750	1.45	3610	1.60	4620	1.74	5810	1.86	7180	1.97	8770	2.05
MTZ040	45	1140	1.18	1620	1.32	2200	1.47	2910	1.61	3780	1.75	4830	1.89	6080	2.01	7570	2.12	9310	2.21
MTZ044	45	940	0.79	1460	1.05	2110	1.29	2930	1.49	3940	1.67	5190	1.83	6720	1.95	8540	2.05	10720	2.13
MTZ050	45	1060	1.00	1660	1.30	2420	1.57	3360	1.80	4550	2.00	6010	2.17	7790	2.31	9930	2.42	12470	2.51
MTZ056	45	1160	1.11	1760	1.38	2530	1.64	3530	1.88	4790	2.11	6380	2.31	8340	2.49	10730	2.64	13590	2.77
MTZ064	45	1310	1.18	2060	1.54	3000	1.87	4190	2.17	5680	2.43	7500	2.67	9720	2.87	12370	3.04	15510	3.18
MTZ072	45	1610	1.37	2470	1.79	3540	2.16	4870	2.50	6530	2.81	8560	3.08	11030	3.33	13990	3.54	17500	3.74
MTZ080	45	2100	1.84	3110	2.23	4340	2.59	5860	2.93	7720	3.24	9990	3.54	12720	3.80	16000	4.05	19860	4.27
MTZ100	45	2080	2.44	3270	2.84	4760	3.25	6620	3.65	8900	4.02	11680	4.35	15010	4.63	18960	4.84	23590	4.96
MTZ125	45	2670	2.53	4160	3.07	6010	3.63	8310	4.17	11110	4.69	14500	5.16	18540	5.57	23300	5.89	28860	6.09
MTZ144	45	3740	3.78	5620	4.31	7930	4.85	10730	5.40	14100	5.94	18110	6.46	22840	6.93	28350	7.34	34720	7.67
MTZ160	45	4230	4.09	6300	4.64	8830	5.23	11900	5.84	15590	6.45	19990	7.06	25190	7.65	31250	8.21	38280	8.72

To : Evaporating temperature in [°C]
Tc : Condensing temperature in [°C]
Qo: Cooling Capacity in [W]
Pe : Power input in [kW]
Subcooling : 0 K
Superheat : 10 K
Voltage : 400 V /3 /50 Hz

MTZ - R134a - Reciprocating compressors - 60 Hz

Nominal performance data

Compressor model	To	-25		-20		-15		-10		-5		0		5		10		15	
	Tc	Qo	Pe	Qo	Pe	Qo	Pe	Qo	Pe	Qo	Pe	Qo	Pe	Qo	Pe	Qo	Pe	Qo	Pe
MTZ018	45	310	0.55	560	0.64	890	0.74	1290	0.83	1780	0.91	2370	0.98	3080	1.04	3910	1.09	4870	1.11
MTZ022	45	480	0.63	790	0.74	1190	0.86	1690	0.98	2310	1.09	3060	1.19	3970	1.27	5050	1.33	6330	1.38
MTZ028	45	720	0.84	1120	0.97	1590	1.09	2190	1.22	2930	1.35	3840	1.48	4950	1.60	6300	1.71	7920	1.81
MTZ032	45	800	0.92	1250	1.11	1800	1.31	2490	1.50	3360	1.68	4430	1.85	5750	1.99	7340	2.11	9230	2.19
MTZ036	45	1130	1.18	1720	1.37	2440	1.55	3300	1.74	4330	1.92	5550	2.09	6970	2.24	8620	2.36	10520	2.46
MTZ040	45	1370	1.42	1940	1.59	2640	1.76	3500	1.93	4540	2.10	5800	2.26	7300	2.41	9080	2.54	11170	2.65
MTZ044	45	1130	0.95	1750	1.26	2530	1.54	3510	1.79	4730	2.01	6230	2.19	8060	2.35	10250	2.46	12860	2.55
MTZ050	45	1270	1.20	1990	1.56	2900	1.88	4040	2.16	5460	2.40	7210	2.61	9350	2.78	11920	2.91	14970	3.01
MTZ056	45	1400	1.33	2110	1.66	3040	1.97	4230	2.26	5750	2.53	7660	2.77	10010	2.99	12870	3.17	16300	3.32
MTZ064	45	1580	1.42	2470	1.85	3600	2.24	5030	2.60	6810	2.92	9010	3.20	11670	3.45	14850	3.65	18610	3.81
MTZ072	45	1930	1.64	2970	2.14	4250	2.60	5850	3.00	7830	3.37	10270	3.70	13230	3.99	16790	4.25	21000	4.49
MTZ080	45	2520	2.21	3730	2.67	5210	3.11	7030	3.51	9260	3.89	11980	4.24	15270	4.56	19200	4.86	23840	5.13
MTZ100	45	2500	2.93	3930	3.41	5710	3.90	7940	4.37	10680	4.82	14010	5.22	18010	5.56	22750	5.81	28310	5.95
MTZ125	45	3200	3.03	4990	3.69	7210	4.35	9970	5.01	13330	5.63	17400	6.20	22240	6.68	27960	7.06	34630	7.31
MTZ144	45	4490	4.54	6750	5.17	9520	5.82	12880	6.48	16920	7.13	21730	7.75	27400	8.31	34020	8.80	41670	9.21
MTZ160	45	5080	4.91	7560	5.57	10600	6.28	14280	7.00	18710	7.74	23990	8.47	30220	9.18	37510	9.85	45940	10.47

To : Evaporating temperature in [°C]
Tc : Condensing temperature in [°C]
Qo: Cooling Capacity in [W]
Pe : Power input in [kW]
Subcooling : 0 K
Superheat : 10 K
Voltage : 460 V /3 /60 Hz

For more information and performance with other refrigerants, please refer to Coolselector ® 2 at coolselector.danfoss.com or contact Danfoss.

Technical data and ordering

MTZ - R404A - Reciprocating compressors - 50 Hz

Nominal performance data

Compressor model	To	-30		-25		-20		-15		-10		-5		0		5		10	
	Tc	Qo	Pe	Qo	Pe	Qo	Pe	Qo	Pe	Qo	Pe	Qo	Pe	Qo	Pe	Qo	Pe	Qo	Pe
MTZ018	45	390	0.69	650	0.83	980	0.96	1400	1.09	1900	1.21	2520	1.31	3250	1.40	4110	1.47	5120	1.53
MTZ022	45	640	0.86	980	1.03	1410	1.19	1960	1.34	2620	1.48	3440	1.61	4410	1.72	5550	1.82	6880	1.90
MTZ028	45	760	1.05	1250	1.30	1850	1.53	2570	1.75	3430	1.96	4450	2.14	5640	2.31	7040	2.45	8640	2.56
MTZ032	45	1040	1.20	1580	1.46	2240	1.71	3030	1.94	3980	2.16	5110	2.36	6440	2.55	7980	2.71	9760	2.86
MTZ036	45	1300	1.50	1930	1.78	2690	2.06	3600	2.33	4670	2.58	5930	2.81	7400	3.01	9100	3.19	11050	3.34
MTZ040	45	1600	1.70	2320	2.05	3160	2.37	4160	2.67	5330	2.95	6700	3.20	8290	3.44	10130	3.65	12230	3.84
MTZ044	45	1360	1.60	2100	1.94	2990	2.25	4070	2.52	5370	2.77	6910	3.00	8740	3.20	10890	3.38	13370	3.54
MTZ050	45	1700	1.94	2500	2.29	3510	2.62	4750	2.93	6260	3.22	8070	3.48	10220	3.71	12740	3.91	15680	4.07
MTZ056	45	1730	2.04	2620	2.43	3710	2.81	5060	3.17	6710	3.51	8690	3.83	11060	4.11	13840	4.36	17090	4.57
MTZ064	45	2160	2.32	3200	2.83	4480	3.32	6060	3.78	7980	4.20	10300	4.60	13070	4.96	16330	5.28	20150	5.55
MTZ072	45	2550	2.74	3670	3.25	5080	3.75	6810	4.23	8920	4.69	11450	5.11	14450	5.51	17970	5.87	22050	6.19
MTZ080	45	3170	3.15	4530	3.85	6170	4.48	8130	5.07	10470	5.61	13230	6.11	16470	6.57	20240	7.01	24580	7.41
MTZ100	45	3240	4.01	4930	4.80	6960	5.53	9390	6.18	12280	6.76	15700	7.26	19710	7.70	24370	8.06	29760	8.34
MTZ125	45	4660	5.16	6620	6.02	9060	6.86	12060	7.67	15710	8.44	20080	9.16	25250	9.83	31300	10.44	38310	10.98
MTZ144	45	5700	6.08	8060	7.05	10920	8.00	14370	8.91	18490	9.78	23380	10.60	29110	11.36	35770	12.06	43450	12.69
MTZ160	45	6280	6.80	8870	7.95	12010	9.04	15790	10.08	20310	11.08	25640	12.05	31900	13.01	39160	13.97	47540	14.95

To : Evaporating temperature in [°C]
Tc : Condensing temperature in [°C]
Qo: Cooling Capacity in [W]
Pe : Power input in [kW]
Subcooling : 0 K
Superheat : 10 K
Voltage : 400 V /3 /50 Hz

MTZ - R404A - Reciprocating compressors - 60 Hz

Nominal performance data

Compressor model	To	-30		-25		-20		-15		-10		-5		0		5		10	
	Tc	Qo	Pe	Qo	Pe	Qo	Pe	Qo	Pe	Qo	Pe	Qo	Pe	Qo	Pe	Qo	Pe	Qo	Pe
MTZ018	45	340	0.78	730	1.06	1190	1.29	1750	1.48	2410	1.63	3190	1.76	4100	1.85	5160	1.91	6380	1.96
MTZ022	45	820	1.08	1280	1.30	1840	1.51	2510	1.70	3330	1.87	4300	2.03	5440	2.17	6770	2.29	8320	2.39
MTZ028	45	1240	1.42	1840	1.71	2540	1.98	3370	2.23	4350	2.45	5500	2.66	6830	2.84	8360	2.99	10110	3.13
MTZ032	45	1350	1.52	1980	1.84	2740	2.15	3660	2.44	4750	2.72	6050	2.97	7580	3.19	9370	3.37	11440	3.51
MTZ036	45	1400	1.67	2160	2.01	3070	2.35	4170	2.69	5480	3.03	7040	3.35	8860	3.67	10990	3.97	13440	4.24
MTZ040	45	1660	1.93	2520	2.32	3550	2.69	4790	3.05	6260	3.42	8010	3.77	10050	4.12	12420	4.47	15150	4.82
MTZ044	45	1470	1.85	2440	2.33	3600	2.78	4990	3.19	6650	3.55	8600	3.87	10890	4.15	13540	4.38	16580	4.56
MTZ050	45	1970	2.29	3060	2.80	4370	3.27	5930	3.69	7780	4.06	9970	4.38	12520	4.66	15470	4.90	18870	5.10
MTZ056	45	2160	2.41	3430	3.07	4940	3.64	6750	4.14	8870	4.58	11360	4.98	14250	5.34	17580	5.69	21380	6.03
MTZ064	45	2630	2.83	3990	3.52	5610	4.15	7560	4.70	9860	5.21	12580	5.67	15760	6.10	19440	6.51	23680	6.90
MTZ072	45	3160	3.44	4640	4.16	6440	4.83	8610	5.45	11210	6.01	14280	6.53	17900	7.00	22100	7.41	26940	7.77
MTZ080	45	3940	4.02	5580	4.91	7560	5.72	9930	6.47	12760	7.16	16090	7.80	20000	8.40	24540	8.96	29760	9.51
MTZ100	45	3790	4.61	5800	5.63	8220	6.54	11110	7.35	14530	8.06	18560	8.69	23270	9.23	28730	9.70	35000	10.10
MTZ125	45	5820	6.37	8290	7.47	11230	8.52	14710	9.52	18820	10.45	23650	11.30	29260	12.06	35750	12.72	43190	13.28
MTZ144	45	7210	7.40	10030	8.66	13400	9.83	17430	10.91	22200	11.95	27810	12.94	34360	13.92	41950	14.90	50680	15.91
MTZ160	45	8000	8.38	11040	9.64	14670	10.93	18990	12.23	24120	13.52	30160	14.80	37220	16.05	45400	17.26	54800	18.40

To : Evaporating temperature in [°C]
Tc : Condensing temperature in [°C]
Qo: Cooling Capacity in [W]
Pe : Power input in [kW]
Subcooling : 0 K
Superheat : 10 K
Voltage : 460 V /3 /60 Hz

For more information and performance with other refrigerants, please refer to Coolselector ® 2 at coolselector.danfoss.com or contact Danfoss.

Technical data and ordering

MTZ - R407A - Reciprocating compressors - 50 Hz

Nominal performance data

Compressor model	To	-30		-25		-20		-15		-10		-5		0		5		10	
	Tc	Qo	Pe	Qo	Pe	Qo	Pe	Qo	Pe	Qo	Pe	Qo	Pe	Qo	Pe	Qo	Pe	Qo	Pe
MTZ018	45	260	0.49	510	0.62	830	0.76	1240	0.90	1740	1.02	2340	1.14	3070	1.24	3930	1.32	4940	1.39
MTZ022	45	430	0.60	760	0.77	1190	0.94	1730	1.10	2390	1.26	3200	1.40	4170	1.53	5300	1.64	6630	1.72
MTZ028	45	510	0.74	990	0.99	1570	1.23	2280	1.46	3130	1.67	4140	1.86	5330	2.03	6720	2.19	8330	2.32
MTZ032	45	700	0.85	1240	1.11	1890	1.37	2690	1.61	3630	1.84	4760	2.05	6080	2.25	7630	2.43	9400	2.59
MTZ036	45	870	1.06	1510	1.35	2270	1.64	3180	1.92	4260	2.19	5520	2.44	7000	2.66	8700	2.86	10670	3.03
MTZ040	45	1070	1.21	1830	1.56	2700	1.90	3710	2.22	4890	2.51	6250	2.79	7840	3.04	9670	3.27	11760	3.47
MTZ044	45	920	1.13	1630	1.47	2520	1.79	3590	2.09	4890	2.36	6440	2.60	8270	2.83	10410	3.03	12890	3.20
MTZ050	45	1140	1.36	1940	1.73	2950	2.08	4190	2.42	5700	2.73	7520	3.02	9670	3.28	12190	3.50	15120	3.69
MTZ056	45	1160	1.43	2030	1.84	3120	2.23	4470	2.62	6120	2.98	8100	3.32	10460	3.63	13240	3.91	16480	4.15
MTZ064	45	1450	1.64	2480	2.15	3760	2.64	5340	3.12	7270	3.57	9600	3.99	12360	4.38	15620	4.73	19420	5.03
MTZ072	45	1710	1.93	2850	2.46	4260	2.98	6010	3.49	8130	3.98	10670	4.44	13680	4.87	17190	5.27	21260	5.61
MTZ080	45	2130	2.23	3520	2.91	5190	3.57	7180	4.18	9540	4.76	12330	5.30	15590	5.81	19360	6.28	23710	6.72
MTZ100	45	2170	2.82	3860	3.64	5880	4.41	8300	5.10	11200	5.74	14620	6.31	18640	6.80	23310	7.22	28700	7.56
MTZ125	45	3130	3.65	5130	4.56	7610	5.45	10650	6.33	14330	7.17	18710	7.96	23890	8.70	29950	9.36	36940	9.95
MTZ144	45	3830	4.33	6270	5.37	9190	6.39	12700	7.37	16870	8.32	21780	9.21	27540	10.04	34220	10.81	41910	11.49
MTZ160	45	4220	4.84	6900	6.05	10120	7.21	13960	8.33	18520	9.42	23890	10.48	30180	11.51	37470	12.53	45860	13.53

To : Evaporating temperature in [°C]
Tc : Condensing temperature in [°C]
Qo: Cooling Capacity in [W]
Pe : Power input in [kW]
Subcooling : 0 K
Superheat : 10 K
Voltage : 400 V /3 /50 Hz

MTZ - R407A - Reciprocating compressors - 60 Hz

Nominal performance data

Compressor model	To	-30		-25		-20		-15		-10		-5		0		5		10	
	Tc	Qo	Pe	Qo	Pe	Qo	Pe	Qo	Pe	Qo	Pe	Qo	Pe	Qo	Pe	Qo	Pe	Qo	Pe
MTZ018	45	310	0.58	620	0.75	1000	0.91	1490	1.07	2080	1.22	2810	1.36	3690	1.48	4720	1.59	5930	1.66
MTZ022	45	520	0.72	910	0.93	1420	1.13	2070	1.32	2870	1.51	3840	1.68	5000	1.83	6360	1.96	7950	2.07
MTZ028	45	620	0.89	1190	1.19	1890	1.48	2740	1.75	3760	2.00	4970	2.23	6400	2.44	8070	2.62	9990	2.78
MTZ032	45	840	1.05	1490	1.38	2270	1.70	3220	2.00	4360	2.28	5710	2.55	7300	2.79	9150	3.01	11290	3.21
MTZ036	45	1050	1.27	1810	1.62	2730	1.97	3820	2.31	5110	2.62	6630	2.92	8400	3.19	10440	3.44	12800	3.64
MTZ040	45	1290	1.45	2190	1.87	3230	2.28	4450	2.66	5860	3.02	7510	3.34	9410	3.65	11600	3.92	14110	4.16
MTZ044	45	1100	1.35	1960	1.76	3020	2.15	4310	2.50	5870	2.83	7730	3.12	9920	3.39	12490	3.63	15470	3.84
MTZ050	45	1370	1.63	2330	2.08	3540	2.50	5030	2.90	6840	3.28	9020	3.62	11600	3.93	14630	4.20	18140	4.43
MTZ056	45	1400	1.72	2440	2.21	3750	2.68	5370	3.14	7340	3.58	9720	3.99	12560	4.36	15890	4.69	19770	4.98
MTZ064	45	1740	1.97	2980	2.58	4520	3.17	6410	3.74	8730	4.29	11520	4.79	14840	5.26	18750	5.67	23300	6.03
MTZ072	45	2050	2.32	3420	2.95	5120	3.57	7210	4.18	9760	4.77	12810	5.33	16410	5.85	20630	6.32	25510	6.73
MTZ080	45	2560	2.67	4230	3.50	6230	4.28	8620	5.02	11450	5.71	14800	6.37	18700	6.97	23240	7.54	28450	8.06
MTZ100	45	2610	3.39	4630	4.37	7050	5.29	9960	6.13	13440	6.89	17540	7.57	22360	8.16	27970	8.67	34440	9.08
MTZ125	45	3750	4.38	6150	5.47	9130	6.55	12780	7.59	17190	8.60	22460	9.55	28670	10.44	35930	11.24	44330	11.94
MTZ144	45	4600	5.19	7520	6.45	11030	7.67	15240	8.85	20240	9.98	26140	11.05	33050	12.05	41070	12.97	50300	13.79
MTZ160	45	5060	5.81	8280	7.26	12140	8.65	16750	10.00	22220	11.30	28670	12.57	36210	13.81	44960	15.03	55030	16.24

To : Evaporating temperature in [°C]
Tc : Condensing temperature in [°C]
Qo: Cooling Capacity in [W]
Pe : Power input in [kW]
Subcooling : 0 K
Superheat : 10 K
Voltage : 460 V /3 /60 Hz

For more information and performance with other refrigerants, please refer to Coolselector ® 2 at coolselector.danfoss.com or contact Danfoss.

Technical data and ordering

MTZ - R407F - Reciprocating compressors - 50 Hz

Nominal performance data

Compressor model	To	-25		-20		-15		-10		-5		0		5		10	
	Tc	Qo	Pe	Qo	Pe	Qo	Pe	Qo	Pe	Qo	Pe	Qo	Pe	Qo	Pe	Qo	Pe
MTZ018	45	540	0.70	890	0.83	1320	0.96	1850	1.08	2490	1.20	3260	1.30	4170	1.39	5230	1.44
MTZ022	45	810	0.86	1270	1.02	1840	1.18	2540	1.33	3400	1.48	4410	1.61	5620	1.72	7030	1.80
MTZ028	45	1030	1.09	1660	1.31	2420	1.53	3320	1.76	4390	1.96	5650	2.15	7130	2.31	8830	2.42
MTZ032	45	1310	1.22	2010	1.46	2850	1.70	3860	1.94	5050	2.17	6450	2.38	8080	2.56	9970	2.71
MTZ036	45	1610	1.49	2430	1.76	3390	2.04	4520	2.31	5860	2.57	7410	2.81	9210	3.01	11290	3.16
MTZ040	45	1930	1.71	2850	2.02	3920	2.34	5170	2.65	6620	2.94	8300	3.21	10250	3.44	12480	3.63
MTZ044	45	1750	1.62	2690	1.92	3830	2.21	5200	2.49	6830	2.75	8760	2.99	11020	3.19	13660	3.35
MTZ050	45	2090	1.88	3160	2.24	4470	2.58	6060	2.90	7970	3.19	10240	3.44	12910	3.67	16020	3.85
MTZ056	45	2180	2.03	3340	2.40	4770	2.78	6500	3.16	8590	3.51	11080	3.84	14020	4.11	17460	4.33
MTZ064	45	2670	2.38	4040	2.84	5700	3.31	7730	3.78	10180	4.22	13100	4.63	16540	4.97	20580	5.25
MTZ072	45	3060	2.74	4570	3.21	6410	3.71	8640	4.21	11310	4.69	14480	5.14	18190	5.53	22520	5.85
MTZ080	45	3790	3.23	5560	3.84	7650	4.44	10140	5.04	13070	5.60	16500	6.13	20490	6.60	25100	7.01
MTZ100	45	4090	4.01	6270	4.73	8840	5.42	11900	6.07	15500	6.66	19740	7.18	24680	7.59	30400	7.89
MTZ125	45	5520	5.07	8160	5.88	11360	6.73	15220	7.58	19830	8.41	25290	9.17	31700	9.84	39130	10.38
MTZ144	45	6730	5.92	9840	6.85	13530	7.81	17910	8.78	23090	9.72	29160	10.60	36220	11.36	44370	11.99
MTZ160	45	7420	6.70	10820	7.75	14870	8.84	19670	9.95	25320	11.05	31950	12.13	39650	13.16	48540	14.12

To : Evaporating temperature in [°C]
Tc : Condensing temperature in [°C]
Qo: Cooling Capacity in [W]
Pe : Power input in [kW]
Subcooling : 0 K
Superheat : 10 K
Voltage : 400 V /3 /50 Hz

MTZ - R407F - Reciprocating compressors - 60 Hz

Nominal performance data

Compressor model	To	-25		-20		-15		-10		-5		0		5		10	
	Tc	Qo	Pe	Qo	Pe	Qo	Pe	Qo	Pe	Qo	Pe	Qo	Pe	Qo	Pe	Qo	Pe
MTZ018	45	650	0.84	1060	0.99	1580	1.15	2220	1.30	2990	1.44	3910	1.57	5010	1.66	6280	1.73
MTZ022	45	970	1.03	1520	1.22	2210	1.41	3050	1.60	4070	1.77	5300	1.93	6740	2.06	8430	2.16
MTZ028	45	1240	1.30	1990	1.57	2900	1.84	3980	2.11	5270	2.36	6780	2.58	8550	2.77	10600	2.91
MTZ032	45	1580	1.46	2420	1.75	3430	2.04	4630	2.33	6060	2.60	7740	2.85	9700	3.07	11960	3.25
MTZ036	45	1930	1.79	2910	2.12	4070	2.45	5430	2.78	7030	3.09	8890	3.37	11060	3.61	13550	3.79
MTZ040	45	2320	2.05	3420	2.43	4700	2.81	6200	3.18	7940	3.53	9970	3.85	12300	4.13	14980	4.36
MTZ044	45	2100	1.95	3230	2.30	4600	2.66	6240	2.99	8190	3.30	10510	3.58	13230	3.82	16390	4.01
MTZ050	45	2500	2.26	3790	2.69	5370	3.09	7270	3.48	9560	3.82	12290	4.13	15490	4.40	19220	4.62
MTZ056	45	2610	2.44	4010	2.88	5720	3.34	7800	3.79	10310	4.22	13300	4.60	16830	4.94	20950	5.19
MTZ064	45	3210	2.85	4840	3.40	6840	3.97	9280	4.53	12210	5.07	15710	5.55	19850	5.97	24690	6.30
MTZ072	45	3680	3.28	5490	3.85	7690	4.45	10370	5.05	13570	5.63	17370	6.17	21830	6.64	27030	7.02
MTZ080	45	4540	3.87	6670	4.60	9180	5.33	12170	6.05	15680	6.73	19800	7.36	24590	7.92	30120	8.41
MTZ100	45	4910	4.81	7520	5.67	10610	6.50	14270	7.29	18600	8.00	23690	8.61	29610	9.11	36480	9.47
MTZ125	45	6630	6.08	9790	7.06	13630	8.07	18260	9.10	23800	10.09	30350	11.00	38040	11.80	46960	12.45
MTZ144	45	8080	7.11	11810	8.22	16240	9.37	21500	10.54	27710	11.67	34990	12.72	43460	13.64	53240	14.39
MTZ160	45	8900	8.04	12990	9.30	17850	10.61	23600	11.94	30390	13.27	38340	14.56	47580	15.79	58250	16.94

To : Evaporating temperature in [°C]
Tc : Condensing temperature in [°C]
Qo: Cooling Capacity in [W]
Pe : Power input in [kW]
Subcooling : 0 K
Superheat : 10 K
Voltage : 460 V /3 /60 Hz

For more information and performance with other refrigerants, please refer to Coolselector ® 2 at coolselector.danfoss.com or contact Danfoss.

Technical data and ordering

MTZ - R407C - Reciprocating compressors - 50 Hz

Nominal performance data

Compressor model	To	-15		-10		-5		0		5		10		15	
	Tc	Qo	Pe	Qo	Pe	Qo	Pe	Qo	Pe	Qo	Pe	Qo	Pe	Qo	Pe
MTZ018	45	1080	0.82	1610	0.94	2230	1.04	2980	1.13	3850	1.20	4860	1.25	6030	1.30
MTZ022	45	1620	1.07	2280	1.24	3060	1.39	3970	1.50	5030	1.60	6260	1.67	7670	1.73
MTZ028	45	1980	1.30	2850	1.52	3870	1.72	5070	1.89	6470	2.03	8080	2.13	9940	2.21
MTZ032	45	2480	1.50	3430	1.75	4530	1.95	5820	2.12	7310	2.27	9030	2.38	11000	2.48
MTZ036	45	2990	1.81	4040	2.10	5240	2.36	6620	2.57	8210	2.73	10030	2.86	12100	2.95
MTZ040	45	3560	2.18	4720	2.48	6070	2.74	7630	2.98	9420	3.18	11480	3.35	13820	3.48
MTZ044	45	3260	1.97	4510	2.28	6050	2.54	7910	2.76	10140	2.94	12770	3.10	15830	3.24
MTZ050	45	3850	2.34	5300	2.70	7020	3.00	9070	3.24	11480	3.45	14300	3.61	17560	3.75
MTZ056	45	4150	2.50	5790	2.90	7740	3.24	10080	3.53	12830	3.77	16050	3.98	19790	4.16
MTZ064	45	5080	2.91	6860	3.35	9020	3.73	11600	4.05	14670	4.32	18260	4.57	22430	4.79
MTZ072	45	5770	3.49	7830	3.96	10320	4.39	13280	4.77	16770	5.11	20840	5.39	25550	5.63
MTZ080	45	6670	4.08	9040	4.64	11830	5.12	15100	5.54	18930	5.89	23350	6.19	28450	6.45
MTZ100	45	7200	4.81	10100	5.47	13590	6.04	17730	6.52	22600	6.92	28290	7.26	34860	7.56
MTZ125	45	10530	6.13	14180	6.97	18480	7.69	23510	8.31	29390	8.84	36190	9.30	44020	9.69
MTZ144	45	11580	7.07	15600	7.92	20370	8.70	25970	9.42	32520	10.04	40110	10.58	48860	11.01
MTZ160	45	14060	8.21	18490	9.20	23730	10.09	29910	10.91	37150	11.68	45560	12.42	55270	13.16

To : Evaporating temperature in [°C]
Tc : Condensing temperature in [°C]
Qo: Cooling Capacity in [W]
Pe : Power input in [kW]
Subcooling : 0 K
Superheat : 10 K
Voltage : 400 V /3 /50 Hz

MTZ - R407C - Reciprocating compressors - 60 Hz

Nominal performance data

Compressor model	To	-15		-10		-5		0		5		10		15	
	Tc	Qo	Pe	Qo	Pe	Qo	Pe	Qo	Pe	Qo	Pe	Qo	Pe	Qo	Pe
MTZ018	45	1560	1.03	2230	1.20	3010	1.32	3920	1.42	4970	1.49	6180	1.54	7570	1.57
MTZ022	45	2130	1.32	2910	1.52	3840	1.68	4930	1.82	6200	1.93	7670	2.02	9370	2.10
MTZ028	45	2900	1.77	3860	1.96	5000	2.14	6380	2.30	8010	2.45	9950	2.58	12210	2.71
MTZ032	45	3290	1.94	4320	2.17	5550	2.37	7030	2.57	8780	2.74	10850	2.89	13260	3.02
MTZ036	45	3590	2.21	4720	2.54	6110	2.86	7800	3.15	9810	3.41	12190	3.63	14960	3.80
MTZ040	45	3960	2.45	5420	2.81	7130	3.18	9130	3.54	11450	3.90	14140	4.23	17230	4.52
MTZ044	45	4170	2.47	5790	2.87	7700	3.20	9940	3.46	12550	3.67	15570	3.83	19040	3.95
MTZ050	45	4870	2.92	6550	3.32	8570	3.66	10980	3.95	13860	4.19	17260	4.38	21240	4.53
MTZ056	45	5560	3.24	7470	3.69	9770	4.07	12530	4.40	15790	4.69	19630	4.96	24110	5.22
MTZ064	45	6080	3.64	8330	4.14	10940	4.56	13990	4.93	17520	5.27	21590	5.58	26250	5.89
MTZ072	45	7200	4.25	9710	4.88	12670	5.43	16120	5.91	20140	6.33	24780	6.70	30120	7.03
MTZ080	45	7780	4.80	10570	5.47	13820	6.08	17640	6.63	22160	7.15	27480	7.63	33700	8.10
MTZ100	45	9540	5.95	13030	6.79	17160	7.47	22020	8.02	27720	8.48	34350	8.88	42010	9.25
MTZ125	45	13460	7.78	17720	8.75	22720	9.63	28550	10.42	35330	11.15	43170	11.82	52170	12.45
MTZ144	45	15250	8.78	20220	9.90	25920	10.88	32450	11.73	39940	12.47	48480	13.11	58200	13.68
MTZ160	45	17150	9.98	22430	11.22	28610	12.42	35830	13.54	44230	14.57	53930	15.46	65090	16.19

To : Evaporating temperature in [°C]
Tc : Condensing temperature in [°C]
Qo: Cooling Capacity in [W]
Pe : Power input in [kW]
Subcooling : 0 K
Superheat : 10 K
Voltage : 460 V /3 /60 Hz

For more information and performance with other refrigerants, please refer to Coolselector ® 2 at coolselector.danfoss.com or contact Danfoss.

Technical data and ordering

MTZ - R448A - Reciprocating compressors - 50 Hz

Nominal performance data

Compressor model	To	-30		-25		-20		-15		-10		-5		0		5		10	
	Tc	Qo	Pe	Qo	Pe	Qo	Pe	Qo	Pe	Qo	Pe	Qo	Pe	Qo	Pe	Qo	Pe	Qo	Pe
MTZ018	45	260	0.48	550	0.64	900	0.78	1330	0.92	1840	1.04	2440	1.14	3160	1.22	3980	1.28	4930	1.32
MTZ022	45	790	0.85	1110	0.98	1500	1.11	1980	1.24	2580	1.37	3320	1.49	4220	1.60	5310	1.70	6610	1.79
MTZ028	45	980	1.05	1370	1.21	1850	1.37	2440	1.53	3180	1.69	4100	1.84	5210	1.97	6560	2.10	8170	2.20
MTZ032	45	1080	1.10	1550	1.30	2110	1.49	2810	1.68	3660	1.87	4700	2.05	5960	2.22	7470	2.37	9250	2.50
MTZ036	45	1180	1.27	1720	1.51	2400	1.76	3240	2.00	4250	2.24	5460	2.46	6900	2.66	8590	2.84	10550	3.00
MTZ040	45	1340	1.49	1960	1.77	2740	2.06	3710	2.34	4880	2.62	6280	2.88	7930	3.12	9870	3.33	12110	3.50
MTZ044	45	1130	1.34	1820	1.64	2670	1.94	3720	2.22	5010	2.49	6570	2.73	8430	2.95	10650	3.12	13240	3.26
MTZ050	45	1250	1.43	2050	1.80	3020	2.18	4230	2.54	5700	2.87	7490	3.18	9620	3.44	12150	3.64	15110	3.78
MTZ056	45	1390	1.57	2280	1.99	3360	2.40	4700	2.79	6340	3.16	8320	3.50	10690	3.78	13500	4.01	16800	4.16
MTZ064	45	1740	1.87	2730	2.33	3960	2.78	5480	3.22	7330	3.62	9540	3.99	12150	4.30	15210	4.56	18740	4.75
MTZ072	45	2000	2.17	3140	2.70	4560	3.23	6310	3.73	8440	4.20	10980	4.62	13990	4.99	17510	5.29	21580	5.52
MTZ080	45	2840	2.82	4140	3.36	5730	3.91	7670	4.45	10010	4.97	12800	5.45	16090	5.89	19930	6.27	24380	6.57
MTZ100	45	2770	3.28	4250	3.91	6120	4.55	8450	5.19	11310	5.79	14780	6.34	18940	6.82	23850	7.21	29600	7.49
MTZ125	45	3740	4.19	5720	5.01	8230	5.85	11370	6.67	15220	7.44	19890	8.15	25470	8.77	32060	9.26	39760	9.60
MTZ144	45	5150	5.02	7430	6.01	10210	6.93	13550	7.81	17560	8.63	22320	9.42	27920	10.16	34430	10.86	41960	11.54
MTZ160	45	5890	5.80	8530	6.88	11710	7.93	15550	8.92	20140	9.87	25590	10.77	32010	11.62	39480	12.42	48120	13.16

To : Evaporating temperature in [°C]
Tc : Condensing temperature in [°C]
Qo: Cooling Capacity in [W]
Pe : Power input in [kW]
Subcooling : 0 K
Superheat : 10 K
Voltage : 400 V /3 /50 Hz

MTZ - R448A - Reciprocating compressors - 60 Hz

Nominal performance data

Compressor model	To	-30		-25		-20		-15		-10		-5		0		5		10	
	Tc	Qo	Pe	Qo	Pe	Qo	Pe	Qo	Pe	Qo	Pe	Qo	Pe	Qo	Pe	Qo	Pe	Qo	Pe
MTZ018	45	310	0.58	660	0.76	1080	0.94	1590	1.10	2210	1.24	2930	1.37	3790	1.47	4780	1.54	5920	1.58
MTZ022	45	950	1.02	1330	1.18	1790	1.33	2370	1.49	3090	1.64	3980	1.79	5070	1.92	6380	2.04	7940	2.15
MTZ028	45	1180	1.26	1640	1.45	2220	1.64	2930	1.84	3820	2.02	4920	2.20	6260	2.37	7880	2.52	9810	2.64
MTZ032	45	1300	1.32	1860	1.56	2540	1.79	3370	2.02	4390	2.25	5640	2.46	7150	2.66	8960	2.84	11100	3.00
MTZ036	45	1410	1.52	2070	1.82	2880	2.11	3880	2.41	5100	2.69	6550	2.95	8280	3.19	10310	3.41	12660	3.60
MTZ040	45	1600	1.79	2350	2.13	3290	2.47	4450	2.81	5850	3.14	7530	3.45	9520	3.74	11840	3.99	14530	4.21
MTZ044	45	1360	1.61	2190	1.97	3210	2.32	4470	2.66	6010	2.98	7880	3.28	10120	3.53	12780	3.75	15890	3.91
MTZ050	45	1510	1.71	2460	2.16	3630	2.61	5070	3.05	6840	3.45	8980	3.81	11550	4.12	14580	4.37	18130	4.54
MTZ056	45	1670	1.89	2730	2.39	4040	2.88	5640	3.35	7610	3.79	9990	4.19	12830	4.54	16210	4.81	20160	5.00
MTZ064	45	2090	2.25	3270	2.80	4760	3.34	6580	3.86	8800	4.35	11450	4.79	14580	5.17	18250	5.48	22490	5.70
MTZ072	45	2400	2.60	3770	3.25	5480	3.87	7580	4.48	10120	5.04	13180	5.55	16790	5.99	21010	6.35	25890	6.62
MTZ080	45	3410	3.39	4960	4.04	6870	4.69	9200	5.34	12010	5.96	15360	6.53	19310	7.06	23920	7.52	29250	7.89
MTZ100	45	3330	3.91	5110	4.69	7350	5.47	10140	6.23	13570	6.95	17740	7.61	22720	8.18	28620	8.65	35510	8.99
MTZ125	45	4490	4.77	6870	5.87	9880	6.96	13640	8.00	18260	8.97	23860	9.83	30560	10.54	38460	11.08	47700	11.42
MTZ144	45	6190	6.03	8920	7.21	12240	8.32	16260	9.37	21080	10.36	26790	11.30	33510	12.19	41330	13.04	50350	13.86
MTZ160	45	7080	6.91	10230	8.24	14050	9.51	18650	10.71	24170	11.85	30720	12.92	38420	13.95	47390	14.91	57750	15.83

To : Evaporating temperature in [°C]
Tc : Condensing temperature in [°C]
Qo: Cooling Capacity in [W]
Pe : Power input in [kW]
Subcooling : 0 K
Superheat : 10 K
Voltage : 460 V /3 /60 Hz

For more information and performance with other refrigerants, please refer to Coolselector ® 2 at coolselector.danfoss.com or contact Danfoss.

Technical data and ordering

MTZ - R449A - Reciprocating compressors - 50 Hz

Nominal performance data

Compressor model	To	-30		-25		-20		-15		-10		-5		0		5		10	
	Tc	Qo	Pe	Qo	Pe	Qo	Pe	Qo	Pe	Qo	Pe	Qo	Pe	Qo	Pe	Qo	Pe	Qo	Pe
MTZ018	45	260	0.48	550	0.64	900	0.78	1330	0.92	1840	1.04	2440	1.14	3160	1.22	3980	1.28	4930	1.32
MTZ022	45	790	0.85	1110	0.98	1500	1.11	1980	1.24	2580	1.37	3320	1.49	4220	1.60	5310	1.70	6610	1.79
MTZ028	45	980	1.05	1370	1.21	1850	1.37	2440	1.53	3180	1.69	4100	1.84	5210	1.97	6560	2.10	8170	2.20
MTZ032	45	1080	1.10	1550	1.30	2110	1.49	2810	1.68	3660	1.87	4700	2.05	5960	2.22	7470	2.37	9250	2.50
MTZ036	45	1180	1.27	1720	1.51	2400	1.76	3240	2.00	4250	2.24	5460	2.46	6900	2.66	8590	2.84	10550	3.00
MTZ040	45	1340	1.49	1960	1.77	2740	2.06	3710	2.34	4880	2.62	6280	2.88	7930	3.12	9870	3.33	12110	3.50
MTZ044	45	1130	1.34	1820	1.64	2670	1.94	3720	2.22	5010	2.49	6570	2.73	8430	2.95	10650	3.12	13240	3.26
MTZ050	45	1250	1.43	2050	1.80	3020	2.18	4230	2.54	5700	2.87	7490	3.18	9620	3.44	12150	3.64	15110	3.78
MTZ056	45	1390	1.57	2280	1.99	3360	2.40	4700	2.79	6340	3.16	8320	3.50	10690	3.78	13500	4.01	16800	4.16
MTZ064	45	1740	1.87	2730	2.33	3960	2.78	5480	3.22	7330	3.62	9540	3.99	12150	4.30	15210	4.56	18740	4.75
MTZ072	45	2000	2.17	3140	2.70	4560	3.23	6310	3.73	8440	4.20	10980	4.62	13990	4.99	17510	5.29	21580	5.52
MTZ080	45	2840	2.82	4140	3.36	5730	3.91	7670	4.45	10010	4.97	12800	5.45	16090	5.89	19930	6.27	24380	6.57
MTZ100	45	2770	3.28	4250	3.91	6120	4.55	8450	5.19	11310	5.79	14780	6.34	18940	6.82	23850	7.21	29600	7.49
MTZ125	45	3740	4.19	5720	5.01	8230	5.85	11370	6.67	15220	7.44	19890	8.15	25470	8.77	32060	9.26	39760	9.60
MTZ144	45	5150	5.02	7430	6.01	10210	6.93	13550	7.81	17560	8.63	22320	9.42	27920	10.16	34430	10.86	41960	11.54
MTZ160	45	5890	5.80	8530	6.88	11710	7.93	15550	8.92	20140	9.87	25590	10.77	32010	11.62	39480	12.42	48120	13.16

To : Evaporating temperature in [°C]
Tc : Condensing temperature in [°C]
Qo: Cooling Capacity in [W]
Pe : Power input in [kW]
Subcooling : 0 K
Superheat : 10 K
Voltage : 400 V /3 /50 Hz

MTZ - R449A - Reciprocating compressors - 60 Hz

Nominal performance data

Compressor model	To	-30		-25		-20		-15		-10		-5		0		5		10	
	Tc	Qo	Pe	Qo	Pe	Qo	Pe	Qo	Pe	Qo	Pe	Qo	Pe	Qo	Pe	Qo	Pe	Qo	Pe
MTZ018	45	310	0.58	660	0.76	1080	0.94	1590	1.10	2210	1.24	2930	1.37	3790	1.47	4780	1.54	5920	1.58
MTZ022	45	950	1.02	1330	1.18	1790	1.33	2370	1.49	3090	1.64	3980	1.79	5070	1.92	6380	2.04	7940	2.15
MTZ028	45	1180	1.26	1640	1.45	2220	1.64	2930	1.84	3820	2.02	4920	2.20	6260	2.37	7880	2.52	9810	2.64
MTZ032	45	1300	1.32	1860	1.56	2540	1.79	3370	2.02	4390	2.25	5640	2.46	7150	2.66	8960	2.84	11100	3.00
MTZ036	45	1410	1.52	2070	1.82	2880	2.11	3880	2.41	5100	2.69	6550	2.95	8280	3.19	10310	3.41	12660	3.60
MTZ040	45	1600	1.79	2350	2.13	3290	2.47	4450	2.81	5850	3.14	7530	3.45	9520	3.74	11840	3.99	14530	4.21
MTZ044	45	1360	1.61	2190	1.97	3210	2.32	4470	2.66	6010	2.98	7880	3.28	10120	3.53	12780	3.75	15890	3.91
MTZ050	45	1510	1.71	2460	2.16	3630	2.61	5070	3.05	6840	3.45	8980	3.81	11550	4.12	14580	4.37	18130	4.54
MTZ056	45	1670	1.89	2730	2.39	4040	2.88	5640	3.35	7610	3.79	9990	4.19	12830	4.54	16210	4.81	20160	5.00
MTZ064	45	2090	2.25	3270	2.80	4760	3.34	6580	3.86	8800	4.35	11450	4.79	14580	5.17	18250	5.48	22490	5.70
MTZ072	45	2400	2.60	3770	3.25	5480	3.87	7580	4.48	10120	5.04	13180	5.55	16790	5.99	21010	6.35	25890	6.62
MTZ080	45	3410	3.39	4960	4.04	6870	4.69	9200	5.34	12010	5.96	15360	6.53	19310	7.06	23920	7.52	29250	7.89
MTZ100	45	3330	3.91	5110	4.69	7350	5.47	10140	6.23	13570	6.95	17740	7.61	22720	8.18	28620	8.65	35510	8.99
MTZ125	45	4490	4.77	6870	5.87	9880	6.96	13640	8.00	18260	8.97	23860	9.83	30560	10.54	38460	11.08	47700	11.42
MTZ144	45	6190	6.03	8920	7.21	12240	8.32	16260	9.37	21080	10.36	26790	11.30	33510	12.19	41330	13.04	50350	13.86
MTZ160	45	7080	6.91	10230	8.24	14050	9.51	18650	10.71	24170	11.85	30720	12.92	38420	13.95	47390	14.91	57750	15.83

To : Evaporating temperature in [°C]
Tc : Condensing temperature in [°C]
Qo: Cooling Capacity in [W]
Pe : Power input in [kW]
Subcooling : 0 K
Superheat : 10 K
Voltage : 460 V /3 /60 Hz

For more information and performance with other refrigerants, please refer to Coolselector ® 2 at coolselector.danfoss.com or contact Danfoss.

Technical data and ordering

MTZ - R452A - Reciprocating compressors - 50 Hz

Nominal performance data

Compressor model	To	-30		-25		-20		-15		-10		-5		0		5		10	
	Tc	Qo	Pe	Qo	Pe	Qo	Pe	Qo	Pe	Qo	Pe	Qo	Pe	Qo	Pe	Qo	Pe	Qo	Pe
MTZ018	45	410	0.56	700	0.73	1050	0.89	1480	1.03	2000	1.15	2610	1.24	3340	1.32	4190	1.37	5180	1.39
MTZ022	45	790	0.91	1160	1.07	1610	1.22	2150	1.37	2810	1.51	3580	1.63	4490	1.73	5560	1.81	6780	1.87
MTZ028	45	1210	1.23	1560	1.39	2000	1.55	2550	1.70	3250	1.86	4130	2.00	5210	2.14	6520	2.26	8100	2.36
MTZ032	45	1100	1.18	1590	1.42	2190	1.65	2910	1.86	3790	2.06	4830	2.24	6070	2.40	7530	2.54	9220	2.65
MTZ036	45	1450	1.48	1960	1.75	2580	2.00	3350	2.25	4300	2.48	5440	2.69	6810	2.88	8430	3.04	10330	3.18
MTZ040	45	1670	1.72	2290	2.04	3040	2.34	3960	2.63	5090	2.89	6450	3.14	8070	3.36	10000	3.55	12250	3.71
MTZ044	45	1370	1.58	2100	1.91	2990	2.21	4060	2.49	5370	2.73	6920	2.96	8770	3.16	10940	3.34	13460	3.50
MTZ050	45	1520	1.65	2360	2.09	3370	2.49	4610	2.84	6110	3.16	7890	3.44	10000	3.68	12480	3.89	15340	4.07
MTZ056	45	1690	1.84	2620	2.31	3750	2.74	5130	3.13	6790	3.47	8780	3.78	11120	4.06	13870	4.29	17060	4.48
MTZ064	45	2100	2.17	3160	2.71	4440	3.19	5990	3.60	7840	3.98	10030	4.31	12610	4.61	15610	4.88	19060	5.13
MTZ072	45	2410	2.53	3630	3.15	5110	3.69	6890	4.18	9020	4.61	11550	4.99	14520	5.34	17970	5.66	21950	5.95
MTZ080	45	3090	3.18	4320	3.78	5800	4.32	7570	4.81	9680	5.26	12180	5.67	15100	6.07	18500	6.45	22410	6.82
MTZ100	45	3330	3.77	4990	4.50	6990	5.19	9410	5.81	12310	6.37	15770	6.87	19880	7.29	24690	7.65	30280	7.93
MTZ125	45	4340	4.76	6500	5.75	9110	6.66	12270	7.47	16070	8.19	20600	8.83	25940	9.37	32190	9.83	39440	10.20
MTZ144	45	6060	5.56	8270	6.89	10920	7.96	14080	8.84	17830	9.58	22250	10.23	27430	10.84	33440	11.48	40370	12.19
MTZ160	45	6730	6.92	9220	8.04	12180	9.05	15700	9.96	19880	10.80	24810	11.61	30580	12.41	37290	13.24	45040	14.12

To : Evaporating temperature in [°C]
Tc : Condensing temperature in [°C]
Qo: Cooling Capacity in [W]
Pe : Power input in [kW]
Subcooling : 0 K
Superheat : 10 K
Voltage : 400 V /3 /50 Hz

MTZ - R452A - Reciprocating compressors - 60 Hz

Nominal performance data

Compressor model	To	-30		-25		-20		-15		-10		-5		0		5		10	
	Tc	Qo	Pe	Qo	Pe	Qo	Pe	Qo	Pe	Qo	Pe	Qo	Pe	Qo	Pe	Qo	Pe	Qo	Pe
MTZ018	45	490	0.67	840	0.88	1260	1.07	1780	1.23	2390	1.38	3130	1.49	4010	1.58	5030	1.64	6220	1.67
MTZ022	45	950	1.09	1390	1.28	1930	1.47	2580	1.65	3370	1.81	4300	1.96	5390	2.08	6670	2.18	8140	2.24
MTZ028	45	1450	1.48	1870	1.67	2400	1.86	3060	2.04	3900	2.23	4950	2.40	6250	2.57	7830	2.71	9730	2.83
MTZ032	45	1320	1.42	1910	1.71	2620	1.98	3490	2.24	4540	2.47	5800	2.69	7290	2.88	9040	3.04	11070	3.17
MTZ036	45	1730	1.78	2350	2.10	3100	2.40	4020	2.70	5160	2.97	6530	3.23	8170	3.45	10110	3.65	12390	3.81
MTZ040	45	2010	2.07	2750	2.45	3650	2.81	4760	3.15	6110	3.47	7740	3.77	9690	4.03	12000	4.26	14700	4.46
MTZ044	45	1640	1.89	2520	2.29	3580	2.66	4880	2.98	6440	3.28	8310	3.55	10520	3.79	13120	4.01	16150	4.20
MTZ050	45	1830	1.98	2830	2.51	4050	2.99	5540	3.41	7330	3.79	9470	4.13	12010	4.42	14970	4.67	18410	4.88
MTZ056	45	2030	2.21	3150	2.77	4500	3.29	6160	3.75	8150	4.17	10530	4.54	13350	4.87	16650	5.14	20480	5.38
MTZ064	45	2520	2.61	3790	3.25	5330	3.82	7190	4.33	9410	4.77	12040	5.17	15130	5.53	18730	5.85	22880	6.15
MTZ072	45	2900	3.04	4360	3.78	6130	4.43	8270	5.01	10830	5.53	13860	5.99	17420	6.41	21560	6.79	26340	7.14
MTZ080	45	3700	3.81	5180	4.53	6960	5.18	9080	5.77	11620	6.31	14610	6.81	18120	7.28	22200	7.74	26890	8.18
MTZ100	45	3990	4.52	5990	5.41	8390	6.22	11290	6.97	14770	7.65	18930	8.24	23850	8.75	29620	9.18	36340	9.52
MTZ125	45	5210	5.71	7790	6.90	10930	7.99	14720	8.96	19280	9.83	24720	10.59	31130	11.25	38630	11.79	47330	12.24
MTZ144	45	7270	6.67	9930	8.26	13100	9.55	16890	10.61	21390	11.50	26700	12.27	32920	13.01	40130	13.77	48440	14.62
MTZ160	45	8070	8.30	11060	9.65	14620	10.86	18840	11.95	23860	12.96	29770	13.93	36700	14.89	44750	15.89	54040	16.95

To : Evaporating temperature in [°C]
Tc : Condensing temperature in [°C]
Qo: Cooling Capacity in [W]
Pe : Power input in [kW]
Subcooling : 0 K
Superheat : 10 K
Voltage : 460 V /3 /60 Hz

For more information and performance with other refrigerants, please refer to Coolselector ® 2 at coolselector.danfoss.com or contact Danfoss.

Technical data and ordering

MTZ - R513A - Reciprocating compressors - 50 Hz

Nominal performance data

Compressor model	To	-30		-25		-20		-15		-10		-5		0		5		10	
	Tc	Qo	Pe	Qo	Pe	Qo	Pe	Qo	Pe	Qo	Pe	Qo	Pe	Qo	Pe	Qo	Pe	Qo	Pe
MTZ018	45	340	0.42	570	0.54	840	0.64	1180	0.74	1590	0.81	2080	0.87	2670	0.91	3370	0.92	4180	0.91
MTZ022	45	530	0.56	790	0.67	1130	0.78	1550	0.88	2070	0.97	2700	1.05	3450	1.11	4350	1.15	5400	1.17
MTZ028	45	690	0.76	1020	0.89	1430	1.02	1950	1.14	2590	1.25	3360	1.35	4280	1.43	5370	1.49	6640	1.53
MTZ032	45	800	0.81	1210	0.97	1710	1.13	2320	1.27	3060	1.40	3940	1.52	4980	1.62	6190	1.69	7590	1.75
MTZ036	45	880	0.91	1370	1.13	1960	1.32	2670	1.47	3520	1.61	4540	1.72	5740	1.82	7150	1.91	8780	2.00
MTZ040	45	1190	1.24	1720	1.44	2370	1.62	3170	1.78	4140	1.94	5300	2.08	6670	2.22	8280	2.35	10130	2.48
MTZ044	45	970	1.02	1540	1.26	2270	1.48	3180	1.68	4300	1.85	5630	1.99	7220	2.10	9090	2.17	11240	2.20
MTZ050	45	1350	1.25	1950	1.48	2690	1.70	3620	1.90	4770	2.08	6170	2.24	7850	2.36	9860	2.45	12220	2.49
MTZ056	45	1300	1.31	1930	1.57	2760	1.81	3820	2.05	5140	2.26	6740	2.45	8650	2.61	10900	2.74	13520	2.83
MTZ064	45	1500	1.47	2250	1.77	3210	2.06	4420	2.34	5900	2.59	7700	2.82	9840	3.01	12360	3.17	15300	3.29
MTZ072	45	1850	1.78	2670	2.09	3720	2.40	5040	2.69	6670	2.98	8650	3.24	11020	3.47	13810	3.67	17080	3.84
MTZ080	45	2080	2.03	2990	2.40	4190	2.75	5700	3.09	7580	3.41	9850	3.71	12570	4.00	15760	4.28	19470	4.54
MTZ100	45	2570	2.64	3800	3.10	5300	3.52	7150	3.91	9410	4.26	12140	4.57	15420	4.83	19310	5.04	23890	5.18
MTZ125	45	3860	3.32	5400	3.83	7290	4.33	9610	4.81	12480	5.27	15970	5.70	20190	6.11	25240	6.48	31220	6.82
MTZ144	45	4390	3.86	6110	4.46	8290	5.04	11000	5.60	14310	6.13	18290	6.64	23010	7.12	28540	7.57	34950	7.99
MTZ160	45	5030	4.36	7000	5.06	9460	5.73	12490	6.38	16160	7.01	20560	7.61	25750	8.20	31830	8.76	38860	9.31

To : Evaporating temperature in [°C]
Tc : Condensing temperature in [°C]
Qo: Cooling Capacity in [W]
Pe : Power input in [kW]
Subcooling : 0 K
Superheat : 10 K
Voltage : 400 V /3 /50 Hz

MTZ - R513A - Reciprocating compressors - 60 Hz

Nominal performance data

Compressor model	To	-30		-25		-20		-15		-10		-5		0		5		10	
	Tc	Qo	Pe	Qo	Pe	Qo	Pe	Qo	Pe	Qo	Pe	Qo	Pe	Qo	Pe	Qo	Pe	Qo	Pe
MTZ018	45	420	0.50	690	0.64	1040	0.76	1460	0.87	1980	0.96	2600	1.04	3330	1.10	4190	1.14	5180	1.16
MTZ022	45	630	0.65	990	0.82	1440	0.97	1980	1.11	2620	1.23	3400	1.33	4300	1.41	5360	1.46	6590	1.48
MTZ028	45	850	0.88	1320	1.08	1880	1.25	2560	1.41	3360	1.55	4310	1.67	5420	1.76	6700	1.84	8180	1.90
MTZ032	45	990	0.97	1560	1.21	2230	1.42	3020	1.60	3960	1.77	5050	1.90	6330	2.02	7800	2.12	9480	2.20
MTZ036	45	1050	1.12	1630	1.39	2330	1.61	3170	1.80	4190	1.96	5390	2.10	6820	2.22	8500	2.33	10440	2.44
MTZ040	45	1410	1.40	2020	1.65	2800	1.88	3760	2.08	4930	2.28	6340	2.47	8000	2.66	9940	2.87	12190	3.09
MTZ044	45	1270	1.27	1920	1.55	2770	1.81	3850	2.04	5190	2.26	6810	2.44	8750	2.60	11020	2.73	13660	2.83
MTZ050	45	1630	1.57	2340	1.85	3240	2.12	4360	2.38	5740	2.61	7430	2.80	9450	2.96	11870	3.07	14710	3.12
MTZ056	45	1570	1.58	2470	1.97	3590	2.31	4970	2.63	6620	2.90	8590	3.14	10910	3.35	13620	3.53	16750	3.68
MTZ064	45	1670	1.74	2740	2.21	4020	2.63	5570	2.99	7430	3.31	9610	3.58	12180	3.82	15160	4.03	18590	4.21
MTZ072	45	2330	2.17	3450	2.62	4810	3.04	6450	3.42	8420	3.78	10760	4.10	13510	4.39	16720	4.65	20430	4.86
MTZ080	45	2690	2.53	4040	3.07	5630	3.55	7520	3.99	9750	4.38	12360	4.75	15400	5.08	18900	5.39	22920	5.69
MTZ100	45	3060	3.02	4560	3.66	6440	4.24	8760	4.76	11560	5.22	14920	5.61	18880	5.95	23510	6.23	28860	6.46
MTZ125	45	4630	3.96	6670	4.75	9130	5.45	12070	6.09	15580	6.66	19730	7.18	24580	7.67	30220	8.14	36720	8.58
MTZ144	45	5480	4.73	7770	5.58	10510	6.34	13810	7.03	17720	7.67	22350	8.27	27770	8.86	34060	9.45	41310	10.07
MTZ160	45	6670	5.32	9010	6.39	11880	7.30	15380	8.11	19580	8.84	24590	9.56	30500	10.29	37380	11.07	45340	11.97

To : Evaporating temperature in [°C]
Tc : Condensing temperature in [°C]
Qo: Cooling Capacity in [W]
Pe : Power input in [kW]
Subcooling : 0 K
Superheat : 10 K
Voltage : 460 V /3 /60 Hz

For more information and performance with other refrigerants, please refer to Coolselector ® 2 at coolselector.danfoss.com or contact Danfoss.

Technical data and ordering

NTZ - R404A - Reciprocating compressors - 50 Hz

Nominal performance data

Compressor model	To	-40		-35		-30		-25		-20		-15		-10	
	Tc	Qo	Pe	Qo	Pe	Qo	Pe	Qo	Pe	Qo	Pe	Qo	Pe	Qo	Pe
NTZ048	45	420	0.59	710	0.84	1070	1.09	1700	1.34	2240	1.57	2860	1.79	3570	1.99
NTZ068	45	870	1.28	1290	1.54	1810	1.81	2790	2.09	3570	2.38	4490	2.68	5540	2.99
NTZ096	45	910	1.29	1420	1.67	2090	2.09	3360	2.53	4510	2.99	5900	3.48	7550	3.97
NTZ108	45	1120	1.57	1770	2.03	2590	2.49	4080	2.95	5340	3.40	6820	3.85	8530	4.29
NTZ136	45	1570	2.27	2360	2.86	3350	3.47	5200	4.08	6750	4.69	8570	5.29	10710	5.87
NTZ215	45	2220	3.23	3530	4.10	5120	5.00	8020	5.91	10430	6.81	13210	7.68	16420	8.49
NTZ271	45	3460	4.60	5140	5.65	7200	6.73	11040	7.82	14170	8.92	17790	10.03	21970	11.13

To : Evaporating temperature in [°C]
Tc : Condensing temperature in [°C]
Qo: Cooling Capacity in [W]
Pe : Power input in [kW]
Subcooling : 0 K
Superheat : 10 K
Voltage : 400 V /3 /50 Hz

NTZ - R404A - Reciprocating compressors - 60 Hz

Nominal performance data

Compressor model	To	-40		-35		-30		-25		-20		-15		-10	
	Tc	Qo	Pe	Qo	Pe	Qo	Pe	Qo	Pe	Qo	Pe	Qo	Pe	Qo	Pe
NTZ048	45	500	0.71	850	1.02	1270	1.33	2040	1.62	2690	1.89	3440	2.13	4310	2.33
NTZ068	45	1020	1.51	1530	1.82	2140	2.14	3290	2.47	4220	2.81	5290	3.16	6530	3.53
NTZ096	45	890	1.40	1630	1.96	2550	2.54	4160	3.12	5560	3.70	7190	4.24	9050	4.75
NTZ108	45	1240	2.04	2040	2.51	3030	3.04	4860	3.62	6440	4.24	8290	4.88	10460	5.53
NTZ136	45	1690	2.65	2720	3.31	3970	4.03	6260	4.80	8170	5.60	10380	6.44	12920	7.31
NTZ215	45	2640	3.74	4170	4.81	6050	5.91	9480	7.01	12320	8.09	15600	9.11	19380	10.05
NTZ271	45	4090	5.44	6070	6.68	8500	7.94	13040	9.21	16740	10.50	21050	11.80	26010	13.10

To : Evaporating temperature in [°C]
Tc : Condensing temperature in [°C]
Qo: Cooling Capacity in [W]
Pe : Power input in [kW]
Subcooling : 0 K
Superheat : 10 K
Voltage : 460 V /3 /60 Hz

For more information and performance with other refrigerants, please refer to Coolselector ® 2 at coolselector.danfoss.com or contact Danfoss.

Technical data and ordering

NTZ - R452A - Reciprocating compressors - 50 Hz

Nominal performance data

Compressor model	To	-40		-35		-30		-25		-20		-15		-10	
	Tc	Qo	Pe	Qo	Pe	Qo	Pe	Qo	Pe	Qo	Pe	Qo	Pe	Qo	Pe
NTZ048	45	520	0.70	760	0.87	1080	1.06	1660	1.26	2190	1.47	2830	1.69	3580	1.91
NTZ068	45	840	1.16	1260	1.33	1790	1.54	2730	1.79	3540	2.12	4490	2.53	5600	3.04
NTZ096	45	1020	1.28	1540	1.62	2220	1.99	3450	2.39	4580	2.79	5930	3.20	7520	3.59
NTZ108	45	1430	1.71	2030	2.06	2790	2.43	4200	2.82	5440	3.23	6930	3.66	8680	4.10
NTZ136	45	1810	2.27	2560	2.79	3530	3.32	5310	3.87	6870	4.43	8740	5.00	10960	5.60
NTZ215	45	2370	3.24	3580	3.99	5080	4.77	7760	5.57	10110	6.38	12900	7.20	16160	8.02
NTZ271	45	2990	3.81	4660	4.87	6690	5.97	10230	7.10	13300	8.22	16890	9.32	21060	10.38

To : Evaporating temperature in [°C]
Tc : Condensing temperature in [°C]
Qo: Cooling Capacity in [W]
Pe : Power input in [kW]
Subcooling : 0 K
Superheat : 10 K
Voltage : 400 V /3 /50 Hz

NTZ - R452A - Reciprocating compressors - 60 Hz

Nominal performance data

Compressor model	To	0		-35		-30		-25		-20		-15		-10	
	Tc	Qo	Pe	Qo	Pe	Qo	Pe	Qo	Pe	Qo	Pe	Qo	Pe	Qo	Pe
NTZ048	45	650	0.84	950	1.04	1350	1.26	2070	1.51	2730	1.76	3530	2.02	4470	2.29
NTZ068	45	960	1.36	1450	1.56	2060	1.80	3130	2.10	4060	2.49	5160	2.97	6420	3.57
NTZ096	45	1250	1.59	1880	2.01	2720	2.48	4230	2.97	5620	3.47	7270	3.97	9220	4.46
NTZ108	45	1720	2.10	2440	2.53	3360	2.99	5060	3.47	6560	3.97	8350	4.50	10450	5.04
NTZ136	45	2170	2.73	3080	3.35	4240	3.99	6390	4.64	8270	5.31	10520	6.01	13190	6.73
NTZ215	45	3020	3.90	4550	4.95	6450	5.97	9840	6.96	12820	7.95	16350	8.94	20480	9.97
NTZ271	45	3780	4.93	5880	6.31	8450	7.74	12920	9.19	16800	10.64	21330	12.07	26600	13.44

To : Evaporating temperature in [°C]
Tc : Condensing temperature in [°C]
Qo: Cooling Capacity in [W]
Pe : Power input in [kW]
Subcooling : 0 K
Superheat : 10 K
Voltage : 460 V /3 /60 Hz

For more information and performance with other refrigerants, please refer to Coolselector ® 2 at coolselector.danfoss.com or contact Danfoss.

Nomenclature and Dimensions

Nomenclature

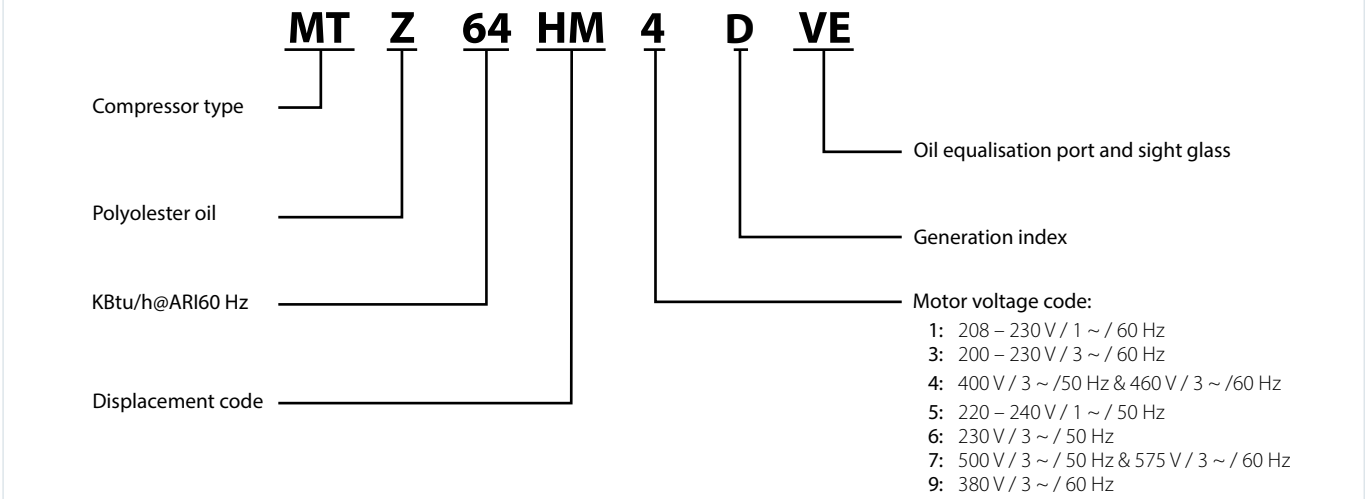

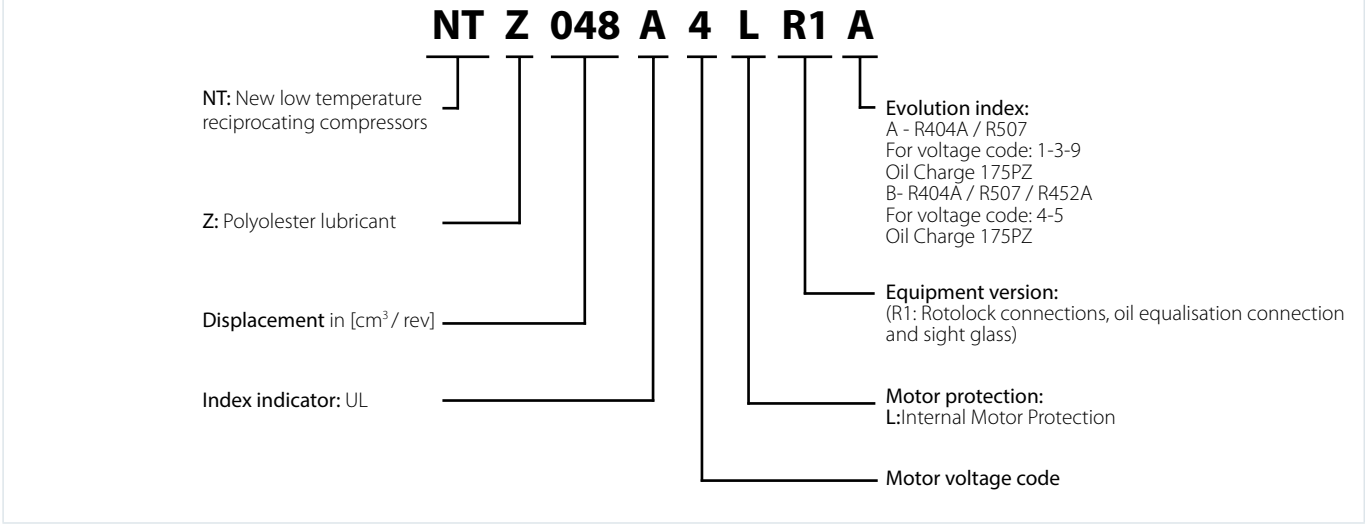

Please consult Danfoss for motor version available

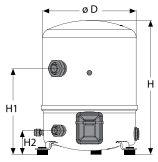

MTZ / NTZ
1 cylinder

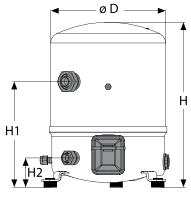

MTZ / NTZ
2 cylinders

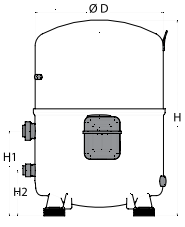

MTZ / NTZ
4 cylinders

Single compressors [mm]

Type	D	H	H1	H2
1 cylinder	224	333 / 358	263	68
2 cylinders	288	413	265	74
4 cylinders	352	519 / 540	233	128

VTZ, Inverter reciprocating compressor

Maneurop® - VTZ reciprocating inverter compressors 3 – 48 kW multirefrigerant units - R404A, R407C and R134a - for commercial and process cooling applications prevent you from oversized and short cycling systems by automatically adapting to the current load in your commercial package air conditioning, chillers and rooftops.

Use the innovative and intelligent compressor package that utilizes variable speed technology to ensure superior efficiency across the entire operating range.



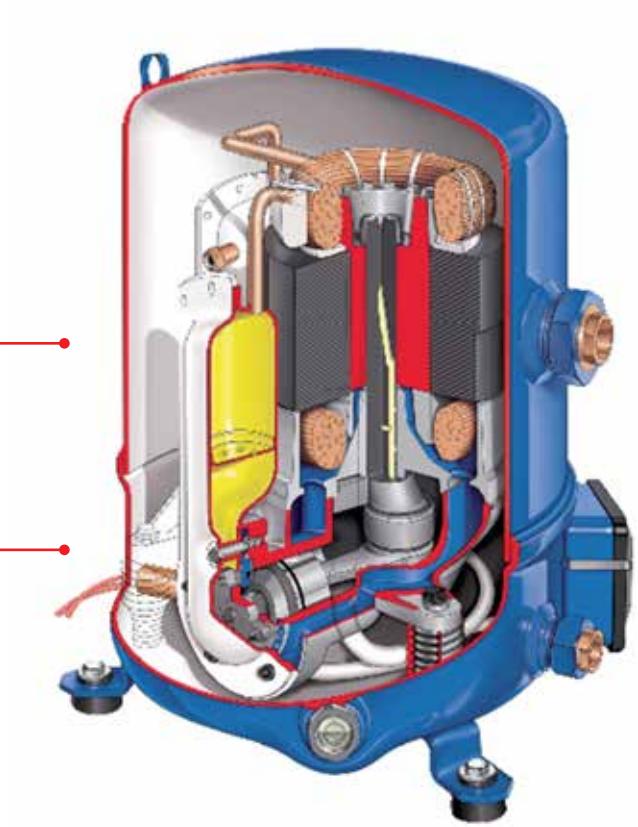

Flexibility and precision cooling within a wide capacity range (30 – 90 rps)

High COP across the whole operating range for great energy savings

Highly reliable solution

One qualified "*plug & play*" compressor and drive solution

Facts

Applications:
- Packaged air conditioning
- Rooftops
- Chillers
- Close controls
- Heat pumps
- Data centers

- Capacity modulation: adapts motorspeed to varying load continuously, quickly and smoothly
- Tight temperature control ± 0.3 °C
- Pre-qualified compressor and drive package
- Drive protection
- Multi-refrigerant capacibility inverter reciprocating compressors
- Advanced energy efficiency cuts the electric bill and easily meets the energy standards

- Improves comfort and process reliability, greater humidity control
- Lower noise level during part-load operations
- Faster time to market, saves time on development and enhances overall system reliability
- Reduces the size of needed power back up systems
- Reduces installation costs with eliminationof components

Technical data and ordering

VTZ - Inverter reciprocating compressor - Voltage code G 380 – 480 V and CD302

Ordering

Compressor			Frequency converter				
Type	Code no.		Model & power	IP class	RFI class	LCP	Code no.
	Single pack	Industrial pack					Single pack
VTZ038-G	120B0001	NA	CD302 - 4.0 kW	IP20	H1	yes	131B3543
	120B0001	NA	CD302 - 4.0 kW	IP20	H1	no	131B3544
	120B0001	NA	CD302 - 4.0 kW	IP20	H2	yes	131B3545
	120B0001	NA	CD302 - 4.0 kW	IP20	H2	no	131B3546
	120B0001	NA	CD302 - 4.0 kW	IP55	H1	yes	131B3547
	120B0001	NA	CD302 - 4.0 kW	IP55	H1	no	131B3548
	120B0001	NA	CD302 - 4.0 kW	IP55	H2	yes	131B3550
	120B0001	NA	CD302 - 4.0 kW	IP55	H2	no	131B3549
VTZ054-G	120B0002	NA	CD302 - 5.5 kW	IP20	H1	yes	131B3552
	120B0002	NA	CD302 - 5.5 kW	IP20	H1	no	131B3553
	120B0002	NA	CD302 - 5.5 kW	IP20	H2	yes	131B3554
	120B0002	NA	CD302 - 5.5 kW	IP20	H2	no	131B3555
	120B0002	NA	CD302 - 5.5 kW	IP55	H1	yes	131B3556
	120B0002	NA	CD302 - 5.5 kW	IP55	H1	no	131B3557
	120B0002	NA	CD302 - 5.5 kW	IP55	H2	yes	131B3558
	120B0002	NA	CD302 - 5.5 kW	IP55	H2	no	131B3559
	120B0003	120B0054	CD302 - 7.5 kW	IP20	H1	yes	131B3560
	120B0003	120B0054	CD302 - 7.5 kW	IP20	H1	no	131B3561
	120B0003	120B0054	CD302 - 7.5 kW	IP20	H2	yes	131B3562
	120B0003	120B0054	CD302 - 7.5 kW	IP20	H2	no	131B3563
	120B0003	120B0054	CD302 - 7.5 kW	IP55	H1	yes	131B3564
	120B0003	120B0054	CD302 - 7.5 kW	IP55	H1	no	131B3565
	120B0003	120B0054	CD302 - 7.5 kW	IP55	H2	yes	131B3566
	120B0003	120B0054	CD302 - 7.5 kW	IP55	H2	no	131B3567
	120B0004	120B0052	CD302 - 11.0 kW	IP20	H1	no	131X2198
	120B0004	120B0052	CD302 - 11.0 kW	IP21	H1	yes	131B3568
	120B0004	120B0052	CD302 - 11.0 kW	IP21	H1	no	131B3569
	120B0004	120B0052	CD302 - 11.0 kW	IP21	H2	yes	131B3570
	120B0004	120B0052	CD302 - 11.0 kW	IP21	H2	no	131B3571
	120B0004	120B0052	CD302 - 11.0 kW	IP55	H1	yes	131B3572
	120B0004	120B0052	CD302 - 11.0 kW	IP55	H1	no	131B3573
	120B0004	120B0052	CD302 - 11.0 kW	IP55	H2	yes	131B3574
	120B0004	120B0052	CD302 - 11.0 kW	IP55	H2	no	131B3575
VTZ171-G	120B0005	120B0055	CD302 - 15.0 kW	IP20	H1	no	131X2199
	120B0005	120B0055	CD302 - 15.0 kW	IP21	H1	yes	131B3576
	120B0005	120B0055	CD302 - 15.0 kW	IP21	H1	no	131B3577
	120B0005	120B0055	CD302 - 15.0 kW	IP21	H2	yes	131B3578
	120B0005	120B0055	CD302 - 15.0 kW	IP21	H2	no	–
	120B0005	120B0055	CD302 - 15.0 kW	IP55	H1	yes	131B3580
	120B0005	120B0055	CD302 - 15.0 kW	IP55	H1	no	–
	120B0005	120B0055	CD302 - 15.0 kW	IP55	H2	yes	131B3582
	120B0005	120B0055	CD302 - 15.0 kW	IP55	H2	no	131B3583
VTZ215-G	120B0006	120B0056	CD302 - 18.5 kW	IP20	H1	no	131X2200
	120B0006	120B0056	CD302 - 18.5 kW	IP21	H1	yes	131B3584
	120B0006	120B0056	CD302 - 18.5 kW	IP21	H1	no	131B3585
	120B0006	120B0056	CD302 - 18.5 kW	IP21	H2	yes	131B3586
	120B0006	120B0056	CD302 - 18.5 kW	IP21	H2	no	131B3587
	120B0006	120B0056	CD302 - 18.5 kW	IP55	H1	yes	131B3588
	120B0006	120B0056	CD302 - 18.5 kW	IP55	H1	no	131B3589
	120B0006	120B0056	CD302 - 18.5 kW	IP55	H2	yes	131B3590
	120B0006	120B0056	CD302 - 18.5 kW	IP55	H2	no	131B3591

Technical data and ordering

VTZ - Inverter reciprocating compressor - Voltage code J 200 - 240 V and CD302

Ordering

Compressor			Frequency converter				
Type	Code no.		Model and power	IP class	RFI class	LCP	Code no.
	Single pack	Industrial pack					Single pack
VTZ038-J	120B0029	NA	CD302 - 4.0 kW	IP20	H1	yes	131B5347
	120B0029	NA	CD302 - 4.0 kW	IP20	–	no	131B5348
	120B0029	NA	CD302 - 4.0 kW	IP20	H2	yes	131B5349
	120B0029	NA	CD302 - 4.0 kW	IP20	H2	no	131B5350
	120B0029	NA	CD302 - 4.0 kW	IP55	H1	yes	–
	120B0029	NA	CD302 - 4.0 kW	IP55	–	no	–
	120B0029	NA	CD302 - 4.0 kW	IP55	H2	yes	–
	120B0029	NA	CD302 - 4.0 kW	IP55	H2	no	–
VTZ054-J	120B0030	NA	CD302 - 5.5 kW	IP21	H1	yes	131B5351
	120B0030	NA	CD302 - 5.5 kW	IP21	–	no	131B5352
	120B0030	NA	CD302 - 5.5 kW	IP21	H2	yes	131B5355
	120B0030	NA	CD302 - 5.5 kW	IP21	H2	no	131B5356
	120B0030	NA	CD302 - 5.5 kW	IP55	H1	yes	–
	120B0030	NA	CD302 - 5.5 kW	IP55	–	no	131B5354
	120B0030	NA	CD302 - 5.5 kW	IP55	H2	yes	131B5357
	120B0030	NA	CD302 - 5.5 kW	IP55	H2	no	131B5358
VTZ086-J	120B0031	NA	CD302 - 7.5 kW	IP21	H1	yes	131B5009
	120B0031	NA	CD302 - 7.5 kW	IP21	–	no	131B5359
	120B0031	NA	CD302 - 7.5 kW	IP21	H2	yes	–
	120B0031	NA	CD302 - 7.5 kW	IP21	H2	no	131B5360
	120B0031	NA	CD302 - 7.5 kW	IP55	H1	yes	131B5361
	120B0031	NA	CD302 - 7.5 kW	IP55	–	no	131B5362
	120B0031	NA	CD302 - 7.5 kW	IP55	H2	yes	131B5363
	120B0031	NA	CD302 - 7.5 kW	IP55	H2	no	131B5364
VTZ121-J	120B0032	tbd	CD302 - 11.0 kW	IP21	H1	yes	131B5365
	120B0032	tbd	CD302 - 11.0 kW	IP21	H1	no	–
	120B0032	tbd	CD302 - 11.0 kW	IP21	H2	yes	131B5367
	120B0032	tbd	CD302 - 11.0 kW	IP21	H2	no	131B5368
	120B0032	tbd	CD302 - 11.0 kW	IP55	H1	yes	131B5369
	120B0032	tbd	CD302 - 11.0 kW	IP55	H1	no	131B5370
	120B0032	tbd	CD302 - 11.0 kW	IP55	H2	yes	131B5371
	120B0032	tbd	CD302 - 11.0 kW	IP55	H2	no	131B5372

Technical data and ordering

VTZ - Inverter reciprocating compressor

Electrical specification

Supply voltage	Compressor Type	Nominal motor power [kW]	RW [Ohm]	RT [Ohm]	RLA [A]	MMT [A]	LRA [A]
200 – 240 V	VTZ038-J	3.59	0.31	0.65	13.5	17	69
	VTZ054-J	5	0.215	0.44	20	25	93
	VTZ086-J	7.8	0.158	0.317	32.5	40.6	88
	VTZ121-J	12.5	0.095	0.156	50	64.4	160
380 – 480 V	VTZ038-G	3.59	1.684	3.37	7.35	9.2	30.5
	VTZ054-G	4.95	1.039	2.08	12	15	47
	VTZ086-G	7.8	0.685	1.37	16	20	74
	VTZ121-G	11.66	0.294	0.59	23.2	29	139
	VTZ171-G	16	0.337	0.67	30.5	38.1	130
	VTZ215-G	21.3	0.236	0.47	40.8	51	197

RW: *Winding resistance per winding (in CD302 parameter list)*
RT: *Winding resistance as measured at motor terminals*
RLA: *Rated load current with R404A at 5 – 60 °C*
MMT: *Maximum must trip current*
LRA: *Locked rotor current*

Note that parameter 1-30 in the frequency converter settings reflects the winding resistance per winding
This is not the same value as measured at the motor terminals

VTZ - Inverter reciprocating compressor

Frequency converter single pack

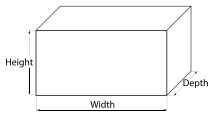

Drive supply voltage	Drive supply voltage code	Drive power [kW]	IP20			IP21			IP55		
			Drive enclosure	Overall dimension (H x W x L) [mm]	Weight [kg]	Drive enclosure	Overall dimension (H x W x L) [mm]	Weight [kg]	Drive enclosure	Overall dimension (H x W x L) [mm]	Weight [kg]
200 – 240 / 3 / 50 – 60	T2	3.7	A3	290x390x200	6.6	–	–	–	–	–	–
	T2	5.5	–	–	–	B1	346x810x320	23	B1	346x810x320	23
	T2	7.5	–	–	–	B1	346x810x320	23	B1	346x810x320	23
	T2	11	–	–	–	B2	346x810x320	28	B2	346x810x320	28
380 – 480 / 3 / 50 – 60	T4	4	A2	290x390x160	5	–	–	–	A5	335x550x280	15
	T4	5.5	A3	290x390x200	6.6	–	–	–	A5	335x550x280	15
	T4	7.5	A3	290x390x200	6.6	–	–	–	A5	335x550x280	15
	T4	11	B3	349x500x330	13	B1	346x810x320	23	B1	346x810x320	23
	T4	15	B3	349x500x330	13	B1	346x810x320	23	B1	346x810x320	23
	T4	18.5	B4	346x810x320	24	B2	346x810x320	28	B2	346x810x320	28
	T4	22	–	–	–	B2	346x810x320	28	B2	346x810x320	28

Dimensions are given with drives in delivery position, without black plastic pallet

Technical data and ordering

VTZ - Inverter reciprocating compressor - R134a - 380 – 480 V

Performance table

Type	[rpm]	Te	-15		-10		-5		0		5		10		15	
		Tc	Qo	Pe	Qo	Pe	Qo	Pe	Qo	Pe	Qo	Pe	Qo	Pe	Qo	Pe
VTZ038-G	2100	40	800	0.52	1000	0.60	1300	0.67	1800	0.72	2300	0.77	2900	0.80	3700	0.82
	2100	50	600	0.52	800	0.61	1100	0.70	1500	0.77	1900	0.84	2500	0.90	3200	0.94
	2100	60	–	–	–	–	900	0.73	1200	0.82	1600	0.90	2100	0.98	2700	1.04
	3600	40	1400	0.95	1900	1.09	2500	1.20	3300	1.30	4200	1.39	5400	1.45	6800	1.49
	3600	50	1100	0.95	1500	1.12	2000	1.27	2700	1.40	3600	1.52	4600	1.62	5900	1.70
	3600	60	–	–	–	–	1600	1.31	2200	1.48	2900	1.63	3800	1.76	4900	1.88
	5400	40	2100	1.41	2800	1.60	3800	1.77	4900	1.92	6400	2.04	8100	2.13	10300	2.19
	5400	50	1600	1.40	2300	1.64	3100	1.87	4100	2.06	5400	2.24	7000	2.38	8900	2.50
	5400	60	–	–	–	–	2400	1.92	3300	2.17	4400	2.40	5800	2.60	7500	2.77
VTZ054-G	2100	40	1200	0.73	1600	0.81	2100	0.90	2700	0.98	3400	1.06	4200	1.13	5100	1.20
	2100	50	900	0.76	1300	0.86	1700	0.96	2300	1.07	2900	1.17	3600	1.27	4500	1.37
	2100	60	–	–	–	–	1400	1.02	1900	1.14	2400	1.27	3000	1.40	3800	1.52
	3600	40	2200	1.32	2900	1.47	3800	1.63	4900	1.78	6300	1.92	7800	2.05	9500	2.16
	3600	50	1700	1.37	2400	1.56	3200	1.75	4200	1.93	5300	2.12	6700	2.30	8300	2.47
	3600	60	–	–	–	–	2600	1.84	3500	2.07	4500	2.30	5600	2.53	7000	2.76
	5400	40	3300	1.93	4400	2.17	5800	2.39	7500	2.62	9500	2.83	11800	3.02	14400	3.19
	5400	50	2600	2.02	3700	2.29	4900	2.57	6400	2.85	8100	3.12	10200	3.39	12500	3.64
	5400	60	–	–	–	–	4000	2.71	5200	3.04	6800	3.38	8500	3.71	10600	4.04
VTZ086-G	1800	40	1500	0.99	2100	1.12	2800	1.23	3600	1.32	4600	1.39	5800	1.45	7200	1.50
	1800	50	1200	1.00	1700	1.16	2300	1.31	3000	1.44	3900	1.55	5000	1.65	6200	1.74
	1800	60	–	–	–	–	1800	1.36	2500	1.52	3200	1.67	4100	1.80	5200	1.93
	3600	40	3200	2.10	4500	2.37	6000	2.59	7900	2.77	10000	2.92	12600	3.07	15600	3.20
	3600	50	2500	2.11	3600	2.46	5000	2.77	6600	3.03	8500	3.25	10800	3.46	13400	3.66
	3600	60	–	–	–	–	3900	2.87	5300	3.21	6900	3.52	8900	3.81	11200	4.08
	5400	40	4900	3.04	6800	3.49	9100	3.85	11900	4.13	15200	4.35	19100	4.52	23700	4.65
	5400	50	3800	3.06	5500	3.61	7600	4.08	10000	4.48	12900	4.82	16300	5.11	20300	5.38
	5400	60	–	–	–	–	5900	4.26	8000	4.74	10500	5.18	13500	5.57	16900	5.95
VTZ121-G	1800	40	2400	1.39	3100	1.54	4000	1.69	5000	1.83	6300	1.96	7700	2.08	9400	2.19
	1800	50	2000	1.49	2700	1.68	3400	1.86	4300	2.04	5400	2.21	6700	2.37	8300	2.53
	1800	60	–	–	–	–	2800	1.99	3600	2.21	4500	2.43	5700	2.64	7000	2.84
	3600	40	5100	2.92	6600	3.23	8400	3.54	10500	3.83	13100	4.11	16200	4.36	19700	4.60
	3600	50	4300	3.13	5600	3.52	7200	3.90	9100	4.28	11400	4.64	14200	4.98	17400	5.30
	3600	60	–	–	–	–	5900	4.19	7500	4.65	9500	5.10	11900	5.54	14800	5.97
	5100	40	7300	4.05	9400	4.49	11900	4.92	15000	5.34	18700	5.72	23100	6.08	28200	6.38
	5100	50	6100	4.35	7900	4.88	10200	5.41	13000	5.93	16300	6.45	20200	6.94	24800	7.40
	5100	60	–	–	–	–	8300	5.82	10700	6.45	13600	7.08	17000	7.70	21100	8.31
VTZ171-G	1800	40	2900	2.09	4000	2.31	5500	2.49	7200	2.64	9200	2.76	11600	2.86	14400	2.96
	1800	50	2100	2.12	3200	2.44	4400	2.71	5900	2.94	7700	3.13	9800	3.29	12300	3.43
	1800	60	–	–	–	–	3400	2.84	4700	3.18	6200	3.46	8000	3.71	10200	3.92
	3600	40	6500	4.23	9000	4.76	12100	5.22	15700	5.62	20000	5.97	25000	6.28	30800	6.55
	3600	50	4900	4.22	7200	4.93	9900	5.55	13100	6.10	16900	6.60	21400	7.03	26600	7.43
	3600	60	–	–	–	–	7600	5.69	10400	6.43	13700	7.10	17600	7.71	22100	8.25
	5400	40	10000	6.22	13800	7.25	18300	8.19	23600	9.02	29900	9.73	37200	10.31	45700	10.74
	5400	50	7600	6.19	11000	7.32	15100	8.44	19900	9.51	25600	10.54	32300	11.50	40000	12.38
	5400	60	–	–	–	–	11800	8.62	16000	9.80	21000	11.00	26900	12.21	33800	13.41
VTZ215-G	1800	40	4300	2.77	5700	3.07	7500	3.33	9500	3.56	11900	3.79	14800	4.03	18000	4.29
	1800	50	3500	2.88	4800	3.28	6300	3.63	8200	3.94	10300	4.23	12900	4.50	15800	4.78
	1800	60	–	–	–	–	5100	3.82	6700	4.25	8600	4.63	10900	4.99	13500	5.33
	3600	40	9300	5.87	12400	6.51	16200	7.08	20600	7.60	25800	8.10	31800	8.61	38700	9.14
	3600	50	7500	6.07	10300	6.93	13700	7.68	17700	8.35	22400	8.96	27700	9.54	33900	10.11
	3600	60	–	–	–	–	11100	8.07	14600	8.97	18700	9.77	23500	10.49	29000	11.17
	5400	40	14000	8.66	18800	9.56	24500	10.38	31200	11.16	39100	11.92	48300	12.70	58900	13.54
	5400	50	11300	8.97	15600	10.16	20700	11.23	26800	12.22	33900	13.17	42200	14.09	51900	15.02
	5400	60	–	–	–	–	16800	11.83	22100	13.12	28300	14.32	35700	15.46	44300	16.58

To: *Evaporating temperature in [°C]*
Tc: *Condensing temperature in [°C]*
Qo: *Cooling capacity in [W]*
Pe: *Power input in [kW]*
Subcooling: *0 K*
Superheat: *10 K*
Voltage code: *G: 380 – 480 V / 3 / 50 and 60 Hz*

For more information and performance with other refrigerants, please refer to Coolselector ® 2 at coolselector.danfoss.com or contact Danfoss.

Technical data and ordering

VTZ - Inverter reciprocating compressor - R404A - 380 – 480 V

Performance table

Type	[rpm]	Te	-30		-25		-20		-15		-10		-5		0		5	
		Tc	Qo	Pe	Qo	Pe	Qo	Pe	Qo	Pe	Qo	Pe	Qo	Pe	Qo	Pe	Qo	Pe
VTZ038-G	2100	20	1100	0.61	1400	0.67	1800	0.71	2400	0.74	2900	0.76	3700	0.77	–	–	–	–
	2100	30	800	0.64	1100	0.72	1500	0.79	1900	0.85	2400	0.89	3000	0.93	3700	0.95	4600	0.96
	2100	40	600	0.64	900	0.75	1100	0.85	1500	0.94	1900	1.02	2400	1.09	3000	1.14	3700	1.18
	2100	50	400	0.62	600	0.76	800	0.90	1100	1.02	1500	1.14	1900	1.24	2400	1.33	2900	1.40
	2100	60	–	–	–	–	500	0.92	700	1.08	1000	1.23	1300	1.37	1700	1.50	2200	1.61
	3600	20	1700	1.08	2300	1.20	3000	1.29	3900	1.37	4900	1.43	6100	1.45	–	–	–	–
	3600	30	1400	1.10	1900	1.26	2600	1.40	3400	1.52	4300	1.62	5400	1.69	6700	1.74	8200	1.75
	3600	40	1000	1.10	1500	1.30	2100	1.49	2800	1.66	3600	1.81	4600	1.93	5700	2.03	7000	2.11
	3600	50	600	1.04	1000	1.29	1500	1.52	2100	1.75	2800	1.95	3600	2.14	4600	2.30	5800	2.44
	3600	60	–	–	–	–	1000	1.47	1400	1.75	2000	2.02	2600	2.27	3400	2.50	4400	2.70
	5400	20	2200	1.76	3100	2.01	4200	2.22	5500	2.39	7000	2.51	8800	2.57	–	–	–	–
	5400	30	1700	1.74	2500	2.08	3500	2.38	4600	2.64	6000	2.86	7700	3.03	9500	3.15	11700	3.22
	5400	40	1100	1.60	1900	2.03	2700	2.43	3700	2.78	5000	3.10	6400	3.37	8100	3.60	10000	3.78
	5400	50	600	1.34	1200	1.86	1900	2.34	2800	2.79	3800	3.21	5100	3.58	6500	3.92	8200	4.20
	5400	60	–	–	–	–	1200	2.11	1900	2.66	2700	3.17	3600	3.65	4800	4.09	6200	4.49
VTZ054-G	2100	20	1500	0.88	2000	0.97	2600	1.05	3400	1.11	4300	1.16	5400	1.19	–	–	–	–
	2100	30	1200	0.94	1600	1.06	2100	1.16	2800	1.26	3600	1.34	4500	1.40	5700	1.45	7100	1.48
	2100	40	900	0.96	1300	1.11	1700	1.25	2200	1.38	2900	1.50	3700	1.60	4700	1.69	5800	1.76
	2100	50	700	0.96	900	1.14	1300	1.32	1700	1.49	2200	1.64	2900	1.79	3700	1.92	4600	2.03
	2100	60	–	–	–	–	900	1.37	1200	1.57	1600	1.77	2100	1.96	2700	2.13	3500	2.29
	3600	20	2500	1.58	3300	1.76	4300	1.91	5400	2.05	6900	2.16	8600	2.26	–	–	–	–
	3600	30	2100	1.67	2800	1.89	3700	2.09	4800	2.28	6100	2.44	7600	2.59	9400	2.72	11400	2.82
	3600	40	1700	1.69	2300	1.96	3100	2.22	4000	2.46	5100	2.69	6500	2.90	8000	3.09	9900	3.25
	3600	50	1200	1.64	1700	1.97	2400	2.29	3100	2.60	4100	2.89	5200	3.17	6500	3.42	8100	3.66
	3600	60	–	–	–	–	1600	2.29	2200	2.66	2900	3.03	3800	3.37	4900	3.71	6200	4.02
	5400	20	3700	2.45	4900	2.76	6200	3.06	7900	3.34	9900	3.61	12200	3.84	–	–	–	–
	5400	30	3000	2.47	4000	2.84	5300	3.21	6800	3.57	8600	3.92	10700	4.26	13200	4.58	16100	4.87
	5400	40	2200	2.43	3100	2.85	4200	3.28	5500	3.72	7100	4.16	9000	4.59	11200	5.02	13800	5.43
	5400	50	1400	2.30	2200	2.77	3100	3.26	4200	3.77	5500	4.29	7100	4.82	9000	5.35	11300	5.87
	5400	60	–	–	–	–	1900	3.15	2800	3.73	3900	4.32	5100	4.94	6700	5.56	8600	6.19
VTZ086-G	1800	20	1800	1.18	2600	1.31	3500	1.42	4700	1.49	6000	1.54	7700	1.56	–	–	–	–
	1800	30	1300	1.21	2000	1.40	2700	1.56	3700	1.69	4800	1.80	6200	1.87	7800	1.92	9600	1.94
	1800	40	900	1.16	1400	1.43	2000	1.66	2800	1.85	3700	2.02	4800	2.16	6100	2.27	7700	2.35
	1800	50	600	1.04	1000	1.38	1500	1.69	2000	1.97	2800	2.21	3600	2.42	4700	2.60	5900	2.75
	1800	60	–	–	–	–	900	1.67	1400	2.03	1900	2.36	2600	2.65	3400	2.91	4300	3.14
	3600	20	4300	2.46	5800	2.74	7600	2.97	9800	3.16	12400	3.29	15500	3.38	–	–	–	–
	3600	30	3300	2.53	4600	2.91	6200	3.25	8100	3.54	10400	3.78	13100	3.96	16300	4.10	19900	4.18
	3600	40	2300	2.46	3400	2.97	4800	3.42	6500	3.82	8400	4.17	10800	4.47	13500	4.72	16700	4.91
	3600	50	1400	2.24	2300	2.87	3500	3.45	4800	3.98	6500	4.46	8400	4.88	10700	5.25	13400	5.56
	3600	60	–	–	–	–	2200	3.34	3200	4.00	4500	4.62	6000	5.18	7900	5.68	10100	6.13
	5400	20	6200	3.89	8300	4.34	11000	4.74	14100	5.10	17900	5.40	22300	5.66	–	–	–	–
	5400	30	5000	4.00	6900	4.59	9300	5.13	12100	5.61	15500	6.05	19400	6.44	23900	6.78	29100	7.07
	5400	40	3600	3.91	5400	4.66	7400	5.35	9900	5.99	12800	6.58	16200	7.11	20200	7.60	24700	8.03
	5400	50	2300	3.59	3700	4.51	5500	5.38	7500	6.19	10000	6.94	12800	7.64	16200	8.28	20000	8.87
	5400	60	–	–	–	–	3400	5.16	5100	6.15	7000	7.09	9300	7.96	12000	8.78	15100	9.55

For more information and performance with other refrigerants, please refer to Coolselector ® 2 at coolselector.danfoss.com or contact Danfoss.

Technical data and ordering

VTZ - Inverter reciprocating compressor - R404A - 380 – 480 V

Performance table

Type	[rpm]	Te	-30		-25		-20		-15		-10		-5		0		5	
		Tc	Qo	Pe	Qo	Pe	Qo	Pe	Qo	Pe	Qo	Pe	Qo	Pe	Qo	Pe	Qo	Pe
VTZ121-G	1800	20	2700	1.89	3700	2.05	4800	2.19	6200	2.30	7900	2.39	10000	2.46	–	–	–	–
	1800	30	2300	2.03	3100	2.25	4100	2.44	5400	2.60	6900	2.74	8700	2.85	10800	2.95	13300	3.02
	1800	40	1800	2.10	2500	2.38	3400	2.64	4400	2.86	5700	3.06	7300	3.24	9100	3.39	11300	3.52
	1800	50	1200	2.08	1800	2.44	2500	2.77	3400	3.07	4400	3.35	5700	3.60	7300	3.82	9100	4.01
	1800	60	–	–	–	–	1700	2.82	2300	3.21	3100	3.57	4100	3.90	5300	4.20	6700	4.48
	3600	20	5500	3.69	7500	4.09	9900	4.47	12900	4.85	16400	5.21	20600	5.56	–	–	–	–
	3600	30	4500	3.88	6200	4.36	8400	4.82	11000	5.26	14100	5.70	17900	6.12	22300	6.54	27400	6.96
	3600	40	3500	3.99	5000	4.56	6800	5.11	9000	5.64	11800	6.17	15000	6.68	18900	7.18	23400	7.68
	3600	50	2600	4.00	3800	4.68	5200	5.33	7000	5.98	9300	6.60	12000	7.21	15200	7.81	19100	8.41
	3600	60	–	–	–	–	3700	5.49	5000	6.25	6700	6.99	8800	7.72	11400	8.43	14600	9.14
	5100	20	8100	5.47	10800	6.11	14200	6.73	18300	7.32	23400	7.85	29400	8.31	–	–	–	–
	5100	30	6400	5.63	8800	6.38	11700	7.14	15300	7.90	19800	8.64	25000	9.34	31300	9.99	[1])	–
	5100	40	4900	5.67	6900	6.50	9400	7.38	12400	8.29	16200	9.20	20700	10.10	26100	10.99	[1])	–
	5100	50	3400	5.64	5100	6.53	7100	7.49	9600	8.51	12600	9.57	16400	10.65	20900	11.74	[1])	–
	5100	60	–	–	–	–	4900	7.52	6800	8.62	9100	9.79	12100	11.02	15700	12.29	[1])	–
VTZ171-G	1800	20	3900	2.31	5400	2.59	7200	2.83	9400	3.04	12000	3.20	15200	3.31	–	–	–	–
	1800	30	2900	2.32	4200	2.65	5700	2.96	7600	3.24	9800	3.47	12400	3.67	15500	3.82	19100	3.91
	1800	40	2100	2.31	3100	2.72	4300	3.11	5900	3.48	7700	3.81	9900	4.10	12500	4.36	15500	4.57
	1800	50	1400	2.23	2200	2.74	3100	3.23	4300	3.70	5800	4.14	7500	4.56	9600	4.94	12100	5.28
	1800	60	–	–	–	–	2100	3.25	2900	3.84	4000	4.41	5300	4.97	6900	5.49	8800	5.98
	3600	20	7700	4.52	10400	5.12	13800	5.67	18100	6.16	23200	6.61	29200	7.03	–	–	–	–
	3600	30	6200	4.73	8700	5.49	11700	6.16	15400	6.77	19900	7.32	25200	7.82	31400	8.28	38600	8.71
	3600	40	4700	4.78	6800	5.75	9500	6.61	12600	7.39	16400	8.08	21000	8.71	26300	9.28	32500	9.81
	3600	50	3100	4.54	4900	5.76	7100	6.87	9700	7.87	12900	8.77	16600	9.58	21000	10.31	26200	10.98
	3600	60	–	–	–	–	4700	6.81	6700	8.08	9200	9.24	12100	10.29	15600	11.24	19700	12.10
	5400	20	11300	7.31	15900	8.36	21500	9.26	28000	10.05	35600	10.73	44300	11.32	–	–	–	–
	5400	30	8900	7.54	13000	8.95	17900	10.20	23700	11.32	30400	12.32	38000	13.21	46600	14.03	56100	14.77
	5400	40	6400	7.24	10000	9.03	14200	10.66	19300	12.14	25000	13.50	31600	14.73	39000	15.87	47200	16.93
	5400	50	3800	6.29	6800	8.51	10400	10.55	14700	12.44	19500	14.17	25000	15.78	31200	17.28	38100	18.69
	5400	60	–	–	–	–	6500	9.78	9900	12.09	13900	14.25	18300	16.27	23300	18.16	28900	19.95
VTZ215-G	1800	20	4800	3.00	6700	3.31	9000	3.58	11900	3.79	15400	3.95	19500	4.04	–	–	–	–
	1800	30	3700	3.18	5300	3.60	7400	3.97	9800	4.30	12800	4.57	16300	4.79	20400	4.94	25200	5.02
	1800	40	2700	3.24	4100	3.78	5800	4.28	7800	4.74	10300	5.15	13300	5.51	16800	5.80	20800	6.03
	1800	50	1800	3.15	2900	3.83	4200	4.48	5900	5.09	7900	5.65	10300	6.16	13200	6.62	16500	7.02
	1800	60	–	–	–	–	2800	4.52	4100	5.30	5600	6.03	7400	6.72	9700	7.36	12300	7.95
	3600	20	9200	5.45	12700	6.26	17200	7.01	22700	7.68	29400	8.27	37400	8.76	–	–	–	–
	3600	30	7600	5.86	10700	6.85	14600	7.79	19300	8.68	25100	9.49	32100	10.23	40300	10.86	49800	11.38
	3600	40	5900	6.12	8600	7.28	11900	8.41	15900	9.49	20800	10.53	26700	11.49	33700	12.38	41900	13.16
	3600	50	4100	6.24	6400	7.55	9200	8.85	12500	10.13	16500	11.37	21300	12.56	27100	13.68	33900	14.72
	3600	60	–	–	–	–	6300	9.13	8900	10.58	12000	12.02	15700	13.41	20300	14.76	25700	16.04
	5400	20	15200	9.71	20500	11.10	27000	12.40	34800	13.62	44100	14.73	55000	15.73	–	–	–	–
	5400	30	12200	9.94	17200	11.64	23200	13.30	30300	14.90	38800	16.44	48700	17.91	60200	19.30	73400	20.59
	5400	40	9000	9.79	13400	11.78	18700	13.76	25000	15.73	32500	17.67	41200	19.58	51400	21.44	63200	23.24
	5400	50	5800	9.21	9500	11.46	13900	13.73	19100	16.03	25400	18.35	32900	20.66	41600	22.97	51800	25.26
	5400	60	–	–	–	–	8900	13.17	13000	15.77	17900	18.43	23800	21.13	30900	23.85	39300	26.60

To: *Evaporating temperature in [°C]*
Tc: *Condensing temperature in [°C]*
Qo: *Cooling capacity in [W]*
Pe: *Power input in [kW]*
Subcooling: *0 K*
Superheat: *10 K*
Voltage code: *G: 380 – 480 V / 3 / 50 and 60 Hz*
[1]) *Error 3: Evaporating temperature too high. Approximative result*

For more information and performance with other refrigerants, please refer to Coolselector ® 2 at coolselector.danfoss.com or contact Danfoss.

Technical data and ordering

VTZ - Inverter reciprocating compressor - R407C - 380 – 480 V

Performance table

Type	[rpm]	Te	-15		-10		-5		0		5		10		15	
		Tc	Qo	Pe	Qo	Pe	Qo	Pe	Qo	Pe	Qo	Pe	Qo	Pe	Qo	Pe
VTZ038-G	2100	20	2000	0.69	2600	0.71	3300	0.73	4100	0.72	–	–	–	–	–	–
	2100	30	1700	0.77	2200	0.84	2800	0.89	3600	0.91	4400	0.93	5400	0.93	–	–
	2100	40	1300	0.82	1800	0.93	2300	1.01	3000	1.08	3700	1.13	4600	1.17	5600	1.20
	2100	50	–	–	1400	0.98	1900	1.11	2400	1.22	3100	1.32	3800	1.40	4700	1.47
	2100	60	–	–	–	–	1400	1.18	1800	1.34	2400	1.48	3000	1.61	3800	1.73
	3600	20	3200	1.11	4200	1.19	5400	1.25	6900	1.30	–	–	–	–	–	–
	3600	30	2700	1.24	3600	1.35	4700	1.45	6000	1.53	7500	1.59	9400	1.63	–	–
	3600	40	2200	1.34	3000	1.49	3900	1.63	5100	1.75	6400	1.86	8000	1.94	9900	2.01
	3600	50	–	–	2400	1.60	3300	1.79	4200	1.96	5400	2.11	6700	2.25	8400	2.36
	3600	60	–	–	–	–	2600	1.92	3400	2.14	4300	2.35	5500	2.54	6900	2.71
	5400	20	4600	1.79	6000	2.00	7600	2.19	9700	2.35	–	–	–	–	–	–
	5400	30	4000	1.96	5200	2.22	6700	2.47	8600	2.70	10900	2.91	13600	3.08	–	–
	5400	40	3300	2.06	4400	2.38	5700	2.68	7400	2.98	9400	3.26	11800	3.51	14700	3.73
	5400	50	–	–	3500	2.49	4600	2.85	6100	3.21	7800	3.55	9900	3.88	12500	4.18
	5400	60	–	–	–	–	3600	2.98	4800	3.40	6200	3.81	8000	4.21	10200	4.59
VTZ054-G	2100	20	2700	0.90	3500	0.94	4400	0.97	5500	0.99	–	–	–	–	–	–
	2100	30	2300	1.03	3000	1.11	3800	1.17	4800	1.21	6000	1.24	7500	1.26	–	–
	2100	40	1900	1.13	2500	1.26	3200	1.36	4100	1.45	5100	1.51	6400	1.56	7900	1.60
	2100	50	–	–	1900	1.37	2500	1.53	3300	1.67	4200	1.79	5300	1.88	6600	1.96
	2100	60	–	–	–	–	1900	1.65	2500	1.86	3300	2.04	4200	2.20	5200	2.33
	3600	20	4700	1.66	6100	1.79	7800	1.90	9900	1.99	–	–	–	–	–	–
	3600	30	4000	1.82	5200	2.00	6800	2.16	8700	2.32	10900	2.46	13500	2.58	–	–
	3600	40	3300	1.96	4400	2.19	5700	2.41	7400	2.62	9400	2.83	11700	3.02	14400	3.20
	3600	50	–	–	3600	2.33	4700	2.62	6100	2.89	7800	3.17	9900	3.43	12300	3.69
	3600	60	–	–	–	–	3700	2.76	4900	3.10	6300	3.45	8100	3.79	10200	4.13
	5400	20	6600	2.70	8600	3.01	11200	3.28	14300	3.51	–	–	–	–	–	–
	5400	30	5700	2.92	7500	3.32	9700	3.70	12400	4.05	15800	4.37	19800	4.63	–	–
	5400	40	4700	3.05	6300	3.53	8200	4.01	10600	4.48	13500	4.93	17000	5.34	21200	5.69
	5400	50	–	–	5200	3.63	6800	4.20	8800	4.78	11300	5.35	14300	5.89	17900	6.41
	5400	60	–	–	–	–	5400	4.26	7100	4.93	9100	5.62	11700	6.29	14700	6.96
VTZ086-G	1800	20	3700	1.14	5000	1.19	6500	1.22	8400	1.24	–	–	–	–	–	–
	1800	30	2900	1.34	3900	1.45	5200	1.53	6700	1.58	8600	1.62	10700	1.65	–	–
	1800	40	2200	1.47	3100	1.67	4100	1.82	5400	1.93	6800	2.02	8600	2.09	10700	2.14
	1800	50	–	–	2300	1.78	3200	2.03	4200	2.23	5500	2.40	6900	2.53	8600	2.63
	1800	60	–	–	–	–	2400	2.13	3300	2.45	4300	2.71	5400	2.93	6800	3.12
	3600	20	6300	2.61	8600	2.76	11500	2.88	14900	2.96	–	–	–	–	–	–
	3600	30	5500	2.86	7600	3.10	10100	3.28	13000	3.42	16500	3.53	20500	3.62	–	–
	3600	40	4600	3.04	6400	3.40	8600	3.69	11200	3.92	14200	4.10	17700	4.25	21700	4.38
	3600	50	–	–	5200	3.61	7100	4.04	9400	4.40	11900	4.69	14800	4.94	18200	5.16
	3600	60	–	–	–	–	5500	4.27	7400	4.80	9500	5.24	11900	5.63	14700	5.97
	5400	20	10200	3.86	13400	4.11	17500	4.31	22600	4.44	–	–	–	–	–	–
	5400	30	8800	4.33	11500	4.69	14900	5.02	19200	5.30	24500	5.52	31100	5.65	–	–
	5400	40	7700	4.72	9900	5.19	12700	5.65	16200	6.07	20700	6.45	26100	6.76	32800	7.00
	5400	50	–	–	8400	5.62	10800	6.19	13700	6.75	17300	7.29	21800	7.77	27300	8.21
	5400	60	–	–	–	–	8900	6.66	11300	7.35	14300	8.04	17900	8.69	22400	9.31

For more information and performance with other refrigerants, please refer to Coolselector ® 2 at coolselector.danfoss.com or contact Danfoss.

Technical data and ordering

VTZ - Inverter reciprocating compressor - R407C - 380 – 480 V

Performance table

Type	[rpm]	Te	-15		-10		-5		0		5		10		15	
		Tc	Qo	Pe	Qo	Pe	Qo	Pe	Qo	Pe	Qo	Pe	Qo	Pe	Qo	Pe
VTZ121-G	1800	20	5200	1.66	6900	1.77	8900	1.84	11300	1.85	–	–	–	–	–	–
	1800	30	4400	1.91	5800	2.10	7600	2.25	9700	2.35	12200	2.40	15100	2.39	–	–
	1800	40	3500	2.11	4800	2.39	6400	2.62	8200	2.80	10400	2.94	12900	3.02	15800	3.04
	1800	50	–	–	3900	2.63	5200	2.95	6800	3.21	8600	3.43	10800	3.60	13300	3.71
	1800	60	–	–	–	–	4100	3.23	5400	3.58	6900	3.89	8700	4.15	10900	4.35
	3600	20	11100	3.94	14300	4.27	18200	4.60	22800	4.92	–	–	–	–	–	–
	3600	30	9400	4.21	12200	4.60	15700	4.98	19900	5.34	24800	5.69	30600	6.03	–	–
	3600	40	7800	4.52	10300	5.01	13300	5.47	17100	5.93	21500	6.36	26700	6.77	32700	7.16
	3600	50	–	–	8400	5.36	11100	5.97	14300	6.55	18200	7.11	22800	7.64	28200	8.15
	3600	60	–	–	–	–	8900	6.33	11600	7.09	14900	7.82	18900	8.51	23700	9.18
	5100	20	15400	5.71	19800	6.34	25000	6.98	31300	7.64	–	–	–	–	–	–
	5100	30	13100	6.11	17100	6.81	21900	7.52	27600	8.26	34300	9.02	42200	9.79	–	–
	5100	40	10900	6.48	14400	7.28	18700	8.09	23800	8.92	29900	9.77	37000	10.64	45200	11.52
	5100	50	–	–	11800	7.68	15500	8.62	19900	9.56	25300	10.53	31600	11.51	39000	12.51
	5100	60	–	–	–	–	12400	9.04	16100	10.13	20700	11.23	26100	12.35	32600	13.49
VTZ171-G	1800	20	6900	2.27	9000	2.38	11700	2.45	14800	2.47	–	–	–	–	–	–
	1800	30	6000	2.68	7900	2.88	10300	3.05	13200	3.17	16700	3.24	20800	3.27	–	–
	1800	40	4900	3.00	6600	3.31	8800	3.59	11400	3.84	14500	4.04	18100	4.19	22500	4.28
	1800	50	–	–	5200	3.64	7100	4.05	9300	4.44	12000	4.78	15200	5.08	19000	5.33
	1800	60	–	–	–	–	5300	4.38	7100	4.93	9300	5.44	12000	5.92	15300	6.34
	3600	20	15300	5.05	19600	5.33	24800	5.49	30900	5.50	–	–	–	–	–	–
	3600	30	12900	5.67	16900	6.18	21700	6.59	27400	6.88	34200	7.02	42100	7.00	–	–
	3600	40	10500	6.06	14100	6.82	18400	7.49	23700	8.06	29900	8.50	37200	8.80	45700	8.93
	3600	50	–	–	11300	7.25	15100	8.19	19700	9.04	25300	9.80	31900	10.43	39700	10.91
	3600	60	–	–	–	–	11800	8.69	15700	9.84	20600	10.91	26400	11.88	33300	12.72
	5400	20	21100	7.82	27300	8.46	34800	9.00	43600	9.43	–	–	–	–	–	–
	5400	30	18500	8.77	24500	9.71	31600	10.55	39900	11.31	49600	11.97	60700	12.54	–	–
	5400	40	15600	9.47	21100	10.71	27600	11.87	35300	12.96	44200	13.96	54600	14.89	66400	15.73
	5400	50	–	–	17300	11.40	23100	12.89	30000	14.31	38100	15.66	47400	16.95	58200	18.18
	5400	60	–	–	–	–	18300	13.52	24200	15.29	31300	17.01	39600	18.67	49100	20.29
VTZ215-G	1800	20	9200	2.96	11800	3.13	15100	3.26	18900	3.37	–	–	–	–	–	–
	1800	30	8100	3.48	10500	3.75	13400	3.98	17000	4.16	21200	4.31	26300	4.42	–	–
	1800	40	6800	3.93	8900	4.34	11600	4.70	14700	5.00	18500	5.26	23100	5.47	28400	5.64
	1800	50	–	–	7200	4.82	9500	5.35	12300	5.82	15600	6.23	19600	6.58	24300	6.88
	1800	60	–	–	–	–	7400	5.87	9700	6.54	12500	7.14	15900	7.68	19900	8.15
	3600	20	20700	6.67	26200	7.18	32800	7.63	40600	8.03	–	–	–	–	–	–
	3600	30	17800	7.45	22800	8.14	28900	8.79	36000	9.38	44400	9.92	54100	10.40	–	–
	3600	40	14800	8.04	19300	8.97	24800	9.85	31200	10.68	38800	11.45	47700	12.16	57900	12.81
	3600	50	–	–	15800	9.62	20600	10.78	26300	11.88	33100	12.93	41000	13.92	50300	14.85
	3600	60	–	–	–	–	16400	11.54	21300	12.96	27200	14.33	34200	15.64	42400	16.89
	5400	20	28400	10.93	36500	12.14	46200	13.25	57500	14.22	–	–	–	–	–	–
	5400	30	24600	11.71	32100	13.25	41100	14.75	51600	16.17	63800	17.48	77800	18.64	–	–
	5400	40	20600	12.27	27500	14.11	35700	15.97	45300	17.81	56400	19.60	69300	21.30	84000	22.87
	5400	50	–	–	22700	14.80	30000	16.98	38600	19.20	48600	21.43	60100	23.64	73500	25.78
	5400	60	–	–	–	–	24100	17.85	31600	20.42	40400	23.06	50600	25.73	62500	28.40

To: *Evaporating temperature in [°C]*
Tc: *Condensing temperature in [°C]*
Qo: *Cooling capacity in [W]*
Pe: *Power input in [kW]*
Subcooling: *0 K*
Superheat: *10 K*
Voltage code*: G: 380 – 480 V / 3 / 50 and 60 Hz*

For more information and performance with other refrigerants, please refer to Coolselector ® 2 at coolselector.danfoss.com or contact Danfoss.

Nomenclature

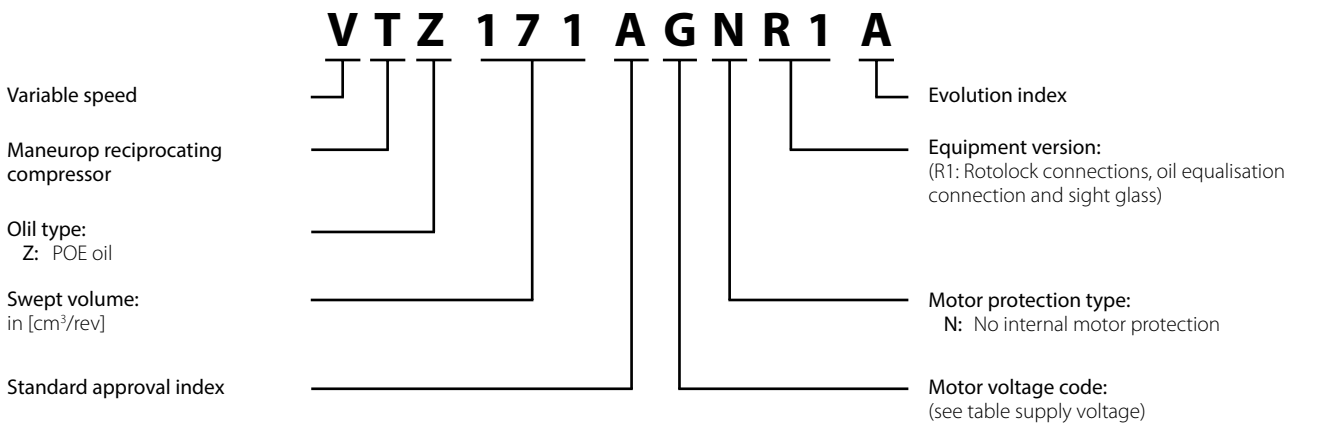

Compressor specifications

Compressor Type	Swept volume [cm³/rev]	Displacement			Cyl. nbr	Oil charge [dm³]	Net Weight [kg]
		Min speed [m³/h]	50 Hz [m³/h]	Max speed [m³/h]			
VTZ038	38.12	4.57	6.63	12.12	1	0.95	21
VTZ054	53.86	6.46	9.37	17.13	1	0.95	24
VTZ086	85.64	8.74	14.90	27.23	2	1.80	35
VTZ121	120.94	12.34	21.04	36.28	2	1.80	40
VTZ171	171.26	17.47	29.80	54.46	4	3.90	60
VTZ215	215.44	21.97	37.49	68.51	4	3.90	64

Frequency converter nomenclature

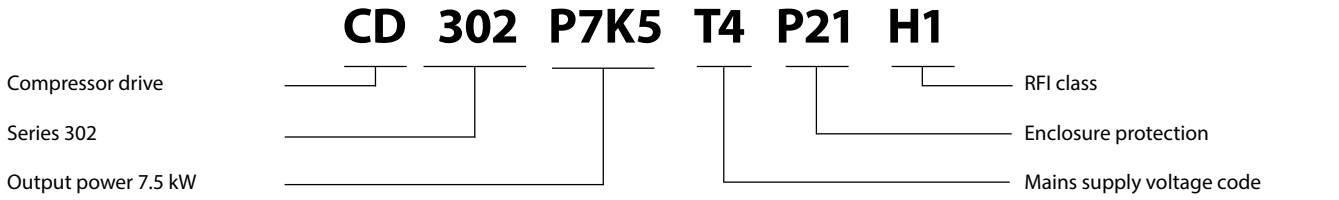

Frequency converter specifications

Mains supply voltage	T2: 200 – 240 V ± 10% (3-phase), T4: 380 – 480 V ± 10% (3-phase)
Supply frequency	50 / 60 Hz
Output voltage	0 – 100% of supply voltage
Inputs	6 digital (0 – 24 V), 2 analogue (-10 – 10 V or 0 / 4 V -20 mA, scalable)
Programmable outputs	2 digital (0 – 24 V), 1 analogue, 2 relay
Protection functions	Over-current protection, over-modulation handling, low / high current handling
Smart Logic Control functions	Pump-down function, Anti short-cycle function, Oil return management
Communication	Modbus

Dimensions

VTZ038 / VTZ054

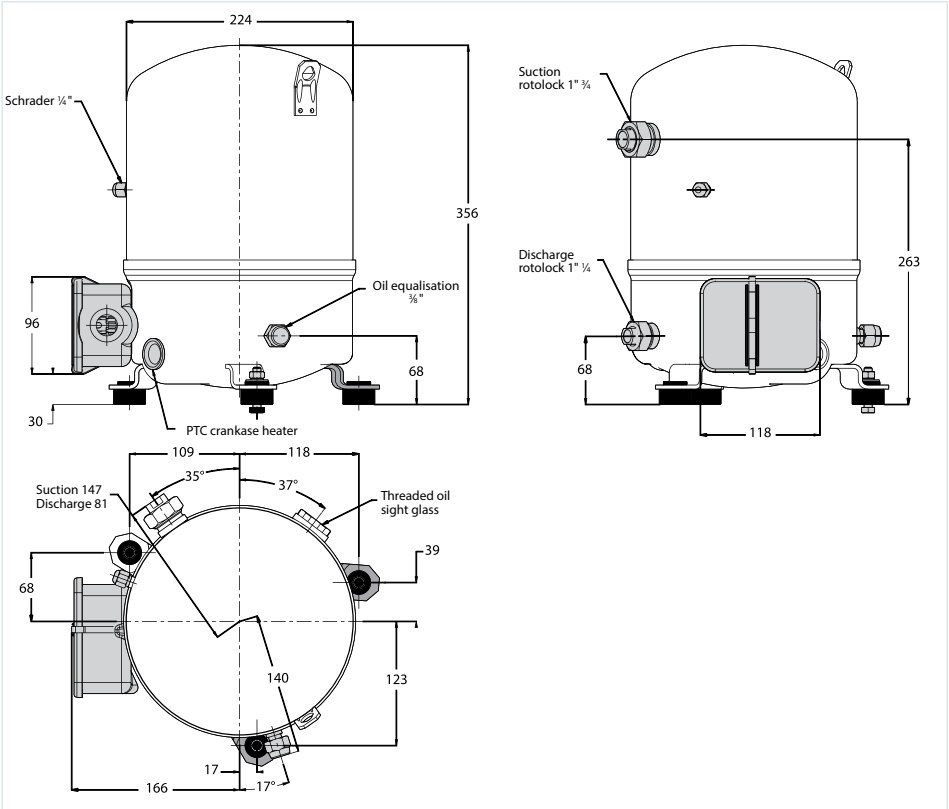

VTZ086 / VTZ121

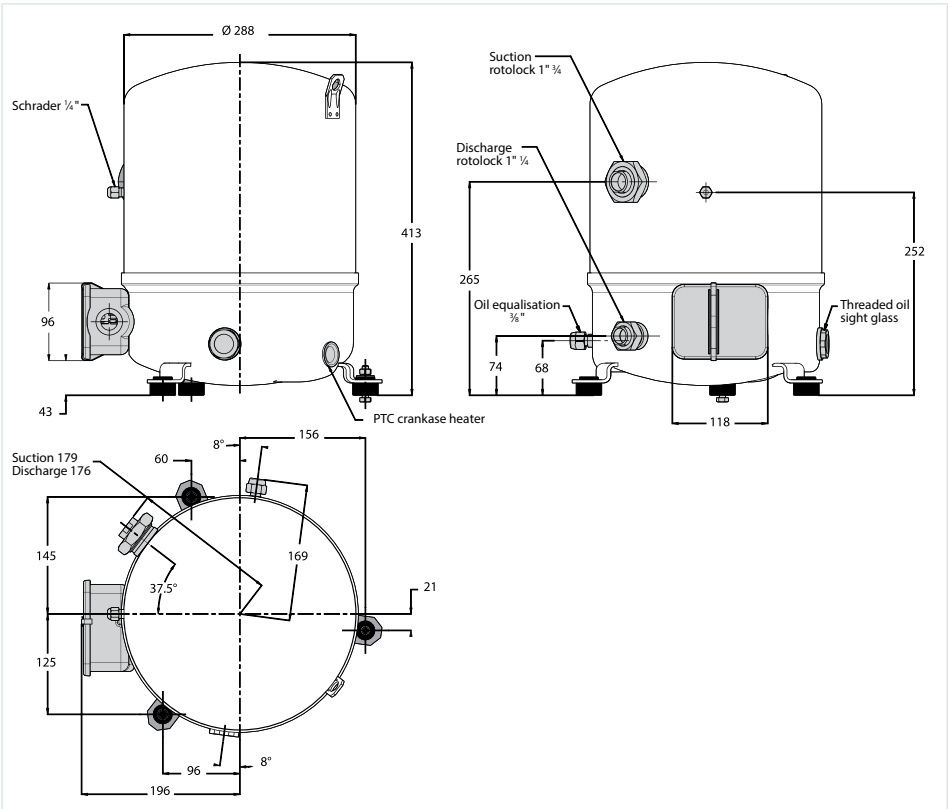

Dimensions

VTZ171 / VTZ215

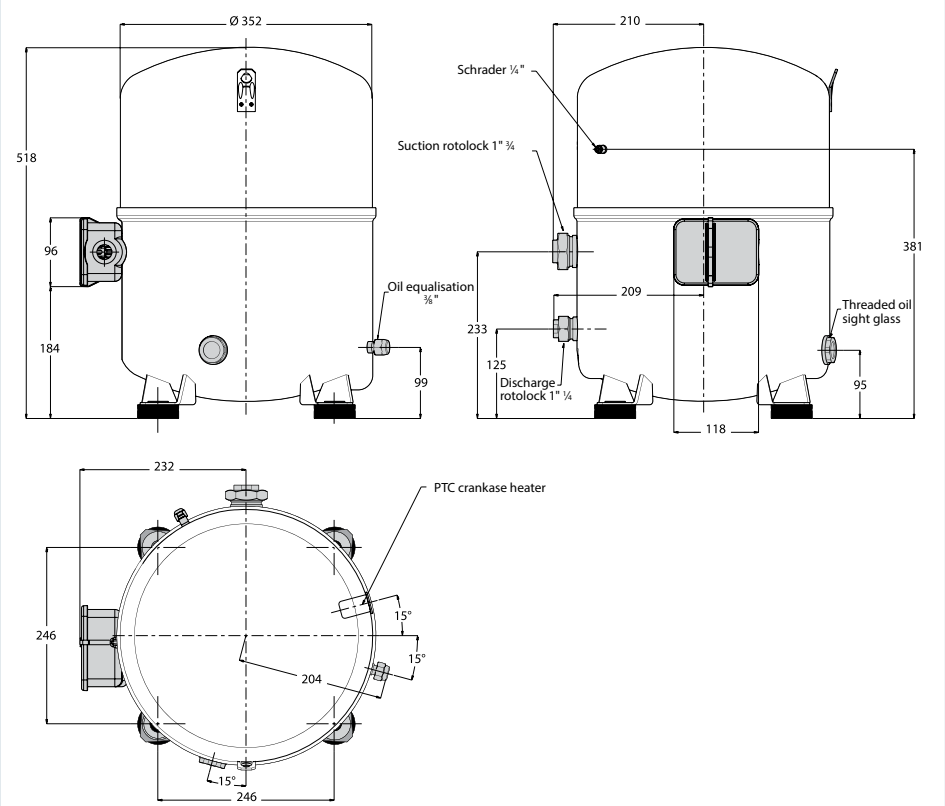

Technical data

Sight glass

VTZ compressors come equipped with a threaded oil sight glass with 1 1/8 – 18 inch UNEF connection.
It can be used for visual check of oil amount and conditions, or it may be replaced by an oil management device.

Schrader

The oil fill connection and gauge port is a 1/4 inch male flare connector incorporating a schrader valve.

Suction and discharge connections

VTZ compressors are all delivered with suction and discharge rotolock connections only.

Type	Rotolock connections size		Pipe sizing		Rotolock valve	
	Suction [in]	Discharge [in]	Suction [in]	Discharge [in]	Suction	Discharge
VTZ038 – 054	1 1/4	1	5/8	1/2	V09	V06
VTZ086 – 121	1 3/4	1 1/4	7/8	3/4	V07	V04
VTZ171 – 215	1 3/4	1 1/4	1 1/8	3/4	V02	V04

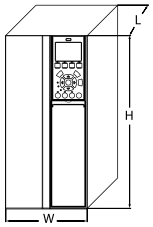

VTZ - Inverter reciprocating compressor

Frequency converter dimensions

Drive supply voltage	Drive power [kW]	Compressor voltage code	Compressor model	IP20			IP21			IP55		
				Drive enclosure	Overall dimension (H x W x L) [mm]	Weight [kg]	Drive enclosure	Overall dimension (H x W x L) [mm]	Weight [kg]	Drive enclosure	Overall dimension (H x W x L) [mm]	Weight [kg]
T2: 200 – 240 / 3 / 50 – 60	3.7	J	VTZ038	A3	268x130x205	6.6	–	–	–	–	–	–
	5.5	J	VTZ054	–	–	–	B1	494x242x260	23	B1	480x242x260	23
	7.5	J	VTZ086	–	–	–	B1	494x242x260	23	B1	480x242x260	23
	11	J	VTZ121	–	–	–	B2	664x242x260	27	B2	664x242x260	27
T4: 380 – 480 / 3 / 50 – 60	4	G	VTZ038	A2	268x90x205	4.9	–	–	–	A5	420x242x200	13.5
	5.5	G	VTZ054	A3	268x130x205	6.6	–	–	–	A5	420x242x200	13.5
	7.5	G	VTZ086	A3	268x130x205	6.6	–	–	–	A5	420x242x200	13.5
	11	G	VTZ121	B3	399x165x248	12	B1	494x242x260	23	B1	480x242x260	23
	15	G	VTZ171	B3	399x165x248	12	B1	494x242x260	23	B1	480x242x260	23
	18.5	G	VTZ215	B4	518x231x242	23	B2	664x242x260	27	B2	650x242x260	27

Frequency converter dimensions depend on supply voltage, IP rating and power
The below table gives an overview of the overall dimensions and different drive enclosures (B1 - C3)
Details for each drive enclosure are on the following pages

Quick Selection Notes:

DCJ, Scroll compressor - R410A

DCJ compressors range from 7.5 to 10 TR. They are designed for excellence in performance and feature the Intermediate Discharge Valves (IDVs) for higher part-load efficiency. They are compact and are available in single and tandem models. They are optimized for R410A.

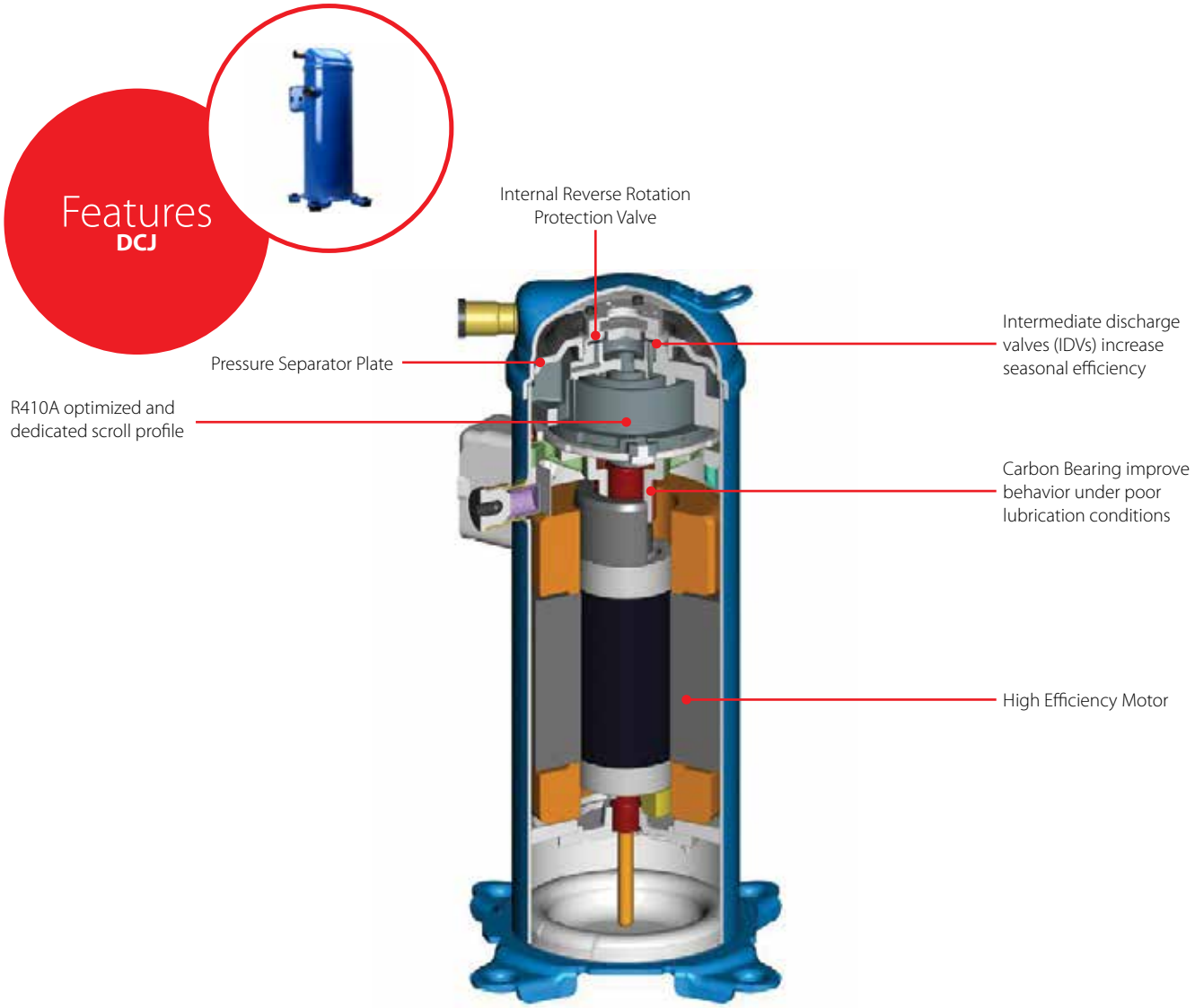

Facts

Applications:

- A good fit for compact air conditioning systems operating with R410A

- **Intermediate Discharge Valves (IDVs)**
- Mechanically reduce excessive compression of refrigerant under part-load conditions while maintaining the same cooling capacity. They adapt the effort of the motor to the pressure conditions in the system by openingwhen condensing pressure and pressure ratio (part-load) fall below the built-in optimization point of the scroll. This reduces the effort of the motor and its electrical consumption thus improving the system's seasonal energy efficiency. IDV technology enhances system efficiency by 15% on average in Water-to- Water chillers and by 6% in rooftops and Air-to-Water chillers
- Reduce the load on mechanical parts at start up, provide safer operation at high condensing and evaporating temperatures and contribute to better liquid management

Technical data and ordering

DCJ - Scroll compressor - R410A

Ordering - Single pack

Compressor model	Model Variation	Connections	Feature	Code no.			
				2	4	7	9
				200-220/3/50 208-230/3/60	380-415/3/50 460/3/60	575/3/50	380/3/60
DCJ091	T	C	6	121L5003	121L5001	121L5005 [2)]	121L5007 [2)]
	T	C	8 [1)]	121L5029	121L5027	121L5031 [2)]	121L5033 [2)]
DCJ106	T	C	6	121L5011	121L5009	121L5013 [2)]	121L5015 [2)]
	T	C	8 [1)]	121L5037	121L5035	121L5039 [2)]	121L5041 [2)]
DCJ121	T	C	6	121L5019	121L5017	121L5021 [2)]	121L5023 [2)]
	T	C	8 [1)]	121L5045	121L5043	121L5047 [2)]	121L5049 [2)]

[1)] Feature 8 is for tandem manifolding
[2)] These code are preliminary.

DCJ - Scroll compressor - R410A

Ordering - Industrial pack

Compressor model	Model Variation	Connections	Feature	Code no.			
				2	4	7	9
				200-220/3/50 208-230/3/60	380-415/3/50 460/3/60	575/3/50	380/3/60
DCJ091	T	C	6	121L5002	121L5000	121L5004 [2)]	121L5006 [2)]
	T	C	8 [1)]	121L5028	121L5026	121L5030 [2)]	121L5032 [2)]
DCJ106	T	C	6	121L5010	121L5008	121L5012 [2)]	121L5014 [2)]
	T	C	8 [1)]	121L5036	121L5034	121L5038 [2)]	121L5040 [2)]
DCJ121	T	C	6	121L5018	121L5016	121L5020 [2)]	121L5022 [2)]
	T	C	8 [1)]	121L5044	121L5042	121L5046 [2)]	121L5048 [2)]

[1)] Feature 8 is for tandem manifolding
[2)] These code are preliminary.

DCJ – Scroll compressors – R410A – 50 Hz – 60 Hz

Technical data

Compressor model		Nominal tons 60 Hz	Nominal cooling capacity		Power input	COP	E.E.R.	Swept volume		Displacement [1)]		Oil charge		Net weight [2)]	
		[TR]	[W]	[Btu/h]	[W]	[W/W]	[Btu/h/W]	[cm³/rev]	[cu.in/rev]	[m³/h]	[cu.ft/h]	[dm³]	[oz]	[kg]	[lbs]
50 Hz	DCJ091	7.5	19670	67114	6360	3.09	10.55	86.9	5.3	15.11	533.6	2.46	84	49	108
	DCJ106	9	23000	78476	7363	3.12	10.66	101.6	6.2	17.68	624.4	2.46	84	49	108
	DCJ121	10	26250	89565	8431	3.11	10.62	116.4	7.1	20.24	714.8	2.46	84	49	108
60 Hz	DCJ091	7.5	27084	92437	8393	3.23	11.01	86.9	5.3	18.24	644.1	2.46	84	49	108
	DCJ106	9	31472	107412	9671	3.25	11.11	101.6	6.2	21.34	753.6	2.46	84	49	108
	DCJ121	10	35723	121921	11122	3.21	10.96	116.4	7.1	24.43	862.7	2.46	84	49	108

[1)] Displacement at nominal speed: 2900 rpm at 50 Hz, 3500 rpm at 60 Hz
[2)] Net weight with oil charge
TR: Ton of Refrigeration,
Standard rating conditions:
For 50 Hz: Evaporating temperature: 5 °C / 41°F, Condensing temperature: 50 °C / 122 °F, Superheat: 10 K (18°F), Subcooling: 0 K (0 °F)
For 60 Hz: Evaporating temperature: 7.1 °C / 45 °F, Condensing temperature: 54.4 °C / 130 °F, Superheat: 11.1 K (20°F), Subcooling: 8.3 K (15 °F)
EER: Energy Efficiency Ratio Refrigerant: R410A
COP: Coefficient Of Performance,
All performance data test after run-in 72 hrs
Subject to modification without prior notification.

Technical data and ordering

DCJ – Scroll compressors – R410A – 50 Hz

Performance table

Compressor model	Te	-25		-15		-5		0		5		10		20	
	Tc	Qo	Pe	Qo	Pe	Qo	Pe	Qo	Pe	Qo	Pe	Qo	Pe	Qo	Pe
DCJ091T4	30	8200	4.03	12850	4.12	19140	4.18	23020	4.16	27470	4.07	32520	3.90	–	–
DCJ091T4	45	–	–	10610	5.63	16070	5.68	19450	5.71	23330	5.72	27760	5.68	38480	5.40
DCJ106T4	30	9740	4.64	15220	4.71	22580	4.78	27110	4.77	32290	4.70	38180	4.54	–	–
DCJ106T4	45	–	–	12390	6.55	18830	6.57	22800	6.59	27350	6.59	32540	6.56	45080	6.31
DCJ121T4	30	11280	5.29	17530	5.34	25950	5.45	31140	5.46	37080	5.41	43820	5.26	–	–
DCJ121T4	45	–	–	14140	7.56	21520	7.49	26090	7.52	31320	7.54	37290	7.54	51700	7.34

To : Evaporating temperature in [°C]
Tc : Condensing temperature in [°C]
Qo: Cooling Capacity in [W]
Pe : Power input in [kW]
Subcooling : 8.3K
Superheat : 11.1K
Voltage : 400 V /3 /50 Hz

DCJ – Scroll compressors – R410A – 60 Hz

Performance table

Compressor model	Te	-25		-15		-5		0		5		10		20	
	Tc	Qo	Pe	Qo	Pe	Qo	Pe	Qo	Pe	Qo	Pe	Qo	Pe	Qo	Pe
DCJ091T4	30	10150	4.80	15760	4.98	23340	5.11	28020	5.08	33380	4.94	39480	4.65	-	-
DCJ091T4	45	-	-	13130	6.67	19710	6.81	23780	6.89	28460	6.93	33800	6.89	46720	6.47
DCJ106T4	30	11970	5.49	18500	5.65	27310	5.82	32750	5.81	38970	5.68	46050	5.38	-	-
DCJ106T4	45	-	-	15300	7.68	22980	7.79	27730	7.89	33190	7.95	39420	7.94	54490	7.52
DCJ121T4	30	13830	6.24	21270	6.39	31290	6.60	37480	6.60	44540	6.48	52570	6.19	-	-
DCJ121T4	45	-	-	17440	8.82	26240	8.90	31670	9.00	37900	9.09	45010	9.11	62170	8.75

To : Evaporating temperature in [°C]
Tc : Condensing temperature in [°C]
Qo: Cooling Capacity in [W]
Pe : Power input in [kW]
Subcooling : 8.3K
Superheat : 11.1K
Voltage : 460 V /3 /60 Hz

For more information and performance with other refrigerants, please refer to Coolselector ® 2 at coolselector.danfoss.com or contact Danfoss.

Nomenclature and Dimensions

Type	Size	Motor	Features
DCJ	091	T4L	C6

DCJ:
Commercial scroll,PVE lubricant,for R410A

Nominal capacity:
In thousand Btu/h at 60 Hz,
ARI conditions

Model variation:
T: Design optimized for 7.2 – 54.4 °C

Other features

	Oil sight glass	Oil equalisation	Oil drain	LP gauge port	Gas equalisation port
6	None	None	None	None	None
8	None	Brazed	None	None	Brazed

Tubing and electrical connections
C: brazed connections, screw terminals



Motor protection
C: brazed connections, screw terminals

Motor voltage code
2: 200-220 V/3~/50 Hz & 208-230 V/3~/60 Hz
4: 380-415V/3~/50 Hz & 460 V/3~/60 Hz
7: 575V/3~/60 Hz
9: 380 V/3~/60 Hz

Single compressors DCJ091-106-121

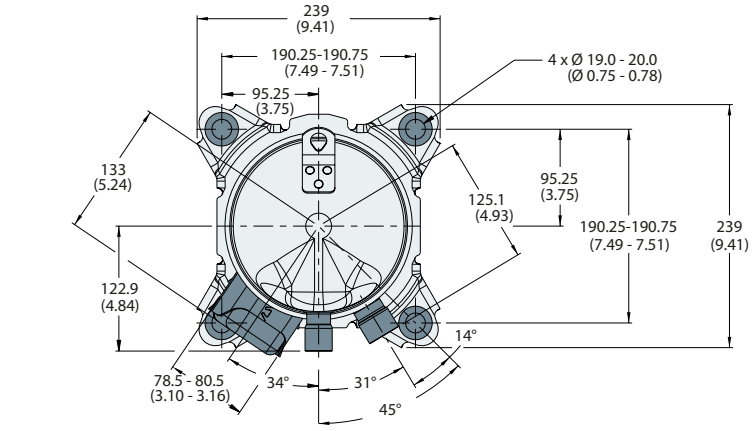

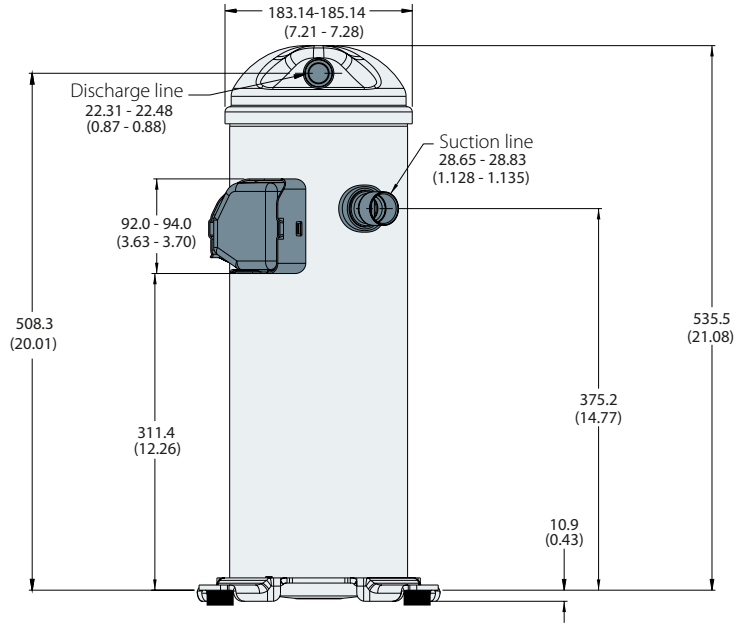

DCJ091-106-121

All dimensions in mm (inch)

H-Series, Scroll compressor

Danfoss scrolls are designed for excellence in performance, silence and endurance. They feature compressors that are among the quietest, most efficient, reliable and available on the market. Ranging from 2.5 – 10 TR, the universal dimension, footprint and connections of the H series make it the natural choice for greater comfort in existing or new residences.

Available in a large variety of single and tandem models for refrigerants R407C, R134a, R410A and R22, the compressors combine high energy efficiency with low sound and minimal vibration.

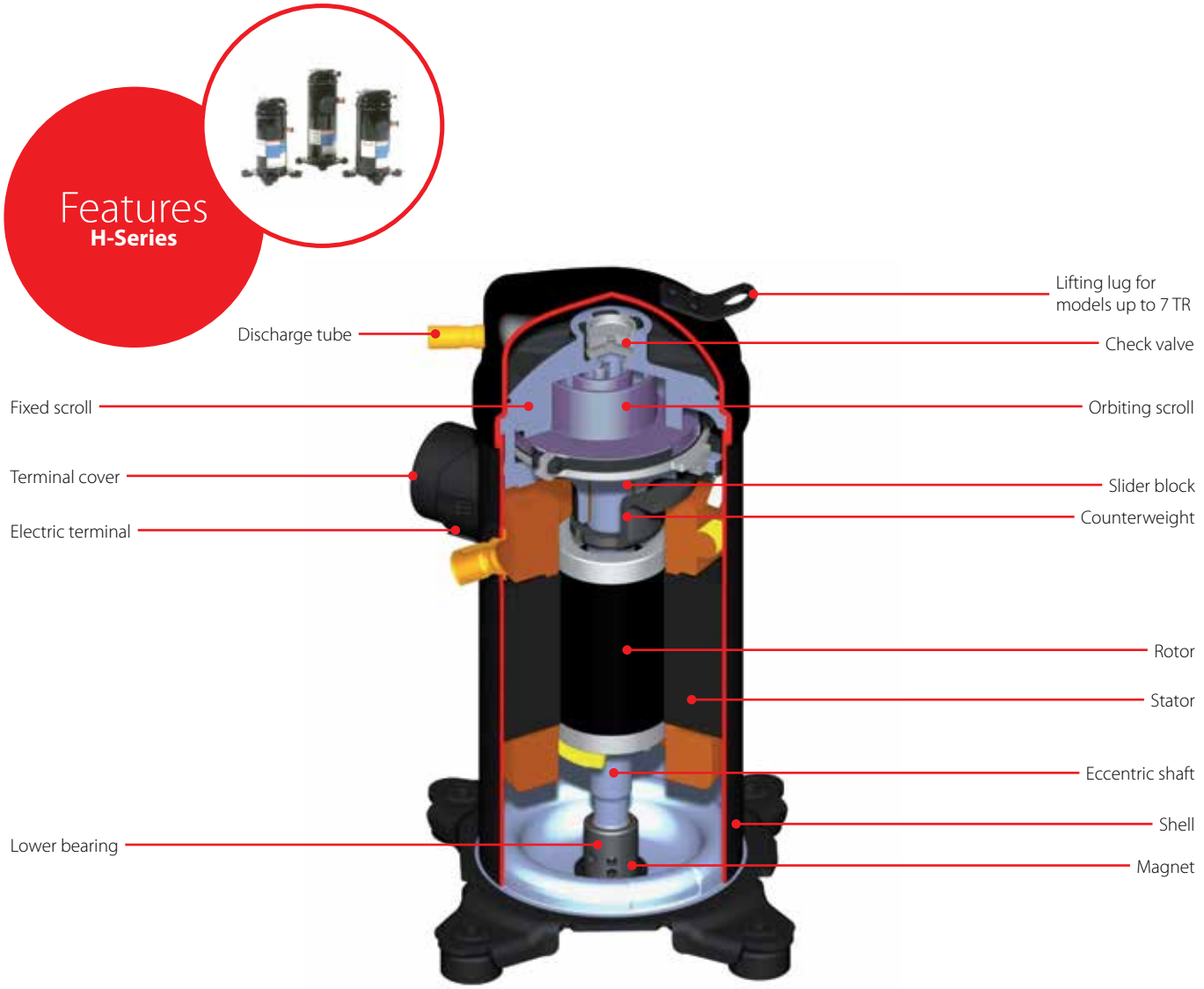

Facts

- Discharge check valve: no reverse rotation hence no shutdown noise
- Radial scroll compliance: good resistance to liquid flood back
- Axial scroll compliance: low starting current
- Oil injection: good lubrication at fierce conditions
- Lead-free bearings: high reliability even with low lubrication
- Patented internal protection combined with HOOP (Hot Oil Over Protector) thermal valve: excellent reliability
- Standard dimensions and tubing: ideal for both new installations and replacement markets

Technical data and ordering

H series - Scroll compressor - R22 / R407C / R410A - 50 Hz

Technical data

Type		Nominal tons 60 Hz	Nominal cooling capacity		Power input	COP	E.E.R	Swept volume	Displacement	Oil charge	Net weight
		[TR]	[W]	[Btu/h]	[kW]	[W/W]	[Btu/h/W]	[cm³/rev]	[m³/h]	[dm³]	[kg]
R22	HRM025T4	2	5 950	20 300	1.86	3.2	10.9	34.1	5.9	1.06	32
	HRM034U4	2.8	8 350	28 490	2.66	3.14	10.7	46.2	8.03	1.06	32
	HRM034T4	2.8	8 200	28 000	2.66	3.29	11.2	46.2	8.03	1.06	32
	HRM038U4	3.2	9 240	31 520	2.94	3.14	10.7	51.6	8.98	1.06	32
	HRM040U4	3.3	9 710	33 120	2.98	3.26	11.1	54.4	9.47	1.06	32
	HRM042U4	3.5	10 190	34 770	3.13	3.26	11.1	57.2	9.95	1.06	32
	HRM042T4	3.5	10 110	34 500	3..08	3.28	11.2	57.2	9.95	1.06	32
	HRM045U4	3.8	10 940	37 310	3.45	3.17	10.8	61.5	10.69	1.33	32
	HRM047U4	3.9	11 500	39 250	3.57	3.23	11	64.1	11.15	1.33	32
	HRM048U4	4	11 510	39 270	3.57	3.23	11	64.4	11.21	1.57	39
	HRM051T4	4.3	12 390	42 280	3.67	3.37	11.5	68.8	11.98	1.57	39
	HRM051U4	4.3	12 800	43 690	3.83	3.34	11.4	68.8	11.98	1.57	39
	HRM054U4	4.5	13 390	45 680	3.97	3.37	11.5	72.9	12.69	1.57	41
	HRM054T4	4.5	13 300	45 400	3.84	3.46	11.8	72.9	12.69	1.57	41
	HRM058U4	4.8	14 340	48 930	4.25	3.37	11.5	78.2	13.6	1.57	41
	HRM060T4	5	14 570	49 720	4.28	3.4	11.6	81	14.09	1.57	41
	HRM060U4	5	14 820	50 580	4.4	3.37	11.5	81	14.09	1.57	41
	HLM068T4	5.7	16 880	57 580	5	3.37	11.5	93.1	16.2	1.57	41
	HLM072T4	6	17 840	60 870	5.29	3.37	11.5	98.7	17.2	1.57	41
	HLM075T4	6.3	18 430	62 880	5.37	3.43	11.7	102.8	17.88	1.57	41
	HLM081T4	6.8	19 890	67 880	5.8	3.43	11.7	110.9	19.3	1.57	41
	HCM094T4	7.8	23 060	78 670	6.8	3.39	11.6	126	21.93	2.66	47
	HCM109T4	9.1	26 690	91 070	7.77	3.43	11.7	148.8	25.89	2.66	47
	HCM120T4	10	29 130	99 390	8.51	3.42	11.7	162.4	28.26	2.66	47
R407C	HRP025T4	2	5730	19 570	1.86	3.08	10.5	34.1	5.9	1.06	32
	HRP034T4	2.8	7 940	27 080	2.68	2.96	10.1	46.2	8.03	1.06	32
	HRP038T4	3.2	8 840	30 150	2.82	3.14	10.7	51.6	8.98	1.06	32
	HRP040T4	3.3	9 110	31 080	3.14	2.9	9.9	54.4	9.47	1.06	32
	HRP042T4	3.5	9 580	32 680	3.3	2.9	9.9	57.2	9.95	1.06	32
	HRP045T4	3.8	10 810	36 890	3.58	3.02	10.3	61.5	10.69	1.33	32
	HRP047T4	3.9	11 130	37 980	3.69	3.02	10.3	64.1	11.15	1.33	32
	HRP048T4	4	11 100	37 880	3.35	3.31	11.3	64.4	11.21	1.57	39
	HRP051T4	4.3	12 120	41 370	3.83	3.17	10.8	68.8	11.98	1.57	39
	HRP054T4	4.5	12 570	42 880	3.97	3.17	10.8	72.8	12.66	1.57	41
	HRP058T4	4.8	13 470	45 970	4.25	3.17	10.8	78.2	13.6	1.57	41
	HRP060T4	5	13 860	47 280	4.26	3.25	11.1	81	14.09	1.57	41
	HLP068T4	5.7	15 700	53 560	5.1	3.08	10.5	93.1	16.2	1.57	41
	HLP072T4	6	16 620	56 740	5.3	3.14	10.7	98.7	17.17	1.57	41
	HLP075T4	6.3	18 040	61 550	5.54	3.26	11.1	102.8	17.88	1.57	41
	HLP081T4	6.8	19 480	66 510	5.99	3.25	11.1	110.9	19.3	1.57	41
	HCP094T4	7.8	21 590	73 660	6.63	3.26	11.1	126	21.93	2.66	47
	HCP109T4	9.1	26 060	88 950	7.93	3.28	11.2	148.8	25.89	2.66	47
	HCP120T4	10	28 150	96 080	8.88	3.17	10.8	162.4	28.26	2.66	47
R410A	HRH029U4	2.4	7 120	24 310	2.43	2.93	10	27.8	4.84	1.06	32
	HRH031U4	2.6	7 530	25 710	2.67	2.82	9.62	29.8	5.19	1.06	32
	HRH032U4	2.7	7 670	26 170	2.75	2.79	9.51	30.6	5.33	1.06	32
	HRH034U4	2.8	8 500	29 000	2.9	2.93	10	33.3	5.75	1.06	32
	HRH036U4	3	8 820	30 110	3.13	2.82	9.62	34.7	6.04	1.06	32
	HRH038U4	3.2	9 250	31 560	3.35	2.76	9.41	36.5	6.36	1.06	39
	HRH040U4	3.3	10 200	34 810	3.58	2.85	9.72	39.6	6.9	1.33	39
	HRH041U4	3.3	10 050	34 300	3.43	2.93	10	39.3	6.8	1.57	39
	HRH044U4	3.7	10 830	36 940	3.92	2.76	9.41	42.6	7.41	1.57	39
	HRH047U4	3.9	11 340	38 700	3.87	2.93	10.01	44.4	7.73	1.57	39
	HRH049U4	4.1	12 110	41 320	4.04	2.99	10.22	47.4	8.24	1.57	39
	HRH051U4	4.3	12 860	43 890	4.21	3.05	10.42	49.3	8.58	1.57	41
	HRH054U4	4.5	13 340	45 510	4.41	3.02	10.32	52.1	9.07	1.57	41
	HRH056U4	4.7	13 830	47 200	4.58	3.02	10.31	54.1	9.42	1.57	41
	HLH061T4	5.1	15 210	51 880	4.89	3.11	10.61	57.8	10.1	1.57	41
	HLH068T4	5.7	16 880	57 610	5.26	3.21	10.96	64.4	11.21	1.57	41
	HLJ072T4	6	17 840	60 900	5.56	3.21	11	68	11.82	1.57	41
	HLJ075T4	6.3	18 600	63 490	5.77	3.22	11	70.8	12.32	1.57	41
	HLJ083T4	6.9	20 420	69 690	6.28	3.25	11.1	78.1	13.59	1.57	41
	HCJ090T4	7.5	22 320	76 190	7.19	3.11	10.6	86.9	15.11	2.66	44
	HCJ091T4	7.5	22 380	76 360	7.03	3.18	10.87	86.9	15.11	2.46	49
	HCJ105T4	8.8	26 100	89 090	8.25	3.16	10.8	101.6	17.68	2.66	44
	HCJ106T4	8.8	26 050	88 880	8.07	3.23	11.01	101.6	17.68	2.46	49
	HCJ120T4	10	29 610	101080	9.53	3.11	10.6	116.4	20.24	2.66	44
	HCJ121T4	10	29 720	101400	9.22	3.22	11	116.4	20.24	2.46	49

TR: *Ton of Refrigeration*
COP: *Coefficient Of Performance*
EER: *Energy Efficiency Ratio*

**) ARI standard rating conditions, 400 V / 3 ph / 50 Hz*

Evaporating temperature: 7.2 °C
Condensing temperature: 54.4 °C
Superheat: 11.1 K
Sub-cooling: 8.3 K

Technical data and ordering

H series - Scroll compressor - R22 / R407C / R410A - 60 Hz

Technical data

Type		Nominal tons 60 Hz	Nominal cooling capacity		Power input	COP	E.E.R	Swept volume	Displacement	Oil charge	Net weight
		[TR]	[W]	[Btu/h]	[kW]	[W/W]	[Btu/h/W]	[cm³/rev]	[m³/h]	[dm³]	[kg]
R22	HRM025T4	2	7 090	24 200	2.22	3.2	10.9	34.1	7.12	1.06	32
	HRM034U4	2.8	9 810	33 480	3.07	3.2	10.9	46.2	9.69	1.06	32
	HRM034T4	2.8	9 960	34 010	2.98	3.34	11.4	46.2	9.69	1.06	32
	HRM038U4	3.2	11 130	37 980	3.39	3.28	11.2	51.6	10.84	1.06	32
	HRM040U4	3.3	11 720	39 980	3.57	3.28	11.2	54.4	11.43	1.06	32
	HRM042U4	3.5	12 300	41 980	3.75	3.28	11.2	57.2	12	1.06	32
	HRM042T4	3.5	12 160	41 510	3.64	3.34	11.4	57.2	12	1.06	32
	HRM045U4	3.8	13 180	44 980	4.01	3.28	11.2	61.5	12.9	1.33	32
	HRM047U4	3.9	13 920	47 490	4.22	3.3	11.3	64.1	13.46	1.33	32
	HRM048U4	4	13 830	47 180	4.25	3.25	11.1	64.4	13.53	1.57	39
	HRM051T4	4.3	15 030	51 270	4.46	3.37	11.5	68.8	14.46	1.57	39
	HRM051U4	4.3	15 030	51 280	4.46	3.37	11.5	68.8	14.46	1.57	39
	HRM054U4	4.5	15 730	53 680	4.62	3.4	11.6	72.9	15.32	1.57	41
	HRM054T4	4.5	15 820	54 000	4.53	3.49	11.9	72.9	15.32	1.57	41
	HRM058U4	4.8	16 930	57 780	5.02	3.37	11.5	78.2	16.41	1.57	41
	HRM060T4	5	17 490	59 670	5.14	3.4	11.6	81	17	1.57	41
	HRM060U4	5	17 490	59 680	5.19	3.37	11.5	81	17	1.57	41
	HLM068T4	5.7	20 190	68 880	5.94	3.4	11.6	93.1	19.55	1.57	41
	HLM072T4	6	21 330	72 770	6.27	3.4	11.6	98.7	20.76	1.57	41
	HLM075T4	6.3	22 120	75 480	6.45	3.43	11.7	102.8	21.58	1.57	41
	HLM081T4	6.8	23 880	81 470	6.96	3.43	11.7	110.9	23.29	1.57	41
	HCM094T4	7.8	27 690	94 470	8.07	3.43	11.7	126	26.47	2.66	47
	HCM109T4	9.1	32 020	109 270	9.33	3.43	11.7	148.8	31.25	2.66	47
	HCM120T4	10	34 950	119 260	10.22	3.42	11.7	162.4	34.11	2.66	47
R407C	HRP025T4	2	6880	23 490	2.22	3.11	10.6	34.1	7.12	1.06	32
	HRP034T4	2.8	9580	32 700	3.2	3	10.2	46.2	9.69	1.06	32
	HRP038T4	3.2	10 670	36 410	3.36	3.18	10.8	46.2	10.84	1.06	32
	HRP040T4	3.3	10 990	37 510	3.7	2.97	10.1	54.4	11.43	1.06	32
	HRP042T4	3.5	11 560	39 460	3.93	2.94	10	57.2	12.01	1.06	32
	HRP045T4	3.8	13 050	44 540	4.27	3.06	10.4	61.5	12.9	1.33	32
	HRP047T4	3.9	12 690	43 300	4.24	3	10.2	64.1	13.46	1.33	32
	HRP048T4	4	13 400	45 740	3.99	3.36	11.5	64.4	13.53	1.57	39
	HRP051T4	4.3	14 380	49080	4.46	3.23	11	68.8	14.46	1.57	39
	HRP054T4	4.5	15 120	51 770	4.73	3.21	11	72.8	15.28	1.57	41
	HRP058T4	4.8	16 260	55 510	5.07	3.17	10.8	78.2	16.41	1.57	41
	HRP060T4	5	16 720	57 010	5.07	3.3	11.3	81	17.01	1.57	41
	HLP068T4	5.7	18 950	64 660	6.08	3.12	10.6	93.1	19.55	1.57	41
	HLP072T4	6	20 060	68 480	6.32	3.17	10.8	98.7	20.72	1.57	41
	HLP075T4	6.3	21 770	74 330	6.6	3.3	11.3	102.8	21.58	1.57	41
	HLP081T4	6.8	23 380	79 810	7.14	3.27	11.2	110.9	23.29	1.57	41
	HCP094T4	7.8	26 060	88 950	7.9	3.3	11.3	126	26.47	2.66	47
	HCP109T4	9.1	31 450	107 350	9.46	3.32	11.3	148.8	31.25	2.66	47
	HCP120T4	10	33 970	115 960	10.59	3.21	11	162.4	34.11	2.66	47
R410A	HRH029U4	2.4	8 500	29 000	2.84	2.99	10.2	27.8	5.84	1.06	32
	HRH031U4	2.6	9 080	30 990	3.04	2.99	10.2	29.8	6.26	1.06	32
	HRH032U4	2.7	9 380	31 990	3.1	3.02	10.3	30.6	6.43	1.06	32
	HRH034U4	2.8	10 110	34 510	3.38	2.99	10.2	33.3	6.94	1.06	32
	HRH036U4	3	10 370	35 390	3.47	2.99	10.2	34.7	7.3	1.06	32
	HRH038U4	3.2	11 100	37 890	3.79	2.93	10	36.5	7.67	1.06	39
	HRH040U4	3.3	12 160	41 490	4.03	3.02	10.3	39.6	8.3	1.33	39
	HRH041U4	3.3	12 100	41 300	4.05	2.99	10.2	39.3	8.3	1.57	39
	HRH044U4	3.7	13 010	44 390	4.31	3.02	10.3	42.6	8.95	1.57	39
	HRH047U4	3.9	13 630	46 510	4.56	2.99	10.2	44.4	9.33	1.57	39
	HRH049U4	4.1	14 360	48 990	4.66	3.08	10.5	47.4	9.95	1.57	39
	HRH051U4	4.3	15 180	51 780	4.84	3.14	10.7	49.3	10.36	1.57	41
	HRH054U4	4.5	15 970	54 480	5.14	3.11	10.6	52.1	10.94	1.57	41
	HRH056U4	4.7	16 670	56 880	5.36	3.11	10.6	54.1	11.36	1.57	41
	HLH061T4	5.1	18 050	61 580	5.7	3.17	10.8	57.8	12.13	1.57	41
	HLH068T4	5.7	20 130	68 670	6.3	3.2	10.9	64.4	13.52	1.57	41
	HLJ072T4	6	21 240	72 500	6.65	3.19	10.9	68	14.27	1.57	41
	HLJ075T4	6.3	22 320	76 190	6.86	3.25	11.1	70.8	14.87	1.57	41
	HLJ083T4	6.9	24 340	83 090	7.55	3.22	11	78.1	16.4	1.57	41
	HCJ090T4	7.5	26 810	91 500	8.47	3.16	10.8	86.9	18.24	2.66	44
	HCJ091T4	7.5	27 140	92 600	8.37	3.24	11.07	86.9	18.24	2.46	49
	HCJ105T4	8.8	31 170	106 390	9.75	3.2	10.9	101.6	21.34	2.66	44
	HCJ106T4	8.8	31 670	108 050	9.67	3.28	11.18	101.6	21.34	2.46	49
	HCJ120T4	10	35 620	121 600	11.15	3.2	10.9	116.4	24.43	2.66	44
	HCJ121T4	10	35 940	122 620	11.07	3.25	11.08	116.4	24.43	2.46	49

TR: *Ton of Refrigeration*
COP: *Coefficient Of Performance*
EER: *Energy Efficiency Ratio*

**) ARI standard rating conditions, 460 V / 3 ph / 60 Hz*

Evaporating temperature: 7.2 °C
Condensing temperature: 54.4 °C
Superheat: 11.1 K
Sub-cooling: 8.3 K

Technical data and ordering

H series - Scroll compressor - R410A

Ordering single pack

Type	Model Variation	Connect.	Features	Code no.					
				1	2	4	5	7	9
HRH029	U	P	6	120U2277	120U2282	120U2287	–	–	–
HRH031	U	P	6	120U1136	120U1251	120U1191	120U1166	–	–
HRH032	U	P	6	120U1141	120U1256	120U1196	120U1171	120U1221	–
HRH034	U	P	6	120U1146	120U1261	120U2443	120U2650	120U1226	–
HRH036	U	P	6	120U1151	120U1266	120U1201	120U1176	120U1231	–
HRH038	U	P	6	120U1156	120U1271	120U1206	120U1181	–	120U2658
HRH039	U	P	6	120U2466	–	–	–	–	–
HRH040	U	P	6	120U1161	120U1276	120U1211	120U1186	120U1241	–
HRH041	U	P	6	120U1281	120U1451	120U1356	–	120U1406	–
	U	C	8	–	120U2407	120U2397	–	–	–
HRH044	U	P	6	120U1286	120U1456	120U1361	–	–	–
HRH047	U	P	6	120U2362	–	–	–	–	–
HRH048	U	P	6	120U2582	–	–	–	–	–
HRH049	U	P	6	120U1291	120U1461	120U1366	–	–	–
	U	C	8	–	120U2482	120U2474	–	120U2478	–
HRH050	U	P	6	120U2470	–	–	–	–	–
HRH051	U	P	6	120U1296	120U1466	120U1371	120U1326	120U1421	–
HRH054	U	P	6	120U1301	120U1471	120U1376	120U1331	120U1426	–
HRH056	U	C	6	–	–	120U1386	–	120U2237	–
	U	P	6	120U1306	120U1476	120U1381	120U1336	120U1431	–
HLH061	T	C	6	–	120U2062	120U2052		120U2057	120U2450
	T	P	6	120U2042	–	–	120U2047	–	–
	T	C	8	–	120U2494	120U2486	–	120U2490	–
HLH068	T	C	6	–	120U1481	120U1391	–	120U1436	–
	T	P	6	120U1311	–	–	120U1341	–	–
	T	C	8	–	120U2427	120U2417	–	120U2422	–
HLJ072	T	C	6	–	120U1486	120U1396	–	120U2037	–
	T	P	6	120U1316	–	–	120U1346	–	–
	T	C	8	–	120U2177	120U2167	–	120U2498	–
HLJ075	T	C	6	–	120U2272	120U2267	–	–	–
HLJ083	T	C	6	–	120U1491	120U1401	–	120U1441	120U2387
	T	P	6	120U1321	–	–	120U1351	–	–
	T	C	8	–	120U2182	120U2172	–	120U2502	–
HCJ090	T	C	6	–	120U2307	120U2302	–	120U2312	–
	T	C	7	–	120U2542	120U2534	–	120U2510	–
	T	C	8	–	120U2546	120U2538	–	–	–
HCJ105	T	C	6	–	120U2327	120U2322	–	120U2332	–
	T	C	7	–	–	120U2574	–	–	–
	T	C	8	–	120U2554	120U2578	–	–	–
HCJ120	T	C	6	–	120U2347	120U2342	–	120U2352	–
	T	C	7	–	–	120U2558	–	–	–
	T	C	8	–	120U2570	120U2562	–	–	–

Technical data and ordering

H series - Scroll compressor - R410A

Ordering industrial pack

Type	Model Variation	Connect.	Features	Code no.					
				1	2	4	5	7	9
HRH029	U	P	6	120U2274	120U2279	120U2284	–	–	–
HRH031	U	P	6	120U1133	120U1248	120U1188	120U1163	–	–
HRH032	U	P	6	120U1138	120U1253	120U1193	120U1168	120U1218	–
HRH034	U	P	6	120U1143	120U1258	120U2446	120U2647	120U1223	–
HRH036	U	P	6	120U1148	120U1263	120U1198	120U1173	120U1228	–
HRH038	U	P	6	120U1153	120U1268	120U1203	120U1178		120U2655
HRH039	U	P	6	120U2463	–	–	–		–
HRH040	U	P	6	120U1158	120U1273	120U1208	120U1183	120U1238	–
HRH041	U	P	6	120U1278	120U1448	120U1353	–	120U1403	–
	U	C	8	–	120U2404	120U2394	–	–	–
HRH044	U	P	6	120U1283	120U1453	120U1358	–	–	–
HRH047	U	P	6	120U2359	–	–	–	–	–
HRH048	U	P	6	120U2579	–	–	–	–	–
HRH049	U	P	6	120U1288	120U1458	120U1363	–	–	–
	U	C	8	–	120U2479	120U2471	–	120U2475	–
HRH050	U	P	6	120U2467	–	–	–	–	–
HRH051	U	P	6	120U1293	120U1463	120U1368	120U1323	120U1418	–
HRH054	U	P	6	120U1298	120U1468	120U1373	120U1328	120U1423	–
HRH056	U	C	6	–	–	120U1383	–	120U2234	–
HRH056	U	P	6	120U1303	120U1473	120U1378	120U1333	120U1428	–
HLH061	T	P	6	120U2039	–	–	120U2044	–	–
	T	C	6	–	120U2059	120U2049	–	120U2054	120U2447
	T	C	8	–	120U2491	120U2483	–	120U2487	–
HLH068	T	C	6	–	120U1478	120U1388	–	120U1433	–
	T	C	8		120U2424	120U2414	–	120U2419	–
	T	P	6	120U1308	–	–	120U1338	–	–
HLJ072	T	C	6	–	120U1483	120U1393	–	120U2034	–
	T	C	8	–	120U2174	120U2164	–	120U2495	–
	T	P	6	120U1313	–	–	120U1343	–	–
HLJ075	T	C	6	–	120U2269	120U2264	–	–	120U1443
HLJ083	T	C	6	–	120U1488	120U1398	–	120U1438	120U2384
	T	C	8	–	120U2179	120U2169	–	120U2499	–
	T	P	6	120U1318	–	–	120U1348	–	–
HCJ090	T	C	6	–	120U2304	120U2299	–	120U2309	–
	T	C	7	–	120U2539	120U2531	–	120U2507	–
	T	C	8	–	120U2543	120U2535	–	–	–
HCJ105	T	C	6	–	120U2324	120U2319	–	120U2329	–
	T	C	7	–	–	120U2571	–	–	–
	T	C	8	–	120U2551	120U2575	–	–	–
HCJ120	T	C	6	–	120U2344	120U2339	–	120U2349	–
	T	C	7	–	–	120U2555	–	–	–
	T	C	8	–	120U2567	120U2559	–	–	–

Technical data and ordering

H series - Scroll compressor - R407C

Ordering single pack

Type	Model Variation	Connect.	Features	Code no.					
				1	2	4	5	7	9
HRP025	T	P	6	–	–	120U3088	–	–	–
HRP034	T	P	6	–	–	120U2024	120U2019	–	–
HRP038	T	P	6	–	120U1086	120U1006	120U0961	–	–
HRP040	T	P	6	–	120U1096	120U1016	120U1929	–	–
HRP042	T	P	6	–	–	120U1026	120U2157	–	–
HRP045	T	P	6	–	–	120U1036	120U0976	–	–
HRP047	T	P	6	–	120U1126	120U1046	120U0986	–	–
HRP048	T	C	8	–	–	120U1661	–	–	–
HRP048	T	P	6	–	–	120U1656	–	–	–
HRP051	T	P	6	120U1501	120U1861	120U1681	–	–	–
HRP054	T	P	6	–	–	120U1691	120U2197	–	–
HRP058	T	P	6	–	–	120U1701	120U1596	–	–
HRP060	T	C	8	–	–	120U1731	–	–	–
	T	P	6	–	120U2297	120U1726	120U1606	–	–
HLP068	T	C	6	–	–	120U2014	–	–	–
	T	P	6	120U1561	–	–	120U1621	–	–
HLP072	T	C	6	–	–	120U1756	–	–	–
	T	C	8	–	–	120U2072	–	–	–
	T	P	6	120U1571	–	–	120U1631	–	–
HLP075	T	C	6	–	–	120U1766	–	–	–
HLP078	T	C	6	–	120U2458	120U2454	–	–	–
HLP081	T	C	6	–	120U1916	120U1781	–	–	–
	T	C	8	–	–	120U1786	–	–	–
	T	P	6	120U1591	–	–	120U1651	–	–
HCP094	T	C	6	–	120U0906	120U0601	–	–	–
	T	C	7	–	–	120U0606	–	–	–
	T	C	8	–	120U0916	120U0611	–	–	–
HCP109	T	C	6	–	–	120U0376	–	–	–
	T	C	7	–	–	120U0381	–	–	–
	T	C	8	–	–	120U0386	–	–	–
HCP120	T	C	6	–	120U0766	120U0401	–	–	–
	T	C	7	–	–	120U0406	–	–	–
	T	C	8	–	–	120U0411	–	–	–

Technical data and ordering

H series - Scroll compressor - R407C

Ordering industrial pack

Type	Model Variation	Connect.	Features	Code no.					
				1	2	4	5	7	9
HRP025	T	P	6	–	–	120U3087	–	–	–
HRP034	T	P	6	–	–	120U2021	120U2016	–	–
HRP038	T	P	6	–	120U1083	120U1003	120U0958	–	–
HRP040	T	P	6	–	120U1093	120U1013	120U1926	–	–
HRP042	T	P	6	–	–	120U1023	120U2154	–	–
HRP045	T	P	6	–	–	120U1033	120U0973	–	–
HRP047	T	P	6	–	120U1123	120U1043	120U0983	–	–
HRP048	T	C	8	–	–	120U1658	–	–	–
HRP048	T	P	6	–	–	120U1653	–	–	–
HRP051	T	P	6	120U1498	120U1858	120U1678	–	–	–
HRP054	T	P	6	–	–	120U1688	120U2194	–	–
HRP058	T	P	6	–	–	120U1698	120U1593	–	–
HRP060	T	C	8	–	–	120U1728	–	–	–
	T	P	6	–	120U2297	120U1723	120U1603	–	–
HLP068	T	C	6	–	–	120U2011	–	–	–
	T	P	6	120U1558	–	–	120U1618	–	–
HLP072	T	C	6	–	–	120U1753	–	–	–
	T	C	8	–	–	120U2069	–	–	–
	T	P	6	–	–	–	120U1628	–	–
HLP075	T	C	6	–	–	120U1763	–	–	–
HLP078	T	C	6	–	120U2455	120U2451	–	–	–
HLP081	T	C	6	–	120U1913	120U1778	–	–	–
	T	C	8	–	–	120U1783	–	–	–
	T	P	6	120U1588	–	–	120U1648	–	–
HCP094	T	C	6	–	120U0903	120U0598	–	–	–
	T	C	7	–	–	120U0603	–	–	–
	T	C	8	–	120U0913	120U0608	–	–	–
HCP109	T	C	6	–	–	120U0373	–	–	–
	T	C	7	–	–	120U0378	–	–	–
	T	C	8	–	–	120U0383	–	–	–
HCP120	T	C	6	–	120U0763	120U0398	–	–	–
	T	C	7	–	–	120U0403	–	–	–
	T	C	8	–	–	120U0408	–	–	–

Technical data and ordering

H series - Scroll compressor - R22

Ordering single pack

Type	Model Variation	Connect.	Features	Code no.					
				1	2	4	5	7	9
HRM032	U	P	6	120U0921	–	–	–	–	–
HRM034	U	P	6	120U0926	120U1081	120U1001	–	–	–
	T	P	6	–	–	120U2367	–	–	120U2087
HRM038	U	P	6	120U0931	120U1091	120U1011	120U0966	120U1056	–
	T	P	6	–	–	–	–	–	120U2092
HRM040	U	P	6	120U0936	120U1101	120U1021	–	–	–
HRM042	U	P	6	120U0941	120U1111	120U1031	–	120U1066	–
	T	P	6	–	–	120U2127	120U2152	–	120U2107
HRM045	U	P	6	120U0946	120U1121	120U1041	–	120U1071	–
HRM047	U	P	6	120U0951	120U1131	120U1051	120U0991	120U1076	–
	T	P	6	–	–	120U2132	120U2162	–	120U2097
HRM048	U	C	8	–	–	120U1671	–	–	–
	U	P	6	120U1496	–	120U1666	–	120U1791	–
HRM051	T	P	6	–	–	120U1676	–	–	–
	U	P	6	120U1506	–	–	–	–	–
HRM054	U	C	6	120U1516	–	–	–	–	–
	U	P	6	120U1511	120U1871	120U1696	–	120U1811	–
	T	P	6	–	–	–	–	–	120U2292
HRM058	T	P	6	120U1521	–	–	–	–	–
	U	C	6	120U1536	–	–	–	–	–
	U	P	6	120U1531	120U1876	120U1711	–	120U1821	–
HRM060	T	P	6	120U1541	120U2760	120U1721	–	–	120U2082
	U	C	6	120U1551	120U2077	–	–	–	–
	U	P	6	120U1546	120U1881	120U1736	120U1611	120U1831	–
HLM068	T	C	6	–	120U1891	120U1746	–	–	–
	T	P	6	120U1556	–	–	–	–	–
HLM072	T	C	6	–	120U1896	120U1751	–	120U2602	120U1856
	T	P	6	120U1566	–	–	–	–	–
HLM075	T	C	6	–	120U1901	120U1761	–	120U1836	–
	T	P	6	120U1576	–	–	120U1636	–	–
HLM078	T	C	6	–	–	120U1771	–	–	–
HLM081	T	C	6	–	120U1911	120U1776	–	–	120U2102
	T	P	6	120U1586	–	–	–	–	–
HCM094	T	C	6	–	120U0891	120U0581	–	120U0711	120U0746
	T	C	7	–	–	120U0586	–	–	–
	T	C	8	–	–	120U0596	–	120U0721	–
HCM109	T	C	6	–	120U2506	120U0366	–	–	–
HCM120	T	C	6	–	120U0761	120U0391	–	–	–
	T	C	7	–	–	120U0396	–	–	–
	T	C	8	–	–	120U2207	–	–	–

Technical data and ordering

H series - Scroll compressor - R22

Ordering industrial pack

Type	Model Variation	Connect.	Features	Code no.					
				1	2	4	5	7	9
HRM032	U	P	6	120U0918	–	–	–	–	–
HRM034	T	P	6	–	–	120U2364	–	–	120U2084
	U	P	6	120U0923	120U1078	120U0998	–	–	–
HRM038	T	P	6	–	–	–	–	–	120U2089
	U	P	6	120U0928	120U1088	120U1008	120U0963	120U1053	–
HRM040	U	P	6	120U0933	120U1098	120U1018	–	–	–
HRM042	T	P	6	–	–	120U2124	120U2149	–	120U2104
	U	P	6	120U0938	120U1108	120U1028	–	120U1063	–
HRM045	U	P	6	120U0943	120U1118	120U1038	–	120U1068	–
HRM047	T	P	6	–	–	120U2129	120U2159	–	120U2094
	U	P	6	120U0948	120U1128	120U1048	120U0988	120U1073	–
HRM048	U	C	8	–	–	120U1668	–		–
	U	P	6	120U1493		120U1663	–	120U1788	–
HRM051	T	P	6	–	–	120U1673	–	–	–
	U	P	6	120U1503	–	–	–	–	–
HRM054	T	P	6		–	–	–	–	120U2289
	U	C	6	120U1513	–	–	–	–	–
	U	P	6	120U1508	120U1868	120U1693	–	120U1808	–
HRM058	T	P	6	120U1518	–	–	–	–	–
	U	C	6	120U1533	–	–	–	–	–
	U	C	8	–	–	120U1716	–	–	–
	U	P	6	120U1528	120U1873	120U1708	–	120U1818	–
HRM060	T	P	6	120U1538	120U2757	120U1718	–	–	120U2079
	U	C	6	120U1548	120U2074	–	–	–	–
	U	P	6	120U1543	120U1878	120U1733	120U1608	120U1828	–
HLM068	T	C	6	–	120U1888	120U1743	–	–	–
	T	P	6	120U1553	–	–	–	–	–
HLM072	T	C	6	–	120U1893	120U1748	–	120U2599	120U1853
	T	P	6	120U1563	–	–	–	–	–
HLM075	T	C	6	–	120U1898	120U1758	–	120U1833	–
	T	P	6	120U1573	–	–	120U1633	–	–
HLM078	T	C	6	–	–	120U1768	–	–	
HLM081	T	C	6	–	120U1908	120U1773	–	–	120U2099
	T	P	6	120U1583	–	–	–	–	–
HCM094	T	C	6	–	120U0888	120U0578	–	120U0708	120U0743
	T	C	7	–	–	120U0583	–	–	–
	T	C	8	–	–	120U0593	–	120U0718	–
HCM109	T	C	6	–	120U2503	120U0363	–	–	–
HCM120	T	C	6	–	120U0758	120U0388	–	–	–
	T	C	7	–	–	120U0393	–	–	–
	T	C	8	–	–	120U2204	–	–	–

Technical data and ordering

H series - Scroll compressor - R22

Ordering single pack

Model		Model Variation	Voltage code	Connect.	Features	Code no.	
						Industrial pack	Single pack
HRM025	R22	T	4	P	6	121L2781	121L2784
HRM034		T	4	P	6	121L2364	121L2367
HRM034		T	5	P	6	121L2119	121L2122
HRM038		T	9	P	6	121L2089	121L2092
HRM042		T	4	P	6	121L2124	121L2127
HRM051		T	4	P	6	121L1673	121L1676
HRM054		T	4	P	6	121L2749	121L2752
HRM060		T	4	P	6	121L1718	121L1721
HRM060		T	2	P	6	121L2757	121L2760
HRM060		T	9	P	6	121L2079	121L2082
HRM060		T	4	C	8	121L3071	121L3072
HLM072		T	4	C	6	121L1748	121L1751
HLM072		T	9	C	6	121L1853	121L1856
HLM081		T	4	C	6	121L1773	121L1776
HLM081		T	2	C	6	121L1908	121L1911
HLM081		T	9	C	6	121L2099	121L2102
HCM094		T	4	C	6	121L0578	121L0581
HCM109		T	4	C	6	121L0363	121L0366
HCM120		T	4	C	6	121L0388	121L0391
HRP054	R407C	T	4	P	6	121L1688	121L1691
HRP054		T	4	C	6	121L3183	121L3184
HRP060		T	4	P	6	121L1723	121L1726
HLP072		T	4	C	6	121L1753	121L1756
HLP081		T	4	C	6	121L1778	121L1781
HCP094		T	4	C	6	121L0598	121L0601
HCP109		T	4	C	6	121L0373	121L0376
HCP120		T	4	C	6	121L0398	121L0401
HRH047	R410A	U	4	P	6	121L2848	121L2851
HRH049		U	4	P	6	121L1363	121L1366
HRH051		U	4	P	6	121L1368	121L1371
HRH054		U	4	P	6	121L1373	121L1376
HRH054		U	4	C	8	121L3030	121L3033
HLH061		T	9	C	6	121L2447	121L2450
HLH061		T	4	C	6	121L2049	121L2052
HLH061		T	4	C	8	121L2483	121L2486
HLH068		T	4	C	6	121L1388	121L1391
HLJ072		T	9	C	6	121L2989	121L2992
HLJ072		T	4	C	6	121L1393	121L1396
HLJ072		T	4	C	8	121L2164	121L2167
HLJ075		T	4	C	6	121L2264	121L2267
HLJ083		T	4	C	6	121L1398	121L1401
HLJ083		T	4	C	8	121L2169	121L2172
HCJ091		T	4	C	6	121L3112	121L3113
HCJ091		T	4	C	8	121L3118	121L3119
HCJ106		T	4	C	6	121L3114	121L3115
HCJ106		T	4	C	8	121L3120	121L3121
HCJ121		T	4	C	6	121L3116	121L3117
HCJ121		T	4	C	8	121L3122	121L3123

Industrial pack: 12 compressors per pallet
Single pack: 1 compressor in cardboard box, 9pcs on a full pallet

Technical data and ordering

H-Series - Scroll compressors - R410A - 50 Hz

Performance table

Type	To	-25		-20		-15		-10		-5		0		5		10	
	Tc	H	Pe	H	Pe	H	Pe	H	Pe	H	Pe	H	Pe	H	Pe	H	Pe
HRH029U4	35	–	–	2670	1.62	3480	1.60	4430	1.58	5550	1.56	6850	1.54	8330	1.52	10010	1.49
	55	–	–	–	–	–	–	–	–	4150	2.56	5230	2.52	6460	2.48	7860	2.44
HRH031U4	35	–	–	2870	1.74	3730	1.71	4750	1.69	5950	1.67	7340	1.65	8930	1.63	10730	1.60
	55	–	–	–	–	–	–	–	–	4380	2.82	5520	2.78	6830	2.74	8300	2.69
HRH032U4	35	–	–	2910	1.71	3780	1.68	4820	1.66	6040	1.65	7450	1.63	9060	1.60	10890	1.57
	55	–	–	–	–	–	–	–	–	4470	2.91	5630	2.87	6960	2.82	8470	2.78
HRH034U4	35	–	–	3220	1.88	4190	1.86	5340	1.83	6690	1.81	8250	1.79	10030	1.77	12060	1.74
	55	–	–	–	–	–	–	–	–	4950	3.06	6230	3.01	7700	2.97	9370	2.91
HRH036U4	35	–	–	3350	1.98	4350	1.95	5550	1.93	6950	1.91	8570	1.88	10420	1.86	12530	1.82
	55	–	–	–	–	–	–	–	–	5130	3.31	6470	3.26	8000	3.21	9730	3.15
HRH038U4	35	–	–	3550	2.16	4610	2.13	5880	2.10	7360	2.08	9080	2.05	11050	2.02	13280	1.99
	55	–	–	–	–	–	–	–	–	5390	3.55	6790	3.49	8390	3.44	10210	3.38
HRH040U4	35	–	–	3850	2.34	5010	2.31	6390	2.28	8000	2.25	9870	2.23	12000	2.20	14430	2.16
	55	–	–	–	–	–	–	–	–	5940	3.78	7480	3.73	9250	3.67	11250	3.60
HRH041U4	35	–	–	5380	2.55	6720	2.58	8210	2.59	9930	2.60	11940	2.58	14310	2.54	17130	2.48
	55	–	–	–	–	–	–	–	–	7340	4.11	9150	4.12	11080	4.11	13200	4.09
HRH044U4	35	–	–	5830	2.70	7280	2.73	8890	2.75	10750	2.75	12930	2.73	15500	2.69	18550	2.63
	55	–	–	–	–	–	–	–	–	7890	4.38	9840	4.39	11910	4.38	14190	4.35
HRH047U4	35	–	–	5130	3.00	6670	2.96	8500	2.93	10640	2.89	13130	2.86	15970	2.82	19190	2.77
	55	–	–	–	–	–	–	–	–	7930	4.80	10000	4.73	12360	4.66	15030	4.58
HRH048U4	35	–	–	5350	3.14	6960	3.10	8880	3.06	11120	3.02	13710	2.99	16680	2.95	20050	2.90
	55	–	–	–	–	–	–	–	–	8220	4.93	10360	4.86	12810	4.78	15580	4.70
HRH049U4	35	–	–	6380	2.95	7970	2.98	9740	3.00	11770	3.00	14150	2.98	16970	2.94	20310	2.87
	55	–	–	–	–	–	–	–	–	8710	4.74	10860	4.75	13150	4.74	15670	4.71
HRH050U4	35	–	–	5620	3.29	7310	3.25	9320	3.21	11670	3.18	14400	3.14	17520	3.10	21060	3.04
	55	–	–	–	–	–	–	–	–	8610	5.16	10860	5.09	13420	5.01	16320	4.92
HRH051U4	35	–	–	6800	3.10	8490	3.13	10370	3.15	12540	3.15	15080	3.13	18080	3.08	21640	3.01
	55	–	–	–	–	–	–	–	–	9200	4.92	11470	4.92	13890	4.91	16560	4.88
HRH054U4	35	–	–	7160	3.31	8940	3.35	10920	3.37	13200	3.37	15870	3.35	19030	3.30	22780	3.22
	55	–	–	–	–	–	–	–	–	9680	5.22	12070	5.23	14620	5.22	17420	5.19
HRH056U4	35	–	–	6320	3.65	8220	3.60	10470	3.56	13120	3.52	16170	3.48	19680	3.43	23650	3.37
	55	–	–	–	–	–	–	–	–	9700	5.65	12230	5.57	15120	5.48	18390	5.38
HLH061T4	35	6160	3.82	8040	3.89	10050	3.93	12270	3.95	14840	3.95	17840	3.93	21390	3.87	25600	3.79
	55	–	–	–	–	–	–	8360	5.78	11000	5.81	13720	5.82	16610	5.81	19790	5.77
HLH068T4	35	6810	4.10	8880	4.16	11090	4.21	13550	4.23	16380	4.23	19700	4.20	23620	4.14	28260	4.05
	55	–	–	–	–	–	–	9280	6.37	12210	6.39	15220	6.40	18440	6.39	21970	6.35
HLJ072T4	35	7190	4.31	9380	4.38	11710	4.43	14310	4.45	17290	4.45	20790	4.42	24930	4.36	29840	4.26
	55	–	–	–	–	–	–	9800	6.72	12890	6.75	16070	6.76	19460	6.75	23190	6.70
HLJ075T4	35	7680	4.62	10040	4.70	12540	4.75	15320	4.78	18510	4.78	22260	4.75	26700	4.68	31950	4.58
	55	–	–	–	–	–	–	10280	6.92	13540	6.96	16880	6.97	20440	6.95	24350	6.91
HLJ083T4	35	8320	5.08	10860	5.17	13570	5.23	16570	5.26	20030	5.26	24090	5.22	28890	5.15	34570	5.03
	55	–	–	–	–	–	–	11220	7.62	14770	7.66	18410	7.67	22290	7.65	26560	7.60
HCJ090T4	35	9020	5.49	11770	5.57	14710	5.61	17990	5.61	21740	5.61	26110	5.62	31250	5.68	37300	5.79
	55	–	–	–	–	–	–	13710	8.55	16960	8.59	20540	8.59	24600	8.58	29280	8.58
HCJ091T4	35	9770	5.36	12280	5.38	15200	5.42	18590	5.46	22510	5.51	27020	5.57	32180	5.64	38040	5.71
	55	–	–	–	–	–	–	13910	8.43	17050	8.43	20680	8.44	24850	8.46	29640	8.50
HCJ105T4	35	10580	6.03	13810	6.13	17350	6.21	21310	6.29	25790	6.39	30920	6.51	36790	6.69	43510	6.93
	55	–	–	–	–	–	–	15690	9.53	19420	9.62	23650	9.71	28510	9.81	34100	9.94
HCJ106T4	35	11410	6.19	14330	6.25	17740	6.30	21700	6.35	26270	6.41	31530	6.48	37550	6.56	44390	6.66
	55	–	–	–	–	–	–	16230	9.75	19890	9.76	24130	9.77	29000	9.79	34580	9.81
HCJ120T4	35	12110	7.01	15810	7.13	19860	7.22	24390	7.30	29520	7.39	35390	7.53	42110	7.74	49810	8.04
	55	–	–	–	–	–	–	17950	10.94	22190	11.00	27030	11.08	32580	11.20	38980	11.38
HCJ121T4	35	12950	7.09	16270	7.12	20130	7.17	24620	7.22	29800	7.29	35770	7.36	42590	7.46	50340	7.56
	55	–	–	–	–	–	–	18430	11.14	22580	11.15	27390	11.17	32910	11.20	39240	11.25

To: *Evaporating temperature in [°C]*
Tc: *Condensing temperature in [°C]*
H. *Heating capacity in [W]*
Pe: *Power input in [kW]*
Subcooling: *8.3 K*
Superheat: *11.1 K*
Voltage code: *G: 380 – 480 V / 3 / 50 Hz*

For more information and performance with other refrigerants, please refer to Coolselector ® 2 at coolselector.danfoss.com or contact Danfoss.

Technical data and ordering

H-Series - Scroll compressors - R410A - 60 Hz

Performance table

Type	To	-25		-20		-15		-10		-5		0		5		10	
	Tc	H	Pe	H	Pe	H	Pe	H	Pe	H	Pe	H	Pe	H	Pe	H	Pe
HRH029U4	35	–	–	3210	1.91	4180	1.89	5320	1.87	6670	1.84	8220	1.82	10000	1.80	12020	1.77
	55	–	–	–	–	–	–	–	–	4950	2.99	6230	2.95	7710	2.90	9370	2.85
HRH031U4	35	–	–	3430	2.05	4470	2.02	5690	2.00	7130	1.97	8790	1.95	10700	1.92	12860	1.89
	55	–	–	–	–	–	–	–	–	5290	3.20	6660	3.15	8240	3.10	10020	3.05
HRH032U4	35	–	–	3520	2.10	4580	2.07	5840	2.05	7310	2.02	9010	2.00	10970	1.97	13180	1.94
	55	–	–	–	–	–	–	–	–	5460	3.27	6880	3.22	8500	3.17	10350	3.12
HRH034U4	35	–	–	3810	2.25	4950	2.22	6310	2.20	7900	2.17	9750	2.15	11860	2.12	14250	2.08
	55	–	–	–	–	–	–	–	–	5880	3.56	7420	3.51	9170	3.46	11150	3.40
HRH036U4	35	–	–	3940	2.33	5120	2.30	6520	2.27	8170	2.25	10080	2.22	12260	2.19	14740	2.15
	55	–	–	–	–	–	–	–	–	6040	3.66	7610	3.60	9400	3.54	11440	3.48
HRH038U4	35	–	–	4180	2.47	5440	2.44	6930	2.41	8680	2.38	10710	2.35	13030	2.32	15660	2.28
	55	–	–	–	–	–	–	–	–	6460	4.00	8150	3.94	10070	3.87	12250	3.81
HRH040U4	35	–	–	4560	2.69	5930	2.65	7560	2.62	9470	2.59	11680	2.56	14210	2.53	17080	2.48
	55	–	–	–	–	–	–	–	–	7080	4.24	8920	4.18	11030	4.12	13420	4.04
HRH041U4	35	–	–	5380	2.55	6720	2.58	8210	2.59	9930	2.60	11940	2.58	14310	2.54	17130	2.48
	55	–	–	–	–	–	–	–	–	7340	4.11	9150	4.12	11080	4.11	13200	4.09
HRH044U4	35	–	–	5830	2.70	7280	2.73	8890	2.75	10750	2.75	12930	2.73	15500	2.69	18550	2.63
	55	–	–	–	–	–	–	–	–	7890	4.38	9840	4.39	11910	4.38	14190	4.35
HRH047U4	35	–	–	5130	3.00	6670	2.96	8500	2.93	10640	2.89	13130	2.86	15970	2.82	19190	2.77
	55	–	–	–	–	–	–	–	–	7930	4.80	10000	4.73	12360	4.66	15030	4.58
HRH048U4	35	–	–	5350	3.14	6960	3.10	8880	3.06	11120	3.02	13710	2.99	16680	2.95	20050	2.90
	55	–	–	–	–	–	–	–	–	8220	4.93	10360	4.86	12810	4.78	15580	4.70
HRH049U4	35	–	–	6380	2.95	7970	2.98	9740	3.00	11770	3.00	14150	2.98	16970	2.94	20310	2.87
	55	–	–	–	–	–	–	–	–	8710	4.74	10860	4.75	13150	4.74	15670	4.71
HRH050U4	35	–	–	5620	3.29	7310	3.25	9320	3.21	11670	3.18	14400	3.14	17520	3.10	21060	3.04
	55	–	–	–	–	–	–	–	–	8610	5.16	10860	5.09	13420	5.01	16320	4.92
HRH051U4	35	–	–	6800	3.10	8490	3.13	10370	3.15	12540	3.15	15080	3.13	18080	3.08	21640	3.01
	55	–	–	–	–	–	–	–	–	9200	4.92	11470	4.92	13890	4.91	16560	4.88
HRH054U4	35	–	–	7160	3.31	8940	3.35	10920	3.37	13200	3.37	15870	3.35	19030	3.30	22780	3.22
	55	–	–	–	–	–	–	–	–	9680	5.22	12070	5.23	14620	5.22	17420	5.19
HRH056U4	35	–	–	6320	3.65	8220	3.60	10470	3.56	13120	3.52	16170	3.48	19680	3.43	23650	3.37
	55	–	–	–	–	–	–	–	–	9700	5.65	12230	5.57	15120	5.48	18390	5.38
HLH061T4	35	6160	3.82	8040	3.89	10050	3.93	12270	3.95	14840	3.95	17840	3.93	21390	3.87	25600	3.79
	55	–	–	–	–	–	–	8360	5.78	11000	5.81	13720	5.82	16610	5.81	19790	5.77
HLH068T4	35	6810	4.10	8880	4.16	11090	4.21	13550	4.23	16380	4.23	19700	4.20	23620	4.14	28260	4.05
	55	–	–	–	–	–	–	9280	6.37	12210	6.39	15220	6.40	18440	6.39	21970	6.35
HLJ072T4	35	7190	4.31	9380	4.38	11710	4.43	14310	4.45	17290	4.45	20790	4.42	24930	4.36	29840	4.26
	55	–	–	–	–	–	–	9800	6.72	12890	6.75	16070	6.76	19460	6.75	23190	6.70
HLJ075T4	35	7680	4.62	10040	4.70	12540	4.75	15320	4.78	18510	4.78	22260	4.75	26700	4.68	31950	4.58
	55	–	–	–	–	–	–	10280	6.92	13540	6.96	16880	6.97	20440	6.95	24350	6.91
HLJ083T4	35	8320	5.08	10860	5.17	13570	5.23	16570	5.26	20030	5.26	24090	5.22	28890	5.15	34570	5.03
	55	–	–	–	–	–	–	11220	7.62	14770	7.66	18410	7.67	22290	7.65	26560	7.60
HCJ090T4	35	9020	5.49	11770	5.57	14710	5.61	17990	5.61	21740	5.61	26110	5.62	31250	5.68	37300	5.79
	55	–	–	–	–	–	–	13710	8.55	16960	8.59	20540	8.59	24600	8.58	29280	8.58
HCJ091T4	35	9770	5.36	12280	5.38	15200	5.42	18590	5.46	22510	5.51	27020	5.57	32180	5.64	38040	5.71
	55	–	–	–	–	–	–	13910	8.43	17050	8.43	20680	8.44	24850	8.46	29640	8.50
HCJ105T4	35	10580	6,03	13810	6,13	17350	6,21	21310	6,29	25790	6,39	30920	6,51	36790	6,69	43510	6,93
	55	–	–	–	–	–	–	15690	9,53	19420	9,62	23650	9,71	28510	9,81	34100	9,94
HCJ106T4	35	11410	6.19	14330	6.25	17740	6.30	21700	6.35	26270	6.41	31530	6.48	37550	6.56	44390	6.66
	55	–	–	–	–	–	–	16230	9.75	19890	9.76	24130	9.77	29000	9.79	34580	9.81
HCJ120T4	35	12110	7,01	15810	7,13	19860	7,22	24390	7,30	29520	7,39	35390	7,53	42110	7,74	49810	8,04
	55	–	–	–	–	–	–	17950	10,94	22190	11,00	27030	11,08	32580	11,20	38980	11,38
HCJ121T4	35	12950	7.09	16270	7.12	20130	7.17	24620	7.22	29800	7.29	35770	7.36	42590	7.46	50340	7.56
	55	–	–	–	–	–	–	18430	11.14	22580	11.15	27390	11.17	32910	11.20	39240	11.25

To: *Evaporating temperature in [°C]*
Tc: *Condensing temperature in [°C]*
H: *Heating capacity in [W]*
Pe: *Power input in [kW]*
Subcooling: *8.3 K*
Superheat: *11.1 K*
Voltage code: *G: 380 – 480 V / 3 / 60 Hz*

For more information and performance with other refrigerants, please refer to Coolselector ® 2 at coolselector.danfoss.com or contact Danfoss.

Technical data and ordering

H-Series - Scroll compressors - R407C - 50 Hz

Performance table

Type	To	-25		-20		-15		-10		-5		0		5		10	
	Tc	H	Pe	H	Pe	H	Pe	H	Pe	H	Pe	H	Pe	H	Pe	H	Pe
HRP025T4	35	1920	1.11	2440	1.15	3050	1.18	3750	1.21	4550	1.24	5460	1.26	6480	1.29	7630	1.32
	55	–	–	–	–	–	–	3020	1.76	3680	1.81	4440	1.85	5290	1.88	6240	1.89
HRP034T4	35	2480	1.73	3190	1.71	4050	1.70	5080	1.69	6290	1.68	7710	1.67	9340	1.64	11220	1.59
	55	–	–	–	–	–	–	3790	2.77	4760	2.76	5900	2.75	7220	2.73	8740	2.71
HRP038T4	35	2710	1.85	3480	1.83	4410	1.82	5530	1.82	6850	1.80	8390	1.79	10170	1.76	12210	1.71
	55	–	–	–	–	–	–	4230	2.91	5300	2.90	6570	2.89	8040	2.87	9740	2.84
HRP040T4	35	2850	2.03	3670	2.01	4660	2.00	5840	1.99	7230	1.97	8850	1.95	10730	1.92	12890	1.87
	55	–	–	–	–	–	–	4350	3.24	5460	3.23	6770	3.22	8280	3.20	10030	3.17
HRP042T4	35	3000	2.13	3860	2.11	4900	2.10	6140	2.09	7600	2.08	9310	2.06	11290	2.02	13560	1.97
	55	–	–	–	–	–	–	4570	3.41	5740	3.40	7120	3.38	8710	3.36	10550	3.33
HRP045T4	35	3270	2.19	4200	2.16	5320	2.15	6670	2.14	8260	2.13	10120	2.11	12270	2.07	14720	2.01
	55	–	–	–	–	–	–	5170	3.70	6490	3.69	8040	3.68	9840	3.66	11920	3.62
HRP047T4	35	3430	2.30	4410	2.28	5600	2.26	7020	2.25	8690	2.24	10650	2.22	12910	2.18	15500	2.12
	55	–	–	–	–	–	–	5320	3.81	6680	3.80	8270	3.78	10130	3.76	12270	3.73
HRP048T4	35	3460	2.39	4450	2.38	5640	2.37	7070	2.36	8760	2.35	10730	2.32	13010	2.28	15620	2.23
	55	–	–	–	–	–	–	5300	3.44	6660	3.44	8250	3.42	10100	3.40	12230	3.37
HRP051T4	35	3750	2.33	4790	2.36	6070	2.39	7610	2.42	9420	2.46	11540	2.50	14000	2.54	16810	2.60
	55	–	–	–	–	–	–	5830	4.00	7300	3.95	9030	3.91	11040	3.89	13350	3.87
HRP054T4	35	3920	2.44	5010	2.46	6350	2.50	7950	2.53	9850	2.57	12070	2.61	14630	2.66	17580	2.72
	55	–	–	–	–	–	–	6050	4.15	7570	4.10	9360	4.06	11440	4.03	13840	4.01
HRP058T4	35	4200	2.61	5380	2.64	6810	2.68	8530	2.71	10560	2.75	12940	2.80	15690	2.85	18840	2.91
	55	–	–	–	–	–	–	6490	4.45	8120	4.39	10030	4.35	12260	4.32	14840	4.30
HRP060T4	35	4340	2.71	5560	2.74	7040	2.78	8820	2.81	10920	2.85	13380	2.90	16230	2.95	19490	3.02
	55	–	–	–	–	–	–	6690	4.50	8350	4.42	10320	4.36	12610	4.32	15260	4.31
HLP068T4	35	5320	3.37	6830	3.42	8630	3.46	10790	3.50	13340	3.55	16330	3.60	19820	3.67	23850	3.77
	55	–	–	–	–	–	–	7760	5.43	9540	5.31	11680	5.22	14240	5.16	17260	5.15
HLP072T4	35	5580	3.57	7170	3.66	9060	3.71	11330	3.75	14010	3.78	17150	3.83	20810	3.89	25040	4.00
	55	–	–	–	–	–	–	8200	5.76	10090	5.56	12370	5.42	15080	5.35	18280	5.37
HLP075T4	35	5550	3.84	7130	3.81	9040	3.80	11330	3.78	14040	3.76	17200	3.72	20850	3.65	25020	3.56
	55	–	–	–	–	–	–	8620	5.70	10820	5.69	13410	5.67	16410	5.64	19880	5.58
HLP078T4	35	5940	3.42	7600	3.46	9620	3.50	12050	3.55	14930	3.61	18290	3.67	22180	3.74	26630	3.81
	55	–	–	–	–	–	–	9220	6.04	11550	6.00	14280	5.96	17460	5.93	21130	5.91
HLP081T4	35	5730	4.16	7330	4.15	9280	4.13	11640	4.11	14420	4.07	17660	4.02	21400	3.95	25670	3.85
	55	–	–	–	–	–	–	9340	6.26	11700	6.21	14490	6.16	17750	6.10	21510	6.02
HCP094T4	35	6600	4.61	8480	4.59	10750	4.57	13480	4.55	16690	4.52	20450	4.47	24790	4.40	29750	4.29
	55	–	–	–	–	–	–	10320	6.83	12960	6.81	16050	6.78	19650	6.74	23800	6.68
HCP109T4	35	8100	4.80	10230	4.93	12990	5.02	16360	5.09	20270	5.15	24670	5.21	29530	5.26	34780	5.32
	55	–	–	–	–	–	–	12560	7.84	15580	7.98	19310	8.05	23700	8.06	28700	8.01
HCP120T4	35	8980	5.49	11340	5.64	14380	5.75	18060	5.81	22330	5.86	27160	5.91	32520	5.98	38360	6.07
	55	–	–	–	–	–	–	13670	8.82	16830	8.94	20810	8.99	25560	9.01	31050	8.99

To: *Evaporating temperature in [°C]*
Tc: *Condensing temperature in [°C]*
H: *Heating capacity in [W]*
Pe: *Power input in [kW]*
Subcooling: *8.3 K*
Superheat: *11.1 K*
Voltage code: *G: 380 – 480 V / 3 / 50 Hz*

For more information and performance with other refrigerants, please refer to Coolselector ® 2 at coolselector.danfoss.com or contact Danfoss.

Technical data and ordering

H-Series, Scroll compressors - R407C - 60 Hz

Performance table

Type	To	-25		-20		-15		-10		-5		0		5		10	
	Tc	H	Pe	H	Pe	H	Pe	H	Pe	H	Pe	H	Pe	H	Pe	H	Pe
HRP025T4	35	2310	1.31	2930	1.35	3650	1.40	4500	1.43	5460	1.47	6550	1.50	7780	1.53	9150	1.57
	55	–	–	–	–	–	–	3620	2.09	4420	2.15	5320	2.20	6340	2.23	7490	2.25
HRP034T4	35	2960	2.17	3810	2.15	4840	2.14	6060	2.13	7510	2.12	9190	2.09	11150	2.06	13390	2.01
	55	–	–	–	–	–	–	4530	3.34	5690	3.33	7050	3.31	8630	3.30	10450	3.26
HRP040T4	35	3490	2.07	4460	2.08	5650	2.11	7070	2.14	8760	2.18	10730	2.22	13010	2.26	15640	2.29
	55	–	–	–	–	–	–	5320	3.79	6630	3.78	8180	3.78	9990	3.77	12100	3.75
HRP042T4	35	3630	2.51	4670	2.49	5930	2.47	7430	2.46	9200	2.45	11270	2.42	13660	2.38	16410	2.32
	55	–	–	–	–	–	–	5510	4.02	6920	4.01	8570	4.00	10490	3.97	12710	3.94
HRP047T4	35	4110	2.38	5260	2.40	6660	2.43	8330	2.47	10310	2.51	12630	2.56	15320	2.60	18420	2.64
	55	–	–	–	–	–	–	6180	4.34	7670	4.33	9450	4.32	11530	4.31	13970	4.29
HRP051T4	35	4410	2.98	5660	2.96	7180	2.94	9000	2.93	11150	2.91	13660	2.88	16560	2.83	19870	2.76
	55	–	–	–	–	–	–	6880	4.60	8630	4.58	10690	4.57	13090	4.54	15850	4.50
HRP060T4	35	5100	3.53	6560	3.50	8320	3.48	10430	3.47	12910	3.44	15820	3.41	19170	3.35	23020	3.27
	55	–	–	–	–	–	–	7920	5.50	9950	5.48	12320	5.46	15080	5.43	18270	5.38
HLP072T4	35	6700	4.23	8600	4.30	10880	4.36	13590	4.40	16810	4.45	20580	4.52	24980	4.61	30050	4.74
	55	–	–	–	–	–	–	9830	6.70	12110	6.53	14840	6.40	18100	6.32	21940	6.30
HLP078T4	35	7120	4.32	9110	4.37	11540	4.43	14460	4.49	17910	4.55	21940	4.63	26610	4.72	31950	4.82
	55	–	–	–	–	–	–	11070	7.30	13860	7.19	17150	7.11	20960	7.05	25360	7.03
HLP081T4	35	6880	4.95	8790	4.92	11140	4.90	13960	4.88	17300	4.85	21200	4.80	25680	4.72	30800	4.60
	55	–	–	–	–	–	–	11210	7.34	14040	7.33	17390	7.31	21300	7.26	25810	7.19
HCP094T4	35	8220	4.91	10390	5.05	13170	5.14	16550	5.20	20470	5.24	24910	5.28	29820	5.34	35160	5.43
	55	–	–	–	–	–	–	12570	7.85	15490	7.94	19160	7.99	23530	8.00	28560	7.99
HCP120T4	35	10760	6.69	13600	6.90	17240	7.01	21650	7.07	26770	7.11	32570	7.16	38990	7.24	45990	7.40
	55	–	–	–	–	–	–	16410	10.56	20210	10.65	24980	10.69	30680	10.70	37260	10.74

To: *Evaporating temperature in [°C]*
Tc: *Condensing temperature in [°C]*
H: *Heating capacity in [W]*
Pe: *Power input in [kW]*
Subcooling: *8.3 K*
Superheat: *11.1 K*
Voltage code: *G: 380 – 480 V / 3 / 60 Hz*

For more information and performance with other refrigerants, please refer to Coolselector ® 2 at coolselector.danfoss.com or contact Danfoss.

Technical data and ordering

H-Series, Scroll compressors - R22 - 50 Hz

Performance table

Type	To	-25		-20		-15		-10		-5		0		5		10	
	Tc	H	Pe	H	Pe	H	Pe	H	Pe	H	Pe	H	Pe	H	Pe	H	Pe
HRM025T4	35	–	–	2550	1.33	3100	1.32	3810	1.31	4670	1.30	5660	1.28	6780	1.26	8010	1.22
	55	–	–	–	–	–	–	–	–	3600	1.95	4490	1.91	5450	1.89	6480	1.88
HRM032T4	35	–	–	3280	1.45	4000	1.44	4930	1.45	6040	1.48	7330	1.53	8780	1.57	10350	1.59
	55	–	–	–	–	–	–	–	–	4750	2.27	5940	2.33	7210	2.37	8550	2.38
HRM032U4	35	–	–	3330	1.69	4050	1.67	4980	1.66	6110	1.65	7400	1.63	8870	1.60	10470	1.54
	55	–	–	–	–	–	–	–	–	4760	2.68	5930	2.63	7200	2.60	8560	2.58
HRM034T4	35	2950	1.83	3470	1.80	4220	1.79	5190	1.77	6350	1.76	7700	1.74	9220	1.70	10890	1.65
	55	–	–	–	–	–	–	3870	2.70	4970	2.62	6190	2.57	7530	2.53	8950	2.52
HRM034U4	35	–	–	3530	1.75	4300	1.73	5280	1.72	6470	1.71	7840	1.69	9390	1.65	11090	1.60
	55	–	–	–	–	–	–	–	–	5060	2.80	6300	2.74	7660	2.71	9110	2.69
HRM038T4	35	3340	1.98	3930	1.94	4780	1.92	5880	1.91	7200	1.89	8740	1.87	10460	1.83	12350	1.78
	55	–	–	–	–	–	–	4350	3.02	5590	2.93	6970	2.87	8460	2.83	10070	2.81
HRM038U4	35	–	–	3970	1.93	4830	1.90	5940	1.89	7270	1.88	8820	1.85	10560	1.82	12480	1.76
	55	–	–	–	–	–	–	–	–	5590	3.10	6970	3.04	8470	3.00	10070	2.98
HRM040T4	35	3480	2.12	4100	2.09	4990	2.06	6130	2.05	7510	2.03	9110	2.01	10900	1.97	12880	1.91
	55	–	–	–	–	–	–	4540	3.12	5840	3.02	7280	2.96	8840	2.93	10510	2.91
HRM040U4	35	–	–	4140	1.99	5030	1.97	6190	1.96	7580	1.94	9190	1.92	11000	1.88	13000	1.82
	55	–	–	–	–	–	–	–	–	5880	3.14	7330	3.07	8900	3.04	10590	3.02
HRM042T4	35	3660	2.23	4310	2.19	5240	2.17	6450	2.15	7900	2.13	9580	2.11	11460	2.07	13540	2.01
	55	–	–	–	–	–	–	4760	3.33	6120	3.23	7630	3.16	9270	3.13	11020	3.10
HRM042U4	35	–	–	4340	2.09	5280	2.07	6490	2.05	7950	2.04	9640	2.01	11550	1.97	13640	1.91
	55	–	–	–	–	–	–	–	–	6170	3.29	7690	3.23	9350	3.19	11120	3.17
HRM045U4	35	–	–	4690	2.22	5710	2.19	7020	2.17	8600	2.16	10420	2.13	12480	2.09	14740	2.02
	55	–	–	–	–	–	–	–	–	6620	3.64	8260	3.56	10030	3.52	11920	3.50
HRM047T4	35	4170	2.43	4910	2.38	5970	2.36	7340	2.34	8990	2.32	10900	2.30	13050	2.25	15420	2.18
	55	–	–	–	–	–	–	5430	3.75	6970	3.63	8690	3.56	10560	3.52	12560	3.49
HRM047U4	35	–	–	4910	2.32	5970	2.30	7340	2.28	8990	2.26	10900	2.24	13050	2.19	15420	2.12
	55	–	–	–	–	–	–	–	–	6970	3.75	8690	3.68	10550	3.63	12550	3.61
HRM048U4	35	–	–	4940	2.36	6010	2.36	7390	2.36	9060	2.35	10980	2.33	13150	2.29	15530	2.23
	55	–	–	–	–	–	–	–	–	6970	3.67	8690	3.64	10560	3.62	12550	3.61
HRM051T4	35	4430	2.43	5210	2.35	6340	2.32	7810	2.33	9580	2.38	11620	2.44	13910	2.51	16410	2.56
	55	–	–	–	–	–	–	5820	3.48	7500	3.56	9370	3.64	11380	3.70	13500	3.74
HRM051U4	35	–	–	5310	2.48	6460	2.47	7940	2.47	9730	2.46	11800	2.44	14120	2.40	16680	2.34
	55	–	–	–	–	–	–	–	–	7760	3.95	9670	3.91	11750	3.89	13980	3.88
HRM054T4	35	–	–	5610	2.39	6830	2.37	8410	2.39	10310	2.44	12510	2.51	14970	2.57	17670	2.62
	55	–	–	–	–	–	–	–	–	8060	3.72	10050	3.81	12210	3.87	14500	3.90
HRM054U4	35	–	–	5620	2.60	6840	2.60	8410	2.60	10300	2.59	12490	2.56	14950	2.52	17660	2.46
	55	–	–	–	–	–	–	–	–	8110	4.09	10110	4.05	12290	4.03	14610	4.02
HRM058U4	35	–	–	6030	2.79	7340	2.79	9020	2.79	11050	2.77	13400	2.75	16040	2.71	18940	2.64
	55	–	–	–	–	–	–	–	–	8690	4.38	10830	4.34	13160	4.32	15650	4.31
HRM060T4	35	5210	2.85	6120	2.75	7460	2.72	9190	2.73	11270	2.78	13670	2.85	16360	2.93	19310	3.00
	55	–	–	–	–	–	–	6840	4.07	8830	4.15	11020	4.24	13380	4.31	15880	4.36
HRM060U4	35	–	–	6230	2.88	7580	2.88	9320	2.88	11420	2.87	13850	2.84	16580	2.80	19580	2.73
	55	–	–	–	–	–	–	–	–	8980	4.53	11190	4.49	13600	4.47	16180	4.45
HLM068T4	35	6120	3.36	7200	3.25	8760	3.21	10770	3.22	13200	3.28	16000	3.36	19160	3.45	22630	3.54
	55	–	–	–	–	–	–	7950	4.76	10220	4.85	12740	4.94	15480	5.03	18410	5.09
HLM072T4	35	6420	3.53	7550	3.41	9190	3.36	11310	3.38	13860	3.44	16810	3.53	20130	3.63	23760	3.71
	55	–	–	–	–	–	–	8390	5.02	10810	5.13	13480	5.23	16370	5.32	19450	5.38
HLM075T4	35	6520	3.70	7650	3.70	9310	3.70	11440	3.70	14020	3.68	17000	3.65	20350	3.59	24030	3.51
	55	–	–	–	–	–	–	8700	5.59	11170	5.52	13920	5.48	16920	5.45	20120	5.43
HLM078T4	35	6760	3.61	7940	3.46	9700	3.43	11980	3.48	14720	3.57	17870	3.69	21380	3.78	25180	3.82
	55	–	–	–	–	–	–	9060	5.42	11780	5.62	14740	5.79	17890	5.88	21160	5.87
HLM081T4	35	7370	3.86	8670	3.72	10540	3.67	12940	3.70	15840	3.78	19200	3.89	22990	3.99	27190	4.07
	55	–	–	–	–	–	–	9480	5.60	12140	5.75	15110	5.89	18370	5.99	21880	6.03
HCM094T4	35	8240	4.77	9680	4.78	11780	4.79	14480	4.78	17740	4.76	21510	4.72	25760	4.64	30420	4.54
	55	–	–	–	–	–	–	10880	7.08	13970	6.99	17410	6.93	21160	6.89	25160	6.87
HCM109T4	35	9480	5.94	11140	5.86	13550	5.80	16660	5.76	20410	5.71	24750	5.64	29630	5.54	34990	5.38
	55	–	–	–	–	–	–	12600	8.39	16170	8.15	20160	7.98	24500	7.88	29140	7.83
HCM120T4	35	8980	5.61	11550	5.71	14710	5.78	18410	5.84	22610	5.88	27260	5.93	32320	6.01	37740	6.11
	55	–	–	–	–	–	–	14550	9.27	18150	9.00	22220	8.87	26730	8.90	31630	9.09

To: *Evaporating temperature in [°C]* ***Tc:*** *Condensing temperature in [°C]* ***H:*** *Heating capacity in [W]* ***Pe:*** *Power input in [kW]*
Subcooling: *8.3 K* ***Superheat:*** *11.1 K* ***Voltage code:*** *G: 380 – 480 V / 3 / 50 Hz*

For more information and performance with other refrigerants, please refer to Coolselector ® 2 at coolselector.danfoss.com or contact Danfoss.

Technical data and ordering

H-Series, Scroll compressors - R22 - 60 Hz

Performance table

Type	To	-25		-20		-15		-10		-5		0		5		10	
	Tc	H	Pe	H	Pe	H	Pe	H	Pe	H	Pe	H	Pe	H	Pe	H	Pe
HRM025T4	35	–	–	3030	1.59	3690	1.58	4530	1.56	5550	1.55	6730	1.53	8060	1.50	9530	1.46
	55	–	–	–	–	–	–	–	–	4290	2.33	5350	2.28	6500	2.25	7730	2.24
HRM032T4	35	–	–	3900	1.78	4750	1.76	5850	1.77	7180	1.80	8710	1.85	10420	1.90	12300	1.94
	55	–	–	–	–	–	–	–	–	5620	2.69	7020	2.75	8530	2.80	10120	2.83
HRM032U4	35	–	–	3930	1.96	4780	1.94	5870	1.93	7200	1.91	8730	1.89	10450	1.85	12340	1.79
	55	–	–	–	–	–	–	–	–	5640	3.09	7040	3.03	8550	2.99	10170	2.97
HRM034T4	35	3570	2.17	4200	2.14	5110	2.12	6280	2.10	7690	2.08	9330	2.06	11170	2.02	13190	1.96
	55	–	–	–	–	–	–	4700	3.22	6030	3.13	7520	3.06	9140	3.02	10870	3.00
HRM034U4	35	–	–	4190	2.05	5100	2.03	6280	2.01	7690	2.00	9320	1.98	11160	1.94	13180	1.87
	55	–	–	–	–	–	–	–	–	5940	3.23	7410	3.16	9000	3.13	10700	3.10
HRM038T4	35	3980	2.36	4680	2.32	5700	2.30	7000	2.28	8580	2.26	10400	2.23	12460	2.19	14710	2.13
	55	–	–	–	–	–	–	5220	3.52	6710	3.42	8360	3.35	10160	3.31	12080	3.28
HRM038U4	35	–	–	4760	2.30	5800	2.27	7120	2.25	8730	2.24	10580	2.21	12670	2.17	14970	2.10
	55	–	–	–	–	–	–	–	–	6740	3.56	8400	3.49	10210	3.45	12140	3.43
HRM040T4	35	4150	2.51	4880	2.47	5940	2.45	7300	2.43	8950	2.41	10850	2.38	12990	2.34	15340	2.27
	55	–	–	–	–	–	–	5430	3.69	6970	3.58	8690	3.51	10560	3.46	12560	3.44
HRM040U4	35	–	–	5010	2.42	6100	2.39	7500	2.37	9190	2.36	11140	2.33	13340	2.28	15760	2.21
	55	–	–	–	–	–	–	–	–	7100	3.75	8850	3.68	10750	3.63	12780	3.61
HRM042T4	35	4370	2.65	5140	2.60	6260	2.58	7690	2.56	9420	2.54	11430	2.51	13680	2.46	16160	2.39
	55	–	–	–	–	–	–	5730	3.93	7360	3.82	9180	3.74	11150	3.69	13270	3.67
HRM042U4	35	–	–	5210	2.54	6340	2.51	7790	2.49	9540	2.47	11570	2.45	13850	2.40	16360	2.32
	55	–	–	–	–	–	–	–	–	7450	3.94	9290	3.86	11290	3.81	13430	3.79
HRM045U4	35	–	–	5610	2.66	6820	2.63	8390	2.61	10280	2.59	12460	2.56	14920	2.51	17620	2.43
	55	–	–	–	–	–	–	–	–	7980	4.22	9950	4.14	12090	4.09	14380	4.06
HRM047T4	35	4970	2.86	5840	2.81	7110	2.78	8730	2.76	10700	2.74	12980	2.71	15540	2.65	18350	2.57
	55	–	–	–	–	–	–	6570	4.47	8430	4.34	10510	4.25	12770	4.20	15190	4.17
HRM047U4	35	–	–	5840	2.77	7110	2.74	8740	2.72	10700	2.70	12980	2.67	15540	2.62	18350	2.53
	55	–	–	–	–	–	–	–	–	8430	4.44	10510	4.35	12770	4.30	15190	4.27
HRM048U4	35	–	–	5870	2.78	7140	2.78	8780	2.78	10760	2.77	13040	2.74	15620	2.70	18450	2.63
	55	–	–	–	–	–	–	–	–	8380	4.38	10440	4.34	12690	4.32	15080	4.30
HRM051T4	35	5340	2.94	6280	2.83	7660	2.80	9430	2.82	11570	2.87	14040	2.95	16800	3.03	19820	3.10
	55	–	–	–	–	–	–	7040	4.22	9100	4.32	11370	4.41	13800	4.49	16370	4.53
HRM051U4	35	–	–	6310	2.93	7680	2.93	9440	2.92	11570	2.91	14030	2.89	16790	2.84	19830	2.77
	55	–	–	–	–	–	–	–	–	9110	4.59	11350	4.55	13790	4.53	16400	4.51
HRM054T4	35	–	–	6660	2.85	8110	2.82	9990	2.84	12250	2.90	14860	2.98	17780	3.06	20990	3.12
	55	–	–	–	–	–	–	–	–	9580	4.39	11960	4.49	14520	4.57	17240	4.60
HRM054U4	35	–	–	6650	3.09	8090	3.09	9950	3.09	12190	3.07	14780	3.04	17690	3.00	20900	2.92
	55	–	–	–	–	–	–	–	–	9530	4.76	11880	4.72	14430	4.70	17160	4.68
HRM058U4	35	–	–	7140	3.32	8690	3.31	10690	3.31	13090	3.30	15880	3.27	19000	3.21	22450	3.13
	55	–	–	–	–	–	–	–	–	10260	5.17	12790	5.13	15540	5.10	18480	5.09
HRM060T4	35	6250	3.42	7350	3.31	8960	3.26	11030	3.28	13530	3.34	16410	3.43	19640	3.52	23180	3.61
	55	–	–	–	–	–	–	8210	4.88	10590	4.98	13220	5.08	16060	5.17	19060	5.23
HRM060U4	35	–	–	7380	3.42	8980	3.42	11040	3.42	13520	3.41	16400	3.37	19630	3.32	23190	3.24
	55	–	–	–	–	–	–	–	–	10600	5.34	13210	5.29	16050	5.27	19080	5.25
HLM068T4	35	7330	3.98	8630	3.85	10500	3.80	12910	3.82	15810	3.88	19170	3.98	22950	4.09	27120	4.20
	55	–	–	–	–	–	–	9520	5.64	12230	5.75	15240	5.86	18520	5.97	22020	6.04
HLM072T4	35	7670	4.17	9020	4.03	10990	3.98	13520	4.00	16570	4.07	20100	4.17	24060	4.29	28400	4.39
	55	–	–	–	–	–	–	10030	5.95	12920	6.07	16110	6.20	19570	6.31	23250	6.38
HLM075T4	35	7820	4.43	9180	4.44	11160	4.44	13730	4.44	16820	4.42	20390	4.38	24410	4.31	28830	4.21
	55	–	–	–	–	–	–	10440	6.72	13410	6.63	16710	6.57	20310	6.54	24160	6.52
HLM078T4	35	8210	4.66	9650	4.66	11740	4.67	14430	4.66	17680	4.64	21440	4.60	25670	4.53	30310	4.42
	55	–	–	–	–	–	–	10850	6.98	13930	6.89	17370	6.83	21110	6.79	25100	6.77
HLM081T4	35	8520	4.83	10020	4.84	12190	4.85	14980	4.84	18350	4.82	22260	4.77	26640	4.70	31460	4.59
	55	–	–	–	–	–	–	11260	7.25	14470	7.15	18030	7.09	21910	7.05	26060	7.03
HCM094T4	35	9880	5.79	11620	5.81	14130	5.82	17380	5.82	21290	5.79	25820	5.73	30900	5.65	36500	5.52
	55	–	–	–	–	–	–	13060	8.39	16770	8.29	20910	8.21	25410	8.17	30220	8.14
HCM109T4	35	11380	6.82	13370	6.85	16260	6.86	19990	6.86	24500	6.82	29710	6.76	35560	6.66	41990	6.51
	55	–	–	–	–	–	–	15110	9.69	19400	9.58	24190	9.50	29390	9.44	34960	9.41
HCM120T4	35	12420	7.47	14600	7.50	17760	7.51	21830	7.51	26740	7.47	32430	7.40	38820	7.29	45850	7.13
	55	–	–	–	–	–	–	16490	10.61	21180	10.49	26400	10.40	32080	10.34	38160	10.30

To: *Evaporating temperature in [°C]*
Tc: *Condensing temperature in [°C]*
H: *Heating capacity in [W]*
Pe: *Power input in [kW]*
Subcooling: *8.3 K*
Superheat: *11.1 K*
Voltage code: *G: 380 – 480 V / 3 / 60 Hz*

For more information and performance with other refrigerants, please refer to Coolselector ® 2 at coolselector.danfoss.com or contact Danfoss.

Nomenclature and Dimensions

Type	Size	Motor	Features
HRH	**036**	**U1L**	**P6**

Application:
H: high temperature / air conditioning

Family:
C: light commercial scroll
R: residential scroll (new platform)
L: light commercial scroll (new platform)

Refrigerant & Lubricant:
M: LR22, alkylbenzene lubricant
P: R407C, PVE lubricant
H: R410A, PVE lubricant
J: R410A, PVE lubricant

Nominal capacity:
in thousand Btu/h at 60 Hz, ARI conditions

Model variation:
T: design optimized for 7.2 / 54.4 °C
U: design optimized for 7.2 / 37.8 °C

Other features

	Oil sight glass	Oil equalisation	Oil drain	LP gauge port	Gas equalis. port
6	None	None	None	None	None
7	Threaded	None	None	None	None
8	None	Brazed	None	None	Brazed

Tubing and electrical connections:
P: brazed connections, spade terminals
C: brazed connections, screw terminals

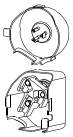

Motor protection:
L: internal motor protection

Motor voltage code:
1: 208 – 230 V / 1 ~ / 60 Hz
2: 200 – 220 V / 3 ~ / 50 Hz & 208 – 230 V / 3 ~ / 60 Hz
4: 380 – 400 V / 3 ~ / 50 Hz & 460 V / 3 ~ / 60 Hz
5: 220 – 240 V / 1 ~ / 50 Hz
7: 500 V / 3 ~ / 50 Hz & 575 V / 3 ~ / 60 Hz
9: 380 V / 3 ~ / 60 Hz

HRM032-034-038-040-042 / HRP034-038-040-042 / HRH029-031-032-034-036-038 / HRM-045-047 / HRP-045-047 / HRH039-040

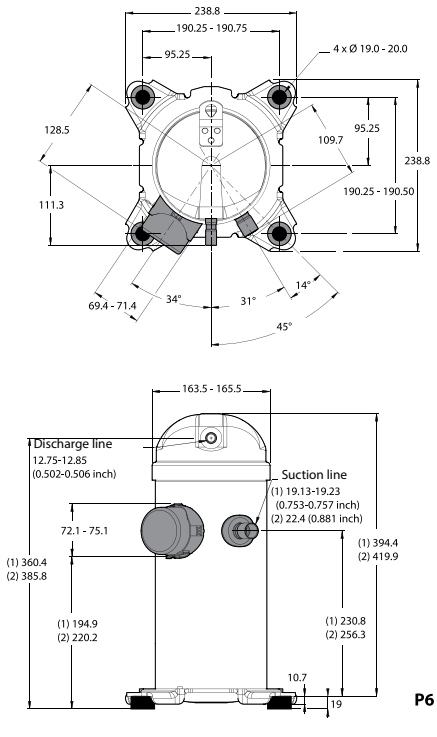

(1) HRM032-034-038-040-042 / HRP034-038-040-042 / HRH029-031-032-034-036-038
(2) HRM-045-047 / HRP-045-047 / HRH039-040

All dimensiond in mm

Dimensions

HRM048-051-054-058-060 / HLM068-072-075-078-081 / HRP048-051-054-058-060 / HLP068-072-075-078-081 / HRH041-044-049-051-054-056 / HLH061-068 / HLJ072-075-083

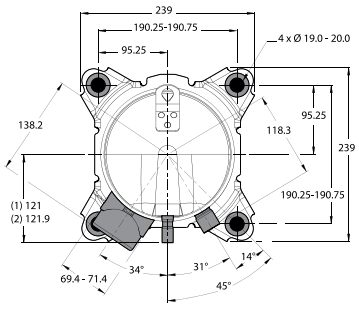

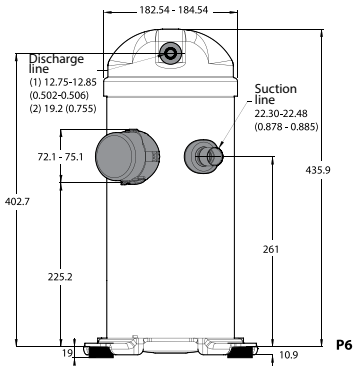

(1) HRM048-051-054-058-060 / HLM068-072-075 / HRP048-051-054-058-060 / HLP068-072-075 / HRH041-044-049-051-054-056 / HLH061-068 / HLJ072-075-083
(2) HLM078-081 / HLP078-081

All dimensiond in mm

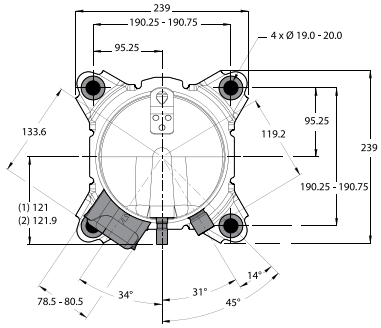

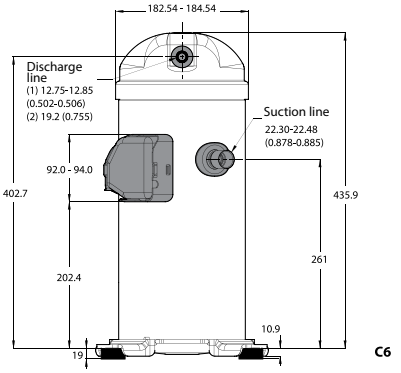

(1) HRM048-051-054-058-060 / HLM068-072-075 / HRP048-051-054-058-060 / HLP068-072-075 / HRH041-044-049-051-054-056 / HLH061-068 / HLJ072-075-083
(2) HLM078-081 / HLP078-081

All dimensiond in mm

HCM / HCP 094-109-120

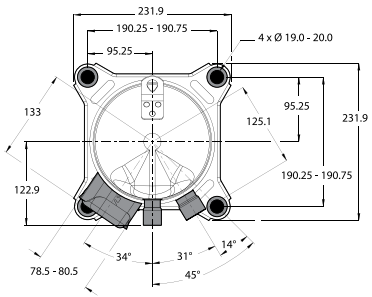

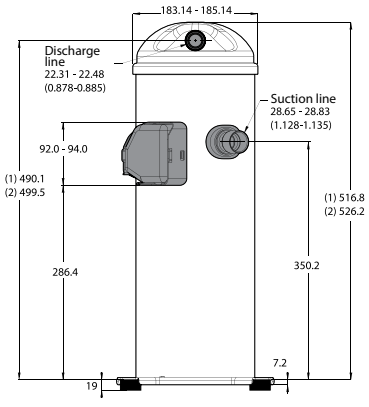

(1) HCM/HCP 094
(2) HCM/HCP 109-120

All dimensiond in mm

HCJ090-105-120

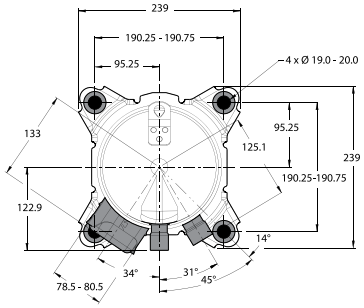

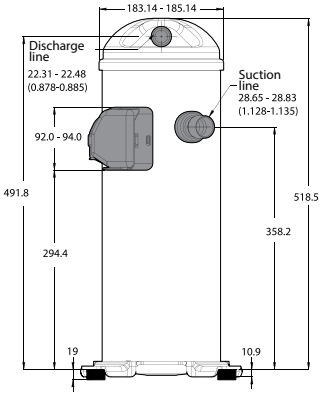

HCJ090-105-120

All dimensiond in mm

HCJ091-106-121

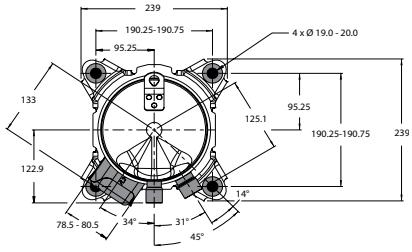

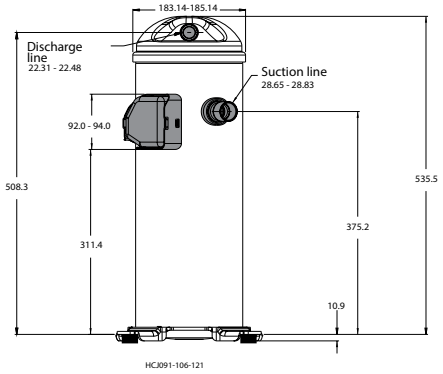

HCJ091-106-121

All dimensiond in mm

HHP, Scroll heating compressor optimized - R407C

The Heat Pump Scroll compressor has an extended operating envelope. This means that your heat pumps will still be highly efficient when the outdoor temperature is below -20 °C.

Your customers will be able to save energy by reducing the use of a supplementary heating source.

Features
HHP



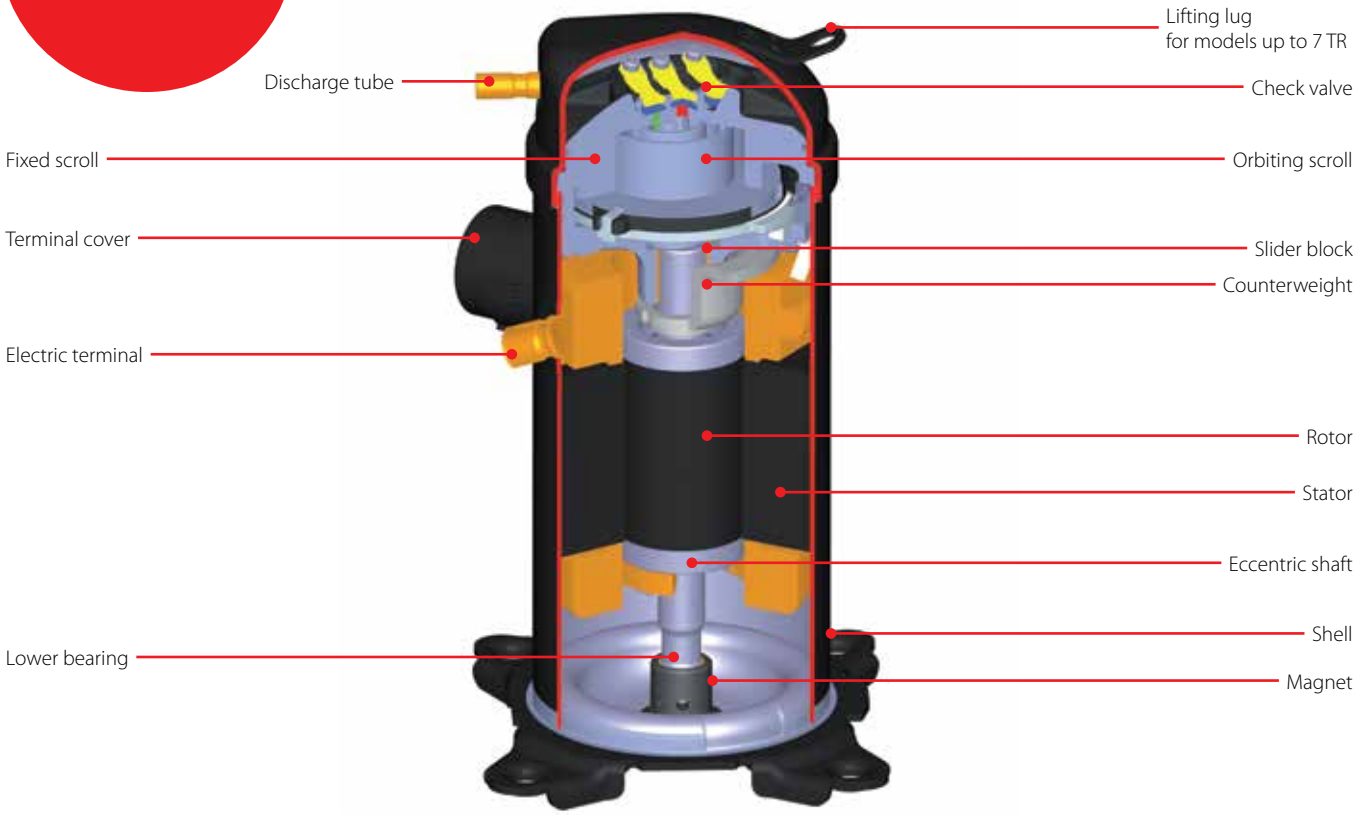

Facts

- Discharge check valve:
  no reverse rotation hence no shutdown noise
- Radial scroll compliance:
  good resistance to liquid fl ood back
- Axial scroll compliance:
  low starting current
- Oil injection:
  good lubrication at fierce conditions
- Lead-free bearings:
  high reliability even with low lubrication
- Patented internal protection combined with HOOP (Hot Oil Over Protector) thermal valve: excellent reliability
- Standard dimensions and tubing:
  ideal for both new installations and replacement markets

Technical data and ordering

HHP - Scroll compressor for heating - R407C - 50 Hz

Technical data

Type	Heating capacity	Power input	Max. A.	Heating efficiency	Swept volume	Displacement	Oil charge	Net weight
	[W]	[W]	[A]	COP [W/W]	[cm³/rev]	[m³/hr] at 2900 [rpm]	[l]	[kg]
HHP015T4LP6	4800	1540	5.1	3.13	34	5.9	1.06	31
HHP015T5LP6	4880	1660	14.2	2.93	34	5.9	1.06	30
HHP019T4LP6	5780	1910	5.8	3.02	41	7.1	1.06	31
HHP019T5LP6	5830	2040	17.7	2.86	41	7.1	1.06	31
HHP021T4LP6	6410	2030	5.8	3.16	46	8	1.06	31
HHP021T5LP6	6630	2110	18.2	3.15	46	8	1.06	31
HHP026T4LP6	8100	2520	7.1	3.22	57	10	1.06	31
HHP026T5LP6	8160	2680	22.7	3.04	57	10	1.06	31
HHP030T4LC6	9700	3070	8.6	3.17	67	11.7	1.57	37
HHP030T5LC6	9790	3190	27.7	3.07	67	11.7	1.57	41
HHP038T4LC6	12050	3730	10.8	3.23	82	14.2	1.57	39
HHP038T5LC6	12140	3850	35.2	3.16	82	14.2	1.57	41
HHP045T4LC6	13940	4300	12.6	3.25	99	17.2	1.57	40

Evaporating temperature: -7 °C *Condensing temperature: 50 °C* *Superheat: 10 K* *Subcooling: 5 K*
Subject to modification without prior notification *Conditions: 400 V / 3 ph / 50 Hz (motor T4), 230 V / 1 ph / 50 Hz (motor T5)*

HHP - Scroll compressor for heating - R407C - 50 Hz

Ordering

Type	Model Variation	Connections	Features	Single pack		Industrial pack	
				4	5	4	5
HHP015	T	P	6	121U9002	121U9004	121U9001	121U9003
HHP019	T	P	6	121U9006	121U9008	121U9005	121U9007
HHP021	T	P	6	121U9010	121U9012	121U9009	121U9011
HHP026	T	P	6	121U9014	121U9016	121U9013	121U9015
HHP030	T	C	6	121U9018	121U9020	121U9017	121U9019
HHP038	T	C	6	121U9022	121U9024	121U9021	121U9023
HHP045	T	C	6	121U9026	–	121U9025	–

HHP - Scroll compressor for heating - R407C - 50 Hz

Performance table

Type	To	-25		-20		-15		-10		-5		0		5		10		15	
	Tc	H	Pe	H	Pe	H	Pe	H	Pe	H	Pe	H	Pe	H	Pe	H	Pe	H	Pe
HHP015T4	40	2 550	1.1	3 070	1.1	3 720	1.2	4 510	1.3	5 450	1.3	6 520	1.4	7 730	1.4	9 080	1.4	10 570	1.4
	50	2 620	1.5	3 050	1.5	3 620	1.5	4 320	1.5	5 150	1.6	6 120	1.6	7 220	1.7	8 460	1.7	9 840	1.7
	60	–	–	–	–	3 860	2.2	4 410	2.1	5 090	2.1	5 890	2.1	6 830	2.1	7 900	2.1	9 100	2.1
HHP019T4	40	3 070	1.3	3 680	1.4	4 450	1.5	5 400	1.5	6 520	1.6	7 810	1.7	9 270	1.7	10 900	1.7	12 690	1.7
	50	3 180	1.7	3 680	1.7	4 340	1.8	5 180	1.9	6 180	1.9	7 340	2.0	8 670	2.1	10 160	2.2	11 830	2.2
	60	–	–	–	–	4 660	2.3	5 300	2.4	6 110	2.4	7 070	2.5	8 200	2.6	9 480	2.7	10 930	2.8
HHP021T4	40	3 530	1.4	4 250	1.5	5 090	1.6	6 080	1.7	7 230	1.7	8 570	1.8	10 100	1.8	11 840	1.7	13 820	1.7
	50	3 430	1.6	4 080	1.8	4 860	1.9	5 770	2.0	6 830	2.1	8 070	2.1	9 500	2.2	11 140	2.2	13 000	2.2
	60	–	–	–	–	4 710	2.2	5 530	2.3	6 510	2.5	7 650	2.6	8 970	2.7	10 490	2.8	12 240	2.8
HHP026T4	40	4 540	1.7	5 410	1.9	6 440	2.0	7 650	2.1	9 070	2.1	10 740	2.2	12 690	2.2	14 950	2.1	17 550	2.0
	50	4 590	2.0	5 350	2.1	6 260	2.3	7 330	2.4	8 610	2.6	10 120	2.6	11 900	2.7	13 970	2.7	16 370	2.7
	60	–	–	–	–	6 240	2.7	7 150	2.9	8 250	3.0	9 560	3.2	11 130	3.3	12 980	3.3	15 150	3.3
HHP030T4	40	4 910	2.1	6 100	2.3	7 480	2.4	9 050	2.6	10 830	2.6	12 830	2.7	15 060	2.7	17 520	2.8	20 240	2.9
	50	4 830	2.3	5 940	2.6	7 230	2.8	8 690	3.0	10 350	3.1	12 200	3.2	14 270	3.4	16 560	3.5	19 090	3.6
	60	–	–	–	–	7 000	3.1	8 330	3.4	9 850	3.6	11 550	3.8	13 440	4.0	15 540	4.2	17 870	4.4
HHP038T4	40	6 150	2.4	7 600	2.8	9 360	3.0	11 390	3.2	13 660	3.2	16 130	3.3	18 750	3.3	21 510	3.4	24 360	3.6
	50	5 730	2.2	7 120	2.8	8 800	3.3	10 740	3.6	12 890	3.8	15 220	4.0	17 700	4.1	20 280	4.2	22 940	4.4
	60	–	–	–	–	8 090	3.2	9 930	3.8	11 970	4.2	14 170	4.5	16 500	4.7	18 920	5.0	21 400	5.2
HHP045T4	40	7 110	3.0	8 800	3.1	10 830	3.3	13 180	3.5	15 800	3.7	18 660	3.8	21 700	3.9	24 890	3.8	28 180	3.7
	50	6 630	3.5	8 240	3.7	10 190	3.9	12 420	4.2	14 910	4.4	17 610	4.6	20 480	4.7	23 460	4.8	26 540	4.8
	60	–	–	–	–	9 360	4.5	11 490	4.8	13 850	5.1	16 400	5.5	19 100	5.7	21 890	6.0	24 760	6.1

To: *Evaporating temperature in [°C]* ***Tc:*** *Condensing temperature in [°C]* ***H:*** *Heating capacity in [W]* ***Pe.*** *Power input in [kW]*
Subcooling: *5 K* ***Superheat:*** *5 K*

For more information and performance with other refrigerants, please refer to Coolselector ® 2 at coolselector.danfoss.com or contact Danfoss.

Nomenclature and Dimensions

Type	Size	Motor	Features
HHP	**030**	**T4L**	**P6**

Application:
H: high temperature

Family:
HP:heat pump R407C PVE

Nominal capacity

Model variation:
T: motor design

Other features

	Oil sight glass	Oil equalisation	Oil drain	LP gauge port	Gas equalis. port
6	None	None	None	None	None

Tubing and electrical connections:
P: brazed connections, spade terminals
C: brazed connections, screw terminals



Motor protection:
L: internal motor protection

Motor voltage code:
4: 380 – 400 V / 3 ~ / 50 Hz
5: 220 – 240 V / 1 ~ / 50 Hz

HHP015-019-021-026

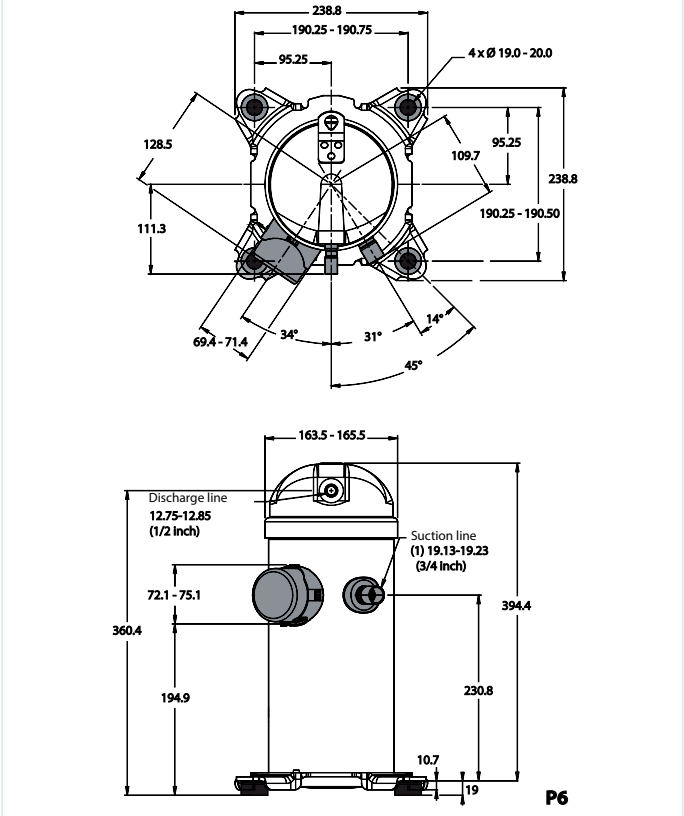

HHP030-038-045

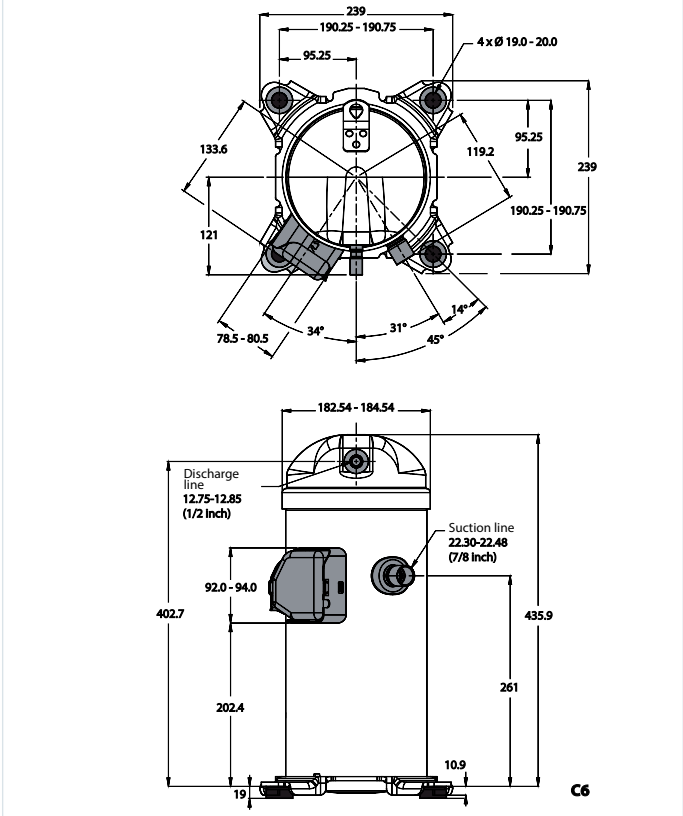

Quick Selection Notes:

MLZ / LLZ, Scroll compressors for refrigeration

MLZ and LLZ scroll compressors are dedicated to commercial and light commercial refrigeration applications with refrigerants R134a, R404A / R507A, R22, R407A. Both brazed and rotolock connections are available for most of the compressors.

MLZ: medium-temperature scroll compressors
R404 / R507A, R407A / F, R134a, R448A, R449A, R452A, R22
LLZ: low-temperature scroll available with and without liquid injection and operate with R404A, R507A, R452A.

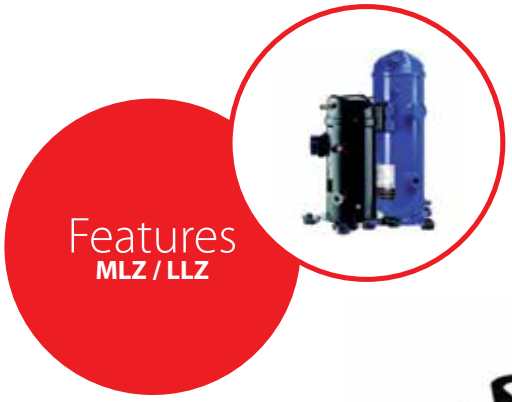

Features
MLZ / LLZ



High efficiency motor

Optimised pressure ration for refrigeration applications

Optimized scroll design

HOOP overload protection
Rotalock or braze connections

Optional sound jacket attenuates sound levels

Multi-refrigerant scrolls save on inventory

Suitable for transport of refrigerated goods

Vapor injection available with optional economizer kit increases LLZ efficiency and cooling capacity

MLZ LLZ

Facts

- Compact design esp. in large capacities
- Complete the existing scroll range for medium temperatures
- **Energy Savings**
  Optimize your system with the scroll compressors for refrigeration. The combination of an energy efficient motor and an optimized scroll wrap for refrigeration applications delivers high efficiency in fixed-speed compressors. Optional vapor injection boosts the cooling capacity and efficiency by more than 20% on LLZ
- **Reliability**
  Improve your system reliability to reduce your maintenance and warranty costs. Reliability is built into this compressor range, from the compliant scroll design and the engineered bearings to the simplified manufacturing process (30% fewer parts). The patented thermal fault protection also contributes to excellent reliability. A smart way to reduce your field service costs
- **Low sound**
  Improve the sound environment with the lowest sound level in the industry. Scroll technology is quiet by design: the scroll provides smooth continuous compression, the absence of suction and discharge valves, and the unique disc check valve design ensure quiet, vibration-free operations
- **Compactness**
  Footprint up to 30% smaller than alternative reduces the logistics costs and frees up space in the system

Technical data and ordering

MLZ - Scroll compressors - R404A/R134a/R22/R407A/R448A/R449A - Made in CN

Ordering - Brazed version - Single pack

Type		Model variation	Connections	Features	Voltage code 1	Voltage code 2	Voltage code 4	Voltage code 5	Voltage code 9
Danfoss palette	MLZ015	T	P	9	121L8659	121L8669	121L8629	121L8631	121L8689
	MLZ021	T	P	9	121L8661	121L8671	121L8633	121L8635	121L8691
	MLZ026	T	P	9	121L8663	121L8673	121L8637	121L8639	121L8693
	MLZ030	T	C	9	121L8665	121L8675	121L8641	121L8643	121L8695
	MLZ038	T	C	9	121L8667	121L8677	121L8645	121L8647	121L8697
	MLZ045	T	C	9	–	121L8679	121L8649	–	121L8699
	MLZ048	T	C	9	–	121L8681	121L8651	–	121L8701
	MLZ058	T	C	9	–	121L8683	121L8653	–	121L8703
	MLZ066	T	C	9	–	121L8685	121L8657	–	121L8705
	MLZ076	T	C	9	–	121L8687	121L8655	–	121L8707

MLZ - Scroll compressors - R404A/R134a/R22/R407A/R448A/R449A - Made in CN

Ordering - Brazed version - Industrial pack

Type		Model variation	Connections	Features	Voltage code 1	Voltage code 2	Voltage code 4	Voltage code 5	Voltage code 9
Danfoss palette	MLZ015	T	P	9	121L8658	121L8668	121L8628	121L8630	121L8688
	MLZ021	T	P	9	121L8660	121L8670	121L8632	121L8634	121L8690
	MLZ026	T	P	9	121L8662	121L8672	121L8636	121L8638	121L8692
	MLZ030	T	C	9	121L8664	121L8674	121L8640	121L8642	121L8694
	MLZ038	T	C	9	121L8666	121L8676	121L8644	121L8646	121L8696
	MLZ045	T	C	9	–	121L8678	121L8648	–	121L8698
	MLZ048	T	C	9	–	121L8680	121L8650	–	121L8700
	MLZ058	T	C	9	–	121L8682	121L8652	–	121L8702
	MLZ066	T	C	9	–	121L8684	121L8656	–	121L8704
	MLZ076	T	C	9	–	121L8686	121L8654	–	121L8706

MLZ - Scroll compressors - R404A / R407A / R407F / R134a / R22 / R448A / R449A - Made from US

Ordering - Rotolock version - Single pack

Type	Model	Connections	Features	Voltage code 1	Voltage code 2	Voltage code 4	Voltage code 5	Voltage code 7	Voltage code 9
MLZ015	T	T	9	121U8513	121U8553	121U8529	121U8521	–	121U8545
MLZ019	T	T	9	121U8515	121U8555	121U8531	121U8523	–	121U8547
MLZ021	T	T	9	121U8517	121U8557	121U8533	121U8525	121U8541	121U8549
MLZ026	T	T	9	121U8519	121U8559	121U8535	121U8527	121U8543	121U8551
MLZ030	T	Q	9	121U8561	121U8597	121U8573	121U8567	121U8581	121U8589
MLZ038	T	Q	9	121U8563	121U8599	121U8575	121U8569	121U8583	121U8591
MLZ042	T	Q	9	121U8565	–	–	121U8571	–	–
MLZ045	T	Q	9	–	121U8601	121U8577	–	121U8585	121U8593
MLZ048	T	Q	9	–	121U8603	121U8579	–	121U8587	121U8595
MLZ058	T	Q	9	–	121U8627	121U8609	–	121U8615	121U8621
MLZ066	T	Q	9	–	121U8623	121U8605	–	121U8611	121U8617
MLZ076	T	Q	9	–	121U8625	121U8607	–	121U8613	121U8619

MLZ - Scroll compressors - R404A / R407A / R407F / R134a / R22 / R448A / R449A - Made from US

Ordering - Rotolock version - Industrial pack

Type	Model	Connections	Features	Voltage code 1	Voltage code 2	Voltage code 4	Voltage code 5	Voltage code 7	Voltage code 9
MLZ015	T	T	9	121U8512	121U8552	121U8528	121U8520	–	121U8544
MLZ019	T	T	9	121U8514	121U8554	121U8530	121U8522	–	121U8546
MLZ021	T	T	9	121U8516	121U8556	121U8532	121U8524	121U8540	121U8548
MLZ026	T	T	9	121U8518	121U8558	121U8534	121U8526	121U8542	121U8550
MLZ030	T	Q	9	121U8560	121U8596	121U8572	121U8566	121U8580	121U8588
MLZ038	T	Q	9	121U8562	121U8598	121U8574	121U8568	121U8582	121U8590
MLZ042	T	Q	9	121U8564	–	–	121U8570	–	–
MLZ045	T	Q	9	–	121U8600	121U8576	–	121U8584	121U8592
MLZ048	T	Q	9	–	121U8602	121U8578	–	121U8586	121U8594
MLZ058	T	Q	9	–	121U8626	121U8608	–	121U8614	121U8620
MLZ066	T	Q	9	–	121U8622	121U8604	–	121U8610	121U8616
MLZ076	T	Q	9	–	121U8624	121U8606	–	121U8612	121U8618

Technical data and ordering

MLZ - Scroll compressors - R404A / R407A / R407F / R134a / R22

Ordering - Brazed version - Single pack

Type		Model	Connections	Features	Voltage code 1	Voltage code 2	Voltage code 4	Voltage code 5	Voltage code 7	Voltage code 9
Danfoss pallet	MLZ015	T	P	9	–	120U8036	121U8002	121U8024	–	–
	MLZ019	T	P	9	121U8060	121U8038	121U8004	121U8026	–	–
	MLZ021	T	P	9	121U8062	121U8040	121U8006	121U8028	–	–
	MLZ026	T	P	9	121U8064	121U8042	121U8008	121U8030	–	–
	MLZ030	T	C	9	121U8066	121U8044	121U8010	121U8032	–	–
	MLZ038	T	C	9	121U8068	121U8046	121U8012	121U8034	–	–
	MLZ042	T	C	9	–	–	–	121U8419	–	–
	MLZ045	T	C	9	–	121U8048	121U8014	–	–	–
	MLZ048	T	C	9	–	121U8050	121U8016	–	–	–
	MLZ058	T	C	9	–	121U8052	121U8018	–	–	–
	MLZ066	T	C	9	–	121U8054	121U8020	–	–	–
	MLZ076	T	C	9	–	121U8056	121U8022	–	–	–
US pallet	MLZ015	T	P	9	120U8058	120U8036	120U8002	120U8024	–	120U8413
	MLZ019	T	P	9	120U8060	120U8038	120U8004	120U8026	–	120U8266
	MLZ021	T	P	9	120U8062	120U8040	120U8006	120U8028	–	120U8272
	MLZ026	T	P	9	120U8064	120U8042	120U8008	120U8030	–	120U8278
	MLZ030	T	C	9	120U8066	120U8044	120U8010	120U8032	–	120U8284
	MLZ038	T	C	9	120U8068	120U8046	120U8012	120U8034	–	120U8296
	MLZ042	T	C	9	120U8399	–	–	–	–	–
	MLZ045	T	C	9	–	120U8048	120U8014	–	120U8332	120U8302
	MLZ048	T	C	9	–	120U8050	120U8016	–	120U8338	120U8308
	MLZ058	T	C	9	–	120U8052	120U8018	–	120U8344	120U8314
	MLZ066	T	C	9	–	120U8054	120U8020	–	120U8350	–
	MLZ076	T	C	9	–	120U8056	120U8022	–	120U8356	–

MLZ - Scroll compressors - R404A / R407A / R407F / R134a / R22

Ordering - Brazed version - Industrial pack

Type		Model	Connections	Features	Voltage code 1	Voltage code 2	Voltage code 4	Voltage code 5	Voltage code 7	Voltage code 9
Danfoss pallet	MLZ015	T	P	9	–	120U8035	121U8001	121U8023	–	–
	MLZ019	T	P	9	121U8059	121U8037	121U8003	121U8025	–	–
	MLZ021	T	P	9	121U8061	121U8039	121U8005	121U8027	–	–
	MLZ026	T	P	9	121U8063	121U8041	121U8007	121U8029	–	–
	MLZ030	T	C	9	121U8065	121U8043	121U8009	121U8031	–	–
	MLZ038	T	C	9	121U8067	121U8045	121U8011	121U8033	–	–
	MLZ042	T	C	9	–	–	–	121U8418	–	–
	MLZ045	T	C	9	–	121U8047	121U8013	–	–	–
	MLZ048	T	C	9	–	121U8049	121U8015	–	–	–
	MLZ058	T	C	9	–	121U8051	121U8017	–	–	–
	MLZ066	T	C	9	–	121U8053	121U8019	–	–	–
	MLZ076	T	C	9	–	121U8055	121U8021	–	–	–
US pallet	MLZ015	T	P	9	120U8057	120U8035	120U8001	120U8023	–	120U8412
	MLZ019	T	P	9	120U8059	120U8037	120U8003	120U8025	–	120U8265
	MLZ021	T	P	9	120U8061	120U8039	120U8005	120U8027	–	120U8271
	MLZ026	T	P	9	120U8063	120U8041	120U8007	120U8029	–	120U8277
	MLZ030	T	C	9	120U8065	120U8043	120U8009	120U8031	–	120U8283
	MLZ038	T	C	9	120U8067	120U8045	120U8011	120U8033	–	120U8295
	MLZ042	T	C	9	120U8398	–	–	–	–	–
	MLZ045	T	C	9	–	120U8047	120U8013	–	120U8331	120U8301
	MLZ048	T	C	9	–	120U8049	120U8015	–	120U8337	120U8307
	MLZ058	T	C	9	–	120U8051	120U8017	–	120U8343	120U8313
	MLZ066	T	C	9	–	120U8053	120U8019	–	120U8349	–
	MLZ076	T	C	9	–	120U8055	120U8021	–	120U8355	–

Technical data and ordering

MLZ - Scroll compressors - R404A / R134a / R22 / R448A / R449A - 50 Hz

Technical data

Type		HP	Nominal cooling capacity [1]		Power input [1]	Efficiency [1]		Swept volume		Displacement		Oil charge		Net weight (with oil)	
			[W]	[Btu/h]	[kW]	COP [W/W]	EER [Btu/h/W]	[cm³/rev]	[cu.in/rev]	[m³/h]	[cu.ft/h]	[Litres]	[oz]	[kg]	[lb]
R404A [2]	MLZ015	2	3300	11300	1.75	1.89	6.45	33.8	2.06	5.9	208	1.1	37	31	68
	MLZ019	2.5	4500	15400	2.16	2.06	7.03	43.5	2.65	7.6	268	1.1	37	31	68
	MLZ021	3	4700	16000	2.27	2.08	7.1	46.2	2.82	8	283	1.1	37	31	68
	MLZ026	3.5	5800	19800	2.9	2	6.83	57.1	3.48	9.9	350	1.1	37	31	68
	MLZ030	4	7100	24200	3.35	2.11	7.2	68.8	4.2	12	424	1.6	54	41	90
	MLZ038	5	8400	28700	3.86	2.19	7.47	81	4.94	14.1	498	1.6	54	41	90
	MLZ042	5.5	9500	32400	4.72	2.02	6.89	93.1	5.68	16.2	572	1.6	54	41	90
	MLZ045	6	10200	34800	4.81	2.11	7.2	98.6	6.02	17.2	607	1.6	54	41	90
	MLZ048	7	11100	37900	5.17	2.14	7.3	107.5	6.56	18.7	660	1.6	54	41	90
	MLZ058	7.5	13000	44400	6.08	2.13	7.27	126	7.69	21.9	773	2.7	91	47	104
	MLZ066	9	15100	51500	7.01	2.15	7.34	148.8	9.08	25.9	915	2.7	91	47	104
	MLZ076	10	17300	59000	7.93	2.18	7.44	162.4	9.91	28.3	999	2.7	91	47	104
R134a [3]	MLZ015	2	2000	6800	1.02	1.95	6.66	33.8	2.06	5.9	208	1.1	37	31	68
	MLZ019	2.5	2500	8500	1.28	1.98	6.76	43.5	2.65	7.6	268	1.1	37	31	68
	MLZ021	3	2700	9200	1.33	2.04	6.96	46.2	2.82	8	283	1.1	37	31	68
	MLZ026	3.5	3300	11300	1.62	2.06	7.03	57.1	3.48	9.9	350	1.1	37	31	68
	MLZ030	4	4000	13700	1.93	2.09	7.13	68.8	4.2	12	424	1.6	54	41	90
	MLZ038	5	4700	16000	2.34	2.02	6.89	81	4.94	14.1	498	1.6	54	41	90
	MLZ042	5.5	5300	18100	2.74	1.95	6.66	93.1	5.68	16.2	572	1.6	54	41	90
	MLZ045	6	5900	20100	2.69	2.17	7.41	98.6	6.02	17.2	607	1.6	54	41	90
	MLZ048	7	6200	21200	2.91	2.14	7.3	107.5	6.56	18.7	660	1.6	54	41	90
	MLZ058	7.5	7400	25300	3.61	2.06	7.03	126	7.69	21.9	773	2.7	91	47	104
	MLZ066	9	8600	29400	4.1	2.1	7.17	148.8	9.08	25.9	915	2.7	91	47	104
	MLZ076	10	9600	32800	4.67	2.06	7.03	162.4	9.91	28.3	999	2.7	91	47	104
R448A [4]	MLZ015	2	3200	11000	1.68	1.91	6.52	33.8	2.06	5.9	208	1.1	37	31	68
	MLZ019	2.5	4200	14300	2.11	1.99	6.79	43.5	2.65	7.6	268	1.1	37	31	68
	MLZ021	3	4400	15000	2.23	1.97	6.73	46.2	2.82	8	283	1.1	37	31	68
	MLZ026	3.5	5500	18700	2.78	1.97	6.72	57.1	3.48	9.9	350	1.1	37	31	68
	MLZ030	4	6600	22500	3.17	2.08	7.09	68.8	4.2	12	424	1.6	54	41	90
	MLZ038	5	7800	26600	3.64	2.14	7.3	81	4.94	14.1	498	1.6	54	41	90
	MLZ042	5.5	9100	31000	4.55	1.99	6.81	93.1	5.68	16.2	572	1.6	54	41	90
	MLZ045	6	9700	33000	4.58	2.11	7.21	98.6	6.02	17.2	607	1.6	54	41	90
	MLZ048	7	10400	35500	5.06	2.06	7.02	107.5	6.56	18.7	660	1.6	54	41	90
	MLZ058	7.5	12200	41700	5.57	2.19	7.48	126	7.69	21.9	773	2.7	91	47	104
	MLZ066	9	14200	48500	6.75	2.11	7.21	148.8	9.08	25.9	915	2.7	91	47	104
	MLZ076	10	15200	51700	7.61	1.99	6.8	162.4	9.91	28.3	999	2.7	91	47	104
R22	MLZ015	2	3300	11263	1.53	2.15	7.34	33.8	2.06	5.9	208	1.1	37	31	68
	MLZ019	2.5	4300	14676	1.87	2.3	7.85	43.5	2.65	7.6	268	1.1	37	31	68
	MLZ021	3	4600	15700	2.02	2.27	7.75	46.2	2.82	8	283	1.1	37	31	68
	MLZ026	3.5	5700	19454	2.43	2.33	7.95	57.1	3.48	9.9	350	1.1	37	31	68
	MLZ030	4	6800	23208	2.93	2.33	7.95	68.8	4.2	12	424	1.6	54	41	90
	MLZ038	5	8100	27645	3.45	2.34	7.99	81	4.94	14.1	498	1.6	54	41	90
	MLZ042	5.5	9100	31058	4.23	2.15	7.34	93.1	5.68	16.2	572	1.6	54	41	90
	MLZ045	6	9300	31741	4.14	2.24	7.65	98.6	6.02	17.2	607	1.6	54	41	90
	MLZ048	7	10600	36177	4.53	2.33	7.95	107.5	6.56	18.7	660	1.6	54	41	90
	MLZ058	7.5	12300	41980	5.29	2.33	7.95	126	7.69	21.9	773	2.7	91	47	104
	MLZ066	9	14100	48123	5.94	2.38	8.12	148.8	9.08	25.9	915	2.7	91	47	104
	MLZ076	10	16600	56655	6.96	2.38	8.12	162.4	9.91	28.3	999	2.7	91	47	104

[1]) at EN12900 conditions: To= -10 °C / 14° F, Tc= 45 °C / 113 °F, RGT= 20 °C / 68 °F, SC= 0 K
[2]) R507 performance data are nearly identical to R404A performance data
[3]): To= -10°C(14°F), Tc= 45 °C / 113 °F, SH= 10 K(18 °F), SC= 0 K
[4]) R449A performance data are nearly identical to R448A performance data
All performance test data after run-in 72hrs. Motor voltage code 4: 400 V/3~/50 Hz, MLZ042: Motor voltage code 5: 220-240 V/1~/50 Hz

Technical data and ordering

MLZ - Scroll compressors - R407A / R407F/ R452A - 50 Hz

Technical data

Type		HP	Nominal cooling capacity [1]		Power input [1]	Efficiency [1]		Swept volume		Displacement		Oil charge		Net weight (with oil)	
						COP	EER								
			[W]	[Btu/h]	[kW]	[W/W]	[Btu/h/W]	[cm³/rev]	[cu.in/rev]	[m³/h]	[cu.ft/h]	[Litres]	[oz]	[kg]	[lb]
R407A	MLZ015	2	3100	10580	1.55	2	6.83	33.8	2.06	5.9	208	1.1	37	31	68
	MLZ019	2.5	4000	13652	2.04	1.96	6.69	43.5	2.65	7.6	268	1.1	37	31	68
	MLZ021	3	4200	14334	2.21	1.91	6.52	46.2	2.82	8	283	1.1	37	31	68
	MLZ026	3.5	5300	18089	2.71	1.96	6.69	57.1	3.48	9.9	350	1.1	37	31	68
	MLZ030	4	6500	22184	2.99	2.17	7.41	68.8	4.2	12	424	1.6	54	41	90
	MLZ038	5	7500	25597	3.47	2.16	7.37	81	4.94	14.1	498	1.6	54	41	90
	MLZ042	5.5	8600	29352	4.53	1.9	6.48	93.1	5.68	16.2	572	1.6	54	41	90
	MLZ045	6	9100	31058	4.55	2.01	6.86	98.6	6.02	17.2	607	1.6	54	41	90
	MLZ048	7	10000	34130	5.01	2	6.83	107.5	6.56	18.7	660	1.6	54	41	90
	MLZ058	7.5	11500	39249	5.69	2.02	6.89	126	7.69	21.9	773	2.7	91	47	104
	MLZ066	9	13400	45734	6.78	1.98	6.76	148.8	9.08	25.9	915	2.7	91	47	104
	MLZ076	10	14700	50171	7.51	1.96	6.69	162.4	9.91	28.3	999	2.7	91	47	104
R407F	MLZ015	2	3300	11263	1.66	2	6.83	33.8	2.06	5.9	208	1.1	37	31	68
	MLZ019	2.5	4300	14676	2.19	1.96	6.69	43.5	2.65	7.6	268	1.1	37	31	68
	MLZ021	3	4500	15358	2.37	1.91	6.52	46.2	2.82	8	283	1.1	37	31	68
	MLZ026	3.5	5700	19454	2.9	1.96	6.69	57.1	3.48	9.9	350	1.1	37	31	68
	MLZ030	4	6900	23549	3.2	2.17	7.41	68.8	4.2	12	424	1.6	54	41	90
	MLZ038	5	8000	27304	3.72	2.16	7.37	81	4.94	14.1	498	1.6	54	41	90
	MLZ042	5.5	9200	31399	4.85	1.9	6.48	93.1	5.68	16.2	572	1.6	54	41	90
	MLZ045	6	9800	33447	4.87	2.01	6.86	98.6	6.02	17.2	607	1.6	54	41	90
	MLZ048	7	10800	36860	5.37	2.01	6.86	107.5	6.56	18.7	660	1.6	54	41	90
	MLZ058	7.5	12300	41980	6.09	2.02	6.89	126	7.69	21.9	773	2.7	91	47	104
	MLZ066	9	14400	49147	7.26	1.99	6.79	148.8	9.08	25.9	915	2.7	91	47	104
	MLZ076	10	15800	53925	8.04	1.96	6.69	162.4	9.91	28.3	999	2.7	91	47	104
R452A	MLZ015	2	3400	11500	1.71	1.97	6.72	33.8	2.06	5.9	208	1.1	37	31	68
	MLZ019	2.5	4300	14700	2.17	1.99	6.8	43.5	2.65	7.6	268	1.1	37	31	68
	MLZ021	3	4600	15700	2.27	2.02	6.89	46.2	2.82	8	283	1.1	37	31	68
	MLZ026	3.5	5700	29400	2.81	2.02	6.9	57.1	3.48	9.9	350	1.1	37	31	68
	MLZ030	4	6800	23400	3.27	2.1	7.18	68.8	4.2	12	424	1.6	54	41	90
	MLZ038	5	8000	27300	3.81	2.1	7.18	81	4.94	14.1	498	1.6	54	41	90
	MLZ042	5.5	9300	31700	4.84	1.92	6.56	93.1	5.68	16.2	572	1.6	54	41	90
	MLZ045	6	10100	34300	4.81	2.09	7.14	98.6	6.02	17.2	607	1.6	54	41	90
	MLZ048	7	11000	37500	5.17	2.12	7.25	107.5	6.56	18.7	660	1.6	54	41	90
	MLZ058	7.5	12900	44000	5.89	2.19	7.48	126	7.69	21.9	773	2.7	91	47	104
	MLZ066	9	15100	51500	7.15	2.11	7.2	148.8	9.08	25.9	915	2.7	91	47	104
	MLZ076	10	16200	55200	7.94	2.04	6.95	162.4	9.91	28.3	999	2.7	91	47	104

[1]) at EN12900 conditions: To= -10°C(14°F), Tc= 45°C(113°F), RGT= 20°C(68°F), SC= 0 K
Only motor code 4, code 5 of MLZ are qualified with R407A/R407F
All performance test data after run-in 72hrs
Motor voltage code 4: 400 V/3~/50 Hz
MLZ042: Motor voltage code 5: 220-240 V/1~/50 Hz

Technical data and ordering

MLZ - Scroll compressors - R404A / R134a / R22 / R448A / R449A - 60 Hz

Technical data

Type		HP	Nominal cooling capacity [1]		Power input [1]	Efficiency [1]		Swept volume		Displacement		Oil charge		Net weight (with oil)	
						COP	EER								
			[W]	[Btu/h]	[kW]	[W/W]	[Btu/h/W]	[cm³/rev]	[cu.in/rev]	[m³/h]	[cu.ft/h]	[Litres]	[oz]	[kg]	[lb]
R404A [2]	MLZ015	2	4100	14000	2.1	1.94	6.62	33.8	2.06	7.1	251	1.1	37	31	68
	MLZ019	2.5	5500	18800	2.58	2.11	7.2	43.5	2.65	9.1	321	1.1	37	31	68
	MLZ021	3	5800	19800	2.74	2.13	7.27	46.2	2.82	9.7	343	1.1	37	31	68
	MLZ026	3.5	7200	24600	3.44	2.1	7.17	57.1	3.48	12	424	1.1	37	31	68
	MLZ030	4	8500	29000	3.9	2.18	7.44	68.8	4.2	14.4	509	1.6	54	41	90
	MLZ038	5	10200	34800	4.7	2.18	7.44	81	4.94	17	600	1.6	54	41	90
	MLZ042	5.5	11800	40300	5.73	2.07	7.06	93.1	5.68	19.6	692	1.6	54	41	90
	MLZ045	6	12400	42300	5.64	2.19	7.47	98.6	6.02	20.7	731	1.6	54	41	90
	MLZ048	7	13500	46100	6.15	2.2	7.51	107.5	6.56	22.6	798	1.6	54	41	90
	MLZ058	7.5	15700	53600	7.35	2.14	7.3	126	7.69	26.4	932	2.7	91	47	104
	MLZ066	9	18400	62800	8.4	2.18	7.44	148.8	9.08	31.3	1105	2.7	91	47	104
	MLZ076	10	20900	71300	9.59	2.18	7.44	162.4	9.91	34.1	1204	2.7	91	47	104
R134a [3]	MLZ015	2	2400	8200	1.19	2.05	7	33.8	2.06	7.1	251	1.1	37	31	68
	MLZ019	2.5	3100	10600	1.53	2.03	6.93	43.5	2.65	9.1	321	1.1	37	31	68
	MLZ021	3	3300	11300	1.58	2.1	7.17	46.2	2.82	9.7	343	1.1	37	31	68
	MLZ026	3.5	4100	14000	1.91	2.15	7.34	57.1	3.48	12	424	1.1	37	31	68
	MLZ030	4	5000	17100	2.35	2.11	7.2	68.8	4.2	14.4	509	1.6	54	41	90
	MLZ038	5	5800	19800	2.8	2.09	7.13	81	4.94	17	600	1.6	54	41	90
	MLZ042	5.5	6500	22200	3.33	1.94	6.62	93.1	5.68	19.6	692	1.6	54	41	90
	MLZ045	6	7100	24200	3.32	2.14	7.3	98.6	6.02	20.7	731	1.6	54	41	90
	MLZ048	7	7600	25900	3.54	2.14	7.3	107.5	6.56	22.6	798	1.6	54	41	90
	MLZ058	7.5	9100	31100	4.28	2.13	7.27	126	7.69	26.4	932	2.7	91	47	104
	MLZ066	9	10400	35500	4.85	2.15	7.34	148.8	9.08	31.3	1105	2.7	91	47	104
	MLZ076	10	11700	39900	5.61	2.09	7.13	162.4	9.91	34.1	1204	2.7	91	47	104
R448A [4]	MLZ015	2	3800	13100	1.96	1.96	6.69	33.8	2.06	7.1	251	1.1	37	31	68
	MLZ019	2.5	5100	17400	2.48	2.06	7.02	43.5	2.65	9.1	321	1.1	37	31	68
	MLZ021	3	5400	18400	2.62	2.06	7.03	46.2	2.82	9.7	343	1.1	37	31	68
	MLZ026	3.5	6800	23200	3.21	2.12	7.23	57.1	3.48	12	424	1.1	37	31	68
	MLZ030	4	6600	22500	3.17	2.08	7.09	68.8	4.2	14.5	512	1.6	54	41	90
	MLZ038	5	8200	28100	3.72	2.22	7.56	81	4.94	17	600	1.6	54	41	90
	MLZ042	5.5	11000	37600	5.55	1.99	6.79	94	5.74	19.6	692	1.6	54	41	90
	MLZ045	6	11600	39500	5.57	2.08	7.1	98.6	6.02	20.7	731	1.6	54	41	90
	MLZ048	7	12800	43800	5.93	2.16	7.38	107.5	6.56	22.6	798	1.6	54	41	90
	MLZ058	7.5	15100	51500	6.65	2.27	7.74	126	7.69	26.5	936	2.7	91	47	104
	MLZ066	9	17400	59300	8.05	2.16	7.36	148.8	9.08	31.3	1105	2.7	91	47	104
	MLZ076	10	18700	63800	8.88	2.11	7.19	162.4	9.91	34.1	1204	2.7	91	47	104
R22	MLZ015	2	3900	13311	1.74	2.26	7.71	33.8	2.06	7.1	251	1.1	37	31	68
	MLZ019	2.5	5200	17747	2.22	2.37	8.09	43.5	2.65	9.1	321	1.1	37	31	68
	MLZ021	3	5600	19113	2.36	2.36	8.05	46.2	2.82	9.7	343	1.1	37	31	68
	MLZ026	3.5	7000	23891	2.93	2.39	8.16	57.1	3.48	12	424	1.1	37	31	68
	MLZ030	4	8200	27986	3.46	2.36	8.05	68.8	4.2	14.5	512	1.6	54	41	90
	MLZ038	5	9600	32765	4.06	2.36	8.05	81	4.94	17	600	1.6	54	41	90
	MLZ042	5.5	10900	37201	5	2.18	7.44	94	5.74	19.6	692	1.6	54	41	90
	MLZ045	6	11700	39932	4.91	2.38	8.12	98.6	6.02	20.7	731	1.6	54	41	90
	MLZ048	7	12900	44027	5.36	2.4	8.19	107.5	6.56	22.6	798	1.6	54	41	90
	MLZ058	7.5	14900	50853	6.34	2.34	7.99	126	7.69	26.5	936	2.7	91	47	104
	MLZ066	9	17000	58020	7.14	2.38	8.12	148.8	9.08	31.3	1105	2.7	91	47	104
	MLZ076	10	20100	68601	8.4	2.39	8.16	162.4	9.91	34.1	1204	2.7	91	47	104

[1]) at EN12900 conditions: To= -10 °C/ 14 °F, Tc= 45 °C/ 113 °F, RGT= 20 °C/ 68 °F, SC= 0 K
[2]) R507 performance data are nearly identical to R404A performance data
[3]) : To= -10 °C / 14 °F, Tc= 45 °C / 113 °F, SH= 10 K(18 °F), SC= 0 K
[4]) R449A performance data are nearly identical to R448A performance data
All performance test data after run-in 72hrs
Motor voltage code 4: 460 V/3~/60 Hz
MLZ042: Motor voltage code 1: 208-230 V/1~/60 Hz

For more information and performance with other refrigerants, please refer to Coolselector ® 2 at coolselector.danfoss.com or contact Danfoss.

Technical data and ordering

MLZ - Scroll compressors - R407A / R407F / R452A - 60 Hz

Technical data

Type		HP	Nominal cooling capacity [1]		Power input [1]	Efficiency [1]		Swept volume		Displacement		Oil charge		Net weight (with oil)	
						COP	EER								
			[W]	[Btu/h]	[kW]	[W/W]	[Btu/h/W]	[cm³/rev]	[cu.in/rev]	[m³/h]	[cu.ft/h]	[Litres]	[oz]	[kg]	[lb]
R407A	MLZ015	2	3800	12969	1.85	2.04	6.96	33.8	2.06	7.1	251	1.1	37	31	68
	MLZ019	2.5	4900	16724	2.4	2.06	7.03	43.5	2.65	9.1	321	1.1	37	31	68
	MLZ021	3	5300	18089	2.63	2.01	6.86	46.2	2.82	9.7	343	1.1	37	31	68
	MLZ026	3.5	6400	21843	3.1	2.07	7.06	57.1	3.48	12	424	1.1	37	31	68
	MLZ030	4	7900	26962	3.52	2.25	7.68	68.8	4.2	14.5	512	1.6	54	41	90
	MLZ038	5	9200	31399	4.1	2.24	7.65	81	4.94	17	600	1.6	54	41	90
	MLZ045	6	11200	38225	5.37	2.09	7.13	98.6	6.02	20.7	731	1.6	54	41	90
	MLZ048	7	12200	41638	6.01	2.03	6.93	107.5	6.56	22.6	798	1.6	54	41	90
	MLZ058	7.5	14300	48805	6.68	2.14	7.3	126	7.69	26.5	936	2.7	91	47	104
	MLZ066	9	16700	56997	7.89	2.12	7.24	148.8	9.08	31.3	1105	2.7	91	47	104
	MLZ076	10	18100	61775	8.64	2.09	7.13	162.4	9.91	34.1	1204	2.7	91	47	104
R407F	MLZ015	2	4100	13993	1.98	2.05	7	33.8	2.06	7.1	251	1.1	37	31	68
	MLZ019	2.5	5300	18089	2.57	2.06	7.03	43.5	2.65	9.1	321	1.1	37	31	68
	MLZ021	3	5700	19454	2.81	2.01	6.86	46.2	2.82	9.7	343	1.1	37	31	68
	MLZ026	3.5	6900	23549	3.32	2.08	7.1	57.1	3.48	12	424	1.1	37	31	68
	MLZ030	4	8500	29010	3.77	2.26	7.71	68.8	4.2	14.5	512	1.6	54	41	90
	MLZ038	5	9800	33447	4.38	2.24	7.65	81	4.94	17	600	1.6	54	41	90
	MLZ045	6	12000	40956	5.75	2.09	7.13	98.6	6.02	20.7	731	1.6	54	41	90
	MLZ048	7	13100	44710	6.44	2.04	6.96	107.5	6.56	22.6	798	1.6	54	41	90
	MLZ058	7.5	15300	52218	7.15	2.14	7.3	126	7.69	26.5	936	2.7	91	47	104
	MLZ066	9	18000	61433	8.45	2.13	7.27	148.8	9.08	31.3	1105	2.7	91	47	104
	MLZ076	10	19400	66212	9.25	2.09	7.13	162.4	9.91	34.1	1204	2.7	91	47	104
R452A	MLZ015	2	4100	13900	2.05	1.99	6.78	33.8	2.06	7.1	251	1.1	37	31	68
	MLZ019	2.5	5200	17900	2.57	2.03	6.94	43.5	2.65	9.1	321	1.1	37	31	68
	MLZ021	3	5500	18800	2.7	2.05	6.99	46.2	2.82	9.7	343	1.1	37	31	68
	MLZ026	3.5	6800	23300	3.34	2.04	6.97	57.1	3.48	12	424	1.1	37	31	68
	MLZ030	4	8400	28700	3.94	2.14	7.29	68.8	4.2	14.5	512	1.6	54	41	90
	MLZ038	5	9800	33300	4.55	2.15	7.34	81	4.94	17	600	1.6	54	41	90
	MLZ042	5.5	11400	38900	5.68	2.01	6.85	93.1	5.68	19.6	692	1.6	54	41	90
	MLZ045	6	12000	41000	5.71	2.11	7.18	98.6	6.02	20.7	731	1.6	54	41	90
	MLZ048	7	13300	45200	6.24	2.13	7.26	107.5	6.56	22.6	798	1.6	54	41	90
	MLZ058	7.5	15500	53000	7.09	2.19	7.48	126	7.69	26.5	936	2.7	91	47	104
	MLZ066	9	18500	63100	8.42	2.2	7.5	148.8	9.08	31.3	1105	2.7	91	47	104
	MLZ076	10	19800	67600	9.26	2.14	7.3	162.4	9.91	34.1	1204	2.7	91	47	104

[1]) at EN12900 conditions: To= -10°C(14°F), Tc= 45°C(113°F), RGT= 20°C(68°F), SC= 0 K
Only motor code 4, code 5 of MLZ are qualified with R407A/R407F
All performance test data after run-in 72hrs
Motor voltage code 4: 460 V/3~/60 Hz
MLZ042: Motor voltage code 1: 208-230 V/1~/60 Hz

For more information and performance with other refrigerants, please refer to Coolselector ® 2 at coolselector.danfoss.com or contact Danfoss.

Technical data and ordering

MLZ - Scroll compressors - R134a - 50 / 60 Hz

Performance table

Type		To	-10		-5		0		5		10		15	
		Tc	Qo	Pe	Qo	Pe	Qo	Pe	Qo	Pe	Qo	Pe	Qo	Pe
50 Hz	MLZ015T4	30	2400	0.74	3000	0.75	3700	0.75	4500	0.76	5400	0.77	–	–
		40	–	–	2700	0.92	3300	0.93	4100	0.94	4900	0.95	5900	0.96
		50	–	–	2400	1.14	3000	1.15	3600	1.16	4400	1.17	5200	1.18
	MLZ019T4	30	3100	0.95	3800	0.96	4700	0.96	5800	0.97	7000	0.99	–	–
		40	–	–	3500	1.18	4300	1.19	5200	1.20	6300	1.21	7600	1.22
		50	–	–	3100	1.44	3800	1.46	4700	1.48	5600	1.49	6700	1.50
	MLZ021T4	30	3300	0.98	4100	0.99	5000	1.00	6100	1.01	7400	1.03	–	–
		40	–	–	3700	1.22	4600	1.23	5600	1.25	6700	1.26	8000	1.28
		50	–	–	3300	1.49	4000	1.51	4900	1.53	6000	1.54	7200	1.56
	MLZ026T4	30	4100	1.19	5100	1.20	6200	1.22	7600	1.23	9100	1.25	–	–
		40	–	–	4600	1.48	5600	1.50	6900	1.52	8300	1.54	9900	1.55
		50	–	–	4100	1.82	5000	1.85	6100	1.87	7400	1.89	8900	1.91
	MLZ030T4	30	4900	1.42	6100	1.43	7500	1.45	9100	1.46	11000	1.48	–	–
		40	–	–	5500	1.76	6800	1.78	8300	1.80	10000	1.82	12000	1.84
		50	–	–	4900	2.16	6000	2.19	7400	2.21	8900	2.23	10700	2.26
	MLZ038T4	30	5800	1.73	7200	1.75	8800	1.77	10700	1.79	12900	1.81	–	–
		40	–	–	6500	2.15	8000	2.18	9700	2.20	11700	2.22	14000	2.24
		50	–	–	5700	2.64	7100	2.68	8700	2.71	10500	2.73	12500	2.75
	MLZ042T5	30	6600	2.15	8200	2.20	10100	2.23	12100	2.28	14400	2.35	–	–
		40	–	–	7500	2.60	9200	2.64	11100	2.68	13200	2.72	15700	2.78
		50	–	–	6500	3.08	8100	3.15	9900	3.19	11800	3.22	14100	3.25
	MLZ045T4	30	7100	1.96	8900	1.99	11000	2.00	13300	2.01	16000	2.02	–	–
		40	–	–	8000	2.46	9900	2.49	12100	2.51	14600	2.53	17400	2.55
		50	–	–	7100	3.03	8800	3.07	10800	3.10	13000	3.13	15600	3.17
	MLZ048T4	30	7600	2.12	9500	2.15	11600	2.18	14100	2.20	16900	2.22	–	–
		40	–	–	8500	2.66	10500	2.70	12800	2.72	15400	2.74	18300	2.75
		50	–	–	7500	3.27	9300	3.32	11400	3.36	13800	3.38	16400	3.39
	MLZ058T4	30	9100	2.64	11300	2.69	13800	2.77	16600	2.83	20000	2.87	–	–
		40	–	–	10100	3.33	12400	3.40	15100	3.44	18100	3.45	21600	3.40
		50	–	–	9000	4.06	11100	4.15	13400	4.20	16100	4.20	19200	4.12
	MLZ066T4	30	10500	3.01	13000	3.07	16000	3.14	19300	3.20	23200	3.24	–	–
		40	–	–	11800	3.79	14500	3.85	17500	3.89	21100	3.90	25000	3.86
		50	–	–	10400	4.62	12800	4.70	15600	4.75	18800	4.75	22300	4.69
	MLZ076T4	30	11800	3.41	14600	3.49	17900	3.58	21600	3.65	25800	3.69	–	–
		40	–	–	13100	4.31	16100	4.39	19600	4.44	23500	4.45	28000	4.39
		50	–	–	11600	5.26	14300	5.36	17400	5.42	21000	5.42	25000	5.34
60 Hz	MLZ015T4	30	3000	0.89	3700	0.90	4600	0.92	5500	0.94	6600	0.96	–	–
		40	–	–	3400	1.10	4200	1.12	5100	1.14	6100	1.16	7200	1.18
		50	–	–	3000	1.33	3700	1.36	4600	1.38	5500	1.40	6500	1.43
	MLZ019T4	30	3800	1.15	4800	1.18	5900	1.20	7100	1.22	8500	1.25	–	–
		40	–	–	4300	1.43	5400	1.46	6500	1.48	7800	1.50	9300	1.54
		50	–	–	3900	1.73	4800	1.77	5900	1.79	7100	1.82	8400	1.84
	MLZ021T4	30	4100	1.19	5100	1.21	6200	1.23	7600	1.25	9100	1.28	–	–
		40	–	–	4600	1.48	5700	1.50	6900	1.52	8300	1.54	9900	1.57
		50	–	–	4100	1.79	5100	1.83	6200	1.85	7500	1.87	8900	1.90
	MLZ026T4	30	5000	1.44	6300	1.46	7700	1.49	9300	1.52	11200	1.57	–	–
		40	–	–	5700	1.78	7000	1.82	8600	1.85	10300	1.88	12200	1.91
		50	–	–	5100	2.16	6300	2.22	7700	2.26	9300	2.29	11000	2.30
	MLZ030T4	30	6000	1.75	7500	1.78	9300	1.81	11300	1.85	13500	1.90	–	–
		40	–	–	6800	2.18	8500	2.21	10300	2.24	12400	2.28	14700	2.33
		50	–	–	6100	2.64	7600	2.68	9300	2.72	11200	2.76	13300	2.81
	MLZ038T4	30	7100	2.06	8800	2.10	10900	2.15	13200	2.21	15900	2.26	–	–
		40	–	–	8000	2.57	9900	2.62	12100	2.67	14600	2.72	17300	2.77
		50	–	–	7200	3.14	8900	3.19	10900	3.24	13200	3.29	15700	3.34
	MLZ042T1	30	8800	2.45	11000	2.49	13500	2.53	16300	2.58	19500	2.65	–	–
		40	–	–	9900	3.05	12200	3.09	14800	3.13	17800	3.18	21100	3.26
		50	–	–	8600	3.74	10700	3.79	13100	3.83	15800	3.88	18900	3.94
	MLZ045T4	30	9300	2.61	11600	2.66	14200	2.72	17200	2.78	20600	2.86	–	–
		40	–	–	10400	3.26	12900	3.31	15600	3.37	18800	3.43	22200	3.49
		50	–	–	9200	3.99	11300	4.06	13900	4.11	16700	4.16	19900	4.21
	MLZ048T4	30	11100	3.14	13700	3.23	16800	3.35	20200	3.47	24000	3.57	–	–
		40	–	–	12400	3.96	15200	4.07	18300	4.17	21900	4.24	25900	4.27
		50	–	–	11000	4.84	13500	4.96	16300	5.06	19600	5.12	23300	5.13
	MLZ058T4	30	12700	3.60	15700	3.70	19200	3.83	23200	3.97	27600	4.10	–	–
		40	–	–	14200	4.53	17400	4.66	21100	4.77	25200	4.85	29800	4.90
		50	–	–	12600	5.52	15500	5.68	18800	5.79	22500	5.86	26700	5.85
	MLZ066T4	30	14300	4.12	17600	4.23	21500	4.38	26000	4.54	31000	4.70	–	–
		40	–	–	16000	5.19	19600	5.33	23600	5.46	28300	5.56	33400	5.61
		50	–	–	14200	6.35	17400	6.51	21100	6.64	25300	6.71	29800	6.71
	MLZ076T4	30	14 300	4.1	17 600	4.2	21 500	4.4	26 000	4.5	31 000	4.7	–	–
		40	–	–	16 000	5.2	19 600	5.3	23 600	5.5	28 300	5.6	33 400	5.6
		50	–	–	14 200	6.4	17 400	6.5	21 100	6.6	25 300	6.7	29 800	6.7

To: *Evaporating temperature in [°C]*
Tc: *Condensing temperature in [°C]*
Qo: *Cooling capacity in [W]*
Pe: *Power input in [kW]*
Subcooling: *0 K*
RGT: *20 °C*
Capacity data at other conditions are available in the datasheets at: www.danfoss.com / odsg

For more information and performance with other refrigerants, please refer to Coolselector ® 2 at coolselector.danfoss.com or contact Danfoss.

Technical data and ordering

MLZ - Scroll compressors - R404A / R507 - 50 / 60 Hz

Performance table

Type		To	-25		-20		-15		-10		-5		0		5		10	
		Tc	Qo	Pe	Qo	Pe	Qo	Pe	Qo	Pe	Qo	Pe	Qo	Pe	Qo	Pe	Qo	Pe
50 Hz	MLZ015T4	30	2300	1.25	2900	1.24	3500	1.22	4300	1.20	5200	1.18	6200	1.16	7400	1.14	8700	1.14
		40	1900	1.63	2400	1.60	3000	1.57	3700	1.54	4400	1.51	5300	1.49	6300	1.47	7400	1.47
		50	–	–	1800	2.10	2400	2.05	2900	2.00	3600	1.95	4300	1.91	5100	1.88	6000	1.86
	MLZ019T4	30	3000	1.51	3800	1.53	4600	1.53	5600	1.53	6700	1.52	8000	1.52	9500	1.53	11200	1.57
		40	2600	1.88	3300	1.92	4000	1.93	4800	1.93	5800	1.91	6900	1.90	8200	1.89	9700	1.89
		50	–	–	2700	2.36	3300	2.40	4000	2.41	4800	2.40	5800	2.38	6800	2.36	8100	2.34
	MLZ021T4	30	3200	1.60	4000	1.60	4900	1.61	5900	1.62	7100	1.63	8500	1.64	10000	1.66	11800	1.68
		40	2800	1.99	3500	2.01	4300	2.02	5100	2.03	6200	2.03	7300	2.03	8700	2.01	10300	2.00
		50	–	–	2900	2.52	3500	2.54	4300	2.55	5100	2.55	6100	2.53	7300	2.49	8600	2.44
	MLZ026T4	30	3900	2.00	4900	2.02	6000	2.03	7300	2.05	8800	2.06	10500	2.06	12500	2.07	14800	2.07
		40	3400	2.55	4200	2.56	5200	2.57	6300	2.58	7600	2.58	9100	2.59	10800	2.58	12800	2.58
		50	–	–	3600	3.26	4400	3.27	5300	3.27	6400	3.26	7600	3.25	9100	3.24	10800	3.23
	MLZ030T4	30	4800	2.33	6000	2.36	7300	2.38	8800	2.39	10600	2.40	12700	2.42	15000	2.43	17700	2.44
		40	4100	2.95	5100	2.97	6300	2.98	7700	2.99	9300	3.00	11100	3.00	13100	3.00	15500	3.00
		50	–	–	4300	3.77	5300	3.77	6400	3.77	7800	3.76	9300	3.75	11100	3.73	13100	3.72
	MLZ038T4	30	5800	2.69	7200	2.69	8700	2.70	10500	2.72	12600	2.76	15000	2.81	17700	2.88	20800	2.97
		40	5000	3.45	6200	3.43	7600	3.42	9200	3.42	11000	3.43	13200	3.46	15600	3.50	18300	3.56
		50	–	–	5100	4.39	6300	4.37	7600	4.35	9200	4.34	11000	4.34	13100	4.35	15400	4.38
	MLZ042T5	30	6300	3.24	7900	3.33	9800	3.42	12000	3.50	14500	3.57	17500	3.60	20900	3.58	24800	3.51
		40	5500	4.12	6900	4.14	8500	4.19	10400	4.24	12500	4.28	15000	4.31	18000	4.32	21500	4.28
		50	–	–	5800	5.32	7100	5.30	8600	5.30	10400	5.31	12600	5.32	15100	5.33	18100	5.31
	MLZ045T4	30	7100	3.46	8700	3.45	10700	3.44	12900	3.44	15500	3.44	18500	3.46	21900	3.49	25700	3.54
		40	6000	4.34	7500	4.35	9200	4.34	11200	4.33	13500	4.33	16100	4.33	19100	4.34	22500	4.36
		50	–	–	6100	5.53	7500	5.54	9200	5.54	11200	5.53	13500	5.53	16000	5.53	19000	5.53
	MLZ048T4	30	7700	3.80	9600	3.78	11700	3.76	14100	3.74	16900	3.72	20100	3.71	23700	3.69	27700	3.67
		40	6500	4.78	8200	4.78	10100	4.79	12300	4.79	14800	4.79	17600	4.79	20800	4.79	24400	4.78
		50	–	–	6600	5.93	8200	5.97	10100	6.01	12300	6.04	14700	6.07	17500	6.10	20600	6.12
	MLZ058T4	30	8700	4.18	10900	4.25	13500	4.33	16400	4.40	19800	4.46	23500	4.53	27800	4.59	32500	4.64
		40	7200	5.29	9300	5.33	11600	5.38	14200	5.43	17200	5.49	20500	5.55	24200	5.60	28400	5.66
		50	–	–	7400	6.81	9400	6.81	11700	6.83	14300	6.85	17100	6.88	20400	6.92	24000	6.96
	MLZ066T4	30	10000	4.92	12600	4.93	15600	4.96	19100	5.02	23100	5.12	27700	5.25	32900	5.43	38900	5.66
		40	8500	6.18	10800	6.18	13400	6.19	16400	6.23	19900	6.30	23900	6.40	28500	6.55	33700	6.73
		50	–	–	8900	7.90	11100	7.90	13600	7.92	16600	7.97	19900	8.05	23800	8.16	28200	8.32
	MLZ076T4	30	12200	5.71	15200	5.71	18500	5.75	22400	5.83	26800	5.94	31900	6.07	37800	6.21	44600	6.34
		40	10600	7.04	13100	7.04	15900	7.08	19100	7.15	22900	7.23	27200	7.33	32300	7.43	38200	7.51
		50	–	–	11000	8.70	13000	8.74	15400	8.80	18300	8.87	21800	8.94	25900	9.00	30800	9.04
60 Hz	MLZ015T4	30	2800	1.50	3500	1.49	4300	1.49	5200	1.48	6200	1.46	7500	1.45	8900	1.42	10500	1.38
		40	2300	1.87	2900	1.87	3600	1.87	4500	1.87	5400	1.86	6400	1.84	7600	1.81	9000	1.78
		50	–	–	2300	2.34	3000	2.35	3700	2.35	4400	2.35	5300	2.33	6300	2.31	7500	2.27
	MLZ019T4	30	3800	1.80	4600	1.82	5700	1.82	6900	1.81	8200	1.81	9700	1.82	11500	1.86	13500	1.94
		40	3200	2.21	4000	2.28	4900	2.31	5900	2.31	7100	2.30	8400	2.29	10000	2.29	11700	2.31
		50	–	–	3300	2.76	4100	2.84	5000	2.87	6000	2.87	7100	2.85	8400	2.83	9900	2.81
	MLZ021T4	30	4000	1.84	4900	1.94	6000	1.97	7300	1.98	8700	1.97	10400	1.96	12200	1.99	14200	2.06
		40	3400	2.29	4300	2.40	5200	2.45	6300	2.46	7600	2.44	9000	2.43	10600	2.44	12400	2.50
		50	–	–	3600	3.01	4400	3.06	5300	3.07	6400	3.05	7600	3.02	9000	3.02	10500	3.04
	MLZ026T4	30	5000	2.30	6100	2.40	7500	2.45	9100	2.47	10900	2.47	12900	2.47	15200	2.47	17800	2.50
		40	4300	2.85	5300	2.98	6500	3.05	7900	3.08	9400	3.09	11200	3.08	13200	3.07	15400	3.08
		50	–	–	4400	3.71	5400	3.80	6600	3.84	7900	3.84	9400	3.82	11100	3.80	13000	3.78
	MLZ030T4	30	5800	2.75	7200	2.77	8800	2.81	10700	2.84	12800	2.86	15200	2.86	17800	2.84	20800	2.78
		40	5100	3.45	6300	3.46	7600	3.47	9300	3.50	11100	3.53	13200	3.54	15500	3.53	18200	3.50
		50	–	–	5200	4.35	6400	4.34	7700	4.35	9300	4.36	11100	4.37	13100	4.37	15400	4.36
	MLZ038T4	30	7000	3.37	8600	3.35	10500	3.36	12700	3.39	15300	3.42	18100	3.42	21400	3.39	25100	3.31
		40	6000	4.20	7500	4.18	9200	4.19	11100	4.22	13300	4.24	15800	4.25	18600	4.23	21800	4.15
		50	–	–	6200	5.19	7700	5.20	9300	5.23	11200	5.26	13300	5.27	15600	5.25	18300	5.18
	MLZ045T4	30	8500	3.95	10500	4.01	12800	4.04	15500	4.05	18600	4.06	22000	4.06	26000	4.08	30400	4.11
		40	7400	4.93	9100	5.00	11100	5.03	13400	5.05	16100	5.05	19100	5.05	22600	5.06	26400	5.08
		50	–	–	7600	6.27	9300	6.30	11300	6.32	13500	6.31	16100	6.31	19000	6.31	22300	6.32
	MLZ048T4	30	9300	4.31	11400	4.35	14000	4.40	16900	4.44	20300	4.48	24100	4.48	28400	4.43	33100	4.32
		40	8100	5.41	9900	5.43	12100	5.48	14700	5.53	17600	5.56	21000	5.58	24700	5.55	28800	5.46
		50	–	–	8300	6.77	10100	6.80	12300	6.84	14800	6.88	17600	6.89	20800	6.87	24300	6.80
	MLZ058T4	30	10800	5.22	13600	5.29	16800	5.39	20500	5.51	24800	5.63	29600	5.72	35000	5.78	40900	5.78
		40	9000	6.57	11400	6.54	14200	6.57	17400	6.64	21100	6.75	25300	6.86	29900	6.95	35100	7.01
		50	–	–	8900	8.27	11200	8.19	13900	8.17	17000	8.21	20400	8.29	24300	8.38	28500	8.46
	MLZ066T4	30	12600	5.95	15500	6.05	18900	6.19	22900	6.35	27600	6.52	32800	6.68	38800	6.82	45500	6.93
		40	10900	7.32	13500	7.39	16500	7.50	19900	7.64	23900	7.79	28500	7.94	33600	8.07	39300	8.17
		50	–	–	11200	9.07	13800	9.15	16700	9.25	20100	9.37	23800	9.50	28100	9.61	32900	9.69
	MLZ076T4	30	14600	6.72	17900	6.93	21800	7.09	26400	7.22	31700	7.37	37800	7.57	44800	7.86	52900	8.27
		40	12600	8.21	15500	8.43	18900	8.59	22800	8.70	27300	8.83	32500	8.99	38500	9.23	45300	9.59
		50	–	–	12900	10.35	15700	10.50	18900	10.60	22600	10.69	26800	10.82	31700	11.01	37300	11.30

To: *Evaporating temperature in [°C]*
Tc: *Condensing temperature in [°C]*
Qo: *Cooling capacity in [W]*
Pe: *Power input in [kW]*
Subcooling: *0 K*
RGT: *20 °C*
Capacity data at other conditions are available in the datasheets at: www.danfoss.com/odsg

For more information and performance with other refrigerants, please refer to Coolselector ® 2 at coolselector.danfoss.com or contact Danfoss.

Technical data and ordering

MLZ - Scroll compressors - R407A - 50 / 60 Hz

Performance table

Type		To	-25		-20		-15		-10		-5		0		5		10	
		Tc	Qo	Pe	Qo	Pe	Qo	Pe	Qo	Pe	Qo	Pe	Qo	Pe	Qo	Pe	Qo	Pe
50 Hz	MLZ015T4	30	2400	1.09	3100	1.11	3800	1.13	4700	1.14	5800	1.14	7000	1.12	8400	1.10	8400	1.1
		40	–	–	2700	1.37	3400	1.39	4200	1.41	5100	1.42	6300	1.43	7600	1.42	7600	1.42
		50	–	–	–	–	2800	1.73	3500	1.76	4400	1.78	5400	1.80	6600	1.81	6600	1.81
	MLZ019T4	30	3200	1.44	4000	1.47	5000	1.49	6100	1.50	7500	1.50	9100	1.48	10900	1.44	10900	1.44
		40	–	–	3400	1.80	4300	1.83	5400	1.86	6600	1.88	8100	1.88	9800	1.87	9800	1.87
		50	–	–	–	–	3700	2.28	4600	2.32	5700	2.35	7000	2.37	8500	2.38	8500	2.38
	MLZ021T4	30	3200	1.52	4100	1.56	5100	1.59	6300	1.61	7700	1.63	9400	1.64	11200	1.65	11200	1.65
		40	–	–	3600	1.93	4500	1.96	5600	1.99	6900	2.02	8400	2.04	10100	2.05	10100	2.05
		50	–	–	–	–	3900	2.50	4900	2.53	6000	2.56	7300	2.58	8800	2.61	8800	2.61
	MLZ026T4	30	4100	1.87	5200	1.91	6500	1.94	8000	1.97	9700	2.00	11800	2.01	14100	2.02	14100	2.02
		40	–	–	4500	2.37	5700	2.41	7100	2.44	8700	2.47	10500	2.50	12700	2.51	12700	2.51
		50	–	–	–	–	4900	3.06	6100	3.10	7500	3.14	9200	3.17	11100	3.19	11100	3.19
	MLZ030T4	30	5000	2.07	6300	2.12	7800	2.15	9700	2.16	11800	2.18	14400	2.20	17300	2.24	17300	2.24
		40	–	–	5600	2.63	6900	2.68	8500	2.71	10400	2.72	12700	2.72	15300	2.73	15300	2.73
		50	–	–	–	–	6000	3.32	7400	3.37	9000	3.40	11000	3.40	13300	3.39	13300	3.39
	MLZ038T4	30	5800	2.41	7300	2.47	9100	2.50	11200	2.52	13700	2.54	16600	2.56	20000	2.61	20000	2.61
		40	–	–	6500	3.06	8000	3.12	9900	3.15	12100	3.16	14700	3.17	17700	3.17	17700	3.17
		50	–	–	–	–	7000	3.86	8600	3.92	10500	3.95	12700	3.96	15400	3.95	15400	3.95
	MLZ042T5	30	6700	3.19	8400	3.22	10500	3.24	13000	3.26	15900	3.29	19300	3.37	23200	3.49	23200	3.49
		40	–	–	7400	4.00	9200	4.03	11500	4.04	14100	4.05	17100	4.08	20700	4.13	20700	4.13
		50	–	–	–	–	7900	5.09	9900	5.12	12200	5.13	14900	5.13	18000	5.13	18000	5.13
	MLZ045T4	30	7200	3.19	9200	3.24	11500	3.28	14200	3.31	17400	3.31	21100	3.28	25300	3.21	25300	3.21
		40	–	–	7800	4.04	10000	4.06	12400	4.09	15300	4.12	18600	4.12	22500	4.11	22500	4.11
		50	–	–	–	–	8300	5.11	10500	5.11	13100	5.12	16000	5.13	19500	5.13	19500	5.13
	MLZ048T4	30	7900	3.52	10100	3.57	12600	3.61	15600	3.64	19100	3.65	23200	3.62	27800	3.54	27800	3.54
		40	–	–	8600	4.45	10900	4.48	13600	4.51	16800	4.54	20500	4.55	24700	4.53	24700	4.53
		50	–	–	–	–	9100	5.63	11500	5.63	14400	5.64	17600	5.65	21400	5.66	21400	5.66
	MLZ058T4	30	9000	3.90	11400	3.98	14200	4.07	17400	4.15	21300	4.19	25700	4.16	30800	4.04	30800	4.04
		40	–	–	9900	5.00	12400	5.05	15300	5.13	18800	5.21	22700	5.25	27300	5.24	27300	5.24
		50	–	–	–	–	10600	6.44	13100	6.46	16100	6.51	19600	6.57	23600	6.61	23600	6.61
	MLZ066T4	30	10500	4.65	13300	4.75	16600	4.85	20400	4.95	24900	4.99	30000	4.96	36000	4.81	36000	4.81
		40	–	–	11600	5.96	14500	6.03	17900	6.12	21900	6.21	26600	6.26	31900	6.25	31900	6.25
		50	–	–	–	–	12300	7.68	15400	7.70	18900	7.77	22900	7.84	27600	7.88	27600	7.88
	MLZ076T4	30	11500	5.30	14800	5.32	18600	5.37	23000	5.44	28200	5.54	34200	5.66	41100	5.82	41100	5.82
		40	–	–	12600	6.67	16000	6.68	20100	6.72	24800	6.78	30200	6.87	36400	6.99	36400	6.99
		50	–	–	–	–	13400	8.48	16900	8.47	21100	8.49	25900	8.54	31500	8.62	31500	8.62
60 Hz	MLZ015T4	30	2900	1.31	3700	1.32	4700	1.33	5800	1.33	7100	1.34	8600	1.35	10300	1.38	8400	1.38
		40	–	–	3200	1.64	4100	1.66	5100	1.67	6300	1.67	7600	1.68	9200	1.69	7600	1.69
		50	–	–	–	–	3500	2.07	4400	2.09	5400	2.11	6600	2.12	8000	2.12	6600	2.12
	MLZ019T4	30	3700	1.70	4800	1.71	6100	1.72	7500	1.72	9200	1.73	11200	1.75	13400	1.78	10900	1.78
		40	–	–	4200	2.12	5300	2.15	6600	2.16	8200	2.16	9900	2.17	12000	2.18	9800	2.18
		50	–	–	–	–	4500	2.67	5700	2.71	7100	2.73	8600	2.74	10400	2.75	8500	2.75
	MLZ021T4	30	4100	1.83	5200	1.85	6400	1.89	7900	1.92	9700	1.95	11700	1.97	14000	1.99	11200	1.99
		40	–	–	4500	2.31	5700	2.33	7000	2.37	8600	2.40	10400	2.44	12500	2.47	10100	2.47
		50	–	–	–	–	4900	2.98	6100	3.01	7500	3.04	9100	3.08	10900	3.12	8800	3.12
	MLZ026T4	30	5000	2.15	6300	2.19	7800	2.22	9600	2.26	11800	2.30	14200	2.33	17000	2.35	14100	2.35
		40	–	–	5500	2.72	6900	2.75	8500	2.79	10500	2.83	12700	2.87	15200	2.91	12700	2.91
		50	–	–	–	–	5900	3.52	7400	3.55	9100	3.59	11000	3.64	13300	3.68	11100	3.68
	MLZ030T4	30	6200	2.46	7700	2.51	9600	2.53	11800	2.56	14500	2.60	17700	2.68	21300	2.81	17300	2.81
		40	–	–	6900	3.10	8500	3.16	10500	3.19	12800	3.22	15600	3.26	18900	3.32	15300	3.32
		50	–	–	–	–	7400	3.90	9100	3.98	11100	4.02	13600	4.05	16500	4.08	13300	4.08
	MLZ038T4	30	7200	2.86	8900	2.92	11100	2.95	13700	2.98	16800	3.02	20400	3.12	24700	3.28	20000	3.28
		40	–	–	7900	3.61	9800	3.68	12100	3.72	14800	3.75	18100	3.79	21900	3.87	17700	3.87
		50	–	–	–	–	8600	4.54	10500	4.63	12900	4.68	15700	4.71	19100	4.75	15400	4.75
	MLZ045T1	30	8800	3.77	11200	3.84	14000	3.88	17300	3.90	21200	3.88	25700	3.80	30900	3.66	25300	3.66
		40	–	–	9600	4.76	12100	4.80	15100	4.83	18600	4.82	22600	4.78	27200	4.69	22500	4.69
		50	–	–	–	–	10200	6.01	12900	6.01	15900	6.00	19500	5.96	23500	5.89	19500	5.89
	MLZ048T4	30	9600	4.22	12200	4.30	15300	4.35	18900	4.37	23100	4.34	28000	4.26	33700	4.10	27800	4.1
		40	–	–	10500	5.34	13200	5.38	16500	5.41	20300	5.40	24700	5.36	29700	5.25	24700	5.25
		50	–	–	–	–	11200	6.73	14000	6.73	17400	6.72	21200	6.68	25700	6.60	21400	6.6
	MLZ058T4	30	11200	4.64	14100	4.68	17600	4.76	21600	4.85	26300	4.97	–	5.09	38100	5.22	30800	5.22
		40	–	–	12300	5.90	15400	5.94	19000	6.01	23300	6.11	28100	6.23	33800	6.36	27300	6.36
		50	–	–	–	–	13100	7.54	16300	7.57	20000	7.64	24300	7.74	29300	7.86	23600	7.86
	MLZ066T4	30	13100	5.48	16500	5.53	20600	5.62	25300	5.73	30900	5.87	37300	6.01	44600	6.16	36000	6.16
		40	–	–	14400	6.97	18100	7.02	22300	7.10	27300	7.22	33000	7.36	39600	7.52	31900	7.52
		50	–	–	–	–	15400	8.91	19100	8.95	23500	9.03	28500	9.14	34300	9.29	27600	9.29
	MLZ076T4	30	14100	6.09	17900	6.16	22400	6.25	27700	6.33	33800	6.36	40900	6.32	49100	6.15	41100	6.15
		40	–	–	15500	7.68	19500	7.72	24200	7.81	29700	7.89	36000	7.95	43300	7.94	36400	7.94
		50	–	–	–	–	16600	9.71	20700	9.72	25500	9.78	31000	9.86	37400	9.93	31500	9.93

To: *Evaporating temperature in [°C]*
Tc: *Condensing temperature in [°C]*
Qo: *Cooling capacity in [W]*
Pe: *Power input in [kW]*
Subcooling: *0 K*
RGT: *20 °C*
Capacity data at other conditions are available in the datasheets at: www.danfoss.com/odsg

For more information and performance with other refrigerants, please refer to Coolselector ® 2 at coolselector.danfoss.com or contact Danfoss.

Technical data and ordering

MLZ - Scroll compressors - R407F - 50 / 60 Hz

Performance table

Type		To	-25		-20		-15		-10		-5		0		5		10	
		Tc	Qo	Pe	Qo	Pe	Qo	Pe	Qo	Pe	Qo	Pe	Qo	Pe	Qo	Pe	Qo	Pe
50 Hz	MLZ015T4	30	2600	1.17	3300	1.19	4100	1.19	5000	1.20	6200	1.21	7500	1.21	9000	1.21	9000	1,21
		40	–	–	–	–	3600	1.48	4500	1.50	5500	1.51	6700	1.51	8100	1.52	8100	1,52
		50	–	–	–	–	–	–	3800	1.88	4700	1.90	5800	1.91	7100	1.92	7100	1,92
	MLZ019T4	30	3400	1.54	4200	1.56	5300	1.58	6500	1.58	8000	1.59	9600	1.60	11600	1.60	11600	1,6
		40	–	–	–	–	4600	1.96	5800	1.98	7100	1.99	8700	2.00	10500	2.00	10500	2
		50	–	–	–	–	–	–	4900	2.48	6100	2.50	7500	2.52	9200	2.53	9200	2,53
	MLZ021T4	30	3500	1.63	4400	1.66	5500	1.67	6700	1.69	8200	1.72	9900	1.77	11900	1.83	11900	1,83
		40	–	–	–	–	4900	2.09	6000	2.11	7400	2.13	8900	2.16	10700	2.20	10700	2,2
		50	–	–	–	–	–	–	5200	2.71	6400	2.72	7800	2.74	9500	2.77	9500	2,77
	MLZ026T4	30	4300	2.00	5500	2.03	6900	2.05	8500	2.07	10300	2.11	12500	2.16	15000	2.25	15000	2,25
		40	–	–	–	–	6100	2.57	7600	2.59	9300	2.61	11200	2.65	13500	2.70	13500	2,7
		50	–	–	–	–	–	–	6600	3.31	8100	3.34	9900	3.36	11900	3.39	11900	3,39
	MLZ030T4	30	5300	2.21	6700	2.26	8300	2.28	10200	2.29	12500	2.31	15200	2.34	18300	2.40	18300	2,4
		40	–	–	–	–	7400	2.86	9100	2.88	11100	2.89	13500	2.90	16300	2.91	16300	2,91
		50	–	–	–	–	–	–	8000	3.61	9700	3.63	11800	3.63	14300	3.63	14300	3,63
	MLZ038T4	30	6200	2.57	7700	2.62	9600	2.65	11900	2.67	14500	2.68	17600	2.72	21100	2.79	21100	2,79
		40	–	–	–	–	8600	3.33	10500	3.35	12900	3.36	15600	3.37	18900	3.39	18900	3,39
		50	–	–	–	–	–	–	9200	4.20	11300	4.23	13700	4.23	16500	4.22	16500	4,22
	MLZ042T5	30	7100	3.40	8900	3.43	11200	3.45	13800	3.46	16800	3.49	20400	3.55	24500	3.64	24500	3,64
		40	–	–	–	–	9900	4.31	12200	4.32	15000	4.33	18200	4.34	22000	4.38	22000	4,38
		50	–	–	–	–	–	–	10600	5.49	13100	5.50	16000	5.49	19300	5.49	19300	5,49
	MLZ045T4	30	7700	3.39	9700	3.44	12200	3.49	15100	3.52	18400	3.51	22300	3.45	26700	3.30	26700	3,3
		40	–	–	–	–	10600	4.34	13200	4.38	16300	4.40	19800	4.39	23900	4.34	23900	4,34
		50	–	–	–	–	–	–	11300	5.48	14000	5.49	17200	5.50	20900	5.49	20900	5,49
	MLZ048T4	30	8400	3.74	10700	3.80	13400	3.85	16600	3.88	20200	3.87	24500	3.80	29400	3.64	29400	3,64
		40	–	–	–	–	11700	4.79	14600	4.83	17900	4.85	21800	4.85	26300	4.79	26300	4,79
		50	–	–	–	–	–	–	12400	6.04	15400	6.05	18900	6.07	23000	6.05	23000	6,05
	MLZ058T4	30	9500	4.15	12100	4.23	15000	4.32	18400	4.39	22500	4.43	27100	4.40	32400	4.27	32400	4,27
		40	–	–	–	–	13200	5.40	16400	5.47	20000	5.54	24200	5.59	29000	5.57	29000	5,57
		50	–	–	–	–	–	–	14100	6.93	17300	6.98	21000	7.03	25300	7.06	25300	7,06
	MLZ066T4	30	11200	4.94	14100	5.04	17500	5.15	21600	5.24	26300	5.28	31700	5.24	38000	5.09	38000	5,09
		40	–	–	–	–	15500	6.43	19100	6.52	23400	6.61	28300	6.66	33900	6.64	33900	6,64
		50	–	–	–	–	–	–	16500	8.26	20300	8.31	24600	8.38	29600	8.42	29600	8,42
	MLZ076T4	30	12300	5.70	15700	5.74	19700	5.77	24400	5.83	29800	5.92	36100	6.06	43300	6.27	43300	6,27
		40	–	–	–	–	17100	7.15	21400	7.17	26400	7.22	32100	7.32	38700	7.49	38700	7,49
		50	–	–	–	–	–	–	18200	9.07	22700	9.07	27800	9.11	33800	9.21	33800	9,21
60 Hz	MLZ015T4	30	3100	1.40	3900	1.41	4900	1.41	6100	1.41	7500	1.42	9100	1.44	10900	1.50	9000	1,5
		40	–	–	–	–	4400	1.77	5400	1.78	6700	1.77	8100	1.78	9800	1.80	8100	1,8
		50	–	–	–	–	–	–	4700	2.24	5800	2.25	7100	2.25	8600	2.26	7100	2,26
	MLZ019T4	30	4000	1.82	5100	1.83	6400	1.82	8000	1.82	9800	1.83	11900	1.87	14300	1.94	11600	1,94
		40	–	–	–	–	5700	2.29	7100	2.30	8700	2.30	10600	2.30	12800	2.33	10500	2,33
		50	–	–	–	–	–	–	6100	2.90	7600	2.91	9300	2.91	11200	2.92	9200	2,92
	MLZ021T4	30	4300	1.96	5500	1.97	6800	2.00	8400	2.02	10200	2.06	12400	2.11	14800	2.16	11900	2,16
		40	–	–	–	–	6100	2.49	7500	2.51	9200	2.54	11100	2.58	13300	2.63	10700	2,63
		50	–	–	–	–	–	–	6500	3.22	8000	3.25	9800	3.28	11800	3.32	9500	3,32
	MLZ026T4	30	5300	2.31	6700	2.33	8300	2.35	10200	2.39	12500	2.43	15100	2.48	18000	2.55	15000	2,55
		40	–	–	–	–	7400	2.94	9100	2.96	11200	3.00	13500	3.05	16200	3.10	13500	3,1
		50	–	–	–	–	–	–	7900	3.80	9800	3.83	11900	3.87	14300	3.91	11900	3,91
	MLZ030T4	30	6600	2.62	8200	2.67	10200	2.69	12500	2.71	15300	2.76	18600	2.84	22400	2.98	18300	2,98
		40	–	–	–	–	9000	3.38	11200	3.41	13700	3.43	16600	3.47	20100	3.54	16300	3,54
		50	–	–	–	–	–	–	9800	4.27	12000	4.31	14600	4.34	17700	4.37	14300	4,37
	MLZ038T4	30	7600	3.05	9500	3.11	11800	3.13	14500	3.16	17800	3.21	21600	3.30	26000	3.47	21100	3,47
		40	–	–	–	–	10500	3.93	12900	3.97	15800	3.99	19200	4.04	23300	4.12	18900	4,12
		50	–	–	–	–	–	–	11300	4.96	13800	5.01	16900	5.04	20400	5.09	16500	5,09
	MLZ045T1	30	9300	4.01	11900	4.08	14900	4.12	18400	4.13	22400	4.11	27100	4.04	32600	3.93	26700	3,93
		40	–	–	–	–	13000	5.13	16100	5.14	19800	5.13	24000	5.09	28900	5.00	23900	5
		50	–	–	–	–	–	–	13900	6.44	17100	6.42	20900	6.37	25200	6.29	20900	6,29
	MLZ048T4	30	10200	4.50	12900	4.57	16200	4.61	20000	4.63	24500	4.60	29600	4.53	35500	4.41	29400	4,41
		40	–	–	–	–	14100	5.74	17600	5.76	21600	5.75	26200	5.70	31600	5.60	26300	5,6
		50	–	–	–	–	–	–	15100	7.22	18700	7.19	22800	7.13	27500	7.05	23000	7,05
	MLZ058T4	30	11900	4.94	15000	4.98	18600	5.05	22900	5.14	27800	5.26	33500	5.41	40100	5.58	32400	5,58
		40	–	–	–	–	16400	6.34	20300	6.41	24800	6.50	29900	6.63	35900	6.78	29000	6,78
		50	–	–	–	–	–	–	17600	8.12	21500	8.18	26100	8.27	31400	8.40	25300	8,4
	MLZ066T4	30	13900	5.84	17500	5.88	21800	5.96	26800	6.07	32600	6.22	39300	6.39	47100	6.60	38000	6,6
		40	–	–	–	–	19300	7.49	23800	7.57	29000	7.68	35100	7.83	42100	8.01	33900	8,01
		50	–	–	–	–	–	–	20600	9.59	25200	9.66	30600	9.77	36800	9.92	29600	9,92
	MLZ076T4	30	15000	6.49	19000	6.54	23700	6.62	29300	6.69	35700	6.72	43100	6.71	51700	6.62	43300	6,62
		40	–	–	–	–	20800	8.24	25800	8.31	31600	8.38	38200	8.44	45900	8.46	38700	8,46
		50	–	–	–	–	–	–	22300	10.41	27400	10.45	33300	10.52	40100	10.59	33800	10,59

To: *Evaporating temperature in [°C]*
Tc: *Condensing temperature in [°C]*
Qo: *Cooling capacity in [W]*
Pe: *Power input in [kW]*
Subcooling: *0 K*
RGT: *20 °C*
Capacity data at other conditions are available in the datasheets at: www.danfoss.com/odsg

For more information and performance with other refrigerants, please refer to Coolselector ® 2 at coolselector.danfoss.com or contact Danfoss.

Technical data and ordering

MLZ - Scroll compressors - R22 - 50 / 60 Hz

Performance table

Type		To	-20		-15		-10		-5		0		5		10	
		Tc	Qo	Pe	Qo	Pe	Qo	Pe	Qo	Pe	Qo	Pe	Qo	Pe	Qo	Pe
50 Hz	MLZ015T4	30	2600	1.08	3200	1.10	3800	1.11	4600	1.13	5500	1.15	6600	1.17	7800	1.19
		40	–	–	2800	1.36	3500	1.38	4200	1.40	5100	1.41	6000	1.42	7100	1.44
		50	–	–	–	–	–	–	3800	1.71	4500	1.73	5400	1.75	6400	1.76
	MLZ019T4	30	3400	1.32	4200	1.34	5000	1.36	6000	1.38	7100	1.40	8500	1.43	10000	1.46
		40	–	–	3800	1.67	4600	1.69	5500	1.71	6500	1.72	7800	1.74	9200	1.76
		50	–	–	–	–	–	–	4900	2.09	5800	2.11	6900	2.13	8300	2.14
	MLZ021T4	30	3600	1.43	4400	1.47	5300	1.50	6400	1.52	7600	1.55	9000	1.57	10600	1.60
		40	–	–	4000	1.79	4800	1.83	5800	1.85	6900	1.88	8200	1.89	9800	1.90
		50	–	–	–	–	–	–	5200	2.27	6200	2.30	7400	2.31	8800	2.32
	MLZ026T4	30	4400	1.76	5400	1.77	6600	1.77	7900	1.76	9600	1.75	11500	1.74	13800	1.75
		40	–	–	4900	2.17	6000	2.19	7200	2.19	8800	2.18	10600	2.16	12700	2.15
		50	–	–	–	–	–	–	6500	2.71	7900	2.71	9500	2.69	11400	2.66
	MLZ030T4	30	5100	2.08	6400	2.14	7900	2.19	9700	2.25	11600	2.32	13800	2.38	16200	2.46
		40	–	–	5800	2.60	7200	2.67	8800	2.72	10700	2.78	12700	2.83	14900	2.89
		50	–	–	–	–	–	–	7900	3.30	9600	3.36	11500	3.40	13600	3.44
	MLZ038T4	30	5800	2.40	7400	2.48	9200	2.57	11300	2.66	13700	2.76	16300	2.84	19100	2.91
		40	–	–	6800	3.04	8500	3.13	10400	3.22	12600	3.29	14900	3.36	17500	3.40
		50	–	–	–	–	–	–	9400	3.90	11400	3.98	13600	4.03	15900	4.06
	MLZ042T5	30	9000	3.18	9500	3.05	10800	3.01	12700	3.03	15400	3.11	18500	3.23	22000	3.36
		40	–	–	8400	3.81	9700	3.75	11600	3.75	14000	3.79	16600	3.86	19600	3.93
		50	–	–	–	–	–	–	10300	4.78	12600	4.79	15000	4.81	17600	4.82
	MLZ045T4	30	7000	3.05	8800	3.08	11000	3.08	13600	3.08	16500	3.08	19700	3.11	23200	3.17
		40	–	–	7900	3.72	9900	3.76	12300	3.77	15000	3.77	18000	3.79	21200	3.84
		50	–	–	–	–	–	–	10800	4.62	13300	4.64	16100	4.65	19100	4.68
	MLZ048T4	30	8100	3.32	10000	3.36	12200	3.37	14800	3.36	17800	3.37	21300	3.40	25300	3.47
		40	–	–	9000	4.07	11100	4.11	13500	4.12	16300	4.12	19500	4.13	23200	4.17
		50	–	–	–	–	–	–	12200	5.05	14700	5.06	17600	5.07	20900	5.10
	MLZ058T4	30	9200	3.93	11500	3.97	14300	3.96	17400	3.95	21100	3.94	25300	3.98	30200	4.09
		40	–	–	10500	4.76	13000	4.80	15900	4.80	19300	4.81	23200	4.84	27800	4.92
		50	–	–	–	–	–	–	14100	5.89	17300	5.90	20900	5.92	25100	5.97
	MLZ066T4	30	10200	4.34	12900	4.40	16200	4.43	20000	4.45	24300	4.49	29100	4.57	34400	4.71
		40	–	–	11900	5.34	14900	5.39	18300	5.43	22300	5.48	26800	5.54	31600	5.66
		50	–	–	–	–	–	–	16500	6.62	20200	6.66	24200	6.72	28700	6.80
	MLZ076T4	30	12400	5.26	15400	5.27	19000	5.20	23200	5.11	27900	5.06	33300	5.12	39300	5.34
		40	–	–	14100	6.36	17400	6.33	21300	6.27	25600	6.22	30500	6.25	36100	6.42
		50	–	–	–	–	–	–	19100	7.68	23100	7.64	27600	7.65	32600	7.78
60 Hz	MLZ015T4	30	3000	1.22	3800	1.25	4600	1.29	5600	1.32	6700	1.36	7900	1.40	9300	1.45
		40	–	–	3400	1.54	4200	1.58	5100	1.62	6100	1.65	7200	1.68	8500	1.70
		50	–	–	–	–	–	–	4500	1.96	5500	2.00	6500	2.03	7700	2.04
	MLZ019T4	30	3900	1.56	4900	1.60	6000	1.65	7300	1.70	8800	1.74	10400	1.76	12200	1.76
		40	–	–	4500	1.97	5500	2.02	6700	2.07	8100	2.11	9600	2.13	11300	2.12
		50	–	–	–	–	–	–	6000	2.49	7300	2.53	8700	2.54	10200	2.53
	MLZ021T4	30	4100	1.69	5200	1.73	6400	1.77	7800	1.80	9400	1.84	11200	1.90	13200	1.97
		40	–	–	4800	2.12	5900	2.15	7200	2.18	8700	2.20	10300	2.24	12100	2.29
		50	–	–	–	–	–	–	6400	2.63	7800	2.66	9300	2.69	11000	2.73
	MLZ026T4	30	5100	2.02	6300	2.07	7800	2.11	9500	2.16	11500	2.20	13700	2.23	16300	2.24
		40	–	–	5900	2.57	7300	2.64	8900	2.69	10600	2.73	12600	2.75	14900	2.74
		50	–	–	–	–	–	–	8100	3.32	9700	3.37	11500	3.39	13500	3.37
	MLZ030T4	30	6000	2.44	7500	2.51	9400	2.57	11500	2.65	13800	2.72	16400	2.81	19300	2.89
		40	–	–	6900	3.07	8600	3.14	10500	3.21	12700	3.27	15100	3.34	17800	3.40
		50	–	–	–	–	–	–	9500	3.89	11500	3.96	13800	4.01	16200	4.06
	MLZ038T4	30	6900	2.83	8800	2.92	11000	3.03	13500	3.14	16300	3.25	19400	3.35	22800	3.42
		40	–	–	8100	3.58	10100	3.68	12400	3.79	15000	3.88	17900	3.96	20900	4.00
		50	–	–	–	–	–	–	11200	4.59	13600	4.68	16200	4.75	19000	4.79
	MLZ042T1	30	8600	3.50	10800	3.57	13500	3.64	16500	3.71	20000	3.79	23800	3.89	28000	4.01
		40	–	–	9800	4.38	12300	4.45	15100	4.51	18400	4.57	21900	4.63	25800	4.70
		50	–	–	–	–	–	–	13600	5.50	16500	5.56	19800	5.61	23400	5.66
	MLZ045T4	30	9700	3.76	12200	3.82	15000	3.89	18300	3.98	21900	4.08	26000	4.21	30500	4.36
		40	–	–	10900	4.74	13600	4.82	16700	4.90	20100	4.97	23900	5.05	28200	5.14
		50	–	–	–	–	–	–	14900	6.04	18100	6.11	21600	6.17	25600	6.22
	MLZ048T4	30	10900	4.50	13800	4.62	17200	4.74	21100	4.87	25600	5.00	30600	5.13	36200	5.27
		40	–	–	12600	5.61	15700	5.75	19300	5.88	23500	5.99	28200	6.08	33400	6.16
		50	–	–	–	–	–	–	17300	7.16	21100	7.26	25500	7.33	30400	7.37
	MLZ058T4	30	12200	5.03	15500	5.18	19400	5.35	24000	5.51	29200	5.68	35000	5.83	41300	5.97
		40	–	–	14200	6.30	17800	6.48	22100	6.65	26900	6.82	32300	6.96	38200	7.08
		50	–	–	–	–	–	–	20000	8.06	24500	8.22	29400	8.36	34700	8.46
	MLZ066T4		14500	6.07	18300	6.20	22800	6.31	28000	6.42	33900	6.54	40400	6.69	47400	6.87
		40	–	–	16900	7.48	21000	7.62	25800	7.74	31200	7.86	37100	7.98	43500	8.13
		50	–	–	–	–	–	–	23400	9.43	28300	9.55	33700	9.66	39600	9.78
	MLZ076T4	30	14 500	6.1	18 300	6.2	22 800	6.3	28 000	6.4	33 900	6.5	40 400	6.7	47 400	6.9
		40	–	–	16 900	7.5	21 000	7.6	25 800	7.7	31 200	7.9	37 100	8.0	43 500	8.1
		50	–	–	–	–	–	–	23 400	9.4	28 300	9.6	33 700	9.7	39 600	9.8

To: *Evaporating temperature in [°C]*
Tc: *Condensing temperature in [°C]*
Qo:*Cooling capacity in [W]*
Pe: *Power input in [kW]*
Subcooling: *0 K*
RGT: *20 °C*
Capacity data at other conditions are available in the datasheets at: www.danfoss.com/odsg

For more information and performance with other refrigerants, please refer to Coolselector ® 2 at coolselector.danfoss.com or contact Danfoss.

Technical data and ordering

MLZ - Scroll compressors - R448A - 50 / 60 Hz

Performance table

Type		To	-25		-20		-15		-10		-5		0		5		10	
		Tc	Qo	Pe	Qo	Pe	Qo	Pe	Qo	Pe	Qo	Pe	Qo	Pe	Qo	Pe	Qo	Pe
50 Hz	MLZ015T4A	30	2003	1.19	2544	1.19	3180	1.19	3926	1.21	4796	1.23	5805	1.25	6969	1.26	8303	1.28
		40	–	–	2215	1.51	2792	1.50	3466	1.50	4254	1.51	5171	1.53	6231	1.55	7450	1.57
		50	–	–	–	–	–	–	2955	1.91	3650	1.90	4463	1.91	5408	1.92	6501	1.94
	MLZ019T4A	30	2578	1.44	3285	1.48	4115	1.50	5087	1.52	6223	1.54	7541	1.55	9061	1.57	10804	1.60
		40	–	–	2892	1.81	3636	1.86	4506	1.90	5521	1.92	6702	1.94	8069	1.96	9641	1.98
		50	–	–	–	–	–	–	3898	2.35	4784	2.40	5819	2.43	7022	2.45	8413	2.48
	MLZ021T4A	30	2737	1.53	3485	1.53	4363	1.55	5393	1.56	6594	1.58	7989	1.60	9598	1.62	11441	1.64
		40	–	–	3034	1.98	3823	1.97	4746	1.97	5824	1.98	7078	1.99	8530	2.01	10200	2.03
		50	–	–	–	–		–	4051	2.54	4993	2.53	6094	2.52	7376	2.52	8859	2.53
	MLZ026T4A	30	3379	1.84	4344	1.88	5459	1.91	6748	1.92	8239	1.94	9955	1.95	11924	1.97	14170	2.00
		40	–	–	3726	2.40	4746	2.43	5919	2.45	7270	2.47	8826	2.47	10611	2.48	12651	2.49
		50	–	–	–	–	–	–	5006	3.15	6204	3.17	7584	3.17	9171	3.17	10991	3.17
	MLZ030T4A	30	4153	2.15	5253	2.15	6542	2.18	8052	2.23	9812	2.28	11853	2.32	14206	2.34	16900	2.33
		40	–	–	4568	2.82	5733	2.79	7097	2.79	8690	2.82	10543	2.86	12686	2.91	15150	2.95
		50	–	–	–	–	–	–	6041	3.63	7442	3.60	9081	3.60	10989	3.63	13197	3.67
	MLZ038T4A	30	4934	2.52	6228	2.49	7745	2.50	9521	2.54	11592	2.61	13995	2.71	16766	2.83	19940	2.98
		40	–	–	5426	3.24	6790	3.20	8385	3.20	10247	3.24	12411	3.32	14915	3.43	17795	3.57
		50	–	–	–	–	–	–	7161	4.15	8791	4.15	10695	4.19	12911	4.27	15474	4.39
	MLZ045T4A	30	5926	3.15	7577	3.15	9510	3.16	11770	3.19	14403	3.23	17454	3.28	20970	3.35	24997	3.43
		40	–	–	6641	4.05	8378	4.04	10401	4.04	12758	4.05	15493	4.09	18653	4.13	22285	4.20
		50	–	–	–	–	–	–	8899	5.21	10943	5.19	13326	5.19	16094	5.20	19292	5.24
	MLZ048T4A	30	6500	3.59	8254	3.54	10314	3.51	12727	3.51	15544	3.53	18814	3.58	22585	3.64	26907	3.72
		40	–	–	7209	4.58	9059	4.50	11222	4.46	13750	4.45	16690	4.46	20092	4.51	24006	4.57
		50	–	–	–	–	–	–	9598	5.77	11803	5.70	14381	5.67	17382	5.67	20854	5.70
	MLZ058T4A	30	7605	3.77	9643	3.81	12037	3.86	14843	3.91	18117	3.98	21917	4.07	26301	4.17	31323	4.31
		40	–	–	8450	4.88	10603	4.90	13125	4.93	16073	4.97	19502	5.03	23471	5.11	28036	5.21
		50	–	–	–	–	–	–	11244	6.32	13818	6.32	16832	6.34	20342	6.37	24404	6.44
	MLZ066T4A	30	8812	4.56	11211	4.61	14028	4.67	17331	4.73	21186	4.81	25660	4.91	30820	5.03	36732	5.17
		40	–	–	9783	5.92	12324	5.94	15301	5.97	18781	6.01	22832	6.08	27519	6.17	32909	6.29
		50	–	–	–	–	–	–	13084	7.66	16138	7.65	19713	7.67	23876	7.71	28694	7.78
	MLZ076T4A	30	9243	5.45	11928	5.40	15085	5.37	18787	5.38	23110	5.44	28126	5.56	33909	5.75	40534	6.01
		40	–	–	10219	6.89	13081	6.80	16439	6.74	20367	6.73	24940	6.77	30232	6.88	36315	7.07
		50	–	–	–	–	–	–	13858	8.64	17331	8.54	21399	8.50	26137	8.52	31617	8.61
60 Hz	MLZ015T4A	30	2307	1.36	2961	1.38	3730	1.41	4632	1.44	5686	1.47	6910	1.49	8324	1.49	9945	1.48
		40	–	–	2614	1.72	3302	1.74	4104	1.76	5039	1.78	6126	1.81	7384	1.83	8830	1.83
		50	–	–	–	–	–	–	3573	2.19	4387	2.20	5334	2.22	6433	2.24	7703	2.25
	MLZ019T4A	30	3105	1.69	3947	1.72	4937	1.75	6099	1.77	7458	1.80	9036	1.83	10859	1.86	12950	1.90
		40	–	–	3517	2.16	4401	2.19	5435	2.21	6644	2.23	8051	2.26	9681	2.28	11557	2.31
		50	–	–	–	–	–	–	4729	2.77	5774	2.79	6995	2.81	8417	2.83	10064	2.85
	MLZ021T4A	30	3305	1.79	4196	1.82	5247	1.85	6484	1.87	7930	1.90	9613	1.92	11558	1.95	13790	1.99
		40	–	–	3736	2.29	4676	2.32	5779	2.34	7071	2.36	8578	2.38	10325	2.39	12338	2.42
		50	–	–	–	–	–	–	5025	2.94	6145	2.95	7459	2.96	8992	2.97	10768	2.98
	MLZ026T4A	30	4180	2.17	5303	2.19	6618	2.22	8158	2.24	9953	2.28	12035	2.32	14437	2.38	17189	2.45
		40	–	–	4733	2.81	5909	2.82	7280	2.84	8879	2.86	10736	2.88	12884	2.91	15354	2.96
		50	–	–	–	–	–	–	6294	3.64	7664	3.64	9265	3.64	11128	3.65	13285	3.68
	MLZ030T4A	30	5052	2.57	6391	2.60	7961	2.65	9801	2.71	11948	2.77	14439	2.83	17312	2.89	20604	2.92
		40	–	–	5716	3.28	7132	3.29	8788	3.33	10721	3.38	12969	3.45	15568	3.51	18556	3.57
		50	–	–	–	–	–	–	7647	4.16	9333	4.18	11304	4.22	13596	4.27	16247	4.33
	MLZ038T4A	30	5955	3.03	7496	3.06	9319	3.10	11468	3.16	13988	3.22	16923	3.30	20319	3.40	24221	3.52
		40	–	–	6621	3.88	8245	3.92	10164	3.96	12421	4.02	15062	4.08	18131	4.16	21673	4.25
		50	–	–	–	–	–	–	8768	4.99	10729	5.05	13040	5.11	15747	5.18	18896	5.27
	MLZ045T4A	30	7136	3.75	9071	3.83	11362	3.91	14062	3.98	17229	4.05	20918	4.11	25185	4.17	30086	4.23
		40	–	–	7956	4.82	10005	4.90	12420	4.98	15257	5.05	18573	5.11	22422	5.17	26862	5.22
		50	–	–	–	–	–	–	10757	6.23	13248	6.30	16173	6.36	19589	6.41	23552	6.45
	MLZ048T4A	30	7921	4.07	10065	4.08	12583	4.11	15535	4.17	18981	4.24	22980	4.33	27593	4.45	32880	4.58
		40	–	–	8845	5.25	11114	5.24	13770	5.25	16872	5.29	20481	5.36	24657	5.45	29459	5.57
		50	–	–	–	–	–	–	11874	6.72	14596	6.71	17778	6.74	21480	6.79	25760	6.87
	MLZ058T4A	30	9375	4.43	11829	4.57	14719	4.68	18116	4.79	22090	4.89	26711	5.00	32048	5.13	38173	5.28
		40	–	–	10495	5.70	13083	5.83	16121	5.95	19678	6.05	23825	6.15	28632	6.26	34169	6.39
		50	–	–	–	–	–	–	14017	7.44	17121	7.55	20757	7.65	24996	7.75	29908	7.85
	MLZ066T4A	30	10728	5.42	13650	5.51	17085	5.61	21112	5.71	25813	5.84	31268	6.00	37559	6.22	44766	6.49
		40	–	–	11916	7.03	15027	7.08	18674	7.14	22937	7.22	27898	7.33	33638	7.48	40238	7.69
		50	–	–	–	–	–	–	16025	9.11	19796	9.13	24208	9.17	29342	9.25	35279	9.37
	MLZ076T4A	30	11529	6.11	14724	6.12	18474	6.17	22864	6.26	27982	6.41	33915	6.63	40750	6.93	48573	7.33
		40	–	–	12742	7.87	16158	7.85	20161	7.86	24839	7.92	30279	8.05	36566	8.24	43789	8.52
		50	–	–	–	–	–	–	17187	10.07	21356	10.04	26232	10.07	31903	10.16	38456	10.32

To: *Evaporating temperature in [°C]*
Tc: *Condensing temperature in [°C]*
Qo: *Cooling capacity in [W]*
Pe: *Power input in [kW]*
Subcooling: *0 K*
RGT: *20 °C*
Capacity data at other conditions are available in the datasheets at: www.danfoss.com/odsg

For more information and performance with other refrigerants, please refer to Coolselector ® 2 at coolselector.danfoss.com or contact Danfoss.

Technical data and ordering

MLZ - Scroll compressors - R449A - 50 / 60 Hz

Performance table

Type		To	-25		-20		-15		-10		-5		0		5		10	
		Tc	Qo	Pe	Qo	Pe	Qo	Pe	Qo	Pe	Qo	Pe	Qo	Pe	Qo	Pe	Qo	Pe
50 Hz	MLZ015T4A	30	2003	1.19	2544	1.19	3180	1.19	3926	1.21	4796	1.23	5805	1.25	6969	1.26	8303	1.28
		40	-	-	2215	1.51	2792	1.50	3466	1.50	4254	1.51	5171	1.53	6231	1.55	7450	1.57
		50	-	-	-	-	-	-	2955	1.91	3650	1.90	4463	1.91	5408	1.92	6501	1.94
	MLZ019T4A	30	2578	1.44	3285	1.48	4115	1.50	5087	1.52	6223	1.54	7541	1.55	9061	1.57	10804	1.60
		40	-	-	2892	1.81	3636	1.86	4506	1.90	5521	1.92	6702	1.94	8069	1.96	9641	1.98
		50	-	-	-	-	-	-	3898	2.35	4784	2.40	5819	2.43	7022	2.45	8413	2.48
	MLZ021T4A	30	2737	1.53	3485	1.53	4363	1.55	5393	1.56	6594	1.58	7989	1.60	9598	1.62	11441	1.64
		40	-	-	3034	1.98	3823	1.97	4746	1.97	5824	1.98	7078	1.99	8530	2.01	10200	2.03
		50	-	-	-	-	-	-	4051	2.54	4993	2.53	6094	2.52	7376	2.52	8859	2.53
	MLZ026T4A	30	3379	1.84	4344	1.88	5459	1.91	6748	1.92	8239	1.94	9955	1.95	11924	1.97	14170	2.00
		40	-	-	3726	2.40	4746	2.43	5919	2.45	7270	2.47	8826	2.47	10611	2.48	12651	2.49
		50	-	-	-	-	-	-	5006	3.15	6204	3.17	7584	3.17	9171	3.17	10991	3.17
	MLZ030T4A	30	4153	2.15	5253	2.15	6542	2.18	8052	2.23	9812	2.28	11853	2.32	14206	2.34	16900	2.33
		40	-	-	4568	2.82	5733	2.79	7097	2.79	8690	2.82	10543	2.86	12686	2.91	15150	2.95
		50	-	-	-	-	-	-	6041	3.63	7442	3.60	9081	3.60	10989	3.63	13197	3.67
	MLZ038T4A	30	4934	2.52	6228	2.49	7745	2.50	9521	2.54	11592	2.61	13995	2.71	16766	2.83	19940	2.98
		40	-	-	5426	3.24	6790	3.20	8385	3.20	10247	3.24	12411	3.32	14915	3.43	17795	3.57
		50	-	-	-	-	-	-	7161	4.15	8791	4.15	10695	4.19	12911	4.27	15474	4.39
	MLZ045T4A	30	5926	3.15	7577	3.15	9510	3.16	11770	3.19	14403	3.23	17454	3.28	20970	3.35	24997	3.43
		40	-	-	6641	4.05	8378	4.04	10401	4.04	12758	4.05	15493	4.09	18653	4.13	22285	4.20
		50	-	-	-	-	-	-	8899	5.21	10943	5.19	13326	5.19	16094	5.20	19292	5.24
	MLZ048T4A	30	6500	3.59	8254	3.54	10314	3.51	12727	3.51	15544	3.53	18814	3.58	22585	3.64	26907	3.72
		40	-	-	7209	4.58	9059	4.50	11222	4.46	13750	4.45	16690	4.46	20092	4.51	24006	4.57
		50	-	-	-	-	-	-	9598	5.77	11803	5.70	14381	5.67	17382	5.67	20854	5.70
	MLZ058T4A	30	7605	3.77	9643	3.81	12037	3.86	14843	3.91	18117	3.98	21917	4.07	26301	4.17	31323	4.31
		40	-	-	8450	4.88	10603	4.90	13125	4.93	16073	4.97	19502	5.03	23471	5.11	28036	5.21
		50	-	-	-	-	-	-	11244	6.32	13818	6.32	16832	6.34	20342	6.37	24404	6.44
	MLZ066T4A	30	8812	4.56	11211	4.61	14028	4.67	17331	4.73	21186	4.81	25660	4.91	30820	5.03	36732	5.17
		40	-	-	9783	5.92	12324	5.94	15301	5.97	18781	6.01	22832	6.08	27519	6.17	32909	6.29
		50	-	-	-	-	-	-	13084	7.66	16138	7.65	19713	7.67	23876	7.71	28694	7.78
	MLZ076T4A	30	9243	5.45	11928	5.40	15085	5.37	18787	5.38	23110	5.44	28126	5.56	33909	5.75	40534	6.01
		40	-	-	10219	6.89	13081	6.80	16439	6.74	20367	6.73	24940	6.77	30232	6.88	36315	7.07
		50	-	-	-	-	-	-	13858	8.64	17331	8.54	21399	8.50	26137	8.52	31617	8.61
60 Hz	MLZ015T4A	30	2307	1.36	2961	1.38	3730	1.41	4632	1.44	5686	1.47	6910	1.49	8324	1.49	9945	1.48
		40	-	-	2614	1.72	3302	1.74	4104	1.76	5039	1.78	6126	1.81	7384	1.83	8830	1.83
		50	-	-	-	-	-	-	3573	2.19	4387	2.20	5334	2.22	6433	2.24	7703	2.25
	MLZ019T4A	30	3105	1.69	3947	1.72	4937	1.75	6099	1.77	7458	1.80	9036	1.83	10859	1.86	12950	1.90
		40	-	-	3517	2.16	4401	2.19	5435	2.21	6644	2.23	8051	2.26	9681	2.28	11557	2.31
		50	-	-	-	-	-	-	4729	2.77	5774	2.79	6995	2.81	8417	2.83	10064	2.85
	MLZ021T4A	30	3305	1.79	4196	1.82	5247	1.85	6484	1.87	7930	1.90	9613	1.92	11558	1.95	13790	1.99
		40	-	-	3736	2.29	4676	2.32	5779	2.34	7071	2.36	8578	2.38	10325	2.39	12338	2.42
		50	-	-	-	-	-	-	5025	2.94	6145	2.95	7459	2.96	8992	2.97	10768	2.98
	MLZ026T4A	30	4180	2.17	5303	2.19	6618	2.22	8158	2.24	9953	2.28	12035	2.32	14437	2.38	17189	2.45
		40	-	-	4733	2.81	5909	2.82	7280	2.84	8879	2.86	10736	2.88	12884	2.91	15354	2.96
		50	-	-	-	-	-	-	6294	3.64	7664	3.64	9265	3.64	11128	3.65	13285	3.68
	MLZ030T4A	30	5052	2.57	6391	2.60	7961	2.65	9801	2.71	11948	2.77	14439	2.83	17312	2.89	20604	2.92
		40	-	-	5716	3.28	7132	3.29	8788	3.33	10721	3.38	12969	3.45	15568	3.51	18556	3.57
		50	-	-	-	-	-	-	7647	4.16	9333	4.18	11304	4.22	13596	4.27	16247	4.33
	MLZ038T4A	30	5955	3.03	7496	3.06	9319	3.10	11468	3.16	13988	3.22	16923	3.30	20319	3.40	24221	3.52
		40	-	-	6621	3.88	8245	3.92	10164	3.96	12421	4.02	15062	4.08	18131	4.16	21673	4.25
		50	-	-	-	-	-	-	8768	4.99	10729	5.05	13040	5.11	15747	5.18	18896	5.27
	MLZ045T4A	30	7136	3.75	9071	3.83	11362	3.91	14062	3.98	17229	4.05	20918	4.11	25185	4.17	30086	4.23
		40	-	-	7956	4.82	10005	4.90	12420	4.98	15257	5.05	18573	5.11	22422	5.17	26862	5.22
		50	-	-	-	-	-	-	10757	6.23	13248	6.30	16173	6.36	19589	6.41	23552	6.45
	MLZ048T4A	30	7921	4.07	10065	4.08	12583	4.11	15535	4.17	18981	4.24	22980	4.33	27593	4.45	32880	4.58
		40	-	-	8845	5.25	11114	5.24	13770	5.25	16872	5.29	20481	5.36	24657	5.45	29459	5.57
		50	-	-	-	-	-	-	11874	6.72	14596	6.71	17778	6.74	21480	6.79	25760	6.87
	MLZ058T4A	30	9375	4.43	11829	4.57	14719	4.68	18116	4.79	22090	4.89	26711	5.00	32048	5.13	38173	5.28
		40	-	-	10495	5.70	13083	5.83	16121	5.95	19678	6.05	23825	6.15	28632	6.26	34169	6.39
		50	-	-	-	-	-	-	14017	7.44	17121	7.55	20757	7.65	24996	7.75	29908	7.85
	MLZ066T4A	30	10728	5.42	13650	5.51	17085	5.61	21112	5.71	25813	5.84	31268	6.00	37559	6.22	44766	6.49
		40	-	-	11916	7.03	15027	7.08	18674	7.14	22937	7.22	27898	7.33	33638	7.48	40238	7.69
		50	-	-	-	-	-	-	16025	9.11	19796	9.13	24208	9.17	29342	9.25	35279	9.37
	MLZ076T4A	30	11529	6.11	14724	6.12	18474	6.17	22864	6.26	27982	6.41	33915	6.63	40750	6.93	48573	7.33
		40	-	-	12742	7.87	16158	7.85	20161	7.86	24839	7.92	30279	8.05	36566	8.24	43789	8.52
		50	-	-	-	-	-	-	17187	10.07	21356	10.04	26232	10.07	31903	10.16	38456	10.32

To: *Evaporating temperature in [°C]*
Tc: *Condensing temperature in [°C]*
Qo: *Cooling capacity in [W]*
Pe: *Power input in [kW]*
Subcooling: *0 K*
RGT: *20 °C*
Capacity data at other conditions are available in the datasheets at: www.danfoss.com/odsg

For more information and performance with other refrigerants, please refer to Coolselector ® 2 at coolselector.danfoss.com or contact Danfoss.

Technical data and ordering

MLZ - Scroll compressors - R452A - 50/60 Hz

Performance table

Type		To	-30		-25		-20		-15		-10		-5		0		5		10	
		Tc	Qo	Pe	Qo	Pe	Qo	Pe	Qo	Pe	Qo	Pe	Qo	Pe	Qo	Pe	Qo	Pe	Qo	Pe
50 Hz	MLZ015T4A	30	1725	1.15	2185	1.18	2732	1.21	3380	1.23	4144	1.24	5036	1.25	6072	1.24	7265	1.23	8629	1.22
		40	–	–	–	–	2403	1.49	2964	1.51	3624	1.53	4397	1.54	5296	1.55	6335	1.54	7529	1.53
		50	–	–	–	–	–	–	2534	1.88	3083	1.90	3729	1.91	4484	1.92	5362	1.92	6379	1.91
	MLZ019T4A	30	2207	1.48	2814	1.50	3526	1.52	4362	1.54	5336	1.56	6467	1.57	7771	1.57	9264	1.57	10963	1.57
		40	–	–	–	–	3084	1.90	3815	1.92	4666	1.94	5654	1.95	6795	1.96	8105	1.97	9602	1.97
		50	–	–	–	–	–	–	3241	2.42	3956	2.43	4789	2.44	5754	2.45	6870	2.46	8152	2.46
	MLZ021T4A	30	2326	1.54	2976	1.58	3741	1.60	4640	1.62	5690	1.62	6909	1.63	8316	1.63	9928	1.63	11765	1.63
		40	–	–	–	–	3255	1.99	4045	2.02	4966	2.03	6036	2.03	7273	2.03	8695	2.02	10321	2.02
		50	–	–	–	–	–	–	3414	2.51	4194	2.54	5103	2.55	6157	2.55	7376	2.54	8778	2.53
	MLZ026T4A	30	2919	1.90	3726	1.92	4672	1.94	5781	1.96	7075	1.98	8573	2.00	10300	2.01	12276	2.02	14523	2.02
		40	–	–	–	–	4057	2.47	5033	2.48	6168	2.49	7486	2.50	9008	2.52	10756	2.53	12751	2.54
		50	–	–	–	–	–	–	4212	3.19	5164	3.18	6275	3.18	7566	3.18	9059	3.18	10777	3.19
	MLZ030T4A	30	3558	2.23	4491	2.27	5604	2.30	6929	2.32	8496	2.34	10334	2.36	12476	2.38	14950	2.40	17786	2.43
		40	–	–	–	–	4922	2.88	6069	2.90	7426	2.92	9022	2.93	10888	2.94	13054	2.95	15551	2.97
		50	–	–	–	–	–	–	5177	3.63	6304	3.65	7638	3.66	9210	3.66	11050	3.67	13188	3.67
	MLZ038T4A	30	4161	2.55	5288	2.58	6611	2.62	8160	2.66	9965	2.70	12058	2.74	14468	2.79	17227	2.83	20365	2.88
		40	–	–	–	–	5726	3.32	7097	3.35	8692	3.39	10543	3.43	12678	3.47	15130	3.51	17929	3.55
		50	–	–	–	–	–	–	5940	4.25	7297	4.28	8877	4.31	10710	4.34	12827	4.37	15259	4.41
	MLZ045T4A	30	5204	3.28	6592	3.31	8232	3.34	10162	3.38	12419	3.42	15042	3.47	18068	3.51	21535	3.56	25481	3.60
		40	–	–	–	–	7216	4.22	8908	4.25	10889	4.28	13196	4.32	15867	4.36	18940	4.40	22454	4.45
		50	–	–	–	–	–	–	7525	5.39	9177	5.40	11117	5.42	13381	5.45	16009	5.48	19038	5.51
	MLZ048T4A	30	5671	3.60	7219	3.59	9045	3.59	11191	3.60	13700	3.62	16613	3.64	19972	3.67	23820	3.71	28199	3.74
		40	–	–	–	–	7827	4.57	9721	4.57	11937	4.58	14517	4.60	17503	4.63	20936	4.66	24860	4.71
		50	–	–	–	–	–	–	8114	5.86	9986	5.85	12181	5.86	14742	5.88	17709	5.91	21126	5.95
	MLZ058T4A	30	6574	3.89	8419	4.00	10583	4.08	13115	4.15	16064	4.20	19479	4.25	23410	4.31	27905	4.38	33014	4.48
		40	–	–	–	–	9154	5.11	11400	5.19	14014	5.25	17046	5.30	20543	5.35	24557	5.41	29134	5.48
		50	–	–	–	–	–	–	9508	6.54	11727	6.62	14315	6.67	17320	6.72	20791	6.76	24777	6.81
	MLZ066T4A	30	7581	4.75	9792	4.90	12359	4.99	15334	5.05	18769	5.08	22717	5.12	27228	5.17	32354	5.25	38149	5.39
		40	–	–	–	–	10647	6.25	13311	6.34	16381	6.38	19909	6.40	23946	6.41	28544	6.44	33756	6.49
		50	–	–	–	–	–	–	11080	7.96	13718	8.02	16760	8.04	20257	8.03	24261	8.02	28824	8.01
	MLZ076T4A	30	7978	5.51	10402	5.59	13200	5.64	16431	5.68	20153	5.72	24423	5.77	29299	5.86	34838	6.00	41100	6.20
		40	–	–	–	–	11331	7.02	14244	7.07	17587	7.10	21416	7.14	25790	7.18	30766	7.26	36402	7.38
		50	–	–	–	–	–	–	11790	8.84	14682	8.88	17999	8.91	21799	8.93	26140	8.97	31080	9.03
60 Hz	MLZ015T4A	30	2093	1.36	2648	1.42	3311	1.47	4099	1.50	5028	1.52	6113	1.52	7371	1.52	8817	1.51	10466	1.50
		40	–	–	–	–	2925	1.79	3605	1.83	4407	1.85	5349	1.86	6444	1.87	7711	1.86	9163	1.85
		50	–	–	–	–	–	–	3099	2.24	3762	2.27	4546	2.29	5467	2.29	6540	2.29	7782	2.27
	MLZ019T4A	30	2699	1.75	3420	1.79	4272	1.83	5274	1.86	6447	1.89	7811	1.91	9385	1.92	11191	1.94	13248	1.94
		40	–	–	–	–	3769	2.26	4642	2.29	5662	2.31	6849	2.33	8223	2.36	9804	2.37	11612	2.39
		50	–	–	–	–	–	–	3981	2.85	4834	2.87	5830	2.89	6989	2.91	8331	2.93	9876	2.95
	MLZ021T4A	30	2836	1.86	3617	1.89	4536	1.92	5614	1.96	6872	1.98	8331	2.00	10013	2.02	11937	2.03	14125	2.03
		40	–	–	–	–	3939	2.38	4893	2.40	6006	2.43	7298	2.45	8792	2.46	10507	2.47	12466	2.48
		50	–	–	–	–	–	–	4113	2.99	5059	3.01	6164	3.02	7448	3.03	8934	3.04	10641	3.04
	MLZ026T4A	30	3619	2.18	4534	2.28	5631	2.34	6938	2.39	8481	2.41	10287	2.42	12381	2.44	14791	2.45	17540	2.48
		40	–	–	–	–	4960	2.89	6087	2.95	7422	2.99	8993	3.01	10826	3.02	12947	3.03	15382	3.03
		50	–	–	–	–	–	–	5191	3.68	6289	3.74	7595	3.77	9136	3.79	10938	3.79	13028	3.78
	MLZ030T4A	30	4362	2.63	5523	2.72	6899	2.79	8522	2.84	10425	2.87	12641	2.90	15202	2.93	18140	2.96	21488	3.01
		40	–	–	–	–	6031	3.42	7455	3.50	9125	3.55	11075	3.58	13338	3.61	15944	3.62	18928	3.64
		50	–	–	–	–	–	–	6324	4.26	7732	4.35	9387	4.41	11322	4.45	13568	4.46	16159	4.47
	MLZ038T4A	30	5058	2.87	6388	3.06	7971	3.17	9849	3.23	12059	3.27	14640	3.33	17633	3.42	21075	3.58	25004	3.84
		40	–	–	–	–	7036	3.89	8667	4.01	10587	4.08	12836	4.13	15453	4.17	18476	4.25	21946	4.38
		50	–	–	–	–	–	–	7420	4.90	9016	5.04	10898	5.12	13105	5.17	15677	5.21	18652	5.27
	MLZ045T4A	30	6376	3.97	7996	3.93	9925	3.97	12211	4.07	14903	4.19	18048	4.30	21694	4.39	25890	4.43	30681	4.38
		40	–	–	–	–	8733	5.04	10712	5.05	13045	5.12	15779	5.23	18962	5.36	22643	5.46	26868	5.52
		50	–	–	–	–	–	–	9137	6.42	11069	6.39	13350	6.45	16029	6.55	19154	6.67	22773	6.79
	MLZ048T4A	30	6909	4.18	8751	4.28	10928	4.36	13491	4.42	16491	4.47	19979	4.51	24004	4.55	28617	4.60	33867	4.66
		40	–	–	–	–	9524	5.42	11780	5.51	14422	5.58	17501	5.64	21068	5.68	25172	5.72	29864	5.77
		50	–	–	–	–	–	–	9934	6.86	12166	6.96	14783	7.04	17838	7.10	21382	7.15	25464	7.19
	MLZ058T4A	30	8023	4.62	10229	4.78	12815	4.92	15839	5.04	19361	5.14	23441	5.24	28136	5.33	33505	5.42	39605	5.52
		40	–	–	–	–	11100	6.12	13783	6.24	16904	6.35	20521	6.44	24694	6.52	29481	6.61	34941	6.69
		50	–	–	–	–	–	–	11546	7.84	14208	7.93	17305	8.01	20898	8.07	25047	8.14	29809	8.20
	MLZ066T4A	30	9473	5.60	12064	5.75	15106	5.86	18669	5.93	22823	6.01	27641	6.11	33190	6.25	39541	6.46	46761	6.77
		40	–	–	–	–	13274	7.35	16408	7.45	20055	7.52	24285	7.59	29170	7.66	34779	7.77	41181	7.95
		50	–	–	–	–	–	–	13978	9.32	17049	9.42	20625	9.48	24777	9.52	29576	9.57	35092	9.65
	MLZ076T4A	30	10024	6.15	12885	6.38	16220	6.52	20101	6.61	24596	6.69	29776	6.79	35711	6.95	42468	7.21	50116	7.61
		40	–	–	–	–	14107	8.05	17557	8.21	21538	8.30	26118	8.37	31369	8.44	37358	8.57	44156	8.78
		50	–	–	–	–	–	–	14779	10.16	18183	10.33	22104	10.43	26610	10.48	31772	10.54	37660	10.63

To: *Evaporating temperature in [°C]*
Tc: *Condensing temperature in [°C]*
Qo: *Cooling capacity in [W]*
Pe: *Power input in [kW]*
Subcooling: *0 K*
RGT: *20 °C*
Capacity data at other conditions are available in the datasheets at: www.danfoss.com/odsg

For more information and performance with other refrigerants, please refer to Coolselector ® 2 at coolselector.danfoss.com or contact Danfoss.

Technical data and ordering

LLZ (Evolution A) - Scroll Compressors - R404A/R507 / R452A / R448A / R449A

Ordering - Rotolock version - Single pack

Type	Model Variation	Connections	Features	Evolution	Voltage Code 2	Voltage Code 4	Voltage Code 9
LLZ013	T	Q	9	A	121L9545	121L9535	121L9555
LLZ015	T	Q	9	A	121L9547	121L9537	121L9557
LLZ018	T	Q	9	A	121L9549	121L9539	121L9559
LLZ024	T	Q	9	A	121L9551	121L9541	121L9561
LLZ034	T	Q	9	A	121L9553	121L9543	121L9563

LLZ (Evolution A) - Scroll Compressors - R404A / R507 / R452A / R448A / R449A

Ordering - Rotolock version - Single pack

Type	Model Variation	Connections	Features	Evolution	Voltage Code 2	Voltage Code 4	Voltage Code 9
LLZ013	T	Q	9	A	121L9544	121L9534	121L9554
LLZ015	T	Q	9	A	121L9546	121L9536	121L9556
LLZ018	T	Q	9	A	121L9548	121L9538	121L9558
LLZ024	T	Q	9	A	121L9550	121L9540	121L9560
LLZ034	T	Q	9	A	121L9552	121L9542	121L9562

LLZ - Scroll compressors - R404A / R507

Ordering - Rotolock version - Single pack

Type		Model variation	Connections	Features	Voltage code 2	Voltage code 4	Voltage code 9
Danfoss pallet	LLZ013	T	Q	9	121L9519	121L9517	121L9531
	LLZ015	T	Q	9	121L9515	121L9513	121L9529
	LLZ018	T	Q	9	121L9511	121L9509	121L9527
	LLZ024	T	Q	9	121L9507	121L9505	121L9525
	LLZ034	T	Q	9	NA	121L9521	121L9533

LLZ - Scroll compressors - R404A / R507

Ordering - Rotolock version - Industrial pack

Type		Model variation	Connections	Features	Voltage code 2	Voltage code 4	Voltage code 9
Danfoss pallet	LLZ013	T	Q	9	121L9518	121L9516	121L9530
	LLZ015	T	Q	9	121L9514	121L9512	121L9528
	LLZ018	T	Q	9	121L9510	121L9508	121L9526
	LLZ024	T	Q	9	121L9506	121L9504	121L9524
	LLZ034	T	Q	9	NA	121L9520	121L9532

Technical data and ordering

LLZ - Scroll compressors - R448A / R449A*) - 50/60 Hz

Technical data - with Liquid injection line

Type		Nominal tons 60 Hz	Nominal cooling capacity		Power input [1)]	COP	EER	Swept volume	Displacement [1)]	Oil charge	Net weight [2)]
		[TR]	[W]	[Btu/h]	[kW]	[W/W]	[Btu/h/W]	[cm³/rev]	[m³/h]	[dm³]	[kg]
50 Hz	LLZ013	4	2048	6990	2106	0.97	3.32	67.4	11.7	1.62	42
	LLZ015	5	2605	8890	2642	0.99	3.37	83.5	14.5	1.62	42
	LLZ018	6	3084	10525	2964	1.04	3.55	97.6	17	1.62	43
	LLZ024	8	3846	13126	3542	1.09	3.71	120.2	20.9	2.51	46
	LLZ034	10	5480	18704	4684	1.17	3.99	168.7	29.4	2.51	51
60 Hz	LLZ013	4	3314	11310	2737	1.21	4.13	67.4	14.2	1.62	42
	LLZ015	5	4097	13983	3416	1.2	4.09	83.5	17.5	1.62	42
	LLZ018	6	4900	16723	3815	1.28	4.38	97.6	20.5	1.62	43
	LLZ024	8	6046	20636	4580	1.32	4.51	120.2	25.3	2.51	46
	LLZ034	10	8531	29116	5928	1.44	4.91	168.7	35.4	2.51	51

[1)] Displacement at nominal speed: 2900 rpm at 50 Hz, 3500 rpm at 60 Hz
[2)] Net weight with oil charge
TR: Ton of Refrigeration, EER: Energy Efficiency Ratio , COP: Coefficient Of Performance, Refrigerant: R448A)*

Rating condition:
50 Hz data: EN12900 LT, Evaporating temperature -35°C, Condensing temperature 40°C, Super Heat 10 K, Subcooling 5K.
60 Hz data: ARI 540 LT, Evaporating temperature -31.5°C, Condensing temperature 40.5°C, Return Gas Temperature 4.5°C, Subcooling 5K.

All of the compressor performance test after run-in 72h
**) R449A performance data are nearly identical to R448A performance data*
Subject to modification without prior notification.
Data given for motor code 4 compressor, for full data details and capacity tables refer to Online Datasheet Generator: www.danfoss.com/odsg

LLZ - Scroll compressors - R404A / R507*) - 50/60 Hz

Technical data - without injection

Type		Nominal tons 60 Hz	Nominal cooling capacity		Power input [1)]	COP	EER	Swept volume	Displacement [1)]	Oil charge	Net weight [2)]
		[TR]	[W]	[Btu/h]	[kW]	[W/W]	[Btu/h/W]	[cm³/rev]	[m³/h]	[dm³]	[kg]
50 Hz	LLZ013	4	2417	8249	2366	1.02	3.48	67.4	11.7	1.62	42
	LLZ015	5	2937	10024	2776	1.06	3.62	83.5	14.5	1.62	42
	LLZ018	6	3453	11785	3150	1.1	3.75	97.6	17	1.62	43
	LLZ024	8	4411	15055	3957	1.11	3.79	120.2	20.9	2.51	46
	LLZ034	10	6051	20652	5458	1.11	3.79	168.7	29.4	2.51	51
60 Hz	LLZ013	4	2896	9884	2774	1.04	3.55	67.4	14.2	1.62	42
	LLZ015	5	3552	12123	3307	1.07	3.65	83.5	17.5	1.62	42
	LLZ018	6	4228	14430	3799	1.11	3.79	97.6	20.5	1.62	43
	LLZ024	8	5278	18014	4611	1.14	3.89	120.2	25.3	2.51	46
	LLZ034	10	7404	25270	6157	1.2	4.1	168.7	35.4	2.51	51

[1)] Displacement at nominal speed: 2900 rpm at 50 Hz, 3500 rpm at 60 Hz
[2)] Net weight with oil charge
TR: Ton of Refrigeration, Standard rating conditions: ARI, Evaporating temperature: -31.7 °C, Superheat: 50 K
EER: Energy Efficiency Ratio, Condensing temperature: 40.6 °C, Subcooling: 0 K, COP: Coefficient Of Performance, Refrigerant: R404A)*

All of the compressor performance test after run-in 72h
**)R507 performance data are nearly identical to R404A performance data*

Subject to modification without prior notification.
Data given for motor code 4 compressor, for full data details and capacity tables refer to Online Datasheet Generator: www.danfoss.com/odsg

Technical data and ordering

LLZ - Scroll compressors - R448A / R449A*) - 50/60 Hz

Technical data - without injection

Type		Nominal tons 60 Hz	Nominal cooling capacity		Power input [1)]	COP	EER	Swept volume	Displacement [1)]	Oil charge	Net weight [2)]
		[TR]	[W]	[Btu/h]	[kW]	[W/W]	[Btu/h/W]	[cm³/rev]	[m³/h]	[dm³]	[kg]
50 Hz	LLZ013	4	2048	6990	2106	0.97	3.32	67.4	11.7	1.62	42
	LLZ015	5	2605	8890	2642	0.99	3.37	83.5	14.5	1.62	42
	LLZ018	6	3084	10525	2964	1.04	3.55	97.6	17	1.62	43
	LLZ024	8	3846	13126	3542	1.09	3.71	120.2	20.9	2.51	46
	LLZ034	10	5480	18704	4684	1.17	3.99	168.7	29.4	2.51	51
60 Hz	LLZ013	4	3314	11310	2737	1.21	4.13	67.4	14.2	1.62	42
	LLZ015	5	4097	13983	3416	1.2	4.09	83.5	17.5	1.62	42
	LLZ018	6	4900	16723	3815	1.28	4.38	97.6	20.5	1.62	43
	LLZ024	8	6046	20636	4580	1.32	4.51	120.2	25.3	2.51	46
	LLZ034	10	8531	29116	5928	1.44	4.91	168.7	35.4	2.51	51

[1)] Displacement at nominal speed: 2900 rpm at 50 Hz, 3500 rpm at 60 Hz
[2)] Net weight with oil charge
TR: Ton of Refrigeration, EER: Energy Efficiency Ratio , COP: Coefficient Of Performance, Refrigerant: R448A)*

Rating condition:
50 Hz data: EN12900 LT, Evaporating temperature -35°C, Condensing temperature 40°C, Super Heat 10 K, Subcooling 5K.
60 Hz data: ARI 540 LT, Evaporating temperature -31.5°C, Condensing temperature 40.5°C, Return Gas Temperature 4.5°C, Subcooling 5K.

All of the compressor performance test after run-in 72h
**) R449A performance data are nearly identical to R448A performance data*
Subject to modification without prior notification.
Data given for motor code 4 compressor, for full data details and capacity tables refer to Online Datasheet Generator: www.danfoss.com/odsg

LLZ - Scroll compressors - R404A*) - 50/60 Hz

Technical data - without injection

Type		Nominal tons 60 Hz	Nominal cooling capacity		Power input [1)]	COP	EER	Swept volume	Displacement [1)]	Oil charge	Net weight [2)]
		[TR]	[W]	[Btu/h]	[kW]	[W/W]	[Btu/h/W]	[cm³/rev]	[m³/h]	[dm³]	[kg]
50 Hz	LLZ013	4	3213	10966	2507	1.28	4.37	67.4	11.7	1.62	42
	LLZ015	5	3898	13304	2949	1.32	4.51	83.5	14.5	1.62	42
	LLZ018	6	4583	15642	3346	1.37	4.68	97.6	17	1.62	43
	LLZ024	8	5854	19980	4204	1.39	4.74	120.2	20.9	2.51	46
	LLZ034	10	7991	27273	5772	1.38	4.71	168.7	29.4	2.51	51
60 Hz	LLZ013	4	3857	13164	2938	1.31	4.47	67.4	14.2	1.62	42
	LLZ015	5	4718	16102	3507	1.35	4.61	83.5	17.5	1.62	42
	LLZ018	6	5616	19167	4028	1.39	4.74	97.6	20.5	1.62	43
	LLZ024	8	7011	23928	4889	1.43	4.88	120.2	25.3	2.51	46
	LLZ034	10	9791	33416	6616	1.48	5.05	168.7	35.4	2.51	51

[1)] Displacement at nominal speed: 2900 rpm at 50 Hz, 3500 rpm at 60 Hz
[2)] Net weight with oil charge
TR: Ton of Refrigeration, Standard rating conditions: ARI, Evaporating temperature: -31.7 °C, Superheat: 50 K
EER: Energy Efficiency Ratio, Condensing temperature: 40.6 °C, Subcooling: 0 K, COP: Coefficient Of Performance, Refrigerant: R404A)*

All of the compressor performance test after run-in 72h
**) R507 performance data are nearly identical to R404A performance data*
Subject to modification without prior notification.
Data given for motor code 4 compressor, for full data details and capacity tables refer to Online Datasheet Generator: www.danfoss.com/odsg

Technical data and ordering

LLZ - Scroll compressors - R452A - 50 Hz

Technical data - without injection

Type		Nominal tons 60 Hz	Nominal cooling capacity		Power input [1]	COP	EER	Swept volume	Displacement [1]	Oil charge	Net weight [2]
		[TR]	[W]	[Btu/h]	[kW]	[W/W]	[Btu/h/W]	[cm³/rev]	[m³/h]	[dm³]	[kg]
50 Hz	LLZ013	4	2189	7469	1990	1.1	3.75	67.4	11.7	1.62	42
	LLZ015	5	2718	9274	2514	1.08	3.69	83.5	14.5	1.62	42
	LLZ018	6	3223	10997	2960	1.09	3.72	97.6	17	1.62	43
	LLZ024	8	4000	13648	3609	1.11	3.78	120.2	20.9	2.51	46
	LLZ034	10	5865	20011	5082	1.15	3.94	168.7	29.4	2.51	51

[1]) Displacement at nominal speed: 2900 rpm at 50 Hz, 3500 rpm at 60 Hz
[2]) Net weight with oil charge

TR: Ton of Refrigeration, Standard rating conditions: EN12900, Evaporating temperature: -35 °C, Superheat: 10 K
EER: Energy Efficiency Ratio, COP: Coefficient Of Performance Condensing temperature: 40 °C, Subcooling: 0 K, Refrigerant: R452A

All of the compressor performance test after run-in 72h
Subject to modification without prior notification.
Data given for motor code 4 compressor, for full data details and capacity tables refer to Online Datasheet Generator: www.danfoss.com/odsg

LLZ - Scroll compressors - R452A - 60 Hz

Technical data - without injection

Type		Nominal tons 60 Hz	Nominal cooling capacity		Power input [1]	COP	EER	Swept volume	Displacement [1]	Oil charge	Net weight [2]
		[TR]	[W]	[Btu/h]	[kW]	[W/W]	[Btu/h/W]	[cm³/rev]	[m³/h]	[dm³]	[kg]
50 Hz	LLZ013	4	3335	11383	2886	1.16	3.94	67.4	14.2	1.62	42
	LLZ015	5	4187	14289	3476	1.2	4.11	83.5	17.5	1.62	42
	LLZ018	6	4919	16788	3952	1.24	4.25	97.6	20.5	1.62	43
	LLZ024	8	6137	20945	4829	1.27	4.34	120.2	25.3	2.51	46
	LLZ034	10	8516	29065	6595	1.29	4.41	168.7	35.4	2.51	51

[1]) Displacement at nominal speed: 2900 rpm at 50 Hz, 3500 rpm at 60 Hz
[2]) Net weight with oil charge

TR: Ton of Refrigeration, Standard rating conditions: ARI 540 LT standard, Evaporating temperature: -31.5 °C, Return Gas Temperature: 4.5 °C
EER: Energy Efficiency Ratio, Condensing temperature: 40.5 °C, Subcooling: 0 K, COP: Coefficient Of Performance, Refrigerant: R452A

All of the compressor performance test after run-in 72h
Subject to modification without prior notification.
Data given for motor code 4 compressor, for full data details and capacity tables refer to Online Datasheet Generator: www.danfoss.com/odsg

Technical data and ordering

LLZ - Scroll compressors - R404A - 50 / 60 Hz

Performance table - Without economizer

Type		To	-40		-35		-30		-25		-20		-15		-10	
		Tc	Qo	Pe	Qo	Pe	Qo	Pe	Qo	Pe	Qo	Pe	Qo	Pe	Qo	Pe
50 Hz	LLZ013T4	30	2200	1,94	2900	2,10	3700	2,25	4600	2,40	5700	2,53	6900	2,62	8400	2,66
		40	1800	2,19	2400	2,37	3100	2,55	3900	2,74	4800	2,91	6000	3,06	7300	3,17
		50	–	–	1900	2,72	2500	2,92	3200	3,14	3900	3,35	4900	3,55	6000	3,73
	LLZ015T4	30	2700	2,28	3500	2,48	4400	2,69	5600	2,89	7000	3,08	8600	3,25	10600	3,38
		40	2300	2,57	2900	2,78	3800	3,01	4700	3,26	5900	3,50	7400	3,74	9000	3,96
		50	–	–	2300	3,16	3000	3,41	3800	3,69	4800	3,98	6000	4,28	7400	4,58
	LLZ018T4	30	3200	2,59	4100	2,81	5200	3,05	6600	3,28	8200	3,50	10200	3,69	12400	3,83
		40	2700	2,91	3500	3,15	4400	3,42	5600	3,69	7000	3,98	8600	4,24	10600	4,49
		50	–	–	2800	3,58	3500	3,87	4500	4,18	5600	4,52	7000	4,86	8700	5,19
	LLZ024T4	30	4100	3,25	5200	3,54	6700	3,83	8400	4,12	10500	4,40	13000	4,63	15900	4,81
		40	3400	3,66	4400	3,96	5600	4,29	7100	4,64	8900	5,00	11000	5,33	13600	5,64
		50	–	–	3500	4,50	4500	4,86	5700	5,25	7200	5,68	9000	6,10	11100	6,52
60 Hz	LLZ013T4	30	2600	2,27	3400	2,46	4400	2,65	5500	2,81	6800	2,94	8300	3,03	10100	3,06
		40	2200	2,57	2900	2,77	3700	2,99	4700	3,20	5800	3,39	7100	3,56	8600	3,69
		50	–	–	2300	3,15	3000	3,39	3800	3,63	4700	3,88	5800	4,11	7100	4,32
	LLZ015T4	30	3300	2,74	4200	2,98	5300	3,22	6700	3,46	8400	3,68	10400	3,85	12800	3,96
		40	2700	3,07	3600	3,31	4500	3,58	5700	3,86	7200	4,15	8900	4,41	10900	4,63
		50	–	–	2900	3,76	3700	4,03	4700	4,34	5900	4,67	7300	5,00	9000	5,31
	LLZ018T4	30	3900	3,15	5000	3,42	6400	3,70	8000	3,98	10000	4,23	12400	4,42	15200	4,55
		40	3300	3,53	4200	3,80	5400	4,11	6800	4,44	8600	4,77	10600	5,07	13000	5,32
		50	–	–	3400	4,32	4400	4,63	5600	4,99	7000	5,36	8700	5,74	10700	6,10
	LLZ024T4	30	4800	3,82	6200	4,15	7900	4,49	10000	4,83	12500	5,13	15500	5,37	19000	5,53
		40	4100	4,28	5300	4,61	6800	4,99	8500	5,39	10700	5,78	13200	6,15	16300	6,46
		50	–	–	4200	5,24	5500	5,62	6900	6,05	8700	6,51	10900	6,97	13400	7,41

To: *Evaporating temperature in [°C]*
Tc: *Condensing temperature in [°C]*
Qo: *Cooling capacity in [W]*
Pe: *Power input in [kW]*
Subcooling: *0 K*
Superheat: *10*

For more information and performance with other refrigerants, please refer to Coolselector ® 2 at coolselector.danfoss.com or contact Danfoss.

Technical data and ordering

LLZ - Scroll compressors - R404A - 50 / 60 Hz

Performance table - With economizer

Type		To	-40		-35		-30		-25		-20		-15		-10	
		Tc	Qo	Pe	Qo	Pe	Qo	Pe	Qo	Pe	Qo	Pe	Qo	Pe	Qo	Pe
50 Hz	LLZ013T4	30	3300	2,44	4200	2,59	5100	2,74	6100	2,88	7300	3,01	8500	3,13	9800	3,24
		40	3200	2,96	4000	3,13	4800	3,28	5800	3,42	6900	3,55	8000	3,68	9200	3,80
		50	–	–	3700	3,80	4600	3,99	5500	4,18	6500	4,35	7500	4,51	8600	4,66
	LLZ015T4	30	4000	2,90	5000	3,05	6000	3,20	7200	3,35	8600	3,49	10200	3,58	12000	3,63
		40	3900	3,48	4700	3,66	5700	3,85	6900	4,04	8200	4,22	9700	4,36	11300	4,46
		50	–	–	4500	4,46	5400	4,71	6500	4,95	7700	5,19	9000	5,40	10500	5,56
	LLZ018T4	30	4800	3,34	5900	3,50	7200	3,68	8600	3,86	10300	4,01	12200	4,13	14300	4,18
		40	4600	4,01	5600	4,21	6800	4,43	8200	4,65	9800	4,86	11500	5,02	13500	5,14
		50	–	–	5400	5,14	6500	5,42	7700	5,70	9200	5,97	10800	6,21	12500	6,40
	LLZ024T4	30	6000	4,13	7400	4,33	9000	4,55	10800	4,77	12900	4,96	15300	5,10	17900	5,16
		40	5800	4,95	7100	5,20	8600	5,48	10300	5,75	12300	6,00	14500	6,21	16900	6,35
		50	–	–	6700	6,35	8100	6,69	9700	7,04	11500	7,38	13500	7,67	15700	7,91
60 Hz	LLZ013T4	30	3900	2,80	5000	2,99	6100	3,16	7300	3,31	8600	3,45	10100	3,57	11800	3,67
		40	3800	3,42	4800	3,62	5800	3,80	6900	3,97	8100	4,12	9500	4,25	11000	4,36
		50	–	–	4500	4,40	5500	4,65	6500	4,88	7600	5,10	8800	5,29	10200	5,47
	LLZ015T4	30	4900	3,42	5900	3,64	7200	3,83	8700	3,99	10400	4,14	12300	4,28	14500	4,41
		40	4700	4,08	5700	4,33	6900	4,57	8300	4,79	9900	5,00	11700	5,22	13600	5,44
		50	–	–	5400	5,26	6600	5,56	7800	5,85	9300	6,14	10900	6,44	12600	6,76
	LLZ018T4	30	5900	3,89	7100	4,15	8600	4,36	10400	4,55	12400	4,72	14700	4,88	17300	5,03
		40	5600	4,65	6800	4,94	8200	5,21	9900	5,46	11800	5,70	13900	5,95	16300	6,20
		50	–	–	6500	6,00	7800	6,33	9400	6,66	11100	6,99	13000	7,34	15100	7,70
	LLZ024T4	30	7300	4,75	8800	5,06	10600	5,32	12800	5,55	15400	5,76	18200	5,95	21400	6,14
		40	6900	5,67	8400	6,03	10200	6,36	12300	6,66	14600	6,96	17300	7,26	20200	7,57
		50	–	–	8000	7,32	9700	7,73	11600	8,13	13800	8,54	16100	8,96	18700	9,40

To: *Evaporating temperature in [°C]*
Tc: *Condensing temperature in [°C]*
Qo: *Cooling capacity in [W]*
Pe: *Power input in [kW]*
Subcooling: *0 K*
Superheat: *10 K*

For more information and performance with other refrigerants, please refer to Coolselector ® 2 at coolselector.danfoss.com or contact Danfoss.

Technical data and ordering

LLZ - Scroll compressors - R452A - 50 Hz

Performance table - Without economizer

Type		To	-40		-35		-30		-25		-20		-15		-10	
		Tc	Qo	Pe	Qo	Pe	Qo	Pe	Qo	Pe	Qo	Pe	Qo	Pe	Qo	Pe
50 Hz	LLZ013T4A	30	1951	1.63	2551	1.85	3300	2.03	4220	2.18	5333	2.31	6663	2.44	8231	2.57
		40	1684	1.66	2187	1.99	2821	2.27	3608	2.50	4570	2.70	5733	2.87	7121	3.04
		50	1429	1.55	1826	2.03	2335	2.43	2978	2.77	3778	3.07	4762	3.32	5955	3.55
	LLZ015T4A	30	2482	2.05	3192	2.31	4055	2.51	5095	2.68	6335	2.83	7802	2.98	9518	3.16
		40	2097	2.12	2715	2.51	3468	2.83	4379	3.10	5474	3.32	6779	3.52	8320	3.71
		50	1687	2.01	2197	2.60	2822	3.08	3588	3.49	4520	3.83	5645	4.12	6992	4.38
	LLZ018T4A	30	2939	2.39	3787	2.69	4813	2.92	6045	3.12	7513	3.29	9246	3.47	11273	3.69
		40	2478	2.51	3220	2.96	4118	3.32	5201	3.62	6497	3.87	8038	4.10	9855	4.33
		50	1982	2.47	2601	3.13	3354	3.66	4268	4.11	5374	4.48	6705	4.81	8292	5.12
	LLZ024T4A	30	3653	2.94	4699	3.27	5967	3.54	7492	3.78	9310	4.00	11458	4.22	13971	4.46
		40	3084	3.11	3997	3.61	5104	4.03	6442	4.38	8046	4.70	9956	4.98	12208	5.25
		50	2472	3.12	3230	3.85	4156	4.47	5283	5.00	6651	5.45	8297	5.85	10265	6.21
	LLZ034T4A	30	5364	4.11	6902	4.59	8764	4.97	11002	5.30	13670	5.60	16821	5.91	20507	6.28
		40	4519	4.36	5861	5.08	7487	5.67	9451	6.16	11805	6.58	14605	6.98	17909	7.39
		50	3611	4.37	4726	5.42	6084	6.29	7738	7.02	9743	7.65	12158	8.21	15041	8.74
60 Hz	LLZ013T4A	30	2361	2.22	3076	2.42	3945	2.60	4990	2.78	6236	2.94	7704	3.10	9418	3.24
		40	1969	2.45	2601	2.70	3365	2.94	4283	3.16	5380	3.38	6681	3.58	8210	3.77
		50	1556	2.69	2097	3.00	2747	3.30	3530	3.58	4472	3.85	5598	4.11	6935	4.35
	LLZ015T4A	30	2997	2.62	3877	2.83	4954	3.06	6258	3.30	7821	3.53	9672	3.74	11840	3.90
		40	2509	3.07	3279	3.28	4218	3.53	5359	3.80	6732	4.07	8371	4.33	10309	4.56
		50	2009	3.65	2661	3.84	3455	4.09	4424	4.37	5602	4.67	7023	4.98	8723	5.27
	LLZ018T4A	30	3490	2.96	4514	3.21	5766	3.51	7288	3.81	9122	4.10	11308	4.36	13888	4.56
		40	2953	3.47	3856	3.72	4951	4.02	6278	4.35	7880	4.70	9801	5.04	12086	5.34
		50	2379	4.20	3154	4.40	4083	4.68	5207	5.02	6572	5.40	8221	5.79	10205	6.17
	LLZ024T4A	30	4300	3.56	5577	3.91	7142	4.28	9043	4.66	11327	5.01	14044	5.31	17238	5.55
		40	3674	4.15	4807	4.51	6175	4.92	7828	5.35	9814	5.77	12185	6.17	14991	6.52
		50	2963	4.98	3943	5.33	5109	5.75	6508	6.22	8191	6.70	10212	7.18	12627	7.63
	LLZ034T4A	30	5832	4.79	7638	5.31	9860	5.80	12556	6.28	15785	6.74	19604	7.20	24069	7.65
		40	5100	5.47	6660	6.11	8570	6.73	10888	7.32	13676	7.90	16996	8.45	20910	9.00
		50	4350	6.27	5639	7.07	7211	7.84	9126	8.58	11447	9.29	14240	9.98	17575	10.66

To: *Evaporating temperature in [°C]*
Tc: *Condensing temperature in [°C]*
Qo: *Cooling capacity in [W]*
Pe: *Power input in [kW]*
Subcooling: *0 K*
Superheat: *10*

For more information and performance with other refrigerants, please refer to Coolselector ® 2 at coolselector.danfoss.com or contact Danfoss.

Technical data and ordering

LLZ - Scroll compressors - R448A - 50 / 60 Hz

Performance table - Without economizer

Type		To	-40		-35		-30		-25		-20		-15		-10	
		Tc	Qo	Pe	Qo	Pe	Qo	Pe	Qo	Pe	Qo	Pe	Qo	Pe	Qo	Pe
50 Hz	LLZ013T4A	30	1621	1.66	2173	1.79	2861	1.94	3705	2.09	4721	2.24	5927	2.37	7341	2.48
		40	1463	2.00	1936	2.11	2534	2.24	3274	2.41	4174	2.58	5251	2.75	6524	2.90
		50	1338	2.49	1717	2.55	2208	2.67	2829	2.82	3597	2.99	4530	3.18	5645	3.37
	LLZ015T4A	30	2049	2.08	2764	2.24	3641	2.42	4703	2.61	5973	2.80	7475	2.97	9231	3.10
		40	1826	2.53	2463	2.64	3239	2.81	4177	3.00	5301	3.22	6634	3.44	8200	3.65
		50	1612	3.21	2163	3.26	2831	3.37	3639	3.55	4611	3.77	5769	4.01	7137	4.27
	LLZ018T4A	30	2454	2.35	3269	2.52	4274	2.73	5500	2.97	6974	3.20	8727	3.41	10785	3.57
		40	2194	2.85	2915	2.96	3803	3.16	4886	3.40	6191	3.67	7749	3.94	9588	4.18
		50	1939	3.58	2564	3.62	3330	3.77	4265	3.99	5399	4.26	6758	4.56	8372	4.87
	LLZ024T4A	30	3140	2.81	4081	3.01	5255	3.27	6707	3.55	8485	3.84	10633	4.10	13197	4.31
		40	2798	3.37	3636	3.54	4670	3.80	5944	4.11	7504	4.46	9397	4.82	11667	5.17
		50	2418	4.26	3153	4.38	4046	4.62	5142	4.96	6485	5.36	8122	5.80	10097	6.26
	LLZ034T4A	30	4483	3.65	5807	4.02	7451	4.42	9467	4.81	11906	5.18	14821	5.50	18265	5.75
		40	4015	4.31	5181	4.68	6626	5.11	8402	5.57	10561	6.04	13155	6.50	16236	6.92
		50	3523	5.20	4511	5.57	5739	6.02	7256	6.55	9116	7.11	11369	7.70	14067	8.28
60 Hz	LLZ013T4A	30	2234	2.05	2895	2.18	3707	2.35	4698	2.55	5894	2.74	7322	2.92	9006	3.07
		40	1988	2.54	2590	2.62	3316	2.76	4194	2.95	5252	3.16	6517	3.38	8016	3.59
		50	1696	3.24	2240	3.24	2882	3.33	3650	3.48	4572	3.69	5676	3.92	6991	4.17
	LLZ015T4A	30	2755	2.79	3545	2.85	4529	2.97	5754	3.13	7268	3.33	9116	3.53	11344	3.74
		40	2483	3.23	3216	3.30	4091	3.44	5156	3.62	6458	3.84	8047	4.07	9967	4.31
		50	2109	3.84	2804	3.91	3593	4.05	4522	4.25	5640	4.48	6994	4.74	8632	5.00
	LLZ018T4A	30	3292	2.92	4249	3.09	5432	3.29	6890	3.50	8673	3.75	10828	4.03	13401	4.35
		40	2958	3.43	3838	3.63	4897	3.85	6183	4.09	7747	4.36	9637	4.66	11902	4.99
		50	2526	4.19	3336	4.40	4279	4.64	5402	4.89	6756	5.17	8391	5.48	10359	5.83
	LLZ024T4A	30	4098	3.47	5260	3.70	6683	3.97	8421	4.29	10529	4.64	13060	5.00	16064	5.36
		40	3676	4.12	4751	4.35	6034	4.63	7581	4.97	9446	5.35	11686	5.74	14354	6.15
		50	3140	5.11	4133	5.31	5284	5.57	6648	5.90	8282	6.28	10241	6.69	12582	7.13
	LLZ034T4A	30	5832	4.50	7487	4.81	9491	5.25	11897	5.77	14758	6.33	18127	6.90	22050	7.43
		40	5210	5.36	6708	5.61	8516	6.02	10689	6.55	13282	7.17	16350	7.84	19944	8.52
		50	4529	6.57	5836	6.71	7414	7.06	9319	7.57	11609	8.21	14340	8.94	17570	9.72

To: *Evaporating temperature in [°C]*
Tc: *Condensing temperature in [°C]*
Qo: *Cooling capacity in [W]*
Pe: *Power input in [kW]*
Subcooling: *0 K*
Superheat: *10 K*

LLZ - Scroll compressors - R449A - 50 / 60 Hz

Performance table - without economizer

Type		To	-40		-35		-30		-25		-20		-15		-10	
		Tc	Qo	Pe	Qo	Pe	Qo	Pe	Qo	Pe	Qo	Pe	Qo	Pe	Qo	Pe
50 Hz	LLZ013T4A	30	1619	1.66	2171	1.79	2859	1.94	3702	2.09	4717	2.24	5923	2.37	7335	2.48
		40	1462	2.00	1934	2.11	2531	2.24	3271	2.41	4170	2.58	5247	2.75	6518	2.90
		50	1336	2.49	1715	2.55	2205	2.67	2826	2.82	3593	2.99	4525	3.18	5639	3.37
	LLZ015T4A	30	2047	2.08	2762	2.24	3638	2.42	4699	2.61	5968	2.80	7469	2.97	9224	3.10
		40	1824	2.53	2460	2.64	3235	2.81	4173	3.00	5296	3.22	6628	3.44	8193	3.65
		50	1609	3.21	2160	3.26	2827	3.37	3635	3.55	4606	3.77	5763	4.01	7130	4.27
	LLZ018T4A	30	2452	2.35	3266	2.52	4270	2.73	5495	2.97	6969	3.20	8720	3.41	10777	3.57
		40	2192	2.85	2912	2.96	3799	3.16	4881	3.40	6185	3.67	7742	3.94	9580	4.18
		50	1936	3.58	2561	3.62	3326	3.77	4260	3.99	5393	4.26	6751	4.56	8364	4.87
	LLZ024T4A	30	3137	2.81	4077	3.01	5250	3.27	6702	3.55	8478	3.84	10624	4.10	13187	4.31
		40	2795	3.37	3632	3.54	4665	3.80	5938	4.11	7497	4.46	9388	4.82	11656	5.17
		50	2414	4.26	3149	4.38	4041	4.62	5136	4.96	6478	5.36	8114	5.80	10087	6.26
	LLZ034T4A	30	4478	3.65	5802	4.02	7445	4.42	9459	4.81	11896	5.18	14810	5.50	18251	5.75
		40	4011	4.31	5175	4.68	6619	5.11	8394	5.57	10551	6.04	13143	6.50	16222	6.92
		50	3518	5.20	4505	5.57	5732	6.02	7248	6.55	9106	7.11	11357	7.70	14053	8.28
60 Hz	LLZ013T4A	30	2225	2.05	2886	2.18	3697	2.35	4687	2.55	5883	2.74	7311	2.92	8997	3.07
		40	1979	2.54	2580	2.62	3305	2.76	4183	2.95	5241	3.16	6506	3.38	8006	3.59
		50	1687	3.24	2229	3.24	2871	3.33	3638	3.48	4560	3.69	5665	3.92	6981	4.17
	LLZ015T4A	30	2745	2.79	3534	2.85	4517	2.97	5741	3.13	7255	3.33	9103	3.53	11332	3.74
		40	2472	3.23	3203	3.30	4077	3.44	5142	3.62	6444	3.84	8033	4.07	9954	4.31
		50	2097	3.84	2791	3.91	3579	4.05	4508	4.25	5625	4.48	6980	4.74	8620	5.00
	LLZ018T4A	30	3279	2.92	4235	3.09	5417	3.29	6875	3.50	8657	3.75	10813	4.03	13387	4.35
		40	2945	3.43	3824	3.63	4881	3.85	6167	4.09	7730	4.36	9621	4.66	11888	4.99
		50	2512	4.19	3321	4.40	4262	4.64	5385	4.89	6738	5.17	8375	5.48	10344	5.83
	LLZ024T4A	30	4082	3.47	5244	3.70	6665	3.97	8402	4.29	10510	4.64	13041	5.00	16047	5.36
		40	3660	4.12	4733	4.35	6014	4.63	7560	4.97	9426	5.35	11666	5.74	14336	6.15
		50	3123	5.11	4113	5.31	5263	5.57	6627	5.90	8260	6.28	10220	6.69	12564	7.13
	LLZ034T4A	30	5810	4.50	7464	4.81	9465	5.25	11870	5.77	14731	6.33	18101	6.90	22027	7.43
		40	5187	5.36	6683	5.61	8488	6.02	10660	6.55	13253	7.17	16322	7.84	19919	8.52
		50	4504	6.57	5809	6.71	7385	7.06	9289	7.57	11579	8.21	14312	8.94	17545	9.72

To: *Evaporating temperature in [°C]*
Tc: *Condensing temperature in [°C]*
Qo: *Cooling capacity in [W]*
Pe: *Power input in [kW]*
Subcooling: *0 K*
Superheat: *10 K*

For more information and performance with other refrigerants, please refer to Coolselector ® 2 at coolselector.danfoss.com or contact Danfoss.

Nomenclature and Dimensions

Type	Size	Motor		Features		Evolution
MLZ	021	T	4 L	P	9	A

Application:
M: Medium temperature refrigeration

Family, Refrigerant:
LZ(A): R404A - R507 - R22 - R134a - R407A - R407F - R448A - R449A - R452A

Nominal capacity:
In thousand Btu/h at 60 Hz, ARI, MBP conditions

Model variation:
T: Design optimised for refrigeration

Index
- with PVE oil
A with POE oil

Other features

	Oil sight glass	Oil equalisation	Oil drain	LP gauge port	Gas equalisation port
9	Threaded	None	Schrader	None	None

Tubing and electrical connections:
P: Brazed connections, spade terminals
C: Brazed connections, screw terminals
T: Rotolock connections, spade terminals
Q: Rotolock connections, screws terminals



Motor protection:
L: internal motor protection

Motor voltage code
1: 208-230 V/1~/60 Hz
2: 200-220 V/3~/50 Hz & 208-230 V/3~/60 Hz
4: 380-415V/3~/50 Hz & 460 V/3~/60 Hz
5: 220-240 V/1~/50 Hz
7: 575V/ 3~/60 Hz
9: 380 V/3~/60 Hz

MLZ015-019-021-026

Brazed

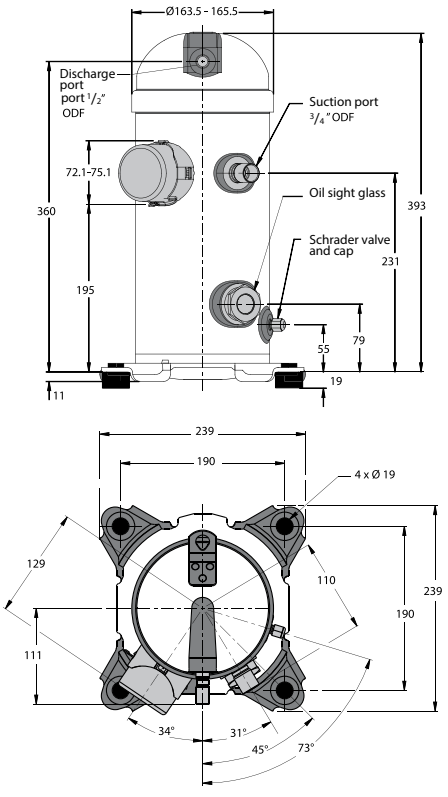

Rotolock

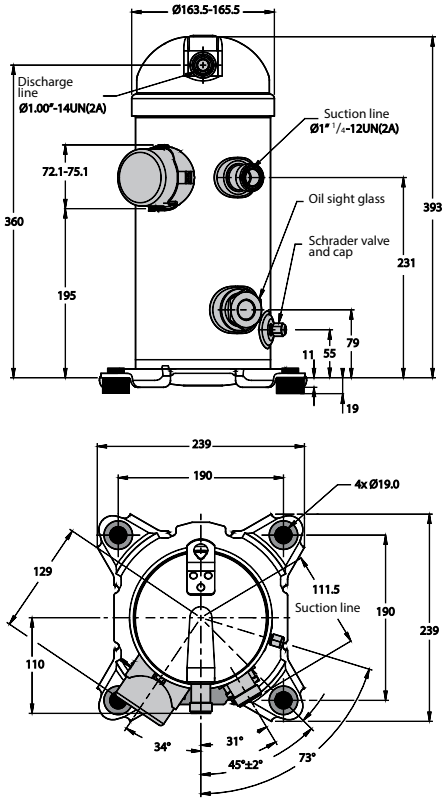

Dimensions

MLZ030-038-042-045-048

Brazed

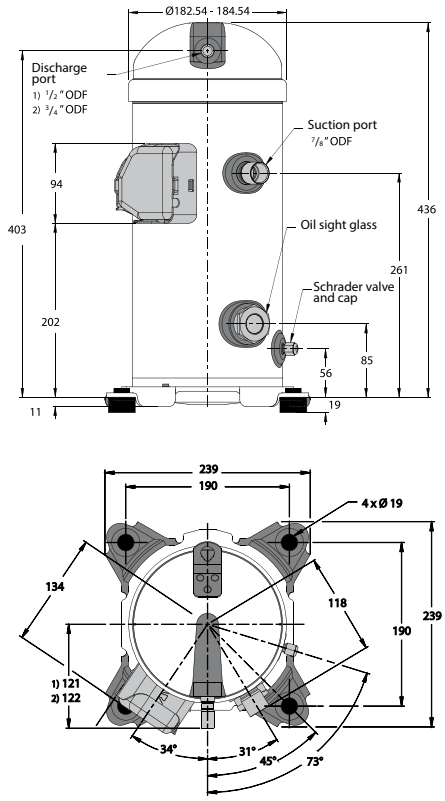

1) MLZ030-038-042-045
2) MLZ048

Rotolock

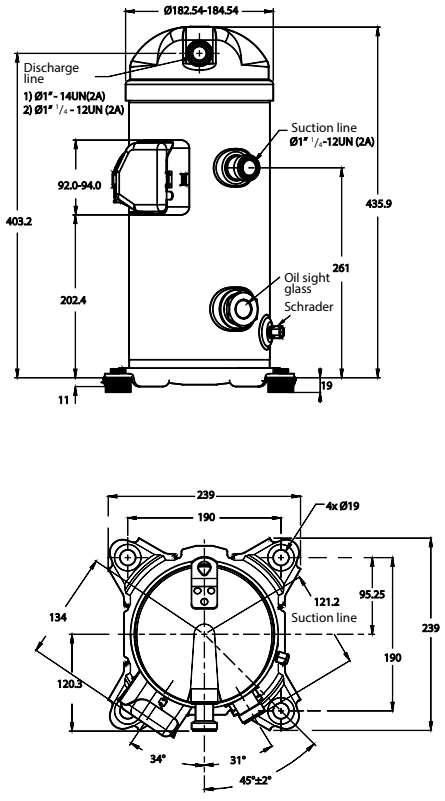

1) MLZ030-038-042-045
2) MLZ048

MLZ058-066-076

Brazed

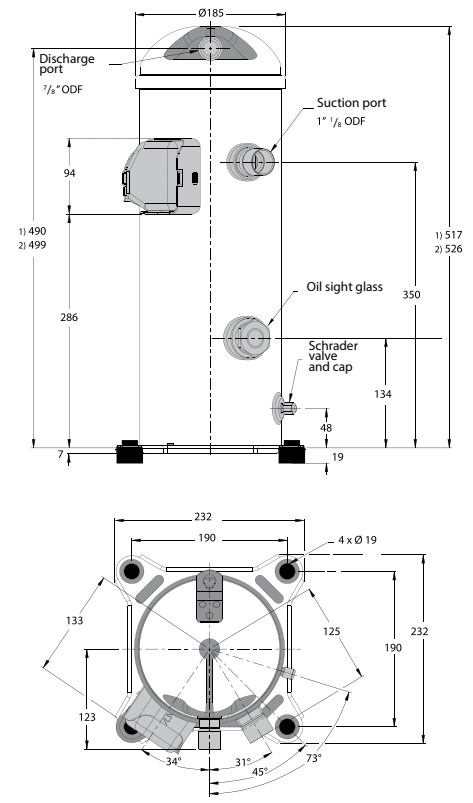

1) MLZ030-038-042-045
2) MLZ048

Rotolock

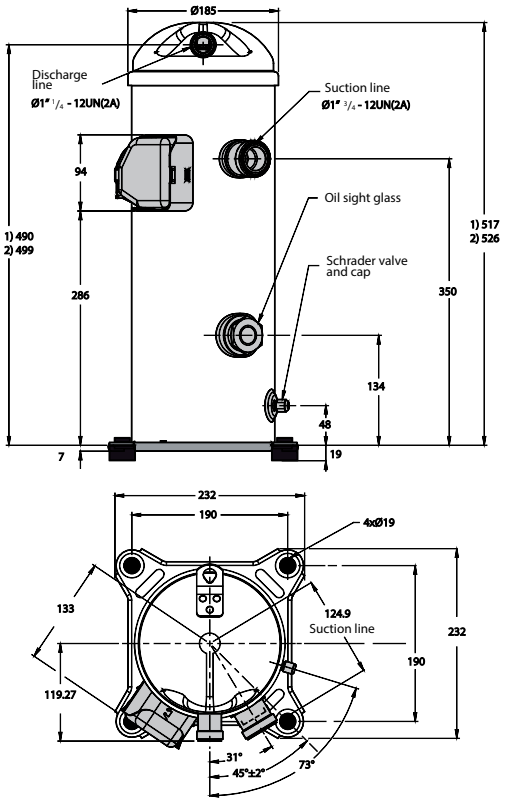

1) MLZ085
2) MLZ066-076

Nomenclature and Dimensions

Type	Size	Motor	Features	Evolution
LLZ	013	T 4 L	Q 9	A

Application:
L: low temperature refrigeration

Family, Refrigerant:
LZ: R404A, R507, R452A, R448A, R449A

Nominal capacity:
In thousand Btu/h at 60 Hz,
ARI, LBP conditions of R404A

Model variation:
T: design optimised for refrigeration

Motor voltage code:
2: 200-220 V/3~/50 Hz & 208-230 V/3~/60 Hz
4: 380-415V/3~/50 Hz & 460 V/3~/60 Hz
9: 380 V/3~60 Hz

Motor protection:
L: Internal motor protection

Tubing and electrical connections:
Q: Rotolock connections, screw terminals



Other features

	Oil sight glass	Oil equalisation	Oil drain	LP gauge port	Gas equalis. port
9	Threaded	None	Schrader	None	None

- with PVE Oil
A with POE Oil

LLZ013-015-018

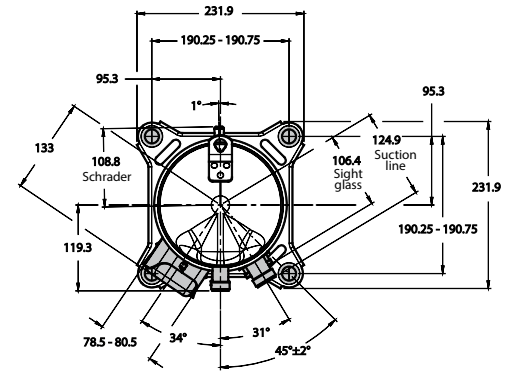

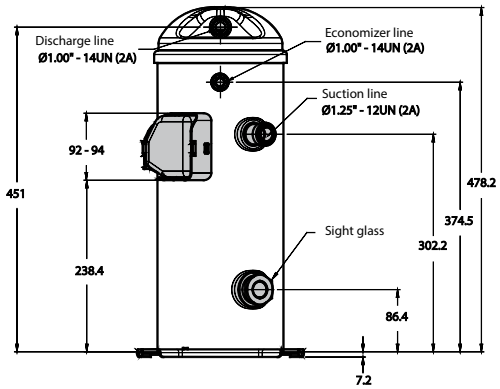

LLZ024

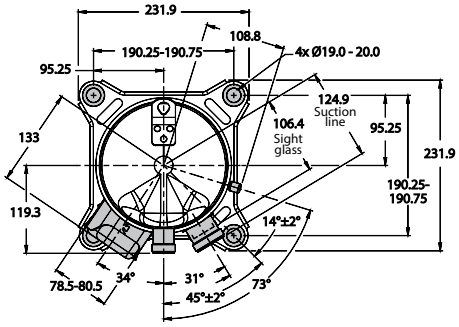

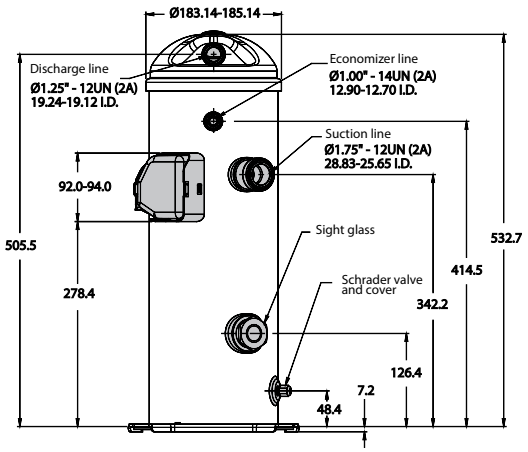

MLM / MLZ 116, Scroll compressors

The addition of the 15HP scroll compressor for MBP/LBP refrigeration perfectly suits the OEM and contractor requirements for cold rooms, mushroom growing rooms, supermarket racks, lab equipment and ice makers with low applied costs.



Features
MLM / MLZ 116

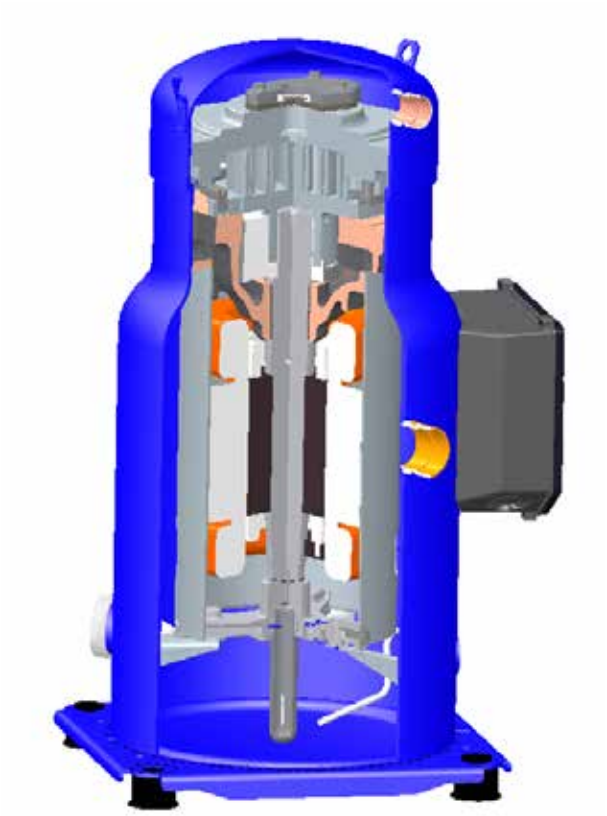

Facts

Applications:
- A design appropriate for cold rooms operating at typically -18 °C
- A high cooling capacity allowing fast pull down
- Industry leading energy efficiency when maintaining the room temperatures with an highly energy efficient motor and a scroll wrap optimized for refrigeration
- Higher energy efficiency, temperature control, flexibility and lower applied costs with staged modulation and manifold configurations

Technical data and ordering

MLM / MLZ 116 - Scroll compressors - R404A

Ordering - Industrial pack

Compressor model		Model variation	Connections	Features	Voltage code 4
Danfoss pallet	MLM116	B	C	5	120H1118
		B	Q	5	120H1231
	MLZ116	B	C	5	120H1117
		B	Q	5	120H1230

MLM / MLZ 116 - Scroll compressors - R404A - 50 Hz

Technical data

Compressor model	HP	Nominal cooling capacity		Power input	Efficiency		Swept volume	Displacement	Oil charge	Net weight (with oil)
					COP	E.E.R.				
		[W]	[Btu/h]	[kW]	[W/W]	[Btu/h/W]	[cm³/rev]	[m³/h]	Litres	[kg]
MLM116	15	24451	83427	10789	2.27	7.73	249.9	43.5	6.7	100
MLZ116	15	26865	91664	12127	2.22	7.56	249.9	43.5	6.7	100

Note: EN12900 conditions: To = -10 °C, Tc= 45 °C, RGT= 20 °C, SC= 0 K

MLM / MLZ 116 - Scroll compressors - R22 - R404A - 50 Hz

Performance table

Type	To	-30		-25		-20		-15		-10		-5		0		5		10	
	Tc	Qo	Pe	Qo	Pe	Qo	Pe	Qo	Pe	Qo	Pe	Qo	Pe	Qo	Pe	Qo	Pe	Qo	Pe
MLM116T4	30	–	–	–	–	18710	7.69	23111	8.19	28238	8.79	34179	9.45	41027	10.16	48885	10.88	57871	11.58
	40	–	–	–	–	–	–	21029	9.47	25742	10.03	31195	10.70	37477	11.47	44685	12.31	52927	13.20
	50	–	–	–	–	–	–	–	–	23137	11.68	28072	12.30	33759	13.06	40285	13.95	47751	14.94
MLZ116T4	30	14300	7.94	17866	8.30	22071	8.72	26998	9.21	32732	9.77	39357	10.43	46965	11.18	55659	12.05	65568	13.04
	40	12557	9.48	15766	9.83	19508	10.23	23865	10.70	28914	11.23	34735	11.85	41407	12.56	49015	13.37	57662	14.30
	50	–	–	13483	11.79	16693	12.19	20409	12.64	24706	13.15	29653	13.74	35317	14.41	41766	15.18	49071	16.06

To: *Evaporating temperature in [°C]*
Tc: *Condensing temperature in [°C]*
Qo: *Cooling Capacity in [W]*
Pe: *Power input in [kW]*
Subcooling: *0 K*
RTG: *20 °C*

For more information and performance with other refrigerants, please refer to Coolselector ® 2 at coolselector.danfoss.com or contact Danfoss.

Nomenclature and Dimensions

Type	Size	Motor	Features
M LZ	116	T 4 B	C 5

Application:
M: Medium temperature refrigeration

Family, Refrigerant:
LZ: R404A, PVE lubricant (160HV)
LM: R22, mineral lubricant

Nominal capacity:
In thousand Btu/h at 60 Hz, ARI, MBP conditions

Model variation:
T: Design optimised for refrigeration

Motor protection:
B: Electronic, 230 V

Motor voltage code
4: 380-415 V/3 ph/50 Hz

Tubing and electrical connections:
C: Brazed connections, screw terminals
Q: Rotolock connections, screws terminals

Other features

	Oil sight glass	Oil equalisation	Oil drain	LP gauge port	Gas equalisation port
5	Threaded	Threaded	Schrader	Schrader	None

MLM / MLZ 116

Brazed connection-MLZ / MLM116 T4BC5

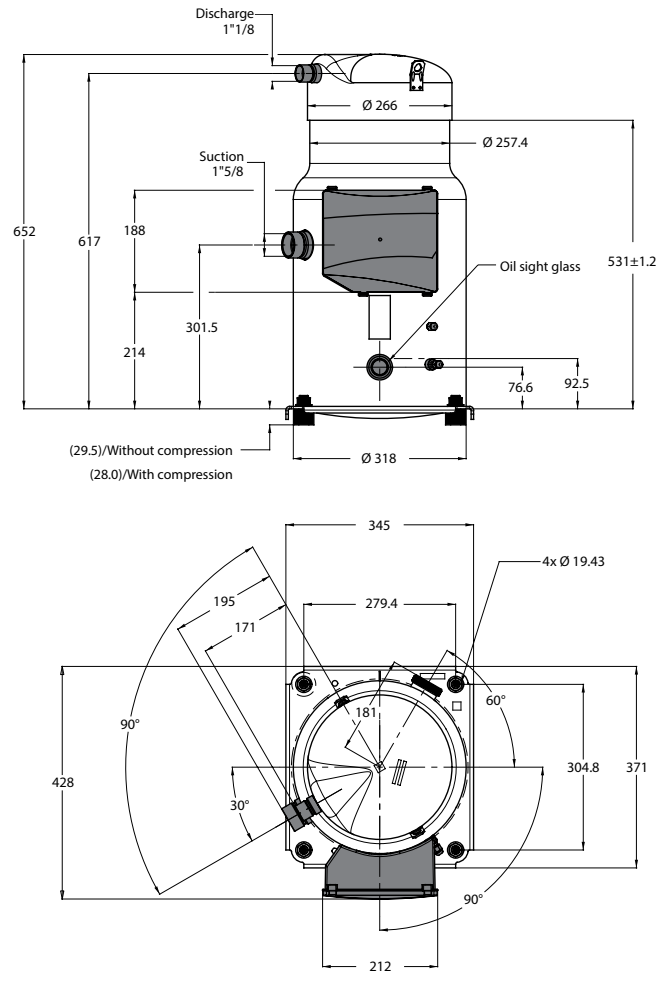

Rotolock connection-MLZ / MLM116 T4QC5

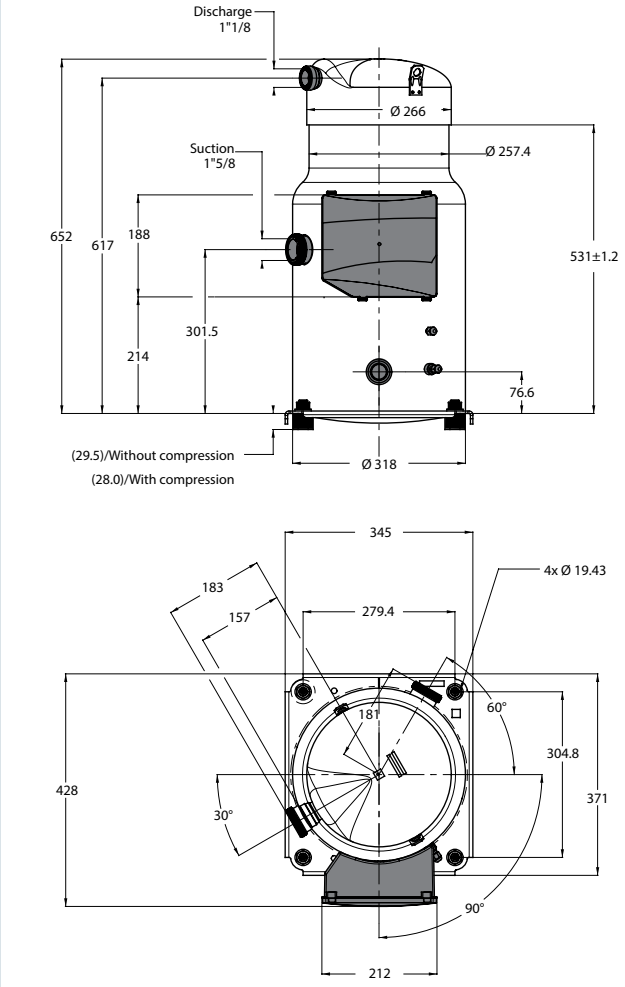

All dimensions are in mm

Quick Selection Notes:

DSH / SH series, Scroll compressors

Danfoss Scrolls SH and DSH are industry leading ranges of high efficiency scrolls optimized for rooftop and chiller applications. They range from 7.5 to 40TR (SH range) and 50 TR (DSH range). Innovative design of the DSH range bring a new level of compressor robustness and system reliability. They are available in a large variety of single and manifold models for refrigerants R410A, and alternate refrigerants with lower-GWP in the fall of 2018 and 2019.



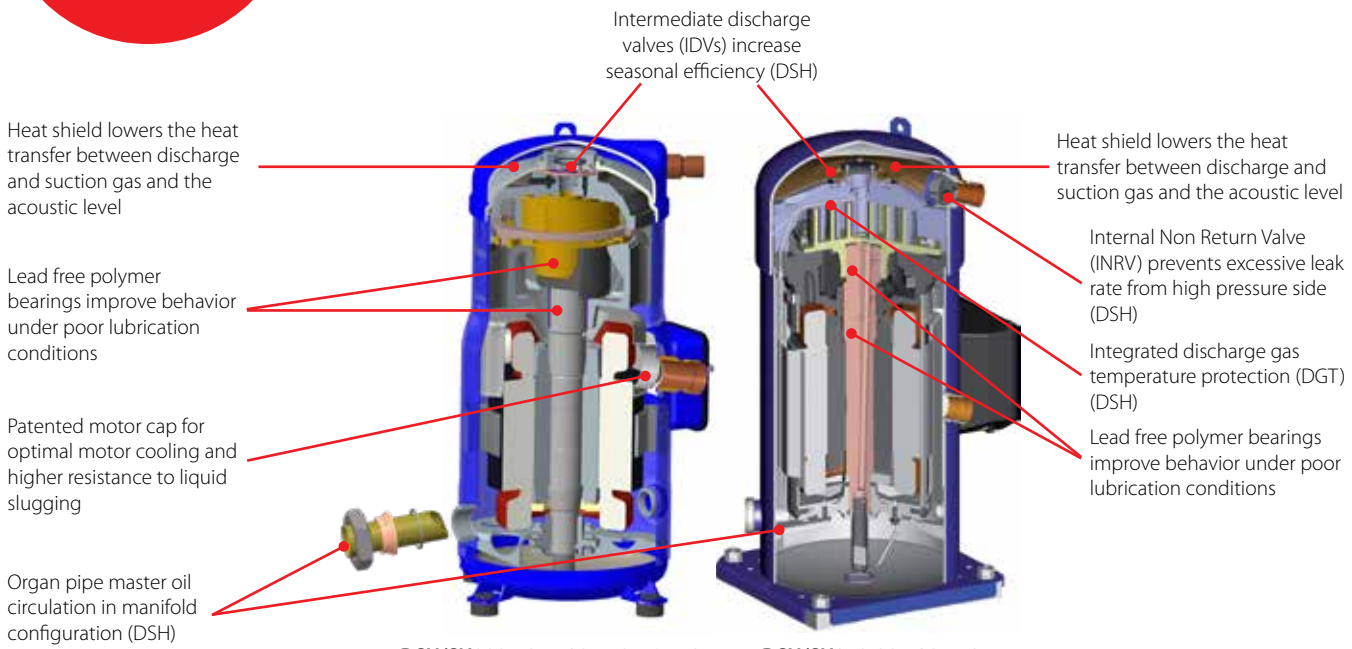

DSH/SH090-105-120-140-161-184 **DSH/SH240-295-381-485**

Facts

Applications:

- Ideal for chillers, rooftops, CRAC systems from 7.5 to 50TR with a single compressor, up to 150 TR per circuit
- The Danfoss Scrolls DSH include several innovative features to improve compressor and system robustness.

- **Intermediate Discharge Valves (IDVs)**
- Mechanically reduce excessive compression of refrigerant under part-load conditions while maintaining the same cooling capacity. They adapt the effort of the motor to the pressure conditions in the system by opening when condensing pressure and pressure ratio (part-load) fall below the built-in optimization point of the scroll. This reduces the effort of the motor and its electrical consumption thus improving the system's seasonal energy efficiency. IDV technology enhances system efficiency by 15% on average in Water-to- Water chillers and by 6% in rooftops and Air-to-Water chillers.
- Reduce the load on mechanical parts at start up, provide safer operation at high condensing and evaporating temperatures and contribute to better liquid management

Technical data and ordering

DSH - Single scroll compressor - R410A

Ordering - Single pack

Compressor model	Connections	Motor protection	Code no.			
			3	4	7	9
			200-230/3/60	380-415/3/50 460/3/60	575/3/60	380-400/3/60
DSH090	Brazed	Internal	120H1180	120H1182	120H1184	120H1186
DSH105	Brazed	Internal	120H1188	120H1190	120H1192	120H1194
DSH120	Brazed	Internal	120H1196	120H1198	120H1200	120H1202
DSH140	Brazed	Internal	120H1204	120H1206	120H1208	120H1210
DSH161	Brazed	Internal	120H1212	120H1214	120H1216	120H1218
DSH184	Brazed	Internal	120H1220	120H1222	120H1224	120H1226
DSH240	Brazed	Module 24V AC [1]	120H1159	120H1119	120H1151	120H1135
	Brazed	Module 110 – 240 V [1]	120H1161	120H1121	120H1152	120H1137
DSH295	Brazed	Module 24V AC [1]	120H1163	120H1123	120H1153	120H1139
	Brazed	Module 110 – 240 V [1]	120H1165	120H1125	120H1154	120H1141
DSH381	Brazed	Module 24V AC [1]	120H1167	120H1127	120H1155 [2]	120H1143 [2]
	Brazed	Module 110 – 240 V [1]	120H1169	120H1129	120H1156 [2]	120H1145 [2]
DSH485	Brazed	Module 24V AC [1]	120H1105 [2]	120H1131	120H1157	120H1147
	Brazed	Module 110 – 240 V [1]	–	120H1133	120H1158	120H1149

[1]) Electronic motor protection, module located in terminal box
[2]) Soon to be released
Mounting kit for DSH240-295-381-485 single compressor applications : ***Ref 8156138***

DSH - Single scroll compressor - R410A

Ordering - Industrial pack

Compressor model	Connections	Motor protection	Code no.			
			3	4	7	9
			200-230/3/60	380-415/3/50 460/3/60	575/3/60	380-400/3/60
DSH090	Brazed	Internal	120H1181	120H1183	120H1185	120H1187
DSH105	Brazed	Internal	120H1189	120H1191	120H1193	120H1195
DSH120	Brazed	Internal	120H1197	120H1199	120H1201	120H1203
DSH140	Brazed	Internal	120H1205	120H1207	120H1209	120H1211
DSH161	Brazed	Internal	120H1213	120H1215	120H1217	120H1219
DSH184	Brazed	Internal	120H1221	120H1223	120H1225	120H1227
DSH240	Brazed	Module 24V AC [1]	120H1160	120H1120	–	120H1136
	Brazed	Module 110 – 240 V [1]	120H1162	120H1122	–	120H1138
DSH295	Brazed	Module 24V AC [1]	120H1164	120H1124	–	120H1140
	Brazed	Module 110 – 240 V [1]	120H1166	120H1126	–	120H1142
DSH381	Brazed	Module 24V AC [1]	120H1168	120H1128	–	120H1144 [2]
	Brazed	Module 110 – 240 V [1]	120H1170	120H1130	–	120H1146 [2]
DSH485	Brazed	Module 24V AC [1]	120H1104 [2]	120H1132	–	120H1148
	Brazed	Module 110 – 240 V [1]	–	120H1134	–	120H1150

[1]) Electronic motor protection, module located in terminal box
[2]) Soon to be released
Mounting kit for DSH240-295-381-485 manifold configurations (one kit per compressor):
Ref 7777045 *for 50 Hz applications*
Ref 120Z0495 *for 60 Hz applications*

Technical data and ordering

DSH - Single scroll compressor - R410A - 50/60 Hz

Technical data

Compressor model		Nominal tons 60 Hz	Nominal cooling capacity		Power input	COP	EER	Swept volume		Displacement [1]		Oil charge		Net weight [2]	
		[TR]	[W]	[Btu/h]	[kW]	[W/W]	[Btu/h/W]	[cm³/rev]	[cu.in/rev]	[m³/h]	[cu.ft/h]	[Litres]	[oz]	[kg]	[lb]
50 Hz	DSH090	7.5	20050	68413	6.54	3.06	10.46	88.4	5.39	15.4	544	3	102	58	128
	DSH105	9	23580	80457	7.65	3.08	10.52	103.5	6.32	18	636	3.3	113	64	141
	DSH120	10	26790	91410	8.61	3.11	10.62	116.9	7.13	20.3	717	3.3	113	64	141
	DSH140	12	30370	103625	9.69	3.13	10.69	133	8.12	23.1	816	3.3	113	67	148
	DSH161	13	34890	119048	11.03	3.16	10.79	151.7	9.26	26.4	932	3.3	113	69	152
	DSH184	15	39040	133208	12.36	3.16	10.78	170.3	10.39	29.6	1045	3.6	123	71.5	158
	DSH240	20	52730	179920	17.04	3.09	10.56	227.6	13.89	39.6	1398	6.7	229	108	238
	DSH295	25	64520	220149	20.35	3.17	10.82	276.2	16.85	48.1	1699	6.7	229	111	245
	DSH381	30	81490	278052	26.21	3.11	10.61	345	21.05	60	2119	6.7	229	159	351
	DSH485	40	103500	353152	32.72	3.16	10.79	442.6	27.01	77	2719	6.7	229	175	386
60 Hz	DSH090	7.5	27470	93730	8.55	3.21	10.96	88.4	5.39	18.6	657	3	102	58	128
	DSH105	9	32280	110100	10.01	3.22	11	103.5	6.32	21.8	770	3.3	113	64	141
	DSH120	10	36630	125000	11.25	3.26	11.11	116.9	7.13	24.6	869	3.3	113	64	141
	DSH140	12	41510	141600	12.75	3.26	11.11	133	8.12	27.9	985	3.3	113	67	148
	DSH161	13	47220	161100	14.7	3.21	10.96	151.7	9.26	31.9	1127	3.3	113	69	152
	DSH184	15	53160	181400	16.36	3.25	11.09	170.3	10.39	35.8	1264	3.6	123	71.5	158
	DSH240	20	71760	244852	22.46	3.2	10.9	227.6	13.89	47.8	1688	6.7	229	108	238
	DSH295	25	87610	298934	26.96	3.25	11.09	276.2	16.85	58	2048	6.7	229	111	245
	DSH381	30	110300	376355	34.52	3.2	10.9	345	21.05	72.3	2553	6.7	229	159	351
	DSH485	40	141900	484177	43.66	3.25	11.09	442.6	27.01	92.9	3281	6.7	229	175	386

[1]) Displacement at nominal speed: 2900rpm at 50 Hz, 3500rpm at 60 Hz
[2]) Net weight with oil charge
TR: Ton of Refrigeration
COP: Coefficient Of Performance
EER: Energy Efficiency Ratio

Standard rating conditions
For 50 Hz: Evaporating temperature: 5 °C / 41 °F *Condensing temperature: 50 °C / 122 °F* *Superheat: 10 K (18 °F)* *Subcooling: 0 K (0 °F)*
For 60 Hz: Evaporating temperature: 7.2°C / 45 °F *Condensing temperature: 54.4°C / 130 °F* *Superheat: 11.1 K (20 °F)* *Subcooling: 8.3 K (15 °F)*

Subject to modification without prior notification.
Data given for motor code 4 compressor with above condition, for full data details and capacity tables refer to Coolselector®2
www.coolselector.danfoss.com

Technical data and ordering

DSH - Single scroll compressor - R410A - 50 Hz

Performance table

Type	To	-30		-20		-10		0		10		15		20		25	
	Tc	Qo	Pe	Qo	Pe	Qo	Pe	Qo	Pe	Qo	Pe	Qo	Pe	Qo	Pe	Qo	Pe
DSH090	35	5660	4.69	9666	4.60	15073	4.68	22285	4.67	31702	4.32	37363	3.93	43725	3.36	50839	2.57
	45	–	–	8535	5.86	13368	5.81	19837	5.86	28350	5.75	33500	5.56	39314	5.24	45842	4.74
	55	–	–	–	–	11477	7.35	17085	7.31	24586	7.30	29177	7.23	34398	7.07	40302	6.80
DSH105	35	6904	5.79	11575	5.51	17891	5.53	26330	5.52	37369	5.15	44013	4.73	51484	4.10	59844	3.21
	45	–	–	9986	7.02	15681	6.85	23329	6.87	33415	6.77	39523	6.57	46423	6.21	54173	5.66
	55	–	–	–	–	13212	8.62	19960	8.51	28997	8.50	34530	8.43	40820	8.26	47932	7.95
DSH120	35	8062	6.28	13295	6.19	20402	6.24	29928	6.17	42417	5.71	49942	5.26	58411	4.61	67893	3.73
	45	–	–	11723	7.78	18057	7.74	26567	7.75	37806	7.55	44621	7.29	52326	6.87	60989	6.26
	55	–	–	–	–	15519	9.63	22919	9.60	32829	9.52	38902	9.39	45814	9.14	53637	8.75
DSH140	35	9552	7.22	15309	6.85	23210	6.94	33891	7.02	47981	6.60	56502	6.05	66111	5.20	76889	3.99
	45	–	–	13527	8.78	20559	8.57	30113	8.68	42829	8.65	50574	8.42	59349	7.98	69236	7.26
	55	–	–	–	–	17681	10.81	26012	10.70	37276	10.79	44213	10.76	52130	10.59	61109	10.23
DSH161	35	10645	7.80	17464	7.75	26674	7.89	38974	7.90	55063	7.48	64746	7.00	75638	6.30	87826	5.32
	45	–	–	15354	9.73	23590	9.77	34637	9.89	49204	9.77	58028	9.52	67998	9.10	79202	8.46
	55	–	–	–	–	20201	12.17	29837	12.25	42742	12.29	50647	12.19	59643	11.98	69820	11.60
DSH184	35	12424	8.68	19896	8.75	30097	8.93	43818	8.95	61846	8.53	72722	8.08	84969	7.40	98686	6.49
	45	–	–	17510	10.85	26573	10.96	38837	11.09	55101	10.98	64983	10.74	76165	10.33	88747	9.72
	55	–	–	–	–	22726	13.63	33369	13.73	47728	13.76	56557	13.67	66623	13.45	78028	13.08
DSH240	35	16780	12.17	26933	11.94	40691	12.17	59073	12.27	83094	11.64	97535	10.87	113767	9.70	131914	8.04
	45	–	–	23718	15.05	36005	15.02	52491	15.25	74204	15.14	87343	14.77	102176	14.10	118830	13.05
	55	–	–	–	–	30845	18.84	45210	18.90	64422	19.01	76176	18.91	89537	18.59	104639	17.99
DSH295	35	20543	14.40	32995	14.28	49827	14.50	72283	14.61	101601	14.18	119219	13.62	139016	12.77	161145	11.55
	45	–	–	29069	17.87	44117	17.93	64253	18.18	90735	18.19	106748	17.97	124818	17.52	145103	16.79
	55	–	–	–	–	37809	22.37	55362	22.54	78779	22.77	93088	22.77	109346	22.62	127716	22.27
DSH381	35	25441	19.05	41177	18.60	62453	18.90	90843	19.16	127915	18.55	150195	17.67	175232	16.27	203221	14.25
	45	–	–	36483	23.05	55512	23.02	80968	23.49	114443	23.64	134685	23.34	157528	22.65	183171	21.49
	55	–	–	–	–	47895	28.44	70102	28.74	99709	29.25	117797	29.34	138346	29.18	161563	28.67
DSH485	35	32323	22.60	52665	23.38	78979	24.07	114448	24.07	162237	22.77	191738	21.45	225501	19.58	263920	17.09
	45	–	–	46624	28.51	70684	29.03	102564	29.51	145479	29.33	172078	28.81	202638	27.89	237560	26.51
	55	–	–	–	–	61128	35.41	89251	35.89	127171	36.36	150832	36.40	178176	36.20	209613	35.71

To: *Evaporating temperature in [°C]*
Tc: *Condensing temperature in [°C]*
Qo: *Cooling Capacity in [W]*
Pe: *Power input in [kW]*
Subcooling: *8.3 K*
Superheat: *11.1 K*
Voltage: *400 V /3 /50 Hz*

For more information and performance with other refrigerants, please refer to Coolselector ® 2 at coolselector.danfoss.com or contact Danfoss.

Technical data and ordering

DSH - Single scroll compressor - R410A - 60 Hz

Performance table

Type	To	-30		-20		-10		0		10		15		20		25	
	Tc	Qo	Pe	Qo	Pe	Qo	Pe	Qo	Pe	Qo	Pe	Qo	Pe	Qo	Pe	Qo	Pe
DSH090	35	7355	5.59	12044	5.54	18414	5.65	26974	5.65	38229	5.27	45026	4.86	52687	4.25	61276	3.41
	45	–	–	10602	6.89	16324	6.92	24060	7.00	34319	6.90	40552	6.68	47607	6.32	55545	5.78
	55	–	–	–	–	14103	8.58	20905	8.63	30054	8.66	35668	8.58	42060	8.40	49292	8.08
DSH105	35	8621	7.03	14212	6.60	21759	6.63	31863	6.67	45122	6.29	53122	5.80	62137	5.03	72240	3.93
	45	–	–	12376	8.41	19176	8.14	28327	8.20	40429	8.16	47774	7.96	56082	7.56	65428	6.91
	55	–	–	–	–	16431	10.27	24506	10.10	35328	10.15	41956	10.11	49496	9.96	58022	9.65
DSH120	35	10077	7.52	16257	7.41	24702	7.48	36099	7.44	51136	6.98	60234	6.51	70500	5.81	82019	4.86
	45	–	–	14322	9.22	21871	9.19	32124	9.25	45768	9.09	54076	8.84	63489	8.42	74094	7.79
	55	–	–	–	–	18927	11.37	27923	11.38	40060	11.37	47522	11.27	56026	11.05	65660	10.67
DSH140	35	11841	8.61	18705	8.14	28137	8.29	40909	8.47	57792	8.12	68018	7.57	79561	6.67	92518	5.35
	45	–	–	16607	10.43	25014	10.20	36508	10.40	51861	10.46	61226	10.26	71845	9.81	83815	9.05
	55	–	–	–	–	21692	12.88	31725	12.78	45364	12.94	53777	12.94	63381	12.79	74273	12.42
DSH161	35	13416	9.23	21424	9.42	32288	9.62	46882	9.65	66080	9.32	77679	8.96	90756	8.43	105421	7.73
	45	–	–	18988	11.60	28672	11.83	41731	12.00	59040	11.92	69560	11.73	81471	11.41	94881	10.93
	55	–	–	–	–	24880	14.57	36249	14.80	51513	14.89	60878	14.83	71545	14.67	83622	14.38
DSH184	35	15104	10.13	24121	10.50	36368	10.77	52833	10.83	74503	10.56	87599	10.26	102367	9.84	118930	9.28
	45	–	–	21299	12.75	32223	13.14	46983	13.38	66565	13.36	78474	13.21	91959	12.95	107143	12.56
	55	–	–	–	–	27853	16.02	40717	16.41	58021	16.59	68647	16.56	80753	16.44	94464	16.21
DSH240	35	20540	14.43	32608	14.19	49037	14.58	71088	14.87	100021	14.31	117462	13.47	137097	12.15	159082	10.23
	45	–	–	28853	17.83	43535	17.82	63354	18.27	89573	18.41	105475	18.14	123450	17.52	143655	16.45
	55	–	–	–	–	37698	22.19	55016	22.38	78248	22.82	92476	22.91	108656	22.78	126944	22.35
DSH295	35	25444	16.99	40028	16.97	59962	17.39	86807	17.78	122124	17.64	143447	17.22	167473	16.49	194398	15.39
	45	–	–	35398	21.13	53208	21.33	77368	21.85	109441	22.18	128931	22.13	150985	21.86	175797	21.31
	55	–	–	–	–	45983	26.49	67103	26.87	95575	27.42	113055	27.61	132958	27.66	155480	27.51
DSH381	35	30518	22.58	49235	22.23	74569	22.73	108461	23.26	152851	22.98	179590	22.28	209681	21.05	243368	19.22
	45	–	–	43530	27.41	66291	27.50	96866	28.22	137197	28.74	161627	28.66	189224	28.22	220230	27.31
	55	–	–	–	–	57544	33.78	84428	34.25	120324	35.13	142258	35.47	167173	35.59	195312	35.39
DSH485	35	40492	27.82	63625	28.10	95560	28.96	138816	29.44	195912	28.56	230438	27.32	269368	25.37	313018	22.59
	45	–	–	56457	34.11	85244	34.86	124320	35.87	176204	36.18	207736	35.77	243415	34.82	283556	33.21
	55	–	–	–	–	74094	42.19	108623	43.30	154928	44.36	183284	44.57	215529	44.41	251977	43.75

To: *Evaporating temperature in [°C]*
Tc: *Condensing temperature in [°C]*
Qo: *Cooling Capacity in [W]*
Pe: *Power input in [kW]*
Subcooling: *8.3 K*
Superheat: *11.1 K*
Voltage: *460 V/3/60 Hz*

For more information and performance with other refrigerants, please refer to Coolselector ® 2 at coolselector.danfoss.com or contact Danfoss.

Nomenclature

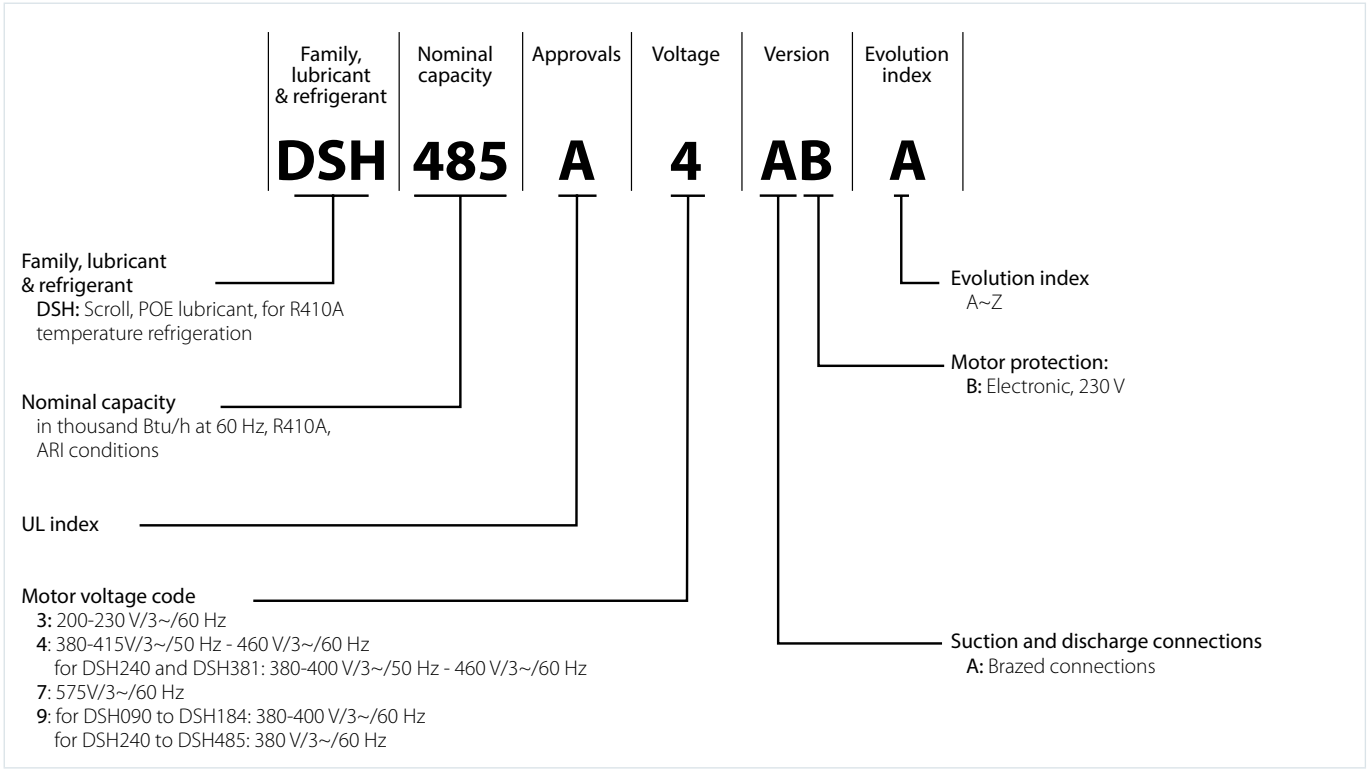

Dimensions

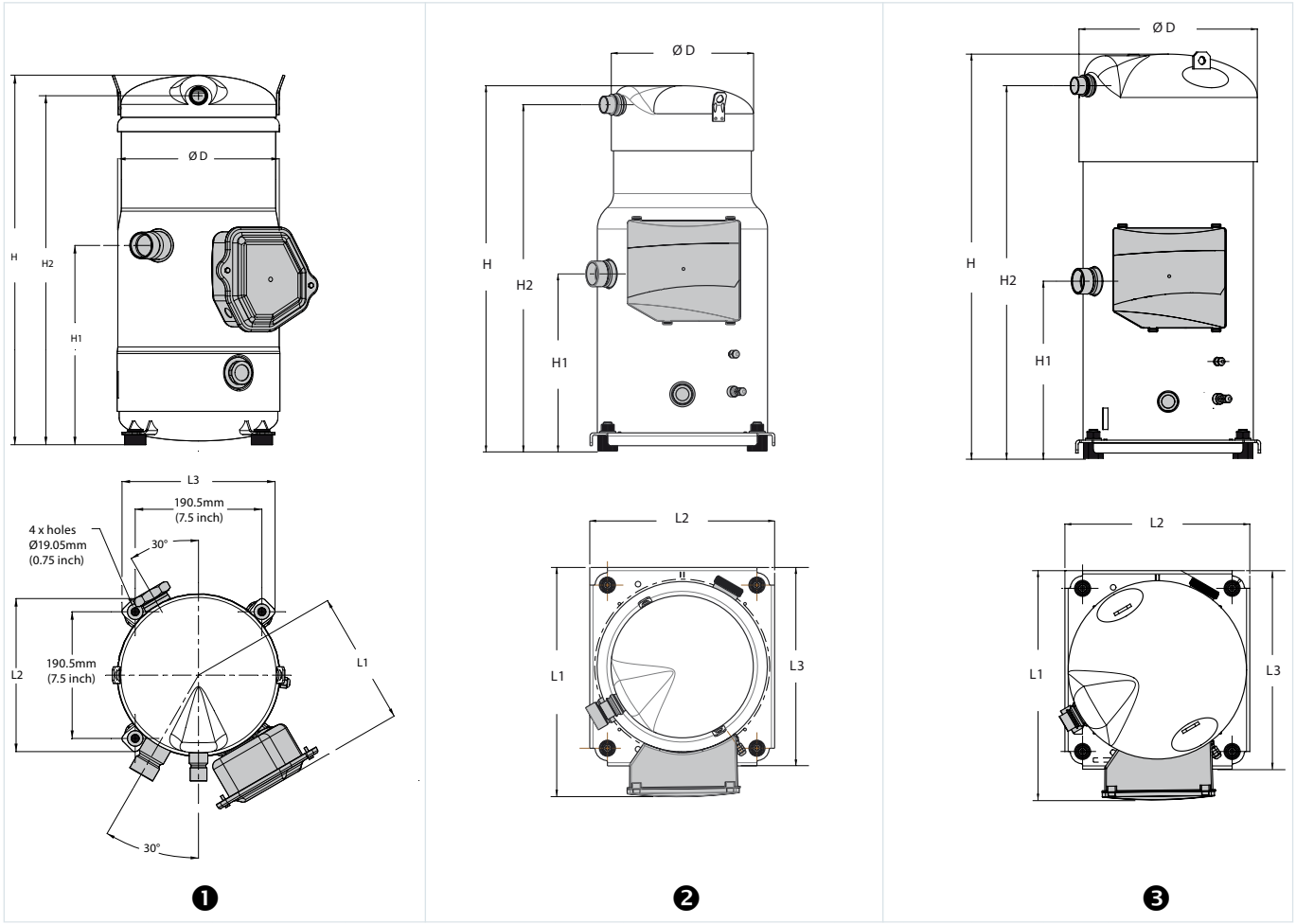

Type	D		H		H1		H2		L1		L2		L3		Outline drawing number	
	[mm]	[in]	[mm]	[in]	[mm]	[in]	[mm]	[in]	[mm]	[in]	[mm]	[in]	[mm]	[in]		
DSH090	243	9.57	485	19.09	235	9.25	451	17.76	180	7.09	230	9.06	230	9.06	❶	8560004
DSH105-120-140-161	243	9.57	542	21.34	278	10.94	509	20.04	180 [1]) 201 [2])	7.09 [1]) 7.91 [2])	230	9.06	230	9.06		8560003 1) 8560041 [2])
DSH184	243	9.57	558	21.97	299	11.77	524	20.63	201	7.91	230	9.06	230	9.06	❷	8560023
DSH240	318	12.52	683	26.89	331	13.03	648	25.51	428	16.85	345	13.58	371	14.61		8556089
DSH295	318	12.52	683	26.89	331	13.03	648	25.51	428	16.85	345	13.58	371	14.61		
DSH381	333	13.11	755	29.72	331	13.03	697	27.44	428 [1]) 477 [2])	16.85 [1]) 18.78 [2])	345	13.58	371	14.61	❸	8556091 1) 8556059 [2])
DSH485	333	13.11	755	29.72	331	13.03	697	27.44	428 [1]) 446 [2])	16.85 [1]) 17.56 [2])	345	13.58	371	14.61		8556133 8556160 [2])

[1]) *compressor motor codes 4, 7, 9*
[2]) *compressor motor code 3*

Technical data and ordering

DSH - Tandem Scroll compressors - R410A - 50/60 Hz

Ordering

Cp1	Cp2	Tandem Model	Suction From	Washer Reference	Washer Inner Diameter		Washer In Suction Of	Kit code no.
					[mm]	[in]		
DSH090	DSH090	DSH180E	Left	Not needed				120Z0634
			Right					
DSH090	DSH105	DSH195U	Left	5312497P01	25	0.98	Cp2	120Z0694
			Right	5312497P05	26	1.02	Cp2	
DSH090	DSH120	DSH210U	Left	5312497P04	27	1.06	Cp2	120Z0694
			Right	5312497P04	27	1.06	Cp2	
DSH105	DSH105	DSH210E	Left	Not needed				120Z0634
			Right					
DSH090	DSH140	DSH230U	Left	5312639P05	23	0.91	Cp1	120Z0694
			Right	5312639P05	23	0.91	Cp1	
DSH120	DSH120	DSH240E	Left	Not needed				120Z0634
			Right					
DSH090	DSH161	DSH251U	Left	5312639P07	21	0.83	Cp1	120Z0694
			Right	5312639P07	21	0.83	Cp1	
DSH120	DSH140	DSH260U	Left	5312497P04	27	1.06	Cp1	120Z0692
			Right	5312497P04	27	1.06	Cp1	
DSH090	DSH184	DSH274U	Left	5312639P01	20	0.79	Cp1	120Z0693
			Right	5312639P01	20	0.79	Cp1	
DSH120	DSH161	DSH281U	Left	5312497P01	25	0.98	Cp1	120Z0692
			Right	5312497P01	25	0.98	Cp1	
DSH140	DSH140	DSH280E	Left	Not needed				120Z0634
			Right					
DSH105	DSH184	DSH289U	Left	5312497P03	23	0.91	Cp1	120Z0693
			Right	5312497P03	23	0.91	Cp1	
DSH140	DSH161	DSH301U	Left	5312497P08	27.5	1.08	Cp1	120Z0692
			Right	5312497P05	26	1.02	Cp1	
DSH120	DSH184	DSH304U	Left	5312497P06	24	0.94	Cp1	120Z0694
			Right	5312497P06	24	0.94	Cp1	
DSH161	DSH161	DSH322E	Left	Not needed				120Z0634
			Right					
DSH140	DSH184	DSH324U	Left	5312497P01	25	0.98	Cp1	120Z0694
			Right	5312497P01	25	0.98	Cp1	
DSH161	DSH184	DSH345U	Left	5312639P08	27.5	1.08	Cp1	120Z0694
			Right	5312639P08	27.5	1.08	Cp1	
DSH120	DSH240	DSH360X	Left	5312497P06	24	0.94	Cp1	120Z0709
			Right	5312497P01	25	0.98	Cp1	
DSH184	DSH184	DSH368E	Left	Not needed				120Z0634
			Right					
DSH184	DSH240	DSH424X	Left	5311579P10	35.5	1.4	CP2	120Z0709
			Right	5311579P10	35.5	1.4	CP2	
DSH161	DSH295	DSH456X	Left	5312497P01	25	0.98	Cp1	120Z0709
			Right	5312497P05	26	1.02	Cp1	
DSH184	DSH295	DSH479X	Left	5312497P05	26	1.02	CP1	120Z0709
			Right	5312497P05	26	1.02	CP1	
DSH240	DSH240	DSH482	Left	Not needed				7777041
			Right					
DSH240	DSH295	DSH535	Left	5311579P01	31	1.22	Cp1	7777037
			Right					
DSH184	DSH381	DSH565X	Left	5312497P06	24	0.94	CP1	120Z0709
			Right	5312497P06	24	0.94	CP1	
DSH295	DSH295	DSH590	Left	Not needed				7777041
			Right					
DSH240	DSH381	DSH620	Left	5311579P05	29	1.14	Cp1	7777048
			Right					
DSH295	DSH381	DSH675	Left	5311579P01	31	1.22	Cp1	7777037
			Right					
DSH240	DSH485	DSH725	Left	5311579P09	24	0.94	Cp1	120Z0569
			Right					
DSH381	DSH381	DSH760	Left	Not needed				7777041
			Right					

Tandem to be achieved by assembly of individual compressors
For cross platform tandem application, which tandem model name ending with X, a external non-return valve (NRV) in highly recommended to install on DSH120/161/184 discharge line.

Technical data and ordering

DSH - Tandem Scroll compressors - R410A - 50/60 Hz (cont.)

Ordering

Cp1	Cp2	Tandem Model	Suction From	Washer Reference	Washer Inner Diameter		Washer In Suction Of	Kit code no.
					[mm]	[in]		
DSH295	DSH485	DSH780	Left	5311579P07	27	1.06	Cp1	120Z0551
			Right					
DSH381	DSH485	DSH865	Left	5311579P08	30	1.18	Cp1	120Z0550
			Right					
DSH485	DSH485	DSH970	Left	Not needed				120Z0578
			Right					

Tandem to be achieved by assembly of individual compressors
For cross platform tandem application, which tandem model name ending with X, a external non-return valve (NRV) in highly recommended to install on DSH120/161/184 discharge line.

DSH - Trio Scroll compressors - R410A - 50/60 Hz

Ordering

Cp1	Cp2	Cp3	Tandem Model	Suction From	Washer Reference	Washer Inner Diameter		Washer In Suction Of	Kit Code o.
						[mm]	[in]		
DSH140	DSH140	DSH140	DSH420	Left	5312497P05	26	1.02	CP1	120Z0672
					5312497P06	24	0.94	CP3	
				Right	5312639P04	24.5	0.96	CP1	
					5312639P04	24.5	0.96	CP3	
DSH161	DSH161	DSH161	DSH483	Left	5312497P05	26	1.02	CP1	120Z0684
					5312497P01	25	0.98	CP3	
				Right	5312497P05	26	1.02	CP1	
					5312497P01	25	0.98	CP3	
DSH184	DSH184	DSH184	DSH552	Left	5312497P04	27	1.06	CP1	120Z0685
					5312497P06	24	0.94	CP3	
				Right	5312497P08	26.5	1.04	CP1	
					5312639P04	24.5	0.96	CP3	
DSH240	DSH240	DSH240	DSH720	Left	5311579P08	30	1.18	Cp3	120Z0673
				Right	5311579P03	34.5	1.36	Cp1 and Cp3	7777039
DSH295	DSH295	DSH295	DSH885	Left	5311579P08	30	1.18	Cp3	120Z0673
				Right	5311579P03	34.5	1.36	Cp1 and Cp3	7777039
DSH381	DSH381	DSH381	DSH1140	Left	5311579P01	31	1.22	Cp1	120Z0686
					5311579P05	29	1.14	Cp3	
				Right	5311579P01	31	1.22	Cp1	120Z0688
DSH381	DSH381	DSH485	DSH1245	Left	5311579P05	29	1.14	Cp1	7777063
				Right					
DSH485	DSH485	DSH381	DSH1350	Left	5311579P05	29	1.14	Cp3	7777063
				Right					
DSH485	DSH485	DSH485	DSH1455	Left	5311579P02	33	1.3	Cp2 and Cp3	7777040
				Right					

Tandem to be achieved by assembly of individual compressors
For cross platform tandem application, which tandem model name ending with X, a external non-return valve (NRV) in highly recommended to install on DSH120/161/184 discharge line.

Technical data and ordering

SH - Scroll compressors - R410A - 50 / 60 Hz

Technical data

Type		Nominal tons 60 Hz	Nominal cooling capacity		Power input	COP	E.E.R.	Swept volume	Displacement [1]	Oil charge	Net weight [2]
		[TR]	[W]	[Btu/h]	[kW]	[W]/[W]	[Btu/h]/[W]	[cm³/rev]	[m³/h]	[dm³]	[kg]
50 Hz	SH090	7.5	22300	76100	7.19	3.10	10.58	88.40	15.4	3.0	58.0
	SH105	9	26800	91500	8.47	3.17	10.82	103.50	18.0	3.3	64.0
	SH120	10	30000	102400	9.46	3.17	10.82	116.90	20.3	3.3	64.0
	SH140	12	34700	118400	10.58	3.28	11.19	133.00	23.1	3.3	67.0
	SH161	13	38800	132400	12.15	3.19	10.89	151.70	26.4	3.3	69.0
	SH184	15	44700	152600	13.73	3.25	11.09	170.30	29.6	3.6	71.5
	SH180	15	44500	151900	13.87	3.21	10.96	170.20	29.6	6.7	108.0
	SH240	20	59700	203800	18.50	3.23	11.02	227.60	39.6	6.7	108.0
	SH295 [3]	25	73200	249800	22.51	3.25	11.09	276.20	48.1	6.7	111.0
	SH380	30	90500	308900	28.18	3.21	10.96	345.00	60.0	6.7	159.0
	SH485	40	116400	397300	35.65	3.26	11.13	442.60	77.0	6.7	175.0
60 Hz	SH090	7.5	27100	92500	8.57	3.16	10.78	88.40	18.6	3.0	58.0
	SH105	9	32100	109600	9.96	3.22	10.99	103.50	21.8	3.3	64.0
	SH120	10	36800	125600	11.25	3.27	11.16	116.90	24.6	3.3	64.0
	SH140	12	42300	144400	12.77	3.31	11.30	133.00	27.9	3.3	67.0
	SH161	13	47200	161100	14.43	3.27	11.16	151.70	31.9	3.3	69.0
	SH184	15	54000	184300	16.45	3.28	11.19	170.30	35.8	3.6	71.5
	SH180	15	54300	185300	16.58	3.27	11.16	170.20	35.7	6.7	108.0
	SH240	20	72200	246400	22.10	3.27	11.16	227.60	47.8	6.7	108.0
	SH295 [3]	25	88500	302000	27.21	3.25	11.09	276.20	58.0	6.7	111.0
	SH380	30	109600	374100	33.99	3.22	10.99	345.00	72.3	6.7	159.0
	SH485	40	140600	479900	43.28	3.25	11.09	442.60	92.9	6.7	175.0

[1]) Displacement at nominal speed: 2900 rpm at 50 Hz, 3500 rpm at 60 Hz
[2]) Net weight with oil charge

TR) *Ton of Refrigeration*
EER) *Energy Efficiency Ratio*
COP) *Coefficient Of Performance*

Standard rating conditions ARI standard
Refrigerant: R410A

Evaporating temperature: 7.2 °C
Condensing temperature: 54.4 °C

Superheat: 11.1 K
Subcooling: 8.3 K

Subject to modification without prior notification
Data given for motor code 4 compressor

[3]) SH295 replaces SH300. SH300 model remains available for after-market

SH - Scroll compressors - R410A - 50 / 60 Hz

Ordering single pack

Compressor model	Connections	Mounting feet	Motor protection	Code no.			
				3	4	7	9
				200-230/3/60	460/3/60 380-400/3/50	575/3/60 500/3/50	380/3/60
SH090	Brazed	Flexible	Internal	120H0001	120H0003	120H0007	120H0009
SH105	Brazed	Flexible	Internal	120H0209	120H0211	120H0215	120H0217
SH120	Brazed	Flexible	Internal	120H0011	120H0013	120H0017	120H0019
SH140	Brazed	Flexible	Internal	120H0199	120H0201	120H0205	120H0207
SH161	Brazed	Flexible	Internal	120H0021	120H0023	120H0027	120H0029
SH184	Brazed	Flexible	Internal	120H0359	120H0361	120H0365	120H0367
SH180	Brazed	Rigid	Module 24V AC [1])	120H0265	120H0267	–	120H0271
	Brazed	Rigid	Module 110-240 V [1])	120H0273	120H0275	120H0277	120H0279
SH240	Brazed	Rigid	Module 24V AC [1])	120H0289	120H0291	–	120H0295
	Brazed	Rigid	Module 110-240 V [1])	120H0297	120H0299	120H0301	120H0303
SH295	Brazed	Rigid	Module 24V AC [1])	120H0851	120H0825	–	120H0841
	Brazed	Rigid	Module 110-240 V [1])	120H0853	120H0827	120H0835	120H0843
SH380	Brazed	Rigid	Module 24V AC [1])	120H0151	120H0253	–	120H0261
	Brazed	Rigid	Module 110-240 V [1])	120H0152	120H0255	120H0259	120H0263
SH485	Brazed	Rigid	Module 24V AC [1])	–	120H1062	–	120H1072
	Brazed	Rigid	Module 110-240 V [1])	–	120H1064	120H1098	120H1074

[1]) Electronic motor protection, module located in terminal box

Technical data and ordering

SH - Scroll compressors - R410A - 50 / 60 Hz

Ordering industrial pack

Compressor model	Connections	Mounting feet	Motor protection	Code no.		
				3	4	9
				200-230/3/60	400/3/50 460/3/60	380/3/60
SH090	Brazed	Flexible	Internal	120H0002	120H0004	120H0010
SH105	Brazed	Flexible	Internal	120H0210	120H0212	120H0218
SH120	Brazed	Flexible	Internal	120H0012	120H0014	120H0020
SH140	Brazed	Flexible	Internal	120H0200	120H0202	120H0208
SH161	Brazed	Flexible	Internal	120H0022	120H0024	120H0030
SH184	Brazed	Flexible	Internal	120H0360	120H0362	120H0368
SH180	Brazed	Rigid	Module 24V AC [1]	120H0266	120H0268	120H0272
	Brazed	Rigid	Module 110-240 V [1]	120H0274	120H0276	120H0280
SH240	Brazed	Rigid	Module 24V AC [1]	120H0290	120H0292	120H0296
	Brazed	Rigid	Module 110-240 V [1]	120H0298	120H0300	120H0304
SH295	Brazed	Rigid	Module 24V AC [1]	120H0852	120H0826	120H0842
	Brazed	Rigid	Module 110-240 V [1]	120H0854	120H0828	120H0844
SH380	Brazed	Rigid	Module 24V AC [1]	120H0250	120H0254	120H0262
	Brazed	Rigid	Module 110-240 V [1]	120H0252	120H0256	120H0264
SH485	Brazed	Rigid	Module 24V AC [1]	-	120H1063	120H1073
	Brazed	Rigid	Module 110-240 V [1]	-	120H1065	120H1075

[1]) *Electronic motor protection, module located in terminal box*

SH - Scroll compressors - R410A - 50 Hz

Performance table

Compressor model	To	-20		-15		-10		-5		0		5		10		15	
	Tc	Qo	Pe	Qo	Pe	Qo	Pe	Qo	Pe	Qo	Pe	Qo	Pe	Qo	Pe	Qo	Pe
SH090-4	35	9700	4.5	12100	4.6	15000	4.7	18200	4.8	22000	4.8	26300	4.9	31200	4.9	36800	4.9
	45	8500	5.6	10700	5.7	13200	5.7	16200	5.8	19600	5.9	23500	5.9	28000	6.0	33000	6.0
	55	–	–	–	–	11300	7.1	13900	7.1	16900	7.2	20400	7.3	24400	7.3	28900	7.4
SH105-4	35	11200	5.4	14100	5.5	17400	5.6	21400	5.7	25900	5.7	31200	5.9	37200	6.0	44000	6.1
	45	10200	6.7	12800	6.7	15900	6.8	19400	6.8	23500	6.9	28100	7.0	33400	7.2	39500	7.3
	55	–	–	–	–	13900	8.4	17000	8.4	20600	8.5	24600	8.5	29200	8.6	34500	8.8
SH120-4	35	13100	5.9	16300	6.0	20100	6.1	24500	6.2	29500	6.3	35300	6.4	41900	6.5	49400	6.5
	45	11400	7.4	14300	7.4	17800	7.5	21800	7.6	26300	7.7	31600	7.8	37600	7.9	44400	7.9
	55	–	–	–	–	15200	9.3	18700	9.4	22800	9.5	27400	9.6	32700	9.6	38800	9.7
SH140-4	35	15700	6.8	19300	6.9	23500	7.0	28400	7.0	34000	7.1	40400	7.2	47700	7.2	56000	7.2
	45	13700	8.3	17000	8.4	20900	8.5	25400	8.6	30500	8.6	36400	8.7	43200	8.8	50800	8.8
	55	–	–	–	–	18000	10.5	22000	10.5	26500	10.6	31800	10.7	37900	10.7	44800	10.8
SH161-4	35	17300	7.8	21500	7.9	26300	7.9	31900	8.0	38300	8.0	45700	8.1	54100	8.2	63600	8.4
	45	15100	9.8	18900	9.8	23300	9.8	28400	9.8	34300	9.9	41000	9.9	48700	10.0	57400	10.1
	55	–	–	–	–	19900	12.4	24300	12.3	29500	12.3	35500	12.3	42400	12.3	50200	12.3
SH180-4	35	19200	9.1	24000	9.1	29600	9.1	36000	9.2	43500	9.2	52100	9.2	61800	9.3	72700	9.4
	45	16600	11.3	21000	11.3	26200	11.3	32100	11.3	39000	11.3	46800	11.3	55700	11.3	65800	11.4
	55	–	–	–	–	22300	14.1	27600	14.1	33700	14.1	40700	14.1	48700	14.0	57800	14.0
SH184-4	35	20200	8.7	24900	8.8	30300	9.0	36700	9.2	44000	9.4	52400	9.5	61900	9.7	72700	9.8
	45	17800	10.6	22100	10.8	27100	10.9	32800	11.1	39400	11.2	47000	11.4	55700	11.6	65500	11.8
	55	–	–	–	–	23400	13.4	28400	13.5	34300	13.6	41000	13.8	48700	14.0	57500	14.2
SH240-4	35	26700	12.0	33200	12.0	40700	12.1	49200	12.1	59000	12.2	70200	12.3	82800	12.4	97100	12.6
	45	23300	14.8	29300	14.9	36100	15.0	43900	15.0	52800	15.1	63000	15.1	74500	15.2	87400	15.3
	55	–	–	–	–	30900	18.6	37800	18.6	45800	18.7	54800	18.7	65100	18.8	76800	18.8
SH295-4	35	32700	14.5	40600	14.6	49800	14.7	60300	14.8	72400	14.9	86100	15.1	101700	15.5	119200	15.9
	45	28700	17.9	35800	18.1	44100	18.2	53600	18.3	64600	18.3	77100	18.5	91200	18.7	107200	18.9
	55	–	–	–	–	37800	22.4	46200	22.6	56000	22.7	67100	22.7	79900	22.9	94300	23.0
SH380-4	35	40400	18.4	50000	18.6	61100	18.7	74000	18.8	88900	19.0	105900	19.2	125300	19.6	147200	20.2
	45	35500	22.3	44200	22.7	54300	22.9	66000	23.0	79600	23.1	95100	23.3	112900	23.5	133000	23.8
	55	–	–	–	–	46600	28.0	57000	28.2	69000	28.3	82900	28.5	98900	28.6	117100	28.8
SH485-4	35	52600	23.0	64800	23.5	78900	23.8	95400	24.1	114400	24.1	136200	23.9	161100	23.4	189400	22.6
	45	46700	28.0	57700	28.4	70600	28.8	85400	29.2	102500	29.4	122200	29.5	144700	29.4	170300	29.0
	55	–	–	–	–	61200	35.0	74300	35.4	89400	35.8	106900	36.0	126900	36.1	149800	36.0

To: *Evaporating temperature in [°C]*
Tc: *Condensing temperature in [°C]*
Pe: *Power input in [kW]*
Qo: *Cooling capacity in [W]*
Subcooling: *8.3 K*
Superheat: *11.1 K*
Voltage: *400 V / 3 / 50 Hz*

For more information and performance with other refrigerants, please refer to Coolselector ® 2 at coolselector.danfoss.com or contact Danfoss.

Technical data and ordering

SH - Scroll compressors - R410A - 60 Hz

Performance table

Compressor model	To	-20		-15		-10		-5		0		5		10		15	
	Tc	Qo	Pe	Qo	Pe	Qo	Pe	Qo	Pe	Qo	Pe	Qo	Pe	Qo	Pe	Qo	Pe
SH090	35	11500	5.53	14400	5.56	17800	5.61	21800	5.66	26400	5.72	31600	5.79	37600	5.87	44400	5.96
	45	10000	6.84	12700	6.87	15800	6.90	19500	6.94	23600	6.98	28500	7.04	33900	7.11	40200	7.20
	55	–	–	–	–	13500	8.58	16800	8.60	20500	8.62	24800	8.66	29700	8.71	35300	8.77
SH105	35	14200	6.51	17500	6.59	21400	6.68	25900	6.78	31000	6.88	37000	6.96	43700	7.03	51300	7.06
	45	12500	7.91	15600	7.94	19200	8.01	23300	8.10	28000	8.21	33500	8.33	39700	8.44	46800	8.55
	55	–	–	–	–	16600	9.76	20300	9.81	24500	9.90	29400	10.01	35100	10.15	41500	10.29
SH120	35	16000	7.15	19900	7.26	24500	7.38	29800	7.51	35800	7.67	42800	7.85	50700	8.06	59700	8.31
	45	14000	8.80	17600	8.88	21800	8.98	26600	9.08	32200	9.21	38500	9.36	45700	9.55	53900	9.77
	55	–	–	–	–	18700	11.08	23000	11.14	28000	11.22	33700	11.32	40100	11.46	47500	11.63
SH140	35	19100	8.18	23400	8.31	28500	8.44	34400	8.59	41200	8.73	49000	8.88	57900	9.02	67900	9.16
	45	16900	9.97	20900	10.07	25500	10.19	30900	10.32	37100	10.47	44300	10.63	52400	10.80	61700	10.96
	55	–	–	–	–	22100	12.47	26900	12.57	32400	12.70	38800	12.85	46100	13.01	54500	13.18
SH161	35	21400	9.22	26300	9.34	32100	9.47	38700	9.60	46400	9.75	55200	9.91	65200	10.09	76600	10.28
	45	18700	11.37	23300	11.47	28500	11.56	34600	11.67	41600	11.79	49600	11.92	58800	12.07	69200	12.24
	55	–	–	–	–	24500	14.34	29900	14.40	36100	14.48	43200	14.56	51500	14.67	60800	14.79
SH180	35	23400	10.85	29300	10.89	36100	10.93	44000	10.96	53200	11.00	63600	11.03	75500	11.07	88900	11.11
	45	20300	13.46	25700	13.48	31900	13.51	39200	13.54	47600	13.56	57200	13.59	68100	13.62	80400	13.65
	55	–	–	–	–	27200	16.86	33600	16.84	41100	16.82	49600	16.81	59400	16.79	70600	16.78
SH184	35	24500	10.44	30100	10.66	36600	10.89	44100	11.11	52700	11.32	62600	11.51	73800	11.66	86500	11.76
	45	21600	12.68	26700	12.87	32700	13.08	39500	13.31	47500	13.55	56500	13.77	66800	13.98	78500	14.16
	55	–	–	–	–	28300	15.90	34400	16.09	41500	16.31	49600	16.53	58900	16.76	69500	16.98
SH240	35	32800	14.32	40400	14.41	49200	14.48	59400	14.56	71200	14.69	84600	14.89	100000	15.20	117300	15.65
	45	28800	17.53	35700	17.71	43800	17.83	53000	17.92	63700	18.01	75900	18.14	89900	18.33	105800	18.62
	55	–	–	–	–	37800	21.90	46000	22.07	55400	22.20	66300	22.32	78700	22.46	93000	22.66
SH295	35	40300	17.44	49600	17.66	60300	17.86	72800	18.07	87200	18.37	103700	18.79	122400	19.39	143600	20.23
	45	35500	21.18	43900	21.55	53700	21.82	65000	22.04	78000	22.26	93000	22.54	110100	22.93	129400	23.48
	55	–	–	–	–	46400	26.60	56400	26.92	68000	27.18	81300	27.42	96500	27.69	113800	28.06
SH380	35	48700	22.23	60200	22.44	73600	22.71	89200	23.02	107100	23.37	127600	23.77	151000	24.19	177500	24.65
	45	42800	27.08	53300	27.23	65400	27.44	79600	27.69	96000	28.00	114800	28.35	136300	28.73	160800	29.15
	55	–	–	–	–	56400	33.48	68900	33.68	83500	33.94	100400	34.24	119900	34.58	142100	34.97
SH485	35	63100	28.00	77700	28.38	94700	28.81	114500	29.22	137400	29.50	163800	29.56	193900	29.33	228200	28.71
	45	55800	34.23	69100	34.42	84500	34.79	102400	35.24	123100	35.69	147100	36.05	174500	36.23	205800	36.14
	55	–	–	–	–	73300	42.35	89200	42.68	107600	43.12	129000	43.58	153500	43.99	181700	44.24

To: *Evaporating temperature in [°C]*
Tc: *Condensing temperature in [°C]*
Pe: *Power input in [kW]*
Qo: *Cooling capacity in [W]*
Subcooling: *8.3 K*
Superheat: *11.1 K*
Voltage: *400 V / 3 / 60 Hz*

For more information and performance with other refrigerants, please refer to Coolselector ® 2 at coolselector.danfoss.com or contact Danfoss.

Nomenclature and Dimensions

Family, lubricant & refrigerant	Normal capacity	Approvals	Voltage	Version	Evolution index
SH	**485**	**A**	**4**	**AB**	**A**

Family, refrigerant & lubrificant:
SH: scroll, POE lubrificant for R410A

Nominal capacity:
in thousand [Btu/h] at 60 Hz, R410A, ARI condition

UL index

Motor voltage code:
3:200-230 V/3~/60 Hz
4: 380-400 V/3~/50 Hz - 460 V/3~/60 Hz
for SH295 & SH485: 380-415V/3~/50 Hz - 460 V/3~/60 Hz
6: 230 V/3~/50 Hz
7: 500 V/3~/50 Hz - 575V/3~/60 Hz
9: 380 V/3~/60 Hz

Evolution index:
A~Z

Motor protection:
L: Internal overload protector
A: Electronic, 24V AC
B: Electronic, 110-240 V
C: Customized electrical box

Suction and discharge connections:
A: Brazed connections

SH090 / 105 / 120 / 140 [3]) / 161 [3])

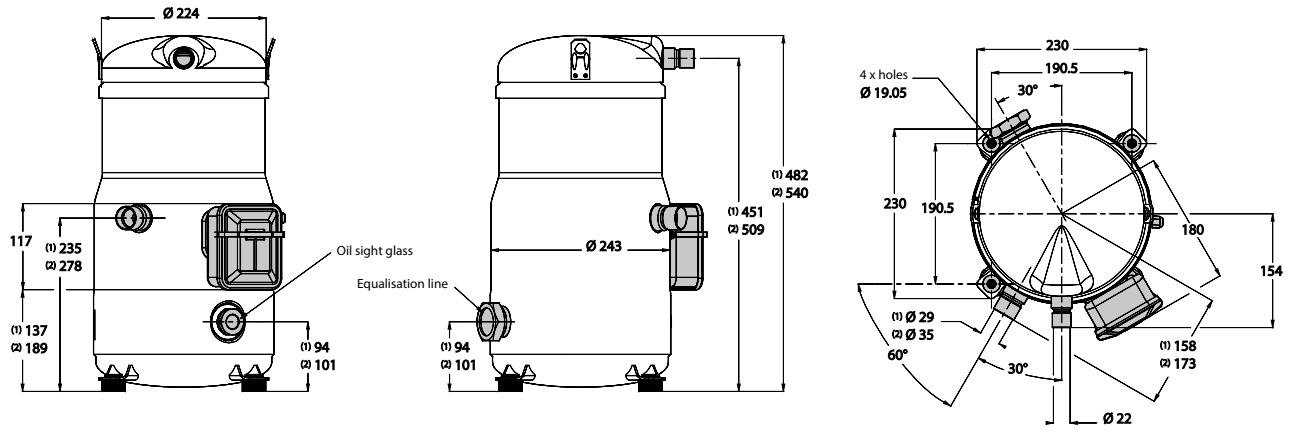

[1]) *SH090*
[2]) *SH105 / 120 / 140 / 161*
[3]) *except code 3*

Dimensions

SH 140 / 161 code 3 and SH184

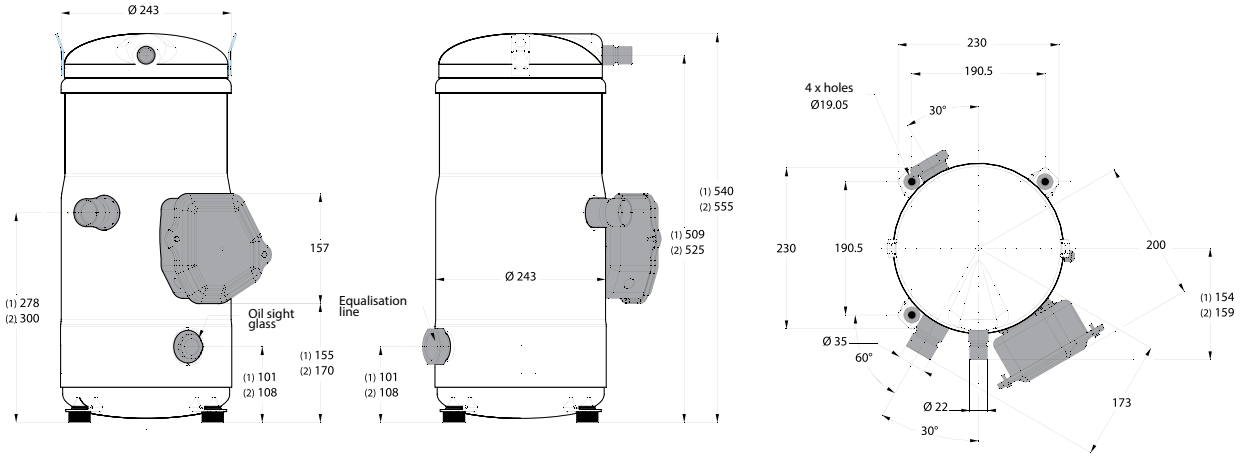

[1]) SH140 / 161 code 3
[2]) SH184

SH380-485 (except code 3)

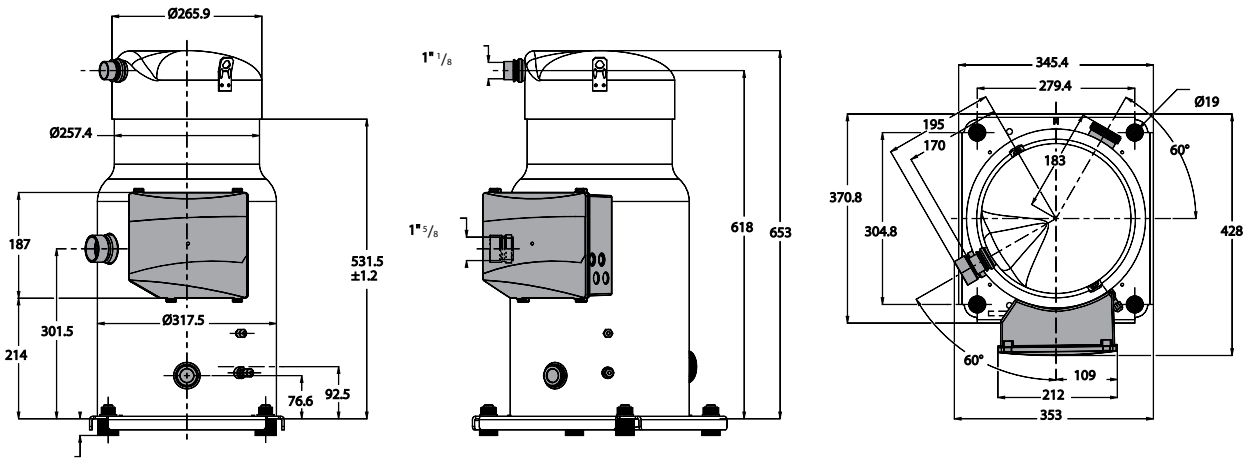

SH180-240-295

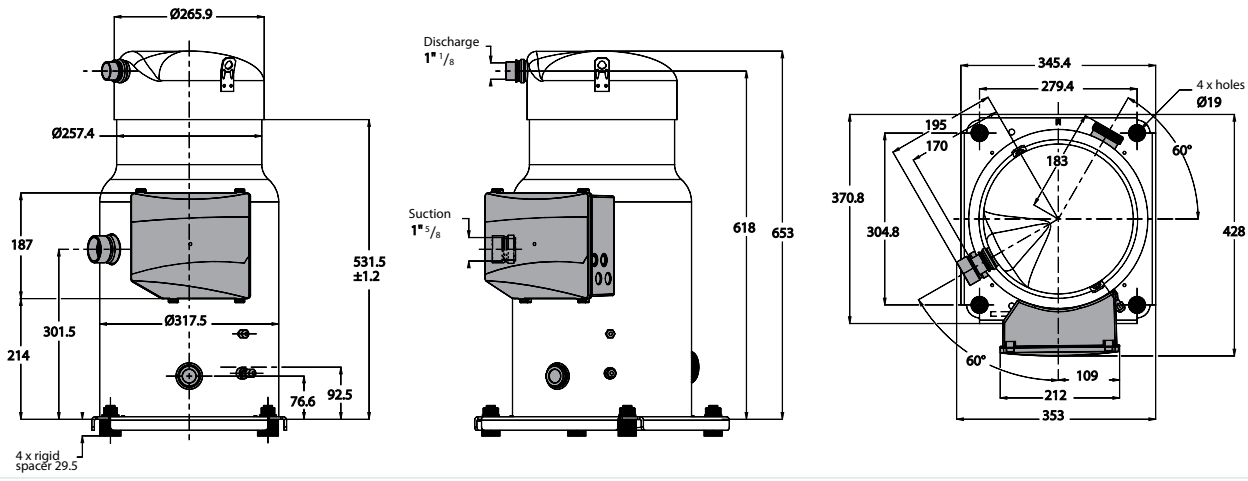

Technical data

Tandem models

Ordering

CP1		CP2		Tandem model	Suction from	Washer reference	Washer Ø [mm]	Washer in suction of	Kit code no.
SH090	+	SH090	=	SH182	Left	Not needed			7777044
					Right				
SH090	+	SH105	=	SH195	Left	5312497P03	23	CP2	7777043
					Right	5312497P03	23	CP2	
SH090	+	SH120	=	SH210	Left	5312497P01	25	CP2	7777043
					Right	5312497P02	24	CP1	
SH105	+	SH105	=	SH212	Left	Not needed			7777044
					Right				
SH090	+	SH140	=	SH230	Left	Not needed			7777043
					Right				
SH120	+	SH120	=	SH242	Left	Not needed			7777044
					Right				
SH120	+	SH140	=	SH260	Left	Not needed			7777042
					Right	5312497P01	25	CP1	
SH120	+	SH161	=	SH281	Left	5312497P01	25	CP1	7777042
					Right	5312497P03	23	CP1	
SH140	+	SH140	=	SH282	Left	Not needed			7777044
					Right				
SH140	+	SH161	=	SH301	Left	5312497P05	26	CP1	7777042
					Right				
SH120	+	SH184	=	SH304	Left	5312497P03	23	CP1	7777052
					Right				
SH161	+	SH161	=	SH322	Left	Not needed			7777044
					Right				
SH140	+	SH184	=	SH324	Left	5312479P06	35	CP1	7777052
					Right				
SH161	+	SH184	=	SH345	Left	5312479P05	26	CP1	7777052
					Right				
SH180	+	SH180	=	SH360	Left	Not needed			7777041
					Right				
SH184	+	SH184	=	SH368	Left	Not needed			7777054
					Right				
SH180	+	SH240	=	SH420	Left	5311579P01	31	CP1	7777037
					Right	5311579P01	31	CP1	
SH180	+	SH295	=	SH475	Left	5311579P04	26	CP1	7777038
					Right	5311579P04	26	CP1	
SH240	+	SH240	=	SH482	Left	Not needed			7777041
					Right				
SH240	+	SH295	=	SH535	Left	5311579P01	31	CP1	7777037
					Right	5311579P01	31	CP1	
SH180	+	SH380	=	SH560	Left	5311579P04	26	CP1	7777038
					Right	5311579P04	26	CP1	
SH295	+	SH295	=	SH590	Left	Not needed			7777041
					Right				
SH240	+	SH380	=	SH620	Left	5311579P05	29	CP1	7777048
					Right	5311579P05	29	CP1	
SH295	+	SH380	=	SH675	Left	5311579P01	31	CP1	7777037
					Right	5311579P01	31	CP1	
SH240	+	SH485	=	SH725	Left	5311579P09	24	CP1	120Z0569
					Right				
SH380	+	SH380	=	SH760	Left	Not needed			7777041
					Right				
SH295	+	SH485	=	SH780	Left	5311579P07	27	CP1	120Z0551
					Right				
SH380	+	SH485	=	SH865	Left	5311579P08	30	CP1	120Z0550
					Right				
SH485	+	SH485	=	SH970	Left	Not needed			120Z0578
					Right				

Technical data

Trio models

Ordering

CP1		CP2		CP3		Trio model	Suction from	Washer reference	Washer Ø [mm]	Washer in suction of	Kit code no.
SH180	+	SH180	+	SH180	=	SH550	Left	5311579P02	33	CP3	7777040
							Right	5311579P03	34.5	CP1 and CP3	7777039
SH184	+	SH184	+	SH184	=	SH552	Right	5312497P05	33	CP1 and CP3	120Z0640
SH240	+	SH240	+	SH240	=	SH720	Left	5311579P08	33	CP3	120Z0673
							Right	5311579P03	34.5	CP1 and CP3	7777039
SH295	+	SH295	+	SH295	=	SH885	Left	5311579P08	33	CP3	120Z0673
							Right	5311579P03		CP1 and CP3	7777039
SH380	+	SH380	+	SH380	=	SH1140	Left	5311579P01/ 5311579P05	29/31	CP1 and CP3	120Z0686
							Right		Not needed		7777049
SH485	+	SH485	+	SH485	=	SH1455	Left	5311579P02	33	CP2 and CP3	7777040
							Right				

SM / SY / SZ, S-Series, Scroll compressors

By combining an in-depth understanding of customer needs with continuous investment in product technology Danfoss is able to offer you the SM/SY/SZ series, which comprise a 7-30TR industry-leading range of scroll compressors optimized for rooftop and chiller applications.

Available in a large variety of single and manifold models for R407C, R134a and R22. Well established technology with proven track records.



Features
SM / SY / SZ

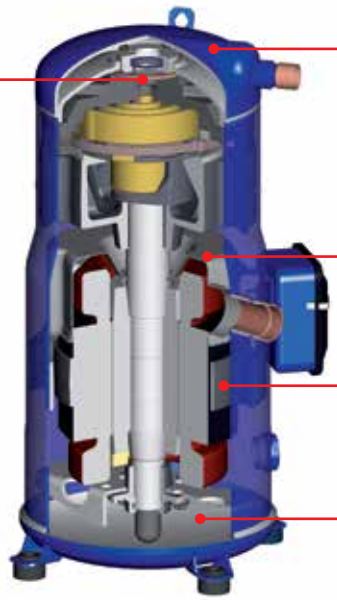

Facts

S-Series compressor design
- Environmentally-friendly lead-free bearings
- Prepared for manifolding with oil sight glass and oil equalizer
- Easy maintenance with oil drain tube

Technical data and ordering

SM / SY / SZ - Scroll compressors - R22 / R407C - 50 Hz

Technical data

Compressor model		Nominal Cap. 60 Hz	Nominal cooling capacity		Power input	COP	E.E.R.	Swept volume	Displacement [1]	Oil charge	Net weight [2]
		[TR]	[W]	[Btu/h]	[kW]	[W]/[W]	[Btu/h]/[W]	[cm³/rev]	[m³/h]	[dm³]	[kg]
R22 SINGLE	SM084	7	20 400	69 600	6.12	3.33	11.4	114.5	19.9	3.25	64
	SM090	7.5	21 800	74 400	6.54	3.33	11.4	120.5	21	3.25	65
	SM100	8	23 100	78 800	6.96	3.33	11.4	127.2	22.1	3.25	65
	SM110	9	25 900	88 400	7.82	3.32	11.3	144.2	25.1	3.25	73
	SM112	9.5	27 600	94 200	7.92	3.49	11.9	151.5	26.4	3.3	64
	SM120	10	30 100	102 700	8.96	3.36	11.5	166.6	29	3.25	73
	SM124	10	31 200	106 500	8.75	3.56	12.2	169.5	29.5	3.3	64
	SM147	12	36 000	122 900	10.08	3.57	12.2	193.5	33.7	3.3	67
	SM148	12	36 100	123 200	10.8	3.34	11.4	199	34.6	3.6	88
	SM161	13	39 000	133 100	11.59	3.37	11.5	216.6	37.7	3.6	88
	SM175	14	42 000	143 300	12.47	3.37	11.5	233	40.5	6.2	100
	SM/SY185	15	45 500	155 300	13.62	3.34	11.4	249.9	43.5	6.2	100
	SY240	20	61 200	208 900	18.2	3.36	11.5	347.8	60.5	8	150
	SY300	25	78 200	266 900	22.83	3.43	11.7	437.5	76.1	8	157
	SY380	30	94 500	322 500	27.33	3.46	11.8	531.2	92.4	8.4	158
R407C SINGLE	SZ084	7	19 300	65 900	6.13	3.15	10.8	114.5	19.9	3.25	64
	SZ090	7.5	20 400	69 600	6.45	3.16	10.8	120.5	21	3.25	65
	SZ100	8	21 600	73 700	6.84	3.15	10.8	127.2	22.1	3.25	65
	SZ110	9	24 600	84 000	7.76	3.17	10.8	144.2	25.1	3.25	73
	SZ120	10	28 600	97 600	8.99	3.17	10.8	166.6	29	3.25	73
	SZ147	12	34 900	119 079	9.92	3.52	12	193.5	33.7	3.3	67
	SZ148	12	35 100	119 800	10.99	3.19	10.9	199	34.6	3.6	88
	SZ161	13	38 000	129 700	11.84	3.21	11	216.6	37.7	3.6	88
	SZ175	14	40 100	136 900	12.67	3.17	10.8	233	40.5	6.2	100
	SZ185	15	43 100	147 100	13.62	3.16	10.8	249.9	43.5	6.2	100
	SY240	20	59 100	201 700	18.55	3.19	10.9	347.8	60.5	8	150
	SY300	25	72 700	248 100	22.73	3.2	10.9	437.5	76.1	8	157
	SY380	30	89 600	305 800	27.59	3.25	11.1	531.2	92.4	8.4	158

TR: *Ton of Refrigeration*
COP: *Coefficient Of Performance*
EER: *Energy Efficiency Ratio*
[1]) Displacement at nominal speed: 2900 rpm at 50 Hz, 3500 rpm at 60 Hz
[2]) Net weight with oil charge
Data given for code 4 compressor, for full data details and capacity tables refer to Online Datasheet Generator: www.danfoss.com/ODSG

Rating conditions

	SM/SY compressors	SZ compressors
Refrigerant	R22	R407C
Frequency	50 Hz	50 Hz
Standard rating conditions	ARI standard conditions	–
Evaporating temperature	7.2 °C	7.2 °C (dew point)
Condensing temperature	54.4 °C	54.4 °C (dew point)
Sub-cooling	8.3 K	8.3 K
Superheat	11.1 K	11.1 K

Subject to modification without prior notification
For full data details and capacity tables refer to Online Datasheet Generator : www.danfoss.com/odsg

Technical data and ordering

SM / SY / SZ - Scroll compressors - R22 / R407C - 60 Hz

Technical data

	Compressor model	Nominal Cap. 60 Hz	Nominal cooling capacity		Power input	COP	E.E.R.	Swept volume	Displacement [1]	Oil charge	Net weight [2]
		[TR]	[W]	[Btu/h]	[kW]	[W]/[W]	[Btu/h]/[W]	[cm³/rev]	[m³/h]	[dm³]	[kg]
R22 SINGLE	SM084	7	24 600	84 000	7.4	3.34	11.4	114.5	24.1	3.25	64
	SM090	7.5	26 400	90 100	7.8	3.37	11.5	120.5	25.3	3.25	65
	SM100	8	27 500	93 900	8.1	3.38	11.5	127.2	26.7	3.25	65
	SM110	9	31 600	107 800	9.3	3.38	11.5	144.2	30.3	3.25	73
	SM112	9.5	34 000	116 000	9.6	3.53	12.1	151.5	31.8	3.3	64
	SM120	10	36 700	125 300	10.8	3.4	11.6	166.6	35	3.25	73
	SM124	10.5	37 700	128 700	10.6	3.56	12.2	169.5	35.6	3.3	64
	SM147	12	43 600	148 800	12.2	3.58	12.2	193.5	40.6	3.3	67
	SM148	12	43 800	149 500	13	3.37	11.5	199	41.8	3.6	88
	SM161	13	47 600	162 500	14.1	3.39	11.6	216.6	45.5	3.6	88
	SM175	14	51 100	174 400	15.3	3.34	11.4	233	48.9	6.2	100
	SM/SY185	15	55 300	188 700	16.3	3.39	11.6	249.9	52.5	6.2	100
	SY240	20	74 100	252 900	22.1	3.35	11.4	347.8	73	8	150
	SY300	25	94 500	322 500	27.5	3.43	11.7	437.5	91.9	8	157
	SY380	30	115 300	393 500	33.4	3.46	11.8	531.2	111.6	8.4	158
R407C SINGLE	SZ084	7	22 500	76 800	7.1	3.19	10.9	114.5	24.1	3.25	64
	SZ090	7.5	24 400	83 300	7.6	3.2	10.9	120.5	25.3	3.25	65
	SZ100	8	26 500	90 400	8.2	3.24	11.1	127.2	26.7	3.25	65
	SZ110	9	30 100	102 700	9.3	3.24	11.1	144.2	30.3	3.25	73
	SZ120	10	34 800	118 800	10.7	3.24	11.1	166.6	35	3.25	73
	SZ147	12	42 300	144 328	12.03	3.52	12	193.5	40.6	3.3	67
	SZ148	12	42 600	145 400	13.3	3.19	10.9	199	41.8	3.6	88
	SZ161	13	46 000	157 000	14.3	3.21	11	216.6	45.5	3.6	88
	SZ175	14	48 700	166 200	15.3	3.19	10.9	233	48.9	6.2	100
	SZ185	15	51 800	176 800	16.4	3.15	10.8	249.9	52.5	6.2	100
	SY240	20	71 100	242 700	22.7	3.14	10.7	347.8	73	8	150
	SY300	25	87 900	300 000	27.5	3.2	10.9	437.5	91.9	8	157
	SY380	30	107 300	366 200	33.5	3.2	10.9	531.2	111.6	8.4	158

TR: *Ton of Refrigeration*
COP: *Coefficient Of Performance*
EER: *Energy Efficiency Ratio*
[1]) Displacement at nominal speed: 2900 rpm at 50 Hz, 3500 rpm at 60 Hz
[2]) Net weight with oil charge
Data given for code 4 compressor, for full data details and capacity tables refer to Online Datasheet Generator: www.danfoss.com/ODSG

Rating conditions

	SM/SY compressors	SZ compressors
Refrigerant	R22	R407C
Frequency	60 Hz	60 Hz
Standard rating conditions	ARI standard conditions	–
Evaporating temperature	7.2 °C	7.2 °C (dew point)
Condensing temperature	54.4 °C	54.4 °C (dew point)
Sub-cooling	8.3 K	8.3 K
Superheat	11.1 K	11.1 K

Subject to modification without prior notification
For full data details and capacity tables refer to Online Datasheet Generator : www.danfoss.com/odsg

Technical data and ordering

SM112-124-147 - Scroll compressors - R22

Ordering single pack

Compressor model	Connections	Motor protection	Code no.				
			3	4	6	7	9
			200 – 230 / 3 / 60	460 / 3 / 60 380 – 400 / 3 / 50	230 / 3 / 50	575 / 3 / 60 500 / 3 / 50	380 / 3 / 60
SM112	Brazed	Internal	–	120H0611	–	–	120H0613
SM124	Brazed	Internal	120H0183	120H0185	–	–	120H0187
SM147	Brazed	Internal	120H0189	120H0191	–	–	120H0197
SZ147	Brazed	Internal	–	120H1096	–	–	–

SM112-124-147 - Scroll compressors - R22

Ordering industrial pack

Compressor model	Connections	Motor protection	Code no.				
			3	4	6	7	9
			200 – 230 / 3 / 60	460 / 3 / 60 380 – 400 / 3 / 50	230 / 3 / 50	575 / 3 / 60 500 / 3 / 50	380 / 3 / 60
SM112	Brazed	Internal	120H0610	120H0612	–	–	120H0614
SM124	Brazed	Internal	120H0184	120H0186	–	–	120H0188
SM147	Brazed	Internal	120H0190	120H0311	–	–	120H0198
SZ147	Brazed	Internal	–	120H1097	–	–	–

SM / SY - Scroll compressors - R22

Ordering single pack

Compressor model	Connections	Motor protection	Code no.		
			3	4	9
			200-230 V/3/60 Hz	460 V/3/60 Hz 380-400 V/3/50 Hz	380 V/3/60 Hz
SM084	Brazed	Internal	–	SM084-4VI	–
SM090	Brazed	Internal	SM090-3VI	SM090-4VI	–
SM100	Brazed	Internal	SM100-3VI	SM100-4VI	SM100-9VI
SM110	Brazed	Internal	SM110-3VI	SM110-4VI	SM110-9VI
SM112	Brazed	Internal	–	120H0611	–
SM120	Brazed	Internal	SM120-3VI	SM120-4VI	SM120-9VI
SM124	Brazed	Internal	120H0183	120H0185	120H0187
SM147	Brazed	Internal	120H0189	120H0191	120H0197
SM148	Brazed	Internal	SM148-3VAI	SM148-4VAI	SM148-9VAI
SM161	Brazed	Internal	SM161-3VAI	SM161-4VAI	SM161-9VAI
SM175	Brazed	Thermostat	SM175-3CAI	SM175-4CAI	–
	Rotolock	Thermostat	–	SM175-4RI	–
SM185	Brazed	Thermostat	SM185-3CAI	SM185-4CAI	SM185-9CAI
	Brazed	Module 24V AC	–	SM185-4PCI	–
	Brazed	Module 110-240 V AC	–	–	–
	Rotolock	Thermostat	SM185-3RI	SM185-4RI	SM185-9RI
	Rotolock	Module 110-240 V AC	–	SM185-4YCI	SM185-9YCI
SY185	Brazed	Thermostat	–	SY185-4CAI	–
	Rotolock	Thermostat	–	SY185-4RI	–
SY240	Brazed	Module 24V AC	–	SY240A4CAI	–
	Brazed	Module 110-240 V AC	SY240A3CBI	SY240A4CBI	SY240A9CBI
	Rotolock	Module 24V AC	–	SY240A4PAI	–
	Rotolock	Module 110-240 V AC	–	SY240A4PBI	–
SY300	Brazed	Module 24V AC	–	SY300A4CAI	–
	Brazed	Module 110-240 V AC	SY300A3CBI	SY300A4CBI	SY300A9CBI
	Rotolock	Module 24V AC	–	SY300A4PAI	–
	Rotolock	Module 110-240 V AC	–	SY300A4PBI	–
SY380	Brazed	Module 24V AC	–	SY380A4CAI	–
	Brazed	Module 110-240 V AC	–	SY380A4CBI	120H1115

SM / SY compressors in industrial pack: use numbers from above table and replace the last digit by "M". Example: SY240A3CAM, except for voltage codes 6 and 7 available in single pack only

Technical data and ordering

SM / SY - Scroll compressors - R22

Ordering Industrial pack

Compressor model	Connections	Motor protection	Code no.		
			3	4	9
			200-230 V/3/60 Hz	460 V/3/60 Hz 380-400 V/3/50 Hz	380 V/3/60 Hz
SM084	Brazed	Internal	–	SM084-4VM	–
SM090	Brazed	Internal	SM090-3VM	SM090-4VM	SM090-9VM
SM100	Brazed	Internal	SM100-3VM	SM100-4VM	SM100-9VM
SM110	Brazed	Internal	SM110-3VM	SM110-4VM	SM110-9VM
SM112	Brazed	Internal	120H0610	120H0612	120H0614
SM120	Brazed	Internal	SM120-3VM	SM120-4VM	SM120-9VM
SM124	Brazed	Internal	120H0184	120H0186	120H0188
SM147	Brazed	Internal	120H0190	120H0311	120H0198
	Brazed *)	Internal	–	120H1179	–
SM148	Brazed	Internal	SM148-3VAM	SM148-4VAM	SM148-9VAM
SM161	Brazed	Internal	SM161-3VAM	SM161-4VAM	SM161-9VAM
SM175	Brazed	Thermostat	–	–	–
	Rotolock	Thermostat	–	SM175-4RM	–
SM185	Brazed	Thermostat	SM185-3CAM	SM185-4CAM	SM185-9CAM
	Brazed	Module 24V AC	–	SM185-4PCM	–
	Brazed	Module 110-240 V AC	–	SM185-4XCM	–
	Rotolock	Thermostat	SM185-3RM	SM185-4RM	SM185-9RM
	Rotolock	Module 110-240 V AC	–	SM185-4YCM	SM185-9YCM
SY185	Brazed	Thermostat	–	SY185-4CAM	–
SY240	Brazed	Module 24V AC	–	SY240A4CAM	–
	Brazed	Module 110-240 V AC	SY240A3CBM	SY240A4CBM	SY240A9CBM
	Rotolock	Module 24V AC	–	SY240A4PAM	–
	Rotolock	Module 110-240 V AC	SY240A3PBM	SY240A4PBM	SY240A9PBM
SY300	Brazed	Module 24V AC	–	SY300A4CAM	–
	Brazed	Module 110-240 V AC	SY300A3CBM	SY300A4CBM	SY300A9CBM
	Rotolock	Module 24V AC	–	SY300A4PAM	–
	Rotolock	Module 110-240 V AC	SY300A3PBM	SY300A4PBM	SY300A9PBM
SY380	Brazed	Module 24V AC	–	SY380A4CAM	–
	Brazed	Module 110-240 V AC	–	SY380A4CBM	120H1116

**) Single installation version without oil equalization and sight glass*

SZ - Scroll compressors - R407C / R134a

Ordering single pack

Compressor model	Connections	Motor protection	Code no.		
			3	4	9
			200-230 V/3/60 Hz	460 V/3/60 Hz 380-400 V/3/50 Hz	380 V/3/60 Hz
SZ084	Brazed	Internal	–	SZ084-4VI	–
SZ090	Brazed	Internal	SZ090-3VI	SZ090-4VI	SZ090-9VI
SZ100	Brazed	Internal	SZ100-3VI	SZ100-4VI	SZ100-9VI
SZ110	Brazed	Internal	SZ110-3VI	SZ110-4VI	SZ110-9VI
SZ120	Brazed	Internal	SZ120-3VI	SZ120-4VI	SZ120-9VI
SZ147	Brazed	Internal	–	120H1096	–
SZ148	Brazed	Internal	SZ148-3VAI	SZ148-4VAI	SZ148-9VAI
SZ161	Brazed	Internal	SZ161-3VAI	SZ161-4VAI	SZ161-9VAI
SZ175	Brazed	Thermostat	–	SZ175-4CAI	–
	Rotolock	Thermostat	–	SZ175-4RI	–
SZ185	Brazed	Thermostat	SZ185-3CAI	SZ185-4CAI	SZ185-9CAI
	Brazed	Module 24V AC	–	SZ185-4PCI	–
	Rotolock	Thermostat	SZ185-3RI	SZ185-4RI	SZ185-9RI

SZ compressors in industrial pack: use numbers from above table and replace the last digit by "M". Example: SZ240A4CAM, except for voltage codes 6 and 7 available in single pack only

Technical data and ordering

SZ - Scroll compressors - R407C / R134a

Ordering Industrial pack

Compressor model	Connections	Motor protection	Code no.		
			3	4	9
			200-230 V/3/60 Hz	460 V/3/60 Hz 380-400 V/3/50 Hz	380 V/3/60 Hz
SZ084	Brazed	Internal	–	SZ084-4VM	–
SZ090	Brazed	Internal	SZ090-3VM	SZ090-4VM	SZ090-9VM
SZ100	Brazed	Internal	–	SZ100-4VM	SZ100-9VM
SZ110	Brazed	Internal	SZ110-3VM	SZ110-4VM	SZ110-9VM
SZ120	Brazed	Internal	SZ120-3VM	SZ120-4VM	SZ120-9VM
SZ147	Brazed	Internal	–	120H1097	–
SZ148	Brazed	Internal	SZ148-3VAM	SZ148-4VAM	–
SZ161	Brazed	Internal	SZ161-3VAM	SZ161-4VAM	SZ161-9VAM
SZ175	Rotolock	Thermostat	–	SZ175-4RM	–
SZ185	Brazed	Thermostat	SZ185-3CAM	SZ185-4CAM	SZ185-9CAM
	Brazed	Module 24V AC	–	–	–
	Brazed	Module 110 – 240 V	–	SZ185-4XCM	–
	Rotolock	Thermostat	–	SZ185-4RM	SZ185-9RM

Technical data and ordering

SZ - Scroll compressors - R134a - 50 Hz

Performance table

Type	To	-15		-10		-5		0		5		10		15	
	Tc	Qo	Pe	Qo	Pe	Qo	Pe	Qo	Pe	Qo	Pe	Qo	Pe	Qo	Pe
SZ084	35	6200	2.8	8000	2.8	10100	2.8	12600	2.8	15400	2.7	18700	2.7	22400	2.6
	55	–	–	6100	4.3	7900	4.3	9900	4.3	12400	4.3	15100	4.3	18300	4.2
SZ090	35	6700	2.9	8600	2.9	10900	3.0	13400	2.9	16400	2.9	19800	2.9	23600	2.8
	55	–	–	6600	4.5	8500	4.6	10700	4.6	13200	4.6	16000	4.5	19300	4.5
SZ100	35	7300	3.1	9400	3.1	11700	3.1	14400	3.1	17500	3.1	21000	3.1	25000	3.1
	55	–	–	7300	4.8	9300	4.8	11500	4.9	14100	4.9	17100	4.9	20400	4.8
SZ110	35	8200	3.5	10500	3.5	13200	3.5	16200	3.5	19800	3.5	23800	3.5	28400	3.5
	55	–	–	8100	5.4	10400	5.4	13000	5.5	16000	5.5	19400	5.5	23300	5.4
SZ120	35	9400	4.0	12000	4.0	15100	4.1	18700	4.1	22800	4.1	27500	4.1	32900	4.0
	55	–	–	9300	6.2	11900	6.3	14900	6.3	18400	6.3	22400	6.3	27000	6.2
SZ148	35	11200	5.0	14400	5.0	18100	5.0	22600	5.0	27900	5.0	34000	5.0	41100	5.0
	55	–	–	11200	7.7	14200	7.7	17800	7.7	22100	7.7	27100	7.8	32800	7.8
SZ161	35	12000	5.2	15300	5.2	19200	5.3	23800	5.3	29200	5.4	35500	5.4	42700	5.4
	55	–	–	12100	8.0	15300	8.0	19200	8.1	23700	8.1	28900	8.1	35000	8.1
SZ175	35	13200	5.7	16900	5.8	21200	5.8	26200	5.9	32100	5.9	38700	5.9	46200	5.8
	55	–	–	13100	8.6	16700	8.6	21000	8.7	26000	8.7	31700	8.8	38100	8.8
SZ185	35	14000	6.1	18000	6.1	22600	6.2	27900	6.2	34100	6.3	41200	6.3	49200	6.2
	55	–	–	13900	9.1	17800	9.2	22400	9.3	27700	9.3	33700	9.3	40600	9.3
SZ240	35	18900	8.4	23900	8.5	29900	8.6	37100	8.7	45700	8.7	56000	8.8	68200	8.9
	55	–	–	18800	12.3	23800	12.5	29700	12.6	36700	12.7	45000	12.9	54700	13.0
SZ300	35	23700	10.2	30000	10.4	37500	10.5	46300	10.6	56700	10.7	68900	10.8	82800	11.0
	55	–	–	23600	15.2	29700	15.4	37100	15.6	45800	15.9	55900	16.1	67800	16.4
SZ380	35	30200	12.3	38000	12.5	47300	12.7	58200	12.9	71000	13.1	85800	13.4	102900	13.6
	55	–	–	30100	18.1	37800	18.4	46900	18.7	57600	19.0	70000	19.2	84400	19.4
SZ170	35	12200	5.5	15700	5.6	19900	5.6	24800	5.5	30400	5.5	36800	5.4	44000	5.3
	55	–	–	11900	8.6	15500	8.6	19600	8.6	24300	8.6	29800	8.5	36000	8.4
SZ180	35	13300	5.9	17000	5.9	21400	5.9	26500	5.9	32300	5.8	39000	5.8	46500	5.7
	55	–	–	13100	9.1	16800	9.1	21100	9.1	26000	9.1	31600	9.1	38000	9.0
SZ200	35	14500	6.2	18400	6.2	23000	6.3	28400	6.3	34500	6.2	41400	6.2	49200	6.1
	55	–	–	14400	9.6	18200	9.7	22700	9.7	27800	9.7	33600	9.7	40200	9.7
SZ220	35	16300	7.0	20700	7.0	25900	7.1	32000	7.1	39000	7.1	46900	7.0	56000	6.9
	55	–	–	16100	10.8	20500	10.9	25600	10.9	31400	10.9	38200	10.9	45900	10.9
SZ230	35	17800	7.6	22800	7.6	28600	7.6	35300	7.6	43000	7.6	51700	7.5	61600	7.4
	55	–	–	17500	11.7	22500	11.8	28200	11.8	34800	11.8	42200	11.8	50700	11.7
SZ242	35	18600	8.0	23700	8.1	29700	8.1	36800	8.1	44900	8.1	54200	8.1	64900	8.0
	55	–	–	18300	12.5	23400	12.5	29300	12.5	36200	12.5	44200	12.5	53300	12.4
SZ250	35	19000	8.1	24300	8.1	30500	8.1	37600	8.1	45800	8.1	55100	8.0	65600	7.9
	55	–	–	18600	12.5	23900	12.5	30000	12.6	37000	12.6	45000	12.5	54000	12.5
SZ268	35	20600	9.0	26400	9.1	33200	9.1	41200	9.1	50600	9.1	61400	9.1	73900	9.0
	55	–	–	20100	13.9	25700	14.0	32300	14.0	39900	14.0	48800	14.0	59100	14.0
SZ271	35	20200	8.7	25800	8.7	32300	8.8	40000	8.9	48900	8.9	59200	8.9	71000	8.9
	55	–	–	19900	13.4	25300	13.5	31600	13.5	39000	13.6	47600	13.6	57400	13.6
SZ281	35	21400	9.2	27300	9.3	34300	9.3	42400	9.4	51900	9.4	62900	9.4	75500	9.4
	55	–	–	21000	14.2	26800	14.3	33500	14.3	41500	14.4	50600	14.4	61200	14.3
SZ285	35	21700	9.3	27800	9.4	34900	9.4	43100	9.5	52600	9.5	63400	9.4	75600	9.3
	55	–	–	21400	14.2	27500	14.2	34500	14.3	42600	14.4	51900	14.4	62400	14.3
SZ290	35	21900	9.5	28000	9.6	35200	9.6	43500	9.7	53100	9.7	64000	9.6	76300	9.5
	55	–	–	21600	14.4	27700	14.5	34800	14.6	43000	14.6	52300	14.7	62900	14.6
SZ296	35	22100	10.0	28300	10.0	35700	10.0	44500	10.0	54900	10.0	67000	10.0	80900	10.0
	55	–	–	22000	15.4	28000	15.4	35200	15.4	43500	15.5	53300	15.5	64700	15.6
SZ310	35	23300	10.1	29800	10.2	37500	10.3	46300	10.3	56500	10.3	68100	10.2	81200	10.1
	55	–	–	23000	15.4	29500	15.5	37100	15.5	45800	15.6	55700	15.6	67000	15.6
SZ320	35	24400	10.5	31300	10.6	39300	10.7	48700	10.8	59400	10.8	71700	10.8	85700	10.8
	55	–	–	24200	15.8	31000	15.9	39000	16.0	48200	16.1	58700	16.2	70700	16.2
SZ322	35	23600	10.4	30100	10.5	37800	10.5	46900	10.6	57600	10.7	69900	10.8	84100	10.8
	55	–	–	23800	15.9	30200	16.0	37800	16.1	46600	16.2	56900	16.2	68900	16.2
SZ350	35	26000	11.4	33200	11.5	41800	11.6	51700	11.7	63100	11.8	76200	11.7	91100	11.7
	55	–	–	25700	17.1	33000	17.3	41400	17.4	51200	17.5	62400	17.5	75100	17.5
SZ370	35	27600	12.1	35400	12.3	44500	12.4	55000	12.5	67200	12.5	81100	12.5	96900	12.4
	55	–	–	27400	18.2	35100	18.4	44100	18.5	54500	18.6	66400	18.7	79900	18.6

To: *Evaporating temperature in [°C]*
Tc: *Condensing temperature in [°C]*
Pe: *Power input in [kW]*
Qo: *Cooling capacity in [W]*
Subcooling: *8.3 K*
Superheat: *11.1 K*
Voltage: *400 V / 3 / 50 Hz*

For more information and performance with other refrigerants, please refer to Coolselector ® 2 at coolselector.danfoss.com or contact Danfoss.

Technical data and ordering

SZ - Scroll compressors - R134a - 60 Hz

Performance table

Type	To	-15		-10		-5		0		5		10		15	
	Tc	Qo	Pe	Qo	Pe	Qo	Pe	Qo	Pe	Qo	Pe	Qo	Pe	Qo	Pe
SZ084	35	7800	3.28	9800	3.30	12300	3.31	15300	3.32	18700	3.31	22700	3.28	27200	3.25
	55	–	–	7800	5.02	9900	5.05	12300	5.09	15200	5.11	18500	5.13	22400	5.13
SZ090	35	8200	3.45	10400	3.48	13100	3.50	16100	3.51	19700	3.50	23900	3.48	28600	3.45
	55	–	–	8300	5.28	10500	5.33	13000	5.36	16000	5.39	19500	5.41	23600	5.41
SZ100	35	8800	3.65	11100	3.68	13900	3.70	17100	3.72	20900	3.72	25300	3.71	30200	3.68
	55	–	–	8800	5.58	11100	5.63	13800	5.67	17000	5.70	20700	5.72	24900	5.72
SZ110	35	10100	4.14	12800	4.18	15900	4.23	19600	4.26	23800	4.27	28700	4.28	34300	4.26
	55	–	–	10000	6.35	12700	6.40	15800	6.45	19400	6.48	23600	6.50	28300	6.51
SZ120	35	11900	4.78	15000	4.85	18600	4.91	22800	4.97	27700	5.00	33300	5.02	39600	5.02
	55	–	–	11700	7.35	14800	7.41	18400	7.47	22600	7.51	27400	7.54	32800	7.54
SZ148	35	13400	6.00	17100	6.14	21400	6.23	26500	6.27	32500	6.26	39500	6.17	47500	6.01
	55	–	–	13400	9.24	17000	9.39	21300	9.48	26300	9.50	32200	9.45	39000	9.31
SZ161	35	14600	6.23	18600	6.34	23300	6.42	28800	6.48	35300	6.52	42800	6.54	51400	6.53
	55	–	–	14700	9.44	18700	9.59	23300	9.70	28600	9.78	34900	9.82	42000	9.84
SZ175	35	16300	6.76	20500	6.85	25600	6.94	31500	7.02	38400	7.08	46300	7.11	55300	7.13
	55	–	–	16100	10.13	20300	10.25	25400	10.37	31200	10.47	38000	10.56	45800	10.63
SZ185	35	17300	7.22	21900	7.32	27200	7.42	33500	7.50	40900	7.56	49300	7.60	58900	7.61
	55	–	–	17100	10.82	21700	10.95	27000	11.08	33300	11.19	40500	11.29	48800	11.36
	35	17300	7.22	21900	7.32	27200	7.42	33500	7.50	40900	7.56	49300	7.60	58900	7.61
	55	–	–	17100	10.82	21700	10.95	27000	11.08	33300	11.19	40500	11.29	48800	11.36
SZ240	35	23200	10.14	29400	10.24	36700	10.37	45400	10.51	55500	10.68	67300	10.86	80800	11.06
	55	–	–	23000	14.86	29100	15.04	36400	15.23	44900	15.44	54800	15.67	66200	15.91
SZ300	35	29100	12.32	36500	12.69	45400	12.98	55900	13.21	68300	13.40	82700	13.58	99500	13.75
	55	–	–	28800	18.40	36100	18.91	44700	19.34	55100	19.69	67200	20.00	81400	20.28
SZ380	35	36200	15.20	45500	15.65	56500	16.00	69500	16.29	84800	16.54	102600	16.78	123200	17.05
	55	–	–	36000	22.19	45200	22.72	56100	23.11	68900	23.38	84000	23.56	101500	23.68
SZ170	35	15300	6.56	19400	6.60	24300	6.62	30100	6.63	36800	6.61	44700	6.56	53600	6.49
	55	–	–	15400	10.02	19500	10.10	24300	10.17	29900	10.22	36500	10.25	44100	10.26
SZ180	35	16200	6.90	20500	6.95	25700	6.99	31800	7.01	38900	7.00	47100	6.96	56400	6.89
	55	–	–	16300	10.56	20600	10.65	25700	10.72	31600	10.77	38500	10.81	46500	10.82
SZ200	35	17200	7.29	21800	7.35	27300	7.40	33700	7.43	41200	7.44	49800	7.41	59600	7.35
	55	–	–	17300	11.16	21800	11.25	27200	11.33	33500	11.39	40800	11.43	49100	11.43
SZ220	35	19900	8.27	25100	8.36	31300	8.45	38600	8.51	47000	8.54	56600	8.54	67500	8.51
	55	–	–	19800	12.68	25000	12.79	31200	12.88	38300	12.95	46400	12.99	55800	13.00
SZ242	35	23300	9.56	29500	9.70	36700	9.82	45000	9.93	54600	10.00	65500	10.04	77900	10.04
	55	–	–	23100	14.69	29200	14.82	36300	14.93	44500	15.01	53900	15.06	64600	15.07
SZ268	35	24900	10.78	31600	10.99	39400	11.15	48600	11.24	59300	11.26	71600	11.19	85700	11.03
	55	–	–	24700	16.58	31400	16.80	39200	16.95	48200	17.01	58700	16.98	70700	16.85
SZ271	35	24300	10.36	30900	10.52	38600	10.65	47700	10.74	58200	10.79	70400	10.81	84400	10.79
	55	–	–	24400	15.78	30900	15.99	38500	16.14	47300	16.26	57600	16.32	69300	16.34
SZ281	35	26100	11.01	33000	11.19	41300	11.34	50900	11.45	62100	11.52	74900	11.56	89600	11.55
	55	–	–	26000	16.79	33000	17.00	41100	17.17	50500	17.29	61300	17.36	73700	17.38
SZ296	35	26500	11.99	33700	12.27	42200	12.46	52300	12.54	64000	12.50	77700	12.33	93500	12.01
	55	–	–	26400	18.46	33500	18.77	42000	18.95	51900	19.00	63500	18.88	76900	18.61
SZ322	35	28800	12.44	36600	12.67	45900	12.84	56800	12.96	69500	13.03	84300	13.06	101300	13.05
	55	–	–	29000	18.87	36700	19.16	45800	19.38	56400	19.54	68700	19.63	82800	19.66
SZ350	35	32100	13.50	40500	13.70	50400	13.88	62100	14.03	75600	14.14	91200	14.22	109000	14.24
	55	–	–	31600	20.25	40100	20.49	50000	20.73	61500	20.94	74900	21.11	90200	21.25
SZ370	35	34100	14.42	43100	14.63	53700	14.82	66100	14.98	80500	15.11	97100	15.19	116000	15.21
	55	–	–	33700	21.63	42700	21.89	53200	22.14	65500	22.37	79700	22.56	96100	22.70

To: *Evaporating temperature in [°C]*
Tc: *Condensing temperature in [°C]*
Pe: *Power input in [kW]*
Qo: *Cooling capacity in [W]*
Subcooling: *8.3 K*
Superheat: *11.1 K*
Voltage: *400 V / 3 / 60 Hz*

For more information and performance with other refrigerants, please refer to Coolselector ® 2 at coolselector.danfoss.com or contact Danfoss.

Technical data and ordering

SZ - Scroll compressors - R407C - 50 Hz

Performance table

Type	To	-20		-15		-10		-5		0		5		10		15	
	Tc	Qo	Pe	Qo	Pe	Qo	Pe	Qo	Pe	Qo	Pe	Qo	Pe	Qo	Pe	Qo	Pe
SZ084	35	7200	3.9	9300	3.9	11800	4.0	14800	4.0	18300	4.0	22300	4.0	27000	4.0	32300	3.9
	55	–	–	–	–	–	–	11300	6.2	14200	6.2	17500	6.2	21400	6.2	25800	6.2
SZ090	35	7600	4.1	9800	4.1	12500	4.2	15600	4.2	19300	4.2	23600	4.2	28500	4.2	34100	4.1
	55	–	–	–	–	–	–	12000	6.5	15000	6.5	18500	6.5	22500	6.5	27200	6.5
SZ100	35	8100	4.3	10500	4.4	13300	4.4	16600	4.4	20500	4.5	25000	4.4	30100	4.4	36000	4.4
	55	–	–	–	–	–	–	12700	6.9	15900	6.9	19600	6.9	23800	6.9	28700	6.9
SZ110	35	9300	4.9	12000	5.0	15200	5.0	19000	5.0	23400	5.0	28500	5.0	34300	5.0	40900	4.9
	55	–	–	–	–	–	–	14500	7.9	18100	7.9	22300	7.9	27200	7.8	32700	7.8
SZ120	35	11000	5.7	14200	5.7	17900	5.8	22200	5.8	27300	5.8	33200	5.8	39900	5.7	47600	5.6
	55	–	–	–	–	–	–	17000	9.2	21200	9.2	26100	9.2	31600	9.1	38000	9.0
SZ148	35	13500	6.9	17300	7.0	21700	7.0	27000	7.0	33100	7.1	40300	7.1	48500	7.1	57800	7.2
	55	–	–	–	–	–	–	21200	11.1	26200	11.1	32100	11.1	38900	11.1	46700	11.1
SZ161	35	14600	7.4	18700	7.5	23500	7.5	29200	7.6	35800	7.6	43500	7.6	52400	7.7	62600	7.8
	55	–	–	–	–	–	–	22900	12.0	28400	12.0	34700	12.0	42100	12.0	50600	12.0
SZ175	35	15500	8.0	19800	8.0	25000	8.1	31100	8.2	38100	8.2	46300	8.2	55600	8.2	66200	8.2
	55	–	–	–	–	–	–	24000	12.7	29800	12.8	36500	12.8	44200	12.8	53000	12.8
SZ185	35	16600	8.6	21300	8.6	26900	8.7	33400	8.8	41000	8.8	49700	8.8	59700	8.8	71100	8.8
	55	–	–	–	–	–	–	25700	13.7	32000	13.7	39200	13.8	47500	13.8	56900	13.8
SZ240	35	22400	11.7	28900	11.8	36500	11.9	45400	12.1	55900	12.2	68000	12.4	82000	12.5	98000	12.6
	55	–	–	21900	17.9	28100	18.0	35500	18.2	44000	18.4	54000	18.7	65500	18.9	78800	19.2
SZ300	35	28700	13.7	36200	13.9	45100	14.1	55500	14.3	67600	14.5	81700	14.7	98000	14.9	116600	15.2
	55	–	–	28500	21.2	35900	21.6	44600	22.1	54800	22.5	66600	22.9	80400	23.2	96300	23.6
SZ380	35	36000	16.9	45300	17.3	56400	17.6	69400	18.0	84600	18.3	102200	18.6	122400	18.9	145400	19.4
	55	–	–	35000	26.1	44200	26.6	55000	27.0	67500	27.4	82100	27.8	98900	28.1	118200	28.5
SZ170	35	14200	7.8	18300	7.9	23200	8.0	29100	8.0	36000	8.0	44000	8.0	53200	8.0	63700	7.9
	55	–	–	–	–	–	–	22300	12.3	27900	12.4	34500	12.4	42100	12.4	50900	12.4
SZ180	35	15000	8.2	19400	8.3	24600	8.3	30800	8.4	38000	8.4	46400	8.4	56100	8.3	67100	8.2
	55	–	–	–	–	–	–	23600	13.0	29500	13.0	36400	13.1	44400	13.0	53600	13.0
SZ200	35	16000	8.7	20600	8.8	26100	8.8	32700	8.9	40300	8.9	49200	8.9	59300	8.8	70900	8.7
	55	–	–	–	–	–	–	25000	13.8	31300	13.9	38600	13.9	47000	13.8	56600	13.8
SZ220	35	18400	9.9	23700	9.9	30000	10.0	37400	10.1	46100	10.1	56100	10.0	67500	10.0	80600	9.8
	55	–	–	–	–	–	–	28600	15.8	35800	15.8	44000	15.8	53500	15.7	64400	15.5
SZ230	35	20000	10.8	25800	10.8	32800	10.9	40900	10.9	50400	10.9	61200	10.9	73700	10.8	87700	10.7
	55	–	–	–	–	–	–	31100	17.4	38900	17.3	48000	17.3	58400	17.2	70200	17.0
SZ242	35	21600	11.4	27900	11.5	35200	11.6	43800	11.6	53800	11.6	65400	11.5	78600	11.4	93700	11.2
	55	–	–	–	–	–	–	33600	18.3	41800	18.4	51300	18.3	62300	18.1	74800	17.9
SZ250	35	21200	11.4	27500	11.4	34900	11.5	43500	11.5	53600	11.5	65200	11.4	78300	11.4	93300	11.3
	55	–	–	–	–	–	–	33100	18.3	41400	18.3	51100	18.2	62100	18.1	74700	17.9
SZ268	35	24100	12.6	31000	12.7	39000	12.8	48500	12.9	59500	12.9	72300	12.9	87000	12.9	103800	12.8
	55	–	–	–	–	–	–	37600	20.3	46700	20.3	57300	20.3	69400	20.2	83400	20.1
SZ271	35	23900	12.4	30600	12.5	38700	12.6	48100	12.6	59100	12.6	71900	12.7	86600	12.7	103400	12.7
	55	–	–	–	–	–	–	36700	19.9	45700	19.9	56000	19.9	68000	19.9	81800	19.8
SZ281	35	25200	13.1	32300	13.2	40800	13.3	50700	13.4	62200	13.4	75600	13.4	90900	13.4	108500	13.4
	55	–	–	–	–	–	–	39300	21.2	48800	21.2	59900	21.2	72600	21.1	87200	21.0
SZ285	35	25500	13.0	32900	13.2	41500	13.3	51700	13.3	63500	13.3	77200	13.3	92900	13.3	110800	13.2
	55	–	–	–	–	–	–	39300	21.0	48900	21.0	60100	21.0	73100	21.0	87900	20.9
SZ290	35	25200	13.4	32500	13.5	41000	13.5	51100	13.6	62800	13.7	76200	13.7	91600	13.6	109000	13.5
	55	–	–	–	–	–	–	39100	21.4	48800	21.5	59900	21.5	72700	21.4	87300	21.3
SZ296	35	26600	13.8	34000	13.9	42800	14.0	53200	14.1	65300	14.2	79300	14.2	95500	14.3	114000	14.4
	55	–	–	–	–	–	–	41700	22.2	51700	22.3	63200	22.3	76600	22.3	92000	22.3
SZ310	35	27000	14.2	34700	14.4	43900	14.5	54700	14.5	67200	14.6	81600	14.6	98000	14.5	116700	14.4
	55	–	–	–	–	–	–	41900	22.9	52200	22.9	64100	22.9	77800	22.9	93400	22.8
SZ320	35	29200	14.7	37300	14.9	47000	15.0	58400	15.1	71800	15.2	87200	15.2	105000	15.2	125400	15.2
	55	–	–	–	–	–	–	45700	23.6	56700	23.7	69400	23.8	84200	23.8	101300	23.9
SZ322	35	28700	14.9	36800	15.0	46300	15.1	57500	15.1	70600	15.2	85800	15.3	103300	15.4	123300	15.5
	55	–	–	–	–	–	–	45100	23.9	55900	24.0	68400	24.0	82900	24.0	99600	24.0
SZ350	35	30500	15.9	39100	16.1	49300	16.2	61200	16.3	75200	16.4	91200	16.4	109500	16.4	130300	16.4
	55	–	–	–	–	–	–	47200	25.4	58600	25.6	71900	25.6	87100	25.7	104400	25.7
SZ370	35	32700	17.1	42000	17.3	52900	17.4	65800	17.5	80700	17.6	98000	17.7	117700	17.7	140000	17.6
	55	–	–	–	–	–	–	50700	27.4	63000	27.5	77200	27.6	93500	27.6	112100	27.6

To: *Evaporating temperature in [°C]*
Subcooling: *8.3 K*

Tc: *Condensing temperature in [°C]*
Superheat: *11.1 K*

Pe: *Power input in [kW]*
Voltage: *400 V / 3 / 50 Hz*

Qo: *Cooling capacity in [W]*

For more information and performance with other refrigerants, please refer to Coolselector ® 2 at coolselector.danfoss.com or contact Danfoss.

Technical data and ordering

SZ - Scroll compressors - R407C - 60 Hz

Performance table

Type	To	-20		-15		-10		-5		0		5		10		15	
	Tc	Qo	Pe	Qo	Pe	Qo	Pe	Qo	Pe	Qo	Pe	Qo	Pe	Qo	Pe	Qo	Pe
SZ084	35	8400	4.45	11100	4.49	14300	4.52	17900	4.53	22000	4.52	26700	4.49	32000	4.42	37900	4.33
	55	–	–	–	–	–	–	12600	7.16	16200	7.17	20300	7.17	25000	7.14	30100	7.08
SZ090	35	9200	4.82	12000	4.87	15300	4.92	19100	4.95	23500	4.96	28500	4.95	34200	4.91	40700	4.84
	55	–	–	–	–	–	–	14100	7.69	17800	7.72	22100	7.74	27000	7.73	32500	7.69
SZ100	35	10000	5.16	12900	5.23	16400	5.30	20400	5.35	25100	5.39	30600	5.41	36800	5.40	43800	5.36
	55	–	–	–	–	–	–	15800	8.19	19700	8.24	24100	8.28	29200	8.29	35000	8.28
SZ110	35	11500	5.85	14800	5.93	18700	6.01	23300	6.06	28600	6.10	34700	6.10	41700	6.08	49600	6.02
	55	–	–	–	–	–	–	18000	9.35	22400	9.40	27400	9.41	33200	9.40	39700	9.35
SZ112	35	–	–	–	–	–	–	–	–	–	–	–	–	–	–	–	–
	55	–	–	–	–	–	–	–	–	–	–	–	–	–	–	–	–
SZ120	35	13500	6.76	17300	6.85	21800	6.94	27000	7.00	33100	7.03	40100	7.02	48100	6.98	57100	6.88
	55	–	–	–	–	–	–	20900	10.88	25900	10.91	31700	10.91	38300	10.86	45900	10.76
SZ124	35	–	–	–	–	–	–	–	–	–	–	–	–	–	–	–	–
	55	–	–	–	–	–	–	–	–	–	–	–	–	–	–	–	–
SZ147	35	17200	7.51	21500	7.59	26600	7.71	32500	7.85	39500	8.03	47600	8.25	56900	8.52	67600	8.82
	55	–	–	–	–	–	–	26100	11.94	31900	12.01	38700	12.12	46500	12.27	55600	12.47
SZ148	35	16500	8.31	21100	8.40	26400	8.52	32700	8.66	40000	8.78	48500	8.88	58300	8.92	69500	8.89
	55	–	–	–	–	–	–	25800	13.28	31800	13.36	38800	13.47	46900	13.59	56200	13.70
SZ161	35	17800	8.90	22700	9.03	28500	9.14	35300	9.24	43200	9.34	52300	9.44	62900	9.56	75000	9.69
	55	–	–	–	–	–	–	27900	14.27	34400	14.38	41900	14.47	50600	14.55	60700	14.63
SZ175	35	19300	9.48	24600	9.63	30800	9.77	38000	9.89	46500	9.99	56300	10.07	67500	10.12	80200	10.14
	55	–	–	–	–	–	–	29400	15.14	36300	15.29	44300	15.43	53600	15.54	64100	15.62
SZ185	35	20600	10.19	26100	10.35	32700	10.50	40500	10.63	49500	10.75	59900	10.83	71800	10.89	85400	10.90
	55	–	–	–	–	–	–	31300	16.28	38600	16.44	47200	16.59	57000	16.71	68200	16.79
SZ185	35	20600	10.19	26100	10.35	32700	10.50	40500	10.63	49500	10.75	59900	10.83	71800	10.89	85400	10.90
	55	–	–	–	–	–	–	31300	16.28	38600	16.44	47200	16.59	57000	16.71	68200	16.79
SZ240	35	26900	13.97	34700	14.33	43900	14.68	54700	15.00	67300	15.31	81900	15.62	98700	15.92	117900	16.22
	55	–	–	26600	21.18	34200	21.63	42900	22.05	53100	22.43	64800	22.78	78400	23.11	94000	23.40
SZ300	35	35800	16.75	44900	17.09	55700	17.43	68400	17.76	83500	18.09	101300	18.42	122000	18.75	146100	19.08
	55	–	–	34300	25.62	43000	26.11	53300	26.61	65500	27.10	80000	27.61	97100	28.11	117100	28.62
SZ380	35	42900	20.29	54100	20.75	67300	21.23	82900	21.73	101000	22.24	122100	22.76	146400	23.28	174100	23.81
	55	–	–	41900	31.38	52800	31.88	65500	32.42	80500	33.00	97900	33.62	118100	34.26	141300	34.93
SZ170	35	16600	8.90	21900	8.98	28100	9.04	35300	9.06	43400	9.04	52600	8.97	63000	8.84	74600	8.65
	55	–	–	–	–	–	–	24800	14.31	31900	14.34	40000	14.33	49200	14.26	59400	14.14
SZ180	35	18100	9.63	23600	9.74	30100	9.83	37600	9.89	46300	9.92	56200	9.89	67500	9.82	80100	9.68
	55	–	–	–	–	–	–	27800	15.37	35100	15.44	43600	15.47	53100	15.45	63900	15.37
SZ200	35	19800	10.31	25500	10.46	32300	10.59	40200	10.70	49500	10.77	60200	10.80	72400	10.78	86300	10.71
	55	–	–	–	–	–	–	31200	16.37	38700	16.48	47500	16.55	57600	16.57	69000	16.54
SZ220	35	22700	11.69	29200	11.86	36800	12.00	45800	12.12	56300	12.19	68300	12.20	82100	12.15	97600	12.02
	55	–	–	–	–	–	–	35500	18.69	44100	18.78	54000	18.81	65300	18.79	78200	18.69
SZ242	35	26600	13.50	34000	13.70	42900	13.86	53200	13.98	65200	14.05	79000	14.04	94800	13.95	112600	13.76
	55	–	–	–	–	–	–	41200	21.75	51100	21.81	62500	21.80	75500	21.71	90400	21.51
SZ268	35	29600	15.07	37800	15.25	47400	15.46	58800	15.65	72000	15.81	87300	15.90	104800	15.90	124700	15.77
	55	–	–	–	–	–	–	46100	24.16	56900	24.27	69500	24.37	84000	24.45	100600	24.46
SZ271	35	28900	14.75	37000	14.96	46500	15.14	57700	15.30	70700	15.43	85700	15.54	103000	15.63	122700	15.71
	55	–	–	–	–	–	–	45200	23.63	55900	23.78	68300	23.89	82500	23.95	98900	23.98
SZ281	35	30900	15.65	39400	15.88	49500	16.07	61300	16.24	75100	16.37	91100	16.46	109300	16.53	130100	16.57
	55	–	–	–	–	–	–	48100	25.16	59400	25.30	72500	25.38	87600	25.41	105000	25.39
SZ294	35	34100	15.02	42600	15.18	52700	15.41	64500	15.70	78300	16.07	94400	16.51	112800	17.03	133900	17.64
	55	–	–	–	–	–	–	51800	23.88	63300	24.02	76700	24.24	92300	24.54	110200	24.94
SZ296	35	32600	16.62	41500	16.79	52000	17.03	64400	17.30	78800	17.55	95500	17.74	114800	17.83	136900	17.76
	55	–	–	–	–	–	–	50900	26.55	62700	26.70	76500	26.92	92500	27.16	110800	27.38
SZ322	35	35100	17.78	44800	18.04	56100	18.27	69500	18.47	85000	18.66	103100	18.87	123900	19.10	147700	19.37
	55	–	–	–	–	–	–	54900	28.53	67700	28.75	82600	28.93	99800	29.09	119600	29.24
SZ350	35	38100	18.95	48400	19.24	60600	19.52	74900	19.77	91700	19.98	110900	20.14	133000	20.23	158100	20.26
	55	–	–	–	–	–	–	57900	30.26	71600	30.56	87300	30.83	105500	31.05	126200	31.22
SZ370	35	40500	20.38	51500	20.69	64400	20.99	79700	21.26	97500	21.48	118000	21.65	141500	21.76	168200	21.79
	55	–	–	–	–	–	–	61600	32.53	76100	32.86	92900	33.15	112300	33.39	134300	33.57

To: *Evaporating temperature in [°C]*
Subcooling: *8.3 K*

Tc: *Condensing temperature in [°C]*
Superheat: *11.1 K*

Pe: *Power input in [kW]*
Voltage: *400 V / 3 / 60 Hz*

Qo: *Cooling capacity in [W]*

For more information and performance with other refrigerants, please refer to Coolselector ® 2 at coolselector.danfoss.com or contact Danfoss.

Technical data and ordering

SM / SY - Scroll compressors - R22 - 50 Hz

Performance table

Type	To	-20		-15		-10		-5		0		5		10		15	
	Tc	Qo	Pe	Qo	Pe	Qo	Pe	Qo	Pe	Qo	Pe	Qo	Pe	Qo	Pe	Qo	Pe
SM084	35	7700	4.0	9900	4.0	12500	4.0	15500	4.0	18900	4.0	22800	4.0	27200	3.9	32100	3.9
	55	–	–	–	–	–	–	12000	6.4	15000	6.3	18500	6.2	22500	6.2	26900	6.1
SM090	35	8600	4.3	10900	4.4	13600	4.4	16700	4.4	20200	4.4	24300	4.4	28900	4.4	34100	4.4
	55	–	–	–	–	–	–	13300	6.7	16400	6.7	19900	6.6	23900	6.6	28400	6.5
SM100	35	9000	4.6	11500	4.6	14400	4.7	17700	4.7	21500	4.7	25800	4.7	30700	4.7	36200	4.7
	55	–	–	–	–	–	–	14200	7.1	17400	7.1	21200	7.1	25400	7.0	30200	7.0
SM110	35	10200	5.2	13000	5.2	16200	5.2	20000	5.2	24200	5.2	29000	5.2	34400	5.2	40400	5.2
	55	–	–	–	–	–	–	15900	8.0	19600	8.0	23800	7.9	28400	7.9	33700	7.8
SM112	35	11300	5.1	14100	5.1	17400	5.2	21200	5.3	25500	5.4	30500	5.5	36100	5.6	42500	5.7
	55	–	–	–	–	–	–	17500	7.8	21200	7.9	25400	8.0	30200	8.1	35700	8.2
SM120	35	11800	6.0	15200	6.0	19000	6.0	23300	5.9	28200	5.9	33700	5.9	39900	5.9	46700	5.9
	55	–	–	–	–	–	–	18600	9.2	22800	9.2	27600	9.1	33000	9.0	38900	9.0
SM124	35	13100	5.4	16200	5.5	19800	5.7	23900	5.8	28700	6.0	34100	6.1	40300	6.2	47200	6.4
	55	–	–	–	–	–	–	19800	8.4	24000	8.6	28700	8.8	34100	9.0	40200	9.2
SM147	35	14900	6.3	18600	6.4	22900	6.5	27800	6.7	33500	6.9	40000	7.1	47300	7.2	55600	7.4
	55	–	–	–	–	–	–	22700	9.8	27500	9.9	33100	10.1	39400	10.3	46600	10.5
SM148	35	14800	7.0	18500	7.0	22900	7.1	27800	7.1	33600	7.2	40100	7.2	47500	7.3	55900	7.3
	55	–	–	–	–	–	–	22600	10.9	27500	10.9	33100	10.9	39500	11.0	46800	11.0
SM161	35	16000	7.5	20100	7.6	24700	7.6	30100	7.6	36300	7.7	43400	7.7	51400	7.8	60500	7.8
	55	–	–	–	–	–	–	24400	11.7	29700	11.7	35800	11.7	42800	11.8	50600	11.8
SM175	35	17000	8.1	21300	8.1	26400	8.2	32300	8.3	39000	8.4	46600	8.4	55200	8.5	64800	8.5
	55	–	–	–	–	–	–	26200	12.4	32000	12.5	38500	12.6	46000	12.6	54400	12.7
SM185	35	18400	8.8	23100	8.9	28600	9.0	35000	9.1	42200	9.1	50500	9.2	59800	9.3	70200	9.3
	55	–	–	–	–	–	13.5	28400	13.6	34600	13.7	41800	13.8	49800	13.8	58900	13.9
SY185	35	17600	8.7	22500	8.7	28100	8.7	34500	8.8	42000	8.9	50400	9.0	60000	9.1	70900	9.2
	55	–	–	–	–	–	13.3	28600	13.3	34800	13.3	41900	13.4	49800	13.5	58600	13.7
SY240	35	25100	11.7	31400	11.8	38800	12.0	47300	12.1	57100	12.4	68300	12.6	81000	13.0	95300	13.3
	55	–	–	–	–	–	–	38400	17.8	46600	18.0	56100	18.3	67000	18.6	79300	18.9
SY300	35	31900	14.2	39900	14.5	49300	14.8	60300	15.1	73100	15.6	87900	16.1	104800	16.7	124100	17.4
	55	–	–	–	–	–	–	48600	22.0	59200	22.4	71600	22.8	85900	23.4	102300	24.1
SY380	35	40100	17.3	49500	17.6	60500	18.0	73300	18.4	88100	18.8	104900	19.2	124100	19.8	145800	20.4
	55	–	–	–	–	–	–	59700	26.8	72300	27.1	86800	27.5	103400	27.9	122300	28.4
SM170	35	15200	8.0	19500	8.0	24600	8.0	30500	8.0	37200	8.0	44900	7.9	53500	7.9	63200	7.8
	55	–	–	–	–	–	–	23600	12.7	29600	12.6	36500	12.5	44300	12.3	53100	12.1
SM180	35	16900	8.6	21400	8.7	26700	8.8	32800	8.8	39900	8.8	47900	8.8	56900	8.8	67100	8.7
	55	–	–	–	–	–	–	26200	13.4	32300	13.3	39300	13.3	47100	13.2	56000	13.1
SM200	35	17700	9.2	22600	9.3	28300	9.3	34800	9.3	42300	9.4	50900	9.4	60500	9.4	71300	9.4
	55	–	–	–	–	–	–	27900	14.3	34400	14.2	41700	14.1	50000	14.0	59400	13.9
SM220	35	20000	10.4	25500	10.4	32000	10.4	39300	10.4	47700	10.5	57100	10.5	67700	10.4	79500	10.4
	55	–	–	–	–	–	–	31400	16.0	38600	16.0	46800	15.9	56000	15.8	66300	15.6
SM230	35	22000	10.8	27400	10.9	33700	10.9	41000	10.9	49500	10.9	59100	10.9	70100	10.9	82400	10.8
	55	–	–	–	–	–	–	32500	17.2	40800	17.1	50200	16.9	61000	16.7	73100	16.5
SM242	35	23300	12.0	29900	11.9	37400	11.9	45900	11.9	55600	11.9	66400	11.9	78500	11.8	92000	11.8
	55	–	–	–	–	–	–	36600	18.4	45000	18.3	54400	18.2	64900	18.1	76600	17.9
SM248	35	26300	10.9	32500	11.1	39600	11.3	47900	11.6	57400	11.9	68200	12.2	80500	12.5	94400	12.7
	55	–	–	–	–	–	–	39700	16.9	47900	17.2	57400	17.5	68100	17.9	80300	18.4
SM250	35	23700	11.6	29500	11.7	36200	11.7	44100	11.7	53200	11.7	63500	11.7	75300	11.7	88600	11.6
	55	–	–	–	–	–	–	35000	18.5	43800	18.4	54000	18.2	65600	18.0	78600	17.7
SM268	35	26600	13.0	33700	13.0	41800	13.0	51100	13.1	61700	13.1	73700	13.2	87300	13.2	102400	13.2
	55	–	–	–	–	–	–	40700	20.1	49800	20.1	60100	20.0	71700	20.0	84800	20.0
SM271	35	25800	12.7	32500	12.8	40300	12.8	49300	12.9	59600	12.9	71300	13.0	84500	13.0	99300	13.0
	55	–	–	–	–	–	–	39700	19.7	48600	19.7	58700	19.7	70100	19.6	83000	19.6
SM272	35	28000	11.7	34800	11.9	42600	12.2	51700	12.5	62100	12.8	73900	13.2	87400	13.5	102600	13.8
	55	–	–	–	–	–	–	41700	18.3	50500	18.5	60600	18.9	72100	19.3	85200	19.7
SM281	35	27500	13.5	34700	13.5	43000	13.6	52600	13.6	63600	13.6	75900	13.7	89900	13.7	105500	13.7
	55	–	–	–	–	–	–	42300	20.9	51800	20.9	62500	20.8	74600	20.8	88200	20.8
SM285	35	27100	13.4	34000	13.5	42100	13.6	51400	13.7	62000	13.8	74100	13.9	87800	14.0	103200	14.1
	55	–	–	–	–	–	–	41200	20.8	51100	20.8	62300	20.8	75000	20.8	89300	20.7
SM290	35	27700	13.5	34700	13.6	42900	13.7	52300	13.8	63100	13.8	75400	13.9	89400	13.9	105100	13.9
	55	–	–	–	–	–	–	42000	21.0	51900	21.1	63100	21.1	75800	21.0	90100	20.9
SM294	35	29900	12.5	37200	12.7	45800	13.0	55600	13.4	67000	13.7	79900	14.1	94600	14.5	111200	14.8
	55	–	–	–	–	–	–	45400	19.7	55100	19.9	66200	20.2	78900	20.6	93300	21.1
SM296	35	29200	14.0	36500	14.1	45000	14.2	54800	14.2	66100	14.3	79000	14.4	93600	14.5	110100	14.6
	55	–	–	–	–	–	–	44500	21.8	54100	21.8	65200	21.8	77900	21.9	92200	21.9
SM310	35	30000	14.6	37500	14.7	46300	14.8	56500	14.9	68200	15.0	81500	15.1	96500	15.1	113500	15.1
	55	–	–	–	–	–	–	45400	22.8	56000	22.9	68100	22.9	81900	22.8	97300	22.7
SM320	35	30600	15.2	38600	15.4	47900	15.6	58600	15.7	70800	15.9	84700	16.1	100300	16.3	117900	16.5
	55	–	–	–	–	–	–	47400	23.1	58300	23.3	70600	23.4	84500	23.5	100100	23.7
SM322	35	31600	15.0	39500	15.1	48700	15.2	59300	15.3	71500	15.4	85500	15.5	101300	15.6	119100	15.6
	55	–	–	–	–	–	–	48100	23.4	58600	23.4	70600	23.4	84200	23.5	99700	23.5
SM350	35	33500	16.1	42000	16.3	52000	16.4	63600	16.6	76800	16.7	91800	16.8	108700	16.9	127700	17.0
	55	–	–	–	–	–	–	51600	24.9	63000	25.0	75900	25.2	90600	25.3	107100	25.4
SM370	35	36200	17.6	45500	17.8	56400	18.0	68900	18.1	83200	18.3	99400	18.4	117700	18.5	138300	18.6
	55	–	–	–	–	–	–	55900	27.2	68200	27.3	82300	27.5	98200	27.6	116000	27.7

To: *Evaporating temperature in [°C]*
Tc: *Condensing temperature in [°C]*
Pe: *Power input in [kW]*
Qo: *Cooling capacity in [W]*
Subcooling: *8.3 K*
Superheat: *11.1 K*
Voltage: *400 V / 3 / 50 Hz*

For more information and performance with other refrigerants, please refer to Coolselector ® 2 at coolselector.danfoss.com or contact Danfoss.

Technical data and ordering

SM / SY - Scroll compressors - R22 - 60 Hz

Performance table

Type	To	-20		-15		-10		-5		0		5		10		15	
	Tc	Qo	Pe	Qo	Pe	Qo	Pe	Qo	Pe	Qo	Pe	Qo	Pe	Qo	Pe	Qo	Pe
SM084	35	9600	4.78	12200	4.81	15200	4.83	18700	4.86	22600	4.89	27100	4.91	32100	4.92	37800	4.93
	55	–	–	–	–	–	–	15000	7.53	18500	7.51	22500	7.49	27000	7.45	32100	7.40
SM090	35	10600	5.20	13300	5.25	16500	5.29	20200	5.33	24500	5.36	29400	5.38	34900	5.39	41100	5.39
	55	–	–	–	–	–	–	16400	7.93	20000	7.93	24200	7.92	28900	7.90	34300	7.86
SM100	35	11200	5.41	14100	5.46	17400	5.50	21300	5.54	25700	5.58	30700	5.61	36400	5.62	42700	5.63
	55	–	–	–	–	–	–	17200	8.26	21000	8.26	25300	8.25	30100	8.23	35600	8.19
SM110	35	12800	6.17	16100	6.22	20000	6.26	24400	6.30	29500	6.34	35200	6.37	41600	6.40	48800	6.43
	55	–	–	–	–	–	–	19800	9.46	24100	9.47	29000	9.47	34500	9.46	40700	9.44
SM112	35	14100	6.07	17600	6.19	21600	6.33	26200	6.48	31500	6.64	37600	6.83	44400	7.02	52200	7.23
	55	–	–	–	–	–	–	21700	9.40	26200	9.51	31300	9.66	37100	9.82	43700	10.02
SM120	35	15000	7.10	18800	7.13	23300	7.17	28400	7.20	34200	7.25	40800	7.29	48300	7.34	56600	7.39
	55	–	–	–	–	–	–	23000	10.92	28000	10.93	33700	10.94	40100	10.94	47300	10.95
SM124	35	16000	6.50	19800	6.64	24300	6.82	29500	7.05	35400	7.32	42200	7.63	49900	7.97	58600	8.36
	55	–	–	–	–	–	–	24100	10.20	29100	10.37	34700	10.60	41200	10.87	48600	11.18
SM147	35	18600	7.58	22800	7.75	27800	7.93	33500	8.10	40000	8.29	47500	8.47	55900	8.66	65500	8.84
	55	–	–	–	–	–	–	28000	11.75	33600	11.97	40100	12.20	47600	12.46	56000	12.73
SM148	35	18100	8.32	22600	8.44	27800	8.54	33800	8.62	40600	8.71	48500	8.79	57400	8.89	67500	9.00
	55	–	–	–	–	–	–	27600	12.91	33500	13.03	40300	13.13	48000	13.22	56700	13.31
SM161	35	19700	8.99	24600	9.12	30200	9.23	36700	9.32	44200	9.41	52700	9.51	62400	9.61	73300	9.72
	55	–	–	–	–	–	–	30000	13.96	36400	14.08	43800	14.19	52100	14.29	61600	14.39
SM175	35	21100	9.81	26400	9.98	32500	10.15	39500	10.31	47500	10.46	56500	10.59	66600	10.70	77800	10.80
	55	–	–	–	–	–	–	32200	15.06	39200	15.23	47000	15.39	55800	15.53	65600	15.65
SM185	35	22500	10.42	28100	10.60	34600	10.78	42000	10.95	50500	11.10	60100	11.25	70800	11.37	82800	11.47
	55	–	–	–	–	–	–	34300	15.99	41700	16.17	50000	16.34	59300	16.49	69800	16.62
SY185	35	22500	10.37	28000	10.49	34500	10.60	42000	10.71	50800	10.83	60800	10.94	72200	11.05	85100	11.16
	55	–	–	–	–	–	–	34600	15.85	42100	16.13	50800	16.39	60700	16.63	71900	16.86
SY240	35	30600	13.98	38200	14.17	47100	14.43	57300	14.75	69100	15.15	82500	15.63	97600	16.19	114800	16.84
	55	–	–	–	–	–	–	46700	21.37	56700	21.74	68100	22.16	81000	22.64	95700	23.19
SY300	35	39800	16.39	49400	16.85	60600	17.38	73600	17.97	88500	18.59	105600	19.25	125000	19.91	146900	20.58
	55	–	–	–	–	–	–	59600	25.95	72300	26.65	86800	27.43	103400	28.30	122300	29.22
SY380	35	49000	20.86	60600	21.18	74200	21.63	89900	22.16	108000	22.77	128600	23.41	152100	24.06	178600	24.68
	55	–	–	–	–	–	–	72800	32.58	88300	32.94	106000	33.45	126200	34.09	149000	34.81
SM170	35	18900	9.54	24000	9.60	29900	9.66	36800	9.72	44500	9.77	53300	9.80	63300	9.83	74400	9.85
	55	–	–	–	–	–	–	29500	15.04	36400	15.01	44300	14.96	53300	14.89	63300	14.80
SM180	35	20900	10.40	26200	10.49	32600	10.57	39900	10.65	48300	10.71	57900	10.76	68700	10.78	80900	10.78
	55	–	–	–	–	–	–	32300	15.85	39400	15.85	47600	15.83	57000	15.79	67500	15.71
SM200	35	22000	10.81	27700	10.91	34300	11.00	41900	11.08	50600	11.15	60500	11.21	71700	11.24	84200	11.25
	55	–	–	–	–	–	–	34000	16.50	41400	16.51	49800	16.49	59400	16.45	70100	16.37
SM220	35	25300	12.34	31800	12.42	39400	12.51	48100	12.59	58000	12.66	69300	12.74	82000	12.80	96200	12.85
	55	–	–	–	–	–	–	39000	18.91	47500	18.92	57100	18.92	68000	18.90	80300	18.86
SM242	35	29500	14.19	37100	14.25	45800	14.32	55900	14.40	67400	14.48	80400	14.58	95100	14.67	111400	14.78
	55	–	–	–	–	–	–	45300	21.83	55200	21.84	66400	21.86	79100	21.87	93200	21.88
SM248	35	32000	13.01	39600	13.27	48600	13.64	58900	14.09	70700	14.63	84300	15.25	99700	15.95	117200	16.71
	55	–	–	–	–	–	–	48100	20.40	58100	20.75	69400	21.19	82400	21.73	97100	22.36
SM268	35	32600	15.41	40800	15.56	50300	15.70	61200	15.83	73700	15.95	88000	16.08	104100	16.23	122200	16.39
	55	–	–	–	–	–	–	49900	23.83	60600	23.95	72900	24.06	86800	24.16	102500	24.25
SM271	35	32100	15.16	40100	15.33	49400	15.48	60200	15.62	72500	15.75	86600	15.88	102500	16.01	120300	16.15
	55	–	–	–	–	–	–	49100	23.42	59600	23.55	71700	23.66	85400	23.75	100800	23.83
SM272	35	34500	14.08	42600	14.39	52000	14.74	62900	15.15	75300	15.60	89600	16.09	105700	16.63	124000	17.20
	55	–	–	–	–	–	–	52000	21.95	62600	22.34	74800	22.80	88700	23.32	104500	23.91
SM281	35	34200	16.09	42700	16.25	52700	16.39	64100	16.53	77200	16.66	92100	16.80	109000	16.95	128000	17.11
	55	–	–	–	–	–	–	52200	24.87	63500	25.01	76300	25.13	90900	25.24	107300	25.34
SM294	35	37100	15.15	45600	15.50	55500	15.85	66900	16.21	79900	16.57	94800	16.94	111700	17.31	130900	17.69
	55	–	–	–	–	–	–	55900	23.50	67200	23.94	80200	24.40	95000	24.91	111800	25.46
SM296	35	35800	16.62	44500	16.86	54700	17.06	66500	17.24	80000	17.40	95500	17.57	113100	17.76	132900	17.98
	55	–	–	–	–	–	–	54400	25.80	66000	26.04	79300	26.24	94500	26.42	111700	26.60
SM322	35	38900	17.97	48400	18.22	59500	18.44	72300	18.63	87000	18.81	103800	19.00	122900	19.20	144500	19.43
	55	–	–	–	–	–	–	59100	27.89	71700	28.15	86200	28.37	102700	28.57	121400	28.76
SM350	35	41600	19.61	52000	19.95	64000	20.28	77800	20.60	93500	20.90	111200	21.16	131100	21.40	153300	21.58
	55	–	–	–	–	–	–	63500	30.10	77100	30.44	92600	30.75	109900	31.04	129200	31.28
SM370	35	44300	20.83	55300	21.19	68100	21.54	82800	21.88	99500	22.19	118300	22.48	139500	22.72	163100	22.92
	55	–	–	–	–	–	–	67600	31.96	82100	32.32	98500	32.66	116900	32.96	137500	33.22

To: *Evaporating temperature in [°C]*
Tc: *Condensing temperature in [°C]*
Pe: *Power input in [kW]*
Qo: *Cooling capacity in [W]*
Subcooling: *8.3 K*
Superheat: *11.1 K*
Voltage: *400 V / 3 / 60 Hz*

For more information and performance with other refrigerants, please refer to Coolselector ® 2 at coolselector.danfoss.com or contact Danfoss.

Nomenclature

Family,lubrificant & refrigerant	Normal capacity	Approval	Voltage	Version	Evolution index	
SZ	**185**	**-**	**4**	**R**	**C**	Single compressor
SY	**300**	**A**	**7**	**CA**	**A**	Single compressor

Family, refrigerant & lubrificant:
SM: Scroll, Mineral oil, R22/R417A*)
SY: Scroll, POE lubricant, R22/R417A (R407C for SY185 to 380,R134a for SY240 to 380)
SZ: Scroll, POE lubricant, R407C - R134a (and R404A, R507A for SZ084 to SZ185)

Nominal capacity:
in thousand Btu/h at 60 Hz, R22, ARI conditions

Motor voltage code:
3: 200-230 V/3~/60 Hz
4: 380-400 V/3~/50 Hz - 460 V/3~/60 Hz
SY380: 380-415V/3~/50 Hz - 460 V/3~/60 Hz
6: 230 V/3~/50 Hz
7: 500 V/3~/50 Hz - 575V/3~/60 Hz
9: 380 V/3~/60 Hz
SY380: 380-400 V/3~/60 Hz

Motor protection type		Connection	Module voltage	Applies to
Internal overload protector	**V**	: brazed		S 084-090-100-110-120-148-161
	A	: brazed		S 112-124-147
Internal thermostat	**C**	: brazed		S 185
	R	: rotolock		
Electronic protection module	**P**	: brazed	24 V AC	
	X	: brazed	110 – 240 V	
	Y	: rotolock	110 – 240 V	
	CA	**C**: brazed	**A**: 24 V AC	S 240 - 300
	CB		**B**: 110 – 240 V	
	PA	**P**: rotolock	**A**: 24 V AC	
	PB		**B**: 110 – 240 V	
	CA	**C**: brazed	**A**: 24 V AC	S 380
	CB		**B**: 110 – 240 V	

*) When SM compressors are used with R417A, the factory charged mineral oil 160P must be replaced by polyolester oil 160SZ

Dimensions

SM / SZ 084-090-100-110-120

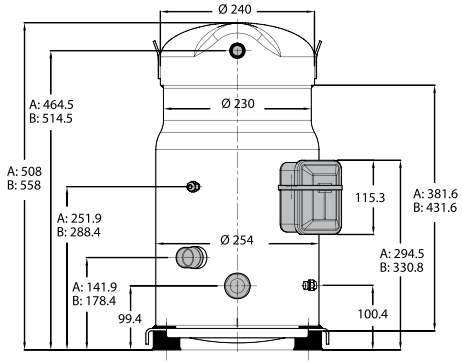

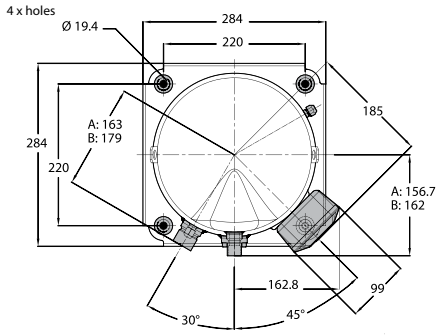

A: SM / SZ 084-090-100
B: SM / SZ 110-120

SM 112-124-SM / SZ147 [3])

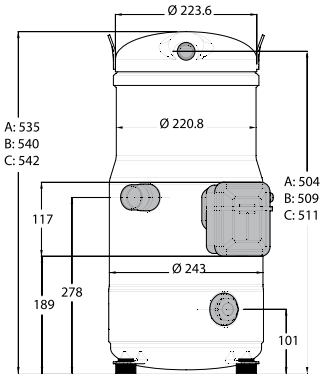

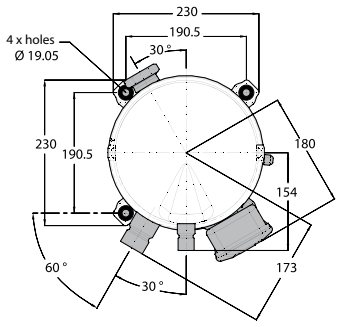

A: SM112
B: SM124
C: SZ147

[3]) except code 3

SM / SZ 147 code 3

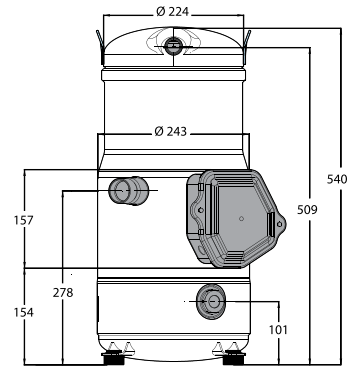

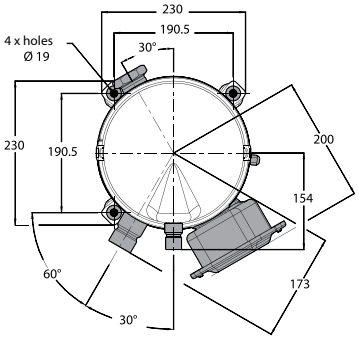

Dimensions

SM / SZ148-161

SM148-161 code 3

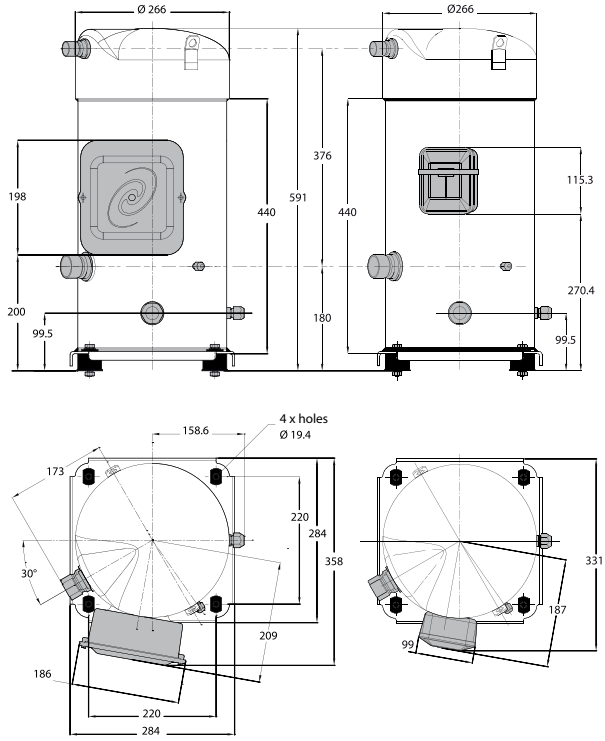

SM148-161 code 4

SM/SZ 175-185 & SY185 - R and C version

Brazed version

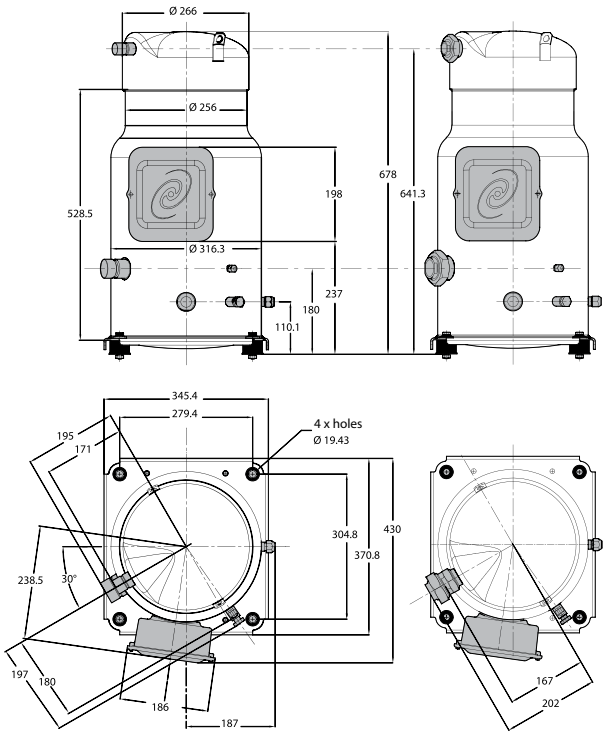

Rotolock version

SM/SZ 185 P, X, Y version

Brazed version

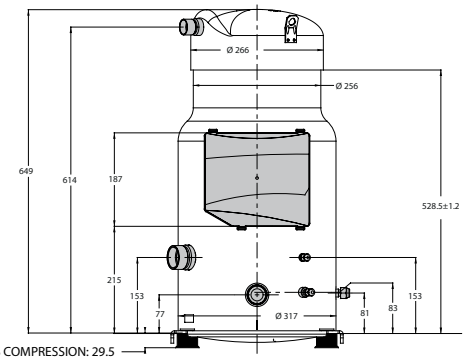

SANS COMPRESSION: 29.5
/ Without compression

AVEC COMPRESSION: 28.0
/ With compression

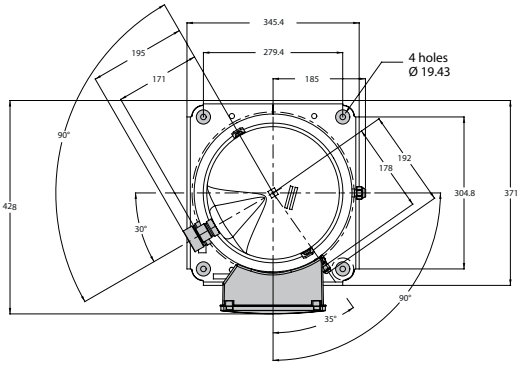

Rotolock version

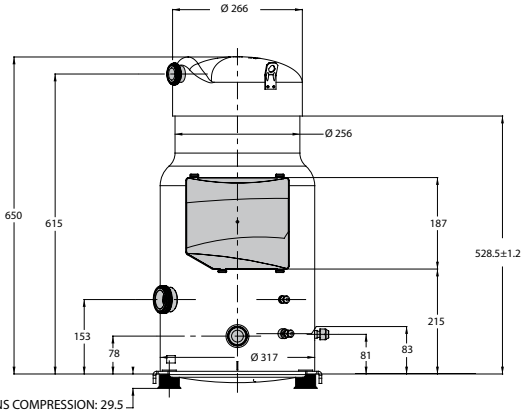

SANS COMPRESSION: 29.5
/ Without compression

AVEC COMPRESSION: 28.0
/ With compression

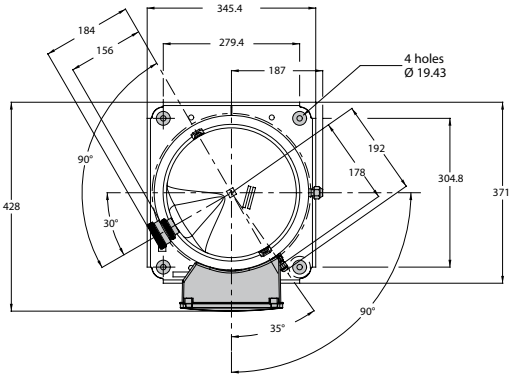

Dimensions

SY / SZ 240-300-380

Brazed version

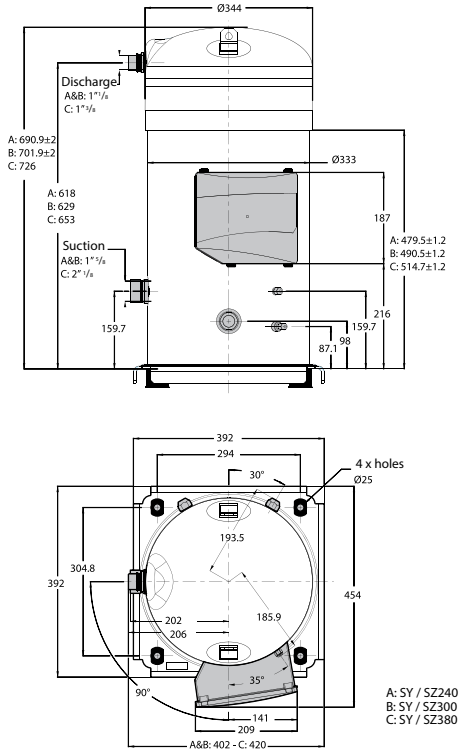

Rotolock version

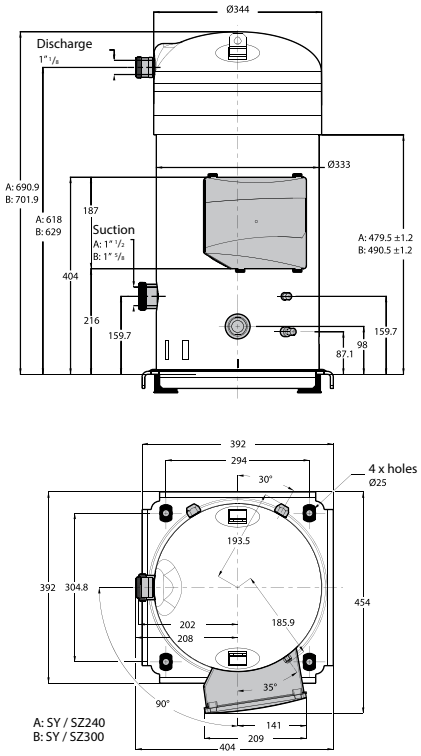

Technical data

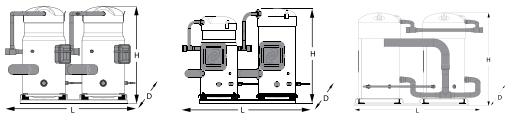

SM / SY / SZ - Scroll compressors - Tandem / Trio

Features

Type		Composition	R22	R404A / R507A	R407C	R134a	Oil management
Tandem	SM/SZ170	SM/SZ084 + SM/SZ084	o	o	o	o	Dynamic
	SM/SZ180	SM/SZ090 + SM/SZ090	o	o	o	o	Dynamic
	SM/SZ200	SM/SZ100 + SM/SZ100	o	o	o	o	Dynamic
	SM/SZ220	SM/SZ110 + SM/SZ110	o	o	o	o	Dynamic
	SM/SZ242	SM/SZ120 + SM/SZ120	o	o	o	o	Dynamic
	SM248	SM124 + SM124	o	–	–	–	Static
	SM/SZ268	SM/SZ120 + SM/SZ148	o	o	o	o	Dynamic
	SM/SZ271	SM/SZ110 + SM/SZ161	o	o	o	o	Dynamic
	SM272	SM124 + SM147	o	–	–	–	Static
	SM/SZ281	SM/SZ120 + SM/SZ161	o	o	o	o	Dynamic
	SM294	SM147 + SM147	o	–	–	–	Static
	SM/SZ296	SM/SZ148 + SM/SZ148	o	o	o	o	Dynamic
	SM/SZ322	SM/SZ161 + SM/SZ161	o	o	o	o	Dynamic
	SM/SZ350	SM/SZ175 + SM/SZ175	o	o	o	o	Dynamic
	SY/SZ370	SY/SZ185 + SY/SZ185	o	o	o	o	Dynamic
	SY/SZ425	SY/SZ240 + SY/SZ185	o	–	o	o	Dynamic
	SY/SZ482	SY/SZ240 + SY/SZ240	o	–	o	o	Static
	SY/SZ485	SY/SZ300 + SY/SZ185	o	–	o	o	Dynamic
	SY/SZ540	SY/SZ300 + SY/SZ240	o	–	o	o	Static
	SY/SZ600	SY/SZ300 + SY/SZ300	o	–	o	o	Static
	SY/SZ620	SY/SZ240 + SY/SZ380	o	–	o	o	Static
	SY/SZ680	SY/SZ300 + SY/SZ380	o	–	o	o	Static
	SY/SZ760	SY/SZ380 + SY/SZ380	o	–	o	o	Static
Trio	SM/SZ444	3 x SM/SZ148	o	o	o	o	Static
	SM/SZ483	3 x SM/SZ161	o	o	o	o	Static
	SY/SZ550	3 x SY/SZ185	o	o	o	o	Dynamic
	SY/SZ720	3 x SY/SZ240	o	–	o	o	Static
	SY/SZ900	3 x SY/SZ300	o	–	o	o	Static
	SY/SZ1140	3 x SY/SZ380	o	–	o	o	Static
Quadro	SM/SZ740	4 x SY/SZ185	o	o	o	o	Dynamic

o *Field assembly*
– *Not available*

SM / SY / SZ - Scroll compressors

Field assembly

Tandem Type	Connection	Configuration example	Oil equalisation fittings	Tandem assembly kit code no.	
				Kit [1]	Kit [2]
SM/SZ170	Brazed	SZ084-4VI + SZ084-4VI	2 x 023U801466	7703251	7765012
SM/SZ180	Brazed	SZ090-4VI + SZ090-4VI	2 x 023U801466	7703251	7765012
SM/SZ200	Brazed	SZ100-4VI + SZ100-4VI	2 x 023U801466	7703251	7765012
SM/SZ220	Brazed	SZ110-4VI + SZ110-4VI	2 x 023U801466	7703384	7765025
SM/SZ242	Brazed	SZ120-4VI + SZ120-4VI	2 x 023U801466	7703384	7765025
SM/SZ268	Brazed	SZ148-4VAI + SZ120-4VI	2 x 023U801466	7703390	7765025
SM/SZ271	Brazed	SZ161-4VAI + SZ110-4VI	2 x 023U801466	7703390	7765025
SM/SZ281	Brazed	SZ161-4VAI + SZ120-4VI	2 x 023U801466	7703390	7765025
SM/SZ296	Brazed	SZ148-4VAI + SZ148-4VAI	2 x 023U801466	7703390	7765025
SM/SZ322	Brazed	SZ161-4VAI + SZ161-4VAI	2 x 023U801466	7703390	7765025
SM/SZ350	Rotolock	SZ175-4SCI + SZ175-4SCI	2 x 023U801466	7703371	7765013
SM/SZ350	Brazed	SZ175-4PCI + SZ175-4PCI	2 x 023U801466	–	7765017
SM/SZ370	Rotolock	SZ185-4SCI + SZ185-4SCI	2 x 023U801466	7703371	7765013
SM/SZ370	Brazed	SZ185-4PCI + SZ185-4PCI	2 x 023U801466	–	7765017
SY/SZ425	Brazed	SZ240A4AAI + SZ185-4PCI	023U801666 + 023U801466	–	7765027
SY/SZ485	Rotolock	SZ300A4AAI + SZ185-4PCI	023U801666 + 023U801466	–	7765027

Different tandem assembly kits are available:
[1]) *Containing the suction and discharge Tees sleeves and the suction oil separator / gas restrictor*
[2]) *Containing the suction oil separator / gas restrictor only*

Technical data

SM - Scroll compressors

Operation principle

Tandem model	Composition	Suction [in]	Discharge [in]	Oil equalisation line [in]	Outline drawing number
SM248	SM124 + SM124	1 5/8	1 3/8	7/8	8556051
SM272	SM124 + SM147	1 5/8	1 3/8	7/8	8556051
SM294	SM147 + SM147	1 5/8	1 3/8	1 1/8	8556051

SM - Scroll compressors

Ordering information

Tandem model	Configuration example	Tandem assembly kit code no.
SM248	120H0185 + 120H0185	7777044
SM272	120H0185 + 120H0191	7777050
SM294	120H0191 + 120H0191	7777054

Refer to FRCC.PC.003 "Ordering information & packaging" section for other codes or industrial pack version.

SY / SZ - Scroll compressors

Operation principle

Tandem model	Composition	Suction [in]	Discharge [in]	Oil equalisation line [in]	Outline drawing number
SY/SZ482	S 240 + S 240	2 5/8	1 5/8	1/2	8556013
SY/SZ540	S 300 + S 240	2 5/8	1 5/8	1/2	8556034
SY/SZ600	S 300 + S 300	2 5/8	1 5/8	1/2	8556013
SY/SZ620	S 380 + S 240	2 5/8	2 1/8	1/2	8556036
SY/SZ680 left suction	S 380 + S 300	2 5/8	2 1/8	1/2	8556032
SY/SZ680 right suction	S 380 + S 300	2 5/8	2 1/8	1/2	8556032
SY/SZ760	S 380 + S 380	2 5/8	2 1/8	1/2	8556029

SY / SZ - Scroll compressors

Ordering information

Tandem model	Composition		Code number	Washer Ø [mm]	Oil equalisation fitting	Washer in suction of compressor
	Cp1	Cp2				
SY/SZ482	SZ240	SZ240	–	–	2 x 023U801666	–
SY/SZ540	SZ300	SZ240	7777023	29.5	2 x 023U801666	Cp1
SY/SZ600	SZ300	SZ300	–	–	2 x 023U801666	–
SY/SZ620	SZ380	SZ240	–	–	2 x 023U801666	–
SY/SZ680 left suction	SZ380	SZ300	7777036	38	2 x 023U801666	Cp2
SY/SZ680 right suction	SZ380	SZ300	7777036	39	2 x 023U801666	Cp2
SY/SZ760	SZ380	SZ380	–	–	2 x 023U801666	–

Refer to FRCC.PC.003. "Ordering information & packaging" section for other codes or other connections, or other motor protection version or industrial pack version.

SY / SZ - Scroll compressors

Operation principle

Trio model	Composition	Suction [in]	Discharge [in]	Oil equalisation [in]	Trio drawing number
SY/SZ720	3 x S240	2 5/8	1 3/8	1/2	8556018 *) 8556024 **)
SY/SZ900	3 x S300	2 5/8	1 3/8	1/2	8556018 *) 8556024 **)
SY/SZ1140	S x S380	2 5/8	1 3/8	1/2	8556145 *) 8556030 **)

*)Left suction connection **) Right suction connection

SY / SZ - Scroll compressors

Operation principle

Trio model	Configuration example	Flare adapters	Restrictors
SY/SZ720	3 x SZ240A4CBM	6 x 023U801666	Standard piping and Tee's
SY/SZ900	3 x SZ300A4CBM	6 x 023U801666	Standard piping and Tee's
SY/SZ1140	3 x SZ380A4CBM	6 x 023U801666	Standard piping and Tee's

CXH 140, Scroll compressor - R410A

For Chinese modular chillers – 12HP - R410A.
CXH scroll compressor is optimized for air-cooled chillers.
The product associates the best in scroll technologies to obtain a higher
level of reliability and industry leading EER. The CXH compressor boosts energy performance and savings in end user applications and helps meeting the demanding Chinese energy efficiency standards.

Combined with a sturdy design, it is today the best fixed-speed offer for light commercial modular chillers that guarantees great comfort at low running costs.
The model is based on the combination of tested and reliable scroll designs. Tip seal and radial compliance ensure strong reliability.
The optimization for Chinese chillers gives a measured saving on electricity consumption of 4% versus the next best alternative in modular air-cooled chillers.



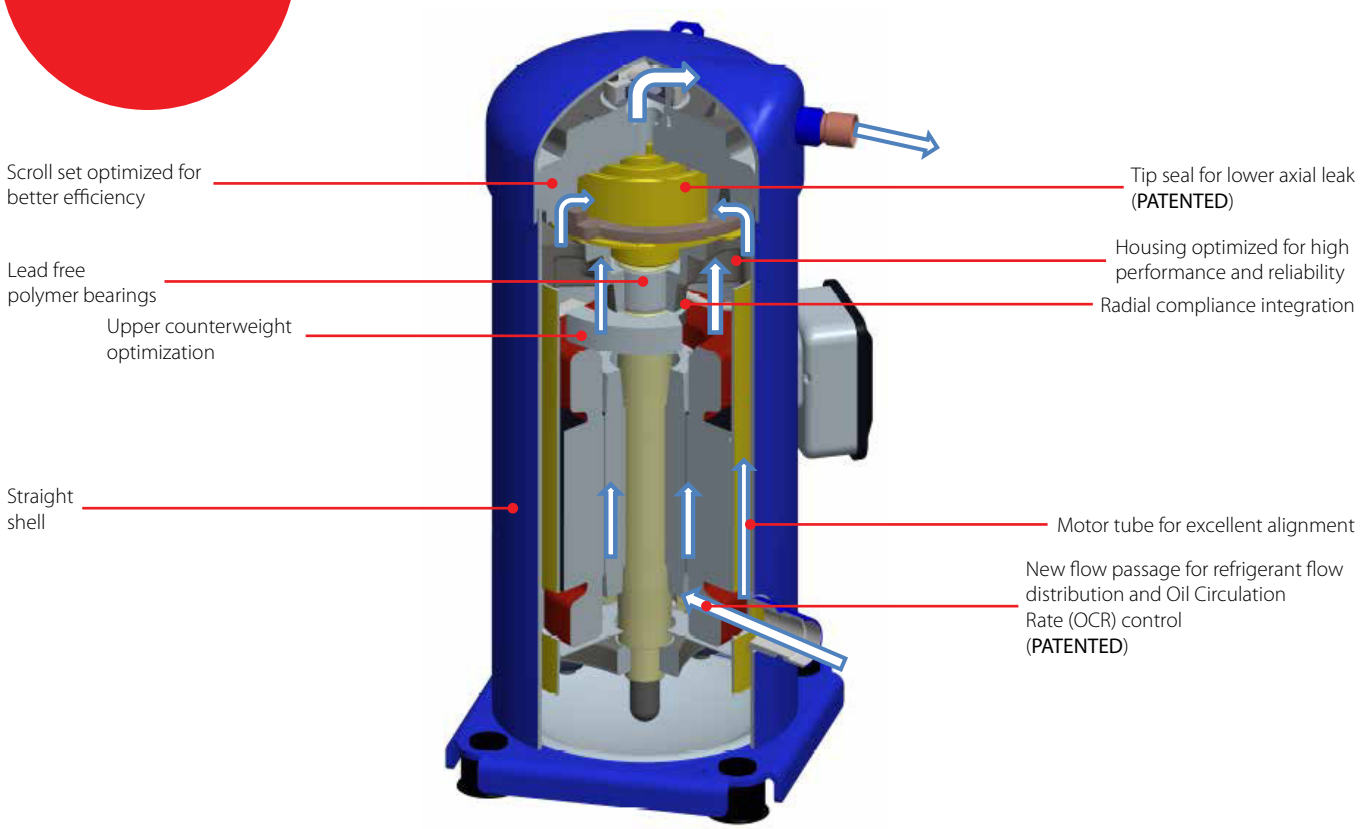

Facts

Product advantages
- New scroll set design
- Optimization for higher efficiency in air-cooled modular chiller conditions
- 11.35 industry leading EER
- Standard footprint
- Wide operating envelope

- Customer benefits
- Higher reliability
- Meet the new energy standards
- Reduced running costs
- Easy drop-in in existing chiller design
- Suitable for applications in extreme conditions

Technical data and ordering

CXH - Scroll compressor - R410A - 50 Hz

Technical data

Type	Nominal tons 60 Hz	Nominal cooling capacity		Power input	COP	E.E.R	Swept volume	Displacement	Oil charge	Net weight
	[TR]	[W]	[Btu/h]	[kW]	[W/W]	[Btu/h/W]	[cm³/rev]	[m³/h]	[dm3]	[kg]
CXH140	12	34 756	119 079	10.45	3.33	11.35	132.9	23.1	2.5	71.5

Note: compressor performance after 72 hours wear in

Type	Nominal tons 60 Hz	Nominal cooling capacity		Power input	Max operating current ①	Efficiency		Sound power	Displacement ②
	[TR]	[W]	[Btu/h]	[kW]		COP [W/W]	E.E.R [Bty/h/W]	dB [A]	[m³/h]
CXH282	23.5	68886	235050	20.9	47	3.30	11.25	75.5	46.2
CXH140 + CXH140									

Note: compressor performance after 72 hours wear in
① for +15 °C evap. temp; +68 °C cond. temp under nominal voltage 400 V / 3 / 50 Hz
② displacement at nominal speed: 2900 rpm at 50 Hz
***TR:** Ton of Refrigeration*
COP: *Coefficient Of Performance*
Rating conditions: CXH compressors *Refrigerant: R410A* *Frequency: 50 Hz* *Standard rating conditions: ARI standard*
Evaporating temperature: 7.2 °C *Condensing temperature: 54.4 °C* *Sub-cooling: 8.3 K* *Superheat: 11.1 K*

CXH - Scroll compressor - R410A

Ordering

Danfoss scroll compressor CXH can be ordered in either industrial packs or in single packs.
Please use the code numbers from below tables for ordering.



CXH - Scroll compressor - R410A

Ordering - Single pack

Type	Version	Code no.
		4
CXH140	AL version	120H1102
	BL version	120H1171



CXH - Scroll compressor - R410A

Ordering - Industrial pack

Type	Version	Code no.
		4
CXH140	AL version	120H1103
	BL version	120H1172

CXH - Scroll compressor - R410A

Performance table

Type	To	-25		-20		-15		-10		-5		0		5		10		15	
	Tc	Qo	Pe	Qo	Pe	Qo	Pe	Qo	Pe	Qo	Pe	Qo	Pe	Qo	Pe	Qo	Pe	Qo	Pe
CXH140	35	11878	6.78	15122	6.84	18907	6.85	23307	6.83	28393	6.80	34237	6.79	40911	6.81	48486	6.89	57035	7.04
	45	10117	8.41	13078	8.53	16533	8.57	20552	8.57	25210	8.54	30576	8.50	36723	8.47	43724	8.48	51649	8.54
	55	–	–	–	–	13876	10.70	17390	10.73	21492	10.71	26255	10.67	31750	10.61	38049	10.58	45225	10.57

***To:** Evaporating temperature in [°C]* ***Tc:** Condensing temperature in [°C]* ***Qo:** Cooling capacity in [W]* ***Pe:** Power input in [kW]*
***Subcooling:** 8.3 K* ***Superheat:** 11.1 K* ***Voltage:** 400 V / 3 / 50 Hz*

CXH - Scroll compressor - R410A

Ordering - Tandem version

Compressor	Tandem	Code no.
Compressor 1	Model	CXH140
	Code No. [1])	120H1172
Compressor 2	Model	CXH140
	Code No. [1])	120H1172
Tandem kit	Code No.	120Z0616

[1]) *Example for the voltage code 4 (industrial pack). Refer to "code number information" part for single pack version*

Nomenclature

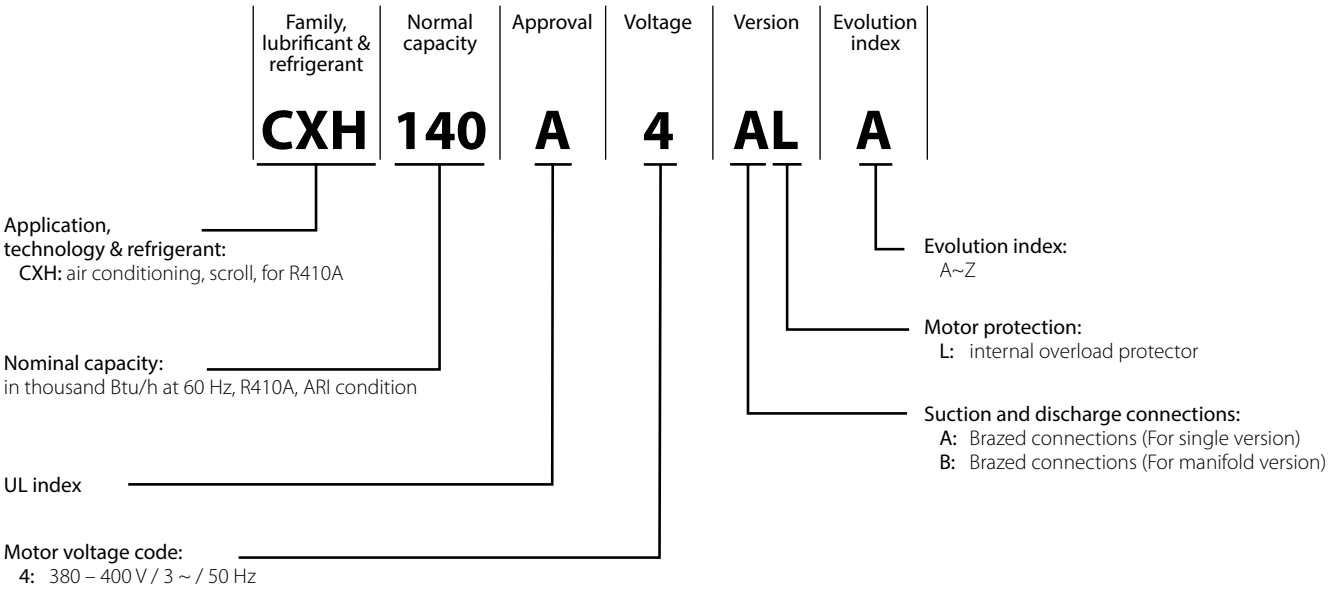

Dimensions

CXH140 - AL - Single version

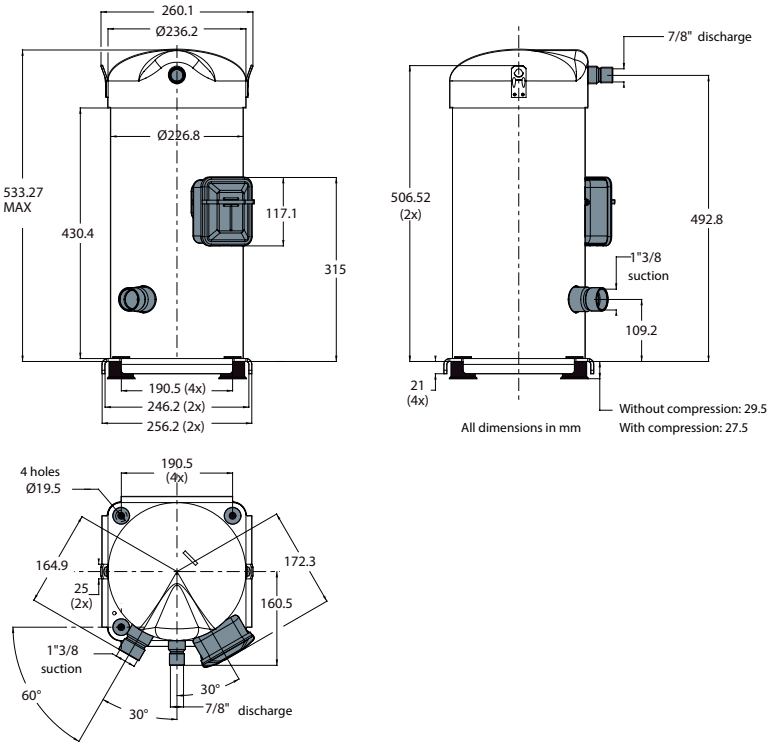

CXH140 - BL - Manifold version

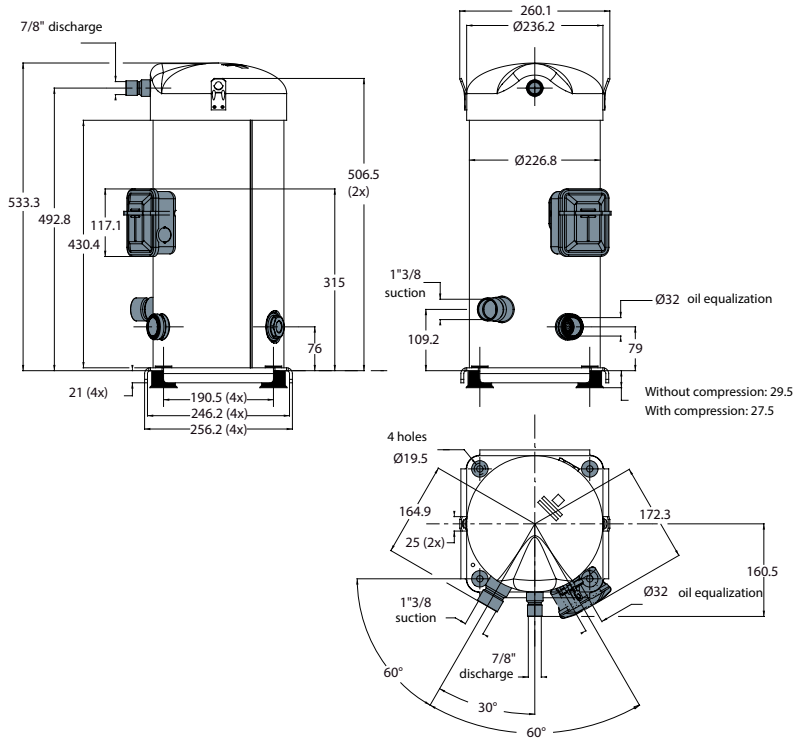

PSH, Scroll compressor heating optimized - R410A

R410A, single, Danfoss scroll compressors dedicated to heating applications. PSH compressors have an extended operating envelope thanks to a liquid injection system and an integrated electronic module. The product reliability is improved via map monitoring, data storage and bus communication.

PSH compressors are suitable with a patented Surface Sump Heater (SSH) with integrated insulation, which largely contributes to the reduction in sound level.



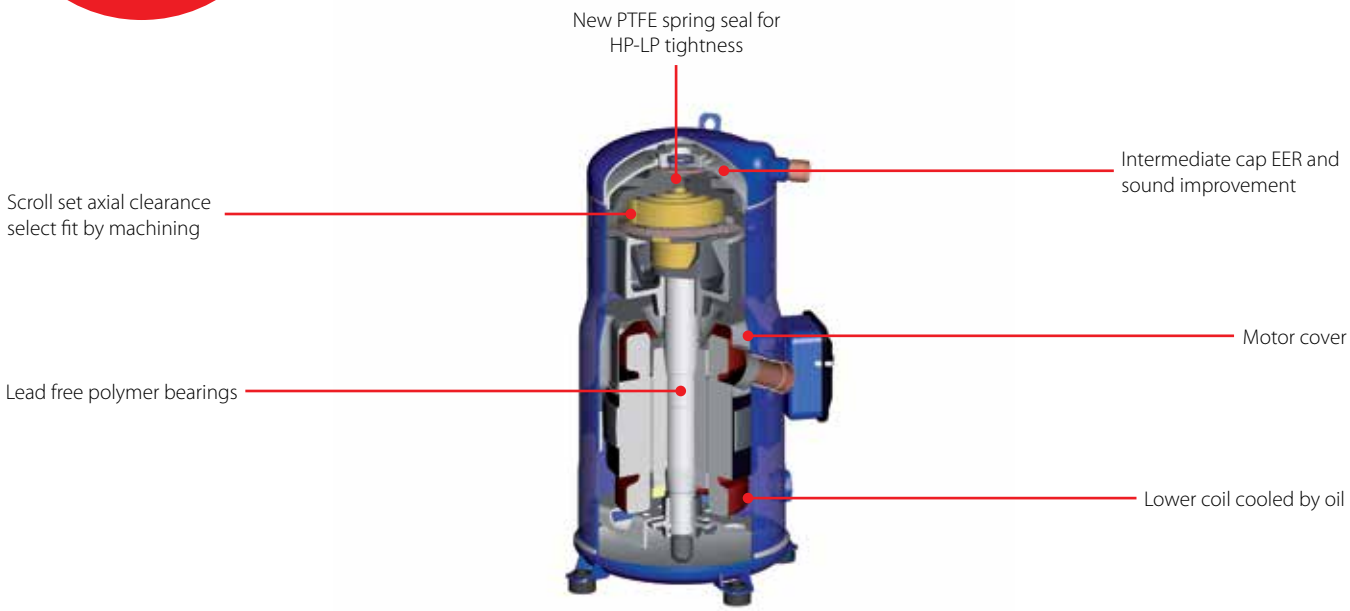

PSH 019 - 039

Facts

- Water heated to 60 °C at -15 °C ambient temperature
- Equipment manufacturers will benefit from the liquid injection system, which offers a wider operating temperature envelope. In comparison with gas or oil furnaces for space heating and Hot Sanitary Water (HSW) production, a heat pump system offers very large energy savings – up to 50%. But until now, most heat pumps have been limited with regard to operating temperatures
- An energy efficient solution that qualifies for the European Ecolabel. The PSH019-039 obtain a compressor COP better than that required for the Ecolabel (3.4W / W). All displacements offer a minimum COP of 3.77, and figures of up 4.11 can be achieved for Air-to-Water heat pumps, depending on the model
- Heat pumps for heating in factories, offices, shopping malls, etc
- A simpler and more efficient solution for OEMs 25% cost reduction. A light PSH compressor requires fewer components in the system. It saves installing an brazed plate heat exchanger, electronic expansion valves and extra piping, thus reducing costs. The new integrated liquid injection valve and controller make it simpler to design and manufacture heat pumps

Technical data and ordering

PSH - Scroll compressors heating optimized

Ordering - Single pack

Compressor	Connections	Code no.		
		Motor code 3	Motor code 4	Motor code 9
PSH019	Full package	120H0963	120H0931	120H0987
PSH023		120H0965	120H0933	120H0989
PSH026		120H0967	120H0935	120H0991
PSH030		120H0969	120H0937	120H0993
PSH034		120H0971	120H0939	120H0995
PSH039		120H0973	120H0941	120H0997
PSH019	Bare compressor	–	120H0951	–
PSH023		–	120H0953	–
PSH026		–	120H0955	–
PSH030		–	120H0957	–
PSH034		–	120H0959	–
PSH039		–	120H0961	–

PSH - Scroll compressors heating optimized

Ordering - Industrial pack

Compressor	Connections	Code no.		
		Motor code 3	Motor code 4	Motor code 9
PSH019	Full package	120H0964	120H0932	120H0988
PSH023		120H0966	120H0934	120H0990
PSH026		120H0968	120H0936	120H0992
PSH030		120H0970	120H0938	120H0994
PSH034		120H0972	120H0940	120H0996
PSH039		120H0974	120H0942	120H0998
PSH019	Bare compressor	–	120H0952	–
PSH023		–	120H0954	–
PSH026		–	120H0956	–
PSH030		–	120H0958	–
PSH034		–	120H0960	–
PSH039		–	120H0962	–

PSH - Scroll compressors heating optimized

Compressor specifications

Type		Nominal Heating capacity	Power Input	Heating COP	Swept volume	Displacement [1]	Oil charge	Net weight [2]
		[W]	[W]	[W]/[W]	[cm³/rev]	[m³/h]	[dm³]	[kg]
50 Hz	PSH019	19600	6.62	2.96	88.40	15.40	3.0	58.5
	PSH023	23000	7.47	3.07	103.50	18.00	3.3	64.5
	PSH026	26000	8.65	3.00	116.90	20.30	3.3	64.5
	PSH030	30000	9.60	3.13	133.00	23.12	3.3	67.5
	PSH034	34200	10.95	3.12	151.17	26.40	3.3	69.5
	PSH039	38900	12.19	3.19	170.30	29.60	3.6	72.0
60 Hz	PSH019	23600	7.97	2.96	88.40	18.60	3.0	58.5
	PSH023	28000	8.84	3.17	103.50	21.80	3.3	64.5
	PSH026	31400	10.19	3.08	116.90	24.60	3.3	64.5
	PSH030	35700	11.35	3.15	133.00	27.90	3.3	67.5
	PSH034	40500	12.72	3.18	151.17	31.90	3.3	69.5
	PSH039	46500	14.49	3.21	170.30	35.80	3.6	72.0

Evaporating temperature: -7 °C Condensing temperature: 50 °C Superheat: 5 K Subcooling: 4 K Refrigerant: R410A

[1]) Displacement at nominal speed: 2900 rpm at 50 Hz. 3500 rpm at 60 Hz
[2]) Net weight with oil charge

Technical data and ordering

PSH - Scroll compressors heating optimized - R410A - 50 Hz

Cooling performance table - Heating optimized

Type	Te	-30		-20		-15		-10		-5		0		5		10		15	
	Tc	Qo	Pe	Qo	Pe	Qo	Pe	Qo	Pe	Qo	Pe	Qo	Pe	Qo	Pe	Qo	Pe	Qo	Pe
PSH019-4	20	7040	3.48	11140	3.59	13810	3.66	16930	3.75	20570	3.87	24740	4.03	29510	4.23	–	–	–	–
	30	6170	4.26	10070	4.36	12560	4.41	15470	4.48	18840	4.57	22710	4.68	27130	4.83	32130	5.02	37760	5.27
	40	5230	5.25	8820	5.36	11100	5.40	13750	5.44	16810	5.50	20330	5.58	24340	5.68	28900	5.81	34040	5.99
	50	4230	6.52	7430	6.65	9430	6.68	11770	6.72	14470	6.75	17590	6.79	21160	6.86	25220	6.94	29820	7.06
	60	–	–	5890	8.31	7580	8.35	9550	8.37	11840	8.39	14510	8.41	17580	8.44	21100	8.48	25110	8.55
	68	–	–	–	–	–	–	7600	10.03	9530	10.04	11800	10.04	14440	10.04	17490	10.06	20990	10.09
PSH023-4	20	8570	4.08	13310	4.38	16360	4.52	19940	4.61	24100	4.64	28880	4.58	34340	4.42	–	–	–	–
	30	7470	4.91	11980	5.13	14860	5.29	18220	5.44	22100	5.57	26560	5.66	31650	5.67	37420	5.60	43920	5.41
	40	6310	6.15	10500	6.14	13140	6.25	16220	6.39	19780	6.55	23870	6.70	28540	6.83	33840	6.90	39830	6.90
	50	5080	8.01	8830	7.63	11190	7.61	13940	7.67	17120	7.78	20780	7.93	24990	8.09	29770	8.24	35200	8.36
	60	–	–	6990	9.82	9010	9.60	11370	9.50	14120	9.50	17310	9.57	20980	9.69	25200	9.84	30010	10.00
	68	–	–	–	–	–	–	9100	11.50	11460	11.35	14230	11.31	17450	11.35	21180	11.45	25450	11.59
PSH026-4	20	9490	4.47	15160	4.64	18860	4.76	23220	4.93	28290	5.14	34130	5.41	40800	5.74	–	–	–	
	30	8350	5.49	13720	5.61	17160	5.69	21200	5.81	25880	5.97	31260	6.17	37410	6.44	44370	6.77	52210	7.18
	40	7140	6.82	12060	6.90	15190	6.95	18840	7.02	23070	7.13	27930	7.28	33490	7.47	39800	7.73	46910	8.05
	50	5840	8.55	10210	8.60	12950	8.63	16160	8.67	19870	8.73	24150	8.82	29050	8.95	34640	9.14	40980	9.38
	60	–	–	8150	10.82	10450	10.82	13140	10.83	16270	10.85	19910	10.90	24100	10.97	28910	11.09	34390	11.26
	68	–	–	–	–	–	–	10490	13.01	13120	13.00	16190	13.01	19770	13.05	23910	13.12	28670	13.23
PSH030-4	20	11280	5.02	17620	5.23	21730	5.34	26560	5.49	32160	5.67	38600	5.90	45950	6.19	–	–	–	–
	30	9960	6.05	15940	6.28	19760	6.38	24220	6.50	29380	6.64	35320	6.81	42080	7.03	49750	7.32	58370	7.69
	40	8580	7.35	14070	7.63	17530	7.74	21570	7.85	26240	7.96	31600	8.10	37720	8.27	44670	8.49	52500	8.77
	50	7130	8.98	12000	9.36	15050	9.50	18590	9.61	22690	9.72	27420	9.84	32840	9.98	39000	10.15	45990	10.37
	60	–	–	9710	11.56	12280	11.74	15270	11.88	18740	12.00	22770	12.12	27420	12.24	32740	12.38	38810	12.56
	68	–	–	–	–	–	–	12350	14.11	15280	14.26	18710	14.39	22690	14.51	27290	14.64	32580	14.80
PSH034-4	20	12690	5.57	20070	5.82	24860	5.97	30460	6.14	36960	6.33	44430	6.52	52940	6.72	–	–	–	–
	30	11140	6.83	18060	6.99	22470	7.12	27620	7.28	33580	7.45	40410	7.65	48200	7.86	57020	8.08	66940	8.30
	40	9560	8.55	15910	8.59	19900	8.67	24530	8.78	29880	8.93	36020	9.10	43030	9.30	50970	9.52	59930	9.76
	50	7930	10.91	13580	10.77	17080	10.78	21140	10.83	25830	10.92	31220	11.05	37380	11.22	44400	11.42	52330	11.64
	60	–	–	11030	13.70	14000	13.61	17430	13.58	21390	13.60	25970	13.66	31230	13.77	37250	13.92	44110	14.11
	68	–	–	–	–	–	–	14190	16.39	17540	16.34	21420	16.33	25920	16.38	31110	16.48	37060	16.62
PSH039-4	20	14480	6.13	22290	6.48	27420	6.70	33450	6.95	40450	7.26	48500	7.63	57660	8.07	–	–	–	–
	30	12950	7.46	20350	7.81	25110	8.01	30690	8.24	37140	8.51	44530	8.83	52930	9.21	62420	9.66	73050	10.20
	40	11290	9.13	18110	9.48	22440	9.67	27480	9.87	33300	10.10	39960	10.38	47530	10.70	56090	11.08	65690	11.54
	50	9450	11.31	15540	11.69	19350	11.86	23780	12.04	28880	12.24	34730	12.47	41400	12.73	48940	13.05	57440	13.43
	60	–	–	12560	14.60	15790	14.77	19520	14.93	23830	15.10	28790	15.28	34470	15.50	40920	15.75	48230	16.05
	68	–	–	–	–	–	–	15680	17.89	19300	18.03	23490	18.19	28320	18.36	33850	18.56	40150	18.80

To: *Evaporating temperature in [°C]*
Tc: *Condensing temperature in [°C]*
Pe: *Power input in [kW]*
Qo: *Cooling capacity in [W]*
Subcooling: *4 K*
Superheat: *5 K*
Frequency: *50 Hz*
Subject to modification without prior notification

For more information and performance with other refrigerants, please refer to Coolselector ® 2 at coolselector.danfoss.com or contact Danfoss.

Technical data and ordering

PSH - Scroll compressors heating optimized - R410A - 50 Hz

Heating performance table - Heating optimized

Type	Te	-30		-20		-15		-10		-5		0		5		10		15	
	Tc	H	Pe	H	Pe	H	Pe	H	Pe	H	Pe	H	Pe	H	Pe	H	Pe	H	Pe
PSH019-4	20	10370	3.48	14580	3.59	17310	3.66	20520	3.75	24270	3.87	28600	4.03	33560	4.23	–	–	–	–
	30	10240	4.26	14240	4.36	16790	4.41	19760	4.48	23210	4.57	27190	4.68	31750	4.83	36940	5.02	42800	5.27
	40	10250	5.25	13950	5.36	16270	5.40	18960	5.44	22070	5.50	25660	5.58	29780	5.68	34470	5.81	39780	5.99
	50	10470	6.52	13790	6.65	15830	6.68	18200	6.72	20930	6.75	24090	6.79	27720	6.86	31870	6.94	36580	7.06
	60	–	–	13840	8.31	15570	8.35	17560	8.37	19880	8.39	22560	8.41	25650	8.44	29220	8.48	33290	8.55
	68	–	–	–	–	–	–	17200	10.03	19140	10.04	21410	10.04	24050	10.04	27120	10.06	30650	10.09
PSH023-4	20	12500	4.08	17520	4.38	20710	4.52	24380	4.61	28570	4.64	33300	4.58	38590	4.42	–	–	–	–
	30	12200	4.91	16920	5.13	19950	5.29	23450	5.44	27460	5.57	32010	5.66	37120	5.67	42810	5.60	49130	5.41
	40	12230	6.15	16410	6.14	19150	6.25	22370	6.39	26080	6.55	30320	6.70	35110	6.83	40490	6.90	46470	6.90
	50	12790	8.01	16180	7.63	18520	7.61	21320	7.67	24610	7.78	28420	7.93	32780	8.09	37710	8.24	43250	8.36
	60	–	–	16440	9.82	18250	9.60	20510	9.50	23260	9.50	26520	9.57	30310	9.69	34680	9.84	39640	10.00
	68	–	–	–	–	–	–	20170	11.50	22390	11.35	25120	11.31	28380	11.35	32210	11.45	36620	11.59
PSH026-4	20	13880	4.47	19720	4.64	23540	4.76	28060	4.93	33340	5.14	39450	5.41	46450	5.74	–	–	–	–
	30	13750	5.49	19230	5.61	22760	5.69	26910	5.81	31740	5.97	37330	6.17	43730	6.44	51020	6.77	59260	7.18
	40	13840	6.82	18840	6.90	22020	6.95	25750	7.02	30080	7.13	35080	7.28	40830	7.47	47390	7.73	54830	8.05
	50	14250	8.55	18660	8.60	21430	8.63	24670	8.67	28440	8.73	32810	8.82	37850	8.95	43620	9.14	50190	9.38
	60	–	–	18780	10.82	21090	10.82	23790	10.83	26940	10.85	30620	10.90	34880	10.97	39810	11.09	45460	11.26
	68	–	–	–	–	–	–	23280	13.01	25900	13.00	28980	13.01	32590	13.05	36800	13.12	41670	13.23
PSH030-4	20	16270	5.02	22820	5.23	27050	5.34	32010	5.49	37790	5.67	44460	5.90	52110	6.19	–	–	–	–
	30	15980	6.05	22190	6.28	26110	6.38	30680	6.50	35980	6.64	42090	6.81	49080	7.03	57030	7.32	66020	7.69
	40	15890	7.35	21660	7.63	25230	7.74	29370	7.85	34150	7.96	39650	8.10	45940	8.27	53110	8.49	61230	8.77
	50	16060	8.98	21310	9.36	24490	9.50	28150	9.61	32360	9.72	37210	9.84	42760	9.98	49100	10.15	56300	10.37
	60	–	–	21200	11.56	23950	11.74	27080	11.88	30680	12.00	34830	12.12	39600	12.24	45060	12.38	51300	12.56
	68	–	–	–	–	–	–	26380	14.11	29460	14.26	33020	14.39	37120	14.51	41860	14.64	47300	14.80
PSH034-4	20	17960	5.57	25580	5.82	30500	5.97	36270	6.14	42950	6.33	50600	6.52	59300	6.72	–	–	–	–
	30	17600	6.83	24670	6.99	29210	7.12	34510	7.28	40630	7.45	47650	7.65	55630	7.86	64660	8.08	74790	8.30
	40	17660	8.55	24030	8.59	28090	8.67	32840	8.78	38330	8.93	44630	9.10	51830	9.30	59980	9.52	69160	9.76
	50	18250	10.91	23760	10.77	27280	10.78	31390	10.83	36160	10.92	41680	11.05	48000	11.22	55200	11.42	63340	11.64
	60	–	–	23990	13.70	26870	13.61	30270	13.58	34250	13.60	38900	13.66	44260	13.77	50430	13.92	57460	14.11
	68	–	–	–	–	–	–	29700	16.39	32990	16.34	36880	16.33	41420	16.38	46700	16.48	52780	16.62
PSH039-4	20	20570	6.13	28720	6.48	34060	6.70	40340	6.95	47650	7.26	56060	7.63	65660	8.07	–	–	–	–
	30	20350	7.46	28090	7.81	33060	8.01	38860	8.24	45570	8.51	53280	8.83	62070	9.21	72000	9.66	83170	10.20
	40	20340	9.13	27520	9.48	32030	9.67	37280	9.87	43320	10.10	50250	10.38	58150	10.70	67080	11.08	77140	11.54
	50	20670	11.31	27130	11.69	31120	11.86	35720	12.04	41020	12.24	47100	12.47	54030	12.73	61880	13.05	70750	13.43
	60	–	–	27040	14.60	30440	14.77	34330	14.93	38810	15.10	43950	15.28	49840	15.50	56540	15.75	64150	16.05
	68	–	–	–	–	–	–	33420	17.89	37190	18.03	41530	18.19	46520	18.36	52250	18.56	58790	18.80

To: *Evaporating temperature in [°C]*
Tc: *Condensing temperature in [°C]*
Pe: *Power input in [kW]*
H: *Heating capacity in [W]*
Subcooling: *4 K*
Superheat: *5 K*
Frequency: *50 Hz*
Subject to modification without prior notification

For more information and performance with other refrigerants, please refer to Coolselector ® 2 at coolselector.danfoss.com or contact Danfoss.

Technical data and ordering

PSH - Scroll compressors heating optimized - R410A - 60 Hz

Cooling performance table - Heating optimized

Type	Te	-30		-20		-15		-10		-5		0		5		10		15	
	Tc	Qo	Pe	Qo	Pe	Qo	Pe	Qo	Pe	Qo	Pe	Qo	Pe	Qo	Pe	Qo	Pe	Qo	Pe
PSH019-4	20	8700	4.00	13620	4.35	16810	4.49	20550	4.62	24900	4.74	29910	4.85	35620	4.98	–	–	–	–
	30	7720	4.89	12350	5.29	15320	5.46	18780	5.61	22790	5.74	27400	5.88	32650	6.02	38610	6.17	45310	6.34
	40	6700	5.82	10950	6.26	13640	6.44	16770	6.61	20390	6.76	24550	6.91	29310	7.06	34700	7.22	40780	7.39
	50	5620	7.00	9400	7.46	11760	7.65	14510	7.83	17700	7.99	21360	8.14	25560	8.30	30350	8.46	35760	8.63
	60	–	–	7670	9.09	9660	9.29	11980	9.47	14680	9.63	17800	9.78	21410	9.94	25530	10.10	30230	10.27
	68	–	–	–	–	–	–	9750	11.22	12020	11.38	14680	11.53	17770	11.68	21330	11.83	25430	11.99
PSH023-4	20	10290	4.81	16020	5.02	19740	5.16	24110	5.33	29180	5.54	35020	5.79	41670	6.10	–	–	–	–
	30	9210	5.80	14640	6.00	18110	6.12	22160	6.27	26850	6.45	32230	6.67	38370	6.92	45330	7.23	53160	7.59
	40	8080	7.02	13090	7.23	16250	7.35	19930	7.48	24170	7.64	29050	7.82	34620	8.04	40930	8.31	48060	8.62
	50	6860	8.54	11340	8.78	14130	8.90	17370	9.03	21120	9.18	25430	9.34	30370	9.54	35990	9.76	42350	10.03
	60	–	–	9350	10.72	11720	10.86	14470	11.00	17660	11.14	21350	11.30	25600	11.48	30460	11.68	36000	11.91
	68	–	–	–	–	–	–	11880	12.92	14580	13.07	17730	13.23	21390	13.40	25600	13.59	30450	13.81
PSH026-4	20	11670	5.40	18260	5.67	22560	5.83	27620	6.03	33510	6.27	40300	6.57	48050	6.94	–	–	–	–
	30	10400	6.52	16610	6.75	20610	6.88	25290	7.04	30730	7.23	36980	7.47	44120	7.76	52210	8.13	61330	8.57
	40	9050	7.95	14750	8.17	18370	8.28	22610	8.40	27510	8.55	33160	8.73	39620	8.95	46960	9.24	55240	9.59
	50	7600	9.80	12650	10.02	15830	10.11	19540	10.20	23850	10.31	28830	10.44	34540	10.61	41050	10.82	48420	11.09
	60	–	–	10290	12.38	12960	12.46	16090	12.54	19730	12.61	23960	12.70	28850	12.81	34460	12.96	40860	13.16
	68	–	–	–	–	–	–	13030	14.84	16090	14.90	19670	14.96	23860	15.03	28700	15.14	34270	15.28
PSH030-4	20	13780	5.98	21300	6.25	26190	6.44	31920	6.71	38570	7.06	46210	7.51	54930	8.08	–	–	–	–
	30	12240	7.26	19280	7.48	23780	7.63	29040	7.83	35130	8.09	42120	8.44	50090	8.89	59120	9.45	69270	10.15
	40	10670	8.85	17110	9.06	21170	9.18	25910	9.34	31380	9.54	37670	9.81	44840	10.16	52980	10.61	62160	11.17
	50	8990	10.84	14720	11.09	18300	11.21	22460	11.34	27260	11.50	32790	11.71	39120	11.99	46320	12.35	54460	12.80
	60	–	–	12070	13.65	15110	13.79	18630	13.92	22710	14.07	27430	14.24	32850	14.47	39050	14.75	46120	15.12
	68	–	–	–	–	–	–	15250	16.46	18710	16.61	22740	16.78	27400	16.97	32770	17.22	38930	17.53
PSH034-4	20	15400	6.67	23950	6.99	29530	7.24	36080	7.57	43680	7.99	52430	8.53	62400	9.20	–	–	–	–
	30	13590	8.16	21680	8.39	26860	8.57	32900	8.81	39900	9.14	47920	9.56	57060	10.09	67400	10.76	79020	11.57
	40	11800	10.03	19260	10.21	23960	10.34	29420	10.51	35720	10.75	42950	11.07	51180	11.49	60500	12.02	70990	12.68
	50	9910	12.43	16590	12.60	20730	12.69	25530	12.81	31060	12.98	37410	13.22	44650	13.54	52870	13.95	62160	14.48
	60	–	–	13580	15.70	17090	15.77	21140	15.86	25820	15.98	31210	16.15	37380	16.38	44430	16.69	52440	17.10
	68	–	–	–	–	–	–	17220	18.94	21160	19.03	25720	19.15	30980	19.33	37030	19.57	43950	19.90
PSH039-4	20	17880	7.41	27450	7.90	33630	8.20	40880	8.54	49280	8.94	58930	9.41	69930	9.97	–	–	–	–
	30	15910	8.92	24920	9.39	30660	9.66	37350	9.96	45080	10.31	53950	10.71	64060	11.19	75500	11.75	88360	12.41
	40	13830	10.84	22120	11.31	27330	11.56	33370	11.84	40350	12.14	48360	12.49	57490	12.90	67840	13.39	79510	13.95
	50	11600	13.27	18990	13.78	23580	14.02	28900	14.28	35040	14.56	42100	14.87	50160	15.23	59340	15.64	69720	16.12
	60	–	–	15480	16.89	19370	17.15	23880	17.40	29100	17.67	35120	17.95	42040	18.27	49960	18.63	58970	19.04
	68	–	–	–	–	–	–	19440	20.47	23850	20.73	28980	21.00	34930	21.29	41780	21.62	49630	21.99

To: *Evaporating temperature in [°C]*
Tc: *Condensing temperature in [°C]*
Pe: *Power input in [kW]*
Qo: *Cooling capacity in [W]*
Subcooling: *4 K*
Superheat: *5 K*
Frequency: *60 Hz*
Subject to modification without prior notification

For more information and performance with other refrigerants, please refer to Coolselector ® 2 at coolselector.danfoss.com or contact Danfoss.

Technical data and ordering

PSH - Scroll compressors heating optimized - R410A - 60 Hz

Heating performance table - Heating optimized

Type	Te	-30		-20		-15		-10		-5		0		5		10		15	
	Tc	H	Pe	H	Pe	H	Pe	H	Pe	H	Pe	H	Pe	H	Pe	H	Pe	H	Pe
PSH019-4	20	12490	4.00	17740	4.35	21070	4.49	24930	4.62	29400	4.74	34520	4.85	40340	4.98	–	–	–	–
	30	12360	4.89	17370	5.29	20490	5.46	24100	5.61	28240	5.74	32980	5.88	38360	6.02	44460	6.17	51320	6.34
	40	12230	5.82	16890	6.26	19760	6.44	23040	6.61	26810	6.76	31110	6.91	36000	7.06	41550	7.22	47790	7.39
	50	12260	7.00	16480	7.46	19020	7.65	21940	7.83	25270	7.99	29090	8.14	33430	8.30	38370	8.46	43950	8.63
	60	–	–	16290	9.09	18470	9.29	20960	9.47	23820	9.63	27090	9.78	30830	9.94	35110	10.10	39980	10.27
	68	–	–	–	–	–	–	20390	11.22	22820	11.38	25620	11.53	28850	11.68	32560	11.83	36810	11.99
PSH023-4	20	14880	4.81	20810	5.02	24660	5.16	29190	5.33	34460	5.54	40540	5.79	47480	6.10	–	–	–	–
	30	14740	5.80	20360	6.00	23950	6.12	28140	6.27	33000	6.45	38590	6.67	44970	6.92	52220	7.23	60400	7.59
	40	14770	7.02	19980	7.23	23260	7.35	27060	7.48	31450	7.64	36510	7.82	42290	8.04	48850	8.31	56270	8.62
	50	15000	8.54	19710	8.78	22620	8.90	25980	9.03	29870	9.18	34340	9.34	39460	9.54	45300	9.76	51910	10.03
	60	–	–	19580	10.72	22070	10.86	24960	11.00	28280	11.14	32120	11.30	36540	11.48	41600	11.68	47360	11.91
	68	–	–	–	–	–	–	24190	12.92	27040	13.07	30340	13.23	34160	13.40	38560	13.59	43610	13.81
PSH026-4	20	16920	5.40	23770	5.67	28230	5.83	33480	6.03	39610	6.27	46690	6.57	54810	6.94	–	–	–	–
	30	16730	6.52	23180	6.75	27310	6.88	32140	7.04	37760	7.23	44240	7.47	51670	7.76	60120	8.13	69670	8.57
	40	16780	7.95	22700	8.17	26430	8.28	30780	8.40	35830	8.55	41650	8.73	48330	8.95	55940	9.24	64570	9.59
	50	17130	9.80	22400	10.02	25670	10.11	29470	10.20	33880	10.31	38980	10.44	44850	10.61	51570	10.82	59210	11.09
	60	–	–	22340	12.38	25090	12.46	28280	12.54	32000	12.61	36320	12.70	41310	12.81	47070	12.96	53660	13.16
	68	–	–	–	–	–	–	27460	14.84	30580	14.90	34220	14.96	38480	15.03	43420	15.14	49130	15.28
PSH030-4	20	19410	5.98	27180	6.25	32250	6.44	38240	6.71	45220	7.06	53290	7.51	62540	8.08	–	–	–	–
	30	19080	7.26	26320	7.48	30960	7.63	36410	7.83	42750	8.09	50070	8.44	58460	8.89	68020	9.45	78830	10.15
	40	19000	8.85	25640	9.06	29820	9.18	34700	9.34	40370	9.54	46910	9.81	54410	10.16	62970	10.61	72680	11.17
	50	19190	10.84	25170	11.09	28860	11.21	33140	11.34	38100	11.50	43820	11.71	50410	11.99	57940	12.35	66520	12.80
	60	–	–	24920	13.65	28090	13.79	31740	13.92	35960	14.07	40840	14.24	46470	14.47	52950	14.75	60350	15.12
	68	–	–	–	–	–	–	30750	16.46	34360	16.61	38540	16.78	43390	16.97	48990	17.22	55440	17.53
PSH034-4	20	21570	6.67	30420	6.99	36220	7.24	43070	7.57	51070	7.99	60320	8.53	70910	9.20	–	–	–	–
	30	21140	8.16	29440	8.39	34780	8.57	41050	8.81	48350	9.14	56760	9.56	66400	10.09	77350	10.76	89720	11.57
	40	21070	10.03	28700	10.21	33520	10.34	39140	10.51	45660	10.75	53180	11.07	61800	11.49	71610	12.02	82720	12.68
	50	21410	12.43	28230	12.60	32470	12.69	37380	12.81	43070	12.98	49630	13.22	57170	13.54	65770	13.95	75550	14.48
	60	–	–	28090	15.70	31680	15.77	35810	15.86	40600	15.98	46140	16.15	52530	16.38	59870	16.69	68250	17.10
	68	–	–	–	–	–	–	34730	18.94	38760	19.03	43430	19.15	48860	19.33	55130	19.57	62350	19.90
PSH039-4	20	25070	7.41	35120	7.90	41590	8.20	49160	8.54	57950	8.94	68060	9.41	79600	9.97	–	–	–	–
	30	24560	8.92	34040	9.39	40030	9.66	47010	9.96	55080	10.31	64350	10.71	74920	11.19	86900	11.75	100400	12.41
	40	24340	10.84	33100	11.31	38550	11.56	44850	11.84	52130	12.14	60480	12.49	70010	12.90	80830	13.39	93040	13.95
	50	24470	13.27	32360	13.78	37190	14.02	42750	14.28	49160	14.56	56520	14.87	64940	15.23	74520	15.64	85370	16.12
	60	–	–	31870	16.89	36010	17.15	40770	17.40	46240	17.67	52530	17.95	59760	18.27	68030	18.63	77450	19.04
	68	–	–	–	–	–	–	39290	20.47	43960	20.73	49360	21.00	55580	21.29	62750	21.62	70970	21.99

To: *Evaporating temperature in [°C]*
Tc: *Condensing temperature in [°C]*
Pe: *Power input in [kW]*
H: *Heating capacity in [W]*
Subcooling: *4 K*
Superheat: *5 K*
Frequency: *60 Hz*
Subject to modification without prior notification

For more information and performance with other refrigerants, please refer to Coolselector ® 2 at coolselector.danfoss.com or contact Danfoss.

Nomenclature

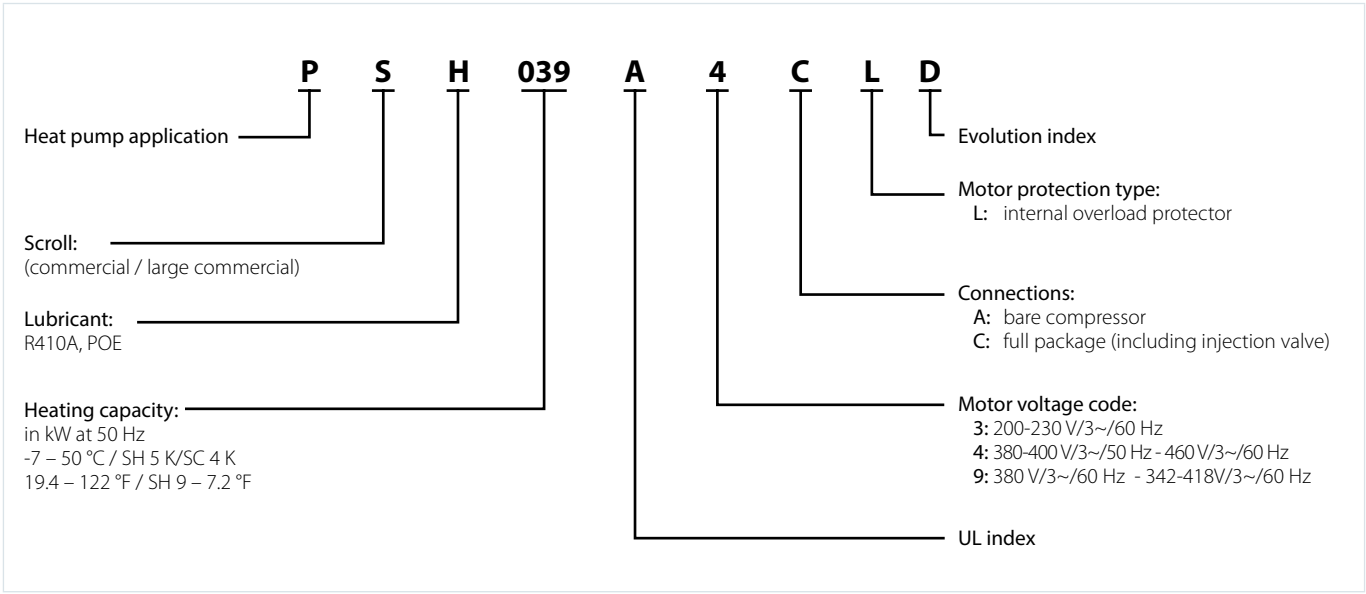

Dimensions

PSH019

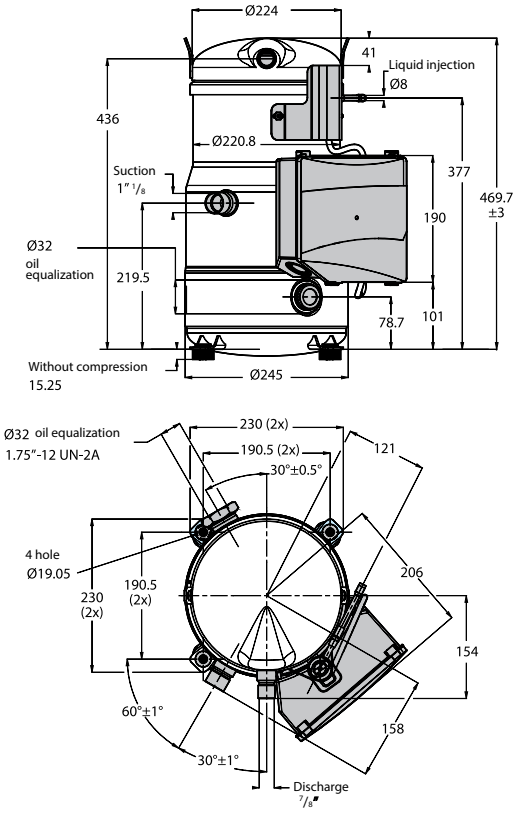

PSH023-026-030-034

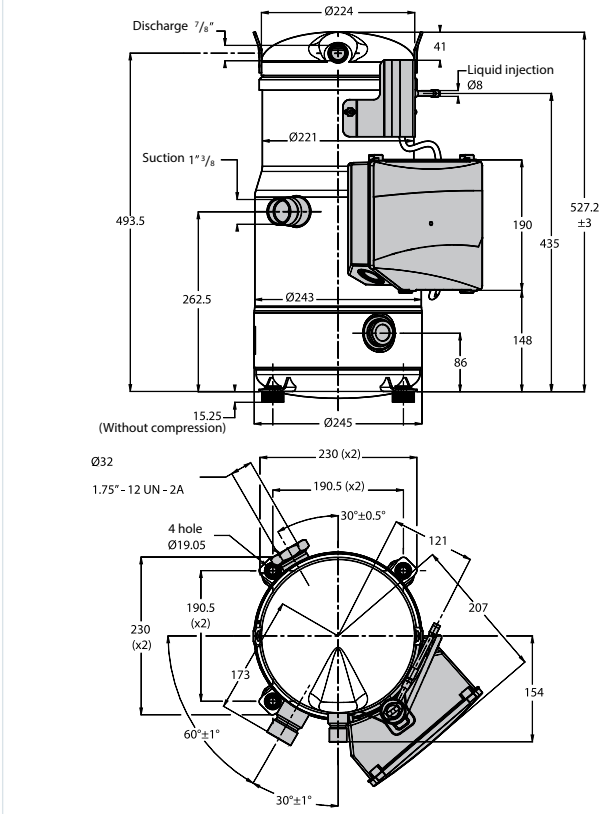

PSH039

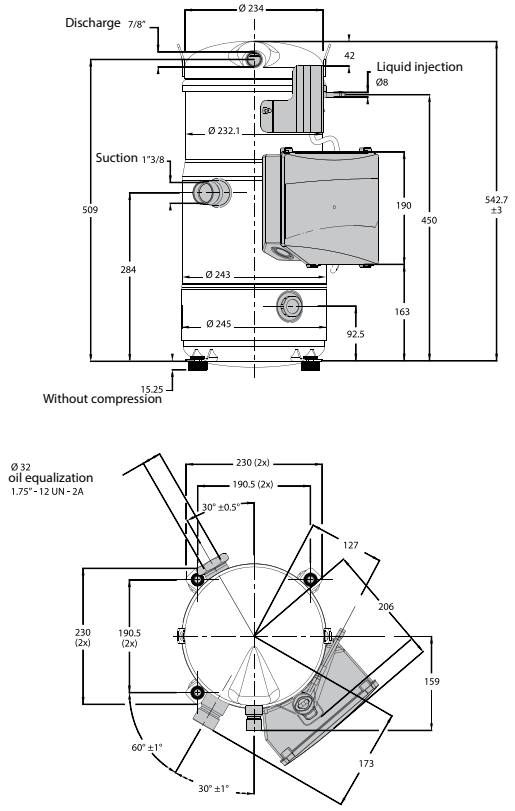

Technical data and ordering

PSH019 – PSH039 - Scroll compressors heating optimized

Tandem kit - Code numbers

Compressor 1	Compressor 2	Tandem type	Suction from	Washer reference	Washer Ø [mm]	Washer in suction of	Kit code no.
PSH019	PSH019	PSH038	Left Right		Not needed		7777044
PSH023	PSH023	PSH046	Left Right		Not needed		7777044
PSH026	PSH026	PSH052	Left Right		Not needed		7777044
PSH030	PSH030	PSH060	Left Right		Not needed		7777044
PSH034	PSH034	PSH068	Left Right		Not needed		7777044
PSH039	PSH039	PSH078	Left Right		Not needed		7777053

Quick Selection Notes:

PCH, Scroll compressor heating optimized - R410A

Danfoss scroll compressor dedicated to heating applications. PCH compressor is designed specifically for the requirements of the heat pump Chinese market of 130 kW module.

It has an extended operating envelope thanks to a vapor injection system for heat pump applications with low ambient such as floor heating and fan coil. The product reliability and energy efficiency are high.



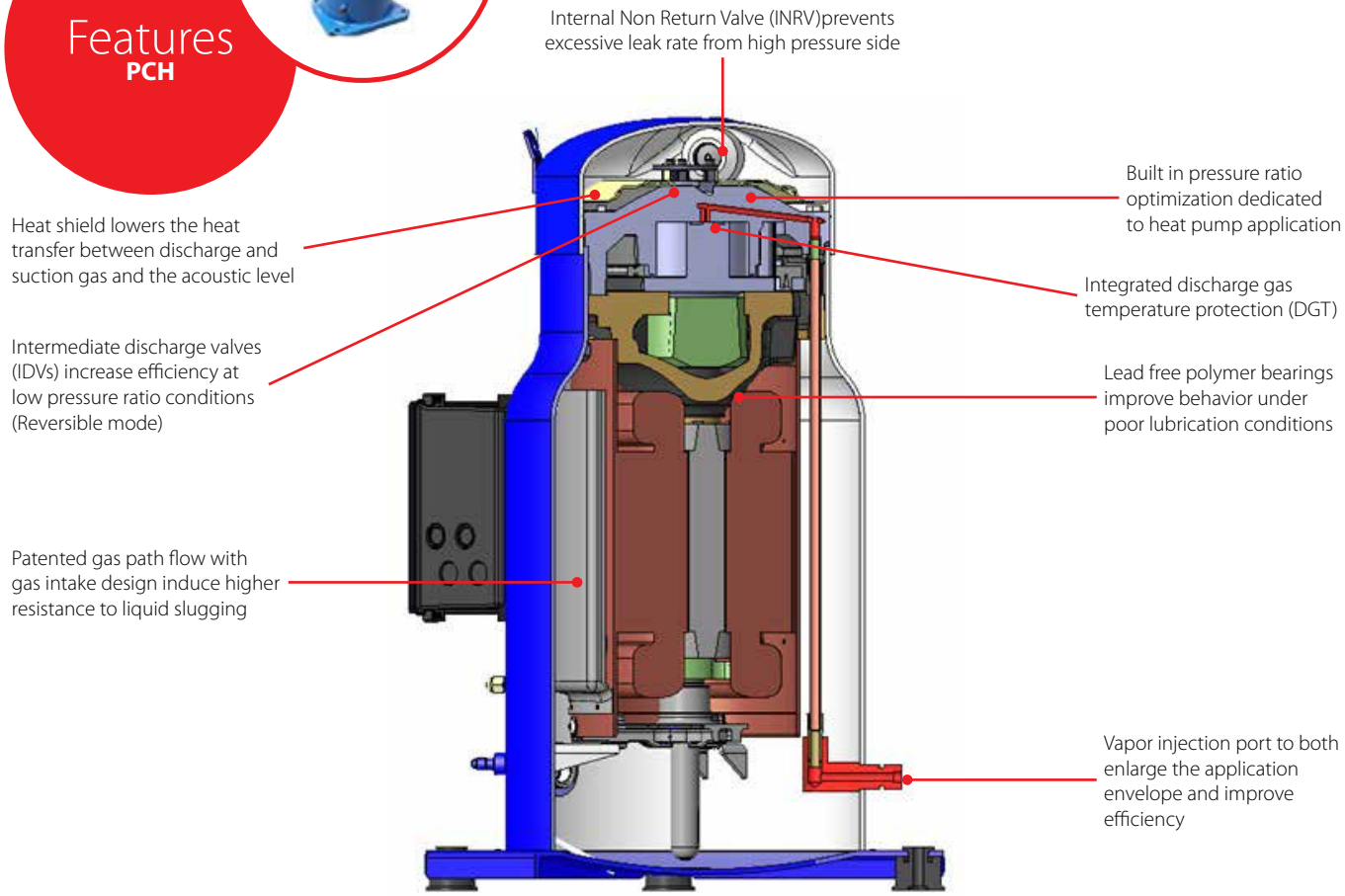

Facts

Applications:

- Water heated to 50 °C at -15 °C ambient temperature
- Equipment manufacturers will benefit from the vapor injection system, with a wide operating temperature envelope. In comparison with gas or oil furnaces for space heating (floor heating and fan coil), a heat pump system offers very large energy savings – up to 50%
- An energy efficient solution that allows reduction of the energy bills and lower CO_2 emissions
- Heat pumps for heating in factories, offices, shopping malls, etc
- A simple and cost efficient solution for OEMs

Technical data and ordering

PCH - Scroll compressors - R410A

Ordering - Single pack

Compressor model	Connections	Model Variation	Code no.
			8
			380/3/50
PCH065	Brazed	Module 110 – 240 V [1])	120H1273

[1]) *Electronic motor protection, module located in terminal box*
Mounting kit for single compressor applications : ***Ref 8156138***

PCH - Scroll compressors - R410A

Ordering - Industrial pack

Compressor model	Connections	Model Variation	Code no.
			8
			380/3/50
PCH065	Brazed	Module 110 – 240 V [1])	120H1272

[1]) *Electronic motor protection, module located in terminal box*

PCH - Scroll compressors - R410A - 50 Hz

Technical data

Compressor model	Swept volume	Displacement [1])	Oil charge	Net weight [2])	Conditions						Nominal heating capacity	Nominal cooling capacity	Power input	Heating COP	Cooling COP
					Evap temp	Cond temp	ΔT intX	Suction Superheat	Injection Superheat	Subcooling					
	[cm³/rev]	[m³/h]	[dm³]	[kg]	[°C]	[°C]	[K]	[K]	[K]	[K]	[W]	[W]	[W]	[W/W]	[W/W]
PCH065	276.2	48.1	6.7	111	3	50	5	5	5	5	92597	70935	22971	4	3.1
					-15	44	5	5	5	5	58572	41093	18536	3.2	2.2
					-7	50	5	5	5	5	71938	51273	21914	3.3	2.3

[1]) *at 2900 tr/min*
[2]) *net weight with oil charge*

For more information and performance with other refrigerants, please refer to Coolselector ® 2 at coolselector.danfoss.com or contact Danfoss.

Nomenclature and Dimensions

Family, lubricant & refrigerant	Nominal capacity	Approvals	Voltage	Version	Evolution index
PCH	065	A	8	VB	A

Family, lubricant & refrigerant
PCH: Heat pump optimized scroll, dedicated to chinese market, POE lubricant, for R410A

Nominal capacity
in kW at 50 Hz with R410A and at condition:
-7°C /50°C Superheat 5K / Sub cooling 5K (w/o injection)

UL index

Motor voltage code:
8: 380 V/3~/50 Hz

Evolution index
A~Z

Motor protection:
B: Electronic module, 110 – 240 V

Options
V: Vapor Injection (No control logic and no injection valve included)

PCH065 - Single compressors

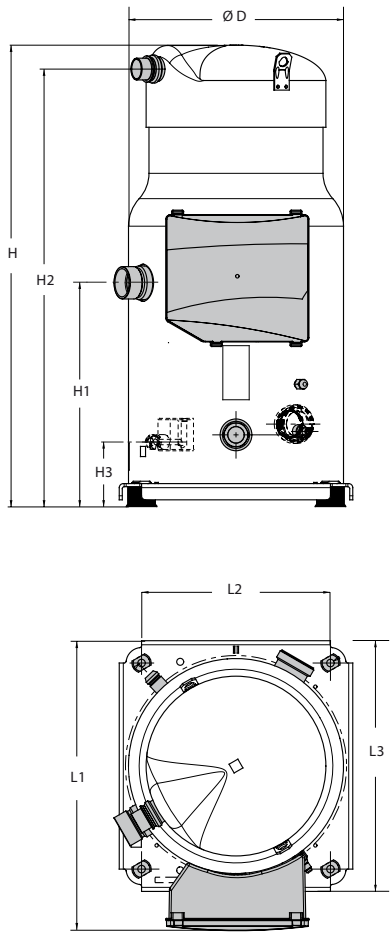

Compressor model	D [mm]	H [mm]	H1 [mm]	H2 [mm]	H3 [mm]	L1 [mm]	L2 [mm]	L3 [mm]	Outline drawing number
PCH065	318	683	331	648	97	428	345	371	8560119

Quick Selection Notes:

VLZ, Inverter scroll compressor - R404A, R448A and R449A

By continuously matching the load fluctuations, Danfoss Inverter Scroll VLZ technology fulfills a major requirement of commercial refrigeration applications.

Temperatures are precisely maintained leading to better food quality and a reduction in the associated energy consumption.
VLZ compressor and drive package consist in 3 compressor models ranging from 1.7 to 9.3 kW.

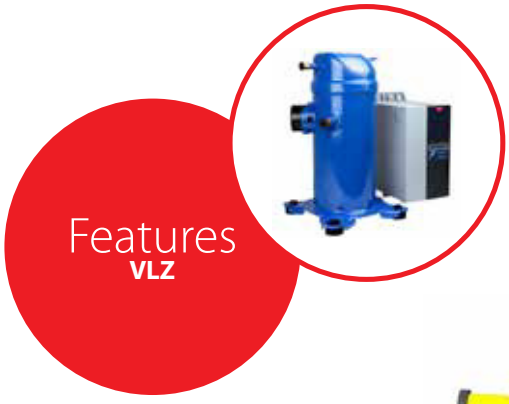

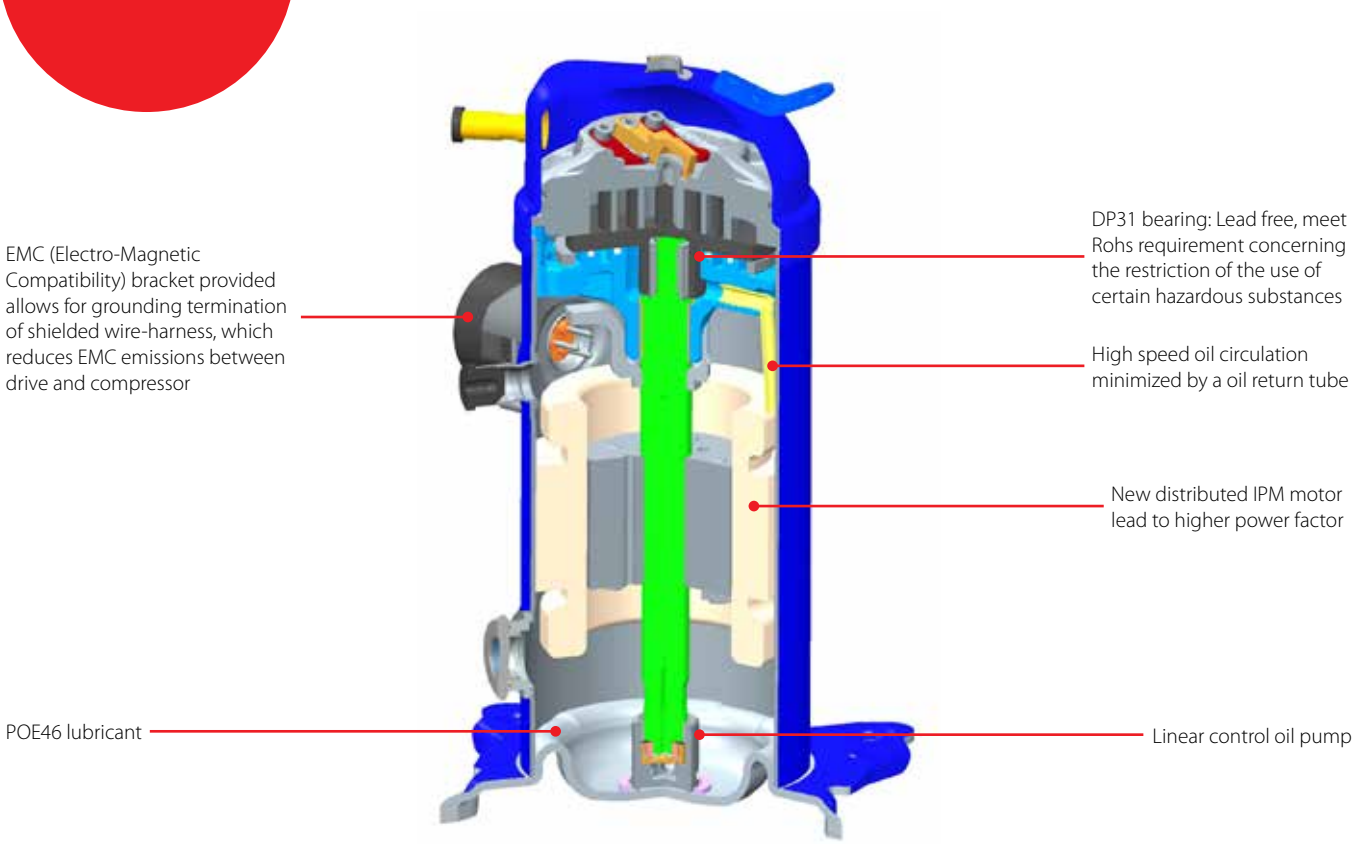

Facts

Applications:

- Designed for refrigeration applications at medium temperatures, such as cold rooms and mini chillers for process cooling, or milk cooling
- A single compressor and drive can simultaneously handle the load demands of multiple display cabinets or cold rooms running at different temperatures
- **Advanced Efficiency:**
  The DC permanent magnet motor of the compressor with patented Intermediate Discharge Valves (IDV) enhances compressor part-load efficiency and reduces components stress, leading to savings on energy usage. Under part-load conditions, the inverter uses up to 30% less energy than mechanically modulated technology as it is able to slow the compressor down to efficiently match requirements
- **Enhanced capacity:**
  Stepless compressor modulation - able to slow down and speed up from 30 to 100 RPS to save energy and match load fluctuations very accurately. The inverter drive incorporates smart logic to increase reliability during operation
- **Accurate temperature and humidity control:**
  For greater storage temperature stability, better food preservation, and longer product shelf life
- **Simplicity to shorten development time:**
  The pre-qualified compressor and drive package is fully integrated to get your product to market faster and act as a black-box/slave to your application and management controller.

Technical data and ordering

VLZ - Inverter scroll compressor

Compressors specifications

Compressor model	Swept volume	Displacement				Oil charge	Net weight
		30 rps	50 rps	60 rps	100 rps		
	[cm³/rev]	[m³/h]	[m³/h]	[m³/h]	[m³/h]	[Liters]	[Kg]
VLZ028	27.8	3	5	6	10	1.1	26
VLZ035	34.9	3.8	6.3	7.5	12.6	1.3	27
VLZ044	44.5	4.8	8	9.6	16	1.3	27

VLZ - Inverter scroll compressor

Frequency converter specifications

Mains supply voltage	CDS803-T2: 200 – 240 V ±10% (3-phase)
	CDS803-T4: 380 – 480 V ±10% (3-phase)
Supply frequency	50 / 60 Hz
Output voltage	0 – 100% of supply voltage
Standby power	T2: P7K5: 23.17 W
	T4: P7K5: 11.3 W
Inputs	CDS803: 4 digital (0 – 24 V), 2 analog (0 /±10 V or 4 – 20 mA, scalable)
Programmable outputs	CDS803: 2 digital (0 – 24 V), 2 analog (0 – 24 V), 2 relay
Protection functions	Over-current protection, low / high current handling
Compressor functions	Pressostat / thermostat function, short cycle protection, oil return management

VLZ - Inverter scroll compressor

Ordering - Single pack

Compressor model	Equipment version	G		J	
		Compressor Name	Code no	Compressor Name	Code no
VLZ028	Single	VLZ028TGNE9A/M	120G0162	VLZ028TJNE9A/M	120G0171
VLZ035	Single	VLZ035TGNE9A/M	120G0159	VLZ035TJNE9A/M	120G0168
VLZ044	Single	VLZ044TGNE9A/M	120G0156	VLZ044TJNE9A/M	120G0165

VLZ - Inverter scroll compressor

Ordering - Industrial pack

Compressor model	Equipment version	G 380-480 V/3ph/50&60 Hz		J 200-240 V/3ph/50&60 Hz	
		Compressor Name	Code no	Compressor Name	Code no
VLZ028	Single	VLZ028TGNE9A/I	120G0164	VLZ028TJNE9A/I	120G0173
VZH035	Single	VLZ035TGNE9A/I	120G0161	VLZ035TJNE9A/I	120G0170
VLZ044	Single	VLZ044TGNE9A/I	120G0158	VLZ044TJNE9A/I	120G0167

VLZ - Inverter scroll compressor

Ordering - Industrial pack

Compressor model	CDS803 drive		
	Voltage	Compressor Name	Code no
VLZ028-035-044	T2 200-240 V/3ph/50&60 Hz	CDS803P7K5T2E20H4	134N4261
VLZ028-035-044	T4 380-480 V/3ph/50&60 Hz	CDS803P7K5T4E20H4	134N4263

LCP: use interface 120Z0581(accessory)

Technical data and ordering

VLZ - Single scroll compressor - R404A - 380 – 480 V / 3 / 50/60 Hz

Performance table (EN12900)

Type	Rpm	Frequency	Te	-25		-20		-15		-10		-5		0		5		10	
			Tc	Qo	Pe	Qo	Pe	Qo	Pe	Qo	Pe	Qo	Pe	Qo	Pe	Qo	Pe	Qo	Pe
VLZ028TGA	1800	30	15	1184	0.55	1506	0.56	1891	0.55	2347	0.53	2881	0.5	–	–	–	–	–	–
			25	1030	0.65	1327	0.66	1680	0.66	2097	0.66	2584	0.64	3151	0.61	3803	0.57	–	–
			35	–	–	1138	0.79	1454	0.79	1826	0.8	2262	0.79	2769	0.78	3354	0.76	4026	0.72
			45	–	–	–	–	–	–	–	–	–	–	–	–	–	–	–	–
	3600	60	15	2507	1.11	3168	1.13	3957	1.12	4888	1.09	5977	1.02	–	–	–	–	–	–
			25	2172	1.28	2774	1.32	3488	1.34	4330	1.34	5315	1.31	6457	1.26	7772	1.17	–	–
			35	1845	1.5	2383	1.54	3018	1.57	3767	1.59	4642	1.6	5660	1.58	6836	1.53	8184	1.45
			45	1508	1.8	1978	1.83	2530	1.86	3180	1.89	3942	1.91	4831	1.91	5863	1.9	7052	1.85
	6000	100	15	4127	2.08	5203	2.14	6483	2.16	7991	2.14	9753	2.07	–	–	–	–	–	–
			25	3619	2.35	4615	2.44	5790	2.5	7171	2.54	8781	2.53	10645	2.47	12789	2.35	–	–
			35	3100	2.67	4001	2.77	5058	2.86	6296	2.93	7739	2.98	9414	2.98	11343	2.93	13553	2.83
			45	2552	3.1	3344	3.19	4268	3.29	5349	3.38	6612	3.45	8082	3.5	9783	3.51	11740	3.47
VLZ035TGA	1800	30	15	1531	0.64	1936	0.65	2421	0.64	2996	0.62	3669	0.58	–	–	–	–	–	–
			25	1328	0.76	1703	0.77	2148	0.78	2674	0.78	3289	0.77	4003	0.74	4826	0.68	–	–
			35	–	–	1452	0.93	1851	0.94	2321	0.95	2871	0.95	3511	0.94	4251	0.92	5099	0.88
			45	–	–	–	–	–	–	–	–	–	–	–	–	–	–	–	–
	3600	60	15	3152	1.27	3974	1.29	4964	1.28	6142	1.26	7527	1.2	–	–	–	–	–	–
			25	2770	1.51	3517	1.54	4411	1.55	5473	1.56	6720	1.54	8174	1.49	9854	1.42	–	–
			35	2379	1.79	3044	1.82	3836	1.86	4773	1.88	5876	1.89	7163	1.88	8656	1.85	10373	1.78
			45	1962	2.14	2539	2.18	3221	2.22	4027	2.26	4978	2.29	6092	2.3	7390	2.3	8891	2.27
	6000	100	15	5131	2.51	6458	2.6	8069	2.65	9999	2.65	12287	2.59	–	–	–	–	–	–
			25	4538	2.82	5746	2.94	7200	3.03	8939	3.1	10998	3.12	13416	3.08	16229	2.97	–	–
			35	3932	3.24	5013	3.35	6303	3.47	7841	3.57	9663	3.64	11808	3.68	14312	3.66	17212	3.58
			45	3278	3.8	4223	3.89	5341	4	6669	4.11	8247	4.22	10109	4.3	12295	4.35	14841	4.35
VLZ044TGA	1800	30	15	2012	0.76	2526	0.78	3140	0.78	3865	0.76	4714	0.71	–	–	–	–	–	–
			25	1751	0.9	2230	0.93	2798	0.95	3467	0.95	4248	0.94	5155	0.9	6200	0.83	–	–
			35	–	–	1903	1.12	2415	1.15	3016	1.17	3720	1.18	4539	1.17	5484	1.13	6569	1.07
			45	–	–	–	–	–	–	–	–	–	–	–	–	–	–	–	–
	3600	60	15	4085	1.59	5139	1.63	6396	1.64	7878	1.6	9609	1.51	–	–	–	–	–	–
			25	3574	1.87	4540	1.94	5683	2	7029	2.02	8598	2	10415	1.93	12503	1.79	–	–
			35	3057	2.19	3924	2.28	4946	2.37	6146	2.43	7546	2.46	9169	2.45	11039	2.4	13178	2.27
			45	2507	2.61	3268	2.69	4160	2.78	5205	2.87	6426	2.93	7847	2.97	9491	2.98	11380	2.93
	6000	100	15	6657	2.98	8421	3.09	10532	3.16	13029	3.19	15952	3.15	–	–	–	–	–	–
			25	5848	3.45	7460	3.61	9376	3.74	11635	3.82	14278	3.86	17342	3.84	20866	3.77	–	–
			35	5029	3.98	6476	4.17	8186	4.32	10196	4.45	12546	4.54	15275	4.59	18421	4.59	22025	4.52
			45	4150	4.64	5421	4.82	6912	4.99	8661	5.14	10707	5.27	13089	5.36	15846	5.41	19018	5.41

For more information and performance with other refrigerants, please refer to Coolselector ® 2 at coolselector.danfoss.com or contact Danfoss.

Technical data and ordering

VLZ - Single scroll compressor - R448A - 380 – 480 V / 3 / 50/60 Hz

Performance table (EN12900)

Type	Rpm	Frequency	Te	-25		-20		-15		-10		-5		0		5		10	
			Tc	Qo	Pe	Qo	Pe	Qo	Pe	Qo	Pe	Qo	Pe	Qo	Pe	Qo	Pe	Qo	Pe
VLZ028TGA	1800	30	15	1044	0.48	1342	0.49	1699	0.5	2124	0.5	2625	0.48	–	–	–	–	–	–
			25	923	0.57	1202	0.58	1535	0.6	1931	0.6	2396	0.6	2938	0.59	3566	0.56	–	–
			35	–	–	1052	0.71	1357	0.72	1718	0.73	2144	0.73	2642	0.73	3219	0.72	3884	0.7
			45	–	–	–	–	–	–	–	–	–	–	–	–	–	–	–	–
	3600	60	15	2178	0.95	2779	0.96	3499	0.96	4356	0.93	5363	0.87	–	–	–	–	–	–
			25	1951	1.12	2513	1.15	3184	1.17	3977	1.17	4909	1.15	5994	1.1	7248	1.03	–	–
			35	1706	1.34	2226	1.38	2840	1.4	3564	1.42	4415	1.43	5406	1.42	6554	1.39	7873	1.33
			45	1443	1.65	1913	1.67	2466	1.7	3116	1.73	3879	1.75	4771	1.76	5806	1.76	7000	1.74
	6000	100	15	3581	1.79	4539	1.85	5710	1.88	7133	1.87	8843	1.82	–	–	–	–	–	–
			25	3221	2.04	4100	2.13	5162	2.2	6444	2.23	7982	2.24	9813	2.2	11973	2.12	–	–
			35	2857	2.36	3668	2.46	4632	2.55	5784	2.62	7161	2.66	8800	2.67	10738	2.65	13011	2.57
			45	2452	2.78	3208	2.88	4085	2.98	5119	3.06	6347	3.13	7805	3.18	9531	3.19	11562	3.17
VLZ035TGA	1800	30	15	1320	0.58	1694	0.59	2146	0.59	2686	0.57	3326	0.55	–	–	–	–	–	–
			25	1168	0.68	1518	0.7	1936	0.71	2433	0.71	3021	0.7	3710	0.68	4510	0.64	–	–
			35	–	–	1327	0.84	1710	0.85	2164	0.86	2699	0.87	3326	0.87	4055	0.85	4897	0.82
			45	–	–	–	–	–	–	–	–	–	–	–	–	–	–	–	–
	3600	60	15	2751	1.17	3515	1.22	4426	1.26	5501	1.26	6760	1.23	–	–	–	–	–	–
			25	2434	1.36	3151	1.42	4000	1.48	4997	1.51	6162	1.52	7512	1.49	9067	1.43	–	–
			35	2100	1.63	2765	1.69	3545	1.75	4458	1.8	5522	1.83	6757	1.83	8180	1.81	9810	1.74
			45	1748	2.03	2354	2.07	3059	2.12	3881	2.17	4840	2.21	5952	2.23	7238	2.22	8714	2.19
	6000	100	15	4525	2.21	5738	2.29	7226	2.35	9034	2.38	11210	2.38	–	–	–	–	–	–
			25	4058	2.53	5162	2.63	6502	2.71	8123	2.78	10072	2.82	12397	2.84	15144	2.82	–	–
			35	3602	2.93	4613	3.04	5820	3.14	7269	3.24	9007	3.31	11081	3.37	13538	3.39	16425	3.38
			45	3113	3.45	4046	3.57	5136	3.68	6429	3.79	7971	3.88	9810	3.97	11992	4.03	14565	4.06
VLZ044TGA	1800	30	15	1731	0.68	2213	0.69	2786	0.69	3465	0.68	4259	0.65	–	–	–	–	–	–
			25	1523	0.82	1978	0.84	2517	0.86	3152	0.87	3896	0.86	4761	0.83	5758	0.79	–	–
			35	–	–	1721	1.03	2219	1.06	2804	1.08	3490	1.09	4289	1.09	5212	1.07	6271	1.02
			45	–	–	–	–	–	–	–	–	–	–	–	–	–	–	–	–
	3600	60	15	3520	1.29	4494	1.34	5657	1.35	7032	1.33	8645	1.26	–	–	–	–	–	–
			25	3117	1.59	4027	1.63	5107	1.68	6382	1.71	7875	1.71	9610	1.68	11612	1.59	–	–
			35	2704	2	3542	2.01	4531	2.04	5696	2.09	7060	2.13	8648	2.16	10483	2.16	12591	2.11
			45	2280	2.61	3037	2.54	3926	2.52	4972	2.54	6199	2.58	7631	2.63	9291	2.67	11205	2.7
	6000	100	15	5876	2.52	7465	2.65	9346	2.75	11557	2.8	14136	2.78	–	–	–	–	–	–
			25	5213	2.93	6731	3.07	8513	3.21	10598	3.34	13024	3.43	15830	3.45	19055	3.39	–	–
			35	4483	3.48	5912	3.59	7578	3.74	9518	3.9	11772	4.05	14379	4.16	17377	4.23	20805	4.21
			45	3685	4.25	5007	4.3	6537	4.4	8314	4.55	10378	4.73	12767	4.9	15520	5.04	18676	5.14

For more information and performance with other refrigerants, please refer to Coolselector ® 2 at coolselector.danfoss.com or contact Danfoss.

Technical data and ordering

VLZ - Single scroll compressor - R449A - 380 – 480 V / 3 / 50/60 Hz

Performance table (EN12900)

Type	Rpm	Frequency	Te	-25		-20		-15		-10		-5		0		5		10	
			Tc	Qo	Pe	Qo	Pe	Qo	Pe	Qo	Pe	Qo	Pe	Qo	Pe	Qo	Pe	Qo	Pe
VLZ028TGA	1800	30	15	1044	0.48	1342	0.49	1699	0.5	2124	0.5	2625	0.48	–	–	–	–	–	–
			25	923	0.57	1202	0.58	1535	0.6	1931	0.6	2396	0.6	2938	0.59	3566	0.56	–	–
			35	–	–	1052	0.71	1357	0.72	1718	0.73	2144	0.73	2642	0.73	3219	0.72	3884	0.7
			45	–	–	–	–	–	–	–	–	–	–	–	–	–	–	–	–
	3600	60	15	2178	0.95	2779	0.96	3499	0.96	4356	0.93	5363	0.87	–	–	–	–	–	–
			25	1951	1.12	2513	1.15	3184	1.17	3977	1.17	4909	1.15	5994	1.1	7248	1.03	–	–
			35	1706	1.34	2226	1.38	2840	1.4	3564	1.42	4415	1.43	5406	1.42	6554	1.39	7873	1.33
			45	1443	1.65	1913	1.67	2466	1.7	3116	1.73	3879	1.75	4771	1.76	5806	1.76	7000	1.74
	6000	100	15	3581	1.79	4539	1.85	5710	1.88	7133	1.87	8843	1.82	–	–	–	–	–	–
			25	3221	2.04	4100	2.13	5162	2.2	6444	2.23	7982	2.24	9813	2.2	11973	2.12	–	–
			35	2857	2.36	3668	2.46	4632	2.55	5784	2.62	7161	2.66	8800	2.67	10738	2.65	13011	2.57
			45	2452	2.78	3208	2.88	4085	2.98	5119	3.06	6347	3.13	7805	3.18	9531	3.19	11562	3.17
VLZ035TGA	1800	30	15	1320	0.58	1694	0.59	2146	0.59	2686	0.57	3326	0.55	–	–	–	–	–	–
			25	1168	0.68	1518	0.7	1936	0.71	2433	0.71	3021	0.7	3710	0.68	4510	0.64	–	–
			35	–	–	1327	0.84	1710	0.85	2164	0.86	2699	0.87	3326	0.87	4055	0.85	4897	0.82
			45	–	–	–	–	–	–	–	–	–	–	–	–	–	–	–	–
	3600	60	15	2751	1.17	3515	1.22	4426	1.26	5501	1.26	6760	1.23	–	–	–	–	–	–
			25	2434	1.36	3151	1.42	4000	1.48	4997	1.51	6162	1.52	7512	1.49	9067	1.43	–	–
			35	2100	1.63	2765	1.69	3545	1.75	4458	1.8	5522	1.83	6757	1.83	8180	1.81	9810	1.74
			45	1748	2.03	2354	2.07	3059	2.12	3881	2.17	4840	2.21	5952	2.23	7238	2.22	8714	2.19
	6000	100	15	4525	2.21	5738	2.29	7226	2.35	9034	2.38	11210	2.38	–	–	–	–	–	–
			25	4058	2.53	5162	2.63	6502	2.71	8123	2.78	10072	2.82	12397	2.84	15144	2.82	–	–
			35	3602	2.93	4613	3.04	5820	3.14	7269	3.24	9007	3.31	11081	3.37	13538	3.39	16425	3.38
			45	3113	3.45	4046	3.57	5136	3.68	6429	3.79	7971	3.88	9810	3.97	11992	4.03	14565	4.06
VLZ044TGA	1800	30	15	1731	0.68	2213	0.69	2786	0.69	3465	0.68	4259	0.65	–	–	–	–	–	–
			25	1523	0.82	1978	0.84	2517	0.86	3152	0.87	3896	0.86	4761	0.83	5758	0.79	–	–
			35	–	–	1721	1.03	2219	1.06	2804	1.08	3490	1.09	4289	1.09	5212	1.07	6271	1.02
			45	–	–	–	–	–	–	–	–	–	–	–	–	–	–	–	–
	3600	60	15	3520	1.29	4494	1.34	5657	1.35	7032	1.33	8645	1.26	–	–	–	–	–	–
			25	3117	1.59	4027	1.63	5107	1.68	6382	1.71	7875	1.71	9610	1.68	11612	1.59	–	–
			35	2704	2	3542	2.01	4531	2.04	5696	2.09	7060	2.13	8648	2.16	10483	2.16	12591	2.11
			45	2280	2.61	3037	2.54	3926	2.52	4972	2.54	6199	2.58	7631	2.63	9291	2.67	11205	2.7
	6000	100	15	5876	2.52	7465	2.65	9346	2.75	11557	2.8	14136	2.78	–	–	–	–	–	–
			25	5213	2.93	6731	3.07	8513	3.21	10598	3.34	13024	3.43	15830	3.45	19055	3.39	–	–
			35	4483	3.48	5912	3.59	7578	3.74	9518	3.9	11772	4.05	14379	4.16	17377	4.23	20805	4.21
			45	3685	4.25	5007	4.3	6537	4.4	8314	4.55	10378	4.73	12767	4.9	15520	5.04	18676	5.14

For more information and performance with other refrigerants, please refer to Coolselector ® 2 at coolselector.danfoss.com or contact Danfoss.

Technical data and ordering

VLZ - Single scroll compressor - R404A - 200 – 240 V / 3 / 50/60 Hz

Performance table (EN12900)

Type	Rpm	Frequency	Te	-25		-20		-15		-10		-5		0		5		10	
			Tc	Qo	Pe	Qo	Pe	Qo	Pe	Qo	Pe	Qo	Pe	Qo	Pe	Qo	Pe	Qo	Pe
VLZ028TGA	1800	30	15	1184	0.56	1506	0.57	1891	0.56	2347	0.54	2881	0.51	–	–	–	–	–	–
			25	1030	0.66	1327	0.67	1680	0.67	2097	0.67	2584	0.65	3151	0.62	3803	0.58	–	–
			35	–	–	1138	0.8	1454	0.81	1826	0.81	2262	0.81	2769	0.79	3354	0.77	4026	0.73
			45	–	–	–	–	–	–	–	–	–	–	–	–	–	–	–	–
	3600	60	15	2507	1.15	3168	1.17	3957	1.17	4888	1.14	5977	1.07	–	–	–	–	–	–
			25	2172	1.33	2774	1.37	3488	1.39	4330	1.4	5315	1.37	6457	1.31	7772	1.21	–	–
			35	1845	1.56	2383	1.6	3018	1.64	3767	1.66	4642	1.67	5660	1.65	6836	1.6	8184	1.51
			45	1508	1.87	1978	1.9	2530	1.94	3180	1.97	3942	1.99	4831	1.99	5863	1.98	7052	1.93
	6000	100	15	4127	2.14	5203	2.2	6483	2.22	7991	2.2	9753	2.12	–	–	–	–	–	–
			25	3619	2.41	4615	2.5	5790	2.57	7171	2.61	8781	2.6	10645	2.54	12789	2.41	–	–
			35	3100	2.75	4001	2.85	5058	2.94	6296	3.02	7739	3.06	9414	3.06	11343	3.01	13553	2.91
			45	2552	3.18	3344	3.28	4268	3.38	5349	3.47	6612	3.55	8082	3.59	9783	3.6	11740	3.57
VLZ035TGA	1800	30	15	1531	0.65	1936	0.66	2421	0.65	2996	0.63	3669	0.59	–	–	–	–	–	–
			25	1328	0.77	1703	0.79	2148	0.79	2674	0.79	3289	0.78	4003	0.75	4826	0.69	–	–
			35	–	–	1452	0.94	1851	0.95	2321	0.96	2871	0.97	3511	0.96	4251	0.93	5099	0.89
			45	–	–	–	–	–	–	–	–	–	–	–	–	–	–	–	–
	3600	60	15	3152	1.27	3974	1.29	4964	1.28	6142	1.25	7527	1.2	–	–	–	–	–	–
			25	2770	1.5	3517	1.53	4411	1.55	5473	1.55	6720	1.54	8174	1.49	9854	1.42	–	–
			35	2379	1.78	3044	1.82	3836	1.86	4773	1.88	5876	1.89	7163	1.88	8656	1.84	10373	1.78
			45	1962	2.13	2539	2.18	3221	2.22	4027	2.25	4978	2.28	6092	2.3	7390	2.29	8891	2.27
	6000	100	15	5131	2.53	6458	2.62	8069	2.67	9999	2.67	12287	2.61	–	–	–	–	–	–
			25	4538	2.85	5746	2.96	7200	3.06	8939	3.12	10998	3.14	13416	3.1	16229	2.99	–	–
			35	3932	3.26	5013	3.38	6303	3.49	7841	3.6	9663	3.67	11808	3.71	14312	3.69	17212	3.61
			45	3278	3.83	4223	3.92	5341	4.03	6669	4.14	8247	4.25	10109	4.33	12295	4.38	14841	4.38
VLZ044TGA	1800	30	15	2012	0.76	2526	0.78	3140	0.78	3865	0.76	4714	0.71	–	–	–	–	–	–
			25	1751	0.9	2230	0.92	2798	0.94	3467	0.95	4248	0.93	5155	0.89	6200	0.82	–	–
			35	–	–	1903	1.12	2415	1.14	3016	1.16	3720	1.17	4539	1.16	5484	1.13	6569	1.07
			45	–	–	–	–	–	–	–	–	–	–	–	–	–	–	–	–
	3600	60	15	4085	1.61	5139	1.66	6396	1.67	7878	1.63	9609	1.54	–	–	–	–	–	–
			25	3574	1.9	4540	1.98	5683	2.04	7029	2.06	8598	2.04	10415	1.96	12503	1.82	–	–
			35	3057	2.23	3924	2.32	4946	2.41	6146	2.47	7546	2.51	9169	2.5	11039	2.44	13178	2.32
			45	2507	2.65	3268	2.74	4160	2.83	5205	2.92	6426	2.99	7847	3.03	9491	3.03	11380	2.98
	6000	100	15	6657	2.97	8421	3.08	10532	3.16	13029	3.18	15952	3.14	–	–	–	–	–	–
			25	5848	3.44	7460	3.6	9376	3.73	11635	3.81	14278	3.85	17342	3.83	20866	3.76	–	–
			35	5029	3.97	6476	4.15	8186	4.31	10196	4.44	12546	4.53	15275	4.58	18421	4.57	22025	4.51
			45	4150	4.63	5421	4.81	6912	4.98	8661	5.13	10707	5.25	13089	5.34	15846	5.39	19018	5.4

For more information and performance with other refrigerants, please refer to Coolselector ® 2 at coolselector.danfoss.com or contact Danfoss.

Technical data and ordering

VLZ - Single scroll compressor - R448A - 200-240 V / 3 / 50/60 Hz

Performance table (EN12900)

Type	Rpm	Frequency	Te	-25		-20		-15		-10		-5		0		5		10	
			Tc	Qo	Pe	Qo	Pe	Qo	Pe	Qo	Pe	Qo	Pe	Qo	Pe	Qo	Pe	Qo	Pe
VLZ028TGA	1800	30	15	1044	0.48	1342	0.5	1699	0.5	2124	0.5	2625	0.48	–	–	–	–	–	–
			25	923	0.57	1202	0.59	1535	0.6	1931	0.6	2396	0.6	2938	0.59	3566	0.57	–	–
			35	–	–	1052	0.71	1357	0.72	1718	0.73	2144	0.74	2642	0.74	3219	0.73	3884	0.7
			45	–	–	–	–	–	–	–	–	–	–	–	–	–	–	–	–
	3600	60	15	2178	0.97	2779	0.99	3499	0.98	4356	0.95	5363	0.89	–	–	–	–	–	–
			25	1951	1.15	2513	1.17	3184	1.19	3977	1.19	4909	1.17	5994	1.13	7248	1.05	–	–
			35	1706	1.37	2226	1.41	2840	1.43	3564	1.45	4415	1.46	5406	1.45	6554	1.42	7873	1.35
			45	1443	1.69	1913	1.71	2466	1.74	3116	1.77	3879	1.79	4771	1.8	5806	1.8	7000	1.77
	6000	100	15	3581	1.82	4539	1.88	5710	1.91	7133	1.9	8843	1.85	–	–	–	–	–	–
			25	3221	2.08	4100	2.17	5162	2.24	6444	2.27	7982	2.28	9813	2.24	11973	2.16	–	–
			35	2857	2.4	3668	2.51	4632	2.6	5784	2.67	7161	2.71	8800	2.72	10738	2.69	13011	2.62
			45	2452	2.83	3208	2.93	4085	3.03	5119	3.12	6347	3.19	7805	3.24	9531	3.25	11562	3.23
VLZ035TGA	1800	30	15	1320	0.59	1694	0.6	2146	0.6	2686	0.59	3326	0.56	–	–	–	–	–	–
			25	1168	0.7	1518	0.71	1936	0.72	2433	0.73	3021	0.72	3710	0.7	4510	0.66	–	–
			35	–	–	1327	0.86	1710	0.87	2164	0.88	2699	0.89	3326	0.89	4055	0.87	4897	0.84
			45	–	–	–	–	–	–	–	–	–	–	–	–	–	–	–	–
	3600	60	15	2751	1.21	3515	1.27	4426	1.3	5501	1.3	6760	1.27	–	–	–	–	–	–
			25	2434	1.41	3151	1.48	4000	1.53	4997	1.56	6162	1.57	7512	1.55	9067	1.48	–	–
			35	2100	1.69	2765	1.75	3545	1.81	4458	1.86	5522	1.89	6757	1.9	8180	1.87	9810	1.81
			45	1748	2.1	2354	2.15	3059	2.2	3881	2.25	4840	2.29	5952	2.31	7238	2.3	8714	2.27
	6000	100	15	4525	2.25	5738	2.33	7226	2.39	9034	2.42	11210	2.43	–	–	–	–	–	–
			25	4058	2.57	5162	2.67	6502	2.76	8123	2.83	10072	2.87	12397	2.89	15144	2.87	–	–
			35	3602	2.98	4613	3.09	5820	3.2	7269	3.29	9007	3.37	11081	3.42	13538	3.45	16425	3.44
			45	3113	3.51	4046	3.63	5136	3.74	6429	3.85	7971	3.95	9810	4.04	11992	4.1	14565	4.13
VLZ044TGA	1800	30	15	1731	0.66	2213	0.68	2786	0.68	3465	0.67	4259	0.64	–	–	–	–	–	–
			25	1523	0.8	1978	0.82	2517	0.84	3152	0.85	3896	0.84	4761	0.82	5758	0.77	–	–
			35	–	–	1721	1.01	2219	1.04	2804	1.06	3490	1.07	4289	1.06	5212	1.04	6271	1
			45	–	–	–	–	–	–	–	–	–	–	–	–	–	–	–	–
	3600	60	15	3520	1.29	4494	1.33	5657	1.35	7032	1.33	8645	1.26	–	–	–	–	–	–
			25	3117	1.58	4027	1.62	5107	1.67	6382	1.7	7875	1.71	9610	1.67	11612	1.58	–	–
			35	2704	1.99	3542	2	4531	2.03	5696	2.08	7060	2.12	8648	2.15	10483	2.15	12591	2.1
			45	2280	2.6	3037	2.53	3926	2.51	4972	2.52	6199	2.57	7631	2.62	9291	2.66	11205	2.69
	6000	100	15	5876	2.56	7465	2.68	9346	2.78	11557	2.83	14136	2.82	–	–	–	–	–	–
			25	5213	2.97	6731	3.11	8513	3.26	10598	3.38	13024	3.47	15830	3.49	19055	3.43	–	–
			35	4483	3.53	5912	3.64	7578	3.79	9518	3.95	11772	4.1	14379	4.22	17377	4.28	20805	4.26
			45	3685	4.31	5007	4.35	6537	4.46	8314	4.61	10378	4.79	12767	4.96	15520	5.1	18676	5.2

For more information and performance with other refrigerants, please refer to Coolselector ® 2 at coolselector.danfoss.com or contact Danfoss.

Technical data and ordering

VLZ - Single scroll compressor - R449A - 200-240 V / 3 / 50/60 Hz

Performance table (EN12900)

Type	Rpm	Frequency	Te	-25		-20		-15		-10		-5		0		5		10	
			Tc	Qo	Pe	Qo	Pe	Qo	Pe	Qo	Pe	Qo	Pe	Qo	Pe	Qo	Pe	Qo	Pe
VLZ028TGA	1800	30	15	1044	0.48	1342	0.5	1699	0.5	2124	0.5	2625	0.48	–	–	–	–	–	–
			25	923	0.57	1202	0.59	1535	0.6	1931	0.6	2396	0.6	2938	0.59	3566	0.57	–	–
			35	–	–	1052	0.71	1357	0.72	1718	0.73	2144	0.74	2642	0.74	3219	0.73	3884	0.7
			45	–	–	–	–	–	–	–	–	–	–	–	–	–	–	–	–
	3600	60	15	2178	0.97	2779	0.99	3499	0.98	4356	0.95	5363	0.89	–	–	–	–	–	–
			25	1951	1.15	2513	1.17	3184	1.19	3977	1.19	4909	1.17	5994	1.13	7248	1.05	–	–
			35	1706	1.37	2226	1.41	2840	1.43	3564	1.45	4415	1.46	5406	1.45	6554	1.42	7873	1.35
			45	1443	1.69	1913	1.71	2466	1.74	3116	1.77	3879	1.79	4771	1.8	5806	1.8	7000	1.77
	6000	100	15	3581	1.82	4539	1.88	5710	1.91	7133	1.9	8843	1.85	–	–	–	–	–	–
			25	3221	2.08	4100	2.17	5162	2.24	6444	2.27	7982	2.28	9813	2.24	11973	2.16	–	–
			35	2857	2.4	3668	2.51	4632	2.6	5784	2.67	7161	2.71	8800	2.72	10738	2.69	13011	2.62
			45	2452	2.83	3208	2.93	4085	3.03	5119	3.12	6347	3.19	7805	3.24	9531	3.25	11562	3.23
VLZ035TGA	1800	30	15	1320	0.59	1694	0.6	2146	0.6	2686	0.59	3326	0.56	–	–	–	–	–	–
			25	1168	0.7	1518	0.71	1936	0.72	2433	0.73	3021	0.72	3710	0.7	4510	0.66	–	–
			35	–	–	1327	0.86	1710	0.87	2164	0.88	2699	0.89	3326	0.89	4055	0.87	4897	0.84
			45	–	–	–	–	–	–	–	–	–	–	–	–	–	–	–	–
	3600	60	15	2751	1.21	3515	1.27	4426	1.3	5501	1.3	6760	1.27	–	–	–	–	–	–
			25	2434	1.41	3151	1.48	4000	1.53	4997	1.56	6162	1.57	7512	1.55	9067	1.48	–	–
			35	2100	1.69	2765	1.75	3545	1.81	4458	1.86	5522	1.89	6757	1.9	8180	1.87	9810	1.81
			45	1748	2.1	2354	2.15	3059	2.2	3881	2.25	4840	2.29	5952	2.31	7238	2.3	8714	2.27
	6000	100	15	4525	2.25	5738	2.33	7226	2.39	9034	2.42	11210	2.43	–	–	–	–	–	–
			25	4058	2.57	5162	2.67	6502	2.76	8123	2.83	10072	2.87	12397	2.89	15144	2.87	–	–
			35	3602	2.98	4613	3.09	5820	3.2	7269	3.29	9007	3.37	11081	3.42	13538	3.45	16425	3.44
			45	3113	3.51	4046	3.63	5136	3.74	6429	3.85	7971	3.95	9810	4.04	11992	4.1	14565	4.13
VLZ044TGA	1800	30	15	1731	0.66	2213	0.68	2786	0.68	3465	0.67	4259	0.64	–	–	–	–	–	–
			25	1523	0.8	1978	0.82	2517	0.84	3152	0.85	3896	0.84	4761	0.82	5758	0.77	–	–
			35	–	–	1721	1.01	2219	1.04	2804	1.06	3490	1.07	4289	1.06	5212	1.04	6271	1
			45	–	–	–	–	–	–	–	–	–	–	–	–	–	–	–	–
	3600	60	15	3520	1.29	4494	1.33	5657	1.35	7032	1.33	8645	1.26	–	–	–	–	–	–
			25	3117	1.58	4027	1.62	5107	1.67	6382	1.7	7875	1.71	9610	1.67	11612	1.58	–	–
			35	2704	1.99	3542	2	4531	2.03	5696	2.08	7060	2.12	8648	2.15	10483	2.15	12591	2.1
			45	2280	2.6	3037	2.53	3926	2.51	4972	2.52	6199	2.57	7631	2.62	9291	2.66	11205	2.69
	6000	100	15	5876	2.56	7465	2.68	9346	2.78	11557	2.83	14136	2.82	–	–	–	–	–	–
			25	5213	2.97	6731	3.11	8513	3.26	10598	3.38	13024	3.47	15830	3.49	19055	3.43	–	–
			35	4483	3.53	5912	3.64	7578	3.79	9518	3.95	11772	4.1	14379	4.22	17377	4.28	20805	4.26
			45	3685	4.31	5007	4.35	6537	4.46	8314	4.61	10378	4.79	12767	4.96	15520	5.1	18676	5.2

For more information and performance with other refrigerants, please refer to Coolselector ® 2 at coolselector.danfoss.com or contact Danfoss.

Nomenclature and Dimensions

V L Z 044 T G N E 9 A

- **V** — Variable speed
- **L** — Family: Scroll (refrigeration)
- **Z** — Lubricant: POE46(RL46HB) lubricant, R404A/R448A/R449A refrigerant
- **044** — Swept volume in cm^3/rev
- **T** — Design pressure ratio: **T:** Design optimized for refrigeration
- **G** — Motor voltage code to CDS303 *): **G:** 380-480 V/3~/50 & 60 Hz; **J:** 200-240 V/3~/50 & 60 Hz
- **N** — Motor protection type: **N:** no internal motor protection (protection by Danfoss drive)
- **E** — Fittings/connections: Brazed connections, EMC compatible terminal box
- **9** — Other features

	Oil sight glass	Oil equalization	Oil drain
9	Threaded	None	Schrader

- **A** — Evolution index

*) *main supply voltage to frequency converter*

VLZ - Single compressors

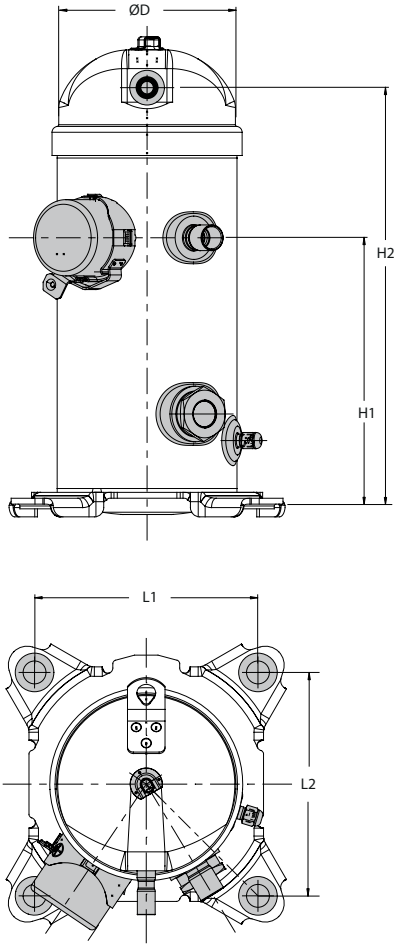

Version	Compressor model	D	H	H1	H2	L1	L2	Outline drawing number
		[mm]	[mm]	[mm]	[mm]	[mm]	[mm]	
Single	VLZ028-035-044	164.5	404.4	230.5	360.4	190.5	190.5	0 VG8213B

Quick Selection Notes:

VZH, Inverter scroll compressor - R410A

Danfoss inverter scroll compressor VZH is the second generation of scroll compressors offering variable speed technology for commercial applications in air conditioning. It allows OEMs to stand out in the commercial HVAC and process cooling marketplaces from 4 – 52 TR (15 – 184 kW) and to exceed the upgraded energy level requirements.

It provides a stepless modulation from
VZH088 / 117 / 170: 25 – 100 rps (1500 – 6000 rpm)
VZH052 / 065: 16.7 – 110 rps (1000 – 6600 rpm)
VZH028 / 035 / 044: 15 – 100 rps (900 – 6000 rpm
depending on the model.
The compressors comes with a pre-qualified drive for a shorter time to market and increased reliability.

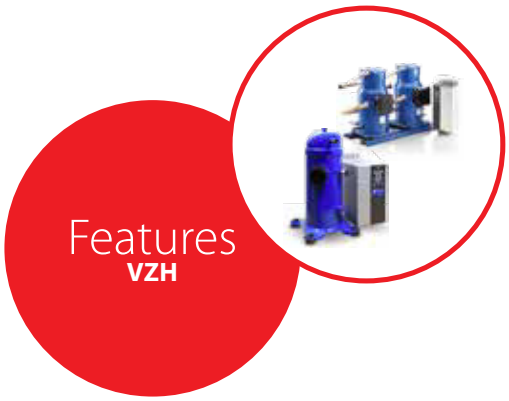

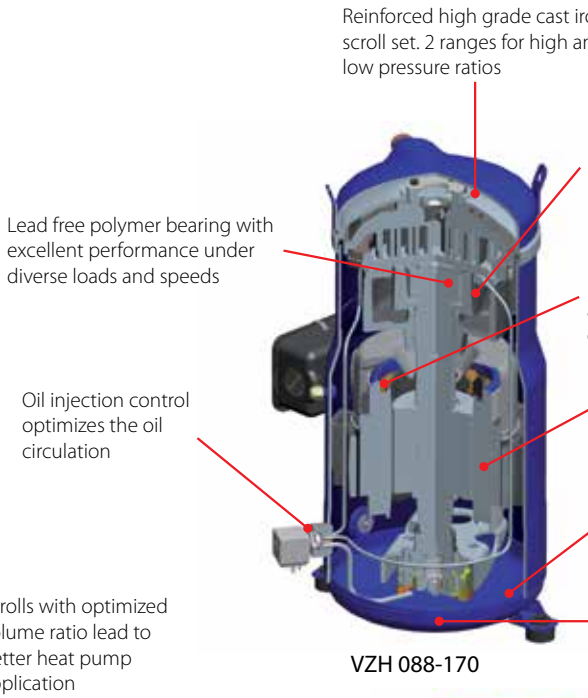

VZH 088-170

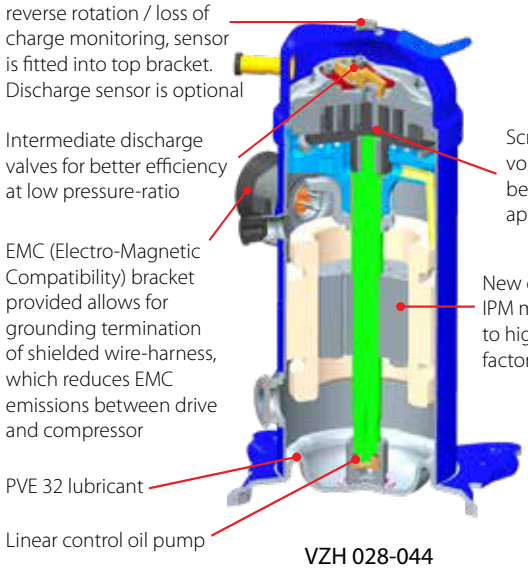

VZH 028-044

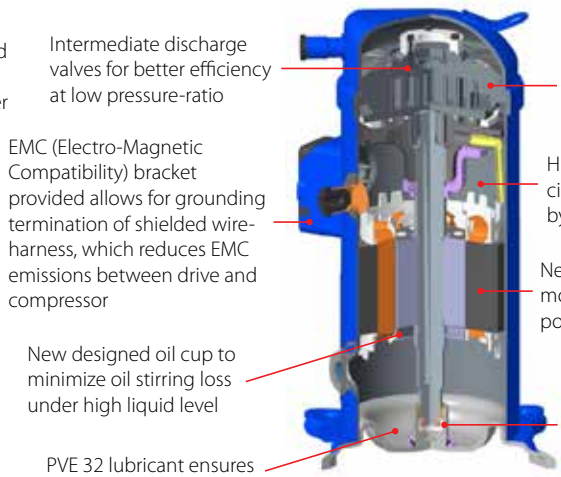

VZH052-065

Facts

Applications:
- Packaged air conditioning
- Rooftops
- Chillers
- Close controls
- Heat pumps
- Data centers

- Capacity modulation: adapts motor speed to varying load continuously, quickly and smoothly for great comfort and reliability
  VZH028-044: 15 – 100 rps (900 – 6000 rpm)
  VZH052-065:1 6.7 – 110 rps (1000 – 6600 rpm)
  VZH088-170: 25 – 100 rps (1500 – 6000 rpm)
- Tight temperature control ± 0.3 °C
- Pre-qualified compressor and drive package
- Motor's protection is managed by the driver
- Low in rush current

- Advanced energy efficiency cuts the electric bill and easily meets the energy standards
- Improves comfort and process reliability, greater humidity control
- Lowers noise level during part-load operations
- Faster time to market, saves time on development and enhances overall system reliability
- Reduces the size of power back up systems needed
- Reduces installation costs with elimination of components

Technical data and ordering

VZH028-044 - Inverter scroll compressor

Compressors specifications

Compressor model	Swept volume [cm³/rev]	Displacement				Oil charge [l]	Net weight [kg]
		15 rps [m³/ h]	50 rps [m³/h]	60 rps [m³/h]	100 rps [m³/h]		
VZH028	27.8	1.5	5.0	6.0	10.0	1.1	26
VZH035	34.9	1.9	6.3	7.5	12.6	1.3	27
VZH044	44.5	2.4	8.0	9.6	16.0	1.3	27

VZH052-065 - Inverter scroll compressor

Compressors specifications

Compressor model	Swept volume [cm³/rev]	Displacement				Oil charge [l]	Net weight [kg]
		1000 rpm [m³/ h]	3000 rpm [m³/h]	3600 rpm [m³/h]	6600 rpm [m³/h]		
VZH052	52.1	3.1	9.4	11.3	20.6	1.57	35
VZH065	65.1	3.9	11.7	14.1	25.8	1.57	35

Frequency converter specifications

Mains supply voltage	T2: 200 – 240 V ± 10% (3-phase), T4: 380 – 480 V ± 10% (3-phase), T6: 525 – 600 V ± 10 % (3-phase)
Supply frequency	50 / 60 Hz
Output voltage	0 – 100% of supply voltage
Inputs	4 digital (0 – 24 V), 2 analog (0 / ± 10 V or 4 – 20 mA, scalable)
Programmable outputs	2 digital (0 – 24 V), 2 analog (0 – 24 V), 2 relay
Protection functions	Over-current protection, low / high current handling
Compressor functions	Pressostat / thermostat function, short cycle protection, oil return management

VZH 028-065 - Single pack

Ordering

Compressor model	Equipment version	G 380-480 V/3ph/50&60 Hz		J 200-240 V/3ph/50&60 Hz		H 525-600 V/3ph/50&60 Hz	
		Compressor Name	Code no.	Compressor name	Code no.	Compressor name	Code no.
VZH028	OSG	VZH028CGANA	120G0061	VZH028CJANA	120G0064	VZH028CHANA	120G0123
VZH035	OSG	VZH035CGANA	120G0060	VZH035CJANA	120G0063	VZH035CHANA	120G0124
	OLS	VZH035CGBNA	120G0073	VZH035CJBNA	120G0076	–	–
VZH044	OSG	VZH044CGANA	120G0059	VZH044CJANA	120G0062	VZH044CHANA	120G0125
	OLS	VZH044CGBNA	120G0072	VZH044CJBNA	120G0075	–	–
VZH052	Single	VZH052CGANB/M	120G0149	VZH052CJANB/M	120G0155	VZH052CHANB/M	120G0147
VZH065	Single	VZH065CGANB/M	120G0152	VZH065CJANB/M	120G0153	VZH065CHANB/M	120G0150

VZH 028-065 - Industrial pack

Ordering

Compressor model	Equipment version	G 380-480 V/3ph/50&60 Hz		J 200-240 V/3ph/50&60 Hz		H 525-600 V/3ph/50&60 Hz	
		Compressor Name	Code no.	Compressor name	Code no.	Compressor name	Code no.
VZH028	OSG	VZH028CGANA/I	120G0138	VZH028CJANA/I	120G0135	VZH028CHANA/I	120G0129
VZH035	OSG	VZH035CGANA/I	120G0139	VZH035CJANA/I	120G0136	VZH035CHANA/I	120G0130
VZH044	OSG	VZH044CGANA/I	120G0140	VZH044CJANA/I	120G0137	VZH044CHANA/I	120G0131
VZH052	Single	VZH052CGANB/I	120G0143	VZH052CJANB/I	120G0142	VZH052CHANB/I	120G0141
VZH065	Single	VZH065CGANB/I	120G0146	VZH065CJANB/I	120G0145	VZH065CHANB/I	120G0144

Technical data and ordering

VZH 028-044 - Frequency converter - Single pack

Ordering

Compressor model	CDS803 drive		
	Voltage	Description	Code no.
VZH028	T2 200-240 V/3ph/50&60 Hz	CDS803P6K0T2E20H4	134N4260
VZH035		CDS803P7K5T2E20H4	134N4261
VZH044		CDS803P10 KT2E20H4	134L9470
VZH028	T4 380-480 V/3ph/50&60 Hz	CDS803P6K0T4E20H4	134N4262
VZH035		CDS803P7K5T4E20H4	134N4263
VZH044		CDS803P10 KT4E20H4	134L9473

LCP: user interface 120Z0581 (accessory)

VZH 028-044 - Frequency converter - Industrial pack

Ordering

Compressor model	CDS803 drive		
	Voltage	Description	Code no.
VZH028	T6 525-600 V/3ph/50&60 Hz	CDS303P7K5T6E20HX	134X8358
VZH035		CDS303P11KT6E20HX	135N3582
VZH044		CDS303P11KT6E20HX	135N3582

LCP: user interface 120Z0581 (accessory)

VZH 052-065 - Frequency converter

Ordering

Compressor model	CDS803 drive					
	Voltage	Model & power	IP class	RFI class	Drive name	Code no.
VZH052/ VZH065	T2 200-240 V/3ph/50&60 Hz	CDS303 11kW	IP20	H2	CDS303P11KT2E20H2	135X3360
			IP20	H3	CDS303P11KT2E20H3	135X3371
			IP55	H2	CDS303P11KT2P55H2	135X3361
			IP55	H3	CDS303P11KT2P55H3	135X3372
VZH052	T4 380-480 V/3ph/50&60 Hz	CDS303 11kW	IP20	H2	CDS303P11KT4E20H2	135X3298
			IP20	H3	CDS303P11KT4E20H3	135X3373
			IP55	H2	CDS303P11KT4P55H2	135X3362
			IP55	H3	CDS303P11KT4P55H3	135X3375
VZH065		CDS303 15kW	IP20	H2	CDS303P15KT4E20H2	135X1998
			IP20	H3	CDS303P15KT4E20H3	135X3379
			IP55	H2	CDS303P15KT4P55H2	135X3369
			IP55	H3	CDS303P15KT4P55H3	135X3380
VZH052	T6 525-600 V/3ph/50&60 Hz	CDS303 15kW	IP20	HX	CDS303P15KT6E20HX	135X3543
			IP55	HX	CDS303P15KT6P55HX	135X4863
VZH065		CDS303 22kW	IP20	HX	CDS303P22KT6E20HX	135X3560
			IP55	HX	CDS303P22KT6P55HX	135X3559

LCP: user interface 120Z0581 (accessory)

Technical data and ordering

VZH 088-170 - Inverter scroll compressor

Compressor specifications

Type	Swept volume [cm³/rev]	Displacement				Oil charge [dm³]	Net weight [kg]
		25 rps [m³/ h]	50 rps [m³/h]	60 rps [m³/h]	100 rps [m³ /h]		
VZH088	88.4	7.7	15.4	18.6	30.8	3.3	55
VZH117	116.9	10.1	20.3	24.6	40.6	3.6	61
VZH170	170.2	14.8	29.6	35.7	54.2	6.7	112

Frequency converter specifications

Mains supply voltage	T2: 200 – 240 V ± 10% (3-phase), T4: 380 – 480 V ± 10% (3-phase), T6: 525 – 600 V ± 10% (3-phase)
Supply frequency	50 / 60 Hz
Output voltage	0 – 100% of supply voltage
Inputs	6 digital (0 – 24 V), 2 analogue (0 ± 10 V or 4 – 20 mA, scalable)
Programmable outputs	2 digital (0 – 24 V), 1 analogue (0 – 24 V), 2 relay
Protection functions	Over-current protection, low / high current handling
Compressor functions	Discharge gas temperature protection, pressostat/thermostat function, short cycle protection, oil return management

VZH 088-170 - Inverter scroll compressor - Single pack

Ordering

Compressor model	Pressure ratio	Equipment version	Technical name	X=motor code		
				G 380-480 V/3ph/ 50&60 Hz	J 200-240 V/3ph/ 50&60 Hz	H 525-600 V/3ph/ 50&60 Hz
VZH088	High	Single	VZH088AXANA	120G0010	120G0012	120G0047
	Low	Single	VZH088BXANA	120G0011	120G0013	120G0049
	High	Manifold	VZH088AXBNA	120G0022	120G0024	120G0048
	Low	Manifold	VZH088BXBNA	120G0023	120G0025	120G0050
VZH117	High	Single	VZH117AXANA	120G0014	120G0016	120G0051
	Low	Single	VZH117BXANA	120G0015	120G0017	120G0053
	High	Manifold	VZH117AXBNA	120G0026	120G0028	120G0052
	Low	Manifold	VZH117BXBNA	120G0027	120G0029	120G0054
VZH170	High	Single	VZH170AXANB	120G0018	120G0020	120G0055
	Low	Single	VZH170BXANB	120G0019	120G0021	120G0057
	High	Manifold	VZH170AXBNB	120G0030	120G0032	120G0056
	Low	Manifold	VZH170BXBNB	120G0031	120G0033	120G0058

VZH 088-170 - Inverter scroll compressor - Industrial pack

Ordering

Compressor model	Technical name	X=motor code	
		Code G	Code J
VZH088	VZH088AXANA	120G0078	120G0080
	VZH088BXANA	120G0079	120G0081
	VZH088AXBNA	120G0090	120G0092
	VZH088BXBNA	120G0091	120G0093
VZH117	VZH117AXANA	120G0082	120G0084
	VZH117BXANA	120G0083	120G0085
	VZH117AXBNA	120G0094	120G0096
	VZH117BXBNA	120G0095	120G0097
VZH170	VZH170AXANB	120G0086	120G0088
	VZH170BXANB	120G0087	120G0089
	VZH170AXBNB	120G0098	120G0100
	VZH170BXBNB	120G0099	120G0101

Coils

Ordering

Coil model	Code no.
208V-240 V coil + adaptor	120Z0521
24V coil + adaptor	120Z0522

Technical data and ordering

VZH voltage code G - 380-480 Volt

Ordering

Compressor model	Frequency converter				
	Model & power	IP class	RFI class	Coating	Code no
VZH088-G	CDS303 15.0 KW	IP20	H3	No	134G3576
	CDS303 15.0 KW			Yes	134G3577
	CDS303 15.0 KW		H2	No	134F9366
	CDS303 15.0 KW			Yes	134G3578
	CDS303 15.0 KW	IP55	H3	No	134G4008
	CDS303 15.0 KW			Yes	134G4010
	CDS303 15.0 KW		H2	No	134G4012
	CDS303 15.0 KW			Yes	134G4013
VZH117-G	CDS303 15.0 KW	IP20	H3	No	134G3579
	CDS303 18.5kW			Yes	134G3580
	CDS303 18.5kW		H2	No	134F9368
	CDS303 18.5kW			Yes	134G3581
	CDS303 18.5kW	IP55	H3	No	134G4015
	CDS303 18.5kW			Yes	134G4016
	CDS303 18.5kW		H2	No	134G4018
	CDS303 18.5kW			Yes	134G4019
VZH170-G	CDS303 18.5kW	IP20	H3	No	134G3582
	CDS303 18.5kW			Yes	134G3583
	CDS303 22.0 KW		H2	No	134F9371
	CDS303 22.0 KW			Yes	134G3584
	CDS303 22.0 KW	IP55	H3	No	134G4020
	CDS303 22.0 KW			Yes	134G4021
	CDS303 22.0 KW		H2	No	134G4022
	CDS303 22.0 KW			Yes	134G4023

LCP: user interface 120Z0326 (accessory)

VZH voltage code H - 525-600 Volt

Ordering

Compressor model	Frequency converter			
	Model & power	IP class	RFI class	Code no
VZH088-H	CDS303 18.5kW	IP20	HX	134L7237
VZH117-H	CDS303 30 KW	IP20	HX	134L7239
VZH170-H	CDS303 30 KW	IP20	HX	134L7239

Technical data and ordering

VZH - Inverter scroll compressor - VZH028CJ-VZH035CJ-VZH044CJ-VZH052CJ-VZH065CJ

EN12900

Type	[rpm]	[rps]	Te	-30		-25		-20		-15		-10		-5		0		5		10		15		20	
			Tc	Qo	Pe	Qo	Pe	Qo	Pe	Qo	Pe	Qo	Pe	Qo	Pe	Qo	Pe	Qo	Pe	Qo	Pe	Qo	Pe	Qo	Pe
VZH028CJ	1800	30	5	–	–	1791	0.54	2252	0.519	2798	0.499	3437	0.479	4177	0.46	5027	0.442	–	–	–	–	–	–	–	–
			25	–	–	1460	0.812	1873	0.804	2351	0.79	2905	0.771	3541	0.747	4269	0.717	5096	0.682	6031	0.643	7081	0.599	8257	0.55
			45	–	–	–	–	–	–	1805	1.198	2256	1.218	2772	1.227	3359	1.224	4027	1.21	4783	1.185	5636	1.149	6593	1.103
			65	–	–	–	–	–	–	–	–	–	–	–	–	–	–	–	–	–	–	–	–	–	–
	3600	60	5	3009	1.04	3787	1.056	4725	1.042	5840	0.984	7151	0.869	8676	0.68	10435	0.403	–	–	–	–	–	–	–	–
			25	2371	1.492	3054	1.527	3863	1.572	4817	1.613	5934	1.634	7232	1.622	8730	1.56	10445	1.436	12396	1.234	14602	0.94	17081	0.539
			45	–	–	2284	2.296	2937	2.292	3702	2.323	4597	2.375	5638	2.431	6845	2.479	8235	2.502	9825	2.487	11634	2.419	13680	2.283
			65	–	–	–	–	–	–	–	–	–	–	3761	3.567	4622	3.615	5626	3.68	6789	3.744	8128	3.795	9660	3.818
	6000	100	5	5025	1.96	6302	2.006	7834	1.996	9651	1.917	11784	1.756	14263	1.499	17119	1.131	–	–	–	–	–	–	–	–
			25	4004	2.64	5147	2.772	6495	2.887	8075	2.972	9920	3.012	12058	2.994	14520	2.905	17336	2.73	20536	2.456	24150	2.068	28209	1.555
			45	–	–	3860	3.845	4978	3.968	6278	4.1	7789	4.225	9540	4.331	11560	4.403	13879	4.429	16527	4.393	19532	4.283	22923	4.084
			65	–	–	–	–	–	–	–	–	–	–	6426	6.069	7912	6.187	9633	6.296	11616	6.383	13888	6.433	16477	6.434
VZH035CJ	1800	30	5	–	–	2268	0.658	2851	0.633	3542	0.608	4350	0.584	5287	0.561	6363	0.539	–	–	–	–	–	–	–	–
			25	–	–	1848	0.99	2370	0.98	2977	0.964	3677	0.94	4483	0.91	5403	0.874	6450	0.832	7634	0.784	8964	0.73	10452	0.67
			45	–	–	–	–	–	–	2284	1.461	2856	1.485	3508	1.496	4252	1.492	5098	1.475	6055	1.445	7134	1.401	8346	1.345
			65	–	–	–	–	–	–	–	–	–	–	–	–	–	–	–	–	–	–	–	–	–	–
	3600	60	5	3808	1.268	4794	1.287	5981	1.27	7392	1.2	9052	1.059	10983	0.829	13209	0.491	–	–	–	–	–	–	–	–
			25	3002	1.82	3866	1.862	4890	1.917	6098	1.966	7512	1.992	9155	1.977	11050	1.903	13222	1.751	15692	1.505	18484	1.146	21622	0.657
			45	–	–	2891	2.799	3718	2.795	4687	2.833	5819	2.895	7137	2.965	8665	3.022	10424	3.051	12437	3.033	14727	2.95	17316	2.784
			65	–	–	–	–	–	–	–	–	–	–	4760	4.349	5851	4.408	7121	4.487	8594	4.566	10289	4.628	12228	4.655
	6000	100	5	6361	2.344	7977	2.398	9916	2.387	12217	2.293	14917	2.1	18055	1.792	21670	1.353	–	–	–	–	–	–	–	–
			25	5069	3.157	6516	3.314	8221	3.452	10222	3.553	12557	3.601	15263	3.58	18379	3.473	21944	3.264	25994	2.936	30570	2.473	35708	1.859
			45	–	–	4885	4.597	6301	4.745	7947	4.902	9859	5.052	12076	5.178	14633	5.265	17569	5.295	20920	5.253	24723	5.121	29017	4.883
			65	–	–	–	–	–	–	–	–	–	–	8134	7.256	10015	7.397	12193	7.528	14704	7.632	17580	7.692	20857	7.693
VZH044CJ	1800	30	5	–	–	2916	0.824	3666	0.792	4554	0.76	5594	0.731	6799	0.702	8183	0.675	–	–	–	–	–	–	–	–
			25	–	–	2377	1.239	3048	1.227	3828	1.206	4729	1.176	5765	1.139	6949	1.094	8295	1.041	9817	0.98	11527	0.913	13441	0.839
			45	–	–	–	–	–	–	2938	1.828	3673	1.858	4512	1.871	5468	1.867	6556	1.846	7787	1.808	9175	1.753	10733	1.682
			65	–	–	–	–	–	–	–	–	–	–	–	–	–	–	–	–	–	–	–	–	–	–
	3600	60	5	4897	1.558	6165	1.581	7691	1.561	9507	1.475	11641	1.301	14124	1.018	16986	0.604	–	–	–	–	–	–	–	–
			25	3860	2.235	4972	2.288	6289	2.355	7842	2.416	9660	2.448	11773	2.429	14211	2.337	17003	2.152	20180	1.849	23770	1.408	27806	0.807
			45	–	–	3718	3.439	4782	3.433	6027	3.48	7483	3.557	9179	3.642	11143	3.713	13405	3.748	15994	3.726	18939	3.624	22269	3.42
			65	–	–	–	–	–	–	–	–	–	–	6122	5.343	7524	5.416	9158	5.512	11052	5.609	13232	5.685	15725	5.718
	6000	100	5	8180	2.932	10259	3	12752	2.986	15711	2.868	19183	2.627	23219	2.242	27868	1.692	–	–	–	–	–	–	–	–
			25	6518	3.949	8379	4.146	10572	4.318	13145	4.445	16148	4.505	19628	4.478	23636	4.345	28220	4.083	33429	3.673	39313	3.094	45920	2.326
			45	–	–	6283	5.751	8103	5.936	10220	6.132	12679	6.32	15529	6.478	18818	6.586	22593	6.624	26903	6.571	31794	6.406	37316	6.109
			65	–	–	–	–	–	–	–	–	–	–	10460	9.077	12879	9.254	15681	9.418	18909	9.547	22608	9.623	26823	9.624
VZH052CG	1800	30	5	2837	0.87	3679	0.86	4596	0.83	5600	0.78	6702	0.69	7913	0.55	9245	0.34	–	–	–	–	–	–	–	–
			25	1040	1.47	2070	1.42	3165	1.4	4335	1.39	5592	1.38	6947	1.35	8410	1.29	9993	1.19	11707	1.04	13563	0.81	15573	0.5
			45	–	–	–	–	–	–	1836	2.31	3123	2.27	4496	2.25	5965	2.23	7541	2.21	9236	2.17	11060	2.1	13023	1.98
			65	–	–	–	–	–	–	–	–	–	–	–	–	–	–	–	–	–	–	–	–	–	–
	3600	60	5	5886	1.82	7488	1.86	9295	1.85	11331	1.77	13624	1.58	16198	1.24	19080	0.73	–	–	–	–	–	–	–	–
			25	3224	2.85	4963	2.8	6884	2.82	9013	2.85	11375	2.87	13996	2.86	16900	2.77	20113	2.57	23662	2.23	27570	1.72	31865	1.01
			45	–	–	–	–	3195	4.72	5185	4.54	7383	4.45	9816	4.42	12507	4.41	15481	4.4	18764	4.35	22379	4.23	26351	4
			65	–	–	–	–	–	–	–	–	–	–	–	–	6490	7.07	8906	6.91	11592	6.81	14573	6.74	17869	6.66
	6000	100	5	9514	3.41	12058	3.44	15031	3.42	18480	3.31	22454	3.09	27000	2.72	32166	2.16	38000	1.4	–	–	–	–	–	–
			25	6474	5.15	9025	5.14	11933	5.17	15247	5.21	19012	5.23	23277	5.2	28089	5.09	33494	4.85	39541	4.47	46277	3.91	53749	3.14
			45	–	–	5027	8.14	7619	7.92	10543	7.81	13845	7.77	17571	7.77	21768	7.78	26480	7.77	31755	7.71	37639	7.56	44177	7.29
			65	–	–	–	–	–	–	–	–	7220	12.06	10057	11.78	13275	11.61	16916	11.52	21024	11.46	25639	11.42	30806	11.35
VZH065CG	1800	30	5	3610	1.07	4658	1.08	5806	1.07	7068	1.02	8461	0.91	9998	0.72	11694	0.41	–	–	–	–	–	–	–	–
			25	1411	1.89	2669	1.78	4013	1.72	5458	1.71	7020	1.7	8712	1.68	10549	1.62	12546	1.51	14717	1.31	17078	1.01	19643	0.59
			45	–	–	–	–	–	–	2378	3.25	3949	3.07	5636	2.95	7454	2.87	9416	2.81	11536	2.74	13830	2.64	16310	2.49
			65	–	–	–	–	–	–	–	–	–	–	–	–	–	–	–	–	–	–	–	–	–	–
	3600	60	5	7165	2.26	9074	2.26	11282	2.23	13828	2.13	16752	1.92	20092	1.56	23886	1.02	–	–	–	–	–	–	–	–
			25	4444	3.65	6484	3.55	8777	3.52	11361	3.53	14274	3.54	17553	3.51	21237	3.41	25365	3.2	29974	2.83	35103	2.28	40791	1.51
			45	–	–	–	–	4678	5.87	6992	5.65	9586	5.54	12495	5.51	15758	5.5	19412	5.5	23493	5.45	28039	5.32	33087	5.08
			65	–	–	–	–	–	–	–	–	–	–	–	–	8282	8.85	11063	8.71	14205	8.64	17741	8.6	21705	8.55
	6000	100	5	11818	4.35	14813	4.36	18362	4.34	22542	4.23	27432	3.98	33109	3.55	39653	2.86	47141	1.88	–	–	–	–	–	–
			25	8594	6.62	11636	6.45	15126	6.41	19139	6.44	23753	6.49	29044	6.52	35090	6.45	41968	6.25	49754	5.86	58528	5.22	68365	4.29
			45	–	–	7083	10.6	10125	10.03	13582	9.7	17529	9.55	22039	9.52	27189	9.58	33053	9.66	39708	9.7	47227	9.66	55687	9.49
			65	–	–	–	–	–	–	–	–	9478	15.48	12722	14.91	16471	14.58	20797	14.43	25768	14.41	31455	14.46	37925	14.54

To: *Evaporating temperature in [°C]*
Tc: *Condensing temperature in [°C]*
Qo: *Cooling capacity in [W]*
Pe: *Power input in [kW] (with drive loss)*
Superheat: *10 K*
Subcooling: *0 K*

For more information and performance with other refrigerants, please refer to Coolselector ® 2 at coolselector.danfoss.com or contact Danfoss.

Technical data and ordering

VZH - Inverter scroll compressor - VZH028CG-VZH035CG-VZH044CG-VZH052CG-VZH065CG

EN12900

Type	[rpm]	[rps]	Te	-30		-25		-20		-15		-10		-5		0		5		10		15		20	
			Tc	Qo	Pe	Qo	Pe	Qo	Pe	Qo	Pe	Qo	Pe	Qo	Pe	Qo	Pe	Qo	Pe	Qo	Pe	Qo	Pe	Qo	Pe
VZH028CG	1800	30	5	–	–	1791	0.535	2252	0.514	2798	0.494	3437	0.474	4177	0.456	5027	0.438	–	–	–	–	–	–	–	–
			25	–	–	1460	0.804	1873	0.796	2351	0.783	2905	0.763	3541	0.739	4269	0.71	5096	0.676	6031	0.636	7081	0.593	8257	0.544
			45	–	–	–	–	–	–	1805	1.186	2256	1.206	2772	1.215	3359	1.212	4027	1.198	4783	1.173	5636	1.138	6593	1.092
			65	–	–	–	–	–	–	–	–	–	–	–	–	–	–	–	–	–	–	–	–	–	–
	3600	60	5	3009	1.03	3787	1.045	4725	1.032	5840	0.975	7151	0.86	8676	0.673	10435	0.399	–	–	–	–	–	–	–	–
			25	2371	1.478	3054	1.512	3863	1.557	4817	1.597	5934	1.618	7232	1.605	8730	1.545	10445	1.422	12396	1.222	14602	0.931	17081	0.533
			45	–	–	2284	2.273	2937	2.269	3702	2.3	4597	2.351	5638	2.407	6845	2.454	8235	2.478	9825	2.463	11634	2.395	13680	2.261
			65	–	–	–	–	–	–	–	–	–	–	3761	3.531	4622	3.58	5626	3.643	6789	3.707	8128	3.758	9660	3.78
	6000	100	5	5025	1.941	6302	1.986	7834	1.976	9651	1.898	11784	1.739	14263	1.484	17119	1.12	–	–	–	–	–	–	–	–
			25	4004	2.614	5147	2.745	6495	2.859	8075	2.942	9920	2.982	12058	2.964	14520	2.876	17336	2.703	20536	2.431	24150	2.048	28209	1.539
			45	–	–	3860	3.807	4978	3.929	6278	4.059	7789	4.183	9540	4.288	11560	4.36	13879	4.385	16527	4.349	19532	4.24	22923	4.044
			65	–	–	–	–	–	–	–	–	–	–	6426	6.009	7912	6.126	9633	6.234	11616	6.32	13888	6.37	16477	6.37
VZH035CG	1800	30	5	–	–	2268	0.652	2851	0.627	3542	0.602	4350	0.578	5287	0.555	6363	0.534	–	–	–	–	–	–	–	–
			25	–	–	1848	0.981	2370	0.971	2977	0.954	3677	0.931	4483	0.901	5403	0.866	6450	0.824	7634	0.776	8964	0.723	10452	0.664
			45	–	–	–	–	–	–	2284	1.447	2856	1.471	3508	1.481	4252	1.478	5098	1.461	6055	1.431	7134	1.388	8346	1.331
			65	–	–	–	–	–	–	–	–	–	–	–	–	–	–	–	–	–	–	–	–	–	–
	3600	60	5	3808	1.256	4794	1.274	5981	1.258	7392	1.188	9052	1.049	10983	0.82	13209	0.486	–	–	–	–	–	–	–	–
			25	3002	1.802	3866	1.844	4890	1.898	6098	1.947	7512	1.973	9155	1.958	11050	1.884	13222	1.734	15692	1.49	18484	1.135	21622	0.65
			45	–	–	2891	2.771	3718	2.767	4687	2.805	5819	2.867	7137	2.935	8665	2.993	10424	3.021	12437	3.003	14727	2.921	17316	2.757
			65	–	–	–	–	–	–	–	–	–	–	4760	4.306	5851	4.365	7121	4.442	8594	4.52	10289	4.582	12228	4.609
	6000	100	5	6361	2.321	7977	2.374	9916	2.363	12217	2.27	14917	2.079	18055	1.774	21670	1.339	–	–	–	–	–	–	–	–
			25	5069	3.126	6516	3.282	8221	3.418	10222	3.518	12557	3.565	15263	3.544	18379	3.438	21944	3.231	25994	2.907	30570	2.449	35708	1.841
			45	–	–	4885	4.551	6301	4.698	7947	4.853	9859	5.002	12076	5.127	14633	5.213	17569	5.243	20920	5.2	24723	5.07	29017	4.835
			65	–	–	–	–	–	–	–	–	–	–	8134	7.184	10015	7.324	12193	7.454	14704	7.556	17580	7.616	20857	7.617
VZH044CG	1800	30	5	–	–	2916	0.815	3666	0.784	4554	0.753	5594	0.723	6799	0.695	8183	0.668	–	–	–	–	–	–	–	–
			25	–	–	2377	1.227	3048	1.214	3828	1.194	4729	1.165	5765	1.128	6949	1.083	8295	1.03	9817	0.971	11527	0.904	13441	0.83
			45	–	–	–	–	–	–	2938	1.81	3673	1.84	4512	1.853	5468	1.849	6556	1.828	7787	1.79	9175	1.736	10733	1.666
			65	–	–	–	–	–	–	–	–	–	–	–	–	–	–	–	–	–	–	–	–	–	–
	3600	60	5	4897	1.543	6165	1.565	7691	1.545	9507	1.46	11641	1.288	14124	1.008	16986	0.598	–	–	–	–	–	–	–	–
			25	3860	2.213	4972	2.265	6289	2.332	7842	2.392	9660	2.423	11773	2.405	14211	2.314	17003	2.13	20180	1.831	23770	1.394	27806	0.799
			45	–	–	3718	3.405	4782	3.399	6027	3.446	7483	3.522	9179	3.606	11143	3.676	13405	3.711	15994	3.689	18939	3.588	22269	3.386
			65	–	–	–	–	–	–	–	–	–	–	6122	5.29	7524	5.362	9158	5.457	11052	5.553	13232	5.629	15725	5.662
	6000	100	5	8180	2.903	10259	2.97	12752	2.956	15711	2.84	19183	2.601	23219	2.22	27868	1.675	–	–	–	–	–	–	–	–
			25	6518	3.91	8379	4.105	10572	4.276	13145	4.401	16148	4.46	19628	4.434	23636	4.302	28220	4.042	33429	3.637	39313	3.063	45920	2.303
			45	–	–	6283	5.694	8103	5.877	10220	6.071	12679	6.257	15529	6.414	18818	6.521	22593	6.559	26903	6.506	31794	6.343	37316	6.049
			65	–	–	–	–	–	–	–	–	–	–	10460	8.988	12879	9.162	15681	9.324	18909	9.453	22608	9.528	26823	9.528
VZH052CG	1800	30	5	2837	0.86	3679	0.84	4596	0.82	5600	0.77	6702	0.68	7913	0.54	9245	0.33	–	–	–	–	–	–	–	–
			25	1040	1.44	2070	1.4	3165	1.37	4335	1.36	5592	1.35	6947	1.32	8410	1.27	9993	1.17	11707	1.02	13563	0.8	15573	0.49
			45	–	–	–	–	–	–	1836	2.27	3123	2.23	4496	2.2	5965	2.19	7541	2.17	9236	2.13	11060	2.06	13023	1.95
			65	–	–	–	–	–	–	–	–	–	–	–	–	–	–	–	–	–	–	–	–	–	–
	3600	60	5	5886	1.79	7488	1.82	9295	1.82	11331	1.74	13624	1.55	16198	1.22	19080	0.72	–	–	–	–	–	–	–	–
			25	3224	2.8	4963	2.75	6884	2.76	9013	2.8	11375	2.82	13996	2.81	16900	2.72	20113	2.52	23662	2.19	27570	1.69	31865	0.99
			45	–	–	–	–	3195	4.63	5185	4.46	7383	4.37	9816	4.34	12507	4.33	15481	4.32	18764	4.27	22379	4.15	26351	3.92
			65	–	–	–	–	–	–	–	–	–	–	–	–	6490	6.94	8906	6.78	11592	6.68	14573	6.61	17869	6.54
	6000	100	5	9514	3.37	12058	3.4	15031	3.38	18480	3.27	22454	3.05	27000	2.68	32166	2.14	38000	1.39	–	–	–	–	–	–
			25	6474	5.08	9025	5.08	11933	5.11	15247	5.15	19012	5.17	23277	5.14	28089	5.03	33494	4.8	39541	4.42	46277	3.87	53749	3.1
			45	–	–	5027	8.04	7619	7.83	10543	7.71	13845	7.67	17571	7.68	21768	7.69	26480	7.68	31755	7.62	37639	7.47	44177	7.21
			65	–	–	–	–	–	–	–	–	7220	11.91	10057	11.64	13275	11.47	16916	11.38	21024	11.33	25639	11.28	30806	11.22
VZH065CG	1800	30	5	3610	1.02	4658	1.03	5806	1.03	7068	0.98	8461	0.88	9998	0.69	11694	0.4	–	–	–	–	–	–	–	–
			25	1411	1.81	2669	1.7	4013	1.65	5458	1.63	7020	1.63	8712	1.61	10549	1.56	12546	1.45	14717	1.26	17078	0.97	19643	0.56
			45	–	–	–	–	–	–	2378	3.11	3949	2.94	5636	2.83	7454	2.75	9416	2.69	11536	2.63	13830	2.53	16310	2.39
			65	–	–	–	–	–	–	–	–	–	–	–	–	–	–	–	–	–	–	–	–	–	–
	3600	60	5	7165	2.2	9074	2.2	11282	2.17	13828	2.07	16752	1.87	20092	1.52	23886	0.99	–	–	–	–	–	–	–	–
			25	4444	3.56	6484	3.46	8777	3.43	11361	3.44	14274	3.45	17553	3.42	21237	3.32	25365	3.11	29974	2.76	35103	2.22	40791	1.47
			45	–	–	–	–	4678	5.72	6992	5.51	9586	5.4	12495	5.36	15758	5.36	19412	5.35	23493	5.31	28039	5.18	33087	4.95
			65	–	–	–	–	–	–	–	–	–	–	–	–	8282	8.62	11063	8.49	14205	8.42	17741	8.37	21705	8.33
	6000	100	5	11818	4.24	14813	4.25	18362	4.23	22542	4.12	27432	3.88	33109	3.46	39653	2.79	47141	1.83	–	–	–	–	–	–
			25	8594	6.46	11636	6.29	15126	6.25	19139	6.28	23753	6.33	29044	6.35	35090	6.29	41968	6.1	49754	5.71	58528	5.09	68365	4.18
			45	–	–	7083	10.34	10125	9.78	13582	9.46	17529	9.31	22039	9.29	27189	9.34	33053	9.42	39708	9.46	47227	9.42	55687	9.25
			65	–	–	–	–	–	–	–	–	9478	15.1	12722	14.54	16471	14.22	20797	14.07	25768	14.05	31455	14.11	37925	14.18

To: *Evaporating temperature in [°C]*
Tc: *Condensing temperature in [°C]*
Qo: *Cooling capacity in [W]*
Pe: *Power input in [kW] (with drive loss)*
Subcooling: *0 K*
Superheat: *10 K*

For more information and performance with other refrigerants, please refer to Coolselector ® 2 at coolselector.danfoss.com or contact Danfoss.

Technical data and ordering

VZH - Inverter scroll compressor - VZH028CJ-VZH035CJ-VZH044CJ-VZH052CJ-VZH065CJ

ARI

Type	[rpm]	[rps]	Te	-30		-25		-20		-15		-10		-5		0		5		10		15		20	
			Tc	Qo	Pe	Qo	Pe	Qo	Pe	Qo	Pe	Qo	Pe	Qo	Pe	Qo	Pe	Qo	Pe	Qo	Pe	Qo	Pe	Qo	Pe
VZH028CJ	1800	30	5	–	–	1894	0.54	2380	0.519	2954	0.499	3626	0.479	4405	0.46	5298	0.442	–	–	–	–	–	–	–	–
			25	–	–	1568	0.812	2009	0.804	2521	0.79	3111	0.771	3790	0.747	4565	0.717	5445	0.682	6440	0.643	7557	0.599	8805	0.55
			45	–	–	–	–	–	–	1990	1.198	2484	1.218	3048	1.227	3690	1.224	4418	1.21	5242	1.185	6171	1.149	7212	1.103
			65	–	–	–	–	–	–	–	–	–	–	–	–	–	–	–	–	–	–	–	–	–	–
	3600	60	5	3183	1.04	4004	1.056	4992	1.042	6167	0.984	7546	0.869	9150	0.68	10999	0.403	–	–	–	–	–	–	–	–
			25	2550	1.492	3280	1.527	4145	1.572	5164	1.613	6356	1.634	7740	1.622	9336	1.56	11162	1.436	13237	1.234	15582	0.94	18215	0.539
			45	–	–	2526	2.296	3244	2.292	4082	2.323	5062	2.375	6200	2.431	7518	2.479	9034	2.502	10767	2.487	12737	2.419	14963	2.283
			65	–	–	–	–	–	–	–	–	–	–	4505	3.567	5520	3.615	6701	3.68	8067	3.744	9637	3.795	11431	3.818
	6000	100	5	5317	1.96	6663	2.006	8277	1.996	10191	1.917	12435	1.756	15043	1.499	18044	1.131	–	–	–	–	–	–	–	–
			25	4305	2.64	5528	2.772	6969	2.887	8657	2.972	10625	3.012	12905	2.994	15527	2.905	18525	2.73	21928	2.456	25770	2.068	30082	1.555
			45	–	–	4269	3.845	5497	3.968	6922	4.1	8576	4.225	10491	4.331	12697	4.403	15226	4.429	18111	4.393	21383	4.283	25074	4.084
			65	–	–	–	–	–	–	–	–	–	–	7698	6.069	9450	6.187	11474	6.296	13802	6.383	16466	6.433	19498	6.434
VZH035CJ	1800	30	5	–	–	2398	0.658	3012	0.633	3740	0.608	4590	0.584	5576	0.561	6707	0.539	–	–	–	–	–	–	–	–
			25	–	–	1985	0.99	2543	0.98	3191	0.964	3939	0.94	4797	0.91	5778	0.874	6893	0.832	8151	0.784	9565	0.73	11146	0.67
			45	–	–	–	–	–	–	2519	1.461	3145	1.485	3858	1.496	4670	1.492	5593	1.475	6636	1.445	7811	1.401	9129	1.345
			65	–	–	–	–	–	–	–	–	–	–	–	–	–	–	–	–	–	–	–	–	–	–
	3600	60	5	4029	1.268	5069	1.287	6319	1.27	7806	1.2	9552	1.059	11583	0.829	13922	0.491	–	–	–	–	–	–	–	–
			25	3227	1.82	4152	1.862	5247	1.917	6537	1.966	8046	1.992	9798	1.977	11817	1.903	14129	1.751	16756	1.505	19724	1.146	23057	0.657
			45	–	–	3198	2.799	4106	2.795	5168	2.833	6407	2.895	7849	2.965	9517	3.022	11436	3.051	13630	3.033	16123	2.95	18941	2.784
			65	–	–	–	–	–	–	–	–	–	–	5703	4.349	6988	4.408	8483	4.487	10212	4.566	12199	4.628	14469	4.655
	6000	100	5	6730	2.344	8434	2.398	10478	2.387	12900	2.293	15741	2.1	19041	1.792	22841	1.353	–	–	–	–	–	–	–	–
			25	5449	3.157	6998	3.314	8821	3.452	10958	3.553	13449	3.601	16335	3.58	19655	3.473	23449	3.264	27758	2.936	32621	2.473	38079	1.859
			45	–	–	5403	4.597	6958	4.745	8763	4.902	10856	5.052	13279	5.178	16072	5.265	19274	5.295	22926	5.253	27067	5.121	31739	4.883
			65	–	–	–	–	–	–	–	–	–	–	9744	7.256	11962	7.397	14524	7.528	17471	7.632	20844	7.692	24681	7.693
VZH044CJ	1800	30	5	–	–	3083	0.824	3874	0.792	4809	0.76	5903	0.731	7171	0.702	8625	0.675	–	–	–	–	–	–	–	–
			25	–	–	2553	1.239	3271	1.227	4104	1.206	5065	1.176	6169	1.139	7431	1.094	8864	1.041	10483	0.98	12301	0.913	14333	0.839
			45	–	–	–	–	–	–	3239	1.828	4044	1.858	4961	1.871	6006	1.867	7192	1.846	8533	1.808	10045	1.753	11740	1.682
			65	–	–	–	–	–	–	–	–	–	–	–	–	–	–	–	–	–	–	–	–	–	–
	3600	60	5	5182	1.558	6518	1.581	8127	1.561	10038	1.475	12284	1.301	14896	1.018	17904	0.604	–	–	–	–	–	–	–	–
			25	4150	2.235	5340	2.288	6748	2.355	8407	2.416	10347	2.448	12600	2.429	15197	2.337	18169	2.152	21548	1.849	25365	1.408	29652	0.807
			45	–	–	4113	3.439	5280	3.433	6646	3.48	8239	3.557	10093	3.642	12238	3.713	14706	3.748	17528	3.726	20734	3.624	24357	3.42
			65	–	–	–	–	–	–	–	–	–	–	7334	5.343	8986	5.416	10909	5.512	13132	5.609	15688	5.685	18607	5.718
	6000	100	5	8654	2.932	10846	3	13474	2.986	16589	2.868	20243	2.627	24487	2.242	29373	1.692	–	–	–	–	–	–	–	–
			25	7008	3.949	9000	4.146	11344	4.318	14092	4.445	17296	4.505	21007	4.478	25276	4.345	30155	4.083	35696	3.673	41950	3.094	48969	2.326
			45	–	–	6949	5.751	8949	5.936	11269	6.132	13961	6.32	17077	6.478	20668	6.586	24786	6.624	29483	6.571	34809	6.406	40816	6.109
			65	–	–	–	–	–	–	–	–	–	–	12531	9.077	15383	9.254	18678	9.418	22468	9.547	26805	9.623	31740	9.624
VZH052CJ	1800	30	5	3002	0.87	3889	0.86	4856	0.83	5913	0.78	7072	0.69	8345	0.55	9744	0.34	–	–	–	–	–	–	–	–
			25	1118	1.47	2223	1.42	3396	1.4	4647	1.39	5989	1.38	7434	1.35	8992	1.29	10677	1.19	12500	1.04	14472	0.81	16606	0.5
			45	–	–	–	–	–	–	2024	2.31	3438	2.27	4943	2.25	6550	2.23	8272	2.21	10121	2.17	12107	2.1	14243	1.98
			65	–	–	–	–	–	–	–	–	–	–	–	–	–	–	–	–	–	–	–	–	–	–
	3600	60	5	6227	1.82	7917	1.86	9820	1.85	11964	1.77	14376	1.58	17082	1.24	20109	0.73	–	–	–	–	–	–	–	–
			25	3466	2.85	5330	2.8	7386	2.82	9662	2.85	12183	2.87	14977	2.86	18071	2.77	21491	2.57	25264	2.23	29418	1.72	33978	1.01
			45	–	–	–	–	3527	4.72	5716	4.54	8129	4.45	10793	4.42	13735	4.41	16982	4.4	20560	4.35	24497	4.23	28820	4
			65	–	–	–	–	–	–	–	–	–	–	–	–	7750	7.07	10605	6.91	13771	6.81	17273	6.74	21139	6.66
	6000	100	5	10065	3.41	12748	3.44	15880	3.42	19512	3.31	23693	3.09	28473	2.72	33901	2.16	40028	1.4	–	–	–	–	–	–
			25	6959	5.15	9692	5.14	12803	5.17	16344	5.21	20363	5.23	24910	5.2	30035	5.09	35788	4.85	42219	4.47	49378	3.91	57313	3.14
			45	–	–	5560	8.14	8412	7.92	11624	7.81	15243	7.77	19320	7.77	23905	7.78	29047	7.77	34796	7.71	41202	7.56	48316	7.29
			65	–	–	–	–	–	–	–	–	8675	12.06	12044	11.78	15851	11.61	20144	11.52	24974	11.46	30391	11.42	36444	11.35
VZH065CJ	1800	30	5	3819	1.07	4924	1.08	6134	1.07	7463	1.02	8928	0.91	10543	0.72	12325	0.41	–	–	–	–	–	–	–	–
			25	1517	1.89	2866	1.78	4305	1.72	5851	1.71	7518	1.7	9323	1.68	11280	1.62	13405	1.51	15714	1.31	18222	1.01	20945	0.59
			45	–	–	–	–	–	–	2622	3.25	4348	3.07	6197	2.95	8185	2.87	10328	2.81	12641	2.74	15139	2.64	17838	2.49
			65	–	–	–	–	–	–	–	–	–	–	–	–	–	–	–	–	–	–	–	–	–	–
	3600	60	5	7580	2.26	9593	2.26	11919	2.23	14600	2.13	17677	1.92	21188	1.56	25174	1.02	–	–	–	–	–	–	–	–
			25	4777	3.65	6964	3.55	9417	3.52	12178	3.53	15287	3.54	18784	3.51	22709	3.41	27102	3.2	32004	2.83	37455	2.28	43496	1.51
			45	–	–	–	–	5165	5.87	7709	5.65	10553	5.54	13739	5.51	17305	5.5	21293	5.5	25743	5.45	30694	5.32	36187	5.08
			65	–	–	–	–	–	–	–	–	–	–	–	–	9889	8.85	13175	8.71	16874	8.64	21029	8.6	25678	8.55
	6000	100	5	12503	4.35	15661	4.36	19399	4.34	23800	4.23	28946	3.98	34916	3.55	41792	2.86	49656	1.88	–	–	–	–	–	–
			25	9239	6.62	12497	6.45	16229	6.41	20516	6.44	25440	6.49	31081	6.52	37522	6.45	44842	6.25	53124	5.86	62449	5.22	72898	4.29
			45	–	–	7833	10.6	11180	10.03	14974	9.7	19298	9.55	24232	9.52	29858	9.58	36257	9.66	43510	9.7	51698	9.66	60903	9.49
			65	–	–	–	–	–	–	–	–	11387	15.48	15235	14.91	19668	14.58	24766	14.43	30611	14.41	37284	14.46	44866	14.54

To: *Evaporating temperature in [°C],* ***Tc:*** *Condensing temperature in [°C],* ***Qo:*** *Cooling capacity in [W],* ***Pe:*** *Power input in [kW] (with drive loss),* ***Subcooling:*** *8.3 K,* ***Superheat:*** *11.1 K*
Rating point: *ARI at 60 rps*
To / Tc / SH / SC: *7.2 °C / 54.4 °C / 11.1 K / 8.3 K at 60 rps*

For more information and performance with other refrigerants, please refer to Coolselector ® 2 at coolselector.danfoss.com or contact Danfoss.

Technical data and ordering

VZH - Inverter scroll compressor - VZH028CG-VZH035CG-VZH044CG-VZH052CG-VZH065CG

ARI

Type	[rpm]	[rps]	Te	-30		-25		-20		-15		-10		-5		0		5		10		15		20	
			Tc	Qo	Pe	Qo	Pe	Qo	Pe	Qo	Pe	Qo	Pe	Qo	Pe	Qo	Pe	Qo	Pe	Qo	Pe	Qo	Pe	Qo	Pe
VZH028CG	1800	30	5	–	–	1894	0.535	2380	0.514	2954	0.494	3626	0.474	4405	0.456	5298	0.438	–	–	–	–	–	–	–	–
			25	–	–	1568	0.804	2009	0.796	2521	0.783	3111	0.763	3790	0.739	4565	0.71	5445	0.676	6440	0.636	7557	0.593	8805	0.544
			45	–	–	–	–	–	–	1990	1.186	2484	1.206	3048	1.215	3690	1.212	4418	1.198	5242	1.173	6171	1.138	7212	1.092
			65	–	–	–	–	–	–	–	–	–	–	–	–	–	–	–	–	–	–	–	–	–	–
	3600	60	5	3183	1.03	4004	1.045	4992	1.032	6167	0.975	7546	0.86	9150	0.673	10999	0.399	–	–	–	–	–	–	–	–
			25	2550	1.478	3280	1.512	4145	1.557	5164	1.597	6356	1.618	7740	1.605	9336	1.545	11162	1.422	13237	1.222	15582	0.931	18215	0.533
			45	–	–	2526	2.273	3244	2.269	4082	2.3	5062	2.351	6200	2.407	7518	2.454	9034	2.478	10767	2.463	12737	2.395	14963	2.261
			65	–	–	–	–	–	–	–	–	–	–	4505	3.531	5520	3.58	6701	3.643	8067	3.707	9637	3.758	11431	3.78
	6000	100	5	5317	1.941	6663	1.986	8277	1.976	10191	1.898	12435	1.739	15043	1.484	18044	1.12	–	–	–	–	–	–	–	–
			25	4305	2.614	5528	2.745	6969	2.859	8657	2.942	10625	2.982	12905	2.964	15527	2.876	18525	2.703	21928	2.431	25770	2.048	30082	1.539
			45	–	–	4269	3.807	5497	3.929	6922	4.059	8576	4.183	10491	4.288	12697	4.36	15226	4.385	18111	4.349	21383	4.24	25074	4.044
			65	–	–	–	–	–	–	–	–	–	–	7698	6.009	9450	6.126	11474	6.234	13802	6.32	16466	6.37	19498	6.37
VZH035CG	1800	30	5	–	–	2398	0.652	3012	0.627	3740	0.602	4590	0.578	5576	0.555	6707	0.534	–	–	–	–	–	–	–	–
			25	–	–	1985	0.981	2543	0.971	3191	0.954	3939	0.931	4797	0.901	5778	0.866	6893	0.824	8151	0.776	9565	0.723	11146	0.664
			45	–	–	–	–	–	–	2519	1.447	3145	1.471	3858	1.481	4670	1.478	5593	1.461	6636	1.431	7811	1.388	9129	1.331
			65	–	–	–	–	–	–	–	–	–	–	–	–	–	–	–	–	–	–	–	–	–	–
	3600	60	5	4029	1.256	5069	1.274	6319	1.258	7806	1.188	9552	1.049	11583	0.82	13922	0.486	–	–	–	–	–	–	–	–
			25	3227	1.802	4152	1.844	5247	1.898	6537	1.947	8046	1.973	9798	1.958	11817	1.884	14129	1.734	16756	1.49	19724	1.135	23057	0.65
			45	–	–	3198	2.771	4106	2.767	5168	2.805	6407	2.867	7849	2.935	9517	2.993	11436	3.021	13630	3.003	16123	2.921	18941	2.757
			65	–	–	–	–	–	–	–	–	–	–	5703	4.306	6988	4.365	8483	4.442	10212	4.52	12199	4.582	14469	4.609
	6000	100	5	6730	2.321	8434	2.374	10478	2.363	12900	2.27	15741	2.079	19041	1.774	22841	1.339	–	–	–	–	–	–	–	–
			25	5449	3.126	6998	3.282	8821	3.418	10958	3.518	13449	3.565	16335	3.544	19655	3.438	23449	3.231	27758	2.907	32621	2.449	38079	1.841
			45	–	–	5403	4.551	6958	4.698	8763	4.853	10856	5.002	13279	5.127	16072	5.213	19274	5.243	22926	5.2	27067	5.07	31739	4.835
			65	–	–	–	–	–	–	–	–	–	–	9744	7.184	11962	7.324	14524	7.454	17471	7.556	20844	7.616	24681	7.617
VZH044CG	1800	30	5	–	–	3083	0.815	3874	0.784	4809	0.753	5903	0.723	7171	0.695	8625	0.668	–	–	–	–	–	–	–	–
			25	–	–	2553	1.227	3271	1.214	4104	1.194	5065	1.165	6169	1.128	7431	1.083	8864	1.03	10483	0.971	12301	0.904	14333	0.83
			45	–	–	–	–	–	–	3239	1.81	4044	1.84	4961	1.853	6006	1.849	7192	1.828	8533	1.79	10045	1.736	11740	1.666
			65	–	–	–	–	–	–	–	–	–	–	–	–	–	–	–	–	–	–	–	–	–	–
	3600	60	5	5182	1.543	6518	1.565	8127	1.545	10038	1.46	12284	1.288	14896	1.008	17904	0.598	–	–	–	–	–	–	–	–
			25	4150	2.213	5340	2.265	6748	2.332	8407	2.392	10347	2.423	12600	2.405	15197	2.314	18169	2.13	21548	1.831	25365	1.394	29652	0.799
			45	–	–	4113	3.405	5280	3.399	6646	3.446	8239	3.522	10093	3.606	12238	3.676	14706	3.711	17528	3.689	20734	3.588	24357	3.386
			65	–	–	–	–	–	–	–	–	–	–	7334	5.29	8986	5.362	10909	5.457	13132	5.553	15688	5.629	18607	5.662
	6000	100	5	8654	2.903	10846	2.97	13474	2.956	16589	2.84	20243	2.601	24487	2.22	29373	1.675	–	–	–	–	–	–	–	–
			25	7008	3.91	9000	4.105	11344	4.276	14092	4.401	17296	4.46	21007	4.434	25276	4.302	30155	4.042	35696	3.637	41950	3.063	48969	2.303
			45	–	–	6949	5.694	8949	5.877	11269	6.071	13961	6.257	17077	6.414	20668	6.521	24786	6.559	29483	6.506	34809	6.343	40816	6.049
			65	–	–	–	–	–	–	–	–	–	–	12531	8.988	15383	9.162	18678	9.324	22468	9.453	26805	9.528	31740	9.528
VZH052CG	1800	30	5	3002	0.86	3889	0.84	4856	0.82	5913	0.77	7072	0.68	8345	0.54	9744	0.33	–	–	–	–	–	–	–	–
			25	1118	1.44	2223	1.4	3396	1.37	4647	1.36	5989	1.35	7434	1.32	8992	1.27	10677	1.17	12500	1.02	14472	0.8	16606	0.49
			45	–	–	–	–	–	–	2024	2.27	3438	2.23	4943	2.2	6550	2.19	8272	2.17	10121	2.13	12107	2.06	14243	1.95
			65	–	–	–	–	–	–	–	–	–	–	–	–	–	–	–	–	–	–	–	–	–	–
	3600	60	5	6227	1.79	7917	1.82	9820	1.82	11964	1.74	14376	1.55	17082	1.22	20109	0.72	–	–	–	–	–	–	–	–
			25	3466	2.8	5330	2.75	7386	2.76	9662	2.8	12183	2.82	14977	2.81	18071	2.72	21491	2.52	25264	2.19	29418	1.69	33978	0.99
			45	–	–	–	–	3527	4.63	5716	4.46	8129	4.37	10793	4.34	13735	4.33	16982	4.32	20560	4.27	24497	4.15	28820	3.92
			65	–	–	–	–	–	–	–	–	–	–	–	–	7750	6.94	10605	6.78	13771	6.68	17273	6.61	21139	6.54
	6000	100	5	10065	3.37	12748	3.4	15880	3.38	19512	3.27	23693	3.05	28473	2.68	33901	2.14	40028	1.39	–	–	–	–	–	–
			25	6959	5.08	9692	5.08	12803	5.11	16344	5.15	20363	5.17	24910	5.14	30035	5.03	35788	4.8	42219	4.42	49378	3.87	57313	3.1
			45	–	–	5560	8.04	8412	7.83	11624	7.71	15243	7.67	19320	7.68	23905	7.69	29047	7.68	34796	7.62	41202	7.47	48316	7.21
			65	–	–	–	–	–	–	–	–	8675	11.91	12044	11.64	15851	11.47	20144	11.38	24974	11.33	30391	11.28	36444	11.22
VZH065CG	1800	30	5	3819	1.02	4924	1.03	6134	1.03	7463	0.98	8928	0.88	10543	0.69	12325	0.4	–	–	–	–	–	–	–	–
			25	1517	1.81	2866	1.7	4305	1.65	5851	1.63	7518	1.63	9323	1.61	11280	1.56	13405	1.45	15714	1.26	18222	0.97	20945	0.56
			45	–	–	–	–	–	–	2622	3.11	4348	2.94	6197	2.83	8185	2.75	10328	2.69	12641	2.63	15139	2.53	17838	2.39
			65	–	–	–	–	–	–	–	–	–	–	–	–	–	–	–	–	–	–	–	–	–	–
	3600	60	5	7580	2.2	9593	2.2	11919	2.17	14600	2.07	17677	1.87	21188	1.52	25174	0.99	–	–	–	–	–	–	–	–
			25	4777	3.56	6964	3.46	9417	3.43	12178	3.44	15287	3.45	18784	3.42	22709	3.32	27102	3.11	32004	2.76	37455	2.22	43496	1.47
			45	–	–	–	–	5165	5.72	7709	5.51	10553	5.4	13739	5.36	17305	5.36	21293	5.35	25743	5.31	30694	5.18	36187	4.95
			65	–	–	–	–	–	–	–	–	–	–	–	–	9889	8.62	13175	8.49	16874	8.42	21029	8.37	25678	8.33
	6000	100	5	12503	4.24	15661	4.25	19399	4.23	23800	4.12	28946	3.88	34916	3.46	41792	2.79	49656	1.83	–	–	–	–	–	–
			25	9239	6.46	12497	6.29	16229	6.25	20516	6.28	25440	6.33	31081	6.35	37522	6.29	44842	6.1	53124	5.71	62449	5.09	72898	4.18
			45	–	–	7833	10.34	11180	9.78	14974	9.46	19298	9.31	24232	9.29	29858	9.34	36257	9.42	43510	9.46	51698	9.42	60903	9.25
			65	–	–	–	–	–	–	–	–	11387	15.1	15235	14.54	19668	14.22	24766	14.07	30611	14.05	37284	14.11	44866	14.18

To: *Evaporating temperature in [°C],* **Tc:** *Condensing temperature in [°C],* **Qo:** *Cooling capacity in [W],* **Subcooling:** *8.3 K,* **Superheat:** *11.1 K,* **Pe:** *Power input in [kW] (with drive loss)*
Rating point: *ARI at 60 rps*
To / Tc / SH / SC: *7.2° C / 54.4 °C / 11.1 K / 8.3 K at 60 rps*

For more information and performance with other refrigerants, please refer to Coolselector ® 2 at coolselector.danfoss.com or contact Danfoss.

Technical data and ordering

Inverter scroll compressor - VZH 088-170BG - R410A

Low pressure ratio - ARI

Type	[rpm]	Te	-25		-20		-15		-10		-5		0		5		10		15	
		Tc	Qo	Pe	Qo	Pe	Qo	Pe	Qo	Pe	Qo	Pe	Qo	Pe	Qo	Pe	Qo	Pe	Qo	Pe
VZH088BG	1500	20	–	–	6500	1.795	7900	1.699	9400	1.613	11200	1.541	13300	1.488	15700	1.457	–	–	–	–
	1500	30	–	–	5600	2.335	6900	2.256	8300	2.176	10000	2.098	12000	2.025	14200	1.963	16700	1.914	19600	1.882
	1500	40	–	–	4700	2.925	5900	2.886	7300	2.833	8900	2.77	10700	2.701	12700	2.628	15100	2.558	17700	2.492
	1500	50	–	–	–	–	–	–	6200	3.651	7600	3.624	9300	3.579	11200	3.52	13400	3.449	15800	3.371
	1500	60	–	–	–	–	–	–	–	–	–	–	7900	4.727	9600	4.702	11600	4.653	13900	4.585
	1500	63	–	–	–	–	–	–	–	–	–	–	–	–	–	–	–	–	–	–
	3600	20	11900	4.447	14600	4.419	17800	4.338	21700	4.232	26200	4.133	31400	4.071	37400	4.074	–	–	–	–
	3600	30	10500	5.484	13100	5.537	16200	5.5	19800	5.405	24100	5.281	28900	5.157	34400	5.064	40700	5.032	47700	5.091
	3600	40	–	–	11700	6.799	14600	6.856	18000	6.818	21900	6.715	26300	6.579	31400	6.438	37100	6.322	43500	6.262
	3600	50	–	–	–	–	–	–	15900	8.502	19500	8.47	23500	8.368	28100	8.226	33200	8.074	39100	7.943
	3600	60	–	–	–	–	–	–	–	–	–	–	20200	10.556	24300	10.461	29000	10.321	34200	10.166
	3600	63	–	–	–	–	–	–	–	–	–	–	–	–	23200	11.223	27600	11.096	32700	10.943
	6000	20	–	–	23900	7.6	28900	7.596	34900	7.554	42000	7.54	50200	7.618	59600	7.857	–	–	–	–
	6000	30	–	–	22000	9.669	26900	9.74	32700	9.694	39500	9.598	47300	9.517	56200	9.517	66400	9.666	77900	10.029
	6000	40	–	–	19800	11.778	24500	12.018	29900	12.063	36200	11.98	43400	11.835	51700	11.693	61100	11.621	71800	11.685
	6000	50	–	–	–	–	–	–	26400	14.579	32000	14.605	38500	14.489	45900	14.3	54400	14.103	64100	13.964
	6000	60	–	–	–	–	–	–	–	–	–	–	32600	17.398	39100	17.256	46500	17.029	55100	16.781
	6000	63	–	–	–	–	–	–	–	–	–	–	–	–	–	–	–	–	–	–
VZH117BG	1500	20	–	–	8700	2.357	10500	2.231	12700	2.118	15100	2.024	17900	1.954	21100	1.913	–	–	–	–
	1500	30	–	–	7500	3.066	9200	2.963	11200	2.858	13500	2.755	16100	2.66	19100	2.578	22500	2.513	26300	2.472
	1500	40	–	–	6300	3.842	7900	3.791	9800	3.721	11900	3.638	14300	3.547	17100	3.452	20200	3.359	23800	3.273
	1500	50	–	–	–	–	–	–	8300	4.795	10200	4.76	12500	4.701	15000	4.623	18000	4.53	21300	4.428
	1500	60	–	–	–	–	–	–	–	–	–	–	10600	6.209	12900	6.175	15600	6.111	18700	6.021
	1500	63	–	–	–	–	–	–	–	–	–	–	–	–	–	–	–	–	–	–
	3600	20	15900	5.84	19600	5.804	23900	5.697	29100	5.559	35200	5.429	42200	5.347	50200	5.351	–	–	–	–
	3600	30	14100	7.203	17600	7.272	21800	7.224	26600	7.099	32300	6.935	38800	6.773	46200	6.651	54600	6.61	64000	6.687
	3600	40	–	–	15700	8.93	19600	9.004	24200	8.954	29400	8.82	35300	8.64	42100	8.455	49800	8.303	58500	8.224
	3600	50	–	–	–	–	–	–	21400	11.167	26100	11.124	31500	10.99	37700	10.804	44600	10.605	52400	10.432
	3600	60	–	–	–	–	–	–	–	–	–	–	27200	13.864	32700	13.739	38900	13.555	45900	13.352
	3600	63	–	–	–	–	–	–	–	–	–	–	–	–	31100	14.74	37100	14.573	43900	14.373
	6000	20	–	–	32000	9.981	38800	9.977	46900	9.922	56300	9.902	67300	10.006	80000	10.319	–	–	–	–
	6000	30	–	–	29500	12.699	36100	12.792	43900	12.732	53000	12.605	63500	12.499	75500	12.5	89200	12.695	104600	13.171
	6000	40	–	–	26600	15.469	32900	15.784	40100	15.844	48500	15.735	58300	15.544	69400	15.357	82000	15.263	96300	15.347
	6000	50	–	–	–	–	–	–	35400	19.148	43000	19.182	51700	19.03	61600	18.782	73100	18.522	86000	18.34
	6000	60	–	–	–	–	–	–	–	–	–	–	43800	22.851	52500	22.664	62500	22.365	73900	22.04
	6000	63	–	–	–	–	–	–	–	–	–	–	–	–	–	–	–	–	–	–
VZH170BG	1500	20	–	–	12400	3.172	14900	3.041	17900	2.907	21400	2.762	25400	2.597	30000	2.405	–	–	–	–
	1500	30	–	–	10800	4.297	13300	4.157	16100	4.026	19400	3.895	23200	3.755	27600	3.599	32500	3.418	38100	3.204
	1500	40	–	–	9300	5.546	11600	5.397	14300	5.268	17300	5.15	20900	5.035	24900	4.915	29600	4.781	34800	4.625
	1500	50	–	–	–	–	–	–	12200	6.784	15100	6.679	18300	6.589	22000	6.504	26300	6.416	31200	6.318
	1500	60	–	–	–	–	–	–	–	–	–	–	15500	8.566	18900	8.516	22800	8.475	27300	8.434
	1500	63	–	–	–	–	–	–	–	–	–	–	–	–	–	–	–	–	–	–
	3600	20	22900	8.352	28200	8.195	34600	8.029	42200	7.839	51100	7.608	61400	7.321	73300	6.961	–	–	–	–
	3600	30	20500	10.392	25600	10.262	31600	10.137	38700	10.004	47000	9.845	56600	9.646	67700	9.389	80400	9.06	94800	8.642
	3600	40	–	–	22900	12.728	28400	12.623	34900	12.524	42500	12.416	51300	12.282	61500	12.106	73100	11.873	86400	11.566
	3600	50	–	–	–	–	–	–	30900	15.652	37600	15.572	45500	15.481	54600	15.363	65200	15.204	77200	14.986
	3600	60	–	–	–	–	–	–	–	–	–	–	39300	19.495	47300	19.414	56600	19.306	67400	19.156
	3600	63	–	–	–	–	–	–	–	–	–	–	–	–	45100	20.821	54100	20.725	64500	20.59
	6000	20	–	–	47100	14.689	57600	14.8	70000	14.747	84500	14.48	101400	13.947	120800	13.097	–	–	–	–
	6000	30	–	–	42800	17.702	52900	17.949	64700	18.102	78500	18.111	94400	17.924	112700	17.488	133500	16.754	157200	15.669
	6000	40	–	–	38300	21.481	47700	21.744	58700	21.983	71500	22.147	86300	22.185	103200	22.046	122600	21.676	144700	21.026
	6000	50	–	–	–	–	–	–	52000	26.837	63500	27.037	76900	27.18	92400	27.216	110100	27.091	130400	26.756
	6000	60	–	–	–	–	–	–	–	–	–	–	66600	33.356	80400	33.446	96400	33.447	114700	33.306
	6000	63	–	–	–	–	–	–	–	–	–	–	–	–	–	–	–	–	–	–

To: *Evaporating temperature in [°C]*
Tc: *Condensing temperature in [°C]*
Pe: *Power input in [kW]*
Qo: *Cooling capacity in [W]*
Subcooling: *8.3 K*
Superheat: *11.1 K*
Voltage code: *G: 380 – 480 V / 3 / 50 and 60 Hz*

For more information and performance with other refrigerants, please refer to Coolselector ® 2 at coolselector.danfoss.com or contact Danfoss.

Technical data and ordering

Inverter scroll compressor - VZH088-VZH170BG - R410A

Low pressure ratio - EN12900

Type	[rpm]	Te	-25		-20		-15		-10		-5		0		5		10		15	
		Tc	Qo	Pe	Qo	Pe	Qo	Pe	Qo	Pe	Qo	Pe	Qo	Pe	Qo	Pe	Qo	Pe	Qo	Pe
VZH088BG	1500	20	–	–	6100	1.795	7400	1.699	8800	1.613	10600	1.541	12500	1.488	14700	1.457	–	–	–	–
	1500	30	–	–	5200	2.335	6400	2.256	7800	2.176	9300	2.098	11200	2.025	13200	1.963	15600	1.914	18300	1.882
	1500	40	–	–	4300	2.925	5400	2.886	6700	2.833	8100	2.77	9800	2.701	11700	2.628	13900	2.558	16300	2.492
	1500	50	–	–	–	–	–	–	5500	3.651	6900	3.624	8400	3.579	10100	3.52	12100	3.449	14300	3.371
	1500	60	–	–	–	–	–	–	–	–	–	–	6800	4.727	8400	4.702	10100	4.653	12200	4.585
	1500	63	–	–	–	–	–	–	–	–	–	–	–	–	–	–	–	–	–	–
	3600	20	11100	4.447	13600	4.419	16700	4.338	20400	4.232	24600	4.133	29500	4.071	35100	4.074	–	–	–	–
	3600	30	9700	5.484	12200	5.537	15000	5.5	18400	5.405	22400	5.281	26900	5.157	32000	5.064	37900	5.032	44500	5.091
	3600	40	–	–	10700	6.799	13400	6.856	16500	6.818	20100	6.715	24200	6.579	28800	6.438	34100	6.322	40100	6.262
	3600	50	–	–	–	–	–	–	14300	8.502	17500	8.47	21100	8.368	25300	8.226	30000	8.074	35300	7.943
	3600	60	–	–	–	–	–	–	–	–	–	–	17600	10.556	21200	10.461	25200	10.321	29800	10.166
	3600	63	–	–	–	–	–	–	–	–	–	–	–	–	19800	11.223	23700	11.096	28100	10.943
	6000	20	–	–	22300	7.6	27100	7.596	32700	7.554	39400	7.54	47100	7.618	56000	7.857	–	–	–	–
	6000	30	–	–	20400	9.669	25000	9.74	30400	9.694	36700	9.598	44000	9.517	52400	9.517	61900	9.666	72700	10.029
	6000	40	–	–	18100	11.778	22400	12.018	27400	12.063	33200	11.98	39900	11.835	47500	11.693	56200	11.621	66100	11.685
	6000	50	–	–	–	–	–	–	23700	14.579	28800	14.605	34700	14.489	41400	14.3	49100	14.103	57900	13.964
	6000	60	–	–	–	–	–	–	–	–	–	–	28300	17.398	34000	17.256	40600	17.029	48100	16.781
	6000	63	–	–	–	–	–	–	–	–	–	–	–	–	–	–	–	–	–	–
VZH117BG	1500	20	–	–	8200	2.357	9900	2.231	11900	2.118	14200	2.024	16800	1.954	19800	1.913	–	–	–	–
	1500	30	–	–	6900	3.066	8500	2.963	10400	2.858	12500	2.755	15000	2.66	17800	2.578	20900	2.513	24500	2.472
	1500	40	–	–	5700	3.842	7200	3.791	8900	3.721	10900	3.638	13200	3.547	15700	3.452	18600	3.359	21900	3.273
	1500	50	–	–	–	–	–	–	7400	4.795	9200	4.76	11200	4.701	13600	4.623	16200	4.53	19200	4.428
	1500	60	–	–	–	–	–	–	–	–	–	–	9200	6.209	11200	6.175	13600	6.111	16300	6.021
	1500	63	–	–	–	–	–	–	–	–	–	–	–	–	–	–	–	–	–	–
	3600	20	14900	5.84	18300	5.804	22400	5.697	27300	5.559	33000	5.429	39600	5.347	47200	5.351	–	–	–	–
	3600	30	13100	7.203	16300	7.272	20200	7.224	24700	7.099	30000	6.935	36100	6.773	43000	6.651	50900	6.61	59700	6.687
	3600	40	–	–	14400	8.93	18000	9.004	22100	8.954	26900	8.82	32400	8.64	38700	8.455	45800	8.303	53800	8.224
	3600	50	–	–	–	–	–	–	19200	11.167	23500	11.124	28400	10.99	34000	10.804	40300	10.605	47400	10.432
	3600	60	–	–	–	–	–	–	–	–	–	–	23600	13.864	28400	13.739	33900	13.555	40100	13.352
	3600	63	–	–	–	–	–	–	–	–	–	–	–	–	26500	14.74	31800	14.573	37700	14.373
	6000	20	–	–	30000	9.981	36400	9.977	43900	9.922	52900	9.902	63200	10.006	75200	10.319	–	–	–	–
	6000	30	–	–	27400	12.699	33500	12.792	40800	12.732	49300	12.605	59100	12.499	70300	12.5	83100	12.695	97500	13.171
	6000	40	–	–	24400	15.469	30100	15.784	36800	15.844	44500	15.735	53500	15.544	63800	15.357	75500	15.263	88700	15.347
	6000	50	–	–	–	–	–	–	31800	19.148	38600	19.182	46500	19.03	55600	18.782	66000	18.522	77700	18.34
	6000	60	–	–	–	–	–	–	–	–	–	–	38000	22.851	45600	22.664	54400	22.365	64500	22.04
	6000	63	–	–	–	–	–	–	–	–	–	–	–	–	–	–	–	–	–	–
VZH170BG	1500	20	–	–	11600	3.172	14000	3.041	16800	2.907	20100	2.762	23800	2.597	28200	2.405	–	–	–	–
	1500	30	–	–	10000	4.297	12300	4.157	15000	4.026	18100	3.895	21600	3.755	25700	3.599	30300	3.418	35500	3.204
	1500	40	–	–	8500	5.546	10600	5.397	13100	5.268	15900	5.15	19200	5.035	22900	4.915	27200	4.781	32000	4.625
	1500	50	–	–	–	–	–	–	11000	6.784	13500	6.679	16500	6.589	19900	6.504	23800	6.416	28200	6.318
	1500	60	–	–	–	–	–	–	–	–	–	–	13500	8.566	16500	8.516	19900	8.475	23800	8.434
	1500	63	–	–	–	–	–	–	–	–	–	–	–	–	–	–	–	–	–	–
	3600	20	21400	8.352	26400	8.195	32400	8.029	39600	7.839	47900	7.608	57700	7.321	68900	6.961	–	–	–	–
	3600	30	19000	10.392	23700	10.262	29300	10.137	35900	10.004	43700	9.845	52700	9.646	63000	9.389	74900	9.06	88400	8.642
	3600	40	–	–	20900	12.728	26000	12.623	32000	12.524	39000	12.416	47100	12.282	56500	12.106	67300	11.873	79600	11.566
	3600	50	–	–	–	–	–	–	27700	15.652	33800	15.572	41000	15.481	49300	15.363	58800	15.204	69800	14.986
	3600	60	–	–	–	–	–	–	–	–	–	–	34100	19.495	41100	19.414	49300	19.306	58800	19.156
	3600	63	–	–	–	–	–	–	–	–	–	–	–	–	38500	20.821	46300	20.725	55300	20.59
	6000	20	–	–	44100	14.689	54000	14.8	65700	14.747	79300	14.48	95200	13.947	113500	13.097	–	–	–	–
	6000	30	–	–	39700	17.702	49100	17.949	60100	18.102	72900	18.111	87800	17.924	104900	17.488	124500	16.754	146600	15.669
	6000	40	–	–	35000	21.481	43700	21.744	53800	21.983	65600	22.147	79200	22.185	94900	22.046	112900	21.676	133300	21.026
	6000	50	–	–	–	–	–	–	46700	26.837	57100	27.037	69300	27.18	83300	27.216	99400	27.091	117800	26.756
	6000	60	–	–	–	–	–	–	–	–	–	–	57800	33.356	69900	33.446	84000	33.447	100100	33.306
	6000	63	–	–	–	–	–	–	–	–	–	–	–	–	–	–	–	–	–	–

To: *Evaporating temperature in [°C]*
Tc: *Condensing temperature in [°C]*
Pe: *Power input in [kW]*
Qo: *Cooling capacity in [W]*
Subcooling: *0 K*
Superheat: *10 K*
Voltage code: *G: 380 – 480 V / 3 / 50 and 60 Hz*

For more information and performance with other refrigerants, please refer to Coolselector ® 2 at coolselector.danfoss.com or contact Danfoss.

Technical data and ordering

Inverter scroll compressor - VZH088-VZH170AG - R410A

High pressure ratio - ARI

Type	[rpm]	Te	-25		-20		-15		-10		-5		0		5		10		15	
		Tc	Qo	Pe	Qo	Pe	Qo	Pe	Qo	Pe	Qo	Pe	Qo	Pe	Qo	Pe	Qo	Pe	Qo	Pe
VZH088AG	1500	20	–	–	5700	1.472	7100	1.542	8600	1.623	10400	1.677	12500	1.665	14900	1.549	–	–	–	–
	1500	30	–	–	5200	2.043	6500	2.008	7900	2.032	9700	2.076	11600	2.103	13900	2.073	16400	1.949	19200	1.692
	1500	40	–	–	4600	2.917	5800	2.735	7200	2.659	8800	2.651	10700	2.673	12700	2.687	15000	2.654	17600	2.537
	1500	50	–	–	–	–	5100	3.786	6400	3.568	7800	3.466	9500	3.441	11300	3.457	13400	3.473	15800	3.453
	1500	60	–	–	–	–	–	–	–	–	6600	4.587	8100	4.473	9700	4.447	11600	4.47	13600	4.504
	1500	68	–	–	–	–	–	–	–	–	–	–	–	–	–	–	–	–	–	–
	3600	20	12000	4.19	14700	4.258	17900	4.335	21700	4.424	26100	4.529	31200	4.652	37100	4.798	–	–	–	–
	3600	30	10600	5.044	13100	5.11	16200	5.181	19700	5.262	23900	5.357	28600	5.467	34100	5.596	40300	5.748	47300	5.926
	3600	40	–	–	11700	6.214	14600	6.274	17800	6.34	21600	6.417	26000	6.507	31000	6.613	36800	6.74	43200	6.889
	3600	50	–	–	–	–	12900	7.746	15800	7.79	19300	7.843	23200	7.906	27700	7.982	32900	8.076	38800	8.191
	3600	60	–	–	–	–	–	–	–	–	16600	9.767	20100	9.796	24100	9.836	28700	9.891	34000	9.963
	3600	68	–	–	–	–	–	–	–	–	–	–	–	–	21300	11.759	25600	11.777	30400	11.81
	6000	20	–	–	24000	7.654	29200	7.958	35400	8.307	42700	8.709	51100	9.176	60700	9.716	–	–	–	–
	6000	30	–	–	21800	9.043	26800	9.284	32700	9.558	39500	9.875	47400	10.245	56400	10.677	66700	11.18	78300	11.765
	6000	40	–	–	19800	10.85	24400	11.021	29800	11.213	36100	11.439	43300	11.705	51600	12.023	61000	12.401	71700	12.849
	6000	50	–	–	–	–	21800	13.353	26600	13.458	32200	13.585	38700	13.741	46100	13.938	54600	14.184	64200	14.49
	6000	60	–	–	–	–	–	–	–	–	27900	16.498	33500	16.538	40000	16.607	47400	16.715	55900	16.87
	6000	68	–	–	–	–	–	–	–	–	–	–	–	–	–	–	–	–	–	–
VZH117AG	1500	20	–	–	7700	1.933	9500	2.025	11600	2.132	14000	2.203	16800	2.187	20000	2.035	–	–	–	–
	1500	30	–	–	6900	2.683	8700	2.638	10700	2.669	13000	2.727	15600	2.762	18600	2.723	22000	2.56	25800	2.223
	1500	40	–	–	6100	3.831	7800	3.592	9700	3.492	11900	3.482	14300	3.511	17100	3.529	20200	3.486	23700	3.332
	1500	50	–	–	–	–	6800	4.973	8500	4.686	10500	4.552	12700	4.52	15200	4.54	18000	4.561	21200	4.535
	1500	60	–	–	–	–	–	–	–	–	8900	6.024	10800	5.875	13100	5.841	15500	5.871	18300	5.916
	1500	68	–	–	–	–	–	–	–	–	–	–	–	–	–	–	–	–	–	–
	3600	20	16200	5.503	19800	5.592	24000	5.693	29100	5.811	35000	5.948	41900	6.11	49700	6.301	–	–	–	–
	3600	30	14200	6.625	17600	6.711	21700	6.805	26500	6.912	32000	7.035	38500	7.18	45800	7.35	54100	7.55	63600	7.783
	3600	40	–	–	15700	8.162	19500	8.24	23900	8.327	29100	8.428	34900	8.546	41700	8.686	49300	8.852	58000	9.048
	3600	50	–	–	–	–	17300	10.173	21300	10.232	25800	10.3	31100	10.383	37200	10.484	44100	10.607	52000	10.757
	3600	60	–	–	–	–	–	–	–	–	22300	12.828	27000	12.866	32400	12.919	38500	12.991	45600	13.086
	3600	68	–	–	–	–	–	–	–	–	–	–	–	–	28700	15.444	34300	15.467	40800	15.512
	6000	20	–	–	32300	10.053	39200	10.452	47500	10.91	57300	11.439	68500	12.052	81500	12.761	–	–	–	–
	6000	30			29300	11.877	36000	12.193	43900	12.553	53000	12.97	63600	13.455	75700	14.023	89500	14.684	105100	15.452
	6000	40	–	–	26500	14.25	32800	14.474	40000	14.728	48500	15.023	58200	15.373	69300	15.791	81900	16.287	96200	16.876
	6000	50					29200	17.538	35800	17.676	43300	17.842	52000	18.048	61900	18.306	73300	18.63	86200	19.03
	6000	60	–	–	–	–	–	–	–	–	37400	21.668	45000	21.721	53600	21.812	63600	21.953	75000	22.157
	6000	68	–	–	–	–	–	–	–	–	–	–	–	–	–	–	–	–	–	–
VZH170AG	1500	20	–	–	11900	3.095	14500	3.074	17500	3.047	21100	2.982	25200	2.844	29900	2.601	–	–	–	–
	1500	30	–	–	10700	4.019	13100	3.962	16000	3.949	19400	3.948	23300	3.925	27700	3.847	32700	3.68	38400	3.391
	1500	40	–	–	9300	5.287	11600	5.112	14300	5.032	17400	5.013	21000	5.023	25000	5.029	29700	4.996	34900	4.891
	1500	50	–	–	–	–	9900	6.724	12300	6.495	15100	6.378	18300	6.339	21900	6.346	26100	6.366	30800	6.363
	1500	60	–	–	–	–	–	–	–	–	12500	8.242	15200	8.074	18400	8.001	22100	7.99	26300	8.009
	1500	68	–	–	–	–	–	–	–	–	–	–	–	–	–	–	–	–	–	–
	3600	20	24500	7.456	29300	7.626	35200	7.808	42400	7.979	50800	8.115	60700	8.191	72100	8.184	–	–	–	–
	3600	30	21800	9.377	26500	9.47	32200	9.611	39000	9.775	46900	9.94	56200	10.081	66900	10.174	79100	10.196	93100	10.122
	3600	40	–	–	24000	11.86	29300	11.904	35500	12.007	42800	12.146	51300	12.297	61100	12.435	72400	12.538	85200	12.581
	3600	50	–	–	–	–	26200	14.819	31700	14.806	38200	14.865	45800	14.97	54500	15.1	64600	15.229	76200	15.333
	3600	60	–	–	–	–	–	–	–	–	32900	18.228	39400	18.234	47000	18.299	55900	18.399	66100	18.511
	3600	68	–	–	–	–	–	–	–	–	–	–	–	–	41000	21.332	49000	21.369	58200	21.447
	6000	20	–	–	48200	13.279	58500	13.868	70800	14.517	85300	15.273	102100	16.184	121500	17.296	–	–	–	–
	6000	30	–	–	43000	16.274	52900	16.84	64400	17.388	77900	17.965	93500	18.618	111400	19.394	131800	20.341	154900	21.505
	6000	40	–	–	38900	19.827	48100	20.446	58800	20.967	71200	21.439	85400	21.909	101800	22.423	120400	23.03	141400	23.776
	6000	50	–	–	–	–	43400	24.851	53100	25.421	64200	25.863	77000	26.224	91700	26.551	108400	26.892	127300	27.294
	6000	60	–	–	–	–	–	–	–	–	56400	31.402	67700	31.729	80600	31.943	95400	32.094	112200	32.226
	6000	68	–	–	–	–	–	–	–	–	–	–	–	–	–	–	–	–	–	–

To: *Evaporating temperature in [°C]*
Tc: *Condensing temperature in [°C]*
Pe: *Power input in [kW]*
Qo: *Cooling capacity in [W]*
Subcooling: *8.3 K*
Superheat: *11.1 K*
Voltage code: *G: 380 – 480 V / 3 / 50 and 60 Hz*

For more information and performance with other refrigerants, please refer to Coolselector ® 2 at coolselector.danfoss.com or contact Danfoss.

Technical data and ordering

Inverter scroll compressor - VZH088-VZH170AG - R410A

High pressure ratio - EN12900

Type	[rpm]	Te	-25		-20		-15		-10		-5		0		5		10		15	
		Tc	Qo	Pe	Qo	Pe	Qo	Pe	Qo	Pe	Qo	Pe	Qo	Pe	Qo	Pe	Qo	Pe	Qo	Pe
VZH088AG	1500	20	–	–	5400	1.472	6600	1.542	8100	1.623	9800	1.677	11800	1.665	14000	1.549	–	–	–	–
	1500	30	–	–	4800	2.043	6000	2.008	7400	2.032	9000	2.076	10800	2.103	12900	2.073	15300	1.949	17900	1.692
	1500	40	–	–	4200	2.917	5300	2.735	6600	2.659	8100	2.651	9800	2.673	11700	2.687	13800	2.654	16200	2.537
	1500	50	–	–	–	–	4500	3.786	5700	3.568	7000	3.466	8500	3.441	10200	3.457	12100	3.473	14300	3.453
	1500	60	–	–	–	–	–	–	–	–	5700	4.587	7000	4.473	8500	4.447	10100	4.47	11900	4.504
	1500	68	–	–	–	–	–	–	–	–	–	–	–	–	–	–	–	–	–	–
	3600	20	11300	4.19	13800	4.258	16800	4.335	20300	4.424	24500	4.529	29300	4.652	34800	4.798	–	–	–	–
	3600	30	9800	5.044	12200	5.11	15000	5.181	18300	5.262	22200	5.357	26700	5.467	31800	5.596	37600	5.748	44200	5.926
	3600	40	–	–	10700	6.214	13300	6.274	16300	6.34	19900	6.417	23900	6.507	28500	6.613	33800	6.74	39800	6.889
	3600	50	–	–	–	–	11500	7.746	14200	7.79	17300	7.843	20900	7.906	25000	7.982	29700	8.076	35000	8.191
	3600	60	–	–	–	–	–	–	–	–	14400	9.767	17500	9.796	21000	9.836	25000	9.891	29600	9.963
	3600	68	–	–	–	–	–	–	–	–	–	–	–	–	17300	11.759	20800	11.777	24800	11.81
	6000	20	–	–	22500	7.654	27400	7.958	33200	8.307	40000	8.709	48000	9.176	57100	9.716	–	–	–	–
	6000	30	–	–	20200	9.043	24900	9.284	30400	9.558	36700	9.875	44100	10.245	52500	10.677	62100	11.18	73000	11.765
	6000	40	–	–	18100	10.85	22300	11.021	27300	11.213	33100	11.439	39800	11.705	47400	12.023	56200	12.401	66000	12.849
	6000	50	–	–	–	–	19500	13.353	23900	13.458	29000	13.585	34900	13.741	41600	13.938	49300	14.184	58000	14.49
	6000	60	–	–	–	–	–	–	–	–	24200	16.498	29100	16.538	34800	16.607	41300	16.715	48800	16.87
	6000	68	–	–	–	–	–	–	–	–	–	–	–	–	–	–	–	–	–	–
VZH117AG	1500	20	–	–	7200	1.933	8900	2.025	10800	2.132	13100	2.203	15800	2.187	18800	2.035	–	–	–	–
	1500	30	–	–	6400	2.683	8000	2.638	9900	2.669	12100	2.727	14500	2.762	17300	2.723	20500	2.56	24100	2.223
	1500	40	–	–	5600	3.831	7100	3.592	8900	3.492	10900	3.482	13100	3.511	15700	3.529	18600	3.486	21800	3.332
	1500	50	–	–	–	–	6100	4.973	7700	4.686	9400	4.552	11500	4.52	13700	4.54	16300	4.561	19100	4.535
	1500	60	–	–	–	–	–	–	–	–	7700	6.024	9400	5.875	11400	5.841	13500	5.871	16000	5.916
	1500	68	–	–	–	–	–	–	–	–	–	–	–	–	–	–	–	–	–	–
	3600	20	15100	5.503	18500	5.592	22500	5.693	27300	5.811	32900	5.948	39300	6.11	46700	6.301	–	–	–	–
	3600	30	13100	6.625	16400	6.711	20200	6.805	24600	6.912	29800	7.035	35800	7.18	42600	7.35	50400	7.55	59300	7.783
	3600	40	–	–	14400	8.162	17900	8.24	21900	8.327	26700	8.428	32100	8.546	38300	8.686	45400	8.852	53400	9.048
	3600	50	–	–	–	–	15500	10.173	19100	10.232	23200	10.3	28000	10.383	33600	10.484	39900	10.607	47000	10.757
	3600	60	–	–	–	–	–	–	–	–	19300	12.828	23400	12.866	28100	12.919	33600	12.991	39800	13.086
	3600	68	–	–	–	–	–	–	–	–	–	–	–	–	23200	15.444	27900	15.467	33300	15.512
	6000	20	–	–	30200	10.053	36800	10.452	44600	10.91	53700	11.439	64400	12.052	76600	12.761	–	–	–	–
	6000	30	–	–	27200	11.877	33400	12.193	40700	12.553	49300	12.97	59200	13.455	70500	14.023	83400	14.684	98000	15.452
	6000	40	–	–	24200	14.25	30000	14.474	36700	14.728	44500	15.023	53400	15.373	63700	15.791	75400	16.287	88600	16.876
	6000	50	–	–	–	–	26200	17.538	32100	17.676	38900	17.842	46800	18.048	55800	18.306	66100	18.63	77900	19.03
	6000	60	–	–	–	–	–	–	–	–	32400	21.668	39000	21.721	46700	21.812	55400	21.953	65500	22.157
	6000	68	–	–	–	–	–	–	–	–	–	–	–	–	–	–	–	–	–	–
VZH170AG	1500	20	–	–	11200	3.095	13600	3.074	16400	3.047	19800	2.982	23600	2.844	28100	2.601				
	1500	30	–	–	9900	4.019	12200	3.962	14900	3.949	18000	3.948	21600	3.925	25800	3.847	30500	3.68	35800	3.391
	1500	40	–	–	8500	5.287	10600	5.112	13100	5.032	16000	5.013	19200	5.023	23000	5.029	27300	4.996	32200	4.891
	1500	50	–	–	–	–	8900	6.724	11000	6.495	13600	6.378	16400	6.339	19800	6.346	23600	6.366	27900	6.363
	1500	60	–	–	–	–	–	–	–	–	10800	8.242	13200	8.074	16000	8.001	19200	7.99	22900	8.009
	1500	68	–	–	–	–	–	–	–	–	–	–	–	–	–	–	–	–	–	–
	3600	20	22900	7.456	27500	7.626	33000	7.808	39700	7.979	47700	8.115	57000	8.191	67700	8.184	–	–	–	–
	3600	30	20200	9.377	24600	9.47	29900	9.611	36200	9.775	43600	9.94	52300	10.081	62300	10.174	73800	10.196	86800	10.122
	3600	40	–	–	21900	11.86	26800	11.904	32500	12.007	39300	12.146	47100	12.297	56200	12.435	66600	12.538	78500	12.581
	3600	50	–	–	–	–	23400	14.819	28500	14.806	34300	14.865	41200	14.97	49200	15.1	58400	15.229	68900	15.333
	3600	60	–	–	–	–	–	–	–	–	28500	18.228	34200	18.234	40900	18.299	48700	18.399	57700	18.511
	3600	68	–	–	–	–	–	–	–	–	–	–	–	–	33200	21.332	39800	21.369	47400	21.447
	6000	20	–	–	45100	13.279	54800	13.868	66400	14.517	80100	15.273	95900	16.184	114200	17.296	–	–	–	–
	6000	30	–	–	39900	16.274	49000	16.84	59800	17.388	72400	17.965	87000	18.618	103700	19.394	122800	20.341	144500	21.505
	6000	40	–	–	35600	19.827	44100	20.446	53900	20.967	65300	21.439	78500	21.909	93500	22.423	110800	23.03	130300	23.776
	6000	50	–	–	–	–	38900	24.851	47700	25.421	57800	25.863	69400	26.224	82700	26.551	97800	26.892	115000	27.294
	6000	60	–	–	–	–	–	–	–	–	48900	31.402	58800	31.729	70100	31.943	83100	32.094	97900	32.226
	6000	68	–	–	–	–	–	–	–	–	–	–	–	–	–	–	–	–	–	–

To: *Evaporating temperature in [°C]*
Tc: *Condensing temperature in [°C]*
Pe: *Power input in [kW]*
Qo: *Cooling capacity in [W]*
Subcooling: *0 K*
Superheat: *10 K*
Voltage code: *G: 380 – 480 V / 3 / 50 and 60 Hz*

For more information and performance with other refrigerants, please refer to Coolselector ® 2 at coolselector.danfoss.com or contact Danfoss.

Nomenclature and Dimensions

V Z H 044 C G A N A

Variable speed

Family:
VZH scroll

Lubricant:
PVE 32 (160 HV) lubricant,
R410A refrigerant

Swept volume:
in [cm³/rev]

Design pressure ratio:
C: IDV and IEER optimized

Evolution index

Motor protection:
N: no internal motor protection
(protection by drive)

Equipement version:
A: brazed connections, OSG version
B: brazed connections, OLS version

	Oil sight glass	Oil level switch
OSG (oil sight glass) version	Threaded	None
OLS (oil level sensor) version	None	Threaded

Motor voltage code to CDS803: *)
G: 380-480 V/3~/50 & 60 Hz
H: 525-600 V/3~/50&60 Hz
J: 200-240 V/3~/50 & 60 Hz
*) main supply voltage to frequency converter

VZH028-035-044G / J - Single version

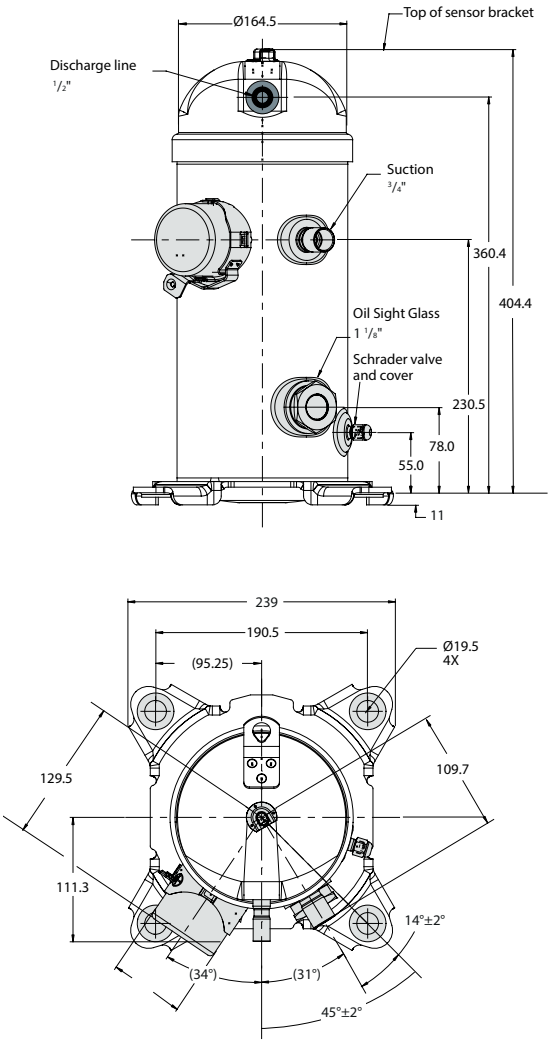

VZH028-035-044G / J - Manifold version

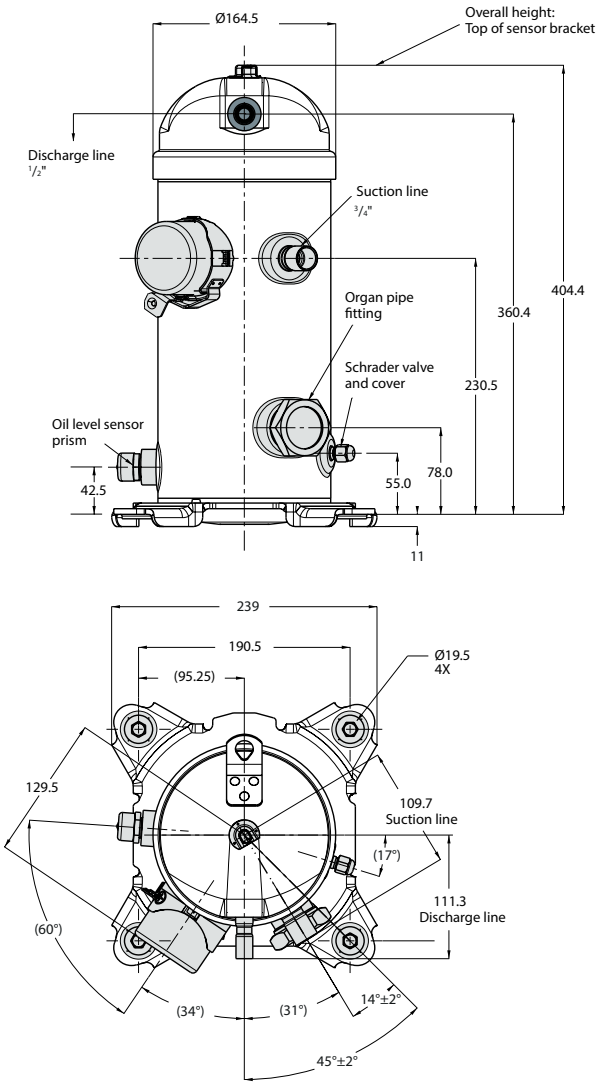

Note: Manifolding drawing is a preliminary version

Dimensions

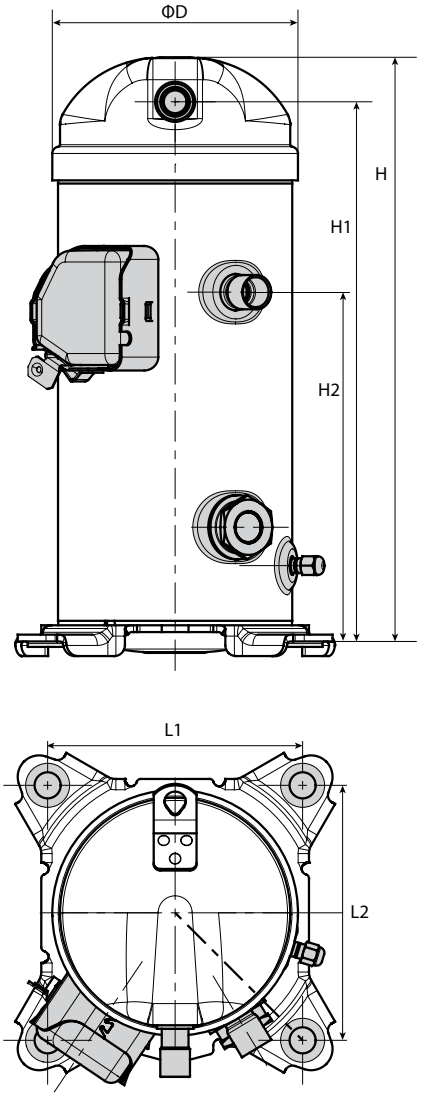

Single version

Version	Compressor model	D	H	H1	H2	L1	L2	Outline drawing number
		[mm]	[mm]	[mm]	[mm]	[mm]	[mm]	
Single	VZH052-065	183.5	436	403	261	190.5	190.5	8590007

Nomenclature and Dimensions

V	Z	H	117	A	G	A	N	A

Variable speed:

Family:
VZH scroll

Lubricant:
POE lubrificant
R410A refrigerant

Swept volume:
in [cm³/rev]

Design pressure ratio:
A: high PR
B: low PR

Motor voltage code to CDS303: *)
G: 380 – 480 V / 3 ~ / 50 / 60 Hz
H: 252 – 600 V / 3 ~ / 50 / 60 Hz
J: 200 – 240 V / 3 ~ / 50 / 60 Hz

*) main supply voltage to frequency converter

Equipement version:
A: brazed connections, single version
B: brazed connections, manifold version

	Oil sight glass	Oil level switch
Single version	Threaded	None
Manifold version	None	Threaded

Motor protection:
N: no internal motor protection (protection by drive)

Evolution index

VZH088-G-H - Single version

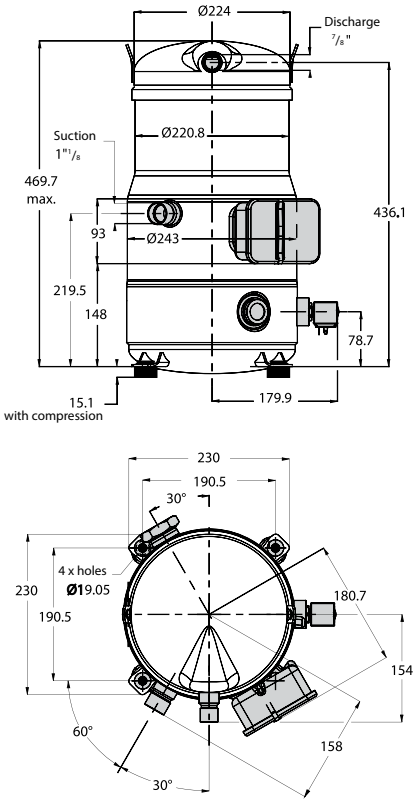

VZH088-G-H - Manifolded version

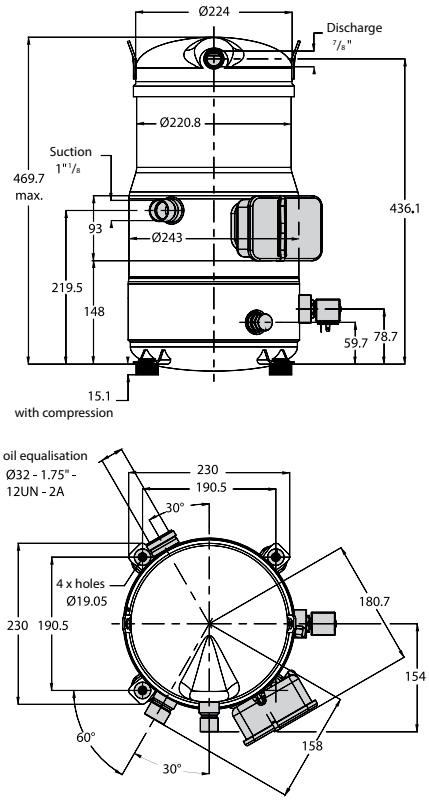

Dimensions

VZH088-J - Single version

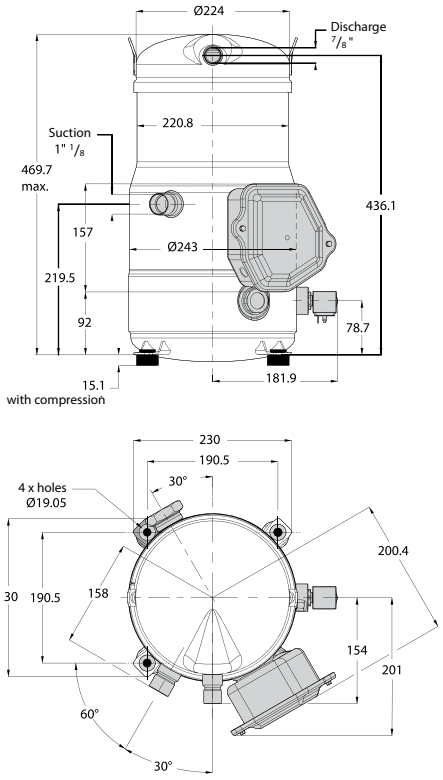

VZH088-J - Manifolded version

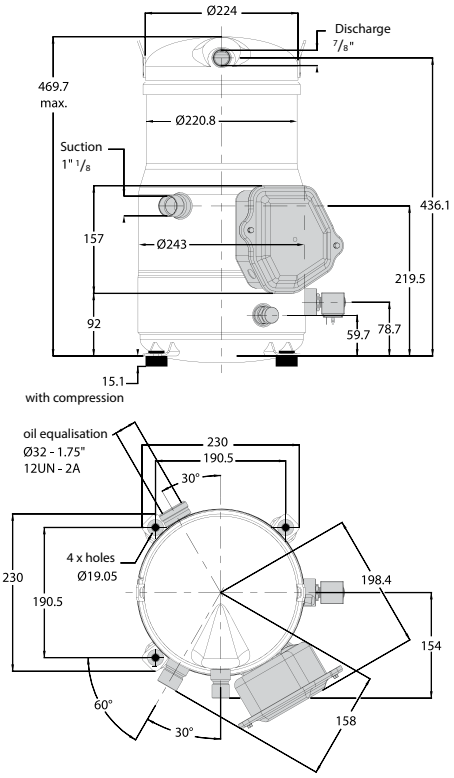

VZH117-G-H - Single version

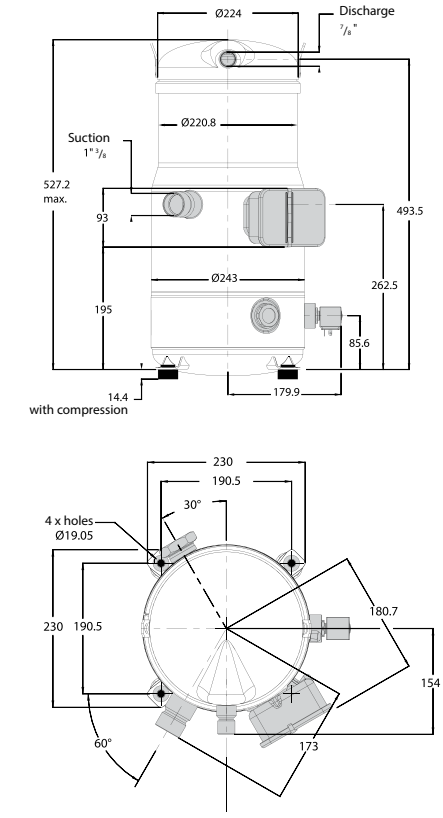

VZH117-G-H - Manifolded version

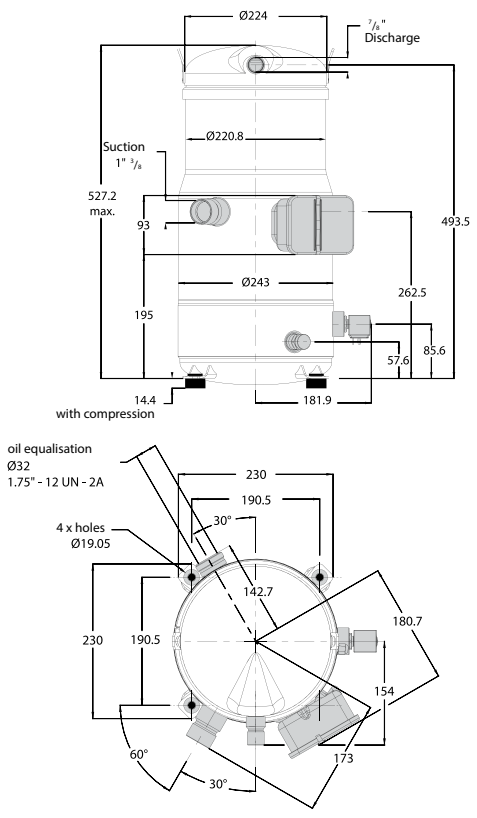

Dimensions

VZH117-J - Single version

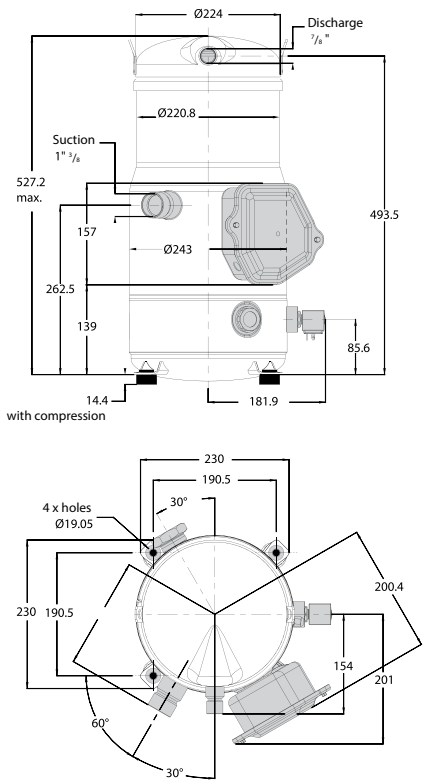

VZH117-J - Manifolded version

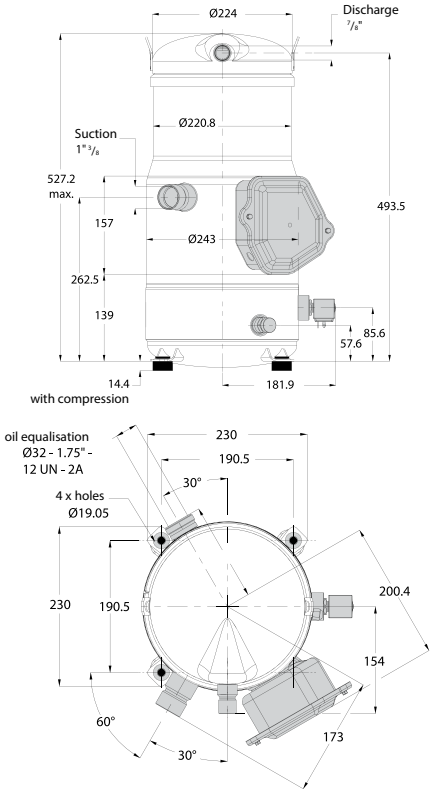

VZH170-G-H - Single version

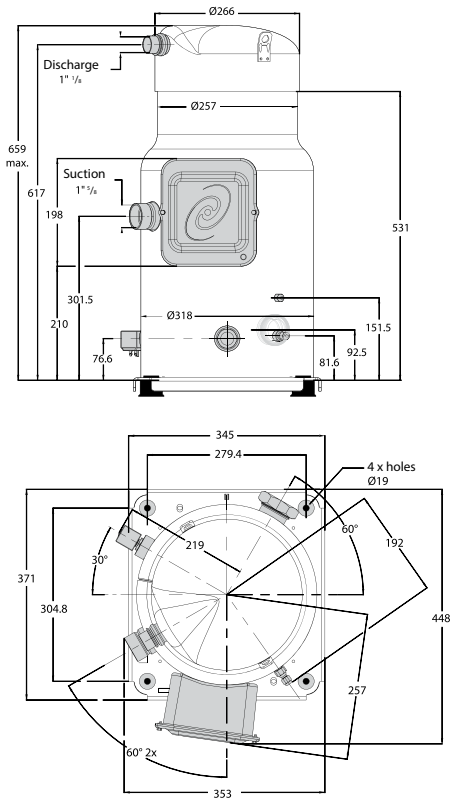

VZH170-G-H - Manifolded version

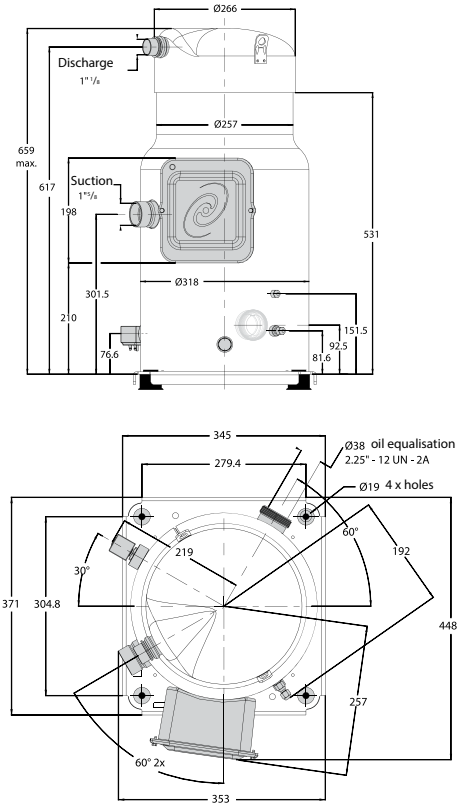

Dimensions

VZH170-J - Single version

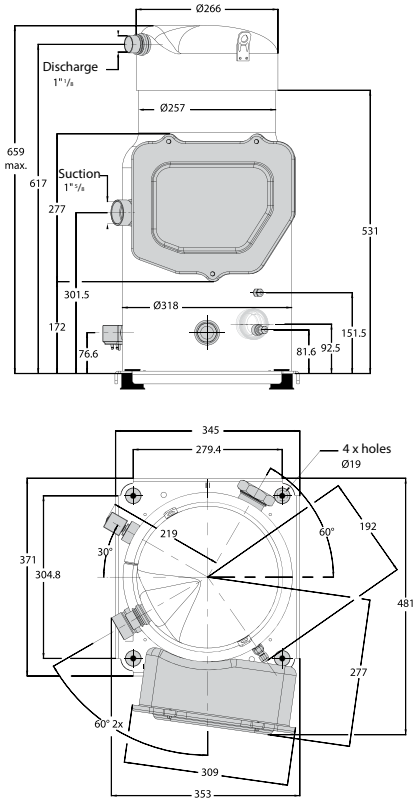

VZH170-J - Manifolded version

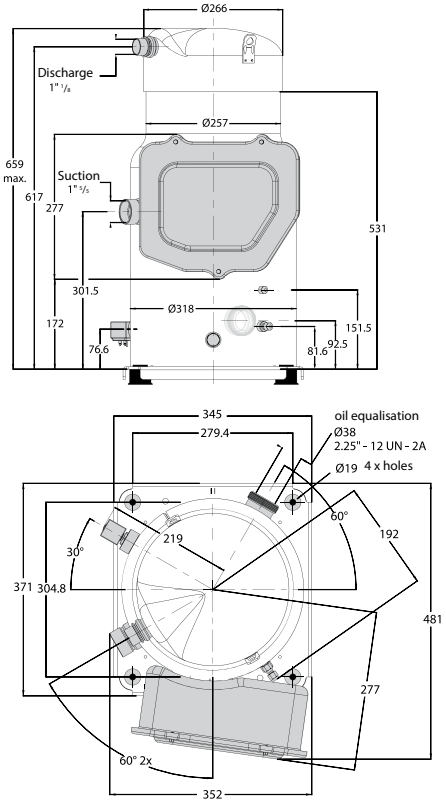

Technical data

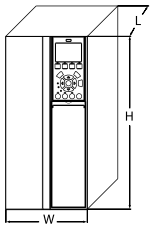

Inverter scroll compressor - VZH 028-065 converter

Frequency converter dimensions

Compressor model	Drive supply voltage	Drive power [kW]	Compressor voltage code	IP20				IP55			
				Drive enclosure	Overall drive size (H x W x L) [mm]	Overall drive size incl. decoupling plate (H x W x L) [mm]	Clearance above / below [mm/inch.]	Drive enclosure	Overall drive size (H x W x L) [mm]	Overall drive size incl. decoupling plate (H x W x L) [mm]	Clearance above / below [mm/inch.]
VZH028	T2: 200-240/3/50-60	6	J	H4	296x135x241	359x135x241	100/4	–	–	–	–
VZH035		7.5		H4	296x135x241	359x135x241	100/4	–	–	–	–
VZH044		10		H5	334x150x255	402x150x255	100/4	–	–	–	–
VZH052-065		11		B4	520x230x242	595x230x242	200/8	B2	650x242x260	-	200/8
VZH028	T4: 380-480/3/50-60	6	G	H3	255x100x206	329x100x206	100/4	–	–	–	–
VZH035		7.5		H3	255x100x206	329x100x206	100/4	–	–	–	–
VZH044		10		H4	296x135x241	359x135x241	100/4	–	–	–	–
VZH052		11		B3	399x165x249	420x165x249	100/4	B1	480x242x260	-	100/4
VZH065		15		B3	399x165x249	420x165x249	100/4	B1	480x242x260	-	100/4
VZH028	T6: 525-600/3/50-60	7.5	H	A3	268x130x205	374x130x205	100/4	–	–	–	–
VZH035		11		B3	399x165x249	420x165x249	100/4	–	–	–	–
VZH044		11		B3	399x165x249	420x165x249	100/4	–	–	–	–
VZH052		11		B3	399x165x249	420x165x249	100/4	B1	480x242x260	–	100/4
VZH065		11		B4	520x230x242	595x230x242	200/8	B2	650x242x260	–	200/8

Frequency converter dimensions depend on supply voltage, IP rating and power
The table gives an overview of the overall dimensions and different drive enclosures (H3 - H5)
Details for each drive enclosure are on the following pages

Inverter scroll compressor - VZH 088-170 converter

Frequency converter dimensions

Compressor model	Drive supply voltage	Drive power [kW]	Compressor voltage code	IP20			IP55		
				Drive enclosure	Overall drive size (H x W x L) [mm]	bracket supplied [mm²]	Overall drive size incl. decoupling plate (H x W x L) [mm]	Clearance above /below [mm/inch.]	bracket supplied [mm²]
VZH088	T2: 200-240/3/50-60	15	J	B4	595x230x242	2pcs, ø24-28k28b 1pcs, ø32-36 k36b	C1	680x308x310	1pcs, ø32-36 k36b 1pcs, ø36-40 k40b
VZH117		18.5		C3	630x308x333	1pcs, ø32-36 k36b 1pcs, ø36-40 k40b	C1	680x308x310	1pcs, ø32-36 k36b 1pcs, ø36-40 k40b
VZH170		22		C3	630x308x333	1pcs, ø32-36 k36b 1pcs, ø36-40 k40b	C1	680x308x310	1pcs, ø32-36 k36b 1pcs, ø36-40 k40b
VZH088	T4: 380-480/3/50-60	15	G	B3	420x165x249	3pcs, Ø13-22	B1	480x242x260	3pcs, ø3-32
VZH117		18.5		B4	595x230x242	2pcs, ø24-28 k28b	B2	650x242x260	3pcs, ø3-32
VZH170		22		B4	595x230x242	2pcs, ø24-28 k28b	B2	650x242x260	3pcs, ø14-40
VZH088	T6: 525-600/3/50-60	18	H	B4	595x230x242	2pcs, ø24-28 k28b	–	–	–
VZH117		30		B4	595x230x242	2pcs, ø24-28 k28b	–	–	–
VZH170		30		B4	595x230x242	2pcs, ø24-28 k28b	–	–	–

Frequency converter dimensions depend on supply voltage, IP rating and power
The table gives an overview of the overall dimensions and different drive enclosures (H3 - H5)
Details for each drive enclosure are on the following pages
For customers who need other size brackets, please refer to accessories for ordering.

Optyma™ - **Condensing Units - Overview**

4 ranges to fit the different market needs of LBP, MBP refrigeration:

- Broad choice for various climates
- Fast installation and maintenance
- Low noise to fit in residential areas
- F-Gas: ready for refrigerants with lower GWP
- Eco Design compliance

Designed by Danfoss with 40 years of know-how in condensing units
Various options:






Optyma™

The widest range of hermetic condensing units with reliable reciprocating compressors and Micro Channel Heat Exchanger on the bigger sizes

Optyma™ **Slim Pack**

The compact, cost effective and low sound levels packaged unit with Micro Channel Heat Exchanger technology

Optyma™ **Plus**

Top performer condensing unit: energy optimized, low noise levels and quick installation / maintenance

Optyma™ **Plus INVERTER**

The premium unit combines ease of use and energy efficiency with the latest Danfoss inverter scroll technology

Range span by refrigerant

Minimum / Maximum Cooling capacity in [kW]	Optyma™		Optyma™ Slim Pack	Optyma™ Plus	Optyma™ Plus INVERTER
	Light Commercial	Commercial			
Medium temperature (MBP)					
R290	0.2 – 1.4	–	–	–	–
R448A	–	2 – 20.5	3.3 – 10.2	3.3 – 14.9	1.7 – 8.3
R449A	–	2 – 20.5	0.8 – 10.2	0.7 – 14.9	1.7 – 8.3
R134a	0.1 – 1.6	1.3 – 13.1	0.6 – 6.6	1.7 – 10.2	–
R452A	–	2.2 – 20.6	1.5 – 10.8	1.5 – 16.2	–
R407A	–	1.9 – 19.1	3.3 – 9.9	3.3 – 14.6	1.7 – 8.4
R407C	–	1.8 – 19.1	–	–	–
R407F	–	2 – 20.1	3.5 – 10.2	3.5 – 15.5	1.8 – 9
R404A / 507	0.3 – 17	2.2 – 21.7	0.9 – 10.3	0.7 – 16	1.8 – 9
Low temperature (LBP)					
R290	0.1 – 0.7	–	–	–	–
R452A	0.1 – 0.3	0.8 – 6.1	0.4 – 3.3	0.4 – 6.1	–
R404A / 507	0.1 – 0.9	0.9 – 6.6	0.4 – 3.6	0.5 – 6.2	–

Rating conditions EN 13215 (dew point):
***MBP**: Ambient temp = 32 °C; Evap temp = -10 °C; Superheat = 10 K; Subcooling = 0 K / **LBP**: Ambient temp = 32 °C; Evap temp = -35 °C; Superheat = 10 K; Subcooling = 0 K*

Quick Selection Notes:

Optyma™ - **Condensing Units**

Optyma™ is the widest range of hermetic condensing units on the market. Optyma™ condensing unit is available with reciprocating compressors to cover a large range of commercial refrigeration applications, reducing costs and complexity of the systems.
All Optyma™ condensing units are extremely efficient and reliable.

That means less energy consumption and less running costs, less cost for service and maintenance. In addition to the wide Optyma™ range, we also offer local support and guidance if needed.
A network of partner wholesalers and local Danfoss teams can offer you help and will do their outmost to fulfil your needs. At Danfoss we simply believe it is important to offer an "Optimum service".



Features
Optyma™



Optimum airflow due to Danfoss designed fan cowl

Pre-mounted LP / HP tubes for easy connection of pressure switch

Easy accessible valves

Base rails designed for easy installition

A01



With Micro Channel condenser for reduced refrigerant charge

Single or double fan design

Receiver equipped with 3/8 inch. NPTF plug and shut-OFF valve with access port

Compact design and extended application envelope

Fully prewired and factory tested

Combined HP / LP pressure switch Danfoss KP17WB

A02

EcoDesign 2018

Facts

- Danfoss Optyma™ condensing units perfectly suit applications like:
  - Cold stores and freezer rooms
  - Milk cooling
  - Beer and wine cellars
  - Small food retail and mini markets
  - Garage forecourt shops
  - Display cabinets
  - Ice cream freezers
  - Bottle coolers
- Refrigerants R134a, R404A, R407A, R407C, R407F, R448A, R449A, R452A and R290
- Capacity: from 0.2 to 21.7 kW for MBP applications and from 0.1 to 6.6 kW for LBP
- High COP, low energy consumption, low running costs
- 100% factory tested for leakage
- Wide application range
- Powder coated steel parts
- High-efficiency condensers allowing an extended application envelope in high ambient conditions
- Reliable components for longer life and less warranty call out costs
- Easy access to all components for higher serviceability and simplified maintenance
- Compact dimensions and minimum foot print for easy handling, shipping and installation

Technical data and ordering

Feature overview

	Light Commercial			Light Commercial R290			Commercial
	A00	A01	A04	A09	A10	A11	A02
Ambient temperature	Up to 43 °C			Up to 43 °C			Up to 46 °C
Hermetic reciprocating compressor	MPT, MLY, NL, SC, GS, FR, TL, NF			NLY, NBC, NPT, NS, NX			MTZ, NTZ
Unit base	Rails or base plate						Base plate
Condenser type	Fin & Tube (painted)						Microchannel
Fan	AC/EC	AC/EC	AC/EC	EC	EC	EC	AC 6 pole
Bracket & tube for pressostat mounting	–	yes	yes	yes	–	–	–
Dual KP pressure switch	–	–	yes	–	–	–	yes
Schrader valve	–	–	–	yes	yes	yes	–
Wired electrical box	yes	yes	yes	yes	yes	yes	yes
Mini HP / LP pressostat	–	–	–	–	yes	–	–
Power cord	–	–	yes	–	yes	–	–
Receiver	–	yes	yes	–	Combo drier + receiver	–	yes
Net weight in kg	**14 chassis:** Lighter: 14 Bigger: 42			**4 chassis:** Lighter: 14 Bigger: 41			**5 chassis:** Lighter single fan: 62 Bigger single fan: 158 Lighter dual fan: 134 Bigger dual fan: 212
Dimensions in mm (height x width x depth)	**14 chassis:** Smaller: 205 x 289 x 424 Larger: 350 x 445 x 613			**4 chassis:** Smaller: 226 x 286 x 513 Larger: 350 x 442 x 480			**5 chassis:** Smaller single fan: 545 x 630 x 650 Larger single fan: 836.5 x 1200 x 800 Smaller dual fan: 693.5 x 1500 x 870 Larger dual fan: 836.5 x 1500 x 870

Technical data and ordering

Optyma™ Light Commercial - Performance data - R290 LBP

Performance data

Model	Compressor	Electrical code [1]	Tamb [°C]	Cooling capacity Q [kW] [2] Te [°C] -40	-35	-30	-25	-20	-15	-10	EcoDesign [3] Q [kW]	P [kW]	COP	SEPR	Version	Code
OP-LCNC004	NLY45LAb	G	27	0.095	0.128	0.166	0.209	0.256	0.307	0.363	–	–	–	–	A09 A10 A11	114F0202 114F0203 114F0201
			32	0.086	0.116	0.152	0.192	0.236	0.284	0.337	0.124	0.119	1.04	–		
			38	0.075	0.103	0.134	0.171	0.212	0.257	0.307	–	–	–	–		
			43	0.067	0.091	0.120	0.154	0.192	0.235	0.282	–	–	–	–		
OP-LCNC006	NLY60LAb	G	27	0.120	0.163	0.211	0.265	0.323	0.386	0.453	–	–	–	–	A09 A10 A11	114F0205 114F0206 114F0204
			32	0.110	0.148	0.193	0.242	0.296	0.356	0.419	0.158	0.149	1.06	–		
			38	0.097	0.131	0.170	0.215	0.265	0.320	0.379	–	–	–	–		
			43	0.087	0.116	0.152	0.193	0.239	0.290	0.346	–	–	–	–		
OP-LCNC008	NLY80LAb	G	27	0.162	0.219	0.284	0.356	0.436	0.523	0.616	–	–	–	–	A09 A10 A11	114F0308 114F0309 114F0307
			32	0.148	0.199	0.258	0.325	0.400	0.482	0.571	0.212	0.196	1.08	–		
			38	0.131	0.175	0.228	0.289	0.357	0.433	0.517	–	–	–	–		
			43	0.117	0.156	0.203	0.259	0.322	0.393	0.472	–	–	–	–		
OP-LCNC011	NPY12LAb	G	27	0.258	0.342	0.440	0.550	0.671	0.805	0.950	–	–	–	–	A09 A10 A11	114F0411 114F0412 114F0410
			32	0.235	0.312	0.402	0.505	0.619	0.746	0.884	0.332	0.289	1.15	–		
			38	0.208	0.276	0.357	0.451	0.557	0.675	0.805	–	–	–	–		
			43	0.185	0.246	0.320	0.406	0.505	0.616	0.740	–	–	–	–		
OP-LCNC016	NPT16LA	G	27	0.344	0.460	0.590	0.731	0.883	1.045	1.218	–	–	–	–	A09 A10 A11	114F0414 114F0415 114F0413
			32	0.315	0.421	0.539	0.670	0.812	0.965	1.129	0.450	0.391	1.15	–		
			38	0.282	0.374	0.480	0.598	0.728	0.869	1.022	–	–	–	–		
			43	0.254	0.335	0.430	0.538	0.658	0.790	0.933	–	–	–	–		
OP-LCNC023	NX23FBa	G	27	0.421	0.570	0.731	0.903	1.086	1.280	1.484	–	–	–	–	A09 A10 A11	114F0417 114F0418 114F0416
			32	0.382	0.518	0.667	0.827	0.999	1.182	1.375	0.556	0.537	1.03	–		
			38	0.335	0.456	0.590	0.737	0.895	1.065	1.245	–	–	–	–		
			43	0.296	0.405	0.527	0.662	0.809	0.967	1.137	–	–	–	–		
OP-LCNC034	NS34FB	G	27	0.557	0.784	1.042	1.326	1.636	1.967	2.317	–	–	–	–	A09 A10 A11	114F0620 114F0621 114F0619
			32	0.484	0.692	0.931	1.197	1.488	1.801	2.135	0.739	0.625	1.18	–		
			38	0.399	0.584	0.800	1.043	1.312	1.604	1.916	–	–	–	–		
			43	0.329	0.495	0.691	0.916	1.166	1.440	1.734	–	–	–	–		

LBP

(1) E - 400V-3ph-50Hz Compressor & 230V-1ph-50Hz Fan
G - 230V-1ph-50Hz Compressor & 230V-1ph-50Hz Fan
(2) Nominal conditions (EN13215), Evaporating temperatures at dew point, Superheat 10 K, Subcooling 0 K
(3) Rated conditions (EN13215), Evaporating temperature (dew point) -35 °C, Ambient air temperature 32 °C, Return Gas Temperature 20 °C, Subcooling 0 K

COP: Coefficient Of Perfromance link to EN13215 and ErP (Energy related Products) 2009/125/CE
SEPR: Seasonal Energy Performance Ratio link to EN13215 and ErP (Energy Related Products) 2009/125/CE
Tamb [°C]: Ambient Temperature
Te [°C]: Evaporating Temperature
Q [kW]: Cooling Capacity in Kilo Watt
P [kW]: Power Input in Kilo Watt

Version
A09: Tube for KP pressostat + Wired Ebox + Schrader valve
A10: Mini pressure switch + Wired Ebox + Combo Filter drier + Schrader valve
A11: Wired Ebox + Schrader valve

*For regular updates and detailed capacities, please refer to **Coolselector®2** software*

EcoDesign 2018

Technical data and ordering

Optyma™ Light Commercial - Performance data - R452A LBP

Performance data

Model	Compressor	Electrical code [1]	Tamb [°C]	Cooling capacity Q [kW] [2] Te [°C] -40	-35	-30	-25	-20	-15	-10	-5	EcoDesign [3] Q [kW]	P [kW]	COP	SEPR	Version	Code
OP-LCQC004	MLY45LAb	G	27	–	0.140	0.142	0.157	0.187	0.235	0.304	–	–	–	–	–	A01	114X1221
			32	–	0.121	0.127	0.146	0.182	0.235	0.310	–	0.134	0.165	0.81	–		
			38	–	0.099	0.109	0.134	0.175	0.234	0.316	–	–	–	–	–		
			43	–	0.080	0.094	0.123	0.168	0.233	0.320	–	–	–	–	–		
OP-LCQC006	MLY60LAb	G	27	–	0.140	0.164	0.205	0.264	0.340	0.436	–	–	–	–	–	A01	114X1337
			32	–	0.126	0.152	0.194	0.253	0.331	0.428	–	0.140	0.167	0.84	–		
			38	–	0.110	0.136	0.180	0.240	0.319	0.417	–	–	–	–	–		
			43	–	0.096	0.124	0.167	0.228	0.308	0.406	–	–	–	–	–		
OP-LCQC008	MYL80LAb	G	27	–	0.210	0.276	0.346	0.418	0.493	0.571	–	–	–	–	–	A01	114X1341
			32	–	0.186	0.246	0.309	0.375	0.444	0.516	–	0.208	0.235	0.88	–		
			38	–	0.158	0.210	0.265	0.323	0.385	0.450	–	–	–	–	–		
			43	–	0.135	0.180	0.228	0.280	0.336	0.395	–	–	–	–	–		
OP-LCQC012	MLY12LAb	G	27	–	0.309	0.400	0.500	0.607	0.721	0.843	–	–	–	–	–	A01	114X1449
			32	–	0.276	0.359	0.450	0.549	0.656	0.771	–	0.307	0.321	0.96	–		
			38	–	0.237	0.309	0.391	0.480	0.578	0.684	–	–	–	–	–		
			43	–	0.204	0.269	0.342	0.423	0.513	0.611	–	–	–	–	–		
OP-LCQC012	MPT12LA	G	27	–	0.368	0.470	0.581	0.698	0.823	0.955	–	–	–	–	–	A01	114X1569
			32	–	0.328	0.421	0.521	0.630	0.746	0.869	–	0.365	0.371	0.98	–		
			38	–	0.281	0.361	0.450	0.548	0.653	–	–	–	–	–	–		
			43	–	0.242	0.312	0.392	0.480	–	–	–	–	–	–	–		
OP-LCQC014	MPT14LA	G	27	–	0.415	0.525	0.642	0.765	0.894	1.028	–	–	–	–	–	A01	114X1573
			32	–	0.372	0.472	0.578	0.692	0.811	0.936	–	0.415	0.436	0.95	–		
			38	–	0.322	0.409	0.503	0.604	0.712	–	–	–	–	–	–		
			43	–	0.280	0.357	0.441	0.532	–	–	–	–	–	–	–		

LBP

(1) E - 400V-3ph-50Hz Compressor & 230V-1ph-50Hz Fan
G - 230V-1ph-50Hz Compressor & 230V-1ph-50Hz Fan
(2) Nominal conditions (EN13215), Evaporating temperatures at dew point, Superheat 10 K, Subcooling 0 K
(3) Rated conditions (EN13215), Evaporating temperature (dew point) -35 °C, Ambient air temperature 32 °C, Return Gas Temperature 20 °C, Subcooling 0 K

COP: Coefficient Of Perfromance link to EN13215 and ErP (Energy related Products) 2009/125/CE
SEPR: Seasonal Energy Performance Ratio link to EN13215 and ErP (Energy Related Products) 2009/125/CE
Tamb [°C]: Ambient Temperature
Te [°C]: Evaporating Temperature
Q [kW]: Cooling Capacity in Kilo Watt
P [kW]: Power Input in Kilo Watt

Version
A00: Without valves and receiver for capillary tubes
A01: With receiver, 2stop valves, brackets and copper pipes for KP
A04: A01 + KP17 WB + FSA-kit + power cord

*For regular updates and detailed capacities, please refer to **Coolselector®2** software*

EcoDesign 2018

Technical data and ordering

Optyma™ Commercial - Performance data - R452A LBP

Performance data

Model	Compressor	Electrical code [1]	Tamb [°C]	Cooling capacity Q [kW] [2] Te [°C] -35	-30	-25	-20	-15	-10	EcoDesign [3] Q [kW]	P [kW]	COP	SEPR	Sound power level dB(A)	Sound pressure level 10 m dB(A)	Version	Code
OP-LCQN048	NTZ048	E	27	0.990	1.299	1.648	2.031	2.439	2.864	–	–	–	–	–	–	A02	114X5758
			32	0.873	1.152	1.467	1.814	2.185	2.571	0.977	0.944	1.03	–	73	42		
			38	0.742	0.985	1.261	1.564	1.889	2.228	–	–	–	–	–	–		
			43	–	0.854	1.097	1.364	1.649	–	–	–	–	–	–	–		
			46	–	0.779	1.001	1.246	1.508	–	–	–	–	–	–	–		
OP-LCQN048	NTZ048	G	27	0.996	1.331	1.709	2.123	2.563	3.019	–	–	–	–	–	–	A02	114X5759
			32	0.867	1.174	1.520	1.898	2.300	2.716	0.969	0.909	1.07	–	73	42		
			38	0.723	0.995	1.302	1.637	1.992	2.359	–	–	–	–	–	–		
			43	–	0.854	1.128	1.426	1.741	2.065	–	–	–	–	–	–		
			46	–	0.773	1.027	1.302	1.592	1.889	–	–	–	–	–	–		
OP-LCQN068	NTZ068	E	27	1.673	2.185	2.752	3.358	3.981	4.597	–	–	–	–	–	–	A02	114X5761
			32	1.476	1.944	2.460	3.008	3.570	4.123	1.650	1.446	1.14	–	71	40		
			38	1.239	1.652	2.106	2.586	3.074	3.548	–	–	–	–	–	–		
			43	–	1.410	1.811	2.233	2.658	–	–	–	–	–	–	–		
			46	–	1.266	1.635	2.022	2.409	–	–	–	–	–	–	–		
OP-LCQN068	NTZ068	G	27	1.689	2.182	2.732	3.333	3.977	4.656	–	–	–	–	–	–	A02	114X5762
			32	1.467	1.924	2.433	2.988	3.583	4.209	1.640	1.674	0.98	–	71	40		
			38	1.209	1.622	2.081	2.581	3.116	3.678	–	–	–	–	–	–		
			43	–	1.378	1.794	2.247	2.731	–	–	–	–	–	–	–		
			46	–	1.234	1.625	2.049	2.502	–	–	–	–	–	–	–		
OP-LCQN096	NTZ096	E	27	1.977	2.582	3.260	3.994	4.766	5.560	–	–	–	–	–	–	A02	114X5764
			32	1.733	2.280	2.895	3.561	4.263	4.983	1.942	1.859	1.04	–	82	51		
			38	1.450	1.927	2.464	3.048	3.664	4.295	–	–	–	–	–	–		
			43	–	1.641	2.114	2.628	3.170	–	–	–	–	–	–	–		
			46	–	1.475	1.907	2.379	2.875	–	–	–	–	–	–	–		
OP-LGQN096	NTZ096	E	27	2.427	3.297	4.352	5.600	7.046	8.697	–	–	–	–	–	–	A02	114X5766
			32	2.141	2.938	3.908	5.061	6.404	7.942	2.366	1.820	1.30	1.70	82	51		
			38	1.803	2.509	3.376	4.413	5.628	7.029	–	–	–	–	–	–		
			43	–	2.158	2.936	3.873	4.981	–	–	–	–	–	–	–		
			46	–	1.952	2.675	3.552	4.593	–	–	–	–	–	–	–		

LBP

(1) E - 400V-3ph-50Hz Compressor & 230V-1ph-50Hz Fan
G - 230V-1ph-50Hz Compressor & 230V-1ph-50Hz Fan
(2) Nominal conditions (EN13215), Evaporating temperatures at dew point, Superheat 10 K, Subcooling 0 K
(3) Rated conditions (EN13215), Evaporating temperature (dew point) -35 °C, Ambient air temperature 32 °C, Return Gas Temperature 20 °C, Subcooling 0 K

COP: Coefficient Of Perfromance link to EN13215 and ErP (Energy related Products) 2009/125/CE
SEPR: Seasonal Energy Performance Ratio link to EN13215 and ErP (Energy Related Products) 2009/125/CE
Tamb [°C]: Ambient Temperature
Te [°C]: Evaporating Temperature
Q [kW]: Cooling Capacity in Kilo Watt
P [kW]: Power Input in Kilo Watt

Version
A02: Receiver + Stop valves + KP17WB pressure switch + Electrical box

*For regular updates and detailed capacities, please refer to **Coolselector®2** software*

Technical data and ordering

Optyma™ Commercial - Performance data - R452A LBP (count.)

Performance data

Model	Compressor	Electrical code [1]	Tamb [°C]	Cooling capacity Q [kW] [2] Te [°C] -35	-30	-25	-20	-15	-10	EcoDesign [3] Q [kW]	P [kW]	COP	SEPR	Sound power level dB(A)	Sound pressure level 10 m dB(A)	Version	Code
OP-LCQN108	NTZ108	E	27	2.973	3.943	5.099	6.444	7.979	9.701	–	–	–	–	–	–	A02	114X5768
			32	2.636	3.514	4.565	5.795	7.205	8.795	2.920	2.231	1.31	1.85	78	47		
			38	2.258	3.028	3.956	5.047	6.308	7.738	–	–	–	–	–	–		
			43	–	2.646	3.471	4.449	5.584	–	–	–	–	–	–	–		
			46	–	2.426	3.191	4.099	5.16	–	–	–	–	–	–	–		
OP-LGQN108	NTZ108	E	27	3.003	3.991	5.173	6.554	8.138	9.923	–	–	–	–	–	–	A02	114X5769
			32	2.662	3.556	4.631	5.894	7.349	8.997	2.946	2.158	1.37	1.95	78	47		
			38	2.280	3.065	4.013	5.134	6.435	7.919	–	–	–	–	–	–		
			43	–	2.679	3.523	4.527	5.700	–	–	–	–	–	–	–		
			46	–	2.456	3.238	4.173	5.269	–	–	–	–	–	–	–		
OP-LGQN136	NTZ136	E	27	3.703	4.896	6.312	7.953	9.818	11.898	–	–	–	–	–	–	A02	114X5771
			32	3.284	4.364	5.650	7.149	8.859	10.777	3.643	2.902	1.26	1.69	78	47		
			38	2.814	3.760	4.893	6.221	7.745	9.467	–	–	–	–	–	–		
			43	–	3.284	4.291	5.477	6.847	–	–	–	–	–	–	–		
			46	–	3.010	3.941	5.043	6.320	–	–	–	–	–	–	–		
OP-LCQN136	NTZ136	E	27	3.657	4.822	6.198	7.785	9.578	11.566	–	–	–	–	–	–	A02	114X5772
			32	3.243	4.298	5.548	6.997	8.64	10.472	3.602	2.975	1.21	1.63	78	47		
			38	2.779	3.703	4.804	6.086	7.55	9.193	–	–	–	–	–	–		
			43	–	3.234	4.211	5.355	6.669	–	–	–	–	–	–	–		
			46	–	2.963	3.867	4.928	6.153	–	–	–	–	–	–	–		
OP-LGQN215	NTZ215	E	27	5.347	7.107	9.183	11.588	14.329	17.407	–	–	–	–	–	–	A02	114X5774
			32	4.725	6.349	8.266	10.491	13.032	15.895	5.238	4.722	1.11	1.63	86	55		
			38	4.001	5.456	7.176	9.179	11.476	14.077	–	–	–	–	–	–		
			43	–	4.730	6.281	8.094	10.183	12.560	–	–	–	–	–	–		
			46	–	4.303	5.752	7.448	9.410	11.651	–	–	–	–	–	–		
OP-LGQN271	NTZ271	E	27	7.015	9.190	11.708	14.576	17.793	21.352	–	–	–	–	–	–	A02	114X5776
			32	6.136	8.154	10.487	13.146	16.132	19.444	6.812	5.818	1.17	1.66	86	55		
			38	5.112	6.940	9.052	11.459	14.169	17.182	–	–	–	–	–	–		
			43	–	5.955	7.881	10.079	12.557	15.320	–	–	–	–	–	–		
			46	–	5.376	7.191	9.261	11.599	14.210	–	–	–	–	–	–		

LBP

(1) E - 400V-3ph-50Hz Compressor & 230V-1ph-50Hz Fan
G - 230V-1ph-50Hz Compressor & 230V-1ph-50Hz Fan
(2) Nominal conditions (EN13215), Evaporating temperatures at dew point, Superheat 10 K, Subcooling 0 K
(3) Rated conditions (EN13215), Evaporating temperature (dew point) -35 °C, Ambient air temperature 32 °C, Return Gas Temperature 20 °C, Subcooling 0 K

COP: Coefficient Of Perfromance link to EN13215 and ErP (Energy related Products) 2009/125/CE
SEPR: Seasonal Energy Performance Ratio link to EN13215 and ErP (Energy Related Products) 2009/125/CE
Tamb [°C]: Ambient Temperature
Te [°C]: Evaporating Temperature
Q [kW]: Cooling Capacity in Kilo Watt
P [kW]: Power Input in Kilo Watt

Version
A02: Receiver + Stop valves + KP17WB pressure switch + Electrical box

*For regular updates and detailed capacities, please refer to **Coolselector®2** software*

EcoDesign 2018

Technical data and ordering

Optyma™ Light Commercial - Performance data - R404A / R507 LBP

Performance data

Model	Compressor	Electrical code [1]	Tamb [°C]	Cooling capacity Q [kW] [2] Te [°C] -45	-40	-35	-30	-25	-20	-15	-10	EcoDesign [3] Q [kW]	P [kW]	COP	SEPR	Version	Code
OP-LCHC004	TL4CL	G	27	0.051	0.074	0.101	0.133	0.169	0.211	0.259	0.312	–	–	–	–	A00 A01 A04	114X1208 114X1209 114X1211
			32	0.052	0.070	0.093	0.120	0.152	0.190	0.233	0.283	0.105	0.131	0.80	–		
			38	0.047	0.061	0.079	0.101	0.129	0.162	0.202	0.248	–	–	–	–		
			43	0.040	0.050	0.065	0.084	0.109	0.139	0.175	0.219	–	–	–	–		
OP-LCQC004	MLY45LAb	G	27	–	–	0.136	0.182	0.233	0.288	0.347	0.409	–	–	–	–	A01	114X1221
			32	–	–	0.120	0.163	0.209	0.259	0.313	0.372	0.136	0.153	0.89	–		
			38	–	–	0.071	0.139	0.180	0.224	0.273	0.326	–	–	–	–		
			43	–	–	0.061	0.119	0.155	0.196	0.240	0.289	–	–	–	–		
OP-LCHC006	FR6CL	G	27	0.080	0.118	0.163	0.216	0.277	0.347	0.427	0.515	–	–	–	–	A00 A01 A04	114X1216 114X1217 114X1219
			32	0.076	0.109	0.149	0.196	0.250	0.313	0.384	0.463	0.168	0.212	0.80	–		
			38	0.068	0.096	0.129	0.169	0.215	0.269	0.330	0.400	–	–	–	–		
			43	0.059	0.083	0.112	0.146	0.186	0.232	–	–	–	–	–	–		
OP-LCQC006	MLY60LAb	G	27	–	–	0.196	0.256	0.320	0.387	0.458	0.532	–	–	–	–	A01	114X1337
			32	–	–	0.173	0.227	0.285	0.347	0.412	0.481	0.196	0.217	0.90	–		
			38	–	–	0.146	0.193	0.244	0.298	0.357	0.420	–	–	–	–		
			43	–	–	0.124	0.165	0.209	0.259	0.312	0.370	–	–	–	–		
OP-LCHC007	NL7CLX	G	27	0.112	0.157	0.211	0.274	0.345	0.425	0.513	0.607	–	–	–	–	A00 A01 A04	114X1328 114X1329 114X1331
			32	0.101	0.142	0.191	0.247	0.312	0.385	0.464	0.550	0.217	0.244	0.89	–		
			38	0.087	0.122	0.165	0.214	0.271	0.335	0.405	0.481	–	–	–	–		
			43	0.074	0.105	0.142	0.185	0.236	0.292	0.354	0.422	–	–	–	–		
OP-LCQC008	MYL80LAb	G	27	–	–	0.226	0.299	0.376	0.458	0.543	0.632	–	–	–	–	A01	114X1341
			32	–	–	0.200	0.265	0.335	0.410	0.488	0.571	0.228	0.257	0.89	–		
			38	–	–	0.169	0.225	0.286	0.352	0.423	0.497	–	–	–	–		
			43	–	–	0.144	0.193	0.246	0.305	0.368	0.436	–	–	–	–		
OP-LCHC008	NL8.4CLX	G	27	0.121	0.169	0.227	0.293	0.369	0.452	0.543	0.64	–	–	–	–	A00 A01 A04	114X1304 114X1301 114X1302
			32	0.109	0.153	0.204	0.265	0.333	0.408	0.491	0.579	0.233	0.268	0.87	–		
			38	0.094	0.131	0.176	0.229	0.288	0.354	0.427	0.504	–	–	–	–		
			43	0.079	0.112	0.151	0.197	0.249	0.308	0.372	0.441	–	–	–	–		
OP-LCHC012	SC12CLX	G	27	–	0.243	0.333	0.439	0.563	0.704	0.862	1.037	–	–	–	–	A00 A01 A04	114X1440 114X1441 114X1443
			32	–	0.198	0.282	0.381	0.496	0.626	0.773	0.936	0.318	0.380	0.84	–		
			38	–	0.146	0.221	0.311	0.414	0.533	0.666	0.814	–	–	–	–		
			43	–	–	0.172	0.253	0.347	0.454	0.576	0.711	–	–	–	–		
OP-LCHC012	SC12CLX.2	G	27	0.190	0.260	0.346	0.446	0.563	0.695	0.844	1.009	–	–	–	–	A00	114X1444
			32	0.160	0.226	0.305	0.398	0.506	0.628	0.766	0.919	0.345	0.417	0.83	–		
			38	–	0.184	0.256	0.339	0.436	0.547	0.672	0.810	–	–	–	–		
			43	–	–	0.215	0.290	0.378	0.478	0.591	0.718	–	–	–	–		

LBP

(1) E - 400V-3ph-50Hz Compressor & 230V-1ph-50Hz Fan
G - 230V-1ph-50Hz Compressor & 230V-1ph-50Hz Fan
(2) Nominal conditions (EN13215), Evaporating temperatures at dew point, Superheat 10 K, Subcooling 0 K
(3) Rated conditions (EN13215), Evaporating temperature (dew point) -35 °C, Ambient air temperature 32 °C, Return Gas Temperature 20 °C, Subcooling 0 K

COP: Coefficient Of Perfromance link to EN13215 and ErP (Energy related Products) 2009/125/CE
SEPR: Seasonal Energy Performance Ratio link to EN13215 and ErP (Energy Related Products) 2009/125/CE
Tamb [°C]: Ambient Temperature
Te [°C]: Evaporating Temperature
Q [kW]: Cooling Capacity in Kilo Watt
P [kW]: Power Input in Kilo Watt

Version
A00: Without valves and receiver for capillary tubes
A01: With receiver, 2stop valves, brackets and copper pipes for KP
A04: A01 + KP17 WB + FSA-kit + power cord

*For regular updates and detailed capacities, please refer to **Coolselector®2** software*

EcoDesign 2018

Technical data and ordering

Optyma™ Light Commercial - Performance data - R404A / R507 LBP (count.)

Performance data

Model	Compressor	Electrical code [1]	Tamb [°C]	Cooling capacity Q [kW] [2] Te [°C] -45	-40	-35	-30	-25	-20	-15	-10	EcoDesign [3] Q [kW]	P [kW]	COP	SEPR	Version	Code
OP-LCQC012	MLY12LAb	G	27	–	–	0.334	0.436	0.548	0.670	0.802	0.943	–	–	–	–	A01	114X1449
			32	–	–	0.297	0.390	0.493	0.606	0.729	0.862	0.336	0.351	0.96	–		
			38	–	–	0.254	0.335	0.427	0.529	0.642	0.765	–	–	–	–		
			43	–	–	0.219	0.290	0.372	0.465	0.569	0.683	–	–	–	–		
OP-LCHC015	SC15CL	G	27	–	0.285	0.389	0.507	0.639	0.788	0.951	1.130	–	–	–	–	A00 A01 A04	114X1548 114X1549 114X1551
			32	–	0.233	0.335	0.449	0.576	0.716	0.870	1.038	0.379	0.468	0.81	–		
			38	–	–	0.265	0.375	0.496	0.627	0.771	0.926	–	–	–	–		
			43	–	–		0.311	0.426	0.551	0.686	0.832	–	–	–	–		
OP-LCQC012	MPT12LA	G	27	–	–	0.398	0.512	0.635	0.769	0.912	1.065	–	–	–	–	A01	114X1569
			32	–	–	0.354	0.456	0.569	0.692	0.825	0.968	0.401	0.405	0.99	–		
			38	–	–	0.302	0.390	0.490	0.600	0.722	–	–	–	–	–		
			43	–	–	0.258	0.336	0.425	0.525	–	–	–	–	–	–		
OP-LCQC014	MPT14LA	G	27	–	–	0.448	0.569	0.700	0.840	–	–	–			–	A01	114X1573
			32	–	–	0.401	0.511	0.630	0.758	0.896	1.041	0.456	0.478	0.95	–		
			38	–	–	0.345	0.441	0.546	0.661	0.785	–	–	–	–	–		
			43	–	–	0.299	0.383	0.477	0.580	–	–	–	–	–	–		
OP-LCHC018	SC18CLX	G	27	0.260	0.362	0.486	0.632	0.801	0.991	–	–	–			–	A00 A01 A04	114X1556 114X1557 114X1559
			32	0.215	0.310	0.423	0.557	0.712	0.886	1.082	1.296	0.478	0.501	0.95	–		
			38	–	0.250	0.351	0.470	0.608	0.764	0.939	1.132	–	–	–	–		
			43	–	–	0.294	0.400	0.524	0.664	0.822	0.998	–	–	–	–		
OP-LCHC021	SC21CL	G	27	–	0.397	0.537	0.695	0.868	1.057	1.262	1.484				–	A00 A01 A04	114X1600 114X1601 114X1602
			32	–	0.347	0.469	0.608	0.764	0.937	1.127	1.336	0.531	0.548	0.97	–		
			38	–	0.282	0.383	0.503	0.641	0.797	0.972	1.168	–	–	–	–		
			43	–	0.230	0.316	0.422	0.546	0.690	0.854	1.040	–	–	–	–		
OP-LCHC026	GS26CLX	G	27	0.390	0.542	0.724	0.934	1.172	1.436	1.725	2.035				–	A01	114X1673
			32	0.324	0.464	0.631	0.824	1.043	1.286	1.553	1.840	0.716	0.754	0.95	–		
			38	0.249	0.375	0.524	0.697	0.892	1.110	1.350	1.609	–	–	–	–		
			43	0.192	0.306	0.440	0.594	0.770	0.967	1.184	1.420	–	–	–	–		
OP-LCHC034	GS34CLX	G	27	–	0.756	0.998	1.278	1.598	1.956	2.349	2.773				–	A01 A04	114X1781 114X1783
			32	–	0.663	0.886	1.146	1.441	1.772	2.136	2.531	1.008	1.009	1.00	–		
			38	–	0.553	0.754	0.987	1.253	1.551	1.880	2.238	–	–	–	–		
			43	–	0.464	0.645	0.856	1.096	1.366	1.665	1.992	–	–	–	–		

LBP

(1) E - 400V-3ph-50Hz Compressor & 230V-1ph-50Hz Fan
G - 230V-1ph-50Hz Compressor & 230V-1ph-50Hz Fan
(2) Nominal conditions (EN13215), Evaporating temperatures at dew point, Superheat 10 K, Subcooling 0 K
(3) Rated conditions (EN13215), Evaporating temperature (dew point) -35 °C, Ambient air temperature 32 °C, Return Gas Temperature 20 °C, Subcooling 0 K

COP: Coefficient Of Perfromance link to EN13215 and ErP (Energy related Products) 2009/125/CE
SEPR: Seasonal Energy Performance Ratio link to EN13215 and ErP (Energy Related Products) 2009/125/CE
Tamb [°C]: Ambient Temperature
Te [°C]: Evaporating Temperature
Q [kW]: Cooling Capacity in Kilo Watt
P [kW]: Power Input in Kilo Watt

Version
A00: Without valves and receiver for capillary tubes
A01: With receiver, 2stop valves, brackets and copper pipes for KP
A04: A01 + KP17 WB + FSA-kit + power cord

*For regular updates and detailed capacities, please refer to **Coolselector®2** software*

EcoDesign 2018

Technical data and ordering

Optyma™ Commercial - Performance data - R404A / R507 LBP

Performance data

Model	Compressor	Electrical code [1]	Tamb [°C]	Cooling capacity Q [kW] [2] Te [°C] -40	-35	-30	-25	-20	-15	-10	EcoDesign [3] Q [kW]	P [kW]	COP	SEPR	Sound power level dB(A)	Sound pressure level 10 m dB(A)	Version	Code
OP-LCQN048	NTZ048	E	27	0.732	1.054	1.425	1.841	2.298	2.791	3.314	–	–	–	–	–	–		
			32	0.625	0.920	1.258	1.636	2.051	2.497	2.972	1.040	0.951	1.09	–	73	42		
			38	0.498	0.761	1.060	1.393	1.757	2.148	2.565	–	–	–	–	–	–	A02	114X5758
			43	–	0.632	0.899	1.194	1.516	1.862	–	–	–	–	–	–	–		
			46	–	0.557	0.804	1.076	1.373	1.692	–	–	–	–	–	–	–		
OP-LCQN048	NTZ048	G	27	0.717	1.036	1.413	1.844	2.323	2.842	3.393	–	–	–	–	–	–		
			32	0.598	0.892	1.237	1.631	2.068	2.543	3.047	1.008	1.06	0.96	–	73	42		
			38	0.457	0.720	1.027	1.377	1.764	2.184	2.631	–	–	–	–	–	–	A02	114X5759
			43	–	0.580	0.855	1.167	1.512	1.887	–	–	–	–	–	–	–		
			46	–	0.499	0.754	1.042	1.362	1.709	–	–	–	–	–	–	–		
OP-LCQN068	NTZ068	E	27	1.289	1.749	2.273	2.857	3.496	4.180	4.902	–	–	–	–	–	–		
			32	1.113	1.535	2.015	2.549	3.134	3.761	4.423	1.745	1.671	1.04	–	71	40		
			38	0.921	1.296	1.722	2.196	2.714	3.271	3.859	–	–	–	–	–	–	A02	114X5761
			43	–	1.110	1.491	1.914	2.376	2.872	–	–	–	–	–	–	–		
			46	–	1.004	1.358	1.750	2.177	2.636	–	–	–	–	–	–	–		
OP-LCQN068	NTZ068	G	27	1.278	1.705	2.207	2.776	3.405	4.081	4.791	–	–	–	–	–	–		
			32	1.139	1.527	1.980	2.494	3.060	3.668	4.307	1.743	1.79	0.97	–	71	40		
			38	0.971	1.314	1.711	2.157	2.649	3.176	3.731	–	–	–	–	–	–	A02	114X5762
			43	–	1.136	1.486	1.879	2.309	2.769	–	–	–	–	–	–	–		
			46	–	1.029	1.352	1.712	2.105	2.525	–	–	–	–	–	–	–		
OP-LCQN068	NTZ068	G	27	1.458	1.984	2.613	3.337	4.144	5.017	5.937	–	–	–	–	–	–		
			32	1.242	1.720	2.290	2.947	3.680	4.475	5.313	1.954	1.946	1.00	–	82	51		
			38	0.986	1.404	1.904	2.481	3.126	3.827	4.567	–	–	–	–	–	–	A02	114X5762
			43	–	1.148	1.588	2.098	2.669	3.292	–	–	–	–	–	–	–		
			46	–	0.998	1.402	1.871	2.398	2.973	–	–	–	–	–	–	–		
OP-LGQN096	NTZ096	E	27	1.692	2.360	3.203	4.240	5.486	6.955	8.656	–	–	–	–	–	–		
			32	1.458	2.073	2.850	3.809	4.964	6.330	7.918	2.328	1.924	1.21	1.60	82	51		
			38	1.171	1.717	2.411	3.270	4.312	5.552	7.001	–	–	–	–	–	–	A02	114X5766
			43	–	1.419	2.039	2.812	3.757	4.888	–	–	–	–	–	–	–		
			46	–	1.243	1.817	2.537	3.421	4.485	–	–	–	–	–	–	–		

LBP

(1) E - 400V-3ph-50Hz Compressor & 230V-1ph-50Hz Fan
G - 230V-1ph-50Hz Compressor & 230V-1ph-50Hz Fan
(2) Nominal conditions (EN13215), Evaporating temperatures at dew point, Superheat 10 K, Subcooling 0 K
(3) Rated conditions (EN13215), Evaporating temperature (dew point) -35 °C, Ambient air temperature 32 °C, Return Gas Temperature 20 °C, Subcooling 0 K

COP: Coefficient Of Perfromance link to EN13215 and ErP (Energy related Products) 2009/125/CE
SEPR: Seasonal Energy Performance Ratio link to EN13215 and ErP (Energy Related Products) 2009/125/CE
Tamb [°C]: Ambient Temperature
Te [°C]: Evaporating Temperature
Q [kW]: Cooling Capacity in Kilo Watt
P [kW]: Power Input in Kilo Watt

Version
A02: Receiver + Stop valves + KP17WB pressure switch + Electrical box

*For regular updates and detailed capacities, please refer to **Coolselector®2** software*

EcoDesign 2018

Technical data and ordering

Optyma™ Commercial - Performance data - R404A / R507 LBP (count.)

Performance data

Model	Compressor	Electrical code [1]	Tamb [°C]	Cooling capacity Q [kW] [2] Te [°C] -40	-35	-30	-25	-20	-15	-10	EcoDesign [3] Q [kW]	P [kW]	COP	SEPR	Sound power level dB(A)	Sound pressure level 10 m dB(A)	Version	Code
OP-LCQN108	NTZ108	E	27	2.012	2.814	3.792	4.951	6.295	7.823	9.531	–	–	–	–	–	–		
			32	1.729	2.471	3.37	4.434	5.669	7.074	8.648	2.779	2.316	1.20	1.66	78	47		
			38	1.394	2.061	2.865	3.814	4.916	6.173	7.587	–	–	–	–	–	–	A02	114X5768
			43	–	1.725	2.448	3.301	4.291	5.424	–	–	–	–	–	–	–		
			46	–	1.527	2.2	2.995	3.918	4.976	–	–	–	–	–	–	–		
OP-LGQN108	NTZ108	E	27	2.029	2.841	3.834	5.016	6.391	7.961	9.725	–	–	–	–	–	–		
			32	1.744	2.495	3.409	4.495	5.759	7.204	8.832	2.805	2.247	1.25	1.74	78	47		
			38	1.407	2.082	2.900	3.869	4.999	6.294	7.757	–	–	–	–	–	–	A02	114X5769
			43	–	1.744	2.479	3.351	4.367	5.535	–	–	–	–	–	–	–		
			46	–	1.544	2.230	3.042	3.990	5.081	–	–	–	–	–	–	–		
OP-LGQN136	NTZ136	E	27	2.601	3.556	4.713	6.081	7.671	9.486	11.528	–	–	–	–	–	–		
			32	2.263	3.144	4.208	5.469	6.935	8.613	10.506	3.544	3.060	1.16	1.70	78	47		
			38	1.865	2.655	3.607	4.736	6.053	7.564	9.277	–	–	–	–	–	–	A02	114X5771
			43	–	2.254	3.112	4.129	5.319	6.690	–	–	–	–	–	–	–		
			46	–	2.019	2.817	3.767	4.880	6.166	–	–	–	–	–	–	–		
OP-LCQN136	NTZ136	E	27	2.575	3.515	4.649	5.986	7.531	9.288	11.253	–	–	–	–	–	–		
			32	2.239	3.106	4.149	5.379	6.803	8.425	10.245	3.504	3.129	1.12	1.62	78	47		
			38	1.845	2.62	3.553	4.654	5.931	7.389	9.032	–	–	–	–	–	–	A02	114X5772
			43	–	2.224	3.062	4.053	5.205	6.526	–	–	–	–	–	–	–		
			46	–	1.99	2.771	3.695	4.771	6.008	–	–	–	–	–	–	–		
OP-LGQN215	NTZ215	E	27	4.127	5.649	7.453	9.558	11.979	14.727	17.809	–	–	–	–	–	–		
			32	3.551	4.984	6.675	8.643	10.904	13.471	16.350	5.521	4.910	1.12	1.62	86	55		
			38	2.845	4.156	5.698	7.490	9.549	11.887	14.515	–	–	–	–	–	–	A02	114X5774
			43	–	3.456	4.863	6.497	8.377	10.517	–	–	–	–	–	–	–		
			46	–	3.037	4.357	5.893	7.661	9.677	–	–	–	–	–	–	–		
OP-LGQN271	NTZ271	E	27	5.495	7.459	9.769	12.430	15.440	18.793	22.476	–	–	–	–	–	–		
			32	4.839	6.659	8.793	11.248	14.027	17.125	20.534	7.403	6.344	1.17	1.62	86	55		
			38	4.047	5.684	7.598	9.799	12.294	15.081	18.158	–	–	–	–	–	–	A02	114X5776
			43	–	4.867	6.591	8.575	10.827	13.350	–	–	–	–	–	–	–		
			46	–	4.378	5.985	7.836	9.939	12.301	–	–	–	–	–	–	–		

LBP

(1) E - 400V-3ph-50Hz Compressor & 230V-1ph-50Hz Fan
G - 230V-1ph-50Hz Compressor & 230V-1ph-50Hz Fan
(2) Nominal conditions (EN13215), Evaporating temperatures at dew point, Superheat 10 K, Subcooling 0 K
(3) Rated conditions (EN13215), Evaporating temperature (dew point) -35 °C, Ambient air temperature 32 °C, Return Gas Temperature 20 °C, Subcooling 0 K

COP: Coefficient Of Perfromance link to EN13215 and ErP (Energy related Products) 2009/125/CE
SEPR: Seasonal Energy Performance Ratio link to EN13215 and ErP (Energy Related Products) 2009/125/CE
Tamb [°C]: Ambient Temperature
Te [°C]: Evaporating Temperature
Q [kW]: Cooling Capacity in Kilo Watt
P [kW]: Power Input in Kilo Watt

Version
A02: Receiver + Stop valves + KP17WB pressure switch + Electrical box

*For regular updates and detailed capacities, please refer to **Coolselector®2** software*

EcoDesign 2018

Technical data and ordering

Optyma™ Light Commercial - Performance data - R290 MBP

Performance data

Model	Compressor	Electrical code [1]	Tamb [°C]	Cooling capacity Q [kW] [2] Te [°C] -25	-20	-15	-10	-5	0	5	10	EcoDesign [3] Q [kW]	P [kW]	COP	SEPR	Version	Code
OP-MCNC003	NBC30RA	G	27	0.141	0.177	0.218	0.264	0.316	0.372	0.433	0.498	–	–	–	–	A09 A10 A11	114F1202 114F1203 114F1201
			32	0.129	0.162	0.200	0.244	0.292	0.346	0.404	0.467	0.250	0.133	1.88	–		
			38	0.116	0.145	0.180	0.220	0.265	0.315	0.370	–	–	–	–	–		
			43	0.105	0.131	0.163	0.199	0.242	0.289	–	–	–	–	–	–		
OP-MCNC004	NLY45RAb	G	27	0.203	0.254	0.311	0.373	0.439	0.510	0.586	0.666	–	–	–	–	A09 A10 A11	114F1205 114F1206 114F1204
			32	0.186	0.233	0.286	0.343	0.406	0.474	0.546	0.623	0.354	0.187	1.88	–		
			38	0.166	0.208	0.256	0.309	0.367	0.430	0.498	–	–	–	–	–		
			43	0.149	0.187	0.231	0.280	0.334	0.394	–	–	–	–	–	–		
OP-MCNC006	NLY60RAb	G	27	0.274	0.341	0.416	0.500	0.590	0.689	0.794	0.906	–	–	–	–	A09 A10 A11	114F1308 114F1309 114F1307
			32	0.254	0.315	0.385	0.463	0.549	0.642	0.743	0.852	0.476	0.245	1.94	–		
			38	0.23	0.284	0.347	0.419	0.499	0.586	0.682	–	–	–	–	–		
			43	0.21	0.258	0.316	0.382	0.457	0.540	–	–	–	–	–	–		
OP-MCNC008	NLY80RAb	G	27	0.354	0.454	0.566	0.691	0.828	0.977	1.138	1.310	–	–	–	–	A09 A10 A11	114F1411 114F1412 114F1410
			32	0.328	0.418	0.522	0.639	0.768	0.910	1.063	1.228	0.656	0.324	2.03	–		
			38	0.296	0.376	0.469	0.576	0.696	0.829	0.974	–	–	–	–	–		
			43	0.269	0.341	0.426	0.524	0.636	0.761	–	–	–	–	–	–		
OP-MCNC009	NLY90RAb	G	27	0.408	0.518	0.641	0.776	0.924	1.084	1.255	1.437	–	–	–	–	A09 A10 A11	114F1414 114F1415 114F1413
			32	0.378	0.478	0.592	0.719	0.858	1.009	1.173	1.348	0.739	0.365	2.02	–		
			38	0.342	0.431	0.533	0.649	0.778	0.920	1.075	–	–	–	–	–		
			43	0.312	0.391	0.485	0.592	0.712	0.846	–	–	–	–	–	–		
OP-MCNC011	NLY12RAb	G	27	0.474	0.603	0.743	0.894	1.056	1.228	1.409	1.601	–	–	–	–	A09 A10 A11	114F1417 114F1418 114F1416
			32	0.442	0.561	0.691	0.833	0.986	1.149	1.324	1.508	0.858	0.445	1.93	–		
			38	0.404	0.511	0.630	0.760	0.902	1.056	1.221	–	–	–	–	–		
			43	0.372	0.469	0.578	0.699	0.833	0.978	–	–	–	–	–	–		
OP-MCNC014	NPT14RA	G	27	0.687	0.746	0.851	1.003	1.200	1.441	1.728	2.061	–	–	–	–	A09 A10 A11	114F1420 114F1421 114F1419
			32	0.652	0.705	0.805	0.950	1.141	1.378	1.660	1.990	0.982	0.590	1.66	–		
			38	0.609	0.656	0.748	0.887	1.071	1.302	1.579	–	–	–	–	–		
			43	0.573	0.614	0.701	0.834	1.013	1.238	–	–	–	–	–	–		
OP-MCNC016	NPT16RA	G	27	0.786	0.859	0.987	1.168	1.402	1.688	2.027	2.418	–	–	–	–	A09 A10 A11	114F1623 114F1624 114F1622
			32	0.746	0.813	0.934	1.108	1.335	1.615	1.948	2.335	1.141	0.636	1.79	–		
			38	0.698	0.757	0.870	1.036	1.255	1.527	1.854	–	–	–	–	–		
			43	0.658	0.710	0.816	0.975	1.188	1.454	–	–	–	–	–	–		
OP-MCNC018	NX18TBa	G	27	0.74	0.936	1.160	1.410	1.686	1.985	2.308	2.653	–	–	–	–	A09 A10 A11	114F1626 114F1627 114F1625
			32	0.675	0.854	1.062	1.296	1.556	1.841	2.150	2.483	1.334	0.726	1.84	–		
			38	0.597	0.756	0.944	1.159	1.401	1.669	1.961	–	–	–	–	–		
			43	0.533	0.675	0.847	1.046	1.272	1.525	–	–	–	–	–	–		
OP-MCNC020	NX21TBa	G	27	0.85	1.068	1.312	1.581	1.872	2.184	2.517	2.869	–	–	–	–	A09 A10 A11	114F1629 114F1630 114F1628
			32	0.775	0.972	1.196	1.445	1.718	2.013	2.330	2.668	1.489	0.829	1.79	–		
			38	0.684	0.857	1.057	1.283	1.534	1.809	2.107	–	–	–	–	–		
				0.61	0.761	0.942	1.149	1.382	1.639	–	–	–	–	–	–		

MBP

(1) E - 400V-3ph-50Hz Compressor & 230V-1ph-50Hz Fan
G - 230V-1ph-50Hz Compressor & 230V-1ph-50Hz Fan
(2) Nominal conditions (EN13215), Evaporating temperatures at dew point, Superheat 10 K, Subcooling 0 K
(3) Rated conditions (EN13215), Evaporating temperature (dew point) -10 °C, Ambient air temperature 32 °C, Return Gas Temperature 20 °C, Subcooling 0 K

COP: Coefficient Of Perfromance link to EN13215 and ErP (Energy related Products) 2009/125/CE
SEPR: Seasonal Energy Performance Ratio link to EN13215 and ErP (Energy Related Products) 2009/125/CE
Tamb [°C]: Ambient Temperature
Te [°C]: Evaporating Temperature
Q [kW]: Cooling Capacity in Kilo Watt
P [kW]: Power Input in Kilo Watt

Version
A09: Tube for KP pressostat + Wired Ebox + Schrader valve
A10: Mini pressure switch + Wired Ebox + Combo Filter drier + Schrader valve
A11: Wired Ebox + Schrader valve

*For regular updates and detailed capacities, please refer to **Coolselector®2** software*

EcoDesign 2018

Technical data and ordering

Optyma™ Light Commercial - Performance data - R134a/R513A* MBP

Performance data

Model	Compressor	Electrical code [1]	Tamb [°C]	Cooling capacity Q [kW] [2] Te [°C] -30	-25	-20	-15	-10	-5	0	5	10	EcoDesign [3] Q [kW]	P [kW]	COP	SEPR	Version	Code
OP-MCGC003	TL3G	G	27	0.050	0.066	0.086	0.110	0.137	0.167	0.200	0.236	0.273	–	–	–	–	A00 A01 A04	114X0104 114X0105 114X0107
			32	0.045	0.060	0.079	0.101	0.126	0.154	0.184	0.217	0.251	0.130	0.120	1.08	–		
			38	0.038	0.052	0.070	0.090	0.112	0.138	0.165	0.194	0.225	–	–	–	–		
			43	0.032	0.045	0.061	0.080	0.101	0.123	0.148	0.175	0.202	–	–	–	–		
OP-MCGC004	TL4G	G	27	0.050	0.077	0.106	0.137	0.170	0.205	0.242	0.284	0.329	–	–	–	–	A00 A01 A04	114X0108 114X0109 114X0111
			32	0.048	0.071	0.096	0.124	0.154	0.187	0.224	0.264	0.310	0.159	0.159	1.00	–		
			38	0.042	0.062	0.084	0.109	0.136	0.168	0.204	0.245	–	–	–	–	–		
			43	0.037	0.054	0.074	0.097	0.124	0.155	0.190	–	–	–	–	–	–		
OP-MCGC005	TL5G	G	27	0.079	0.102	0.130	0.162	0.198	0.238	0.281	0.328	0.376	–	–	–	–	A00 A01 A04	114X0112 114X0113 114X0115
			32	0.071	0.094	0.120	0.150	0.184	0.222	0.263	0.306	0.352	0.190	0.171	1.11	–		
			38	0.063	0.084	0.108	0.136	0.168	0.203	0.241	0.281	0.323	–	–	–	–		
			43	0.056	0.076	0.099	0.125	0.155	0.187	0.222	0.260	0.321	–	–	–	–		
OP-MCGC006	FR6G	G	27	0.110	0.146	0.188	0.238	0.296	0.364	0.441	0.527	0.623	–	–	–	–	A00 A01 A04	114X0200 114X0201 114X0203
			32	0.097	0.131	0.172	0.219	0.275	0.340	0.413	0.496	0.588	0.283	0.187	1.51	–		
			38	0.080	0.113	0.152	0.197	0.250	0.311	0.380	0.458	0.544	–	–	–	–		
			43	0.067	0.099	0.136	0.179	0.229	0.287	0.352	0.426	0.508	–	–	–	–		
OP-MCGC006	NL6.1MF	G	27	–	–	0.197	0.252	0.316	0.388	0.470	0.560	0.657	–	–	–	–	A00	114X0228
			32	–	–	0.181	0.233	0.293	0.361	0.438	0.522	0.614	0.301	0.202	1.49	–		
			38	–	–	0.162	0.210	0.265	0.328	0.399	0.477	0.562	–	–	–	–		
			43	–	–	0.146	0.191	0.242	0.301	0.366	0.439	0.519	–	–	–	–		
OP-MCGC007	FR7.5G	G	27	0.118	0.156	0.202	0.256	0.319	0.392	0.474	0.567	0.669	–	–	–	–	A00 A01 A04	114X0216 114X0217 114X0219
			32	0.103	0.140	0.184	0.236	0.296	0.366	0.444	0.532	0.630	0.305	0.213	1.43	–		
			38	0.087	0.122	0.164	0.213	0.269	0.335	0.408	0.491	0.583	–	–	–	–		
			43	0.074	0.108	0.148	0.194	0.248	0.309	0.379	0.457	0.543	–	–	–	–		
OP-MCGC008	FR8.5G	G	27	0.139	0.184	0.239	0.302	0.376	0.458	0.551	0.653	0.765	–	–	–	–	A00 A01 A04	114X0224 114X0225 114X0227
			32	0.129	0.171	0.222	0.281	0.350	0.428	0.516	0.613	0.720	0.360	0.248	1.45	–		
			38	0.112	0.151	0.198	0.253	0.317	0.389	0.472	0.564	0.666	–	–	–	–		
			43	0.097	0.133	0.177	0.229	0.289	0.358	0.436	0.525	0.623	–	–	–	–		
OP-MCGC007	NL7.3MF	G	27	–	–	0.237	0.301	0.374	0.457	0.548	0.648	0.757	–	–	–	–	A00	114X0244
			32	–	–	0.218	0.278	0.347	0.424	0.511	0.605	0.708	0.357	0.241	1.48	–		
			38	–	–	0.196	0.251	0.314	0.386	0.466	0.554	0.649	–	–	–	–		
			43	–	–	0.178	0.229	0.288	0.355	0.429	0.511	0.600	–	–	–	–		
OP-MCGC008	NL8.4MF	G	27	–	0.210	0.269	0.339	0.418	0.508	0.606	0.714	0.828	–	–	–	–	A00 A01	114X0204 114X0205
			32	–	0.193	0.248	0.314	0.388	0.472	0.565	0.666	0.775	0.400	0.256	1.56	–		
			38	–	0.173	0.224	0.284	0.353	0.431	0.516	0.610	0.711	–	–	–	–		
			43	–	0.158	0.205	0.261	0.325	0.397	0.477	0.564	0.659	–	–	–	–		

MBP

(1) E - 400V-3ph-50Hz Compressor & 230V-1ph-50Hz Fan
G - 230V-1ph-50Hz Compressor & 230V-1ph-50Hz Fan
(2) Nominal conditions (EN13215), Evaporating temperatures at dew point, Superheat 10 K, Subcooling 0 K
(3) Rated conditions (EN13215), Evaporating temperature (dew point) -10 °C, Ambient air temperature 32 °C, Return Gas Temperature 20 °C, Subcooling 0 K

COP: Coefficient Of Perfromance link to EN13215 and ErP (Energy related Products) 2009/125/CE
SEPR: Seasonal Energy Performance Ratio link to EN13215 and ErP (Energy Related Products) 2009/125/CE
Tamb [°C]: Ambient Temperature
Te [°C]: Evaporating Temperature
Q [kW]: Cooling Capacity in Kilo Watt
P [kW]: Power Input in Kilo Watt

Version
A00: Without valves and receiver for capillary tubes
A01: With receiver, 2stop valves, brackets and copper pipes for KP
A04: A01 + KP17 WB + FSA-kit + power cord

**R513A is priliminary*

*For regular updates and detailed capacities, please refer to **Coolselector®2** software*

EcoDesign 2018

Technical data and ordering

Optyma™ Light Commercial - Performance data - R134a / R513A* MBP (count.)

Performance data

Model	Compressor	Electrical code [1]	Tamb [°C]	Cooling capacity Q [kW] [2] Te [°C] -30	-25	-20	-15	-10	-5	0	5	10	EcoDesign [3] Q [kW]	P [kW]	COP	SEPR	Version	Code
OP-MCGC010	SC10G	G	27	0.148	0.212	0.284	0.365	0.454	0.551	0.656	0.771	0.896	–	–	–	–	A04	114X0223
			32	0.128	0.186	0.252	0.328	0.413	0.507	0.611	0.725	0.853	0.426	0.303	1.41	–		
			38	0.102	0.153	0.214	0.286	0.367	0.459	0.563	0.679	0.811	–	–	–	–		
			43	0.080	0.127	0.185	0.254	0.334	0.425	0.530	0.650	–	–	–	–	–		
OP-MCGC008	NL8.4MF	G	27	–	–	0.278	0.352	0.437	0.533	0.641	0.76	0.889	–	–	–	–	A00	114X0352
			32	–	–	0.256	0.325	0.405	0.496	0.598	0.71	0.832	0.417	0.282	1.48	–		
			38	–	–	0.232	0.295	0.369	0.453	0.547	0.651	0.765	–	–	–	–		
			43	–	–	0.212	0.271	0.339	0.417	0.505	0.603	0.71	–	–	–	–		
OP-MCGC011	FR11G	G	27	0.163	0.241	0.322	0.406	0.499	0.600	0.715	0.844	–	–	–	–	–	A00 A01 A04	114X0336 114X0337 114X0339
			32	0.153	0.223	0.296	0.374	0.460	0.557	0.666	0.793	–	0.473	0.337	1.41	–		
			38	0.136	0.198	0.263	0.334	0.414	0.505	0.611	0.734	–	–	–	–	–		
			43	0.121	0.177	0.236	0.302	0.377	0.465	0.568	0.690	–	–	–	–	–		
OP-MCGC012	SC12G	G	27	0.213	0.281	0.362	0.457	0.566	0.688	0.824	0.972	1.133	–	–	–	–	A00 A01 A04	114X0340 114X0341 114X0343
			32	0.185	0.249	0.326	0.416	0.519	0.635	0.764	0.906	1.060	0.535	0.378	1.41	–		
			38	0.153	0.213	0.284	0.368	0.464	0.572	0.694	0.828	0.974	–	–	–	–		
			43	0.129	0.185	0.251	0.329	0.419	0.522	0.637	0.764	–	–	–	–	–		
OP-MCGC015	SC15G	G	27	–	0.323	0.427	0.552	0.694	0.854	1.029	1.218	1.418	–	–	–	–	A00 A01 A04	114X0448 114X0449 114X0451
			32	–	0.294	0.397	0.515	0.650	0.800	0.963	1.138	1.323	0.670	0.463	1.45	–		
			38	–	0.252	0.353	0.466	0.592	0.730	0.879	1.039	1.207	–	–	–	–		
			43	–	0.213	0.312	0.421	0.540	0.669	0.807	0.954	1.109	–	–	–	–		
OP-MCGC018	SC18G	G	27	–	0.400	0.515	0.649	0.803	0.978	1.173	1.389	1.624	–	–	–	–	A00 A01 A04	114X0556 114X0557 114X0559
			32	–	0.351	0.465	0.596	0.746	0.915	1.104	1.310	1.532	0.770	0.552	1.40	–		
			38	–	0.307	0.417	0.543	0.685	0.844	1.019	1.211	1.415	–	–	–	–		
			43	–	0.280	0.384	0.502	0.635	0.783	0.946	1.122	–	–	–	–	–		
OP-MCGC021	SC21MF	G	27	–	–	0.623	0.773	0.945	1.137	1.350	1.583	1.833	–	–	–	–	A00	114X0568
			32	–	–	0.578	0.720	0.881	1.063	1.264	1.483	1.720	0.910	0.647	1.410	–		
			38	–	–	0.524	0.655	0.804	0.972	1.159	1.364	1.585	–	–	–	–		
			43	–	–	0.480	0.601	0.740	0.897	1.072	1.263	–	–	–	–	–		
OP-MCGC021	SC21G	G	27	–	0.463	0.601	0.758	0.933	1.125	1.331	1.551	1.783	–	–	–	–	A00 A01 A04	114X0564 114X0565 114X0567
			32	–	0.421	0.550	0.698	0.862	1.042	1.235	1.441	1.658	0.890	0.631	1.410	–		
			38	–	0.375	0.491	0.624	0.773	0.936	1.112	1.300	1.499	–	–	–	–		
			43	–	0.337	0.440	0.559	0.694	0.842	1.003	1.176	1.359	–	–	–	–		
OP-MCGC026	GS26MFX	G	27	–	–	0.873	1.125	1.416	1.745	2.113	2.519	–	–	–	–	–	A01	114X0773
			32	–	–	0.809	1.045	1.317	1.625	1.970	2.350	–	1.352	0.766	1.77	–		
			38	–	–	0.736	0.953	1.202	1.485	1.801	2.151	–	–	–	–	–		
			43	–	–	0.675	0.877	1.108	1.369	1.662	1.986	–	–	–	–	–		
OP-MCGC034	GS34MFX	G	27	–	–	1.138	1.432	1.772	2.158	2.592	3.072	–	–	–	–	–	A01	114X0781
			32	–	–	1.051	1.330	1.652	2.018	2.429	2.886	–	1.699	0.982	1.73			
			38	–	–	0.946	1.207	1.507	1.848	2.232	2.660	–	–	–	–	–		
			43	–	–	0.858	1.103	1.385	1.706	2.067	2.470	–	–	–	–	–		

MBP

(1) E - 400V-3ph-50Hz Compressor & 230V-1ph-50Hz Fan
G - 230V-1ph-50Hz Compressor & 230V-1ph-50Hz Fan
(2) Nominal conditions (EN13215), Evaporating temperatures at dew point, Superheat 10 K, Subcooling 0 K
(3) Rated conditions (EN13215), Evaporating temperature (dew point) -10 °C, Ambient air temperature 32 °C, Return Gas Temperature 20 °C, Subcooling 0 K

COP: Coefficient Of Perfromance link to EN13215 and ErP (Energy related Products) 2009/125/CE
SEPR: Seasonal Energy Performance Ratio link to EN13215 and ErP (Energy Related Products) 2009/125/CE
Tamb [°C]: Ambient Temperature
Te [°C]: Evaporating Temperature
Q [kW]: Cooling Capacity in Kilo Watt
P [kW]: Power Input in Kilo Watt

Version
A00: Without valves and receiver for capillary tubes
A01: With receiver, 2stop valves, brackets and copper pipes for KP
A04: A01 + KP17 WB + FSA-kit + power cord

*For regular updates and detailed capacities, please refer to **Coolselector®2** software*

EcoDesign 2018

Technical data and ordering

Optyma™ Commercial - Performance data - R134a MBP

Performance data

Model	Compressor	Electrical code [1]	Tamb [°C]	Cooling capacity Q [kW] [2] Te [°C] -20	-15	-10	-5	0	5	10	15	EcoDesign [3] Q [kW]	P [kW]	COP	SEPR	Sound power level dB(A)	Sound pressure level 10 m dB(A)	Version	Code
OP-MCRN030	MTZ018	E	27	0.739	1.058	1.445	1.902	2.433	3.036	3.710	4.453	–	–	–	–	–	–	A02	114X5721
			32	0.616	0.923	1.292	1.726	2.226	2.793	3.426	4.123	1.322	0.727	1.82	–	76	45		
			38	0.490	0.779	1.122	1.523	1.984	2.504	3.085	–	–	–	–	–	–	–		
			43	0.405	0.675	0.993	1.363	1.787	2.267	2.800	–	–	–	–	–	–	–		
			46	0.363	0.620	0.921	1.272	1.673	2.126	2.630	–	–	–	–	–	–	–		
OP-MCRN030	MTZ018	G	27	0.739	1.058	1.445	1.902	2.433	3.036	3.710	4.453	–	–	–	–	–	–	A02	114X5722
			32	0.616	0.923	1.292	1.726	2.226	2.793	3.426	4.123	1.322	0.727	1.82	–	76	45		
			38	0.490	0.779	1.122	1.523	1.984	2.504	3.085	–	–	–	–	–	–	–		
			43	0.405	0.675	0.993	1.363	1.787	2.267	2.800	–	–	–	–	–	–	–		
			46	0.363	0.620	0.921	1.272	1.673	2.126	2.630	–	–	–	–	–	–	–		
OP-MCRN038	MTZ022	E	27	0.947	1.325	1.789	2.343	2.989	3.726	4.552	5.460	–	–	–	–	–	–	A02	114X5724
			32	0.815	1.179	1.620	2.145	2.754	3.447	4.223	5.076	1.659	0.856	1.94	–	74	43		
			38	0.676	1.017	1.427	1.912	2.473	3.111	3.824	–	–	–	–	–	–	–		
			43	0.578	0.896	1.277	1.725	2.243	2.832	3.491	–	–	–	–	–	–	–		
			46	0.528	0.830	1.192	1.616	2.108	2.666	3.292	–	–	–	–	–	–	–		
OP-MCRN038	MTZ022	G	27	0.947	1.325	1.789	2.343	2.989	3.726	4.552	5.460	–	–	–	–	–	–	A02	114X5723
			32	0.815	1.179	1.620	2.145	2.754	3.447	4.223	5.076	1.659	0.856	1.94	–	74	43		
			38	0.676	1.017	1.427	1.912	2.473	3.111	3.824	–	–	–	–	–	–	–		
			43	0.578	0.896	1.277	1.725	2.243	2.832	3.491	–	–	–	–	–	–	–		
			46	0.528	0.830	1.192	1.616	2.108	2.666	3.292	–	–	–	–	–	–	–		
OP-MCRN048	MTZ028	E	27	1.226	1.653	2.200	2.879	3.697	4.660	5.767	7.016	–	–	–	–	–	–	A02	114X5726
			32	1.085	1.494	2.014	2.656	3.429	4.337	5.382	6.559	2.062	1.114	1.85	–	74	43		
			38	0.942	1.323	1.804	2.397	3.110	3.948	4.913	–	–	–	–	–	–	–		
			43	0.848	1.199	1.643	2.190	2.848	3.623	4.518	–	–	–	–	–	–	–		
			46	0.802	1.134	1.552	2.069	2.693	3.429	4.279	–	–	–	–	–	–	–		
OP-MCRN048	MTZ028	G	27	1.226	1.653	2.200	2.879	3.697	4.660	5.767	7.016	–	–	–	–	–	–	A02	114X5728
			32	1.085	1.494	2.014	2.656	3.429	4.337	5.382	6.559	2.062	1.114	1.85	–	74	43		
			38	0.942	1.323	1.804	2.397	3.110	3.948	4.913	–	–	–	–	–	–	–		
			43	0.848	1.199	1.643	2.190	2.848	3.623	4.518	–	–	–	–	–	–	–		
			46	0.802	1.134	1.552	2.069	2.693	3.429	4.279	–	–	–	–	–	–	–		
OP-MCRN054	MTZ032	E	27	1.409	1.919	2.558	3.337	4.261	5.334	6.554	7.916	–	–	–	–	–	–	A02	114X5729
			32	1.243	1.732	2.341	3.079	3.952	4.965	6.116	7.400	2.398	1.353	1.77	–	74	43		
			38	1.064	1.523	2.088	2.772	3.580	4.516	5.581	–	–	–	–	–	–	–		
			43	0.935	1.362	1.887	2.521	3.270	4.139	5.128	–	–	–	–	–	–	–		
			46	0.867	1.273	1.772	2.373	3.086	3.913	4.855	–	–	–	–	–	–	–		
OP-MCRN054	MTZ032	G	27	1.409	1.919	2.558	3.337	4.261	5.334	6.554	7.916	–	–	–	–	–	–	A02	114X5731
			32	1.243	1.732	2.341	3.079	3.952	4.965	6.116	7.400	2.398	1.353	1.77	–	74	43		
			38	1.064	1.523	2.088	2.772	3.580	4.516	5.581	–	–	–	–	–	–	–		
			43	0.935	1.362	1.887	2.521	3.270	4.139	5.128	–	–	–	–	–	–	–		
			46	0.867	1.273	1.772	2.373	3.086	3.913	4.855	–	–	–	–	–	–	–		

MBP

(1) E - 400V-3ph-50Hz Compressor & 230V-1ph-50Hz Fan
G - 230V-1ph-50Hz Compressor & 230V-1ph-50Hz Fan
(2) Nominal conditions (EN13215), Evaporating temperatures at dew point, Superheat 10 K, Subcooling 0 K
(3) Rated conditions (EN13215), Evaporating temperature (dew point) -10 °C, Ambient air temperature 32 °C, Return Gas Temperature 20 °C, Subcooling 0 K

COP: Coefficient Of Perfromance link to EN13215 and ErP (Energy related Products) 2009/125/CE
SEPR: Seasonal Energy Performance Ratio link to EN13215 and ErP (Energy Related Products) 2009/125/CE
Tamb [°C]: Ambient Temperature
Te [°C]: Evaporating Temperature
Q [kW]: Cooling Capacity in Kilo Watt
P [kW]: Power Input in Kilo Watt

Version
A02: Receiver + Stop valves + KP17WB pressure switch + Electrical box

*For regular updates and detailed capacities, please refer to **Coolselector®2** software*

EcoDesign 2018

Technical data and ordering

Optyma™ Commercial - Performance data - R134a MBP (count.)

Performance data

Model	Compressor	Electrical code [1]	Tamb [°C]	Cooling capacity Q [kW] [2] Te [°C] -20	-15	-10	-5	0	5	10	15	EcoDesign [3] Q [kW]	P [kW]	COP	SEPR	Sound power level dB(A)	Sound pressure level 10 m dB(A)	Version	Code
OP-MCRN060	MTZ036	E	27	1.929	2.522	3.237	4.079	5.052	6.154	7.382	8.729	–	–	–	–	–	–	A02	114X5732
			32	1.758	2.330	3.014	3.815	4.736	5.778	6.937	8.207	3.092	1.607	1.92	–	74	43		
			38	1.564	2.105	2.745	3.491	4.347	5.312	6.385	–	–	–	–	–	–	–		
			43	1.413	1.921	2.521	3.217	4.014	4.913	5.911	–	–	–	–	–	–	–		
			46	1.326	1.814	2.387	3.051	3.811	4.668	5.620	–	–	–	–	–	–	–		
OP-MCRN060	MTZ036	G	27	1.929	2.522	3.237	4.079	5.052	6.154	7.382	8.729	–	–	–	–	–	–	A02	114X5734
			32	1.758	2.330	3.014	3.815	4.736	5.778	6.937	8.207	3.092	1.607	1.92	–	74	43		
			38	1.564	2.105	2.745	3.491	4.347	5.312	6.385	–	–	–	–	–	–	–		
			43	1.413	1.921	2.521	3.217	4.014	4.913	5.911	–	–	–	–	–	–	–		
			46	1.326	1.814	2.387	3.051	3.811	4.668	5.620	–	–	–	–	–	–	–		
OP-MCRN068	MTZ040	E	27	2.276	2.905	3.641	4.489	5.451	6.528	7.718	9.016	–	–	–	–	–	–	A02	114X5735
			32	2.115	2.724	3.432	4.244	5.161	6.185	7.313	8.542	3.522	1.739	2.03	–	76	45		
			38	1.921	2.501	3.170	3.933	4.792	5.747	6.798	–	–	–	–	–	–	–		
			43	1.757	2.308	2.941	3.659	4.466	5.362	6.345	–	–	–	–	–	–	–		
			46	1.657	2.189	2.798	3.488	4.262	5.120	6.063	–	–	–	–	–	–	–		
OP-MCRN086	MTZ050	E	27	2.419	3.336	4.466	5.826	7.427	9.275	11.373	13.719	–	–	–	–	–	–	A02	114X5737
			32	2.133	2.991	4.047	5.317	6.815	8.549	10.524	12.740	4.141	1.946	2.13	–	84	53		
			38	1.811	2.606	3.578	4.745	6.124	7.725	9.555	–	–	–	–	–	–	–		
			43	1.554	2.303	3.211	4.298	5.582	7.075	8.786	–	–	–	–	–	–	–		
			46	1.403	2.128	3.000	4.041	5.270	6.700	8.341	–	–	–	–	–	–	–		
OP-MCRN096	MTZ056	E	27	2.290	3.285	4.514	5.997	7.744	9.765	12.065	14.643	–	–	–	–	–	–	A02	114X5739
			32	1.999	2.935	4.093	5.492	7.145	9.063	11.249	13.706	4.188	2.052	2.04	–	83	52		
			38	1.680	2.541	3.611	4.908	6.447	8.237	10.286	–	–	–	–	–	–	–		
			43	1.442	2.240	3.234	4.444	5.885	7.567	9.499	–	–	–	–	–	–	–		
			46	1.313	2.072	3.020	4.176	5.557	7.174	9.036	–	–	–	–	–	–	–		
OP-MCRN108	MTZ064	E	27	2.591	3.749	5.162	6.842	8.796	11.023	13.518	16.273	–	–	–	–	–	–	A02	114X5740
			32	2.278	3.385	4.727	6.319	8.167	10.273	12.635	15.245	4.840	2.312	2.09	–	83	52		
			38	1.910	2.956	4.214	5.700	7.422	9.385	11.587	–	–	–	–	–	–	–		
			43	1.611	2.607	3.796	5.194	6.812	8.654	10.724	–	–	–	–	–	–	–		
			46	1.435	2.402	3.550	4.895	6.450	8.221	10.211	–	–	–	–	–	–	–		
OP-MGRN108	MTZ064	E	27	2.591	3.749	5.162	6.842	8.796	11.023	13.518	16.273	–	–	–	–	–	–	A02	114X5743
			32	2.278	3.385	4.727	6.319	8.167	10.273	12.635	15.245	4.840	2.242	2.16	–	83	52		
			38	1.910	2.956	4.214	5.700	7.422	9.385	11.587	–	–	–	–	–	–	–		
			43	1.611	2.607	3.796	5.194	6.812	8.654	10.724	–	–	–	–	–	–	–		
			46	1.435	2.402	3.550	4.895	6.450	8.221	10.211	–	–	–	–	–	–	–		

MBP

(1) E - 400V-3ph-50Hz Compressor & 230V-1ph-50Hz Fan
G - 230V-1ph-50Hz Compressor & 230V-1ph-50Hz Fan
(2) Nominal conditions (EN13215), Evaporating temperatures at dew point, Superheat 10 K, Subcooling 0 K
(3) *Rated conditions (EN13215), Evaporating temperature (dew point) -10 °C, Ambient air temperature 32 °C, Return Gas Temperature 20 °C, Subcooling 0 K*

COP: Coefficient Of Perfromance link to EN13215 and ErP (Energy related Products) 2009/125/CE
SEPR: Seasonal Energy Performance Ratio link to EN13215 and ErP (Energy Related Products) 2009/125/CE
Tamb [°C]: Ambient Temperature
Te [°C]: Evaporating Temperature
Q [kW]: Cooling Capacity in Kilo Watt
P [kW]: Power Input in Kilo Watt

Version
A02: Receiver + Stop valves + KP17WB pressure switch + Electrical box

*For regular updates and detailed capacities, please refer to **Coolselector®2** software*

Technical data and ordering

Optyma™ Commercial - Performance data - R134a MBP (count.)

Performance data

Model	Compressor	Electrical code [1]	Tamb [°C]	Cooling capacity Q [kW] [2] Te [°C] -20	-15	-10	-5	0	5	10	15	EcoDesign [3] Q [kW]	P [kW]	COP	SEPR	Sound power level dB(A)	Sound pressure level 10 m dB(A)	Version	Code
OP-MCRN121	MTZ072	E	27	2.984	4.234	5.762	7.582	9.704	12.130	14.854	17.865	–	–	–	–	–	–	A02	114X5744
			32	2.667	3.873	5.334	7.069	9.087	11.390	13.976	16.835	5.466	2.625	2.08	2.71	82	51		
			38	2.280	3.427	4.805	6.434	8.323	10.477	12.896	–	–	–	–	–	–	–		
			43	1.958	3.052	4.357	5.894	7.673	9.701	11.978	–	–	–	–	–	–	–		
			46	1.768	2.828	4.088	5.567	7.279	9.230	11.422	–	–	–	–	–	–	–		
OP-MGRN121	MTZ072	E	27	2.984	4.234	5.762	7.582	9.704	12.130	14.854	17.865	–	–	–	–	–	–	A02	114X5746
			32	2.667	3.873	5.334	7.069	9.087	11.390	13.976	16.835	5.466	2.555	2.14	2.80	82	51		
			38	2.280	3.427	4.805	6.434	8.323	10.477	12.896	–	–	–	–	–	–	–		
			43	1.958	3.052	4.357	5.894	7.673	9.701	11.978	–	–	–	–	–	–	–		
			46	1.768	2.828	4.088	5.567	7.279	9.230	11.422	–	–	–	–	–	–	–		
OP-MCRN136	MTZ080	E	27	4.068	5.496	7.259	9.393	11.929	14.891	18.299	22.163	–	–	–	–	–	–	A02	114X5747
			32	3.693	5.062	6.742	8.770	11.178	13.990	17.227	20.903	6.897	2.991	2.31	2.55	82	51		
			38	3.238	4.533	6.111	8.008	10.259	12.890	15.921	–	–	–	–	–	–	–		
			43	2.858	4.089	5.579	7.366	9.484	11.961	14.820	–	–	–	–	–	–	–		
			46	2.632	3.823	5.259	6.979	9.016	11.401	14.155	–	–	–	–	–	–	–		
OP-MGRN136	MTZ080	E	27	3.895	5.241	6.877	8.822	11.086	13.670	16.567	19.764	–	–	–	–	–	–	A02	114X5749
			32	3.530	4.817	6.373	8.216	10.359	12.805	15.548	18.578	6.535	2.976	2.20	2.55	82	51		
			38	3.087	4.303	5.760	7.480	9.476	11.755	14.314	–	–	–	–	–	–	–		
			43	2.720	3.873	5.246	6.862	8.736	10.875	13.281	–	–	–	–	–	–	–		
			46	2.501	3.616	4.939	6.491	8.291	10.346	12.659	–	–	–	–	–	–	–		
OP-MGRN171	MTZ100	E	27	4.814	6.493	8.569	11.082	14.059	17.523	21.488	25.959	–	–	–	–	–	–	A02	114X5750
			32	4.209	5.830	7.821	10.219	13.054	16.346	20.112	24.356	8.004	4.202	1.90	2.68	87	56		
			38	3.572	5.105	6.974	9.217	11.862	14.933	18.444	–	–	–	–	–	–	–		
			43	3.124	4.566	6.317	8.414	10.887	13.759	17.045	–	–	–	–	–	–	–		
			46	2.893	4.273	5.946	7.949	10.312	13.059	16.205	–	–	–	–	–	–	–		
OP-MGRN215	MTZ125	E	27	6.141	8.185	10.674	13.642	17.113	21.104	25.620	30.657	–	–	–	–	–	–	A02	114X5753
			32	5.365	7.344	9.736	12.574	15.884	19.681	23.972	28.754	9.969	4.796	2.08	2.91	86	55		
			38	4.513	6.393	8.648	11.311	14.409	17.957	21.962	–	–	–	–	–	–	–		
			43	3.872	5.651	7.775	10.277	13.183	16.509	20.265	–	–	–	–	–	–	–		
			46	3.520	5.231	7.269	9.667	12.450	15.638	19.238	–	–	–	–	–	–	–		
OP-MGRN242	MTZ144	E	27	7.721	10.141	13.051	16.481	20.447	24.955	29.996	35.552	–	–	–	–	–	–	A02	114X5754
			32	6.930	9.267	12.058	15.330	19.102	23.380	28.156	33.416	12.360	5.939	2.08	2.76	85	54		
			38	6.038	8.254	10.879	13.943	17.464	21.449	25.895	–	–	–	–	–	–	–		
			43	5.352	7.446	9.916	12.789	16.086	19.814	23.973	–	–	–	–	–	–	–		
			46	4.968	6.981	9.349	12.101	15.256	18.825	22.807	–	–	–	–	–	–	–		
OP-MGRN271	MTZ160	E	27	8.459	11.058	14.200	17.910	22.199	27.060	32.471	38.394	–	–	–	–	–	–	A02	114X5757
			32	7.616	10.124	13.129	16.658	20.720	25.311	30.411	35.988	13.465	6.393	2.11	2.79	84	53		
			38	6.709	9.074	11.884	15.165	18.928	23.171	27.879	–	–	–	–	–	–	–		
			43	6.033	8.253	10.874	13.924	17.416	21.351	25.716	–	–	–	–	–	–	–		
			46	5.661	7.781	10.278	13.180	16.500	20.242	24.394	–	–	–	–	–	–	–		

MBP

(1) E - 400V-3ph-50Hz Compressor & 230V-1ph-50Hz Fan
G - 230V-1ph-50Hz Compressor & 230V-1ph-50Hz Fan
(2) Nominal conditions (EN13215), Evaporating temperatures at dew point, Superheat 10 K, Subcooling 0 K
(3) Rated conditions (EN13215), Evaporating temperature (dew point) -10 °C, Ambient air temperature 32 °C, Return Gas Temperature 20 °C, Subcooling 0 K

COP: Coefficient Of Perfromance link to EN13215 and ErP (Energy related Products) 2009/125/CE
SEPR: Seasonal Energy Performance Ratio link to EN13215 and ErP (Energy Related Products) 2009/125/CE
Tamb [°C]: Ambient Temperature
Te [°C]: Evaporating Temperature
Q [kW]: Cooling Capacity in Kilo Watt
P [kW]: Power Input in Kilo Watt

Version
A02: Receiver + Stop valves + KP17WB pressure switch + Electrical box

*For regular updates and detailed capacities, please refer to **Coolselector®2** software*

EcoDesign 2018

Technical data and ordering

Optyma™ Commercial - Performance data - R448A MBP

Performance data

Model	Compressor	Electrical code [1]	Tamb [°C]	Cooling capacity Q [kW] [2] Te [°C] -25	-20	-15	-10	-5	0	5	10	EcoDesign [3] Q [kW]	P [kW]	COP	SEPR	Sound power level dB(A)	Sound pressure level 10 m dB(A)	Version	Code
OP-MCRN030	MTZ018	E	27	0.918	1.309	1.764	2.282	2.863	3.506	4.206	4.962	–	–	–	–	–	–	A02	114X5721
			32	0.786	1.151	1.575	2.060	2.603	3.205	3.862	4.573	2.094	1.084	1.93	–	76	45		
			38	0.639	0.973	1.361	1.804	2.302	2.855	3.461	4.117	–	–	–	–	–	–		
			43	–	0.834	1.192	1.601	2.061	2.573	–	–	–	–	–	–	–	–		
			46	–	0.755	1.095	1.483	1.921	2.408	–	–	–	–	–	–	–	–		
OP-MCRN030	MTZ018	G	27	0.921	1.338	1.826	2.386	3.018	3.719	4.488	5.318	–	–	–	–	–	–	A02	114X5722
			32	0.790	1.185	1.646	2.174	2.768	3.428	4.151	4.933	2.212	1.139	1.94	–	76	45		
			38	0.626	0.994	1.422	1.910	2.460	3.071	3.740	4.464	–	–	–	–	–	–		
			43	–	0.831	1.230	1.686	2.198	2.767	–	–	–	–	–	–	–	–		
			46	–	0.732	1.114	1.549	2.039	2.584	–	–	–	–	–	–	–	–		
OP-MCRN038	MTZ022	E	27	1.403	1.824	2.328	2.918	3.593	4.349	5.179	6.074	–	–	–	–	–	–	A02	114X5724
			32	1.284	1.673	2.137	2.680	3.302	4.001	4.771	5.606	2.733	1.418	1.93	–	74	43		
			38	1.142	1.495	1.913	2.401	2.961	3.592	4.291	5.051	–	–	–	–	–	–		
			43	–	1.348	1.729	2.172	2.681	3.257	3.896	–	–	–	–	–	–	–		
			46	–	1.260	1.619	2.036	2.515	3.057	–	–	–	–	–	–	–	–		
OP-MCRN038	MTZ022	G	27	1.223	1.772	2.406	3.120	3.909	4.767	5.684	6.653	–	–	–	–	–	–	A02	114X5723
			32	1.046	1.565	2.162	2.832	3.573	4.377	5.238	6.148	2.888	1.479	1.95	–	74	43		
			38	0.826	1.309	1.862	2.481	3.163	3.905	4.699	5.539	–	–	–	–	–	–		
			43	–	1.092	1.608	2.184	2.819	3.509	–	–	–	–	–	–	–	–		
			46	–	0.961	1.455	2.006	2.612	3.271	–	–	–	–	–	–	–	–		
OP-MCRN048	MTZ028	E	27	1.808	2.372	3.062	3.890	4.861	5.979	7.242	8.648	–	–	–	–	–	–	A02	114X5726
			32	1.656	2.177	2.812	3.574	4.471	5.506	6.680	7.992	3.632	1.737	2.09	–	74	43		
			38	1.478	1.950	2.522	3.208	4.016	4.953	6.022	7.221	–	–	–	–	–	–		
			43	–	1.764	2.286	2.910	3.647	4.504	5.485	–	–	–	–	–	–	–		
			46	–	1.653	2.146	2.735	3.429	4.239	–	–	–	–	–	–	–	–		
OP-MCRN048	MTZ028	G	27	1.911	2.590	3.382	4.291	5.319	6.465	7.727	9.100	–	–	–	–	–	–	A02	114X5728
			32	1.724	2.366	3.113	3.969	4.936	6.014	7.201	8.494	4.036	1.871	2.16	–	74	43		
			38	1.500	2.097	2.788	3.579	4.471	5.466	6.564	7.761	–	–	–	–	–	–		
			43	–	1.873	2.517	3.252	4.081	5.007	–	–	–	–	–	–	–	–		
			46	–	1.738	2.354	3.055	3.847	4.730	–	–	–	–	–	–	–	–		
OP-MCRN054	MTZ032	E	27	2.119	2.753	3.517	4.419	5.467	6.663	8.004	9.486	–	–	–	–	–	–	A02	114X5729
			32	1.923	2.515	3.224	4.062	5.035	6.147	7.397	8.780	4.130	1.938	2.13	–	74	43		
			38	1.681	2.222	2.866	3.626	4.509	5.521	6.662	7.929	–	–	–	–	–	–		
			43	–	1.974	2.564	3.259	4.067	4.996	–	–	–	–	–	–	–	–		
			46	–	1.825	2.382	3.037	3.801	4.679	–	–	–	–	–	–	–	–		
OP-MCRN054	MTZ032	G	27	1.998	2.664	3.432	4.308	5.296	6.397	7.611	8.935	–	–	–	–	–	–	A02	114X5731
			32	1.796	2.435	3.166	3.996	4.930	5.968	7.113	8.363	4.065	2.042	1.99	–	74	43		
			38	1.543	2.147	2.832	3.606	4.474	5.438	6.500	7.660	–	–	–	–	–	–		
			43	–	1.898	2.545	3.271	4.083	4.985	–	–	–	–	–	–	–	–		
			46	–	1.746	2.369	3.066	3.845	4.709	–	–	–	–	–	–	–	–		

MBP

(1) E - 400V-3ph-50Hz Compressor & 230V-1ph-50Hz Fan
G - 230V-1ph-50Hz Compressor & 230V-1ph-50Hz Fan
(2) Nominal conditions (EN13215), Evaporating temperatures at dew point, Superheat 10 K, Subcooling 0 K
(3) Rated conditions (EN13215), Evaporating temperature (dew point) -10 °C, Ambient air temperature 32 °C, Return Gas Temperature 20 °C, Subcooling 0 K

COP: Coefficient Of Perfromance link to EN13215 and ErP (Energy related Products) 2009/125/CE
SEPR: Seasonal Energy Performance Ratio link to EN13215 and ErP (Energy Related Products) 2009/125/CE
Tamb [°C]: Ambient Temperature
Te [°C]: Evaporating Temperature
Q [kW]: Cooling Capacity in Kilo Watt
P [kW]: Power Input in Kilo Watt

Version
A02: Receiver + Stop valves + KP17WB pressure switch + Electrical box

*For regular updates and detailed capacities, please refer to **Coolselector®2** software*

EcoDesign 2018

Technical data and ordering

Optyma™ Commercial - Performance data - R448A MBP (count.)

Performance data

Model	Compressor	Electrical code [1]	Tamb [°C]	Cooling capacity Q [kW] [2] Te [°C] -25	-20	-15	-10	-5	0	5	10	EcoDesign [3] Q [kW]	P [kW]	COP	SEPR	Sound power level dB(A)	Sound pressure level 10 m dB(A)	Version	Code
OP-MCRN060	MTZ036	E	27	2.268	3.025	3.923	4.960	4.655	7.448	8.885	10.438	–	–	–	–	–	–	A02	114X5732
			32	2.067	2.774	3.609	4.575	5.671	6.893	8.235	9.687	4.657	2.375	1.96	–	74	43		
			38	1.831	2.475	3.234	4.113	5.111	6.226	7.453	8.785	–	–	–	–	–	–		
			43	–	2.227	2.923	3.729	4.645	5.670	–	–	–	–	–	–	–	–		
			46	–	2.080	2.738	3.499	4.365	5.337	–	–	–	–	–	–	–	–		
OP-MCRN060	MTZ036	G	27	2.281	3.038	3.909	4.896	6.002	7.225	8.564	10.013	–	–	–	–	–	–	A02	114X5734
			32	2.047	2.771	3.599	4.533	5.578	6.732	7.995	9.361	4.615	2.417	1.91	–	74	43		
			38	1.756	2.439	3.213	4.083	5.054	6.125	7.295	8.563	–	–	–	–	–	–		
			43	–	2.153	2.882	3.698	4.606	5.607	–	–	–	–	–	–	–	–		
			46	–	1.980	2.681	3.464	4.334	5.292	–	–	–	–	–	–	–	–		
OP-MCRN068	MTZ040	E	27	2.599	3.482	4.523	5.725	7.083	8.594	10.248	12.035	–	–	–	–	–	–	A02	114X5735
			32	2.362	3.185	4.155	5.274	6.540	7.951	9.497	11.170	5.368	2.740	1.96	2.79	76	45		
			38	2.087	2.834	3.716	4.734	5.888	7.176	8.592	10.126	–	–	–	–	–	–		
			43	–	2.548	3.354	4.286	5.346	6.530	–	–	–	–	–	–	–	–		
			46	–	2.380	3.139	4.019	5.020	6.143	–	–	–	–	–	–	–	–		
OP-MCRN086	MTZ050	E	27	2.909	4.000	5.313	6.858	8.638	10.652	12.894	15.353	–	–	–	–	–	–	A02	114X5737
			32	2.623	3.647	4.874	6.315	7.977	9.860	11.958	14.265	6.422	2.970	2.16	3.19	84	53		
			38	2.271	3.212	4.336	5.653	7.173	8.898	10.826	12.951	–	–	–	–	–	–		
			43	–	2.843	3.880	5.095	6.497	8.091	–	–	–	–	–	–	–	–		
			46	–	2.619	3.604	4.757	6.088	7.604	–	–	–	–	–	–	–	–		
OP-MCRN096	MTZ056	E	27	3.205	4.401	5.835	7.515	9.442	11.611	14.012	16.628	–	–	–	–	–	–	A02	114X5739
			32	2.891	4.012	5.350	6.916	8.712	10.736	12.979	15.429	7.037	3.270	2.15	3.16	83	52		
			38	2.502	3.534	4.758	6.187	7.827	9.678	11.734	13.986	–	–	–	–	–	–		
			43	–	3.127	4.257	5.573	7.084	8.791	–	–	–	–	–	–	–	–		
			46	–	2.880	3.953	5.202	6.635	8.257	–	–	–	–	–	–	–	–		
OP-MCRN108	MTZ064	E	27	3.849	5.190	6.762	8.566	10.599	12.851	15.312	17.964	–	–	–	–	–	–	A02	114X5740
			32	3.427	4.679	6.147	7.834	9.737	11.850	14.162	16.659	7.978	3.754	2.13	3.01	83	52		
			38	2.941	4.084	5.425	6.970	8.716	10.660	12.793	15.101	–	–	–	–	–	–		
			43	–	3.605	4.839	6.263	7.877	9.678	–	–	–	–	–	–	–	–		
			46	–	3.326	4.494	5.845	7.379	9.094	–	–	–	–	–	–	–	–		
OP-MGRN108	MTZ064	E	27	3.849	5.190	6.762	8.566	10.599	12.851	15.312	17.964	–	–	–	–	–	–	A02	114X5743
			32	3.427	4.679	6.147	7.834	9.737	11.850	14.162	16.659	7.978	3.684	2.17	3.08	83	52		
			38	2.941	4.084	5.425	6.970	8.716	10.660	12.793	15.101	–	–	–	–	–	–		
			43	–	3.605	4.839	6.263	7.877	9.678	–	–	–	–	–	–	–	–		
			46	–	3.326	4.494	5.845	7.379	9.094	–	–	–	–	–	–	–	–		

MBP

(1) E - 400V-3ph-50Hz Compressor & 230V-1ph-50Hz Fan
G - 230V-1ph-50Hz Compressor & 230V-1ph-50Hz Fan
(2) Nominal conditions (EN13215), Evaporating temperatures at dew point, Superheat 10 K, Subcooling 0 K
(3) Rated conditions (EN13215), Evaporating temperature (dew point) -10 °C, Ambient air temperature 32 °C, Return Gas Temperature 20 °C, Subcooling 0 K

COP: Coefficient Of Perfromance link to EN13215 and ErP (Energy related Products) 2009/125/CE
SEPR: Seasonal Energy Performance Ratio link to EN13215 and ErP (Energy Related Products) 2009/125/CE
Tamb [°C]: Ambient Temperature
Te [°C]: Evaporating Temperature
Q [kW]: Cooling Capacity in Kilo Watt
P [kW]: Power Input in Kilo Watt

Version
A02: Receiver + Stop valves + KP17WB pressure switch + Electrical box

*For regular updates and detailed capacities, please refer to **Coolselector®2** software*

EcoDesign 2018

Technical data and ordering

Optyma™ Commercial - Performance data - R448A MBP (count.)

Performance data

Model	Compressor	Electrical code [1]	Tamb [°C]	Cooling capacity Q [kW] [2] Te [°C] -25	-20	-15	-10	-5	0	5	10	EcoDesign [3] Q [kW]	P [kW]	COP	SEPR	Sound power level dB(A)	Sound pressure level 10 m dB(A)	Version	Code
OP-MCRN121	MTZ072	E	27	4.353	5.852	7.600	9.594	11.823	14.275	16.932	19.771	–	–	–	–	–	–	A02	114X5744
			32	3.875	5.274	6.906	8.768	10.855	13.153	15.647	18.317	8.939	4.364	2.05	2.89	82	51		
			38	3.324	4.602	6.092	7.795	9.708	11.820	14.117	16.583	–	–	–	–	–	–		
			43	–	4.061	5.431	7.000	8.766	10.721	–	–	–	–	–	–	–	–		
			46	–	3.745	5.042	6.530	8.207	10.067	–	–	–	–	–	–	–	–		
OP-MGRN121	MTZ072	E	27	4.353	5.852	7.600	9.594	11.823	14.275	16.932	19.771	–	–	–	–	–	–	A02	114X5746
			32	3.875	5.274	6.906	8.768	10.855	13.153	15.647	18.317	8.939	4.294	2.08	2.95	82	51		
			38	3.324	4.602	6.092	7.795	9.708	11.820	14.117	16.583	–	–	–	–	–	–		
			43	–	4.061	5.431	7.000	8.766	10.721	–	–	–	–	–	–	–	–		
			46	–	3.745	5.042	6.530	8.207	10.067	–	–	–	–	–	–	–	–		
OP-MCRN136	MTZ080	E	27	5.265	6.880	8.748	10.863	13.211	15.773	18.522	21.432	–	–	–	–	–	–	A02	114X5747
			32	4.779	6.290	8.034	10.007	12.198	14.589	17.159	19.882	10.221	5.194	1.97	2.74	82	51		
			38	4.198	5.580	7.173	8.974	10.974	13.161	15.515	18.013	–	–	–	–	–	–		
			43	–	4.991	6.454	8.109	9.950	11.965	–	–	–	–	–	–	–	–		
			46	–	4.639	6.024	7.590	9.334	11.246	–	–	–	–	–	–	–	–		
OP-MGRN136	MTZ080	E	27	5.265	6.880	8.748	10.863	13.211	15.773	18.522	21.432	–	–	–	–	–	–	A02	114X5749
			32	4.779	6.290	8.034	10.007	12.198	14.589	17.159	19.882	10.221	5.124	1.99	2.78	82	51		
			38	4.198	5.580	7.173	8.974	10.974	13.161	15.515	18.013	–	–	–	–	–	–		
			43	–	4.991	6.454	8.109	9.950	11.965	–	–	–	–	–	–	–	–		
			46	–	4.639	6.024	7.590	9.334	11.246	–	–	–	–	–	–	–	–		
OP-MGRN171	MTZ100	E	27	6.111	8.292	10.912	13.990	17.536	21.552	26.030	30.956	–	–	–	–	–	–	A02	114X5750
			32	5.463	7.486	9.918	12.781	16.087	19.841	24.039	28.670	12.988	6.306	2.06	3.01	87	56		
			38	4.717	6.555	8.764	11.370	14.390	17.831	21.693	25.970	–	–	–	–	–	–		
			43	–	5.806	7.832	10.226	13.008	16.189	–	–	–	–	–	–	–	–		
			46	–	5.369	7.285	9.553	12.193	15.218	–	–	–	–	–	–	–	–		
OP-MGRN215	MTZ125	E	27	8.003	10.804	14.133	17.999	22.397	27.312	32.717	38.581	–	–	–	–	–	–	A02	114X5753
			32	7.154	9.756	12.850	16.450	20.555	25.153	30.224	35.738	16.745	8.020	2.09	2.99	86	55		
			38	6.176	8.538	11.351	14.630	18.382	22.600	27.268	32.362	–	–	–	–	–	–		
			43	–	7.557	10.134	13.147	16.604	20.504	–	–	–	–	–	–	–	–		
			46	–	6.983	9.419	12.271	15.551	19.261	–	–	–	–	–	–	–	–		
OP-MGRN242	MTZ144	E	27	9.911	12.849	16.247	20.108	24.420	29.164	34.312	39.831	–	–	–	–	–	–	A02	114X5754
			32	8.913	11.656	14.827	18.433	22.467	26.914	31.751	36.945	18.785	9.244	2.03	2.86	85	54		
			38	7.769	10.282	13.183	16.484	20.185	24.275	28.734	33.538	–	–	–	–	–	–		
			43	–	9.180	11.859	14.908	18.331	22.123	–	–	–	–	–	–	–	–		
			46	–	8.535	11.083	13.982	17.239	20.851	–	–	–	–	–	–	–	–		
OP-MGRN271	MTZ160	E	27	11.163	14.432	18.191	22.434	27.139	32.278	37.811	43.693	–	–	–	–	–	–	A02	114X5757
			32	10.041	13.095	16.602	20.563	24.962	29.774	34.965	40.493	20.980	10.582	1.98	2.74	84	53		
			38	8.751	11.551	14.762	18.387	22.418	26.837	31.615	36.716	–	–	–	–	–	–		
			43	–	10.309	13.277	16.625	20.352	24.443	–	–	–	–	–	–	–	–		
			46	–	9.581	12.405	15.589	19.133	23.028	–	–	–	–	–	–	–	–		

MBP

(1) E - 400V-3ph-50Hz Compressor & 230V-1ph-50Hz Fan
G - 230V-1ph-50Hz Compressor & 230V-1ph-50Hz Fan
(2) Nominal conditions (EN13215), Evaporating temperatures at dew point, Superheat 10 K, Subcooling 0 K
(3) Rated conditions (EN13215), Evaporating temperature (dew point) -10 °C, Ambient air temperature 32 °C, Return Gas Temperature 20 °C, Subcooling 0 K

COP: Coefficient Of Perfromance link to EN13215 and ErP (Energy related Products) 2009/125/CE
SEPR: Seasonal Energy Performance Ratio link to EN13215 and ErP (Energy Related Products) 2009/125/CE
Tamb [°C]: Ambient Temperature
Te [°C]: Evaporating Temperature
Q [kW]: Cooling Capacity in Kilo Watt
P [kW]: Power Input in Kilo Watt

Version
A02: Receiver + Stop valves + KP17WB pressure switch + Electrical box

*For regular updates and detailed capacities, please refer to **Coolselector®2** software*

EcoDesign 2018

Technical data and ordering

Optyma™ Commercial - Performance data - R449A MBP

Performance data

Model	Compressor	Electrical code [1]	Tamb [°C]	Cooling capacity Q [kW] [2] Te [°C] -25	-20	-15	-10	-5	0	5	10	EcoDesign [3] Q [kW]	P [kW]	COP	SEPR	Sound power level dB(A)	Sound pressure level 10 m dB(A)	Version	Code
OP-MCRN030	MTZ018	E	27	0.918	1.309	1.764	2.282	2.863	3.506	4.206	4.962	–	–	–	–	–	–	A02	114X5721
			32	0.786	1.151	1.575	2.060	2.603	3.205	3.862	4.573	2.097	1.084	1.93	–	76	45		
			38	0.639	0.973	1.361	1.804	2.302	2.855	3.461	4.117	–	–	–	–	–	–		
			43	–	0.834	1.192	1.601	2.061	2.573	–	–	–	–	–	–	–	–		
			46	–	0.755	1.095	1.483	1.921	2.408	–	–	–	–	–	–	–	–		
OP-MCRN030	MTZ018	G	27	0.921	1.338	1.826	2.386	3.018	3.719	4.488	5.318	–	–	–	–	–	–	A02	114X5722
			32	0.790	1.185	1.646	2.174	2.768	3.428	4.151	4.933	2.215	1.139	1.95	–	76	45		
			38	0.626	0.994	1.422	1.910	2.460	3.071	3.740	4.464	–	–	–	–	–	–		
			43	–	0.831	1.230	1.686	2.198	2.767	–	–	–	–	–	–	–	–		
			46	–	0.732	1.114	1.549	2.039	2.584	–	–	–	–	–	–	–	–		
OP-MCRN038	MTZ022	E	27	1.403	1.824	2.328	2.918	3.593	4.349	5.178	6.074	–	–	–	–	–	–	A02	114X5724
			32	1.284	1.673	2.137	2.680	3.302	4.001	4.771	5.606	2.737	1.418	1.93	–	74	43		
			38	1.142	1.495	1.913	2.401	2.961	3.592	4.291	5.050	–	–	–	–	–	–		
			43	–	1.348	1.729	2.172	2.681	3.257	3.896	–	–	–	–	–	–	–		
			46	–	1.260	1.619	2.036	2.515	3.057	–	–	–	–	–	–	–	–		
OP-MCRN038	MTZ022	G	27	1.223	1.772	2.406	3.120	3.909	4.767	5.684	6.653	–	–	–	–	–	–	A02	114X5723
			32	1.046	1.565	2.162	2.832	3.573	4.377	5.238	6.148	2.892	1.479	1.96	–	74	43		
			38	0.826	1.309	1.862	2.481	3.163	3.905	4.699	5.539	–	–	–	–	–	–		
			43	–	1.092	1.608	2.184	2.819	3.509	–	–	–	–	–	–	–	–		
			46	–	0.961	1.455	2.006	2.612	3.271	–	–	–	–	–	–	–	–		
OP-MCRN048	MTZ028	E	27	1.808	2.372	3.062	3.890	4.861	5.979	7.242	8.648	–	–	–	–	–	–	A02	114X5726
			32	1.656	2.177	2.812	3.574	4.471	5.506	6.680	7.992	3.637	1.737	2.094	–	74	43		
			38	1.478	1.950	2.522	3.208	4.016	4.953	6.022	7.221	–	–	–	–	–	–		
			43	–	1.764	2.286	2.910	3.647	4.504	–	–	–	–	–	–	–	–		
			46	–	1.653	2.146	2.734	3.429	4.238	–	–	–	–	–	–	–	–		
OP-MCRN048	MTZ028	G	27	1.911	2.590	3.382	4.291	5.319	6.465	7.727	9.100	–	–	–	–	–	–	A02	114X5728
			32	1.724	2.366	3.113	3.969	4.936	6.014	7.201	8.494	4.042	1.871	2.16	–	74	43		
			38	1.500	2.097	2.788	3.579	4.471	5.466	6.564	7.761	–	–	–	–	–	–		
			43	–	1.873	2.517	3.252	4.081	5.007	–	–	–	–	–	–	–	–		
			46	–	1.738	2.354	3.055	3.847	4.730	–	–	–	–	–	–	–	–		
OP-MCRN054	MTZ032	E	27	2.119	2.753	3.517	4.419	5.467	6.663	8.004	9.486	–	–	–	–	–	–	A02	114X5729
			32	1.923	2.515	3.224	4.062	5.035	6.147	7.397	8.780	4.136	1.938	2.13	–	74	43		
			38	1.681	2.222	2.866	3.626	4.509	5.521	6.662	7.929	–	–	–	–	–	–		
			43	–	1.974	2.564	3.259	4.067	4.996	–	–	–	–	–	–	–	–		
			46	–	1.825	2.382	3.037	3.801	4.679	–	–	–	–	–	–	–	–		
OP-MCRN054	MTZ032	G	27	1.998	2.664	3.432	4.308	5.296	6.397	7.611	8.935	–	–	–	–	–	–	A02	114X5731
			32	1.796	2.435	3.166	3.996	4.930	5.968	7.113	8.363	4.071	2.042	1.99	–	74	43		
			38	1.543	2.147	2.832	3.606	4.474	5.438	6.500	7.660	–	–	–	–	–	–		
			43	–	1.898	2.545	3.271	4.083	4.985	–	–	–	–	–	–	–	–		
			46	–	1.746	2.369	3.066	3.845	4.709	–	–	–	–	–	–	–	–		

MBP

(1) E - 400V-3ph-50Hz Compressor & 230V-1ph-50Hz Fan
G - 230V-1ph-50Hz Compressor & 230V-1ph-50Hz Fan
(2) Nominal conditions (EN13215), Evaporating temperatures at dew point, Superheat 10 K, Subcooling 0 K
(3) Rated conditions (EN13215), Evaporating temperature (dew point) -10 °C, Ambient air temperature 32 °C, Return Gas Temperature 20 °C, Subcooling 0 K

COP: Coefficient Of Perfromance link to EN13215 and ErP (Energy related Products) 2009/125/CE
SEPR: Seasonal Energy Performance Ratio link to EN13215 and ErP (Energy Related Products) 2009/125/CE
Tamb [°C]: Ambient Temperature
Te [°C]: Evaporating Temperature
Q [kW]: Cooling Capacity in Kilo Watt
P [kW]: Power Input in Kilo Watt

Version
A02: Receiver + Stop valves + KP17WB pressure switch + Electrical box

*For regular updates and detailed capacities, please refer to **Coolselector®2** software*

EcoDesign 2018

Technical data and ordering

Optyma™ Commercial - Performance data - R449A MBP (count.)

Performance data

Model	Compressor	Electrical code [1]	Tamb [°C]	Cooling capacity Q [kW] [2] Te [°C] -25	-20	-15	-10	-5	0	5	10	EcoDesign [3] Q [kW]	P [kW]	COP	SEPR	Sound power level dB(A)	Sound pressure level 10 m dB(A)	Version	Code
OP-MCRN060	MTZ036	E	27	2.268	3.025	3.923	4.960	6.137	7.448	8.885	10.438	–	–	–	–	–	–	A02	114X5732
			32	2.067	2.774	3.609	4.575	5.671	6.893	8.235	9.687	4.664	2.375	1.96	–	74	43		
			38	1.831	2.475	3.234	4.113	5.111	6.226	7.453	8.785	–	–	–	–	–	–		
			43	–	2.227	2.923	3.729	4.645	5.670	–	–	–	–	–	–	–	–		
			46	–	2.080	2.738	3.499	4.365	5.337	–	–	–	–	–	–	–	–		
OP-MCRN060	MTZ036	G	27	2.281	3.038	3.909	4.896	6.002	7.225	8.564	10.013	–	–	–	–	–	–	A02	114X5734
			32	2.047	2.771	3.598	4.533	5.578	6.732	7.994	9.361	4.622	2.418	1.91	–	74	43		
			38	1.756	2.439	3.213	4.083	5.054	6.125	7.295	8.563	–	–	–	–	–	–		
			43	–	2.153	2.882	3.698	4.606	5.607	–	–	–	–	–	–	–	–		
			46	–	1.980	2.680	3.464	4.334	5.292	–	–	–	–	–	–	–	–		
OP-MCRN068	MTZ040	E	27	2.599	3.482	4.523	5.725	7.083	8.594	10.248	12.035	–	–	–	–	–	–	A02	114X5735
			32	2.362	3.185	4.155	5.274	6.540	7.951	9.497	11.170	5.376	2.740	1.96	2.79	76	45		
			38	2.087	2.834	3.716	4.734	5.888	7.176	8.592	10.126	–	–	–	–	–	–		
			43	–	2.548	3.354	4.286	5.346	6.530	–	–	–	–	–	–	–	–		
			46	–	2.380	3.139	4.019	5.020	6.143	–	–	–	–	–	–	–	–		
OP-MCRN086	MTZ050	E	27	2.909	4.000	5.313	6.858	8.638	10.652	12.894	15.353	–	–	–	–	–	–	A02	114X5737
			32	2.623	3.647	4.874	6.315	7.977	9.860	11.958	14.265	6.431	2.971	2.17	3.20	84	53		
			38	2.271	3.212	4.336	5.653	7.173	8.898	10.826	12.951	–	–	–	–	–	–		
			43	–	2.843	3.880	5.095	6.497	8.091	–	–	–	–	–	–	–	–		
			46	–	2.619	3.604	4.757	6.088	7.604	–	–	–	–	–	–	–	–		
OP-MCRN096	MTZ056	E	27	3.205	4.401	5.835	7.515	9.442	11.611	14.012	16.628	–	–	–	–	–	–	A02	114X5739
			32	2.891	4.012	5.350	6.916	8.712	10.736	12.979	15.429	7.037	3.270	2.15	3.16	83	52		
			38	2.502	3.534	4.758	6.187	7.827	9.678	11.734	13.986	–	–	–	–	–	–		
			43	–	3.127	4.257	5.573	7.084	8.791	–	–	–	–	–	–	–	–		
			46	–	2.880	3.953	5.202	6.635	8.257	–	–	–	–	–	–	–	–		
OP-MCRN108	MTZ064	E	27	3.849	5.190	6.762	8.566	10.599	12.851	15.312	17.964	–	–	–	–	–	–	A02	114X5740
			32	3.427	4.679	6.147	7.834	9.737	11.850	14.162	16.659	7.978	3.754	2.13	3.01	83	52		
			38	2.941	4.084	5.425	6.970	8.716	10.660	12.793	15.101	–	–	–	–	–	–		
			43	–	3.605	4.839	6.263	7.877	9.678	–	–	–	–	–	–	–	–		
			46	–	3.326	4.494	5.845	7.379	9.094	–	–	–	–	–	–	–	–		
OP-MGRN108	MTZ064	E	27	3.849	5.190	6.762	8.566	10.599	12.851	15.312	17.964	–	–	–	–	–	–	A02	114X5743
			32	3.427	4.679	6.147	7.834	9.737	11.850	14.162	16.659	7.978	3.684	2.17	3.08	83	52		
			38	2.941	4.084	5.425	6.970	8.716	10.660	12.793	15.101	–	–	–	–	–	–		
			43	–	3.605	4.839	6.263	7.877	9.678	–	–	–	–	–	–	–	–		
			46	–	3.326	4.494	5.845	7.379	9.094	–	–	–	–	–	–	–	–		

MBP

(1) E - 400V-3ph-50Hz Compressor & 230V-1ph-50Hz Fan
G - 230V-1ph-50Hz Compressor & 230V-1ph-50Hz Fan
(2) Nominal conditions (EN13215), Evaporating temperatures at dew point, Superheat 10 K, Subcooling 0 K
(3) Rated conditions (EN13215), Evaporating temperature (dew point) -10 °C, Ambient air temperature 32 °C, Return Gas Temperature 20 °C, Subcooling 0 K

COP: Coefficient Of Perfromance link to EN13215 and ErP (Energy related Products) 2009/125/CE
SEPR: Seasonal Energy Performance Ratio link to EN13215 and ErP (Energy Related Products) 2009/125/CE
Tamb [°C]: Ambient Temperature
Te [°C]: Evaporating Temperature
Q [kW]: Cooling Capacity in Kilo Watt
P [kW]: Power Input in Kilo Watt

Version
A02: Receiver + Stop valves + KP17WB pressure switch + Electrical box

*For regular updates and detailed capacities, please refer to **Coolselector®2** software*

EcoDesign 2018

Technical data and ordering

Optyma™ Commercial - Performance data - R449A MBP (count.)

Performance data

Model	Compressor	Electrical code [1]	Tamb [°C]	Cooling capacity Q [kW] [2] Te [°C] -25	-20	-15	-10	-5	0	5	10	EcoDesign [3] Q [kW]	P [kW]	COP	SEPR	Sound power level dB(A)	Sound pressure level 10 m dB(A)	Version	Code
OP-MCRN121	MTZ072	E	27	4.353	5.852	7.600	9.594	11.823	14.275	16.932	19.771	–	–	–	–	–	–	A02	114X5744
			32	3.875	5.274	6.906	8.768	10.855	13.153	15.647	18.317	8.939	4.364	2.05	2.89	82	51		
			38	3.324	4.602	6.092	7.795	9.708	11.820	14.117	16.583	–	–	–	–	–	–		
			43	–	4.061	5.431	7.000	8.766	10.721	–	–	–	–	–	–	–	–		
			46	–	3.745	5.042	6.530	8.207	10.067	–	–	–	–	–	–	–	–		
OP-MGRN121	MTZ072	E	27	4.353	5.852	7.600	9.594	11.823	14.275	16.932	19.771	–	–	–	–	–	–	A02	114X5746
			32	3.875	5.274	6.906	8.768	10.855	13.153	15.647	18.317	8.952	4.294	2.08	2.95	82	51		
			38	3.324	4.602	6.092	7.795	9.708	11.820	14.117	16.583	–	–	–	–	–	–		
			43	–	4.061	5.431	7.000	8.766	10.721	–	–	–	–	–	–	–	–		
			46	–	3.745	5.042	6.530	8.207	10.067	–	–	–	–	–	–	–	–		
OP-MCRN136	MTZ080	E	27	5.265	6.880	8.748	10.863	13.211	15.773	18.522	21.432	–	–	–	–	–	–	A02	114X5747
			32	4.779	6.290	8.034	10.007	12.198	14.589	17.159	19.882	10.236	5.194	1.97	2.74	82	51		
			38	4.198	5.580	7.173	8.974	10.974	13.161	15.515	18.013	–	–	–	–	–	–		
			43	–	4.991	6.454	8.109	9.950	11.965	–	–	–	–	–	–	–	–		
			46	–	4.639	6.024	7.590	9.334	11.246	–	–	–	–	–	–	–	–		
OP-MGRN136	MTZ080	E	27	5.265	6.880	8.748	10.863	13.211	15.773	18.522	21.432	–	–	–	–	–	–	A02	114X5749
			32	4.779	6.290	8.034	10.007	12.198	14.589	17.159	19.882	10.236	5.124	2.00	2.79	82	51		
			38	4.198	5.580	7.173	8.974	10.974	13.161	15.515	18.013	–	–	–	–	–	–		
			43	–	4.991	6.454	8.109	9.950	11.965	–	–	–	–	–	–	–	–		
			46	–	4.639	6.024	7.590	9.334	11.246	–	–	–	–	–	–	–	–		
OP-MGRN171	MTZ100	E	27	6.111	8.292	10.912	13.990	17.536	21.552	26.030	30.956	–	–	–	–	–	–	A02	114X5750
			32	5.463	7.486	9.918	12.781	16.087	19.841	24.039	28.670	13.007	6.306	2.06	3.01	87	56		
			38	4.717	6.555	8.764	11.370	14.390	17.831	21.693	25.970	–	–	–	–	–	–		
			43	–	5.806	7.832	10.226	13.008	16.189	–	–	–	–	–	–	–	–		
			46	–	5.369	7.285	9.553	12.193	15.218	–	–	–	–	–	–	–	–		
OP-MGRN215	MTZ125	E	27	8.003	10.804	14.133	17.999	22.397	27.312	32.717	38.581	–	–	–	–	–	–	A02	114X5753
			32	7.154	9.756	12.850	16.450	20.555	25.153	30.224	35.738	16.770	8.021	2.09	2.99	86	55		
			38	6.176	8.538	11.351	14.630	18.382	22.600	27.268	32.362	–	–	–	–	–	–		
			43	–	7.557	10.134	13.147	16.604	20.504	–	–	–	–	–	–	–	–		
			46	–	6.983	9.419	12.271	15.551	19.261	–	–	–	–	–	–	–	–		
OP-MGRN242	MTZ144	E	27	9.911	12.849	16.247	20.108	24.420	29.164	34.312	39.831	–	–	–	–	–	–	A02	114X5754
			32	8.913	11.656	14.827	18.433	22.467	26.914	31.751	36.945	18.813	9.244	2.04	2.86	85	54		
			38	7.769	10.282	13.183	16.484	20.185	24.275	28.734	33.538	–	–	–	–	–	–		
			43	–	9.180	11.859	14.908	18.331	22.123	–	–	–	–	–	–	–	–		
			46	–	8.535	11.083	13.982	17.239	20.851	–	–	–	–	–	–	–	–		
OP-MGRN271	MTZ160	E	27	11.163	14.432	18.191	22.434	27.139	32.278	37.811	43.693	–	–	–	–	–	–	A02	114X5757
			32	10.041	13.095	16.602	20.563	24.962	29.774	34.965	40.493	21.012	10.583	1.99	2.74	84	53		
			38	8.751	11.551	14.762	18.387	22.418	26.837	31.615	36.716	–	–	–	–	–	–		
			43	–	10.309	13.277	16.625	20.352	24.443	–	–	–	–	–	–	–	–		
			46	–	9.581	12.405	15.589	19.133	23.028	–	–	–	–	–	–	–	–		

MBP

(1) E - 400V-3ph-50Hz Compressor & 230V-1ph-50Hz Fan
G - 230V-1ph-50Hz Compressor & 230V-1ph-50Hz Fan
(2) Nominal conditions (EN13215), Evaporating temperatures at dew point, Superheat 10 K, Subcooling 0 K
(3) Rated conditions (EN13215), Evaporating temperature (dew point) -10 °C, Ambient air temperature 32 °C, Return Gas Temperature 20 °C, Subcooling 0 K

COP: Coefficient Of Perfromance link to EN13215 and ErP (Energy related Products) 2009/125/CE
SEPR: Seasonal Energy Performance Ratio link to EN13215 and ErP (Energy Related Products) 2009/125/CE
Tamb [°C]: Ambient Temperature
Te [°C]: Evaporating Temperature
Q [kW]: Cooling Capacity in Kilo Watt
P [kW]: Power Input in Kilo Watt

Version
A02: Receiver + Stop valves + KP17WB pressure switch + Electrical box

*For regular updates and detailed capacities, please refer to **Coolselector®2** software*

EcoDesign 2018

Technical data and ordering

Optyma™ Commercial - Performance data - R452A MBP

Performance data

Model	Compressor	Electrical code [1]	Tamb [°C]	Cooling capacity Q [kW] [2] Te [°C] -25	-20	-15	-10	-5	0	5	10	EcoDesign [3] Q [kW]	P [kW]	COP	SEPR	Sound power level dB(A)	Sound pressure level 10 m dB(A)	Version	Code
OP-MCRN030	MTZ018	E	27	1.122	1.519	1.987	2.526	3.139	3.821	4.572	5.387	–	–	–	–	–	–	A02	114X5721
			32	0.977	1.346	1.778	2.278	2.844	3.477	4.174	4.932	2.377	1.188	2.00	–	76	45		
			38	0.806	1.140	1.531	1.981	2.493	3.066	3.699	4.390	–	–	–	–	–	–		
			43	0.666	0.972	1.327	1.737	2.203	2.726	–	–	–	–	–	–	–	–		
			46	0.584	0.872	1.207	1.592	2.031	2.523	–	–	–	–	–	–	–	–		
OP-MCRN030	MTZ018	G	27	1.038	1.467	1.967	2.538	3.179	3.888	4.659	5.488	–	–	–	–	–	–	A02	114X5722
			32	0.900	1.303	1.771	2.303	2.900	3.559	4.277	5.050	2.404	1.166	2.06	–	76	45		
			38	0.730	1.101	1.528	2.013	2.555	3.155	3.809	4.514	–	–	–	–	–	–		
			43	0.588	0.929	1.321	1.766	2.263	2.812	–	–	–	–	–	–	–	–		
			46	0.503	0.827	1.197	1.616	2.086	2.605	–	–	–	–	–	–	–	–		
OP-MCRN038	MTZ022	E	27	1.616	2.100	2.659	3.292	3.996	4.767	5.602	6.492	–	–	–	–	–	–	A02	114X5724
			32	1.434	1.882	2.399	2.984	3.636	4.351	5.125	5.953	3.124	1.554	2.01	–	74	43		
			38	1.226	1.631	2.097	2.624	3.212	3.858	4.559	5.311	–	–	–	–	–	–		
			43	1.060	1.429	1.852	2.330	2.864	3.452	4.092	–	–	–	–	–	–	–		
			46	0.963	1.310	1.707	2.156	2.657	3.210	–	–	–	–	–	–	–	–		
OP-MCRN038	MTZ022	G	27	1.278	1.797	2.396	3.074	3.826	4.646	5.529	6.466	–	–	–	–	–	–	A02	114X5723
			32	1.104	1.591	2.150	2.781	3.480	4.242	5.063	5.935	2.908	1.464	1.99	–	74	43		
			38	0.892	1.339	1.848	2.422	3.056	3.749	4.495	5.290	–	–	–	–	–	–		
			43	0.715	1.126	1.594	2.118	2.698	3.332	–	–	–	–	–	–	–	–		
			46	0.610	1.000	1.441	1.936	2.483	3.081	–	–	–	–	–	–	–	–		
OP-MCRN048	MTZ028	E	27	2.058	2.586	3.241	4.035	4.980	6.080	7.338	8.751	–	–	–	–	–	–	A02	114X5726
			32	1.891	2.377	2.978	3.706	4.574	5.587	6.750	8.060	3.867	1.900	2.04	–	74	43		
			38	1.683	2.117	2.650	3.297	4.071	4.980	6.027	7.214	–	–	–	–	–	–		
			43	1.504	1.892	2.368	2.947	3.641	4.462	–	–	–	–	–	–	–	–		
			46	1.396	1.755	2.195	2.732	3.379	4.146	–	–	–	–	–	–	–	–		
OP-MCRN048	MTZ028	G	27	1.720	2.398	3.198	4.125	5.181	6.362	7.666	9.085	–	–	–	–	–	–	A02	114X5728
			32	1.477	2.123	2.878	3.748	4.735	5.838	7.054	8.377	3.909	1.874	2.09	–	74	43		
			38	1.185	1.788	2.485	3.283	4.185	5.190	6.298	7.505	–	–	–	–	–	–		
			43	0.946	1.509	2.154	2.888	3.715	4.637	–	–	–	–	–	–	–	–		
			46	0.805	1.342	1.954	2.648	3.430	4.300	–	–	–	–	–	–	–	–		
OP-MCRN054	MTZ032	E	27	2.274	2.951	3.751	4.680	5.739	6.927	8.240	9.671	–	–	–	–	–	–	A02	114X5729
			32	2.040	2.669	3.411	4.270	5.250	6.349	7.565	8.893	4.459	2.118	2.10	–	74	43		
			38	1.752	2.323	2.992	3.766	4.648	5.640	6.740	7.944	–	–	–	–	–	–		
			43	1.510	2.029	2.636	3.337	4.138	5.039	–	–	–	–	–	–	–	–		
			46	1.365	1.852	2.420	3.077	3.828	4.675	–	–	–	–	–	–	–	–		
OP-MCRN054	MTZ032	G	27	1.973	2.720	3.589	4.587	5.715	6.974	8.361	9.872	–	–	–	–	–	–	A02	114X5731
			32	1.680	2.381	3.196	4.132	5.190	6.373	7.678	9.101	4.310	2.085	2.07	–	74	43		
			38	1.339	1.983	2.731	3.590	4.563	5.651	6.856	8.172	–	–	–	–	–	–		
			43	1.067	1.661	2.351	3.143	4.043	5.052	–	–	–	–	–	–	–	–		
			46	0.910	1.473	2.127	2.879	3.734	4.694	–	–	–	–	–	–	–	–		

MBP

(1) E - 400V-3ph-50Hz Compressor & 230V-1ph-50Hz Fan
G - 230V-1ph-50Hz Compressor & 230V-1ph-50Hz Fan
(2) Nominal conditions (EN13215), Evaporating temperatures at dew point, Superheat 10 K, Subcooling 0 K
(3) Rated conditions (EN13215), Evaporating temperature (dew point) -10 °C, Ambient air temperature 32 °C, Return Gas Temperature 20 °C, Subcooling 0 K

COP: Coefficient Of Perfromance link to EN13215 and ErP (Energy related Products) 2009/125/CE
SEPR: Seasonal Energy Performance Ratio link to EN13215 and ErP (Energy Related Products) 2009/125/CE
Tamb [°C]: Ambient Temperature
Te [°C]: Evaporating Temperature
Q [kW]: Cooling Capacity in Kilo Watt
P [kW]: Power Input in Kilo Watt

Version
A02: Receiver + Stop valves + KP17WB pressure switch + Electrical box

*For regular updates and detailed capacities, please refer to **Coolselector®2** software*

EcoDesign 2018

Technical data and ordering

Optyma™ Commercial - Performance data - R452A MBP (count.)

Performance data

Model	Compressor	Electrical code [1]	Tamb [°C]	Cooling capacity Q [kW] [2] Te [°C] -25	-20	-15	-10	-5	0	5	10	EcoDesign [3] Q [kW]	P [kW]	COP	SEPR	Sound power level dB(A)	Sound pressure level 10 m dB(A)	Version	Code
OP-MCRN060	MTZ036	E	27	2.574	3.277	4.116	5.099	4.784	7.502	8.917	10.462	–	–	–	–	–	–	A02	114X5732
			32	2.355	3.008	3.785	4.692	5.734	6.911	8.218	9.649	4.908	2.603	1.89	–	74	43		
			38	2.076	2.666	3.364	4.178	5.113	6.170	7.348	8.641	–	–	–	–	–	–		
			43	1.835	2.368	2.996	3.730	4.573	5.530	–	–	–	–	–	–	–	–		
			46	1.687	2.184	2.770	3.453	4.242	5.138	–	–	–	–	–	–	–	–		
OP-MCRN060	MTZ036	G	27	2.261	3.178	4.242	5.450	6.798	8.275	9.871	11.572	–	–	–	–	–	–	A02	114X5734
			32	1.957	2.818	3.811	4.936	6.189	7.563	9.048	10.633	5.158	2.596	1.99	2.72	74	43		
			38	1.585	2.374	3.281	4.304	5.443	6.692	8.044	9.489	–	–	–	–	–	–		
			43	1.274	2.001	2.833	3.770	4.812	5.957	–	–	–	–	–	–	–	–		
			46	1.088	1.778	2.563	3.448	4.432	5.513	–	–	–	–	–	–	–	–		
OP-MCRN068	MTZ040	E	27	2.989	3.839	4.857	6.051	7.422	8.968	10.681	12.549	–	–	–	–	–	–	A02	114X5735
			32	2.751	3.542	4.484	5.584	6.847	8.270	9.848	11.571	5.839	2.995	1.95	2.75	76	45		
			38	2.440	3.155	4.001	4.986	6.115	7.390	8.806	10.356	–	–	–	–	–	–		
			43	2.163	2.811	3.573	4.459	5.475	6.625	–	–	–	–	–	–	–	–		
			46	1.992	2.597	3.307	4.132	5.080	6.153	–	–	–	–	–	–	–	–		
OP-MCRN086	MTZ050	E	27	3.376	4.530	5.901	7.497	9.320	11.367	13.629	16.095	–	–	–	–	–	–	A02	114X5737
			32	3.043	4.123	5.401	6.886	8.581	10.483	12.588	14.886	7.190	3.238	2.22	2.88	84	53		
			38	2.625	3.612	4.774	6.120	7.656	9.384	11.299	13.394	–	–	–	–	–	–		
			43	2.267	3.171	4.231	5.458	6.860	8.439	–	–	–	–	–	–	–	–		
			46	2.050	2.901	3.898	5.052	6.372	7.860	–	–	–	–	–	–	–	–		
OP-MCRN096	MTZ056	E	27	3.718	4.984	6.484	8.223	10.199	12.405	14.830	17.458	–	–	–	–	–	–	A02	114X5739
			32	3.351	4.535	5.930	7.544	9.377	11.424	13.675	16.119	7.883	3.562	2.21	2.90	83	52		
			38	2.891	3.971	5.237	6.697	8.355	10.208	12.250	14.471	–	–	–	–	–	–		
			43	2.495	3.484	4.638	5.967	7.476	9.165	–	–	–	–	–	–	–	–		
			46	2.254	3.186	4.271	5.519	6.938	8.528	–	–	–	–	–	–	–	–		
OP-MCRN108	MTZ064	E	27	4.474	5.874	7.501	9.357	11.436	13.731	16.227	18.907	–	–	–	–	–	–	A02	114X5740
			32	3.988	5.295	6.809	8.533	10.466	12.601	14.926	17.426	8.923	4.082	2.19	2.84	83	52		
			38	3.415	4.603	5.975	7.537	9.289	11.227	13.343	15.624	–	–	–	–	–	–		
			43	2.946	4.029	5.279	6.701	8.298	10.069	–	–	–	–	–	–	–	–		
			46	2.669	3.687	4.861	6.197	7.700	9.369	–	–	–	–	–	–	–	–		
OP-MGRN108	MTZ064	E	27	4.474	5.874	7.501	9.357	11.436	13.731	16.227	18.907	–	–	–	–	–	–	A02	114X5743
			32	3.988	5.295	6.809	8.533	10.466	12.601	14.926	17.426	8.923	4.012	2.22	2.90	83	52		
			38	3.415	4.603	5.975	7.537	9.289	11.227	13.343	15.624	–	–	–	–	–	–		
			43	2.946	4.029	5.279	6.701	8.298	10.069	–	–	–	–	–	–	–	–		
			46	2.669	3.687	4.861	6.197	7.700	9.369	–	–	–	–	–	–	–	–		

MBP

(1) E - 400V-3ph-50Hz Compressor & 230V-1ph-50Hz Fan
G - 230V-1ph-50Hz Compressor & 230V-1ph-50Hz Fan
(2) Nominal conditions (EN13215), Evaporating temperatures at dew point, Superheat 10 K, Subcooling 0 K
(3) Rated conditions (EN13215), Evaporating temperature (dew point) -10 °C, Ambient air temperature 32 °C, Return Gas Temperature 20 °C, Subcooling 0 K

COP: Coefficient Of Perfromance link to EN13215 and ErP (Energy related Products) 2009/125/CE
SEPR: Seasonal Energy Performance Ratio link to EN13215 and ErP (Energy Related Products) 2009/125/CE
Tamb [°C]: Ambient Temperature
Te [°C]: Evaporating Temperature
Q [kW]: Cooling Capacity in Kilo Watt
P [kW]: Power Input in Kilo Watt

Version
A02: Receiver + Stop valves + KP17WB pressure switch + Electrical box

*For regular updates and detailed capacities, please refer to **Coolselector®2** software*

EcoDesign 2018

Technical data and ordering

Optyma™ Commercial - Performance data - R452A MBP (count.)

Performance data

Model	Compressor	Electrical code [1]	Tamb [°C]	Cooling capacity Q [kW] [2] Te [°C] -25	-20	-15	-10	-5	0	5	10	EcoDesign [3] Q [kW]	P [kW]	COP	SEPR	Sound power level dB(A)	Sound pressure level 10 m dB(A)	Version	Code
OP-MCRN121	MTZ072	E	27	5.061	6.629	8.441	10.492	12.775	15.274	17.970	20.840	–	–	–	–	–	–	A02	114X5744
			32	4.507	9.740	7.653	9.557	11.676	13.996	16.503	19.175	10.006	4.746	2.11	2.77	82	51		
			38	3.855	5.182	6.705	8.426	10.343	12.445	14.720	17.151	–	–	–	–	–	–		
			43	3.323	4.531	5.915	7.479	9.221	11.138	–	–	–	–	–	–	–	–		
			46	3.009	4.143	5.441	6.908	8.545	10.347	–	–	–	–	–	–	–	–		
OP-MGRN121	MTZ072	E	27	5.061	6.629	8.441	10.492	12.775	15.274	17.970	20.840	–	–	–	–	–	–	A02	114X5746
			32	4.507	5.969	7.653	9.557	11.676	13.996	16.503	19.175	10.006	4.676	2.14	2.81	82	51		
			38	3.855	5.182	6.705	8.426	10.343	12.445	14.720	17.151	–	–	–	–	–	–		
			43	3.323	4.531	5.915	7.479	9.221	11.138	–	–	–	–	–	–	–	–		
			46	3.009	4.143	5.441	6.908	8.545	10.347	–	–	–	–	–	–	–	–		
OP-MCRN136	MTZ080	E	27	5.656	7.221	9.034	11.094	13.396	15.927	18.670	21.602	–	–	–	–	–	–	A02	114X5747
			32	5.133	6.596	8.282	10.195	12.330	14.677	17.221	19.943	10.683	5.378	1.99	2.58	82	51		
			38	4.492	5.823	7.350	9.078	11.006	13.127	15.430	17.899	–	–	–	–	–	–		
			43	3.947	5.161	6.549	8.118	9.869	11.798	–	–	–	–	–	–	–	–		
			46	3.617	4.757	6.059	7.529	9.172	10.984	–	–	–	–	–	–	–	–		
OP-MGRN136	MTZ080	E	27	5.599	7.138	8.913	10.923	13.157	15.601	18.235	21.033	–	–	–	–	–	–	A02	114X5749
			32	5.078	6.515	8.165	10.027	12.095	14.358	16.796	19.390	10.516	5.348	1.97	2.57	82	51		
			38	4.439	5.745	7.236	8.915	10.779	12.819	15.021	17.368	–	–	–	–	–	–		
			43	3.898	5.086	6.439	7.960	9.649	11.501	–	–	–	–	–	–	–	–		
			46	3.569	4.685	5.952	7.376	8.958	10.694	–	–	–	–	–	–	–	–		
OP-MGRN171	MTZ100	E	27	7.193	9.480	12.193	15.348	18.949	22.995	27.472	32.361	–	–	–	–	–	–	A02	114X5750
			32	6.450	8.580	11.096	14.016	17.351	21.100	25.257	29.806	14.626	6.795	2.15	3.10	87	56		
			38	5.553	7.494	9.773	12.412	15.425	18.818	22.590	26.730	–	–	–	–	–	–		
			43	4.797	6.582	8.663	11.067	13.812	16.908	–	–	–	–	–	–	–	–		
			46	4.340	6.030	7.992	10.255	12.840	15.759	–	–	–	–	–	–	–	–		
OP-MGRN215	MTZ125	E	27	9.170	12.040	15.402	19.263	17.908	28.437	33.704	39.377	–	–	–	–	–	–	A02	114X5753
			32	8.199	10.872	13.992	17.570	21.603	26.077	30.970	36.252	18.369	8.683	2.12	3.10	86	55		
			38	7.035	9.464	12.287	15.520	19.166	23.218	27.661	32.470	–	–	–	–	–	–		
			43	6.066	8.286	10.856	13.797	17.117	20.814	–	–	–	–	–	–	–	–		
			46	5.486	7.578	9.994	12.758	15.880	19.364	–	–	–	–	–	–	–	–		
OP-MGRN242	MTZ144	E	27	11.122	13.934	17.174	20.852	24.963	29.495	34.425	39.723	–	–	–	–	–	–	A02	114X5754
			32	9.989	12.605	15.615	19.032	22.856	27.079	31.684	36.646	19.922	10.070	1.98	3.01	85	54		
			38	8.658	11.029	13.754	16.848	20.319	24.165	28.373	32.924	–	–	–	–	–	–		
			43	7.570	9.730	12.209	15.028	18.199	21.723	–	–	–	–	–	–	–	–		
			46	6.926	8.956	11.285	13.936	16.924	20.253	–	–	–	–	–	–	–	–		
OP-MGRN271	MTZ160	E	27	12.150	15.195	18.675	22.594	26.941	31.696	36.826	42.289	–	–	–	–	–	–	A02	114X5757
			32	10.903	13.738	16.969	20.603	24.637	29.053	33.823	38.914	21.600	11.452	1.89	2.71	84	53		
			38	9.430	12.004	14.928	18.213	21.862	25.864	30.198	34.835	–	–	–	–	–	–		
			43	8.218	10.569	13.230	16.218	19.541	23.192	–	–	–	–	–	–	–	–		
			46	7.497	9.711	12.211	15.019	18.143	21.582	–	–	–	–	–	–	–	–		

MBP

(1) E - 400V-3ph-50Hz Compressor & 230V-1ph-50Hz Fan
G - 230V-1ph-50Hz Compressor & 230V-1ph-50Hz Fan
(2) Nominal conditions (EN13215), Evaporating temperatures at dew point, Superheat 10 K, Subcooling 0 K
(3) Rated conditions (EN13215), Evaporating temperature (dew point) -10 °C, Ambient air temperature 32 °C, Return Gas Temperature 20 °C, Subcooling 0 K

COP: Coefficient Of Perfromance link to EN13215 and ErP (Energy related Products) 2009/125/CE
SEPR: Seasonal Energy Performance Ratio link to EN13215 and ErP (Energy Related Products) 2009/125/CE
Tamb [°C]: Ambient Temperature
Te [°C]: Evaporating Temperature
Q [kW]: Cooling Capacity in Kilo Watt
P [kW]: Power Input in Kilo Watt

Version
A02: Receiver + Stop valves + KP17WB pressure switch + Electrical box

*For regular updates and detailed capacities, please refer to **Coolselector®2** software*

EcoDesign 2018

Technical data and ordering

Optyma™ Commercial - Performance data - R407A MBP

Performance data

Model	Compressor	Electrical code [1]	Tamb [°C]	Cooling capacity Q [kW] [2] Te [°C] -25	-20	-15	-10	-5	0	5	10	EcoDesign [3] Q [kW]	P [kW]	COP	SEPR	Sound power level dB(A)	Sound pressure level 10 m dB(A)	Version	Code
OP-MCRN030	MTZ018	E	27	0.780	1.152	1.600	2.127	2.729	3.405	4.149	4.956	–	–	–	–	–	–	A02	114X5721
			32	0.691	1.036	1.453	1.941	2.501	3.130	3.823	4.577	1.976	1.073	1.84	–	76	45		
			38	0.584	0.898	1.275	1.718	2.226	2.799	3.433	4.123	–	–	–	–	–	–		
			43	–	–	1.128	1.533	1.998	2.524	–	–	–	–	–	–	–	–		
			46	–	–	1.041	1.422	1.862		–	–	–	–	–	–	–	–		
OP-MCRN030	MTZ018	G	27	0.779	1.150	1.598	2.123	2.725	3.399	4.141	4.946	–	–	–	–	–	–	A02	114X5722
			32	0.690	1.035	1.450	1.938	2.496	3.123	3.815	4.567	1.973	1.113	1.77	–	76	45		
			38	0.583	0.896	1.273	1.714	2.221	2.792	3.424	4.112	–	–	–	–	–	–		
			43	–	–	1.125	1.529	1.993	2.517	–	–	–	–	–	–	–	–		
			46	–	–	1.038	1.419	1.857	–	–	–	–	–	–	–	–	–		
OP-MCRN038	MTZ022	E	27	1.151	1.616	2.169	2.806	3.525	4.320	5.184	6.106	–	–	–	–	–	–	A02	114X5724
			32	1.008	1.441	1.955	2.549	3.219	3.962	4.769	5.633	2.599	1.315	1.98	–	74	43		
			38	0.840	1.232	1.698	2.238	2.850	3.529	4.269	5.063	–	–	–	–	–	–		
			43	–	–	1.486	1.981	2.543	3.169	3.853	–	–	–	–	–	–	–		
			46	–	–	1.362	1.828	2.360	–	–	–	–	–	–	–	–	–		
OP-MCRN038	MTZ022	G	27	1.149	1.613	2.164	2.800	3.518	4.310	5.171	6.090	–	–	–	–	–	–	A02	114X5723
			32	1.006	1.438	1.951	2.543	3.211	3.951	4.755	5.616	2.593	1.365	1.90	–	74	43		
			38	0.838	1.229	1.693	2.232	2.841	3.518	4.255	5.045	–	–	–	–	–	–		
			43	–	–	1.482	1.974	2.534	3.157	–	–	–	–	–	–	–	–		
			46	–	–	1.357	1.822	2.351	–	–	–	–	–	–	–	–	–		
OP-MCRN048	MTZ028	E	27	1.568	2.218	2.988	3.883	4.905	6.055	7.330	8.725	–	–	–	–	–	–	A02	114X5726
			32	1.379	1.991	2.715	3.556	4.517	5.598	6.798	8.114	3.617	1.755	2.06	–	74	43		
			38	1.154	1.720	2.389	3.164	4.051	5.050	6.161	7.381	–	–	–	–	–	–		
			43	–	–	2.118	2.839	3.663	4.594	5.630	–	–	–	–	–	–	–		
			46	–	–	1.958	2.645	3.432	–	–	–	–	–	–	–	–	–		
OP-MCRN048	MTZ028	G	27	1.566	2.215	2.984	3.878	4.899	6.047	7.320	8.712	–	–	–	–	–	–	A02	114X5728
			32	1.377	1.989	2.712	3.551	4.510	5.590	6.788	8.101	3.613	1.820	1.99	–	74	43		
			38	1.152	1.718	2.385	3.159	4.044	5.041	6.149	7.367	–	–	–	–	–	–		
			43	–	–	2.115	2.834	3.656	4.584	–	–	–	–	–	–	–	–		
			46	–	–	1.954	2.640	3.425	–	–	–	–	–	–	–	–	–		
OP-MCRN054	MTZ032	E	27	1.873	2.589	3.434	4.409	5.516	6.752	8.112	9.589	–	–	–	–	–	–	A02	114X5729
			32	1.664	2.340	3.133	4.048	5.087	6.246	7.523	8.910	4.121	1.934	2.13	–	74	43		
			38	1.408	2.032	2.763	3.605	4.560	5.627	6.803	8.084	–	–	–	–	–	–		
			43	–	–	2.451	3.230	4.114	5.103	–	–	–	–	–	–	–	–		
			46	–	–	2.263	3.004	3.846	–	–	–	–	–	–	–	–	–		
OP-MCRN054	MTZ032	G	27	1.871	2.586	3.429	4.403	5.508	6.742	8.099	9.573	–	–	–	–	–	–	A02	114X5731
			32	1.662	2.336	3.129	4.042	5.078	6.235	7.509	8.893	4.116	2.006	2.05	–	74	43		
			38	1.405	2.029	2.758	3.598	4.551	5.615	6.788	8.065	–	–	–	–	–	–		
			43	–	–	2.446	3.223	4.105	5.092	–	–	–	–	–	–	–	–		
			46	–	–	2.258	2.997	3.836	–	–	–	–	–	–	–	–	–		

MBP

(1) E - 400V-3ph-50Hz Compressor & 230V-1ph-50Hz Fan
G - 230V-1ph-50Hz Compressor & 230V-1ph-50Hz Fan
(2) Nominal conditions (EN13215), Evaporating temperatures at dew point, Superheat 10 K, Subcooling 0 K
(3) Rated conditions (EN13215), Evaporating temperature (dew point) -10 °C, Ambient air temperature 32 °C, Return Gas Temperature 20 °C, Subcooling 0 K

COP: Coefficient Of Perfromance link to EN13215 and ErP (Energy related Products) 2009/125/CE
SEPR: Seasonal Energy Performance Ratio link to EN13215 and ErP (Energy Related Products) 2009/125/CE
Tamb [°C]: Ambient Temperature
Te [°C]: Evaporating Temperature
Q [kW]: Cooling Capacity in Kilo Watt
P [kW]: Power Input in Kilo Watt

Version
A02: Receiver + Stop valves + KP17WB pressure switch + Electrical box

*For regular updates and detailed capacities, please refer to **Coolselector®2** software*

EcoDesign 2018

Technical data and ordering

Optyma™ Commercial - Performance data - R407A MBP (count.)

Performance data

Model	Compressor	Electrical code [1]	Tamb [°C]	Cooling capacity Q [kW] [2] Te [°C] -25	-20	-15	-10	-5	0	5	10	EcoDesign [3] Q [kW]	P [kW]	COP	SEPR	Sound power level dB(A)	Sound pressure level 10 m dB(A)	Version	Code
OP-MCRN060	MTZ036	E	27	2.189	2.997	3.937	5.009	6.210	7.535	8.975	10.520	–	–	–	–	–	–	A02	114X5732
			32	1.957	2.721	3.605	4.609	5.732	6.970	8.316	9.760	4.697	2.345	2.00	–	74	43		
			38	1.669	2.379	3.193	4.116	5.145	6.279	7.512	8.836	–	–	–	–	–	–		
			43	–	–	2.845	3.698	4.649	5.696	6.834	–	–	–	–	–	–	–		
			46	–	–	2.634	3.445	4.349	–	–	–	–	–	–	–	–	–		
OP-MCRN060	MTZ036	G	27	2.186	2.993	3.932	5.001	6.200	7.521	8.958	10.498				–				
			32	1.954	2.717	3.599	4.601	5.722	6.956	8.298	9.737	4.689	2.432	1.93	–	74	43		
			38	1.666	2.374	3.187	4.107	5.134	6.264	7.492	8.811	–	–	–	–	–	–	A02	114X5734
			43	–	–	2.838	3.689	4.637	5.680	–	–	–	–	–	–	–	–		
			46	–	–	2.628	3.436	4.337	–	–	–	–	–	–	–	–	–		
OP-MCRN068	MTZ040	E	27	2.555	3.467	4.515	5.702	7.026	8.483	10.066	11.765	–	–	–	–	–	–	A02	114X5735
			32	2.307	3.174	4.163	5.278	6.517	7.879	9.357	10.942	5.379	2.649	2.03	2.57	76	45		
			38	1.996	2.808	3.725	4.751	5.888	7.134	8.485	9.934	–	–	–	–	–	–		
			43	–	–	3.349	4.300	5.351	6.499	–	–	–	–	–	–	–	–		
			46	–	–	3.121	4.027	5.024	–	–	–	–	–	–	–	–	–		
OP-MCRN086	MTZ050	E	27	2.969	4.106	5.454	7.017	8.798	10.791	12.990	15.384	–	–	–	–	–	–	A02	114X5737
			32	2.617	3.678	4.937	6.399	8.066	9.936	12.003	14.259	6.513	2.866	2.27	3.08	84	53		
			38	2.204	3.174	4.324	5.663	7.193	8.915	10.824	12.913	–	–	–	–	–	–		
			43	–	–	3.825	5.060	6.475	8.072	–	–	–	–	–	–	–	–		
			46	–	–	3.531	4.703	6.049	–	–	–	–	–	–	–	–	–		
OP-MCRN096	MTZ056	E	27	3.077	4.284	5.719	7.390	9.297	11.438	13.804	16.382	–	–	–	–	–	–	A02	114X5739
			32	2.713	3.844	5.188	6.755	8.547	10.561	12.792	15.229	6.879	3.120	2.20	2.94	83	52		
			38	2.290	3.328	4.563	6.004	7.656	9.519	11.587	13.852	–	–	–	–	–	–		
			43	–	–	4.054	5.390	6.925	8.660	–	–	–	–	–	–	–	–		
			46	–	–	3.754	5.027	6.492	–	–	–	–	–	–	–	–	–		
OP-MCRN108	MTZ064	E	27	3.662	5.024	6.637	8.507	10.633	13.005	15.611	18.432	–	–	–	–	–	–	A02	114X5740
			32	3.246	4.525	6.038	7.791	9.785	12.013	14.465	17.123	7.943	3.730	2.13	2.81	83	52		
			38	2.741	3.918	5.308	6.920	8.755	10.810	13.076	15.540	–	–	–	–	–	–		
			43	–	–	4.698	6.190	7.891	9.802	–	–	–	–	–	–	–	–		
			46	–	–	4.334	5.753	7.374	–	–	–	–	–	–	–	–	–		
OP-MGRN108	MTZ064	E	27	3.662	5.024	6.637	8.507	10.633	13.005	15.611	18.432	–	–	–	–	–	–	A02	114X5743
			32	3.246	4.525	6.038	7.791	9.785	12.013	14.465	17.123	7.943	3.660	2.17	2.87	83	52		
			38	2.741	3.918	5.308	6.920	8.755	10.810	13.076	15.540	–	–	–	–	–	–		
			43	–	–	4.698	6.190	7.891	9.802	–	–	–	–	–	–	–	–		
			46	–	–	4.334	5.753	7.374	–	–	–	–	–	–	–	–	–		

MBP

(1) E - 400V-3ph-50Hz Compressor & 230V-1ph-50Hz Fan
G - 230V-1ph-50Hz Compressor & 230V-1ph-50Hz Fan
(2) Nominal conditions (EN13215), Evaporating temperatures at dew point, Superheat 10 K, Subcooling 0 K
(3) Rated conditions (EN13215), Evaporating temperature (dew point) -10 °C, Ambient air temperature 32 °C, Return Gas Temperature 20 °C, Subcooling 0 K

COP: Coefficient Of Perfromance link to EN13215 and ErP (Energy related Products) 2009/125/CE
SEPR: Seasonal Energy Performance Ratio link to EN13215 and ErP (Energy Related Products) 2009/125/CE
Tamb [°C]: Ambient Temperature
Te [°C]: Evaporating Temperature
Q [kW]: Cooling Capacity in Kilo Watt
P [kW]: Power Input in Kilo Watt

Version
A02: Receiver + Stop valves + KP17WB pressure switch + Electrical box

*For regular updates and detailed capacities, please refer to **Coolselector®2** software*

EcoDesign 2018

Technical data and ordering

Optyma™ Commercial - Performance data - R407A MBP (count.)

Performance data

Model	Compressor	Electrical code [1]	Tamb [°C]	Cooling capacity Q [kW] [2] Te [°C] -25	-20	-15	-10	-5	0	5	10	EcoDesign [3] Q [kW]	P [kW]	COP	SEPR	Sound power level dB(A)	Sound pressure level 10 m dB(A)	Version	Code
OP-MCRN121	MTZ072	E	27	4.129	5.614	7.350	9.336	11.567	14.033	16.717	19.600	–	–	–	–	–	–	A02	114X5744
			32	3.642	5.035	6.663	8.528	10.628	12.951	15.484	18.209	8.702	4.156	2.09	2.76	82	51		
			38	3.076	4.355	5.852	7.571	9.509	11.660	14.011	16.546	–	–	–	–	–	–		
			43	–	–	5.193	6.787	8.589	10.595	–	–	–	–	–	–	–	–		
			46	–	–	4.805	6.324	8.044	–	–	–	–	–	–	–	–	–		
OP-MGRN121	MTZ072	E	27	4.129	5.614	7.350	9.336	11.567	14.033	16.717	19.600	–	–	–	–	–	–	A02	114X5746
			32	3.642	5.035	6.663	8.528	10.628	12.951	15.484	18.209	8.702	4.086	2.13	2.82	82	51		
			38	3.076	4.355	5.852	7.571	9.509	11.660	14.011	16.546	–	–	–	–	–	–		
			43	–	–	5.193	6.787	8.589	10.595	–	–	–	–	–	–	–	–		
			46	–	–	4.805	6.324	8.044	–	–	–	–	–	–	–	–	–		
OP-MCRN136	MTZ080	E	27	4.838	6.488	8.377	10.501	12.846	15.396	18.128	21.018	–	–	–	–	–	–	A02	114X5747
			32	4.313	5.872	7.649	9.643	11.844	14.238	16.804	19.520	9.855	4.902	2.01	2.64	82	51		
			38	3.685	5.132	6.774	8.611	10.638	12.843	15.208	17.716	–	–	–	–	–	–		
			43	–	–	6.047	7.753	9.634	11.680	–	–	–	–	–	–	–	–		
			46	–	–	5.615	7.241	9.033	–	–	–	–	–	–	–	–	–		
OP-MGRN136	MTZ080	E	27	4.838	6.488	8.377	10.501	12.846	15.396	18.128	21.018	–	–	–	–	–	–	A02	114X5749
			32	4.313	5.872	7.649	9.643	11.844	14.238	16.804	19.520	9.855	4.902	2.01	2.64	82	51		
			38	3.685	5.132	6.774	8.611	10.638	12.843	15.208	17.716	–	–	–	–	–	–		
			43	–	–	6.047	7.753	9.634	11.680	–	–	–	–	–	–	–	–		
			46	–	–	5.615	7.241	9.033	–	–	–	–	–	–	–	–	–		
OP-MGRN171	MTZ100	E	27	5.722	7.951	10.592	13.658	17.151	21.065	25.388	30.098	–	–	–	–	–	–	A02	114X5750
			32	5.134	7.239	9.720	12.592	15.859	19.521	23.567	27.981	12.812	6.257	2.05	2.83	87	56		
			38	4.389	6.343	8.631	11.270	14.268	17.628	21.343	25.403	–	–	–	–	–	–		
			43	–	–	7.696	10.140	12.913	16.022	–	–	–	–	–	–	–	–		
			46	–	–	7.126	9.452	12.091	–	–	–	–	–	–	–	–	–		
OP-MGRN215	MTZ125	E	27	7.559	10.266	13.446	17.108	21.251	25.867	30.937	36.433	–	–	–	–	–	–	A02	114X5753
			32	6.687	9.225	12.205	15.641	19.533	23.876	28.654	33.844	15.935	7.758	2.05	2.83	86	55		
			38	5.669	7.999	10.737	13.897	17.486	21.500	25.926	30.745	–	–	–	–	–	–		
			43	–	–	9.539	12.467	15.799	19.536	–	–	–	–	–	–	–	–		
			46	–	–	8.834	11.621	14.798	–	–	–	–	–	–	–	–	–		
OP-MGRN242	MTZ144	E	27	8.818	11.861	15.388	19.399	23.882	28.814	34.160	39.879	–	–	–	–	–	–	A02	114X5754
			32	7.889	10.760	14.074	17.836	22.036	26.656	31.666	37.030	18.193	8.951	2.03	2.74	85	54		
			38	6.751	9.410	12.465	15.923	19.782	24.027	28.635	33.574	–	–	–	–	–	–		
			43	–	–	11.109	14.312	17.883	21.814	–	–	–	–	–	–	–	–		
			46	–	–	10.295	13.342	16.740	–	–	–	–	–	–	–	–	–		
OP-MGRN271	MTZ160	E	27	9.535	12.804	16.576	20.846	25.595	30.788	36.383	42.325	–	–	–	–	–	–	A02	114X5757
			32	8.538	11.627	15.177	19.185	23.637	28.505	33.750	39.325	19.587	10.096	1.94	2.58	84	53		
			38	7.319	10.186	13.463	17.154	21.249	25.726	30.552	35.686	–	–	–	–	–	–		
			43	–	–	12.020	15.443	19.238	23.386	–	–	–	–	–	–	–	–		
			46	–	–	11.153	14.413	18.025	–	–	–	–	–	–	–	–	–		

MBP

(1) E - 400V-3ph-50Hz Compressor & 230V-1ph-50Hz Fan
G - 230V-1ph-50Hz Compressor & 230V-1ph-50Hz Fan
(2) Nominal conditions (EN13215), Evaporating temperatures at dew point, Superheat 10 K, Subcooling 0 K
(3) Rated conditions (EN13215), Evaporating temperature (dew point) -10 °C, Ambient air temperature 32 °C, Return Gas Temperature 20 °C, Subcooling 0 K

COP: Coefficient Of Perfromance link to EN13215 and ErP (Energy related Products) 2009/125/CE
SEPR: Seasonal Energy Performance Ratio link to EN13215 and ErP (Energy Related Products) 2009/125/CE
Tamb [°C]: Ambient Temperature
Te [°C]: Evaporating Temperature
Q [kW]: Cooling Capacity in Kilo Watt
P [kW]: Power Input in Kilo Watt

Version
A02: Receiver + Stop valves + KP17WB pressure switch + Electrical box

*For regular updates and detailed capacities, please refer to **Coolselector®2** software*

EcoDesign 2018

Technical data and ordering

Optyma™ Commercial - Performance data - R407F MBP

Performance data

Model	Compressor	Electrical code [1]	Tamb [°C]	Cooling capacity Q [kW] [2] Te [°C] -25	-20	-15	-10	-5	0	5	10	EcoDesign [3] Q [kW]	P [kW]	COP	SEPR	Sound power level dB(A)	Sound pressure level 10 m dB(A)	Version	Code
OP-MCRN030	MTZ018	E	27	0.827	1.228	1.705	2.257	2.882	3.579	4.343	5.170	–	–	–	–	–	–		
			32	0.715	1.086	1.529	2.043	2.628	3.282	4.000	4.780	2.060	1.132	1.82	–	76	45		
			38	–	0.939	1.342	1.812	2.349	2.951	3.615	4.339	–	–	–	–	–	–	A02	114X5721
			43	–	–	1.206	1.640	2.137	2.696	–	–	–	–	–	–	–	–		
			46	–	–	1.132	1.545	2.018	–	–	–	–	–	–	–	–	–		
OP-MCRN030	MTZ018	G	27	0.826	1.226	1.701	2.252	2.877	3.572	4.334	5.159	–	–	–	–	–	–		
			32	0.713	1.084	1.526	2.039	2.623	3.275	3.992	4.769	2.056	1.175	1.75	–	76	45		
			38	–	0.937	1.339	1.808	2.344	2.944	3.606	4.327				–			A02	114X5722
			43	–	–	1.204	1.637	2.132	2.689	–	–	–	–	–	–	–	–		
			46	–	–	1.130	1.542	2.014	–	–	–	–	–	–	–	–	–		
OP-MCRN038	MTZ022	E	27	1.217	1.710	2.287	2.948	3.689	4.507	5.398	6.355	–	–	–	–	–	–		
			32	1.049	1.508	2.047	2.667	3.367	4.142	4.988	5.900	2.694	1.389	1.94	–	74	43		
			38	–	1.297	1.794	2.367	3.016	3.740	4.533	5.391	–	–	–	–	–	–	A02	114X5724
			43	–	–	1.608	2.144	2.754	3.435	–	–	–	–	–	–	–	–		
			46	–	–	1.508	2.022	2.608	3.264	–	–	–	–	–	–	–	–		
OP-MCRN038	MTZ022	G	27	1.214	1.706	2.282	2.941	3.680	4.496	5.384	6.338	–	–	–	–	–	–		
			32	1.047	1.505	2.043	2.661	3.358	4.131	4.974	5.883	2.688	1.442	1.86	–	74	43		
			38	–	1.294	1.789	2.361	3.008	3.729	4.519	5.374	–	–	–	–	–	–	A02	114X5723
			43	–	–	1.604	2.139	2.746	3.424	–	–	–	–	–	–	–	–		
			46	–	–	1.504	2.017	2.601	–	–	–	–	–	–	–	–	–		
OP-MCRN048	MTZ028	E	27	1.723	2.426	3.243	4.179	5.238	6.420	7.727	9.157	–	–	–	–	–	–		
			32	1.463	2.118	2.883	3.763	4.763	5.883	7.126	8.492	3.791	1.850	2.05	–	74	43		
			38	–	1.803	2.512	3.330	4.262	5.312	6.482	7.772	–	–	–	–	–	–	A02	114X5726
			43	–	–	2.247	3.018	3.899	4.894	–	–	–	–	–	–	–	–		
			46	–	–	2.105	2.851	3.704	–	–	–	–	–	–	–	–	–		
OP-MCRN048	MTZ028	G	27	1.670	2.268	3.000	3.875	4.899	6.074	7.396	8.861	–	–	–	–	–	–		
			32	1.525	2.084	2.763	3.574	4.523	5.614	6.845	8.213	3.600	1.810	1.99	–	74	43		
			38	–	1.868	2.487	3.223	4.085	5.076	6.200	7.452	–	–	–	–	–	–	A02	114X5728
			43	–	–	2.260	2.936	3.727	4.638	–	–	–	–	–	–	–	–		
			46	–	–	2.123	2.765	3.514	–	–	–	–	–	–	–	–	–		
OP-MCRN054	MTZ032	E	27	2.029	2.798	3.689	4.706	5.850	7.120	8.515	10.031	–	–	–	–	–	–		
			32	1.755	2.474	3.309	4.265	5.343	6.546	7.870	9.315	4.299	2.037	2.11	–	74	43		
			38	–	2.135	2.909	3.796	4.801	5.925	7.168	8.528	–	–	–	–	–	–	A02	114X5729
			43	–	–	2.618	3.453	4.400	5.461	–	–	–	–	–	–	–	–		
			46	–	–	2.460	3.266	4.180	–	–	–	–	–	–	–	–	–		
OP-MCRN054	MTZ032	G	27	2.026	2.794	3.683	4.698	5.840	7.108	8.500	10.012	–	–	–	–	–	–		
			32	1.752	2.470	3.303	4.257	5.334	6.534	7.855	9.297	4.292	2.114	2.03	–	74	43		
			38	–	2.132	2.904	3.790	4.792	5.913	7.153	8.510	–	–	–	–	–	–	A02	114X5731
			43	–	–	2.614	3.447	4.392	5.451	–	–	–	–	–	–	–	–		
			46	–	–	2.456	3.260	4.172	–	–	–	–	–	–	–	–	–		

MBP

(1) E - 400V-3ph-50Hz Compressor & 230V-1ph-50Hz Fan
G - 230V-1ph-50Hz Compressor & 230V-1ph-50Hz Fan
(2) Nominal conditions (EN13215), Evaporating temperatures at dew point, Superheat 10 K, Subcooling 0 K
(3) Rated conditions (EN13215), Evaporating temperature (dew point) -10 °C, Ambient air temperature 32 °C, Return Gas Temperature 20 °C, Subcooling 0 K

COP: Coefficient Of Perfromance link to EN13215 and ErP (Energy related Products) 2009/125/CE
SEPR: Seasonal Energy Performance Ratio link to EN13215 and ErP (Energy Related Products) 2009/125/CE
Tamb [°C]: Ambient Temperature
Te [°C]: Evaporating Temperature
Q [kW]: Cooling Capacity in Kilo Watt
P [kW]: Power Input in Kilo Watt

Version
A02: Receiver + Stop valves + KP17WB pressure switch + Electrical box

*For regular updates and detailed capacities, please refer to **Coolselector®2** software*

EcoDesign 2018

Technical data and ordering

Optyma™ Commercial - Performance data - R407F MBP (count.)

Performance data

Model	Compressor	Electrical code [1]	Tamb [°C]	Cooling capacity Q [kW] [2] Te [°C] -25	-20	-15	-10	-5	0	5	10	EcoDesign [3] Q [kW]	P [kW]	COP	SEPR	Sound power level dB(A)	Sound pressure level 10 m dB(A)	Version	Code
OP-MCRN060	MTZ036	E	27	2.327	3.190	4.181	5.299	4.917	7.902	9.378	10.961	–	–	–	–	–	–	A02	114X5732
			32	2.042	2.854	3.785	4.837	6.007	7.294	8.691	10.193	4.881	2.473	1.97	–	74	43		
			38	–	2.503	3.371	4.350	5.440	6.640	7.946	9.353	–	–	–	–	–	–		
			43	–	–	3.067	3.993	5.021	6.153	–	–	–	–	–	–	–	–		
			46	–	–	2.900	3.796	4.791	–	–	–	–	–	–	–	–	–		
OP-MCRN060	MTZ036	G	27	2.323	3.185	4.174	5.289	6.528	7.886	9.358	10.937	–	–	–	–	–	–	A02	114X5734
			32	2.039	2.849	3.779	4.828	5.995	7.278	8.672	10.169	4.872	2.565	1.90	–	74	43		
			38	–	2.498	3.365	4.342	5.429	6.625	7.927	9.330	–	–	–	–	–	–		
			43	–	–	3.062	3.985	5.011	6.140	–	–	–	–	–	–	–	–		
			46	–	–	2.894	3.789	4.781	–	–	–	–	–	–	–	–	–		
OP-MCRN068	MTZ040	E	27	2.726	3.692	4.795	6.035	7.411	8.919	10.552	12.305	–	–	–	–	–	–	A02	114X5735
			32	2.413	3.324	4.363	5.531	6.827	8.251	9.796	11.457	5.580	2.789	2.00	2.80	76	45		
			38	–	2.937	3.908	4.996	6.204	7.530	8.972	10.524	–	–	–	–	–	–		
			43	–	–	3.572	4.602	5.742	6.992	–	–	–	–	–	–	–	–		
			46	–	–	3.385	4.384	5.486	–	–	–	–	–	–	–	–	–		
OP-MCRN086	MTZ050	E	27	3.174	4.390	5.814	7.451	9.299	11.357	13.619	16.078	–	–	–	–	–	–	A02	114X5737
			32	2.745	3.870	5.194	6.723	8.459	10.402	12.547	14.890	6.776	3.016	2.25	3.27	84	53		
			38	–	3.344	4.559	5.967	7.576	9.384	11.393	13.597	–	–	–	–	–	–		
			43	–	–	4.111	5.429	6.938	8.641	–	–	–	–	–	–	–	–		
			46	–	–	3.874	5.142	6.595	–	–	–	–	–	–	–	–	–		
OP-MCRN096	MTZ056	E	27	3.077	4.576	6.089	7.831	9.805	12.010	14.441	17.094	–	–	–	–	–	–	A02	114X5739
			32	2.713	4.043	5.456	7.093	8.958	11.051	13.370	15.911	7.153	3.289	2.17	3.16	83	52		
			38	2.290	3.507	4.814	6.335	8.076	10.040	12.229	14.638	–	–	–	–	–	–		
			43	–	–	4.365	5.799	7.445	9.310	–	–	–	–	–	–	–	–		
			46	–	–	4.126	5.515	7.109	–	–	–	–	–	–	–	–	–		
OP-MCRN108	MTZ064	E	27	3.662	5.351	7.036	8.972	11.159	13.597	16.280	19.200	–	–	–	–	–	–	A02	114X5740
			32	3.246	4.761	6.344	8.171	10.245	12.566	15.132	17.936	8.250	3.937	2.10	2.99	83	52		
			38	2.741	4.144	5.616	7.321	9.265	11.452	13.879	16.544	–	–	–	–	–	–		
			43	–	–	5.083	6.695	8.538	10.617	–	–	–	–	–	–	–	–		
			46	–	–	4.790	6.351	8.137	–	–	–	–	–	–	–	–	–		
OP-MGRN108	MTZ064	E	27	3.662	5.351	7.036	8.972	11.159	13.597	16.280	19.200	–	–	–	–	–	–	A02	114X5743
			32	3.246	4.761	6.344	8.171	10.245	12.566	15.132	17.936	8.250	3.867	2.13	3.05	83	52		
			38	2.741	4.144	5.616	7.321	9.265	11.452	13.879	16.544	–	–	–	–	–	–		
			43	–	–	5.083	6.695	8.538	10.617	–	–	–	–	–	–	–	–		
			46	–	–	4.790	6.351	8.137	–	–	–	–	–	–	–	–	–		

MBP

(1) E - 400V-3ph-50Hz Compressor & 230V-1ph-50Hz Fan
G - 230V-1ph-50Hz Compressor & 230V-1ph-50Hz Fan
(2) Nominal conditions (EN13215), Evaporating temperatures at dew point, Superheat 10 K, Subcooling 0 K
(3) Rated conditions (EN13215), Evaporating temperature (dew point) -10 °C, Ambient air temperature 32 °C, Return Gas Temperature 20 °C, Subcooling 0 K

COP: Coefficient Of Perfromance link to EN13215 and ErP (Energy related Products) 2009/125/CE
SEPR: Seasonal Energy Performance Ratio link to EN13215 and ErP (Energy Related Products) 2009/125/CE
Tamb [°C]: Ambient Temperature
Te [°C]: Evaporating Temperature
Q [kW]: Cooling Capacity in Kilo Watt
P [kW]: Power Input in Kilo Watt

Version
A02: Receiver + Stop valves + KP17WB pressure switch + Electrical box

*For regular updates and detailed capacities, please refer to **Coolselector®2** software*

EcoDesign 2018

Technical data and ordering

Optyma™ Commercial - Performance data - R407F MBP (count.)

Performance data

Model	Compressor	Electrical code [1]	Tamb [°C]	Cooling capacity Q [kW] [2] Te [°C] -25	-20	-15	-10	-5	0	5	10	EcoDesign [3] Q [kW]	P [kW]	COP	SEPR	Sound power level dB(A)	Sound pressure level 10 m dB(A)	Version	Code
OP-MCRN121	MTZ072	E	27	4.129	5.932	7.743	9.797	12.096	14.636	17.413	20.420	–	–	–	–	–	–	A02	114X5744
			32	3.642	5.275	6.981	8.929	11.120	13.554	16.226	19.132	9.024	4.391	2.06	2.87	82	51		
			38	3.076	4.608	6.202	8.030	10.099	12.409	14.960	17.747	–	–	–	–	–	–		
			43	–	–	5.652	7.392	9.366	11.580	–	–	–	–	–	–	–	–		
			46	–	–	5.361	7.052	8.975	–	–	–	–	–	–	–	–	–		
OP-MGRN121	MTZ072	E	27	4.362	5.932	7.743	9.797	12.096	14.636	17.413	20.420	–	–	–	–	–	–	A02	114X5746
			32	3.804	5.275	6.981	8.929	11.120	13.554	16.226	19.132	9.024	4.321	2.09	2.92	82	51		
			38	–	4.608	6.202	8.030	10.099	12.409	14.960	17.747	–	–	–	–	–	–		
			43	–	–	5.652	7.392	9.366	11.580	–	–	–	–	–	–	–	–		
			46	–	–	5.361	7.052	8.975	–	–	–	–	–	–	–	–	–		
OP-MCRN136	MTZ080	E	27	5.095	6.828	8.793	10.988	13.410	16.051	18.904	21.958	–	–	–	–	–	–	A02	114X5747
			32	4.502	6.146	8.014	10.108	12.426	14.963	17.713	20.666	10.232	5.269	1.94	2.67	82	51		
			38	–	5.443	7.209	9.193	11.395	13.814	16.445	19.280	–	–	–	–	–	–		
			43	–	–	6.630	8.534	10.650	12.978	–	–	–	–	–	–	–	–		
			46	–	–	6.314	8.178	10.248	–	–	–	–	–	–	–	–	–		
OP-MGRN136	MTZ080	E	27	5.095	6.828	8.793	10.988	13.410	16.051	18.904	21.958	–	–	–	–	–	–	A02	114X5749
			32	4.502	6.146	8.014	10.108	12.426	14.963	17.713	20.666	10.232	5.199	1.97	2.71	82	51		
			38	–	5.443	7.209	9.193	11.395	13.814	16.445	19.280	–	–	–	–	–	–		
			43	–	–	6.630	8.534	10.650	12.978	–	–	–	–	–	–	–	–		
			46	–	–	6.314	8.178	10.248	–	–	–	–	–	–	–	–	–		
OP-MGRN171	MTZ100	E	27	6.109	8.512	11.331	14.571	18.228	22.294	26.754	31.591	–	–	–	–	–	–	A02	114X5750
			32	5.361	7.605	10.233	13.255	16.673	20.484	24.678	29.239	13.354	6.576	2.03	3.13	87	56		
			38	–	6.661	9.091	11.878	15.031	18.551	22.436	26.674	–	–	–	–	–	–		
			43	–	–	8.253	10.869	13.822	17.118	–	–	–	–	–	–	–	–		
			46	–	–	7.785	10.312	13.156	–	–	–	–	–	–	–	–	–		
OP-MGRN215	MTZ125	E	27	8.048	10.935	14.279	18.089	16.675	27.118	32.326	37.984	–	–	–	–	–	–	A02	114X5753
			32	7.006	9.693	12.821	16.405	20.453	24.966	29.940	35.365	16.552	8.164	2.03	2.99	86	55		
			38	–	8.442	11.338	14.672	18.457	22.700	27.401	32.554	–	–	–	–	–	–		
			43	–	–	10.302	13.449	17.033	21.065	–	–	–	–	–	–	–	–		
			46	–	–	9.758	12.804	16.276	–	–	–	–	–	–	–	–	–		
OP-MGRN242	MTZ144	E	27	9.395	12.618	16.301	20.448	25.056	30.115	35.609	41.521	–	–	–	–	–	–	A02	114X5754
			32	8.274	11.307	14.779	18.699	23.069	27.884	33.130	38.793	18.889	9.430	2.00	2.86	85	54		
			38	–	9.947	13.191	16.861	20.962	25.495	30.453	35.821	–	–	–	–	–	–		
			43	–	–	12.043	15.525	19.420	23.732	–	–	–	–	–	–	–	–		
			46	–	–	11.420	14.800	18.579	–	–	–	–	–	–	–	–	–		
OP-MGRN271	MTZ160	E	27	10.130	13.582	17.510	21.916	26.794	32.131	37.908	44.101	–	–	–	–	–	–	A02	114X5757
			32	8.945	12.206	15.925	20.109	24.757	29.859	35.401	41.360	20.332	10.650	1.91	2.67	84	53		
			38	–	10.781	14.276	18.215	22.603	27.436	32.702	38.385	–	–	–	–	–	–		
			43	–	–	13.085	16.842	21.030	25.652	–	–	–	–	–	–	–	–		
			46	–	–	12.437	16.096	20.175	–	–	–	–	–	–	–	–	–		

MBP

(1) E - 400V-3ph-50Hz Compressor & 230V-1ph-50Hz Fan
G - 230V-1ph-50Hz Compressor & 230V-1ph-50Hz Fan
(2) Nominal conditions (EN13215), Evaporating temperatures at dew point, Superheat 10 K, Subcooling 0 K
(3) Rated conditions (EN13215), Evaporating temperature (dew point) -10 °C, Ambient air temperature 32 °C, Return Gas Temperature 20 °C, Subcooling 0 K

COP: Coefficient Of Perfromance link to EN13215 and ErP (Energy related Products) 2009/125/CE
SEPR: Seasonal Energy Performance Ratio link to EN13215 and ErP (Energy Related Products) 2009/125/CE
Tamb [°C]: Ambient Temperature
Te [°C]: Evaporating Temperature
Q [kW]: Cooling Capacity in Kilo Watt
P [kW]: Power Input in Kilo Watt

Version
A02: Receiver + Stop valves + KP17WB pressure switch + Electrical box

*For regular updates and detailed capacities, please refer to **Coolselector®2** software*

EcoDesign 2018

Technical data and ordering

Optyma™ Commercial - Performance data - R407C MBP

Performance data

Model	Compressor	Electrical code [1]	Tamb [°C]	Cooling capacity Q [kW] [2] Te [°C] -15	-10	-5	0	5	10	15	EcoDesign [3] Q [kW]	P [kW]	COP	SEPR	Sound power level dB(A)	Sound pressure level 10 m dB(A)	Version	Code
OP-MCRN030	MTZ018	E	27	1.512	2.049	2.663	3.350	4.104	4.918	5.785	–	–	–	–	–	–	A02	114X5721
			32	1.337	1.843	2.421	3.066	3.774	4.539	5.353	1.863	0.984	1.89	–	76	45		
			38	–	1.608	2.143	2.738	3.391	4.097	–	–	–	–	–	–	–		
			43	–	1.422	1.921	2.476	3.083	3.738	–	–	–	–	–	–	–		
			46	–	–	1.793	2.323	2.902	3.528	–	–	–	–	–	–	–		
OP-MCRN030	MTZ018	G	27	1.434	1.970	2.595	3.305	4.088	4.937	5.839	–	–	–	–	–	–	A02	114X5722
			32	1.320	1.821	2.402	3.058	3.784	4.569	5.407	1.841	0.996	1.85	2.77	76	45		
			38	–	1.645	2.179	2.776	3.435	4.148	–	–	–	–	–	–	–		
			43	–	1.494	1.993	2.547	3.153	3.807	–	–	–	–	–	–	–		
			46	–	–	1.879	2.409	2.985	3.606	–	–	–	–	–	–	–		
OP-MCRN038	MTZ022	E	27	2.064	2.688	3.388	4.157	4.987	5.868	6.790	–	–	–	–	–	–	A02	114X5724
			32	1.855	2.444	3.101	3.821	4.597	5.420	6.281	2.475	1.300	1.90	–	74	43		
			38	–	2.154	2.760	3.422	4.133	4.886	–	–	–	–	–	–	–		
			43	–	1.919	2.482	3.094	3.751	4.445	–	–	–	–	–	–	–		
			46	–	–	2.318	2.900	3.524	4.183	–	–	–	–	–	–	–		
OP-MCRN038	MTZ022	G	27	1.985	2.618	3.338	4.136	5.004	5.931	6.907	–	–	–	–	–	–	A02	114X5723
			32	1.786	2.380	3.053	3.800	4.612	5.479	6.392	2.410	1.301	1.85	–	74	43		
			38	–	2.101	2.720	3.404	4.148	4.943	–	–	–	–	–	–	–		
			43	–	1.877	2.449	3.081	3.767	4.501	–	–	–	–	–	–	–		
			46	–	–	2.290	2.890	3.542	4.239	–	–	–	–	–	–	–		
OP-MCRN048	MTZ028	E	27	2.691	3.594	4.632	5.805	7.110	8.538	10.081	–	–	–	–	–	–	A02	114X5726
			32	2.432	3.289	4.270	5.375	6.601	7.942	9.391	3.323	1.619	2.05	–	74	43		
			38	–	2.918	3.830	4.852	5.984	7.220	–	–	–	–	–	–	–		
			43	–	2.606	3.460	4.414	5.467	6.617	–	–	–	–	–	–	–		
			46	–	–	3.239	4.151	5.156	6.254	–	–	–	–	–	–	–		
OP-MCRN048	MTZ028	G	27	2.628	3.553	4.612	5.796	7.097	8.501	9.993	–	–	–	–	–	–	A02	114X5728
			32	2.380	3.256	4.251	5.359	6.573	7.882	9.272	3.289	1.655	1.99	–	74	43		
			38	–	2.896	3.819	4.840	5.953	7.149	–	–	–	–	–	–	–		
			43	–	2.591	3.458	4.409	5.440	6.545	–	–	–	–	–	–	–		
			46	–	–	3.239	4.149	5.133	6.184	–	–	–	–	–	–	–		
OP-MCRN054	MTZ032	E	27	3.242	4.203	5.297	6.520	7.864	9.321	10.877	–	–	–	–	–	–	A02	114X5729
			32	2.942	3.851	4.881	6.028	7.287	8.650	10.106	3.894	1.839	2.12	–	74	43		
			38	–	3.428	4.381	5.438	6.594	7.845	–	–	–	–	–	–	–		
			43	–	3.077	3.966	4.948	6.019	7.176	–	–	–	–	–	–	–		
			46	–	–	3.718	4.655	5.675	6.776	–	–	–	–	–	–	–		
OP-MCRN054	MTZ032	G	27	3.171	4.164	5.291	6.549	7.929	9.424	11.020	–	–	–	–	–	–	A02	114X5731
			32	2.862	3.806	4.871	6.055	7.351	8.753	10.250	3.848	1.877	2.05	–	74	43		
			38	–	3.373	4.365	5.461	6.658	7.950	–	–	–	–	–	–	–		
			43	–	3.011	3.943	4.967	6.081	7.281	–	–	–	–	–	–	–		
			46	–	–	3.689	4.670	5.736	6.880	–	–	–	–	–	–	–		

MBP

(1) E - 400V-3ph-50Hz Compressor & 230V-1ph-50Hz Fan
G - 230V-1ph-50Hz Compressor & 230V-1ph-50Hz Fan
(2) Nominal conditions (EN13215), Evaporating temperatures at dew point, Superheat 10 K, Subcooling 0 K
(3) Rated conditions (EN13215), Evaporating temperature (dew point) -10 °C, Ambient air temperature 32 °C, Return Gas Temperature 20 °C, Subcooling 0 K

COP: Coefficient Of Perfromance link to EN13215 and ErP (Energy related Products) 2009/125/CE
SEPR: Seasonal Energy Performance Ratio link to EN13215 and ErP (Energy Related Products) 2009/125/CE
Tamb [°C]: Ambient Temperature
Te [°C]: Evaporating Temperature
Q [kW]: Cooling Capacity in Kilo Watt
P [kW]: Power Input in Kilo Watt

Version
A02: Receiver + Stop valves + KP17WB pressure switch + Electrical box

*For regular updates and detailed capacities, please refer to **Coolselector®2** software*

EcoDesign 2018

Technical data and ordering

Optyma™ Commercial - Performance data - R407C MBP (count.)

Performance data

Model	Compressor	Electrical code [1]	Tamb [°C]	Cooling capacity Q [kW] [2] Te [°C] -15	-10	-5	0	5	10	15	EcoDesign [3] Q [kW]	P [kW]	COP	SEPR	Sound power level dB(A)	Sound pressure level 10 m dB(A)	Version	Code
OP-MCRN060	MTZ036	E	27	3.729	4.757	5.914	7.190	8.574	10.052	11.610	–	–	–	–	–	–	A02	114X5732
			32	3.415	4.387	5.474	6.669	7.961	9.339	10.792	4.440	2.258	1.97	–	74	43		
			38	–	3.939	4.946	6.046	7.231	8.491	9.817	–	–	–	–	–	–		
			43	–	3.560	4.503	5.526	6.623	7.787	9.008	–	–	–	–	–	–		
			46	–	–	4.235	5.213	6.259	7.365	8.524	–	–	–	–	–	–		
OP-MCRN060	MTZ036	G	27	3.599	4.677	5.894	7.243	8.711	10.287	11.954	–	–	–	–	–	–	A02	114X5734
			32	3.256	4.280	5.431	6.702	8.083	9.563	11.128	4.330	2.219	1.95	–	74	43		
			38	–	3.794	4.867	6.047	7.325	8.692	–	–	–	–	–	–	–		
			43	–	3.378	4.389	5.495	6.688	7.962	–	–	–	–	–	–	–		
			46	–	–	4.098	5.160	6.303	7.521	–	–	–	–	–	–	–		
OP-MCRN068	MTZ040	E	27	4.329	5.488	6.800	8.258	9.849	11.559	13.371	–	–	–	–	–	–	A02	114X5735
			32	3.999	5.097	6.332	7.698	9.185	10.781	12.471	5.158	2.609	1.98	2.71	76	45		
			38	–	4.616	5.761	7.020	8.384	9.844	–	–	–	–	–	–	–		
			43	–	4.203	5.276	6.447	7.711	9.060	–	–	–	–	–	–	–		
			46	–	–	4.979	6.099	7.303	8.586	–	–	–	–	–	–	–		
OP-MCRN086	MTZ050	E	27	5.009	6.504	8.229	10.181	12.351	14.725	17.285	–	–	–	–	–	–	A02	114X5737
			32	4.553	5.959	7.576	9.404	11.435	13.660	16.061	6.025	2.810	2.14	2.89	84	53		
			38	–	5.305	6.795	8.475	10.341	12.385	–	–	–	–	–	–	–		
			43	–	4.761	6.146	7.704	9.433	11.329	–	–	–	–	–	–	–		
			46	–	–	5.759	7.244	8.891	10.698	–	–	–	–	–	–	–		
OP-MCRN096	MTZ056	E	27	5.360	7.008	8.912	11.068	13.461	16.074	18.884	–	–	–	–	–	–	A02	114X5739
			32	4.868	6.424	8.216	10.241	12.489	14.944	17.586	6.497	3.026	2.15	3.00	83	52		
			38	–	5.723	7.380	9.248	11.319	13.584	–	–	–	–	–	–	–		
			43	–	5.142	6.685	8.421	10.346	12.451	–	–	–	–	–	–	–		
			46	–	–	6.271	7.927	9.763	11.772	–	–	–	–	–	–	–		
OP-MCRN108	MTZ064	E	27	6.307	8.073	10.102	12.388	14.916	17.666	20.613	–	–	–	–	–	–	A02	114X5740
			32	5.745	7.402	9.307	11.453	13.828	16.416	19.193	7.494	3.488	2.15	3.01	83	52		
			38	–	6.614	8.364	10.338	12.527	14.916	–	–	–	–	–	–	–		
			43	–	5.977	7.594	9.421	11.451	13.672	–	–	–	–	–	–	–		
			46	–	–	7.142	8.879	10.812	12.930	–	–	–	–	–	–	–		
OP-MGRN108	MTZ064	E	27	6.307	8.073	10.102	12.388	14.916	17.666	20.613	–	–	–	–	–	–	A02	114X5743
			32	5.745	7.402	9.307	11.453	13.828	16.416	19.193	7.494	3.418	2.19	3.08	83	52		
			38	–	6.614	8.364	10.338	12.527	14.916	–	–	–	–	–	–	–		
			43	–	5.977	7.594	9.421	11.451	13.672	–	–	–	–	–	–	–		
			46	–	–	7.142	8.879	10.812	12.930	–	–	–	–	–	–	–		

MBP

(1) E - 400V-3ph-50Hz Compressor & 230V-1ph-50Hz Fan
G - 230V-1ph-50Hz Compressor & 230V-1ph-50Hz Fan
(2) Nominal conditions (EN13215), Evaporating temperatures at dew point, Superheat 10 K, Subcooling 0 K
(3) Rated conditions (EN13215), Evaporating temperature (dew point) -10 °C, Ambient air temperature 32 °C, Return Gas Temperature 20 °C, Subcooling 0 K

COP: Coefficient Of Perfromance link to EN13215 and ErP (Energy related Products) 2009/125/CE
SEPR: Seasonal Energy Performance Ratio link to EN13215 and ErP (Energy Related Products) 2009/125/CE
Tamb [°C]: Ambient Temperature
Te [°C]: Evaporating Temperature
Q [kW]: Cooling Capacity in Kilo Watt
P [kW]: Power Input in Kilo Watt

Version
A02: Receiver + Stop valves + KP17WB pressure switch + Electrical box

*For regular updates and detailed capacities, please refer to **Coolselector®2** software*

EcoDesign 2018

Technical data and ordering

Optyma™ Commercial - Performance data - R407C MBP (count.)

Performance data

Model	Compressor	Electrical code [1]	Tamb [°C]	Cooling capacity Q [kW] [2] Te [°C] -15	-10	-5	0	5	10	15	EcoDesign [3] Q [kW]	P [kW]	COP	SEPR	Sound power level dB(A)	Sound pressure level 10 m dB(A)	Version	Code
OP-MCRN121	MTZ072	E	27	6.985	8.954	11.199	13.702	16.439	19.380	22.492	–	–	–	–	–	–	A02	114X5744
			32	6.375	8.232	10.341	12.689	15.256	18.013	20.932	8.342	4.120	2.02	2.79	82	51		
			38	–	7.367	9.309	11.468	13.826	16.362	–	–	–	–	–	–	–		
			43	–	6.657	8.454	10.452	12.634	14.982	–	–	–	–	–	–	–		
			46	–	–	7.947	9.845	11.920	14.155	–	–	–	–	–	–	–		
OP-MGRN121	MTZ072	E	27	6.985	8.954	11.199	13.702	16.439	19.380	22.492	–	–	–	–	–	–	A02	114X5746
			32	6.375	8.232	10.341	12.689	15.256	18.013	20.932	8.342	4.050	2.06	2.84	82	51		
			38	–	7.367	9.309	11.468	13.826	16.362	–	–	–	–	–	–	–		
			43	–	6.657	8.454	10.452	12.634	14.982	–	–	–	–	–	–	–		
			46	–	–	7.947	9.845	11.920	14.155	–	–	–	–	–	–	–		
OP-MCRN136	MTZ080	E	27	7.817	9.984	12.410	15.067	17.922	20.935	24.064	–	–	–	–	–	–	A02	114X5747
			32	7.164	9.213	11.495	13.985	16.653	19.466	22.386	9.348	4.827	1.94	2.67	82	51		
			38	–	8.281	10.387	12.675	15.120	17.692	–	–	–	–	–	–	–		
			43	–	7.503	9.462	11.579	13.836	16.208	–	–	–	–	–	–	–		
			46	–	–	8.907	10.922	13.065	15.316	–	–	–	–	–	–	–		
OP-MGRN136	MTZ080	E	27	7.817	9.984	12.410	15.067	17.922	20.935	24.064	–	–	–	–	–	–	A02	114X5749
			32	7.164	9.213	11.495	13.985	16.653	19.466	22.386	9.348	4.757	1.97	2.72	82	51		
			38	–	8.281	10.387	12.675	15.120	17.692	–	–	–	–	–	–	–		
			43	–	7.503	9.462	11.579	13.836	16.208	–	–	–	–	–	–	–		
			46	–	–	8.907	10.922	13.065	15.316	–	–	–	–	–	–	–		
OP-MGRN171	MTZ100	E	27	9.666	12.729	16.283	20.326	24.844	29.813	35.202	–	–	–	–	–	–	A02	114X5750
			32	8.732	11.621	14.965	18.763	23.008	27.680	32.752	11.741	6.002	1.96	2.81	87	56		
			38	–	10.297	13.381	16.882	20.795	25.106	–	–	–	–	–	–	–		
			43	–	9.211	12.073	15.321	18.952	22.959	–	–	–	–	–	–	–		
			46	–	–	11.299	14.392	17.852	21.674	–	–	–	–	–	–	–		
OP-MGRN215	MTZ125	E	27	13.147	16.747	20.846	25.435	30.489	35.972	41.839	–	–	–	–	–	–	A02	114X5753
			32	12.015	15.424	19.289	23.605	28.353	33.502	39.015	15.610	7.511	2.08	2.90	86	55		
			38	–	13.814	17.398	21.386	25.766	30.515	–	–	–	–	–	–	–		
			43	–	12.463	15.810	19.524	23.597	28.013	–	–	–	–	–	–	–		
			46	–	–	14.856	18.405	22.294	26.508	–	–	–	–	–	–	–		
OP-MGRN242	MTZ144	E	27	14.195	18.105	22.542	27.487	32.910	38.768	45.009	–	–	–	–	–	–	A02	114X5754
			32	12.972	16.673	20.856	25.507	30.603	36.106	41.971	16.885	8.499	1.99	2.76	85	54		
			38	–	14.953	18.826	23.122	27.822	32.898	–	–	–	–	–	–	–		
			43	–	13.529	17.139	21.134	25.502	30.219	–	–	–	–	–	–	–		
			46	–	–	16.133	19.946	24.112	28.613	–	–	–	–	–	–	–		
OP-MGRN271	MTZ160	E	27	16.529	20.700	25.412	30.631	36.310	42.387	48.793	–	–	–	–	–	–	A02	114X5757
			32	15.200	19.138	23.567	28.462	33.781	39.472	45.474	19.406	9.849	1.97	2.71	84	53		
			38	–	17.256	21.345	25.848	30.735	35.962	–	–	–	–	–	–	–		
			43	–	15.686	19.489	23.665	28.190	33.028	–	–	–	–	–	–	–		
			46	–	–	18.376	22.355	26.662	31.267	–	–	–	–	–	–	–		

MBP

(1) E - 400V-3ph-50Hz Compressor & 230V-1ph-50Hz Fan
G - 230V-1ph-50Hz Compressor & 230V-1ph-50Hz Fan
(2) Nominal conditions (EN13215), Evaporating temperatures at dew point, Superheat 10 K, Subcooling 0 K
(3) Rated conditions (EN13215), Evaporating temperature (dew point) -10 °C, Ambient air temperature 32 °C, Return Gas Temperature 20 °C, Subcooling 0 K

COP: Coefficient Of Perfromance link to EN13215 and ErP (Energy related Products) 2009/125/CE
SEPR: Seasonal Energy Performance Ratio link to EN13215 and ErP (Energy Related Products) 2009/125/CE
Tamb [°C]: Ambient Temperature
Te [°C]: Evaporating Temperature
Q [kW]: Cooling Capacity in Kilo Watt
P [kW]: Power Input in Kilo Watt

Version
A02: Receiver + Stop valves + KP17WB pressure switch + Electrical box

*For regular updates and detailed capacities, please refer to **Coolselector®2** software*

EcoDesign 2018

Technical data and ordering

Optyma™ Light Commercial - Performance data - R404A / R507 MBP

Performance data

Model	Compressor	Electrical code [1]	Tamb [°C]	Cooling capacity Q [kW] [2] Te [°C] -20	-15	-10	-5	0	5	EcoDesign [3] Q [kW]	P [kW]	COP	SEPR	Version	Code
OP-MCHC004	TL4DL	G	27	0.262	0.294	0.348	0.422	0.515	0.622	–	–	–	–	A00 A01 A04	114X0301 114X0302 114X0303
			32	0.230	0.262	0.315	0.386	0.474	0.574	0.330	0.206	1.60	–		
			38	0.195	0.226	0.276	0.342	0.422	0.513	–	–	–	–		
			43	0.167	0.196	0.243	0.303	0.376	0.458	–	–	–	–		
OP-MCHC006	FR6DL	G	27	0.376	0.455	0.552	0.666	0.796	0.941	–	–	–	–	A00 A01 A04	114X2316 114X2317 114X2319
			32	0.337	0.409	0.499	0.603	0.723	0.856	0.524	0.372	1.41	–		
			38	0.293	0.357	0.435	0.528	0.633	0.751	–	–	–	–		
			43	0.259	0.314	0.383	0.464	0.557	–	–	–	–	–		
OP-MCHC007	NF7MLX	G	27	–	0.588	0.720	0.869	1.037	1.223	–	–	–	–	A00 A01 A04	114X2424 114X2425 114X2427
			32	–	0.535	0.657	0.796	0.952	1.127	0.690	0.444	1.55	–		
			38	–	0.470	0.581	0.708	0.850	1.010	–	–	–	–		
			43	–	0.417	0.518	0.634	0.764	0.911	–	–	–	–		
OP-MCHC010	SC10MLX	G	27	0.620	0.767	0.938	1.132	1.348	1.583	–	–	–	–	A00 A01 A04	114X0403 114X0404 114X0405
			32	0.560	0.696	0.853	1.031	1.229	1.445	0.898	0.515	1.74	–		
			38	0.487	0.609	0.749	0.908	1.085	1.279	–	–	–	–		
			43	0.426	0.535	0.661	0.804	0.963	1.138	–	–	–	–		
OP-MCHC013	SC12MLX	G	27	0.737	0.905	1.098	1.316	1.555	1.813	–	–	–	–	A00 A01 A04	114X0406 114X0407 114X0408
			32	0.666	0.820	0.997	1.196	1.416	1.653	1.053	0.620	1.70	–		
			38	0.579	0.717	0.875	1.052	1.247	1.458	–	–	–	–		
			43	0.506	0.630	0.771	0.930	1.104	1.294	–	–	–	–		
OP-MCHC015	SC15MLX	G	27	0.934	1.148	1.396	1.677	1.991	2.337	–	–	–	–	A01 A04	114X2649 114X2651
			32	0.844	1.043	1.273	1.534	1.826	2.150	1.341	0.836	1.60	–		
			38	0.738	0.916	1.124	1.360	1.625	1.919	–	–	–	–		
			43	0.651	0.811	0.998	1.212	1.453	1.722	–	–	–	–		
OP-MCHC018	SC18MLX	G	27	1.073	1.315	1.594	1.909	2.259	2.642	–	–	–	–	A01 A04	114X0702 114X0703
			32	0.970	1.195	1.453	1.745	2.070	2.428	1.533	0.873	1.76	–		
			38	0.848	1.050	1.282	1.545	1.840	2.164	–	–	–	–		
			43	0.748	0.929	1.139	1.377	1.644	1.939	–	–	–	–		
OP-MCHC021	GS21MLX	G	27	1.259	1.557	1.898	2.278	2.694	3.141	–	–	–	–	A01 A04	114X2765 114X2767
			32	1.128	1.402	1.715	2.064	2.446	2.859	1.810	1.039	1.74	–		
			38	0.978	1.222	1.500	1.811	2.152	2.523	–	–	–	–		
			43	0.858	1.076	1.325	1.603	1.910	2.244	–	–	–	–		

MBP

(1) E - 400V-3ph-50Hz Compressor & 230V-1ph-50Hz Fan
G - 230V-1ph-50Hz Compressor & 230V-1ph-50Hz Fan
(2) Nominal conditions (EN13215), Evaporating temperatures at dew point, Superheat 10 K, Subcooling 0 K
(3) Rated conditions (EN13215), Evaporating temperature (dew point) -10 °C, Ambient air temperature 32 °C, Return Gas Temperature 20 °C, Subcooling 0 K

COP: Coefficient Of Perfromance link to EN13215 and ErP (Energy related Products) 2009/125/CE
SEPR: Seasonal Energy Performance Ratio link to EN13215 and ErP (Energy Related Products) 2009/125/CE
Tamb [°C]: Ambient Temperature
Te [°C]: Evaporating Temperature
Q [kW]: Cooling Capacity in Kilo Watt
P [kW]: Power Input in Kilo Watt

Version
A00: Without valves and receiver for capillary tubes
A01: With receiver, 2stop valves, brackets and copper pipes for KP
A04: A01 + KP17 WB + FSA-kit + power cord

*For regular updates and detailed capacities, please refer to **Coolselector®2** software*

EcoDesign 2018

Technical data and ordering

Optyma™ Commercial - Performance data - R404A / R507 MBP

Performance data

Model	Compressor	Electrical code [1]	Tamb [°C]	Cooling capacity Q [kW] [2] Te [°C] -25	-20	-15	-10	-5	0	5	10	EcoDesign [3] Q [kW]	P [kW]	COP	SEPR	Sound power level dB(A)	Sound pressure level 10 m dB(A)	Version	Code
OP-MCRN030	MTZ018	E	27	0.980	1.391	1.884	2.457	3.109	3.837	4.636	5.500	–	–	–	–	–	–	A02	114X5721
			32	0.867	1.243	1.692	2.217	2.814	3.482	4.218	5.016	2.329	1.241	1.88	–	76	45		
			38	0.737	1.070	1.469	1.934	2.465	3.062	3.721	4.439	–	–	–	–	–	–		
			43	–	0.931	1.287	1.702	2.179	2.715	–	–	–	–	–	–	–	–		
			46	–	0.849	1.180	1.565	2.008	2.509	–	–	–	–	–	–	–	–		
OP-MCRN030	MTZ018	G	27	0.980	1.391	1.884	2.457	3.109	3.837	4.636	5.500	–	–	–	–	–	–	A02	114X5722
			32	0.867	1.243	1.692	2.217	2.814	3.482	4.218	5.016	2.329	1.241	1.88	–	76	45		
			38	0.737	1.070	1.469	1.934	2.465	3.062	3.721	4.439	–	–	–	–	–	–		
			43	–	0.931	1.287	1.702	2.179	2.715	–	–	–	–	–	–	–	–		
			46	–	0.849	1.180	1.565	2.008	2.509	–	–	–	–	–	–	–	–		
OP-MCRN038	MTZ022	E	27	1.455	1.959	2.556	3.243	4.017	4.873	5.802	6.798	–	–	–	–	–	–	A02	114X5724
			32	1.279	1.741	2.287	2.917	3.630	4.418	5.278	6.200	3.071	1.519	2.02	–	74	43		
			38	1.076	1.484	1.969	2.531	3.167	3.874	4.648	5.481	–	–	–	–	–	–		
			43	–	1.277	1.710	2.212	2.784	3.423	–	–	–	–	–	–	–	–		
			46	–	1.156	1.556	2.023	2.556	3.153	–	–	–	–	–	–	–	–		
OP-MCRN038	MTZ022	G	27	2.979	1.959	2.556	3.243	4.017	4.873	5.802	6.798	–	–	–	–	–	–	A02	114X5723
			32	1.279	1.741	2.287	2.917	3.630	4.418	5.278	6.200	3.071	1.519	2.02	–	74	43		
			38	1.076	1.484	1.969	2.531	3.167	3.874	4.648	5.481	–	–	–	–	–	–		
			43	–	1.277	1.710	2.212	2.784	3.423	–	–	–	–	–	–	–	–		
			46	–	1.156	1.556	2.023	2.556	3.153	–	–	–	–	–	–	–	–		
OP-MCRN048	MTZ028	E	27	2.012	2.709	3.524	4.461	5.522	6.706	8.012	9.436	–	–	–	–	–	–	A02	114X5726
			32	1.750	2.397	3.154	4.024	5.010	6.112	7.330	8.661	4.225	2.028	2.08	–	74	43		
			38	1.451	2.038	2.722	3.510	4.405	5.407	6.518	7.735	–	–	–	–	–	–		
			43	–	1.750	2.373	3.091	3.908	4.826	–	–	–	–	–	–	–	–		
			46	–	1.582	2.168	2.844	3.614	4.481	–	–	–	–	–	–	–	–		
OP-MCRN048	MTZ028	G	27	2.012	2.709	3.524	4.461	5.522	6.706	8.012	9.436	–	–	–	–	–	–	A02	114X5728
			32	4.109	2.397	3.154	4.024	5.010	6.112	7.330	8.661	4.225	2.028	2.08	–	74	43		
			38	1.451	2.038	2.722	3.510	4.405	5.407	6.518	7.735	–	–	–	–	–	–		
			43	–	1.750	2.373	3.091	3.908	4.826	–	–	–	–	–	–	–	–		
			46	–	1.582	2.168	2.844	3.614	4.481	–	–	–	–	–	–	–	–		
OP-MCRN054	MTZ032	E	27	2.378	3.136	4.021	5.037	6.182	7.453	8.847	10.356	–	–	–	–	–	–	A02	114X5729
			32	2.100	2.803	3.623	4.562	5.623	6.802	8.096	9.499	4.796	2.234	2.15	–	74	43		
			38	1.776	2.410	3.148	3.994	4.950	6.016	7.189	8.464	–	–	–	–	–	–		
			43	–	2.088	2.755	3.522	4.390	5.360	6.430	–	–	–	–	–	–	–		
			46	–	1.897	2.522	3.240	4.054	4.966	–	–	–	–	–	–	–	–		
OP-MCRN054	MTZ032	G	27	2.378	3.136	4.021	5.037	6.182	7.453	8.847	10.356	–	–	–	–	–	–	A02	114X5731
			32	2.100	2.803	3.623	4.562	5.623	6.802	8.096	9.499	4.796	2.234	2.15	–	74	43		
			38	1.776	2.410	3.148	3.994	4.950	6.016	7.189	8.464	–	–	–	–	–	–		
			43	–	2.088	2.755	3.522	4.390	5.360	–	–	–	–	–	–	–	–		
			46	–	1.897	2.522	3.240	4.054	4.966	–	–	–	–	–	–	–	–		

MBP

(1) E - 400V-3ph-50Hz Compressor & 230V-1ph-50Hz Fan
G - 230V-1ph-50Hz Compressor & 230V-1ph-50Hz Fan
(2) Nominal conditions (EN13215), Evaporating temperatures at dew point, Superheat 10 K, Subcooling 0 K
(3) Rated conditions (EN13215), Evaporating temperature (dew point) -10 °C, Ambient air temperature 32 °C, Return Gas Temperature 20 °C, Subcooling 0 K

COP: Coefficient Of Perfromance link to EN13215 and ErP (Energy related Products) 2009/125/CE
SEPR: Seasonal Energy Performance Ratio link to EN13215 and ErP (Energy Related Products) 2009/125/CE
Tamb [°C]: Ambient Temperature
Te [°C]: Evaporating Temperature
Q [kW]: Cooling Capacity in Kilo Watt
P [kW]: Power Input in Kilo Watt

Version
A02: Receiver + Stop valves + KP17WB pressure switch + Electrical box

*For regular updates and detailed capacities, please refer to **Coolselector®2** software*

EcoDesign 2018

Technical data and ordering

Optyma™ Commercial - Performance data - R404A / R507 MBP (count.)

Performance data

Model	Compressor	Electrical code [1]	Tamb [°C]	Cooling capacity Q [kW] [2] Te [°C] -25	-20	-15	-10	-5	0	5	10	EcoDesign [3] Q [kW]	P [kW]	COP	SEPR	Sound power level dB(A)	Sound pressure level 10 m dB(A)	Version	Code
OP-MCRN060	MTZ036	E	27	2.738	3.588	4.572	5.687	6.929	8.290	9.762	11.333	–	–	–	–	–	–	A02	114X5732
			32	2.450	3.238	4.146	5.174	6.317	7.570	8.926	10.376	5.448	2.707	2.01	2.85	74	43		
			38	2.104	2.817	3.634	4.555	5.579	6.702	7.919	9.222	–	–	–	–	–	–		
			43	–	2.465	3.205	4.037	4.961	5.975	–	–	–	–	–	–	–	–		
			46	–	2.254	2.947	3.725	4.589	5.537	–	–	–	–	–	–	–	–		
OP-MCRN060	MTZ036	G	27	2.738	3.588	4.572	5.687	6.929	8.290	9.762	11.333	–	–	–	–	–	–	A02	114X5734
			32	2.450	3.238	4.146	5.174	6.317	7.570	8.926	10.376	5.448	2.707	2.01	2.85	74	43		
			38	2.104	2.817	3.634	4.555	5.579	6.702	7.919	9.222	–	–	–	–	–	–		
			43	–	2.465	3.205	4.037	4.961	5.975	–	–	–	–	–	–	–	–		
			46	–	2.254	2.947	3.725	4.589	5.537	–	–	–	–	–	–	–	–		
OP-MCRN068	MTZ040	E	27	3.282	4.266	5.409	6.717	8.190	9.826	11.623	13.572	–	–	–	–	–	–	A02	114X5735
			32	2.964	3.880	4.942	6.152	7.514	9.027	10.689	12.494	6.463	3.005	2.15	2.77	76	45		
			38	2.575	3.409	4.368	5.459	6.686	8.048	9.547	11.177	–	–	–	–	–	–		
			43	–	3.009	3.881	4.871	5.982	7.217	–	–	–	–	–	–	–	–		
			46	–	2.767	3.585	4.512	5.554	6.712	–	–	–	–	–	–	–	–		
OP-MCRN086	MTZ050	E	27	3.782	5.021	6.492	8.200	10.149	12.335	14.754	17.396	–	–	–	–	–	–	A02	114X5737
			32	3.338	4.474	5.823	7.393	9.189	11.211	13.453	15.911	7.759	3.283	2.36	3.34	84	53		
			38	2.837	3.849	5.051	6.456	8.067	9.889	11.919	14.153	–	–	–	–	–	–		
			43	–	3.352	4.432	5.697	7.154	8.808	–	–	–	–	–	–	–	–		
			46	–	3.063	4.070	5.251	6.615	8.168	–	–	–	–	–	–	–	–		
OP-MCRN096	MTZ056	E	27	3.925	5.245	6.814	8.640	10.727	13.071	15.668	18.506	–	–	–	–	–	–	A02	114X5739
			32	3.465	4.680	6.125	7.809	9.738	11.912	14.326	16.972	8.201	3.578	2.29	3.14	83	52		
			38	2.947	4.037	5.332	6.845	8.583	10.550	12.743	15.156	–	–	–	–	–	–		
			43	–	3.526	4.696	6.065	7.644	9.436	–	–	–	–	–	–	–	–		
			46	–	3.228	4.323	5.606	7.089	8.776	–	–	–	–	–	–	–	–		
OP-MCRN108	MTZ064	E	27	4.700	6.176	7.927	9.961	12.280	14.880	17.750	20.876	–	–	–	–	–	–	A02	114X5740
			32	4.171	5.537	7.154	9.033	11.178	13.588	16.254	19.166	9.500	4.287	2.22	3.07	83	52		
			38	3.551	4.780	6.233	7.923	9.856	12.035	14.456	17.108	–	–	–	–	–	–		
			43	–	4.159	5.472	7.002	8.757	10.742	–	–	–	–	–	–	–	–		
			46	–	3.791	5.019	6.451	8.098	9.966	–	–	–	–	–	–	–	–		
OP-MGRN108	MTZ064	E	27	4.700	6.176	7.927	9.961	12.280	14.880	17.750	20.876	–	–	–	–	–	–	A02	114X5743
			32	4.171	5.537	7.154	9.033	11.178	13.588	16.254	19.166	9.500	4.217	2.25	3.13	83	52		
			38	3.551	4.780	6.233	7.923	9.856	12.035	14.456	17.108	–	–	–	–	–	–		
			43	–	4.159	5.472	7.002	8.757	10.742	–	–	–	–	–	–	–	–		
			46	–	3.791	5.019	6.451	8.098	9.966	–	–	–	–	–	–	–	–		

MBP

(1) E - 400V-3ph-50Hz Compressor & 230V-1ph-50Hz Fan
G - 230V-1ph-50Hz Compressor & 230V-1ph-50Hz Fan
(2) Nominal conditions (EN13215), Evaporating temperatures at dew point, Superheat 10 K, Subcooling 0 K
(3) Rated conditions (EN13215), Evaporating temperature (dew point) -10 °C, Ambient air temperature 32 °C, Return Gas Temperature 20 °C, Subcooling 0 K

COP: Coefficient Of Perfromance link to EN13215 and ErP (Energy related Products) 2009/125/CE
SEPR: Seasonal Energy Performance Ratio link to EN13215 and ErP (Energy Related Products) 2009/125/CE
Tamb [°C]: Ambient Temperature
Te [°C]: Evaporating Temperature
Q [kW]: Cooling Capacity in Kilo Watt
P [kW]: Power Input in Kilo Watt

Version
A02: Receiver + Stop valves + KP17WB pressure switch + Electrical box

*For regular updates and detailed capacities, please refer to **Coolselector®2** software*

EcoDesign 2018

Technical data and ordering

Optyma™ Commercial - Performance data - R404A / R507 MBP (count.)

Performance data

Model	Compressor	Electrical code [1]	Tamb [°C]	Cooling capacity Q [kW] [2] Te [°C] -25	-20	-15	-10	-5	0	5	10	EcoDesign [3] Q [kW]	P [kW]	COP	SEPR	Sound power level dB(A)	Sound pressure level 10 m dB(A)	Version	Code
OP-MCRN121	MTZ072	E	27	5.284	6.897	8.788	10.957	13.401	16.109	19.069	22.261	–	–	–	–	–	–	A02	114X5744
			32	4.675	6.160	7.903	9.907	12.170	14.685	17.440	20.419	10.428	4.787	2.18	3.03	82	51		
			38	3.993	5.320	6.881	8.682	10.723	13.001	15.507	18.228	–	–	–	–	–	–		
			43	–	4.652	6.058	7.686	9.540	11.618	–	–	–	–	–	–	–	–		
			46	–	4.264	5.576	7.099	8.839	10.795	–	–	–	–	–	–	–	–		
OP-MGRN121	MTZ072	E	27	5.284	6.897	8.788	10.957	13.401	16.109	19.069	22.261	–	–	–	–	–	–	A02	114X5746
			32	4.675	6.160	7.903	9.907	12.170	14.685	17.440	20.419	10.428	4.717	2.21	3.08	82	51		
			38	3.993	5.320	6.881	8.682	10.723	13.001	15.507	18.228	–	–	–	–	–	–		
			43	–	4.652	6.058	7.686	9.540	11.618	–	–	–	–	–	–	–	–		
			46	–	4.264	5.576	7.099	8.839	10.795	–	–	–	–	–	–	–	–		
OP-MCRN136	MTZ080	E	27	6.204	7.979	10.021	12.327	14.886	17.685	20.702	23.917	–	–	–	–	–	–	A02	114X5747
			32	5.548	7.192	9.079	11.209	13.574	16.164	18.961	21.948	11.824	5.719	2.07	2.83	82	51		
			38	4.789	6.272	7.969	9.884	12.012	14.347	16.877	19.586	–	–	–	–	–	–		
			43	–	5.522	7.058	8.789	10.717	12.838	–	–	–	–	–	–	–	–		
			46	–	5.077	6.515	8.136	9.942	11.933	–	–	–	–	–	–	–	–		
OP-MGRN136	MTZ080	E	27	6.204	7.979	10.021	12.327	14.886	17.685	20.702	23.917	–	–	–	–	–	–	A02	114X5749
			32	5.548	7.192	9.079	11.209	13.574	16.164	18.961	21.948	11.824	5.649	2.09	2.87	82	51		
			38	4.789	6.272	7.969	9.884	12.012	14.347	16.877	19.586	–	–	–	–	–	–		
			43	–	5.522	7.058	8.789	10.717	12.838	–	–	–	–	–	–	–	–		
			46	–	5.077	6.515	8.136	9.942	11.933	–	–	–	–	–	–	–	–		
OP-MGRN171	MTZ100	E	27	7.159	9.542	12.363	15.630	19.338	23.478	28.030	32.971	–	–	–	–	–	–	A02	114X5750
			32	6.441	8.648	11.249	14.253	17.662	21.470	25.665	30.227	14.969	7.150	2.09	3.02	87	56		
			38	5.553	7.554	9.894	12.587	15.641	19.055	22.823	26.932	–	–	–	–	–	–		
			43	–	6.622	8.749	11.186	13.947	17.036	–	–	–	–	–	–	–	–		
			46	–	6.053	8.053	10.340	12.926	15.821	–	–	–	–	–	–	–	–		
OP-MGRN215	MTZ125	E	27	9.526	12.393	15.755	19.618	23.976	28.816	34.117	39.850	–	–	–	–	–	–	A02	114X5753
			32	8.441	11.075	14.168	17.730	21.759	26.245	31.173	36.516	18.648	8.915	2.09	3.03	86	55		
			38	7.227	9.575	12.339	15.533	19.160	23.216	27.688	32.556	–	–	–	–	–	–		
			43	–	8.385	10.870	13.752	17.039	20.730	–	–	–	–	–	–	–	–		
			46	–	7.694	10.010	12.703	15.783	19.254	–	–	–	–	–	–	–	–		
OP-MGRN242	MTZ144	E	27	11.170	14.359	18.047	22.232	26.901	32.033	37.594	43.548	–	–	–	–	–	–	A02	114X5754
			32	9.988	12.938	16.342	20.204	24.515	29.259	34.407	39.929	21.288	10.307	2.07	2.91	85	54		
			38	8.608	11.260	14.314	17.779	21.653	25.923	30.571	35.570	–	–	–	–	–	–		
			43	–	9.883	12.637	15.764	19.266	23.138	–	–	–	–	–	–	–	–		
			46	–	9.066	11.636	14.557	17.834	21.464	–	–	–	–	–	–	–	–		
OP-MGRN271	MTZ160	E	27	12.084	15.502	19.434	23.875	28.803	34.187	39.984	46.143	–	–	–	–	–	–	A02	114X5757
			32	10.816	13.982	17.616	21.717	26.270	31.249	36.617	42.330	22.911	11.650	1.97	2.74	84	53		
			38	9.337	12.187	15.452	19.135	23.229	27.713	32.560	37.731	–	–	–	–	–	–		
			43	–	10.714	13.661	16.987	20.690	24.756	–	–	–	–	–	–	–	–		
			46	–	9.838	12.590	15.698	19.163	22.975	–	–	–	–	–	–	–	–		

MBP

(1) E - 400V-3ph-50Hz Compressor & 230V-1ph-50Hz Fan
G - 230V-1ph-50Hz Compressor & 230V-1ph-50Hz Fan
(2) Nominal conditions (EN13215), Evaporating temperatures at dew point, Superheat 10 K, Subcooling 0 K
(3) Rated conditions (EN13215), Evaporating temperature (dew point) -10 °C, Ambient air temperature 32 °C, Return Gas Temperature 20 °C, Subcooling 0 K

COP: Coefficient Of Perfromance link to EN13215 and ErP (Energy related Products) 2009/125/CE
SEPR: Seasonal Energy Performance Ratio link to EN13215 and ErP (Energy Related Products) 2009/125/CE
Tamb [°C]: Ambient Temperature
Te [°C]: Evaporating Temperature
Q [kW]: Cooling Capacity in Kilo Watt
P [kW]: Power Input in Kilo Watt

Version
A02: Receiver + Stop valves + KP17WB pressure switch + Electrical box

*For regular updates and detailed capacities, please refer to **Coolselector®2** software*

EcoDesign 2018

Technical data and ordering

Optyma™ Light Commercial - R290

Technical data

Model number	Compressor Model	Application	Electrical code [1]	Refrigerant [2]	Condenser Coil			Fan		Receiver	Dimensions						Weight		Code no.		
					Type	Airflow	Internal Volume	Number	Blade ø	Volume	Chassis	Height	Width	Depth	Suction line	Liquid line	Gross	Net			
						[m³/h]	[dm³]		[mm]	[L]		[mm]					[Kg]		A09	A10	A11
OP-LCNC004NY	NLY45LAb	LBP	G	N	BG2	231	0.25	1	200	0.114	1	226	286	513	6	6	21	19	114F0202	114F0203	114F0201
OP-LCNC006NY	NLY60LAb	LBP	G	N	BG2	231	0.25	1	200	0.114	1	226	286	513	6	6	19	17	114F0205	114F0206	114F0204
OP-LCNC008NY	NLY80LAb	LBP	G	N	BG3	518	0.31	1	230	0.114	2	256	304	513	6	6	20	18	114F0308	114F0309	114F0307
OP-LCNC011NY	NPY12LAb	LBP	G	N	BG4/5	631	0.4	1	254	0.165	3	296	319	513	8	6	25	22	114F0411	114F0412	114F0410
OP-LCNC016NP	NPT16LA	LBP	G	N	BG4/5	631	0.4	1	254	0.165	3	296	319	513	8	6	26	23	114F0414	114F0415	114F0413
OP-LCNC023NX	NX23FBa	LBP	G	N	BG4/5	631	0.4	1	254	0.165	3	296	319	513	10	6	31	28	114F0417	114F0418	114F0416
OP-LCNC034NS	NS34FB	LBP	G	N	BG6	1132	0.63	1	300	0.32	4	350	442	480	12	6	47	41	114F0620	114F0621	114F0619
OP-MCNC003NB	NBC30RA	MBP	G	N	BG2	231	0.25	1	200	0.114	1	226	286	513	6	6	16	14	114F1202	114F1203	114F1201
OP-MCNC004NY	NLY45RAb	MBP	G	N	BG2	231	0.25	1	200	0.114	1	226	286	513	6	6	21	19	114F1205	114F1206	114F1204
OP-MCNC006NY	NLY60RAb	MBP	G	N	BG3	518	0.31	1	230	0.114	2	256	304	513	6	6	20	18	114F1308	114F1309	114F1307
OP-MCNC008NY	NLY80RAb	MBP	G	N	BG4/5	631	0.4	1	254	0.165	3	296	319	513	6	6	25	22	114F1411	114F1412	114F1410
OP-MCNC009NY	NLY90RAb	MBP	G	N	BG4/5	631	0.4	1	254	0.165	3	296	319	513	6	6	25	22	114F1414	114F1415	114F1413
OP-MCNC011NY	NLY12RAb	MBP	G	N	BG4/5	631	0.4	1	254	0.165	3	296	319	513	8	6	26	23	114F1417	114F1418	114F1416
OP-MCNC014NP	NPT14RA	MBP	G	N	BG4/5	631	0.4	1	254	0.165	3	296	319	513	8	6	27	24	114F1420	114F1421	114F1419
OP-MCNC016NP	NPT16RA	MBP	G	N	BG6	1132	0.63	1	300	0.32	4	350	442	480	8	6	36	32	114F1623	114F1624	114F1622
OP-MCNC018NX	NX18TBa	MBP	G	N	BG6	1132	0.63	1	300	0.32	4	350	442	480	10	6	29	26	114F1626	114F1627	114F1625
OP-MCNC020NX	NX21TBa	MBP	G	N	BG6	1132	0.63	1	300	0.32	4	350	442	480	10	6	39	35	114F1629	114F1630	114F1628

(1) E - 400V-3ph-50Hz Compressor & 230V-1ph-50Hz Fan
G - 230V-1ph-50Hz Compressor & 230V-1ph-50Hz Fan
(2) N - R290

Technical data and ordering

Optyma™ Light Commercial - R134a / R513A - R452A - R404A / R507

Technical data

Model number	Compressor Model	Application	Electrical code (1)	Refrigerant (2)	Condenser Coil			Fan		Receiver	Dimensions						Weight		Code no.		
					Type	Airflow	Internal Volume	Number	Blade ø	Volume	Chassis	Height	Width	Depth	Suction line	Liquid line	Gross	Net			
						[m³/h]	[dm³]		[mm]	[L]		[mm]			[in]		[Kg]		A00	A01	A04
OP-LCHC004TL	TL4CL	LBP	G	H	BG2	231	0.25	1	200	0.8	2	226	312	446	1/4	1/4	19	17	114X1208	114X1209	114X1211
OP-LCHC006FR	FR6CL	LBP	G	H	BG2	231	0.25	1	200	0.8	2	226	312	446	3/8	1/4	19	17	114X1216	114X1217	114X1219
OP-LCHC007NL	NL7CLX	LBP	G	H	BG3	518	0.31	1	230	1.1	9	256	321	471	3/8	1/4	20	18	114X1328	114X1329	114X1331
OP-LCHC008FR	FR8.5CL	LBP	G	H	BG3	518	0.31	1	230	1.1	9	256	321	471	3/8	1/4	20	18	114X1324	114X1325	114X1327
OP-LCHC008NL	NL8.4CLX	LBP	G	H	BG3	518	0.31	1	230	1.1	7	256	318	513	3/8	1/4	22	20	114X1304	114X1301	114X1302
OP-LCHC012SC	SC12CL	LBP	G	H	BG4/5	631	0.4	1	254	1.1	10	296	331	487	3/8	1/4	25	22	114X1440	114X1441	114X1443
OP-LCHC012SC	SC12CLX.2	LBP	G	H	BG4/5	631	0.4	1	254	1.1	10	296	331	487	3/8	1/4	23	20	114X1444	–	–
OP-LCHC015SC	SC15CLX	LBP	G	H	BG4/5	631	0.4	1	254	1.1	10	296	331	487	3/8	1/4	26	23	114X1548	114X1549	114X1551
OP-LCHC018SC	SC18CL	LBP	G	H	BG4/5	631	0.4	1	254	1.1	11	296	331	513	1/2	1/4	26	23	114X1556	114X1557	114X1559
OP-LCHC021SC	SC21CL	LBP	G	H	BG6	1150	0.63	1	300	1.1	12	350	445	613	1/2	1/4	47	41	114X1600	114X1601	114X1602
OP-LCHC026GS	GS26CLX	LBP	G	H	BG6	1150	0.63	1	300	2.4	13	340	430	480	1/2	3/8	45	39	–	114X1673	–
OP-LCHC034GS	GS34CLX	LBP	G	H	BG7	990	0.84	1	300	2.4	13	340	430	480	1/2	3/8	48	42	–	114X1781	114X1783
OP-LCQC004ML	MLY45LAb	LBP	G	Q	BG2	231	0.25	1	200	0.8	5	226	302	513	3/8	1/4	19	17	–	114X1221	–
OP-LCQC006ML	MLY60LAb	LBP	G	Q	BG3	518	0.31	1	230	1.1	7	256	318	513	3/8	1/4	20	18	–	114X1337	–
OP-LCQC008ML	MLY80LAb	LBP	G	Q	BG3	518	0.31	1	230	1.1	7	256	318	513	3/8	1/4	20	18	–	114X1341	–
OP-LCQC012ML	MLY12LAb	LBP	G	Q	BG4/5	631	0.4	1	254	1.1	11	296	331	513	3/8	1/4	25	22	–	114X1449	–
OP-LCQC012MP	MPT12LA	LBP	G	Q	BG4/5	631	0.4	1	254	1.1	11	296	331	513	3/8	1/4	26	23	–	114X1569	–
OP-LCQC014MP	MPT14LA	LBP	G	Q	BG4/5	631	0.4	1	254	1.1	11	296	331	513	1/2	1/4	26	23	–	114X1573	–
OP-MCGC003TL	TL3GX	MBP	G	G	BG1	243	0.13	1	172	0.8	1	205	289	424	1/4	1/4	16	14	114X0104	114X0105	114X0107
OP-MCGC004TL	TL4GX	MBP	G	G	BG1	243	0.13	1	172	0.8	1	205	289	424	1/4	1/4	16	14	114X0108	114X0109	114X0111
OP-MCGC005TL	TL5GX	MBP	G	G	BG1	243	0.13	1	172	0.8	1	205	289	424	1/4	1/4	16	14	114X0112	114X0113	114X0115
OP-MCGC006FR	FR6GX	MBP	G	G	BG2	231	0.25	1	200	0.8	2	226	312	446	3/8	1/4	19	17	114X0200	114X0201	114X0203
OP-MCGC006NL	NL6.1MF	MBP	G	G	BG2	231	0.25	1	200	0.8	3	226	304	432	3/8	1/4	19	17	114X0228	–	–
OP-MCGC007FR	FR7.5GX	MBP	G	G	BG2	231	0.25	1	200	0.8	2	226	312	446	3/8	1/4	19	17	114X0216	114X0217	114X0219
OP-MCGC007NL	NL7.3MF	MBP	G	G	BG2	231	0.25	1	200	0.8	3	226	304	432	3/8	1/4	19	17	114X0244	–	–
OP-MCGC008FR	FR8.5GX	MBP	G	G	BG2	231	0.25	1	200	0.8	2	226	312	446	3/8	1/4	19	17	114X0224	114X0225	114X0227
OP-MCGC008NL	NL8.4MF	MBP	G	G	BG2	231	0.25	1	200	0.8	4	225	313	470	3/8	1/4	25	22	114X0204	114X0205	–
OP-MCGC008NL	NL8.4MF	MBP	G	G	BG3	518	0.31	1	230	–	6	256	310	444	3/8	1/4	20	18	114X0352	–	–
OP-MCGC010SC	SC10GX	MBP	G	G	BG2	231	0.25	1	200	0.8	2	226	312	446	3/8	1/4	21	19	–	–	114X0223
OP-MCGC011FR	FR11GX	MBP	G	G	BG3	518	0.31	1	230	1.1	8	256	321	458	3/8	1/4	20	18	114X0336	114X0337	114X0339
OP-MCGC012SC	SC12GX	MBP	G	G	BG3	518	0.31	1	230	1.1	8	256	321	458	3/8	1/4	22	20	114X0340	114X0341	114X0343
OP-MCGC015SC	SC15GX	MBP	G	G	BG4/5	631	0.4	1	254	1.1	10	296	331	478	3/8	1/4	25	22	114X0448	114X0449	114X0451
OP-MCGC018SC	SC18G	MBP	G	G	BG4/5	631	0.4	1	254	1.1	10	296	331	478	3/8	1/4	27	24	114X0556	114X0557	114X0559
OP-MCGC021SC	SC21MF	MBP	G	G	BG4/5	631	0.4	1	254	1.1	10	296	331	478	3/8	1/4	26	23	114X0568	–	–
OP-MCGC021SC	SC21GX	MBP	G	G	BG4/5	631	0.4	1	254	1.1	11	296	331	513	3/8	1/4	26	23	114X0564	114X0565	114X0567
OP-MCGC026GS	GS26MFX	MBP	G	G	BG7	990	0.84	1	300	2.4	13	340	430	480	3/8	1/4	39	33	–	114X0773	–
OP-MCGC034GS	GS34MFX	MBP	G	G	BG7	990	0.84	1	300	2.4	13	340	430	480	1/2	3/8	40	34	–	114X0781	–
OP-MCHB007NF	NF7MLX	MBP	G	H	BG4/5	631	0.4	1	254	1.1	10	296	331	478	3/8	1/4	25	22	114X2424	114X2425	114X2427
OP-MCHC004TL	TL4DL	MBP	G	H	BG3	518	0.31	1	230	1.1	6	256	310	444	3/8	1/4	18	16	114X0301	114X0302	114X0303
OP-MCHC006FR	FR6DLX	MBP	G	H	BG3	518	0.31	1	230	1.1	8	256	321	458	3/8	1/4	20	18	114X2316	114X2317	114X2319
OP-MCHC010SC	SC10MLX	MBP	G	H	BG4/5	631	0.4	1	254	1.1	10	296	331	478	3/8	1/4	26	23	114X0403	114X0404	114X0405
OP-MCHC013SC	SC12MLX	MBP	G	H	BG4/5	631	0.4	1	254	1.1	10	296	331	478	3/8	1/4	27	24	114X0406	114X0407	114X0408
OP-MCHC015SC	SC15MLX	MBP	G	H	BG6	1132	1.1	1	300	1.1	14	350	445	613	1/2	1/4	48	42	–	114X2649	114X2651
OP-MCHC018SC	SC18MLX	MBP	G	H	BG7	990	0.84	1	300	1.1	14	350	445	613	1/2	1/4	39	33	114X0702	114X0703	–
OP-MCHC021GS	GS21MLX	MBP	G	H	BG7	990	0.84	1	300	1.6	13	340	430	480	5/8	3/8	48	42	114X2765	–	114X2767

(1) E - 400V-3ph-50Hz Compressor & 230V-1ph-50Hz Fan
G - 230V-1ph-50Hz Compressor & 230V-1ph-50Hz Fan
(2) G - R134a
H - R404A / R507
Q - R452A/R404A / R507

Technical data and ordering

Optyma™ Commercial

Technical data

Model number	Compressor Model	Application	Electrical code [1]	Refrigerant (2)	Condenser Coil			Fan		Receiver	Dimensions						Weight		Code no.
					Type	Airflow	Internal Volume	Number	Blade ø	Volume	Chassis	Height	Width	Depth	Suction line	Liquid line	Gross	Net	
						[m³/h]	[dm³]		[mm]	[L]		[mm]			[in]		[Kg]		A02
OP-LCQN048NTA02E	NTZ048	LBP	E	Q	A7	1550	0.6	1	350	3	A	545	630	650	5/8	3/8	72	62	114X5758
OP-LCQN048NTA02G	NTZ048	LBP	G	Q	A7	1550	0.6	1	350	3	A	545	630	650	5/8	3/8	73	63	114X5759
OP-LCQN068NTA02E	NTZ068	LBP	E	Q	D7	3550	0.6	1	450	5.2	C	705	900	900	5/8	1/2	96	81	114X5761
OP-LCQN068NTA02G	NTZ068	LBP	G	Q	D7	3550	0.6	1	450	5.2	C	705	900	900	5/8	1/2	96	82	114X5762
OP-LCQN096NTA02E	NTZ096	LBP	E	Q	G7	4300	1.62	1	500	7.3	D	836.5	1200	800	7/8	1/2	143	123	114X5764
OP-LCQN108NTA02E	NTZ108	LBP	E	Q	G7	4300	1.62	1	500	7.3	D	836.5	1200	800	7/8	1/2	143	123	114X5768
OP-LCQN136NTA02E	NTZ136	LBP	E	Q	G7	4300	1.62	1	500	7.3	D	836.5	1200	800	7/8	1/2	143	123	114X5772
OP-LGQN096NTA02E	NTZ096	LBP	E	Q	N8	3450	1.54	2	350	7.3	B	693.5	1500	870	7/8	1/2	155	131	114X5766
OP-LGQN108NTA02E	NTZ108	LBP	E	Q	N8	3450	1.54	2	350	7.3	B	693.5	1500	870	7/8	1/2	157	134	114X5769
OP-LGQN136NTA02E	NTZ136	LBP	E	Q	N8	3450	1.54	2	350	7.3	B	693.5	1500	870	7/8	1/2	157	134	114X5771
OP-LGQN215NTA02E	NTZ215	LBP	E	Q	J7	10700	1.97	2	560	14	E	836.5	1500	870	11/8	5/8	228	205	114X5774
OP-LGQN271NTA02E	NTZ271	LBP	E	Q	J7	10700	1.97	2	560	14	E	836.5	1500	870	11/8	5/8	230	207	114X5776
OP-MCRN030MTA02E	MTZ018	MBP	E	R	A7	1550	0.4	1	350	3	A	545	630	650	1/2	3/8	72	62	114X5721
OP-MCRN030MTA02G	MTZ018	MBP	G	R	A7	1550	0.4	1	350	3	A	545	630	650	1/2	3/8	72	62	114X5722
OP-MCRN038MTA02E	MTZ022	MBP	E	R	A7	1550	0.4	1	350	3	A	545	630	650	1/2	3/8	72	62	114X5724
OP-MCRN038MTA02G	MTZ022	MBP	G	R	A7	1550	0.4	1	350	3	A	545	630	650	1/2	3/8	72	62	114X5723
OP-MCRN048MTA02E	MTZ028	MBP	E	R	D7	3550	0.6	1	450	5.2	C	705	900	900	1/2	1/2	99	85	114X5726
OP-MCRN048MTA02G	MTZ028	MBP	G	R	D7	3550	0.6	1	450	5.2	C	705	900	900	1/2	1/2	100	85	114X5728
OP-MCRN054MTA02E	MTZ032	MBP	E	R	D7	3550	0.6	1	450	5.2	C	705	900	900	5/8	1/2	100	86	114X5729
OP-MCRN054MTA02G	MTZ032	MBP	G	R	D7	3550	0.6	1	450	5.2	C	705	900	900	5/8	1/2	101	86	114X5731
OP-MCRN060MTA02E	MTZ036	MBP	E	R	D7	4180	0.6	1	500	5.2	C	705	900	900	5/8	1/2	101	87	114X5732
OP-MCRN060MTA02G	MTZ036	MBP	G	R	D7	4180	0.6	1	500	5.2	C	705	900	900	5/8	1/2	102	87	114X5734
OP-MCRN068MTA02E	MTZ040	MBP	E	R	G7	4300	1.62	1	500	7.3	D	836.5	1200	800	5/8	1/2	145	125	114X5735
OP-MCRN086MTA02E	MTZ050	MBP	E	R	G7	4300	1.62	1	500	7.3	D	836.5	1200	800	7/8	1/2	145	125	114X5737
OP-MCRN096MTA02E	MTZ056	MBP	E	R	G7	4300	1.62	1	500	7.3	D	836.5	1200	800	7/8	1/2	158	138	114X5739
OP-MCRN108MTA02E	MTZ064	MBP	E	R	G7	4300	1.62	1	500	7.3	D	836.5	1200	800	7/8	1/2	178	158	114X5740
OP-MCRN121MTA02E	MTZ072	MBP	E	R	G7	4300	1.62	1	500	7.3	D	836.5	1200	800	11/8	1/2	148	128	114X5744
OP-MCRN136MTA02E	MTZ080	MBP	E	R	G7	4300	1.62	1	500	7.3	D	836.5	1200	800	11/8	1/2	148	128	114X5747
OP-MGRN108MTA02E	MTZ064	MBP	E	R	N8	3450	1.54	2	350	7.3	B	693.5	1500	870	7/8	1/2	185	161	114X5743
OP-MGRN121MTA02E	MTZ072	MBP	E	R	N8	3450	1.54	2	350	7.3	B	693.5	1500	870	11/8	1/2	163	139	114X5746
OP-MGRN136MTA02E	MTZ080	MBP	E	R	N8	3450	1.54	2	350	7.3	B	693.5	1500	870	11/8	1/2	182	158	114X5749
OP-MGRN171MTA02E	MTZ100	MBP	E	R	J7	10700	1.97	2	560	14	E	836.5	1500	870	11/8	5/8	208	184	114X5750
OP-MGRN215MTA02E	MTZ125	MBP	E	R	J7	10700	1.97	2	560	14	E	836.5	1500	870	11/8	5/8	231	207	114X5753
OP-MGRN242MTA02E	MTZ144	MBP	E	R	J7	10700	1.97	2	560	14	E	836.5	1500	870	11/8	5/8	234	210	114X5754
OP-MGRN271MTA02E	MTZ160	MBP	E	R	J7	10700	1.97	2	560	14	E	836.5	1500	870	11/8	5/8	236	212	114X5757

(1) E - 400V-3ph-50Hz Compressor & 230V-1ph-50Hz Fan
G - 230V-1ph-50Hz Compressor & 230V-1ph-50Hz Fan
(2) R - R134a, R404A / R507, R407A, R407C, R407F, R448A/R449A, R452A
Q - R404A / R507, R452A

Technical data and ordering

Optyma™ Light Commercial - LBP - R290

Spare parts & accessories

Designation	OP-LCNC004	OP-LCNC006	OP-LCNC008	OP-LCNC011	OP-LCNC016	OP-LCNC023	OP-LCNC034
Compressor Description	NLY45LAb	NLY60LAb	NLY80LAb	NPY12LAb	NPT16LA	NX23FBa	NS34FB
A09	114F0202	114F0205	114F0308	114F0411	114F0414	114F0417	114F0620
A10	114F0203	114F0206	114F0309	114F0412	114F0415	114F0418	114F0621
A11	114F0201	114F0204	114F0307	114F0410	114F0413	114F0416	114F0619
Condenser coil type	BG2	BG2	BG3	BG4/5	BG4/5	BG4/5	BG6
Electrical code	G	G	G	G	G	G	G
Refrigerant	N	N	N	N	N	N	N
Spare Parts							
Compressor single pack	123B3103	123B3107	123B3115	123B3121	123B3124	123B3128	123B3167
Compressor Industrial pack	123F3103	123F3107	123F3115	123F3121	123F3124	123F3128	123F3167
Condenser	118U0029	118U0029	118U0030	118U0031	118U0031	118U0031	118U0054
HP switch	061F6701	061F6701	061F6701	061F6701	061F6701	061F6701	061F6701
LP switch	061F7959	061F7959	061F7959	061F7959	061F7959	061F7959	061F7959
Fan motor	118U1008	118U1008	118U1008	118U1009	118U1009	118U1009	118U1010
Fan guard	118U0042	118U0042	118U0043	118U0044	118U0044	118U0044	118U0066
Combo filter drier receiver	023Z7012	023Z7012	023Z7012	023Z7013	023Z7013	023Z7013	023Z7007
Electrical Characteristics							
MCC Fan (A)	0.25	0.25	0.25	0.39	0.39	0.39	0.19
LRA Compressor (A)	6.7	10	10.5	14.2	19	30	34.5

MCC - Max Continuous Current
LRA - Locked Rotor Amps

Electrical code
E : 400V-3ph-50Hz Compressor & 230V-1ph-50Hz Fan
G : 230V-1ph-50Hz Compressor & 230V-1ph-50Hz Fan

Technical data and ordering

Optyma™ Light Commercial - LBP - R452A - R404A / R507

Spare parts & accessories

Designation	OP-LCHC008	OP-LCHC021	OP-LCHC006	OP-LCHC026	OP-LCHC004	OP-LCHC007	OP-LCHC012	OP-LCHC012
Compressor Description	NL8.4CLX	SC21CL	FR6CLX	GS26CLX	TL4CLX	NL7CLX	SC12CLX	SC12CLX.2
A00	114X1304	114X1600	114X1216		114X1208	114X1328	114X1440	114X1444
A01	114X1301	114X1601	114X1217	114X1673	114X1209	114X1329	114X1441	–
A04	114X1302	114X1602	114X1219		114X1211	114X1331	114X1443	–
Condenser coil type	BG3	BG6	BG2	BG6	BG2	BG3	BG4	BG4
Electrical code	G	G	G	G	G	G	G	G
Refrigerant	H	H	H	H	H	H	H	H
Spare Parts								
Compressor single pack	195B0481	195B0640	195B0032	195B0501	102U2071	105F3710	104L2697	104L2697
Condenser	118U0030	118U0054	118U0029	118U0054	118U0029	118U0030	118U0031	118U0031
Dual pressure switch	060-5393	060-5393	060-5393	-	060-5393	060-5393	060-5393	–
Fan motor	118U0033	118U1010	118U0032	118U0058	118U0032	118U0033	118U0034	118U0034
Fan guard	118U0043	118U0066	118U0042	-	118U0042	118U0043	118U0044	118U0044
Receiver	118U0523	118U0523	118U0517	-	118U0517	118U0523	118U0523	–
Suction valve	118U0079	118U0047	118U0079	118U0047	118U0485	118U0079	118U0079	–
Liquid valve	118U0045	118U0045	118U0045	118U0079	118U0045	118U0045	118U0045	–
Electrical Characteristics								
LRA Compressor (A)	2.5	8.2	8.2	25.7	5.7	10.4	14.8	19.6
MCC Fan (A)	0.25	0.19	0.19	0.75	0.19	0.25	0.39	0.39

Designation	OP-LCHC015	OP-LCHC034	OP-LCHC018	OP-LCQC004	OP-LCQC006	OP-LCQC008	OP-LCQC012	OP-LCQC012	OP-LCQC014
Compressor Description	SC15CLX	GS34CLX	SC18CLX	MLY45Lab	MLY60LAb	MLY80LAb	MPT12LA	MLY12Lab	MPT14LA
A00	114X1548	–	114X1556	–	–	–	–	–	–
A01	114X1549	114X1781	114X1557	114X1221	114X1337	114X1341	114X1449	114X1569	114X1573
A04	114X1551	114X1783	114X1559	–	–	–	–	–	–
Condenser coil type	BG4	BG7	–	BG2	BG3	BG3	BG4	BG4	BG4
Electrical code	G	G	G	G	G	G	G	G	G
Refrigerant	H	H	H	H	H	H	H	H	H
Spare Parts									
Compressor single pack	104L2854	107B0501	104L2123	123B2106	123B2110	123G2114	123B2120	123B2123	123B2126
Condenser	118U0031	118U0069	118U0031	118U0029	118U0030	118U0030	118U0031	118U0031	118U0031
Dual pressure switch	060-5393	060-5393	060-5393	–	–	–	–	–	–
Fan motor	118U0034	118U0058	118U0034	118U0032	118U0033	118U0033	118U0034	118U0034	118U0034
Fan guard	118U0044	–	118U0044	118U0042	118U0043	118U0043	118U0044	118U0044	118U0044
Receiver	118U0523	–	118U0523	118U0517	118U0523	118U0523	118U0523	118U0523	118U0523
Suction valve	118U0047	118U0047	118U0047	118U0079	118U0079	118U0079	118U0079	118U0047	118U0047
Liquid valve	118U0045	118U0079	118U0045	118U0045	118U0045	118U0045	118U0045	118U0045	118U0045
Electrical Characteristics									
LRA Compressor (A)	18.6	40	20	8.1	10	14	13.9	20	16
MCC Fan (A)	0.39	0.75	0.39	0.19	0.25	0.25	0.39	0.39	0.39

MCC - Max Continuous Current
LRA - Locked Rotor Amps

Electrical code
E : 400V-3ph-50Hz Compressor & 230V-1ph-50Hz Fan
G : 230V-1ph-50Hz Compressor & 230V-1ph-50Hz Fan

Technical data and ordering

Optyma™ Light Commercial - MBP - R290

Spare parts & accessories

Designation	OP-MCNC003	OP-MCNC004	OP-MCNC006	OP-MCNC008	OP-MCNC009
Compressor Description	NBC30RA	NLY45RAb	NLY60RAb	NLY80RAb	NLY90RAb
A09	114F1202	114F1205	114F1308	114F1411	114F1414
A10	114F1203	114F1206	114F1309	114F1412	114F1415
A11	114F1201	114F1204	114F1307	114F1410	114F1413
Condenser coil type	BG2	BG2	BG3	BG4/5	BG4/5
Electrical code	G	G	G	G	G
Refrigerant	N	N	N	N	N
Spare Parts					
Compressor single pack	123B8310	123B3505	123B3507	123B3511	123B3513
Compressor Industrial pack	123F8310	123F3505	123F3507	123F3511	123F3513
Condenser	118U0029	118U0029	118U0030	118U0031	118U0031
HP switch	061F6701	061F6701	061F6701	061F6701	061F6701
LP switch	061F7958	061F7958	061F7958	061F7958	061F7958
Fan motor	118U1008	118U1008	118U1008	118U1009	118U1009
Fan guard	118U0042	118U0042	118U0043	118U0044	118U0044
Receiver	023Z7012	023Z7012	023Z7012	023Z7013	023Z7013
Electrical Characteristics					
MCC Fan (A)	0.25	0.25	0.25	0.39	0.39
LRA Compressor (A)	8.2	8.2	10	13.5	14

Designation	OP-MCNC011	OP-MCNC014	OP-MCNC016	OP-MCNC018	OP-MCNC020
Compressor Description	NLY12RAb	NPT14RA	NPT16RA	NX18TBa	NX21TBa
A09	114F1417	114F1420	114F1623	114F1626	114F1629
A10	114F1418	114F1421	114F1624	114F1627	114F1630
A11	114F1416	114F1419	114F1622	114F1625	114F1628
Condenser coil type	BG4/5	BG4/5	BG6	BG6	BG6
Electrical code	G	G	G	G	G
Refrigerant	N	N	N	N	N
Spare Parts					
Compressor single pack	123B3530	123B3703	123B3712	123B3514	123B3515
Compressor Industrial pack	123F3530	123F3703	123F3712	123F3514	123F3515
Condenser	118U0031	118U0031	118U0054	118U0054	118U0054
HP switch	061F6701	061F6701	061F6701	061F6701	061F6701
LP switch	061F7958	061F7958	061F7958	061F7958	061F7958
Fan motor	118U1009	118U1009	118U1010	118U1010	118U1010
Fan guard	118U0044	118U0044	118U0066	118U0066	118U0066
Receiver	023Z7013	023Z7013	023Z7007	023Z7007	023Z7007
Electrical Characteristics					
MCC Fan (A)	0.39	0.39	0.19	0.19	0.19
LRA Compressor (A)	18.5	21	21	31.5	34.5

MCC - Max Continuous Current
LRA - Locked Rotor Amps

Electrical code
E : 400V-3ph-50Hz Compressor & 230V-1ph-50Hz Fan
G : 230V-1ph-50Hz Compressor & 230V-1ph-50Hz Fan

Technical data and ordering

Optyma™ Light Commercial - MBP - R134a - R404A / 507

Spare parts & accessories

Designation	OP-MCGC008	OP-MCGC003	OP-MCGC004	OP-MCHC004	OP-MCHC010	OP-MCHC013	OP-MCHC018	OP-MCGC010	OP-MCGC021
Compressor Description	NL8.4MF	TL3G	TL4G	TL4DL	SC10MLX	SC12MLX	SC18MLX	SC10GX	SC21MF
A00	114X0204	114X0104	114X0108	114X0301	114X0403	114X0406			114X0568
A01	114X0205	114X0105	114X0109	114X0302	114X0404	114X0407	114X0702		
A04		114X0107	114X0111	114X0303	114X0405	114X0408	114X0703	114X0223	
Condenser coil type	BG2	BG1	BG1	BG3	BG4	BG4	BG7	BG2	BG4
Electrical code	G	G	G	G	G	G	G	G	G
Refrigerant	G	G	G	H	H	H	H	G	G
Spare Parts									
Compressor single pack	195B0371	195B0340	195B0570	195B0166	195B0345	195B0351	104L2139	103G6880	104G8120
Condenser	118U0029	118U0028	118U0028	118U0030	118U0031	118U0031	118U0055	118U0029	118U0031
Dual pressure switch	-	060-5393	060-5393	060-5393	060-5393	060-5393	060-5393	060-5393	060-5393
Fan motor	118U0032	118U0032	118U0032	118U0033	118U1009	118U1009	118U1010	118U0032	118U0034
Fan guard	118U0042	118U0041	118U0041	118U0042	118U0044	118U0044	118U0407	-	118U0044
Receiver	118U0517	118U0517	118U0517	118U0523	118U0523	118U0523	118U0523	118U0517	-
Suction valve	118U0079	118U0485	118U0485	118U0485	118U0079	118U0079	118U0047	118U0079	-
Liquid valve	118U0045	118U0045	118U0045	118U0045	118U0045	118U0045	118U0045	118U0045	-
Electrical Characteristics									
LRA Compressor (A)	11.7	5.7	5.7	7.5	19.5	23.6	23.6	11.1	23.6
MCC Fan (A)	0.19	0.19	0.19	0.25	0.39	0.39	0.75	0.19	0.39

Designation	OP-MCGC021	OP-MCGC005	OP-MCGC006	OP-MCGC006	OP-MCGC007	OP-MCGC008	OP-MCGC007	OP-MCGC008	OP-MCGC011
Compressor Description	SC21G	TL5G	FR6G	NL6.1MF	FR7.5G	FR8.5G	NL7.3MF	NL8.4MF	FR11GX
A00	114X0564	114X0112	114X0200	114X0228	114X0216	114X0224	114X0244	114X0352	114X0336
A01	114X0565	114X0113	114X0201		114X0217	114X0225			114X0337
A04	114X0567	114X0115	114X0203		114X0219	114X0227			114X0339
Condenser coil type	BG4	BG1	BG2	BG2	BG2	BG2	BG2	BG2	BG3
Electrical code	G	G	G	G	G	G	G	G	G
Refrigerant	G	G	G	G	G	G	G	G	G
Spare Parts									
Compressor single pack	104G8140	102G4550	103G6660	105G6660	103G6681	103G6780	105G6772	105G6877	103G6980
Condenser	118U0031	118U0028	118U0029	118U0029	118U0029	118U0029	118U0029	118U0030	118U0030
Dual pressure switch	060-5393	060-5393	060-5393	060-5393	060-5393	060-5393	060-5393	060-5393	060-5393
Fan motor	118U0034	118U0032	118U0032	118U0032	118U0032	118U0032	118U0032	118U0033	118U0033
Fan guard	118U0044	118U0041	118U0042	118U0042	118U0042	-	118U0042	118U0043	118U0043
Receiver	118U0523	118U0517	118U0517	-	118U0517	118U0517	-	-	118U0523
Suction valve	118U0047	118U0485	118U0079	-	118U0079	118U0079	-	-	118U0079
Liquid valve	118U0045	118U0045	118U0045	-	118U0045	118U0045	-	-	118U0045
Electrical Characteristics									
LRA Compressor (A)	21.8	5.7	7.5	9.2	8.1	8.2	11.3	11.7	10
MCC Fan (A)	0.39	0.19	0.19	0.19	0.19	0.19	0.19	0.19	0.25

Designation	OP-MCGC012	OP-MCGC015	OP-MCGC018	OP-MCGC026	OP-MCGC034	OP-MCHC006	OP-MCHC015	OP-MCHC007	OP-MCHC021
Compressor Description	SC12GX	SC15GX	SC18G	GS26MFX	GS34MFX	FR6DLX	SC15MLX	NF7MLX	GS21MLX
A00	114X0340	114X0448	114X0556	–	–	114X2316	–	114X2424	114X2765
A01	114X0341	114X0449	114X0557	114X0773	114X0781	114X2317	114X2649	114X2425	–
A04	114X0343	114X0451	114X0559	–	–	114X2319	114X2651	114X2427	114X2767
Condenser coil type	BG3	BG4	BG4/5	BG7	BG7	BG3	BG6	BG4	BG7
Electrical code	G	G	G	G	G	G	G	G	G
Refrigerant	G	G	G	G	G	H	H	H	H
Spare Parts									
Compressor single pack	104G8240	104G8525	195B0548	107B0700	107B0701	103U2680	104L2869	105F3721	107B0502
Condenser	118U0030	118U0031	118U0031	118U0069	118U0069	118U0030	118U0068	118U0031	118U0069
Dual pressure switch	060-5393	060-5393	060-5393	060-5393	060-5393	060-5393	060-5393	060-5393	060-5393
Fan motor	118U0033	118U0034	118U0034	118U0058	118U0058	118U0033	118U0035	118U0034	118U0058
Fan guard	–	–	–	–	–	118U0043	118U0066	118U0044	–
Receiver	118U0523	118U0523	118U0523	–	–	118U0523	118U0523	118U0523	–
Suction valve	118U0079	118U0079	118U0079	118U0079	118U0047	118U0079	118U0047	118U0079	118U0079
Liquid valve	118U0045	118U0045	118U0045	118U0045	118U0045	118U0045	118U0045	118U0045	118U0079
Electrical Characteristics									
LRA Compressor (A)	12.6	14.8	20.4	20.2	25.7	10	23.5	20	24.4
MCC Fan (A)	0.25	0.39	0.39	0.75	0.75	0.25	0.48	0.39	0.75

MCC - Max Continuous Current
LRA - Locked Rotor Amps
Electrical code
E : 400V-3ph-50Hz Compressor & 230V-1ph-50Hz Fan
G : 230V-1ph-50Hz Compressor & 230V-1ph-50Hz Fan

Technical data and ordering

Optyma™ Commercial - LBP

Spare parts & accessories

Designation	OP-LCQN048	OP-LCQN048	OP-LCQN068	OP-LCQN068	OP-LCQN096	OP-LGQN096
Compressor Description	NTZ048-4B	NTZ048-5B	NTZ068-4B	NTZ068-5B	NTZ096-4B	NTZ096-4B
Code Number	114X5758	114X5759	114X5761	114X5762	114X5764	114X5766
Version	A02	A02	A02	A02	A02	A02
Condenser coil type	A7	A7	D7	D7	G7	N8
Electrical Code	E	G	E	G	E	E
Refrigerant	Q	Q	Q	Q	Q	Q
Oil	175PZ - POE	175PZ - POE	175PZ - POE	175PZ - POE	175PZ - POE	175PZ - POE
Spare Parts						
Compressor single pack	120F0226	120F0228	120F0230	120F0232	120F0234	120F0234
Condenser	118U3492	118U3492	118U3493	118U3493	118U3494	118U1004
Crankcase heater	120Z0459	120Z0459	120Z0459	120Z0459	120Z0459	120Z0459
Dual pressure switch	060-539766	060-539766	060-539766	060-539766	060-539766	060-539766
Fan assembly	118U0390	118U0390	118U0391	118U0391	118U0392	118U0390
Filter drier type	023Z4562	023Z4562	023Z4562	023Z4562	023Z4562	023Z4562
Receiver	8168179	8168179	8168180	8168180	8168181	8168181
Rotalock valve discharge	7968012	7968012	7968013	7968013	7968013	7968013
Rotalock valve suction	7968014	7968014	7968014	7968014	7968016	7968016
Sight glass	014-0182	014-0182	014-0183	014-0183	014-0183	014-0183
Discharge gas thermostat	7750009	7750009	7750009	7750009	7750009	7750009
Fan speed controller	061H3144	061H3144	061H3144	061H3144	061H3144	061H3144
Electrical Characteristics						
MCC Compressor (A)	4.8	11	8.4	17	10.1	10.1
LRA compressor (A)	16	37	25	53	32	32
MCC Fan (A)	0.43	0.43	0.82	0.82	1.22	2 X 0.43
Fan power (W)	75	75	155	155	220	2 X 75

Designation	OP-LCQN108	OP-LGQN108	OP-LGQN136	OP-LCQN136	OP-LGQN215	OP-LGQN271
Compressor Description	NTZ108-4B	NTZ108-4B	NTZ136-4B	NTZ136-4B	NTZ215-4B	NTZ271-4B
Code Number	114X5768	114X5769	114X5771	114X5772	114X5774	114X5776
Version	A02	A02	A02	A02	A02	A02
Condenser coil type	G7	N8	N8	G7	J7	J7
Electrical Code	E	E	E	E	E	E
Refrigerant	Q	Q	Q	Q	Q	Q
Oil	175PZ - POE	175PZ - POE	175PZ - POE	175PZ - POE	175PZ - POE	175PZ - POE
Spare Parts						
Compressor single pack	120F0238	120F0238	120F0236	120F0236	120F0240	120F0242
Condenser	118U3494	118U1004	118U1004	118U3494	118U3717	118U3717
Crankcase heater	120Z0459	120Z0459	120Z0459	120Z0459	120Z0459	120Z0459
Dual pressure switch	060-539766	060-539766	060-539766	060-539766	060-539766	060-539766
Fan assembly	118U0392	118U0390	118U0390	118U0392	118U0393	118U0393
Filter drier type	023Z4562	023Z4562	023Z4562	023Z4562	023Z4581	023Z4581
Receiver	8168181	8168181	8168181	8168181	8168183	8168183
Rotalock valve discharge	7968013	7968013	7968013	7968013	7968014	7968014
Rotalock valve suction	7968016	7968016	7968016	7968016	7968018	7968018
Sight glass	014-0183	014-0183	014-0183	014-0183	014-0184	014-0184
Discharge gas thermostat	7750009	7750009	7750009	7750009	7750009	7750009
Fan speed controller	061H3144	061H3144	061H3144	061H3144	061H3144	061H3144
Electrical Characteristics						
MCC Compressor (A)	12.1	12.1	14.3	14.3	22.3	27
LRA compressor (A)	45	45	51	51	74	96
MCC Fan (A)	1.22	2 X 0.43	2 X 0.43	1.22	2 X 2.23	2 X 2.23
Fan power (W)	220	2 X 75	2 X 75	220	2 X 390	2 X 390

MCC - Max Continuous Current
LRA - Locked Rotor Amps
FSC - Fan Speed Controller

Electrical code
E : 400V-3ph-50Hz Compressor & 230V-1ph-50Hz Fan
G : 230V-1ph-50Hz Compressor & 230V-1ph-50Hz Fan

Technical data and ordering

Optyma™ Commercial - MBP

Spare parts & accessories

Designation	OP-MCRN030	OP-MCRN030	OP-MCRN038	OP-MCRN038	OP-MCRN048	OP-MCRN048	OP-MCRN054	OP-MCRN054	OP-MCRN060
Compressor Description	MTZ018-4	MTZ018-5	MTZ022-5	MTZ022-4	MTZ028-4	MTZ028-5	MTZ032-4	MTZ032-5	MTZ036-4
Code Number	114X5721	114X5722	114X5723	114X5724	114X5726	114X5728	114X5729	114X5731	114X5732
Version	A02	A02	A02	A02	A02	A02	A02	A02	A02
Condenser coil type	A7	A7	A7	A7	D7	D7	D7	D7	D7
Electrical Code	E	G	G	E	E	G	E	G	E
Refrigerant	R	R	R	R	R	R	R	R	R
Oil	175PZ - POE	175PZ - POE	175PZ - POE	175PZ - POE	175PZ - POE	175PZ - POE	175PZ - POE	175PZ - POE	175PZ - POE
Spare Parts									
Compressor single pack	MTZ18-4VI	MTZ18-5VI	MTZ22-5VI	MTZ22-4VI	MTZ28-4VI	MTZ28-5VI	MTZ32-4VI	MTZ32-5VI	MTZ36-4VI
Condenser	118U3492	118U3492	118U3492	118U3492	118U3493	118U3493	118U3493	118U3493	118U3493
Crankcase heater	120Z0459	120Z0459	120Z0459	120Z0459	120Z0459	120Z0459	120Z0459	120Z0459	120Z0459
Dual pressure switch	060-539766	060-539766	060-539766	060-539766	060-539766	060-539766	060-539766	060-539766	060-539766
Fan assembly	118U0390	118U0390	118U0390	118U0390	118U0391	118U0391	118U0391	118U0391	118U0392
Filter drier type	023Z4562	023Z4562	023Z4562	023Z4562	023Z4572	023Z4572	023Z4572	023Z4572	023Z4572
Receiver	8168179	8168179	8168179	8168179	8168180	8168180	8168180	8168180	8168180
Rotalock valve discharge	7968012	7968012	7968012	7968012	7968013	7968013	7968013	7968013	7968013
Rotalock valve suction	7968013	7968013	7968013	7968013	7968013	7968013	7968014	7968014	7968014
Sight glass	014-0182	014-0182	014-0182	014-0182	014-0183	014-0183	014-0183	014-0183	014-0183
Discharge gas thermostat	7750009	7750009	7750009	7750009	7750009	7750009	7750009	7750009	7750009
Fan speed controller	061H3144	061H3144	061H3144	061H3144	061H3144	061H3144	061H3144	061H3144	061H3144
Electrical Characteristics									
MCC Compressor (A)	5	10	15	6	7.5	20	8	20	9
LRA compressor (A)	20	40	41	20	29	51	25	70	38
MCC Fan (A)	0.43	0.43	0.43	0.43	0.82	0.82	0.82	0.82	1.22
Fan power (W)	75	75	75	75	155	155	155	155	220

Designation	OP-MCRN060	OP-MCRN068	OP-MCRN086	OP-MCRN096	OP-MCRN108	OP-MGRN108	OP-MCRN121	OP-MGRN121	OP-MCRN136M
Compressor Description	MTZ036-5	MTZ040-4	MTZ050-4	MTZ056-4	MTZ064-4	MTZ064-4	MTZ072-4	MTZ072-4	MTZ080-4
Code Number	114X5734	114X5735	114X5737	114X5739	114X5740	114X5743	114X5744	114X5746	114X5747
Version	A02	A02	A02	A02	A02	A02	A02	A02	A02
Condenser coil type	D7	G7	G7	G7	G7	N8	G7	N8	G7
Electrical Code	G	E	E	E	E	E	E	E	E
Refrigerant	R	R	R	R	R	R	R	R	R
Oil	175PZ - POE	175PZ - POE	175PZ - POE	175PZ - POE	175PZ - POE	175PZ - POE	175PZ - POE	175PZ - POE	175PZ - POE
Spare Parts									
Compressor single pack	MTZ36-5VI	MTZ40-4VI	MTZ50-4VI	MTZ56-4VI	MTZ64-4VI	MTZ64-4VI	MTZ72-4VI	MTZ72-4VI	MTZ80-4VI
Condenser	118U3493	118U3494	118U3494	118U3494	118U3494	118U1004	118U3494	118U1004	118U3494
Crankcase heater	120Z0459	120Z0459	120Z0459	120Z0459	120Z0459	120Z0459	120Z0459	120Z0459	120Z0459
Dual pressure switch	060-539766	060-539766	060-539766	060-539766	060-539766	060-539766	060-539766	060-539766	060-539766
Fan assembly	118U0392	118U0392	118U0392	118U0392	118U0392	118U0390	118U0392	118U0390	118U0392
Filter drier type	023Z4572	023Z4572	023Z4572	023Z4572	023Z4572	023Z4572	023Z4572	023Z4572	023Z4572
Receiver	8168180	8168181	8168181	8168181	8168181	8168181	8168181	8168181	8168181
Rotalock valve discharge	7968013	7968013	7968013	7968013	7968013	7968013	7968013	7968013	7968013
Rotalock valve suction	7968014	7968014	7968017	7968017	7968017	7968017	7968018	7968018	7968018
Sight glass	014-0183	014-0183	014-0183	014-0183	014-0183	014-0183	014-0183	014-0183	014-0183
Discharge gas thermostat	7750009	7750009	7750009	7750009	7750009	7750009	7750009	7750009	7750009
Fan speed controller	061H3144	061H3144	061H3144	061H3144	061H3144	061H3144	061H3144	061H3144	061H3144
Electrical Characteristics									
MCC Compressor (A)	22	10	12	12.5	13.5	13.5	17.5	17.5	18.5
LRA compressor (A)	60	38	47	64	64	64	80	80	80
MCC Fan (A)	1.22	1.22	1.22	1.22	1.22	2 X 0.43	1.22	2 X 0.43	1.22
Fan power (W)	220	220	220	220	220	2 X 75	220	2 X 75	220

MCC - Max Continuous Current
LRA - Locked Rotor Amps
FSC - Fan Speed Controller

Electrical code
E : 400V-3ph-50Hz Compressor & 230V-1ph-50Hz Fan
G : 230V-1ph-50Hz Compressor & 230V-1ph-50Hz Fan

Technical data and ordering

Optyma™ Commercial - MBP

Spare parts & accessories

Designation	OP-MGRN136M	OP-MGRN171	OP-MGRN215	OP-MGRN242	OP-MGRN271
Compressor Description	MTZ080-4	MTZ100-4	MTZ125-4	MTZ144-4	MTZ160-4
Code Number	114X5749	114X5750	114X5753	114X5754	114X5757
Version	A02	A02	A02	A02	A02
Condenser coil type	N8	J7	J7	J7	J7
Electrical Code	E	E	E	E	E
Refrigerant	R	R	R	R	R
Oil	175PZ - POE	175PZ - POE	175PZ - POE	175PZ - POE	175PZ - POE
Spare Parts					
Compressor single pack	MTZ80-4VI	MTZ100-4VI	MTZ125-4VI	MTZ144-4VI	MTZ160-4VI
Condenser	118U1004	118U3717	118U3717	118U3717	118U3717
Crankcase heater	120Z0459	120Z0459	120Z0459	120Z0459	120Z0459
Dual pressure switch	060-539766	060-539766	060-539766	060-539766	060-539766
Fan assembly	118U0390	118U0393	118U0393	118U0393	118U0393
Filter drier type	023Z4572	023Z4581	023Z4581	023Z4581	023Z4581
Receiver	8168181	8168183	8168183	8168183	8168183
Rotalock valve discharge	7968013	7968014	7968014	7968014	7968014
Rotalock valve suction	7968018	7968018	7968018	7968018	7968018
Sight glass	014-0183	014-0184	014-0184	014-0184	014-0184
Discharge gas thermostat	7750009	7750009	7750009	7750009	7750009
Fan speed controller	061H3144	061H3144	061H3144	061H3144	061H3144
Electrical Characteristics					
MCC Compressor (A)	18.5	22	27	36	36
LRA compressor (A)	80	90	105	130	130
MCC Fan (A)	2 X 0.43	2 X 2.23	2 X 2.23	2 X 2.23	2 X 2.23
Fan power (W)	2 X 75	2 X 390	2 X 390	2 X 390	2 X 390

MCC - Max Continuous Current
LRA - Locked Rotor Amps
FSC - Fan Speed Controller

Electrical code
E : 400V-3ph-50Hz Compressor & 230V-1ph-50Hz Fan
G : 230V-1ph-50Hz Compressor & 230V-1ph-50Hz Fan

Technical data and ordering

Optyma™ Light Commercial

Spare parts & accessories list

Component type	Component code	Component description	Additional informations
Compressor single pack	195B0481	SERVICE-Kit NL8.4CLX	
Compressor single pack	195B0640	Service-KIT SC21CL COMPRESSOR	
Compressor single pack	195B0032	KIT FR6DLX COMPRESSOR	
Compressor single pack	195B0038	KIT FR8,5CLX COMPRESSOR	
Compressor single pack	195B0501	SERVICE-Kit GS 26CLX	
Compressor single pack	102U2071	TL4CL COMPRESSOREN	
Compressor single pack	105F3710	NL7CLX COM	
Compressor single pack	104L2697	SC12CLX.2 LBP	
Compressor single pack	104L2854	SC15CLX LBP	
Compressor single pack	107B0501	GS34CLX COMPRESSOR	
Compressor single pack	104L2123	SC18CL LBP/MBP	
Compressor single pack	123B2106	Spare part, MLY45LAb	
Compressor single pack	123B2110	Sparw part, MLY60LAb	
Compressor single pack	123G2114	MLY80LAB SINGLE PACK	
Compressor single pack	123B2120	MLY12LAb SINGLE PACK	
Compressor single pack	123B2123	Sparw part, MPT12LA	
Compressor single pack	123B2126	Compresseur MPT14LA pour LSQM014G	
Compressor single pack	195B0371	Kit NL 8.4MF	
Compressor single pack	195B0166	KIT TL4DLX COMPRESSOR	
Compressor single pack	195B0345	Kit SC10MLX	
Compressor single pack	195B0351	SERVICE-Kit SC12MLX	
Compressor single pack	104L2139	Spare part, SC18MLX	
Compressor single pack	103G6880	Spare part, FR10G	
Compressor single pack	104G8120	Spare part, SC21MFX	
Compressor single pack	104G8140	Spare part, SC21G	
Compressor single pack	102G4550	Spare part, TL5G	
Compressor single pack	103G6660	FR6G Universal R134a	
Compressor single pack	105G6660	NL6.1MF Std. R134A	
Compressor single pack	103G6681	FR7,5G COMPRESSOR	
Compressor single pack	103G6780	FR8,5G COMPRESSOR	
Compressor single pack	105G6772	NL7,3 MF COMPRESSOR	
Compressor single pack	105G6877	COMPRESSOR NL8.4MF	
Compressor single pack	103G6980	FR11G COMPRESSOR	
Compressor single pack	104G8240	SC12G Universal R134A	
Compressor single pack	104G8525	Spare part, SC15G	
Compressor single pack	107B0700	Spare part, GS26MFX	
Compressor single pack	107B0701	Spare part, GS34MFX	
Compressor single pack	103U2680	FR6DL COMPRESSOR 404A	
Compressor single pack	104L2869	Spare part, SC15MLX	
Compressor single pack	105F3721	Spare part, NF7MLX	
Compressor single pack	107B0502	GS21MLX Compressor	
Compressor single pack	195B0548	Spare part, SC18G 220V 50HZ R 134A	
Compressor single pack	195B0340	Spare part, TL3G	
Compressor single pack	195B0570	Spare part, TL4G	
Compressor single pack	123F8310	NBC30RA; 220-240V 50Hz	
Compressor single pack	123B3505	NLY45RAb/ 220-240V 50Hz	
Compressor single pack	123B3507	NLY60RAb/ 220-240V 50Hz	
Compressor single pack	123B3511	NLY80RAB/ 220-240V 50HZ	
Compressor single pack	123B3513	NLY90RAb/ 220-240V 50Hz	
Compressor single pack	123F3530	NLY12RAb; 220-240V 50Hz	
Compressor single pack	123F3703	NPT14RA/ 220-240V 50Hz	
Compressor single pack	123F3712	NPT16RA; 220-240V 50Hz	
Compressor single pack	123F3514	NX18TBa / 220-240V 50Hz	
Compressor single pack	123B3515	NX21TBa/ 220-240V 50Hz	
Compressor single pack	123B3103	NLY45LAb/ 220-240V 50Hz	
Compressor single pack	123B3107	NLY60LAb/ 220-240V 50Hz	
Compressor single pack	123B3115	NLY80LAB/ 220-240V 50HZ	
Compressor single pack	123B3121	NPY12LAb/ 220-240V 50Hz	
Compressor single pack	123B3124	NPT16LA/ 220-240V 50Hz	
Compressor single pack	123B3128	NX23FBa/ 220-240V 50Hz	
Compressor single pack	123F3167	NS34FB; 220-240V 50Hz	
Condenser	118U0030	CONDENSER COIL BG3	

Optyma™ Light Commercial (Count.)

Spare parts & accessories list

Component type	Component code	Component description	Additional informations
Condenser	118U0054	CONDENSER COIL BG6	
Condenser	118U0029	CONDENSER COIL BG2	
Condenser	118U0031	CONDENSER COIL BG4/5	
Condenser	118U0069	CONDENSER COIL BG7 GS	
Condenser	118U0028	CONDENSER COIL BG1	
Condenser	118U0029	CONDENSER COIL BG2	
Condenser	118U0055	CONDENSER COIL BG7	
Condenser	118U0030	CONDENSER COIL BG3	
Condenser	118U0031	CONDENSER COIL BG4/5	
Condenser	118U0054	CONDENSER COIL BG6	
Fan motor	118U1010	Spare part, Fan motor EC 25-25	
Fan motor	118U0032	FAN MOTOR 5 WATT	
Fan motor	118U0033	FAN MOTOR 11 WATT	
Fan motor	118U0058	FAN MOTOR 25 WATT	
Fan motor	118U0034	FAN MOTOR 16 WATT	
Fan motor	118U1009	Spare part, Fan motor EC 20-25	
Fan motor	118U0035	FAN MOTOR 18 WATT	
Fan motor	118U1008	Spare part, Fan motor EC 12-10	
Fan motor	118U1009	Spare part, Fan motor EC 20-25	
Fan motor	118U1010	Spare part, Fan motor EC 25-25	
Fan guard	118U0043	FAN COWL BG3	
Fan guard	118U0066	FAN COWL BG6	
Fan guard	118U0042	FAN COWL BG2	
Fan guard	118U0044	FAN COWL BG4/5	
Fan guard	118U0042	FAN COWL BG2	
Fan guard	118U0043	FAN COWL BG3	
Fan guard	118U0407	FAN COWL BG7	
Fan guard	118U0067	FAN COWL BG7	
Fan guard	118U0042	FAN COWL BG2	
Fan guard	118U0043	FAN COWL BG3	
Fan guard	118U0044	FAN COWL BG4/5	
Fan guard	118U0066	FAN COWL BG6	
Receiver	118U0523	LIQUID RECEIVER 1100 CCM (TUEV)	
Receiver	118U0517	LIQUID RECEIVER 800 CCM (TUEV)	
Receiver	023Z7012	Receiver filter drier DMC 0432S/6mm I/16	
Receiver	023Z7013	Receiver filter drier DMC 0732S I/16	
Receiver	023Z7007	Receiver filter drier DMC 2033S I/10	
Suction valve	118U0079	Spare part, Valve	
Suction valve	118U0047	S-VALVE 10/10	
Suction valve	118U0485	SAUGVENTIL 6/6MM + KP-ANSCHLUSS (Stahl)	
Liquid valve	118U0045	L-VALVE 6/6	
Liquid valve	118U0079	Spare part, Valve	
Pressure switch - HP	061F6701	ACB Pressure switch - HP	
Pressure switch - LP	061F7958	ACB Pressure switch - LP	
Pressure switch - LP	061F7959	ACB Pressure switch - LP	

Technical data and ordering

Optyma™ Commercial - Spare parts & accessories list

Spare parts & accessories list

Component type	Component code	Component description	Additional informations
Compressor single pack	MTZ18-4VI	MTZ18-4VI, COMP OSG-EQUAL MULTIREF	
Compressor single pack	MTZ18-5VI	MTZ18-5VI, COMPRESSOR VERSION EGALISATION	
Compressor single pack	MTZ22-5VI	MTZ22-5VI, COMPRESSOR VERSION EGALISATION	
Compressor single pack	MTZ22-4VI	MTZ22-4VI, COMP OSG-EQUAL MULTIREF	
Compressor single pack	MTZ28-4VI	MTZ28-4VI, COMP OSG-EQUAL MULTIREF	
Compressor single pack	MTZ28-5VI	MTZ28-5VI, COMP OSG-EQUAL MULTIREF	
Compressor single pack	MTZ32-4VI	MTZ32-4VI, COMP OSG-EQUAL MULTIREF	
Compressor single pack	MTZ32-5VI	MTZ32-5VI, COMP OSG-EQUAL MULTIREF	
Compressor single pack	MTZ36-4VI	Compressor MTZ36-5VI	
Compressor single pack	MTZ36-5VI	MTZ36-5VI, COMP OSG-EQUAL MULTIREF	
Compressor single pack	MTZ40-4VI	MTZ40-4VI, COMP OSG-EQUAL MULTIREF	
Compressor single pack	MTZ50-4VI	MTZ50-4VI, COMP OSG-EQUAL MULTIREF	
Compressor single pack	MTZ56-4VI	MTZ56-4VI, COMP OSG-EQUAL MULTIREF	
Compressor single pack	MTZ64-4VI	MTZ64-4VI, COMP OSG-EQUAL MULTIREF	
Compressor single pack	MTZ72-4VI	MTZ72-4VI, COMP OSG-EQUAL MULTIREF	
Compressor single pack	MTZ80-4VI	MTZ80-4VI, COMP OSG-EQUAL MULTIREF	
Compressor single pack	MTZ100-4VI	MTZ100-4VI, COMP OSG-EQUAL MULTIREF	
Compressor single pack	MTZ125-4VI	MTZ125-4VI, COMP OSG-EQUAL MULTIREF	
Compressor single pack	MTZ144-4VI	MTZ144-4VI, COMP OSG-EQUAL MULTIREF	
Compressor single pack	MTZ160-4VI	MTZ160-4VI, COMP OSG-EQUAL MULTIREF	
Compressor single pack	120F0226	NTZ048-4LR1-SINGLE	
Compressor single pack	120F0228	NTZ048-5LR1-SINGLE	
Compressor single pack	120F0230	NTZ068-4LR1-SINGLE	
Compressor single pack	120F0232	NTZ068-5LR1-SINGLE	
Compressor single pack	120F0234	NTZ096-4LR1-SINGLE	
Compressor single pack	120F0238	NTZ108-4LR1-SINGLE	
Compressor single pack	120F0236	NTZ136-4LR1- RECIP	
Compressor single pack	120F0240	NTZ215-4LR1-SINGLE RECIP COMP	
Compressor single pack	120F0242	NTZ271-4LR1-SINGLE RECIP COMP	
Condenser	118U3492	CONDENSER COIL MCHX A7	
Condenser	118U3493	CONDENSER COIL MCHX D7	
Condenser	118U3494	CONDENSER COIL MCHX G7	
Condenser	118U1004	CONDENSER COIL MCHX N8	
Condenser	118U3717	Spare Part H4 MCHX	
Crankcase heater	120Z0459	PTC Crankcase heater	
Dual pressure switch	060-127466	KP17B Switch	
Dual pressure switch	060-539766	KP17WB Switch	
Fan assembly	118U0390	Fan assembly Ø350- 6 Pole, 230/1/50-60	
Fan assembly	118U0391	Fan assembly Ø450-6 Pole, 230/1/50-60	
Fan assembly	118U0392	Fan assembly Ø500-6 Pole, 230/1/50-60	
Fan assembly	118U0393	Fan assembly Ø560-6 Pole, 230/1/50-60	
Discharge gas thermostat	7750009	DISCHARGE THERMOSTAT KIT	
Fan speed controller	061H3144	XGE-2C	
Filter drier (Multipack)	023Z4562	DML053S	
Filter drier (Multipack)	023Z4572	DML084S	
Filter drier (Multipack)	023Z4581	DML165S	
Oil	120Z0638	LUBRICANT 175PZ-1L CAN	
Oil	120Z0639	LUBRICANT 175PZ-2.5L CAN	
Receiver	8168179	LIQUID RECEIVER 3L R032	
Receiver	8168180	LIQUID RECEIVER 6L R061	
Receiver	8168181	LIQUID RECEIVER 8L R076	
Receiver	8168183	LIQUID RECEIVER 14L R141	
Rotalock valve discharge	7968012	ROTALOCK valve 1" - 3/8"	
Rotalock valve discharge	7968013	ROTALOCK VALVE 1" - 1/2"	
Rotalock valve discharge	7968014	ROTALOCK VALVE 1 1/4" - 5/8"	
Rotalock valve suction	7968017	ROTALOCK VALVE 1 3/4" - 7/8"	
Rotalock valve suction	7968018	ROTALOCK valve 1+3/4" - 1+1/8"	
Sight glass (Multipack)	014-0182	SGN10s	
Sight glass (Multipack)	014-0183	SGN12s	
Sight glass (Multipack)	014-0184	SGN16s	

Nomenclature

Designation system for the Optyma™ standard programm

(additional programm voltage, frequency etc.: please contact your local wholesaler)

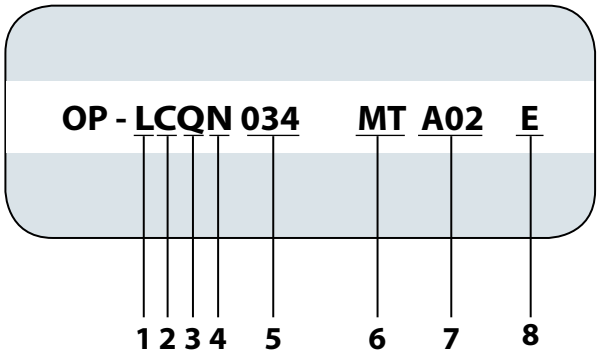

No.	Title	Description	No.	Title	Description
1	Application	M = Medium Back Pressure (MBP), L = Low Back Pressure (LBP)	5	Compressor displacement	Example 048 = 48 cm³
2	Platform	C: Air cooled condensing unit with single fan G: Air cooled condensing unit with dual fan	6	Reciprocating compressor platform	FR = FR SC = SC NX = NX NS = NS NP = NPT MY = MLY NT = NTZ TL = TL NF = NF GS = GS NB = NBC NY = NLY MP = MPT MX = MX MT = MTZ NL = NL
3	Refrigerant	R: R134a, R404A / R507, R407C, R407A, R407F, R448A, R449A, R452A G: R134a, R513A H: R404A / R507 Q: R452A, R404A / R507 N: R290	7	Version	A00, A01, A02, A04, A09, A10, A11.
4	Condenser design	C: Fin & Tube condenser, ambient temperature up to 43 °C N: Microchannel condenser, ambient temperature up to 46 °C	8	Electrical code	G: Compressor 230V/1P/50Hz, fan 230V/1P/50Hz E: Compressor 400V/3P/50Hz, fan 230V/1P/50Hz

Cooling capacity range [kW]

Range span by refrigerant

Minimum / Maximum Cooling capacity in [kW]	Optyma™	
	Light Commercial	Commercial
Medium temperature (MBP)		
R290	0.2 – 1.4	–
R448A	–	2 – 20.5
R449A	–	2 – 20.5
R134a / R513A *)	0.1 – 1.6	1.3 – 13.1
R452A	–	2.2 – 20.6
R407A	–	1.9 – 19.1
R407C	–	1.8 – 19.1
R407F	–	2 – 20.1
R404A / 507	0.3 – 17	2.2 – 21.7
Low temperature (LBP)		
R290	0.1 – 0.7	–
R452A	0.1 – 0.3	0.8 – 6.1
R404A / 507	0.1 – 0.9	0.9 – 6.6

Rating conditions EN 13215 (dew point):
***MBP**: Ambient temp = 32 °C; Evap temp = -10 °C; Superheat = 10 K; Subcooling = 0 K / **LBP**: Ambient temp = 32 °C; Evap temp = -35 °C; Superheat = 10 K; Subcooling = 0 K*
**) R513A is preliminary (available only for light commercial)*

Dimensions

Optyma™ Light Commercial - Dimensions

Chassis

1 2

3 4

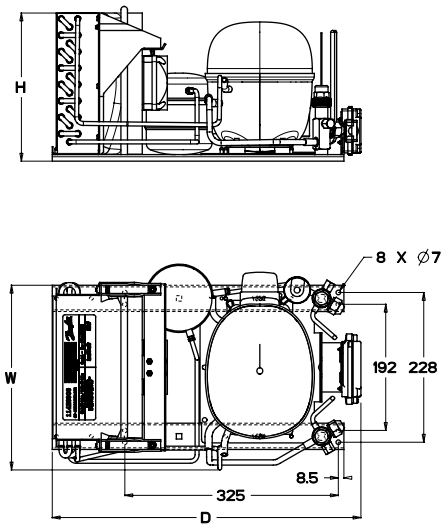

Chassis

5 6 7

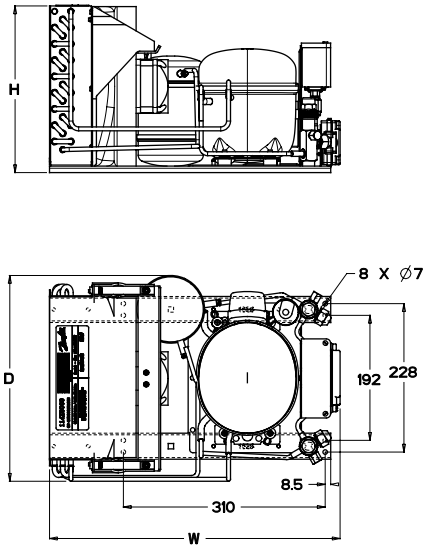

Chassis

8 9 10

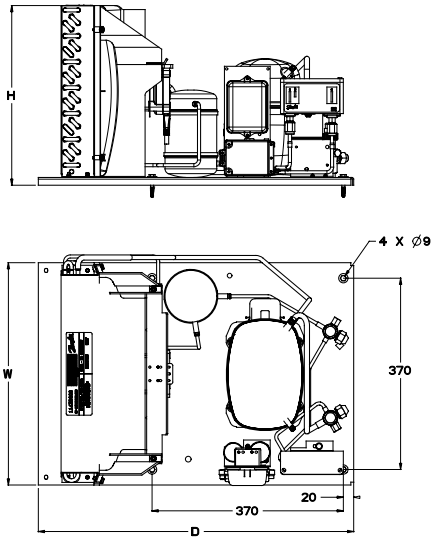

Chassis

11 12

13 14

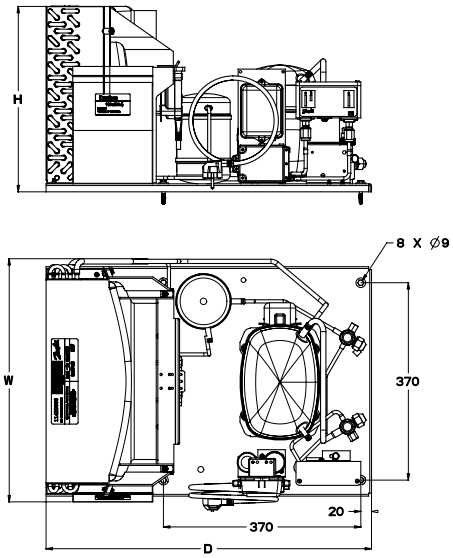

Dimensions

Optyma™ Commercial - Dimensions

Chassis A (Single Fan)

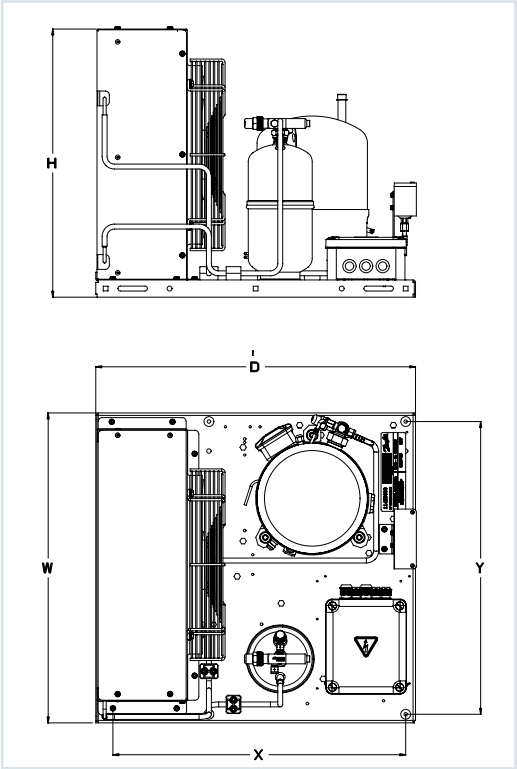

S.No	Description	Compressor	Application	H	W	D	X	Y	Units
1	OP-MCRN030MTA02E	MTZ018	MBP	545	630	650	400	595	114X5721
2	OP-MCRN030MTA02G		MBP						114X5722
3	OP-MCRN038MTA02G	MTZ022	MBP						114X5723
4	OP-MCRN038MTA02E		MBP						114X5724
5	OP-LCQN048NTA02E	NTZ048	LBP						114X5758
6	OP-LCQN048NTA02G		LBP						114X5759

Chassis B (Two Fan)

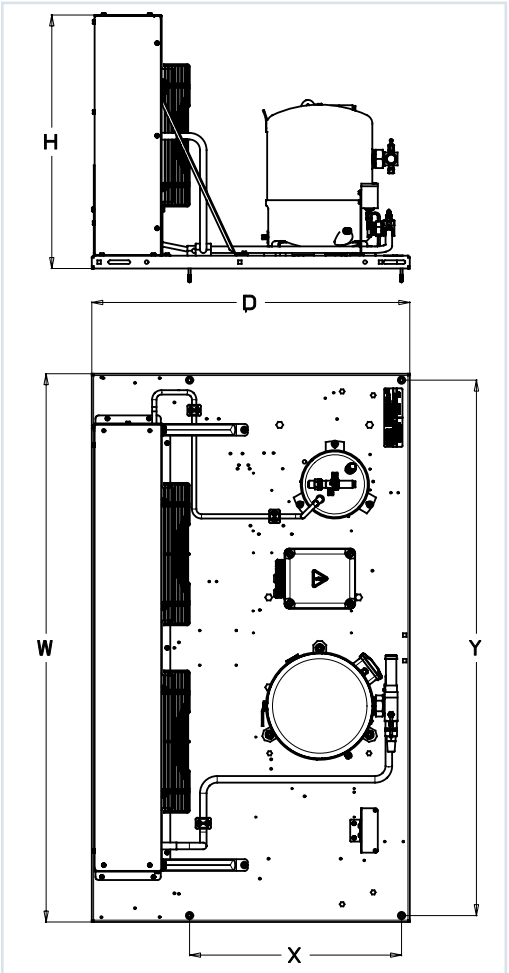

S.No	Description	Compressor	Application	H	W	D	X	Y	Units
1	OP-MGRN108MTA02E	MTZ064	MBP	693.5	1500	870	580	1465	114X5743
2	OP-MGRN121MTA02E	MTZ072	MBP						114X5746
3	OP-MGRN136MTA02E	MTZ080	MBP						114X5749
4	OP-LGQN096NTA02E	NTZ096	LBP						114X5766
5	OP-LGQN108NTA02E	NTZ108	LBP						114X5769
6	OP-LGQN136NTA02E	NTZ136	LBP						114X5771

Dimensions

Optyma™ Commercial - Dimensions

Chassis C (Single Fan)

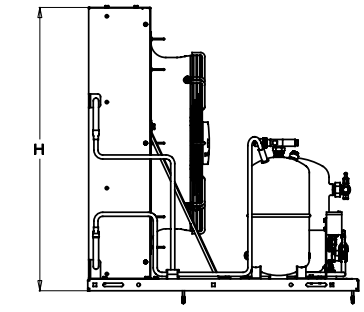

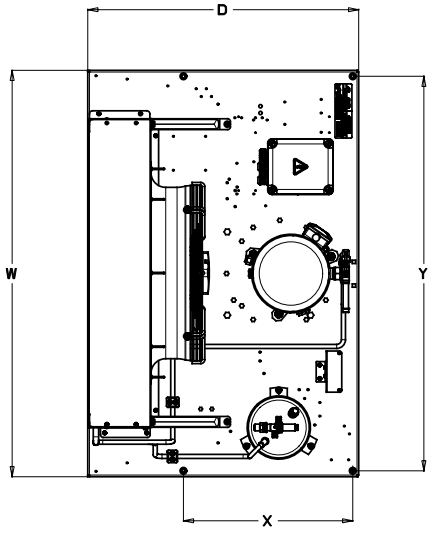

S.No	Description	Compressor	Application	H	W	D	X	Y	Units
1	OP-MCRN048MTA02E	MTZ028	MBP	705	900	900	600	865	114X5726
2	OP-MCRN048MTA02G		MBP						114X5728
3	OP-MCRN054MTA02E	MTZ032	MBP						114X5729
4	OP-MCRN054MTA02G		MBP						114X5731
5	OP-MCRN060MTA02E	MTZ036	MBP						114X5732
6	OP-MCRN060MTA02G		MBP						114X5734
7	OP-LCQN068NTA02E	NTZ068	LBP						114X5761
8	OP-LCQN068NTA02G		LBP						114X5762

Chassis D (Single Fan)

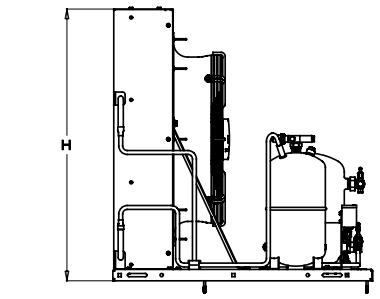

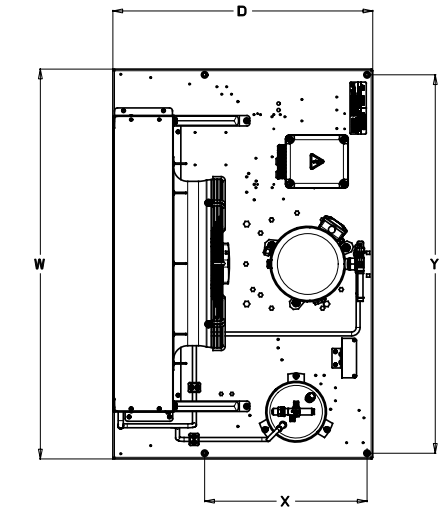

S.No	Description	Compressor	Application	H	W	D	X	Y	Units
1	OP-MCRN068MTA02E	MTZ040	MBP	836.5	1200	800	500	1165	114X5735
2	OP-MCRN086MTA02E	MTZ050	MBP						114X5737
3	OP-MCRN096MTA02E	MTZ056	MBP						114X5739
4	OP-MCRN108MTA02E	MTZ064	MBP						114X5740
5	OP-MCRN121MTA02E	MTZ072	MBP						114X5744
6	OP-MCRN136MTA02E	MTZ080	MBP						114X5747
7	OP-LCQN096NTA02E	NTZ096	LBP						114X5764
8	OP-LCQN108NTA02E	NTZ108	LBP						114X5768
9	OP-LCQN136NTA02E	NTZ136	LBP						114X5772

Dimensions

Optyma™ Commercial - Dimensions

Chassis E (Two Fan)

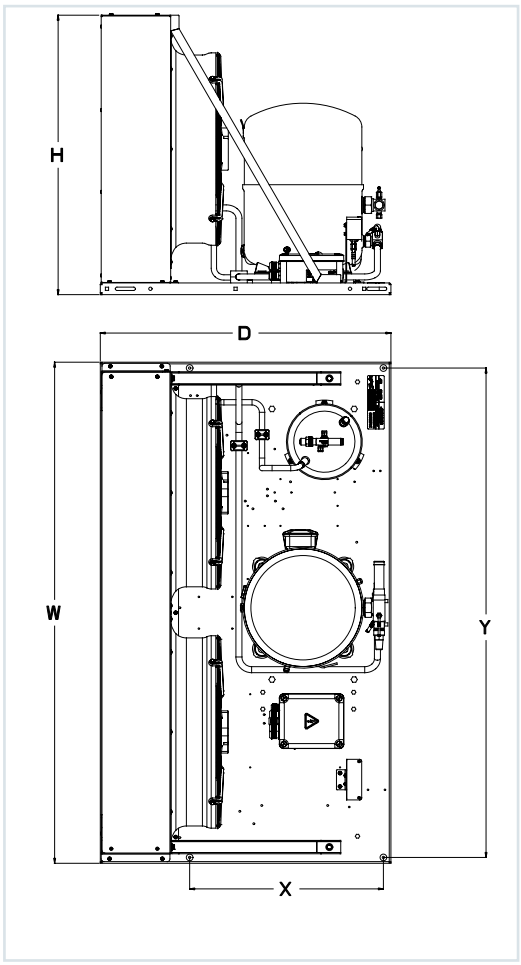

S.No	Description	Compressor	Application	H	W	D	X	Y	Units
1	OP-MGRN171MTA02E	MTZ100	MBP	836.5	1500	870	580	1465	114X5750
2	OP-MGRN215MTA02E	MTZ125	MBP						114X5753
3	OP-MGRN242MTA02E	MTZ144	MBP						114X5754
4	OP-MGRN271MTA02E	MTZ160	MBP						114X5757
5	OP-LGQN215NTA02E	NTZ215	LBP						114X5774
6	OP-LGQN271NTA02E	NTZ271	LBP						114X5776

Wiring diagram

Optyma™ Light Commercial - Electrical wiring diagrams - R290

Compressor range: NS34

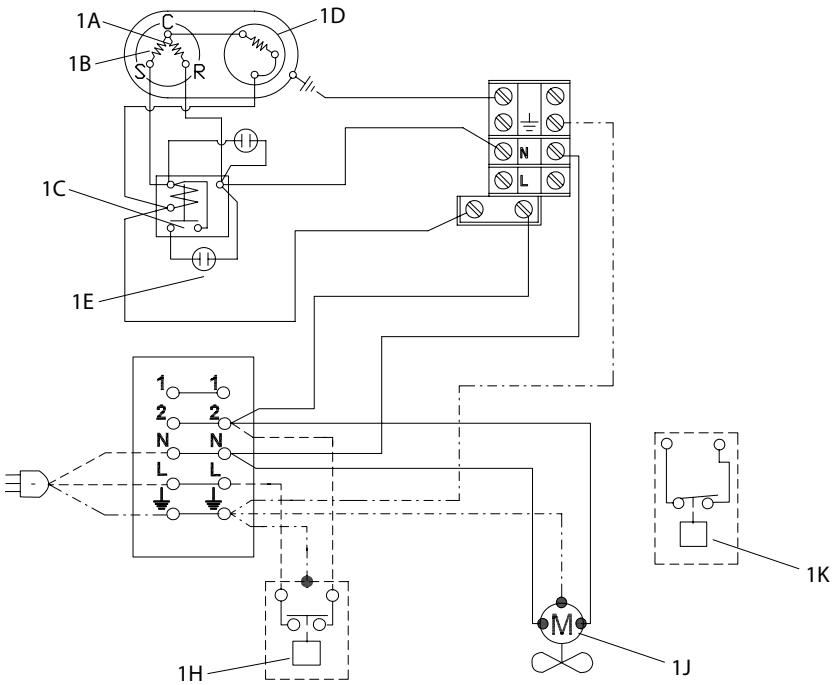

Compressor range: NL and NP and NX

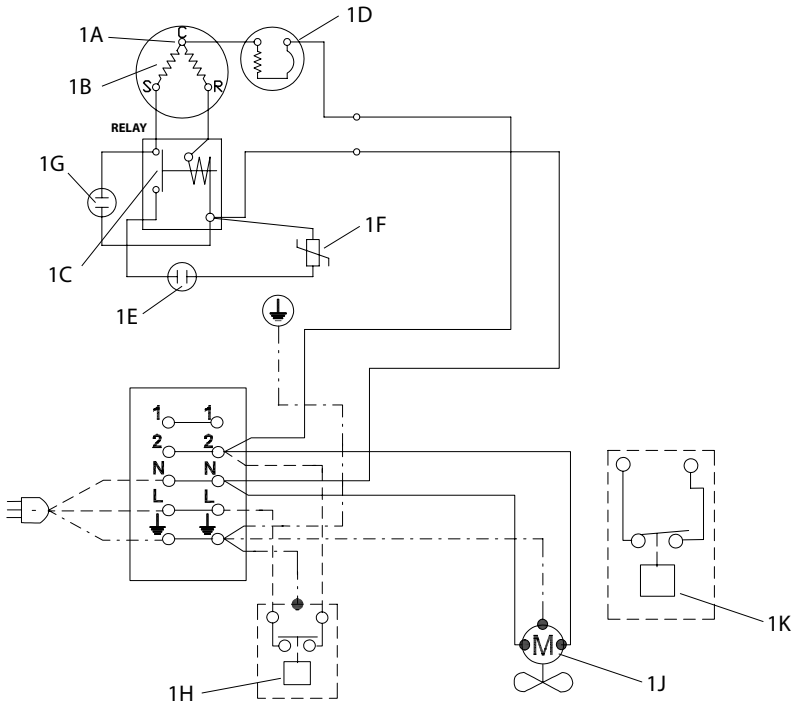

1A - Main winding
1B - Start winding
1C - Start relay
1D - Winding protector
1E - Start capacitor
1F - Bleeder resistance
1G - Run capacitor
1H - Thermostat
1J - Fan
1K - Pressure control

Wiring diagram

Optyma™ Light Commercial - Electrical wiring diagrams - R290

Compressor range: NBC30

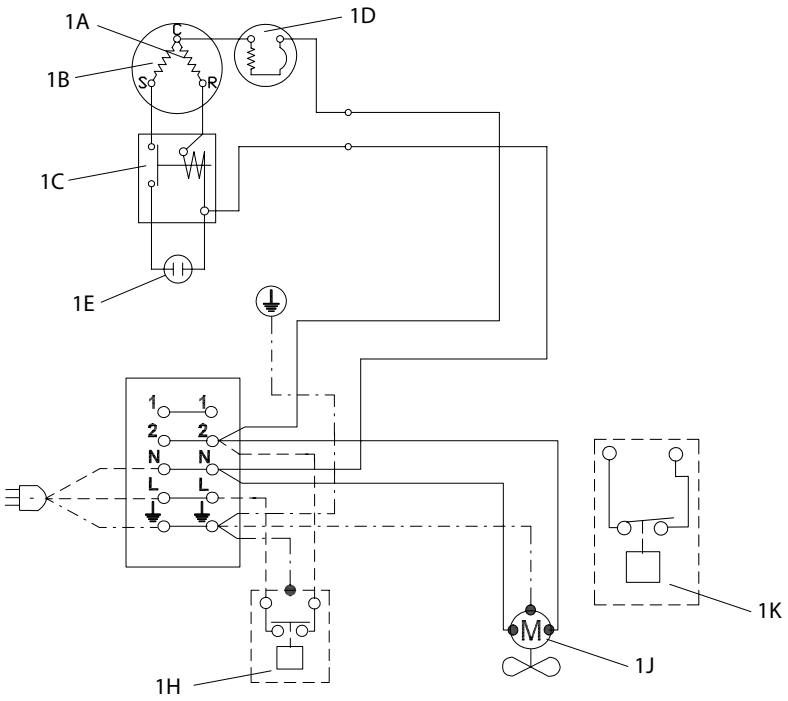

1A - Main winding
1B - Start winding
1C - Start relay
1D - Winding protector
1E - Start capacitor
1F - Bleeder resistance
1G - Run capacitor
1H - Thermostat
1J - Fan
1K - Pressure control

Wiring diagram

Optyma™ Light Commercial - Electrical wiring diagrams - R134a, R404A / R507 & R452A

For compressor:
- NL8,4CLX
- NL8,4MF
- TL4DL
- SX10MLX
- SC12MLX

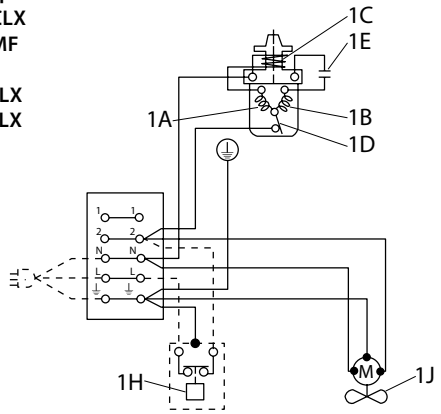

For compressor:
- SC18MLX
- SC21CL
- SC18CL

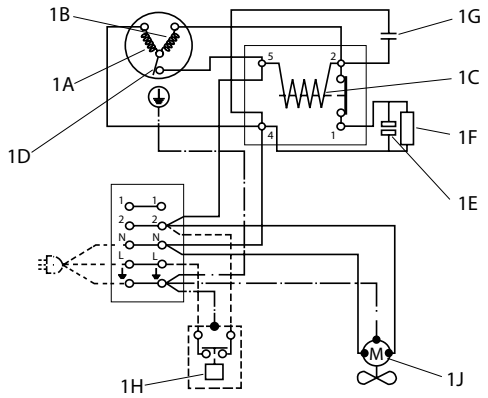

For compressor:
- TL4DL
- SC10MLX
- SC12MLX
- NL8,4CLX

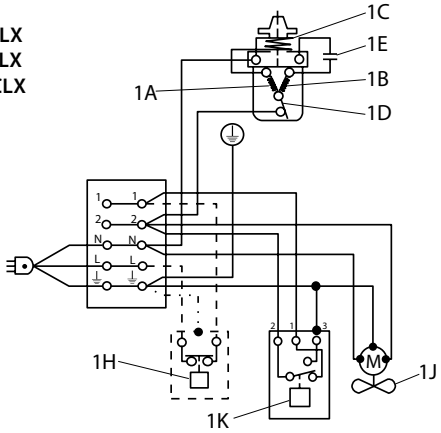

For compressor:
- SC18MLX
- SC21CL

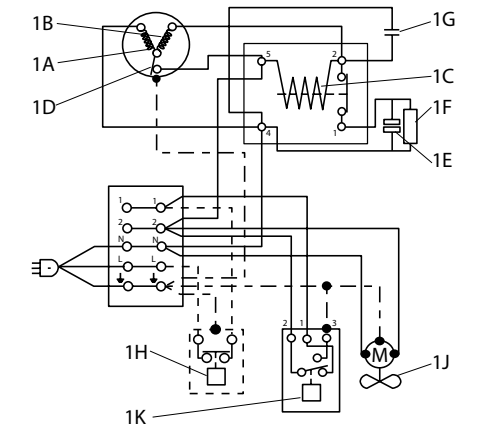

1A - Main winding
1B - Start winding
1C - Start relay
1D - Winding protector
1E - Start capacitor
1F - Bleeder resistance
1G - Run capacitor
1H - Thermostat
1J - Fan
1K - Pressure control

Wiring diagram

Optyma™ Commercial - Electrical wiring diagrams

Single Phase models

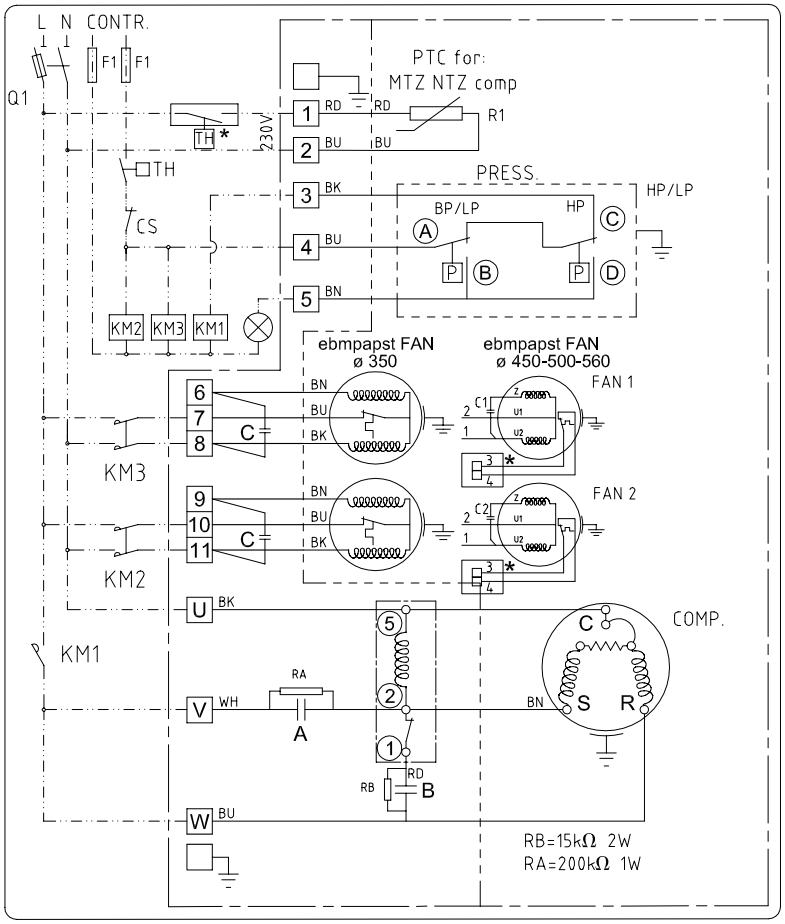

BK: BLACK BU: BLUE
BN: BROWN WH: WHITE
RD: RED GY:GREY
One or two fans for Danfoss condensing units

*OPTION
OVERLOAD PROTECTOR IF AVAILABLE

50 Hz			
COMPRESSOR MODEL	DISPLACEMENT cm³	A	B
		µF/450VAC	µF/450VAC
NTZ048	048	30	100
NTZ068	068	30	100
MT-MTZ18	030	30	100
MT-MTZ22	038	30	100
MT-MTZ28	048	30	100
MT-MTZ32	054	35	135
MT-MTZ36	061	35	135
60 Hz			
NTZ048	048	25	100
NTZ068	068	50	135
MT-MTZ18	030	25	100
MT-MTZ22	038	45	100
MT-MTZ28	048	50	135
MT-MTZ32	054	45	100
MT-MTZ36	061	45	100

FAN DIAMETER	C (Capacitor Fan) ebmpapst µF/450VAC	
	50 Hz	60 Hz
350	2	2
	C1/C2 (Capacitor Fan)	
450	3	3
500	5	5
560	10	10

LEGEND	
A	RUN CAPACITOR COMPRESSOR
B	START CAPACITOR COMPRESSOR
CS	CONTROL SWITCH ON/OFF
C/C1/C2	CAPACITOR FAN
F1	FUSE CONTROL CIRCUIT
FAN 1-2	CONDENSER FANS
HP/LP	DUAL PRESSURE SWITCH
KM1	COMPRESSOR CONTACTOR
KM2	FAN CONTACTOR
KM3	FAN CONTACTOR
Q1	MAIN SWITCH + CIRCUIT BREAKER
R1	CRANKCASE HEATER
RA	BLEEDER RESISTOR
RB	BLEEDER RESISTOR
TH	THERMOSTAT

Three Phase models

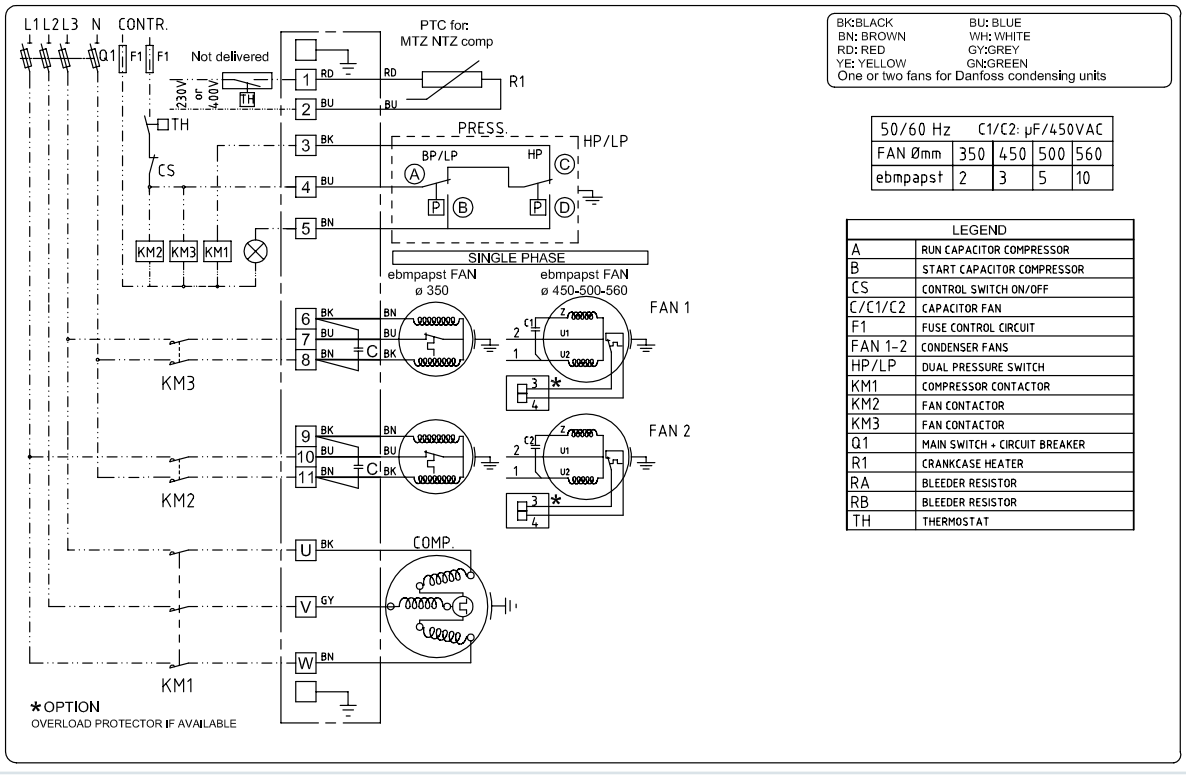

BK:BLACK BU: BLUE
BN: BROWN WH: WHITE
RD: RED GY:GREY
YE: YELLOW GN:GREEN
One or two fans for Danfoss condensing units

50/60 Hz	C1/C2: µF/450VAC			
FAN Ømm	350	450	500	560
ebmpapst	2	3	5	10

LEGEND	
A	RUN CAPACITOR COMPRESSOR
B	START CAPACITOR COMPRESSOR
CS	CONTROL SWITCH ON/OFF
C/C1/C2	CAPACITOR FAN
F1	FUSE CONTROL CIRCUIT
FAN 1-2	CONDENSER FANS
HP/LP	DUAL PRESSURE SWITCH
KM1	COMPRESSOR CONTACTOR
KM2	FAN CONTACTOR
KM3	FAN CONTACTOR
Q1	MAIN SWITCH + CIRCUIT BREAKER
R1	CRANKCASE HEATER
RA	BLEEDER RESISTOR
RB	BLEEDER RESISTOR
TH	THERMOSTAT

Optyma™ **Slim Pack - The cost effective outdoor solution**

Optyma™ **Slim Pack** is the cost effective packaged condensing unit - Micro Channel condenser technology.
Danfoss has developed Optyma™ **Slim Pack** to meet all customers' needs in MBP and LBP applications.

Reliability, compactness, low sound level and low cost make the Danfoss Optyma™ **Slim Pack** condensing unit an optimal cooling solution for refrigeration. Dedicated outdoor condensing unit for cold, fermentation and storage rooms in all kinds of convenience stores or restaurants.



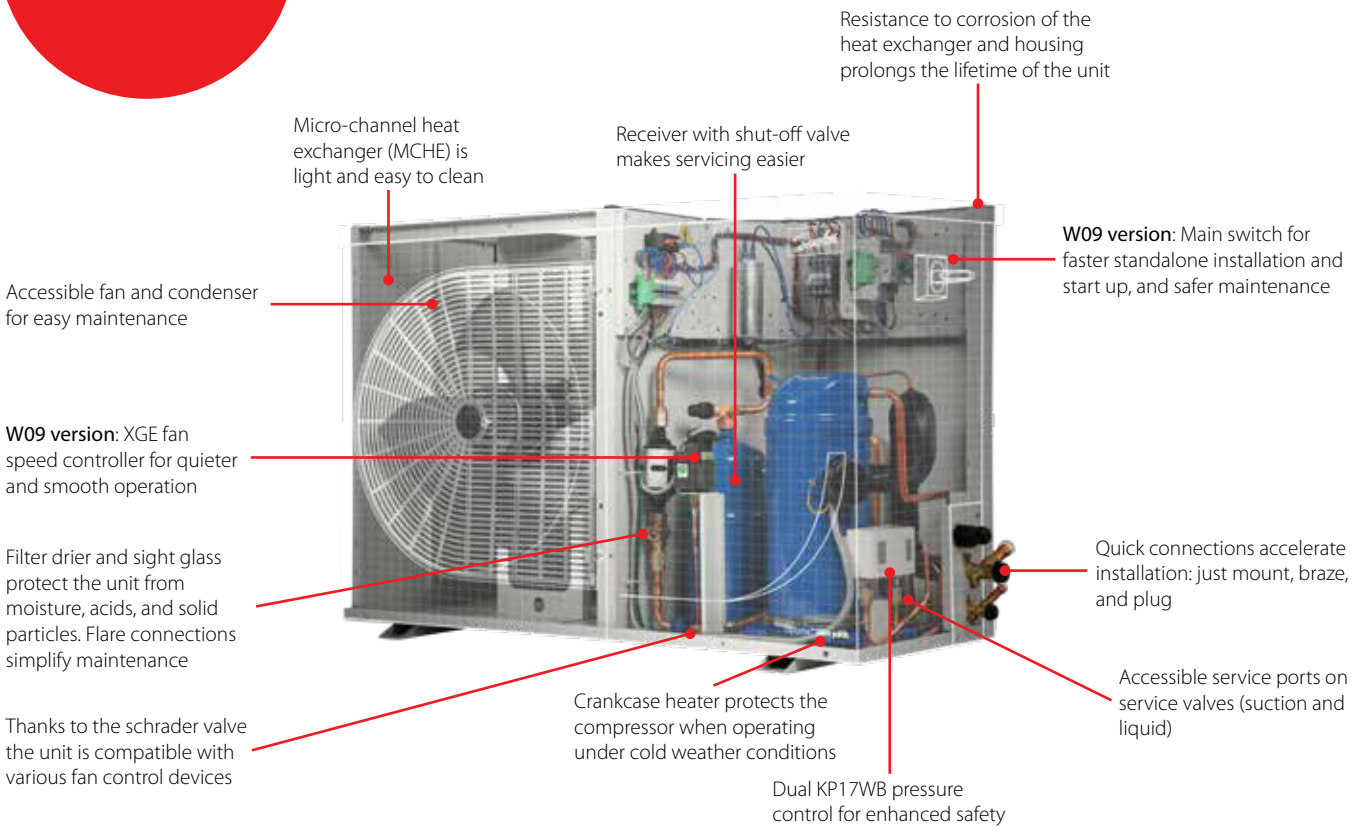

EcoDesign 2018

Facts

Applications:
- Mini-markets / supermarkets
- Restaurants
- Wine cellars
- Fish markets
- Butchers' shops
- Bakeries
- Laboratories
- Florists
- Petrol stations
- Industrial processes
- Milk cooling
- Dairy and general food storage
- Cold rooms
- Freezers
- Depending on models, available for R134a, R407A/F, R404A, R448A, R449A, R452A, R513A*)
  **) in progress*

- The Optyma™ **Slim Pack** can be located even in residential areas. Smart compressor design. These unit presents low acoustic levels improving comfort and reducing surrounding impact.
- We provide the units with highly reliable scroll and reciprocating compressors, micro channel heat exchangers and all needed components which are pre-assembled, integrated and factory tested.
- Danfoss Optyma™ **Slim Pack** is designed for Outdoor & Indoor conditions using corrosion resistant microchannel heat exchangers and housing. The galvanized, painted and salt spray tested housing is used to ensure long lifetime.
- Optyma™ **Slim Pack** Condensing units meet Ecodesign 2018 targets and Energy related Product (ErP) directive applicable for fan motors. In addition, Optyma™ **Slim Pack** Condensing units are qualified with Low GWP refrigerants reducing environmental impact.
- System designed to perfectly fit into a compact and light housing. The Optyma™ **Slim Pack** weights up to 87 kg, which makes it the lightest solution in the market
- With quick connections of suction and liquid lines and service ports outside Optyma™ **Slim Pack** is among the fastest and easiest to install. Easy to clean MCHE saves your time and efforts, ensuring longer lifetime and optimized efficiency
- Danfoss Optyma™ **Slim Pack** extends your possibilities with models for low and medium temperatures.

Technical data and ordering

Optyma™ **Slim Pack - R452A - LBP**

Performance data

Model	Compressor	Electrical code [1]	Tamb [°C]	Cooling capacity Q [kW] [2] Te [°C] -40	-35	-30	-25	-20	-15	-10	EcoDesign [3] Q [kW]	P [kW]	COP	SEPR	Sound power level dB(A)	Sound pressure level 10 m dB(A)	Version	Code
OP-LSQM014MP	MPT14LA	G	27	–	0.421	0.535	0.656	0.784	0.919	1.060	–	–	–	–	–	–	W05 W09	114X7106 114X7129
			32	–	0.379	0.481	0.592	0.710	0.835	0.966	0.422	0.441	0.96	–	63	32		
			38	–	0.328	0.418	0.515	0.621	0.734	0.854	–	–	–	–	–	–		
			43	–	0.285	0.365	0.452	0.548	0.651	0.761	–	–	–	–	–	–		
OP-LSQM018MP	MPT16LA	G	27	–	0.443	0.583	0.735	0.897	1.070	1.253	–	–	–	–	–	–	W05 W09	114X7107 114X7130
			32	–	0.396	0.522	0.661	0.810	0.971	1.142	0.441	0.465	0.95	–	63	32		
			38	–	0.340	0.450	0.572	0.707	0.853	1.009	–	–	–	–	–	–		
			43	–	0.293	0.390	0.499	0.621	0.754	0.899	–	–	–	–	–	–		
OP-LSQM026AJ	CAJ2446Z	G	27	0.472	0.659	0.881	1.144	1.447	1.794	2.184	–	–	–	–	–	–	W05 W09	114X7085 114X7179
			32	0.408	0.581	0.788	1.031	1.312	1.634	1.997	0.644	0.671	0.96	–	67	36		
			38	–	0.489	0.675	0.894	1.148	1.439	1.769	–	–	–	–	–	–		
			43	–	0.414	0.582	0.780	1.010	1.275	1.577	–	–	–	–	–	–		
OP-LSQM034AJ	CAJ2464Z	G	27	0.628	0.859	1.139	1.473	1.864	2.316	2.830	–	–	–	–	–	–	W05 W09	114X7086 114X7180
			32	0.549	0.763	1.022	1.332	1.695	2.115	2.594	0.846	0.892	0.95	–	68	37		
			38	–	0.649	0.882	1.161	1.489	1.870	2.307	–	–	–	–	–	–		
			43	–	0.556	0.767	1.019	1.318	1.666	2.067	–	–	–	–	–	–		
OP-LSQM048NT	NTZ048-5	G	27	0.771	1.090	1.478	1.931	2.446	3.018	3.641	–	–	–	–	–	–	W05 W09	114X7087 114X7181
			32	0.655	0.948	1.303	1.718	2.191	2.717	3.291	1.053	0.950	1.11	–	71	40		
			38	0.529	0.790	1.105	1.475	1.896	2.366	2.880	–	–	–	–	–	–		
			43	0.433	0.667	0.950	1.281	1.660	2.082	2.545	–	–	–	–	–	–		
OP-LSQM048NT	NTZ048-4	E	27	0.778	1.076	1.438	1.860	2.340	2.873	3.454	–	–	–	–	–	–	W05 W09	114X7088 114X7182
			32	0.679	0.947	1.273	1.655	2.092	2.579	3.112	1.054	0.981	1.07	–	71	40		
			38	0.572	0.805	1.089	1.424	1.809	2.241	2.716	–	–	–	–	–	–		
			43	0.491	0.695	0.945	1.242	1.584	1.969	2.396	–	–	–	–	–	–		
OP-LSQM074FH	FH2511Z	G	27	1.062	1.511	2.037	2.641	3.324	4.085	4.919	–	–	–	–	–	–	W05 W09	114X7095 114X7185
			32	0.889	1.310	1.801	2.365	3.003	3.713	4.492	1.458	1.539	0.95	–	75	44		
			38	–	1.070	1.518	2.033	2.614	3.262	3.975	–	–	–	–	–	–		
			43	–	0.874	1.286	1.757	2.290	2.886	3.542	–	–	–	–	–	–		
OP-LSQM074FH	TFH2511Z	E	27	1.001	1.415	1.897	2.442	3.044	3.695	4.384	–	–	–	–	–	–	W05 W09	114X7096 114X7186
			32	0.841	1.221	1.664	2.166	2.722	3.324	3.964	1.362	1.390	0.98	–	75	44		
			38	–	1.003	1.398	1.848	2.347	2.890	3.467	–	–	–	–	–	–		
			43	–	0.835	1.190	1.595	2.045	2.536	3.059	–	–	–	–	–	–		
OP-LSQM068NT	NTZ068-4	E	27	1.215	1.655	2.158	2.712	3.299	3.898	4.484	–	–	–	–	–	–	W05 W09	114X7090 114X7184
			32	1.056	1.459	1.918	2.421	2.952	3.491	4.014	1.632	1.404	1.16	–	71	40		
			38	0.864	1.223	1.629	2.070	2.534	3.000	3.446	–	–	–	–	–	–		
			43	0.708	1.028	1.388	1.778	2.184	2.588	2.969	–	–	–	–	–	–		
OP-LSQM068NT	NTZ068-5	G	27	1.241	1.667	2.151	2.688	3.273	3.897	4.550	–	–	–	–	–	–	W05 W09	114X7089 114X7183
			32	1.052	1.447	1.895	2.392	2.932	3.508	4.110	1.619	1.627	1.00	–	71	40		
			38	0.833	1.192	1.597	2.045	2.530	3.047	3.586	–	–	–	–	–	–		
			43	0.659	0.987	1.355	1.762	2.201	2.668	3.153	–	–	–	–	–	–		
OP-LSQM067LL	LLZ013T4	E	27	1.925	2.483	3.161	3.970	4.918	6.013	7.257	–	–	–	–	–	–	W05 W09	114X7091 114X7187
			32	1.794	2.306	2.929	3.675	4.553	5.571	6.733	2.570	2.177	1.18	1.67	71	40		
			38	1.642	2.096	2.651	3.318	4.108	5.030	6.089	–	–	–	–	–	–		
			43	1.519	1.922	2.418	3.017	3.731	4.570	5.541	–	–	–	–	–	–		
OP-LSQM084LL	LLZ015T4	E	27	2.408	3.051	3.812	4.703	5.732	6.905	8.225	–	–	–	–	–	–	W05 W09	114X7092 114X7188
			32	2.223	2.820	3.526	4.351	5.306	6.398	7.630	3.152	2.706	1.16	1.6	73	42		
			38	1.997	2.533	3.167	3.909	4.771	5.761	6.884	–	–	–	–	–	–		
			43	1.803	2.286	2.856	3.526	4.306	5.206	6.234	–	–	–	–	–	–		
OP-LSQM098LL	LLZ018T4	E	27	2.812	3.560	4.438	5.457	6.622	7.938	9.406	–	–	–	–	–	–	W05 W09	114X7075 114X7189
			32	2.592	3.286	4.098	5.039	6.118	7.339	8.704	3.683	3.166	1.16	1.61	74	43		
			38	2.318	2.943	3.671	4.516	5.486	6.588	7.824	–	–	–	–	–	–		
			43	2.084	2.647	3.302	4.062	4.937	5.935	7.061	–	–	–	–	–	–		

LBP

(1) G - Compressor 230V/1~/50Hz, fan 230V/1~/50Hz
E - Compressor 400V/3~/50Hz, fan 230V/1~/50Hz
(2) Nominal conditions (EN13215), Evaporating temperatures at dew point, Superheat 10 K, Subcooling 0 K
(3) Rated conditions (EN13215), Evaporating temperature (dew point) -35 °C, Ambient air temperature 32 °C, Return Gas Temperature 20 °C, Subcooling 0 K

SEPR, Seasonal Energy Performance Ratio
Q [kW], Cooling Capacity
P [kW], Power Input

*For regular updates and detailed capacities, please refer to **Coolselector®2** software*

EcoDesign 2018

Technical data and ordering

Optyma™ **Slim Pack - R404A / R507 - LBP**

Performance data

Model	Compressor	Electrical code [1]	Tamb [°C]	Cooling capacity Q [kW] [2] Te [°C] -40	-35	-30	-25	-20	-15	-10	EcoDesign [3] Q [kW]	P [kW]	COP	SEPR	Sound power level dB(A)	Sound pressure level 10 m dB(A)	Version	Code
OP-LSQM014MP	MPT14LA	G	27	–	0.494	0.640	0.802	0.979	1.171	1.379	–	–	–	–	–	–	W05 W09	114X7106 114X7129
			32	–	0.444	0.577	0.725	0.889	1.068	1.264	0.500	0.486	1.03	–	60	29		
			38	–	0.384	0.501	0.633	0.781	0.945	1.126	–	–	–	–	–	–		
			43	–	0.335	0.439	0.557	0.692	0.843	1.011	–	–	–	–	–	–		
OP-LSQM018MP	MPT16LA	G	27	–	0.535	0.710	0.903	1.115	1.345	1.594	–	–	–	–	–	–	W05 W09	114X7107 114X7130
			32	–	0.480	0.638	0.816	1.013	1.228	1.463	0.540	0.504	1.07	–	60	29		
			38	–	0.413	0.553	0.712	0.890	1.088	1.305	–	–	–	–	–	–		
			43	–	0.359	0.483	0.626	0.789	0.971	1.173	–	–	–	–	–	–		
OP-LSQM026AJ	CAJ2446Z	G	27	0.526	0.732	0.978	1.268	1.606	1.993	2.432	–	–	–	–	–	–	W05 W09	114X7085 114X7179
			32	0.455	0.645	0.872	1.140	1.451	1.809	2.216	0.724	0.715	1.01	–	67	36		
			38	0.371	0.541	0.745	0.985	1.265	1.588	1.957	–	–	–	–	–	–		
			43	–	0.457	0.641	0.857	1.111	1.404	1.739	–	–	–	–	–	–		
OP-LSQM034AJ	CAJ2464Z	G	27	0.685	0.933	1.232	1.586	2.000	2.476	3.015	–	–	–	–	–	–	W05 W09	114X7086 114X7180
			32	0.599	0.826	1.101	1.428	1.809	2.249	2.749	0.930	0.953	0.98	–	68	37		
			38	0.497	0.701	0.946	1.238	1.580	1.976	2.429	–	–	–	–	–	–		
			43	–	0.598	0.819	1.082	1.391	1.750	2.163	–	–	–	–	–	–		
OP-LSQM048NT	NTZ048-5	G	27	0.776	1.134	1.568	2.083	2.677	3.349	4.098	–	–	–	–	–	–	W05 W09	114X7087 114X7181
			32	0.651	0.981	1.381	1.853	2.398	3.017	3.706	1.104	1.097	1.01	–	71	40		
			38	0.501	0.798	1.155	1.576	2.062	2.615	3.232	–	–	–	–	–	–		
			43	0.381	0.647	0.968	1.345	1.782	2.279	2.836	–	–	–	–	–	–		
OP-LSQM048NT	NTZ048-4	E	27	0.783	1.143	1.572	2.072	2.645	3.290	4.007	–	–	–	–	–	–	W05 W09	114X7088 114X7182
			32	0.670	1.000	1.392	1.849	2.371	2.960	3.615	1.126	0.997	1.13	–	71	40		
			38	0.536	0.831	1.179	1.583	2.044	2.565	3.147	–	–	–	–	–	–		
			43	0.427	0.692	1.003	1.363	1.775	2.240	2.760	–	–	–	–	–	–		
OP-LSQM074FH	TFH2511Z	E	27	1.177	1.670	2.254	2.931	3.695	4.543	5.468	–	–	–	–	–	–	W05 W09	114X7096 114X7186
			32	0.985	1.434	1.969	2.588	3.291	4.074	4.931	1.620	1.514	1.07	–	75	44		
			38	0.776	1.173	1.646	2.197	2.825	3.528	4.301	–	–	–	–	–	–		
			43	0.620	0.972	1.394	1.887	2.452	3.087	3.789	–	–	–	–	–	–		
OP-LSQM074FH	FH2511Z	G	27	1.176	1.664	2.235	2.890	3.630	4.455	5.361	–	–	–	–	–	–	W05 W09	114X7095 114X7185
			32	0.983	1.439	1.971	2.580	3.268	4.034	4.877	1.627	1.662	0.98	–	75	44		
			38	0.756	1.172	1.655	2.207	2.831	3.526	4.292	–	–	–	–	–	–		
			43	0.573	0.955	1.395	1.899	2.468	3.102	3.803	–	–	–	–	–	–		
OP-LSQM068NT	NTZ068-5	G	27	1.332	1.793	2.348	2.994	3.730	4.548	5.440	–	–	–	–	–	–	W05 W09	114X7089 114X7183
			32	1.189	1.608	2.110	2.694	3.358	4.098	4.905	1.826	1.730	1.06	–	71	40		
			38	1.017	1.388	1.828	2.338	2.918	3.564	4.270	–	–	–	–	–	–		
			43	0.873	1.205	1.594	2.044	2.554	3.123	3.745	–	–	–	–	–	–		
OP-LSQM068NT	NTZ068-4	E	27	1.359	1.860	2.443	3.107	3.852	4.672	5.563	–	–	–	–	–	–	W05 W09	114X7090 114X7184
			32	1.172	1.629	2.162	2.770	3.451	4.204	5.024	1.845	1.613	1.14	–	71	40		
			38	0.967	1.374	1.846	2.386	2.991	3.662	4.394	–	–	–	–	–	–		
			43	0.812	1.177	1.599	2.081	2.623	3.225	3.883	–	–	–	–	–	–		
OP-LSQM067LL	LLZ013T4	E	27	2.210	2.823	3.547	4.391	5.365	6.476	7.732	–	–	–	–	–	–	W05 W09	114X7091 114X7187
			32	2.024	2.600	3.276	4.061	4.965	5.997	7.163	2.942	2.481	1.19	1.65	71	40		
			38	1.790	2.319	2.934	3.645	4.462	5.395	6.451	–	–	–	–	–	–		
			43	1.586	2.073	2.634	3.280	4.022	4.870	5.832	–	–	–	–	–	–		
OP-LSQM084LL	LLZ015T4	E	27	2.654	3.375	4.240	5.261	6.444	7.795	9.317	–	–	–	–	–	–	W05 W09	114X7092 114X7188
			32	2.440	3.110	3.909	4.848	5.936	7.178	8.580	3.528	2.909	1.21	1.67	73	42		
			38	2.171	2.777	3.494	4.332	5.303	6.412	7.667	–	–	–	–	–	–		
			43	1.935	2.485	3.130	3.883	4.754	5.751	6.882	–	–	–	–	–	–		
OP-LSQM098LL	LLZ018T4	E	27	3.089	3.920	4.914	6.079	7.421	8.944	10.647	–	–	–	–	–	–	W05 W09	114X7075 114X7189
			32	2.837	3.608	4.524	5.594	6.825	8.221	9.785	4.103	3.299	1.24	1.72	74	43		
			38	2.519	3.216	4.035	4.987	6.082	7.324	8.719	–	–	–	–	–	–		
			43	2.241	2.871	3.607	4.459	5.438	6.550	7.802	–	–	–	–	–	–		

LBP

(1) G - Compressor 230V/1~/50Hz, fan 230V/1~/50Hz
E - Compressor 400V/3~/50Hz, fan 230V/1~/50Hz
(2) Nominal conditions (EN13215), Evaporating temperatures at dew point, Superheat 10 K, Subcooling 0 K
(3) Rated conditions (EN13215), Evaporating temperature (dew point) -35 °C, Ambient air temperature 32 °C, Return Gas Temperature 20 °C, Subcooling 0 K

SEPR, Seasonal Energy Performance Ratio
Q [kW], Cooling Capacity
P [kW], Power Input

*For regular updates and detailed capacities, please refer to **Coolselector®2** software*

EcoDesign 2018

Technical data and ordering

Optyma™ **Slim Pack - R134a - MBP**

Performance data

Model	Compressor	Electrical code [1]	Tamb [°C]	Cooling capacity Q [kW] [2] Te [°C] -15	-10	-5	0	5	10	15	EcoDesign [3] Q [kW]	P [kW]	COP	SEPR	Sound power level dB(A)	Sound pressure level 10 m dB(A)	Version	Code
OP-MSGM012SC	SC12G	G	27	0.549	0.693	0.861	1.055	1.277	1.528	1.810	–	–	–	–	–	–	W05 W09	114X7099 114X7207
			32	0.503	0.640	0.800	0.987	1.200	1.442	1.714	0.655	0.382	1.71	–	62	31		
			38	0.446	0.575	0.726	0.902	1.105	1.336	1.596	–	–	–	–	–	–		
			43	0.400	0.521	0.664	0.832	1.025	1.246	1.497	–	–	–	–	–	–		
OP-MSGM015SC	SC15G	G	27	0.591	0.756	0.951	1.177	1.435	1.725	2.047	–	–	–	–	–	–	W05 W09	114X7100 114X7208
			32	0.562	0.719	0.903	1.115	1.357	1.628	1.930	0.737	0.448	1.64	–	63	32		
			38	0.517	0.666	0.838	1.034	1.256	1.506	1.782	–	–	–	–	–	–		
			43	0.474	0.616	0.778	0.961	1.168	1.399	1.656	–	–	–	–	–	–		
OP-MSGM018SC	SC18G	G	27	0.757	0.937	1.144	1.381	1.651	1.954	2.293	–	–	–	–	–	–	W05 W09	114X7101 114X7131
			32	0.680	0.855	1.057	1.289	1.552	1.849	2.180	0.876	0.544	1.61	–	63	32		
			38	0.606	0.774	0.968	1.191	1.444	1.729	2.049	–	–	–	–	–	–		
			43	0.556	0.716	0.902	1.114	1.357	1.631	1.938	–	–	–	–	–	–		
OP-MSGM021SC	SC21G	G	27	0.885	1.107	1.358	1.638	1.949	2.290	2.662	–	–	–	–	–	–	W05 W09	114X7102 114X7132
			32	0.813	1.025	1.267	1.538	1.839	2.170	2.531	1.051	0.605	1.74	–	63	32		
			38	0.733	0.932	1.159	1.416	1.702	2.018	2.364	–	–	–	–	–	–		
			43	0.666	0.852	1.066	1.308	1.580	1.881	2.213	–	–	–	–	–	–		
OP-MSGM026AJ	CAJ4492Y	G	27	1.075	1.396	1.773	2.209	2.708	3.270	3.896	–	–	–	–	–	–	W05 W09	114X7103 114X7209
			32	0.982	1.284	1.638	2.048	2.516	3.045	3.636	1.314	0.729	1.80	–	62	31		
			38	0.867	1.149	1.477	1.856	2.289	2.779	3.328	–	–	–	–	–	–		
			43	0.769	1.035	1.342	1.696	2.101	2.559	3.074	–	–	–	–	–	–		
OP-MSGM033AJ	CAJ4511Y	G	27	1.444	1.835	2.280	2.786	3.353	3.984	4.678	–	–	–	–	–	–	W05 W09	114X7104 114X7210
			32	1.326	1.699	2.122	2.601	3.138	3.736	4.394	1.740	0.849	2.05	–	67	36		
			38	1.180	1.531	1.927	2.373	2.873	3.430	4.045	–	–	–	–	–	–		
			43	1.058	1.389	1.761	2.180	2.649	3.171	3.749	–	–	–	–	–	–		
OP-MSXM034ML	MLZ015T4	E	27	1.817	2.286	2.834	3.467	4.188	5.001	5.907	–	–	–	–	–	–	W05 W09	114X7062 114X7196
			32	1.716	2.162	2.685	3.290	3.980	4.761	5.632	2.216	0.983	2.25	–	69	38		
			38	1.597	2.012	2.502	3.071	3.723	4.462	5.290	–	–	–	–	–	–		
			43	1.499	1.886	2.346	2.883	3.502	4.205	4.995	–	–	–	–	–	–		
OP-MSXM034ML	MLZ015T5	G	27	1.822	2.321	2.883	3.513	4.218	5.003	5.876	–	–	–	–	–	–	W05 W09	114X7061 114X7195
			32	1.711	2.189	2.730	3.339	4.023	4.788	5.639	2.244	1.033	2.17	–	69	38		
			38	1.580	2.026	2.536	3.115	3.770	4.504	5.324	–	–	–	–	–	–		
			43	1.476	1.890	2.369	2.919	3.544	4.250	5.041	–	–	–	–	–	–		
OP-MSXM044ML	MLZ019T4	E	27	2.323	2.897	3.577	4.365	5.259	6.259	7.360	–	–	–	–	–	–	W05 W09	114X7162 114X7212
			32	2.193	2.739	3.386	4.137	4.990	5.944	6.997	2.811	1.258	2.23	–	69	38		
			38	2.032	2.543	3.149	3.853	4.655	5.554	6.548	–	–	–	–	–	–		
			43	1.896	2.375	2.945	3.610	4.368	5.220	6.164	–	–	–	–	–	–		
OP-MSXM044ML	MLZ019T5	G	27	2.312	2.920	3.612	4.394	5.268	6.238	7.307	–	–	–	–	–	–	W05 W09	114X7161 114X7211
			32	2.173	2.748	3.411	4.163	5.007	5.947	6.985	2.821	1.401	2.01	–	69	38		
			38	2.009	2.539	3.157	3.867	4.670	5.568	6.564	–	–	–	–	–	–		
			43	1.881	2.364	2.940	3.609	4.373	5.232	6.189	–	–	–	–	–	–		
OP-MSXM046ML	MLZ021T4	E	27	2.478	3.090	3.817	4.660	5.618	6.691	7.875	–	–	–	–	–	–	W05 W09	114X7064 114X7198
			32	2.339	2.922	3.614	4.418	5.333	6.358	7.490	2.998	1.289	2.33	–	69	38		
			38	2.167	2.713	3.363	4.118	4.979	5.945	7.014	–	–	–	–	–	–		
			43	2.021	2.535	3.147	3.860	4.674	5.591	6.606	–	–	–	–	–	–		
OP-MSXM046ML	MLZ021T5	G	27	2.465	3.114	3.854	4.690	5.626	6.665	7.811	–	–	–	–	–	–	W05 W09	114X7063 114X7197
			32	2.317	2.933	3.641	4.446	5.350	6.358	7.473	3.010	1.451	2.07	–	69	38		
			38	2.143	2.710	3.372	4.133	4.994	5.959	7.030	–	–	–	–	–	–		
			43	2.006	2.524	3.142	3.859	4.679	5.603	6.633	–	–	–	–	–	–		
OP-MSXM057ML	MLZ026T4	E	27	2.988	3.749	4.629	5.632	6.762	8.020	9.405	–	–	–	–	–	–	W05 W09	114X7066 114X7200
			32	2.811	3.536	4.375	5.331	6.409	7.610	8.932	3.633	1.591	2.28	–	69	38		
			38	2.596	3.276	4.062	4.959	5.972	7.101	8.346	–	–	–	–	–	–		
			43	2.416	3.055	3.795	4.641	5.596	6.664	7.843	–	–	–	–	–	–		

MBP

(1) G - Compressor 230V/1~/50Hz, fan 230V/1~/50Hz
E - Compressor 400V/3~/50Hz, fan 230V/1~/50Hz
(2) Nominal conditions (EN13215), Evaporating temperatures at dew point, Superheat 10 K, Subcooling 0 K
(3) Rated conditions (EN13215), Evaporating temperature (dew point) -10 °C, Ambient air temperature 32 °C, Return Gas Temperature 20 °C, Subcooling 0 K

SEPR, Seasonal Energy Performance Ratio
Q [kW], Cooling Capacity
P [kW], Power Input

*For regular updates and detailed capacities, please refer to **Coolselector®2** software*

EcoDesign 2018

Technical data and ordering

Optyma™ **Slim Pack - R134a - MBP (count.)**

Performance data

Model	Compressor	Electrical code [1]	Tamb [°C]	Cooling capacity Q [kW] [2] Te [°C] -15	-10	-5	0	5	10	15	EcoDesign [3] Q [kW]	P [kW]	COP	SEPR	Sound power level dB(A)	Sound pressure level 10 m dB(A)	Version	Code
OP-MSXM057ML	MLZ026T5	G	27	2.981	3.762	4.649	5.647	6.760	7.991	9.345	–	–	–	–	–	–	W05 W09	114X7065 114X7199
			32	2.805	3.540	4.384	5.339	6.409	7.597	8.905	3.639	1.914	1.90	–	69	38		
			38	2.601	3.271	4.052	4.947	5.958	7.088	8.337	–	–	–	–	–	–		
			43	2.443	3.048	3.770	4.608	5.564	6.638	7.833	–	–	–	–	–	–		
OP-MSXM068ML	MLZ030T4	E	27	3.686	4.631	5.738	7.016	8.470	10.104	11.920	–	–	–	–	–	–	W05 W09	114X7068 114X7202
			32	3.484	4.382	5.437	6.657	8.048	9.614	11.357	4.493	1.897	2.37	–	70	39		
			38	3.240	4.078	5.066	6.213	7.524	9.005	10.657	–	–	–	–	–	–		
			43	3.037	3.820	4.748	5.831	7.073	8.480	10.053	–	–	–	–	–	–		
OP-MSXM068ML	MLZ030T5	G	27	3.786	4.657	5.752	7.035	8.471	10.032	11.692	–	–	–	–	–	–	W05 W09	114X7067 114X7201
			32	3.642	4.426	5.449	6.672	8.059	9.581	11.211	4.540	2.184	2.08	–	70	39		
			38	3.479	4.146	5.072	6.214	7.534	9.001	10.586	–	–	–	–	–	–		
			43	3.356	3.915	4.751	5.817	7.073	8.487	10.029	–	–	–	–	–	–		
OP-MSXM080ML	MLZ038T4	E	27	4.283	5.388	6.667	8.129	9.782	11.630	13.673	–	–	–	–	–	–	W05 W09	114X7070 114X7204
			32	4.029	5.086	6.307	7.704	9.282	11.048	13.001	5.220	2.308	2.26	3.43	70	39		
			38	3.718	4.713	5.863	7.176	8.663	10.326	12.170	–	–	–	–	–	–		
			43	3.454	4.396	5.482	6.724	8.130	9.707	11.457	–	–	–	–	–	–		
OP-MSXM080ML	MLZ038T5	G	27	4.250	5.469	6.787	8.230	9.821	11.578	13.518	–	–	–	–	–	–	W05 W09	114X7069 114X7203
			32	3.953	5.136	6.411	7.803	9.334	11.025	12.892	5.271	2.438	2.16	3.03	70	39		
			38	3.566	4.705	5.926	7.255	8.715	10.327	12.107	–	–	–	–	–	–		
			43	3.225	4.325	5.500	6.776	8.176	9.721	11.429	–	–	–	–	–	–		
OP-MSXM099ML	MLZ045T4	E	27	5.329	6.672	8.263	10.089	12.135	14.386	16.825	–	–	–	–	–	–	W05 W09	114X7071 114X7205
			32	5.018	6.290	7.806	9.553	11.514	13.674	16.016	6.456	2.623	2.46	3.83	70	39		
			38	4.645	5.822	7.239	8.880	10.731	12.775	14.994	–	–	–	–	–	–		
			43	4.337	5.425	6.750	8.297	10.049	11.990	14.101	–	–	–	–	–	–		
OP-MSXM108ML	MLZ048T4	E	27	5.637	7.050	8.708	10.601	12.721	15.056	17.592	–	–	–	–	–	–	W05 W09	114X7072 114X7206
			32	5.298	6.641	8.223	10.033	12.062	14.299	16.730	6.819	2.840	2.40	3.74	70	39		
			38	4.889	6.140	7.620	9.323	11.236	13.349	15.649	–	–	–	–	–	–		
			43	4.548	5.714	7.104	8.709	10.520	12.525	14.711	–	–	–	–	–	–		

MBP

(1) G - Compressor 230V/1~/50Hz, fan 230V/1~/50Hz
E - Compressor 400V/3~/50Hz, fan 230V/1~/50Hz
(2) Nominal conditions (EN13215), Evaporating temperatures at dew point, Superheat 10 K, Subcooling 0 K
(3) Rated conditions (EN13215), Evaporating temperature (dew point) -10 °C, Ambient air temperature 32 °C, Return Gas Temperature 20 °C, Subcooling 0 K

SEPR, Seasonal Energy Performance Ratio
Q [kW], Cooling Capacity
P [kW], Power Input

*For regular updates and detailed capacities, please refer to **Coolselector®2** software*

EcoDesign 2018

Technical data and ordering

Optyma™ **Slim Pack - R448A - MBP**

Performance data

Model	Compressor	Electrical code [1]	Tamb [°C]	Cooling capacity Q [kW] [2] Te [°C] -20	-15	-10	-5	0	5	10	EcoDesign [3] Q [kW]	P [kW]	COP	SEPR	Sound power level dB(A)	Sound pressure level 10 m dB(A)	Version	Code
OP-MSXM034ML	MLZ015T4	E	27	2.372	2.942	3.595	4.338	5.175	6.110	7.142	–	–	–	–	–	–		
			32	2.193	2.731	3.348	4.050	4.843	5.729	6.711	3.409	1.647	2.07	–	69	38	W05 W09	114X7062 114X7196
			38	1.965	2.464	3.035	3.685	4.422	5.248	6.169	–	–	–	–	–	–		
			43	–	2.229	2.759	3.365	4.053	4.828	5.696	–	–	–	–	–	–		
OP-MSXM034ML	MLZ015T5	G	27	2.360	2.934	3.592	4.340	5.182	6.120	7.153	–	–	–	–	–	–		
			32	2.195	2.736	3.356	4.061	4.856	5.743	6.725	3.418	1.604	2.13	–	69	38	W05 W09	114X7061 114X7195
			38	1.992	2.491	3.063	3.715	4.451	5.277	6.194	–	–	–	–	–	–		
			43	–	2.283	2.812	3.416	4.102	4.875	5.737	–	–	–	–	–	–		
OP-MSXM044ML	MLZ019T4	E	27	2.992	3.699	4.502	5.404	6.409	7.517	8.727	–	–	–	–	–	–		
			32	2.780	3.443	4.194	5.040	5.984	7.027	8.170	4.281	2.165	1.98	–	69	38	W05 W09	114X7162 114X7212
			38	2.521	3.129	3.817	4.592	5.460	6.423	7.484	–	–	–	–	–	–		
			43	–	2.863	3.495	4.209	5.011	5.906	6.897	–	–	–	–	–	–		
OP-MSXM044ML	MLZ019T5	G	27	2.894	3.600	4.404	5.314	6.332	7.459	8.696	–	–	–	–	–	–		
			32	2.697	3.363	4.121	4.978	5.939	7.007	8.181	4.207	2.280	1.85	–	69	38	W05 W09	114X7161 114X7211
			38	2.454	3.068	3.767	4.559	5.449	6.442	7.541	–	–	–	–	–	–		
			43	–	2.813	3.460	4.195	5.025	5.954	6.987	–	–	–	–	–	–		
OP-MSXM046ML	MLZ021T4	E	27	3.178	3.933	4.791	5.759	6.840	8.035	9.343	–	–	–	–	–	–		
			32	2.930	3.640	4.446	5.355	6.372	7.499	8.738	4.535	2.237	2.03	–	69	38	W05 W09	114X7064 114X7198
			38	2.622	3.274	4.014	4.850	5.788	6.832	7.985	–	–	–	–	–	–		
			43	–	2.957	3.639	4.411	5.281	6.254	7.335	–	–	–	–	–	–		
OP-MSXM046ML	MLZ021T5	G	27	3.182	3.942	4.809	5.791	6.890	8.108	9.445	–	–	–	–	–	–		
			32	2.949	3.663	4.477	5.400	6.437	7.589	8.858	4.568	2.352	1.94	–	69	38	W05 W09	114X7063 114X7197
			38	2.665	3.318	4.065	4.914	5.871	6.941	8.127	–	–	–	–	–	–		
			43	–	3.025	3.713	4.496	5.384	6.382	7.495	–	–	–	–	–	–		
OP-MSXM057ML	MLZ026T4	E	27	3.811	4.724	5.742	6.868	8.104	9.450	10.901	–	–	–	–	–	–		
			32	3.473	4.333	5.289	6.345	7.506	8.770	10.138	5.406	2.940	1.84	3.15	69	38	W05 W09	114X7066 114X7200
			38	3.048	3.841	4.718	5.688	6.754	7.919	9.186	–	–	–	–	–	–		
			43	–	3.412	4.221	5.114	6.099	7.179	8.360	–	–	–	–	–	–		
OP-MSXM057ML	MLZ026T5	G	27	3.863	4.769	5.790	6.932	8.193	9.572	11.064	–	–	–	–	–	–		
			32	3.561	4.404	5.354	6.416	7.593	8.883	10.284	5.475	3.082	1.78	2.93	69	38	W05 W09	114X7065 114X7199
			38	3.185	3.945	4.803	5.766	6.836	8.016	9.306	–	–	–	–	–	–		
			43	–	3.548	4.323	5.197	6.175	7.260	8.454	–	–	–	–	–	–		
OP-MSXM068ML	MLZ030T5	G	27	4.812	5.958	7.265	8.744	10.404	12.248	14.278	–	–	–	–	–	–		
			32	4.447	5.529	6.761	8.157	9.726	11.473	13.403	6.890	3.266	2.11	3.30	70	39	W05 W09	114X7067 114X7201
			38	3.993	4.993	6.132	7.424	8.879	10.507	12.313	–	–	–	–	–	–		
			43	–	4.531	5.587	6.788	8.146	9.671	11.373	–	–	–	–	–	–		
OP-MSXM068ML	MLZ030T4	E	27	4.860	5.997	7.295	8.767	10.419	12.259	14.287	–	–	–	–	–	–		
			32	4.485	5.559	6.783	8.172	9.734	11.476	13.402	6.911	3.138	2.20	3.48	70	39	W05 W09	114X7068 114X7202
			38	4.012	5.003	6.134	7.418	8.867	10.490	12.292	–	–	–	–	–	–		
			43	–	4.516	5.564	6.757	8.109	9.629	11.326	–	–	–	–	–	–		
OP-MSXM080ML	MLZ038T5	G	27	5.554	6.850	8.310	9.943	11.753	13.739	15.900	–	–	–	–	–	–		
			32	5.167	6.388	7.759	9.290	10.988	12.855	14.891	7.919	3.985	1.99	3.07	70	39	W05 W09	114X7069 114X7203
			38	4.680	5.803	7.062	8.467	10.027	11.747	13.631	–	–	–	–	–	–		
			43	–	5.292	6.452	7.747	9.188	10.783	12.539	–	–	–	–	–	–		
OP-MSXM080ML	MLZ038T4	E	27	5.654	6.949	8.417	10.066	11.901	13.922	16.126	–	–	–	–	–	–		
			32	5.214	6.433	7.812	9.361	11.088	12.995	15.081	7.969	3.716	2.14	3.49	70	39	W05 W09	114X7070 114X7204
			38	4.667	5.786	7.053	8.479	10.073	11.838	13.779	–	–	–	–	–	–		
			43	–	5.227	6.395	7.714	9.192	10.836	12.654	–	–	–	–	–	–		
OP-MSXM099ML	MLZ045T4	E	27	6.863	8.500	10.345	12.405	14.683	17.178	19.881	–	–	–	–	–	–		
			32	6.342	7.876	9.600	11.525	13.656	15.995	18.537	9.800	4.693	2.09	3.46	70	39	W05 W09	114X7071 114X7205
			38	5.692	7.092	8.663	10.419	12.367	14.513	16.859	–	–	–	–	–	–		
			43	–	6.412	7.848	9.456	11.247	13.228	15.406	–	–	–	–	–	–		
OP-MSXM108ML	MLZ048T4	E	27	7.357	9.067	10.997	13.154	15.541	18.156	20.992	–	–	–	–	–	–		
			32	6.775	8.377	10.182	12.201	14.439	16.897	19.572	10.403	5.300	1.96	3.31	70	39	W05 W09	114X7072 114X7206
			38	6.050	7.513	9.161	11.008	13.061	15.326	17.804	–	–	–	–	–	–		
			43	–	6.764	8.274	9.971	11.865	13.964	16.275	–	–	–	–	–	–		

MBP

(1) G - Compressor 230V/1~/50Hz, fan 230V/1~/50Hz
E - Compressor 400V/3~/50Hz, fan 230V/1~/50Hz
(2) Nominal conditions (EN13215), Evaporating temperatures at dew point, Superheat 10 K, Subcooling 0 K
(3) Rated conditions (EN13215), Evaporating temperature (dew point) -10 °C, Ambient air temperature 32 °C, Return Gas Temperature 20 °C, Subcooling 0 K

SEPR, Seasonal Energy Performance Ratio
Q [kW], Cooling Capacity
P [kW], Power Input

*For regular updates and detailed capacities, please refer to **Coolselector®2** software*

EcoDesign 2018

Technical data and ordering

Optyma™ **Slim Pack - R449A - MBP**

Performance data

Model	Compressor	Electrical code [1]	Tamb [°C]	Cooling capacity Q [kW] [2] Te [°C] -20	-15	-10	-5	0	5	10	EcoDesign [3] Q [kW]	P [kW]	COP	SEPR	Sound power level dB(A)	Sound pressure level 10 m dB(A)	Version	Code
OP-MSYM009MY	MLY90RAb	G	27	–	0.668	0.878	1.098	1.327	1.566	1.813	–	–	–	–	–	–	W05 W09	114X7108 114X7133
			32	–	0.609	0.801	1.004	1.217	1.441	1.673	0.813	0.430	1.89	–	62	31		
			38	–	0.540	0.710	0.892	1.086	1.290	1.504	–	–	–	–	–	–		
			43	–	0.482	0.635	0.800	0.976	1.164	1.364	–	–	–	–	–	–		
OP-MSYM012MP	MPT12RA	G	27	–	0.930	1.198	1.478	1.768	2.067	2.373	–	–	–	–	–	–	W05 W09	114X7109 114X7134
			32	–	0.848	1.095	1.353	1.623	1.902	2.191	1.112	0.589	1.89	–	65	34		
			38	–	0.751	0.971	1.204	1.449	1.705	1.972	–	–	–	–	–	–		
			43	–	0.670	0.868	1.080	1.304	1.541	1.790	–	–	–	–	–	–		
OP-MSYM014MP	MPT14RA	G	27	–	0.978	1.251	1.544	1.859	2.193	2.546	–	–	–	–	–	–	W05 W09	114X7110 114X7135
			32	–	0.896	1.147	1.421	1.716	2.032	2.367	1.166	0.729	1.60	–	60	29		
			38	–	0.799	1.024	1.273	1.544	1.838	2.153	–	–	–	–	–	–		
			43	–	0.718	0.922	1.150	1.401	1.676	1.974	–	–	–	–	–	–		
OP-MSYM018AJ	CAJ9510Z	G	27	0.932	1.233	1.594	2.022	2.527	3.114	3.791	–	–	–	–	–	–	W05 W09	114X7111 114X7136
			32	0.854	1.134	1.469	1.868	2.339	2.889	3.524	1.491	0.781	1.91	–	64	33		
			38	–	1.015	1.321	1.685	2.117	2.622	3.209	–	–	–	–	–	–		
			43	–	0.916	1.199	1.535	1.934	2.404	2.950	–	–	–	–	–	–		
OP-MSYM024AJ	CAJ9513Z	G	27	1.153	1.549	2.021	2.577	3.222	3.960	4.796	–	–	–	–	–	–	W05 W09	114X7097 114X7194
			32	1.041	1.409	1.847	2.363	2.964	3.655	4.439	1.876	0.902	2.08	–	64	33		
			38	–	1.244	1.643	2.113	2.663	3.297	4.021	–	–	–	–	–	–		
			43	–	1.107	1.475	1.909	2.417	3.006	3.679	–	–	–	–	–	–		
OP-MSYM026AJ	CAJ4517Z	G	27	1.321	1.737	2.227	2.802	3.469	4.235	5.103	–	–	–	–	–	–	W05 W09	114X7083 114X7190
			32	1.203	1.591	2.047	2.582	3.205	3.923	4.739	2.080	1.009	2.06	–	67	36		
			38	–	1.416	1.833	2.323	2.894	3.554	4.309	–	–	–	–	–	–		
			43	–	1.271	1.657	2.109	2.638	3.252	3.956	–	–	–	–	–	–		
OP-MSYM026AJ	TAJ4517Z	E	27	1.298	1.730	2.233	2.819	3.495	4.268	5.144	–	–	–	–	–	–	W05 W09	114X7093 114X7192
			32	1.169	1.575	2.048	2.597	3.232	3.960	4.785	2.081	1.059	1.97	–	67	36		
			38	–	1.388	1.824	2.330	2.917	3.590	4.356	–	–	–	–	–	–		
			43	–	1.231	1.637	2.109	2.654	3.283	4.000	–	–	–	–	–	–		
OP-MSYM034AJ	TAJ4519Z	E	27	1.650	2.164	2.762	3.451	4.239	5.132	6.131	–	–	–	–	–	–	W05 W09	114X7094 114X7193
			32	1.503	1.986	2.546	3.191	3.930	4.768	5.708	2.591	1.350	1.92	–	68	37		
			38	–	1.771	2.288	2.882	3.562	4.336	5.206	–	–	–	–	–	–		
			43	–	1.589	2.071	2.625	3.259	3.980	4.792	–	–	–	–	–	–		
OP-MSYM034AJ	CAJ4519Z	G	27	1.650	2.185	2.805	3.521	4.340	5.269	6.309	–	–	–	–	–	–	W05 W09	114X7084 114X7191
			32	1.498	2.000	2.581	3.251	4.018	4.889	5.866	2.627	1.416	1.86	–	68	37		
			38	–	1.776	2.310	2.925	3.630	4.431	5.333	–	–	–	–	–	–		
			43	–	1.588	2.083	2.652	3.306	4.050	4.889	–	–	–	–	–	–		
OP-MSXM034ML	MLZ015T4	E	27	2.367	2.937	3.590	4.334	5.172	6.108	7.142	–	–	–	–	–	–	W05 W09	114X7062 114X7196
			32	2.187	2.726	3.343	4.046	4.839	5.727	6.711	3.409	1.647	2.07	–	69	38		
			38	1.960	2.458	3.029	3.681	4.418	5.246	6.169	–	–	–	–	–	–		
			43	–	2.224	2.754	3.360	4.049	4.826	5.696	–	–	–	–	–	–		
OP-MSXM034ML	MLZ015T5	G	27	2.355	2.929	3.587	4.336	5.179	6.118	7.153	–	–	–	–	–	–	W05 W09	114X7061 114X7195
			32	2.189	2.731	3.351	4.057	4.852	5.741	6.725	3.418	1.604	2.13	–	69	38		
			38	1.987	2.486	3.058	3.710	4.447	5.274	6.194	–	–	–	–	–	–		
			43	–	2.277	2.807	3.412	4.098	4.872	5.737	–	–	–	–	–	–		
OP-MSXM044ML	MLZ019T4	E	27	2.986	3.693	4.495	5.398	6.405	7.515	8.727	–	–	–	–	–	–	W05 W09	114X7162 114X7212
			32	2.773	3.436	4.188	5.034	5.980	7.025	8.170	4.281	2.165	1.98	–	69	38		
			38	2.514	3.122	3.810	4.586	5.455	6.420	7.484	–	–	–	–	–	–		
			43	–	2.856	3.489	4.203	5.007	5.903	6.897	–	–	–	–	–	–		
OP-MSXM044ML	MLZ019T5	G	27	2.888	3.593	4.398	5.308	6.327	7.457	8.696	–	–	–	–	–	–	W05 W09	114X7161 114X7211
			32	2.691	3.356	4.114	4.972	5.935	7.004	8.181	4.207	2.280	1.85	–	69	38		
			38	2.447	3.061	3.760	4.553	5.445	6.439	7.541	–	–	–	–	–	–		
			43	–	2.806	3.454	4.189	5.020	5.951	6.987	–	–	–	–	–	–		
OP-MSXM046ML	MLZ021T4	E	27	3.171	3.926	4.785	5.753	6.835	8.032	9.343	–	–	–	–	–	–	W05 W09	114X7064 114X7198
			32	2.923	3.633	4.439	5.349	6.367	7.497	8.738	4.535	2.237	2.03	–	69	38		
			38	2.615	3.267	4.007	4.843	5.783	6.829	7.985	–	–	–	–	–	–		
			43	–	2.950	3.632	4.405	5.276	6.251	7.335	–	–	–	–	–	–		

MBP

(1) G - Compressor 230V/1~/50Hz, fan 230V/1~/50Hz
E - Compressor 400V/3~/50Hz, fan 230V/1~/50Hz
(2) Nominal conditions (EN13215), Evaporating temperatures at dew point, Superheat 10 K, Subcooling 0 K
(3) Rated conditions (EN13215), Evaporating temperature (dew point) -10 °C, Ambient air temperature 32 °C, Return Gas Temperature 20 °C, Subcooling 0 K

SEPR, Seasonal Energy Performance Ratio
Q [kW], Cooling Capacity
P [kW], Power Input

*For regular updates and detailed capacities, please refer to **Coolselector®2** software*

EcoDesign 2018

Technical data and ordering

Optyma™ **Slim Pack - R449A - MBP (count.)**

Performance data

Model	Compressor	Electrical code [1]	Tamb [°C]	Cooling capacity Q [kW] [2] Te [°C] -20	-15	-10	-5	0	5	10	EcoDesign [3] Q [kW]	P [kW]	COP	SEPR	Sound power level dB(A)	Sound pressure level 10 m dB(A)	Version	Code
OP-MSXM046ML	MLZ021T5	G	27	3.175	3.935	4.802	5.785	6.885	8.106	9.445	–	–	–	–	–	–	W05 W09	114X7063 114X7197
			32	2.942	3.655	4.470	5.394	6.432	7.586	8.858	4.568	2.352	1.94	–	69	38		
			38	2.657	3.311	4.058	4.908	5.866	6.938	8.127	–	–	–	–	–	–		
			43	–	3.018	3.705	4.490	5.379	6.379	7.495	–	–	–	–	–	–		
OP-MSXM057ML	MLZ026T4	E	27	3.803	4.716	5.734	6.861	8.099	9.446	10.901	–	–	–	–	–	–	W05 W09	114X7066 114X7200
			32	3.464	4.325	5.281	6.338	7.500	8.767	10.138	5.406	2.940	1.84	3.15	69	38		
			38	3.040	3.832	4.710	5.680	6.748	7.916	9.186	–	–	–	–	–	–		
			43	–	3.403	4.213	5.107	6.093	7.176	8.360	–	–	–	–	–	–		
OP-MSXM057ML	MLZ026T5	G	27	3.855	4.760	5.782	6.924	8.188	9.569	11.064	–	–	–	–	–	–	W05 W09	114X7065 114X7199
			32	3.553	4.395	5.345	6.409	7.587	8.880	10.284	5.475	3.082	1.78	2.93	69	38		
			38	3.176	3.936	4.795	5.758	6.830	8.013	9.306	–	–	–	–	–	–		
			43	–	3.539	4.315	5.190	6.169	7.257	8.454	–	–	–	–	–	–		
OP-MSXM068ML	MLZ030T5	G	27	4.802	5.948	7.255	8.735	10.397	12.244	14.278	–	–	–	–	–	–	W05 W09	114X7067 114X7201
			32	4.436	5.518	6.751	8.148	9.719	11.469	13.403	6.890	3.266	2.11	3.30	70	39		
			38	3.983	4.982	6.121	7.414	8.872	10.503	12.313	–	–	–	–	–	–		
			43	–	4.520	5.577	6.779	8.139	9.667	11.373	–	–	–	–	–	–		
OP-MSXM068ML	MLZ030T4	E	27	4.849	5.986	7.285	8.758	10.412	12.255	14.287	–	–	–	–	–	–	W05 W09	114X7068 114X7202
			32	4.475	5.548	6.773	8.163	9.727	11.472	13.402	6.911	3.138	2.20	3.48	70	39		
			38	4.001	4.992	6.123	7.409	8.860	10.486	12.292	–	–	–	–	–	–		
			43	–	4.505	5.553	6.748	8.102	9.625	11.326	–	–	–	–	–	–		
OP-MSXM080ML	MLZ038T5	G	27	5.542	6.838	8.298	9.933	11.744	13.735	15.900	–	–	–	–	–	–	W05 W09	114X7069 114X7203
			32	5.155	6.375	7.747	9.279	10.980	12.850	14.891	7.919	3.985	1.99	3.07	70	39		
			38	4.667	5.790	7.049	8.456	10.018	11.742	13.631	–	–	–	–	–	–		
			43	–	5.279	6.439	7.736	9.180	10.778	12.539	–	–	–	–	–	–		
OP-MSXM080ML	MLZ038T4	E	27	5.641	6.937	8.405	10.056	11.893	13.917	16.126	–	–	–	–	–	–	W05 W09	114X7070 114X7204
			32	5.202	6.420	7.800	9.351	11.080	12.990	15.081	7.969	3.716	2.14	3.49	70	39		
			38	4.654	5.774	7.041	8.469	10.064	11.833	13.779	–	–	–	–	–	–		
			43	–	5.214	6.383	7.703	9.183	10.832	12.654	–	–	–	–	–	–		
OP-MSXM099ML	MLZ045T4	E	27	6.848	8.485	10.330	12.392	14.673	17.172	19.881	–	–	–	–	–	–	W05 W09	114X7071 114X7205
			32	6.327	7.860	9.585	11.512	13.646	15.989	18.537	9.800	4.693	2.09	3.46	70	39		
			38	5.676	7.076	8.648	10.405	12.357	14.507	16.859	–	–	–	–	–	–		
			43	–	6.396	7.833	9.443	11.237	13.222	15.406	–	–	–	–	–	–		
OP-MSXM108ML	MLZ048T4	E	27	7.341	9.051	10.981	13.140	15.530	18.149	20.992	–	–	–	–	–	–	W05 W09	114X7072 114X7206
			32	6.758	8.360	10.166	12.187	14.428	16.891	19.572	10.403	5.300	1.96	3.31	70	39		
			38	6.033	7.496	9.145	10.994	13.050	15.319	17.804	–	–	–	–	–	–		
			43	–	6.748	8.258	9.957	11.854	13.958	16.275	–	–	–	–	–	–		

MBP

(1) G - Compressor 230V/1~/50Hz, fan 230V/1~/50Hz
E - Compressor 400V/3~/50Hz, fan 230V/1~/50Hz
(2) Nominal conditions (EN13215), Evaporating temperatures at dew point, Superheat 10 K, Subcooling 0 K
(3) Rated conditions (EN13215), Evaporating temperature (dew point) -10 °C, Ambient air temperature 32 °C, Return Gas Temperature 20 °C, Subcooling 0 K

SEPR, Seasonal Energy Performance Ratio
Q [kW], Cooling Capacity
P [kW], Power Input

*For regular updates and detailed capacities, please refer to **Coolselector®2** software*

EcoDesign 2018

Technical data and ordering

Optyma™ Slim Pack - R452A MBP*)

Performance data

Model	Compressor	Electrical code [1]	Tamb [°C]	Cooling capacity Q [kW] [2] Te [°C] -20	-15	-10	-5	0	5	10	EcoDesign [3] Q [kW]	P [kW]	COP	SEPR	Sound power level dB(A)	Sound pressure level 10 m dB(A)	Version	Code
OP-MSYM018AJ	CAJ9510Z	G	27	1.020	1.315	1.665	2.079	2.564	3.126	3.772	–	–	–	–	–	–	W05 W09	114X7111 114X7136
			32	0.928	1.202	1.526	1.910	2.360	2.884	3.487	1.588	0.860	1.85	–	64	33		
			38	–	–	1.358	1.705	2.114	2.591	3.142	–	–	–	–	–	–		
			43	–	–	1.216	1.533	1.907	2.345	2.852	–	–	–	–	–	–		
OP-MSYM024AJ	CAJ9513Z	G	27	–	1.649	2.109	2.647	3.267	3.974	–	–	–	–	–	–	–	W05 W09	114X7097 114X7194
			32	–	1.491	1.916	2.413	2.988	3.645	–	1.995	0.994	2.01	–	64	33		
			38	–	1.302	1.685	2.134	2.655	3.252	–	–	–	–	–	–	–		
			43	–	1.143	1.493	1.902	2.377	2.924	–	–	–	–	–	–	–		
OP-MSYM026AJ	TAJ4517Z	E	27	1.417	1.840	2.328	2.893	3.541	4.278	5.109	–	–	–	–	–	–	W05 W09	114X7093 114X7192
			32	1.267	1.664	2.122	2.649	3.253	3.943	4.721	2.211	1.169	1.89	–	67	36		
			38	1.085	1.450	1.868	2.349	2.902	3.532	4.246	–	–	–	–	–	–		
			43	–	1.270	1.654	2.096	2.603	3.184	3.843	–	–	–	–	–	–		
OP-MSYM026AJ	CAJ4517Z	G	27	1.442	1.848	2.322	2.876	3.515	4.246	5.071	–	–	–	–	–	–	W05 W09	114X7083 114X7190
			32	1.304	1.681	2.121	2.634	3.228	3.908	4.678	2.210	1.113	1.99	–	67	36		
			38	1.138	1.480	1.878	2.342	2.880	3.499	4.203	–	–	–	–	–	–		
			43	–	1.311	1.674	2.097	2.589	3.156	3.804	–	–	–	–	–	–		
OP-MSYM034AJ	TAJ4519Z	E	27	1.797	2.297	2.873	3.534	4.286	5.133	6.077	–	–	–	–	–	–	W05 W09	114X7094 114X7193
			32	1.625	2.094	2.631	3.245	3.944	4.732	5.612	2.746	1.490	1.84	–	68	37		
			38	1.415	1.845	2.335	2.893	3.529	4.246	5.049	–	–	–	–	–	–		
			43	–	1.633	2.083	2.595	3.177	3.834	4.571	–	–	–	–	–	–		
OP-MSYM034AJ	CAJ4519Z	G	27	1.796	2.318	2.917	3.605	4.387	5.269	6.251	–	–	–	–	–	–	W05 W09	114X7084 114X7191
			32	1.619	2.107	2.666	3.305	4.031	4.851	5.766	2.784	1.563	1.78	–	68	37		
			38	1.403	1.849	2.357	2.935	3.594	4.338	5.171	–	–	–	–	–	–		
			43	–	1.631	2.094	2.621	3.222	3.901	4.663	–	–	–	–	–	–		
OP-MSXM034ML	MLZ015T4	E	27	2.543	3.128	3.789	4.528	5.345	6.239	7.205	–	–	–	–	–	–	W05 W09	114X7062 114X7196
			32	2.311	2.854	3.466	4.151	4.909	5.739	6.639	3.532	1.596	2.21	–	69	38		
			38	2.020	2.509	3.062	3.680	4.365	5.117	5.937	–	–	–	–	–	–		
			43	1.767	2.211	2.711	3.271	3.894	4.581	5.333	–	–	–	–	–	–		
OP-MSXM034ML	MLZ015T5	G	27	2.660	3.222	3.858	4.568	5.354	6.216	7.152	–	–	–	–	–	–	W05 W09	114X7061 114X7195
			32	2.461	2.983	3.575	4.238	4.973	5.781	6.664	3.646	1.684	2.16	–	69	38		
			38	2.214	2.688	3.227	3.831	4.505	5.249	6.065	–	–	–	–	–	–		
			43	2.003	2.436	2.929	3.485	4.106	4.796	5.557	–	–	–	–	–	–		
OP-MSXM044ML	MLZ019T4	E	27	3.308	4.011	4.799	5.673	6.629	7.663	8.770	–	–	–	–	–	–	W05 W09	114X7162 114X7212
			32	3.058	3.709	4.437	5.243	6.127	7.085	8.114	4.533	2.097	2.16	–	69	38		
			38	2.746	3.330	3.983	4.706	5.501	6.367	7.302	–	–	–	–	–	–		
			43	2.476	3.002	3.590	4.242	4.961	5.748	6.603	–	–	–	–	–	–		
OP-MSXM044ML	MLZ019T5	G	27	3.374	4.081	4.876	5.757	6.723	7.770	8.893	–	–	–	–	–	–	W05 W09	114X7161 114X7211
			32	3.116	3.771	4.506	5.320	6.214	7.185	8.230	3.532	1.596	2.21	–	69	38		
			38	2.791	3.381	4.040	4.772	5.577	6.455	7.405	–	–	–	–	–	–		
			43	2.508	3.040	3.635	4.296	5.025	5.824	6.694	–	–	–	–	–	–		
OP-MSXM046ML	MLZ021T4	E	27	3.493	4.224	5.044	5.951	6.942	8.014	9.159	–	–	–	–	–	–	W05 W09	114X7064 114X7198
			32	3.224	3.901	4.658	5.495	6.412	7.405	8.470	4.761	2.224	2.14	–	69	38		
			38	2.886	3.494	4.172	4.923	5.748	6.645	7.612	–	–	–	–	–	–		
			43	2.592	3.139	3.749	4.426	5.172	5.987	6.871	–	–	–	–	–	–		
OP-MSXM046ML	MLZ021T5	G	27	3.425	4.224	5.114	6.096	7.164	8.312	9.534	–	–	–	–	–	–	W05 W09	114X7063 114X7197
			32	3.194	3.940	4.768	5.678	6.667	7.730	8.862	4.877	2.346	2.08	–	69	38		
			38	2.885	3.562	4.310	5.130	6.021	6.980	8.005	–	–	–	–	–	–		
			43	2.602	3.217	3.894	4.637	5.444	6.315	7.250	–	–	–	–	–	–		
OP-MSXM057ML	MLZ026T5	G	27	4.122	4.969	5.913	6.954	8.086	9.304	10.600	–	–	–	–	–	–	W05 W09	114X7065 114X7199
			32	3.800	4.578	5.447	6.404	7.449	8.576	9.781	5.583	3.142	1.78	3.04	69	38		
			38	3.403	4.096	4.870	5.726	6.662	7.679	8.772	–	–	–	–	–	–		
			43	3.060	3.680	4.373	5.141	5.986	6.908	7.908	–	–	–	–	–	–		

MBP

(1) G - Compressor 230V/1~/50Hz, fan 230V/1~/50Hz
E - Compressor 400V/3~/50Hz, fan 230V/1~/50Hz
(2) Nominal conditions (EN13215), Evaporating temperatures at dew point, Superheat 10 K, Subcooling 0 K
(3) Rated conditions (EN13215), Evaporating temperature (dew point) -10 °C, Ambient air temperature 32 °C, Return Gas Temperature 20 °C, Subcooling 0 K
**) Preliminary data*

SEPR, Seasonal Energy Performance Ratio
Q [kW], Cooling Capacity
P [kW], Power Input

*For regular updates and detailed capacities, please refer to **Coolselector®2** software*

EcoDesign 2018

Technical data and ordering

Optyma™ **Slim Pack - R452A MBP*) (count.)**

Performance data

Model	Compressor	Electrical code [1]	Tamb [°C]	Cooling capacity Q [kW] [2] Te [°C] -20	-15	-10	-5	0	5	10	EcoDesign [3] Q [kW]	P [kW]	COP	SEPR	Sound power level dB(A)	Sound pressure level 10 m dB(A)	Version	Code
OP-MSXM057ML	MLZ026T4	E	27	4.125	4.972	5.918	6.962	8.098	9.321	10.624	–	–	–	–	–	–	W05 W09	114X7066 114X7200
			32	3.805	4.584	5.455	6.416	7.465	8.597	9.809	5.590	3.022	1.85	3.15	69	38		
			38	3.411	4.106	4.883	5.742	6.684	7.706	8.807	–	–	–	–	–	–		
			43	3.071	3.693	4.389	5.162	6.012	6.941	7.949	–	–	–	–	–	–		
OP-MSXM068ML	MLZ030T4	E	27	5.417	6.593	7.931	9.439	11.120	12.975	15.000	–	–	–	–	–	–	W05 W09	114X7068 114X7202
			32	5.016	6.118	7.371	8.784	10.362	12.107	14.018	7.514	3.131	2.40	3.87	70	39		
			38	4.514	5.524	6.671	7.966	9.417	11.027	12.799	–	–	–	–	–	–		
			43	4.078	5.007	6.062	7.256	8.597	10.093	11.747	–	–	–	–	–	–		
OP-MSXM068ML	MLZ030T5	G	27	5.420	6.596	7.933	9.440	11.120	12.973	14.995	–	–	–	–	–	–	W05 W09	114X7067 114X7201
			32	5.017	6.119	7.373	8.785	10.361	12.103	14.012	7.516	3.195	2.35	3.79	70	39		
			38	4.514	5.524	6.671	7.965	9.414	11.021	12.790	–	–	–	–	–	–		
			43	4.076	5.006	6.061	7.254	8.593	10.086	11.736	–	–	–	–	–	–		
OP-MSXM080ML	MLZ038T5	G	27	6.388	7.726	9.237	10.922	12.779	14.805	16.989	–	–	–	–	–	–	W05 W09	114X7069 114X7203
			32	5.906	7.152	8.555	10.120	11.846	13.732	15.772	8.733	3.937	2.22	3.61	70	39		
			38	5.291	6.418	7.686	9.100	10.665	12.380	14.243	–	–	–	–	–	–		
			43	4.747	5.768	6.918	8.203	9.628	11.198	12.911	–	–	–	–	–	–		
OP-MSXM080ML	MLZ038T4	E	27	6.425	7.767	9.281	10.971	12.837	14.875	17.078	–	–	–	–	–	–	W05 W09	114X7070 114X7204
			32	5.939	7.191	8.602	10.177	11.918	13.822	15.886	8.780	3.684	2.38	3.84	70	39		
			38	5.314	6.450	7.730	9.159	10.743	12.482	14.376	–	–	–	–	–	–		
			43	4.762	5.793	6.956	8.257	9.705	11.302	13.051	–	–	–	–	–	–		
OP-MSXM099ML	MLZ045T4	E	27	7.544	9.131	10.906	12.870	15.021	17.353	19.855	–	–	–	–	–	–	W05 W09	114X7071 114X7205
			32	6.902	8.380	10.031	11.858	13.860	16.034	18.373	10.256	4.875	2.10	3.52	70	39		
			38	6.095	7.433	8.926	10.579	12.396	14.375	16.514	–	–	–	–	–	–		
			43	5.395	6.606	7.960	9.462	11.118	12.929	14.896	–	–	–	–	–	–		
OP-MSXM108ML	MLZ048T4	E	27	8.136	9.851	11.742	13.807	16.038	18.425	20.953	–	–	–	–	–	–	W05 W09	114X7072 114X7206
			32	7.419	9.018	10.776	12.693	14.763	16.980	19.334	11.027	5.463	2.02	3.48	70	39		
			38	6.510	7.957	9.545	11.275	13.147	15.155	17.296	–	–	–	–	–	–		
			43	5.717	7.027	8.465	10.033	11.733	13.563	15.523	–	–	–	–	–	–		

MBP

(1) G - Compressor 230V/1~/50Hz, fan 230V/1~/50Hz
E - Compressor 400V/3~/50Hz, fan 230V/1~/50Hz
(2) Nominal conditions (EN13215), Evaporating temperatures at dew point, Superheat 10 K, Subcooling 0 K
(3) Rated conditions (EN13215), Evaporating temperature (dew point) -10 °C, Ambient air temperature 32 °C, Return Gas Temperature 20 °C, Subcooling 0 K
**) Preliminary data*

SEPR, Seasonal Energy Performance Ratio
Q [kW], Cooling Capacity
P [kW], Power Input

*For regular updates and detailed capacities, please refer to **Coolselector®2** software*

EcoDesign 2018

Technical data and ordering

Optyma™ **Slim Pack - R407A - MBP**

Performance data

Model	Compressor	Electrical code [1]	Tamb [°C]	Cooling capacity Q [kW] [2] Te [°C] -20	-15	-10	-5	0	5	10	EcoDesign [3] Q [kW]	P [kW]	COP	SEPR	Sound power level dB(A)	Sound pressure level 10 m dB(A)	Version	Code
OP-MSXM034ML	MLZ015T4	E	27	2.297	2.872	3.545	4.322	5.210	6.211	7.326	–	–	–	–	–	–		
			32	2.112	2.653	3.288	4.024	4.865	5.815	6.876	3.351	1.536	2.18	–	69	38	W05 W09	114X7062 114X7196
			38	1.881	2.379	2.965	3.648	4.431	5.318	6.312	–	–	–	–	–	–		
			43	–	2.141	2.684	3.320	4.053	4.886	5.822	–	–	–	–	–	–		
OP-MSXM034ML	MLZ015T5	G	27	2.326	2.908	3.588	4.374	5.271	6.282	7.408	–	–	–	–	–	–		
			32	2.138	2.686	3.328	4.071	4.921	5.881	6.952	3.392	1.560	2.17	–	69	38	W05 W09	114X7061 114X7195
			38	1.903	2.407	3.000	3.690	4.480	5.376	6.379	–	–	–	–	–	–		
			43	–	2.166	2.715	3.357	4.097	4.938	5.882	–	–	–	–	–	–		
OP-MSXM044ML	MLZ019T4	E	27	2.851	3.553	4.369	5.304	6.362	7.543	8.846	–	–	–	–	–	–		
			32	2.612	3.270	4.036	4.917	5.915	7.031	8.264	4.122	2.078	1.98	–	69	38	W05 W09	114X7162 114X7212
			38	2.313	2.915	3.619	4.431	5.354	6.390	7.538	–	–	–	–	–	–		
			43	–	2.608	3.256	4.008	4.866	5.834	6.908	–	–	–	–	–	–		
OP-MSXM044ML	MLZ019T5	G	27	2.836	3.534	4.346	5.276	6.328	7.503	8.799	–	–	–	–	–	–		
			32	2.596	3.250	4.012	4.888	5.880	6.989	8.214	4.098	2.205	1.86	–	69	38	W05 W09	114X7161 114X7211
			38	2.296	2.894	3.593	4.399	5.316	6.344	7.483	–	–	–	–	–	–		
			43	–	2.586	3.228	3.974	4.825	5.784	6.850	–	–	–	–	–	–		
OP-MSXM046ML	MLZ021T4	E	27	2.968	3.727	4.597	5.584	6.691	7.919	9.265	–	–	–	–	–	–		
			32	2.732	3.451	4.274	5.206	6.252	7.413	8.687	4.364	2.204	1.98	–	69	38	W05 W09	114X7064 114X7198
			38	2.438	3.105	3.868	4.732	5.702	6.780	7.965	–	–	–	–	–	–		
			43	–	2.805	3.515	4.320	5.225	6.231	7.339	–	–	–	–	–	–		
OP-MSXM046ML	MLZ021T5	G	27	3.021	3.794	4.678	5.680	6.803	8.047	9.411	–	–	–	–	–	–		
			32	2.781	3.512	4.348	5.294	6.355	7.531	8.820	4.440	2.248	1.97	–	69	38	W05 W09	114X7063 114X7197
			38	2.480	3.159	3.933	4.810	5.794	6.885	8.083	–	–	–	–	–	–		
			43	–	2.852	3.572	4.389	5.306	6.324	7.445	–	–	–	–	–	–		
OP-MSXM057ML	MLZ026T4	E	27	3.575	4.477	5.501	6.652	7.929	9.331	10.849	–	–	–	–	–	–		
			32	3.281	4.132	5.096	6.179	7.381	8.699	10.128	5.214	2.788	1.87	3.01	69	38	W05 W09	114X7066 114X7200
			38	2.912	3.698	4.588	5.586	6.693	7.909	9.229	–	–	–	–	–	–		
			43	–	3.320	4.144	5.068	6.094	7.223	8.448	–	–	–	–	–	–		
OP-MSXM057ML	MLZ026T5	G	27	3.636	4.551	5.590	6.757	8.051	9.468	11.002	–	–	–	–	–	–		
			32	3.336	4.199	5.178	6.275	7.492	8.824	10.267	5.298	2.833	1.87	3.02	69	38	W05 W09	114X7065 114X7199
			38	2.960	3.757	4.659	5.670	6.790	8.019	9.350	–	–	–	–	–	–		
			43	–	3.372	4.206	5.141	6.180	7.319	8.555	–	–	–	–	–	–		
OP-MSXM068ML	MLZ030T5	G	27	4.657	5.759	7.057	8.559	10.269	12.191	14.322	–	–	–	–	–	–		
			32	4.361	5.381	6.589	7.994	9.602	11.415	13.433	6.722	3.117	2.16	3.46	70	39	W05 W09	114X7067 114X7201
			38	4.021	4.938	6.034	7.318	8.798	10.476	12.354	–	–	–	–	–	–		
			43	–	4.579	5.576	6.756	8.124	9.687	11.445	–	–	–	–	–	–		
OP-MSXM068ML	MLZ030T4	E	27	4.693	5.804	7.111	8.624	10.346	12.281	14.426	–	–	–	–	–	–		
			32	4.395	5.424	6.642	8.057	9.677	11.503	13.534	6.774	2.991	2.27	3.62	70	39	W05 W09	114X7068 114X7202
			38	4.054	4.979	6.084	7.379	8.870	10.561	12.453	–	–	–	–	–	–		
			43	–	4.619	5.625	6.815	8.195	9.770	11.542	–	–	–	–	–	–		
OP-MSXM080ML	MLZ038T5	G	27	5.297	6.531	7.978	9.644	11.533	13.643	15.969	–	–	–	–	–	–		
			32	4.957	6.097	7.441	8.996	10.767	12.753	14.950	7.601	3.817	1.99	3.22	70	39	W05 W09	114X7069 114X7203
			38	4.568	5.588	6.801	8.217	9.841	11.674	13.713	–	–	–	–	–	–		
			43	–	5.176	6.275	7.570	9.066	10.767	12.669	–	–	–	–	–	–		
OP-MSXM080ML	MLZ038T4	E	27	5.357	6.606	8.069	9.754	11.663	13.796	16.145	–	–	–	–	–	–		
			32	5.016	6.170	7.530	9.104	10.895	12.904	15.126	7.691	3.546	2.17	3.48	70	39	W05 W09	114X7070 114X7204
			38	4.624	5.659	6.889	8.324	9.969	11.824	13.887	–	–	–	–	–	–		
			43	–	5.245	6.361	7.675	9.193	10.916	12.844	–	–	–	–	–	–		
OP-MSXM099ML	MLZ045T4	E	27	6.413	8.067	9.958	12.096	14.490	17.138	20.039	–	–	–	–	–	–		
			32	5.808	7.373	9.161	11.184	13.451	15.962	18.716	9.357	4.629	2.02	3.31	70	39	W05 W09	114X7071 114X7205
			38	5.060	6.514	8.175	10.057	12.169	14.514	17.091	–	–	–	–	–	–		
			43	–	5.776	7.328	9.090	11.071	13.275	15.704	–	–	–	–	–	–		
OP-MSXM108ML	MLZ048T4	E	27	6.935	8.714	10.739	13.021	15.563	18.365	21.418	–	–	–	–	–	–		
			32	6.269	7.949	9.862	12.019	14.424	17.077	19.972	10.082	5.206	1.94	3.19	70	39	W05 W09	114X7072 114X7206
			38	5.444	7.003	8.777	10.780	13.017	15.490	18.194	–	–	–	–	–	–		
			43	–	6.188	7.844	9.715	11.810	14.131	16.675	–	–	–	–	–	–		

MBP

(1) G - Compressor 230V/1~/50Hz, fan 230V/1~/50Hz
E - Compressor 400V/3~/50Hz, fan 230V/1~/50Hz
(2) Nominal conditions (EN13215), Evaporating temperatures at dew point, Superheat 10 K, Subcooling 0 K
(3) Rated conditions (EN13215), Evaporating temperature (dew point) -10 °C, Ambient air temperature 32 °C, Return Gas Temperature 20 °C, Subcooling 0 K

SEPR, Seasonal Energy Performance Ratio
Q [kW], Cooling Capacity
P [kW], Power Input

*For regular updates and detailed capacities, please refer to **Coolselector®2** software*

EcoDesign 2018

Technical data and ordering

Optyma™ **Slim Pack - R407F - MBP**

Performance data

Model	Compressor	Electrical code [1]	Tamb [°C]	Cooling capacity Q [kW] [2] Te [°C] -20	-15	-10	-5	0	5	10	EcoDesign [3] Q [kW]	P [kW]	COP	SEPR	Sound power level dB(A)	Sound pressure level 10 m dB(A)	Version	Code
OP-MSXM034ML	MLZ015T4	E	27	2.441	3.044	3.746	4.555	5.477	6.514	7.669	–	–	–	–	–	–		
			32	2.250	2.819	3.483	4.250	5.125	6.112	7.213	3.515	1.639	2.14	–	69	38	W05 W09	114X7062 114X7196
			38	–	2.536	3.151	3.864	4.681	5.605	6.638	–	–	–	–	–	–		
			43	–	–	2.861	3.526	4.292	5.161	6.136	–	–	–	–	–	–		
OP-MSXM034ML	MLZ015T5	G	27	2.499	3.115	3.833	4.659	5.598	6.655	7.831	–	–	–	–	–	–		
			32	2.303	2.884	3.563	4.345	5.237	6.243	7.362	3.596	1.680	2.14	–	69	38	W05 W09	114X7061 114X7195
			38	–	2.594	3.221	3.948	4.780	5.721	6.772	–	–	–	–	–	–		
			43	–	–	2.924	3.602	4.381	5.266	6.257	–	–	–	–	–	–		
OP-MSXM044ML	MLZ019T4	E	27	3.059	3.801	4.660	5.640	6.746	7.977	9.333	–	–	–	–	–	–		
			32	2.809	3.506	4.313	5.237	6.282	7.447	8.732	4.362	2.251	1.94	–	69	38	W05 W09	114X7162 114X7212
			38	–	3.135	3.877	4.730	5.697	6.780	7.977	–	–	–	–	–	–		
			43	–	–	3.497	4.286	5.187	6.199	7.321	–	–	–	–	–	–		
OP-MSXM044ML	MLZ019T5	G	27	3.042	3.780	4.634	5.609	6.709	7.934	9.281	–	–	–	–	–	–		
			32	2.792	3.484	4.286	5.205	6.243	7.401	8.677	4.336	2.391	1.81	–	69	38	W05 W09	114X7161 114X7211
			38	–	3.111	3.848	4.694	5.654	6.729	7.917	–	–	–	–	–	–		
			43	–	–	3.465	4.248	5.140	6.143	7.255	–	–	–	–	–	–		
OP-MSXM046ML	MLZ021T4	E	27	3.186	3.991	4.910	5.946	7.103	8.380	9.776	–	–	–	–	–	–		
			32	2.940	3.704	4.574	5.555	6.650	7.860	9.183	4.624	2.390	1.94	–	69	38	W05 W09	114X7064 114X7198
			38	–	3.343	4.151	5.062	6.080	7.207	8.439	–	–	–	–	–	–		
			43	–	–	3.781	4.631	5.583	6.637	7.792	–	–	–	–	–	–		
OP-MSXM046ML	MLZ021T5	G	27	3.243	4.062	4.995	6.047	7.220	8.515	9.928	–	–	–	–	–	–		
			32	2.993	3.769	4.652	5.647	6.758	7.984	9.322	4.704	2.439	1.93	–	69	38	W05 W09	114X7063 114X7197
			38	–	3.400	4.220	5.144	6.176	7.316	8.563	–	–	–	–	–	–		
			43	–	–	3.842	4.704	5.668	6.734	7.902	–	–	–	–	–	–		
OP-MSXM057ML	MLZ026T4	E	27	3.782	4.724	5.790	6.983	8.302	9.743	11.298	–	–	–	–	–	–		
			32	3.479	4.370	5.375	6.499	7.742	9.100	10.567	5.445	2.992	1.82	2.98	69	38	W05 W09	114X7066 114X7200
			38	–	3.923	4.852	5.889	7.037	8.293	9.650	–	–	–	–	–	–		
			43	–	–	4.393	5.355	6.421	7.587	–	–	–	–	–	–	–		
OP-MSXM057ML	MLZ026T5	G	27	3.898	4.867	5.960	7.182	8.530	9.743	11.583	–	–	–	–	–	–		
			32	3.584	4.499	5.530	6.680	7.949	9.333	10.824	5.604	3.095	1.81	2.98	69	38	W05 W09	114X7065 114X7199
			38	–	4.035	4.986	6.047	7.218	8.495	9.873	–	–	–	–	–	–		
			43	–	–	4.510	5.493	6.578	7.764	–	–	–	–	–	–	–		
OP-MSXM068ML	MLZ030T5	G	27	5.011	6.171	7.530	9.097	10.876	12.869	15.074	–	–	–	–	–	–		
			32	4.713	5.790	7.058	8.527	10.203	12.087	14.178	7.129	3.361	2.12	3.41	70	39	W05 W09	114X7067 114X7201
			38	–	5.344	6.497	7.843	9.389	11.137	13.088	–	–	–	–	–	–		
			43	–	–	6.036	7.275	8.708	10.339	12.168	–	–	–	–	–	–		
OP-MSXM068ML	MLZ030T4	E	27	5.049	6.219	7.588	9.166	10.958	12.964	15.184	–	–	–	–	–	–		
			32	4.750	5.836	7.115	8.595	10.282	12.180	14.286	7.186	3.224	2.23	3.58	70	39	W05 W09	114X7068 114X7202
			38	–	5.388	6.552	7.909	9.467	11.229	13.194	–	–	–	–	–	–		
			43	–	–	6.089	7.339	8.784	10.429	12.273	–	–	–	–	–	–		
OP-MSXM080ML	MLZ038T5	G	27	5.698	6.996	8.510	10.247	12.208	14.394	16.797	–	–	–	–	–	–		
			32	5.357	6.559	7.967	9.591	11.433	13.494	15.767	8.059	4.134	1.95	3.16	70	39	W05 W09	114X7069 114X7203
			38	–	6.046	7.321	8.803	10.496	12.400	14.513	–	–	–	–	–	–		
			43	–	–	6.791	8.148	9.710	11.480	13.453	–	–	–	–	–	–		
OP-MSXM080ML	MLZ038T4	E	27	5.713	7.016	8.534	10.277	12.245	14.438	16.850	–	–	–	–	–	–		
			32	5.372	6.579	7.993	9.623	11.473	13.541	15.824	8.084	3.938	2.05	3.32	70	39	W05 W09	114X7070 114X7204
			38	–	6.067	7.349	8.838	10.539	12.453	14.576	–	–	–	–	–	–		
			43	–	–	6.820	8.185	9.757	11.537	13.522	–	–	–	–	–	–		
OP-MSXM099ML	MLZ045T4	E	27	6.872	8.617	10.598	12.828	15.315	18.060	21.062	–	–	–	–	–	–		
			32	6.242	7.899	9.779	11.894	14.254	16.862	19.717	9.892	5.025	1.97	3.23	70	39	W05 W09	114X7071 114X7205
			38	–	7.005	8.759	10.733	12.939	15.380	18.057	–	–	–	–	–	–		
			43	–	–	7.876	9.732	11.807	14.107	16.634	–	–	–	–	–	–		
OP-MSXM108ML	MLZ048T4	E	27	7.187	9.007	11.068	13.382	15.956	18.789	21.877	–	–	–	–	–	–		
			32	6.517	8.243	10.196	12.389	14.829	17.517	20.450	10.322	5.568	1.85	3.07	70	39	W05 W09	114X7072 114X7206
			38	–	7.290	9.110	11.154	13.430	15.942	18.687	–	–	–	–	–	–		
			43	–	–	8.169	10.086	12.224	14.588	17.175	–	–	–	–	–	–		

MBP

(1) G - Compressor 230V/1~/50Hz, fan 230V/1~/50Hz
E - Compressor 400V/3~/50Hz, fan 230V/1~/50Hz
(2) Nominal conditions (EN13215), Evaporating temperatures at dew point, Superheat 10 K, Subcooling 0 K
(3) Rated conditions (EN13215), Evaporating temperature (dew point) -10 °C, Ambient air temperature 32 °C, Return Gas Temperature 20 °C, Subcooling 0 K

SEPR, Seasonal Energy Performance Ratio
Q [kW], Cooling Capacity
P [kW], Power Input

*For regular updates and detailed capacities, please refer to **Coolselector®2** software*

EcoDesign 2018

Technical data and ordering

Optyma™ **Slim Pack - R404A / R507 - MBP**

Performance data

Model	Compressor	Electrical code [1]	Tamb [°C]	Cooling capacity Q [kW] [2] Te [°C] -20	-15	-10	-5	0	5	10	EcoDesign [3] Q [kW]	P [kW]	COP	SEPR	Sound power level dB(A)	Sound pressure level 10 m dB(A)	Version	Code
OP-MSYM009MY	MLY90RAb	G	27	–	0.814	1.007	1.217	1.443	1.684	1.941	–	–	–	–	–	–	W05 W09	114X7108 114X7133
			32	–	0.737	0.914	1.108	1.319	1.546	1.79	0.957	0.48	1.99	–	63	32		
			38	–	0.644	0.802	0.978	1.171	1.381	1.609	–	–	–	–	–	–		
			43	–	0.568	0.709	0.869	1.047	1.244	1.459	–	–	–	–	–	–		
OP-MSYM012MP	MPT12RA	G	27	–	1.115	1.365	1.631	1.914	2.213	2.526	–	–	–	–	–	–	W05 W09	114X7109 114X7134
			32	–	1.01	1.239	1.486	1.751	2.033	2.331	1.3	0.646	2.01	–	65	34		
			38	–	0.883	1.089	1.313	1.556	1.817	2.097	–	–	–	–	–	–		
			43	–	0.779	0.964	1.169	1.394	1.638	1.902	–	–	–	–	–	–		
OP-MSYM014MP	MPT14RA	G	27	–	1.13	1.396	1.685	1.999	2.335	2.693	–	–	–	–	–	–	W05 W09	114X7110 114X7135
			32	–	1.031	1.276	1.546	1.841	2.16	2.502	1.34	0.795	1.69	–	60	29		
			38	–	0.913	1.133	1.38	1.652	1.95	2.274	–	–	–	–	–	–		
			43	–	0.814	1.014	1.241	1.494	1.775	2.084	–	–	–	–	–	–		
OP-MSYM018AJ	CAJ9510Z	G	27	1.184	1.477	1.818	2.209	2.651	3.146	3.694	–	–	–	–	–	–	W05 W09	114X7111 114X7136
			32	1.078	1.351	1.666	2.024	2.429	2.881	3.382	1.746	0.903	1.93	–	64	33		
			38	–	–	1.48	1.8	2.16	2.561	3.005	–	–	–	–	–	–		
			43	–	–	1.324	1.612	1.933	2.292	2.688	–	–	–	–	–	–		
OP-MSYM024AJ	CAJ9513Z	G	27	–	1.822	2.288	2.82	3.418	4.082	4.808	–	–	–	–	–	–	W05 W09	114X7097 114X7194
			32	–	1.638	2.067	2.557	3.108	3.72	4.392	2.168	1.045	2.07	–	64	33		
			38	–	1.417	1.804	2.243	2.738	3.288	3.895	–	–	–	–	–	–		
			43	–	1.235	1.586	1.983	2.431	2.93	3.482	–	–	–	–	–	–		
OP-MSYM026AJ	TAJ4517Z	E	27	1.595	2.029	2.522	3.078	3.7	4.388	5.141	–	–	–	–	–	–	W05 W09	114X7093 114X7192
			32	1.416	1.824	2.285	2.802	3.379	4.017	4.717	2.398	1.231	1.95	–	67	36		
			38	1.199	1.575	1.996	2.465	2.987	3.565	4.2	–	–	–	–	–	–		
			43	–	1.368	1.754	2.182	2.657	3.184	3.765	–	–	–	–	–	–		
OP-MSYM026AJ	CAJ4517Z	G	27	1.626	2.039	2.517	3.061	3.674	4.356	5.104	–	–	–	–	–	–	W05 W09	114X7083 114X7190
			32	1.459	1.844	2.285	2.788	3.353	3.982	4.675	2.399	1.172	2.05	–	67	36		
			38	1.259	1.609	2.007	2.459	2.967	3.533	4.159	–	–	–	–	–	–		
			43	–	1.413	1.776	2.185	2.644	3.157	3.728	–	–	–	–	–	–		
OP-MSYM034AJ	TAJ4519Z	E	27	2.018	2.526	3.102	3.747	4.461	5.242	6.087	–	–	–	–	–	–	W05 W09	114X7094 114X7193
			32	1.811	2.287	2.823	3.42	4.079	4.799	5.581	2.97	1.573	1.89	–	68	37		
			38	1.559	1.997	2.484	3.023	3.616	4.264	4.969	–	–	–	–	–	–		
			–	–	1.753	2.199	2.689	3.227	3.815	4.456	–	–	–	–	–	–		
OP-MSYM034AJ	CAJ4519Z	G	27	2.015	2.547	3.147	3.819	4.563	5.376	6.257	–	–	–	–	–	–	W05 W09	114X7084 114X7191
			32	1.802	2.3	2.859	3.48	4.166	4.916	5.729	3.008	1.65	1.82	–	68	37		
			38	1.544	2	2.506	3.065	3.68	4.353	5.085	–	–	–	–	–	–		
			43	–	1.749	2.209	2.715	3.27	3.878	4.541	–	–	–	–	–	–		
OP-MSXM034ML	MLZ015T4	E	27	2.502	3.081	3.734	4.463	5.272	6.158	7.121	–	–	–	–	–	–	W05 W09	114X7062 114X7196
			32	2.251	2.793	3.398	4.073	4.82	5.64	6.535	3.58	1.693	2.11	–	69	38		
			38	1.926	2.424	2.974	3.584	4.258	5.001	5.814	–	–	–	–	–	–		
			43	1.634	2.095	2.6	3.157	3.772	4.451	5.198	–	–	–	–	–	–		
OP-MSXM034ML	MLZ015T5	G	27	2.591	3.149	3.783	4.496	5.289	6.163	7.122	–	–	–	–	–	–	W05 W09	114X7061 114X7195
			32	2.373	2.89	3.478	4.142	4.882	5.703	6.608	3.669	1.762	2.08	–	69	38		
			38	2.101	2.569	3.102	3.705	4.383	5.139	5.981	–	–	–	–	–	–		
			43	1.867	2.293	2.78	3.334	3.959	4.662	5.452	–	–	–	–	–	–		
OP-MSXM044ML	MLZ019T4	E	27	3.235	3.925	4.696	5.556	6.511	7.563	8.716	–	–	–	–	–	–	W05 W09	114X7162 114X7212
			32	2.959	3.596	4.307	5.101	5.985	6.964	8.044	4.556	2.203	2.07	–	69	38		
			38	2.604	3.178	3.816	4.53	5.329	6.22	7.212	–	–	–	–	–	–		
			43	2.289	2.808	3.385	4.032	4.759	5.576	6.497	–	–	–	–	–	–		
OP-MSXM044ML	MLZ019T5	G	27	3.279	3.979	4.768	5.646	6.615	7.674	8.823	–	–	–	–	–	–	W05 W09	114X7161 114X7211
			32	2.995	3.641	4.368	5.18	6.078	7.064	8.141	4.622	2.266	2.04	–	69	38		
			38	2.634	3.213	3.865	4.595	5.407	6.305	7.294	–	–	–	–	–	–		
			43	2.316	2.837	3.425	4.086	4.825	5.649	6.566	–	–	–	–	–	–		
OP-MSXM046ML	MLZ021T4	E	27	3.404	4.124	4.928	5.824	6.815	7.905	9.099	–	–	–	–	–	–	W05 W09	114X7064 114X7198
			32	3.108	3.772	4.514	5.34	6.257	7.271	8.39	4.778	2.35	2.03	–	69	38		
			38	2.729	3.325	3.99	4.731	5.559	6.482	7.511	–	–	–	–	–	–		
			–	2.392	2.93	3.529	4.199	4.952	5.798	6.754	–	–	–	–	–	–		

MBP

(1) G - Compressor 230V/1~/50Hz, fan 230V/1~/50Hz
E - Compressor 400V/3~/50Hz, fan 230V/1~/50Hz
(2) Nominal conditions (EN13215), Evaporating temperatures at dew point, Superheat 10 K, Subcooling 0 K
(3) Rated conditions (EN13215), Evaporating temperature (dew point) -10 °C, Ambient air temperature 32 °C, Return Gas Temperature 20 °C, Subcooling 0 K

SEPR, Seasonal Energy Performance Ratio
Q [kW], Cooling Capacity
P [kW], Power Input

*For regular updates and detailed capacities, please refer to **Coolselector®2** software*

EcoDesign 2018

Technical data and ordering

Optyma™ **Slim Pack - R404A / R507 - MBP (count.)**

Performance data

Model	Compressor	Electrical code [1]	Tamb [°C]	Cooling capacity Q [kW] [2] Te [°C] -20	-15	-10	-5	0	5	10	EcoDesign [3] Q [kW]	P [kW]	COP	SEPR	Sound power level dB(A)	Sound pressure level 10 m dB(A)	Version	Code
OP-MSXM046ML	MLZ021T5	G	27	3.45	4.182	5.004	5.917	6.922	8.018	9.203	–	–	–	–	–	–	W05 W09	114X7063 114X7197
			32	3.147	3.821	4.578	5.421	6.352	7.371	8.481	4.848	2.435	1.99	–	69	38		
			38	2.762	3.365	4.043	4.8	5.64	6.567	7.586	–	–	–	–	–	–		
			43	2.422	2.964	3.574	4.258	5.022	5.872	6.817	–	–	–	–	–	–		
OP-MSXM057ML	MLZ026T5	G	27	3.973	4.806	5.741	6.777	7.912	9.142	10.467	–	–	–	–	–	–	W05 W09	114X7065 114X7199
			32	3.619	4.382	5.238	6.189	7.234	8.373	9.609	5.571	3.291	1.69	2.9	69	38		
			38	3.179	3.855	4.615	5.46	6.396	7.424	8.553	–	–	–	–	–	–		
			43	2.795	3.397	4.073	4.83	5.673	6.609	7.65	–	–	–	–	–	–		
OP-MSXM057ML	MLZ026T4	E	27	3.977	4.812	5.749	6.788	7.926	9.162	10.493	–	–	–	–	–	–	W05 W09	114X7066 114X7200
			32	3.625	4.39	5.249	6.203	7.252	8.397	9.639	5.58	3.164	1.76	3.01	69	38		
			38	3.189	3.868	4.63	5.48	6.42	7.455	8.59	–	–	–	–	–	–		
			43	2.809	3.414	4.094	4.855	5.703	6.645	7.693	–	–	–	–	–	–		
OP-MSXM068ML	MLZ030T4	E	27	5.271	6.443	7.784	9.3	10.998	12.88	14.945	–	–	–	–	–	–	W05 W09	114X7068 114X7202
			32	4.832	5.926	7.177	8.594	10.185	11.954	13.907	7.566	3.279	2.31	3.73	70	39		
			38	4.284	5.279	6.418	7.711	9.17	10.803	12.618	–	–	–	–	–	–		
			43	3.809	4.717	5.758	6.945	8.291	9.806	11.506	–	–	–	–	–	–		
OP-MSXM068ML	MLZ030T5	G	27	5.273	6.446	7.786	9.302	10.997	12.876	14.938	–	–	–	–	–	–	W05 W09	114X7067 114X7201
			32	4.832	5.927	7.178	8.594	10.182	11.949	13.898	7.568	3.353	2.26	3.66	70	39		
			38	4.283	5.278	6.417	7.709	9.166	10.795	12.606	–	–	–	–	–	–		
			43	3.806	4.714	5.755	6.941	8.284	9.797	11.492	–	–	–	–	–	–		
OP-MSXM080ML	MLZ038T5	G	27	6.066	7.469	9.041	10.768	12.634	14.626	16.73	–	–	–	–	–	–	W05 W09	114X7069 114X7203
			32	5.504	6.806	8.273	9.892	11.65	13.536	15.538	8.735	4.027	2.17	3.33	70	39		
			38	4.826	5.992	7.319	8.797	10.415	12.164	14.039	–	–	–	–	–	–		
			43	4.268	5.307	6.506	7.857	9.349	10.976	12.738	–	–	–	–	–	–		
OP-MSXM080ML	MLZ038T4	E	27	6.238	7.571	9.084	10.78	12.662	14.727	16.973	–	–	–	–	–	–	W05 W09	114X7070 114X7204
			32	5.708	6.948	8.353	9.93	11.682	13.612	15.72	8.822	3.856	2.29	3.71	70	39		
			38	5.026	6.146	7.415	8.842	10.434	12.197	14.137	–	–	–	–	–	–		
			43	4.423	5.435	6.584	7.881	9.335	10.956	12.755	–	–	–	–	–	–		
OP-MSXM099ML	MLZ045T4	E	27	7.288	8.825	10.553	12.472	14.58	16.875	19.357	–	–	–	–	–	–	W05 W09	114X7071 114X7205
			32	6.643	8.055	9.648	11.422	13.379	15.521	17.853	10.216	5.001	2.04	3.37	70	39		
			38	5.823	7.082	8.508	10.106	11.88	13.836	15.989	–	–	–	–	–	–		
			43	5.1	6.228	7.513	8.96	10.58	12.381	14.387	–	–	–	–	–	–		
OP-MSXM108ML	MLZ048T4	E	27	7.856	9.491	11.303	13.308	15.517	17.94	20.584	–	–	–	–	–	–	W05 W09	114X7072 114X7206
			32	7.147	8.653	10.321	12.168	14.209	16.459	18.932	10.943	5.478	2	3.31	70	39		
			38	6.248	7.596	9.087	10.742	12.581	14.623	16.892	–	–	–	–	–	–		
			–	5.457	6.671	8.012	9.504	11.172	13.041	15.144	–	–	–	–	–	–		

MBP

(1) G - Compressor 230V/1~/50Hz, fan 230V/1~/50Hz
E - Compressor 400V/3~/50Hz, fan 230V/1~/50Hz
(2) Nominal conditions (EN13215), Evaporating temperatures at dew point, Superheat 10 K, Subcooling 0 K
(3) Rated conditions (EN13215), Evaporating temperature (dew point) -10 °C, Ambient air temperature 32 °C, Return Gas Temperature 20 °C, Subcooling 0 K

SEPR, Seasonal Energy Performance Ratio
Q [kW], Cooling Capacity
P [kW], Power Input

*For regular updates and detailed capacities, please refer to **Coolselector®2** software*

EcoDesign 2018

Technical data and ordering

Optyma™ **Slim Pack**

Ordering

Model number	Compressor Model	Application	Electrical code [1]	Refrigerant [2]	Condenser Coil			Fan		Receiver	Dimensions						Weight		Code no.	
					Type	Airflow	Internal Volume	Number	Blade ø	Volume	Housing	Height	Width	Depth	Suction line	Liquid Line	Gross	Net		
						[m³/h]	[dm³]		[mm]	[L]		[mm]			[in]		[Kg]		W05	W09
OP-LSQM014MP	MPT14LA	LBP	G	Q	A7	2,200	0.4	1	365	1.3	B1	530	910	364	3/8	3/8	64.4	50.9	114X7106	114X7129
OP-LSQM018MP	MPT16LA	LBP	G	Q	A7	2,200	0.4	1	365	1.3	B1	530	910	364	3/8	3/8	64.6	51.1	114X7107	114X7130
OP-LSQM026AJ	CAJ2446Z	LBP	G	Q	D7	3,300	0.6	1	450	3.4	B2	690	1087	464	1/2	1/2	76.7	61.5	114X7085	114X7179
OP-LSQM034AJ	CAJ2464Z	LBP	G	Q	D7	3,300	0.6	1	450	3.4	B2	690	1087	464	1/2	1/2	76.7	61.5	114X7086	114X7180
OP-LSQM048NT	NTZ048-5	LBP	G	Q	D7	3,300	0.6	1	450	3.4	B2	690	1087	464	5/8	1/2	77	62	114X7087	114X7181
OP-LSQM048NT	NTZ048-4	LBP	E	Q	D7	3,300	0.6	1	450	3.4	B2	690	1087	464	5/8	1/2	77	62	114X7088	114X7182
OP-LSQM074FH	FH2511Z	LBP	G	Q	D7	3,300	0.6	1	450	3.4	B2	690	1087	464	5/8	1/2	92	77	114X7095	114X7185
OP-LSQM074FH	TFH2511Z	LBP	E	Q	D7	3,300	0.6	1	450	3.4	B2	690	1087	464	5/8	1/2	88	73	114X7096	114X7186
OP-LSQM068NT	NTZ068-5	LBP	G	Q	D7	3,300	0.6	1	450	3.4	B2	690	1087	464	5/8	1/2	79	64	114X7089	114X7183
OP-LSQM068NT	NTZ068-4	LBP	E	Q	D7	3,300	0.6	1	450	3.4	B2	690	1087	464	5/8	1/2	80	65	114X7090	114X7184
OP-LSQM067LL	LLZ013T4	LBP	E	Q	G7	5,200	1.6	1	500	6.2	B3	825	1105	464	3/4	1/2	97	78	114X7091	114X7187
OP-LSQM084LL	LLZ015T4	LBP	E	Q	G7	5,200	1.6	1	500	6.2	B3	825	1105	464	3/4	1/2	97	78	114X7092	114X7188
OP-LSQM098LL	LLZ018T4	LBP	E	Q	G7	5,200	1.6	1	500	6.2	B3	825	1105	464	3/4	1/2	97	78	114X7075	114X7189
OP-MSGM012SC	SC12G	MBP	G	G	A7	2,200	0.4	1	365	1.3	B1	530	910	364	3/8	3/8	65.5	52	114X7099	114X7207
OP-MSGM015SC	SC15G	MBP	G	G	A7	2,200	0.4	1	365	1.3	B1	530	910	364	3/8	3/8	65.5	52	114X7100	114X7208
OP-MSGM018SC	SC18G	MBP	G	G	A7	2,200	0.4	1	365	1.3	B1	530	910	364	3/8	3/8	66.5	53	114X7101	114X7131
OP-MSYM009MY	MLY90RAb	MBP	G	Y	A7	2,200	0.4	1	365	1.3	B1	530	910	364	3/8	3/8	63.9	50.4	114X7108	114X7133
OP-MSGM033AJ	CAJ4511Y	MBP	G	G	D7	3,300	0.6	1	450	3.4	B2	690	1087	464	1/2	1/2	79	64	114X7104	114X7210
OP-MSYM018AJ	CAJ9510Z	MBP	G	Y	D7	3300	0.6	1	450	3.4	B2	690	1087	464	1/2	1/2	77	62	114X7111	114X7136
OP-MSGM021SC	SC21G	MBP	G	G	A7	2,200	0.4	1	365	1.3	B1	530	910	364	3/8	3/8	66.5	53	114X7102	114X7132
OP-MSYM012MP	MPT12RA	MBP	G	Y	A7	2,200	0.4	1	365	1.3	B1	530	910	364	3/8	3/8	64.3	50.8	114X7109	114X7134
OP-MSGM026AJ	CAJ4492Y	MBP	G	G	D7	3,300	0.6	1	450	3.4	B2	690	1087	464	1/2	1/2	78	62.5	114X7103	114X7209
OP-MSYM014MP	MPT14RA	MBP	G	Y	A7	2,200	0.4	1	365	1.3	B1	530	910	364	3/8	3/8	65	51.5	114X7110	114X7135
OP-MSYM024AJ	CAJ9513Z	MBP	G	Y	D7	3,300	0.6	1	450	3.4	B2	690	1087	464	1/2	1/2	78	63	114X7097	114X7194
OP-MSYM026AJ	TAJ4517Z	MBP	E	Y	D7	3,300	0.6	1	450	3.4	B2	690	1087	464	1/2	1/2	74.4	59.2	114X7093	114X7192
OP-MSYM026AJ	CAJ4517Z	MBP	G	Y	D7	3,300	0.6	1	450	3.4	B2	690	1087	464	1/2	1/2	77.7	62.5	114X7083	114X7190
OP-MSYM034AJ	TAJ4519Z	MBP	E	Y	D7	3,300	0.6	1	450	3.4	B2	690	1087	464	1/2	1/2	76.7	61.5	114X7094	114X7193
OP-MSYM034AJ	CAJ4519Z	MBP	G	Y	D7	3,300	0.6	1	450	3.4	B2	690	1087	464	1/2	1/2	77.7	62.5	114X7084	114X7191
OP-MSXM034ML	MLZ015T4	MBP	E	X	D7	3,300	0.6	1	450	3.4	B2	690	1087	464	3/4	1/2	85	70	114X7062	114X7196
OP-MSXM034ML	MLZ015T5	MBP	G	X	D7	3,300	0.6	1	450	3.4	B2	690	1087	464	3/4	1/2	85	70	114X7061	114X7195
OP-MSXM044ML	MLZ019T4	MBP	E	X	D7	3,300	0.6	1	450	3.4	B2	690	1087	464	3/4	1/2	85	70	114X7162	114X7212
OP-MSXM044ML	MLZ019T5	MBP	G	X	D7	3,300	0.6	1	450	3.4	B2	690	1087	464	3/4	1/2	85	70	114X7161	114X7211
OP-MSXM046ML	MLZ021T4	MBP	E	X	D7	3,300	0.6	1	450	3.4	B2	690	1087	464	3/4	1/2	85	70	114X7064	114X7198
OP-MSXM046ML	MLZ021T5	MBP	G	X	D7	3,300	0.6	1	450	3.4	B2	690	1087	464	3/4	1/2	85	70	114X7063	114X7197
OP-MSXM057ML	MLZ026T5	MBP	G	X	D7	3,300	0.6	1	450	3.4	B2	690	1087	464	3/4	1/2	85	70	114X7065	114X7199
OP-MSXM057ML	MLZ026T4	MBP	E	X	D7	3,300	0.6	1	450	3.4	B2	690	1087	464	3/4	1/2	85	70	114X7066	114X7200
OP-MSXM068ML	MLZ030T4	MBP	E	X	G7	5,200	1.6	1	500	6.2	B3	825	1105	464	7/8	1/2	95	76	114X7068	114X7202
OP-MSXM068ML	MLZ030T5	MBP	G	X	G7	5,200	1.6	1	500	6.2	B3	825	1105	464	7/8	1/2	95	76	114X7067	114X7201
OP-MSXM080ML	MLZ038T5	MBP	G	X	G7	5,200	1.6	1	500	6.2	B3	825	1105	464	7/8	1/2	96	77	114X7069	114X7203
OP-MSXM080ML	MLZ038T4	MBP	E	X	G7	5,200	1.6	1	500	6.2	B3	825	1105	464	7/8	1/2	96	77	114X7070	114X7204
OP-MSXM099ML	MLZ045T4	MBP	E	X	G7	5,200	1.6	1	500	6.2	B3	825	1105	464	7/8	1/2	98	79	114X7071	114X7205
OP-MSXM108ML	MLZ048T4	MBP	E	X	G7	5,200	1.6	1	500	6.2	B3	825	1105	464	7/8	1/2	98	79	114X7072	114X7206

[1]) G - Compressor 230V/1~/50Hz, fan 230V/1~/50Hz
E - Compressor 400V/3~/50Hz, fan 230V/1~/50Hz
[2]) G - R134a
X - R134a, R404A / R507, R407A, R407F, R449A, R448A
Y - R404A / R507, R449A
Q - R404A / R507, R452A
H - R404A / R507

Technical data and ordering

Optyma™ **Slim Pack**

Spareparts & accessories - LBP

Designation		LSQM026AJ	LSQM034AJ	LSQM048NT	LSQM048NT	LSQM068NT	LSQM068NT	LSQM067LL
Code Number	W05	114X7085	114X7086	114X7087	114X7088	114X7089	114X7090	114X7091
	W09	114X7179	114X7180	114X7181	114X7182	114X7183	114X7184	114X7187
Compressor Description		CAJ2446Z	CAJ2464Z	NTZ048-5	NTZ048-4	NTZ068-5	NTZ068-4	LLZ013T4
Oil		RL32HA/HT	RL32HA/HT	175PZ-POE	175PZ-POE	175PZ-POE	175PZ-POE	215PZ-POE46
Housing		B2	B2	B2	B2	B2	B2	B3
Spare Parts								
Compressor single pack		118U3992	118U3990	120F0228	120F0226	120F0232	120F0230	121L9535
Condenser		118U3493	118U3493	118U3493	118U3493	118U3493	118U3493	118U3494
Dual pressure switch		060-539766	060-539766	060-539766	060-539766	060-539766	060-539766	060-539766
Fan assembly		–	–	–	–	–	–	118U3829
Fan blade		118U3481	118U3481	118U3481	118U3481	118U3481	118U3481	–
Fan capacitor		118U3297	118U3297	118U3297	118U3297	118U3297	118U3297	–
Fan cowl/grill		118U3484	118U3484	118U3484	118U3484	118U3484	118U3484	118U3485
Fan motor		118U3823	118U3823	118U3823	118U3823	118U3823	118U3823	118U3829
Filter drier		023Z5041	023Z5041	023Z5041	023Z5041	023Z5041	023Z5041	023Z5044
Liquid valve		118U3761	118U3761	118U3761	118U3761	118U3761	118U3761	118U3761
Receiver		118U3475	118U3475	118U3475	118U3475	118U3475	118U3475	118U3476
Sight glass		014L0173	014L0173	014L0173	014L0173	014L0173	014L0173	014L0173
Suction valve		118U3761	118U3761	118U3764	118U3764	118U3764	118U3764	118U3762
Electrical Spare Parts								
Crankcase heater		120Z0057	120Z0057	120Z0459	120Z0459	120Z0459	120Z0459	120Z5040
Contactor kit		118U3893	118U3894	118U3894	118U3893	118U3895	118U3893	118U3896
Main switch kit	W05	118U3976	118U3976	118U3976	118U3872	118U3869	118U3873	118U3873
	W09	118U3851	118U3852	118U3852	118U3853	118U3854	118U3851	118U3852
Overload relay		118U3876	118U3877	118U3877	118U3978	118U3879	118U3876	118U3877
Run capacitor				8173041	–	8173041	–	–
Starting capacitor		118U5191	118U5192	8173001	–	8173001	–	–
Starting relay				–	–	–	–	–
Sequence phase relay		–	–	–	–	–	–	118U3882
Isolator switch assembly		118U5117	118U5117	118U5117	118U5117	118U5117	118U5117	118U5120
Premounted FSC		061H3144	061H3144	061H3144	061H3144	061H3144	061H3144	061H3144
Electrical Characteristics								
Wiring Diagram	W05	WD2	WD2	WD2	WD7	WD2	WD7	WD5
	W09	WD12	WD12	WD12	WD11	WD12	WD11	WD13
LRA Compressor [A]		29	40	37	16	53	25	62
MCC Compressor [A]		7.9	10	11	4.8	17	8.4	12
Max cont.power [kW]		1.4	1.87	2.19	2.28	4	3.57	4.59
MCC Fan [A]		0.47	0.47	0.47	0.47	0	0.47	0.97
Fan Power [W]		1x68	1x68	1x68	1x68	1x68	1x68	1x130
Min Fuse rating gL/gG (A)		10	16	16	10	25	16	16
Accessories (Not Premounted)								
Acoustic hood		–	–	120Z0575	120Z0575	120Z0575	120Z0575	120Z5052
FSC Male connection		061H3142	061H3142	061H3142	061H3142	061H3142	061H3142	061H3142
FSC Female connection		061H3140	061H3140	061H3140	061H3140	061H3140	061H3140	061H3140
Sheet Metal								
Top panel		118U5146	118U5146	118U5146	118U5146	118U5146	118U5146	118U5151
Fan panel		118U5147	118U5147	118U5147	118U5147	118U5147	118U5147	118U5152
Back panel		118U5148	118U5148	118U5148	118U5148	118U5148	118U5148	118U5153
Left side panel		118U5168	118U5168	118U5168	118U5168	118U5168	118U5168	118U5169
Service panel	W05	118U5149	118U5149	118U5149	118U5149	118U5149	118U5149	118U5154
	W09	118U5157	118U5157	118U5157	118U5157	118U5157	118U5157	118U5158

MCC - *Max Continuous Current*
LRA - *Locked Rotor Amps*
FSC - *Fan Speed Controller*

Technical data and ordering

Optyma™ **Slim Pack (count.)**

Spareparts & accessories - LBP

Designation		LSQM084LL	LSQM098LL	LSQM074FH	LSQM074FH	LSQM014MP	LSQM018MP
Code Number	W05	114X7092	114X7075	114X7095	114X7096	114X7106	114X7107
	W09	114X7188	114X7189	114X7185	114X7186	114X7129	114X7130
Compressor Description		LLZ015T4	LLZ018T4	FH2511Z	TFH2511Z	MPT14LA	MPT16LA
Oil		215PZ-POE46	215PZ-POE46	RL32HA/HT	RL32HA/HT	POE32	POE32
Housing		B3	B3	B2	B2	B1	B1
Spare Parts							
Compressor single pack		121L9537	121L9539	118U3914	118U3915	123B2126	123B2127
Condenser		118U3494	118U3494	118U3493	118U3493	118U3492	118U3492
Dual pressure switch		060-539766	060-539766	060-539766	060-539766	060-539766	060-539766
Fan assembly		118U3829	118U3829	–	–	–	–
Fan blade		–	–	118U3481	118U3481	118U3480	118U3480
Fan capacitor		–	–	118U3297	118U3297	118U3296	118U3296
Fan cowl/grill		118U3485	118U3485	118U3484	118U3484	118U3483	118U3483
Fan motor		118U3829	118U3829	118U3823	118U3823	118U3477	118U3477
Filter drier		023Z5044	023Z5044	023Z5041	023Z5041	023Z5040	023Z5040
Liquid valve		118U3761	118U3761	118U3761	118U3761	118U3414	118U3414
Receiver		118U3476	118U3476	118U3475	118U3475	118U3474	118U3474
Sight glass		014L0173	014L0173	014L0173	014L0173	014L0182	014L0182
Suction valve		118U3762	118U3762	118U3764	118U3764	118U3414	118U3414
Electrical Spare Parts							
Crankcase heater		120Z5040	120Z5040	120Z0459	120Z0459	192H2096	192H2096
Contactor kit		118U3896	118U3896	118U3895	118U3893	118U3894	118U3894
Main switch kit	W05	118U3874	118U3874	118U3870	118U3872	118U3975	118U3975
	W09	118U3852	118U3852	118U3855	118U3851	118U3853	118U3853
Overload relay		118U3878	118U3878	118U3880	118U3876	118U3978	118U3978
Run capacitor		–	–	118U5199	–	123B9222	123B9219
Starting capacitor		–	–		–	123B9312	123B9316
Starting relay		–	–		–	123B9151	123B9151
Sequence phase relay		118U3882	118U3882	–	–	–	–
Isolator switch assembly	W09	118U5120	118U5120	118U5117	118U5117	118U5117	118U5117
Premounted FSC	W09	061H3144	061H3144	061H3144	061H3144	061H3144	061H3144
Electrical Characteristics							
Wiring Diagram	W05	WD5	WD5	WD2	WD7	WD8	WD8
	W09	WD13	WD13	WD12	WD11	WD9	WD9
LRA Compressor [A]		88.5	90	81	28	16	19
MCC Compressor [A]		15	14.4	24	7.2	5	4
Max cont.power [kW]		5.49	6.2	3.45	3.34	0.78	0.89
MCC Fan [A]		0.97	0.97	0.47	0.47	0.32	0.32
Fan Power [W]		1x130	1x130	1x68	1x68	1x25	1x25
Min Fuse rating gL/gG (A)		20	20	32	10	10	10
Accessories (Not Premounted)							
Acoustic hood		120Z5052	120Z5052	–	–	–	–
FSC Male connection		061H3142	061H3142	061H3142	061H3142	061H3142	061H3142
FSC Female connection		061H3140	061H3140	061H3140	061H3140	061H3140	061H3140
Sheet Metal							
Top panel		118U5151	118U5151	118U5146	118U5146	118U5141	118U5141
Fan panel		118U5152	118U5152	118U5147	118U5147	118U5142	118U5142
Back panel		118U5153	118U5153	118U5148	118U5148	118U5143	118U5143
Left side panel		118U5169	118U5169	118U5168	118U5168	118U5167	118U5167
Service panel	W05	118U5154	118U5154	118U5149	118U5149	118U5144	118U5144
	W09	118U5158	118U5158	118U5157	118U5157	118U5156	118U5156

MCC - *Max Continuous Current*
LRA - *Locked Rotor Amps*
FSC - *Fan Speed Controller*

Technical data and ordering

Optyma™ **Slim Pack**

Spareparts & accessories - MBP

Designation		MSXM034ML	MSXM034ML	MSXM044ML	MSXM044ML	MSXM046ML	MSXM046ML	MSXM057ML	MSXM057ML	MSXM068ML
Code Number	W05	114X7061	114X7062	114X7161	114X7162	114X7063	114X7064	114X7065	114X7066	114X7067
	W09	114X7195	114X7196	114X7211	114X7212	114X7197	114X7198	114X7199	114X7200	114X7201
Compressor Description		MLZ015T5	MLZ015T4	MLZ019T5	MLZ019T4	MLZ021T5	MLZ021T4	MLZ026T5	MLZ026T4	MLZ030T5
Oil		215PZ-POE46	215PZ-POE46	215PZ-POE46	215PZ-POE46	215PZ-POE46	215PZ-POE46	215PZ-POE46	215PZ-POE46	215PZ-POE46
Housing		B2	B2	B2	B2	B2	B2	B2	B2	B3
Spare Parts										
Compressor single pack		121L8631	121L8629	121U8026	121U8004	121L8635	121L8633	121L8639	121L8637	121L8643
Condenser		118U3493	118U3493	118U3493	118U3493	118U3493	118U3493	118U3493	118U3493	118U3494
Dual pressure switch		060-539766	060-539766	060-539766	060-539766	060-539766	060-539766	060-539766	060-539766	060-539766
Fan assembly		–	–	–	–	–	–	–	–	118U3829
Fan blade		118U3481	118U3481	118U3481	118U3481	118U3481	118U3481	118U3481	118U3481	–
Fan capacitor		118U3297	118U3297	118U3297	118U3297	118U3297	118U3297	118U3297	118U3297	–
Fan cowl/grill		118U3484	118U3484	118U3484	118U3484	118U3484	118U3484	118U3484	118U3484	118U3485
Fan motor		118U3823	118U3823	118U3823	118U3823	118U3823	118U3823	118U3823	118U3823	118U3829
Filter drier		023Z5041	023Z5041	023Z5041	023Z5041	023Z5041	023Z5041	023Z5041	023Z5041	023Z5044
Liquid valve		118U3761	118U3761	118U3761	118U3761	118U3761	118U3761	118U3761	118U3761	118U3761
Receiver		118U3475	118U3475	118U3475	118U3475	118U3475	118U3475	118U3475	118U3475	118U3476
Sight glass		014L0173	014L0173	014L0173	014L0173	014L0173	014L0173	014L0173	014L0173	014L0173
Suction valve		118U3762	118U3762	118U3762	118U3762	118U3762	118U3762	118U3762	118U3762	118U3763
Electrical Spare Parts										
Crankcase heater		120Z5040	120Z5040	120Z5040	120Z5040	120Z5040	120Z5040	120Z5040	120Z5040	120Z5040
Contactor kit		118U3895	118U3893	118U3895	118U3867	118U3895	118U3867	118U3895	118U3867	118U3868
Main switch kit	W05	118U3869	118U3872	118U3870	118U3873	118U3870	118U3873	118U3870	118U3873	118U3871
	W09	118U3854	118U3851	118U3856	118U3851	118U3856	118U3851	118U3856	118U3852	118U3857
Overload relay		118U3879	118U3875	118U3880	118U3876	118U3880	118U3876	118U3880	118U3877	118U3880
Run capacitor		8173231	–	120Z0051	–	120Z0051	–	120Z0051	–	8173233
Starting capacitor		120Z0399	–	120Z0399	–	120Z0399	–	120Z0399	–	120Z0400
Starting relay		120Z0393	–	120Z0393	–	120Z0393	–	120Z0393	–	120Z0394
Sequence phase relay		118U3882	118U3882	118U3882	118U3882	118U3882	118U3882	118U3882	118U3882	118U3882
Isolator switch assembly	W09	118U5117	118U5117	118U5117	118U5117	118U5117	118U5117	118U5117	118U5117	118U5119
Premounted FSC	W09	061H3144	061H3144	061H3144	061H3144	061H3144	061H3144	061H3144	061H3144	061H3144
Electrical Characteristics										
Wiring Diagram	W05	WD3	WD6	WD3	WD6	WD3	WD6	WD3	WD6	WD4
	W09	WD12	WD11	WD12	WD11	WD12	WD11	WD12	WD11	WD14
LRA Compressor [A]		60	30	97	45	97	45	97	45	127
MCC Compressor [A]		19	7	23	9.5	25	9.5	26	10	32
Max cont.power [kW]		2.53	2.73	3.38	3.33	3.38	3.33	4.42	4.14	4.89
MCC Fan [A]		0.47	0.47	0.47	0.47	0.47	0.47	0.47	0.47	0.97
Fan Power [W]		1x68	1x68	1x68	1x68	1x68	1x68	1x68	1x68	1x130
Min Fuse rating gL/gG (A)		25	10	32	16	32	16	32	16	40
Accessories (Not Premounted)										
Acoustic hood		120Z5043	120Z5043	120Z5043	120Z5043	120Z5043	120Z5043	120Z5043	120Z5043	120Z5044
FSC Male connection		061H3142	061H3142	061H3142	061H3142	061H3142	061H3142	061H3142	061H3142	061H3142
FSC Female connection		061H3140	061H3140	061H3140	061H3140	061H3140	061H3140	061H3140	061H3140	061H3140
Sheet Metal										
Top panel		118U5146	118U5146	118U5146	118U5146	118U5146	118U5146	118U5146	118U5146	118U5151
Fan panel		118U5147	118U5147	118U5147	118U5147	118U5147	118U5147	118U5147	118U5147	118U5152
Back panel		118U5148	118U5148	118U5148	118U5148	118U5148	118U5148	118U5148	118U5148	118U5153
Left side panel		118U5168	118U5168	118U5168	118U5168	118U5168	118U5168	118U5168	118U5168	118U5169
Service panel	W05	118U5149	118U5149	118U5149	118U5149	118U5149	118U5149	118U5149	118U5149	118U5154
	W09	118U5157	118U5157	118U5157	118U5157	118U5157	118U5157	118U5157	118U5157	118U5158

MCC - *Max Continuous Current*
LRA - *Locked Rotor Amps*
FSC - *Fan Speed Controller*

Technical data and ordering

Optyma™ **Slim Pack (count.)**

Spareparts & accessories - MBP

Designation		MSXM068ML	MSXM080ML	MSXM080ML	MSXM099ML	MSXM108ML	MSYM026AJ	MSYM034AJ	MSYM026AJ	MSYM034AJ	MSYM024AJ
Code Number	W05	114X7068	114X7069	114X7070	114X7071	114X7072	114X7083	114X7084	114X7093	114X7094	114X7097
	W09	114X7202	114X7203	114X7204	114X7205	114X7206	114X7190	114X7191	114X7192	114X7193	114X7194
Compressor Description		MLZ030T4	MLZ038T5	MLZ038T4	MLZ045T4	MLZ048T4	CAJ4517Z	CAJ4519Z	TAJ4517Z	TAJ4519Z	CAJ9513Z
Oil		215PZ-POE46	215PZ-POE46	215PZ-POE46	215PZ-POE46	215PZ-POE46	RL32HA/HT	RL32HA/HT	RL32HA/HT	RL32HA/HT	RL32HA/HT
Housing		B3	B3	B3	B3	B3	B2	B2	B2	B2	B2
Spare Parts											
Compressor single pack		121L8641	121L8647	121L8645	121L8649	121L8651	118U3993	118U3994	118U3991	118U3989	118U3995
Condenser		118U3494	118U3494	118U3494	118U3494	118U3494	118U3493	118U3493	118U3493	118U3493	118U3493
Dual pressure switch		060-539766	060-539766	060-539766	060-539766	060-539766	060-539766	060-539766	060-539766	060-539766	060-539766
Fan assembly		118U3829	118U3829	118U3829	118U3829	118U3829	–	–	–	–	–
Fan blade		–	–	–	–	–	118U3481	118U3481	118U3481	118U3481	118U3481
Fan capacitor		–	–	–	–	–	118U3297	118U3297	118U3297	118U3297	118U3297
Fan cowl/grill		118U3485	118U3485	118U3485	118U3485	118U3485	118U3484	118U3484	118U3484	118U3484	118U3484
Fan motor		118U3829	118U3829	118U3829	118U3829	118U3829	118U3823	118U3823	118U3823	118U3823	118U3823
Filter drier		023Z5044	023Z5044	023Z5044	023Z5044	023Z5044	023Z5041	023Z5041	023Z5041	023Z5041	023Z5041
Liquid valve		118U3761	118U3761	118U3761	118U3761	118U3761	118U3761	118U3761	118U3761	118U3761	118U3761
Receiver		118U3476	118U3476	118U3476	118U3476	118U3476	118U3475	118U3475	118U3475	118U3475	118U3475
Sight glass		014L0173	014L0173	014L0173	014L0173	014L0173	014L0173	014L0173	014L0173	014L0173	014L0173
Suction valve		118U3763	118U3763	118U3763	118U3763	118U3763	118U3761	118U3761	118U3761	118U3761	118U3761
Electrical Spare Parts											
Crankcase heater		120Z5040	120Z5040	120Z5040	120Z5040	120Z5040	192H2096	192H2096	192H2096	192H2096	120Z0057
Contactor kit		118U3896	118U3868	118U3896	118U3896	118U3896	118U3896	118U3896	118U3893	118U3893	118U3894
Main switch kit	W05	118U3873	118U3871	118U3874	118U3874	118U3874	118U3976	118U3976	118U3872	118U3872	118U3976
	W09	118U3852	118U3857	118U3852	118U3852	118U3854	118U3852	118U3852	118U3853	118U3853	118U3852
Overload relay		118U3877	118U3881	118U3878	118U3878	118U3878	118U3877	118U3878	118U3978	118U3978	118U3877
Run capacitor		–	8173234	–	–	–	118U5195	118U5196	–	–	118U5198
Starting capacitor		–	8173001	–	–	–			–	–	
Starting relay		–	120Z0395	–	–	–			–	–	
Sequence phase relay		118U3882	118U3882	118U3882	118U3882	118U3882	–	–	–	–	–
Isolator switch assembly	W09	118U5120	118U5119	118U5120	118U5120	118U5120	118U5117	118U5117	118U5117	118U5117	118U5117
Premounted FSC	W09	061H3144	061H3144	061H3144	061H3144	061H3144	061H3144	061H3144	061H3144	061H3144	061H3144
Electrical Characteristics											
Wiring Diagram	W05	WD5	WD4	WD5	WD5	WD5	WD2	WD2	WD7	WD7	WD2
	W09	WD13	WD14	WD13	WD13	WD14	WD12	WD12	WD11	WD11	WD12
LRA Compressor [A]		60	130	70	82	87	38.5	45	18	22	33.5
MCC Compressor [A]		13	38	15	15	16	12.7	15.2	4	4.8	10.2
Max cont.power [kW]		4.88	5.77	5.78	7.01	7.55	2	2.74	2.09	2.7	1.75
MCC Fan [A]		0.97	0.97	0.97	0.97	0.97	0.47	0.47	0.47	0.47	0.47
Fan Power [W]		1x130	1x130	1x130	1x130	1x130	1x68	1x68	1x68	1x68	1x68
Min Fuse rating gL/gG (A)		16	40	20	20	20	16	16	10	10	16
Accessories (Not Premounted)											
Acoustic hood		120Z5044	120Z5044	120Z5044	120Z5044	120Z5044	–	–	–	–	–
FSC Male connection		061H3142	061H3142	061H3142	061H3142	061H3142	061H3142	061H3142	061H3142	061H3142	061H3142
FSC Female connection		061H3140	061H3140	061H3140	061H3140	061H3140	061H3140	061H3140	061H3140	061H3140	061H3140
Sheet Metal											
Top panel		118U5151	118U5151	118U5151	118U5151	118U5151	118U5146	118U5146	118U5146	118U5146	118U5146
Fan panel		118U5152	118U5152	118U5152	118U5152	118U5152	118U5147	118U5147	118U5147	118U5147	118U5147
Back panel		118U5153	118U5153	118U5153	118U5153	118U5153	118U5148	118U5148	118U5148	118U5148	118U5148
Left side panel		118U5169	118U5169	118U5169	118U5169	118U5169	118U5168	118U5168	118U5168	118U5168	118U5168
Service panel	W05	118U5154	118U5154	118U5154	118U5154	118U5154	118U5149	118U5149	118U5149	118U5149	118U5149
	W09	118U5158	118U5158	118U5158	118U5158	118U5158	118U5157	118U5157	118U5157	118U5157	118U5157

MCC - *Max Continuous Current*
LRA - *Locked Rotor Amps*
FSC - *Fan Speed Controller*

Technical data and ordering

Optyma™ **Slim Pack (count.)**

Spareparts & accessories - MBP

Designation		MSGM012SC	MSGM015SC	MSGM018SC	MSGM021SC	MSGM026AJ	MSGM033AJ	MSYM009MY	MSYM012MP	MSYM014MP	MSYM018AJ
Code Number	W05	114X7099	114X7100	114X7101	114X7102	114X7103	114X7104	114X7108	114X7109	114X7110	114X7111
	W09	114X7207	114X7208	114X7131	114X7132	114X7209	114X7210	114X7133	114X7134	114X7135	114X7136
Compressor Description		SC12G	SC15G	SC18G	SC21G	CAJ4492Y	CAJ4511Y	MLY90RAb	MPT12RA	MPT14RA	CAJ9510Z
Oil		POE	POE	POE	POE	RL32HA/HT	RL32HA/HT	POE32	POE32	POE32	RL32HA/HT
Housing		B1	B1	B1	B1	B2	B2	B1	B1	B1	B2
Spare Parts											
Compressor single pack		195B0050	195B0053	195B0059	195B0636	118U3997	118U3996	123B2514	123B2518	123B2704	118U3988
Condenser		118U3492	118U3492	118U3492	118U3492	118U3493	118U3493	118U3492	118U3492	118U3492	118U3493
Dual pressure switch		060-539766	060-539766	060-539766	060-539766	060-539766	060-539766	060-539766	060-539766	060-539766	060-539766
Fan assembly		–	–	–	–	–	–	–	–	–	–
Fan blade		118U3480	118U3480	118U3480	118U3480	118U3481	118U3481	118U3480	118U3480	118U3480	118U3481
Fan capacitor		118U3296	118U3296	118U3296	118U3296	118U3297	118U3297	118U3296	118U3296	118U3296	118U3297
Fan cowl/grill		118U3483	118U3483	118U3483	118U3483	118U3484	118U3484	118U3483	118U3483	118U3483	118U3484
Fan motor		118U3477	118U3477	118U3477	118U3477	118U3823	118U3823	118U3477	118U3477	118U3477	118U3823
Filter drier		023Z5040	023Z5040	023Z5040	023Z5040	023Z5041	023Z5041	023Z5040	023Z5040	023Z5040	023Z5041
Liquid valve		118U3414	118U3414	118U3414	118U3414	118U3761	118U3761	118U3414	118U3414	118U3414	118U3414
Receiver		118U3474	118U3474	118U3474	118U3474	118U3475	118U3475	118U3474	118U3474	118U3474	118U3475
Sight glass		014L0182	014L0182	014L0182	014L0182	014L0173	014L0173	014L0182	014L0182	014L0182	014L0173
Suction valve		118U3414	118U3414	118U3414	118U3414	118U3764	118U3764	118U3414	118U3414	118U3414	118U3414
Electrical Spare Parts											
Crankcase heater		192H2096	192H2096	192H2096	192H2096	120Z0459	120Z0459	192H2096	192H2096	192H2096	192H2096
Contactor kit		118U3893	118U3893	118U3893	118U3893	118U3894	118U3894	118U3894	118U3894	118U3894	118U3894
Main switch kit	W05	–	–	–	–	–	–	118U3980	118U3975	118U3975	118U3975
	W09	118U5162	118U3853	118U3853	118U3853	118U3851	118U3851	118U3853	118U3853	118U3851	118U3851
Overload relay		118U3875	118U3875	118U3875	118U3875	118U3876	118U3876	118U3978	118U3876	118U3876	118U3876
Run capacitor		–	–	–	117-7029	118U5193	118U5194	123B9222	123B9215	123B9226	118U5197
Starting capacitor		117U5017	117U5017	117U5017				123B9315	123B9315	123B9315	
Starting relay		117U6003	117U6005	117U6019				123B9133	123B9151	123B9139	
Sequence phase relay		–	–	–	–	–	–	–	–	–	–
Isolator switch assembly	W09	118U5117	118U5117	118U5117	118U5117	118U5117	118U5117	118U5117	118U5117	118U5117	118U5117
Premounted FSC	W09	061H3144	061H3144	061H3144	061H3144	061H3144	061H3144	061H3144	061H3144	061H3144	061H3144
Electrical Characteristics											
Wiring Diagram	W05	WD1	WD1	WD1	WD2	WD1	WD1	WD8	WD8	WD8	WD8
	W09	WD10	WD10	WD9	WD9	WD10	WD12	WD9	WD9	WD9	WD9
LRA Compressor [A]		12.4	14.8	18.6	21.8	28	30	17	18.5	21	30
MCC Compressor [A]		3.17	3.88	4.34	4.6	8.9	8.6	5.3	5.3	6.5	8
Max cont.power [kW]		0.812	0.819	0.945	0.936	1.43	1.69	0.62	0.84	1.03	1.3
MCC Fan [A]		0.32	0.32	0.32	0.32	0.47	0.47	0.32	0.32	0.32	0.47
Fan Power [W]		1x25	1x25	1x25	1x25	1x68	1x68	1x25	1x25	1x25	1x68
Min Fuse rating gL/gG (A)		10	10	10	10	16	16	10	10	10	10
Accessories (Not Premounted)											
Acoustic hood		–	–	–	–	–	–	–	–	–	–
FSC Male connection		061H3142	061H3142	061H3142	061H3142	061H3142	061H3142	061H3142	061H3142	061H3142	061H3142
FSC Female connection		061H3140	061H3140	061H3140	061H3140	061H3140	061H3140	061H3140	061H3140	061H3140	061H3140
Sheet Metal											
Top panel		118U5141	118U5141	118U5141	118U5141	118U5146	118U5146	118U5141	118U5141	118U5141	118U5146
Fan panel		118U5142	118U5142	118U5142	118U5142	118U5147	118U5147	118U5142	118U5142	118U5142	118U5147
Back panel		118U5143	118U5143	118U5143	118U5143	118U5148	118U5148	118U5143	118U5143	118U5143	118U5148
Left side panel		118U5167	118U5167	118U5167	118U5167	118U5168	118U5168	118U5167	118U5167	118U5167	118U5168
Service panel	W05	118U5144	118U5144	118U5144	118U5144	118U5149	118U5149	118U5144	118U5144	118U5144	118U5149
	W09	118U5156	118U5156	118U5156	118U5156	118U5157	118U5157	118U5156	118U5156	118U5156	118U5157

MCC - *Max Continuous Current*
LRA - *Locked Rotor Amps*
FSC - *Fan Speed Controller*

Technical data and ordering

Optyma™ **Slim Pack**

Spare parts & accessories list

Component type	Component description	Additional informations	Component code
Acoustic Hood	ACOUSTIC HOOD COMP 1CYL		120Z0575
Acoustic Hood	ACCOUSTIC HOOD - SMALL FRAME		120Z5043
Acoustic Hood	Acoustic hood for Scroll MLZ compressor		120Z5044
Acoustic Hood	ACCOUSTIC HOOD, LARGE FRAME		120Z5045
Acoustic Hood	Sound Cover, LLZ013-018		120Z5052
Capacitor	CAPACITOR 100µF 330V+R		8173001
Capacitor	CAPACITOR 30µF 450V		8173041
Capacitor	START CAPACITOR 80 mfd		117U5017
Capacitor	Start Capacitor 125 mF, 220V/50Hz		117U5012
Compressor Single Pack	TAJ4519Z - AJ1 range	Phased out & replaced by 118U3989 from SN: 054428CG3916	118U3751
Compressor Single Pack	CAJ2464Z - AJ1 range	Phased out & replaced by 118U3990 from SN: 054428CG3916	118U3769
Compressor Single Pack	TAJ4517Z - AJ1 range	Phased out & replaced by 118U3991 from SN: 054428CG3916	118U3770
Compressor Single Pack	CAJ2446Z - AJ1 range	Phased out & replaced by 118U3992 from SN: 054428CG3916	118U3779
Compressor Single Pack	CAJ4517Z - AJ1 range	Phased out & replaced by 118U3993 from SN: 054428CG3916	118U3810
Compressor Single Pack	CAJ4519Z - AJ1 range	Phased out & replaced by 118U3994 from SN: 054428CG3916	118U3811
Compressor Single Pack	CAJ9513Z - AJ1 range	Phased out & replaced by 118U3995 from SN: 054428CG3916	118U3912
Compressor Single Pack	FH2511Z		118U3914
Compressor Single Pack	TFH2511Z		118U3915
Compressor Single Pack	CAJ9510Z - AJ2 range		118U3988
Compressor Single Pack	TAJ4519Z - AJ2 range		118U3989
Compressor Single Pack	CAJ2464Z - AJ2 range		118U3990
Compressor Single Pack	TAJ4517Z - AJ2 range		118U3991
Compressor Single Pack	CAJ2446Z - AJ2 range		118U3992
Compressor Single Pack	CAJ4517Z - AJ2 range		118U3993
Compressor Single Pack	CAJ4519Z - AJ2 range		118U3994
Compressor Single Pack	CAJ9513Z - AJ2 range		118U3995
Compressor Single Pack	CAJ4511Y - AJ2 range		118U3996
Compressor Single Pack	CAJ4492Y - AJ2 range		118U3997
Compressor Single Pack	NTZ048-4LR1B		120F0226
Compressor Single Pack	NTZ048-5LR1B		120F0228
Compressor Single Pack	NTZ068-4LR1B		120F0230
Compressor Single Pack	NTZ068-5LR1B		120F0232
Compressor Single Pack	MLZ015T4LP9A		121L8629
Compressor Single Pack	MLZ015T5LP9A		121L8631
Compressor Single Pack	MLZ021T4LP9A		121L8633
Compressor Single Pack	MLZ021T5LP9A		121L8635
Compressor Single Pack	MLZ026T4LP9A		121L8637
Compressor Single Pack	MLZ026T5LP9A		121L8639
Compressor Single Pack	MLZ030T4LC9A		121L8641
Compressor Single Pack	MLZ030T5LC9A		121L8643
Compressor Single Pack	MLZ038T4LC9A		121L8645
Compressor Single Pack	MLZ038T5LC9A		121L8647
Compressor Single Pack	MLZ045T4LC9A		121L8649
Compressor Single Pack	MLZ048T4LC9A		121L8651
Compressor Single Pack	LLZ013T4LQ9A		121L9535
Compressor Single Pack	LLZ015T4LQ9A		121L9537
Compressor Single Pack	LLZ018T4LQ9A		121L9539
Compressor Single Pack	MPT14LA		123B2126
Compressor Single Pack	MPT16LA		123B2127
Compressor Single Pack	MLY90RAb		123B2514
Compressor Single Pack	MPT12RA		123B2518
Compressor Single Pack	MPT14RA		123B2704
Compressor Single Pack	SC12G		195B0050
Compressor Single Pack	SC15G		195B0053
Compressor Single Pack	SC18G		195B0059
Compressor Single Pack	SC21G		195B0636
Condenser	A7		118U3492
Condenser	D7		118U3493
Condenser	G7		118U3494
Contactor kit	KIT CONT, SCHNEIDER-LC1E2501M6		118U3867
Contactor kit	KIT CONT, SCHNEIDER-LC1E3801M6		118U3868
Contactor kit	KIT CONT, SCHNEIDER-LC1E0901M5		118U3893

Technical data and ordering

Optyma™ **Slim Pack (count.)**

Spare parts & accessories list

Component type	Component description	Additional informations	Component code
Contactor kit	KIT CONT, SCHNEIDER-LC1E1201M5		118U3894
Contactor kit	KIT CONT, SCHNEIDER-LC1E3201M5		118U3895
Contactor kit	KIT CONT, SCHNEIDER-LC1E1801M5		118U3896
Contactor kit	KIT CONT, SCHNEIDER-LC1E3801M6		118U3898
Crankcase heater	Belt type, 50 W, 230 V, CE mark, UL		120Z0057
Crankcase heater	PTC heater 27 W, CE mark, UL		120Z0459
Crankcase heater	Belt type, 70 W, 240 V, CE mark, UL		120Z5040
Crankcase heater	Crankcase heater 55W * use 118U0051		192H2096
Door Handle	HANDLE, ABB-OHB2AJM,MSMN,OXS5X131		118U3858
Dual pressure switch	KP 17 WB		060-539766
Fan assembly	Fan assembly		118U3829
Fan blade	Fan blade		118U3480
Fan blade	Fan blade		118U3481
Fan capacitor	1,8 µF		118U3296
Fan capacitor	3,5 µF		118U3297
Fan cowl/grill	Ã¸ 356 mm		118U3483
Fan cowl/grill	Ã¸ 457 mm		118U3484
Fan cowl/grill	Ã¸ 609 mm		118U3485
Fan motor (Capacitor not included)	25 W		118U3477
Fan motor (Capacitor not included)	68 W		118U3823
Fan speed control Female connection	XGE-4C		061H3140
Fan speed control Female connection	XGE-2C		061H3144
Fan speed control Male connection	XGE-4C		061H3142
Filter drier	DML083		023Z5040
Filter drier	DML084		023Z5041
Filter drier	DML164		023Z5044
Liquid valve	Brazed Service Valve 3/8"		118U3414
Liquid valve	Brazed Service Valve 1/2"		118U3761
Main switch kit	C60H2P25AC		118U3869
Main switch kit	C60H2P32AC		118U3870
Main switch kit	C60H2P40AC		118U3871
Main switch kit	C60H4P10AC		118U3872
Main switch kit	C60H4P16AC		118U3873
Main switch kit	C60H4P20AC		118U3874
Main switch kit	KIT CIRCUITBREAKER,C60H2P10A		118U3975
Main switch kit	KIT CIRCUITBREAKER,C60H2P16A		118U3976
Main switch kit	KIT CIRCUITBREAKER, SCHNEIDER-A9N2P06C		118U3980
Main switch kit	KIT MPCB, ABB-MS116-10+HK1-20		118U3851
Main switch kit	KIT MPCB, ABB-MS116-16+HK1-20		118U3852
Main switch kit	KIT MPCB, ABB-MS116-6.3+HK1-20		118U3853
Main switch kit	KIT MPCB, ABB-MS132-20+HK1-20		118U3854
Main switch kit	KIT MPCB, ABB-MS132-25+HK1-20		118U3855
Main switch kit	KIT MPCB, ABB-MS132-32+HK1-20		118U3856
Main switch kit	KIT MPCB, ABB-MS450-40+HKS4-20		118U3857
Main switch kit	SPARE PART, KIT MPCB MS116-4.0 2.5-4A		118U5162
Isolator switch	SPARE PART, ISOLATOR SWITCH SHAFT ASSLY B1/B2		118U5117
Isolator switch	SPARE PART, ISOLATOR SWITCH SHAFT ASSLY B3 3PH		118U5120
Isolator switch	SPARE PART, ISOLATOR SWITCH SHAFT ASSLY B3 1PH		118U5119
Oil	POE32 for Light Commercial (MLY / MPT)		–
Oil	RL32HA/HT for light Commercial (CAJ/FH/TAJ/TFH)		–
Oil	1 litre can of 175PZ - POE (NTZ Platform)	CU with a SN above 051220CG3016	120Z0638
Oil	2,5 litre can of 175PZ - POE (NTZ Platform)	CU with a SN above 051220CG3016	120Z0639
Oil	1 litre can of 215PZ - POE46 (MLZ & LLZ Platform)	CU with a SN above 051220CG3016	120Z0648
Overload relay	KIT OL-RELAY, SCHNEIDER-LRE12+LAEB2		118U3875
Overload relay	KIT OL-RELAY, SCHNEIDER-LRE14+LAEB2		118U3876
Overload relay	KIT OL-RELAY, SCHNEIDER-LRE16+LAEB2		118U3877
Overload relay	KIT OL-RELAY, SCHNEIDER-LRE21+LAEB2		118U3878
Overload relay	KIT OL-RELAY, SCHNEIDER-LRE22+LAEB2		118U3879
Overload relay	KIT OL-RELAY, SCHNEIDER-LRE32+LAEB2		118U3880
Overload relay	KIT OL-RELAY, SCHNEIDER-LRE35+LAEB2		118U3881
Overload relay	KIT OL-RELAY, SCHNEIDER-LRE1		118U3978

Technical data and ordering

Optyma™ **Slim Pack (count.)**

Spare parts & accessories list

Component type	Component description	Additional informations	Component code
Receiver	1,3 L		118U3474
Receiver	3,4 L		118U3475
Receiver	6,2 L		118U3476
Relay	STARTING RELAY TYPE RVA6AMKL		8173022
Relay	STARTING RELAY		117U6013
Relay	Starting Relay SC 50/60 Hz		117U6019
Relay	STARTING RELAY SC 220V/60Hz		117U6011
Relay	SC-RELAY		117-7027
Relay	STARTING RELAY TL/SC 115V/50/60Hz		117U6003
Relay	STARTING RELAY SC 220V/50Hz		117U6005
Relay	SC-RELAY		117-7029
Run capacitor	Run capacitor 440V, 40 µF		8173231
Run capacitor	Run capacitor 440V,50 µF		8173233
Run capacitor	Run capacitor 440V,55 µF		8173234
Run capacitor	Run capacitor 70 µF		120Z0051
Sequence phase relay	SM500-MG73BF		118U3882
Sight glass	SGP 12 N		014L0173
Sight glass	SGP 10s N		014L0182
Suction valve	Brazed Service Valve 3/4"		118U3762
Suction valve	Brazed Service Valve 7/8"		118U3763
Suction valve	Brazed Service Valve 5/8"		118U3764
Top Panel B1	SPARE PART, SHEET METAL TOP B1		118U5141
Fan panel B1	SPARE PART, SHEET METAL FAN B1		118U5142
Back Panel B1	SPARE PART, SHEET METAL BACK B1		118U5143
Service panel W05 B1	SPARE PART, SHEET METAL SERVICE PANEL B1		118U5144
Left Side Panel B1	SPARE PART, SHEET METAL LEFT SIDE B1		118U5167
Service panel W09 B1	SPARE PART, SHEET METAL SERVICE PANEL B1- W09		118U5156
Top Panel B2	SPARE PART, SHEET METAL TOP B2		118U5146
Fan panel B2	SPARE PART, SHEET METAL FAN B2		118U5147
Back Panel B2	SPARE PART, SHEET METAL BACK B2		118U5148
Service panel W05 B2	SPARE PART, SHEET METAL SERVICE PANEL B2		118U5149
Left Side Panel B2	SPARE PART, SHEET METAL LEFT SIDE B2		118U5168
Service panel W09 B2	SPARE PART, SHEET METAL SERVICE PANEL B2 -W09		118U5157
Top Panel B3	SPARE PART, SHEET METAL TOP B3		118U5151
Fan panel B3	SPARE PART, SHEET METAL FAN B3		118U5152
Back Panel B3	SPARE PART, SHEET METAL BACK B3		118U5153
Service panel W05 B3	SPARE PART, SHEET METAL SERVICE PANEL B3		118U5154
Left Side Panel B3	SPARE PART, SHEET METAL LEFT SIDE B3		118U5169
Service panel W09 B3	SPARE PART, SHEET METAL SERVICE PANEL B3 -W09		118U5158
Starting KIT	CAJ2446Z _ F1 KIT Capacitor and relay		118U5191
Starting KIT	CAJ2464Z _ F1 KIT Capacitor and relay		118U5192
Starting KIT	CAJ4492Y _ F1 KIT Capacitor and relay		118U5193
Starting KIT	CAJ4511Y _ F1KIT Capacitor and relay		118U5194
Starting KIT	CAJ4517Z _ F1 KIT Capacitor and relay		118U5195
Starting KIT	CAJ4519Z _ F1 KIT Capacitor and relay		118U5196
Starting KIT	CAJ9510Z _ F1 KIT Capacitor and relay		118U5197
Starting KIT	CAJ9513Z _ F1KIT Capacitor and relay		118U5198
Starting KIT	FH2511Z _ F1KIT Capacitor and relay		118U5199
Start capacitor	STARTING CAPACITOR+CC 72-88µF/330V R216		123B9316
Run C capacitor	RUN CAPACITOR 16µF/420V, REF. 321		123B9219
Relay	RELAY + CON. BOARD 1158-8 BDG 158S+ NTC		123B9151
Start capacitor	STARTING CAPACITOR+CC 64-77µF/330V R205		123B9315
Run C capacitor	RUN CAPACITOR 10µF/420V, REF. 326		123B9222
Relay	RELAY + CON. BOARD 1149-8 BDG 149S+ NTC		123B9133
Start capacitor	START CAPACITOR 80 mfd		117U5373
Capacitor	CAPACITOR 161-193µF 330V		120Z0400
Start relay	Starting relay RVA9CKL		120Z0393
Start relay	Starting relay RVA3EKL		120Z0394
Start relay	Starting relay RVA4GKL		120Z0395
Start capacitor	Start capacitor 145-175 F		120Z0399
Relay	RELAY + CON. BOARD 1166-8 BDG 166S+ NTC		123B9139
Run C capacitor	RUN CAPACITOR 25µF/420V, REF. 310 MET.		123B9226

Nomenclature

Designation system for the Optyma™ Slim Pack range

(additional program frequency etc.: please contact your local wholesaler)

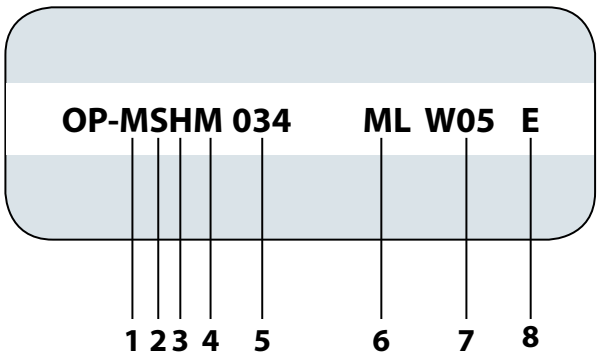

Number	Title	Description
1	Application	M = MBP L = LBP
2	Family	S = Optyma™ **Slim Pack**
3	Refrigerant	Q= R452A / R404A / 507 ; G=R134a ; H = R404A / R507 X = R404A / 507 / R134a / R407A / R407F / R448A / R449A / R452A Y = R404A / 507 / R449A
4	Condenser	M = Micro channel heat exchanger
5	Displacement	Displacement in cm^3
6	Compressor platform	AJ = CAJ, TAJ (Reciprocating) FH = FH, TFH (Reciprocating) NF = NF (Reciprocating) NT = NTZ (Reciprocating) SC = SC (Reciprocating) MP = MPT (Reciprocating) MY = MLY (Reciprocating) MX = MX (Reciprocating) ML = MLZ (Scroll) LL = LLZ (Scroll)
7	Version	**W05 and W09**
8	Electrical code	G = 230 V-1ph Comp & Fan E = 400 V-3ph Comp & 230 V-1ph Fan

Optyma™ Slim Pack - Cooling capacity and operating range range [kW]

Range span by refrigerant

Minimum / Maximum Cooling capacity in [kW]	Optyma™ **Slim Pack**
Medium temperature (MBP)	
R448A	3.3 – 10.2
R449A	0.8 – 10.2
R134a	0.6 – 6.6
R452A	1.5 – 10.8
R407A	3.3 – 9.9
R407F	3.5 – 10.2
R404A / 507	0.9 – 10.3
Low temperature (LBP)	
R452A	0.4 – 3.3
R404A / 507	0.4 – 3.6

Rating conditions EN 13215 (dew point):
***MBP**: Ambient temp = 32 °C; Evap temp = -10 °C; Superheat = 10 K; Subcooling = 0 K / **LBP**: Ambient temp = 32 °C; Evap temp = -35 °C; Superheat = 10 K; Subcooling = 0 K*

Dimensions

Housing B1

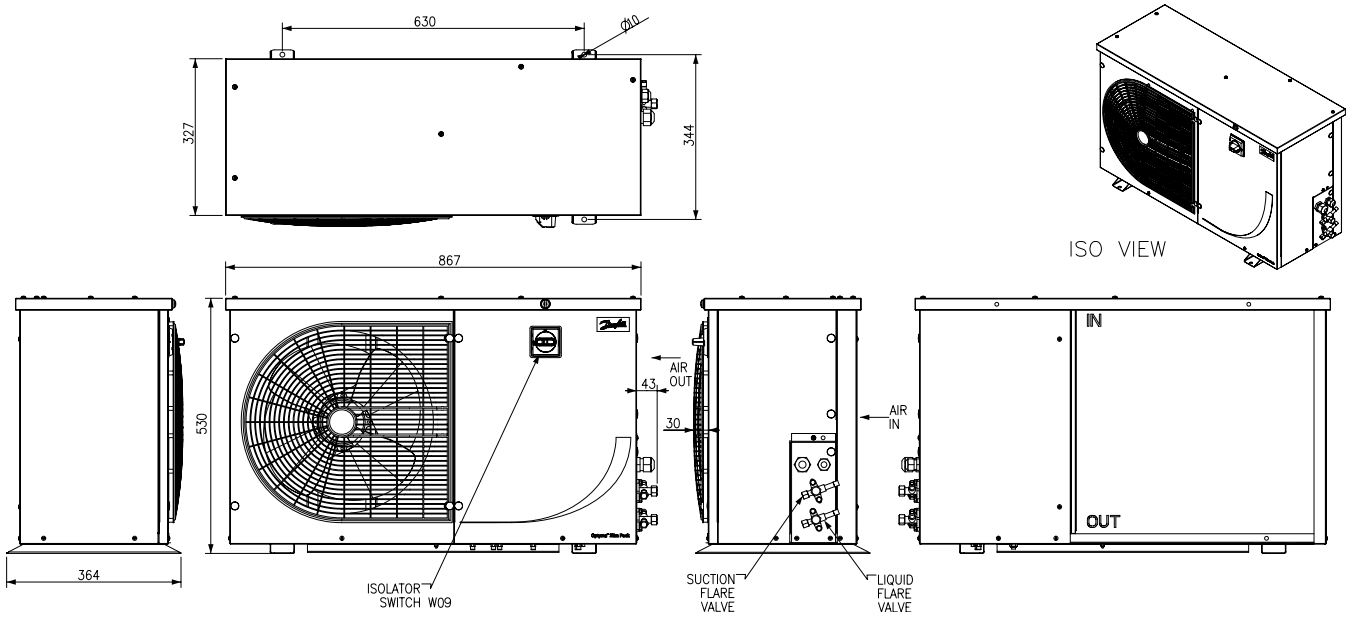

Housing B2

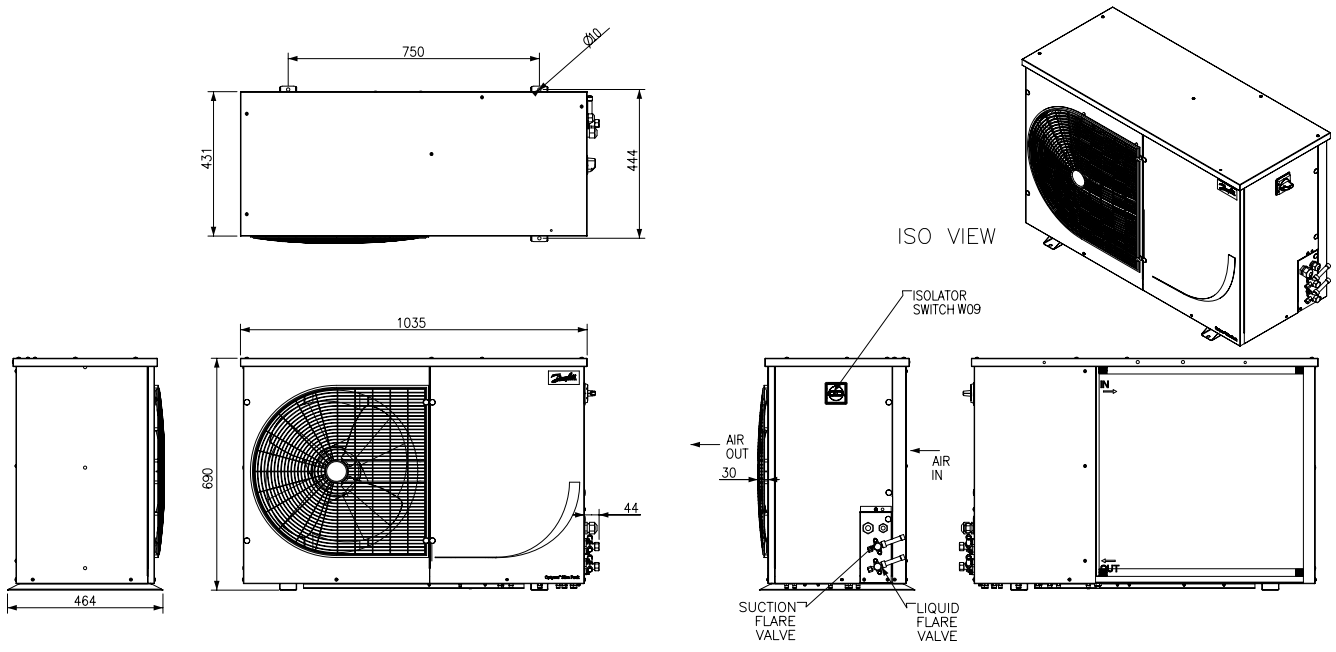

Dimensions are in (mm)

Dimensions

Housing B3

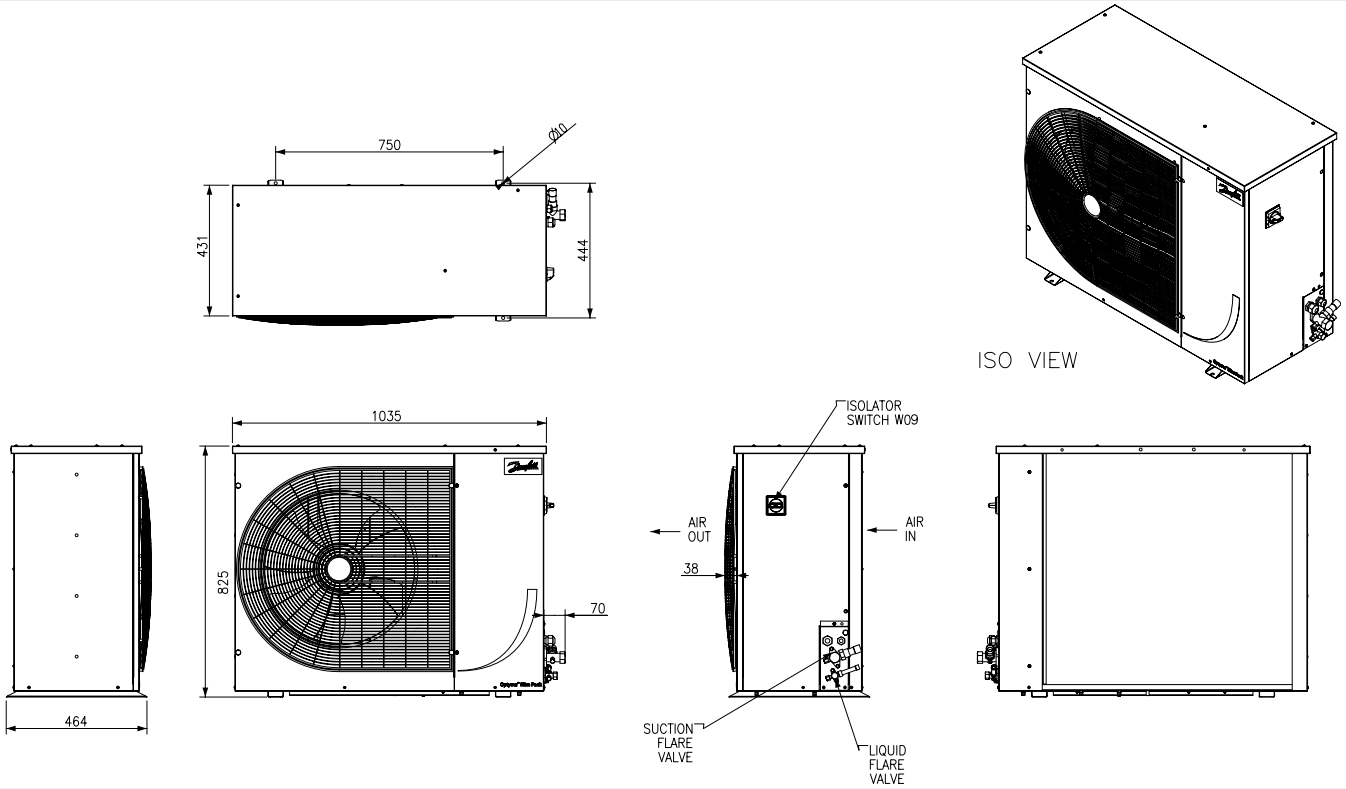

Dimensions are in (mm)

Wiring diagram

Code G : OP-MSGM012 - 015 - 018 - 026

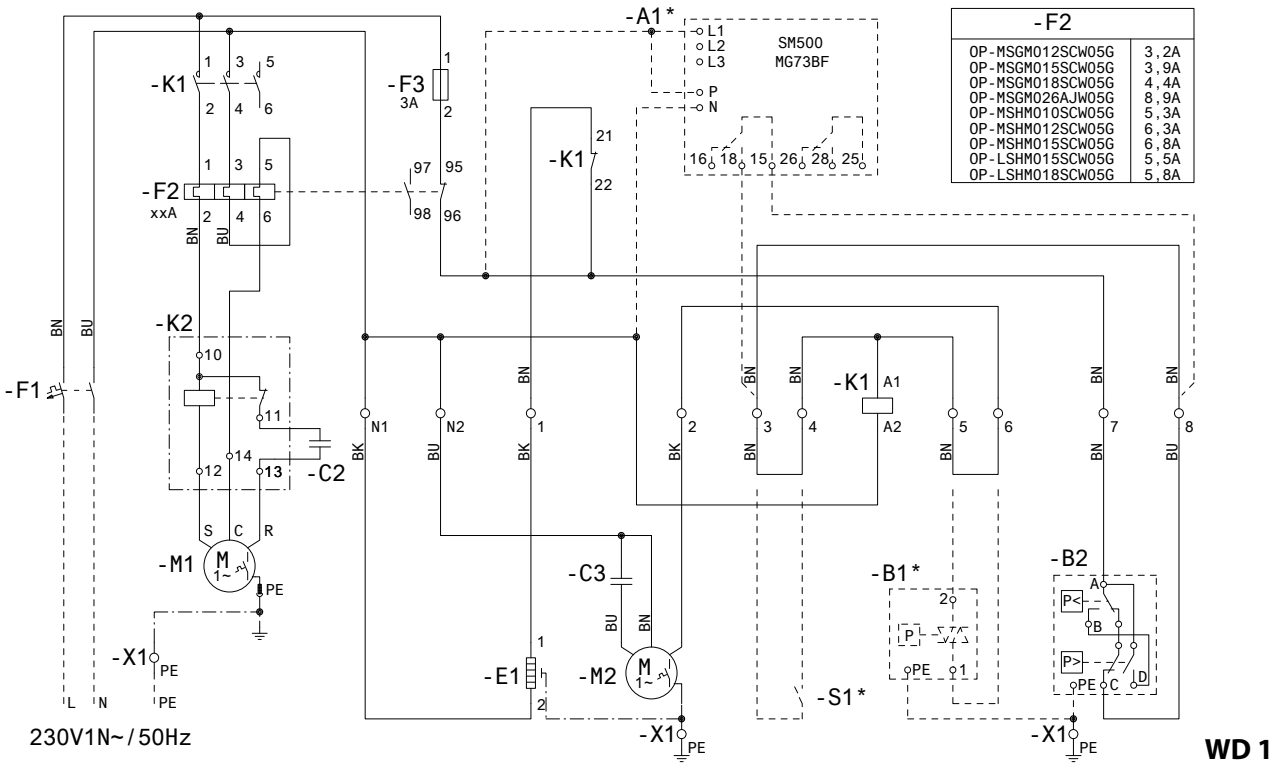

-F2	
OP-MSGM012SCW05G	3,2A
OP-MSGM015SCW05G	3,9A
OP-MSGM018SCW05G	4,4A
OP-MSGM026AJW05G	8,9A
OP-MSHM010SCW05G	5,3A
OP-MSHM012SCW05G	6,3A
OP-MSHM015SCW05G	6,8A
OP-LSHM015SCW05G	5,5A
OP-LSHM018SCW05G	5,8A

Code G : OP-LSQM026 - 034 - 048 - 068 - 074, OP-MSGM033, OP-MSHM018, OP-MSYM018 - 024 - 026 - 034

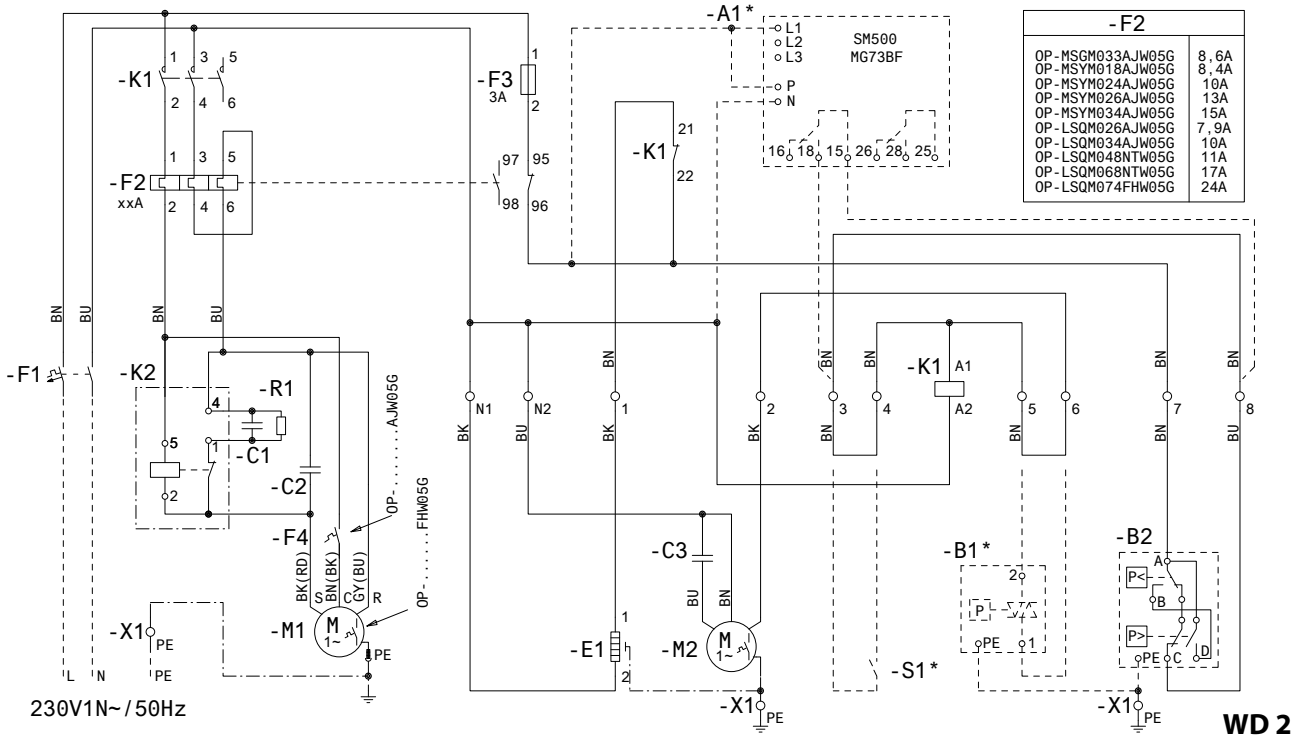

-F2	
OP-MSGM033AJW05G	8,6A
OP-MSYM018AJW05G	8,4A
OP-MSYM024AJW05G	10A
OP-MSYM026AJW05G	13A
OP-MSYM034AJW05G	15A
OP-LSQM026AJW05G	7,9A
OP-LSQM034AJW05G	10A
OP-LSQM048NTW05G	11A
OP-LSQM068NTW05G	11A
OP-LSQM074FHW05G	24A

Legend

BK black
BU blue
BN brown
GY grey
RD red
WH white

A1 Voltage relay (option)*
B1 Fan speed controller (option)*
B2 High and Low pressure switch
C1 Start capacitor compressor
C2 № 1: Start capacitor compressor
№ 2: Run capacitor compressor
C3 Run capacitor fan

E1 Crankcase heater
F1 Main switch
F2 Overload relay
F3 Fuse control circuit
F4 Compressor thermal protector
K1 Contactor
K2 Start relay

M1 Compressor
M2 Fan motor
R1 Bleeder resistor
S1 Room thermostat (option)*
X1 Terminals
** Option (remove bridge)*

Wiring diagram

Code G : OP-MSXM034 - 044 - 46 - 057

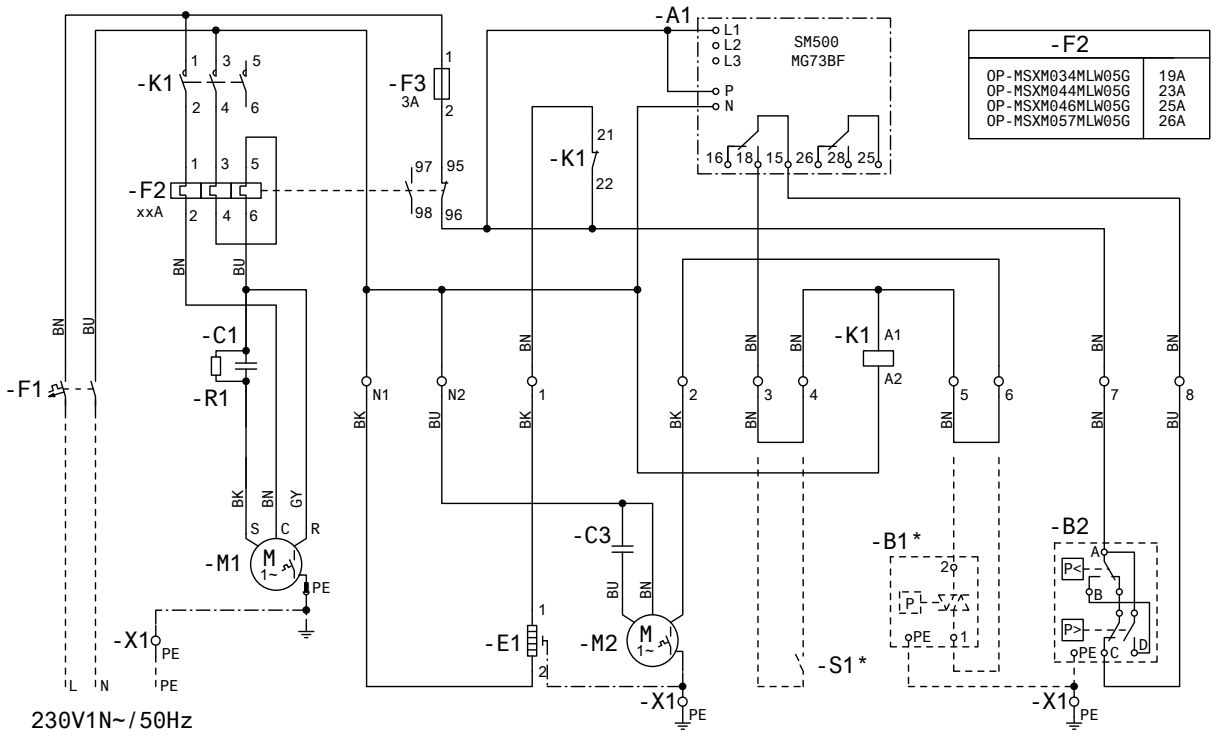

WD 3

Code G : OP-MSXM068 - 080

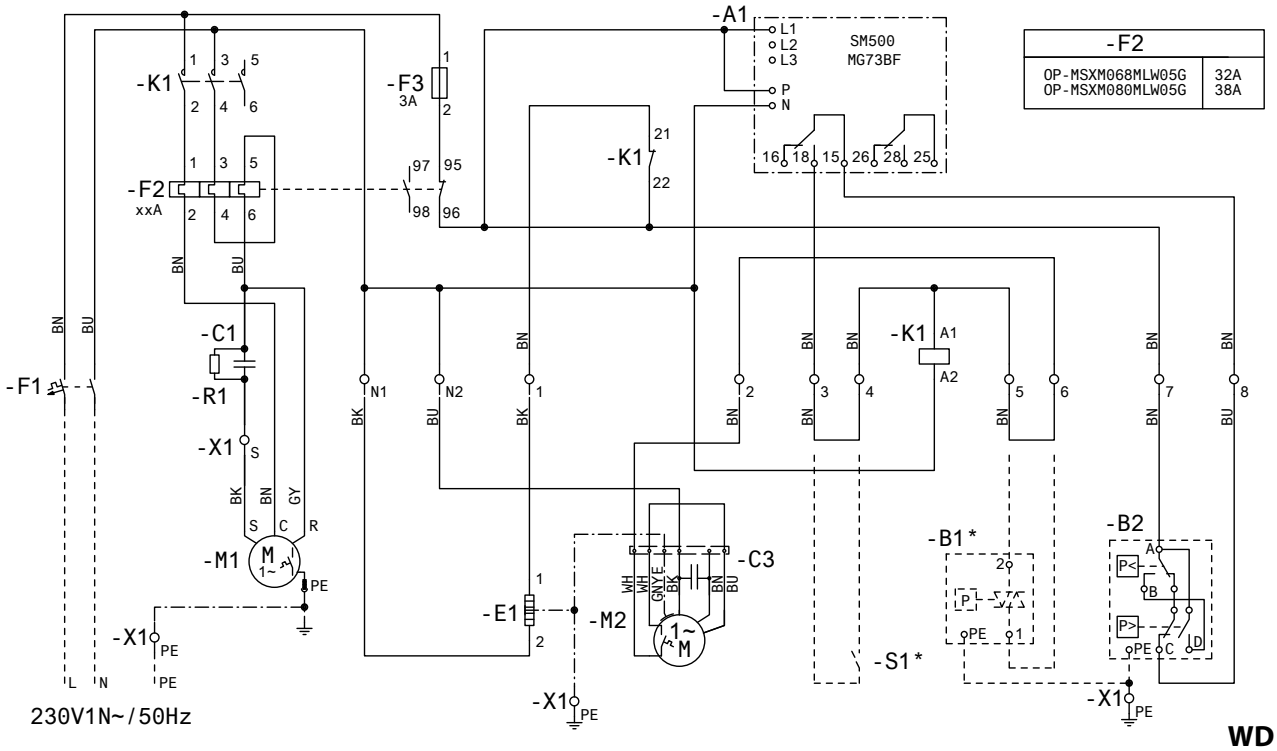

WD 4

Legend

BK	black
BU	blue
BN	brown
GY	grey
RD	red
WH	white

A1	Voltage relay
B1*	Fan speed controller (option)
B2	High and Low pressure switch
C1	Run capacitor compressor
C3	Run capacitor fan
E1	Crankcase heater

F1	Main switch
F2	Overload relay
F3	Fuse control circuit
K1	Contactor
K2	Start relay
M1	Compressor

M2	Fan motor
R1	Bleeder resistor
S1*	Room thermostat (option)
X1	Terminals
*	Option (remove bridge)

Wiring diagram

Code G : OP-MSXM093

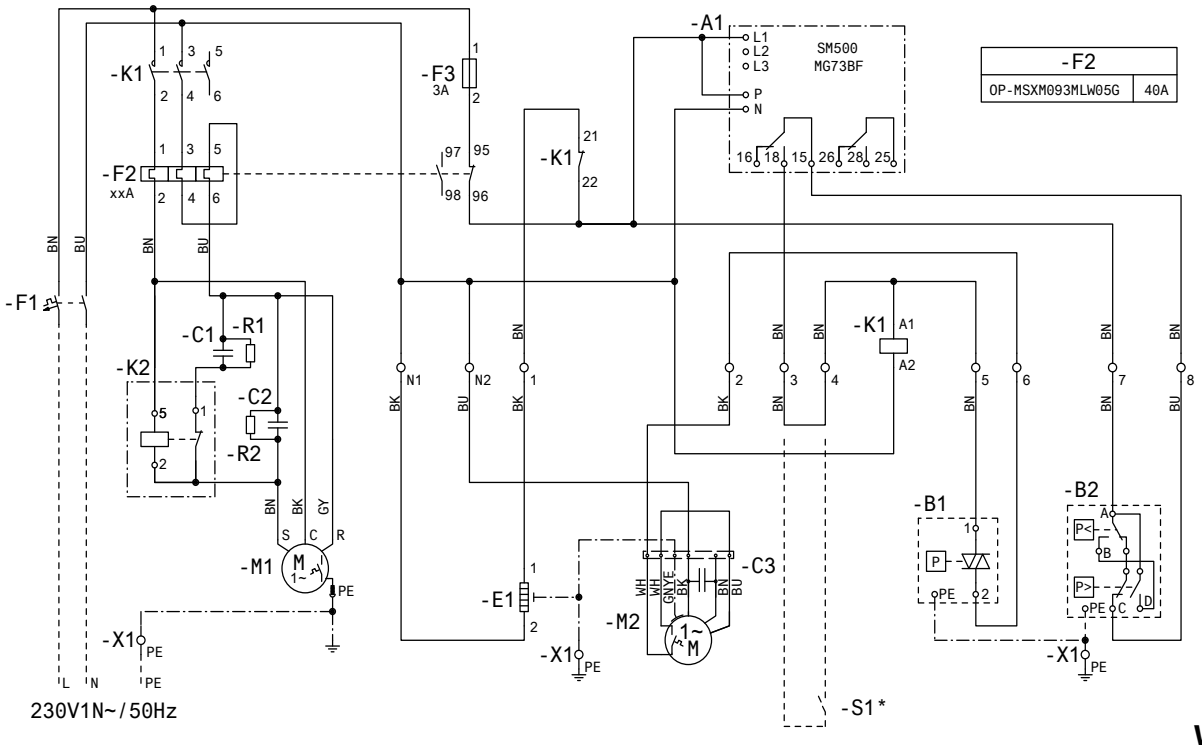

WD 5

Code E : OP-LSQM048 - 068 - 074, OP-MSYM026 - 034, OP-MSXM034 - 044 - 046 - 057

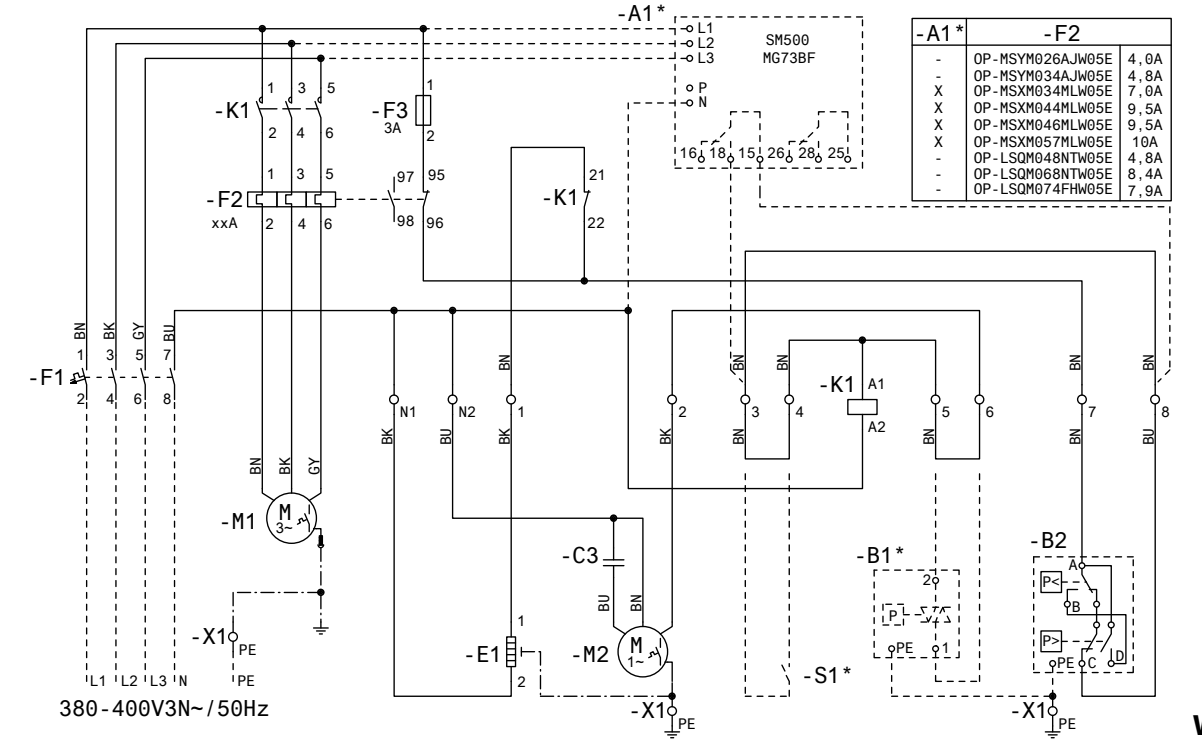

-A1*	-F2	
-	OP-MSYM026AJW05E	4,0A
-	OP-MSYM034AJW05E	4,8A
X	OP-MSXM034MLW05E	7,0A
X	OP-MSXM044MLW05E	9,5A
X	OP-MSXM046MLW05E	9,5A
X	OP-MSXM057MLW05E	10A
-	OP-LSQM048NTW05E	4,8A
-	OP-LSQM068NTW05E	8,4A
-	OP-LSQM074FHW05E	7,9A

WD 6

Legend

BK black
BU blue
BN brown
GY grey
RD red
WH white

A1 Voltage relay (option)*
B1 Fan speed controller (option)*
B2 High and Low pressure switch
C1 Start capacitor compressor
C2 Run capacitor compressor
C3 Run capacitor fan

E1 Crankcase heater
F1 Main switch
F2 Overload relay
F3 Fuse control circuit
K1 Contactor
K2 Start relay

M1 Compressor
M2 Fan motor
R1, R2 Bleeder resistor
S1 Room thermostat (option)*
X1 Terminals
** Option (remove bridge)*

Wiring diagram

Code E : OP-MSXM068 - 080 - 099 - 108, OP-LSQM067 - 084 - 098

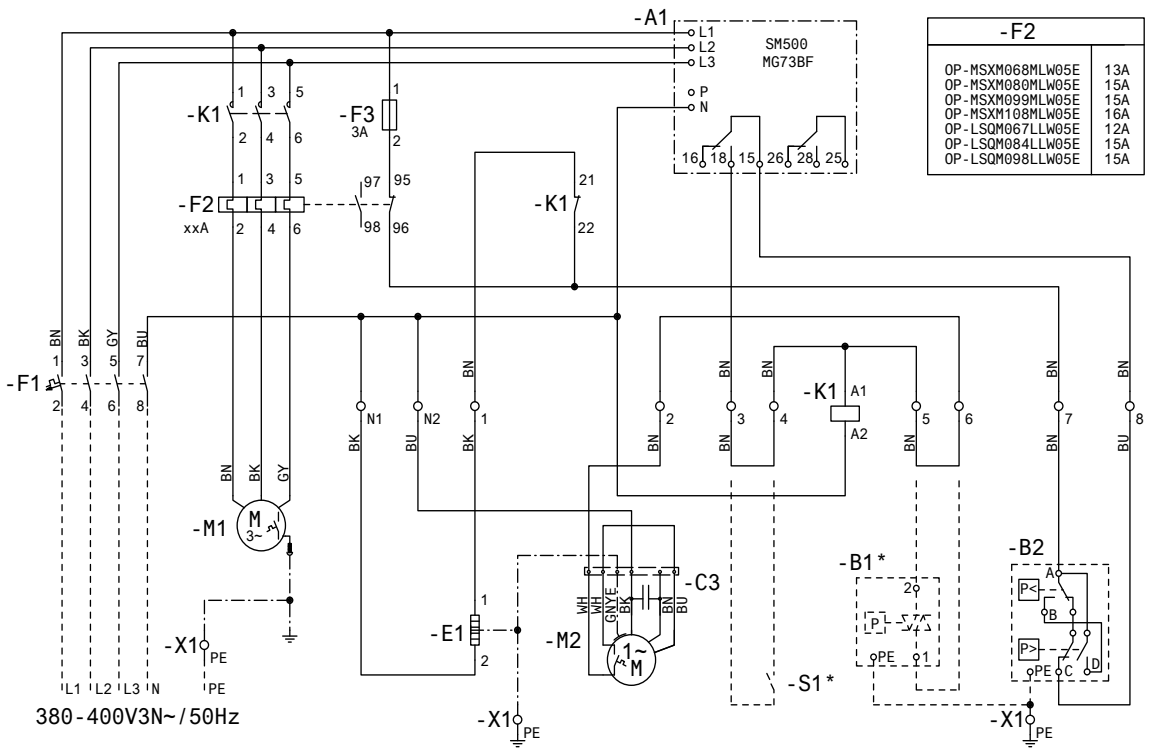

WD 7

Code G : OP-MSYM009 - 012 - 014 - 018, OP-LSQM014 - 018, OP-MSGM21

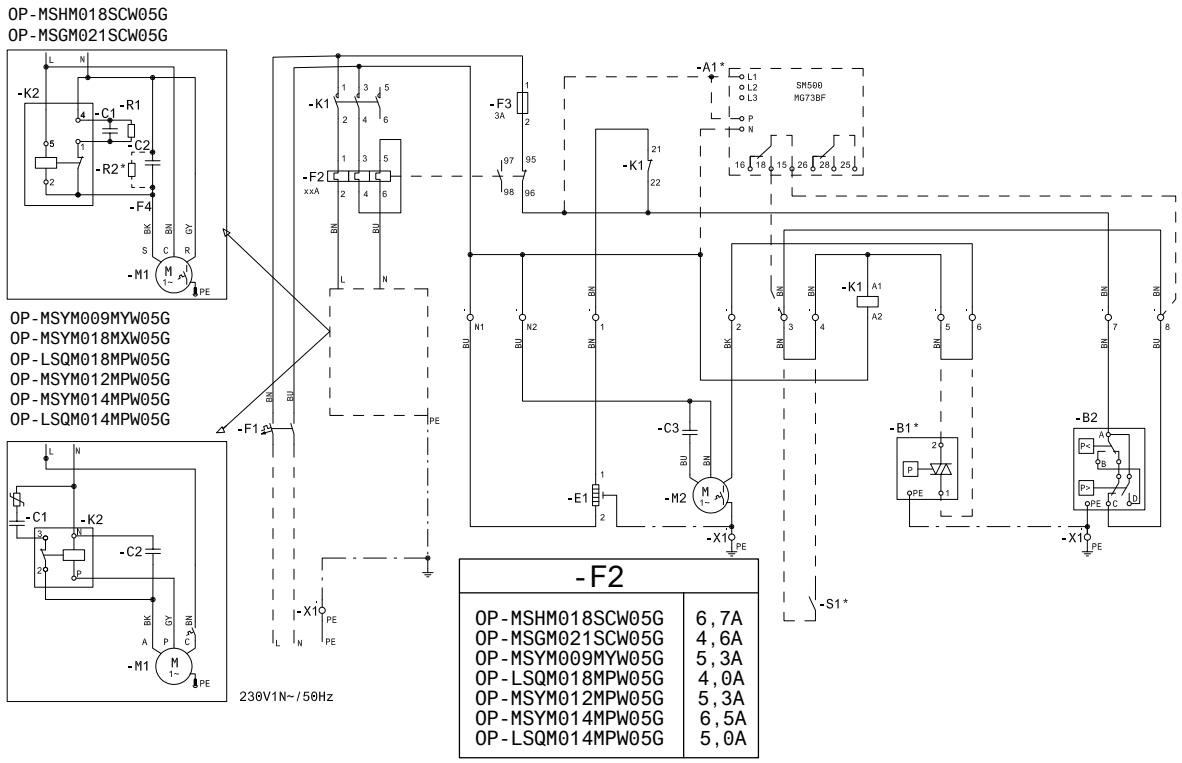

WD 8

Legend

BK	black
BU	blue
BN	brown
GY	grey
RD	red
WH	white

A1*	Voltage relay
B1*	Fan speed controller (option)
B2	High and Low pressure switch
C1	Start capacitor compressor
C2	Run capacitor compressor
C3	Run capacitor fan

E1	Crankcase heater
F1	Main switch
F2	Overload relay
F3	Fuse control circuit
K1	Contactor
K2	Start relay

M1	Compressor
M2	Fan motor
R1, R2*	Bleeder resistor
S1*	Room thermostat (option)
X1	Terminals
*	Option (remove bridge)

Wiring diagram

Code G (W09 Version): OP-LSQM014, 018, OP-MSGM018, 021, OP-MSYM009, 012, 014, OP-MSYM018

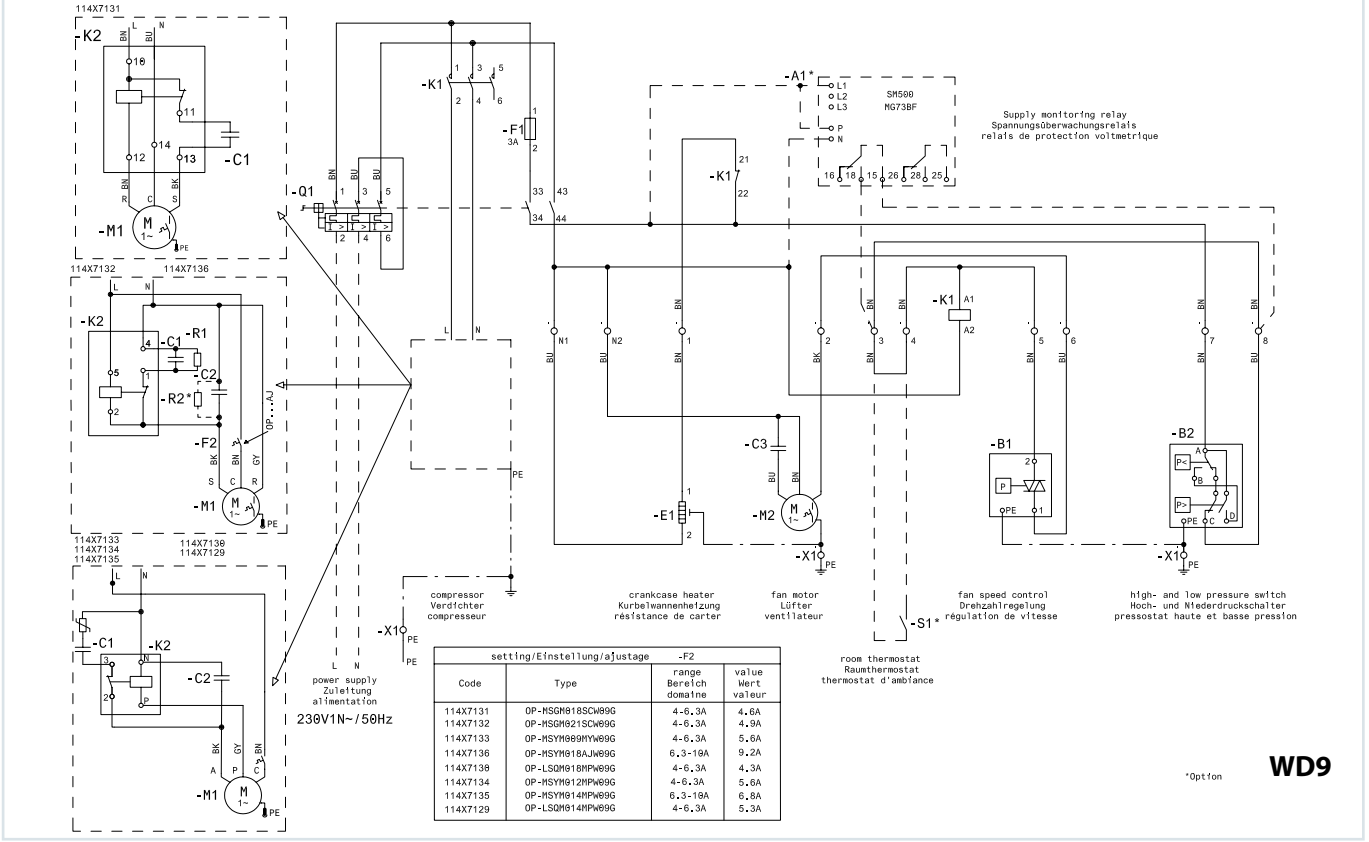

setting/Einstellung/ajustage -F2

Code	Type	range Bereich domaine	value Wert valeur
114X7131	OP-MSGM018SCW09G	4-6.3A	4.6A
114X7132	OP-MSGM021SCW09G	4-6.3A	4.9A
114X7133	OP-MSYM009MYW09G	4-6.3A	5.6A
114X7136	OP-MSYM018AJW09G	6.3-10A	9.2A
114X7139	OP-LSQM018MPW09G	4-6.3A	4.3A
114X7134	OP-MSYM012MPW09G	4-6.3A	5.6A
114X7135	OP-MSYM014MPW09G	6.3-10A	6.8A
114X7129	OP-LSQM014MPW09G	4-6.3A	5.3A

Code G (W09 Version): OP-MSGM012, 015, 026

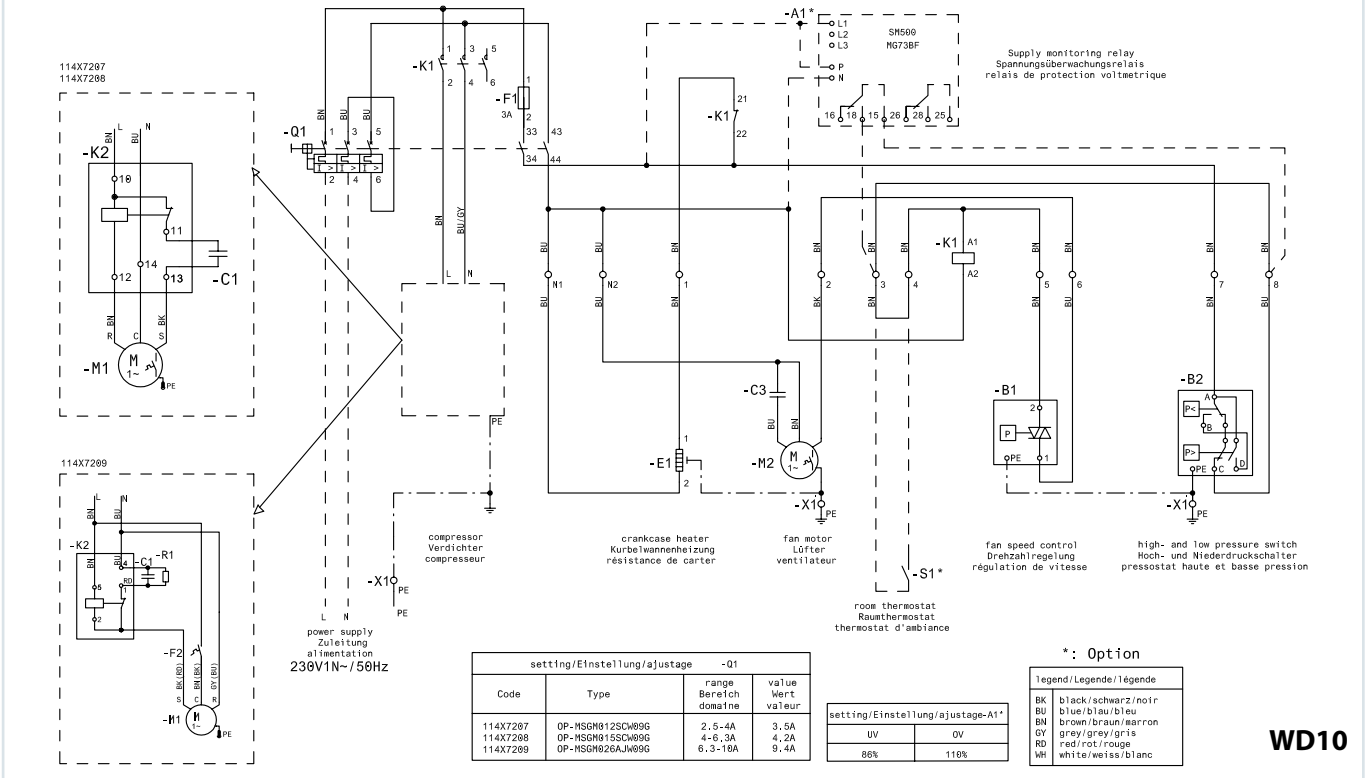

setting/Einstellung/ajustage -Q1

Code	Type	range Bereich domaine	value Wert valeur
114X7207	OP-MSGM012SCW09G	2.5-4A	3.5A
114X7208	OP-MSGM015SCW09G	4-6.3A	4.2A
114X7209	OP-MSGM026AJW09G	6.3-10A	9.4A

setting/Einstellung/ajustage-A1*

UV	OV
86%	110%

legend/Legende/légende

BK	black/schwarz/noir
BU	blue/blau/bleu
BN	brown/braun/marron
GY	grey/grey/gris
RD	red/rot/rouge
WH	white/weiss/blanc

Legend

BK	black
BU	blue
BN	brown
GY	grey
RD	red
WH	white

A1*	Voltage relay
B1	Fan speed controller
B2	High and Low pressure switch
C1	Start capacitor compressor
C2	Run capacitor compressor
C3	Run capacitor fan

E1	Crankcase heater
F1	Main switch
F2	Overload relay
F3	Fuse control circuit
K1	Contactor
K2	Start relay

M1	Compressor
M2	Fan motor
R1, R2*	Bleeder resistor
S1*	Room thermostat (option)
X1	Terminals
*	Option (remove bridge)

Wiring diagram

Code E (W09 Version): OP-LSQM048, 068, 074 OP-MSYM023, 034 OP-MSXM034, 044, 046, 057

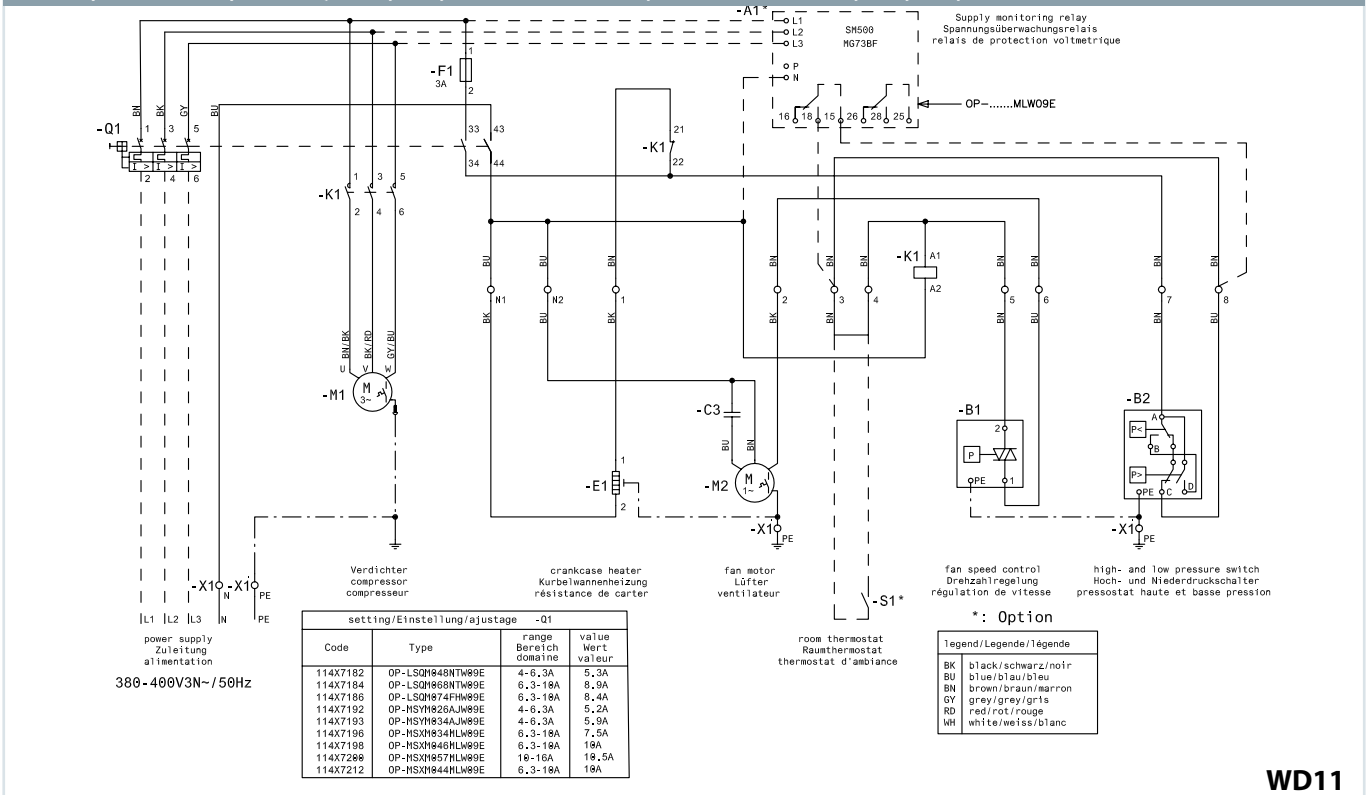

setting/Einstellung/ajustage -Q1			
Code	Type	range Bereich domaine	value Wert valeur
114X7182	OP-LSQM048NTW09E	4-6.3A	5.3A
114X7184	OP-LSQM068NTW09E	6.3-10A	8.9A
114X7186	OP-LSQM074FHW09E	6.3-10A	8.4A
114X7192	OP-MSYM026AJW09E	4-6.3A	5.2A
114X7193	OP-MSYM034AJW09E	4-6.3A	5.9A
114X7196	OP-MSXM034MLW09E	6.3-10A	7.5A
114X7198	OP-MSXM046MLW09E	6.3-10A	10A
114X7200	OP-MSXM057MLW09E	10-16A	10.5A
114X7212	OP-MSXM044MLW09E	6.3-10A	10A

legend/Legende/légende	
BK	black/schwarz/noir
BU	blue/blau/bleu
BN	brown/braun/marron
GY	grey/grey/gris
RD	red/rot/rouge
WH	white/weiss/blanc

WD11

Code E (W09 Version): OP-LSQM026, 034, 048, 068, 074 OP-MSYM024, 026, 034 OP-MSXM034, 044, 046, 057 OP-MSGM033

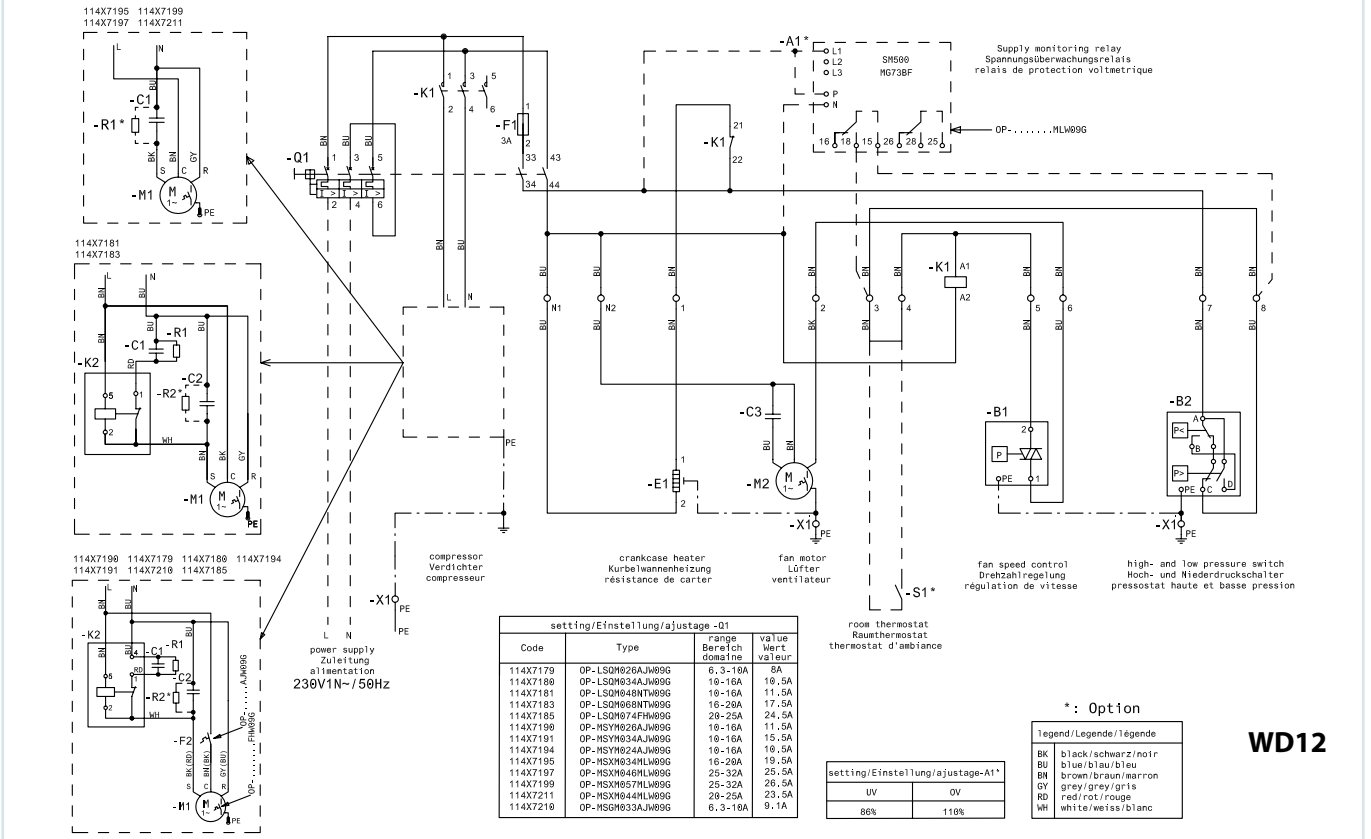

setting/Einstellung/ajustage -Q1			
Code	Type	range Bereich domaine	value Wert valeur
114X7179	OP-LSQM026AJW09G	6.3-10A	8A
114X7180	OP-LSQM034AJW09G	10-16A	10.5A
114X7181	OP-LSQM048NTW09G	10-16A	11.5A
114X7183	OP-LSQM068NTW09G	16-20A	17.5A
114X7185	OP-LSQM074FHW09G	20-25A	24.5A
114X7190	OP-MSYM026AJW09G	10-16A	11.5A
114X7191	OP-MSYM034AJW09G	10-16A	15.5A
114X7194	OP-MSYM024AJW09G	10-16A	10.5A
114X7195	OP-MSXM034MLW09G	16-20A	19.5A
114X7197	OP-MSXM046MLW09G	25-32A	25.5A
114X7199	OP-MSXM057MLW09G	25-32A	26.5A
114X7211	OP-MSXM044MLW09G	20-25A	23.5A
114X7210	OP-MSGM033AJW09G	6.3-10A	9.1A

setting/Einstellung/ajustage-A1*	
UV	OV
86%	110%

legend/Legende/légende	
BK	black/schwarz/noir
BU	blue/blau/bleu
BN	brown/braun/marron
GY	grey/grey/gris
RD	red/rot/rouge
WH	white/weiss/blanc

WD12

Legend

BK	black
BU	blue
BN	brown
GY	grey
RD	red
WH	white
A1*	Voltage relay
B1	Fan speed controller
B2	High and Low pressure switch
C1	Start capacitor compressor
C2	Run capacitor compressor
C3	Run capacitor fan
E1	Crankcase heater
F1	Main switch
F2	Overload relay
F3	Fuse control circuit
K1	Contactor
K2	Start relay
M1	Compressor
M2	Fan motor
R1, R2*	Bleeder resistor
S1*	Room thermostat (option)
X1	Terminals
*	Option (remove bridge)

Wiring diagram

Code G (W09 Version): OP-LSQM014, 018, OP-MSGM018, 021, OP-MSYM009, 012, 014, OP-MSYM018

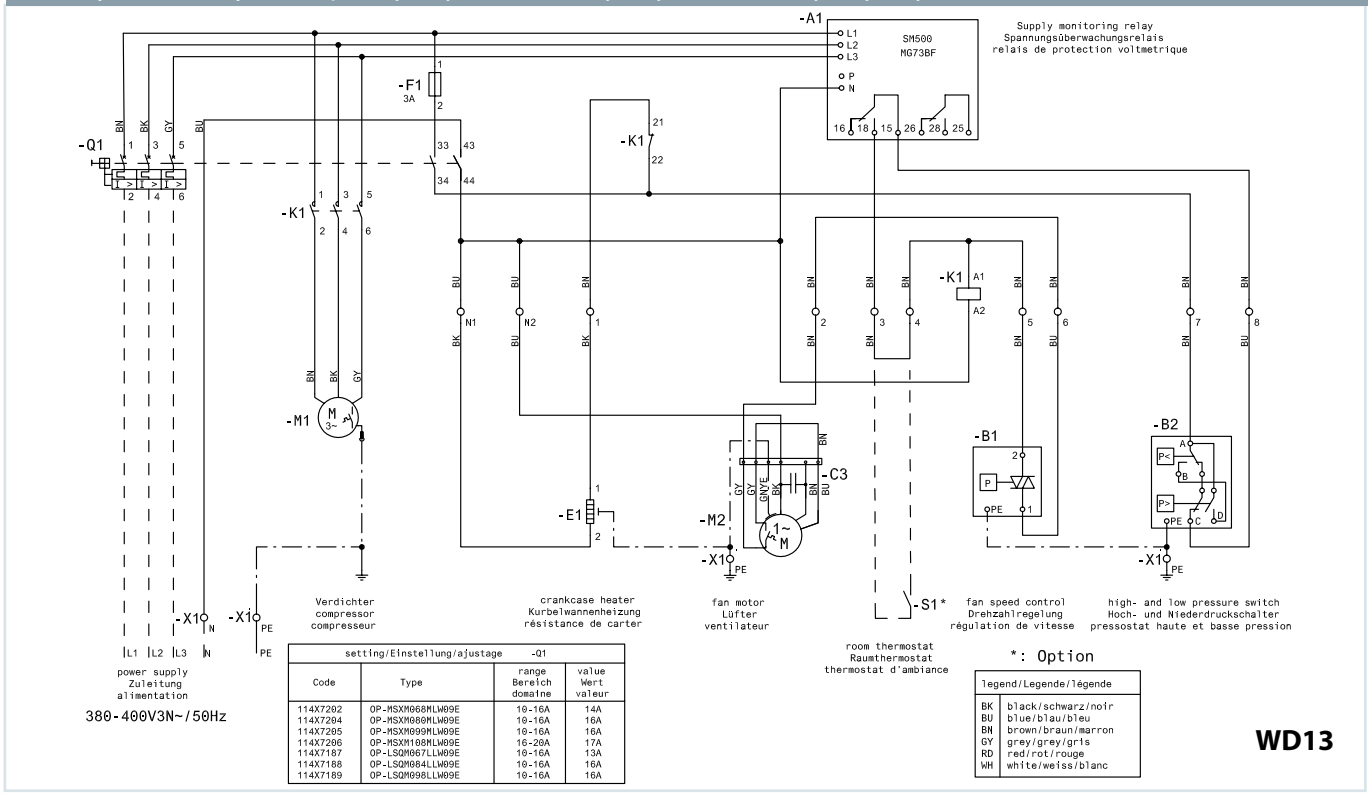

setting/Einstellung/ajustage -Q1

Code	Type	range Bereich domaine	value Wert valeur
114X7202	OP-MSXM068MLW09E	10-16A	14A
114X7204	OP-MSXM080MLW09E	10-16A	16A
114X7205	OP-MSXM090MLW09E	10-16A	16A
114X7206	OP-MSXM108MLW09E	16-20A	17A
114X7187	OP-LSQM067LLW09E	10-16A	13A
114X7188	OP-LSQM084LLW09E	10-16A	16A
114X7189	OP-LSQM098LLW09E	10-16A	16A

legend/Legende/légende

BK	black/schwarz/noir
BU	blue/blau/bleu
BN	brown/braun/marron
GY	grey/grey/gris
RD	red/rot/rouge
WH	white/weiss/blanc

Code G (W09 Version): OP-MSGM012, 015, 026

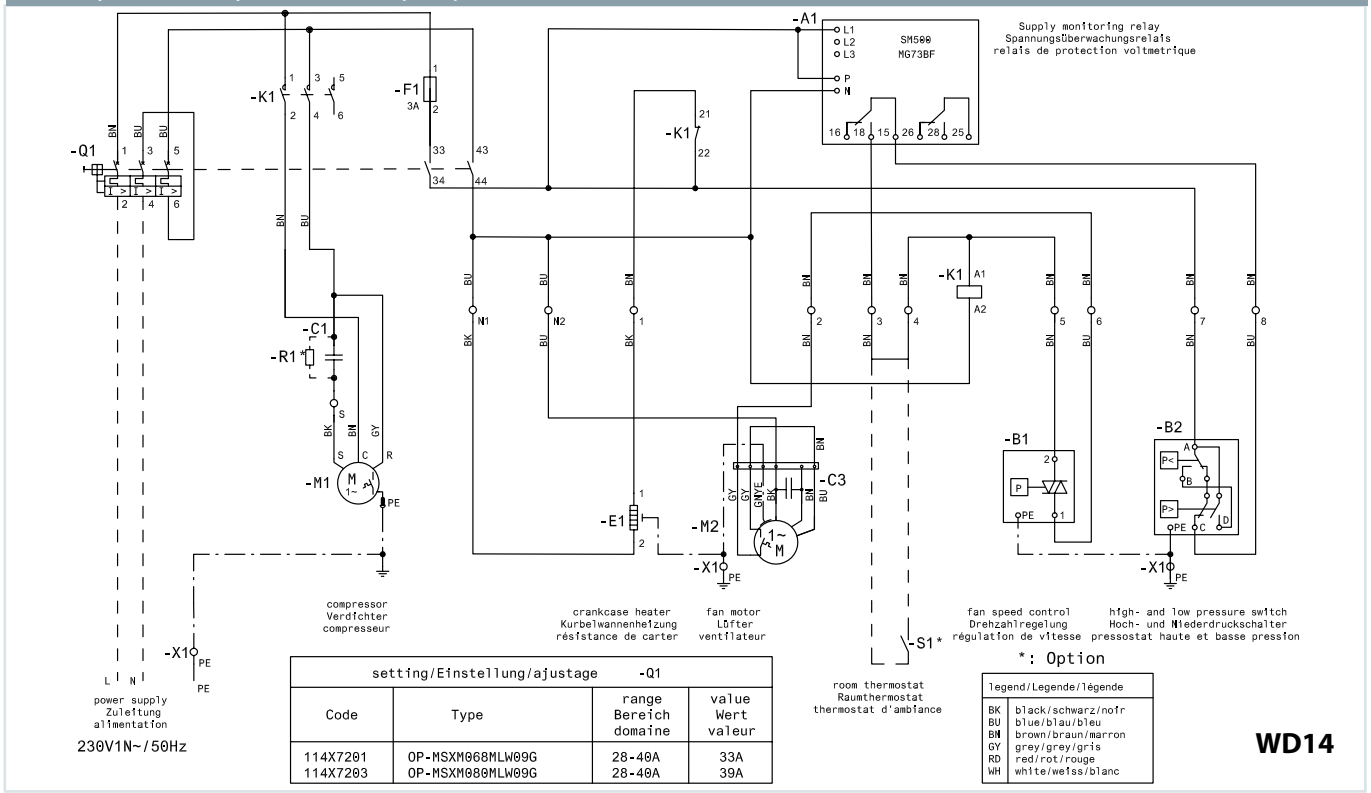

setting/Einstellung/ajustage -Q1

Code	Type	range Bereich domaine	value Wert valeur
114X7201	OP-MSXM068MLW09G	28-40A	33A
114X7203	OP-MSXM080MLW09G	28-40A	39A

legend/Legende/légende

BK	black/schwarz/nofr
BU	blue/blau/bleu
BN	brown/braun/marron
GY	grey/grey/gris
RD	red/rot/rouge
WH	white/weiss/blanc

Legend

BK	black
BU	blue
BN	brown
GY	grey
RD	red
WH	white

A1*	Voltage relay
B1	Fan speed controller
B2	High and Low pressure switch
C1	Start capacitor compressor
C2	Run capacitor compressor
C3	Run capacitor fan

E1	Crankcase heater
F1	Main switch
F2	Overload relay
F3	Fuse control circuit
K1	Contactor
K2	Start relay

M1	Compressor
M2	Fan motor
R1, R2*	Bleeder resistor
S1*	Room thermostat (option)
X1	Terminals
*	Option (remove bridge)

Quick Selection Notes:

Optyma™ **Plus** –
The low noise condensing units for quick installation

Optyma™ **Plus** is the premium condensing unit designed with Danfoss expertise.

The Optyma™ **Plus** further optimizes energy and acoustic performances and maintenance time. Extended range fits more applications for low and medium refrigeration.

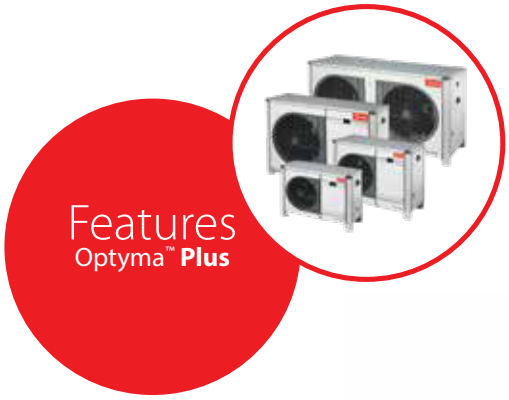



EcoDesign 2018

Facts

Applications:
- Food Retail
- Commercial Refrigeration
- Light Commercial Refrigeration
- Food Processing and Storage

- **Silent and outstanding performance**
  The Optyma™ **Plus** can be located even in residential areas. Smart compressor design, acoustic insulation and fan speed reduction during low capacity operation periods make the Optyma™ **Plus** the quietest solution today to respect your environment.
- **Increased efficiency and sustainable solutions**
  Optyma™ **Plus** Condening units range is compliant Ecodesign 2018 presenting high energetic efficiency solution improving payback and environmental impact. With the Optyma™ **Plus** substantial energy savings can be achieved thanks to the energy efficient components inside such as: optimized compressors, micro channel heat exchanger, high efficiency fan motors, fan speed and crank case heater control. You are going to reduce the energy consumption significantly and therefore, cut the energy bills.
- **Stock and logistics optimization**
  Multirefrigerant condensing units with optimized packaging cover a wide variety of applications and reduce your stock. Most of the Danfoss condensing units can be used with can be used with R134a, R404A, R448A, R449A, R452A and R513*)
  *) qualification in progress.
- **Increase business opportunity with complete range of condensing units**
  Danfoss Optyma™ **Plus** extend your possibilities with new models for low and medium temperatures. Your cooling capacity has almost no limits
- **Effortless installation**
  Featuring a more compact design, reduced weight and simplified wiring, the Optyma™ **Plus** Plug & Play unit is among the fastest to install and easiest to service. All parameters are already set up, switch on the power, and the cooling process is up and running!
- **The highest standard and quality**
  We provide 100% factory tested units to our customers with premium quality. We at Danfoss do not accept any compromise regarding reliability of our products. The Optyma™ **Plus** includes all the best of our condensing units.
- **Environmental friendly** Optyma™ **Plus** Condensing units meet Ecodesign 2018 targets and Energy related Product (ErP) directive applicable for fan motors. In addition, Optyma™ **Plus** Condensing units are qualified with Low GWP refrigerant reducing environmental impact.

Technical data and ordering

Optyma™ Plus - R452A - LBP

Performance data

Model	Compressor	Electrical code [1]	Tamb [°C]	Cooling capacity Q [kW] [2] Te [°C] -40	-35	-30	-25	-20	-15	-10	EcoDesign [3] Q [kW]	P [kW]	COP	SEPR	Sound power level dB(A)	Sound pressure level 10 m dB(A)	Version	Code
OP-LPQM017MP	MPT16LA	G	27	–	0.443	0.583	0.735	0.897	1.070	1.253	–	–	–	–	–	–	P00	114X3118
			32	–	0.396	0.522	0.661	0.810	0.971	1.142	0.441	0.465	0.95	–	60	29		
			38	–	0.340	0.450	0.572	0.707	0.853	1.009	–	–	–	–	–	–		
			43	–	0.293	0.390	0.499	0.621	0.754	0.899	–	–	–	–	–	–		
OP-LPQM026AJ	CAJ2446Z	G	27	0.472	0.659	0.881	1.144	1.447	1.794	2.184	–	–	–	–	–	–	P00	114X3216
			32	0.408	0.581	0.788	1.031	1.312	1.634	1.997	0.644	0.671	0.96	–	67	36		
			38	–	0.489	0.675	0.894	1.148	1.439	1.769	–	–	–	–	–	–		
			43	–	0.414	0.582	0.780	1.010	1.275	1.577	–	–	–	–	–	–		
OP-LPQM048NT	NTZ048-5	G	27	0.771	1.090	1.478	1.931	2.446	3.018	3.641	–	–	–	–	–	–	P00	114X3225
			32	0.655	0.948	1.303	1.718	2.191	2.717	3.291	1.053	0.950	1.11	–	69	38		
			38	0.529	0.790	1.105	1.475	1.896	2.366	2.880	–	–	–	–	–	–		
			43	0.433	0.667	0.950	1.281	1.660	2.082	2.545	–	–	–	–	–	–		
OP-LPQM048NT	NTZ048-4	E	27	0.778	1.076	1.438	1.860	2.340	2.873	3.454	–	–	–	–	–	–	P00	114X3233
			32	0.679	0.947	1.273	1.655	2.092	2.579	3.112	1.054	0.981	1.07	–	69	38		
			38	0.572	0.805	1.089	1.424	1.809	2.241	2.716	–	–	–	–	–	–		
			43	0.491	0.695	0.945	1.242	1.584	1.969	2.396	–	–	–	–	–	–		
OP-LPQM068NT	NTZ068-5	G	27	1.241	1.667	2.151	2.688	3.273	3.897	4.550	–	–	–	–	–	–	P00	114X3241
			32	1.052	1.447	1.895	2.392	2.932	3.508	4.110	1.619	1.627	1.00	–	70	39		
			38	0.833	1.192	1.597	2.045	2.530	3.047	3.586	–	–	–	–	–	–		
			43	0.659	0.987	1.355	1.762	2.201	2.668	3.153	–	–	–	–	–	–		
OP-LPQM074FH	FH2511Z	G	27	1.062	1.511	2.037	2.641	3.324	4.085	4.919	–	–	–	–	–	–	P00	114X3252
			32	0.889	1.310	1.801	2.365	3.003	3.713	4.492	1.458	1.539	0.95	–	69	38		
			38	–	1.070	1.518	2.033	2.614	3.262	3.975	–	–	–	–	–	–		
			43	–	0.874	1.286	1.757	2.290	2.886	3.542	–	–	–	–	–	–		
OP-LPQM074FH	TFH2511Z	E	27	1.001	1.415	1.897	2.442	3.044	3.695	4.384	–	–	–	–	–	–	P00	114X3253
			32	0.841	1.221	1.664	2.166	2.722	3.324	3.964	1.362	1.390	0.98	–	69	38		
			38	–	1.003	1.398	1.848	2.347	2.890	3.467	–	–	–	–	–	–		
			43	–	0.835	1.190	1.595	2.045	2.536	3.059	–	–	–	–	–	–		
OP-LPQM068NT	NTZ068-4	E	27	1.215	1.655	2.158	2.712	3.299	3.898	4.484	–	–	–	–	–	–	P00	114X3249
			32	1.056	1.459	1.918	2.421	2.952	3.491	4.014	1.632	1.404	1.16	–	70	39		
			38	0.864	1.223	1.629	2.070	2.534	3.000	3.446	–	–	–	–	–	–		
			43	0.708	1.028	1.388	1.778	2.184	2.588	2.969	–	–	–	–	–	–		
OP-LPQM096NT	NTZ096-4	E	27	1.487	2.022	2.651	3.363	4.142	4.972	5.836	–	–	–	–	–	–	P00	114X3357
			32	1.289	1.773	2.344	2.990	3.699	4.454	5.241	1.984	1.863	1.07	–	72	41		
			38	1.063	1.484	1.982	2.549	3.173	3.838	4.532	–	–	–	–	–	–		
			43	0.887	1.253	1.691	2.190	2.741	3.330	3.943	–	–	–	–	–	–		
OP-LPQM136NT	NTZ136-4	E	27	2.700	3.657	4.822	6.198	7.785	9.578	11.566	–	–	–	–	–	–	P00	114X3365
			32	2.380	3.243	4.298	5.548	6.997	8.640	10.472	3.602	2.975	1.21	1.63	73	42		
			38	2.025	2.779	3.703	4.804	6.086	7.550	9.193	–	–	–	–	–	–		
			43	1.751	2.417	3.234	4.211	5.355	6.669	8.154	–	–	–	–	–	–		
OP-LPQM215LL	LLZ024T4	E	27	3.619	4.605	5.778	7.161	8.770	10.623	12.731	–	–	–	–	–	–	P00	114X3476
			32	3.345	4.266	5.360	6.650	8.154	9.889	11.869	4.746	3.940	1.20	1.67	78	47		
			38	3.005	3.841	4.834	6.005	7.376	8.963	10.784	–	–	–	–	–	–		
			43	2.712	3.472	4.374	5.442	6.696	8.155	9.837	–	–	–	–	–	–		
OP-LPQM271LL	LLZ034T4	E	27	5.186	6.570	8.201	10.101	12.287	14.769	17.551	–	–	–	–	–	–	P00	114X3482
			32	4.780	6.066	7.578	9.340	11.369	13.678	16.274	6.782	5.457	1.24	1.74	78	47		
			38	4.278	5.437	6.798	8.385	10.217	12.310	14.673	–	–	–	–	–	–		
			43	3.847	4.893	6.120	7.553	9.214	11.119	13.281	–	–	–	–	–	–		

LBP

(1) G - Compressor 230V/1~/50Hz, fan 230V/1~/50Hz
E - Compressor 400V/3~/50Hz, fan 230V/1~/50Hz
(2) Nominal conditions (EN13215), Evaporating temperatures at dew point, Superheat 10 K, Subcooling 0 K
(3) Rated conditions (EN13215), Evaporating temperature (dew point) -35 °C, Ambient air temperature 32 °C, Return Gas Temperature 20 °C, Subcooling 0 K

SEPR, Seasonal Energy Performance Ratio
Q [kW], Cooling Capacity
P [kW], Power Input

*For regular updates and detailed capacities, please refer to **Coolselector®2** software*

EcoDesign 2018

Technical data and ordering

Optyma™ Plus - R404A / R507 - LBP

Performance data

Model	Compressor	Electrical code [1]	Tamb [°C]	Cooling capacity Q [kW] [2] Te [°C] -40	-35	-30	-25	-20	-15	-10	EcoDesign [3] Q [kW]	P [kW]	COP	SEPR	Sound power level dB(A)	Sound pressure level 10 m dB(A)	Version	Code
OP-LPQM017MP	MPT16LA	G	27	–	0.535	0.710	0.903	1.115	1.345	1.594	–	–	–	–	–	–	P00	114X3118
			32	–	0.480	0.638	0.816	1.013	1.228	1.463	0.540	0.504	1.07	–	60	29		
			38	–	0.413	0.553	0.712	0.890	1.088	1.305	–	–	–	–	–	–		
			43	–	0.359	0.483	0.626	0.789	0.971	1.173	–	–	–	–	–	–		
OP-LPQM026AJ	CAJ2446Z	G	27	0.526	0.732	0.978	1.268	1.606	1.993	2.432	–	–	–	–	–	–	P00	114X3216
			32	0.455	0.645	0.872	1.140	1.451	1.809	2.216	0.724	0.715	1.01	–	67	36		
			38	0.371	0.541	0.745	0.985	1.265	1.588	1.957	–	–	–	–	–	–		
			43	–	0.457	0.641	0.857	1.111	1.404	1.739	–	–	–	–	–	–		
OP-LPQM048NT	NTZ048-5	G	27	0.776	1.134	1.568	2.083	2.677	3.349	4.098	–	–	–	–	–	–	P00	114X3225
			32	0.651	0.981	1.381	1.853	2.398	3.017	3.706	1.104	1.097	1.01	–	69	38		
			38	0.501	0.798	1.155	1.576	2.062	2.615	3.232	–	–	–	–	–	–		
			43	0.381	0.647	0.968	1.345	1.782	2.279	2.836	–	–	–	–	–	–		
OP-LPQM048NT	NTZ048-4	E	27	0.783	1.143	1.572	2.072	2.645	3.290	4.007	–	–	–	–	–	–	P00	114X3233
			32	0.670	1.000	1.392	1.849	2.371	2.960	3.615	1.126	0.997	1.13	–	69	38		
			38	0.536	0.831	1.179	1.583	2.044	2.565	3.147	–	–	–	–	–	–		
			43	0.427	0.692	1.003	1.363	1.775	2.240	2.760	–	–	–	–	–	–		
OP-LPQM074FH	TFH2511Z	E	27	1.177	1.670	2.254	2.931	3.695	4.543	5.468	–	–	–	–	–	–	P00	114X3253
			32	0.985	1.434	1.969	2.588	3.291	4.074	4.931	1.620	1.514	1.07	–	69	38		
			38	0.776	1.173	1.646	2.197	2.825	3.528	4.301	–	–	–	–	–	–		
			43	0.620	0.972	1.394	1.887	2.452	3.087	3.789	–	–	–	–	–	–		
OP-LPQM074FH	FH2511Z	G	27	1.176	1.664	2.235	2.890	3.630	4.455	5.361	–	–	–	–	–	–	P00	114X3252
			32	0.983	1.439	1.971	2.580	3.268	4.034	4.877	1.627	1.662	0.98	–	69	38		
			38	0.756	1.172	1.655	2.207	2.831	3.526	4.292	–	–	–	–	–	–		
			43	0.573	0.955	1.395	1.899	2.468	3.102	3.803	–	–	–	–	–	–		
OP-LPQM068NT	NTZ068-5	G	27	1.332	1.793	2.348	2.994	3.730	4.548	5.440	–	–	–	–	–	–	P00	114X3241
			32	1.189	1.608	2.110	2.694	3.358	4.098	4.905	1.826	1.730	1.06	–	70	39		
			38	1.017	1.388	1.828	2.338	2.918	3.564	4.270	–	–	–	–	–	–		
			43	0.873	1.205	1.594	2.044	2.554	3.123	3.745	–	–	–	–	–	–		
OP-LPQM068NT	NTZ068-4	E	27	1.359	1.860	2.443	3.107	3.852	4.672	5.563	–	–	–	–	–	–	P00	114X3249
			32	1.172	1.629	2.162	2.770	3.451	4.204	5.024	1.845	1.613	1.14	–	70	39		
			38	0.967	1.374	1.846	2.386	2.991	3.662	4.394	–	–	–	–	–	–		
			43	0.812	1.177	1.599	2.081	2.623	3.225	3.883	–	–	–	–	–	–		
OP-LPQM096NT	NTZ096-4	E	27	1.480	2.019	2.667	3.418	4.262	5.184	6.164	–	–	–	–	–	–	P00	114X3357
			32	1.262	1.752	2.340	3.023	3.791	4.631	5.527	1.988	1.951	1.02	–	72	41		
			38	1.003	1.432	1.948	2.549	3.226	3.969	4.763	–	–	–	–	–	–		
			43	0.794	1.171	1.627	2.158	2.760	3.421	4.130	–	–	–	–	–	–		
OP-LPQM136NT	NTZ136-4	E	27	2.549	3.477	4.594	5.909	7.428	9.150	11.073	–	–	–	–	–	–	P00	114X3365
			32	2.214	3.068	4.094	5.301	6.696	8.282	10.056	3.468	3.128	1.11	1.60	73	42		
			38	1.821	2.584	3.498	4.575	5.821	7.240	8.834	–	–	–	–	–	–		
			43	1.503	2.188	3.008	3.974	5.094	6.373	7.814	–	–	–	–	–	–		
OP-LPQM215LL	LLZ024T4	E	27	3.997	5.083	6.389	7.930	9.719	11.763	14.068	–	–	–	–	–	–	P00	114X3476
			32	3.676	4.687	5.893	7.312	8.958	10.839	12.963	5.313	4.264	1.25	1.71	78	47		
			38	3.273	4.188	5.271	6.540	8.010	9.692	11.597	–	–	–	–	–	–		
			43	2.920	3.750	4.727	5.867	7.188	8.702	10.421	–	–	–	–	–	–		
OP-LPQM271LL	LLZ034T4	E	27	5.429	6.821	8.466	10.379	12.568	15.038	17.788	–	–	–	–	–	–	P00	114X3482
			32	4.953	6.244	7.754	9.498	11.490	13.737	16.242	7.114	5.791	1.23	1.81	78	47		
			38	4.337	5.503	6.848	8.390	10.143	12.121	14.332	–	–	–	–	–	–		
			43	3.776	4.836	6.042	7.412	8.967	10.719	12.683	–	–	–	–	–	–		

LBP

(1) G - Compressor 230V/1~/50Hz, fan 230V/1~/50Hz
E - Compressor 400V/3~/50Hz, fan 230V/1~/50Hz
(2) Nominal conditions (EN13215), Evaporating temperatures at dew point, Superheat 10 K, Subcooling 0 K
(3) Rated conditions (EN13215), Evaporating temperature (dew point) -35 °C, Ambient air temperature 32 °C, Return Gas Temperature 20 °C, Subcooling 0 K

SEPR, Seasonal Energy Performance Ratio
Q [kW], Cooling Capacity
P [kW], Power Input

*For regular updates and detailed capacities, please refer to **Coolselector®2** software*

EcoDesign 2018

Technical data and ordering

Optyma™ **Plus - R134a - MBP**

Performance data

Model	Compressor	Electrical code [1]	Tamb [°C]	Cooling capacity Q [kW] [2] Te [°C] -15	-10	-5	0	5	10	15	EcoDesign [3] Q [kW]	P [kW]	COP	SEPR	Sound power level dB(A)	Sound pressure level 10 m dB(A)	Version	Code
OP-MPGM033AJ	CAJ4511Y	G	27	1.444	1.835	2.280	2.786	3.353	3.984	4.678	–	–	–	–	–	–	P00	114X4220
			32	1.326	1.699	2.122	2.601	3.138	3.736	4.394	1.740	0.849	2.05	–	67	36		
			38	1.180	1.531	1.927	2.373	2.873	3.430	4.045	–	–	–	–	–	–		
			43	1.058	1.389	1.761	2.180	2.649	3.171	3.749	–	–	–	–	–	–		
OP-MPXM034ML	MLZ015T4	E	27	1.817	2.286	2.834	3.467	4.188	5.001	5.907	–	–	–	–	–	–	P00	114X4264
			32	1.716	2.162	2.685	3.290	3.980	4.761	5.632	2.216	0.983	2.25	–	68	37		
			38	1.597	2.012	2.502	3.071	3.723	4.462	5.290	–	–	–	–	–	–		
			43	1.499	1.886	2.346	2.883	3.502	4.205	4.995	–	–	–	–	–	–		
OP-MPXM034ML	MLZ015T5	G	27	1.822	2.321	2.883	3.513	4.218	5.003	5.876	–	–	–	–	–	–	P00	114X4261
			32	1.711	2.189	2.730	3.339	4.023	4.788	5.639	2.244	1.033	2.17	–	68	37		
			38	1.580	2.026	2.536	3.115	3.770	4.504	5.324	–	–	–	–	–	–		
			43	1.476	1.890	2.369	2.919	3.544	4.250	5.041	–	–	–	–	–	–		
OP-MPXM046ML	MLZ021T4	E	27	2.478	3.090	3.817	4.660	5.618	6.691	7.875	–	–	–	–	–	–	P00	114X4284
			32	2.339	2.922	3.614	4.418	5.333	6.358	7.490	2.998	1.289	2.33	–	68	37		
			38	2.167	2.713	3.363	4.118	4.979	5.945	7.014	–	–	–	–	–	–		
			43	2.021	2.535	3.147	3.860	4.674	5.591	6.606	–	–	–	–	–	–		
OP-MPXM046ML	MLZ021T5	G	27	2.465	3.114	3.854	4.690	5.626	6.665	7.811	–	–	–	–	–	–	P00	114X4281
			32	2.317	2.933	3.641	4.446	5.350	6.358	7.473	3.010	1.451	2.07	–	68	37		
			38	2.143	2.710	3.372	4.133	4.994	5.959	7.030	–	–	–	–	–	–		
			43	2.006	2.524	3.142	3.859	4.679	5.603	6.633	–	–	–	–	–	–		
OP-MPXM057ML	MLZ026T4	E	27	2.988	3.749	4.629	5.632	6.762	8.020	9.405	–	–	–	–	–	–	P00	114X4293
			32	2.811	3.536	4.375	5.331	6.409	7.610	8.932	3.633	1.591	2.28	–	68	37		
			38	2.596	3.276	4.062	4.959	5.972	7.101	8.346	–	–	–	–	–	–		
			43	2.416	3.055	3.795	4.641	5.596	6.664	7.843	–	–	–	–	–	–		
OP-MPXM057ML	MLZ026T5	G	27	2.981	3.762	4.649	5.647	6.760	7.991	9.345	–	–	–	–	–	–	P00	114X4290
			32	2.805	3.540	4.384	5.339	6.409	7.597	8.905	3.639	1.914	1.90	–	68	37		
			38	2.601	3.271	4.052	4.947	5.958	7.088	8.337	–	–	–	–	–	–		
			43	2.443	3.048	3.770	4.608	5.564	6.638	7.833	–	–	–	–	–	–		
OP-MPXM068ML	MLZ030T4	E	27	3.686	4.631	5.738	7.016	8.470	10.104	11.920	–	–	–	–	–	–	P00	114X4311
			32	3.484	4.382	5.437	6.657	8.048	9.614	11.357	4.493	1.897	2.37	–	69	38		
			38	3.240	4.078	5.066	6.213	7.524	9.005	10.657	–	–	–	–	–	–		
			43	3.037	3.820	4.748	5.831	7.073	8.480	10.053	–	–	–	–	–	–		
OP-MPXM068ML	MLZ030T5	G	27	3.786	4.657	5.752	7.035	8.471	10.032	11.692	–	–	–	–	–	–	P00	114X4308
			32	3.642	4.426	5.449	6.672	8.059	9.581	11.211	4.540	2.184	2.08	–	69	38		
			38	3.479	4.146	5.072	6.214	7.534	9.001	10.586	–	–	–	–	–	–		
			43	3.356	3.915	4.751	5.817	7.073	8.487	10.029	–	–	–	–	–	–		
OP-MPXM080ML	MLZ038T4	E	27	4.283	5.388	6.667	8.129	9.782	11.630	13.673	–	–	–	–	–	–	P00	114X4324
			32	4.029	5.086	6.307	7.704	9.282	11.048	13.001	5.220	2.308	2.26	3.43	69	38		
			38	3.718	4.713	5.863	7.176	8.663	10.326	12.170	–	–	–	–	–	–		
			43	3.454	4.396	5.482	6.724	8.130	9.707	11.457	–	–	–	–	–	–		
OP-MPXM080ML	MLZ038T5	G	27	4.250	5.469	6.787	8.230	9.821	11.578	13.518	–	–	–	–	–	–	P00	114X4321
			32	3.953	5.136	6.411	7.803	9.334	11.025	12.892	5.271	2.438	2.16	3.03	69	38		
			38	3.566	4.705	5.926	7.255	8.715	10.327	12.107	–	–	–	–	–	–		
			43	3.225	4.325	5.500	6.776	8.176	9.721	11.429	–	–	–	–	–	–		
OP-MPXM108ML	MLZ048T4	E	27	5.637	7.050	8.708	10.601	12.721	15.056	17.592	–	–	–	–	–	–	P00	114X4344
			32	5.298	6.641	8.223	10.033	12.062	14.299	16.730	6.819	2.840	2.40	3.74	75	44		
			38	4.889	6.140	7.620	9.323	11.236	13.349	15.649	–	–	–	–	–	–		
			43	4.548	5.714	7.104	8.709	10.520	12.525	14.711	–	–	–	–	–	–		
OP-MPXM125ML	MLZ058T4	E	27	6.778	8.475	10.421	12.628	15.107	17.864	20.905	–	–	–	–	–	–	P00	114X4414
			32	6.346	7.978	9.843	11.956	14.327	16.964	19.874	8.189	3.677	2.23	3.40	77	46		
			38	5.815	7.364	9.130	11.125	13.363	15.853	18.604	–	–	–	–	–	–		
			43	5.363	6.841	8.519	10.414	12.539	14.904	17.519	–	–	–	–	–	–		
OP-MPXM162ML	MLZ076T4	E	27	8.698	10.884	13.393	16.234	19.416	22.943	26.820	–	–	–	–	–	–	P00	114X4434
			32	8.169	10.246	12.638	15.353	18.399	21.782	25.505	10.523	4.681	2.25	3.46	77	46		
			38	7.544	9.476	11.714	14.265	17.136	20.335	23.866	–	–	–	–	–	–		
			43	7.035	8.834	10.931	13.335	16.052	19.089	22.451	–	–	–	–	–	–		

MBP

(1) G - Compressor 230V/1~/50Hz, fan 230V/1~/50Hz
E - Compressor 400V/3~/50Hz, fan 230V/1~/50Hz
(2) Nominal conditions (EN13215), Evaporating temperatures at dew point, Superheat 10 K, Subcooling 0 K
(3) Rated conditions (EN13215), Evaporating temperature (dew point) -35 °C, Ambient air temperature 32 °C, Return Gas Temperature 20 °C, Subcooling 0 K

SEPR, Seasonal Energy Performance Ratio, Q [kW], Cooling Capacity, P [kW], Power Input

*For regular updates and detailed capacities, please refer to **Coolselector®2** software*

EcoDesign 2018

Technical data and ordering

Optyma™ **Plus - R448A - MBP**

Performance data

Model	Compressor	Electrical code [1]	Tamb [°C]	Cooling capacity Q [kW] [2] Te [°C] -20	-15	-10	-5	0	5	10	EcoDesign [3] Q [kW]	P [kW]	COP	SEPR	Sound power level dB(A)	Sound pressure level 10 m dB(A)	Version	Code
OP-MPXM034ML	MLZ015T4	E	27	2.372	2.942	3.595	4.338	5.175	6.110	7.142	–	–	–	–	–	–	P00	114X4264
			32	2.193	2.731	3.348	4.050	4.843	5.729	6.711	3.409	1.647	2.07	–	68	37		
			38	1.965	2.464	3.035	3.685	4.422	5.248	6.169	–	–	–	–	–	–		
			43	–	2.229	2.759	3.365	4.053	4.828	5.696	–	–	–	–	–	–		
OP-MPXM034ML	MLZ015T5	G	27	2.36	2.934	3.592	4.340	5.182	6.120	7.153	–	–	–	–	–	–	P00	114X4261
			32	2.195	2.736	3.356	4.061	4.856	5.743	6.725	3.418	1.604	2.13	–	68	37		
			38	1.992	2.491	3.063	3.715	4.451	5.277	6.194	–	–	–	–	–	–		
			43	–	2.283	2.812	3.416	4.102	4.875	5.737	–	–	–	–	–	–		
OP-MPXM046ML	MLZ021T4	E	27	3.178	3.933	4.791	5.759	6.840	8.035	9.343	–	–	–	–	–	–	P00	114X4284
			32	2.93	3.640	4.446	5.355	6.372	7.499	8.738	4.535	2.237	2.03	–	68	37		
			38	2.622	3.274	4.014	4.850	5.788	6.832	7.985	–	–	–	–	–	–		
			43	–	2.957	3.639	4.411	5.281	6.254	7.335	–	–	–	–	–	–		
OP-MPXM046ML	MLZ021T5	G	27	3.182	3.942	4.809	5.791	6.890	8.108	9.445	–	–	–	–	–	–	P00	114X4281
			32	2.949	3.663	4.477	5.400	6.437	7.589	8.858	4.568	2.352	1.94	–	68	37		
			38	2.665	3.318	4.065	4.914	5.871	6.941	8.127	–	–	–	–	–	–		
			43	–	3.025	3.713	4.496	5.384	6.382	7.495	–	–	–	–	–	–		
OP-MPXM057ML	MLZ026T4	E	27	3.811	4.724	5.742	6.868	8.104	9.450	10.901	–	–	–	–	–	–	P00	114X4293
			32	3.473	4.333	5.289	6.345	7.506	8.770	10.138	5.406	2.940	1.84	3.15	68	37		
			38	3.048	3.841	4.718	5.688	6.754	7.919	9.186	–	–	–	–	–	–		
			43	–	3.412	4.221	5.114	6.099	7.179	8.360	–	–	–	–	–	–		
OP-MPXM057ML	MLZ026T5	G	27	3.863	4.769	5.790	6.932	8.193	9.572	11.064	–	–	–	–	–	–	P00	114X4290
			32	3.561	4.404	5.354	6.416	7.593	8.883	10.284	5.475	3.082	1.78	2.93	68	37		
			38	3.185	3.945	4.803	5.766	6.836	8.016	9.306	–	–	–	–	–	–		
			43	–	3.548	4.323	5.197	6.175	7.260	8.454	–	–	–	–	–	–		
OP-MPXM068ML	MLZ030T5	G	27	4.812	5.958	7.265	8.744	10.404	12.248	14.278	–	–	–	–	–	–	P00	114X4308
			32	4.447	5.529	6.761	8.157	9.726	11.473	13.403	6.890	3.266	2.11	3.30	69	38		
			38	3.993	4.993	6.132	7.424	8.879	10.507	12.313	–	–	–	–	–	–		
			43	–	4.531	5.587	6.788	8.146	9.671	11.373	–	–	–	–	–	–		
OP-MPXM068ML	MLZ030T4	E	27	4.86	5.997	7.295	8.767	10.419	12.259	14.287	–	–	–	–	–	–	P00	114X4311
			32	4.485	5.559	6.783	8.172	9.734	11.476	13.402	6.911	3.138	2.20	3.48	69	38		
			38	4.012	5.003	6.134	7.418	8.867	10.490	12.292	–	–	–	–	–	–		
			43	–	4.516	5.564	6.757	8.109	9.629	11.326	–	–	–	–	–	–		
OP-MPXM080ML	MLZ038T5	G	27	5.554	6.850	8.310	9.943	11.753	13.739	15.900	–	–	–	–	–	–	P00	114X4321
			32	5.167	6.388	7.759	9.290	10.988	12.855	14.891	7.919	3.985	1.99	3.07	69	38		
			38	4.68	5.803	7.062	8.467	10.027	11.747	13.631	–	–	–	–	–	–		
			43	–	5.292	6.452	7.747	9.188	10.783	12.539	–	–	–	–	–	–		
OP-MPXM080ML	MLZ038T4	E	27	5.654	6.949	8.417	10.066	11.901	13.922	16.126	–	–	–	–	–	–	P00	114X4324
			32	5.214	6.433	7.812	9.361	11.088	12.995	15.081	7.969	3.716	2.14	3.49	69	38		
			38	4.667	5.786	7.053	8.479	10.073	11.838	13.779	–	–	–	–	–	–		
			43	–	5.227	6.395	7.714	9.192	10.836	12.654	–	–	–	–	–	–		
OP-MPXM108ML	MLZ048T4	E	27	7.357	9.067	10.997	13.154	15.541	18.156	20.992	–	–	–	–	–	–	P00	114X4344
			32	6.775	8.377	10.182	12.201	14.439	16.897	19.572	10.403	5.300	1.96	3.31	75	44		
			38	6.05	7.513	9.161	11.008	13.061	15.326	17.804	–	–	–	–	–	–		
			43	–	6.764	8.274	9.971	11.865	13.964	16.275	–	–	–	–	–	–		
OP-MPXM125ML	MLZ058T4	E	27	8.752	10.784	13.088	15.678	18.560	21.734	25.194	–	–	–	–	–	–	P00	114X4414
			32	8.094	10.001	12.160	14.589	17.297	20.286	23.558	12.411	5.856	2.12	3.42	77	46		
			38	7.275	9.018	10.993	13.220	15.711	18.474	21.514	–	–	–	–	–	–		
			43	–	8.166	9.979	12.030	14.333	16.901	19.744	–	–	–	–	–	–		
OP-MPXM162ML	MLZ076T4	E	27	10.583	13.218	16.207	19.567	23.303	27.413	31.890	–	–	–	–	–	–	P00	114X4434
			32	9.654	12.132	14.943	18.105	21.627	25.514	29.760	15.258	7.988	1.91	3.13	77	46		
			38	8.496	10.769	13.351	16.263	19.520	23.128	27.093	–	–	–	–	–	–		
			43	–	9.587	11.965	14.658	17.683	21.051	24.775	–	–	–	–	–	–		

MBP

(1) G - Compressor 230V/1~/50Hz, fan 230V/1~/50Hz
E - Compressor 400V/3~/50Hz, fan 230V/1~/50Hz
(2) Nominal conditions (EN13215), Evaporating temperatures at dew point, Superheat 10 K, Subcooling 0 K
(3) Rated conditions (EN13215), Evaporating temperature (dew point) -10 °C, Ambient air temperature 32 °C, Return Gas Temperature 20 °C, Subcooling 0 K

SEPR, Seasonal Energy Performance Ratio, Q [kW], Cooling Capacity, P [kW], Power Input

*For regular updates and detailed capacities, please refer to **Coolselector®2** software*

EcoDesign 2018

Technical data and ordering

Optyma™ Plus - R449A - MBP

Performance data

Model	Compressor	Electrical code [1]	Tamb [°C]	Cooling capacity Q [kW] [2] Te [°C] -20	-15	-10	-5	0	5	10	EcoDesign [3] Q [kW]	P [kW]	COP	SEPR	Sound power level dB(A)	Sound pressure level 10 m dB(A)	Version	Code
OP-MPYM008MY	MLY80RAb	G	27	–	0.632	0.822	1.025	1.240	1.467	1.704	–	–	–	–	–	–	P00	114X4119
			32	–	0.574	0.749	0.937	1.138	1.351	1.574	0.760	0.393	1.93	–	60	29		
			38	–	0.504	0.661	0.831	1.015	1.211	1.419	–	–	–	–	–	–		
			43	–	0.447	0.588	0.744	0.913	1.095	1.290	–	–	–	–	–	–		
OP-MPYM009MY	MLY90RAb	G	27	–	0.668	0.878	1.098	1.327	1.566	1.813	–	–	–	–	–	–	P00	114X4120
			32	–	0.609	0.801	1.004	1.217	1.441	1.673	0.813	0.430	1.89	–	61	30		
			38	–	0.540	0.710	0.892	1.086	1.290	1.504	–	–	–	–	–	–		
			43	–	0.482	0.635	0.800	0.976	1.164	1.364	–	–	–	–	–	–		
OP-MPYM012MP	MPT12RA	G	27	–	0.930	1.198	1.478	1.768	2.067	2.373	–	–	–	–	–	–	P00	114X4121
			32	–	0.848	1.095	1.353	1.623	1.902	2.191	1.112	0.589	1.89	–	63	32		
			38	–	0.751	0.971	1.204	1.449	1.705	1.972	–	–	–	–	–	–		
			43	–	0.670	0.868	1.080	1.304	1.541	1.790	–	–	–	–	–	–		
OP-MPYM014MP	MPT14RA	G	27	–	0.978	1.251	1.544	1.859	2.193	2.546	–	–	–	–	–	–	P00	114X4122
			32	–	0.896	1.147	1.421	1.716	2.032	2.367	1.166	0.729	1.60	–	60	29		
			38	–	0.799	1.024	1.273	1.544	1.838	2.153	–	–	–	–	–	–		
			43	–	0.718	0.922	1.150	1.401	1.676	1.974	–	–	–	–	–	–		
OP-MPYM018AJ	CAJ9510Z	G	27	0.932	1.233	1.594	2.022	2.527	3.114	3.791	–	–	–	–	–	–	P00	114X4230
			32	0.854	1.134	1.469	1.868	2.339	2.889	3.524	1.491	0.781	1.91	–	67	36		
			38	–	1.015	1.321	1.685	2.117	2.622	3.209	–	–	–	–	–	–		
			43	–	0.916	1.199	1.535	1.934	2.404	2.950	–	–	–	–	–	–		
OP-MPYM024AJ	CAJ9513Z	G	27	1.153	1.549	2.021	2.577	3.222	3.960	4.796	–	–	–	–	–	–	P00	114X4200
			32	1.041	1.409	1.847	2.363	2.964	3.655	4.439	1.876	0.902	2.08	–	67	36		
			38	–	1.244	1.643	2.113	2.663	3.297	4.021	–	–	–	–	–	–		
			43	–	1.107	1.475	1.909	2.417	3.006	3.679	–	–	–	–	–	–		
OP-MPYM026AJ	CAJ4517Z	G	27	1.321	1.737	2.227	2.802	3.469	4.235	5.103	–	–	–	–	–	–	P00	114X4212
			32	1.203	1.591	2.047	2.582	3.205	3.923	4.739	2.080	1.009	2.06	–	67	36		
			38	–	1.416	1.833	2.323	2.894	3.554	4.309	–	–	–	–	–	–		
			43	–	1.271	1.657	2.109	2.638	3.252	3.956	–	–	–	–	–	–		
OP-MPYM026AJ	TAJ4517Z	E	27	1.298	1.730	2.233	2.819	3.495	4.268	5.144	–	–	–	–	–	–	P00	114X4213
			32	1.169	1.575	2.048	2.597	3.232	3.960	4.785	2.081	1.059	1.97	–	67	36		
			38	–	1.388	1.824	2.330	2.917	3.590	4.356	–	–	–	–	–	–		
			43	–	1.231	1.637	2.109	2.654	3.283	4.000	–	–	–	–	–	–		
OP-MPYM034AJ	TAJ4519Z	E	27	1.657	2.175	2.778	3.474	4.273	5.179	6.195	–	–	–	–	–	–	P00	114X4227
			32	1.51	1.997	2.561	3.213	3.962	4.812	5.768	2.606	1.346	1.94	–	67	36		
			38	–	1.781	2.302	2.903	3.592	4.378	5.263	–	–	–	–	–	–		
			43	–	1.599	2.086	2.645	3.287	4.019	4.846	–	–	–	–	–	–		
OP-MPYM034AJ	CAJ4519Z	G	27	1.65	2.185	2.805	3.521	4.340	5.269	6.309	–	–	–	–	–	–	P00	114X4226
			32	1.498	2.000	2.581	3.251	4.018	4.889	5.866	2.627	1.416	1.86	–	67	36		
			38	–	1.776	2.310	2.925	3.630	4.431	5.333	–	–	–	–	–	–		
			43	–	1.588	2.083	2.652	3.306	4.050	4.889	–	–	–	–	–	–		
OP-MPXM034ML	MLZ015T4	E	27	2.367	2.937	3.590	4.334	5.172	6.108	7.142	–	–	–	–	–	–	P00	114X4264
			32	2.187	2.726	3.343	4.046	4.839	5.727	6.711	3.409	1.647	2.07	–	68	37		
			38	1.96	2.458	3.029	3.681	4.418	5.246	6.169	–	–	–	–	–	–		
			43	–	2.224	2.754	3.360	4.049	4.826	5.696	–	–	–	–	–	–		
OP-MPXM034ML	MLZ015T5	G	27	2.355	2.929	3.587	4.336	5.179	6.118	7.153	–	–	–	–	–	–	P00	114X4261
			32	2.189	2.731	3.351	4.057	4.852	5.741	6.725	3.418	1.604	2.13	–	68	37		
			38	1.987	2.486	3.058	3.710	4.447	5.274	6.194	–	–	–	–	–	–		
			43	–	2.277	2.807	3.412	4.098	4.872	5.737	–	–	–	–	–	–		
OP-MPXM046ML	MLZ021T4	E	27	3.171	3.926	4.785	5.753	6.835	8.032	9.343	–	–	–	–	–	–	P00	114X4284
			32	2.923	3.633	4.439	5.349	6.367	7.497	8.738	4.535	2.237	2.03	–	68	37		
			38	2.615	3.267	4.007	4.843	5.783	6.829	7.985	–	–	–	–	–	–		
			43	–	2.950	3.632	4.405	5.276	6.251	7.335	–	–	–	–	–	–		
OP-MPXM046ML	MLZ021T5	G	27	3.175	3.935	4.802	5.785	6.885	8.106	9.445	–	–	–	–	–	–	P00	114X4281
			32	2.942	3.655	4.470	5.394	6.432	7.586	8.858	4.568	2.352	1.94	–	68	37		
			38	2.657	3.311	4.058	4.908	5.866	6.938	8.127	–	–	–	–	–	–		
			43	–	3.018	3.705	4.490	5.379	6.379	7.495	–	–	–	–	–	–		

MBP

(1) G - Compressor 230V/1~/50Hz, fan 230V/1~/50Hz
E - Compressor 400V/3~/50Hz, fan 230V/1~/50Hz
(2) Nominal conditions (EN13215), Evaporating temperatures at dew point, Superheat 10 K, Subcooling 0 K
(3) Rated conditions (EN13215), Evaporating temperature (dew point) -35 °C, Ambient air temperature 32 °C, Return Gas Temperature 20 °C, Subcooling 0 K

SEPR, Seasonal Energy Performance Ratio, Q [kW], Cooling Capacity, P [kW], Power Input

*For regular updates and detailed capacities, please refer to **Coolselector®2** software*

EcoDesign 2018

Technical data and ordering

Optyma™ Plus - R449A - MBP (count.)

Performance data

Model	Compressor	Electrical code [1]	Tamb [°C]	Cooling capacity Q [kW] [2] Te [°C] -20	-15	-10	-5	0	5	10	EcoDesign [3] Q [kW]	P [kW]	COP	SEPR	Sound power level dB(A)	Sound pressure level 10 m dB(A)	Version	Code
OP-MPXM057ML	MLZ026T4	E	27	3.803	4.716	5.734	6.861	8.099	9.446	10.901	–	–	–	–	–	–	P00	114X4293
			32	3.464	4.325	5.281	6.338	7.500	8.767	10.138	5.406	2.940	1.84	3.15	68	37		
			38	3.04	3.832	4.710	5.680	6.748	7.916	9.186	–	–	–	–	–	–		
			43	–	3.403	4.213	5.107	6.093	7.176	8.360	–	–	–	–	–	–		
OP-MPXM057ML	MLZ026T5	G	27	3.855	4.760	5.782	6.924	8.188	9.569	11.064	–	–	–	–	–	–	P00	114X4290
			32	3.553	4.395	5.345	6.409	7.587	8.880	10.284	5.475	3.082	1.78	2.93	68	37		
			38	3.176	3.936	4.795	5.758	6.830	8.013	9.306	–	–	–	–	–	–		
			43	–	3.539	4.315	5.190	6.169	7.257	8.454	–	–	–	–	–	–		
OP-MPXM068ML	MLZ030T5	G	27	4.802	5.948	7.255	8.735	10.397	12.244	14.278	–	–	–	–	–	–	P00	114X4308
			32	4.436	5.518	6.751	8.148	9.719	11.469	13.403	6.890	3.266	2.11	3.30	69	38		
			38	3.983	4.982	6.121	7.414	8.872	10.503	12.313	–	–	–	–	–	–		
			43	–	4.520	5.577	6.779	8.139	9.667	11.373	–	–	–	–	–	–		
OP-MPXM068ML	MLZ030T4	E	27	4.849	5.986	7.285	8.758	10.412	12.255	14.287	–	–	–	–	–	–	P00	114X4311
			32	4.475	5.548	6.773	8.163	9.727	11.472	13.402	6.911	3.138	2.20	3.48	69	38		
			38	4.001	4.992	6.123	7.409	8.860	10.486	12.292	–	–	–	–	–	–		
			43	–	4.505	5.553	6.748	8.102	9.625	11.326	–	–	–	–	–	–		
OP-MPXM080ML	MLZ038T5	G	27	5.542	6.838	8.298	9.933	11.744	13.735	15.900	–	–	–	–	–	–	P00	114X4321
			32	5.155	6.375	7.747	9.279	10.980	12.850	14.891	7.919	3.985	1.99	3.07	69	38		
			38	4.667	5.790	7.049	8.456	10.018	11.742	13.631	–	–	–	–	–	–		
			43	–	5.279	6.439	7.736	9.180	10.778	12.539	–	–	–	–	–	–		
OP-MPXM080ML	MLZ038T4	E	27	5.641	6.937	8.405	10.056	11.893	13.917	16.126	–	–	–	–	–	–	P00	114X4324
			32	5.202	6.420	7.800	9.351	11.080	12.990	15.081	7.969	3.716	2.14	3.49	69	38		
			38	4.654	5.774	7.041	8.469	10.064	11.833	13.779	–	–	–	–	–	–		
			43	–	5.214	6.383	7.703	9.183	10.832	12.654	–	–	–	–	–	–		
OP-MPXM108ML	MLZ048T4	E	27	7.341	9.051	10.981	13.140	15.530	18.149	20.992	–	–	–	–	–	–	P00	114X4344
			32	6.758	8.360	10.166	12.187	14.428	16.891	19.572	10.403	5.300	1.96	3.31	75	44		
			38	6.033	7.496	9.145	10.994	13.050	15.319	17.804	–	–	–	–	–	–		
			43	–	6.748	8.258	9.957	11.854	13.958	16.275	–	–	–	–	–	–		
OP-MPXM125ML	MLZ058T4	E	27	8.733	10.765	13.070	15.662	18.547	21.726	25.194	–	–	–	–	–	–	P00	114X4414
			32	8.075	9.981	12.142	14.573	17.284	20.279	23.558	12.411	5.856	2.12	3.42	77	46		
			38	7.255	8.998	10.974	13.204	15.698	18.466	21.514	–	–	–	–	–	–		
			43	–	8.146	9.960	12.013	14.320	16.893	19.744	–	–	–	–	–	–		
OP-MPXM162ML	MLZ076T4	E	27	10.56	13.195	16.185	19.547	23.287	27.404	31.890	–	–	–	–	–	–	P00	114X4434
			32	9.631	12.108	14.920	18.084	21.611	25.504	29.760	15.258	7.988	1.91	3.13	77	46		
			38	8.473	10.745	13.328	16.243	19.504	23.119	27.093	–	–	–	–	–	–		
			43	–	9.564	11.942	14.638	17.667	21.042	24.775	–	–	–	–	–	–		

MBP

(1) G - Compressor 230V/1~/50Hz, fan 230V/1~/50Hz
E - Compressor 400V/3~/50Hz, fan 230V/1~/50Hz
(2) Nominal conditions (EN13215), Evaporating temperatures at dew point, Superheat 10 K, Subcooling 0 K
(3) Rated conditions (EN13215), Evaporating temperature (dew point) -10 °C, Ambient air temperature 32 °C, Return Gas Temperature 20 °C, Subcooling 0 K

SEPR, Seasonal Energy Performance Ratio, Q [kW], Cooling Capacity, P [kW], Power Input

*For regular updates and detailed capacities, please refer to **Coolselector®2** software*

EcoDesign 2018

Technical data and ordering

Optyma™ Plus - R452A - MBP *)

Performance data

Model	Compressor	Electrical code [1]	Tamb [°C]	Cooling capacity Q [kW] [2] Te [°C] -20	-15	-10	-5	0	5	10	EcoDesign [3] Q [kW]	P [kW]	COP	SEPR	Sound power level dB(A)	Sound pressure level 10 m dB(A)	Version	Code
OP-MPYM018AJ	CAJ9510Z	G	27	1.020	1.315	1.665	2.079	2.564	3.126	3.772	–	–	–	–	–	–	P00	114X4230
			32	0.928	1.202	1.526	1.910	2.360	2.884	3.487	1.588	0.860	1.85	–	64	33		
			38	–	–	1.358	1.705	2.114	2.591	3.142	–	–	–	–	–	–		
			43	–	–	1.216	1.533	1.907	2.345	2.852	–	–	–	–	–	–		
OP-MPYM024AJ	CAJ9513Z	G	27	–	1.649	2.109	2.647	3.267	3.974	–	–	–	–	–	–	–	P00	114X4200
			32	–	1.491	1.916	2.413	2.988	3.645	–	1.995	0.994	2.01	–	64	33		
			38	–	1.302	1.685	2.134	2.655	3.252	–	–	–	–	–	–	–		
			43	–	1.143	1.493	1.902	2.377	2.924	–	–	–	–	–	–	–		
OP-MPYM026AJ	CAJ4517Z	G	27	1.442	1.848	2.322	2.876	3.515	4.246	5.071	–	–	–	–	–	–	P00	114X4212
			32	1.304	1.681	2.121	2.634	3.228	3.908	4.678	2.210	1.113	1.99	–	67	36		
			38	1.138	1.480	1.878	2.342	2.880	3.499	4.203	–	–	–	–	–	–		
			43	–	1.311	1.674	2.097	2.589	3.156	3.804	–	–	–	–	–	–		
OP-MPYM026AJ	TAJ4517Z	E	27	1.417	1.840	2.328	2.893	3.541	4.278	5.109	–	–	–	–	–	–	P00	114X4213
			32	1.267	1.664	2.122	2.649	3.253	3.943	4.721	2.211	1.169	1.89	–	67	36		
			38	1.085	1.450	1.868	2.349	2.902	3.532	4.246	–	–	–	–	–	–		
			43	–	1.270	1.654	2.096	2.603	3.184	3.843	–	–	–	–	–	–		
OP-MPYM034AJ	TAJ4519Z	E	27	1.797	2.297	2.873	3.534	4.286	5.133	6.077	–	–	–	–	–	–	P00	114X4227
			32	1.625	2.094	2.631	3.245	3.944	4.732	5.612	2.746	1.490	1.84	–	68	37		
			38	1.415	1.845	2.335	2.893	3.529	4.246	5.049	–	–	–	–	–	–		
			43	–	1.633	2.083	2.595	3.177	3.834	4.571	–	–	–	–	–	–		
OP-MPYM034AJ	CAJ4519Z	G	27	1.796	2.318	2.917	3.605	4.387	5.269	6.251	–	–	–	–	–	–	P00	114X4226
			32	1.619	2.107	2.666	3.305	4.031	4.851	5.766	2.784	1.563	1.78	–	68	37		
			38	1.403	1.849	2.357	2.935	3.594	4.338	5.171	–	–	–	–	–	–		
			43	–	1.631	2.094	2.621	3.222	3.901	4.663	–	–	–	–	–	–		
OP-MPXM034ML	MLZ015T4	E	27	2.543	3.128	3.789	4.528	5.345	6.239	7.205	–	–	–	–	–	–	P00	114X4264
			32	2.311	2.854	3.466	4.151	4.909	5.739	6.639	3.532	1.596	2.21	–	69	38		
			38	2.020	2.509	3.062	3.680	4.365	5.117	5.937	–	–	–	–	–	–		
			43	1.767	2.211	2.711	3.271	3.894	4.581	5.333	–	–	–	–	–	–		
OP-MPXM034ML	MLZ015T5	G	27	2.660	3.222	3.858	4.568	5.354	6.216	7.152	–	–	–	–	–	–	P00	114X4261
			32	2.461	2.983	3.575	4.238	4.973	5.781	6.664	3.646	1.684	2.16	–	69	38		
			38	2.214	2.688	3.227	3.831	4.505	5.249	6.065	–	–	–	–	–	–		
			43	2.003	2.436	2.929	3.485	4.106	4.796	5.557	–	–	–	–	–	–		
OP-MPXM046ML	MLZ021T4	E	27	3.493	4.224	5.044	5.951	6.942	8.014	9.159	–	–	–	–	–	–	P00	114X4284
			32	3.224	3.901	4.658	5.495	6.412	7.405	8.470	4.761	2.224	2.14	–	69	38		
			38	2.886	3.494	4.172	4.923	5.748	6.645	7.612	–	–	–	–	–	–		
			43	2.592	3.139	3.749	4.426	5.172	5.987	6.871	–	–	–	–	–	–		
OP-MPXM046ML	MLZ021T5	G	27	3.425	4.224	5.114	6.096	7.164	8.312	9.534	–	–	–	–	–	–	P00	114X4281
			32	3.194	3.940	4.768	5.678	6.667	7.730	8.862	4.877	2.346	2.08	–	69	38		
			38	2.885	3.562	4.310	5.130	6.021	6.980	8.005	–	–	–	–	–	–		
			43	2.602	3.217	3.894	4.637	5.444	6.315	7.250	–	–	–	–	–	–		
OP-MPXM057MLP00G	MLZ026T5	G	27	4.122	4.969	5.913	6.954	8.086	9.304	10.600	–	–	–	–	–	–	P00	114X4290
			32	3.800	4.578	5.447	6.404	7.449	8.576	9.781	5.583	3.142	1.78	3.04	69	38		
			38	3.403	4.096	4.870	5.726	6.662	7.679	8.772	–	–	–	–	–	–		
			43	3.060	3.680	4.373	5.141	5.986	6.908	7.908	–	–	–	–	–	–		
OP-MPXM057MLP00E	MLZ026T4	E	27	4.125	4.972	5.918	6.962	8.098	9.321	10.624	–	–	–	–	–	–	P00	114X4293
			32	3.805	4.584	5.455	6.416	7.465	8.597	9.809	5.590	3.022	1.85	3.15	69	38		
			38	3.411	4.106	4.883	5.742	6.684	7.706	8.807	–	–	–	–	–	–		
			43	3.071	3.693	4.389	5.162	6.012	6.941	7.949	–	–	–	–	–	–		
OP-MPXM068MLP00G	MLZ030T5	G	27	5.420	6.596	7.933	9.440	11.120	12.973	14.995	–	–	–	–	–	–	P00	114X4308
			32	5.017	6.119	7.373	8.785	10.361	12.103	14.012	7.516	3.195	2.35	3.79	70	39		
			38	4.514	5.524	6.671	7.965	9.414	11.021	12.790	–	–	–	–	–	–		
			43	4.076	5.006	6.061	7.254	8.593	10.086	11.736	–	–	–	–	–	–		
OP-MPXM068MLP00E	MLZ030T4	E	27	5.417	6.593	7.931	9.439	11.120	12.975	15.000	–	–	–	–	–	–	P00	114X4311
			32	5.016	6.118	7.371	8.784	10.362	12.107	14.018	7.514	3.131	2.40	3.87	70	39		
			38	4.514	5.524	6.671	7.966	9.417	11.027	12.799	–	–	–	–	–	–		
			43	4.078	5.007	6.062	7.256	8.597	10.093	11.747	–	–	–	–	–	–		

MBP

(1) G - Compressor 230V/1~/50Hz, fan 230V/1~/50Hz
E - Compressor 400V/3~/50Hz, fan 230V/1~/50Hz
(2) Nominal conditions (EN13215), Evaporating temperatures at dew point, Superheat 10 K, Subcooling 0 K
(3) Rated conditions (EN13215), Evaporating temperature (dew point) -10 °C, Ambient air temperature 32 °C, Return Gas Temperature 20 °C, Subcooling 0 K
**) Preliminary data*

SEPR, Seasonal Energy Performance Ratio, Q [kW], Cooling Capacity, P [kW], Power Input

*For regular updates and detailed capacities, please refer to **Coolselector®2** software*

EcoDesign 2018

Technical data and ordering

Optyma™ Plus - R452A - MBP *) (count.)

Performance data

Model	Compressor	Electrical code [1]	Tamb [°C]	Cooling capacity Q [kW] [2] Te [°C] -20	-15	-10	-5	0	5	10	EcoDesign [3] Q [kW]	P [kW]	COP	SEPR	Sound power level dB(A)	Sound pressure level 10 m dB(A)	Version	Code
OP-MPXM080MLP00G	MLZ038T5	G	27	6.388	7.726	9.237	10.922	12.779	14.805	16.989	–	–	–	–	–	–	P00	114X4321
			32	5.906	7.152	8.555	10.120	11.846	13.732	15.772	8.733	3.937	2.22	3.61	70	39		
			38	5.291	6.418	7.686	9.100	10.665	12.380	14.243	–	–	–	–	–	–		
			43	4.747	5.768	6.918	8.203	9.628	11.198	12.911	–	–	–	–	–	–		
OP-MPXM080MLP00E	MLZ038T4	E	27	6.425	7.767	9.281	10.971	12.837	14.875	17.078	–	–	–	–	–	–	P00	114X4324
			32	5.939	7.191	8.602	10.177	11.918	13.822	15.886	8.780	3.684	2.38	3.84	70	39		
			38	5.314	6.450	7.730	9.159	10.743	12.482	14.376	–	–	–	–	–	–		
			43	4.762	5.793	6.956	8.257	9.705	11.302	13.051	–	–	–	–	–	–		
OP-MPXM108MLP00E	MLZ048T4	E	27	8.136	9.851	11.742	13.807	16.038	18.425	20.953	–	–	–	–	–	–	P00	114X4344
			32	7.419	9.018	10.776	12.693	14.763	16.980	19.334	11.027	5.463	2.02	3.48	70	39		
			38	6.510	7.957	9.545	11.275	13.147	15.155	17.296	–	–	–	–	–	–		
			43	5.717	7.027	8.465	10.033	11.733	13.563	15.523	–	–	–	–	–	–		
OP-MPXM125MLP00E	MLZ058T4	E	27	9.354	11.537	13.979	16.684	19.656	22.893	26.389	–	–	–	–	–	–	P00	114X4414
			32	8.516	10.574	12.872	15.416	18.213	21.264	24.570	13.487	5.945	2.27	3.61	77	46		
			38	7.458	9.357	11.472	13.815	16.395	19.218	22.295	–	–	–	–	–	–		
			43	6.532	8.289	10.244	12.412	14.805	17.435	20.319	–	–	–	–	–	–		
OP-MPXM162MLP00E	MLZ076T4	E	27	12.410	14.960	17.771	20.824	24.095	27.559	31.190	–	–	–	–	–	–	P00	114X4434
			32	11.327	13.638	16.177	18.933	21.890	25.031	28.338	16.991	8.093	2.10	3.38	77	46		
			38	9.967	11.978	14.180	16.572	19.145	21.894	24.809	–	–	–	–	–	–		
			43	8.792	10.540	12.451	14.530	16.778	19.194	21.780	–	–	–	–	–	–		

MBP

(1) G - Compressor 230V/1~/50Hz, fan 230V/1~/50Hz
E - Compressor 400V/3~/50Hz, fan 230V/1~/50Hz
(2) Nominal conditions (EN13215), Evaporating temperatures at dew point, Superheat 10 K, Subcooling 0 K
(3) Rated conditions (EN13215), Evaporating temperature (dew point) -10 °C, Ambient air temperature 32 °C, Return Gas Temperature 20 °C, Subcooling 0 K
**) Preliminary data*

SEPR, Seasonal Energy Performance Ratio,
Q [kW], Cooling Capacity,
P [kW], Power Input

*For regular updates and detailed capacities, please refer to **Coolselector®2** software*

EcoDesign 2018

Technical data and ordering

Optyma™ Plus - R407A - MBP

Performance data

Model	Compressor	Electrical code [1]	Tamb [°C]	Cooling capacity Q [kW] [2] Te [°C] -20	-15	-10	-5	0	5	10	EcoDesign [3] Q [kW]	P [kW]	COP	SEPR	Sound power level dB(A)	Sound pressure level 10 m dB(A)	Version	Code
OP-MPXM034ML	MLZ015T4	E	27	2.297	2.872	3.545	4.322	5.210	6.211	7.326	–	–	–	–	–	–	P00	114X4264
			32	2.112	2.653	3.288	4.024	4.865	5.815	6.876	3.351	1.536	2.18	–	68	37		
			38	1.881	2.379	2.965	3.648	4.431	5.318	6.312	–	–	–	–	–	–		
			43	–	2.141	2.684	3.320	4.053	4.886	5.822	–	–	–	–	–	–		
OP-MPXM034ML	MLZ015T5	G	27	2.326	2.908	3.588	4.374	5.271	6.282	7.408	–	–	–	–	–	–	P00	114X4261
			32	2.138	2.686	3.328	4.071	4.921	5.881	6.952	3.392	1.560	2.17	–	68	37		
			38	1.903	2.407	3.000	3.690	4.480	5.376	6.379	–	–	–	–	–	–		
			43	–	2.166	2.715	3.357	4.097	4.938	5.882	–	–	–	–	–	–		
OP-MPXM046ML	MLZ021T4	E	27	2.968	3.727	4.597	5.584	6.691	7.919	9.265	–	–	–	–	–	–	P00	114X4284
			32	2.732	3.451	4.274	5.206	6.252	7.413	8.687	4.364	2.204	1.98	–	68	37		
			38	2.438	3.105	3.868	4.732	5.702	6.780	7.965	–	–	–	–	–	–		
			43	–	2.805	3.515	4.320	5.225	6.231	7.339	–	–	–	–	–	–		
OP-MPXM046ML	MLZ021T5	G	27	3.021	3.794	4.678	5.680	6.803	8.047	9.411	–	–	–	–	–	–	P00	114X4281
			32	2.781	3.512	4.348	5.294	6.355	7.531	8.820	4.440	2.248	1.97	–	68	37		
			38	2.48	3.159	3.933	4.810	5.794	6.885	8.083	–	–	–	–	–	–		
			43	–	2.852	3.572	4.389	5.306	6.324	7.445	–	–	–	–	–	–		
OP-MPXM057ML	MLZ026T4	E	27	3.575	4.477	5.501	6.652	7.929	9.331	10.849	–	–	–	–	–	–	P00	114X4293
			32	3.281	4.132	5.096	6.179	7.381	8.699	10.128	5.214	2.788	1.87	3.01	68	37		
			38	2.912	3.698	4.588	5.586	6.693	7.909	9.229	–	–	–	–	–	–		
			43	–	3.320	4.144	5.068	6.094	7.223	8.448	–	–	–	–	–	–		
OP-MPXM057ML	MLZ026T5	G	27	3.636	4.551	5.590	6.757	8.051	9.468	11.002	–	–	–	–	–	–	P00	114X4290
			32	3.336	4.199	5.178	6.275	7.492	8.824	10.267	5.298	2.833	1.87	3.02	68	37		
			38	2.960	3.757	4.659	5.670	6.790	8.019	9.350	–	–	–	–	–	–		
			43	–	3.372	4.206	5.141	6.180	7.319	8.555	–	–	–	–	–	–		
OP-MPXM068ML	MLZ030T5	G	27	4.657	5.759	7.057	8.559	10.269	12.191	14.322	–	–	–	–	–	–	P00	114X4308
			32	4.361	5.381	6.589	7.994	9.602	11.415	13.433	6.722	3.117	2.16	3.46	68	37		
			38	4.021	4.938	6.034	7.318	8.798	10.476	12.354	–	–	–	–	–	–		
			43	–	4.579	5.576	6.756	8.124	9.687	11.445	–	–	–	–	–	–		
OP-MPXM068ML	MLZ030T4	E	27	4.693	5.804	7.111	8.624	10.346	12.281	14.426	–	–	–	–	–	–	P00	114X4311
			32	4.395	5.424	6.642	8.057	9.677	11.503	13.534	6.774	2.991	2.27	3.62	68	37		
			38	4.054	4.979	6.084	7.379	8.870	10.561	12.453	–	–	–	–	–	–		
			43	–	4.619	5.625	6.815	8.195	9.770	11.542	–	–	–	–	–	–		
OP-MPXM080ML	MLZ038T5	G	27	5.297	6.531	7.978	9.644	11.533	13.643	15.969	–	–	–	–	–	–	P00	114X4321
			32	4.957	6.097	7.441	8.996	10.767	12.753	14.950	7.601	3.817	1.99	3.22	68	37		
			38	4.568	5.588	6.801	8.217	9.841	11.674	13.713	–	–	–	–	–	–		
			43	–	5.176	6.275	7.570	9.066	10.767	12.669	–	–	–	–	–	–		
OP-MPXM080ML	MLZ038T4	E	27	5.357	6.606	8.069	9.754	11.663	13.796	16.145	–	–	–	–	–	–	P00	114X4324
			32	5.016	6.170	7.530	9.104	10.895	12.904	15.126	7.691	3.546	2.17	3.48	68	37		
			38	4.624	5.659	6.889	8.324	9.969	11.824	13.887	–	–	–	–	–	–		
			43	–	5.245	6.361	7.675	9.193	10.916	12.844	–	–	–	–	–	–		
OP-MPXM108ML	MLZ048T4	E	27	6.935	8.714	10.739	13.021	15.563	18.365	21.418	–	–	–	–	–	–	P00	114X4344
			32	6.269	7.949	9.862	12.019	14.424	17.077	19.972	10.082	5.206	1.94	3.19	68	37		
			38	5.444	7.003	8.777	10.780	13.017	15.490	18.194	–	–	–	–	–	–		
			43	–	6.188	7.844	9.715	11.810	14.131	16.675	–	–	–	–	–	–		
OP-MPXM125ML	MLZ058T4	E	27	8.114	10.135	12.435	15.023	17.903	21.073	24.524	–	–	–	–	–	–	P00	114X4414
			32	7.45	9.356	11.519	13.951	16.659	19.640	22.888	11.766	5.925	1.99	3.18	68	37		
			38	6.624	8.385	10.379	12.621	15.117	17.869	20.873	–	–	–	–	–	–		
			43	–	7.545	9.394	11.473	13.790	16.349	19.147	–	–	–	–	–	–		
OP-MPXM162ML	MLZ076T4	E	27	10.156	12.831	15.872	19.291	23.090	27.263	31.793	–	–	–	–	–	–	P00	114X4434
			32	9.173	11.702	14.573	17.800	21.388	25.332	29.620	14.892	7.845	1.90	3.11	68	37		
			38	7.955	10.300	12.959	15.949	19.278	22.944	26.936	–	–	–	–	–	–		
			43	–	9.092	11.568	14.355	17.463	20.892	24.633	–	–	–	–	–	–		

MBP

(1) G - Compressor 230V/1~/50Hz, fan 230V/1~/50Hz
E - Compressor 400V/3~/50Hz, fan 230V/1~/50Hz
(2) Nominal conditions (EN13215), Evaporating temperatures at dew point, Superheat 10 K, Subcooling 0 K
(3) Rated conditions (EN13215), Evaporating temperature (dew point) -10 °C, Ambient air temperature 32 °C, Return Gas Temperature 20 °C, Subcooling 0 K

SEPR, Seasonal Energy Performance Ratio
Q [kW], Cooling Capacity
P [kW], Power Input

*For regular updates and detailed capacities, please refer to **Coolselector®2** software*

EcoDesign 2018

Technical data and ordering

Optyma™ Plus - R407F - MBP

Performance data

Model	Compressor	Electrical code [1]	Tamb [°C]	Cooling capacity Q [kW] [2] Te [°C] -20	-15	-10	-5	0	5	10	EcoDesign [3] Q [kW]	P [kW]	COP	SEPR	Sound power level dB(A)	Sound pressure level 10 m dB(A)	Version	Code
OP-MPXM034ML	MLZ015T4	E	27	2.441	3.044	3.746	4.555	5.477	6.514	7.669	–	–	–	–	–	–	P00	114X4264
			32	2.25	2.819	3.483	4.250	5.125	6.112	7.213	3.515	1.639	2.14	–	68	37		
			38	–	2.536	3.151	3.864	4.681	5.605	6.638	–	–	–	–	–	–		
			43	–	–	2.861	3.526	4.292	5.161	6.136	–	–	–	–	–	–		
OP-MPXM034ML	MLZ015T5	G	27	2.499	3.115	3.833	4.659	5.598	6.655	7.831	–	–	–	–	–	–	P00	114X4261
			32	2.303	2.884	3.563	4.345	5.237	6.243	7.362	3.596	1.680	2.14	–	68	37		
			38	–	2.594	3.221	3.948	4.780	5.721	6.772	–	–	–	–	–	–		
			43	–	–	2.924	3.602	4.381	5.266	6.257	–	–	–	–	–	–		
OP-MPXM046ML	MLZ021T4	E	27	3.186	3.991	4.910	5.946	7.103	8.380	9.776	–	–	–	–	–	–	P00	114X4284
			32	2.94	3.704	4.574	5.555	6.650	7.860	9.183	4.624	2.390	1.94	–	68	37		
			38	–	3.343	4.151	5.062	6.080	7.207	8.439	–	–	–	–	–	–		
			43	–	–	3.781	4.631	5.583	6.637	7.792	–	–	–	–	–	–		
OP-MPXM046ML	MLZ021T5	G	27	3.243	4.062	4.995	6.047	7.220	8.515	9.928	–	–	–	–	–	–	P00	114X4281
			32	2.993	3.769	4.652	5.647	6.758	7.984	9.322	4.704	2.439	1.93	–	68	37		
			38	–	3.400	4.220	5.144	6.176	7.316	8.563	–	–	–	–	–	–		
			43	–	–	3.842	4.704	5.668	6.734	7.902	–	–	–	–	–	–		
OP-MPXM057ML	MLZ026T4	E	27	3.782	4.724	5.790	6.983	8.302	9.743	11.298	–	–	–	–	–	–	P00	114X4293
			32	3.479	4.370	5.375	6.499	7.742	9.100	10.567	5.445	2.992	1.82	2.98	68	37		
			38	–	3.923	4.852	5.889	7.037	8.293	9.650	–	–	–	–	–	–		
			43	–	–	4.393	5.355	6.421	7.587	–	–	–	–	–	–	–		
OP-MPXM057ML	MLZ026T5	G	27	3.898	4.867	5.960	7.182	8.530	10.000	11.583	–	–	–	–	–	–	P00	114X4290
			32	3.584	4.499	5.530	6.680	7.949	9.333	10.824	5.604	3.095	1.81	2.98	68	37		
			38	–	4.035	4.986	6.047	7.218	8.495	9.873	–	–	–	–	–	–		
			43	–	–	4.510	5.493	6.578	7.764	–	–	–	–	–	–	–		
OP-MPXM068ML	MLZ030T5	G	27	5.011	6.171	7.530	9.097	10.876	12.869	15.074	–	–	–	–	–	–	P00	114X4308
			32	4.713	5.790	7.058	8.527	10.203	12.087	14.178	7.129	3.361	2.12	3.41	69	38		
			38	–	5.344	6.497	7.843	9.389	11.137	13.088	–	–	–	–	–	–		
			43	–	–	6.036	7.275	8.708	10.339	12.168	–	–	–	–	–	–		
OP-MPXM068ML	MLZ030T4	E	27	5.049	6.219	7.588	9.166	10.958	12.964	15.184	–	–	–	–	–	–	P00	114X4311
			32	4.75	5.836	7.115	8.595	10.282	12.180	14.286	7.186	3.224	2.23	3.58	69	38		
			38	–	5.388	6.552	7.909	9.467	11.229	13.194	–	–	–	–	–	–		
			43	–	–	6.089	7.339	8.784	10.429	12.273	–	–	–	–	–	–		
OP-MPXM080ML	MLZ038T5	G	27	5.698	6.996	8.510	10.247	12.208	14.394	16.797	–	–	–	–	–	–	P00	114X4321
			32	5.357	6.559	7.967	9.591	11.433	13.494	15.767	8.059	4.134	1.95	3.16	69	38		
			38	–	6.046	7.321	8.803	10.496	12.400	14.513	–	–	–	–	–	–		
			43	–	–	6.791	8.148	9.710	11.480	13.453	–	–	–	–	–	–		
OP-MPXM080ML	MLZ038T4	E	27	5.713	7.016	8.534	10.277	12.245	14.438	16.850	–	–	–	–	–	–	P00	114X4324
			32	5.372	6.579	7.993	9.623	11.473	13.541	15.824	8.084	3.938	2.05	3.32	69	38		
			38	–	6.067	7.349	8.838	10.539	12.453	14.576	–	–	–	–	–	–		
			43	–	–	6.820	8.185	9.757	11.537	13.522	–	–	–	–	–	–		
OP-MPXM108ML	MLZ048T4	E	27	7.187	9.007	11.068	13.382	15.956	18.789	21.877	–	–	–	–	–	–	P00	114X4344
			32	6.517	8.243	10.196	12.389	14.829	17.517	20.450	10.322	5.568	1.85	3.07	75	44		
			38	–	7.290	9.110	11.154	13.430	15.942	18.687	–	–	–	–	–	–		
			43	–	–	8.169	10.086	12.224	14.588	17.175	–	–	–	–	–	–		
OP-MPXM125ML	MLZ058T4	E	27	8.71	10.842	13.251	15.948	18.937	22.213	25.769	–	–	–	–	–	–	P00	114X4414
			32	8.024	10.040	12.313	14.853	17.667	20.753	24.104	12.456	6.423	1.94	3.13	77	46		
			38	–	9.036	11.138	13.486	16.087	18.941	22.044	–	–	–	–	–	–		
			43	–	–	10.116	12.299	14.719	17.377	20.272	–	–	–	–	–	–		
OP-MPXM162ML	MLZ076T4	E	27	10.814	13.619	16.792	20.344	24.275	28.576	33.225	–	–	–	–	–	–	P00	114X4434
			32	9.803	12.462	15.466	18.827	22.547	26.618	31.020	15.654	8.407	1.86	3.05	77	46		
			38	–	11.009	13.801	16.925	20.383	24.170	28.268	–	–	–	–	–	–		
			43	–	–	12.346	15.263	18.496	22.039	25.877	–	–	–	–	–	–		

MBP

(1) G - Compressor 230V/1~/50Hz, fan 230V/1~/50Hz
E - Compressor 400V/3~/50Hz, fan 230V/1~/50Hz
(2) Nominal conditions (EN13215), Evaporating temperatures at dew point, Superheat 10 K, Subcooling 0 K
(3) Rated conditions (EN13215), Evaporating temperature (dew point) -10 °C, Ambient air temperature 32 °C, Return Gas Temperature 20 °C, Subcooling 0 K

SEPR, Seasonal Energy Performance Ratio
Q [kW], Cooling Capacity
P [kW], Power Input

*For regular updates and detailed capacities, please refer to **Coolselector®2** software*

EcoDesign 2018

Technical data and ordering

Optyma™ **Plus - R404A / R507 - MBP**

Performance data

Model	Compressor	Electrical code [1]	Tamb [°C]	Cooling capacity Q [kW] [2] Te [°C] -20	-15	-10	-5	0	5	10	EcoDesign [3] Q [kW]	P [kW]	COP	SEPR	Sound power level dB(A)	Sound pressure level 10 m dB(A)	Version	Code
OP-MPYM008MY	MLY80RAb	G	27	–	0.756	0.936	1.132	1.345	1.573	–	–	–	–	–	–	–	P00	114X4119
			32	–	0.683	0.848	1.031	1.230	1.446	–	0.888	0.421	2.11	–	60	29		
			38	–	0.596	0.744	0.909	1.092	1.293	–	–	–	–	–	–	–		
			43	–	0.524	0.657	0.808	0.978	1.165	–	–	–	–	–	–	–		
OP-MPYM009MY	MLY90RAb	G	27	–	0.814	1.007	1.217	1.443	1.684	–	–	–	–	–	–	–	P00	114X4120
			32	–	0.737	0.914	1.108	1.319	1.546	–	0.960	0.480	1.99	–	61	30		
			38	–	0.644	0.802	0.978	1.171	1.381	–	–	–	–	–	–	–		
			43	–	0.568	0.709	0.869	1.047	1.244	–	–	–	–	–	–	–		
OP-MPYM012MP	MPT12RA	G	27	–	1.115	1.365	1.631	1.914	2.213	2.526	–	–	–	–	–	–	P00	114X4121
			32	–	1.010	1.239	1.486	1.751	2.033	2.331	1.300	0.646	2.01	–	63	32		
			38	–	0.883	1.089	1.313	1.556	1.817	2.097	–	–	–	–	–	–		
			43	–	0.779	0.964	1.169	1.394	1.638	1.902	–	–	–	–	–	–		
OP-MPYM014MP	MPT14RA	G	27	–	1.130	1.396	1.685	1.999	2.335	2.693	–	–	–	–	–	–	P00	114X4122
			32	–	1.031	1.276	1.546	1.841	2.160	2.502	1.340	0.795	1.69	–	60	29		
			38	–	0.913	1.133	1.380	1.652	1.950	2.274	–	–	–	–	–	–		
			–	–	0.814	1.014	1.241	1.494	1.775	2.084	–	–	–	–	–	–		
OP-MPYM018AJ	CAJ9510Z	G	27	1.184	1.477	1.818	2.209	2.651	3.146	3.694	–	–	–	–	–	–	P00	114X4230
			32	1.078	1.351	1.666	2.024	2.429	2.881	3.382	1.746	0.903	1.93	–	67	36		
			38	–	–	1.480	1.800	2.160	2.561	3.005	–	–	–	–	–	–		
			43	–	–	1.324	1.612	1.933	2.292	2.688	–	–	–	–	–	–		
OP-MPYM024AJ	CAJ9513Z	G	27	–	1.822	2.288	2.820	3.418	4.082	4.808	–	–	–	–	–	–	P00	114X4200
			32	–	1.638	2.067	2.557	3.108	3.720	4.392	2.168	1.045	2.07	–	67	36		
			38	–	1.417	1.804	2.243	2.738	3.288	3.895	–	–	–	–	–	–		
			43	–	1.235	1.586	1.983	2.431	2.930	3.482	–	–	–	–	–	–		
OP-MPYM026AJ	CAJ4517Z	G	27	1.626	2.039	2.517	3.061	3.674	4.356	5.104	–	–	–	–	–	–	P00	114X4212
			32	1.459	1.844	2.285	2.788	3.353	3.982	4.675	2.399	1.172	2.05	–	67	36		
			38	1.259	1.609	2.007	2.459	2.967	3.533	4.159	–	–	–	–	–	–		
			43	–	1.413	1.776	2.185	2.644	3.157	3.728	–	–	–	–	–	–		
OP-MPYM026AJ	TAJ4517Z	E	27	1.595	2.029	2.522	3.078	3.700	4.388	5.141	–	–	–	–	–	–	P00	114X4213
			32	1.416	1.824	2.285	2.802	3.379	4.017	4.717	2.398	1.231	1.95	–	67	36		
			38	1.199	1.575	1.996	2.465	2.987	3.565	4.200	–	–	–	–	–	–		
			43	–	1.368	1.754	2.182	2.657	3.184	3.765	–	–	–	–	–	–		
OP-MPYM034AJ	TAJ4519Z	E	27	2.018	2.526	3.102	3.747	4.461	5.242	6.087	–	–	–	–	–	–	P00	114X4227
			32	1.811	2.287	2.823	3.420	4.079	4.799	5.581	2.970	1.573	1.89	–	67	36		
			38	1.559	1.997	2.484	3.023	3.616	4.264	4.969	–	–	–	–	–	–		
			43	–	1.753	2.199	2.689	3.227	3.815	4.456	–	–	–	–	–	–		
OP-MPYM034AJ	CAJ4519Z	G	27	2.015	2.547	3.147	3.819	4.563	5.376	6.257	–	–	–	–	–	–	P00	114X4226
			32	1.802	2.300	2.859	3.480	4.166	4.916	5.729	3.008	1.650	1.82	–	67	36		
			38	1.544	2.000	2.506	3.065	3.680	4.353	5.085	–	–	–	–	–	–		
			43	–	1.749	2.209	2.715	3.270	3.878	4.541	–	–	–	–	–	–		
OP-MPXM034ML	MLZ015T4	E	27	2.502	3.081	3.734	4.463	5.272	6.158	7.121	–	–	–	–	–	–	P00	114X4264
			32	2.251	2.793	3.398	4.073	4.820	5.640	6.535	3.580	1.693	2.11	–	68	37		
			38	1.926	2.424	2.974	3.584	4.258	5.001	5.814	–	–	–	–	–	–		
			43	1.634	2.095	2.600	3.157	3.772	4.451	5.198	–	–	–	–	–	–		
OP-MPXM034ML	MLZ015T5	G	27	2.591	3.149	3.783	4.496	5.289	6.163	7.122	–	–	–	–	–	–	P00	114X4261
			32	2.373	2.890	3.478	4.142	4.882	5.703	6.608	3.669	1.762	2.08	–	68	37		
			38	2.101	2.569	3.102	3.705	4.383	5.139	5.981	–	–	–	–	–	–		
			43	1.867	2.293	2.780	3.334	3.959	4.662	5.452	–	–	–	–	–	–		
OP-MPXM046ML	MLZ021T4	E	27	3.404	4.124	4.928	5.824	6.815	7.905	9.099	–	–	–	–	–	–	P00	114X4284
			32	3.108	3.772	4.514	5.340	6.257	7.271	8.390	4.778	2.350	2.03	–	68	37		
			38	2.729	3.325	3.990	4.731	5.559	6.482	7.511	–	–	–	–	–	–		
			43	2.392	2.930	3.529	4.199	4.952	5.798	6.754	–	–	–	–	–	–		
OP-MPXM046ML	MLZ021T5	G	27	3.450	4.182	5.004	5.917	6.922	8.018	9.203	–	–	–	–	–	–	P00	114X4281
			32	3.147	3.821	4.578	5.421	6.352	7.371	8.481	4.848	2.435	1.99	–	68	37		
			38	2.762	3.365	4.043	4.800	5.640	6.567	7.586	–	–	–	–	–	–		
			43	2.422	2.964	3.574	4.258	5.022	5.872	6.817	–	–	–	–	–	–		

MBP

(1) G - Compressor 230V/1~/50Hz, fan 230V/1~/50Hz
E - Compressor 400V/3~/50Hz, fan 230V/1~/50Hz
(2) Nominal conditions (EN13215), Evaporating temperatures at dew point, Superheat 10 K, Subcooling 0 K
(3) Rated conditions (EN13215), Evaporating temperature (dew point) -10 °C, Ambient air temperature 32 °C, Return Gas Temperature 20 °C, Subcooling 0 K

SEPR, Seasonal Energy Performance Ratio, Q [kW], Cooling Capacity, P [kW], Power Input

*For regular updates and detailed capacities, please refer to **Coolselector®2** software*

EcoDesign 2018

Technical data and ordering

Optyma™ Plus - R404A / R507 - MBP (count.)

Performance data

Model	Compressor	Electrical code [1]	Tamb [°C]	Cooling capacity Q [kW] [2]							EcoDesign [3]				Sound power level dB(A)	Sound pressure level 10 m dB(A)	Version	Code
				Te [°C]							Q [kW]	P [kW]	COP	SEPR				
				-20	-15	-10	-5	0	5	10								
OP-MPXM057ML	MLZ026T5	G	27	3.973	4.806	5.741	6.777	7.912	9.142	10.467	–	–	–	–	–	–	P00	114X4290
			32	3.619	4.382	5.238	6.189	7.234	8.373	9.609	5.571	3.291	1.69	2.90	68	37		
			38	3.179	3.855	4.615	5.460	6.396	7.424	8.553	–	–	–	–	–	–		
			43	2.795	3.397	4.073	4.830	5.673	6.609	7.650	–	–	–	–	–	–		
OP-MPXM057ML	MLZ026T4	E	27	3.977	4.812	5.749	6.788	7.926	9.162	10.493	–	–	–	–	–	–	P00	114X4293
			32	3.625	4.390	5.249	6.203	7.252	8.397	9.639	5.580	3.164	1.76	3.01	68	37		
			38	3.189	3.868	4.630	5.480	6.420	7.455	8.590	–	–	–	–	–	–		
			43	2.809	3.414	4.094	4.855	5.703	6.645	7.693	–	–	–	–	–	–		
OP-MPXM068ML	MLZ030T5	G	27	5.273	6.446	7.786	9.302	10.997	12.876	14.938	–	–	–	–	–	–	P00	114X4308
			32	4.832	5.927	7.178	8.594	10.182	11.949	13.898	7.568	3.353	2.26	3.66	69	38		
			38	4.283	5.278	6.417	7.709	9.166	10.795	12.606	–	–	–	–	–	–		
			43	3.806	4.714	5.755	6.941	8.284	9.797	11.492	–	–	–	–	–	–		
OP-MPXM068ML	MLZ030T4	E	27	5.271	6.443	7.784	9.300	10.998	12.880	14.945	–	–	–	–	–	–	P00	114X4311
			32	4.832	5.926	7.177	8.594	10.185	11.954	13.907	7.566	3.279	2.31	3.73	69	38		
			38	4.284	5.279	6.418	7.711	9.170	10.803	12.618	–	–	–	–	–	–		
			43	3.809	4.717	5.758	6.945	8.291	9.806	11.506	–	–	–	–	–	–		
OP-MPXM080ML	MLZ038T5	G	27	6.066	7.469	9.041	10.768	12.634	14.626	16.730	–	–	–	–	–	–	P00	114X4321
			32	5.504	6.806	8.273	9.892	11.650	13.536	15.538	8.735	4.027	2.17	3.33	69	38		
			38	4.826	5.992	7.319	8.797	10.415	12.164	14.039	–	–	–	–	–	–		
			43	4.268	5.307	6.506	7.857	9.349	10.976	12.738	–	–	–	–	–	–		
OP-MPXM080ML	MLZ038T4	E	27	6.238	7.571	9.084	10.780	12.662	14.727	16.973	–	–	–	–	–	–	P00	114X4324
			32	5.708	6.948	8.353	9.930	11.682	13.612	15.720	8.822	3.856	2.29	3.71	69	38		
			38	5.026	6.146	7.415	8.842	10.434	12.197	14.137	–	–	–	–	–	–		
			43	4.423	5.435	6.584	7.881	9.335	10.956	12.755	–	–	–	–	–	–		
OP-MPXM108ML	MLZ048T4	E	27	7.856	9.491	11.303	13.308	15.517	17.940	20.584	–	–	–	–	–	–	P00	114X4344
			32	7.147	8.653	10.321	12.168	14.209	16.459	18.932	10.943	5.478	2.00	3.31	75	44		
			38	6.248	7.596	9.087	10.742	12.581	14.623	16.892	–	–	–	–	–	–		
			43	5.457	6.671	8.012	9.504	11.172	13.041	15.144	–	–	–	–	–	–		
OP-MPXM125ML	MLZ058T4	E	27	9.409	11.580	14.000	16.676	19.608	22.795	26.233	–	–	–	–	–	–	P00	114X4414
			32	8.513	10.552	12.820	15.326	18.074	21.068	24.310	13.539	6.214	2.18	3.48	77	46		
			38	7.385	9.257	11.334	13.628	16.149	18.906	21.911	–	–	–	–	–	–		
			43	6.404	8.125	10.034	12.145	14.472	17.028	19.836	–	–	–	–	–	–		
OP-MPXM162ML	MLZ076T4	E	27	12.516	15.012	17.725	20.689	23.929	27.465	31.318	–	–	–	–	–	–	P00	114X4434
			32	11.400	13.616	16.030	18.678	21.592	24.799	28.325	16.975	8.520	1.99	3.23	77	46		
			38	10.034	11.882	13.909	16.158	18.665	21.464	24.592	–	–	–	–	–	–		
			43	8.881	10.396	12.079	13.976	16.130	18.579	21.368	–	–	–	–	–	–		

MBP

(1) G - Compressor 230V/1~/50Hz, fan 230V/1~/50Hz
E - Compressor 400V/3~/50Hz, fan 230V/1~/50Hz
(2) Nominal conditions (EN13215), Evaporating temperatures at dew point, Superheat 10 K, Subcooling 0 K
(3) Rated conditions (EN13215), Evaporating temperature (dew point) -10 °C, Ambient air temperature 32 °C, Return Gas Temperature 20 °C, Subcooling 0 K

SEPR, Seasonal Energy Performance Ratio
Q [kW], Cooling Capacity
P [kW], Power Input

*For regular updates and detailed capacities, please refer to **Coolselector®2** software*

EcoDesign 2018

Technical data and ordering

Optyma™ **Plus**

Ordering

Model number	Compressor Model	Application	Electrical code [1]	Refrigerant [2]	Condenser Coil			Fan		Receiver	Dimensions						Weight		Code no.
					Type	Airflow	Internal Volume	Number	Blade ø	Volume	Housing	Height	Width	Depth	Suction line	Liquid Line	Gross	Net	
						[m³/h]	[dm³]		[mm]	[L]		[mm]			[in]		[Kg]		
OP-LPQM017MPP00G	MPT16LA	LBP	G	Q	A7	2,200	0.41	1	365	1.3	H1	652	906	356	3/8	3/8	65	49	114X3118
OP-LPQM026AJP00G	CAJ2446Z	LBP	G	Q	D7	3,300	0.61	1	450	3.4	H2	813	1055	430	1/2	3/8	97	80	114X3216
OP-LPQM048NTP00G	NTZ048-5	LBP	G	Q	D7	3,300	0.61	1	450	3.4	H2	813	1055	430	5/8	3/8	102	80	114X3225
OP-LPQM048NTP00E	NTZ048-4	LBP	E	Q	D7	3,300	0.61	1	450	3.4	H2	813	1055	430	5/8	3/8	102	80	114X3233
OP-LPQM068NTP00G	NTZ068-5	LBP	G	Q	D7	3,300	0.61	1	450	3.4	H2	813	1055	430	5/8	3/8	102	80	114X3241
OP-LPQM068NTP00E	NTZ068-4	LBP	E	Q	D7	3,300	0.61	1	450	3.4	H2	813	1055	430	5/8	3/8	102	80	114X3249
OP-LPQM074FHP00G	FH2511Z	LBP	G	Q	D7	3,300	0.61	1	450	3.4	H2	813	1055	430	5/8	3/8	111	94	114X3252
OP-LPQM074FHP00E	TFH2511Z	LBP	E	Q	D7	3,300	0.61	1	450	3.4	H2	813	1055	430	5/8	3/8	106	89	114X3253
OP-LPQM096NTP00E	NTZ096-4	LBP	E	Q	G7	5,200	1.69	1	500	6.2	H3	967	1406	481	7/8	1/2	143	107	114X3357
OP-LPQM136NTP00E	NTZ136-4	LBP	E	Q	G7	5,200	1.69	1	500	6.2	H3	967	1406	481	1 1/8	1/2	143	107	114X3365
OP-LPQM215LLP00E	LLZ024T4	LBP	E	Q	J7	9,500	2.03	2	500	10	H4	966	1800	600	1 1/8	3/4	218	169	114X3476
OP-LPQM271LLP00E	LLZ034T4	LBP	E	Q	J7	9,500	2.03	2	500	10	H4	966	1800	600	1 1/8	3/4	218	169	114X3482
OP-MPYM008MYP00G	MLY80RAb	MBP	G	Y	A7	2,200	0.41	1	365	1.3	H1	652	906	356	3/8	1/4	65	49	114X4119
OP-MPYM009MYP00G	MLY90RAb	MBP	G	Y	A7	2,200	0.41	1	365	1.3	H1	652	906	356	3/8	1/4	65	49	114X4120
OP-MPYM012MPP00G	MPT12RA	MBP	G	Y	A7	2,200	0.41	1	365	1.3	H1	652	906	356	3/8	3/8	65	49	114X4121
OP-MPYM014MPP00G	MPT14RA	MBP	G	Y	A7	2,200	0.41	1	365	1.3	H1	652	906	356	3/8	3/8	65	49	114X4122
OP-MPYM024AJP00G	CAJ9513Z	MBP	G	Y	D7	3,300	0.61	1	450	3.4	H2	813	1055	430	1/2	3/8	97	80	114X4200
OP-MPYM026AJP00G	CAJ4517Z	MBP	G	Y	D7	3,300	0.61	1	450	3.4	H2	813	1055	430	1/2	3/8	97	80	114X4212
OP-MPYM026AJP00E	TAJ4517Z	MBP	E	Y	D7	3,300	0.61	1	450	3.4	H2	813	1055	430	1/2	3/8	97	80	114X4213
OP-MPGM033AJP00G	CAJ4511Y	MBP	G	G	D7	3,300	0.61	1	450	3.4	H2	813	1055	430	1/2	3/8	97	80	114X4220
OP-MPYM034AJP00G	CAJ4519Z	MBP	G	Y	D7	3,300	0.61	1	450	3.4	H2	813	1055	430	1/2	3/8	97	80	114X4226
OP-MPYM034AJP00E	TAJ4519Z	MBP	E	Y	D7	3,300	0.61	1	450	3.4	H2	813	1055	430	1/2	3/8	97	80	114X4227
OP-MPYM018AJP00G	CAJ9510Z	MBP	G	Y	D7	3,300	0.61	1	450	3.4	H2	813	1055	430	1/2	3/8	97	80	114X4230
OP-MPXM034MLP00G	MLZ015T5	MBP	G	X	D7	3,300	0.61	1	450	3.4	H2	813	1055	430	3/4	1/2	109	87	114X4261
OP-MPXM034MLP00E	MLZ015T4	MBP	E	X	D7	3,300	0.61	1	450	3.4	H2	813	1055	430	3/4	1/2	109	87	114X4264
OP-MPXM046MLP00G	MLZ021T5	MBP	G	X	D7	3,300	0.61	1	450	3.4	H2	813	1055	430	3/4	1/2	109	87	114X4281
OP-MPXM046MLP00E	MLZ021T4	MBP	E	X	D7	3,300	0.61	1	450	3.4	H2	813	1055	430	3/4	1/2	109	87	114X4284
OP-MPXM057MLP00G	MLZ026T5	MBP	G	X	D7	3,300	0.61	1	450	3.4	H2	813	1055	430	3/4	1/2	109	87	114X4290
OP-MPXM057MLP00E	MLZ026T4	MBP	E	X	D7	3,300	0.61	1	450	3.4	H2	813	1055	430	3/4	1/2	109	87	114X4293
OP-MPXM068MLP00G	MLZ030T5	MBP	G	X	G7	5,200	1.69	1	500	6.2	H3	967	1406	481	7/8	5/8	137	101	114X4308
OP-MPXM068MLP00E	MLZ030T4	MBP	E	X	G7	5,200	1.69	1	500	6.2	H3	967	1406	481	7/8	5/8	137	101	114X4311
OP-MPXM080MLP00G	MLZ038T5	MBP	G	X	G7	5,200	1.69	1	500	6.2	H3	967	1406	481	7/8	5/8	137	101	114X4321
OP-MPXM080MLP00E	MLZ038T4	MBP	E	X	G7	5,200	1.69	1	500	6.2	H3	967	1406	481	7/8	5/8	137	101	114X4324
OP-MPXM108MLP00E	MLZ048T4	MBP	E	X	G7	5,200	1.69	1	500	6.2	H3	967	1406	481	7/8	5/8	137	101	114X4344
OP-MPXM125MLP00E	MLZ058T4	MBP	E	X	J7	9,500	2.03	2	500	10	H4	966	1800	600	1 1/8	3/4	218	169	114X4414
OP-MPXM162MLP00E	MLZ076T4	MBP	E	X	J7	9,500	2.03	2	500	10	H4	966	1800	600	1 1/8	3/4	218	169	114X4434

[1]) G - Compressor 230V/1~/50Hz, fan 230V/1~/50Hz
E - Compressor 400V/3~/50Hz, fan 230V/1~/50Hz

[2]) G - R134a
X - R134a, R404A / R507, R407A, R407F, R449A, R448A
Y - R404A / R507, R449A
Q - R404A / R507, R452A

*For regular updates and detailed capacities, please refer to **Coolselector®2** software*

EcoDesign 2018

Technical data and ordering

Optyma™ **Plus**

Spareparts & accessories - LBP

Designation	LPQM017MP	LPQM026AJ	LPQM048NT	LPQM048NT	LPQM068NT	LPQM068NT	LPQM074FH
Code Number	114X3118	114X3216	114X3225	114X3233	114X3241	114X3249	114X3252
Compressor Description	MPT16LA	CAJ2446Z	NTZ048-5	NTZ048-4	NTZ068-5	NTZ068-4	FH2511Z
Oil	POE32	RL32HA/HT	175PZ-POE	175PZ-POE	175PZ-POE	175PZ-POE	RL32HA/HT
Housing	H1	H2	H2	H2	H2	H2	H2
Spare Parts							
Compressor single pack	123B2127	118U3992	120F0228	120F0226	120F0232	120F0230	118U3914
Condenser	118U3492	118U3493	118U3493	118U3493	118U3493	118U3493	118U3493
Discharge pressure sensor	118U3722	118U3722	118U3722	118U3722	118U3722	118U3722	118U3722
Fan assembly	–	–	–	–	–	–	–
Fan blade	118U3480	118U3481	118U3481	118U3481	118U3481	118U3481	118U3481
Fan capacitor	118U3296	118U3297	118U3297	118U3297	118U3297	118U3297	118U3297
Fan cowl/grill	118U3483	118U3484	118U3484	118U3484	118U3484	118U3484	118U3484
Fan motor	118U3477	118U3823	118U3823	118U3823	118U3823	118U3823	118U3823
Filter drier	023Z5039	023Z5040	023Z5040	023Z5040	023Z5040	023Z5040	023Z5040
High-pressure switch	118U3718	118U3718	118U3718	118U3718	118U3718	118U3718	118U3718
Liquid valve	009G7051	009G7051	009G7051	009G7051	009G7051	009G7051	009G7051
Low-pressure switch	118U3720	118U3720	118U3720	118U3720	118U3720	118U3720	118U3720
Receiver	118U3474	118U3475	118U3475	118U3475	118U3475	118U3475	118U3475
Sight glass	014L0182	014L0172	014L0172	014L0172	014L0172	014L0172	014L0172
Suction pressure sensor	118U3721	118U3721	118U3721	118U3721	118U3721	118U3721	118U3721
Suction valve	009G7051	009G7051	009G7053	009G7053	009G7053	009G7053	009G7053
Electrical Spare Parts							
Crankcase heater	192H2096	192H2096	120Z0459	120Z0459	120Z0459	120Z0459	120Z0459
Optyma™ **Plus** Controller	118U3465	118U3465	118U3465	118U3465	118U3465	118U3465	118U3465
Discharge temperature sensor	084N2007	084N2007	084N2007	084N2007	084N2007	084N2007	084N2007
Suction and ambient temp sensor	084N0003	084N0003	084N0003	084N0003	084N0003	084N0003	084N0003
Contactor kit	118U3845	118U3845	118U3846	118U3845	118U3848	118U3845	118U3845
Door handle	118U3858	118U3858	118U3858	118U3858	118U3858	118U3858	118U3858
Main switch kit	118U3853	118U3851	118U3852	118U3853	118U3854	118U3851	118U3853
Run capacitor	123B9219	118U5191	8173041	–	8173041	–	118U5199
Starting capacitor	123B9316		8173001	–	8173001	–	
Starting relay	123B9151		8173022	–	8173022	–	
Electrical characteristics							
Wiring Diagram	WD7	WD3	WD3	WD5	WD3	WD5	WD3
LRA Compressor [A]	19	29	37	16	53	25	81
MCC Compressor [A]	4	7.9	11	5	17	8.4	24
Max cont.power [kW]	0.89	1.31	2.19	2	3.62	3.57	3.45
MCC Fan [A]	0.32	0.47	0.47	0	0.47	0.47	0.47
Fan Power [W]	1x25	1x68	1x68	1x68	1x68	1x68	1x68
Min Fuse rating gL/gG (A)	10	16	20	10	25	16	32
Accessories (not premounted)							
Acoustic hood	–	–	120Z575	120Z575	120Z575	120Z575	–
Adap-Kool Accessories							
External Diplay & settings	084B8575	084B8575	084B8575	084B8575	084B8575	084B8575	084B8575
Cable for EKA Displays 6 m	084B7299	084B7299	084B7299	084B7299	084B7299	084B7299	084B7299
Mounting kit for EKA Display	084B8584	084B8584	084B8584	084B8584	084B8584	084B8584	084B8584
MODBUS Communication Module	084B8571	084B8571	084B8571	084B8571	084B8571	084B8571	084B8571
Lon-Bus Communication Module	084B8579	084B8579	084B8579	084B8579	084B8579	084B8579	084B8579
Programming Key	084B8582	084B8582	084B8582	084B8582	084B8582	084B8582	084B8582
Sheet Metal							
Top Panel	118U5121	118U5126	118U5126	118U5126	118U5126	118U5126	118U5126
Fan Panel	118U5122	118U5127	118U5127	118U5127	118U5127	118U5127	118U5127
Back Panel	118U5123	118U5128	118U5128	118U5128	118U5128	118U5128	118U5128
Front Panel	118U5124	118U5129	118U5129	118U5129	118U5129	118U5129	118U5129
Access Panel	118U5125	118U5130	118U5130	118U5130	118U5130	118U5130	118U5130
Left side Panel	118U5163	118U5164	118U5164	118U5164	118U5164	118U5164	118U5164
Fan Panel (LH)	–	–	–	–	–	–	–
Fan Panel (RH)	–	–	–	–	–	–	–

MCC - *Max Continuous Current*
LRA - *Locked Rotor Amps*
MCA - *Minimum Circuit Ampacity*

Technical data and ordering

Optyma™ **Plus (count.)**

Spareparts & accessories - LBP

Designation	LPQM074FH	LPQM096NT	LPQM136NT	LPQM215LL	LPQM271LL
Code Number	114X3253	114X3357	114X3365	114X3476	114X3482
Compressor Description	TFH2511Z	NTZ096-4	NTZ136-4	LLZ024T4	LLZ034T4
Oil	RL32HA/HT	175PZ-POE	175PZ-POE	215PZ-POE46	215PZ-POE46
Housing	H2	H3	H3	H4	H4
Spare Parts					
Compressor single pack	118U3915	120F0234	120F0236	121L9541	121L9543
Condenser	118U3493	118U3494	118U3494	118U3717	118U3717
Discharge pressure sensor	118U3722	118U3722	118U3722	118U3722	118U3722
Fan assembly	–	118U3829	118U3829	118U3829	118U3829
Fan blade	118U3481	–	–	–	–
Fan capacitor	118U3297	–	–	–	–
Fan cowl/grill	118U3484	118U3485	118U3485	118U3485	118U3485
Fan motor	118U3823	–	–	–	–
Filter drier	023Z5040	023Z5044	023Z5044	023Z5046	023Z5046
High-pressure switch	118U3718	118U3718	118U3718	118U3718	118U3718
Liquid valve	009G7051	009G7052	009G7052	009G7054	009G7054
Low-pressure switch	118U3720	118U3720	118U3720	118U3720	118U3720
Receiver	118U3475	118U3476	118U3476	118U3716	118U3716
Sight glass	014L0172	014L0173	014L0173	014L0175	014L0175
Suction pressure sensor	118U3721	118U3721	118U3721	118U3721	118U3721
Suction valve	009G7053	009G7055	009G7056	009G7056	009G7056
Electrical Spare Parts					
Crankcase heater	120Z0459	120Z0459	120Z0459	120Z5040	120Z5040
Optyma™ **Plus** Controller	118U3465	118U3465	118U3465	118U3465	118U3465
Discharge temperature sensor	084N2007	084N2007	084N2007	084N2007	084N2007
Suction and ambient temp sensor	084N0003	084N0003	084N0003	084N0003	084N0003
Contactor kit	118U3845	118U3846	118U3847	118U3848	118U3848
Door handle	118U3858	118U3858	118U3858	118U3858	118U3858
Main switch kit	118U3853	118U3851	118U3852	118U3856	118U3856
Run capacitor	–	–	–	–	–
Starting capacitor	–	–	–	–	–
Starting relay	–	–	–	–	–
Electrical characteristics					
Wiring Diagram	WD5	WD5	WD5	WD6	WD6
LRA Compressor [A]	28	32	51	95	150
MCC Compressor [A]	7.2	10.1	14.3	21	26
Max cont.power [kW]	3.34	4.53	6.87	7.96	11.1
MCC Fan [A]	0.47	0.97	0.97	2x0.97	2x0.97
Fan Power [W]	1x68	1x130	1x130	2x130	2x130
Min Fuse rating gL/gG (A)	16	16	20	32	40
Accessories (not premounted)					
Acoustic hood		120Z576	120Z576	120Z5053	120Z5055
Adap-Kool Accessories					
External Diplay & settings	084B8575	084B8575	084B8575	084B8575	084B8575
Cable for EKA Displays 6 m	084B7299	084B7299	084B7299	084B7299	084B7299
Mounting kit for EKA Display	084B8584	084B8584	084B8584	084B8584	084B8584
MODBUS Communication Module	084B8571	084B8571	084B8571	084B8571	084B8571
Lon-Bus Communication Module	084B8579	084B8579	084B8579	084B8579	084B8579
Programming Key	084B8582	084B8582	084B8582	084B8582	084B8582
Sheet Metal					
Top Panel	118U5126	118U5131	118U5131	118U5136	118U5136
Fan Panel	118U5127	118U5132	118U5132	–	–
Back Panel	118U5128	118U5133	118U5133	118U5139	118U5139
Front Panel	118U5129	118U5134	118U5134	–	–
Access Panel	118U5130	118U5135	118U5135	118U5140	118U5140
Left side Panel	118U5164	118U5165	118U5165	118U5166	118U5166
Fan Panel (LH)	–	–	–	118U5137	118U5137
Fan Panel (RH)	–	–	–	118U5138	118U5138

MCC - *Max Continuous Current*
LRA - *Locked Rotor Amps*
MCA - *Minimum Circuit Ampacity*

Technical data and ordering

Optyma™ **Plus (count.)**

Spareparts & accessories - MBP

Designation	MPYM008MY	MPYM009MY	MPYM012MP	MPYM014MP	MPYM024AJ	MPYM026AJ	MPYM026AJ	MPGM033AJ	MPYM034AJ
Code Number	114X4119	114X4120	114X4121	114X4122	114X4200	114X4212	114X4213	114X4220	114X4226
Compressor Description	MLY80RAb	MLY90RAb	MPT12RA	MPT14RA	CAJ9513Z	CAJ4517Z	TAJ4517Z	CAJ4511Y	CAJ4519Z
Oil	POE32	POE32	POE32	POE32	RL32HA/HT	RL32HA/HT	RL32HA/HT	RL32HA/HT	RL32HA/HT
Housing	H1	H1	H1	H1	H2	H2	H2	H2	H2
Spare Parts									
Compressor single pack	123B2510	123B2514	123B2518	123B2704	118U3995	118U3993	118U3991	118U3996	118U3994
Condenser	118U3492	118U3492	118U3492	118U3492	118U3493	118U3493	118U3493	118U3493	118U3493
Discharge pressure sensor	118U3722	118U3722	118U3722	118U3722	118U3722	118U3722	118U3722	118U3722	118U3722
Fan assembly	–	–	–	–	–	–	–	–	–
Fan blade	118U3480	118U3480	118U3480	118U3480	118U3481	118U3481	118U3481	118U3481	118U3481
Fan capacitor	118U3296	118U3296	118U3296	118U3296	118U3297	118U3297	118U3297	118U3297	118U3297
Fan cowl/grill	118U3483	118U3483	118U3483	118U3483	118U3484	118U3484	118U3484	118U3484	118U3484
Fan motor	118U3477	118U3477	118U3477	118U3477	118U3823	118U3823	118U3823	118U3823	118U3823
Filter drier	023Z5039	023Z5040	023Z5040	023Z5040	023Z5040	023Z5040	023Z5040	023Z5041	023Z5040
High-pressure switch	118U3718	118U3718	118U3718	118U3718	118U3718	118U3718	118U3718	118U3718	118U3718
Liquid valve	009G7050	009G7050	009G7051	009G7051	009G7022	009G7022	009G7022	009G7022	009G7022
Low-pressure switch	118U3720	118U3720	118U3720	118U3720	118U3720	118U3720	118U3720	118U3720	118U3720
Receiver	118U3474	118U3474	118U3474	118U3474	118U3475	118U3475	118U3475	118U3475	118U3475
Sight glass	014L0181	014L0181	014L0181	014L0181	014L0172	014L0172	014L0172	014L0172	014L0172
Suction pressure sensor	118U3721	118U3721	118U3721	118U3721	118U3721	118U3721	118U3721	118U3721	118U3721
Suction valve	009G7051	009G7051	009G7051	009G7051	009G7021	009G7021	009G7021	009G7021	009G7021
Electrical Spare Parts									
Crankcase heater	192H2096	192H2096	192H2096	192H2096	192H2096	192H2096	192H2096	192H2096	192H2096
Optyma™ Plus Controller	118U3465	118U3465	118U3465	118U3465	118U3465	118U3465	118U3465	118U3465	118U3465
Discharge temperature sensor	084N2007	084N2007	084N2007	084N2007	084N2007	084N2007	084N2007	084N2007	084N2007
Suction and ambient temp sensor	084N0003	084N0003	084N0003	084N0003	084N0003	084N0003	084N0003	084N0003	084N0003
Contactor kit	118U3845	118U3845	118U3845	118U3845	118U3845	118U3846	118U3845	118U3845	118U3847
Door handle	118U3858	118U3858	118U3858	118U3858	118U3858	118U3858	118U3858	118U3858	118U3858
Main switch kit	118U3853	118U3853	118U3853	118U3853	118U3851	118U3851	118U3851	118U3851	118U3852
Run capacitor	123B9315	123B9315	123B9315	123B9315			–		
Starting capacitor	123B9222	123B9222	123B9215	123B9226	118U5198	118U5195	–	118U5194	118U5196
Starting relay	123B9133	123B9133	123B9151	123B9139			–		
Electrical Characteristics									
Wiring Diagram	WD7	WD7	WD7	WD7	WD3	WD3	WD2	WD3	WD3
LRA Compressor [A]	14	17	18.5	21	33.5	38.5	18	30	45
MCC Compressor [A]	4.9	5.3	5.3	6.5	10.2	12.7	4	8.9	15.2
Max cont.power [kW]	0.55	0.62	0.84	1.03	1.75	1.96	2.05	1.5	2.7
MCC Fan [A]	0.32	0.32	0.32	0.32	0.47	0.47	0.47	0.47	0.47
Fan Power [W]	1x25	1x25	1x25	1x25	1x68	1x68	1x68	1x68	1x68
Min Fuse rating gL/gG (A)	10	10	10	16	20	20	10	16	20
Accessories (Not Premounted)									
Acoustic hood	–	–	–	–	–	–	–	–	–
Adap-Kool Accessories									
External Diplay & settings	084B8575	084B8575	084B8575	084B8575	084B8575	084B8575	084B8575	084B8575	084B8575
Cable for EKA Displays 6 m	084B7299	084B7299	084B7299	084B7299	084B7299	084B7299	084B7299	084B7299	084B7299
Mounting kit for EKA Display	084B8584	084B8584	084B8584	084B8584	084B8584	084B8584	084B8584	084B8584	084B8584
MODBUS Communication Module	084B8571	084B8571	084B8571	084B8571	084B8571	084B8571	084B8571	084B8571	084B8571
Lon-Bus Communication Module	084B8579	084B8579	084B8579	084B8579	084B8579	084B8579	084B8579	084B8579	084B8579
Programming Key	084B8582	084B8582	084B8582	084B8582	084B8582	084B8582	084B8582	084B8582	084B8582
Sheet Metal									
Top Panel	118U5121	118U5121	118U5121	118U5121	118U5126	118U5126	118U5126	118U5126	118U5126
Fan Panel	118U5122	118U5122	118U5122	118U5122	118U5127	118U5127	118U5127	118U5127	118U5127
Back Panel	118U5123	118U5123	118U5123	118U5123	118U5128	118U5128	118U5128	118U5128	118U5128
Front Panel	118U5124	118U5124	118U5124	118U5124	118U5129	118U5129	118U5129	118U5129	118U5129
Access Panel	118U5125	118U5125	118U5125	118U5125	118U5130	118U5130	118U5130	118U5130	118U5130
Left side Panel	118U5163	118U5163	118U5163	118U5163	118U5164	118U5164	118U5164	118U5164	118U5164
Fan Panel (LH)	–	–	–	–	–	–	–	–	–
Fan Panel (RH)	–	–	–	–	–	–	–	–	–

MCC - *Max Continuous Current*
LRA - *Locked Rotor Amps*
MCA - *Minimum Circuit Ampacity*

Technical data and ordering

Optyma™ **Plus (count.)**

Spareparts & accessories - MBP

Designation	MPYM034AJ	MPYM018AJ	MPXM034ML	MPXM034ML	MPXM046ML	MPXM046ML	MPXM057ML	MPXM057ML	MPXM068ML
Code Number	114X4227	114X4230	114X4261	114X4264	114X4281	114X4284	114X4290	114X4293	114X4308
Compressor Description	TAJ4519Z	CAJ9510Z	MLZ015T5	MLZ015T4	MLZ021T5	MLZ021T4	MLZ026T5	MLZ026T4	MLZ030T5
Oil	RL32HA/HT	RL32HA/HT	215PZ-POE46	215PZ-POE46	215PZ-POE46	215PZ-POE46	215PZ-POE46	215PZ-POE46	215PZ-POE46
Housing	H2	H2	H2	H2	H2	H2	H2	H2	H3
Spare Parts									
Compressor single pack	118U3989	118U3988	121L8631	121L8629	121L8635	121L8633	121L8639	121L8637	121L8643
Condenser	118U3493	118U3493	118U3493	118U3493	118U3493	118U3493	118U3493	118U3493	118U3494
Discharge pressure sensor	118U3722	118U3722	118U3722	118U3722	118U3722	118U3722	118U3722	118U3722	118U3722
Fan assembly	–	–	–	–	–	–	–	–	118U3829
Fan blade	118U3481	118U3481	118U3481	118U3481	118U3481	118U3481	118U3481	118U3481	–
Fan capacitor	118U3297	118U3297	118U3297	118U3297	118U3297	118U3297	118U3297	118U3297	–
Fan cowl/grill	118U3484	118U3484	118U3484	118U3484	118U3484	118U3484	118U3484	118U3484	118U3485
Fan motor	118U3823	118U3823	118U3823	118U3823	118U3823	118U3823	118U3823	118U3823	
Filter drier	023Z5040	023Z5041	023Z5041	023Z5041	023Z5041	023Z5041	023Z5041	023Z5041	023Z5045
High-pressure switch	118U3718	118U3718	118U3718	118U3718	118U3718	118U3718	118U3718	118U3718	118U3718
Liquid valve	009G7022	009G7022	009G7052	009G7052	009G7052	009G7052	009G7052	009G7052	009G7053
Low-pressure switch	118U3720	118U3720	118U3720	118U3720	118U3720	118U3720	118U3720	118U3720	118U3720
Receiver	118U3475	118U3475	118U3475	118U3475	118U3475	118U3475	118U3475	118U3475	118U3476
Sight glass	014L0172	014L0172	014L0173	014L0173	014L0173	014L0173	014L0173	014L0173	014L0174
Suction pressure sensor	118U3721	118U3721	118U3721	118U3721	118U3721	118U3721	118U3721	118U3721	118U3721
Suction valve	009G7021	009G7021	009G7054	009G7054	009G7054	009G7054	009G7054	009G7054	009G7055
Electrical Spare Parts									
Crankcase heater	192H2096	192H2096	120Z5040	120Z5040	120Z5040	120Z5040	120Z5040	120Z5040	120Z5040
Optyma™ Plus Controller	118U3465	118U3465	118U3465	118U3465	118U3465	118U3465	118U3465	118U3465	118U3465
Discharge temperature sensor	084N2007	084N2007	084N2007	084N2007	084N2007	084N2007	084N2007	084N2007	084N2007
Suction and ambient temp sensor	084N0003	084N0003	084N0003	084N0003	084N0003	084N0003	084N0003	084N0003	084N0003
Contactor kit	118U3847	118U3845	118U3848	118U3845	118U3848	118U3846	118U3849	118U3846	118U3849
Door handle	118U3858	118U3858	118U3858	118U3858	118U3858	118U3858	118U3858	118U3858	118U3858
Main switch kit	118U3852	118U3851	118U3854	118U3851	118U3856	118U3852	118U3856	118U3852	118U3857
Run capacitor	–		8173231	–	120Z0051	–	120Z0051	–	8173233
Starting capacitor	–	118U5197	120Z0399	–	120Z0399	–	120Z0399	–	120Z0040
Starting relay	–		120Z0393	–	120Z0393	–	120Z0393	–	120Z0394
Electrical Characteristics									
Wiring Diagram	WD2	WD2	WD4	WD5	WD4	WD5	WD4	WD5	WD4
LRA Compressor [A]	30	30	60	30	97	45	97	45	127
MCC Compressor [A]	7	8	19	7	25	9.5	26	10	32
Max cont.power [kW]	2.73	1.3	2.53	2.73	3.38	3.33	4.42	4.14	4.89
MCC Fan [A]	0.47	0.47	0.47	0.47	0.47	0.47	0.47	0.47	0.97
Fan Power [W]	1x68	1x68	1x68	1x68	1x68	1x68	1x68	1x68	1x130
Min Fuse rating gL/gG (A)	10	16	25	16	40	20	40	20	50
Accessories (Not Premounted)									
Acoustic hood	–	–	120Z5043	120Z5043	120Z5043	120Z5043	120Z5043	120Z5043	120Z5044
Adap-Kool Accessories									
External Diplay & settings	084B8575	084B8575	084B8575	084B8575	084B8575	084B8575	084B8575	084B8575	084B8575
Cable for EKA Displays 6 m	084B7299	084B7299	084B7299	084B7299	084B7299	084B7299	084B7299	084B7299	084B7299
Mounting kit for EKA Display	084B8584	084B8584	084B8584	084B8584	084B8584	084B8584	084B8584	084B8584	084B8584
MODBUS Communication Module	084B8571	084B8571	084B8571	084B8571	084B8571	084B8571	084B8571	084B8571	084B8571
Lon-Bus Communication Module	084B8579	084B8579	084B8579	084B8579	084B8579	084B8579	084B8579	084B8579	084B8579
Programming Key	084B8582	084B8582	084B8582	084B8582	084B8582	084B8582	084B8582	084B8582	084B8582
Sheet Metal									
Top Panel	118U5126	118U5126	118U5126	118U5126	118U5126	118U5126	118U5126	118U5126	118U5131
Fan Panel	118U5127	118U5127	118U5127	118U5127	118U5127	118U5127	118U5127	118U5127	118U5132
Back Panel	118U5128	118U5128	118U5128	118U5128	118U5128	118U5128	118U5128	118U5128	118U5133
Front Panel	118U5129	118U5129	118U5129	118U5129	118U5129	118U5129	118U5129	118U5129	118U5134
Access Panel	118U5130	118U5130	118U5130	118U5130	118U5130	118U5130	118U5130	118U5130	118U5135
Left side Panel	118U5164	118U5164	118U5164	118U5164	118U5164	118U5164	118U5164	118U5164	118U5165
Fan Panel (LH)	–	–	–	–	–	–	–	–	–
Fan Panel (RH)	–	–	–	–	–	–	–	–	–

MCC - *Max Continuous Current*
LRA - *Locked Rotor Amps*
MCA - *Minimum Circuit Ampacity*

Technical data and ordering

Optyma™ **Plus (count.)**

Spareparts & accessories - MBP

Designation	MPXM068ML	MPXM080ML	MPXM080ML	MPXM108ML	MPXM125ML	MPXM162ML
Code Number	114X4311	114X4321	114X4324	114X4344	114X4414	114X4434
Compressor Description	MLZ030T4	MLZ038T5	MLZ038T4	MLZ048T4	MLZ058T4	MLZ076T4
Oil	215PZ-POE46	215PZ-POE46	215PZ-POE46	215PZ-POE46	215PZ-POE46	215PZ-POE46
Housing	H3	H3	H3	H3	H4	H4
Spare Parts						
Compressor single pack	121L8641	121L8647	121L8645	121L8651	121L8653	121L8655
Condenser	118U3494	118U3494	118U3494	118U3494	118U3717	118U3717
Discharge pressure sensor	118U3722	118U3722	118U3722	118U3722	118U3722	118U3722
Fan assembly	118U3829	118U3829	118U3829	118U3829	118U3829	118U3829
Fan blade	–	–	–	–	–	–
Fan capacitor	–	–	–	–	–	–
Fan cowl/grill	118U3485	118U3485	118U3485	118U3485	118U3485	118U3485
Fan motor						
Filter drier	023Z5045	023Z5045	023Z5045	023Z5045	023Z5046	023Z5046
High-pressure switch	118U3718	118U3718	118U3718	118U3718	118U3718	118U3718
Liquid valve	009G7053	009G7053	009G7053	009G7053	009G7054	009G7054
Low-pressure switch	118U3720	118U3720	118U3720	118U3720	118U3720	118U3720
Receiver	118U3476	118U3476	118U3476	118U3476	118U3716	118U3716
Sight glass	014L0174	014L0174	014L0174	014L0174	014L0175	014L0175
Suction pressure sensor	118U3721	118U3721	118U3721	118U3721	118U3721	118U3721
Suction valve	009G7055	009G7055	009G7055	009G7055	009G7056	009G7056
Electrical Spare Parts						
Crankcase heater	120Z5040	120Z5040	120Z5040	120Z5040	120Z5040	120Z5040
Optyma™ Plus Controller	118U3465	118U3465	118U3465	118U3465	118U3465	118U3465
Discharge temperature sensor	084N2007	084N2007	084N2007	084N2007	084N2007	084N2007
Suction and ambient temp sensor	084N0003	084N0003	084N0003	084N0003	084N0003	084N0003
Contactor kit	118U3847	118U3850	118U3847	118U3848	118U3847	118U3848
Door handle	118U3858	118U3858	118U3858	118U3858	118U3858	118U3858
Main switch kit	118U3852	118U3857	118U3852	118U3854	118U3855	118U3856
Run capacitor	–	8173234	–	–	–	–
Starting capacitor	–	8173001	–	–	–	–
Starting relay	–	120Z0395	–	–	–	–
Electrical Characteristics						
Wiring Diagram	WD5	WD4	WD5	WD5	WD6	WD6
LRA Compressor [A]	60	130	70	87	95	140
MCC Compressor [A]	13	38	15	16	20	25
Max cont.power [kW]	4.88	5.77	5.78	7.55	9.39	11.41
MCC Fan [A]	0.97	0.47	0.97	0.97	2x0.97	2x0.97
Fan Power [W]	1x130	1x130	1x130	1x130	1x130	1x130
Min Fuse rating gL/gG (A)	20	50	20	25	32	40
Accessories (Not Premounted)						
Acoustic hood	120Z5044	120Z5044	120Z5044	120Z5044	120Z5045	120Z5045
Adap-Kool Accessories						
External Diplay & settings	084B8575	084B8575	084B8575	084B8575	084B8575	084B8575
Cable for EKA Displays 6 m	084B7299	084B7299	084B7299	084B7299	084B7299	084B7299
Mounting kit for EKA Display	084B8584	084B8584	084B8584	084B8584	084B8584	084B8584
MODBUS Communication Module	084B8571	084B8571	084B8571	084B8571	084B8571	084B8571
Lon-Bus Communication Module	084B8579	084B8579	084B8579	084B8579	084B8579	084B8579
Programming Key	084B8582	084B8582	084B8582	084B8582	084B8582	084B8582
Sheet Metal						
Top Panel	118U5131	118U5131	118U5131	118U5131	118U5136	118U5136
Fan Panel	118U5132	118U5132	118U5132	118U5132	–	–
Back Panel	118U5133	118U5133	118U5133	118U5133	118U5139	118U5139
Front Panel	118U5134	118U5134	118U5134	118U5134	–	–
Access Panel	118U5135	118U5135	118U5135	118U5135	118U5140	118U5140
Left side Panel	118U5165	118U5165	118U5165	118U5165	118U5166	118U5166
Fan Panel (LH)	–	–	–	–	118U5137	118U5137
Fan Panel (RH)	–	–	–	–	118U5138	118U5138

MCC - *Max Continuous Current*
LRA - *Locked Rotor Amps*
MCA - *Minimum Circuit Ampacity*

Technical data and ordering

Optyma™ **Plus**

Spare parts & accessories list

Component type	Component description	Additional informations	Component code
Acoustic Hood	ACOUSTIC HOOD COMP 1CYL		120Z0575
Acoustic Hood	ACCOUSTIC HOOD - SMALL FRAME		120Z5043
Acoustic Hood	Acoustic hood for Scroll MLZ compressor		120Z5044
Acoustic Hood	ACCOUSTIC HOOD, LARGE FRAME		120Z5045
Acoustic Hood	Sound Cover, LLZ013-018		120Z5052
Cable for EKA Displays 6 m	EKA Accessory		084B7299
Capacitor	CAPACITOR 100µF 330V+R		8173001
Capacitor	CAPACITOR 30µF 450V		8173041
Compressor Single Pack	TAJ4519Z - AJ1 range	Phased out & replaced by 118U3989 from SN: 054428CG3916	118U3751
Compressor Single Pack	TAJ4517Z - AJ1 range	Phased out & replaced by 118U3991 from SN: 054428CG3916	118U3770
Compressor Single Pack	CAJ2446Z - AJ1 range	Phased out & replaced by 118U3992 from SN: 054428CG3916	118U3779
Compressor Single Pack	CAJ4517Z - AJ1 range	Phased out & replaced by 118U3993 from SN: 054428CG3916	118U3810
Compressor Single Pack	CAJ4519Z - AJ1 range	Phased out & replaced by 118U3994 from SN: 054428CG3916	118U3811
Compressor Single Pack	CAJ9513Z - AJ1 range	Phased out & replaced by 118U3995 from SN: 054428CG3916	118U3912
Compressor Single Pack	FH2511Z		118U3914
Compressor Single Pack	TFH2511Z		118U3915
Compressor Single Pack	CAJ9510Z - AJ2 range		118U3988
Compressor Single Pack	TAJ4519Z - AJ2 range		118U3989
Compressor Single Pack	TAJ4517Z - AJ2 range		118U3991
Compressor Single Pack	CAJ2446Z - AJ2 range		118U3992
Compressor Single Pack	CAJ4517Z - AJ2 range		118U3993
Compressor Single Pack	CAJ4519Z - AJ2 range		118U3994
Compressor Single Pack	CAJ9513Z - AJ2 range		118U3995
Compressor Single Pack	CAJ4511Y - AJ2 range		118U3996
Compressor Single Pack	NTZ048-4LR1B		120F0226
Compressor Single Pack	NTZ048-5LR1B		120F0228
Compressor Single Pack	NTZ068-4LR1B		120F0230
Compressor Single Pack	NTZ068-5LR1B		120F0232
Compressor Single Pack	NTZ096A4LR1B		120F0234
Compressor Single Pack	NTZ136A4LR1B		120F0236
Compressor Single Pack	MLZ015T4LP9A		121L8629
Compressor Single Pack	MLZ015T5LP9A		121L8631
Compressor Single Pack	MLZ021T4LP9A		121L8633
Compressor Single Pack	MLZ021T5LP9A		121L8635
Compressor Single Pack	MLZ026T4LP9A		121L8637
Compressor Single Pack	MLZ026T5LP9A		121L8639
Compressor Single Pack	MLZ030T4LC9A		121L8641
Compressor Single Pack	MLZ030T5LC9A		121L8643
Compressor Single Pack	MLZ038T4LC9A		121L8645
Compressor Single Pack	MLZ038T5LC9A		121L8647
Compressor Single Pack	MLZ048T4LC9A		121L8651
Compressor Single Pack	MLZ058T4LC9A		121L8653
Compressor Single Pack	MLZ076T4LC9A		121L8655
Compressor Single Pack	LLZ024T4LQ9A		121L9541
Compressor Single Pack	LLZ034T4LQ9A		121L9543
Compressor Single Pack	MPT16LA		123B2127
Compressor Single Pack	MLY80RAb		123B2510
Compressor Single Pack	MLY90RAb		123B2514
Compressor Single Pack	MPT12RA		123B2518
Compressor Single Pack	MPT14RA		123B2704
Compressor Single Pack	SC12MLX	CU phased out but spare part still available	195B0323
Compressor Single Pack	SC18CLX.2	CU phased out but spare part still available	195B0332
Compressor Single Pack	SC10MLX	CU phased out but spare part still available	195B0345
Compressor Single Pack	SC15MLX	CU phased out but spare part still available	195B0391
Compressor Single Pack	GS26CLX	CU phased out but spare part still available	195B0427
Compressor Single Pack	GS34MFX	CU phased out but spare part still available	195B0435
Compressor Single Pack	GS34MLX	CU phased out but spare part still available	195B0438
Compressor Single Pack	NF7MLX	CU phased out but spare part still available	195B0443
Compressor Single Pack	SC18MLX	CU phased out but spare part still available	195B0624
Condenser	A7		118U3492
Condenser	D7		118U3493
Condenser	G7		118U3494
Condenser	J7		118U3717

Technical data and ordering

Optyma™ **Plus (count.)**

Spare parts & accessories list

Component type	Component description	Additional informations	Component code
Contactor kit	A 9-30-01-80, DILM07-01, DILM09-01		118U3845
Contactor kit	A12-30-01-80, DILM12-01		118U3846
Contactor kit	A 16-30-01-80, DILM15-01		118U3847
Contactor kit	A 26-30-01-80, DILM17-01		118U3848
Contactor kit	A 30-30-01-80, DILM25-01		118U3849
Contactor kit	A 50-30-00-80, DILM32-01		118U3850
Crankcase heater	Belt type, 50 W, 230 V, CE mark, UL		120Z0057
Crankcase heater	PTC heater 27 W, CE mark, UL		120Z0459
Crankcase heater	Belt type, 70 W, 240 V, CE mark, UL		120Z5040
Crankcase heater	CRANKCASE HEATER 55W	192H2096 Phased out Use 118U0051	118U0051
Discharge pressure sensor	AKS 32R 0...32 bar		118U3722
Discharge temperature sensor	AKS21A		084N2007
Door handle	Door handle, ABB-OHB2AJM,MSMN,OXS5X131		118U3858
External Diplay & settings	EKA164B		084B8575
Fan assembly	Fan assembly		118U3829
Fan blade	Fan blade		118U3480
Fan blade	Fan blade		118U3481
Fan capacitor	1,8 µF		118U3296
Fan capacitor	3,5 µF		118U3297
Fan cowl/grill	Ã¸ 356 mm		118U3483
Fan cowl/grill	Ã¸ 457 mm		118U3484
Fan cowl/grill	Ã¸ 609 mm		118U3485
Fan motor (Capacitor not included)	25 W		118U3477
Fan motor (Capacitor not included)	68 W		118U3823
Filter drier	DML082		023Z5039
Filter drier	DML083		023Z5040
Filter drier	DML084		023Z5041
Filter drier	DML164		023Z5044
Filter drier	DML165		023Z5045
Filter drier	DML 166		023Z5046
High-pressure switch	ACB-2UB463W		118U3718
Liquid valve	GBC 6s Ball Valve M/25		009G7050
Liquid valve	GBC 10s		009G7051
Liquid valve	GBC 12s Ball Valve M/25		009G7052
Liquid valve	Liquid line valve		009G7053
Liquid valve	Suction line valve		009G7054
Lon-Bus COM Module	EKA175		084B8579
Low-pressure switch	ACB-2UA418W		118U3720
Main switch kit	MS132 - 25		118U3855
Main switch kit	MS132 - 32		118U3856
Main switch kit	MS450 - 40		118U3857
MODBUS COM Module	EKA178B		084B8571
Mounting kit for EKA Display	EKA Accessory		084B8584
MPCB	MPCB, ABB-MS116-10+HK1-12		118U3851
MPCB	MPCB, ABB-MS116-16+HK1-12		118U3852
MPCB	MPCB, ABB-MS116-6.3+HK1-12		118U3853
MPCB	MPCB, ABB-MS132-20+HK1-12		118U3854
Oil	POE32 for Light Commercial (MLY / MPT)		–
Oil	RL32HA/HT for light Commercial (CAJ/FH/TAJ/TFH)		–
Oil	1 litre can of 175PZ - POE (NTZ Platform)	CU with a SN above 051220CG3016	120Z0638
Oil	2,5 litre can of 175PZ - POE (NTZ Platform)	CU with a SN above 051220CG3016	120Z0639
Oil	1 litre can of 215PZ - POE46 (MLZ & LLZ Platform)	CU with a SN above 051220CG3016	120Z0648
Optyma Plus Controller	OPTYMA PLUS CONTROLLER-084B8080		118U3465
Programming Key	AKA183A		084B8582
Receiver	1,3 L		118U3474
Receiver	3,4 L		118U3475
Receiver	6,2 L		118U3476
Receiver	10 L		118U3716
Run capacitor	PSC starting kit, 30 µF, 15 µF		7701035
Run capacitor	Run capacitor 440V, 40 µF		8173231
Run capacitor	Run capacitor 440V, 50 µF		8173233
Run capacitor	Run capacitor 440V, 55 µF		8173234
Run capacitor	Run capacitor 70 µF		120Z0051

Technical data and ordering

Optyma™ **Plus (count.)**

Spare parts & accessories list

Component type	Component description	Additional informations	Component code
Sight glass	SGP 10 N		014L0172
Sight glass	SGP 12 N		014L0173
Sight glass	SGP 16 N		014L0174
Sight glass	SGP 19 N		014L0175
Sight glass	SGP 6s N		014L0181
Sight glass	SGP 10s N		014L0182
Starting capacitor	Start capacitor 125 µF, 220V - SC		117U5012
Starting capacitor	Start capacitor 80 µF, 220V - SC		117U5017
Starting capacitor	Start capacitor 125 µF, 220V - NF,NL		117U5018
Starting capacitor	Start capacitor 161-193 µF		120Z0040
Starting capacitor	Start capacitor 145-175 µF		120Z0399
Starting relay	Starting relay type RVA-6AMKL/3ARR3J4A4		8173022
Starting relay	RELAY ASSY. HST - "MRP56EN-6; 117U2121		117U4139
Starting relay	Starting Relay SC		117U6011
Starting relay	Starting Relay		117U6013
Starting relay	Starting relay type RVA9CKL/3ARR3J4A4		120Z0393
Starting relay	Starting relay type RVA3EKL/3ARR3J24P4		120Z0394
Starting relay	Starting relay type RVA4GKL/3ARR3J25S4		120Z0395
Relay	SC-RELAY		117-7027
Suc & Amb temp sensor	AKS11		084N0003
Suction pressure sensor	AKS 32R -1...12 bar		118U3721
Suction valve	GBC 22s Ball Valve M/25		009G7055
Suction valve	GBC 28s Ball Valve M/5		009G7056
Starting KIT	CAJ2446Z _ F1 KIT Capacitor and relay		118U5191
Starting KIT	CAJ2464Z _ F1 KIT Capacitor and relay		118U5192
Starting KIT	CAJ4492Y _ F1 KIT Capacitor and relay		118U5193
Starting KIT	CAJ4511Y _ F1KIT Capacitor and relay		118U5194
Starting KIT	CAJ4517Z _ F1 KIT Capacitor and relay		118U5195
Starting KIT	CAJ4519Z _ F1 KIT Capacitor and relay		118U5196
Starting KIT	CAJ9510Z _ F1 KIT Capacitor and relay		118U5197
Starting KIT	CAJ9513Z _ F1KIT Capacitor and relay		118U5198
Starting KIT	FH2511Z _ F1KIT Capacitor and relay		118U5199
Start capacitor	STARTING CAPACITOR+CC 72-88µF/330V R216		123B9316
Run C capacitor	RUN CAPACITOR 16µF/420V, REF. 321		123B9219
Relay	RELAY + CON. BOARD 1158-8 BDG 158S+ NTC		123B9151
Start capacitor	STARTING CAPACITOR+CC 64-77µF/330V R205		123B9315
Run C capacitor	RUN CAPACITOR 10µF/420V, REF. 326		123B9222
Relay	RELAY + CON. BOARD 1149-8 BDG 149S+ NTC		123B9133
Start capacitor	START CAPACITOR 80 mfd		117U5373
Relay	RELAY + CON. BOARD 1166-8 BDG 166S+ NTC		123B9139
Run C capacitor	RUN CAPACITOR 25µF/420V, REF. 310 MET.		123B9226
Top Panel H1	SPARE PART, SHEET METAL TOP H1		118U5121
Fan panel H1	SPARE PART, SHEET METAL FAN H1		118U5122
Back Panel H1	SPARE PART, SHEET METAL BACK H1		118U5123
Front Panel H1	SPARE PART, SHEET METAL FRONT H1		118U5124
Access Panel H1	SPARE PART, SHEET METAL ACCESS H1		118U5125
Left Side Panel H1	SPARE PART, SHEET METAL LEFT SIDE H1		118U5163
Top Panel H2	SPARE PART, SHEET METAL TOP H2		118U5126
Fan panel H2	SPARE PART, SHEET METAL FAN H2		118U5127
Back Panel H2	SPARE PART, SHEET METAL BACK H2		118U5128
Front Panel H2	SPARE PART, SHEET METAL FRONT H2		118U5129
Access Panel H2	SPARE PART, SHEET METAL ACCESS H2		118U5130
Left Side Panel H2	SPARE PART, SHEET METAL LEFT SIDE H2		118U5164
Top Panel H3	SPARE PART, SHEET METAL TOP H3		118U5131
Fan panel H3	SPARE PART, SHEET METAL FAN H3		118U5132
Back Panel H3	SPARE PART, SHEET METAL BACK H3		118U5133
Front Panel H3	SPARE PART, SHEET METAL FRONT H3		118U5134
Access Panel H3	SPARE PART, SHEET METAL ACCESS H3		118U5135
Left Side Panel H3	SPARE PART, SHEET METAL LEFT SIDE H3		118U5165
Top Panel H4	SPARE PART, SHEET METAL TOP H4		118U5136
Fan LH panel H4	SPARE PART, SHEET METAL FAN LH H4		118U5137
Fan RH panel H4	SPARE PART, SHEET METAL FAN RH H4		118U5138
Back Panel H4	SPARE PART, SHEET METAL BACK H4		118U5139
Access Panel H4	SPARE PART, SHEET METAL ACCESS H4		118U5140
Left Side Panel H4	SPARE PART, SHEET METAL LEFT SIDE H4		118U5166

Nomenclature

Designation system for the Optyma™ Plus program

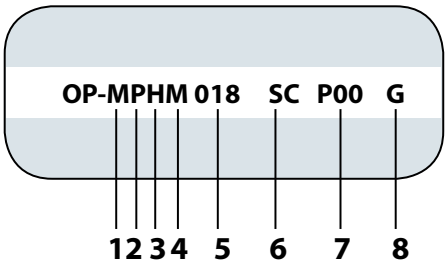

Number	Title	Description
1	Application	L = LBP M = MBP
2	Family	P = Optyma™ **Plus**
3	Refrigerant	Q= R452A / R404A / 507; G=R134a; H = R404A / R507 X = R404A / 507 / R134a / R407A / R407 F/ R448A / R449A / R452A Y = R404A / 507 / R449A
4	Condenser	Micro channel heat exchanger
5	Displacement	Displacement in cm^3
6	Compressor platform	AJ = CAJ, TAJ (Reciprocating) FH = FH, TFH (Reciprocating) NF = NF (Reciprocating) NT = NTZ (Reciprocating SC = SC (Reciprocating) MP = MPT (Reciprocating) MY = MLY (Reciprocating) MX = MX (Reciprocating) ML = MLZ (Scroll) LL = LLZ (Scroll)
7	Version	P00 Optyma™ **Plus**
8	Electrical code	G = 230V-1ph Comp & Fan E = 400V-3ph Comp & 230V-1ph Fan

Optyma™ Plus - cooling capacity & operating range presentation [kW]

Range span by refrigerant

Minimum / Maximum Cooling capacity in [kW]	Optyma™ **Plus**
Medium temperature (MBP)	
R448A	3.3 – 14.9
R449A	0.7 – 14.9
R134a	1.7 – 10.2
R452A	1.5 – 16.2
R407A	3.3 – 14.6
R407F	3.5 – 15.5
R404A / 507	0.7 – 16
Low temperature (LBP)	
R452A	0.4 – 6.1
R404A / 507	0.5 – 6.2

Rating conditions EN 13215 (dew point):
***MBP**: Ambient temp = 32 °C; Evap temp = -10 °C; Superheat = 10 K; Subcooling = 0 K / **LBP**: Ambient temp = 32 °C; Evap temp = -35 °C; Superheat = 10 K; Subcooling = 0 K*

Dimensions

Housing H1

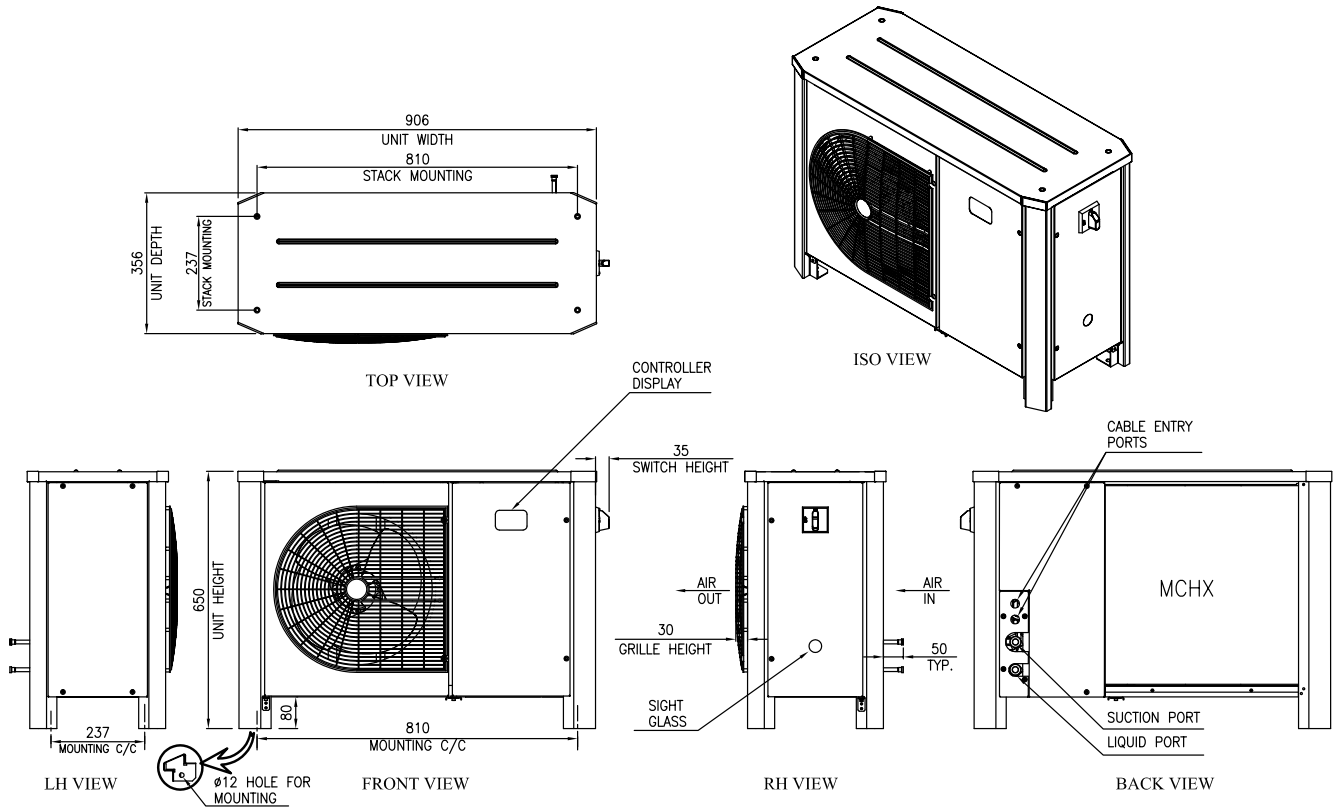

Housing H2

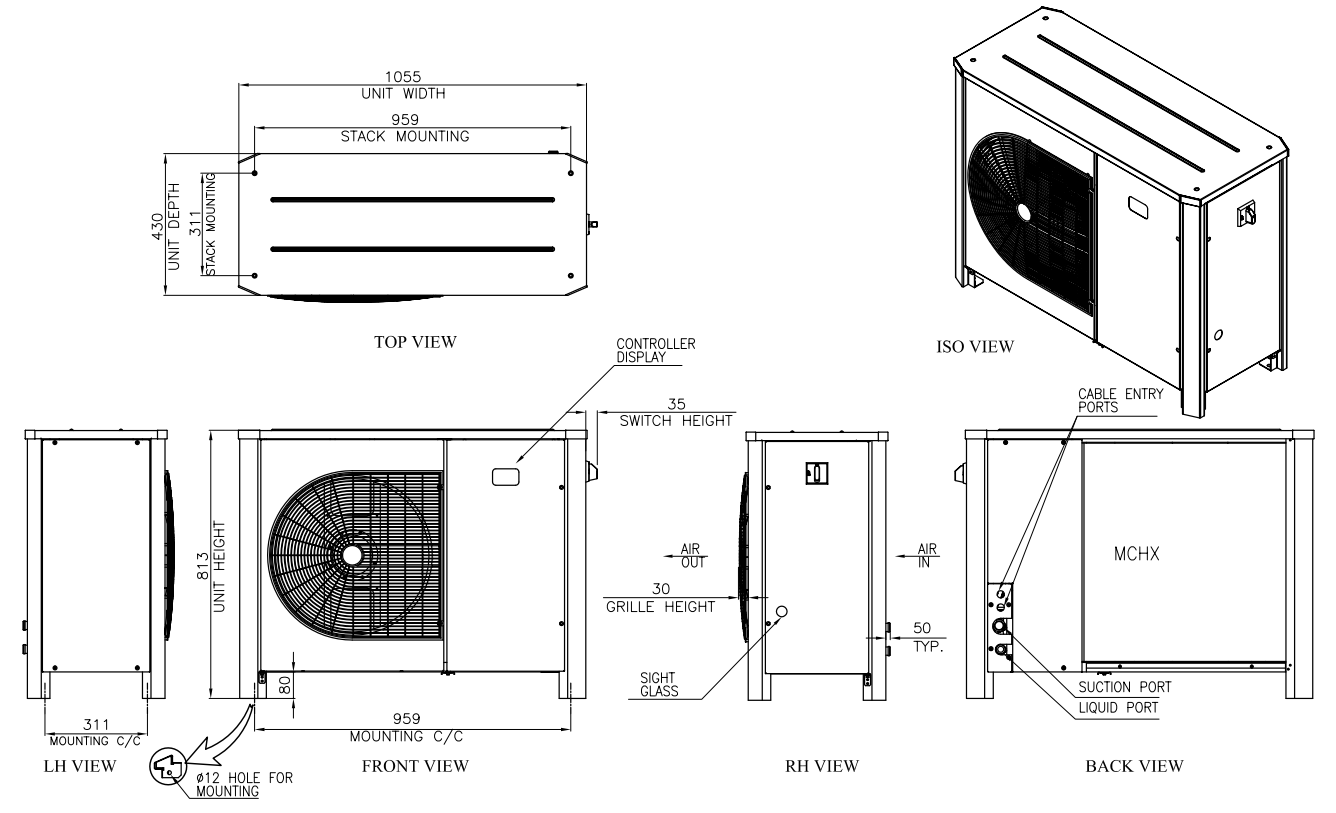

Dimensions are in (mm)

Dimensions

Housing H3

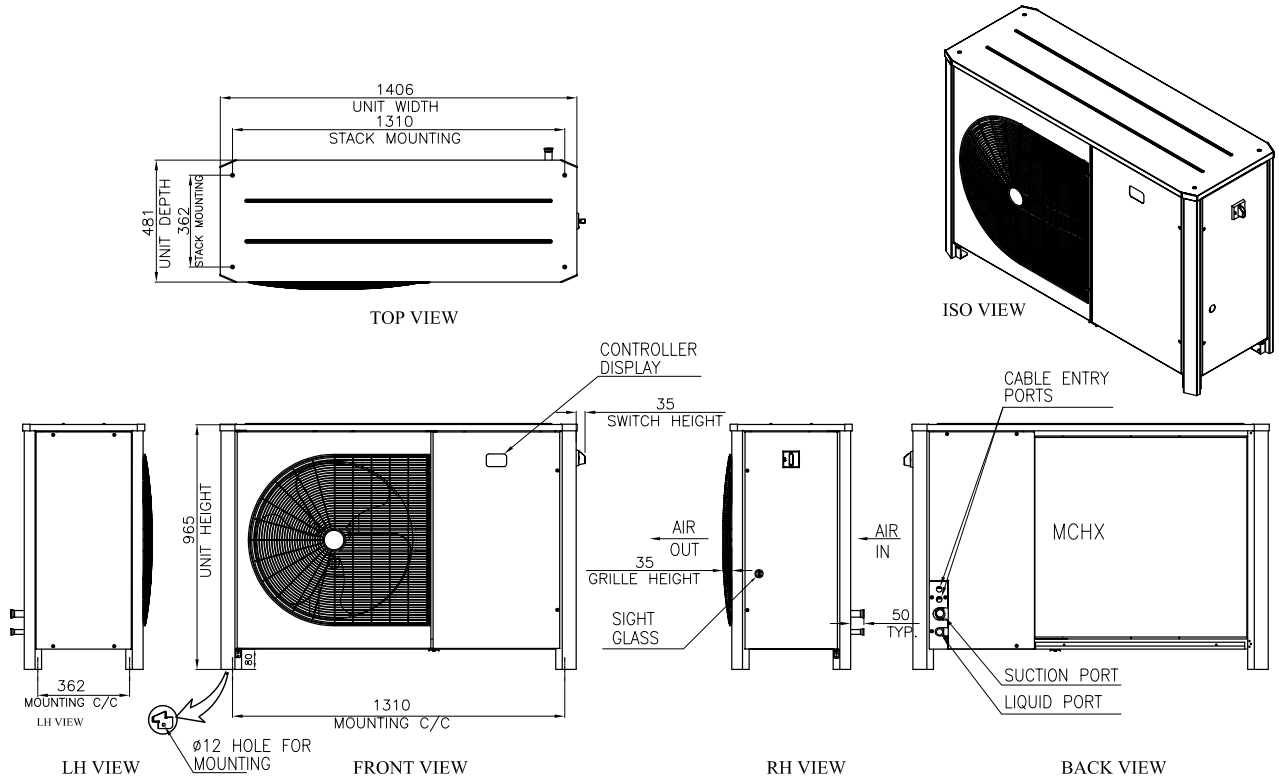

Housing H4

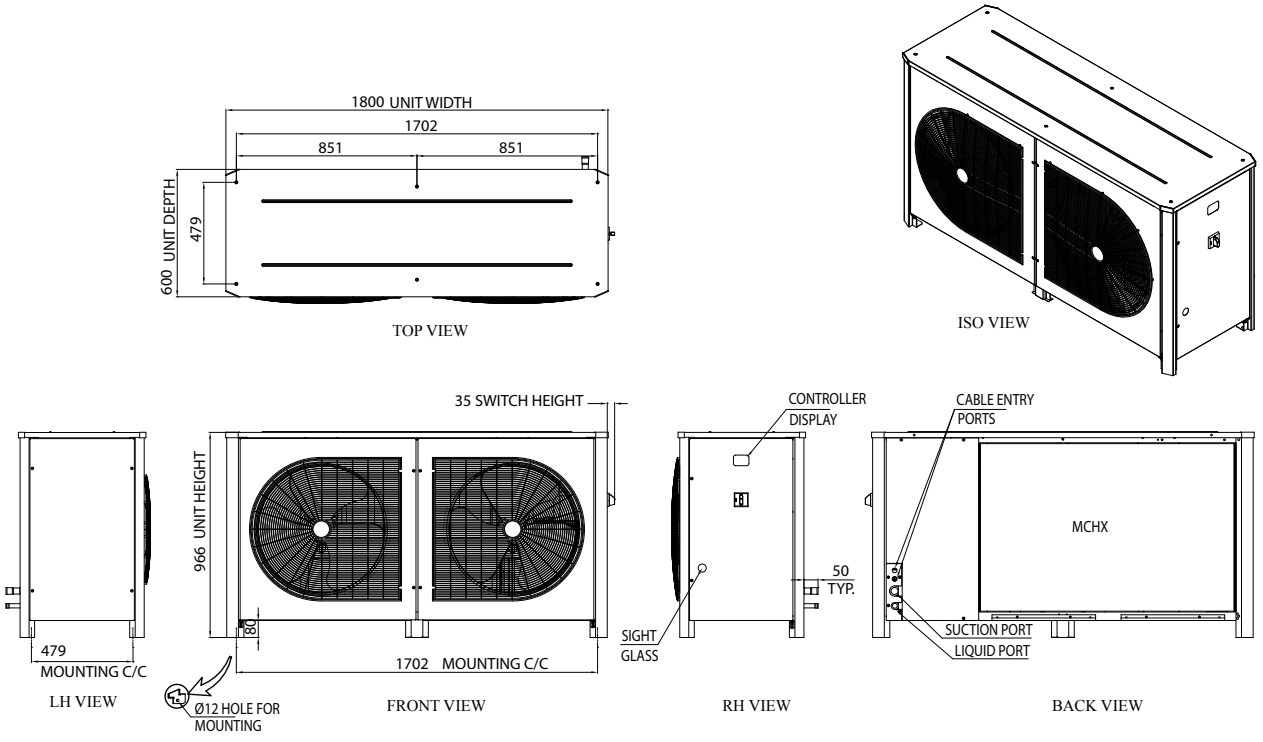

Dimensions are in (mm)

Electrical wiring diagrams

Code G : OP-LPQM026-048-068-074, OP-MPGM033-34, OP-MPYM018-024-026-034

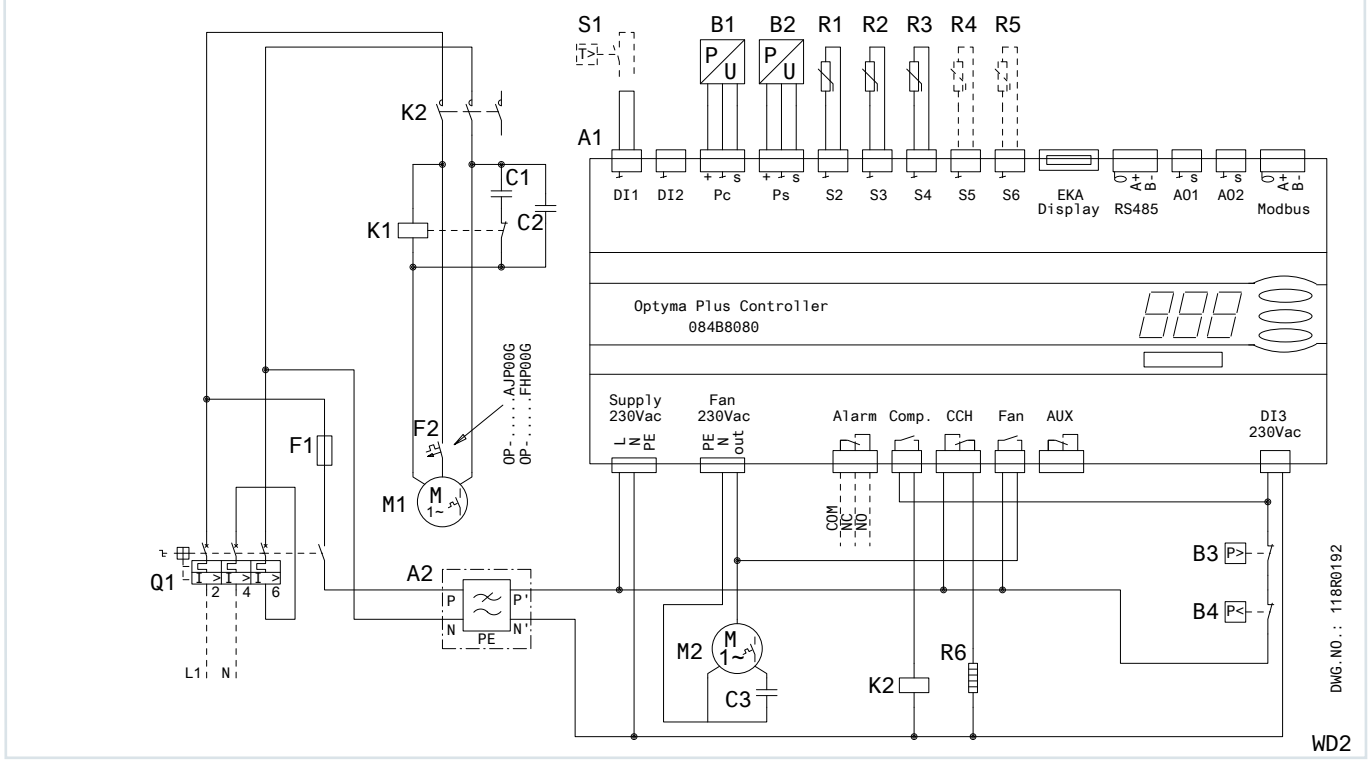

Code G : OP-MPXM034-046-057-068-080

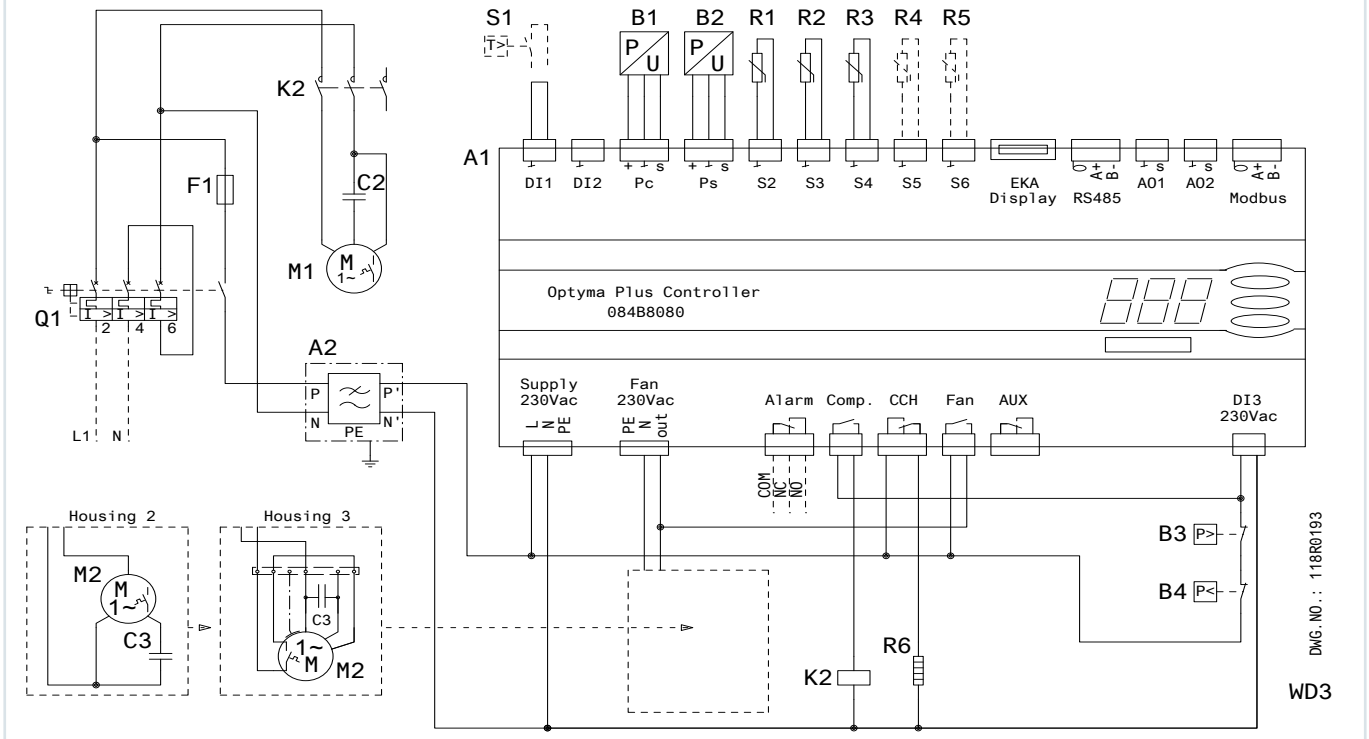

*A1 : Optyma™ **Plus** Controller*
A2 : EMI Filter
B1 : Condensing Pressure Transducer
B2 : Suction Pressure Transducer
B3 : High Pressure Switch
B4 : Low Pressure Switch
C1 : Start Capacitor (Compressor)
C2 : Run Capacitor (Compressor)
C3 : Run Capacitor (Fan)
F1 : Fuse (Control Circuit)
F2 : Motor Protector
K1 : Start Relay
K2 : Contactor
M1 : Compressor
M2 : Fan Motor
Q1 : Main Switch
R1 : Ambient Temp. Sensor
R2 : Discharge Temp. Sensor
R3 : Suction Temp. Sensor R4,R5 : Auxiliary Temp. Sensor (optional)
R6 : Crankcase Heater
S1 : Room Thermostat (optional)
Supply : Supply
Fan : Fan
Alarm : Alarm
Comp. : Compressor
CCH : Crankcase Heater
Aux : Auxiliary

Electrical wiring diagrams

Code E : OP-LPQM048-068-074-096-136 & OP-MPXM034-046-057-068-080-108

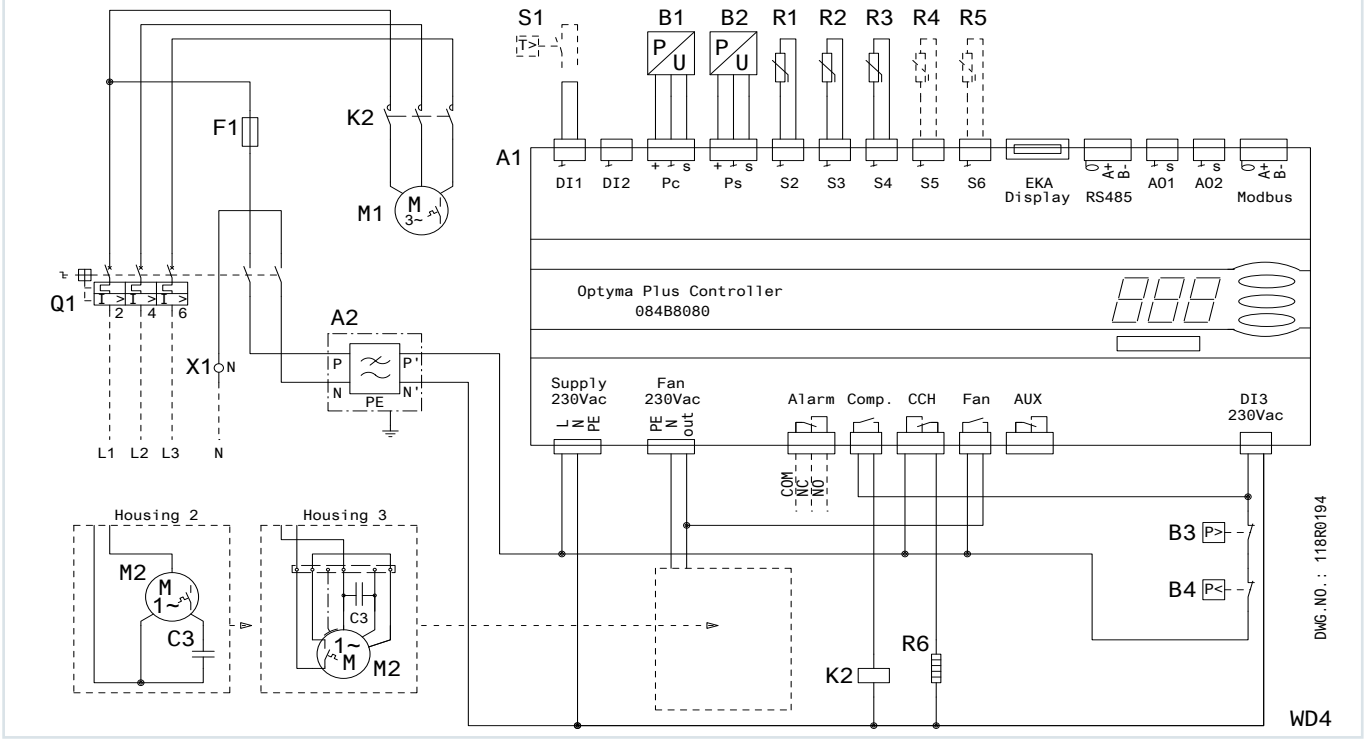

Code E : OP-LPQM215-271 & OP-MPXM125-162

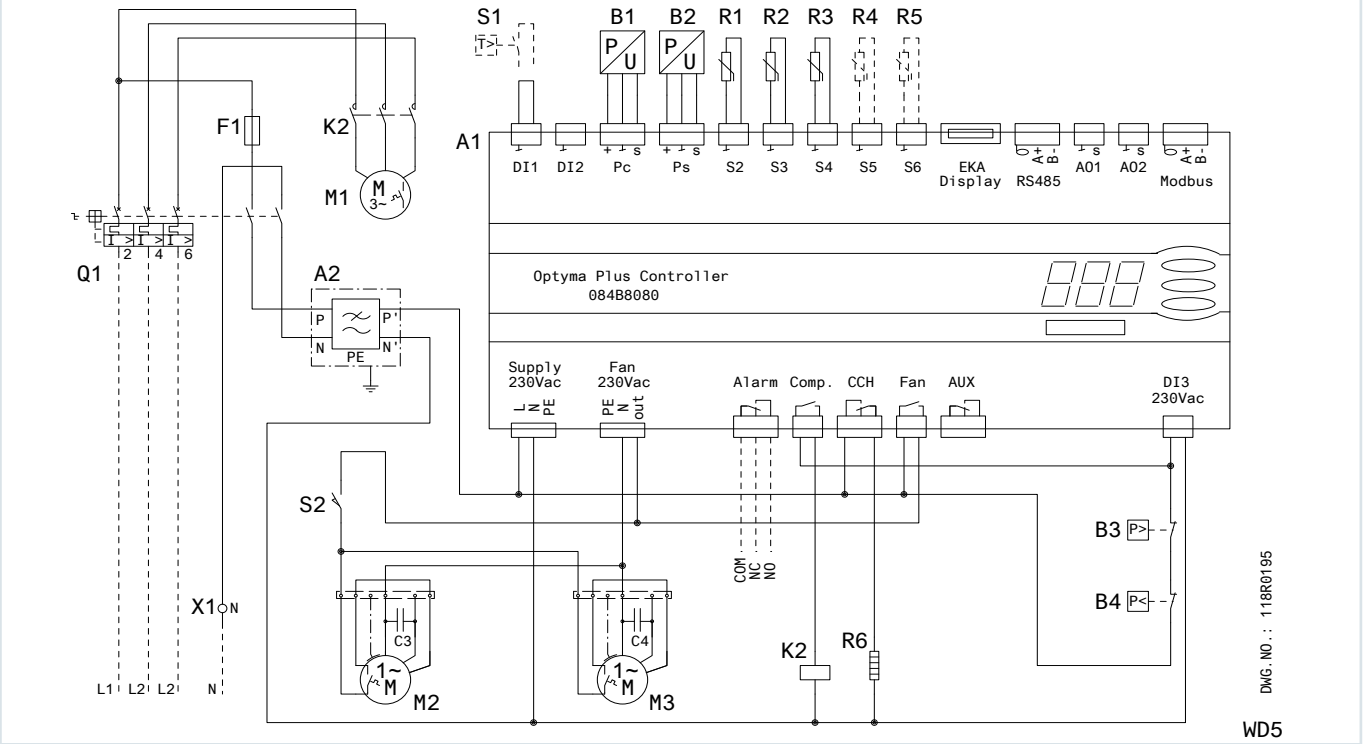

*A1 : Optyma™ **Plus** Controller*
A2 : EMI Filter
B1 : Condensing Pressure Transducer
B2 : Suction Pressure Transducer
B3 : High Pressure Switch
B4 : Low Pressure Switch
C3 : Run Capacitor (Fan 1)
C4 : Run Capacitor (Fan 2)

F1 : Fuse (Control Circuit)
K2 : Contactor
M1 : Compressor
M2 : Fan Motor 1
M3 : Fan Motor 2
Q1 : Main Switch
R1 : Ambient Temp. Sensor
R2 : Discharge Temp. Sensor

R3 : Suction Temp. Sensor
R4,R5 : Auxiliary Temp. Sensor (optional)
R6 : Crankcase Heater
S1 : Room Thermostat (optional)
S2 : Door Limit Switch
X1 : Terminal

Supply : Supply
Fan : Fan
Alarm : Alarm
Comp. : Compressor
CCH : Crankcase Heater
Aux : Auxiliary

Electrical wiring diagrams

Code E : OP-MPYM026-034

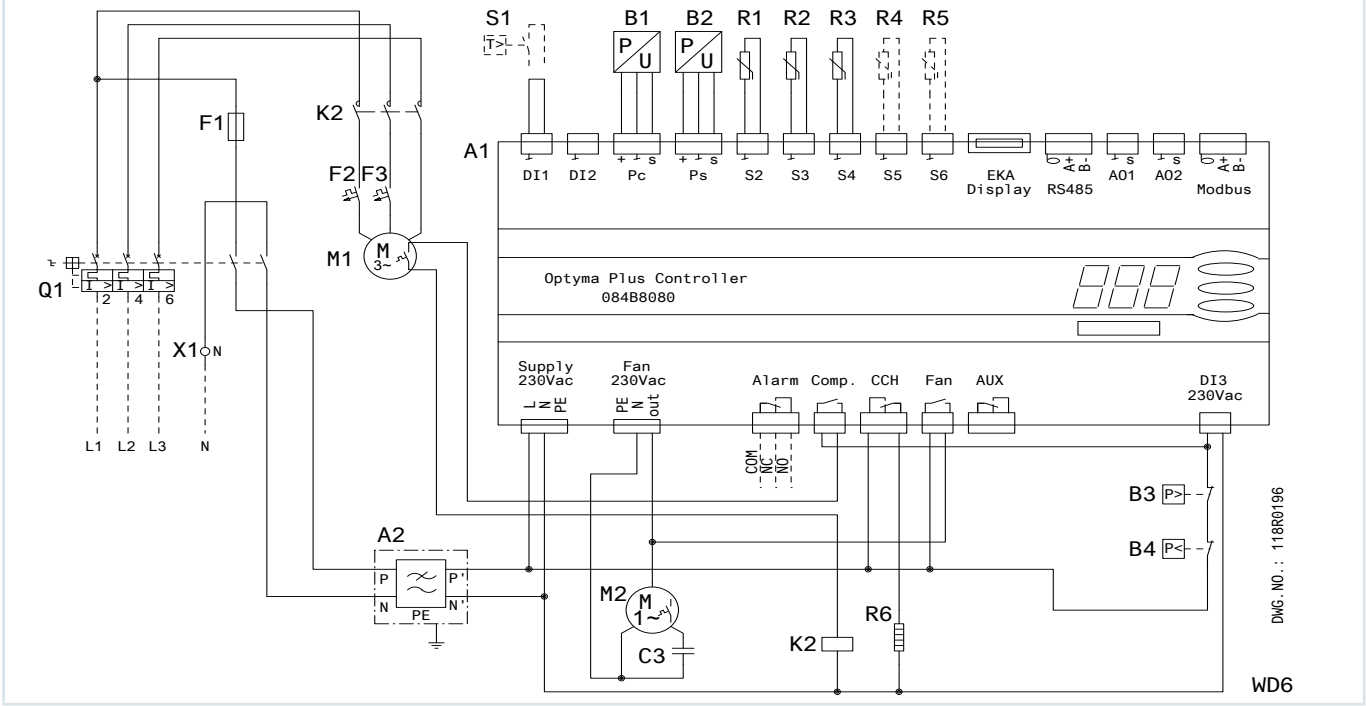

Code G: OP-LPQM017 & OP-MPYM008-009-012-014

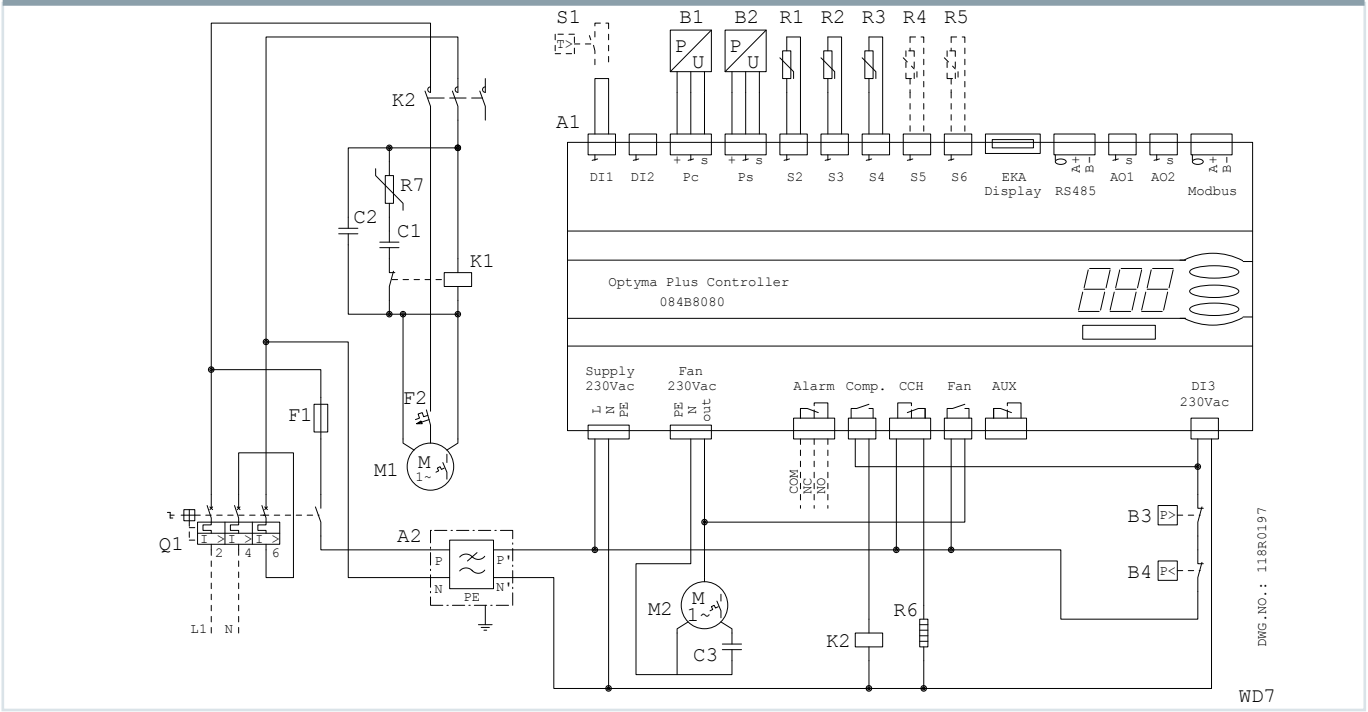

*A1 : Optyma™ **Plus** Controller*
A2 : EMI Filter
B1 : Condensing Pressure Transducer
B2 : Suction Pressure Transducer
B3 : High Pressure Switch
B4 : Low Pressure Switch
C1 : Start Capacitor (Compressor)
C2 : Run Capacitor (Compressor)
C3 : Run Capacitor (Fan)

F1 : Fuse (Control Circuit)
F2,F3 : Motor protector
K1 : Start Relay
K2 : Contactor
M1 : Compressor
M2 : Fan Motor
Q1 : Main Switch
R1 : Ambient Temp. Sensor
R2 : Discharge Temp. Sensor

R3 : Suction Temp. Sensor
R4,R5 : Auxiliary Temp. Sensor (optional)
R6 : Crankcase Heater
R7 : NTC Resistor
S1 : Room Thermostat (optional)
X1 : Terminal

Supply : Supply
Fan : Fan
Alarm : Alarm
Comp. : Compressor
CCH : Crankcase Heater
Aux : Auxiliary

Optyma™ **Plus Inverter**
Capacity modulation in a simple and **adapative** package

Optyma™ **Plus INVERTER** combines our market leading expertise in condensing unit design with the unique benefits of stepless inverter scroll technology.

The result is 25% higher energy efficiency in an adaptive package, for medium and high temperature refrigeration applications in the range of 1.7 kW to 9kW with R448A, R449A, R407A/F and R404A

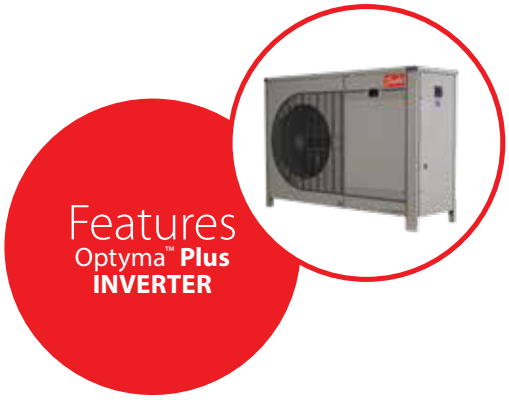

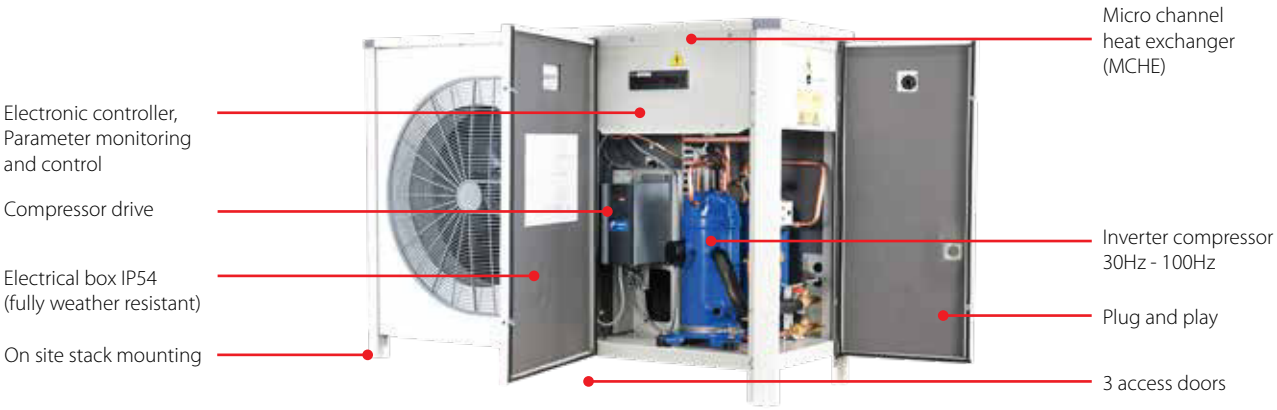

Facts

Unique Danfoss features
- Danfoss inverter scroll and drive tuned to work together for a wide range of refrigeration applications
- Danfoss micro-channel heat exchanger
- IDV* technology enhances part-load efficiency and allows less stress on components
- Danfoss proven condensing unit design
- Optyma™ **Plus Controller**
- Compliant with EcoDesign 2018 regulation

Plug-and-play variable speed technology
- One model suits several applications and model selection is easy and safe, especially in sensitive applications where the loads change rapidly
- The installation of an Optyma™ Plus INVERTER is as simple as a standard Optyma™ Plus. Preset parameters and Modbus communication makes start-up and maintenance of the condensing unit effortlessly quick and easy

High reliability for safe food preservation
- Accurate temperature and humidity control can be tailored to suit the requirements of different foods and beverages
- Improved food preservation and less waste of valuable products
- Electronic controller enables quick and accurate diagnostics
- Built-in compressor protection functions

**IDV: Intermediate Discharge Valves*

Technical data and ordering

Optyma™ **Plus INVERTER**

Technical specifications

Unit	Condenser coil			Condenser fan	Receiver	Dimensions					Weight [kg]	
	Type	Air flow [m³/h]	Internal volume [dm³]	Fan blade Ø [mm]	volume [L] (without valve)	Depth D [mm]	Width W [mm]	Height H [mm]	Suction line [in]	Liquid line [in]	Gross	Net
OP-MPLM028 OP-MPPM028	G7	5200	1.62	1x500	6.2	481	1406	965	3/4	5/8	150	124
OP-MPLM035 OP-MPPM035	G7	5200	1.62	1x500	6.2	481	1406	965	3/4	5/8	151	125
OP-MPLM044 OP-MPPM044	G7	5200	1.62	1x500	6.2	481	1406	965	3/4	5/8	151	125

For more information and performance with other refrigerants, please refer to Coolselector ® 2 at coolselector.danfoss.com or contact Danfoss.

Technical data and ordering

Optyma™ Plus INVERTER - R448A/R449A - MBP

Performance data

Model	Compressor	Electrical code [1]	Compressor speed, rps	Tamb [°C]	Cooling capacity Q [kW] [2] Te [°C] -15	-10	-5	0	5	EcoDesign [3] Q [kW]	P [kW]	COP	SEPR	Sound power level dB(A)	Sound pressure level 10 m dB(A)	Version	Code
OP-MPPM028VVL	VLZ028TGA	E	30	27	1.465	1.839	2.276	2.783	3.365	–	–	–	–	71	40	P01	114X4302
				32	1.375	1.732	2.149	2.633	3.190	–	–	–	–				
				38	–	–	–	–	–	–	–	–	–				
				43	–	–	–	–	–	–	–	–	–				
			50	27	2.494	3.107	3.816	4.629	5.553	–	–	–	–	72	41		
				32	2.346	2.930	3.605	4.379	5.259	–	–	–	–				
				38	–	2.706	3.338	4.064	4.891	–	–	–	–				
				43	–	2.510	3.106	3.790	4.571	–	–	–	–				
			75	27	3.656	4.527	5.536	6.695	8.013	–	–	–	–	73	42		
				32	3.443	4.270	5.226	6.324	7.573	–	–	–	–				
				38	–	3.949	4.842	5.866	7.032	–	–	–	–				
				43	–	3.670	4.509	5.472	6.569	–	–	–	–				
			100	27	4.686	5.774	7.041	8.502	10.171	–	–	–	–	74	43		
				32	4.421	5.451	6.648	8.028	9.605	5.548	3.058	1.81	3.38				
				38	–	5.056	6.170	7.454	8.922	–	–	–	–				
				43	–	4.713	5.761	6.967	8.346	–	–	–	–				
OP-MPPM035VVL	VLZ035TGA	E	30	27	1.836	2.301	2.845	3.476	4.201	–	–	–	–	73	42	P01	114X4316
				32	1.722	2.166	2.684	3.284	3.974	–	–	–	–				
				38	–	–	–	–	–	–	–	–	–				
				43	–	–	–	–	–	–	–	–	–				
			50	27	3.091	3.846	4.713	5.699	6.812	–	–	–	–	74	43		
				32	2.896	3.616	4.442	5.381	6.441	–	–	–	–				
				38	–	3.327	4.102	4.983	5.977	–	–	–	–				
				43	–	3.076	3.806	4.637	5.577	–	–	–	–				
			75	27	4.505	5.569	6.792	8.183	9.752	–	–	–	–	74	43		
				32	4.227	5.238	6.396	7.713	9.200	–	–	–	–				
				38	–	4.827	5.907	7.136	8.523	–	–	–	–				
				43	–	4.472	5.487	6.641	7.945	–	–	–	–				
			100	27	5.773	7.090	8.615	10.361	12.338	–	–	–	–	75	44		
				32	5.439	6.683	8.119	9.765	11.631	6.814	3.837	1.78	3.29				
				38	–	6.185	7.518	9.045	10.779	–	–	–	–				
				43	–	5.757	7.006	8.436	10.061	–	–	–	–				
OP-MPPM044VVL	VLZ044TGA	E	30	27	2.364	2.954	3.637	4.422	5.317	–	–	–	–	73	42	P01	114X4334
				32	2.213	2.776	3.429	4.180	5.037	–	–	–	–				
				38	–	–	–	–	–	–	–	–	–				
				43	–	–	–	–	–	–	–	–	–				
			50	27	3.894	4.834	5.915	7.145	8.532	–	–	–	–	74	43		
				32	3.650	4.544	5.570	6.739	8.058	–	–	–	–				
				38	–	4.185	5.144	6.238	7.473	–	–	–	–				
				43	–	3.876	4.779	5.808	6.973	–	–	–	–				
			75	27	5.674	7.003	8.510	10.203	12.087	–	–	–	–	75	44		
				32	5.308	6.572	8.003	9.609	11.397	–	–	–	–				
				38	–	6.034	7.371	8.873	10.544	–	–	–	–				
				43	–	5.566	6.825	8.237	9.810	–	–	–	–				
			100	27	7.289	8.959	10.828	12.899	15.173	–	–	–	–	76	45		
				32	6.786	8.375	10.149	12.112	14.265	8.558	4.753	1.80	3.73				
				38	–	7.634	9.291	11.123	13.130	–	–	–	–				
				43	–	6.982	8.539	10.260	12.145	–	–	–	–				

MBP

(1) G - Compressor 230V/1~/50Hz, fan 230V/1~/50Hz
E - Compressor 400V/3~/50Hz, fan 230V/1~/50Hz
(2) Nominal conditions (EN13215), Evaporating temperatures at dew point, Superheat 10 K, Subcooling 0 K
(3) Rated conditions (EN13215), Evaporating temperature (dew point) -10 °C, Ambient air temperature 32 °C, Return Gas Temperature 20 °C, Subcooling 0 K

SEPR, Seasonal Energy Performance Ratio
Q [kW], Cooling Capacity
P [kW], Power Input

*For regular updates and detailed capacities, please refer to **Coolselector®2** software*

EcoDesign 2018

Technical data and ordering

Optyma™ Plus INVERTER - R407A - MBP

Performance data

Model	Compressor	Electrical code [1]	Compressor speed, rps	Tamb [°C]	Cooling capacity Q [kW] [2] Te [°C] -15	-10	-5	0	5	EcoDesign [3] Q [kW]	P [kW]	COP	SEPR	Sound power level dB(A)	Sound pressure level 10 m dB(A)	Version	Code
OP-MPPM028VVL	VLZ028TGA	E	30	27	1.435	1.797	2.227	2.732	3.320	–	–	–	–	73	42	P01	114X4302
				32	1.345	1.686	2.092	2.570	3.128	–	–	–	–				
				38	–	1.557	1.934	2.380	2.902	–	–	–	–				
				43	–	–	–	–	–	–	–	–	–				
			50	27	2.382	2.994	3.711	4.543	5.499	–	–	–	–	73	42		
				32	2.243	2.829	3.515	4.310	5.224	–	–	–	–				
				38	–	2.622	3.267	4.015	4.876	–	–	–	–				
				43	–	2.442	3.050	3.757	4.571	–	–	–	–				
			75	27	3.499	4.412	5.470	6.686	8.069	–	–	–	–	74	43		
				32	3.306	4.177	5.183	6.339	7.654	–	–	–	–				
				38	–	3.879	4.821	5.901	7.131	–	–	–	–				
				43	–	3.618	4.503	5.519	6.676	–	–	–	–				
			100	27	4.549	5.740	7.106	8.660	10.413	–	–	–	–	75	44		
				32	4.313	5.438	6.726	8.192	9.847	5.539	2.834	1.95	3.49				
				38	–	5.067	6.261	7.621	9.158	–	–	–	–				
				43	–	4.747	5.864	7.135	8.575	–	–	–	–				
OP-MPPM035VVL	VLZ035TGA	E	30	27	1.806	2.259	2.796	3.426	4.157	–	–	–	–	72	41	P01	114X4316
				32	1.692	2.119	2.626	3.223	3.916	–	–	–	–				
				38	–	1.956	2.427	2.983	3.632	–	–	–	–				
				43	–	–	–	–	–	–	–	–	–				
			50	27	2.988	3.751	4.643	5.674	6.854	–	–	–	–	72	41		
				32	2.812	3.542	4.393	5.378	6.504	–	–	–	–				
				38	–	3.279	4.079	5.003	6.061	–	–	–	–				
				43	–	3.051	3.803	4.674	5.674	–	–	–	–				
			75	27	4.374	5.503	6.805	8.291	9.973	–	–	–	–	73	42		
				32	4.128	5.203	6.439	7.849	9.443	–	–	–	–				
				38	–	4.824	5.977	7.292	8.779	–	–	–	–				
				43	–	4.492	5.573	6.806	8.201	–	–	–	–				
			100	27	5.666	7.124	8.782	10.652	12.744	–	–	–	–	75	44		
				32	5.367	6.741	8.302	10.064	12.035	6.876	3.494	1.97	3.63				
				38	–	6.270	7.715	9.345	11.172	–	–	–	–				
				43	–	5.864	7.212	8.734	10.442	–	–	–	–				
OP-MPPM044VVL	VLZ044TGA	E	30	27	2.303	2.877	3.556	4.350	5.268	–	–	–	–	73	42	P01	114X4334
				32	2.159	2.699	3.339	4.091	4.962	–	–	–	–				
				38	–	2.491	3.085	3.785	4.600	–	–	–	–				
				43	–	–	–	–	–	–	–	–	–				
			50	27	3.796	4.757	5.876	7.163	8.629	–	–	–	–	73	42		
				32	3.569	4.487	5.553	6.779	8.175	–	–	–	–				
				38	–	4.148	5.146	6.294	7.602	–	–	–	–				
				43	–	3.852	4.790	5.870	7.101	–	–	–	–				
			75	27	5.527	6.933	8.542	10.363	12.405	–	–	–	–	74	43		
				32	5.208	6.543	8.067	9.790	11.720	–	–	–	–				
				38	–	6.052	7.468	9.069	10.862	–	–	–	–				
				43	–	5.620	6.944	8.440	10.117	–	–	–	–				
			100	27	7.125	8.914	10.926	13.170	15.649	–	–	–	–	74	43		
				32	6.738	8.421	10.311	12.419	14.750	8.612	4.446	1.94	3.71				
				38	–	7.813	9.557	11.502	13.656	–	–	–	–				
				43	–	7.288	8.911	10.721	12.728	–	–	–	–				

MBP

(1) G - Compressor 230V/1~/50Hz, fan 230V/1~/50Hz
E - Compressor 400V/3~/50Hz, fan 230V/1~/50Hz
(2) Nominal conditions (EN13215), Evaporating temperatures at dew point, Superheat 10 K, Subcooling 0 K
(3) Rated conditions (EN13215), Evaporating temperature (dew point) -10 °C, Ambient air temperature 32 °C, Return Gas Temperature 20 °C, Subcooling 0 K

SEPR, Seasonal Energy Performance Ratio
Q [kW], Cooling Capacity
P [kW], Power Input

*For regular updates and detailed capacities, please refer to **Coolselector®2** software*

EcoDesign 2018

Technical data and ordering

Optyma™ **Plus INVERTER - R407F - MBP**

Performance data

Model	Compressor	Electrical code [1]	Compressor speed, rps	Tamb [°C]	Cooling capacity Q [kW] [2] Te [°C] -15	-10	-5	0	5	EcoDesign [3] Q [kW]	P [kW]	COP	SEPR	Sound power level dB(A)	Sound pressure level 10 m dB(A)	Version	Code
OP-MPPM028VVL	VLZ028TGA	E	30	27	1.534	1.915	2.363	2.888	3.496	–	–	–	–	73	42	P01	114X4302
				32	1.447	1.808	2.234	2.733	3.313	–	–	–	–				
				38	–	1.679	2.078	2.547	3.092	–	–	–	–				
				43	–	–	–	–	–	–	–	–	–				
			50	27	2.598	3.258	4.022	4.900	5.902	–	–	–	–	73	42		
				32	2.450	3.083	3.815	4.655	5.613	–	–	–	–				
				38	–	2.862	3.555	4.349	5.254	–	–	–	–				
				43	–	2.669	3.328	4.083	4.943	–	–	–	–				
			75	27	3.826	4.792	5.901	7.163	8.590	–	–	–	–	74	43		
				32	3.612	4.539	5.600	6.806	8.169	–	–	–	–				
				38	–	4.220	5.223	6.362	7.647	–	–	–	–				
				43	–	3.942	4.895	5.977	7.197	–	–	–	–				
			100	27	4.950	6.174	7.573	9.158	10.939	–	–	–	–	75	44		
				32	4.689	5.857	7.191	8.703	10.400	5.905	2.979	1.98	3.58				
				38	–	5.470	6.724	8.145	9.742	–	–	–	–				
				43	–	5.141	6.327	7.671	9.182	–	–	–	–				
OP-MPPM035VVL	VLZ035TGA	E	30	27	1.931	2.408	2.969	3.623	4.380	–	–	–	–	72	41	P01	114X4316
				32	1.820	2.272	2.805	3.428	4.149	–	–	–	–				
				38	–	2.110	2.609	3.193	3.871	–	–	–	–				
				43	–	–	–	–	–	–	–	–	–				
			50	27	3.258	4.080	5.029	6.116	7.351	–	–	–	–	72	41		
				32	3.069	3.858	4.766	5.804	6.984	–	–	–	–				
				38	–	3.577	4.435	5.416	6.529	–	–	–	–				
				43	–	3.330	4.147	5.078	6.135	–	–	–	–				
			75	27	4.776	5.970	7.334	8.878	10.612	–	–	–	–	73	42		
				32	4.503	5.648	6.951	8.425	10.079	–	–	–	–				
				38	–	5.242	6.472	7.860	9.417	–	–	–	–				
				43	–	4.888	6.055	7.372	8.847	–	–	–	–				
			100	27	6.156	7.655	9.358	11.274	13.409	–	–	–	–	75	44		
				32	5.825	7.254	8.876	10.699	12.731	7.326	3.682	1.99	3.71				
				38	–	6.764	8.286	9.996	11.902	–	–	–	–				
				43	–	6.347	7.783	9.397	11.198	–	–	–	–				
OP-MPPM044VVL	VLZ044TGA	E	30	27	2.464	3.068	3.778	4.603	5.555	–	–	–	–	73	42	P01	114X4334
				32	2.322	2.895	3.568	4.354	5.260	–	–	–	–				
				38	–	2.686	3.316	4.052	4.903	–	–	–	–				
				43	–	–	–	–	–	–	–	–	–				
			50	27	4.135	5.170	6.359	7.714	9.244	–	–	–	–	73	42		
				32	3.891	4.882	6.019	7.311	8.771	–	–	–	–				
				38	–	4.519	5.591	6.809	8.184	–	–	–	–				
				43	–	4.200	5.218	6.374	7.677	–	–	–	–				
			75	27	6.024	7.510	9.195	11.089	13.196	–	–	–	–	74	43		
				32	5.670	7.092	8.700	10.503	12.509	–	–	–	–				
				38	–	6.567	8.080	9.774	11.658	–	–	–	–				
				43	–	6.107	7.540	9.143	10.924	–	–	–	–				
			100	27	7.723	9.567	11.641	13.951	16.496	–	–	–	–	74	43		
				32	7.298	9.052	11.023	13.215	15.631	9.164	4.701	1.95	3.78				
				38	–	8.421	10.265	12.315	14.574	–	–	–	–				
				43	–	7.884	9.618	11.548	13.675	–	–	–	–				

MBP

(1) G - Compressor 230V/1~/50Hz, fan 230V/1~/50Hz
E - Compressor 400V/3~/50Hz, fan 230V/1~/50Hz
(2) Nominal conditions (EN13215), Evaporating temperatures at dew point, Superheat 10 K, Subcooling 0 K
(3) Rated conditions (EN13215), Evaporating temperature (dew point) -10 °C, Ambient air temperature 32 °C, Return Gas Temperature 20 °C, Subcooling 0 K

SEPR, Seasonal Energy Performance Ratio
Q [kW], Cooling Capacity
P [kW], Power Input

*For regular updates and detailed capacities, please refer to **Coolselector®2** software*

EcoDesign 2018

Technical data and ordering

Optyma™ Plus INVERTER - R404A - MBP

Performance data

Model	Compressor	Electrical code [1]	Compressor speed, rps	Tamb [°C]	Cooling capacity Q [kW] [2] Te [°C] -15	-10	-5	0	5	EcoDesign [3] Q [kW]	P [kW]	COP	SEPR	Sound power level dB(A)	Sound pressure level 10 m dB(A)	Version	Code
OP-MPPM028VVL	VLZ028TGA	E	30	27	1.597	1.990	2.446	2.972	3.573	–	–	–	–	71	40	P01	114X4302
				32	1.484	1.854	2.284	2.780	3.349	–	–	–	–				
				38	–	–	–	–	–	–	–	–	–				
				43	–	–	–	–	–	–	–	–	–				
			50	27	2.700	3.340	4.080	4.929	5.894	–	–	–	–	72	41		
				32	2.505	3.106	3.802	4.601	5.510	–	–	–	–				
				38	2.266	2.820	3.461	4.198	5.039	–	–	–	–				
				43	2.060	2.574	3.168	3.853	4.636	–	–	–	–				
			75	27	3.994	4.916	5.976	7.181	8.542	–	–	–	–	73	42		
				32	3.707	4.574	5.569	6.701	7.981	–	–	–	–				
				38	3.354	4.151	5.066	6.110	7.290	–	–	–	–				
				43	3.048	3.785	4.633	5.600	6.698	–	–	–	–				
			100	27	5.202	6.381	7.724	9.241	10.939	–	–	–	–	74	43		
				32	4.832	5.939	7.198	8.620	10.214	6.250	3.328	1.88	3.47				
				38	4.368	5.384	6.539	7.845	9.310	–	–	–	–				
				43	3.962	4.899	5.965	7.171	8.528	–	–	–	–				
OP-MPPM035VVL	VLZ035TGA	E	30	27	2.027	2.517	3.085	3.739	4.485	–	–	–	–	73	42	P01	114X4316
				32	1.878	2.339	2.875	3.491	4.196	–	–	–	–				
				38	–	–	–	–	–	–	–	–	–				
				43	–	–	–	–	–	–	–	–	–				
			50	27	3.402	4.193	5.108	6.153	7.338	–	–	–	–	74	43		
				32	3.158	3.899	4.755	5.735	6.846	–	–	–	–				
				38	2.854	3.533	4.317	5.215	6.236	–	–	–	–				
				43	2.590	3.215	3.937	4.766	5.711	–	–	–	–				
			75	27	4.962	6.087	7.381	8.853	10.511	–	–	–	–	74	43		
				32	4.610	5.659	6.866	8.240	9.790	–	–	–	–				
				38	4.169	5.126	6.226	7.481	8.899	–	–	–	–				
				43	3.784	4.662	5.672	6.826	8.133	–	–	–	–				
			100	27	6.354	7.768	9.389	11.226	13.287	–	–	–	–	75	44		
				32	5.901	7.218	8.727	10.438	12.36	7.614	4.088	1.86	3.77				
				38	5.331	6.529	7.901	9.460	11.214	–	–	–	–				
				43	4.828	5.926	7.183	8.614	10.227	–	–	–	–				
OP-MPPM044VVL	VLZ044TGA	E	30	27	2.620	3.236	3.949	4.767	5.698	–	–	–	–	73	42	P01	114X4334
				32	2.426	3.008	3.681	4.453	5.334	–	–	–	–				
				38	–	–	–	–	–	–	–	–	–				
				43	–	–	–	–	–	–	–	–	–				
			50	27	4.322	5.303	6.426	7.700	9.134	–	–	–	–	74	43		
				32	4.012	4.932	5.987	7.183	8.532	–	–	–	–				
				38	3.623	4.470	5.439	6.541	7.784	–	–	–	–				
				43	3.284	4.067	4.964	5.985	7.139	–	–	–	–				
			75	27	6.267	7.656	9.231	10.997	12.960	–	–	–	–	75	44		
				32	5.812	7.111	8.583	10.234	12.070	–	–	–	–				
				38	5.243	6.432	7.777	9.289	10.972	–	–	–	–				
				43	4.744	5.839	7.078	8.472	10.027	–	–	–	–				
			100	27	8.008	9.755	11.715	13.888	16.273	–	–	–	–	76	45		
				32	7.406	9.033	10.856	12.879	15.102	9.560	5.220	1.83	3.76				
				38	6.648	8.128	9.785	11.626	13.651	–	–	–	–				
				43	5.980	7.335	8.852	10.539	12.399	–	–	–	–				

MBP

(1) G - Compressor 230V/1~/50Hz, fan 230V/1~/50Hz
E - Compressor 400V/3~/50Hz, fan 230V/1~/50Hz
(2) Nominal conditions (EN13215), Evaporating temperatures at dew point, Superheat 10 K, Subcooling 0 K
(3) Rated conditions (EN13215), Evaporating temperature (dew point) -10 °C, Ambient air temperature 32 °C, Return Gas Temperature 20 °C, Subcooling 0 K

SEPR, Seasonal Energy Performance Ratio
Q [kW], Cooling Capacity
P [kW], Power Input

*For regular updates and detailed capacities, please refer to **Coolselector®2** software*

EcoDesign 2018

Nomenclature

Designation system for the Optyma™ Plus INVERTER - MBP

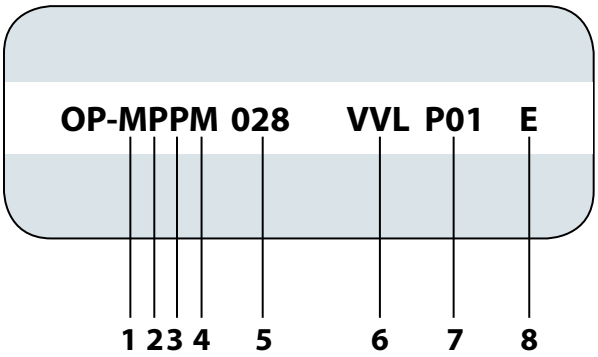

Number	Title	Description
1	Application	M = MBP
2	Design	P = Packaged units
3	Refrigerant	P = R404A, R407A, R407F, R448A, R449A
4	Condenser type	M = Micro channel heat exchanger
5	Displacement	028 = 28 cm^3/rev
6	Compressor platform	VVL = variable speed scroll VLZ compressor
7	Version	P01
8	Electrical code	E = Compressor 400 V/3 phase/50 Hz, fan 230 V/1 phase/ 50 Hz

Optyma™ Plus INVERTER - cooling capacity range presentation [kW]

Range span by refrigerant

Minimum / Maximum Cooling capacity in [kW]	Optyma™ Plus INVERTER
Medium temperature (MBP)	
R448A	1.7 – 8.3
R449A	1.7 – 8.3
R407A	1.7 – 8.4
R407F	1.8 – 9
R404A / 507	1.8 – 9

Rating conditions EN 13215 (dew point):
***MBP**: Ambient temp = 32 °C; Evap temp = -10 °C; Superheat = 10 K; Subcooling = 0 K*

Technical data and ordering

Optyma™ **Plus INVERTER**

Spare parts & accessories - MBP

Designation	OP-MPLM028	OP-MPPM028	OP-MPLM035	OP-MPPM035	OP-MPLM044	OP-MPPM044
Code Number	114X4300 *)	114X4302	114X4315 *)	114X4316	114X4333 *)	114X4334
Compressor Description	VLZ028TGA		VLZ035TGA		VLZ044TGA	
Compressor oil	120Z5034	120Z0648	120Z5034	120Z0648	120Z5034	120Z0648
Spare Parts						
Compressor	120G0162		120G0159		120G0156	
Condenser	118U3494		118U3494		118U3494	
Oil separator	118U3981		118U3981		118U3982	
Fan assembly	118U3829		118U3829		118U3829	
Fan cowl/grill	118U3485		118U3485		118U3485	
Filter	023Z5045		023Z5045		023Z5045	
High-pressure switch	118U3718		118U3718		118U3718	
Low-pressure switch	118U3720		118U3720		118U3720	
Receiver	118U3476		118U3476		118U3476	
Sight glass	014F0174		014F0174		014F0174	
Suction line valve	009G7054		009G7054		009G7054	
Liquid line valve	009G7053		009G7053		009G7053	
Electrical Spare Parts						
Crankcase heater	120Z5040		120Z5040		120Z5040	
Controller	118U3465		118U3465		118U3465	
Discharge temperature sensor	084N2007		084N2007		084N2007	
High-pressure transmitter	118U3722		118U3722		118U3722	
Low-pressure transmitter	118U3721		118U3721		118U3721	
Suction and ambient temp sensor	084N0003		084N0003		084N0003	
Compressor contact	118U3847		118U3847		118U3847	
Door handle	118U3858		118U3858		118U3858	
Main switch	118U3852	118U3854	118U3852	118U3854	118U3852	118U3854
Compressor drive CDS803	118U3973		118U3973		118U3973	
EMI filter (Drive)	118U3972		118U3972		118U3972	
EMI filter (Controller)	118U3974		118U3974		118U3974	
Electrical Characteristics						
MCC Compressor [A] 400V/3phase	8.1		9.8		12.0	
Max cont.power consumption [kW]	3.98		4.94		6.33	
MCC Fan [A] 230V/1 phase	0.96		0.96		0.96	
Fan power output [W]	1x130		1x130		1x130	
Fan power consumption [W]	1x220		1x220		1x220	
Accessories (Not Premounted)						
Acoustic hood	120Z5043		120Z5043		120Z5043	
Sheet Metal						
Top panel	118U5131		118U5131		118U5131	
Fan Panel	118U5132		118U5132		118U5132	
Back panel	118U5133		118U5133		118U5133	
Front panel	118U5134		118U5134		118U5134	
Access panel	118U5135		118U5135		118U5135	
Left side panel	118U5165		118U5165		118U5165	

MCC - Max Continuous Current
**) Phased out model*
Note: For service purpose original components (spare parts) recommended by Danfoss should be used.

Technical data and ordering

Optyma™ **Plus INVERTER**

Spare parts & accessories list

Component type	Component description	Additional informations	Component code
Compressor Single pack	Compresssor VLZ028TGNE9A/M		120G0162
Compressor Single pack	Compresssor VLZ035TGNE9A/M		120G0159
Compressor Single pack	Compresssor VLZ044TGNE9A/M		120G0156
Condenser	CONDENSER COIL MCHX G7		118U3494
Oil Separator	SEPARATEUR HUILE SO/ER-31 OPTYMA INVERT		118U3981
Oil separator	SEPARATEUR HUILE SO/ER16101 OPTYMA INVER		118U3982
Fan assembly	FAN ASSEMBLIES, EBM, ERP2015		118U3829
Fan cowl/grill	FAN GRILL HOUSING 3 OP PLUS		118U3485
Filter	Filter drier DML 165 M/12		023Z5045
High-pressure switch	HIGH PR SWITCH ACB-2UB463W		118U3718
Low-pressure switch	LOW PR SWITCH ACB-2UA418W		118U3720
Receiver	LIQUID RECEIVER 6,2L OP PLUS		118U3476
Sight glass	Del-SGN+ 16 Sight Glass M/36		014F0174
Suction valve	GBC 18s Ball Valve M/25		009G7054
Liquid valve	GBC 16s Ball Valve M/25		009G7053
Crankcase heater	CRANKCASE HEATER, 240V 70W		120Z5040
Controller	OPTYMA PLUS CONTROLLER-084B8080		118U3465
Discharge temperature sensor	Sensor AKS 21 A 2.5m		084N2007
High-pressure transmitter	AKS HP PR TRANSMITTER		118U3722
Low-pressure transmitter	AKS LP PR TRANSMITTER		118U3721
Suction and ambient temp sensor	Sensor AKS 11 3.5m		084N0003
Compressor contact	CONT, ABB-A16-30-01-80+CA5-11		118U3847
Door handle	HANDLE, ABB-OHB2AJM,MSMN,OXS5X131		118U3858
Compressor drive CDS803	Drive CDS803 7,5kW H OPTYMA INVERTER		118U3973
EMI filter (Drive)	Filtre pour Drive EN 55011 class B (C1)		118U3972
EMI filter (Controller)	CONTROLLER EMC/RFI FILTER OPTYMA PLUS		118U3974
Top Panel	SPARE PART, SHEET METAL TOP H3		118U5131
Fan panel	SPARE PART, SHEET METAL FAN H3		118U5132
Back panel	SPARE PART, SHEET METAL BACK H3		118U5133
Front Panel	SPARE PART, SHEET METAL FRONT H3		118U5134
Access Panel	SPARE PART, SHEET METAL ACCESS H3		118U5135
Left Side panel	SPARE PART, SHEET METAL LEFT SIDE H3		118U5165
Main switch	MPCB, ABB-MS116-16+HK1-12		118U3852
Main switch	MPCB, ABB-MS132-20+HK1-12		118U3854
Acoustic hood	ACCOUSTIC HOOD SMALL now use (120Z5083)		120Z5043

Dimensions

OP-MPLM028-035-044, OP-MPPM028-035-044

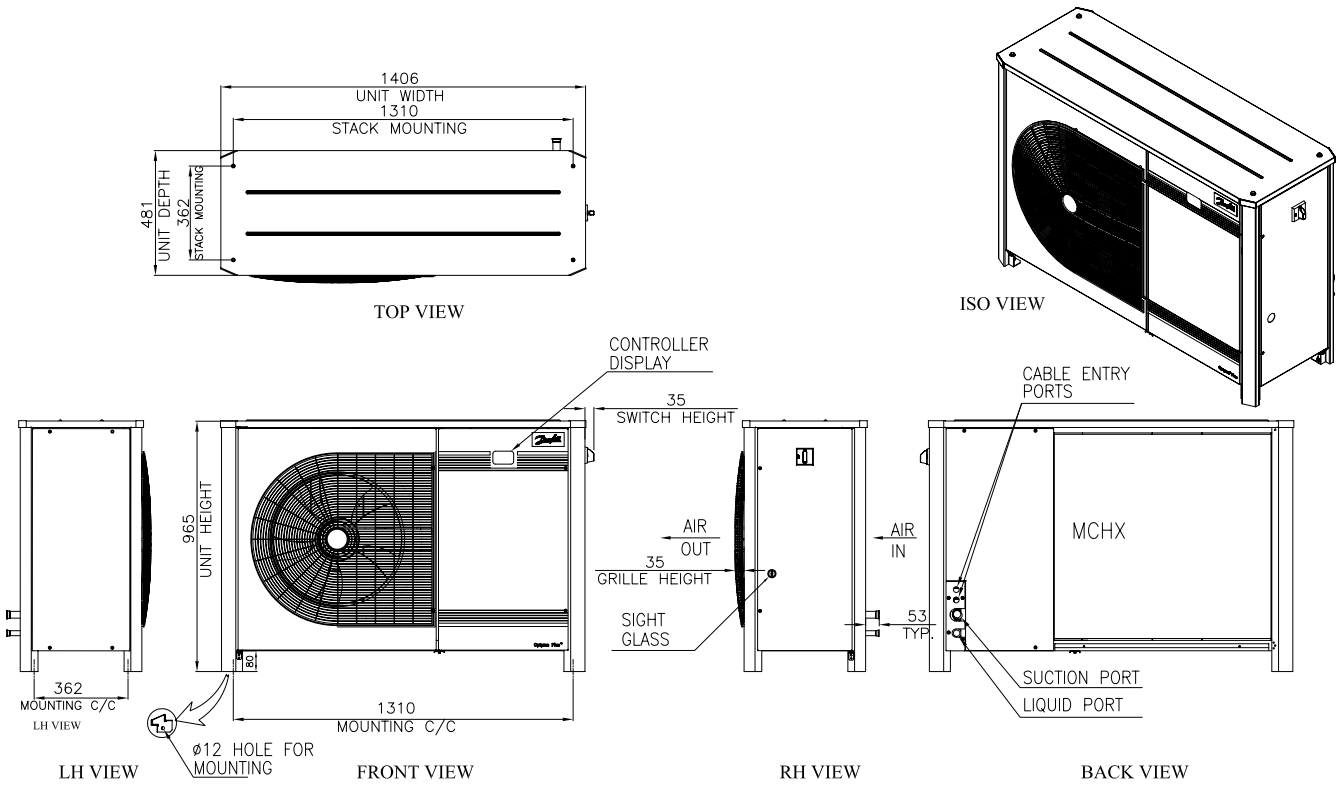

Electrical wiring diagrams

OP-MPLM028-035-044, OP-MPPM028-035-044

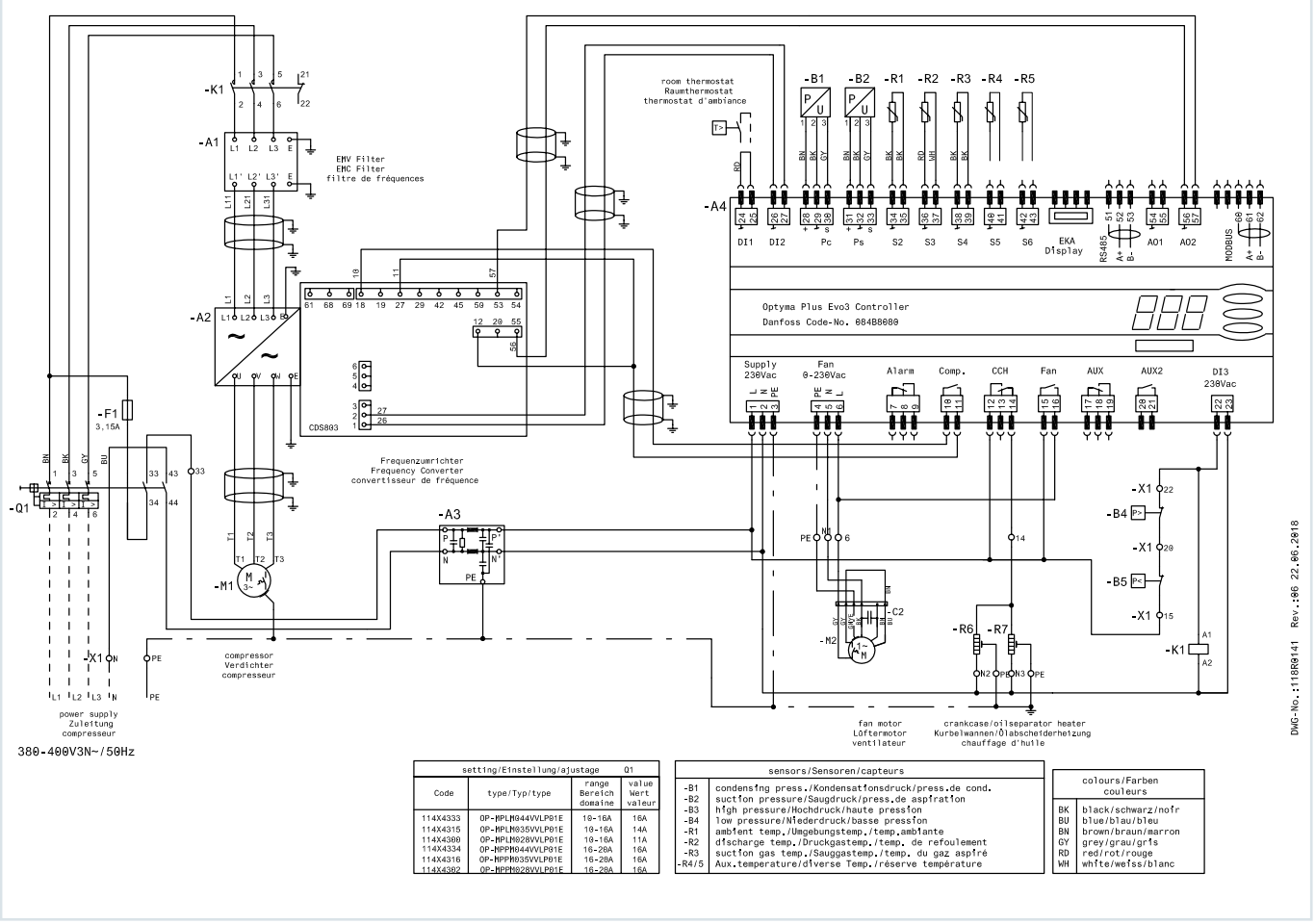

setting/Einstellung/ajustage Q1			
Code	type/Typ/type	range Bereich domaine	value Wert valeur
114X4333	OP-MPLM044VVLP01E	10-16A	16A
114X4315	OP-MPLM035VVLP01E	10-16A	14A
114X4300	OP-MPLM028VVLP01E	10-16A	11A
114X4334	OP-MPPM044VVLP01E	16-20A	16A
114X4316	OP-MPPM035VVLP01E	16-20A	16A
114X4302	OP-MPPM028VVLP01E	16-20A	16A

sensors/Sensoren/capteurs	
-B1	condens!ng press./Kondensat!onsdruck/press.de cond.
-B2	suct!on pressure/Saugdruck/press.de aspir!at!on
-B3	h!gh pressure/Hochdruck/haute press!on
-B4	low pressure/N!ederdruck/basse press!on
-R1	amb!ent temp./Umgebungstemp./temp.ambiante
-R2	d!scharge temp./Druckgastemp./temp. de refoulement
-R3	suct!on gas temp./Sauggastemp./temp. du gaz aspiré
-R4/5	Aux.temperature/d!verse Temp./réserve température

colours/Farben couleurs	
BK	black/schwarz/noir
BU	blue/blau/bleu
BN	brown/braun/marron
GY	grey/grau/gris
RD	red/rot/rouge
WH	white/weiss/blanc

A1 : EMC/RFI Filter (Compressor)
A2 : Frequency Converter
A3 : EMI Filter (Controls)
*A4 : Optyma™ **Plus** Controller*
B1 : Condensing Pressure Transducer
B2 : Suction Pressure Transducer
B3 : High Pressure Switch
B4 : Low Pressure Switch
C1 : Run Capacitor (Fan)
F1 : Fuse (Control Circuit)
K1 : Contactor
M1 : Compressor
M2 : Fan Motor
Q1 : Main Switch
R1 : Ambient Temp. Sensor
R2 : Discharge Temp. Sensor
R3 : Suction Temp. Sensor
R4,R5 : Auxiliary Temp. Sensor (optional)
R6 : Crankcase heater
R7 : Oil Separator Heater
S1 : Room Thermostat (optional)
X1 : Terminal
Supply : Supply
Fan : Fan
Alarm : Alarm
Comp. : Compressor
CCH : Crankcase Heater
Aux : Auxiliary

Electrical wiring diagrams

OP-MPLM028-035-044, OP-MPPM028-035-044- Emergency Wiring

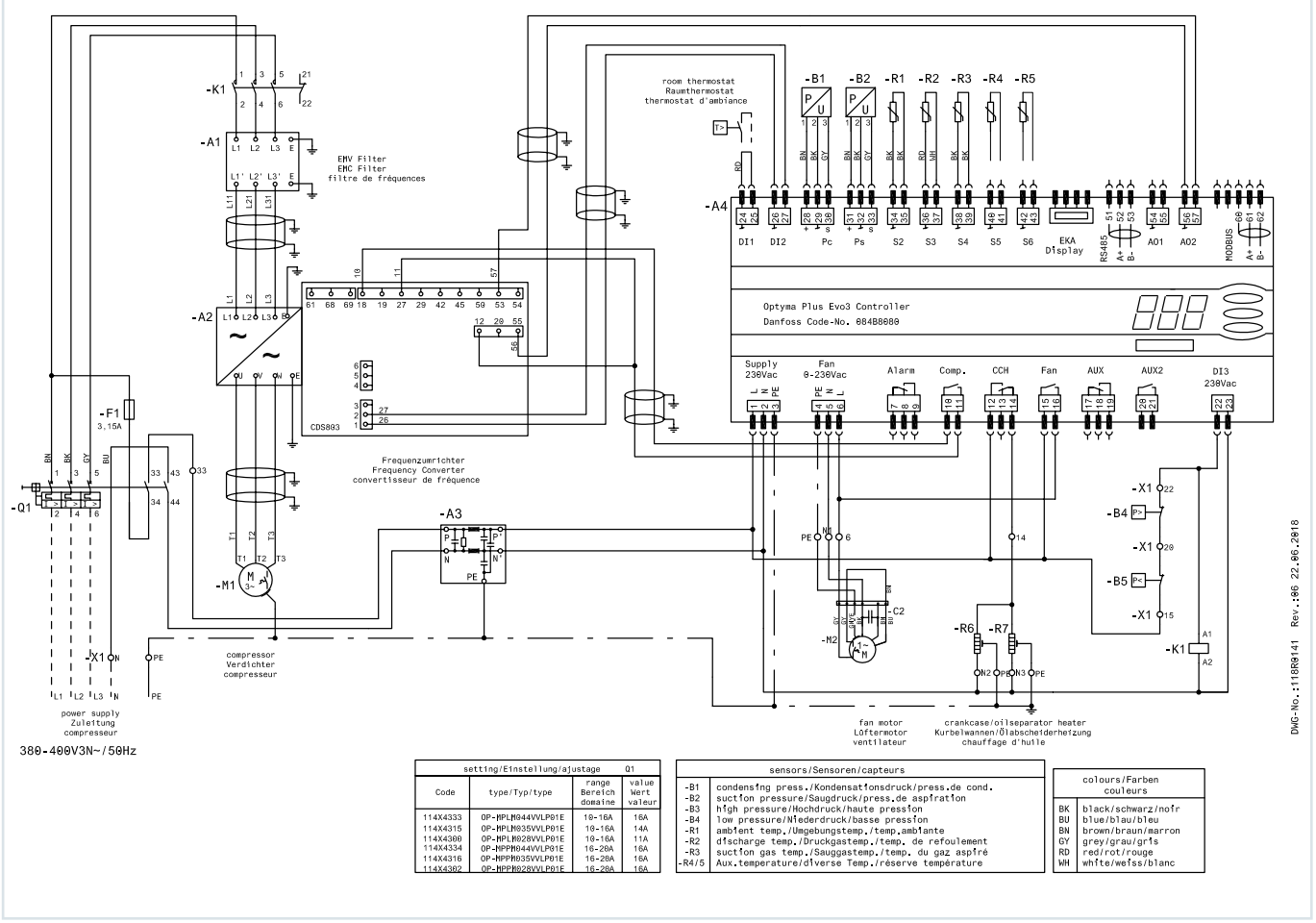

setting/Einstellung/ajustage Q1			
Code	type/Typ/type	range Bereich domaine	value Wert valeur
114X4333	OP-MPLM044VVLP01E	10-16A	16A
114X4315	OP-MPLM035VVLP01E	10-16A	14A
114X4308	OP-MPLM028VVLP01E	10-16A	11A
114X4334	OP-MPPM044VVLP01E	16-20A	16A
114X4316	OP-MPPM035VVLP01E	16-20A	16A
114X4302	OP-MPPM028VVLP01E	16-20A	16A

sensors/Sensoren/capteurs	
-B1	condensing press./Kondensationsdruck/press.de cond.
-B2	suction pressure/Saugdruck/press.de aspiration
-B3	high pressure/Hochdruck/haute pression
-B4	low pressure/Niederdruck/basse pression
-R1	ambient temp./Umgebungstemp./temp.ambiante
-R2	discharge temp./Druckgastemp./temp. de refoulement
-R3	suction gas temp./Sauggastemp./temp. du gaz aspiré
-R4/5	Aux.temperature/diverse Temp./réserve température

colours/Farben couleurs	
BK	black/schwarz/noir
BU	blue/blau/bleu
BN	brown/braun/marron
GY	grey/grau/gris
RD	red/rot/rouge
WH	white/weiss/blanc

A1 : EMC/RFI Filter (Compressor)
A2 : Frequency Converter
A3 : EMI Filter (Controls)
*A4 : Optyma™ **Plus** Controller*
B1 : Condensing Pressure Transducer
B2 : Suction Pressure Transducer
B3 : High Pressure Switch
B4 : Low Pressure Switch
B5 : Fan Speed Controller / Pressure Switch*
C1 : Run Capacitor (Fan)
F1 : Fuse (Control Circuit)
K1 : Contactor
M1 : Compressor
M2 : Fan Motor
Q1 : Main Switch
R1 : Ambient Temp. Sensor
R2 : Discharge Temp. Sensor
R3 : Suction Temp. Sensor
R4,R5 : Auxiliary Temp. Sensor (optional)
R6 : Crankcase heater
R7 : Oil Separator Heater
R8 : Compressor Speed Potentiometer
S1 : Room Thermostat (optional)
X1 : Terminal
Supply : Supply
Fan : Fan
Alarm : Alarm
Comp. : Compressor
CCH : Crankcase Heater
Aux : Auxiliary

Refrigerant control schedules

The graph below shows the phase-out of HCF refrigerants as agreed under the Montreal

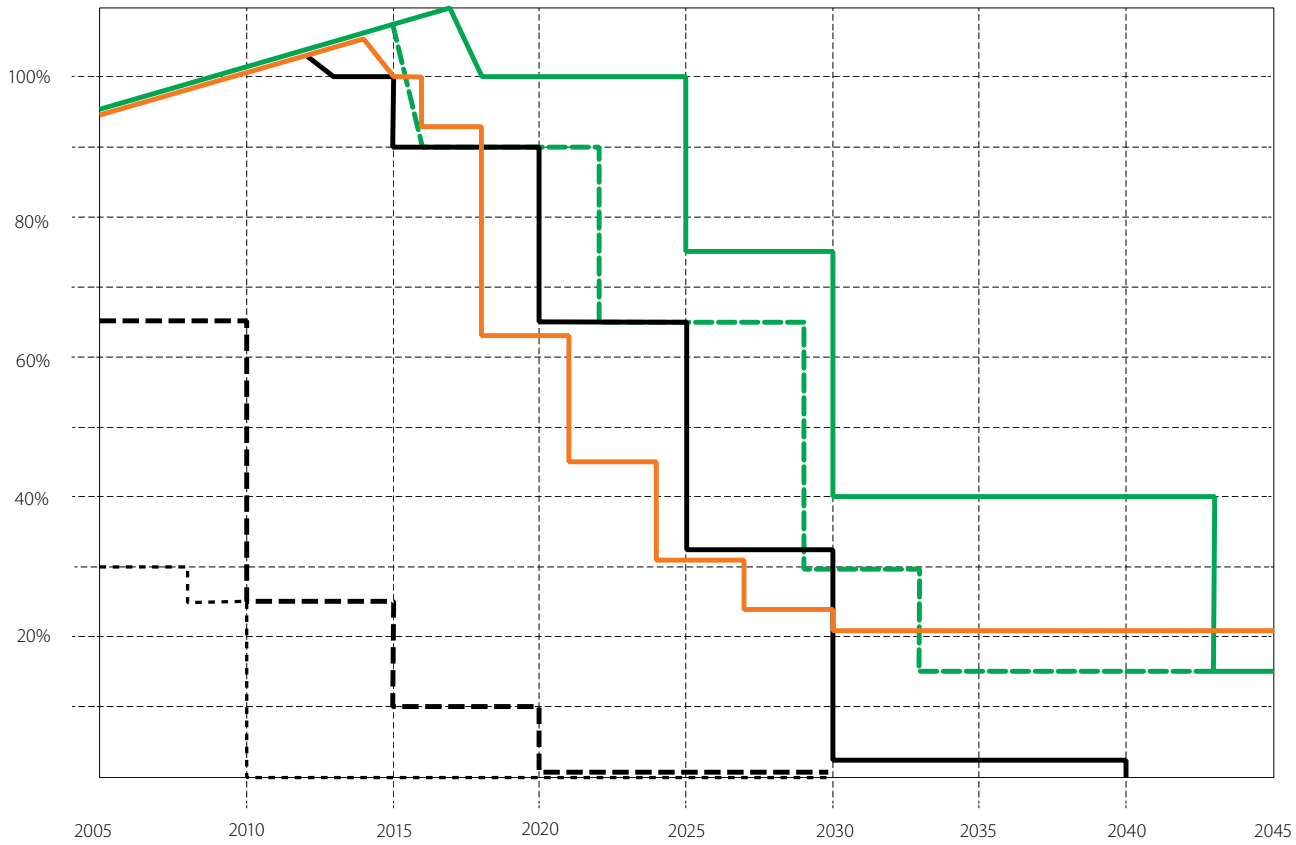

HCFC Phase-out
US, other developed countries
EU regulations
Developing countries

HFC Phase-down (US Proposal)
US, other developed countries
Developing countries

HFC Phase-down (Proposal by EU Commission)
EU F-gas regulations

Perhaps the most effective mechanism of the F-gas regulation will be the GWP-based phase-down of HFC refrigerants.
The phase-down will effectively reduce the supply of high-GWP refrigerants to where demand cannot be met. In turn, this will lead to significantly higher prices on HFC refrigerants. The higher the GWP, the higher the price. Although transitional refrigerants such as R407A and R407F are not directly affected by refrigerant bans in the near term, prices will undoubtedly increase and may become prohibitive in most applications with more than a few kg charge.

Overview of refrigerant trends

Refrigerant	Application	Refrigeration												Air Conditioning						Heat Pumps					
		Domestic-Household refigeration			Light Commercial refrigeration			Commercial Racks and Condensing Units			Industrial Refrigeration			Residential A/C (including Reversible systems)			Commercial A/C			Residential and Commercial			Industrial		
	Watt	50 – 300			150 –5000			> 5.000			> 1.000.000			1.000 – 20.000			> 20.000								
	Region/ Year	2018	2022	2027	2018	2022	2027	2018	2022	2027	2018	2022	2027	2018	2022	2027	2018	2022	2027	2018	2022	2027	2018	2022	2027
CO_2 R744	NAM											*													
	Europe																								
	China												*												
	ROW												*												
NH_3 (2L) R717	NAM											*													
	Europe																								
	China												*												
	ROW												*												
HC	NAM																								
	Europe																								
	China																								
	ROW																								
HFC	NAM																								
	Europe																								
	China																								
	ROW																								
HFC/HFO below GWP 700	NAM																								
	Europe																								
	China																								
	ROW																								

Main refrigerant
Regular use
Limited use and only niche applications
Not applicable or unclear situation

**) Ammonia / CO_2 cascades will dominate industrial refrigeration*
Table 1: Global trends in refrigeration and air conditioning (Status in 2017)

Seen from a global perspective, the tendency of the industry is to move increasingly toward natural refrigerant solutions when it is technologically safe & economically feasible. Synthetic refrigerants are still likely to play an important role in both the refrigeration and air conditioning industries, where the trend is also moving toward new low-GWP substances that cause a minimal environmental impact.

CO_2 (R744)

- The CO_2's GWP value equal to 1
- Lends itself well to **food retail applications**, where the impact, in case of leaks, is minimal and where its thermodynamic properties make it the ideal media for heat recovery
- Transcritical CO_2 cycles reject a large proportion of the cycle heat at high temperatures which makes it suitable for heat pumps
- In **industrial refrigeration**, CO_2 provides a means to reduce the charge of Ammonia, increasing the efficiency and decreasing the footprint of freezing equipment
- In **transport refrigeration** and **electronics cooling**, CO_2 provides a non-flammable, environmentally benign solution

Ammonia (NH_3 - R717)

- GWP and ODP (Ozone Depletion Potential) equal to zero, cost (per kg) considerabl lower than the cost of HFCs
- Ammonia is one of the most **energy efficient** refrigerants in applications ranging from high to low temperatures. With the increasing focus on energy consumption, ammonia is a sustainable choice for the future
- Ammonia has better **heat transfer properties** than most of chemical refrigerants and therefore plant construction and operating costs will be lower

Hydrocarbons (R290, R600)

- Provides high energy-efficiency, good volumetric capacity and large operating envelopes compared to HFCs
- The flammability limits the use to small **systems** and **chillers** (e.g. **chillers for food retail systems** or for **comfort air conditioning** installed outside the building)
- Allows for very low evaporating temperatures without overheating the compressor when used in **heat pumps** (with HFCs you need to supplement with an electrical heating element for the really cold days or more expensive vapor / liquid injection cycles) **Medium GWP HFC / HFO blends**
- A transitional solution that can be used in retrofitting high-GWP HFC systems. Medium GWP solutions, <1500, and non-flammable are particularly indicated where indoor system charge can be an issue and alternative system architecture too expensive

Mildly flammable HFC & HFO

- The low GWP and low flammability makes these refrigerants suitable for **relatively large systems**
- Especially interesting for **air conditioning** where there is a lack of non-flammable (A1) natural alternatives

Danfoss and low-GWP refrigerants

Sustainable solutions are in the best interests of all stakeholders in our industry. Sustainability safeguards long-term investments and ensures compliance with Corporate Social Responsibility. Today, when talking about refrigerants and long-term sustainability, Danfoss considers three main parameters that must be aligned to accomplish a real sustainable balance: **affordability, safety, and environment**. In order to enable the market to achieve these CO_2 eq reduction targets, Danfoss is actively working on **solutions for alternative refrigerants** with a pragmatic approach, keeping system efficiency, costs and safety in mind.
The company offers **a wide range of products and solutions for low-GWP** synthetic and natural refrigerants for both refrigeration and air-conditioning applications.

For more product information, coolselector.danfoss.com

Main applications and refrigerant types

GWP values are decreasing due to phase downs and energy efficiency demands (MEPS) are increasing. HVAC-R professionals will focus on using components that allow for the lowest possible charge and on technologies with the best cost/performance ratio for a given refrigerant type. Choosing a refrigerant is no simple task; it depends on the timing of regional regulations as well as applied standards and building codes. In the last year, the situation has been further complicated by massive price increases and the decreased availability of fluorinated refrigerants.

Chillers:

Depending on their size and the compressor technology they use, chillers operate with low to high pressure refrigerants and are divided into two categories: low/medium (L/M) and medium/high (M/H) pressure.
L/M chillers transitioning from R123 can stay non-flammable using HCFO solutions like R1233zd (fig.1). But this refrigerant is banned in some countries because, while its ODP is negligible, it's still above zero. R134a applications have non-flammable, A1 solutions with GWP less than 640, such as HFO blends R513A and R450A. A2L classified refrigerants need to be accepted according to applied safety standards and building codes. GWP level can come very close to zero using the pure HFO R1234ze (fig.1). We expect industry professionals will adopt this ultra-low GWP refrigerant as a long-term solution for these kinds of systems.
For M/H pressure chillers, there is no ideal non-flammable alternative for incumbent refrigerants such as R410A. Instead, industry professionals must accept A2L or even A3 solutions like R290. A2L alternatives are in the 500 – 700 GWP range like R32/R452B/R454B.
Their use should be acceptable for systems installed outdoors or in machine rooms, but their placement must always follow local safety standards and building codes.

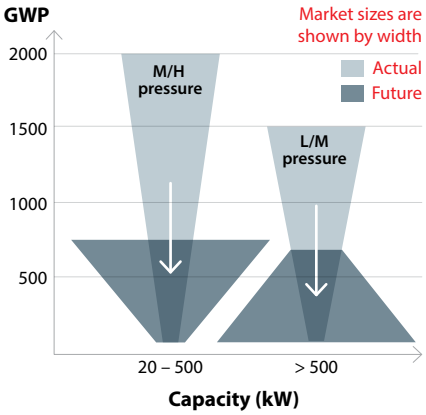

Figure 1: Market transition and GWP level per Chiller size. Most of the M/H Chillers will use refrigerants with a GWP around 750, and most L/M chillers will use ultra-low GWP refrigerants.

We foresee that the high density/pressure refrigerant choice will fall into two groups: the majority with a GWP around 500 – 750 and a smaller but still significant group applying A3 refrigerants like R290.
In the longer term, we may even experience lower GWP levels in the main market. It's dependent on refrigerant availability and cost. The F-gas phase-down has so far caused high GWP-related price increases.

VRF systems:

VRF systems use a relatively large amount of refrigerant per unit, compared to ducted systems, due to their decentralized evaporators and subsequent piping. Minimizing piping size requires medium to high density refrigerants where the only alternatives to R410A are A2L refrigerants such as R32 or R452B/R454B.
Innovative, alternative fluids are under constant development–water is an obvious choice and even CO_2 has been proposed.

Industrial Refrigeration:

From a glance, Industrial Refrigeration seems to be an easy sector regarding low GWP refrigerants, but we still see potential pitfalls as well as room for innovation. NH_3 (ammonia) has been the preferred refrigerant due to its excellent efficiency and it continues to be used as demands for sustainable refrigerants increase. However, safety concerns may potentially limit the success of NH_3 as it is toxic, necessitating comprehensive measures in order to be utilized safely. We have learned, as an industry, some important lessons such as avoiding large charges and careful planning the location of larger plants. This has led to find new, innovative ways to reduce charge sizes for example when combining NH_3 with CO_2: CO_2 takes on the role of thermal carrier and is circulated inside the larger storage facilities.

Commercial Refrigeration:

Commercial Refrigeration applications are very diverse regarding systems types and refrigerants used. It includes cold rooms, glass door merchandizers, and display and islands cabinets, either in centralized or plug-ins – hermetic or autonomous cooling circuits with condensing units. Commercial Refrigeration applications are grouped into three main categories.

1. Hermetically sealed applications today use various refrigerants with GWP up to 4000. They are suited for using low GWP refrigerants, which are safe due to their low charge amounts. Many of these systems already use hydrocarbons like R600a and R290 and the EU phasedown has required GWP values below 150 since 2016 (Fig. 2).

2. Condensing units have a refrigerant charge that is typically between 1 and 20 kg and safety on flammability is imperative as many of these systems can be accessed by the public. High GWP refrigerants like R404A have been used for many years, but new alternative A1- classified HFCs like R452A have a GWP of less than 60% of R404A . Nevertheless, the impact of higher compressor discharge temperatures on the operating envelope and the impact of refrigerant glide on cooling performance present new challenges. We believe that most of the market will quickly move to an average GWP level of around 1500, like R448A and R449A, before slowly seeking for more, lower -GWP solutions like CO_2, R290 (Hydrocarbons), or lower GWP HFO Blends (Fig. 2).

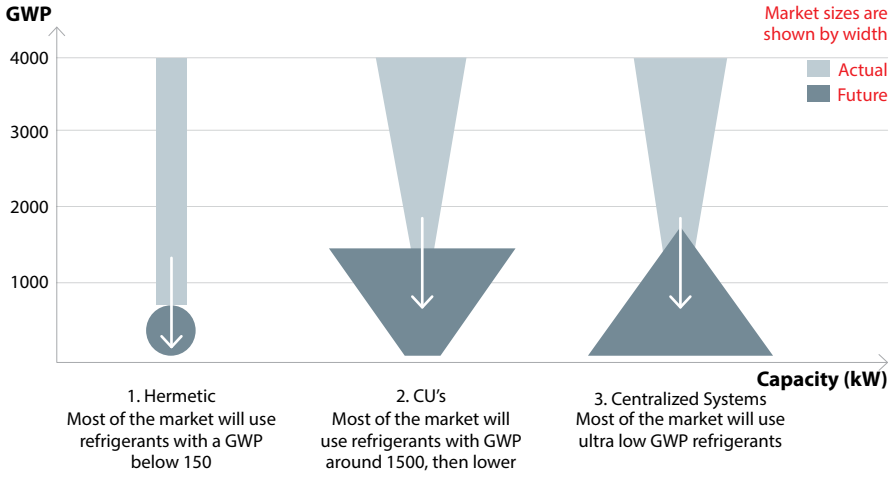

Figure 2: Market transition and GWP levels for Commercial Refrigeration applications

3. Centralized DX systems are by far the highest refrigerant-consuming application due to their large charge sizes and high leakage rates. In the EU phasedown, they are estimated to use more than 40% of the baseline amount of refrigerant recommended by the phasedown. During the last ten years, CO_2 has become a viable refrigerant and can be used in different system setups:

- Transcritical systems where CO_2 is used in all circuits (MT and LT). CO_2 transcritical systems have also been driving the development of integrated heating and cooling systems, linking the refrigerant choice to the type of system.
- Indirect systems where a chiller-like rack using HFCs, HCs, or NH_3 cools the CO_2 in a receiver, which is then circulated in the MT circuit, cooling the MT circuit. LT is also covered by CO_2 and condenses either directly to the chiller on top or the CO_2 MT circuit.
- Cascade systems where CO_2 is used only in the LT circuit and cascaded into the MT circuit which uses HFC. This type of system still uses around 80% of the HFC refrigerant used in a conventional system.

Geographical location affects the energy efficiency of any system due to outdoor ambient temperature. Transcritical CO_2 systems have been known to be extraordinary sensitive to outdoor temperatures. However, the latest developments with ejector technologies have seriously increased CO_2 system efficiency even in very warm climates, and we're now seeing a market breakthrough which will gain momentum in the coming years.

Main refrigerants at Play - A Complex Picture in Continuous Evolution

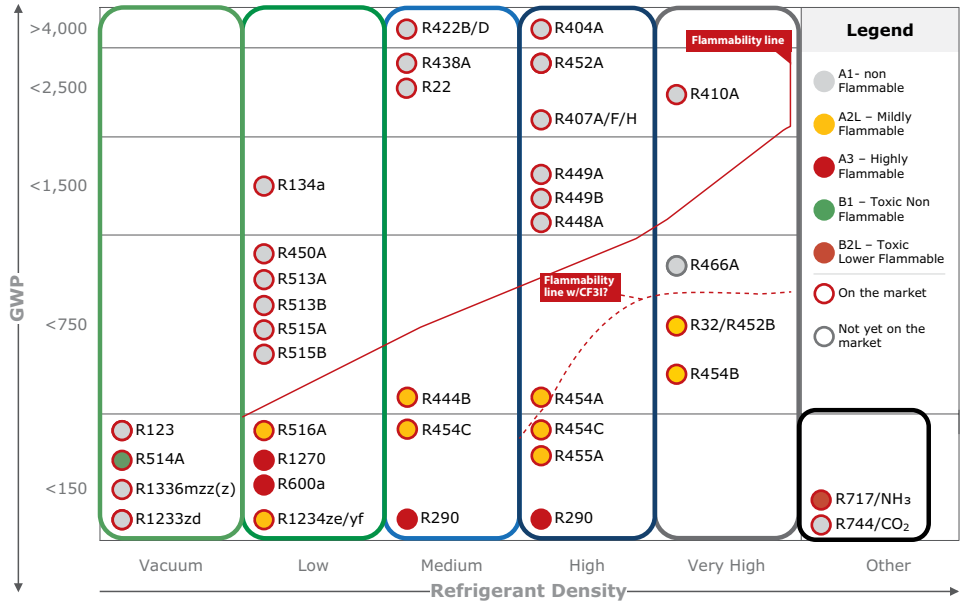

GWP versus Density (pressure) of the main refrigerant groups

Products for refrigerants with a GWP <2500

Refrigerants									
Product grouping	Product	Product description	Pressure [bar]	R1233zd	R1234ze	R134a	R290, R600a	R32	R407A R407F
Electronic controllers [1)]	AK-PC 7XX	Advanced pack controllers		●	●	●	●	●	●
	AK-PC 351/ 5XX	Standard pack controllers			●**)	●	●	●	●
	AK-CC 550/750	Case controller for electronic expansion valves			●**)	●	●	●	●
	AK-CC 250/350/450	Case controller for thermostatic expansion valves					●	●	●
	EKC 326a	CO_2 gas pressure controllers							
	MCX	Programmable controllers		●	●		●	●	●
	EIM 336	Electronic superheat controllers			●	●	●	●	●
	EKE 1A, EKE 1B, EKE 1C (1V)				●	●	●	●	●
	EKC 313	Cascade injection with CO_2		●	●		●	●	●
	EKC 315a	Superheat controllers		●	●		●	●	●
	EKC 361	Temperature controllers		●	●		●	●	●
	EKE 347	Liquid level controllers		●	●			●	●
	ERC IIx / ETC	For commercial refrigeration		●	●	●	●	●	●
Compressors for air conditioning	DSH / DCJ	Scrolls with IDVs for air conditioning						●*)	
	HLJ / HCJ+ / SH	Scrolls for air conditioning							
	PSH	Scrolls heating optimized							
	SZ	Scrolls for air conditioning							
	VZH	Inverter scrolls for air conditioning						●*)	
	TT, TG, VTT	Turbocor oil-free centrifugal compressors			●	●			
Compressors for refrigeration	MTZ	Maneurop reciprocating compressor for medium temp.				●			●
	NTZ	Maneurop reciprocating compressor for low temp.							
	MLZ	Scroll compressor for medium temperature				●			●
	LLZ	Scroll compressor for low temperature							
	PL/TL/DL/FR/NL/SC/GS/ B/U/L/P/X/S	Light Commercial AC Compressors for LBP/MBP				●	●		
	SLV, NLV, DLV, XV	Variable speed reciprocating compressor for LBP/MBP					●		
	BD	Light Commercial AC/DC compressors for mobile cooling				●	●		
Condensing units	Optyma™	Condensing Units for medium temperature refrigeration				●	●		●
	Optyma™	Condensing Units for low temperature refrigeration					●		
	Optyma™ **Slim Pack**, Optyma™ **Plus**	Condensing Units for medium temperature refrigeration				●			●
	Optyma™ **Slim Pack**, Optyma™ **Plus**	Condensing Units for low temperature refrigeration							
	Optyma™ **Plus INVERTER**	Condensing Units for medium temperature refrigeration							●
Electronic expansion valves	AKV	Electronic expansion valves	28 – 52			●			●[5)]
	AKVA	Electronic expansion valves	42						●
	AKVH	Electronic expansion valves	90			●			●
	ETS Colibri®	Electronic expansion valves	50		●	●	●	●	●
	ETS 12.5 - 400	Electronic expansion valves	45.5/34		●	●			●
Electronic Pressure & Temperature regulating Valves	CCM	Standstill capable electronic backpressure regulators	90			●			
	CCMT		140			●			
	CTM	Multi Ejector	140						
	CTR	3-Way Heat Reclaim Valve	140						
	KVS	Electronic suction modulating valves	45.5/34		●	●			●
	ICM	Industrial motorized regulating valves	52/65		●	●			●
	ICMTS	High pressure industrial motorized regulating valves	140					●	
Sensors & transmitters	AKS	Pressure sensors with 4 – 20 mA, volt., and ratiometric outputs	100	●	●	●	●	●	●
	AKS 4100	Liquid level sensors	100						●
	MBS 8200	Pressure sensors with 4 – 20 mA, and ratiometric outputs	160	●	●	●	●	●	●
	AKS Temperature	Sensors with Pt1000, Pt 1000 and thermistor elements		●	●	●	●	●	●
	GD	Gas detecting sensors			●		●		
	DST P100	Pressure Sensor with Ratiometric output and diagnostic capabilities	50	●	●	●	●	●	●
Heat exchangers	BPHE	Brazed Plate heat exchangers			●	●	●	●	●
	MPHE	Micro Plate heat exchangers			●	●	●	●	●
	MCHE	Micro Channel heat exchangers			●	●	●	●	●

[1)] Parameters for other refrigerants can be entered manually. please refer to refrigerant constants for ADAP-KOOL
●) Qualification in progress*
*●**) Only in the latest versions of the controller software*
*●***) except AKV20 with media temperature constantly below 0 °C*
[5)] only for solder version
[7)] Models and map restrictions might apply - Contact Danfoss
[8)] Can be defined by the user

Refrigerants																		
R407C	R410A	R422B	R422D	R444B	R448A	R449A	R449B	R450A	R452A	R452B	R454A	R454B	R454C	R455A	R513A	R744 (CO_2)	R717 (NH_3)	R1234YI
●	●		●		●**)	●**)			●**)		●				●	●	●	
●	●		●		●**)	●**)			●**)						●	●	●	
●	●		●		●**)	●**)			●**)						●	●	●	
																●	●	
																●		
				●					●	●						●	●	
●	●		●		●	●			●							●		
●	●	●7)	●	●7)	●	●		●8)	●	●8)	●8)	●8)	●8)		●8)	●		
				●					●	●						●	●	
				●					●	●						●	●	
				●					●	●						●	●	
				●					●	●						●	●	
				●	●	●			●	●						●	●	
	●									●*)								
	●																	
	●																	
●																		
	●									●*)								
															●			
●					●	●			●						●*)			
									●									
					●	●			●						●*)			
					●	●			●									
					●*)	●*)												
									●									
					●*)	●*)			●						●*)			
						●7)		●7)	●						●*)			
●5)	●	●5)	●5)		●5)	●5)	●	●5)	●5)						●5)	●***)		
●	●	●	●		●	●		●	●						●	●	●	
●	●	●	●		●	●	●	●	●						●	●		
●	●	●	●	●	●	●	●	●	●	●	●	●	●		●			
●	●	●			●	●		●							●			
																●		
																●		
																●		
																●		
●	●	●	●		●	●		●	●						●			
●	●															●	●	
																●		
●	●	●	●	●	●	●		●	●	●	●	●	●	●	●	●	●	
●	●															●	●	
●	●	●	●	●	●	●		●	●	●	●	●	●	●	●	●	●	
●	●	●	●	●	●	●		●	●	●	●	●	●	●	●	●	●	
				●						●						●	●	
●	●	●	●	●	●	●		●	●	●	●	●	●	●	●	●	●	
●	●			●	●	●			●	●		●			●			
●	●			●	●	●			●	●		●			●			
●	●			●	●	●			●	●		●			●			

For any refrigerants not listed and for the detailed information per product, please contact Danfoss or check in Coolselector: ***coolselector.danfoss.com***

Products for refrigerants with a GWP <2500

Refrigerants									
Product grouping	**Product**	**Product description**	**Pressure [bar]**	**R1233zd**	**R1234ze**	**R134a**	**R290, R600a**	**R32**	**R407A R407F**
Thermostatic expansion valves	TU	Stainless steel thermostatic expansion valves	45.5					●	
	TU		34		●	●	●		●
	TC		45.5		●	●	●	●	●
	T2	Thermostatic expansion valves	34			●			●
	TD1		34			●	●		
	TG		46		●	●	●	●	●
	TE5-TE55		28			●			●
	TEA	Industrial thermostatic exp. valves							
Solenoid valves	EVR v2 [2]	Allround solenoid valves	32 – 45.2		●[6]	●	●[6]	●[6]	●
	EVRA/T	Solenoid valves	42			●			●
	EVRH	High pressure solenoid valves	45.2		●	●		●	●
	EVU	Semi-hermetic solenoid valves	70						●
	EVUL	Fully-hermetic solenoid valves	90				●	●	●
	ICLX	Flexline™ solenoid valves	52			●		●	●
Valve stations	ICF	Flexline™ valve stations	52/65			●			●
Mechanical pressure & temperature regulating valves	KVD	Receiver pressure regulators				●	●		●
	KVC	Capacity regulators				●	●		●
	KVL	Crankcase pressure regulators				●	●		●
	KVP	Evaporating pressure regulators				●	●		●
	KVR	Condensing pressure regulators				●	●		●
	CPCE	Hot gas bypass regulating valves				●	●		●
	CVC / CVP	Pilot valve for ICS	65			●			●
	ICS	Mechanical backpressure regulators	52/65		●	●	●	●	●
	REG-S	Flexline™ regulating valves	52			●	●	●	●
Switches	AKS 38	Electro-mechanical float switches	28		●			●	●
	KP	Pressure switches	46		●	●	●		●
	RT					●			●
	MP	Differential pressure switches				●	●	●	●
	RT					●			●
	ACB	Cartridge pressure controls	45		●	●	●	●	●
	CCB		165						
Water regulating valves	WVFX	Pressure operated water valves				●	●		●
	WVO					●	●		●
	WVS					●	●		●
Filters & driers	DCR	Receiver filter driers with replaceable solid cover	28/46	●	●	●			●
	DMC / DCC	Receiver filter driers	42	●	●	●	●	●	●
	DML / DCL	Liquid line filter driers	46	●	●	●	●	●	●
	DMB / DCB	Bi-flow filter driers	46	●	●	●	●[3]	●[3]	●
	DAS	Burn-out filter driers	35	●	●	●	●[3]	●[3]	●
	DMT	Filter driers for transcritical applications	140						
	DMSC	Filter drier for subcritical applications	52						
Check valves	NRV	Piston check valves	46		●	●	●[4]	●[4]	●
	NRVA		40			●	●	●	●
	CHV-X	Flexline™ check valves	52/65			●			●
	SCA-X	Flexline™ check & stop valves	52/65			●			●
Shut-off valves	GBC	Shut-off ball valves	45		●	●	●[4]	●[4]	●
	BML	Shut-off diaphragm valves	28		●	●	●[5]		
	SNV / SVA	Gauge valves / Flexline™ stop valves	52/65		●	●	●	●	●
Sight glasses	SG	Sight glasses for low pressures	35			●			●
	SGP	Sight glasses for high pressures	52		●	●	●[5]	●[5]	●

**) Qualification in progress*
[2]) New EVR: 45.2 bar
[3]) Filter Dryers with connection sizes below 25 mm - Qualification of the filter driers mentionned for R452B and R454B in progress - Qualification of DMSC/52 bar for CO_2 in progress
[4]) NRV with connection sizes below 22 mm / GBC with connection sizes below 25 mm
[5]) Only for solder version
[6]) EVR v2 2 to 22 with solder connection and without manual stem

Refrigerants																		
R407C	R410A	R422B	R422D	R444B	R448A	R449A	R449B	R450A	R452A	R452B	R454A	R454B	R454C	R455A	R513A	R744 (CO_2)	R717 (NH_3)	R1234YI
	●															●		
●					●	●		●	●						●			
●	●				●	●		●	●						●			
●					●	●		●	●						●			
●					●*	●*			●*									
●	●									●		●						
●					●	●		●*	●						●			
																	●	
●	●		●	●	●	●		●	●									●[6]
●	●																●	
●	●	●	●		●	●	●	●	●									
●	●				●	●		●	●							●		
●	●				●	●		●	●							●		
●	●															●	●	
●	●															●	●	
●		●	●		●	●		●	●						●			
●		●	●		●	●		●	●						●			
●		●	●		●	●		●	●						●			
●		●	●		●	●		●	●						●			
●		●	●		●	●		●	●						●			
●		●	●		●	●		●	●						●			
●	●															●	●	
●	●															●	●	
●	●													●		●	●	
	●									●		●		●		●	●	
●	●	●	●	●	●	●		●	●						●		●	
●		●	●														●	
●		●	●		●	●		●	●						●		●	
●		●	●														●	
●	●	●	●		●	●		●	●	●		●			●			
																●		
●	●	●	●		●	●		●	●						●		●	
●		●	●		●	●		●	●						●		●	
●	●	●	●		●	●		●	●						●		●	
●	●						●	●	●						●			
●	●	●	●	●	●	●		●	●	●	●	●		●	●			
●	●	●	●	●[3]	●	●	●	●[3]	●	●	●	●		●	●			
●	●	●	●	●[3]	●	●	●	●[3]	●	●[3]	●[3]	●[3]		●	●			
●	●	●	●	●[3]	●	●	●	●[3]	●	●[3]	●[3]	●[3]		●	●			
																●		
																●[3]		
●	●				●	●		●	●	●[4]		●[4]			●	90 bar		●[6]
●	●																●	
●	●															●	●	
●	●															●	●	
●	●				●	●		●	●	●[4]		●[4]			●	75/90 bar		
●								●							●			●[5]
●	●	●	●	●	●	●	●	●	●	●	●	●		●	●	●	●	
●					●	●		●	●						●			
●	●				●	●		●	●	●[5]		●[5]			●	●		●[5]

For any refrigerants not listed and for the detailed information per product, please contact Danfoss or check in Coolselector: ***coolselector.danfoss.com***

Table of contents - Type

034G7073 54
034G7074 54
034G7602 42
034G7700 42
034G7701 42
034G7702 42
034G7703 42
034G7800 42
034G7801 42
034G7802 42
034G7803 42
48-DA solid core 223
48-DC solid core 223
48-DM solid core 223
48-F strainer 223
077B0 141
077B02 141
077B6/62 141
077B20 141
077B30 141
077B40 141

A

ACCCBI 435
ACCCBI 435
ACCCBI 437
ACCCBI 437
AK-CC 210 400
AK-CC 210 411
AK-CC 250A 400
AK-CC 250A 413
AK-CC 350 400
AK-CC 350 415
AK-CC 450 400
AK-CC 450 417
AK-CC 550A 400
AK-CC 550A 419
AK-CC 750A 400
AK-CM101C 402
AK-CM 102 421
AK-CM 102 439
AK-CM 102 441
AK-CM 102 443
AK-CM 102 445
AK-HS 1000 477
AK-PC 351 401
AK-PC 351 433
AK-PC 551 401
AK-PC 551 401
AK-PC 551 435
AK-PC 551 435
AK-PC 551 kit 435
AK-PC 551 kit 435
AK-PC 651 401
AK-PC 651 437
AK-PC 772A 401
AK-PC 772A 439
AK-PC 781A 401
AK-PC 781A 441
AK-PC 782A 401
AK-PC 782A 443
AK-PC 783A 401
AK-PC 783A 445
AK-RC 101 401
AK-RC 101 447
AK-RC 101 447
AK-RC 103 401
AK-RC 103 401
AK-RC 103 401
AK-RC 103 449
AK-RC 103 449
AK-RC 103 449
AK-RC 103 449
AK-RC 103 - three-phase (3 kW) 449
AK-RC 103 - three-phase (5 kW) 449
AKS 11 423
AKS 11 477
AKS 12 405
AKS 12 407
AKS 12 409
AKS 12 411
AKS 12 413
AKS 12 415
AKS 12 477
AKS 21A 477
AKS 21D 477
AKS 21M 477
AKS 21W 477
AKS 32 473
AKS 32R 423
AKS 32R 473
AKS 33 423
AKS 33 473
AKS 2050 473
AKS 3000 423
AKS 3000 473
AKS 4100 469
AKS 4100 469
AKS 4100 469
AKS 4100 469
AKS 4100 469
AKS 4100 469
AKS 4100 469
AKS 4100 469
AKS 4100 469
AKS 4100 469
AKS 4100 469
AKS 4100 469
AKS 4100 469
AKS 4100 469
AKS 4100 469
AKS 4100 469
AKS 4100 469
AKS 4100 469
AKS 4100 469
AKS 4100 469
AKS 4100 469
AKS 4100 469
AKS 4100 469
AKS 4100 469
AKS 4100 469
AKS 4100 469
AKS 4100 469
AKS 4100 / AKS 4100U 470
AKS 4100 / AKS 4100U HMI 470
AKS 4100 / AKS 4100U HMI 470
AKS 4100 / AKS 4100U HMI 470
AKS 4100 / AKS 4100U HMI 470
AKS 4100U 469
AKS 4100U 469
AKS 4100U 469
AKS 4100U 469
AKS 4100U 469
AKS 4100U 469
AKS 4100U 469
AKS 4100U 469
AKS 4100U 469
AKS 4100U 469
AKS 4100U 469
AKS 4100U 469
AKS 4100U 469
AKS 4100U 469
AKS 4100U 469
AKS 4100U 469
AKS 4100U 469
AKS 4100U 469
AKS 4100U 469
AKS 4100U 469
AKS 4100U 469
AKS 4100U 469
AKS 4100U 469
AK-SM 800AL 401
AK-SM 800AL 451
AK-SM 810 401
AK-SM 810 451
AK-SM 820 401
AK-SM 820 451
AK-SM 850 401
AK-SM 850 451
AK-SM 880 401
AK-SM 880 451
AK-ST 500 421
AK-ST 500 439
AK-ST 500 441
AK-ST 500 443
AK-ST 500 445
AKV 10P0 64
AKV 10P0 64
AKV 10P1 64
AKV 10P1 64
AKV 10P2 64
AKV 10P2 64
AKV 10P3 64
AKV 10P3 64
AKV 10P4 64
AKV 10P4 64
AKV 10P5 64
AKV 10P5 64
AKV 10P6 64
AKV 10P6 64
AKV 10P7 64
AKV 10P7 64
AKV 10PS4 64
AKV 10PS4 64
AKV 10PS5 64
AKV 10PS5 64
AKV 10PS6 64
AKV 10PS6 64
AKV 10PS7 64
AKV 10PS7 64
AKV 15 – 1 67
AKV 15 – 1 67
AKV 15 – 2 67
AKV 15 – 2 67
AKV 15 – 3 67
AKV 15 – 3 67
AKV 15 – 4 67
AKV 15 – 4 67
AKV 20 – 1 67

AKV 20 – 1 67
AKV 20 – 1 67
AKV 20 – 2 67
AKV 20 – 2 67
AKV 20 – 2 67
AKV 20 – 3 67
AKV 20 – 3 67
AKV 20 – 3 67
AKV 20 – 4 67
AKV 20 – 4 67
AKV 20 – 4 67
AKV 20 – 5 67
AKV 20 – 5 67
AKV 20 – 5 67
AKVA 10 71
AKVA 10 – 1 71
AKVA 10 – 2 71
AKVA 10 – 3 71
AKVA 10 – 4 71
AKVA 10 – 5 71
AKVA 10 – 6 71
AKVA 10 – 7 71
AKVA 10 – 8 71
AKVA 15 71
AKVA 15 – 1 71
AKVA 15 – 1 to 4 71
AKVA 15 – 2 71
AKVA 15 – 3 71
AKVA 15 – 4 71
AKVA 20 71
AKVA 20 – 1 71
AKVA 20 – 2 71
AKVA 20 – 3 71
AKVA 20 – 4 71
AKVA 20 – 5 71
AKVH / EVRH 100
AKVH / EVRH 100
AK-XM 101A 402
AK-XM 101A 421
AK-XM 101A 439
AK-XM 101A 441
AK-XM 102A 402
AK-XM 102A 421
AK-XM 102A 439
AK-XM 102A 441
AK-XM 102B 402
AK-XM 102B 421
AK-XM 102B 439
AK-XM 102B 441
AK-XM 103A 402
AK-XM 103A 421
AK-XM 103A 439
AK-XM 103A 441
AK-XM 204A 402
AK-XM 204A 421
AK-XM 204A 439
AK-XM 204A 441
AK-XM 204B 402
AK-XM 204B 421
AK-XM 204B 439
AK-XM 204B 441
AK-XM 205A 402
AK-XM 205A 421
AK-XM 205A 439
AK-XM 205A 441
AK-XM 205B 402
AK-XM 205B 421
AK-XM 205B 439
AK-XM 205B 441
AK-XM 208C 402
AK-XM 208C 421
AK-XM 208C 439
AK-XM 208C 441
AS012DS 95
AS024CS 94
AS024D 95
AS230CS 61
AS230CS 94
AS240CS 94
AST 54
AST-G 54
AST-G 58
AST-G service driver 51
AU012DS 95
AU024DS 95
AU115CS 94
AU230CS 94
AU240CS 94
AVTA 10 161
AVTA 10 161
AVTA 10 161
AVTA 10 161
AVTA 15 161
AVTA 15 161
AVTA 15 161
AVTA 15 161
AVTA 15 161
AVTA 15 161
AVTA 15 161
AVTA 20 161
AVTA 20 161
AVTA 20 161
AVTA 20 161
AVTA 20 161
AVTA 25 161
AVTA 25 161
AVTA 25 161
AVTA 25 161
AVTA 25 161
AY024C 95
AY120C 95
AY240C 95
AZ024CS 95
AZ120CS 61
AZ120CS 95
AZ240CS 95

B

B3-030-10-3.0-HQ 390
B3-030-20-3.0-HQ 390
B3-030-30-3.0-HQ 390
B3-030-50-3.0-HQ 390
B3-030-70-3.0-HQ 390
B3-052-54-3.0-HQ 390
B3-052-70-3.0-HQ 390
B3-052-88-3.0-HQ 390
B3-095-44-3.0-HQ 390
B3-095-60-3.0-HQ 390
B3-095-74-3.0-HQ 390
B3-095-92-3.0-HQ 390
B3-095-122-3.0-HQ 390
B3-210-74-3.0-HQ 390
B3-210-90-3.0-HQ 390
B22G 518
B22G5 527
B25G 518
B25G 527
B25G5L 527
B25GL 518
B30G 518
B30G 518
B30G5 527
B35C 524
B35C 524
B35C 531
B35C5B 531
B35C5BL 531
B35CA 524
B35G5 527
B35GL 518
B38G 518
B38G 518
B38G 527
B38G5L 527
B38H 517
B38H 526
B38H5 526
B38H5L 526
B43C0 524
B43C0 531
B43C5B 531
B43CB 524
B43CB 524
B43CB 524
B43CB 531
B43GL 518
B43H 517
B43H 526
B43H5L 526
B43HB 517
B43HB 526
B48H 517
B52C0L 524
B52C0L 531
B52C5BL 531
B52CL 524
B52CL 524
B60C5BL 531
B60CBL 524
B60CBL 524
B60CBL 531
B65CL 524
B65CL 524
BB024AS 99
BB024BS 99
BB110CS 99
BB110CS 99
BB115AS 99
BB230AS 99
BB230CS 99
BB230CS 99
BB240AS 99
BE012AS 97
BE024AS 97
BE024AS 98
BE024BS 97
BE042AS 97
BE048AS 97

Table of contents - Type

BE110CS 97
BE110CS 97
BE110CS 98
BE110CS 98
BE115AS 97
BE115CS 97
BE115CS 97
BE115CS 98
BE115CS 98
BE220BS 97
BE220BS 98
BE230AS 97
BE230AS 97
BE230AS 98
BE230AS 98
BE230CS 65
BE230CS 65
BE230CS 97
BE230CS 97
BE230CS 98
BE230CS 98
BE240AS 97
BE240AS 98
BE240CS 65
BE240CS 65
BE240CS 65
BE240CS 97
BE240CS 97
BE420AS 98
BE440AS 97
BE440CS 97
BE440CS 97
BF024AS 97
BF024BS 97
BF110CS 97
BF110CS 97
BF115CS 97
BF115CS 97
BF220BS 97
BF230AS 97
BF230AS 97
BF230CS 65
BF230CS 65
BF230CS 65
BF230CS 97
BF230CS 97
BF240AS 97
BF400AS 97
BG012DS 98
BG012DS 98
BG024AS 98
BG024BS 98
BG024DS 98
BG024DS 98
BG048AS 98
BG048DS 98
BG048DS 98
BG110AS 98
BG110BS 65
BG110BS 98
BG110DS 98
BG110DS 98
BG115DS 98
BG220BS 98
BG220DS 98
BG220DS 98
BG230AS 98
BG230AS 98
BG240AS 98
BG400AS 98
BJ 100
BJ024CS 65
BJ120CS 65
BJ120CS 65
BJ240CS 65
BJ240CS 65
BML 6 275
BML 6 276
BML 6s 275
BML 6s 275
BML 10 275
BML 10 276
BML 10s 275
BML 10s 275
BML 12 275
BML 12 276
BML 12s 275
BML 12s 275
BML 15 275
BML 15 276
BML 15s 275
BML 15s 275
BML 18 275
BML 18 276
BML 18s 275
BML 22 276
BML 22s 275
BML 22s 275
BMT 6 275
BMT 6 276
BN024AS 99
BN024BS 99
BN230AS 99
BV 99
BX 100
BX024CS 65
BX024CS 65
BX024CS 65
BX120CS 65
BX120CS 65
BX120CS 65
BX120CS 65
BX120CS 65
BX120CS 65
BX120CS 65
BX120CS 65
BX240CS 65
BX240CS 65
BX240CS 65
BX240CS 65

C

C62L-EZ-20 399
C62L-EZ-30 399
C62L-EZ-40 399
C62L-EZ-50 399
C62L-EZ-60 399
C62L-EZ-70 399
C62L-EZ-80 399
C62L-EZ-90 399
C62L-EZ-100 399
C62L-EZ-110 399
C62L-EZ-120 399
C62L-EZ-140 399
C118L-EZ-40 399
C118L-EZ-40 400
C118L-EZ-50 399
C118L-EZ-50 400
C118L-EZ-60 399
C118L-EZ-60 400
C118L-EZ-70 399
C118L-EZ-70 400
C118L-EZ-80 399
C118L-EZ-80 400
C118L-EZ-90 399
C118L-EZ-90 400
C118L-EZ-100 399
C118L-EZ-100 400
C118L-EZ-110 399
C118L-EZ-110 400
C118L-EZ-120 399
C118L-EZ-120 400
C118L-EZ-130 399
C118L-EZ-130 400
C118L-EZ-140 399
C118L-EZ-140 400
C118L-EZ-150 399
C118L-EZ-150 400
C118L-EZ-160 399
C118L-EZ-160 400
C118L-EZ-180 399
C118L-EZ-180 400
C118L-EZ-200 399
C118L-EZ-200 400
C118L-EZ-220 399
C118L-EZ-220 400
C118L-EZ-250 399
C118L-EZ-250 400
CAJ2446Z 767
CAJ2446Z 768
CAJ2446Z 780
CAJ2446Z 781
CAJ2446Z 801
CAJ2446Z 802
CAJ2446Z 813
CAJ2446Z 814
CAJ2464Z 767
CAJ2464Z 768
CAJ2464Z 780
CAJ2464Z 781
CAJ4492Y 769
CAJ4492Y 780
CAJ4492Y 785
CAJ4511Y 769
CAJ4511Y 780
CAJ4511Y 785
CAJ4511Y 803
CAJ4511Y 813
CAJ4511Y 816
CAJ4517Z 772
CAJ4517Z 774
CAJ4517Z 778
CAJ4517Z 780
CAJ4517Z 784
CAJ4517Z 805
CAJ4517Z 807
CAJ4517Z 811
CAJ4517Z 813
CAJ4517Z 816
CAJ4519Z 772
CAJ4519Z 774

CAJ4519Z 778
CAJ4519Z 780
CAJ4519Z 784
CAJ4519Z 805
CAJ4519Z 807
CAJ4519Z 811
CAJ4519Z 813
CAJ4519Z 816
CAJ9510Z 772
CAJ9510Z 774
CAJ9510Z 778
CAJ9510Z 780
CAJ9510Z 785
CAJ9510Z 805
CAJ9510Z 807
CAJ9510Z 811
CAJ9510Z 813
CAJ9510Z 817
CAJ9513Z 772
CAJ9513Z 774
CAJ9513Z 778
CAJ9513Z 780
CAJ9513Z 784
CAJ9513Z 805
CAJ9513Z 807
CAJ9513Z 811
CAJ9513Z 813
CAJ9513Z 816
CCM 10 54
CCM 20 54
CCM 30 54
CCM 40 54
CCMT 2 58
CCMT 4 58
CCMT 8 58
CHV-X 15 327
CHV-X 15 328
CHV-X 15 332
CHV-X 15 332
CHV-X 15 332
CHV-X 15 340
CHV-X 15 340
CHV-X 15 340
CHV-X 20 327
CHV-X 20 328
CHV-X 20 332
CHV-X 20 332
CHV-X 20 332
CHV-X 20 340
CHV-X 20 340
CHV-X 20 340
CHV-X 25 327
CHV-X 25 328
CHV-X 25 332
CHV-X 25 332
CHV-X 25 332
CHV-X 25 340
CHV-X 25 340
CHV-X 25 340
CHV-X 32 327
CHV-X 32 328
CHV-X 32 333
CHV-X 32 333
CHV-X 32 333
CHV-X 32 340
CHV-X 32 340
CHV-X 32 340
CHV-X 40 327
CHV-X 40 328
CHV-X 40 333
CHV-X 40 333
CHV-X 40 333
CHV-X 40 341
CHV-X 40 341
CHV-X 40 341
CHV-X 50 327
CHV-X 50 328
CHV-X 50 333
CHV-X 50 333
CHV-X 50 333
CHV-X 50 341
CHV-X 50 341
CHV-X 50 341
CHV-X 65 327
CHV-X 65 328
CHV-X 65 333
CHV-X 65 333
CHV-X 65 333
CHV-X 65 341
CHV-X 65 341
CHV-X 65 341
CHV-X 80 327
CHV-X 80 328
CHV-X 80 334
CHV-X 80 334
CHV-X 80 334
CHV-X 80 341
CHV-X 80 341
CHV-X 80 341
CHV-X 100 327
CHV-X 100 328
CHV-X 100 334
CHV-X 100 334
CHV-X 100 334
CHV-X 100 341
CHV-X 100 341
CHV-X 100 341
CHV-X 125 327
CHV-X 125 328
CHV-X 125 334
CHV-X 125 334
CHV-X 125 334
CHV-X 125 342
CHV-X 125 342
CHV-X 125 342
CHV-X SS 15 345
CHV-X SS 15 345
CHV-X SS 20 345
CHV-X SS 20 345
CHV-X SS 25 345
CHV-X SS 25 345
CHV-X SS 32 345
CHV-X SS 32 345
CHV-X SS 40 345
CHV-X SS 40 345
CPCE 12 155
CPCE 15 155
CPCE 22 155
CTM 1 LE 200 61
CTM 1 LE 400 61
CTM 2 LE 600 61
CTM 6 HP 1875 61
CTM 6 HP 3875 61
CTM 6 LP 935 61
CTM 6 LP 1935 61
CVC-L 195
CVC (LP) 193
CVC-M 195
CVC (XP) 193
CVE 195
CVH 193
CVH 195
CVP-H 195
CVP (HP) 193
CVP-L 195
CVP (LP) 193
CVP-M 195
CVPP (HP) 193
CVPP-L 195
CVPP (LP) 193
CVPP-M 195
CVP (XP) 193
CVQ 193
CXH140 663
CXH140 663
CXH140 663
CXH140 663
CXH140 + CXH140 663
CXH282 663

D

D22-10 397
D22-16 397
D22-20 397
D22-26 397
D22-30 397
D22-36 397
D22-40 397
D22-50 397
D22-60 397
D22L-10 396
D22L-16 396
D22L-20 396
D22L-26 396
D22L-30 396
D22L-36 396
D22L-40 396
D22L-50 396
D22L-60 396
D55-H-10 397
D55-H-16 397
D55-H-20 397
D55-H-26 397
D55-H-30 397
D55-H-36 397
D55-H-40 397
D55-H-46 397
D55-H-50 397
D55-H-60 397
D55-H-70 397
D55-H-80 397
D55L-EU-10 394
D55L-EU-16 394
D55L-EU-20 394
D55L-EU-26 394
D55L-EU-30 394
D55L-EU-36 394
D55L-EU-40 394
D55L-EU-46 394
D55L-EU-50 394
D55L-EU-60 394

Table of contents - Type

D55L-EU-70 394
D55L-EU-80 394
D55L-EU-90 394
D55L-EU-100 394
D55L-H-10 396
D55L-H-16 396
D55L-H-20 396
D55L-H-26 396
D55L-H-30 396
D55L-H-36 396
D55L-H-40 396
D55L-H-46 396
D55L-H-50 396
D55L-H-60 396
D55L-H-70 396
D55L-H-80 396
D62-16 397
D62-20 397
D62-26 397
D62-30 397
D62-36 397
D62-40 397
D62-46 397
D62-50 397
D62-60 397
D62-70 397
D62-80 397
D62-90 397
D62-100 397
D62-110 397
D62-120 397
D62-E-16 395
D62-E-20 395
D62-E-26 395
D62-E-30 395
D62-E-36 395
D62-E-40 395
D62-E-46 395
D62-E-50 395
D62-E-60 395
D62-E-70 395
D62-E-80 395
D62-E-90 395
D62-E-100 395
D62-E-110 395
D62-E-120 395
D62L-E -16 394
D62L-E -20 394
D62L-E - 26 394
D62L-E - 30 394
D62L-E - 36 394
D62L-E - 40 394
D62L-E - 46 394
D62L-E - 50 394
D62L-E - 60 394
D62L-E - 70 394
D62L-E - 80 394
D62L-E - 90 394
D62L-E - 100 394
D62L-E - 110 394
D62L-E - 120 394
D62L-H-16 396
D62L-H-20 396
D62L-H-26 396
D62L-H-30 396
D62L-H-36 396
D62L-H-40 396
D62L-H-46 396
D62L-H-50 396
D62L-H-60 396
D62L-H-70 396
D62L-H-80 396
D62L-H-90 396
D62L-H-100 396
D62L-H-110 396
D62L-H-120 396
D118-20 397
D118-26 397
D118-30 397
D118-36 397
D118-40 397
D118-46 397
D118-50 397
D118-56 397
D118-60 397
D118-70 397
D118-80 397
D118-90 397
D118-100 397
D118-110 397
D118-120 397
D118-130 397
D118-140 397
D118-150 397
D118-160 397
D118-E-20 395
D118-E-26 395
D118-E-30 395
D118-E-36 395
D118-E-40 395
D118-E-46 395
D118-E-50 395
D118-E-56 395
D118-E-60 395
D118-E-70 395
D118-E-80 395
D118-E-90 395
D118-E-100 395
D118-E-110 395
D118-E-120 395
D118-E-130 395
D118-E-140 395
D118-E-150 395
D118-E-160 395
D118L-20 396
D118L-26 396
D118L-30 396
D118L-36 396
D118L-40 396
D118L-46 396
D118L-50 396
D118L-56 396
D118L-60 396
D118L-70 396
D118L-80 396
D118L-90 396
D118L-100 396
D118L-110 396
D118L-120 396
D118L-130 396
D118L-140 396
D118L-150 396
D118L-160 396
D118L-E - 20 394
D118L-E - 26 394
D118L-E - 30 394
D118L-E - 36 394
D118L-E - 40 394
D118L-E - 46 394
D118L-E - 50 394
D118L-E - 56 394
D118L-E - 60 394
D118L-E - 70 394
D118L-E - 80 394
D118L-E - 90 394
D118L-E - 100 394
D118L-E - 110 394
D118L-E - 120 394
D118L-E - 130 394
D118L-E - 140 394
D118L-E - 150 394
D118L-E - 160 394
DAS 083 213
DAS 084 213
DAS 084sVV 213
DAS 084VV 213
DAS 085 213
DAS 085sVV 213
DAS 086 213
DAS 086sVV 213
DAS 164 213
DAS 164sVV 213
DAS 164VV 213
DAS 165 213
DAS 165sVV 213
DAS 165VV 213
DAS 166 213
DAS 166sVV 213
DAS 167 213
DAS 167sVV 213
DAS 305 213
DAS 305sVV 213
DAS 306 213
DAS 306sVV 213
DAS 307 213
DAS 307sVV 213
DAS 309 213
DAS 309sVV 213
DAS 417 213
DAS 417sVV 213
DAS 419 213
DAS 419sVV 213
DAS 607 213
DAS 607sVV 213
DAS 609sVV 213
DCB 053s 229
DCB 053s 229
DCB 082 230
DCB 082 / 082s 229
DCB 082 / 082s 229
DCB 082s 230
DCB 083 230
DCB 083 / 083s 229
DCB 083 / 083s 229
DCB 083s 230
DCB 084 230
DCB 084 / 084s 229
DCB 084 / 084s 229
DCB 084s 230
DCB 162 229
DCB 162 229

DCB 162 230
DCB 163 230
DCB 163 / 163s 229
DCB 163 / 163s 229
DCB 163s 230
DCB 164 230
DCB 164 / 164s 229
DCB 164 / 164s 229
DCB 164s 230
DCB 165 230
DCB 165 / 165s 229
DCB 165 / 165s 229
DCB 165s 230
DCB 303 229
DCB 303 229
DCB 303 230
DCB 304 230
DCB 304 / 304s 229
DCB 304 / 304s 229
DCB 304s 230
DCB 305 230
DCB 305 / 305s 229
DCB 305 / 305s 229
DCB 305s 230
DCB 307s 229
DCB 307s 229
DCB 307s 230
DCC 0432s 235
DCC 0432s 235
DCC 0732s 235
DCC 0732s 235
DCC 2032s 235
DCC 2032s 235
DCC 2033s 235
DCC 2033s 235
DCC 40163s 235
DCJ091 573
DCJ091 573
DCJ091 573
DCJ091 573
DCJ091T4 574
DCJ091T4 574
DCJ091T4 574
DCJ091T4 574
DCJ106 573
DCJ106 573
DCJ106 573
DCJ106 573
DCJ106T4 574
DCJ106T4 574
DCJ106T4 574
DCJ106T4 574
DCJ121 573
DCJ121 573
DCJ121 573
DCJ121 573
DCJ121T4 574
DCJ121T4 574
DCJ121T4 574
DCJ121T4 574
DCL 1.52XL / 2.8mm s 202
DCL1.52XL / 2.8 mms 199
DCL1.52XL 2.8 mm s 200
DCL 032 201
DCL 032.5s 199
DCL 032.5s 200
DCL 032.5s 202
DCL 032.5s 203
DCL 032 / 032s 199
DCL 032s 202
DCL 032s 203
DCL 033 201
DCL 033 / 033s 199
DCL 033 / 033s 200
DCL 033s 202
DCL 033s 203
DCL 052 201
DCL 052.5s 199
DCL 052.5s 200
DCL 052 / 052s 199
DCL 052 / 052s 200
DCL 052s 202
DCL 052s 203
DCL 053 201
DCL 053 / 053s 199
DCL 053 / 053s 200
DCL 053s 202
DCL 053s 203
DCL 082 201
DCL 082.5s 199
DCL 082.5s 200
DCL 082 / 082s 199
DCL 082 / 082s 200
DCL 082s 202
DCL 082s 203
DCL 083 201
DCL 083 / 083s 199
DCL 083 / 083s 200
DCL 083s 202
DCL 083s 203
DCL 084 201
DCL 084 / 084s 199
DCL 084 / 084s 200
DCL 084s 202
DCL 084s 203
DCL 085s 202
DCL 162 201
DCL 162.5s 200
DCL 162 / 162s 199
DCL 162 / 162s 200
DCL 162s 202
DCL 162s 203
DCL 163 201
DCL 163 / 163s 199
DCL 163 / 163s 200
DCL 163s 202
DCL 163s 203
DCL 164 201
DCL 164 / 164s 199
DCL 164 / 164s 200
DCL 164s 202
DCL 164s 203
DCL 165 201
DCL 165 / 165s 199
DCL 165 / 165s 200
DCL 165s 202
DCL 165s 203
DCL 166 201
DCL 166 / 166s 199
DCL 166 / 166s 200
DCL 166s 202
DCL 166s 203
DCL 167s 199
DCL 167s 200
DCL 167s 202
DCL 167s 203
DCL 303 201
DCL 303 / 303s 199
DCL 303 / 303s 200
DCL 303s 202
DCL 303s 203
DCL 304 201
DCL 304 / 304s 199
DCL 304 / 304s 200
DCL 304s 202
DCL 304s 203
DCL 305 201
DCL 305 / 305s 199
DCL 305 / 305s 200
DCL 305s 202
DCL 305s 203
DCL 306 201
DCL 306 / 306s 199
DCL 306 / 306s 200
DCL 306s 202
DCL 306s 203
DCL 307s 199
DCL 307s 200
DCL 307s 202
DCL 307s 203
DCL 309s 199
DCL 309s 200
DCL 309s 202
DCL 309s 203
DCL 413 199
DCL 413 200
DCL 414 201
DCL 414 / 414s 199
DCL 414 / 414s 200
DCL 414s 202
DCL 414s 203
DCL 415 201
DCL 415 / 415s 199
DCL 415 / 415s 200
DCL 415s 202
DCL 415s 203
DCL 417s 199
DCL 417s 200
DCL 417s 202
DCL 417s 203
DCL 419s 199
DCL 419s 200
DCL 419s 202
DCL 419s 203
DCL 604s 199
DCL 604s 200
DCL 604s 203
DCL 607s 199
DCL 607s 200
DCL 607s 202
DCL 607s 203
DCL 609s 199
DCL 609s 200
DCL 609s 202
DCL 609s 203
DCL 757s 199
DCL 757s 200
DCL 757s 202
DCL 757s 203
DCL 759s 199
DCL 759s 200

Table of contents - Type

DCL 759s 202
DCL 759s 203
DCR 048 219
DCR 048 219
DCR 096 219
DCR 096 219
DCR 144 219
DCR 144 219
DCR 192 219
DCR 192 219
DCR 0485 215
DCR 0485 216
DCR 0485 217
DCR 0485 218
DCR 0485 219
DCR 0485 220
DCR 0485 221
DCR 0485s 222
DCR 0487 215
DCR 0487 216
DCR 0487 217
DCR 0487 218
DCR 0487 219
DCR 0487 220
DCR 0487 221
DCR 0487 221
DCR 0487s 222
DCR 0487s 222
DCR 0489 215
DCR 0489 216
DCR 0489 217
DCR 0489 218
DCR 0489 219
DCR 0489 220
DCR 0489 221
DCR 0489 221
DCR 0489s 222
DCR 0489s 222
DCR 0489s 222
DCR 0965 219
DCR 0965 220
DCR 0967 215
DCR 0967 216
DCR 0967 217
DCR 0967 218
DCR 0967 219
DCR 0967 220
DCR 0967 221
DCR 0967s 222
DCR 0969 215
DCR 0969 216
DCR 0969 217
DCR 0969 218
DCR 0969 219
DCR 0969 220
DCR 0969 221
DCR 0969 221
DCR 0969s 222
DCR 0969s 222
DCR 0969s 222
DCR 1445 219
DCR 1445 220
DCR 1447 219
DCR 1447 220
DCR 1449 215
DCR 1449 216
DCR 1449 217
DCR 1449 218
DCR 1449 219
DCR 1449 220
DCR 1449 221
DCR 1449 221
DCR 1449s 222
DCR 1925 219
DCR 1925 220
DCR 1927 219
DCR 1927 220
DCR 1929 219
DCR 1929 220
DCR 04811 215
DCR 04811 216
DCR 04811 217
DCR 04811 218
DCR 04811 219
DCR 04811 220
DCR 04811 221
DCR 04811s 222
DCR 04813 215
DCR 04813 216
DCR 04813 217
DCR 04813 218
DCR 04813 219
DCR 04813 220
DCR 04813 221
DCR 04813 221
DCR 04813s 222
DCR 04813s 222
DCR 04813s 222
DCR 04817 215
DCR 04817 216
DCR 04817 217
DCR 04817 218
DCR 04817 219
DCR 04817 220
DCR 04817 221
DCR 04817s 222
DCR 04821 215
DCR 04821 216
DCR 04821 217
DCR 04821 218
DCR 04821 219
DCR 04821 220
DCR 04821 221
DCR 04821s 222
DCR 09611 215
DCR 09611 216
DCR 09611 217
DCR 09611 218
DCR 09611 219
DCR 09611 220
DCR 09611 221
DCR 09611 221
DCR 09611s 222
DCR 09613 215
DCR 09613 216
DCR 09613 217
DCR 09613 218
DCR 09613 219
DCR 09613 220
DCR 09613 221
DCR 09613 221
DCR 09613s 222
DCR 09613s 222
DCR 09613s 222
DCR 09617 215
DCR 09617 216
DCR 09617 217
DCR 09617 218
DCR 09617 219
DCR 09617 220
DCR 09617 221
DCR 09617s 222
DCR 09617s 222
DCR 09621 219
DCR 09621 220
DCR 09621s 222
DCR 14411 215
DCR 14411 216
DCR 14411 217
DCR 14411 218
DCR 14411 219
DCR 14411 220
DCR 14411 221
DCR 14411s 222
DCR 14411s 222
DCR 14413 215
DCR 14413 216
DCR 14413 217
DCR 14413 218
DCR 14413 219
DCR 14413 220
DCR 14413 221
DCR 14413 221
DCR 14413s 222
DCR 14413s 222
DCR 14413s 222
DCR 14417 215
DCR 14417 216
DCR 14417 217
DCR 14417 218
DCR 14417 219
DCR 14417 220
DCR 14417 221
DCR 14417s 222
DCR 14421 219
DCR 14421 220
DCR 19211 215
DCR 19211 216
DCR 19211 217
DCR 19211 218
DCR 19211 219
DCR 19211 220
DCR 19211 221
DCR 19211s 222
DCR 19213 215
DCR 19213 216
DCR 19213 217
DCR 19213 218
DCR 19213 219
DCR 19213 220
DCR 19213 221
DCR 19213 221
DCR 19213s 222
DCR 19213s 222
DCR 19213s 222
DCR 19217 215
DCR 19217 216
DCR 19217 217
DCR 19217 218
DCR 19217 219
DCR 19217 220

DCR 19217 221
DCR 19217s 222
DCR 19221 217
DCR 19221 219
DCR 19221 220
DCR 19221 221
DGS-IR-CO2 465
DGS-IR-CO2 465
DGS-IR-CO2 465
DGS-IR-CO2-FS 465
DGS-IR-CO2-FS 465
DGS-IR-CO2-FS 465
DGS-IR-CO2-FS 465
DGS-SC 465
DGS-SC 465
DGS-SC 465
DGS-SC 465
DGS-SC 465
DGS-SC 465
DGS-SC 465
DGS-SC 465
DGS-SC 465
DIN plug 61
DIN plug (LED) 61
DLE4.8CN 505
DLE4.8CN 507
DLE4.8CNT 505
DLE4.8CNT 505
DLE4CN 505
DLE4CN 507
DLE4CNT 505
DLE5.7CN 505
DLE5.7CN 507
DLE5.7CNT 505
DLE6.5CN 505
DLE6.5CN 507
DLE7.5CN 505
DLE8.7KK 509
DLE9.4KK 509
DLE10 KK 509
DLX4KK 509
DLX4KK.1 509
DLX5.7KK.1 509
DLX9.4KK.1 509
DMB 053s 225
DMB 053s 225
DMB 082 226
DMB 082 / 082s 225
DMB 082 / 082s 225
DMB 082s 226
DMB 082s 226
DMB 082s 230
DMB 083 226
DMB 083 / 083s 225
DMB 083 / 083s 225
DMB 083s 226
DMB 083s 226
DMB 083s 230
DMB 084 226
DMB 084 / 084s 225
DMB 084 / 084s 225
DMB 084s 226
DMB 084s 226
DMB 084s 230
DMB 162 225
DMB 162 225
DMB 163 226
DMB 163 / 163s 225
DMB 163 / 163s 225
DMB 163s 226
DMB 163s 226
DMB 163s 230
DMB 164 226
DMB 164 / 164s 225
DMB 164 / 164s 225
DMB 164s 226
DMB 164s 226
DMB 164s 230
DMB 165 226
DMB 165 / 165s 225
DMB 165 / 165s 225
DMB 165s 226
DMB 165s 226
DMB 165s 230
DMB 303 225
DMB 303 225
DMB 303 226
DMB 303s 226
DMB 304 226
DMB 304 / 304s 225
DMB 304 / 304s 225
DMB 304s 226
DMB 304s 226
DMB 304s 230
DMB 305 226
DMB 305 / 305s 225
DMB 305 / 305s 225
DMB 305s 226
DMB 305s 226
DMB 305s 230
DMB 307s 225
DMB 307s 225
DMB 307s 226
DMB 307s 226
DMB 307s 230
DMC 0432s 233
DMC 0432s 233
DMC 0732s 233
DMC 0732s 233
DMC 2023s 233
DMC 2032s 233
DMC 2033s 233
DMC 2033s 233
DMC 2034s 233
DMC 2034s 233
DMC 40163s 233
DMC 40163s 233
DMC 40164s 233
DMC 40164s 233
DML 1.52 s 205
DML 1.52 s 206
DML 1.52s 208
DML 1.52x2 / 2s 208
DML 032 207
DML 032.5s 205
DML 032.5s 206
DML 032.5s 208
DML 032.5s 209
DML 032 / 032s 205
DML 032 / 032s 206
DML 032s 208
DML 032s 209
DML 033 207
DML 033 / 033s 205
DML 033 / 033s 206
DML 033s 208
DML 033s 209
DML 034s 205
DML 034s 206
DML 034s 208
DML 034s 209
DML 052 207
DML 052.5s 205
DML 052.5s 206
DML 052.5s 209
DML 052 / 052s 205
DML 052 / 052s 206
DML 052s 208
DML 052s 209
DML 053 207
DML 053 / 053s 205
DML 053 / 053s 206
DML 053s 208
DML 053s 209
DML 054s 205
DML 054s 206
DML 054s 208
DML 054s 209
DML 055s 205
DML 055s 206
DML 055s 209
DML 082 207
DML 082.5s 205
DML 082.5s 206
DML 082.5s 208
DML 082 / 082s 205
DML 082 / 082s 206
DML 082s 208
DML 082s 209
DML 083 207
DML 083 / 083s 205
DML 083 / 083s 206
DML 083s 208
DML 083s 209
DML 084 207
DML 084 / 084s 205
DML 084 / 084s 206
DML 084s 208
DML 084s 209
DML 085 207
DML 085 / 085s 205
DML 085 / 085s 206
DML 085s 208
DML 085s 209
DML 162 207
DML 162 / 162s 205
DML 162 / 162s 206
DML 162s 208
DML 162s 209
DML 163 207
DML 163 / 163s 205
DML 163 / 163s 206
DML 163s 208
DML 163s 209
DML 164 207
DML 164 / 164s 205
DML 164 / 164s 206
DML 164s 208
DML 164s 209
DML 165 207

Table of contents - Type

DML 165 / 165s 205
DML 165 / 165s 206
DML 165s 208
DML 165s 209
DML 166 207
DML 166 / 166s 205
DML 166 / 166s 206
DML 166s 208
DML 166s 209
DML 167s 205
DML 167s 206
DML 167s 208
DML 167s 209
DML 303 207
DML 303 / 303s 205
DML 303 / 303s 206
DML 303s 208
DML 303s 209
DML 304 207
DML 304 / 304s 205
DML 304 / 304s 206
DML 304s 208
DML 304s 209
DML 305 207
DML 305 / 305s 205
DML 305 / 305s 206
DML 305s 208
DML 305s 209
DML 306 207
DML 306 / 306s 205
DML 306 / 306s 206
DML 306s 208
DML 306s 209
DML 307s 205
DML 307s 206
DML 307s 208
DML 307s 209
DML 309s 205
DML 309s 206
DML 309s 208
DML 309s 209
DML 385 207
DML 413 205
DML 413 206
DML 413 207
DML 414 207
DML 414 / 414s 205
DML 414 / 414s 206
DML 414s 208
DML 414s 209
DML 415 207
DML 415 / 415S 205
DML 415 / 415S 206
DML 415s 208
DML 415s 209
DML 416 207
DML 417s 205
DML 417s 206
DML 417s 208
DML 417s 209
DML 419s 205
DML 419s 206
DML 419s 208
DML 419s 209
DML 604s 208
DML 604s 209
DML 605s 209
DML 607s 205
DML 607s 206
DML 607s 208
DML 607s 209
DML 609s 205
DML 609s 206
DML 609s 208
DML 609s 209
DML 757s 205
DML 757s 206
DML 757s 208
DML 757s 209
DML 759s 205
DML 759s 206
DML 759s 208
DML 759s 209
DMT 082 211
DMT 082 / 082s 211
DMT 082s 211
DMT 083 211
DMT 083 / 083s 211
DMT 083s 211
DMT 084s 211
DMT 084s 211
DMT 133 211
DMT 133 / 133s 211
DMT 133 NPT 211
DMT 133s 211
DMT 134s 211
DMT 134s 211
DSH090 629
DSH090 629
DSH090 630
DSH090 630
DSH090 631
DSH090 632
DSH090 634
DSH090 + DSH090 635
DSH090 + DSH105 635
DSH090 + DSH120 635
DSH090 + DSH140 635
DSH090 + DSH161 635
DSH090 + DSH184 635
DSH105 629
DSH105 629
DSH105 630
DSH105 630
DSH105 631
DSH105 632
DSH105 + DSH105 635
DSH105 + DSH184 635
DSH105-120-140-161 634
DSH120 629
DSH120 629
DSH120 630
DSH120 630
DSH120 631
DSH120 632
DSH120 + DSH120 635
DSH120 + DSH140 635
DSH120 + DSH161 635
DSH120 + DSH184 635
DSH120 + DSH240 635
DSH140 629
DSH140 629
DSH140 630
DSH140 630
DSH140 631
DSH140 632
DSH140 + DSH140 635
DSH140 + DSH140 + DSH140 = DSH420 636
DSH140 + DSH161 635
DSH140 + DSH184 635
DSH161 629
DSH161 629
DSH161 630
DSH161 630
DSH161 631
DSH161 632
DSH161 + DSH161 635
DSH161 + DSH161 + DSH161 = DSH483 636
DSH161 + DSH184 635
DSH161 + DSH295 635
DSH180E 635
DSH184 629
DSH184 629
DSH184 630
DSH184 630
DSH184 631
DSH184 632
DSH184 634
DSH184 + DSH184 635
DSH184 + DSH184 + DSH184 = DSH552 636
DSH184 + DSH240 635
DSH184 + DSH295 635
DSH184 + DSH381 635
DSH195U 635
DSH210E 635
DSH210U 635
DSH230U 635
DSH240 629
DSH240 629
DSH240 630
DSH240 630
DSH240 631
DSH240 632
DSH240 634
DSH240 + DSH240 635
DSH240 + DSH240 + DSH240 = DSH720 636
DSH240 + DSH295 635
DSH240 + DSH381 635
DSH240 + DSH485 635
DSH240E 635
DSH251U 635
DSH260U 635
DSH274U 635
DSH280E 635
DSH281U 635
DSH289U 635
DSH295 629
DSH295 629
DSH295 630
DSH295 630
DSH295 631
DSH295 632
DSH295 634
DSH295 + DSH295 635
DSH295 + DSH295 + DSH295 = DSH885 636
DSH295 + DSH381 635
DSH295 + DSH485 636
DSH301U 635
DSH304U 635
DSH322E 635
DSH324U 635

DSH345U 635
DSH360X 635
DSH368E 635
DSH381 629
DSH381 629
DSH381 630
DSH381 630
DSH381 631
DSH381 632
DSH381 634
DSH381 + DSH381 635
DSH381 + DSH381 + DSH381 = DSH1140 636
DSH381 + DSH381 + DSH485 = DSH1245 636
DSH381 + DSH485 636
DSH424X 635
DSH456X 635
DSH479X 635
DSH482 635
DSH485 629
DSH485 629
DSH485 630
DSH485 630
DSH485 631
DSH485 632
DSH485 634
DSH485 + DSH485 636
DSH485 + DSH485 + DSH381 = DSH1350 636
DSH485 + DSH485 + DSH485 = DSH1455 636
DSH535 635
DSH565X 635
DSH590 635
DSH620 635
DSH675 635
DSH725 635
DSH760 635
DSH780 636
DSH865 636
DSH970 636
DST P100 474
DSV 1 355
DSV 1 355
DSV 2 355
DSV 2 355
DSV 2 355
DSV 2 355
DSV 2 355
DSV 2 355
DSV 2 355

E

EKA 163A 407
EKA 163A 411
EKA 163A 413
EKA 163A 415
EKA 163A 417
EKA 163A 419
EKA 163B 417
EKA 163B 419
EKA 163B 421
EKA 163B 439
EKA 163B 441
EKA 163B 443
EKA 163B 445
EKA 164A 417
EKA 164A 419
EKA 164B 417
EKA 164B 419
EKA 164B 421
EKA 164B 439
EKA 164B 441
EKA 164B 443
EKA 164B 445
EKA 172 429
EKA 174 423
EKA 174 429
EKA 175 409
EKA 175 417
EKA 175 419
EKA 175 423
EKA 175 429
EKA 176 417
EKA 176 419
EKA 178A 405
EKA 178A 407
EKA 178A 411
EKA 178B 409
EKA 178B 417
EKA 178B 419
EKA 179A 405
EKA 179A 407
EKA 179A 411
EKA 181C 405
EKA 181C 407
EKA 181C 411
EKA 181C 413
EKA 182A 405
EKA 182A 407
EKA 182A 411
EKA 182A 413
EKA 183A 405
EKA 183A 409
EKA 183A 415
EKC 202A 400
EKC 202A 405
EKC 202B 400
EKC 202B 405
EKC 202C 400
EKC 202C 405
EKC 202C-MS 400
EKC 202C-MS 405
EKC 202D1 400
EKC 202D1 407
EKC 302A 400
EKC 302A 409
EKC 302B 400
EKC 302B 409
EKC 302D 400
EKC 302D 409
EKC 312 400
EKC 315A 400
EKC 315A 423
EKC 315A 423
EKC 315A 423
EKC 316A 400
EKC 368 400
EKC 368 429
EKD 316 400
EKE 1A 58
EKE 1A 400
EKE 1A 425
EKE 1B 58
EKE 1B 400
EKE 1B 425
EKE 1C 58
EKE 1C 400
EKE 1C 425
EKE 347 401
EKE 347 427
EKS 111 405
EKS 111 407
EKS 111 409
EKS 111 411
EKS 111 413
EKS 111 415
EKS 111 477
EKS 211 405
EKS 211 407
EKS 211 409
EKS 211 411
EKS 211 477
EKS 221 405
EKS 221 477
ERC 211 400
ERC 211 400
ERC 211 431
ERC 213 400
ERC 213 400
ERC 213 431
ERC 214 400
ERC 214 400
ERC 214 431
ETS 6 – 08 45
ETS 6 – 08 45
ETS 6 – 10 45
ETS 6 – 10 45
ETS 6 – 14 45
ETS 6 – 14 45
ETS 6 – 18 45
ETS 6 – 18 45
ETS 6 – 25 45
ETS 6 – 25 45
ETS 6 – 32 45
ETS 6 – 32 45
ETS 6 – 40 45
ETS 6 – 40 45
ETS 6 Coil 46
ETS 12.5 50
ETS 12.5 50
ETS 12C 42
ETS 24C 42
ETS 25 50
ETS 25 50
ETS 25C 42
ETS 50 50
ETS 50C 42
ETS 100 50
ETS 100C 42
ETS 250 50
ETS 400 50
EVM (NC) 193
EVM NC 195
EVM (NO) 193
EVM NO 195
EVM NO 195
EVR 2 76
EVR 2 76
EVR 2 76
EVR 2 77
EVR 2 78
EVR 2 81
EVR 2 81

Table of contents - Type

EVR 2 81
EVR 2 82
EVR 2 83
EVR 2 NC 75
EVR 2 NC 80
EVR 3 76
EVR 3 76
EVR 3 76
EVR 3 77
EVR 3 78
EVR 3 81
EVR 3 81
EVR 3 81
EVR 3 82
EVR 3 83
EVR 3 NC 75
EVR 3 NC 80
EVR 4 76
EVR 4 76
EVR 4 76
EVR 4 77
EVR 4 81
EVR 4 81
EVR 4 81
EVR 4 82
EVR 4 NC 75
EVR 4 NC 80
EVR 6 76
EVR 6 76
EVR 6 76
EVR 6 77
EVR 6 78
EVR 6 78
EVR 6 78
EVR 6 81
EVR 6 81
EVR 6 81
EVR 6 82
EVR 6 83
EVR 6 83
EVR 6 83
EVR 6 NC 75
EVR 6 NC 80
EVR 6 NO 75
EVR 6 NO 80
EVR 8 76
EVR 8 76
EVR 8 76
EVR 8 77
EVR 8 81
EVR 8 81
EVR 8 81
EVR 8 82
EVR 8 NC 75
EVR 8 NC 80
EVR 10 76
EVR 10 76
EVR 10 76
EVR 10 77
EVR 10 78
EVR 10 78
EVR 10 78
EVR 10 81
EVR 10 81
EVR 10 81
EVR 10 82
EVR 10 83
EVR 10 83
EVR 10 83
EVR 10 NC 75
EVR 10 NC 80
EVR 10 NO 75
EVR 10 NO 80
EVR 15 76
EVR 15 76
EVR 15 76
EVR 15 77
EVR 15 78
EVR 15 78
EVR 15 79
EVR 15 79
EVR 15 81
EVR 15 81
EVR 15 81
EVR 15 82
EVR 15 83
EVR 15 83
EVR 15 84
EVR 15 84
EVR 15 NC 75
EVR 15 NC 80
EVR 15 NO 75
EVR 15 NO 80
EVR 18 76
EVR 18 76
EVR 18 76
EVR 18 77
EVR 18 81
EVR 18 81
EVR 18 81
EVR 18 82
EVR 18 NC 75
EVR 18 NC 80
EVR 20 76
EVR 20 76
EVR 20 76
EVR 20 77
EVR 20 78
EVR 20 79
EVR 20 79
EVR 20 81
EVR 20 81
EVR 20 81
EVR 20 82
EVR 20 83
EVR 20 84
EVR 20 84
EVR 20 NC 75
EVR 20 NC 80
EVR 20 NO 75
EVR 20 NO 80
EVR 22 76
EVR 22 76
EVR 22 76
EVR 22 77
EVR 22 78
EVR 22 81
EVR 22 81
EVR 22 81
EVR 22 82
EVR 22 83
EVR 22 NC 75
EVR 22 NC 80
EVR 22 NO 75
EVR 22 NO 80
EVR 25 76
EVR 25 76
EVR 25 76
EVR 25 77
EVR 25 81
EVR 25 81
EVR 25 81
EVR 25 82
EVR 25 NC 75
EVR 25 NC 80
EVR 32 76
EVR 32 76
EVR 32 76
EVR 32 77
EVR 32 81
EVR 32 81
EVR 32 81
EVR 32 82
EVR 32 NC 75
EVR 32 NC 80
EVR 40 76
EVR 40 76
EVR 40 76
EVR 40 77
EVR 40 81
EVR 40 81
EVR 40 81
EVR 40 82
EVR 40 NC 75
EVR 40 NC 80
EVRA 3 89
EVRA 3 89
EVRA 10 89
EVRA 10 89
EVRA 15 89
EVRA 15 89
EVRA 20 89
EVRA 20 89
EVRA 25 89
EVRA 25 89
EVRA 32 89
EVRA 32 89
EVRA 32 89
EVRA 40 89
EVRA 40 89
EVRA 40 89
EVRAT 10 89
EVRAT 15 89
EVRAT 20 89
EVRC 15 79
EVRC 20 79
EVRS 3 87
EVRS 3 87
EVRS 3 87
EVRS 3 87
EVRS 3 87
EVRS 10 87
EVRS 10 87
EVRS 15 87
EVRS 15 87
EVRS 20 87
EVRS 20 87
EVRS / EVRST 10 87
EVRS / EVRST 10 87
EVRS / EVRST 15 87
EVRS / EVRST 15 87

EVRS / EVRST 20 87
EVRS / EVRST 20 87
EVRST 10 87
EVRST 10 87
EVRST 15 87
EVRST 15 87
EVRST 20 87
EVRST 20 87
EVUL 1 91
EVUL 1 91
EVUL 1 91
EVUL 1 92
EVUL 1 92
EVUL 1 92
EVUL 1 93
EVUL 1 93
EVUL 2 91
EVUL 2 91
EVUL 2 91
EVUL 2 92
EVUL 2 92
EVUL 2 92
EVUL 2 93
EVUL 2 93
EVUL 3 91
EVUL 3 91
EVUL 3 91
EVUL 3 92
EVUL 3 92
EVUL 3 92
EVUL 3 93
EVUL 3 93
EVUL 4 91
EVUL 4 91
EVUL 4 91
EVUL 4 92
EVUL 4 92
EVUL 4 92
EVUL 4 93
EVUL 4 93
EVUL 5 91
EVUL 5 91
EVUL 5 91
EVUL 5 92
EVUL 5 92
EVUL 5 92
EVUL 5 93
EVUL 5 93
EVUL 6 91
EVUL 6 91
EVUL 6 91
EVUL 6 92
EVUL 6 92
EVUL 6 92
EVUL 6 93
EVUL 6 93
EVUL 8 91
EVUL 8 91
EVUL 8 91
EVUL 8 92
EVUL 8 92
EVUL 8 92
EVUL 8 93
EVUL 8 93

F

FF6GK 497
FF7.5GK 497
FF8.5GX 497
FF10GX 497
FH2511Z 767
FH2511Z 768
FH2511Z 780
FH2511Z 782
FH2511Z 801
FH2511Z 802
FH2511Z 813
FH2511Z 814
FIA 15 250
FIA 15 257
FIA 15 – 20 248
FIA 15 – 20 248
FIA 15 – 20 259
FIA 15 – 20 259
FIA 15 angleway 246
FIA 15 angleway 250
FIA 15 angleway 257
FIA 15 straightway 246
FIA 15 straightway 250
FIA 15 straightway 257
FIA 20 250
FIA 20 257
FIA 20 angleway 246
FIA 20 angleway 250
FIA 20 angleway 257
FIA 20 straightway 246
FIA 20 straightway 250
FIA 20 straightway 257
FIA 25 250
FIA 25 257
FIA 25 – 40 248
FIA 25 – 40 248
FIA 25 – 40 259
FIA 25 – 40 259
FIA 25 angleway 246
FIA 25 angleway 250
FIA 25 angleway 257
FIA 25 straightway 246
FIA 25 straightway 250
FIA 25 straightway 257
FIA 32 251
FIA 32 257
FIA 32 angleway 246
FIA 32 angleway 251
FIA 32 angleway 257
FIA 32 straightway 247
FIA 32 straightway 251
FIA 32 straightway 257
FIA 40 251
FIA 40 258
FIA 40 angleway 247
FIA 40 angleway 251
FIA 40 angleway 258
FIA 40 straightway 247
FIA 40 straightway 251
FIA 40 straightway 258
FIA 50 248
FIA 50 248
FIA 50 251
FIA 50 258
FIA 50 259
FIA 50 259
FIA 50 angleway 247
FIA 50 angleway 251
FIA 50 angleway 258
FIA 50 straightway 247
FIA 50 straightway 251
FIA 50 straightway 258
FIA 65 248
FIA 65 248
FIA 65 251
FIA 65 258
FIA 65 259
FIA 65 259
FIA 65 angleway 247
FIA 65 angleway 251
FIA 65 angleway 258
FIA 65 straightway 247
FIA 65 straightway 251
FIA 65 straightway 258
FIA 80 248
FIA 80 248
FIA 80 252
FIA 80 258
FIA 80 259
FIA 80 259
FIA 80 angleway 247
FIA 80 angleway 252
FIA 80 angleway 258
FIA 80 straightway 247
FIA 80 straightway 252
FIA 80 straightway 258
FIA 100 248
FIA 100 248
FIA 100 252
FIA 100 258
FIA 100 259
FIA 100 259
FIA 100 angleway 247
FIA 100 angleway 252
FIA 100 angleway 258
FIA 100 straightway 247
FIA 100 straightway 252
FIA 100 straightway 258
FIA 125 248
FIA 125 248
FIA 125 252
FIA 125 259
FIA 125 259
FIA 125 259
FIA 125 angleway 247
FIA 125 angleway 252
FIA 125 angleway 259
FIA 125 straightway 247
FIA 125 straightway 252
FIA 125 straightway 259
FIA 150 248
FIA 150 248
FIA 150 angleway 247
FIA 150 straightway 247
FIA 200 248
FIA 200 248
FIA 200 angleway 247
FIA 200 straightway 247
FIA 250 248
FIA 250 angleway 247
FIA 300 248
FIA 300 angleway 247
FIA SS 15–20 264
FIA SS 15–20 265
FIA SS 15 angleway 264

Table of contents - Type

FIA SS 15 straightway 264
FIA SS 15 straightway 264
FIA SS 20 angleway 264
FIA SS 20 straightway 264
FIA SS 20 straightway 264
FIA SS 25–40 264
FIA SS 25–40 265
FIA SS 25 angleway 264
FIA SS 25 straightway 264
FIA SS 25 straightway 264
FIA SS 32 angleway 264
FIA SS 32 straightway 264
FIA SS 32 straightway 264
FIA SS 40 angleway 264
FIA SS 40 straightway 264
FIA SS 40 straightway 264
FIA SS 50 264
FIA SS 50 265
FIA SS 50 angleway 264
FIA SS 50 straightway 264
FIA SS 65 264
FIA SS 65 265
FIA SS 65 angleway 264
FIA SS 65 angleway 264
FIA SS 65 straightway 264
FIA SS 65 straightway 264
FR6CL 499
FR6CL 712
FR6CL 745
FR6CLX 748
FR6DL 499
FR6DL 740
FR6DLX 745
FR6DLX 750
FR6G 491
FR6G 495
FR6G 717
FR6G 750
FR6GX 745
FR7.5CL 499
FR7.5G 491
FR7.5G 495
FR7.5G 717
FR7.5G 750
FR7.5GX 745
FR7GH 491
FR7GH 495
FR8.5CL 499
FR8.5CL 745
FR8.5G 491
FR8.5G 495
FR8.5G 717
FR8.5G 750
FR8.5GX 745
FR10G 491
FR10G 495
FR11G 491
FR11G 718
FR11GX 745
FR11GX 750

G

GBC 6s 267
GBC 6s 267
GBC 6s 267
GBC 6s 267
GBC 6s 271
GBC 6s 271
GBC 6s 271
GBC 6s - 16s 273
GBC 6s - 22s 273
GBC 6s - GBC 12s 268
GBC 6s - GBC 12s 268
GBC 6s - GBC 16s 271
GBC 6s - GBC 22s 271
GBC 6s – GBC 42s 267
GBC 10s 267
GBC 10s 267
GBC 10s 267
GBC 10s 267
GBC 10s 271
GBC 10s 271
GBC 10s 271
GBC 12s 267
GBC 12s 267
GBC 12s 267
GBC 12s 267
GBC 12s 271
GBC 12s 271
GBC 12s 271
GBC 12s 271
GBC 16s 267
GBC 16s 267
GBC 16s 268
GBC 16s 271
GBC 16s 271
GBC 16s – GBC 22s 268
GBC 18s 267
GBC 18s 267
GBC 18s 267
GBC 18s 267
GBC 18s 271
GBC 18s 271
GBC 18s 271
GBC 18s 271
GBC 18s - 22s 273
GBC 18s - GBC 22s 268
GBC 18s - GBC 22s 271
GBC 22s 267
GBC 22s 267
GBC 22s 268
GBC 22s 271
GBC 22s 271
GBC 28s 267
GBC 28s 267
GBC 28s 267
GBC 28s 267
GBC 28s 268
GBC 28s 268
GBC 28s 268
GBC 28s 271
GBC 28s 271
GBC 28s 271
GBC 28s 271
GBC 28s 271
GBC 28s 271
GBC 28s 273
GBC 28s 273
GBC 28s - 35s 273
GBC 28s - GBC 35s 271
GBC 28s – GBC 35s 268
GBC 35s 267
GBC 35s 267
GBC 35s 268
GBC 35s 268
GBC 35s 268
GBC 35s 271
GBC 35s 271
GBC 35s 271
GBC 35s 273
GBC 35s 273
GBC 42s 267
GBC 42s 267
GBC 42s 267
GBC 42s 267
GBC 42s 268
GBC 42s 268
GBC 42s 268
GBC 42s 271
GBC 42s 271
GBC 42s 271
GBC 42s 271
GBC 42s 271
GBC 42s 271
GBC 42s 273
GBC 42s 273
GBC 42s 273
GBC 42s - GBC 79s 268
GBC 54s 267
GBC 54s 267
GBC 54s 268
GBC 54s – GBC 79s 267
GBC 67s 267
GBC 67s 267
GBC 67s 268
GBC 67s RP 267
GBC 67s RP 267
GBC 79s 267
GBC 79s 267
GBC 79s 268
GBC 79s 268
GBC 79s RP 267
GBC 79s RP 267
GBCH 6s 273
GBCH 6s 273
GBCH 10s 273
GBCH 10s 273
GBCH 12s 273
GBCH 12s 273
GBCH 16s 273
GBCH 16s 273
GBCH 18s 273
GBCH 18s 273
GBCH 22s 273
GBCH 22s 273
GDA 456
GDA 456
GDA 456
GDA 456
GDA 456
GDA 456
GDA 456
GDA 456
GDA 459
GDA 459
GDA 459
GDA 459
GDA 459
GDA 459
GDA 459

GDA 459
GDA 459
GDA 459
GDA 459
GDA 459
GDA 459
GDA 459
GDA 459
GDA 459
GDA 459
GDA 459
GDA 459
GDA 459
GDA 459
GDA 459
GDA 459
GDA 459
GDA 459
GDA 459
GDA 459
GDA 463
GDA 463
GDA 463
GDA 463
GDC 459
GDC 459
GDH 459
GDH 459
GDH 459
GDHC 459
GDHC 459
GDHC 459
GDHF 456
GDHF 456
GDHF 459
GDHF 459
GDHF 459
GDHF 459
GDHF 459
GL11TB 518
GL45AAa 517
GL45AAb 517
GL45ADa 526
GL45ADb 526
GL45ANa 517
GL45ANa 526
GL45MG 518
GL45MG 527
GL45PB 518
GL45PE 527
GL45TB 518
GL45TE 527
GL45TG 518
GL45TG 527
GL60AAa 517
GL60AAb 517
GL60ADa 526
GL60ADb 526
GL60ANa 517
GL60ANa 526
GL60ANb 517
GL60ANb 526
GL60ANc 517
GL60ANc 526
GL60MG 518
GL60MG 527
GL60PB 518
GL60PE 527
GL60TB 518
GL60TC 519
GL60TC 527
GL60TE 527
GL60TG 518
GL60TG 527
GL80AAa 517
GL80AAb 517
GL80ANa 517
GL80ANa 526
GL80ANb 517
GL80ANb 526
GL80ANc 517
GL80ANc 526
GL80MG 518
GL80MG 527
GL80PB 518
GL80PE 527
GL80TB 518
GL80TC 519
GL80TC 527
GL80TE 527
GL80TG 518
GL80TG 527
GL90AAa 517
GL90AAb 517
GL90ANa 517
GL90ANa 526
GL90ANb 517
GL90ANb 526
GL90ANc 517
GL90ANc 526
GL90MG 518
GL90MG 527
GL90PB 518
GL90PE 527
GL90TB 518
GL90TC 519
GL90TC 527
GL90TE 527
GL90TG 518
GL90TG 527
GL99AAa 517
GL99AAb 517
GL99ADa 526
GL99ADb 526
GLM12LAa 517
GLM12LAb 517
GLY12NRa 526
GLY12NRb 526
GLY12RAa 518
GLY12RAb 518
GLY12RGa 518
GLY12RGa 527
GLY12RGb 518
GLY12RGb 527
GLY12RRa 527
GLY12RRb 527
GLY45AAa 517
GLY45AAb 517
GLY45RAa 518
GLY45RAb 518
GLY60AAa 517
GLY60AAb 517
GLY60RAa 518
GLY60RAb 518
GLY70AAa 517
GLY70AAb 517
GLY80AAa 517
GLY80AAb 517
GLY80RAa 518
GLY80RAb 518
GLY80RDa 527
GLY80RDb 527
GLY90AAa 517
GLY90AAb 517
GLY90RAa 518
GLY90RAb 518
GLY90RDa 527
GLY90RDb 527
GP14CG 517
GP14CG 526
GP14FB 517
GP14FE 526
GP14TB 518
GP14TG 518
GP14TG 527
GP16FB 517
GP16TB 518
GP16TE 527
GP16TG 518
GP16TG 527
GPM16RA 518
GPT16RG 518
GPT16RG 527
GPT18RA 519
GPT18RG 519
GPT18RG 527
GPY12AAa 517
GPY12AAb 517
GPY12LAa 517
GPY12LAb 517
GPY12RAa 518
GPY12RAb 518
GPY12RDa 527
GPY12RDb 527
GPY14NDa 526
GPY14NDb 526
GPY14NGa 517
GPY14NGa 526
GPY14NGb 517
GPY14NGb 526
GPY14RAa 518
GPY14RAb 518
GPY14RDa 527
GPY14RDb 527
GPY16LAa 517
GPY16LAb 517
GPY16RAa 518
GPY16RAb 518
GPY16RDa 527
GPY16RDb 527
GS21CLX 501
GS21MLX 499
GS21MLX 501
GS21MLX 740
GS21MLX 745
GS21MLX 750
GS26CLX 499
GS26CLX 501
GS26CLX 713

Table of contents - Type

GS26CLX 745
GS26CLX 748
GS26GHX 493
GS26MFX 493
GS26MFX 718
GS26MFX 745
GS26MFX 750
GS26MLX 499
GS26T3 519
GS26T3 527
GS26TB 519
GS26TG 519
GS26TG 527
GS30TB 519
GS30TG 519
GS30TG 527
GS34CLX 499
GS34CLX 713
GS34CLX 745
GS34CLX 748
GS34MFX 493
GS34MFX 718
GS34MFX 745
GS34MFX 750
GS34MLX 499
GS34TB 519
GS34TF 527
GS34TG 519
GS34TG 527
GUY60NRc 526
GUY60RAa 518
GUY60RAb 518
GUY70NRb 526
GUY70NRc 526
GUY72RCa 519
GUY72RCa 527
GUY72RCb 519
GUY72RCb 527
GUY80NRb 526
GUY80NRc 526
GUY80RAa 518
GUY80RAb 518
GUY90RAa 518
GUY90RAb 518
GX18TB 519
GX18TG 519
GX18TG 527
GX21FB 517
GX21TB 519
GX23TB 519
GX23TG 519
GX23TG 527

H

H30L-C-20 398
H30L-C-30 398
H30L-C-40 398
H30L-C-50 398
H30L-C-60 398
H30L-C-70 398
H30L-C-80 398
H62L-CX-20 398
H62L-CX-26 398
H62L-CX-30 398
H62L-CX-36 398
H62L-CX-40 398
H62L-CX-46 398
H62L-CX-50 398
H62L-CX-60 398
H62L-CX-70 398
H62L-CX-80 398
H62L-CX-90 398
H62L-CX-100 398
H62L-CX-110 398
H62L-CX-120 398
H62L-EZU-20 398
H62L-EZU-26 398
H62L-EZU-30 398
H62L-EZU-36 398
H62L-EZU-40 398
H62L-EZU-46 398
H62L-EZU-50 398
H62L-EZU-60 398
H62L-EZU-70 398
H62L-EZU-80 398
H62L-EZU-90 398
H62L-EZU-100 398
H62L-EZU-110 398
H62L-EZU-120 398
HCJ090 579
HCJ090 580
HCJ090T4 577
HCJ090T4 578
HCJ090T4 586
HCJ090T4 587
HCJ091 585
HCJ091 585
HCJ091T4 577
HCJ091T4 578
HCJ091T4 586
HCJ091T4 587
HCJ105 579
HCJ105 580
HCJ105T4 577
HCJ105T4 578
HCJ105T4 586
HCJ105T4 587
HCJ106 585
HCJ106 585
HCJ106T4 577
HCJ106T4 578
HCJ106T4 586
HCJ106T4 587
HCJ120 579
HCJ120 580
HCJ120T4 577
HCJ120T4 578
HCJ120T4 586
HCJ120T4 587
HCJ121 585
HCJ121 585
HCJ121T4 577
HCJ121T4 578
HCJ121T4 586
HCJ121T4 587
HCM094 583
HCM094 584
HCM094 585
HCM094T4 577
HCM094T4 578
HCM094T4 590
HCM094T4 591
HCM109 583
HCM109 584
HCM109 585
HCM109T4 577
HCM109T4 578
HCM109T4 590
HCM109T4 591
HCM120 583
HCM120 584
HCM120 585
HCM120T4 577
HCM120T4 578
HCM120T4 590
HCM120T4 591
HCP094 581
HCP094 582
HCP094 585
HCP094T4 577
HCP094T4 578
HCP094T4 588
HCP094T4 589
HCP109 581
HCP109 582
HCP109 585
HCP109T4 577
HCP109T4 578
HCP109T4 588
HCP120 581
HCP120 582
HCP120 585
HCP120T4 577
HCP120T4 578
HCP120T4 588
HCP120T4 589
HE 0.5 387
HE 0.5 387
HE 1.0 387
HE 1.0 387
HE 1.5 387
HE 1.5 387
HE 4.0 387
HE 4.0 387
HE 8.0 387
HE 8.0 387
HHP015 595
HHP015T4 595
HHP015T4LP6 595
HHP015T5LP6 595
HHP019 595
HHP019T4 595
HHP019T4LP6 595
HHP019T5LP6 595
HHP021 595
HHP021T4 595
HHP021T4LP6 595
HHP021T5LP6 595
HHP026 595
HHP026T4 595
HHP026T4LP6 595
HHP026T5LP6 595
HHP030 595
HHP030T4 595
HHP030T4LC6 595
HHP030T5LC6 595
HHP038 595
HHP038T4 595
HHP038T4LC6 595
HHP038T5LC6 595
HHP045 595

HHP045T4 595
HHP045T4LC6 595
HLH061 579
HLH061 580
HLH061 585
HLH061 585
HLH061 585
HLH061T4 577
HLH061T4 578
HLH061T4 586
HLH061T4 587
HLH068 579
HLH068 580
HLH068 585
HLH068T4 577
HLH068T4 578
HLH068T4 586
HLH068T4 587
HLJ072 579
HLJ072 580
HLJ072 585
HLJ072 585
HLJ072 585
HLJ072T4 577
HLJ072T4 578
HLJ072T4 586
HLJ072T4 587
HLJ075 579
HLJ075 580
HLJ075 585
HLJ075T4 577
HLJ075T4 578
HLJ075T4 586
HLJ075T4 587
HLJ083 579
HLJ083 580
HLJ083 585
HLJ083 585
HLJ083T4 577
HLJ083T4 578
HLJ083T4 586
HLJ083T4 587
HLM068 583
HLM068 584
HLM068T4 577
HLM068T4 578
HLM068T4 590
HLM068T4 591
HLM072 583
HLM072 584
HLM072 585
HLM072 585
HLM072T4 577
HLM072T4 578
HLM072T4 590
HLM072T4 591
HLM075 583
HLM075 584
HLM075T4 577
HLM075T4 578
HLM075T4 590
HLM075T4 591
HLM078 583
HLM078 584
HLM078T4 590
HLM078T4 591
HLM081 583
HLM081 584
HLM081 585
HLM081 585
HLM081 585
HLM081T4 577
HLM081T4 578
HLM081T4 590
HLM081T4 591
HLP068 581
HLP068 582
HLP068T4 577
HLP068T4 578
HLP068T4 588
HLP072 581
HLP072 582
HLP072 585
HLP072T4 577
HLP072T4 578
HLP072T4 588
HLP072T4 589
HLP075 581
HLP075 582
HLP075T4 577
HLP075T4 578
HLP075T4 588
HLP078 581
HLP078 582
HLP078T4 588
HLP078T4 589
HLP081 581
HLP081 582
HLP081 585
HLP081T4 577
HLP081T4 578
HLP081T4 588
HLP081T4 589
HLY55MAa 525
HLY55MAb 525
HLY70MAa 525
HLY70MAb 525
HLY80AAa 524
HLY80AAb 524
HLY90AAa 524
HLY90AAb 524
HLY99AAa 524
HLY99AAb 524
HLY99RAa 525
HLY99RAb 525
HPY12AAa 524
HPY12AAb 524
HPY12AGa 524
HPY12AGa 531
HPY12AGb 524
HPY12AGb 531
HPY12RAa 525
HPY12RAb 525
HPY14AAa 524
HPY14AAb 524
HPY14AJa 524
HPY14AJa 531
HPY14AJb 524
HPY14AJb 531
HPY14RAa 525
HPY14RAb 525
HPY16AAa 524
HPY16AAb 524
HPY16RAa 525
HPY16RAb 525
HRH029 579
HRH029 580
HRH029U4 577
HRH029U4 578
HRH029U4 586
HRH029U4 587
HRH031 579
HRH031 580
HRH031U4 577
HRH031U4 578
HRH031U4 586
HRH031U4 587
HRH032 579
HRH032 580
HRH032U4 577
HRH032U4 578
HRH032U4 586
HRH032U4 587
HRH034 579
HRH034 580
HRH034U4 577
HRH034U4 578
HRH034U4 586
HRH034U4 587
HRH036 579
HRH036 580
HRH036U4 577
HRH036U4 578
HRH036U4 586
HRH036U4 587
HRH038 579
HRH038 580
HRH038U4 577
HRH038U4 578
HRH038U4 586
HRH038U4 587
HRH039 579
HRH039 580
HRH040 579
HRH040 580
HRH040U4 577
HRH040U4 578
HRH040U4 586
HRH040U4 587
HRH041 579
HRH041 580
HRH041U4 577
HRH041U4 578
HRH041U4 586
HRH041U4 587
HRH044 579
HRH044 580
HRH044U4 577
HRH044U4 578
HRH044U4 586
HRH044U4 587
HRH047 579
HRH047 580
HRH047 585
HRH047U4 577
HRH047U4 578
HRH047U4 586
HRH047U4 587
HRH048 579
HRH048 580
HRH048U4 586

Table of contents - Type

HRH048U4 587
HRH049 579
HRH049 580
HRH049 585
HRH049U4 577
HRH049U4 578
HRH049U4 586
HRH049U4 587
HRH050 579
HRH050 580
HRH050U4 586
HRH050U4 587
HRH051 579
HRH051 580
HRH051 585
HRH051U4 577
HRH051U4 578
HRH051U4 586
HRH051U4 587
HRH054 579
HRH054 580
HRH054 585
HRH054 585
HRH054U4 577
HRH054U4 578
HRH054U4 586
HRH054U4 587
HRH056 579
HRH056 580
HRH056 580
HRH056U4 577
HRH056U4 578
HRH056U4 586
HRH056U4 587
HRM025 585
HRM025T4 577
HRM025T4 578
HRM025T4 590
HRM025T4 591
HRM032 583
HRM032 584
HRM032T4 590
HRM032T4 591
HRM032U4 590
HRM032U4 591
HRM034 583
HRM034 584
HRM034 585
HRM034 585
HRM034T4 577
HRM034T4 578
HRM034T4 590
HRM034T4 591
HRM034U4 577
HRM034U4 578
HRM034U4 590
HRM034U4 591
HRM038 583
HRM038 584
HRM038 585
HRM038T4 590
HRM038T4 591
HRM038U4 577
HRM038U4 578
HRM038U4 590
HRM038U4 591
HRM040 583
HRM040 584
HRM040T4 590
HRM040T4 591
HRM040U4 577
HRM040U4 578
HRM040U4 590
HRM040U4 591
HRM042 583
HRM042 584
HRM042 585
HRM042T4 577
HRM042T4 578
HRM042T4 590
HRM042T4 591
HRM042U4 577
HRM042U4 578
HRM042U4 590
HRM042U4 591
HRM045 583
HRM045 584
HRM045U4 577
HRM045U4 578
HRM045U4 590
HRM045U4 591
HRM047 583
HRM047 584
HRM047T4 590
HRM047T4 591
HRM047U4 577
HRM047U4 578
HRM047U4 590
HRM047U4 591
HRM048 583
HRM048 584
HRM048U4 577
HRM048U4 578
HRM048U4 590
HRM048U4 591
HRM051 583
HRM051 584
HRM051 585
HRM051T4 577
HRM051T4 578
HRM051T4 590
HRM051T4 591
HRM051U4 577
HRM051U4 578
HRM051U4 590
HRM051U4 591
HRM054 583
HRM054 584
HRM054 585
HRM054T4 577
HRM054T4 578
HRM054T4 590
HRM054T4 591
HRM054U4 577
HRM054U4 578
HRM054U4 590
HRM054U4 591
HRM058 583
HRM058 584
HRM058U4 577
HRM058U4 578
HRM058U4 590
HRM058U4 591
HRM060 583
HRM060 584
HRM060 585
HRM060 585
HRM060 585
HRM060T4 577
HRM060T4 578
HRM060T4 590
HRM060T4 591
HRM060U4 577
HRM060U4 578
HRM060U4 590
HRM060U4 591
HRP025 581
HRP025 582
HRP025T4 577
HRP025T4 578
HRP025T4 588
HRP025T4 589
HRP034 581
HRP034 582
HRP034T4 577
HRP034T4 578
HRP034T4 588
HRP034T4 589
HRP038 581
HRP038 582
HRP038T4 577
HRP038T4 578
HRP038T4 588
HRP040 581
HRP040 582
HRP040T4 577
HRP040T4 578
HRP040T4 588
HRP040T4 589
HRP042 581
HRP042 582
HRP042T4 577
HRP042T4 578
HRP042T4 588
HRP042T4 589
HRP045 581
HRP045 582
HRP045T4 577
HRP045T4 578
HRP045T4 588
HRP047 581
HRP047 582
HRP047T4 577
HRP047T4 578
HRP047T4 588
HRP047T4 589
HRP048 581
HRP048 581
HRP048 582
HRP048 582
HRP048T4 577
HRP048T4 578
HRP048T4 588
HRP051 581
HRP051 582
HRP051T4 577
HRP051T4 578
HRP051T4 588
HRP051T4 589
HRP054 581

HRP054 582
HRP054 585
HRP054 585
HRP054T4 577
HRP054T4 578
HRP054T4 588
HRP058 581
HRP058 582
HRP058T4 577
HRP058T4 578
HRP058T4 588
HRP060 581
HRP060 582
HRP060 585
HRP060T4 577
HRP060T4 578
HRP060T4 588
HRP060T4 589
HTD30AE 511
HTD30AG 511
HUY55MAa 525
HUY55MAb 525
HUY70MAa 525
HUY70MAb 525
HXK12AT 511
HXK80AT 511
HXK87AT 511
HXK95AT 511

I

ICAD 600A 173
ICAD 1200A 173
ICF 15 371
ICF 15 371
ICF 15 371
ICF 15 371
ICF 15 371
ICF 15 371
ICF 15 371
ICF 15 371
ICF 15 371
ICF 15 373
ICF 15 373
ICF 15 373
ICF 15 373
ICF 15 373
ICF 15 373
ICF 15 373
ICF 15 373
ICF 15 373
ICF 15 373
ICF 15 373
ICF 15 375
ICF 15 375
ICF 15 375
ICF 15 375
ICF 15 375
ICF 15 375
ICF 15 375
ICF 15 375
ICF 15 375
ICF 15 375
ICF 15 375
ICF 15 375
ICF 15 375
ICF 15 375
ICF 15 378
ICF 15 378
ICF 15 EVRAT 103
ICF 20 368
ICF 20 368
ICF 20 368
ICF 20 368
ICF 20 368
ICF 20 368
ICF 20 368
ICF 20 368
ICF 20 368
ICF 20 368
ICF 20 368
ICF 20 368
ICF 20 368
ICF 20 368
ICF 20 368
ICF 20 368
ICF 20 368
ICF 20 368
ICF 20 368
ICF 20 368
ICF 20 368
ICF 20 368
ICF 20 368
ICF 20 368
ICF 20 368
ICF 20 371
ICF 20 371
ICF 20 371
ICF 20 371
ICF 20 371
ICF 20 371
ICF 20 371
ICF 20 371
ICF 20 371
ICF 20 371
ICF 20 371
ICF 20 373
ICF 20 373
ICF 20 373
ICF 20 373
ICF 20 373
ICF 20 373
ICF 20 373
ICF 20 373
ICF 20 373
ICF 20 373
ICF 20 373
ICF 20 373
ICF 20 373
ICF 20 373
ICF 20 373
ICF 20 375
ICF 20 375
ICF 20 375
ICF 20 375
ICF 20 375
ICF 20 375
ICF 20 375
ICF 20 375
ICF 20 375
ICF 20 375
ICF 20 375
ICF 20 375
ICF 20 375
ICF 20 375
ICF 20 378
ICF 20 378
ICF 20 378
ICF 20 378
ICF 20 378
ICF 20 378
ICF 20 378
ICF 20 378
ICF 20 378
ICF 20 378
ICF 20 378
ICF 20 378
ICF 20 378
ICF 20 378
ICF 20 378
ICF 20 378
ICF 20 378
ICF 20 378
ICF 20 378
ICF 20 378
ICF 20 378
ICF 20 378
ICF 20 379
ICF 20 379
ICF 20 379

Table of contents - Type

ICF 25 368
ICF 25 368
ICF 25 368
ICF 25 371
ICF 25 371
ICF 25 371
ICF 25 371
ICF 25 371
ICF 25 371
ICF 25 371
ICF 25 371
ICF 25 373
ICF 25 373
ICF 25 373
ICF 25 373
ICF 25 373
ICF 25 373
ICF 25 373
ICF 25 373
ICF 25 373
ICF 25 373
ICF 25 375
ICF 25 375
ICF 25 375
ICF 25 375
ICF 25 375
ICF 25 375
ICF 25 375
ICF 25 375
ICF 25 375
ICF 25 375
ICF 25 375
ICF 25 379
ICF 25 379
ICF 25 379
ICF 25 379
ICF 25 379
ICF 25 379
ICF 25 379
ICF 25 379
ICF 25 379
ICF 25 379
ICF 25 379
ICF 25 379
ICF 25 379
ICF 25 379
ICF 25 379
ICF 25 379
ICF 25 379
ICF 25 379
ICF 25 379
ICF 50 376
ICF 50 376
ICF 50 376

ICF SS 25 382
ICF SS 25 382
ICLX 32 106
ICLX 32 107
ICLX 40 106
ICLX 40 107
ICLX 50 106
ICLX 50 107
ICLX 65 106
ICLX 65 108
ICLX 80 106
ICLX 100 106
ICLX 125 106
ICLX 150 106
ICM 20–32 173
ICM 20 – A 172
ICM 20 – A 174
ICM 20-A 171
ICM 20 – A33 174
ICM 20A-33 171
ICM 20 – B 172
ICM 20 – B 174
ICM 20-B 171
ICM 20 – B66 174
ICM 20-B66 171
ICM 20 – C 172
ICM 20 – C 174
ICM 20-C 171
ICM 25 – A 172
ICM 25 – A 174
ICM 25-A 171
ICM 25-A33 171
ICM 25-A33 174
ICM 25 – B 172
ICM 25 – B 174
ICM 25-B 171
ICM 32 – A 172
ICM 32 – A 175
ICM 32-A 171
ICM 32 – B 172
ICM 32 – B 175
ICM 32-B 171
ICM 40–150 173
ICM 40 – A 172
ICM 40 – A 175
ICM 40-A 171
ICM 40 – B 172
ICM 40 – B 175
ICM 40-B 171
ICM 50 – A 172
ICM 50 – A 175
ICM 50-A 171
ICM 50 – B 172
ICM 50 – B 175
ICM 50-B 171
ICM 65 – A 172
ICM 65 – A 175
ICM 65-A 171
ICM 65 – B 172
ICM 65 – B 175
ICM 65-B 171
ICM 100 173
ICM 100-B 171
ICM 125 173
ICM 125-B 171
ICM 150 173
ICM 150-B 171
ICS 25 181
ICS 25 – 5 111
ICS 25 – 5 177
ICS 25 – 5 178
ICS 25 – 5 181
ICS 25 – 10 111
ICS 25 – 10 177
ICS 25 – 10 178
ICS 25 – 10 181
ICS 25 – 15 111
ICS 25 – 15 177
ICS 25 – 15 178
ICS 25 – 15 181
ICS 25 – 20 111
ICS 25 – 20 177
ICS 25 – 20 178
ICS 25 – 20 181
ICS 25 – 25 111
ICS 25 – 25 177
ICS 25 – 25 179
ICS 25 – 25 181
ICS 25 – 150 176
ICS 32 111
ICS 32 177
ICS 32 179
ICS 32 181
ICS 32 181
ICS 40 111
ICS 40 177
ICS 40 179
ICS 40 182
ICS 40 182
ICS 50 111
ICS 50 177
ICS 50 179
ICS 50 182
ICS 50 182
ICS 65 111
ICS 65 177
ICS 65 179
ICS 65 182
ICS 65 – 80 182
ICS 80 111
ICS 80 177
ICS 80 179
ICS 80 182
ICS 100 177
ICS 100 179
ICS 125 177
ICS 125 179
ICS 150 177
ICS 150 179
ICSH 25 112
ICSH 25 113
ICSH 32 112
ICSH 32 113
ICSH 40 112
ICSH 40 114
ICSH 50 112
ICSH 50 114
ICSH 65 112
ICSH 65 114
ICSH 80 112
ICSH 80 114
ICSH / ICS 25 – 5 113
ICSH / ICS 25 – 10 113
ICSH / ICS 25 – 15 113
ICSH / ICS 25 – 20 113
ICSH / ICS 25 – 25 113
ICSH / ICS 32 113
ICSH / ICS 40 114
ICSH / ICS 50 114
ICSH / ICS 65 114
ICSH / ICS 80 114
ICV 20 174
ICV 25 113
ICV 25 174
ICV 25 181
ICV 25 (H)A4A Valve housing 173
ICV 25 PM Valve housing 180
ICV 32 107
ICV 32 113
ICV 32 175
ICV 32 181
ICV 32 A4A Valve housing 173
ICV 32 HA4A Valve housing 173
ICV 32 PM Valve housing 180
ICV 40 107
ICV 40 114
ICV 40 175
ICV 40 182
ICV 40 (H)A4A Valve housing 173
ICV 40 PM Valve housing 180
ICV 50 107
ICV 50 114
ICV 50 175
ICV 50 182
ICV 50 (H)A4A Valve housing 173
ICV 50 PM Valve housing 180
ICV 65 108
ICV 65 – 80 114
ICV 65 – 80 175
ICV 65 – 80 182
ICV 65 (H)A4A Valve housing 173
ICV 65 PM Valve housing 180

K

KP 1 123
KP 1 124
KP 1A 125
KP 1E 125
KP 1E 125
KP 2 123
KP 2 124
KP 5 123
KP 5A 125
KP 6B 124
KP 6W 124
KP 7ABS 125
KP 7B 124
KP 7BS 124
KP 7EB 125
KP 7EW 125
KP 7S 124
KP 7W 124
KP 15 123
KP 15A 125
KP 17B 124
KP 17W 124
KP 17W 124
KP 17WB 124
KP 61 137
KP 62 137
KP 62 137

Table of contents - Type

KP 63 137
KP 68 137
KP 69 137
KP 71 137
KP 73 137
KP 75 137
KP 77 137
KP 79 137
KP 81 137
KP 98 137
KVC 12 153
KVC 15 153
KVC 22 153
KVD 12 151
KVD 15 151
KVL 12 149
KVL 15 149
KVL 22 149
KVL 28 149
KVL 35 149
KVP 12 147
KVP 15 147
KVP 22 147
KVP 28 147
KVP 35 147
KVR 12 145
KVR 15 145
KVR 22 145
KVR 28 145
KVR 35 145
KVS 15 168
KVS 42 168

L

L22C5L 531
L22CL 524
L22H5 526
L22HL 517
L30CL 524
L30CL 531
L30H5L 526
L30HL 517
L30HL 526
LG 12 – LG 16 155
LG 12 – LG 22 155
LG 16 – LG 28 155
LG 22 – LG 35 155
LLG 242
LLG 185 243
LLG 185 F 243
LLG 185 S 243
LLG 185 SF 243
LLG 335 243
LLG 335 F 243
LLG 335 S 243
LLG 335 SF 243
LLG 590 243
LLG 590 F 243
LLG 590 S 243
LLG 590 SF 243
LLG 740 243
LLG 740 F 243
LLG 740 S 243
LLG 740 SF 243
LLG 995 243
LLG 995 F 243
LLG 995 S 243
LLG 995 SF 243
LLG 1145 243
LLG 1145 F 243
LLG 1145 S 243
LLG 1145 SF 243
LLG 1550 243
LLG 1550 F 243
LLG 1550 S 243
LLG 1550 SF 243
LLZ013 613
LLZ013 613
LLZ013 613
LLZ013 613
LLZ013 614
LLZ013 614
LLZ013 614
LLZ013 615
LLZ013 615
LLZ013 615
LLZ013 615
LLZ013 616
LLZ013 616
LLZ013T4 617
LLZ013T4 617
LLZ013T4 618
LLZ013T4 618
LLZ013T4 767
LLZ013T4 768
LLZ013T4 780
LLZ013T4 781
LLZ013T4A 619
LLZ013T4A 619
LLZ013T4A 620
LLZ013T4A 620
LLZ013T4A 620
LLZ013T4A 620
LLZ015 613
LLZ015 613
LLZ015 613
LLZ015 613
LLZ015 614
LLZ015 614
LLZ015 614
LLZ015 614
LLZ015 615
LLZ015 615
LLZ015 615
LLZ015 615
LLZ015 616
LLZ015 616
LLZ015T4 617
LLZ015T4 617
LLZ015T4 618
LLZ015T4 618
LLZ015T4 767
LLZ015T4 768
LLZ015T4 780
LLZ015T4 782
LLZ015T4A 619
LLZ015T4A 619
LLZ015T4A 620
LLZ015T4A 620
LLZ015T4A 620
LLZ015T4A 620
LLZ018 613
LLZ018 613
LLZ018 613
LLZ018 614
LLZ018 614
LLZ018 614
LLZ018 614
LLZ018 615
LLZ018 615
LLZ018 615
LLZ018 615
LLZ018 616
LLZ018 616
LLZ018T4 617
LLZ018T4 617
LLZ018T4 618
LLZ018T4 618
LLZ018T4 767
LLZ018T4 768
LLZ018T4 780
LLZ018T4 782
LLZ018T4A 619
LLZ018T4A 619
LLZ018T4A 620
LLZ018T4A 620
LLZ018T4A 620
LLZ018T4A 620
LLZ024 613
LLZ024 613
LLZ024 613
LLZ024 613
LLZ024 614
LLZ024 614
LLZ024 614
LLZ024 614
LLZ024 615
LLZ024 615
LLZ024 615
LLZ024 615
LLZ024 616
LLZ024 616
LLZ024T4 617
LLZ024T4 617
LLZ024T4 618
LLZ024T4 618
LLZ024T4 801
LLZ024T4 802
LLZ024T4 813
LLZ024T4 815
LLZ024T4A 619
LLZ024T4A 619
LLZ024T4A 620
LLZ024T4A 620
LLZ024T4A 620
LLZ024T4A 620
LLZ034 613
LLZ034 613
LLZ034 613
LLZ034 613
LLZ034 614
LLZ034 614
LLZ034 614
LLZ034 614
LLZ034 615
LLZ034 615
LLZ034 615
LLZ034 615
LLZ034 616

LLZ034 616
LLZ034T4 801
LLZ034T4 802
LLZ034T4 813
LLZ034T4 815
LLZ034T4A 619
LLZ034T4A 619
LLZ034T4A 620
LLZ034T4A 620
LLZ034T4A 620
LLZ034T4A 620
LPQM017MP 814
LPQM026AJ 814
LPQM048NT 814
LPQM048NT 814
LPQM068NT 814
LPQM068NT 814
LPQM074FH 814
LPQM074FH 815
LPQM096NT 815
LPQM136NT 815
LPQM215LL 815
LPQM271LL 815
LSQM014MP 782
LSQM018MP 782
LSQM026AJ 781
LSQM034AJ 781
LSQM048NT 781
LSQM048NT 781
LSQM067LL 781
LSQM068NT 781
LSQM068NT 781
LSQM074FH 782
LSQM074FH 782
LSQM084LL 782
LSQM098LL 782

M

M12 Cable 54
M12 Cable 58
ML40TB 521
ML40TG 521
ML40TG 529
ML45FB 520
ML45FG 520
ML45FG 528
ML45FR 528
ML45TB 521
ML45TG 521
ML45TG 529
ML60FB 520
ML60FG 520
ML60FG 528
ML60FR 528
ML60TB 521
ML60TG 521
ML60TG 529
ML60TR 529
ML80FB 520
ML80FG 520
ML80FG 528
ML80FR 528
ML80TB 521
ML80TG 521
ML80TG 529
ML90FB 520
ML90FG 520
ML90FG 528
ML90FR 528
ML90TB 521
ML90TG 521
ML90TG 529
MLM116 625
MLM116 625
MLM116T4 625
MLT12RA 521
MLT12RG 521
MLT12RG 529
MLT12RR 529
MLT45RG 521
MLT45RG 529
MLT90CD 528
MLT90CDc 528
MLT90LD 528
MLY12LAa 520
MLY12Lab 748
MLY12LAb 709
MLY12LAb 713
MLY12LAb 745
MLY12LAb 520
MLY12LFa 528
MLY12LFb 528
MLY12LGa 520
MLY12LGa 528
MLY12LGb 520
MLY12LGb 528
MLY12LRa 528
MLY12LRb 528
MLY45LAa 520
MLY45Lab 748
MLY45LAb 709
MLY45LAb 712
MLY45LAb 745
MLY45LAb 520
MLY45LRa 528
MLY45LRb 528
MLY60LAa 520
MLY60LAb 709
MLY60LAb 712
MLY60LAb 745
MLY60LAb 748
MLY60LAb 520
MLY60LDa 528
MLY60LDb 528
MLY60RAa 521
MLY60RAb 521
MLY60RDa 529
MLY60RDb 529
MLY60RGa 521
MLY60RGa 529
MLY60RGb 521
MLY60RGb 529
MLY80LAa 520
MLY80LAb 745
MLY80LAb 748
MLY80LAb 520
MLY80RAa 521
MLY80RAb 805
MLY80RAb 811
MLY80RAb 813
MLY80RAb 816
MLY80RAb 521
MLY80RDa 529
MLY80RDb 529
MLY90LAa 520
MLY90LAb 520
MLY90RAa 521
MLY90RAb 772
MLY90RAb 778
MLY90RAb 780
MLY90RAb 785
MLY90RAb 805
MLY90RAb 811
MLY90RAb 813
MLY90RAb 816
MLY90RAb 521
MLZ015 599
MLZ015 599
MLZ015 599
MLZ015 599
MLZ015 600
MLZ015 600
MLZ015 600
MLZ015 600
MLZ015 601
MLZ015 601
MLZ015 601
MLZ015 601
MLZ015 602
MLZ015 602
MLZ015 602
MLZ015 603
MLZ015 603
MLZ015 603
MLZ015 603
MLZ015 604
MLZ015 604
MLZ015 604
MLZ015T4 605
MLZ015T4 605
MLZ015T4 606
MLZ015T4 606
MLZ015T4 607
MLZ015T4 607
MLZ015T4 608
MLZ015T4 608
MLZ015T4 609
MLZ015T4 609
MLZ015T4 769
MLZ015T4 771
MLZ015T4 772
MLZ015T4 774
MLZ015T4 776
MLZ015T4 777
MLZ015T4 778
MLZ015T4 780
MLZ015T4 783
MLZ015T4 803
MLZ015T4 804
MLZ015T4 805
MLZ015T4 807
MLZ015T4 809
MLZ015T4 810
MLZ015T4 811
MLZ015T4 813
MLZ015T4 817
MLZ015T4A 610
MLZ015T4A 610
MLZ015T4A 611
MLZ015T4A 611
MLZ015T4A 612

Table of contents - Type

MLZ015T4A 612
MLZ015T5 769
MLZ015T5 771
MLZ015T5 772
MLZ015T5 774
MLZ015T5 776
MLZ015T5 777
MLZ015T5 778
MLZ015T5 780
MLZ015T5 783
MLZ015T5 803
MLZ015T5 804
MLZ015T5 805
MLZ015T5 807
MLZ015T5 809
MLZ015T5 810
MLZ015T5 811
MLZ015T5 813
MLZ015T5 817
MLZ019 599
MLZ019 599
MLZ019 600
MLZ019 600
MLZ019 600
MLZ019 600
MLZ019 601
MLZ019 601
MLZ019 601
MLZ019 601
MLZ019 602
MLZ019 602
MLZ019 602
MLZ019 603
MLZ019 603
MLZ019 603
MLZ019 603
MLZ019 604
MLZ019 604
MLZ019 604
MLZ019T4 605
MLZ019T4 605
MLZ019T4 606
MLZ019T4 606
MLZ019T4 607
MLZ019T4 607
MLZ019T4 608
MLZ019T4 608
MLZ019T4 609
MLZ019T4 609
MLZ019T4 769
MLZ019T4 771
MLZ019T4 772
MLZ019T4 774
MLZ019T4 776
MLZ019T4 777
MLZ019T4 778
MLZ019T4 780
MLZ019T4 783
MLZ019T4A 610
MLZ019T4A 610
MLZ019T4A 611
MLZ019T4A 611
MLZ019T4A 612
MLZ019T4A 612
MLZ019T5 769
MLZ019T5 771
MLZ019T5 772
MLZ019T5 774
MLZ019T5 776
MLZ019T5 777
MLZ019T5 778
MLZ019T5 780
MLZ019T5 783
MLZ021 599
MLZ021 599
MLZ021 599
MLZ021 599
MLZ021 600
MLZ021 600
MLZ021 600
MLZ021 600
MLZ021 601
MLZ021 601
MLZ021 601
MLZ021 601
MLZ021 602
MLZ021 602
MLZ021 602
MLZ021 603
MLZ021 603
MLZ021 603
MLZ021 603
MLZ021 604
MLZ021 604
MLZ021 604
MLZ021T4 605
MLZ021T4 605
MLZ021T4 606
MLZ021T4 606
MLZ021T4 607
MLZ021T4 607
MLZ021T4 608
MLZ021T4 608
MLZ021T4 609
MLZ021T4 609
MLZ021T4 769
MLZ021T4 771
MLZ021T4 772
MLZ021T4 774
MLZ021T4 776
MLZ021T4 777
MLZ021T4 778
MLZ021T4 780
MLZ021T4 783
MLZ021T4 803
MLZ021T4 804
MLZ021T4 805
MLZ021T4 807
MLZ021T4 809
MLZ021T4 810
MLZ021T4 811
MLZ021T4 813
MLZ021T4 817
MLZ021T4A 610
MLZ021T4A 610
MLZ021T4A 611
MLZ021T4A 611
MLZ021T4A 612
MLZ021T4A 612
MLZ021T5 769
MLZ021T5 771
MLZ021T5 773
MLZ021T5 774
MLZ021T5 776
MLZ021T5 777
MLZ021T5 779
MLZ021T5 780
MLZ021T5 783
MLZ021T5 803
MLZ021T5 804
MLZ021T5 805
MLZ021T5 807
MLZ021T5 809
MLZ021T5 810
MLZ021T5 811
MLZ021T5 813
MLZ021T5 817
MLZ026 599
MLZ026 599
MLZ026 599
MLZ026 599
MLZ026 600
MLZ026 600
MLZ026 600
MLZ026 600
MLZ026 601
MLZ026 601
MLZ026 601
MLZ026 601
MLZ026 601
MLZ026 602
MLZ026 602
MLZ026 602
MLZ026 603
MLZ026 603
MLZ026 603
MLZ026 603
MLZ026 604
MLZ026 604
MLZ026 604
MLZ026T4 605
MLZ026T4 605
MLZ026T4 606
MLZ026T4 606
MLZ026T4 607
MLZ026T4 607
MLZ026T4 608
MLZ026T4 608
MLZ026T4 609
MLZ026T4 609
MLZ026T4 769
MLZ026T4 771
MLZ026T4 773
MLZ026T4 775
MLZ026T4 776
MLZ026T4 777
MLZ026T4 779
MLZ026T4 780
MLZ026T4 783
MLZ026T4 803
MLZ026T4 804
MLZ026T4 806
MLZ026T4 807
MLZ026T4 809
MLZ026T4 810
MLZ026T4 812
MLZ026T4 813
MLZ026T4 817
MLZ026T4A 610
MLZ026T4A 610
MLZ026T4A 611
MLZ026T4A 611

MLZ026T4A 612
MLZ026T4A 612
MLZ026T5 770
MLZ026T5 771
MLZ026T5 773
MLZ026T5 774
MLZ026T5 776
MLZ026T5 777
MLZ026T5 779
MLZ026T5 780
MLZ026T5 783
MLZ026T5 803
MLZ026T5 804
MLZ026T5 806
MLZ026T5 807
MLZ026T5 809
MLZ026T5 810
MLZ026T5 812
MLZ026T5 813
MLZ026T5 817
MLZ030 599
MLZ030 599
MLZ030 599
MLZ030 599
MLZ030 600
MLZ030 600
MLZ030 600
MLZ030 600
MLZ030 601
MLZ030 601
MLZ030 601
MLZ030 601
MLZ030 602
MLZ030 602
MLZ030 602
MLZ030 603
MLZ030 603
MLZ030 603
MLZ030 603
MLZ030 604
MLZ030 604
MLZ030 604
MLZ030T4 605
MLZ030T4 605
MLZ030T4 606
MLZ030T4 606
MLZ030T4 607
MLZ030T4 607
MLZ030T4 608
MLZ030T4 608
MLZ030T4 609
MLZ030T4 609
MLZ030T4 770
MLZ030T4 771
MLZ030T4 773
MLZ030T4 775
MLZ030T4 776
MLZ030T4 777
MLZ030T4 779
MLZ030T4 780
MLZ030T4 784
MLZ030T4 803
MLZ030T4 804
MLZ030T4 806
MLZ030T4 807
MLZ030T4 809
MLZ030T4 810
MLZ030T4 812
MLZ030T4 813
MLZ030T4 818
MLZ030T4A 610
MLZ030T4A 610
MLZ030T4A 611
MLZ030T4A 611
MLZ030T4A 612
MLZ030T4A 612
MLZ030T5 770
MLZ030T5 771
MLZ030T5 773
MLZ030T5 775
MLZ030T5 776
MLZ030T5 777
MLZ030T5 779
MLZ030T5 780
MLZ030T5 783
MLZ030T5 803
MLZ030T5 804
MLZ030T5 806
MLZ030T5 807
MLZ030T5 809
MLZ030T5 810
MLZ030T5 812
MLZ030T5 813
MLZ030T5 817
MLZ038 599
MLZ038 599
MLZ038 599
MLZ038 599
MLZ038 600
MLZ038 600
MLZ038 600
MLZ038 600
MLZ038 601
MLZ038 601
MLZ038 601
MLZ038 601
MLZ038 602
MLZ038 602
MLZ038 602
MLZ038 603
MLZ038 603
MLZ038 603
MLZ038 603
MLZ038 604
MLZ038 604
MLZ038 604
MLZ038T4 605
MLZ038T4 605
MLZ038T4 606
MLZ038T4 606
MLZ038T4 607
MLZ038T4 607
MLZ038T4 608
MLZ038T4 608
MLZ038T4 609
MLZ038T4 609
MLZ038T4 770
MLZ038T4 771
MLZ038T4 773
MLZ038T4 775
MLZ038T4 776
MLZ038T4 777
MLZ038T4 779
MLZ038T4 780
MLZ038T4 784
MLZ038T4 803
MLZ038T4 804
MLZ038T4 806
MLZ038T4 808
MLZ038T4 809
MLZ038T4 810
MLZ038T4 812
MLZ038T4 813
MLZ038T4 818
MLZ038T4A 610
MLZ038T4A 610
MLZ038T4A 611
MLZ038T4A 611
MLZ038T4A 612
MLZ038T4A 612
MLZ038T5 770
MLZ038T5 771
MLZ038T5 773
MLZ038T5 775
MLZ038T5 776
MLZ038T5 777
MLZ038T5 779
MLZ038T5 780
MLZ038T5 784
MLZ038T5 803
MLZ038T5 804
MLZ038T5 806
MLZ038T5 808
MLZ038T5 809
MLZ038T5 810
MLZ038T5 812
MLZ038T5 813
MLZ038T5 818
MLZ042 599
MLZ042 599
MLZ042 600
MLZ042 600
MLZ042 600
MLZ042 600
MLZ042 601
MLZ042 601
MLZ042 601
MLZ042 601
MLZ042 602
MLZ042 602
MLZ042 602
MLZ042 603
MLZ042 603
MLZ042 603
MLZ042 603
MLZ042 604
MLZ042T1 605
MLZ042T1 609
MLZ042T5 605
MLZ042T5 606
MLZ042T5 607
MLZ042T5 608
MLZ042T5 609
MLZ045 599
MLZ045 599
MLZ045 599
MLZ045 599
MLZ045 600
MLZ045 600
MLZ045 600
MLZ045 600

Table of contents - Type

MLZ045 601
MLZ045 601
MLZ045 601
MLZ045 601
MLZ045 602
MLZ045 602
MLZ045 602
MLZ045 603
MLZ045 603
MLZ045 603
MLZ045 603
MLZ045 604
MLZ045 604
MLZ045 604
MLZ045T1 607
MLZ045T1 608
MLZ045T4 605
MLZ045T4 605
MLZ045T4 606
MLZ045T4 606
MLZ045T4 607
MLZ045T4 608
MLZ045T4 609
MLZ045T4 609
MLZ045T4 770
MLZ045T4 771
MLZ045T4 773
MLZ045T4 775
MLZ045T4 776
MLZ045T4 777
MLZ045T4 779
MLZ045T4 780
MLZ045T4 784
MLZ045T4A 610
MLZ045T4A 610
MLZ045T4A 611
MLZ045T4A 611
MLZ045T4A 612
MLZ045T4A 612
MLZ048 599
MLZ048 599
MLZ048 599
MLZ048 599
MLZ048 600
MLZ048 600
MLZ048 600
MLZ048 600
MLZ048 601
MLZ048 601
MLZ048 601
MLZ048 601
MLZ048 602
MLZ048 602
MLZ048 602
MLZ048 603
MLZ048 603
MLZ048 603
MLZ048 603
MLZ048 604
MLZ048 604
MLZ048 604
MLZ048T4 605
MLZ048T4 605
MLZ048T4 606
MLZ048T4 606
MLZ048T4 607
MLZ048T4 607
MLZ048T4 608
MLZ048T4 608
MLZ048T4 609
MLZ048T4 609
MLZ048T4 770
MLZ048T4 771
MLZ048T4 773
MLZ048T4 775
MLZ048T4 776
MLZ048T4 LZ066 600
MLZ066 600
MLZ066 601
MLZ066 601
MLZ066 601
MLZ066 601
MLZ066 602
MLZ066 602
MLZ066 602
MLZ066 603
MLZ066 603
MLZ066 603
MLZ066 603
MLZ066 604
MLZ066 604
MLZ066 604
MLZ066T4 605
MLZ066T4 605
MLZ066T4 606
MLZ066T4 606
MLZ066T4 607
MLZ066T4 607
MLZ066T4 608
MLZ066T4 608
MLZ066T4 609
MLZ066T4 609
MLZ066T4A 610
MLZ066T4A 610
MLZ066T4A 611
MLZ066T4A 611
MLZ066T4A 612
MLZ066T4A 612
MLZ076 599
MLZ076 599
MLZ076 599
MLZ076 599
MLZ076 600
MLZ076 600
MLZ076 600
MLZ076 600
MLZ076 601
MLZ076 601
MLZ076 601
MLZ076 602
MLZ076 602
MLZ076 602
MLZ076 603
MLZ076 603
MLZ076 603
MLZ076 604
MLZ076 604
MLZ076 604
MLZ076T4 605
MLZ076T4 605
MLZ076T4 606
MLZ076T4 606
MLZ076T4 607
MLZ076T4 607
MLZ076T4 608
MLZ076T4 608
MLZ076T4 609
MLZ076T4 609
MLZ076T4 803
MLZ076T4 804
MLZ076T4 806
MLZ076T4 808
MLZ076T4 809
MLZ076T4 810
MLZ076T4 812
MLZ076T4 813
MLZ076T4 818
MLZ076T4A 610
MLZ076T4A 610
MLZ076T4A 611
MLZ076T4A 611
MLZ076T4A 612
MLZ076T4A 612
MLZ116 625
MLZ116 625
MLZ116T4 625
MMIGRS2 58
MMIGRS2 421
MMIGRS2 427
MMIGRS2 435
MMIGRS2 437
MMIGRS2 439
MMIGRS2 441
MMIGRS2 443
MMIGRS2 445
MMIGRS2 Remote Display 425
MMIMYK gateway 425
Model 517
Model 518
Model 519
Model 520
Model 521
Model 526
Model 527
Model 528
Model 529
Model 522
Model 523
Model 524
Model 525
Model 530
Model 531
Model 531
MP14FB 520
MP14FG 520
MP14FG 528
MP 54 127
MP 54 127
MP 55 127
MP 55 127
MP 55A 127
MP 55E 128
MPGM033AJ 816
MPT12CD 528
MPT12LA 709
MPT12LA 713
MPT12LA 745
MPT12LA 748
MPT12LA 520

MPT12LD 528
MPT12RA 772
MPT12RA 778
MPT12RA 780
MPT12RA 785
MPT12RA 805
MPT12RA 811
MPT12RA 813
MPT12RA 816
MPT12RA 521
MPT12RG 521
MPT12RG 529
MPT14LA 709
MPT14LA 713
MPT14LA 745
MPT14LA 748
MPT14LA 767
MPT14LA 768
MPT14LA 780
MPT14LA 782
MPT14LA 520
MPT14LD 528
MPT14LF 528
MPT14RA 772
MPT14RA 778
MPT14RA 780
MPT14RA 785
MPT14RA 805
MPT14RA 811
MPT14RA 813
MPT14RA 816
MPT14RA 521
MPT14RD 529
MPT14RF 529
MPT16LA 767
MPT16LA 768
MPT16LA 780
MPT16LA 782
MPT16LA 801
MPT16LA 802
MPT16LA 813
MPT16LA 814
MPT16LA 520
MPT16LD 528
MPT18LA 520
MPXM034ML 817
MPXM034ML 817
MPXM046ML 817
MPXM046ML 817
MPXM057ML 817
MPXM057ML 817
MPXM068ML 817
MPXM068ML 818
MPXM080ML 818
MPXM080ML 818
MPXM108ML 818
MPXM125ML 818
MPXM162ML 818
MPYM008MY 816
MPYM009MY 816
MPYM012MP 816
MPYM014MP 816
MPYM018AJ 817
MPYM024AJ 816
MPYM026AJ 816
MPYM026AJ 816
MPYM034AJ 816
MPYM034AJ 817
MS18T3 521
MS18T3 529
MS22T3 521
MS22T3 529
MS22TB 521
MS26F3 520
MS26F3 528
MS26FB 520
MS26FF 528
MS26FG 520
MS26FG 528
MS26T3 521
MS26T3 529
MS26TB 521
MS26TG 521
MS26TG 529
MS30F3 520
MS30F3 528
MS30FB 520
MS30FF 528
MS34F3 520
MS34F3 528
MS34FB 520
MS34FF 528
MS34T3 521
MS34T3 529
MS34TB 521
MS34TG 521
MS34TG 529
MSGM012SC 785
MSGM015SC 785
MSGM018SC 785
MSGM021SC 785
MSGM026AJ 785
MSGM033AJ 785
MSXM034ML 783
MSXM034ML 783
MSXM044ML 783
MSXM044ML 783
MSXM046ML 783
MSXM046ML 783
MSXM057ML 783
MSXM057ML 783
MSXM068ML 783
MSXM068ML 784
MSXM080ML 784
MSXM080ML 784
MSXM099ML 784
MSXM108ML 784
MSYM009MY 785
MSYM012MP 785
MSYM014MP 785
MSYM018AJ 785
MSYM024AJ 784
MSYM026AJ 784
MSYM026AJ 784
MSYM034AJ 784
MSYM034AJ 784
MTZ018 542
MTZ018 542
MTZ018 543
MTZ018 543
MTZ018 546
MTZ018 546
MTZ018 547
MTZ018 547
MTZ018 548
MTZ018 548
MTZ018 549
MTZ018 549
MTZ018 550
MTZ018 550
MTZ018 551
MTZ018 551
MTZ018 552
MTZ018 552
MTZ018 553
MTZ018 553
MTZ018 554
MTZ018 554
MTZ018 719
MTZ018 719
MTZ018 722
MTZ018 722
MTZ018 725
MTZ018 725
MTZ018 728
MTZ018 728
MTZ018 731
MTZ018 731
MTZ018 734
MTZ018 734
MTZ018 737
MTZ018 737
MTZ018 741
MTZ018 741
MTZ018 746
MTZ018 746
MTZ018 759
MTZ018-4 752
MTZ018-5 752
MTZ022 542
MTZ022 542
MTZ022 543
MTZ022 543
MTZ022 546
MTZ022 546
MTZ022 547
MTZ022 547
MTZ022 548
MTZ022 548
MTZ022 549
MTZ022 549
MTZ022 550
MTZ022 550
MTZ022 551
MTZ022 551
MTZ022 552
MTZ022 552
MTZ022 553
MTZ022 553
MTZ022 554
MTZ022 554
MTZ022 719
MTZ022 719
MTZ022 722
MTZ022 722
MTZ022 725
MTZ022 725
MTZ022 728
MTZ022 728
MTZ022 731
MTZ022 731

Table of contents - Type

MTZ022 734
MTZ022 734
MTZ022 737
MTZ022 737
MTZ022 741
MTZ022 741
MTZ022 746
MTZ022 746
MTZ022 759
MTZ022-4 752
MTZ022-5 752
MTZ028 542
MTZ028 542
MTZ028 543
MTZ028 543
MTZ028 546
MTZ028 546
MTZ028 547
MTZ028 547
MTZ028 548
MTZ028 548
MTZ028 549
MTZ028 549
MTZ028 550
MTZ028 550
MTZ028 551
MTZ028 551
MTZ028 552
MTZ028 552
MTZ028 553
MTZ028 553
MTZ028 554
MTZ028 554
MTZ028 719
MTZ028 719
MTZ028 722
MTZ028 722
MTZ028 725
MTZ028 725
MTZ028 728
MTZ028 728
MTZ028 731
MTZ028 731
MTZ028 734
MTZ028 734
MTZ028 737
MTZ028 737
MTZ028 741
MTZ028 741
MTZ028 746
MTZ028 746
MTZ028 760
MTZ028-4 752
MTZ028-5 752
MTZ032 542
MTZ032 542
MTZ032 543
MTZ032 543
MTZ032 546
MTZ032 546
MTZ032 547
MTZ032 547
MTZ032 548
MTZ032 548
MTZ032 549
MTZ032 549
MTZ032 550
MTZ032 550
MTZ032 551
MTZ032 551
MTZ032 552
MTZ032 552
MTZ032 553
MTZ032 553
MTZ032 554
MTZ032 554
MTZ032 719
MTZ032 719
MTZ032 722
MTZ032 722
MTZ032 725
MTZ032 725
MTZ032 728
MTZ032 728
MTZ032 731
MTZ032 731
MTZ032 734
MTZ032 734
MTZ032 737
MTZ032 737
MTZ032 741
MTZ032 741
MTZ032 746
MTZ032 746
MTZ032 760
MTZ032-4 752
MTZ032-5 752
MTZ036 542
MTZ036 542
MTZ036 543
MTZ036 543
MTZ036 546
MTZ036 546
MTZ036 547
MTZ036 547
MTZ036 548
MTZ036 548
MTZ036 549
MTZ036 549
MTZ036 550
MTZ036 550
MTZ036 551
MTZ036 551
MTZ036 552
MTZ036 552
MTZ036 553
MTZ036 553
MTZ036 554
MTZ036 554
MTZ036 720
MTZ036 720
MTZ036 723
MTZ036 723
MTZ036 726
MTZ036 726
MTZ036 729
MTZ036 729
MTZ036 732
MTZ036 732
MTZ036 735
MTZ036 735
MTZ036 738
MTZ036 738
MTZ036 742
MTZ036 742
MTZ036 746
MTZ036 746
MTZ036 760
MTZ036-4 752
MTZ036-5 752
MTZ040 542
MTZ040 542
MTZ040 543
MTZ040 543
MTZ040 546
MTZ040 546
MTZ040 547
MTZ040 547
MTZ040 548
MTZ040 548
MTZ040 549
MTZ040 549
MTZ040 550
MTZ040 550
MTZ040 551
MTZ040 551
MTZ040 552
MTZ040 552
MTZ040 553
MTZ040 553
MTZ040 554
MTZ040 554
MTZ040 720
MTZ040 723
MTZ040 726
MTZ040 729
MTZ040 732
MTZ040 735
MTZ040 738
MTZ040 742
MTZ040 746
MTZ040 760
MTZ040-4 752
MTZ044 542
MTZ044 542
MTZ044 543
MTZ044 543
MTZ044 546
MTZ044 546
MTZ044 547
MTZ044 547
MTZ044 548
MTZ044 548
MTZ044 549
MTZ044 549
MTZ044 550
MTZ044 550
MTZ044 551
MTZ044 551
MTZ044 552
MTZ044 552
MTZ044 553
MTZ044 553
MTZ044 554
MTZ044 554
MTZ050 542
MTZ050 542
MTZ050 543
MTZ050 543
MTZ050 546
MTZ050 546

MTZ050 547
MTZ050 547
MTZ050 548
MTZ050 548
MTZ050 549
MTZ050 549
MTZ050 550
MTZ050 550
MTZ050 551
MTZ050 551
MTZ050 552
MTZ050 552
MTZ050 553
MTZ050 553
MTZ050 554
MTZ050 554
MTZ050 720
MTZ050 723
MTZ050 726
MTZ050 729
MTZ050 732
MTZ050 735
MTZ050 738
MTZ050 742
MTZ050 746
MTZ050 760
MTZ050-4 752
MTZ056 542
MTZ056 542
MTZ056 543
MTZ056 543
MTZ056 546
MTZ056 546
MTZ056 547
MTZ056 547
MTZ056 548
MTZ056 548
MTZ056 549
MTZ056 549
MTZ056 550
MTZ056 550
MTZ056 551
MTZ056 551
MTZ056 552
MTZ056 552
MTZ056 553
MTZ056 553
MTZ056 554
MTZ056 554
MTZ056 720
MTZ056 723
MTZ056 726
MTZ056 729
MTZ056 732
MTZ056 735
MTZ056 738
MTZ056 742
MTZ056 746
MTZ056 760
MTZ056-4 752
MTZ064 542
MTZ064 542
MTZ064 543
MTZ064 543
MTZ064 546
MTZ064 546
MTZ064 547
MTZ064 547
MTZ064 548
MTZ064 548
MTZ064 549
MTZ064 549
MTZ064 550
MTZ064 550
MTZ064 551
MTZ064 551
MTZ064 552
MTZ064 552
MTZ064 553
MTZ064 553
MTZ064 554
MTZ064 554
MTZ064 720
MTZ064 720
MTZ064 723
MTZ064 723
MTZ064 726
MTZ064 726
MTZ064 729
MTZ064 729
MTZ064 732
MTZ064 732
MTZ064 735
MTZ064 735
MTZ064 738
MTZ064 738
MTZ064 742
MTZ064 742
MTZ064 746
MTZ064 746
MTZ064 759
MTZ064 760
MTZ064-4 752
MTZ064-4 752
MTZ072 542
MTZ072 542
MTZ072 543
MTZ072 543
MTZ072 546
MTZ072 546
MTZ072 547
MTZ072 547
MTZ072 548
MTZ072 548
MTZ072 549
MTZ072 549
MTZ072 550
MTZ072 550
MTZ072 551
MTZ072 551
MTZ072 552
MTZ072 552
MTZ072 553
MTZ072 553
MTZ072 554
MTZ072 554
MTZ072 721
MTZ072 721
MTZ072 724
MTZ072 724
MTZ072 727
MTZ072 727
MTZ072 730
MTZ072 730
MTZ072 733
MTZ072 733
MTZ072 736
MTZ072 736
MTZ072 739
MTZ072 739
MTZ072 743
MTZ072 743
MTZ072 746
MTZ072 746
MTZ072 759
MTZ072 760
MTZ072-4 752
MTZ072-4 752
MTZ080 542
MTZ080 542
MTZ080 543
MTZ080 543
MTZ080 546
MTZ080 546
MTZ080 547
MTZ080 547
MTZ080 548
MTZ080 548
MTZ080 549
MTZ080 549
MTZ080 550
MTZ080 550
MTZ080 551
MTZ080 551
MTZ080 552
MTZ080 552
MTZ080 553
MTZ080 553
MTZ080 554
MTZ080 554
MTZ080 721
MTZ080 721
MTZ080 724
MTZ080 724
MTZ080 727
MTZ080 727
MTZ080 730
MTZ080 730
MTZ080 733
MTZ080 733
MTZ080 736
MTZ080 736
MTZ080 739
MTZ080 739
MTZ080 743
MTZ080 743
MTZ080 746
MTZ080 746
MTZ080 759
MTZ080 760
MTZ080-4 752
MTZ080-4 753
MTZ100 542
MTZ100 542
MTZ100 543
MTZ100 543
MTZ100 546
MTZ100 546
MTZ100 547
MTZ100 547
MTZ100 548

Table of contents - Type

MTZ100 548
MTZ100 549
MTZ100 549
MTZ100 550
MTZ100 550
MTZ100 551
MTZ100 551
MTZ100 552
MTZ100 552
MTZ100 553
MTZ100 553
MTZ100 554
MTZ100 554
MTZ100 721
MTZ100 724
MTZ100 727
MTZ100 730
MTZ100 733
MTZ100 736
MTZ100 739
MTZ100 743
MTZ100 746
MTZ100 761
MTZ100-4 753
MTZ125 542
MTZ125 542
MTZ125 543
MTZ125 543
MTZ125 546
MTZ125 546
MTZ125 547
MTZ125 547
MTZ125 548
MTZ125 548
MTZ125 549
MTZ125 549
MTZ125 550
MTZ125 550
MTZ125 551
MTZ125 551
MTZ125 552
MTZ125 552
MTZ125 553
MTZ125 553
MTZ125 554
MTZ125 554
MTZ125 721
MTZ125 724
MTZ125 727
MTZ125 730
MTZ125 733
MTZ125 736
MTZ125 739
MTZ125 743
MTZ125 746
MTZ125 761
MTZ125-4 753
MTZ144 542
MTZ144 542
MTZ144 543
MTZ144 543
MTZ144 546
MTZ144 546
MTZ144 547
MTZ144 547
MTZ144 548
MTZ144 548
MTZ144 549
MTZ144 549
MTZ144 550
MTZ144 550
MTZ144 551
MTZ144 551
MTZ144 552
MTZ144 552
MTZ144 553
MTZ144 553
MTZ144 554
MTZ144 554
MTZ144 721
MTZ144 724
MTZ144 727
MTZ144 730
MTZ144 733
MTZ144 736
MTZ144 739
MTZ144 743
MTZ144 746
MTZ144 761
MTZ144-4 753
MTZ160 542
MTZ160 542
MTZ160 543
MTZ160 543
MTZ160 546
MTZ160 546
MTZ160 547
MTZ160 547
MTZ160 548
MTZ160 548
MTZ160 549
MTZ160 549
MTZ160 550
MTZ160 550
MTZ160 551
MTZ160 551
MTZ160 552
MTZ160 552
MTZ160 553
MTZ160 553
MTZ160 554
MTZ160 554
MTZ160 721
MTZ160 724
MTZ160 727
MTZ160 730
MTZ160 733
MTZ160 736
MTZ160 739
MTZ160 743
MTZ160 746
MTZ160 761
MTZ160-4 753
MX16TBa 521
MX16TE 529
MX18FBa 520
MX18TBa 521
MX18TE 529
MX18TGa 521
MX18TGa 529
MX21FBa 520
MX21FGa 520
MX21FGa 528
MX21FR 528
MX21TBa 521
MX21TGa 521
MX21TGa 529
MX23FBa 520
MX23FGa 520
MX23FGa 528
MYL80LAb 709
MYL80LAb 712

N

NBC22RA 523
NBC25CA 522
NBC30NR 530
NBC30RA 716
NBC30RA 744
NBC30RA 749
NBC30RA 523
NBC35NA 522
NBC41NA 522
NBG25CA 522
NBG35CA 522
NBG41CA 522
NF5.5CLX 503
NF5.5FX 497
NF6.1FX.2 497
NF6FK 497
NF7.3FX.2 497
NF7CLX 503
NF7FK 497
NF7FX 491
NF7FX 495
NF7FX 497
NF7MLX 499
NF7MLX 501
NF7MLX 501
NF7MLX 740
NF7MLX 745
NF7MLX 750
NF8.4FX.2 497
NF9FX 491
NF9FX 497
NF10FX 491
NF10FX 495
NF10FX 497
NF11FX 491
NF11FX 497
NF11FX.2 497
NL6.1FT 491
NL6.1FT 491
NL6.1MF 491
NL6.1MF 495
NL6.1MF 717
NL6.1MF 745
NL6.1MF 750
NL6.1MLX 499
NL6.1MLX 501
NL6.1MLX 501
NL6F 491
NL6FT 491
NL6FT 495
NL7.3CNX.2 507
NL7.3FT 491
NL7.3MF 491
NL7.3MF 495
NL7.3MF 717
NL7.3MF 745
NL7.3MF 750

NL7CLX 499
NL7CLX 712
NL7CLX 745
NL7CLX 748
NL7CN 505
NL7F 491
NL7FT 493
NL8.4CLX 499
NL8.4CLX 712
NL8.4CLX 745
NL8.4CLX 748
NL8.4CNX.2 507
NL8.4FT 493
NL8.4MF 493
NL8.4MF 495
NL8.4MF 717
NL8.4MF 718
NL8.4MF 745
NL8.4MF 745
NL8.4MF 750
NL8.4MF 750
NL8F 493
NL9CLX 499
NL9CN 505
NL9F 493
NL9FT 493
NL9FT 493
NL9FT 495
NL10FT 493
NL10MF 493
NL10MF 495
NL11F 493
NL11MF 493
NLE8.0CN 507
NLE8.0CNT 505
NLE8.8CN 505
NLE8.8CN 507
NLE9F 493
NLE9KTK 509
NLE10CN 505
NLE10CN 507
NLE10CNT 505
NLE10 KK.4 509
NLE10MF 493
NLE10MF.2 493
NLE11CNL 505
NLE11CNL 507
NLE11KK.4 509
NLE11KTK 509
NLE11KTK 511
NLE11KTK 511
NLE11KTK.2 509
NLE11MF.2 493
NLE11MN 505
NLE11MN 507
NLE12.6CNL 505
NLE12.6MF.2 493
NLE12.6MF.2 495
NLE12.6MFT 493
NLE12.6MFT 495
NLE12.6MN 505
NLE13KK.4 511
NLE13KTK 511
NLE13KTK.2 511
NLE15KK.4 511
NLE15KTK.2 511
NLE15MKK 511
NLT12RR 531
NLU8.0 KK.1 509
NLU8.8KK.1 509
NLU8.8KK.1 509
NLU10 KK.1 509
NLU11KK.1 509
NLU13KK.1 511
NLU13KTK.1 511
NLU15KK.1 511
NLU15KTK.1 511
NLX8.0 KK.2 509
NLX8.8KK.2 509
NLX10 KK.1 509
NLX10 KK.2 509
NLX11KK.2 511
NLX11KK.3 509
NLX13KK.1 511
NLX13KK.2 511
NLX13KK.3 511
NLX15KK.1 511
NLX15KK.2 511
NLX15KK.3 511
NLY10CN 507
NLY12LAa 522
NLY12LAb 522
NLY12NGa 522
NLY12NGa 530
NLY12NGb 522
NLY12NGb 530
NLY12NRa 530
NLY12NRb 530
NLY12RAa 523
NLY12RAb 716
NLY12RAb 744
NLY12RAb 749
NLY12RAb 523
NLY12RGa 523
NLY12RGa 531
NLY12RGb 523
NLY12RGb 531
NLY45LAa 522
NLY45LAb 522
NLY45LAb 708
NLY45LAb 744
NLY45LAb 747
NLY45LRa 530
NLY45LRb 530
NLY45RAa 523
NLY45RAb 523
NLY45RAb 716
NLY45RAb 744
NLY45RAb 749
NLY45RRa 531
NLY45RRb 531
NLY60LAa 522
NLY60LAb 522
NLY60LAb 708
NLY60LAb 744
NLY60LAb 747
NLY60LRa 530
NLY60LRb 530
NLY60RAa 523
NLY60RAb 523
NLY60RAb 716
NLY60RAb 744
NLY60RAb 749
NLY60RRa 531
NLY60RRb 531
NLY75LAa 522
NLY75LAb 522
NLY75NGa 522
NLY75NGa 530
NLY75NGb 522
NLY75NGb 530
NLY75NRa 530
NLY75NRb 530
NLY75RAa 523
NLY75RAb 523
NLY75RRa 531
NLY75RRb 531
NLY80LAa 522
NLY80LAb 522
NLY80LAb 708
NLY80LAb 744
NLY80LAb 747
NLY80LRa 530
NLY80LRb 530
NLY80RAa 523
NLY80RAb 523
NLY80RAb 716
NLY80RAb 744
NLY80RAb 749
NLY80RRa 531
NLY80RRb 531
NLY90CAa 522
NLY90CAb 522
NLY90LAa 522
NLY90LAb 522
NLY90NRa 530
NLY90NRb 530
NLY90RAa 523
NLY90RAb 523
NLY90RAb 716
NLY90RAb 744
NLY90RAb 749
NLY90RRa 531
NLY90RRb 531
NPT14RA 523
NPT14RA 716
NPT14RA 744
NPT14RA 749
NPT16LA 522
NPT16LA 708
NPT16LA 744
NPT16LA 747
NPT16LR 530
NPT16RA 716
NPT16RA 744
NPT16RA 749
NPT16RA 523
NPT18LA 522
NPY12LAa 522
NPY12LAb 522
NPY12LAb 708
NPY12LAb 744
NPY12LAb 747
NPY12LRa 530
NPY12LRb 530
NPY12RAa 523
NPY12RAb 523
NPY14LAa 522
NPY14LAb 522
NRD 145
NRV6 321

Table of contents - Type

NRV 6s 321
NRV 6s 321
NRV 10 321
NRV 10s 321
NRV 10s 321
NRV 10s H 322
NRV 12 321
NRV 12s 321
NRV 12s 321
NRV 16 321
NRV 16s 321
NRV 16s 321
NRV 19 321
NRV 19s 321
NRV 19s 321
NRV 22s 321
NRV 22s 321
NRV 28s 321
NRV 28s 321
NRV 35s 321
NRV 35s 321
NRVA 15 325
NRVA 15 325
NRVA 15 325
NRVA 15 / 20 325
NRVA 20 325
NRVA 20 325
NRVA 20 325
NRVA 25 325
NRVA 25 325
NRVA 25 325
NRVA 25 / 32 325
NRVA 32 325
NRVA 32 325
NRVA 32 325
NRVA 40 325
NRVA 40 325
NRVA 40 325
NRVA 40 / 50 325
NRVA 50 325
NRVA 50 325
NRVA 50 325
NRVA 65 325
NRVA 65 325
NRVA 65 325
NRVA 65 325
NRVH 6s 322
NRVH 10s 322
NRVH 10s 322
NRVH 12s 322
NRVH 12s 322
NRVH 16s 322
NRVH 16s 322
NRVH 19s 322
NRVH 19s 322
NRVH 22s 322
NRVH 22s 322
NRVH 28s 322
NRVH 28s 322
NRVH 35s 322
NRVH 35s 322
NS26FB 522
NS34FB 708
NS34FB 744
NS34FB 747
NS34FB 522
NSK 479
NSK 479
NTY7FK 497
NTZ048 541
NTZ048 541
NTZ048 541
NTZ048 555
NTZ048 555
NTZ048 556
NTZ048 556
NTZ048 710
NTZ048 710
NTZ048 714
NTZ048 714
NTZ048 746
NTZ048 746
NTZ048 759
NTZ048-4 767
NTZ048-4 768
NTZ048-4 780
NTZ048-4 781
NTZ048-4 801
NTZ048-4 802
NTZ048-4 813
NTZ048-4 814
NTZ048-4B 751
NTZ048-5 767
NTZ048-5 768
NTZ048-5 780
NTZ048-5 781
NTZ048-5 801
NTZ048-5 802
NTZ048-5 813
NTZ048-5 814
NTZ048-5B 751
NTZ068 541
NTZ068 541
NTZ068 541
NTZ068 555
NTZ068 555
NTZ068 556
NTZ068 556
NTZ068 710
NTZ068 710
NTZ068 714
NTZ068 714
NTZ068 714
NTZ068 746
NTZ068 746
NTZ068 760
NTZ068-4 767
NTZ068-4 768
NTZ068-4 780
NTZ068-4 781
NTZ068-4 801
NTZ068-4 802
NTZ068-4 813
NTZ068-4 814
NTZ068-4B 751
NTZ068-5 767
NTZ068-5 768
NTZ068-5 780
NTZ068-5 781
NTZ068-5 801
NTZ068-5 802
NTZ068-5 813
NTZ068-5 814
NTZ068-5B 751
NTZ096 541
NTZ096 541
NTZ096 541
NTZ096 555
NTZ096 555
NTZ096 556
NTZ096 556
NTZ096 710
NTZ096 710
NTZ096 714
NTZ096 746
NTZ096 746
NTZ096 759
NTZ096 760
NTZ096-4 801
NTZ096-4 802
NTZ096-4 813
NTZ096-4 815
NTZ096-4B 751
NTZ096-4B 751
NTZ108 541
NTZ108 541
NTZ108 541
NTZ108 555
NTZ108 555
NTZ108 556
NTZ108 556
NTZ108 711
NTZ108 711
NTZ108 715
NTZ108 715
NTZ108 746
NTZ108 746
NTZ108 759
NTZ108 760
NTZ108-4B 751
NTZ108-4B 751
NTZ136 541
NTZ136 541
NTZ136 541
NTZ136 555
NTZ136 555
NTZ136 556
NTZ136 556
NTZ136 711
NTZ136 711
NTZ136 715
NTZ136 715
NTZ136 746
NTZ136 746
NTZ136 759
NTZ136 760
NTZ136-4 801
NTZ136-4 802
NTZ136-4 813
NTZ136-4 815
NTZ136-4B 751
NTZ136-4B 751
NTZ215 541
NTZ215 541
NTZ215 541
NTZ215 555
NTZ215 555
NTZ215 556
NTZ215 556
NTZ215 711
NTZ215 715

NTZ215 746
NTZ215 761
NTZ215-4B 751
NTZ271 541
NTZ271 541
NTZ271 541
NTZ271 555
NTZ271 555
NTZ271 556
NTZ271 556
NTZ271 711
NTZ271 715
NTZ271 746
NTZ271 761
NTZ271-4B 751
NUT55CAa 522
NUT55CAb 522
NUT55CAc 522
NUT55CAd 522
NUT55LRa 530
NUT55LRb 530
NUT55LRc 530
NUT55LRd 530
NUT60CAa 522
NUT60CAb 522
NUT60CAc 522
NUT60CAd 522
NUT60LRa 530
NUT60LRb 530
NUT60LRc 530
NUT60LRd 530
NUT70CAa 522
NUT70CAb 522
NUY45LAa 522
NUY45LAb 522
NUY45NRa 530
NUY45NRb 530
NUY45RAa 523
NUY55RAa 523
NUY60LAa 522
NUY60LAb 522
NUY60RAa 523
NUY70RAa 523
NUY70RAb 523
NUY80LAa 522
NUY90CAa 522
NUY90CAb 522
NUY90LAa 522
NUY90LAb 522
NX18FBa 522
NX18TBa 523
NX18TBa 716
NX18TBa 744
NX18TBa 749
NX21FBa 522
NX21TBa 523
NX21TBa 716
NX21TBa 744
NX21TBa 749
NX23FBa 522
NX23FBa 708
NX23FBa 744
NX23FBa 747

O

OFV 20 197
OFV 25 197
OFV – SS 20 197
OFV – SS 25 197
OP-LCHC004 712
OP-LCHC004 748
OP-LCHC004TL 745
OP-LCHC006 712
OP-LCHC006 748
OP-LCHC006FR 745
OP-LCHC007 712
OP-LCHC007 748
OP-LCHC007NL 745
OP-LCHC008 712
OP-LCHC008 748
OP-LCHC008FR 745
OP-LCHC008NL 745
OP-LCHC012 712
OP-LCHC012 712
OP-LCHC012 748
OP-LCHC012 748
OP-LCHC012SC 745
OP-LCHC012SC 745
OP-LCHC015 713
OP-LCHC015 748
OP-LCHC015SC 745
OP-LCHC018 713
OP-LCHC018 748
OP-LCHC018SC 745
OP-LCHC021 713
OP-LCHC021 748
OP-LCHC021SC 745
OP-LCHC026 713
OP-LCHC026 748
OP-LCHC026GS 745
OP-LCHC034 713
OP-LCHC034 748
OP-LCHC034GS 745
OP-LCNC004 708
OP-LCNC004 747
OP-LCNC004NY 744
OP-LCNC006 708
OP-LCNC006 747
OP-LCNC006NY 744
OP-LCNC008 708
OP-LCNC008 747
OP-LCNC008NY 744
OP-LCNC011 708
OP-LCNC011 747
OP-LCNC011NY 744
OP-LCNC016 708
OP-LCNC016 747
OP-LCNC016NP 744
OP-LCNC023 708
OP-LCNC023 747
OP-LCNC023NX 744
OP-LCNC034 708
OP-LCNC034 747
OP-LCNC034NS 744
OP-LCQC004 709
OP-LCQC004 712
OP-LCQC004 748
OP-LCQC004ML 745
OP-LCQC006 709
OP-LCQC006 712
OP-LCQC006 748
OP-LCQC006ML 745
OP-LCQC008 709
OP-LCQC008 712
OP-LCQC008 748
OP-LCQC008ML 745
OP-LCQC012 709
OP-LCQC012 709
OP-LCQC012 713
OP-LCQC012 713
OP-LCQC012 748
OP-LCQC012 748
OP-LCQC012ML 745
OP-LCQC012MP 745
OP-LCQC014 709
OP-LCQC014 713
OP-LCQC014 748
OP-LCQC014MP 745
OP-LCQN048 710
OP-LCQN048 710
OP-LCQN048 714
OP-LCQN048 714
OP-LCQN048 751
OP-LCQN048 751
OP-LCQN048NTA02E 746
OP-LCQN048NTA02E 759
OP-LCQN048NTA02G 746
OP-LCQN048NTA02G 759
OP-LCQN068 710
OP-LCQN068 710
OP-LCQN068 714
OP-LCQN068 714
OP-LCQN068 714
OP-LCQN068 751
OP-LCQN068 751
OP-LCQN068NTA02E 746
OP-LCQN068NTA02E 760
OP-LCQN068NTA02G 746
OP-LCQN068NTA02G 760
OP-LCQN096 710
OP-LCQN096 751
OP-LCQN096NTA02E 746
OP-LCQN096NTA02E 760
OP-LCQN108 711
OP-LCQN108 715
OP-LCQN108 751
OP-LCQN108NTA02E 746
OP-LCQN108NTA02E 760
OP-LCQN136 711
OP-LCQN136 715
OP-LCQN136 751
OP-LCQN136NTA02E 746
OP-LCQN136NTA02E 760
OP-LGQN096 710
OP-LGQN096 714
OP-LGQN096 751
OP-LGQN096NTA02E 746
OP-LGQN096NTA02E 759
OP-LGQN108 711
OP-LGQN108 715
OP-LGQN108 751
OP-LGQN108NTA02E 746
OP-LGQN108NTA02E 759
OP-LGQN136 711
OP-LGQN136 715
OP-LGQN136 751
OP-LGQN136NTA02E 746
OP-LGQN136NTA02E 759
OP-LGQN215 711
OP-LGQN215 715
OP-LGQN215 751

Table of contents - Type

OP-LGQN215NTA02E 746
OP-LGQN215NTA02E 761
OP-LGQN271 711
OP-LGQN271 715
OP-LGQN271 751
OP-LGQN271NTA02E 746
OP-LGQN271NTA02E 761
OP-LPQM017MP 801
OP-LPQM017MP 802
OP-LPQM017MPP00G 813
OP-LPQM026AJ 801
OP-LPQM026AJ 802
OP-LPQM026AJP00G 813
OP-LPQM048NT 801
OP-LPQM048NT 801
OP-LPQM048NT 802
OP-LPQM048NT 802
OP-LPQM048NTP00E 813
OP-LPQM048NTP00G 813
OP-LPQM068NT 801
OP-LPQM068NT 801
OP-LPQM068NT 802
OP-LPQM068NT 802
OP-LPQM068NTP00E 813
OP-LPQM068NTP00G 813
OP-LPQM074FH 801
OP-LPQM074FH 801
OP-LPQM074FH 802
OP-LPQM074FH 802
OP-LPQM074FHP00E 813
OP-LPQM074FHP00G 813
OP-LPQM096NT 801
OP-LPQM096NT 802
OP-LPQM096NTP00E 813
OP-LPQM136NT 801
OP-LPQM136NT 802
OP-LPQM136NTP00E 813
OP-LPQM215LL 801
OP-LPQM215LL 802
OP-LPQM215LLP00E 813
OP-LPQM271LL 801
OP-LPQM271LL 802
OP-LPQM271LLP00E 813
OP-LSQM014MP 767
OP-LSQM014MP 768
OP-LSQM014MP 780
OP-LSQM018MP 767
OP-LSQM018MP 768
OP-LSQM018MP 780
OP-LSQM026AJ 767
OP-LSQM026AJ 768
OP-LSQM026AJ 780
OP-LSQM034AJ 767
OP-LSQM034AJ 768
OP-LSQM034AJ 780
OP-LSQM048NT 767
OP-LSQM048NT 767
OP-LSQM048NT 768
OP-LSQM048NT 768
OP-LSQM048NT 780
OP-LSQM048NT 780
OP-LSQM067LL 767
OP-LSQM067LL 768
OP-LSQM067LL 780
OP-LSQM068NT 767
OP-LSQM068NT 767
OP-LSQM068NT 768
OP-LSQM068NT 768
OP-LSQM068NT 780
OP-LSQM068NT 780
OP-LSQM068NT 780
OP-LSQM074FH 767
OP-LSQM074FH 767
OP-LSQM074FH 768
OP-LSQM074FH 768
OP-LSQM074FH 780
OP-LSQM074FH 780
OP-LSQM084LL 767
OP-LSQM084LL 768
OP-LSQM084LL 780
OP-LSQM098LL 767
OP-LSQM098LL 768
OP-LSQM098LL 780
OP-MCGC003 717
OP-MCGC003 750
OP-MCGC003TL 745
OP-MCGC004 717
OP-MCGC004 750
OP-MCGC004TL 745
OP-MCGC005 717
OP-MCGC005 750
OP-MCGC005TL 745
OP-MCGC006 717
OP-MCGC006 717
OP-MCGC006 750
OP-MCGC006 750
OP-MCGC006FR 745
OP-MCGC006NL 745
OP-MCGC007 717
OP-MCGC007 717
OP-MCGC007 750
OP-MCGC007 750
OP-MCGC007FR 745
OP-MCGC007NL 745
OP-MCGC008 717
OP-MCGC008 717
OP-MCGC008 718
OP-MCGC008 750
OP-MCGC008 750
OP-MCGC008 750
OP-MCGC008FR 745
OP-MCGC008NL 745
OP-MCGC008NL 745
OP-MCGC010 718
OP-MCGC010 750
OP-MCGC010SC 745
OP-MCGC011 718
OP-MCGC011 750
OP-MCGC011FR 745
OP-MCGC012 718
OP-MCGC012 750
OP-MCGC012SC 745
OP-MCGC015 718
OP-MCGC015 750
OP-MCGC015SC 745
OP-MCGC018 718
OP-MCGC018 750
OP-MCGC018SC 745
OP-MCGC021 718
OP-MCGC021 718
OP-MCGC021 750
OP-MCGC021 750
OP-MCGC021SC 745
OP-MCGC021SC 745
OP-MCGC026 718
OP-MCGC026 750
OP-MCGC026GS 745
OP-MCGC034 718
OP-MCGC034 750
OP-MCGC034GS 745
OP-MCHB007NF 745
OP-MCHC004 740
OP-MCHC004 750
OP-MCHC004TL 745
OP-MCHC006 740
OP-MCHC006 750
OP-MCHC006FR 745
OP-MCHC007 740
OP-MCHC007 750
OP-MCHC010 740
OP-MCHC010 750
OP-MCHC010SC 745
OP-MCHC013 740
OP-MCHC013 750
OP-MCHC013SC 745
OP-MCHC015 740
OP-MCHC015 750
OP-MCHC015SC 745
OP-MCHC018 740
OP-MCHC018 750
OP-MCHC018SC 745
OP-MCHC021 740
OP-MCHC021 750
OP-MCHC021GS 745
OP-MCNC003 716
OP-MCNC003 749
OP-MCNC003NB 744
OP-MCNC004 716
OP-MCNC004 749
OP-MCNC004NY 744
OP-MCNC006 716
OP-MCNC006 749
OP-MCNC006NY 744
OP-MCNC008 716
OP-MCNC008 749
OP-MCNC008NY 744
OP-MCNC009 716
OP-MCNC009 749
OP-MCNC009NY 744
OP-MCNC011 716
OP-MCNC011 749
OP-MCNC011NY 744
OP-MCNC014 716
OP-MCNC014 749
OP-MCNC014NP 744
OP-MCNC016 716
OP-MCNC016 749
OP-MCNC016NP 744
OP-MCNC018 716
OP-MCNC018 749
OP-MCNC018NX 744
OP-MCNC020 716
OP-MCNC020 749
OP-MCNC020NX 744
OP-MCRN030 719
OP-MCRN030 719
OP-MCRN030 722
OP-MCRN030 722
OP-MCRN030 725
OP-MCRN030 725
OP-MCRN030 728
OP-MCRN030 728

OP-MCRN030 731
OP-MCRN030 731
OP-MCRN030 734
OP-MCRN030 734
OP-MCRN030 737
OP-MCRN030 737
OP-MCRN030 741
OP-MCRN030 741
OP-MCRN030 752
OP-MCRN030 752
OP-MCRN030MTA02E 746
OP-MCRN030MTA02E 759
OP-MCRN030MTA02G 746
OP-MCRN030MTA02G 759
OP-MCRN038 719
OP-MCRN038 719
OP-MCRN038 722
OP-MCRN038 722
OP-MCRN038 725
OP-MCRN038 725
OP-MCRN038 728
OP-MCRN038 728
OP-MCRN038 731
OP-MCRN038 731
OP-MCRN038 734
OP-MCRN038 734
OP-MCRN038 737
OP-MCRN038 737
OP-MCRN038 741
OP-MCRN038 741
OP-MCRN038 752
OP-MCRN038 752
OP-MCRN038MTA02E 746
OP-MCRN038MTA02E 759
OP-MCRN038MTA02G 746
OP-MCRN038MTA02G 759
OP-MCRN048 719
OP-MCRN048 719
OP-MCRN048 722
OP-MCRN048 722
OP-MCRN048 725
OP-MCRN048 725
OP-MCRN048 728
OP-MCRN048 728
OP-MCRN048 731
OP-MCRN048 731
OP-MCRN048 734
OP-MCRN048 734
OP-MCRN048 737
OP-MCRN048 737
OP-MCRN048 741
OP-MCRN048 741
OP-MCRN048 752
OP-MCRN048 752
OP-MCRN048MTA02E 746
OP-MCRN048MTA02E 760
OP-MCRN048MTA02G 746
OP-MCRN048MTA02G 760
OP-MCRN054 719
OP-MCRN054 719
OP-MCRN054 722
OP-MCRN054 722
OP-MCRN054 725
OP-MCRN054 725
OP-MCRN054 728
OP-MCRN054 728
OP-MCRN054 731
OP-MCRN054 731
OP-MCRN054 734
OP-MCRN054 734
OP-MCRN054 737
OP-MCRN054 737
OP-MCRN054 741
OP-MCRN054 741
OP-MCRN054 752
OP-MCRN054 752
OP-MCRN054MTA02E 746
OP-MCRN054MTA02E 760
OP-MCRN054MTA02G 746
OP-MCRN054MTA02G 760
OP-MCRN060 720
OP-MCRN060 720
OP-MCRN060 723
OP-MCRN060 723
OP-MCRN060 726
OP-MCRN060 726
OP-MCRN060 729
OP-MCRN060 729
OP-MCRN060 732
OP-MCRN060 732
OP-MCRN060 735
OP-MCRN060 735
OP-MCRN060 738
OP-MCRN060 738
OP-MCRN060 742
OP-MCRN060 742
OP-MCRN060 752
OP-MCRN060 752
OP-MCRN060MTA02E 746
OP-MCRN060MTA02E 760
OP-MCRN060MTA02G 746
OP-MCRN060MTA02G 760
OP-MCRN068 720
OP-MCRN068 723
OP-MCRN068 726
OP-MCRN068 729
OP-MCRN068 732
OP-MCRN068 735
OP-MCRN068 738
OP-MCRN068 742
OP-MCRN068 752
OP-MCRN068MTA02E 746
OP-MCRN068MTA02E 760
OP-MCRN086 720
OP-MCRN086 723
OP-MCRN086 726
OP-MCRN086 729
OP-MCRN086 732
OP-MCRN086 735
OP-MCRN086 738
OP-MCRN086 742
OP-MCRN086 752
OP-MCRN086MTA02E 746
OP-MCRN086MTA02E 760
OP-MCRN096 720
OP-MCRN096 723
OP-MCRN096 726
OP-MCRN096 729
OP-MCRN096 732
OP-MCRN096 735
OP-MCRN096 738
OP-MCRN096 742
OP-MCRN096 752
OP-MCRN096MTA02E 746
OP-MCRN096MTA02E 760
OP-MCRN108 720
OP-MCRN108 723
OP-MCRN108 726
OP-MCRN108 729
OP-MCRN108 732
OP-MCRN108 735
OP-MCRN108 738
OP-MCRN108 742
OP-MCRN108 752
OP-MCRN108MTA02E 746
OP-MCRN108MTA02E 760
OP-MCRN121 721
OP-MCRN121 724
OP-MCRN121 727
OP-MCRN121 730
OP-MCRN121 733
OP-MCRN121 736
OP-MCRN121 739
OP-MCRN121 743
OP-MCRN121 752
OP-MCRN121MTA02E 746
OP-MCRN121MTA02E 760
OP-MCRN136 721
OP-MCRN136 724
OP-MCRN136 727
OP-MCRN136 730
OP-MCRN136 733
OP-MCRN136 736
OP-MCRN136 739
OP-MCRN136 743
OP-MCRN136M 752
OP-MCRN136MTA02E 746
OP-MCRN136MTA02E 760
OP-MGRN108 720
OP-MGRN108 723
OP-MGRN108 726
OP-MGRN108 729
OP-MGRN108 732
OP-MGRN108 735
OP-MGRN108 738
OP-MGRN108 742
OP-MGRN108 752
OP-MGRN108MTA02E 746
OP-MGRN108MTA02E 759
OP-MGRN121 721
OP-MGRN121 724
OP-MGRN121 727
OP-MGRN121 730
OP-MGRN121 733
OP-MGRN121 736
OP-MGRN121 739
OP-MGRN121 743
OP-MGRN121 752
OP-MGRN121MTA02E 746
OP-MGRN121MTA02E 759
OP-MGRN136 721
OP-MGRN136 724
OP-MGRN136 727
OP-MGRN136 730
OP-MGRN136 733
OP-MGRN136 736
OP-MGRN136 739
OP-MGRN136 743
OP-MGRN136M 753
OP-MGRN136MTA02E 746
OP-MGRN136MTA02E 759

Table of contents - Type

OP-MGRN171 721
OP-MGRN171 724
OP-MGRN171 727
OP-MGRN171 730
OP-MGRN171 733
OP-MGRN171 736
OP-MGRN171 739
OP-MGRN171 743
OP-MGRN171 753
OP-MGRN171MTA02E 746
OP-MGRN171MTA02E 761
OP-MGRN215 721
OP-MGRN215 724
OP-MGRN215 727
OP-MGRN215 730
OP-MGRN215 733
OP-MGRN215 736
OP-MGRN215 739
OP-MGRN215 743
OP-MGRN215 753
OP-MGRN215MTA02E 746
OP-MGRN215MTA02E 761
OP-MGRN242 721
OP-MGRN242 724
OP-MGRN242 727
OP-MGRN242 730
OP-MGRN242 733
OP-MGRN242 736
OP-MGRN242 739
OP-MGRN242 743
OP-MGRN242 753
OP-MGRN242MTA02E 746
OP-MGRN242MTA02E 761
OP-MGRN271 721
OP-MGRN271 724
OP-MGRN271 727
OP-MGRN271 730
OP-MGRN271 733
OP-MGRN271 736
OP-MGRN271 739
OP-MGRN271 743
OP-MGRN271 753
OP-MGRN271MTA02E 746
OP-MGRN271MTA02E 761
OP-MPGM033AJ 803
OP-MPGM033AJP00G 813
OP-MPLM028OP-MPPM028 829
OP-MPLM035OP-MPPM035 829
OP-MPLM044OP-MPPM044 829
OP-MPPM028VVL 830
OP-MPPM028VVL 831
OP-MPPM028VVL 832
OP-MPPM028VVL 833
OP-MPPM035VVL 830
OP-MPPM035VVL 831
OP-MPPM035VVL 832
OP-MPPM035VVL 833
OP-MPPM044VVL 830
OP-MPPM044VVL 831
OP-MPPM044VVL 832
OP-MPPM044VVL 833
OP-MPXM034ML 803
OP-MPXM034ML 803
OP-MPXM034ML 804
OP-MPXM034ML 804
OP-MPXM034ML 805
OP-MPXM034ML 805
OP-MPXM034ML 807
OP-MPXM034ML 807
OP-MPXM034ML 809
OP-MPXM034ML 809
OP-MPXM034ML 810
OP-MPXM034ML 810
OP-MPXM034ML 811
OP-MPXM034ML 811
OP-MPXM034MLP00E 813
OP-MPXM034MLP00G 813
OP-MPXM046ML 803
OP-MPXM046ML 803
OP-MPXM046ML 804
OP-MPXM046ML 804
OP-MPXM046ML 805
OP-MPXM046ML 805
OP-MPXM046ML 807
OP-MPXM046ML 807
OP-MPXM046ML 809
OP-MPXM046ML 809
OP-MPXM046ML 810
OP-MPXM046ML 810
OP-MPXM046ML 811
OP-MPXM046ML 811
OP-MPXM046MLP00E 813
OP-MPXM046MLP00G 813
OP-MPXM057ML 803
OP-MPXM057ML 803
OP-MPXM057ML 804
OP-MPXM057ML 804
OP-MPXM057ML 806
OP-MPXM057ML 806
OP-MPXM057ML 809
OP-MPXM057ML 809
OP-MPXM057ML 810
OP-MPXM057ML 810
OP-MPXM057ML 812
OP-MPXM057ML 812
OP-MPXM057MLP00E 807
OP-MPXM057MLP00E 813
OP-MPXM057MLP00G 807
OP-MPXM057MLP00G 813
OP-MPXM068ML 803
OP-MPXM068ML 803
OP-MPXM068ML 804
OP-MPXM068ML 804
OP-MPXM068ML 806
OP-MPXM068ML 806
OP-MPXM068ML 809
OP-MPXM068ML 809
OP-MPXM068ML 810
OP-MPXM068ML 810
OP-MPXM068ML 812
OP-MPXM068ML 812
OP-MPXM068MLP00E 807
OP-MPXM068MLP00E 813
OP-MPXM068MLP00G 807
OP-MPXM068MLP00G 813
OP-MPXM080ML 803
OP-MPXM080ML 803
OP-MPXM080ML 804
OP-MPXM080ML 804
OP-MPXM080ML 806
OP-MPXM080ML 806
OP-MPXM080ML 809
OP-MPXM080ML 809
OP-MPXM080ML 810
OP-MPXM080ML 810
OP-MPXM080ML 812
OP-MPXM080ML 812
OP-MPXM080MLP00E 808
OP-MPXM080MLP00E 813
OP-MPXM080MLP00G 808
OP-MPXM080MLP00G 813
OP-MPXM108ML 803
OP-MPXM108ML 804
OP-MPXM108ML 806
OP-MPXM108ML 809
OP-MPXM108ML 810
OP-MPXM108ML 812
OP-MPXM108MLP00E 808
OP-MPXM108MLP00E 813
OP-MPXM125ML 803
OP-MPXM125ML 804
OP-MPXM125ML 806
OP-MPXM125ML 809
OP-MPXM125ML 810
OP-MPXM125ML 812
OP-MPXM125MLP00E 808
OP-MPXM125MLP00E 813
OP-MPXM162ML 803
OP-MPXM162ML 804
OP-MPXM162ML 806
OP-MPXM162ML 809
OP-MPXM162ML 810
OP-MPXM162ML 812
OP-MPXM162MLP00E 808
OP-MPXM162MLP00E 813
OP-MPYM008MY 805
OP-MPYM008MY 811
OP-MPYM008MYP00G 813
OP-MPYM009MY 805
OP-MPYM009MY 811
OP-MPYM009MYP00G 813
OP-MPYM012MP 805
OP-MPYM012MP 811
OP-MPYM012MPP00G 813
OP-MPYM014MP 805
OP-MPYM014MP 811
OP-MPYM014MPP00G 813
OP-MPYM018AJ 805
OP-MPYM018AJ 807
OP-MPYM018AJ 811
OP-MPYM018AJP00G 813
OP-MPYM024AJ 805
OP-MPYM024AJ 807
OP-MPYM024AJ 811
OP-MPYM024AJP00G 813
OP-MPYM026AJ 805
OP-MPYM026AJ 805
OP-MPYM026AJ 807
OP-MPYM026AJ 807
OP-MPYM026AJ 811
OP-MPYM026AJ 811
OP-MPYM026AJP00E 813
OP-MPYM026AJP00G 813
OP-MPYM034AJ 805
OP-MPYM034AJ 805
OP-MPYM034AJ 807
OP-MPYM034AJ 807
OP-MPYM034AJ 811
OP-MPYM034AJ 811
OP-MPYM034AJP00E 813
OP-MPYM034AJP00G 813

OP-MSGM012SC 769
OP-MSGM012SC 780
OP-MSGM015SC 769
OP-MSGM015SC 780
OP-MSGM018SC 769
OP-MSGM018SC 780
OP-MSGM021SC 769
OP-MSGM021SC 780
OP-MSGM026AJ 769
OP-MSGM026AJ 780
OP-MSGM033AJ 769
OP-MSGM033AJ 780
OP-MSXM034ML 769
OP-MSXM034ML 769
OP-MSXM034ML 771
OP-MSXM034ML 771
OP-MSXM034ML 772
OP-MSXM034ML 772
OP-MSXM034ML 774
OP-MSXM034ML 774
OP-MSXM034ML 776
OP-MSXM034ML 776
OP-MSXM034ML 777
OP-MSXM034ML 777
OP-MSXM034ML 778
OP-MSXM034ML 778
OP-MSXM034ML 780
OP-MSXM034ML 780
OP-MSXM044ML 769
OP-MSXM044ML 769
OP-MSXM044ML 771
OP-MSXM044ML 771
OP-MSXM044ML 772
OP-MSXM044ML 772
OP-MSXM044ML 774
OP-MSXM044ML 774
OP-MSXM044ML 776
OP-MSXM044ML 776
OP-MSXM044ML 777
OP-MSXM044ML 777
OP-MSXM044ML 778
OP-MSXM044ML 778
OP-MSXM044ML 780
OP-MSXM044ML 780
OP-MSXM046ML 769
OP-MSXM046ML 769
OP-MSXM046ML 771
OP-MSXM046ML 771
OP-MSXM046ML 772
OP-MSXM046ML 773
OP-MSXM046ML 774
OP-MSXM046ML 774
OP-MSXM046ML 776
OP-MSXM046ML 776
OP-MSXM046ML 777
OP-MSXM046ML 777
OP-MSXM046ML 778
OP-MSXM046ML 779
OP-MSXM046ML 780
OP-MSXM046ML 780
OP-MSXM057ML 769
OP-MSXM057ML 770
OP-MSXM057ML 771
OP-MSXM057ML 771
OP-MSXM057ML 773
OP-MSXM057ML 773
OP-MSXM057ML 774
OP-MSXM057ML 775
OP-MSXM057ML 776
OP-MSXM057ML 776
OP-MSXM057ML 777
OP-MSXM057ML 777
OP-MSXM057ML 779
OP-MSXM057ML 779
OP-MSXM057ML 780
OP-MSXM057ML 780
OP-MSXM068ML 770
OP-MSXM068ML 770
OP-MSXM068ML 771
OP-MSXM068ML 771
OP-MSXM068ML 773
OP-MSXM068ML 773
OP-MSXM068ML 775
OP-MSXM068ML 775
OP-MSXM068ML 776
OP-MSXM068ML 776
OP-MSXM068ML 777
OP-MSXM068ML 777
OP-MSXM068ML 779
OP-MSXM068ML 779
OP-MSXM068ML 780
OP-MSXM068ML 780
OP-MSXM080ML 770
OP-MSXM080ML 770
OP-MSXM080ML 771
OP-MSXM080ML 771
OP-MSXM080ML 773
OP-MSXM080ML 773
OP-MSXM080ML 775
OP-MSXM080ML 775
OP-MSXM080ML 776
OP-MSXM080ML 776
OP-MSXM080ML 777
OP-MSXM080ML 777
OP-MSXM080ML 779
OP-MSXM080ML 779
OP-MSXM080ML 780
OP-MSXM080ML 780
OP-MSXM099ML 770
OP-MSXM099ML 771
OP-MSXM099ML 773
OP-MSXM099ML 775
OP-MSXM099ML 776
OP-MSXM099ML 777
OP-MSXM099ML 779
OP-MSXM099ML 780
OP-MSXM108ML 770
OP-MSXM108ML 771
OP-MSXM108ML 773
OP-MSXM108ML 775
OP-MSXM108ML 776
OP-MSXM108ML 777
OP-MSXM108ML 779
OP-MSXM108ML 780
OP-MSYM009MY 772
OP-MSYM009MY 778
OP-MSYM009MY 780
OP-MSYM012MP 772
OP-MSYM012MP 778
OP-MSYM012MP 780
OP-MSYM014MP 772
OP-MSYM014MP 778
OP-MSYM014MP 780
OP-MSYM018AJ 772
OP-MSYM018AJ 774
OP-MSYM018AJ 778
OP-MSYM018AJ 780
OP-MSYM024AJ 772
OP-MSYM024AJ 774
OP-MSYM024AJ 778
OP-MSYM024AJ 780
OP-MSYM026AJ 772
OP-MSYM026AJ 772
OP-MSYM026AJ 774
OP-MSYM026AJ 774
OP-MSYM026AJ 778
OP-MSYM026AJ 778
OP-MSYM026AJ 780
OP-MSYM026AJ 780
OP-MSYM034AJ 772
OP-MSYM034AJ 772
OP-MSYM034AJ 774
OP-MSYM034AJ 774
OP-MSYM034AJ 778
OP-MSYM034AJ 778
OP-MSYM034AJ 780
OP-MSYM034AJ 780
Optyma™ Plus 800
OUB 1 385
OUB 1s 385
OUB 1s 385
OUB 4 385

P

PCH065 677
PCH065 677
PCH065 677
PCH065 678
PHE B3-030 389
PHE B3-030 389
PHE B3-030 389
PHE B3-030 389
PHE B3-052 389
PHE B3-052 389
PHE B3-052 389
PHE B3-095 389
PHE B3-095 389
PHE B3-095 389
PHE B3-095 389
PHE B3-095 389
PHE B3-210 389
PHE B3-210 389
PHE B-3030 389
PL20F 491
PL30F 497
PL35F 491
PL35G 491
PL35G 495
PL50F 491
PL50F 491
PL50F 497
PLE35K 509
PLE50F 491
PSH019 667
PSH019 667
PSH019 667
PSH019 667
PSH019 667
PSH019 667
PSH019 674
PSH019 674

Table of contents - Type

PSH019-4 668
PSH019-4 669
PSH019-4 670
PSH019-4 671
PSH023 667
PSH023 667
PSH023 667
PSH023 667
PSH023 667
PSH023 667
PSH023 674
PSH023 674
PSH023-4 668
PSH023-4 669
PSH023-4 670
PSH023-4 671
PSH026 667
PSH026 667
PSH026 667
PSH026 667
PSH026 667
PSH026 667
PSH026 674
PSH026 674
PSH026-4 668
PSH026-4 669
PSH026-4 670
PSH026-4 671
PSH030 667
PSH030 667
PSH030 667
PSH030 667
PSH030 667
PSH030 667
PSH030 674
PSH030 674
PSH030-4 668
PSH030-4 669
PSH030-4 670
PSH030-4 671
PSH034 667
PSH034 667
PSH034 667
PSH034 667
PSH034 667
PSH034 667
PSH034 674
PSH034 674
PSH034-4 668
PSH034-4 669
PSH034-4 670
PSH034-4 671
PSH038 674
PSH039 667
PSH039 667
PSH039 667
PSH039 667
PSH039 667
PSH039 667
PSH039 674
PSH039 674
PSH039-4 668
PSH039-4 669
PSH039-4 670
PSH039-4 671
PSH046 674
PSH052 674
PSH060 674
PSH068 674
PSH078 674

Q

QDV 15 1/2 in FPT 299
QDV 15 ½in FPT+SVA-ST SOC ½in H-WHEEL 299
QDV 15 3/4 in FPT 299
QDV 15 DN 15 299
QDV 15 DN 15+SVA-ST DN 15 H-WHEEL 299

R

REG-LA 15 308
REG-LA 20 309
REG-LA 25 309
REG-LA 32 309
REG-LA 40 310
REG-LB 15 308
REG-LB 20 309
REG-LB 25 309
REG-LB 32 309
REG-LB 40 310
REG-SA 10 306
REG-SA 10 306
REG-SA 10 308
REG-SA 10 314
REG-SA 15 306
REG-SA 15 306
REG-SA 15 308
REG-SA 15 314
REG-SA 20 306
REG-SA 20 306
REG-SA 20 309
REG-SA 20 314
REG-SA 25 306
REG-SA 25 306
REG-SA 25 309
REG-SA 25 315
REG-SA 32 306
REG-SA 32 306
REG-SA 32 309
REG-SA 32 315
REG-SA 40 306
REG-SA 40 306
REG-SA 40 310
REG-SA 40 315
REG-SA / SB 10 308
REG-SA / SB 10 308
REG-SA / SB 10 314
REG-SA / SB 10 314
REG-SA / SB 15 314
REG-SA / SB 15 314
REG-SA / SB 20 314
REG-SA / SB 20 314
REG-SA / SB 25 315
REG-SA / SB 25 315
REG-SA / SB 32 315
REG-SA / SB 32 315
REG-SA / SB 40 315
REG-SA / SB 40 315
REG-SA / SB 50 310
REG-SA / SB 50 310
REG-SA / SB 50 315
REG-SA / SB 50 315
REG-SA / SB 65 310
REG-SA / SB 65 310
REG-SA / SB 65 316
REG-SA / SB 65 316
REG-SA / SB / LA / LB 15 308
REG-SA / SB / LA / LB 15 308
REG-SA / SB / LA / LB 20 309
REG-SA / SB / LA / LB 20 309
REG-SA / SB / LA / LB 25 309
REG-SA / SB / LA / LB 25 309
REG-SA / SB / LA / LB 32 309
REG-SA / SB / LA / LB 32 309
REG-SA / SB / LA / LB 40 310
REG-SA / SB / LA / LB 40 310
REG-SA SS 15 319
REG-SA SS 15 319
REG-SA SS 20 319
REG-SA SS 20 319
REG-SA SS 25 319
REG-SA SS 25 319
REG-SA SS 32 319
REG-SA SS 32 319
REG-SA SS 40 319
REG-SA SS 40 319
REG-SB 10 307
REG-SB 10 307
REG-SB 10 308
REG-SB 10 314
REG-SB 15 307
REG-SB 15 307
REG-SB 15 308
REG-SB 15 314
REG-SB 15 319
REG-SB 20 307
REG-SB 20 307
REG-SB 20 309
REG-SB 20 314
REG-SB 20 319
REG-SB 25 307
REG-SB 25 307
REG-SB 25 309
REG-SB 25 315
REG-SB 25 319
REG-SB 32 307
REG-SB 32 307
REG-SB 32 309
REG-SB 32 315
REG-SB 32 319
REG-SB 40 307
REG-SB 40 307
REG-SB 40 310
REG-SB 40 315
REG-SB 40 319
REG-SB 50 307
REG-SB 50 307
REG-SB 50 307
REG-SB 50 310
REG-SB 50 315
REG-SB 65 307
REG-SB 65 307
REG-SB 65 310
REG-SB 65 316
REG-SB SS 15 319
REG-SB SS 20 319
REG-SB SS 25 319
REG-SB SS 32 319
REG-SB SS 40 319
RGE-X3R4-7DS 399
RGE-X3R6-7DS 399
RGE-Z1N4-7DS 399

RGE-Z1N6-7DS 399
RGE-Z1P4-7DS 399
RGE-Z1P6-7DS 399
RGE-Z1Q4-7DS 399
RGE-Z1Q6-7DS 399
RGE-Z3R4-7DS 399
RGE-Z3T4-7DS 399
RT 1 119
RT 1A 119
RT 1AL 119
RT 2 135
RT 3 135
RT 4 135
RT 5A 119
RT 5AL 119
RT 6AB 120
RT 6AS 120
RT 6AW 120
RT 6B 120
RT 6S 120
RT 6W 120
RT 7 135
RT 8 135
RT 8L 135
RT 9 135
RT 11 135
RT 12 135
RT 13 135
RT 14 135
RT 14L 135
RT 15 135
RT 16L 135
RT 17 135
RT 23 135
RT 24 135
RT 30AB 120
RT 30AS 120
RT 30AW 120
RT 34 135
RT 101 135
RT 101L 135
RT 102 135
RT 107 135
RT 117 119
RT 117L 119
RT 140 135
RT 140L 135
RT 200 119
RT 200L 119
RT 260A 120
RT 262A 120
RT 262 AL 120
RT 265A 120

S

SC10/10CL 499
SC10/10DL 499
SC10/10DL 503
SC10CL 499
SC10CL 503
SC10CLX 499
SC10CLX 501
SC10CLX 501
SC10CNX 505
SC10CNX.2 507
SC10DL 499
SC10DL 503
SC10G 493
SC10G 495
SC10G 718
SC10GH 493
SC10GH 495
SC10GX 745
SC10GX 750
SC10MLX 499
SC10MLX 501
SC10MLX 501
SC10MLX 740
SC10MLX 745
SC10MLX 750
SC10MNX 505
SC12/12CL 499
SC12/12CLX 501
SC12/12DL 499
SC12/12DL 503
SC12/12G 493
SC12CL 499
SC12CL 503
SC12CL 745
SC12CLX 501
SC12CLX 712
SC12CLX 748
SC12CLX.2 499
SC12CLX.2 501
SC12CLX.2 501
SC12CLX.2 501
SC12CLX.2 503
SC12CLX.2 712
SC12CLX.2 745
SC12CLX.2 748
SC12CNX 505
SC12CNX.2 505
SC12CNX.2 507
SC12DL 499
SC12DL 503
SC12FT 493
SC12FT 495
SC12G 493
SC12G 495
SC12G 495
SC12G 497
SC12G 718
SC12G 769
SC12G 780
SC12G 785
SC12GH 493
SC12GH 495
SC12GX 745
SC12GX 750
SC12MLX 499
SC12MLX 501
SC12MLX 501
SC12MLX 503
SC12MLX 740
SC12MLX 745
SC12MLX 750
SC12MNX 505
SC15/15CL 499
SC15/15DL 499
SC15/15DL 503
SC15/15G 493
SC15CL 713
SC15CLX 501
SC15CLX 745
SC15CLX 748
SC15CLX.2 499
SC15CLX.2 499
SC15CLX.2 501
SC15CLX.2 503
SC15CNX 505
SC15CNX.2 505
SC15DL 499
SC15DL 503
SC15F 493
SC15FT 493
SC15FT 495
SC15FTX 497
SC15G 493
SC15G 495
SC15G 495
SC15G 497
SC15G 718
SC15G 769
SC15G 780
SC15G 785
SC15GH 493
SC15GH 495
SC15GX 745
SC15GX 750
SC15MFX 493
SC15MLX 499
SC15MLX 503
SC15MLX 740
SC15MLX 745
SC15MLX 750
SC15MLX.2 501
SC15MLX.2 503
SC15MNX 505
SC15MNX 507
SC18/18CL 499
SC18/18CLX.2 499
SC18/18G 493
SC18CL 499
SC18CL 745
SC18CLX 713
SC18CLX 748
SC18CLX.2 499
SC18CLX.2 501
SC18CLX.2 503
SC18CNX 505
SC18CNX.2 505
SC18F 493
SC18FTX 493
SC18FTX 495
SC18G 493
SC18G 495
SC18G 495
SC18G 497
SC18G 718
SC18G 745
SC18G 750
SC18G 769
SC18G 780
SC18G 785
SC18GH 493
SC18GH 493
SC18GH 495
SC18MFX 493
SC18MFX 495
SC18MLX 499
SC18MLX 501

Table of contents - Type

SC18MLX 503
SC18MLX 740
SC18MLX 745
SC18MLX 750
SC18MLX.3 499
SC18MNX 505
SC18MNX 507
SC21/21CL 499
SC21/21G 493
SC21CL 499
SC21CL 713
SC21CL 745
SC21CL 748
SC21CNX.2 505
SC21F 493
SC21FTX 493
SC21FTX 495
SC21G 493
SC21G 495
SC21G 495
SC21G 718
SC21G 750
SC21G 769
SC21G 780
SC21G 785
SC21GX 745
SC21MF 718
SC21MF 745
SC21MF 750
SC21MFX 493
SCA-X 15 329
SCA-X 15 329
SCA-X 15 337
SCA-X 15 337
SCA-X 15 327
SCA-X 15 329
SCA-X 15 337
SCA-X 20 327
SCA-X 20 329
SCA-X 20 329
SCA-X 20 329
SCA-X 20 337
SCA-X 20 337
SCA-X 20 337
SCA-X 25 327
SCA-X 25 329
SCA-X 25 329
SCA-X 25 329
SCA-X 25 337
SCA-X 25 337
SCA-X 25 337
SCA-X 32 327
SCA-X 32 330
SCA-X 32 330
SCA-X 32 330
SCA-X 32 338
SCA-X 32 338
SCA-X 32 338
SCA-X 32 339
SCA-X 32 339
SCA-X 32 339
SCA-X 40 327
SCA-X 40 330
SCA-X 40 330
SCA-X 40 330
SCA-X 40 338
SCA-X 40 338
SCA-X 40 338
SCA-X 40 339
SCA-X 40 339
SCA-X 40 339
SCA-X 50 327
SCA-X 50 330
SCA-X 50 330
SCA-X 50 330
SCA-X 50 338
SCA-X 50 338
SCA-X 50 338
SCA-X 65 327
SCA-X 65 330
SCA-X 65 330
SCA-X 65 330
SCA-X 65 338
SCA-X 65 338
SCA-X 65 338
SCA-X 80 327
SCA-X 80 331
SCA-X 80 331
SCA-X 80 331
SCA-X 80 338
SCA-X 80 338
SCA-X 80 338
SCA-X 100 327
SCA-X 100 331
SCA-X 100 331
SCA-X 100 331
SCA-X 125 327
SCA-X 125 331
SCA-X 125 331
SCA-X 125 331
SCA-X SS 15 345
SCA-X SS 20 345
SCA-X SS 25 345
SCA-X SS 32 345
SCA-X SS 40 345
SCE15CNLX 507
SCE15MNX 507
SCE18CNLX 507
SCE18MNX 507
SCE21CNLX 505
SCE21CNLX 507
SCE21MNX 505
SFA 15-50 T 210 348
SFA 15-50 T 210 349
SFA 15-50 T 211 348
SFA 15-50 T 211 349
SFA 15-50 T 212 348
SFA 15-50 T 212 349
SFA 15-50 T 213 348
SFA 15-50 T 213 349
SFA 15-50 T 214 348
SFA 15-50 T 214 349
SFA 15-50 T 215 348
SFA 15-50 T 215 349
SFA 15-50 T 216 348
SFA 15-50 T 216 349
SFA 15-50 T 217 348
SFA 15-50 T 217 349
SFA 15-50 T 218 348
SFA 15-50 T 218 349
SFA 15-50 T 219 348
SFA 15-50 T 219 349
SFA 15-50 T 220 348
SFA 15-50 T 220 349
SFA 15-50 T 221 348
SFA 15-50 T 221 349
SFA 15-50 T 222 348
SFA 15-50 T 222 349
SFA 15-50 T 223 348
SFA 15-50 T 223 349
SFA 15-50 T 224 348
SFA 15-50 T 224 349
SFA 15-50 T 225 348
SFA 15-50 T 225 349
SFA 15-50 T 226 348
SFA 15-50 T 226 349
SFA 15-50 T 227 348
SFA 15-50 T 227 349
SFA 15-50 T 228 348
SFA 15-50 T 228 349
SFA 15-50 T 229 348
SFA 15-50 T 229 349
SFA 15-50 T 230 348
SFA 15-50 T 230 349
SFA 15-50 T 231 348
SFA 15-50 T 231 349
SFA 15-50 T 232 348
SFA 15-50 T 232 349
SFA 15-50 T 233 348
SFA 15-50 T 233 349
SFA 15-50 T 234 348
SFA 15-50 T 234 349
SFA 15-50 T 235 348
SFA 15-50 T 235 349
SFA 15-50 T 236 348
SFA 15-50 T 236 349
SFA 15-50 T 237 348
SFA 15-50 T 237 349
SFA 15-50 T 238 348
SFA 15-50 T 238 349
SFA 15-50 T 239 348
SFA 15-50 T 239 349
SFA 15-50 T 240 348
SFA 15-50 T 240 349
SFA 15 T 210 347
SFA 15 T 211 347
SFA 15 T 212 347
SFA 15 T 213 347
SFA 15 T 214 347
SFA 15 T 215 347
SFA 15 T 216 347
SFA 15 T 217 347
SFA 15 T 218 347
SFA 15 T 219 347
SFA 15 T 220 347
SFA 15 T 221 347
SFA 15 T 222 347
SFA 15 T 223 347
SFA 15 T 224 347
SFA 15 T 225 347
SFA 15 T 226 347
SFA 15 T 227 347
SFA 15 T 228 347
SFA 15 T 229 347
SFA 15 T 230 347
SFA 15 T 231 347
SFA 15 T 232 347
SFA 15 T 233 347
SFA 15 T 234 347
SFA 15 T 235 347
SFA 15 T 236 347

SFA 15 T 237 347
SFA 15 T 238 347
SFA 15 T 239 347
SFA 15 T 240 347
SFA 15 T 310 349
SFA 15 T 311 349
SFA 15 T 312 349
SFA 15 T 313 349
SFA 15 T 314 349
SFA 15 T 315 349
SFA 15 T 316 349
SFA 15 T 317 349
SFA 15 T 318 349
SFA 15 T 319 349
SFA 15 T 320 349
SFA 15 T 321 349
SFA 15 T 322 349
SFA 15 T 323 349
SFA 15 T 324 349
SFA 15 T 325 349
SFA 15 T 326 349
SFA 15 T 327 349
SFA 15 T 328 349
SFA 15 T 329 349
SFA 15 T 330 349
SFA 15 T 331 349
SFA 15 T 332 349
SFA 15 T 333 349
SFA 15 T 334 349
SFA 15 T 335 349
SFA 15 T 336 349
SFA 15 T 337 349
SFA 15 T 338 349
SFA 15 T 339 349
SFA 15 T 340 349
SFV 20 T 210 351
SFV 20 T 211 351
SFV 20 T 212 351
SFV 20 T 213 351
SFV 20 T 214 351
SFV 20 T 215 351
SFV 20 T 216 351
SFV 20 T 217 351
SFV 20 T 218 351
SFV 20 T 219 351
SFV 20 T 220 351
SFV 20 T 221 351
SFV 20 T 222 351
SFV 20 T 223 351
SFV 20 T 224 351
SFV 20 T 225 351
SFV 20 T 310 352
SFV 20 T 311 352
SFV 20 T 312 352
SFV 20 T 313 352
SFV 20 T 314 352
SFV 20 T 315 352
SFV 20 T 316 352
SFV 20 T 317 352
SFV 20 T 318 352
SFV 20 T 319 352
SFV 20 T 320 352
SFV 20 T 321 352
SFV 20 T 322 352
SFV 20 T 323 352
SFV 20 T 324 352
SFV 20 T 325 352
SFV 25 T 210 351
SFV 25 T 211 351
SFV 25 T 212 351
SFV 25 T 213 351
SFV 25 T 214 351
SFV 25 T 215 351
SFV 25 T 216 351
SFV 25 T 217 351
SFV 25 T 218 351
SFV 25 T 219 351
SFV 25 T 220 351
SFV 25 T 221 351
SFV 25 T 222 351
SFV 25 T 223 351
SFV 25 T 224 351
SFV 25 T 225 351
SFV 25 T 310 352
SFV 25 T 311 352
SFV 25 T 312 352
SFV 25 T 313 352
SFV 25 T 314 352
SFV 25 T 315 352
SFV 25 T 316 352
SFV 25 T 317 352
SFV 25 T 318 352
SFV 25 T 319 352
SFV 25 T 320 352
SFV 25 T 321 352
SFV 25 T 322 352
SFV 25 T 323 352
SFV 25 T 324 352
SFV 25 T 325 352
SGP 236
SGP 1/2 RI (I type indicator) 240
SGP 1/2 RN (N type indicator) 240
SGP 1/2 RX (no indicator) 240
SGP 3/4 RX (no indicator) 240
SGP 6 I 239
SGP 6 N 240
SGP 6 N 240
SGP 6s I 239
SGP 6s N 240
SGP 6s N 240
SGP 6s N 240
SGP 10 I 239
SGP 10 N 240
SGP 10 N 240
SGP 10s I 239
SGP 10s N 240
SGP 10s N 240
SGP 10s N 240
SGP 10 X 239
SGP 12 I 239
SGP 12 N 240
SGP 12 N 240
SGP 12s I 239
SGP 12s N 240
SGP 12s N 240
SGP 12s N 240
SGP 12s X 239
SGP 16 I 239
SGP 16 N 240
SGP 16 N 240
SGP 16s I 239
SGP 16s N 240
SGP 16s N 240
SGP 16s X 239
SGP 18s I 239
SGP 18s N 240
SGP 19 I 239
SGP 19 N 240
SGP 19 N 240
SGP 19s I 239
SGP 19s N 240
SGP 20 RN (N type indicator) 240
SGP 22s I 239
SGP 22s N 240
SGP 22s N 240
SGP 22s N 240
SGP 22s X 239
SGP 24 RI (I type indicator) 240
SGP 24 RN (N type indicator) 240
SGS (saddle) 240
SH090 637
SH090 637
SH090 637
SH090 638
SH090 639
SH090 + SH090 = SH182 642
SH090-4 638
SH105 637
SH105 637
SH105 637
SH105 638
SH105 639
SH105-4 638
SH120 637
SH120 637
SH120 637
SH120 638
SH120 639
SH120-4 638
SH140 637
SH140 637
SH140 637
SH140 638
SH140 639
SH140-4 638
SH161 637
SH161 637
SH161 637
SH161 638
SH161 639
SH161-4 638
SH180 637
SH180 637
SH180 637
SH180 638
SH180 639
SH180 + SH180 + SH180 = SH550 643
SH180-4 638
SH184 637
SH184 637
SH184 637
SH184 638
SH184 639
SH184 + SH184 + SH184 = SH552 643
SH184-4 638
SH240 637
SH240 637
SH240 637
SH240 638
SH240 639
SH240 + SH240 + SH240 = SH720 643

SH240-4 638
SH294 + SH294 + SH294 = SH885 643
SH295 639
SH295 637
SH295 638
SH295 + SH295 + SH295 = SH885 643
SH295 637
SH295 637
SH295-4 638
SH380 637
SH380 637
SH380 637
SH380 638
SH380 639
SH380 + SH380 + SH380 = SH1140 643
SH380-4 638
SH485 637
SH485 637
SH485 637
SH485 638
SH485 639
SH485 + SH485 + SH485 = SH1455 643
SH485-4 638
SM084 645
SM084 646
SM084 647
SM084 648
SM084 654
SM084 655
SM090 645
SM090 646
SM090 647
SM090 648
SM090 654
SM090 655
SM100 645
SM100 646
SM100 647
SM100 648
SM100 654
SM100 655
SM110 645
SM110 646
SM110 647
SM110 648
SM110 654
SM110 655
SM112 645
SM112 646
SM112 647
SM112 647
SM112 647
SM112 648
SM112 654
SM112 655
SM120 645
SM120 646
SM120 647
SM120 648
SM120 654
SM120 655
SM124 645
SM124 646
SM124 647
SM124 647
SM124 647
SM124 648
SM124 654
SM124 655
SM147 645
SM147 646
SM147 647
SM147 647
SM147 647
SM147 648
SM147 654
SM147 655
SM148 645
SM148 646
SM148 647
SM148 648
SM148 654
SM148 655
SM161 645
SM161 646
SM161 647
SM161 648
SM161 654
SM161 655
SM170 654
SM170 655
SM175 645
SM175 646
SM175 647
SM175 648
SM175 654
SM175 655
SM180 654
SM180 655
SM185 647
SM185 648
SM185 654
SM185 655
SM200 654
SM200 655
SM220 654
SM220 655
SM230 654
SM242 654
SM242 655
SM248 654
SM248 655
SM248 660
SM248 661
SM248 661
SM250 654
SM268 654
SM268 655
SM271 654
SM271 655
SM272 654
SM272 655
SM272 660
SM272 661
SM272 661
SM281 654
SM281 655
SM285 654
SM290 654
SM294 654
SM294 655
SM294 660
SM294 661
SM294 661
SM296 654
SM296 655
SM310 654
SM320 654
SM322 654
SM322 655
SM350 654
SM350 655
SM370 654
SM370 655
SM/SY185 645
SM/SY185 646
SM/SZ170 660
SM/SZ170 660
SM/SZ180 660
SM/SZ180 660
SM/SZ200 660
SM/SZ200 660
SM/SZ220 660
SM/SZ220 660
SM/SZ242 660
SM/SZ242 660
SM/SZ268 660
SM/SZ268 660
SM/SZ271 660
SM/SZ271 660
SM/SZ281 660
SM/SZ281 660
SM/SZ296 660
SM/SZ296 660
SM/SZ322 660
SM/SZ322 660
SM/SZ350 660
SM/SZ350 660
SM/SZ350 660
SM/SZ370 660
SM/SZ370 660
SM/SZ444 660
SM/SZ483 660
SM/SZ740 660
SNV-SS 1/4FPT-1/4MPT 301
SNV-SS 3/8FPT-3/8MPT 301
SNV-SS G1/2 Man 302
SNV-SS G 1/2-W 1/2 L50 302
SNV-SS G1/2-W1/2 L50 302
SNV-SS G1/2-W1/2 L50 302
SNV-SS G 1/2-W 1/2 L150 302
SNV-SS G1/2-W1/2 L150 302
SNV-SS G1/2-W1/2 L150 302
SNV-ST 1/4FPT-1/4MPT L100 302
SNV-ST 1/4FPT-1/4MPT L100 302
SNV-ST 1/4FTP-W1/2 L100 302
SNV-ST 1/2MPT-1/2MPT 301
SNV-ST 1/2MPT-1/2MPT 301
SNV-ST 1/2MPT-3/8FPT 301
SNV-ST 1/4FPT-1/4FPT 301
SNV-ST 1/4FPT-1/4FPT 301
SNV-ST 1/4FPT-1/4MPT 301
SNV-ST 1/4FPT-1/4MPT 301
SNV-ST 1/4FPT-1/4MPT 301
SNV-ST 1/4RC-1/4R 301
SNV-ST 1/4RC-3/8R 301
SNV-ST 3/8FPT-1/2MPT 301
SNV-ST 3/8FPT-1/2MPT 301
SNV-ST 3/8FPT-3/8FPT 301
SNV-ST 3/8FPT-3/8FPT 301
SNV-ST 3/8FPT-3/8MPT 301

SNV-ST 3/8FPT-3/8MPT 301
SNV-ST 3/8RC-3/8R 301
SNV-ST 7/16UNF-1/4MPT 301
SNV-ST 7/16UNF-1/4MPT 301
SNV-ST CD6-1/4MPT 301
SNV-ST CD6-1/4MPT 301
SNV-ST CD6-3/8MPT 301
SNV-ST CD10-1/4MPT 301
SNV-ST CD10-3/8MPT 301
SNV-ST CD10-CD10 301
SNV-ST CD10-CD10 301
SNV-ST CD10-CD10 302
SNV-ST CD10-W 1/2 L100 302
SNV-ST CD10-W1/2 L100 302
SNV-ST CD10-W1/2 L100 302
SNV-ST G1/2 Man 302
SNV-ST G1/2-W1/2 L50 302
SNV-ST G1/2-W1/2 L50 302
SNV-ST G1/2-W1/2 L100 302
SNV-ST G1/2-W1/2 L100 302
SNV-ST G1/2-W1/2 L125 302
SNV-ST G1/2-G1/2 301
SNV-ST G1/2-G1/2 301
STF-01AB500A1 117
STF-01AB503B1 117
STF-01AJ504F1 117
STF-01AJ506B1 117
STF-01AJ512D1 117
STF-0101G 117
STF-0104G 117
STF-0201G 117
STF-0204G 117
STF-0205G 117
STF-0208G 117
STF-0209G 117
STF-0214G 117
STF-0301G 117
STF-0306G 117
STF-0401G 117
STF-0409G 117
STF-0413G 117
STF-0420G 117
STF-0712G 117
STF-0715G 117
STF-0728G 117
STF-1511G 117
STF-1513G 117
STF-1514G 117
STF-2011G 117
STF-2017G 117
STF-2501G 117
STF-2505G 117
STF-2506G 117
STF-3001G 117
STF-3003G 117
STF-4001G 117
STF-4002G 117
STF-5001G 117
STF-5002G 117
SVA-L 15 282
SVA-L 15 283
SVA-L 15 284
SVA-L 15 284
SVA-L 15 290
SVA-L 20 282
SVA-L 20 283
SVA-L 20 285
SVA-L 20 285
SVA-L 20 290
SVA-L 25 282
SVA-L 25 283
SVA-L 25 285
SVA-L 25 285
SVA-L 25 291
SVA-L 32 282
SVA-L 32 283
SVA-L 32 285
SVA-L 32 285
SVA-L 32 291
SVA-L 40 282
SVA-L 40 283
SVA-L 40 286
SVA-L 40 286
SVA-L 40 291
SVA-L SS 15 296
SVA-L SS 15 296
SVA-L SS 20 296
SVA-L SS 20 296
SVA-L SS 25 296
SVA-L SS 25 296
SVA-L SS 32 296
SVA-L SS 32 296
SVA-L SS 40 296
SVA-L SS 40 296
SVA-S 6 280
SVA-S 6 281
SVA-S 6 284
SVA-S 6 284
SVA-S 6 284
SVA-S 6 284
SVA-S 6 290
SVA-S 6 290
SVA-S 6 290
SVA-S 10 280
SVA-S 10 281
SVA-S 10 284
SVA-S 10 284
SVA-S 10 284
SVA-S 10 284
SVA-S 10 290
SVA-S 10 290
SVA-S 10 290
SVA-S 15 280
SVA-S 15 281
SVA-S 15 284
SVA-S 15 284
SVA-S 15 290
SVA-S 20 280
SVA-S 20 281
SVA-S 20 285
SVA-S 20 285
SVA-S 20 290
SVA-S 25 280
SVA-S 25 281
SVA-S 25 285
SVA-S 25 285
SVA-S 25 291
SVA-S 32 280
SVA-S 32 281
SVA-S 32 285
SVA-S 32 285
SVA-S 32 291
SVA-S 40 280
SVA-S 40 281
SVA-S 40 286
SVA-S 40 286
SVA-S 40 291
SVA-S 50 280
SVA-S 50 281
SVA-S 50 286
SVA-S 50 286
SVA-S 50 286
SVA-S 50 286
SVA-S 50 291
SVA-S 50 291
SVA-S 50 291
SVA-S 65 280
SVA-S 65 281
SVA-S 65 286
SVA-S 65 286
SVA-S 65 286
SVA-S 65 286
SVA-S 65 292
SVA-S 65 292
SVA-S 65 292
SVA-S 80 280
SVA-S 80 281
SVA-S 80 287
SVA-S 80 287
SVA-S 80 287
SVA-S 80 287
SVA-S 80 292
SVA-S 80 292
SVA-S 80 292
SVA-S 100 280
SVA-S 100 281
SVA-S 100 287
SVA-S 100 287
SVA-S 100 287
SVA-S 100 287
SVA-S 100 292
SVA-S 100 292
SVA-S 100 292
SVA-S 125 280
SVA-S 125 281
SVA-S 125 287
SVA-S 125 287
SVA-S 125 287
SVA-S 125 287
SVA-S 125 292
SVA-S 125 292
SVA-S 125 292
SVA-S 150 280
SVA-S 150 281
SVA-S 150 293
SVA-S 150 293
SVA-S 200 280
SVA-S 200 281
SVA-S 200 293
SVA-S 200 293
SVA-S / L 15 284
SVA-S / L 15 284
SVA-S / L 15 290
SVA-S / L 15 290
SVA-S / L 20 285
SVA-S / L 20 285
SVA-S / L 20 290
SVA-S / L 20 290
SVA-S / L 25 285
SVA-S / L 25 285
SVA-S / L 25 291

SVA-S / L 25 291
SVA-S / L 32 285
SVA-S / L 32 285
SVA-S / L 32 291
SVA-S / L 32 291
SVA-S / L 40 286
SVA-S / L 40 286
SVA-S / L 40 291
SVA-S / L 40 291
SVA-S SS 15 295
SVA-S SS 15 295
SVA-S SS 20 295
SVA-S SS 20 295
SVA-S SS 25 295
SVA-S SS 25 295
SVA-S SS 32 295
SVA-S SS 32 295
SVA-S SS 40 295
SVA-S SS 40 295
SVA-S SS 50 295
SVA-S SS 50 295
SVA-S SS 65 295
SVA-S SS 65 295
SVA-S SS 80 295
SVA-S SS 100 295
SVA-S SS 125 295
SY185 647
SY185 648
SY185 654
SY185 655
SY240 645
SY240 645
SY240 646
SY240 646
SY240 647
SY240 648
SY240 654
SY240 655
SY300 645
SY300 645
SY300 646
SY300 646
SY300 647
SY300 648
SY300 654
SY300 655
SY380 645
SY380 645
SY380 646
SY380 646
SY380 647
SY380 648
SY380 654
SY380 655
SY/SZ370 660
SY/SZ425 660
SY/SZ425 660
SY/SZ482 660
SY/SZ482 661
SY/SZ482 661
SY/SZ485 660
SY/SZ485 660
SY/SZ540 660
SY/SZ540 661
SY/SZ540 661
SY/SZ550 660
SY/SZ600 660
SY/SZ600 661
SY/SZ600 661
SY/SZ620 660
SY/SZ620 661
SY/SZ620 661
SY/SZ680 660
SY/SZ680 left suction 661
SY/SZ680 left suction 661
SY/SZ680 right suction 661
SY/SZ680 right suction 661
SY/SZ720 660
SY/SZ720 661
SY/SZ720 661
SY/SZ760 660
SY/SZ760 661
SY/SZ760 661
SY/SZ900 660
SY/SZ900 661
SY/SZ900 661
SY/SZ1140 660
SY/SZ1140 661
SY/SZ1140 661
SZ084 645
SZ084 646
SZ084 648
SZ084 649
SZ084 650
SZ084 651
SZ084 652
SZ084 653
SZ090 645
SZ090 646
SZ090 648
SZ090 649
SZ090 650
SZ090 651
SZ090 652
SZ090 653
SZ100 645
SZ100 646
SZ100 648
SZ100 649
SZ100 650
SZ100 651
SZ100 652
SZ100 653
SZ110 645
SZ110 646
SZ110 648
SZ110 649
SZ110 650
SZ110 651
SZ110 652
SZ110 653
SZ112 653
SZ120 645
SZ120 646
SZ120 648
SZ120 649
SZ120 650
SZ120 651
SZ120 652
SZ120 653
SZ124 653
SZ147 645
SZ147 646
SZ147 647
SZ147 648
SZ147 649
SZ147 653
SZ148 645
SZ148 646
SZ148 648
SZ148 649
SZ148 650
SZ148 651
SZ148 652
SZ148 653
SZ161 645
SZ161 646
SZ161 648
SZ161 649
SZ161 650
SZ161 651
SZ161 652
SZ161 653
SZ170 650
SZ170 651
SZ170 652
SZ170 653
SZ175 645
SZ175 646
SZ175 648
SZ175 649
SZ175 650
SZ175 651
SZ175 652
SZ175 653
SZ180 650
SZ180 651
SZ180 652
SZ180 653
SZ185 645
SZ185 646
SZ185 648
SZ185 649
SZ185 650
SZ185 651
SZ185 652
SZ185 653
SZ185 653
SZ200 650
SZ200 651
SZ200 652
SZ200 653
SZ220 650
SZ220 651
SZ220 652
SZ220 653
SZ230 650
SZ230 652
SZ240 650
SZ240 651
SZ240 652
SZ240 653
SZ242 650
SZ242 651
SZ242 652
SZ242 653
SZ250 650
SZ250 652
SZ268 650
SZ268 651

SZ268 652
SZ268 653
SZ271 650
SZ271 651
SZ271 652
SZ271 653
SZ281 650
SZ281 651
SZ281 652
SZ281 653
SZ285 650
SZ285 652
SZ290 650
SZ290 652
SZ294 653
SZ296 650
SZ296 651
SZ296 652
SZ296 653
SZ300 650
SZ300 651
SZ300 652
SZ300 653
SZ310 650
SZ310 652
SZ320 650
SZ320 652
SZ322 650
SZ322 651
SZ322 652
SZ322 653
SZ350 650
SZ350 651
SZ350 652
SZ350 653
SZ370 650
SZ370 651
SZ370 652
SZ370 653
SZ380 650
SZ380 651
SZ380 652
SZ380 653

T

T2 7
T2 7
T2 7
T2 7
T2 7
T2 7
T2 8
T2 8
T2 8
T2 8
T2 8
T2 8
T2 8
T2 8
T2 / TE2 6
T2 / TE2 9
T2 / TE2 9
TAJ4517Z 772
TAJ4517Z 774
TAJ4517Z 778
TAJ4517Z 780
TAJ4517Z 784
TAJ4517Z 805
TAJ4517Z 807
TAJ4517Z 811
TAJ4517Z 813
TAJ4517Z 816
TAJ4519Z 772
TAJ4519Z 774
TAJ4519Z 778
TAJ4519Z 780
TAJ4519Z 784
TAJ4519Z 805
TAJ4519Z 807
TAJ4519Z 811
TAJ4519Z 813
TAJ4519Z 817
TCAE 32
TCAE 33
TCBE 39
TCHE 163
TCHE 163
TE2 7
TE2 7
TE2 7
TE2 7
TE2 7
TE2 7
TE2 8
TE2 8
TE2 8
TE2 8
TE2 8
TE2 8
TE2 8
TE2 8
TE 5 11
TE 5 12
TE 5 12
TE 5 12
TE 5 13
TE 5 13
TE 5 13
TE 5 13
TE 5 14
TE 5 15
TE 5 - TE 55 10
TE 12 11
TE 12 12
TE 12 12
TE 12 12
TE 12 13
TE 12 13
TE 12 13
TE 12 13
TE 12 14
TE 12 15
TE 20 11
TE 20 12
TE 20 12
TE 20 12
TE 20 13
TE 20 13
TE 20 13
TE 20 13
TE 20 15
TE20 14
TE 55 11
TE 55 12
TE 55 12
TE 55 13
TE 55 13
TE 55 13
TE 55 13
TE 55 14
TE 55 15
TF3.5F 497
TF4CLX 503
TFH2511Z 767
TFH2511Z 768
TFH2511Z 780
TFH2511Z 782
TFH2511Z 801
TFH2511Z 802
TFH2511Z 813
TFH2511Z 815
TFS4.5CLX 503
TFS4.5FT 491
TFS4.5FT 497
TFS4F 497
TGE 16
TGE 10 17
TGE 10 18
TGE 10 18
TGE 10 19
TGE 10 19
TGE 10 20
TGE 10 20
TGE 10 21
TGE 10 21
TGE 10 22
TGE 10 22
TGE 10 23
TGE 10 24
TGE 10 24
TGE 10 25
TGE 10 25
TGE 10 26
TGE 20 17
TGE 20 18
TGE 20 18
TGE 20 19
TGE 20 19
TGE 20 20
TGE 20 20
TGE 20 21
TGE 20 22
TGE 20 23
TGE 20 24
TGE 20 24
TGE 20 25
TGE 20 25
TGE 20 26
TGE 40 17
TGE 40 18
TGE 40 18
TGE 40 19
TGE 40 19
TGE 40 21
TGE 40 22
TGE 40 23
TGE 40 24
TGE 40 24
TGE 40 25
TGE 40 25

TGE 40 26
TGHE 10 165
TGHE 10 165
TGHE 10 165
TGHE 20 165
TGHE 20 165
TGHE 20 165
TGHE 40 165
TGHE 40 165
TL2.5F 491
TL2.5F 497
TL2.5G 491
TL2.5G 495
TL2.5G 497
TL3CN 505
TL3F 491
TL3F 497
TL3G 491
TL3G 495
TL3G 717
TL3G 750
TL3GX 745
TL4.5CLX 499
TL4.8CNX.2 507
TL4CL 499
TL4CL 712
TL4CL 745
TL4CLX 748
TL4CN 505
TL4CNX.2 507
TL4DL 499
TL4DL 740
TL4DL 745
TL4DL 750
TL4F 491
TL4G 491
TL4G 495
TL4G 497
TL4G 717
TL4G 750
TL4GH 491
TL4GH 495
TL4GX 745
TL5CN 505
TL5F 491
TL5G 491
TL5G 495
TL5G 717
TL5G 750
TL5GX 745
TLES3F 491
TLES4.8KK.3 509
TLES4.8KK.3 509
TLES4F 491
TLES4KK.3 509
TLES4KTK 509
TLES5.7FT.3 491
TLES5.7KK.3 509
TLES5F 491
TLES5KTK 509
TLES6.5FT.3 491
TLES6.5FT.3 495
TLES6.5KK.3 509
TLES6F 491
TLES6KTK 509
TLES7.5KK.3 509
TLES7FT.4 491
TLES7FT.4 495
TLES7KTK 509
TLES8.7KK.3 509
TLES8.7KTK.3 509
TLES8KTK 509
TLES10 KTK.3 509
TLS3FT 491
TLS4.5F 497
TLS4FT 491
TLS5F 491
TLS5FT 491
TLS6F 491
TLS7F 491
TLX4KK.3 509
TLX5.7KK.3 509
TLX6.5KK.3 509
TLX7.5KK.3 509
TLX8.7KK.3 509
TLY4.8KK.3 509
TLY4KK.3 509
TLY5.7KK.3 509
TLY6.5KK.3 509
TLY10 KK.3 509
TUA 30
TUAE 30
TUAE 31
TUA / TUAE 31
TUA / TUAE / TCAE 28
TUB 36
TUB 37
TUB 38
TUBE 36
TUBE 37
TUBE 37
TUBE 37
TUBE 38
TUB / TUBE / TCBE 34
TUH 163
TUH 163

U

UT 72 139
UT 73 139

V

VLZ028 681
VLZ028 681
VLZ028 681
VLZ028-035-044 681
VLZ028-035-044 681
VLZ028TGA 682
VLZ028TGA 683
VLZ028TGA 684
VLZ028TGA 685
VLZ028TGA 686
VLZ028TGA 687
VLZ028TGA 830
VLZ028TGA 831
VLZ028TGA 832
VLZ028TGA 833
VLZ028TGA 835
VLZ035 681
VLZ035 681
VLZ035TGA 682
VLZ035TGA 683
VLZ035TGA 684
VLZ035TGA 685
VLZ035TGA 686
VLZ035TGA 687
VLZ035TGA 830
VLZ035TGA 831
VLZ035TGA 832
VLZ035TGA 833
VLZ035TGA 835
VLZ044 681
VLZ044 681
VLZ044 681
VLZ044TGA 682
VLZ044TGA 683
VLZ044TGA 684
VLZ044TGA 685
VLZ044TGA 686
VLZ044TGA 687
VLZ044TGA 830
VLZ044TGA 831
VLZ044TGA 832
VLZ044TGA 833
VLZ044TGA 835
VTZ038 567
VTZ038 – 054 570
VTZ038-G 559
VTZ038-G 561
VTZ038-G 562
VTZ038-G 563
VTZ038-G 565
VTZ038-J 560
VTZ038-J 561
VTZ054 567
VTZ054-G 559
VTZ054-G 561
VTZ054-G 562
VTZ054-G 563
VTZ054-G 565
VTZ054-J 560
VTZ054-J 561
VTZ086 567
VTZ086 – 121 570
VTZ086-G 561
VTZ086-G 562
VTZ086-G 563
VTZ086-G 565
VTZ086-J 560
VTZ086-J 561
VTZ121 567
VTZ121-G 561
VTZ121-G 562
VTZ121-G 564
VTZ121-G 566
VTZ121-J 560
VTZ121-J 561
VTZ171 567
VTZ171 – 215 570
VTZ171-G 559
VTZ171-G 561
VTZ171-G 562
VTZ171-G 564
VTZ171-G 566
VTZ215 567
VTZ215-G 559
VTZ215-G 561
VTZ215-G 562
VTZ215-G 564
VTZ215-G 566
VZH028 691

VZH028 691
VZH028 691
VZH028 692
VZH028 692
VZH028 692
VZH028 709
VZH028 709
VZH028 709
VZH028CG 696
VZH028CG 698
VZH028CGANA 691
VZH028CGANA/I 691
VZH028CHANA 691
VZH028CHANA/I 691
VZH028CJ 695
VZH028CJ 697
VZH028CJANA 691
VZH028CJANA/I 691
VZH035 681
VZH035 691
VZH035 691
VZH035 691
VZH035 692
VZH035 692
VZH035 692
VZH035 709
VZH035 709
VZH035 709
VZH035CG 696
VZH035CG 698
VZH035CGANA 691
VZH035CGANA/I 691
VZH035CGBNA 691
VZH035CHANA 691
VZH035CHANA/I 691
VZH035CJ 695
VZH035CJ 697
VZH035CJANA 691
VZH035CJANA/I 691
VZH035CJBNA 691
VZH044 691
VZH044 691
VZH044 691
VZH044 692
VZH044 692
VZH044 692
VZH044 709
VZH044 709
VZH044 709
VZH044CG 696
VZH044CG 698
VZH044CGANA 691
VZH044CGANA/I 691
VZH044CGBNA 691
VZH044CHANA 691
VZH044CHANA/I 691
VZH044CJ 695
VZH044CJ 697
VZH044CJANA 691
VZH044CJANA/I 691
VZH044CJBNA 691
VZH052 691
VZH052 691
VZH052 691
VZH052 692
VZH052 692
VZH052 709
VZH052 709
VZH052-065 704
VZH052-065 709
VZH052CG 695
VZH052CG 696
VZH052CG 698
VZH052CGANB/I 691
VZH052CGANB/M 691
VZH052CHANB/I 691
VZH052CHANB/M 691
VZH052CJ 697
VZH052CJANB/I 691
VZH052CJANB/M 691
VZH052/VZH065 692
VZH065 691
VZH065 691
VZH065 691
VZH065 692
VZH065 692
VZH065 709
VZH065 709
VZH065CG 695
VZH065CG 696
VZH065CG 698
VZH065CGANB/I 691
VZH065CGANB/M 691
VZH065CHANB/I 691
VZH065CHANB/M 691
VZH065CJ 697
VZH065CJANB/I 691
VZH065CJANB/M 691
VZH088 693
VZH088 693
VZH088 693
VZH088 709
VZH088 709
VZH088 709
VZH088AG 701
VZH088AG 702
VZH088BG 699
VZH088BG 700
VZH088-G 694
VZH088-H 694
VZH117 693
VZH117 693
VZH117 693
VZH117 709
VZH117 709
VZH117 709
VZH117AG 701
VZH117AG 702
VZH117BG 699
VZH117BG 700
VZH117-G 694
VZH117-H 694
VZH170 693
VZH170 693
VZH170 693
VZH170 709
VZH170 709
VZH170 709
VZH170AG 701
VZH170AG 702
VZH170BG 699
VZH170BG 700
VZH170-G 694
VZH170-H 694

W

WVFX 10 157
WVFX 10 158
WVFX 15 157
WVFX 15 158
WVFX 15 158
WVFX 20 157
WVFX 20 158
WVFX 20 158
WVFX 25 157
WVFX 25 158
WVFX 25 158
WVFX 32 157
WVFX 32 158
WVFX 40 157
WVFX 40 158
WVO 10 157
WVO 10 158
WVO 15 157
WVO 15 158
WVS 32 157
WVS 32 158
WVS 40 157
WVS 40 158
WVS 50 157
WVS 50 158
WVS 65 157
WVS 65 158
WVS 80 157
WVS 80 158
WVS 100 157
WVS 100 158

X

XGE-2C 399
XGE-2S-E 399
XGE-4C 399
XGE-4CB 399
XGE-4M 399
XGE-4MB 399
XGE-4S-E 399
XGE-6C 399
XGE-6CB 399
XGE-6M 399
XGE-6S-E 399
XGE-AE01 399

Table of contents - Code numbers

2 x 023U801466 660
2 x 023U801466 660
2 x 023U801466 660
2 x 023U801466 660
2 x 023U801466 660
2 x 023U801466 660
2 x 023U801466 660
2 x 023U801466 660
2 x 023U801466 660
2 x 023U801466 660
2 x 023U801466 660
2 x 023U801466 660
2 x 023U801466 660
003F1232 158
003F1240 158
003N0031 161
003N0032 161
003N0034 161
003N0041 161
003N0042 161
003N0043 161
003N0045 161
003N0046 161
003N0047 161
003N0107 161
003N0108 161
003N0109 161
003N0299 161
003N0388 158
003N1100 158
003N1105 158
003N1132 161
003N1144 161
003N1162 161
003N1182 161
003N1410 158
003N2100 158
003N2101 158
003N2104 158
003N2105 158
003N2132 161
003N2150 161
003N2162 161
003N2182 161
003N2205 158
003N2410 158
003N3100 158
003N3104 158
003N3105 158
003N3132 161
003N3150 161
003N3162 161
003N3165 161
003N3182 161
003N3205 158
003N3410 158
003N4100 158
003N4101 158
003N4104 158
003N4105 158
003N4132 161
003N4150 161
003N4162 161
003N4165 161
003N4182 161
003N4410 158
003N5203 158
003N5206 158
003N5207 158
003N5216 158
006-1107 325
006-1135 325
006-1137 325
006-1138 325
009G0025 276
009G0026 276
009G0027 276
009G0028 276
009G0029 276
009G0101 275
009G0102 275
009G0105 275
009G0108 275
009G0122 275
009G0127 275
009G0128 275
009G0141 275
009G0142 275
009G0148 275
009G0168 275
009G0170 275
009G0181 275
009G0183 275
009G0184 275
009G0191 275
009G0202 275
009G0208 275
009G0222 275
009G0228 275
009G0242 275
009G0248 275
009G0262 275
009G0291 275
009G7021 822
009G7021 822
009G7021 822
009G7021 822
009G7021 822
009G7021 823
009G7021 823
009G7022 822
009G7022 822
009G7022 822
009G7022 822
009G7022 822
009G7022 823
009G7022 823
009G7050 822
009G7050 822
009G7050 826
009G7051 820
009G7051 820
009G7051 820
009G7051 820
009G7051 820
009G7051 820
009G7051 820
009G7051 820
009G7051 821
009G7051 822
009G7051 822
009G7051 822
009G7051 822
009G7051 822
009G7051 822
009G7052 821
009G7052 821
009G7052 823
009G7052 823
009G7052 823
009G7052 823
009G7052 823
009G7052 823
009G7052 826
009G7053 820
009G7053 820
009G7053 820
009G7053 820
009G7053 820
009G7053 821
009G7053 823
009G7053 824
009G7053 824
009G7053 824
009G7053 824
009G7053 826
009G7053 841
009G7053 841
009G7053 841
009G7053 842
009G7054 821
009G7054 821
009G7054 823
009G7054 823
009G7054 823
009G7054 823
009G7054 823
009G7054 823
009G7054 824
009G7054 824
009G7054 826
009G7054 841
009G7054 841
009G7054 841
009G7054 842
009G7055 821
009G7055 823
009G7055 824
009G7055 824
009G7055 824
009G7055 824
009G7055 827
009G7056 821
009G7056 821
009G7056 821
009G7056 824
009G7056 824
009G7056 827
009G7084 268
009G7084 271
009G7084 273
009G7085 268
009G7085 271
009G7085 273
009G7086 268
009G7086 271
009G7086 273
009G7087 268

009G7087 271
009G7087 273
009G7088 268
009G7088 271
009G7088 273
009G7089 268
009L7000 268
009L7001 268
009L7002 268
009L7003 268
009L7020 267
009L7021 267
009L7022 267
009L7023 267
009L7024 267
009L7025 267
009L7026 267
009L7027 267
009L7028 267
009L7029 267
009L7030 267
009L7031 267
009L7032 267
009L7033 267
009L7034 267
009L7035 267
009L7036 267
009L7037 267
009L7050 267
009L7051 267
009L7052 267
009L7053 267
009L7054 267
009L7055 267
009L7056 267
009L7057 267
009L7058 267
009L7059 267
009L7060 267
009L7061 267
009L7062 267
009L7063 267
009L7064 267
009L7065 267
009L7066 267
009L7067 267
009L7069 268
009L7097 268
009L7098 268
009L7099 268
009L7209 268
009L7210 268
009L7210 271
009L7210 273
009L7211 268
009L7211 271
009L7211 273
009L7212 268
009L7212 271
009L7212 273
009L7395 273
009L7396 273
009L7397 273
009L7399 273
009L7406 273
009L7410 273
009L7411 273
009L7415 273
009L7416 273
009L7417 273
009L7418 273
009L7419 273
009L7420 273
009L7520 271
009L7521 271
009L7522 271
009L7523 271
009L7524 271
009L7525 271
009L7526 271
009L7528 271
009L7529 271
009L7534 271
009L7536 271
009L7553 271
009L7554 271
009L7555 271
009L7556 271
009L7557 271
009L7558 271
009L7563 271
009L7564 271
009L7565 271
009L7566 271
009L7567 271
009L7568 271
009L7569 271
009L7570 271
009L7571 271
009L7572 271
009L7574 271
009L7576 271
009L7579 271
009L7580 273
009L7581 273
009L7582 273
009L7583 273
009L7584 273
009L7585 273
009L7586 273
009L7587 273
009L7588 273
009L7589 273
009L7958 268
009L7959 267
009L7960 267
009L7969 268
009L7970 268
009L7980 267
009L7981 267
014-0182 757
014-0182 757
014-0182 758
014-0182 758
014-0182 758
014-0182 758
014-0183 757
014-0183 757
014-0183 757
014-0183 757
014-0183 757
014-0183 757
014-0183 757
014-0183 757
014-0183 758
014-0183 758
014-0183 758
014-0183 758
014-0183 758
014-0183 758
014-0183 758
014-0183 758
014-0183 758
014-0183 758
014-0183 759
014-0184 757
014-0184 757
014-0184 759
014-0184 759
014-0184 759
014-0184 759
014-1056 240
014-1057 240
014-1058 240
014-1059 240
014-1067 240
014-1071 240
014-1074 240
014F0174 841
014F0174 841
014F0174 841
014F0174 842
014L0002 240
014L0004 240
014L0005 240
014L0006 240
014L0007 239
014L0008 239
014L0009 239
014L0021 239
014L0022 239
014L0024 239
014L0025 239
014L0026 239
014L0028 239
014L0034 239
014L0035 239
014L0036 239
014L0039 239
014L0040 239
014L0041 239
014L0042 239
014L0043 239
014L0044 239
014L0045 239
014L0047 239
014L0080 239
014L0086 239
014L0087 239
014L0125 239
014L0126 239
014L0127 239
014L0128 239
014L0130 239
014L0131 240
014L0161 240
014L0162 240

Table of contents - Code numbers

014L0163 240
014L0165 240
014L0166 240
014L0171 240
014L0172 240
014L0172 820
014L0172 820
014L0172 820
014L0172 820
014L0172 820
014L0172 820
014L0172 821
014L0172 822
014L0172 822
014L0172 822
014L0172 822
014L0172 822
014L0172 823
014L0172 823
014L0172 827
014L0173 240
014L0173 787
014L0173 787
014L0173 787
014L0173 787
014L0173 787
014L0173 787
014L0173 787
014L0173 788
014L0173 788
014L0173 788
014L0173 788
014L0173 789
014L0173 789
014L0173 789
014L0173 789
014L0173 789
014L0173 789
014L0173 789
014L0173 789
014L0173 790
014L0173 790
014L0173 790
014L0173 790
014L0173 790
014L0173 790
014L0173 790
014L0173 790
014L0173 791
014L0173 791
014L0173 791
014L0173 794
014L0173 821
014L0173 821
014L0173 823
014L0173 823
014L0173 823
014L0173 823
014L0173 823
014L0173 823
014L0173 827
014L0174 240
014L0174 823
014L0174 824
014L0174 824
014L0174 824
014L0174 827
014L0175 240
014L0175 821
014L0175 821
014L0175 824
014L0175 824
014L0175 827
014L0181 240
014L0181 822
014L0181 822
014L0181 822
014L0181 822
014L0181 827
014L0182 240
014L0182 788
014L0182 788
014L0182 791
014L0182 791
014L0182 791
014L0182 791
014L0182 791
014L0182 791
014L0182 791
014L0182 794
014L0182 820
014L0182 827
014L0183 240
014L0184 240
014L0185 240
014L0186 240
014L0187 240
014L0191 240
014L0192 240
014L0193 240
014L0195 240
014L0201 240
014L0202 240
014L0203 240
014L0204 240
014L0206 240
014L1154 240
014L1155 240
014L1207 239
014L1601 240
015D0001 387
015D0002 387
015D0003 387
015D0004 387
015D0005 387
015D0006 387
015D0007 387
015D0008 387
015D0009 387
015D0010 387
016D0575 158
016D0576 158
016D0577 158
016D0578 158
016D0579 158
016D1017 158
016D1017 158
016D1017 158
016D1017 158
016D1017 158
016D1017 158
016D1018 158
016D1018 158
016D1018 158
016D1018 158
016D1018 158
016D1018 158
016D1327 158
016D5032 158
016D5040 158
016D5050 158
016D5065 158
016D5080 158
016D5100 158
017-500166 119
017-500266 119
017-500366 135
017-500766 119
017-500866 135
017-501466 135
017-501966 119
017-502766 119
017-503166 120
017-503266 120
017-503466 120
017-503566 120
017-504666 119
017-504766 119
017-505266 119
017-505366 135
017-506166 119
017-506366 135
017-506666 135
017-507566 120
017-507666 120
017-508366 135
017-508966 135
017-509766 135
017-509966 135
017-511566 135
017-511766 135
017-511866 135
017-513166 120
017-513366 120
017-513566 135
017-514666 120
017-514766 135
017-518766 120
017-518866 120
017-518966 120
017-523666 135
017-523766 119
017-524566 119
017-524666 119
017-527866 135
017-528566 135
017-529566 119
017-503666017-503766 135
017D001366 120
017D001466 120
017D001566 120
017D001666 120
017D002166 120
017D002266 120
017D002366 120
017D002466 120
017D002566 120

017D004366 120
017D007266 120
017L001666 119
017L001766 119
017L002466 135
017L003066 135
017L003166 135
017L003266 119
017L003366 119
017L003466 135
017L004066 119
017L004266 119
017L006266 135
018F4100 65
018F4100 100
018F4102 65
018F4102 100
018F4103 65
018F4103 100
018F4104 65
018F4104 100
018F4110 65
018F4110 100
018F4112 65
018F4112 100
018F4113 65
018F4113 100
018F4114 65
018F4114 100
018F4115 65
018F4115 100
018F4120 65
018F4120 100
018F4122 65
018F4122 100
018F4123 65
018F4123 100
018F4130 100
018F4131 100
018F4132 100
018F4133 100
018F4134 100
018F4135 100
018F4961 65
018F6176 68
018F6176 72
018F6176 98
018F6176 98
018F6177 68
018F6177 72
018F6177 98
018F6179 98
018F6182 68
018F6182 72
018F6182 98
018F6185 68
018F6185 72
018F6185 98
018F6185 98
018F6189 68
018F6189 72
018F6189 98
018F6192 98
018F6192 98
018F6193 65
018F6193 68
018F6193 72
018F6193 98
018F6193 98
018F6251 97
018F6251 97
018F6252 97
018F6253 97
018F6257 97
018F6260 97
018F6260 97
018F6264 65
018F6264 97
018F6265 97
018F6278 68
018F6278 72
018F6279 68
018F6279 72
018F6280 97
018F6280 97
018F6282 65
018F6282 97
018F6282 97
018F6288 68
018F6288 72
018F6701 68
018F6701 72
018F6701 97
018F6701 97
018F6702 68
018F6702 72
018F6702 97
018F6703 97
018F6703 97
018F6704 97
018F6706 97
018F6707 68
018F6707 72
018F6707 97
018F6708 97
018F6709 97
018F6710 68
018F6710 72
018F6710 97
018F6710 97
018F6711 68
018F6711 72
018F6711 97
018F6713 65
018F6713 68
018F6713 72
018F6713 97
018F6713 97
018F6714 68
018F6714 72
018F6714 97
018F6715 68
018F6715 72
018F6715 97
018F6730 97
018F6730 97
018F6732 65
018F6732 68
018F6732 72
018F6732 97
018F6732 97
018F6780 68
018F6780 72
018F6781 68
018F6781 72
018F6801 68
018F6801 72
018F6801 98
018F6801 98
018F6802 68
018F6802 72
018F6802 98
018F6803 98
018F6807 68
018F6807 72
018F6807 98
018F6809 98
018F6811 68
018F6811 72
018F6811 98
018F6813 65
018F6813 68
018F6813 72
018F6813 98
018F6814 65
018F6814 68
018F6814 72
018F6814 98
018F6815 68
018F6815 72
018F6815 98
018F6851 68
018F6851 72
018F6851 98
018F6856 98
018F6857 98
018F6859 98
018F6860 98
018F6861 98
018F6881 98
018F6886 98
018F6887 98
018F6889 98
018F6890 98
018F6903 68
018F6903 72
018F6903 99
018F6905 68
018F6905 72
018F6905 99
018F6906 68
018F6906 72
018F6906 99
018F6991 68
018F6991 72
018F7351 99
018F7352 99
018F7358 99
018F7360 99
018F7360 99
018F7361 99
018F7363 99
018F7363 99
018F7365 99
018F8232 65
018F8290 65
018F8291 65
018Z0089 99
018Z6120 99
018Z6121 99
018Z6122 99

Table of contents - Code numbers

018Z6123 99
018Z6125 99
018Z6127 99
020-1008 322
020-1010 321
020-1011 321
020-1012 321
020-1014 321
020-1015 321
020-1016 321
020-1017 321
020-1018 321
020-1019 321
020-1020 321
020-1021 321
020-1023 322
020-1025 321
020-1026 321
020-1027 321
020-1029 322
020-1032 322
020-1033 322
020-1034 322
020-1035 322
020-1036 322
020-1037 322
020-1038 322
020-1039 322
020-1040 321
020-1041 321
020-1042 321
020-1043 321
020-1044 321
020-1046 322
020-1050 321
020-1051 321
020-1052 321
020-1053 321
020-1054 321
020-1055 321
020-1056 321
020-1057 321
020-1058 321
020-1059 321
020-1060 321
020-1061 321
020-1062 322
020-1063 322
020-1064 322
020-1065 322
020-1066 322
020-1067 322
020-1068 322
020-1069 322
020-1070 322
020-1071 322
020-1072 322
020-1073 322
020-1132 145
020-1136 145
020-2000 325
020-2001 325
020-2002 325
020-2003 325
020-2004 325
020-2005 325
020-2006 325
020-2020 325
020-2020 325
020-2022 325
020-2022 325
020-2024 325
020-2024 325
020-2026 325
020-2307 325
020-2307 325
020-2317 325
020-2317 325
020-2327 325
020-2327 325
020-2337 325
020-4000 322
020-4300 322
021B2055 390
021B2056 390
021B2057 390
021B2058 390
021B2059 390
021B2060 390
021B2061 390
021B2062 390
021B2063 390
021B2064 390
021B3706 390
021B3707 390
021B3708 390
021B3709 390
021B3710 390
021B6321 390
021B6322 390
021B6323 390
021B6324 390
021B6325 390
021B6326 390
021B6352 390
021B6358 390
021B7595 390
021B7596 390
021H0373 398
021H0374 398
021H0375 398
021H0376 398
021H0377 398
021H0378 398
021H0379 398
021H0380 398
021H0381 398
021H0382 398
021H0383 398
021H0384 398
021H0385 398
021H0386 398
021H0840 394
021H0841 394
021H0842 394
021H0843 394
021H0844 394
021H0845 394
021H0846 394
021H0847 394
021H0848 394
021H0849 394
021H0850 394
021H0851 394
021H0852 394
021H0853 394
021H0854 394
021H0855 396
021H0856 396
021H0857 396
021H0858 396
021H0859 396
021H0860 396
021H0861 396
021H0862 396
021H0863 396
021H0864 396
021H0865 396
021H0866 396
021H0867 396
021H0868 396
021H0869 396
021H0870 395
021H0871 395
021H0872 395
021H0873 395
021H0874 395
021H0875 395
021H0876 395
021H0877 395
021H0878 395
021H0879 395
021H0880 395
021H0881 395
021H0882 395
021H0883 395
021H0884 395
021H0885 397
021H0886 397
021H0887 397
021H0888 397
021H0889 397
021H0890 397
021H0891 397
021H0892 397
021H0893 397
021H0894 397
021H0895 397
021H0896 397
021H0897 397
021H0898 397
021H0899 397
021H1287 396
021H1288 396
021H1289 396
021H1290 396
021H1291 396
021H1292 396
021H1293 396
021H1294 396
021H1295 396
021H1296 397
021H1297 397
021H1298 397
021H1299 397
021H1300 397
021H2718 394
021H2719 394
021H2720 394
021H2721 394
021H2722 394

021H2723 394
021H2724 394
021H2725 394
021H2726 394
021H2727 394
021H2728 394
021H2729 394
021H2730 394
021H2731 394
021H2732 394
021H2733 394
021H2734 394
021H2735 394
021H2736 394
021H2737 396
021H2738 396
021H2739 396
021H2740 396
021H2741 396
021H2742 396
021H2743 396
021H2744 396
021H2745 396
021H2746 396
021H2747 396
021H2748 396
021H2749 396
021H2750 396
021H2751 396
021H2752 396
021H2753 396
021H2754 396
021H2755 396
021H2756 395
021H2757 395
021H2758 395
021H2759 395
021H2760 395
021H2761 395
021H2762 395
021H2763 395
021H2764 395
021H2765 395
021H2766 395
021H2767 395
021H2768 395
021H2769 395
021H2770 395
021H2771 395
021H2772 395
021H2773 395
021H2774 395
021H2775 397
021H2776 397
021H2777 397
021H2778 397
021H2779 397
021H2780 397
021H2781 397
021H2782 397
021H2783 397
021H2784 397
021H2785 397
021H2786 397
021H2787 397
021H2788 397
021H2789 397
021H2790 397
021H2791 397
021H2792 397
021H2793 397
021H3593 396
021H3594 396
021H3595 396
021H3596 396
021H3597 396
021H3598 396
021H3599 396
021H3600 396
021H3601 396
021H3602 396
021H3603 396
021H3604 396
021H3617 397
021H3618 397
021H3619 397
021H3620 397
021H3621 397
021H3622 397
021H3623 397
021H3624 397
021H3625 397
021H3626 397
021H3627 397
021H3628 397
021H4171 398
021H4172 398
021H4173 398
021H4174 398
021H4175 398
021H4176 398
021H4177 398
021H4801 397
021H4802 397
021H4803 397
021H4804 397
021H7470 394
021H7471 394
021H7472 394
021H7473 394
021H7474 394
021H7475 394
021H7476 394
021H7477 394
021H7478 394
021H7479 394
021H7480 394
021H7481 394
021H7482 394
021H7483 394
023U1391 223
023U1392 223
023U1393 223
023U1921 223
023U4380 223
023U4381 223
023U4382 223
023U5380 223
023U5381 223
023U5382 223
023U7050 221
023U7051 221
023U7052 221
023U7053 221
023U7054 221
023U7055 221
023U7056 221
023U7057 221
023U7058 221
023U7059 221
023U7060 221
023U7061 221
023U7062 221
023U7063 221
023U7064 221
023U7065 221
023U7066 221
023U7067 221
023U7068 221
023U7069 221
023U7070 221
023U7071 221
023U7072 221
023U7073 221
023U7074 221
023U7076 221
023U7082 222
023U7083 222
023U7086 221
023U7151 221
023U7161 221
023U7250 222
023U7251 222
023U7252 222
023U7253 222
023U7254 222
023U7255 222
023U7256 222
023U7257 222
023U7258 222
023U7259 222
023U7260 222
023U7261 222
023U7262 222
023U7263 222
023U7264 222
023U7265 222
023U7267 222
023U7268 222
023U7269 222
023U7270 222
023U7272 222
023U7273 222
023U7274 222
023U7275 222
023U7276 222
023U7278 222
023U7281 222
023U7282 222
023U7290 222
023U7297 222
023U7303 222
023U7463 222
023U7571 222
023U801666 + 023U801466 660
023U801666 + 023U801466 660
023Z0012 201
023Z0013 201
023Z0014 201
023Z0030 202
023Z0031 202

Table of contents - Code numbers

023Z0032 202
023Z0033 202
023Z0034 202
023Z0035 202
023Z0036 202
023Z0037 202
023Z0049 207
023Z0050 207
023Z0051 207
023Z0067 208
023Z0068 208
023Z0069 208
023Z0070 208
023Z0071 208
023Z0072 208
023Z0073 208
023Z0074 208
023Z0102 201
023Z0103 201
023Z0104 202
023Z0105 202
023Z0106 202
023Z0107 202
023Z0108 207
023Z0109 207
023Z0110 207
023Z0111 208
023Z0112 208
023Z0113 208
023Z0114 208
023Z0115 202
023Z0116 202
023Z0117 208
023Z0118 208
023Z0156 201
023Z0189 207
023Z0193 207
023Z0195 207
023Z1002 213
023Z1004 213
023Z1005 213
023Z1006 213
023Z1007 213
023Z1008 213
023Z1009 213
023Z1010 213
023Z1011 213
023Z1012 213
023Z1013 213
023Z1014 213
023Z1015 213
023Z1016 213
023Z1017 213
023Z1018 213
023Z1019 213
023Z1020 213
023Z1400 230
023Z1401 230
023Z1402 230
023Z1403 230
023Z1404 230
023Z1405 230
023Z1406 230
023Z1407 230
023Z1408 230
023Z1409 230
023Z1410 226
023Z1411 226
023Z1412 226
023Z1413 226
023Z1414 226
023Z1415 226
023Z1417 226
023Z1418 226
023Z1419 226
023Z1422 226
023Z1424 226
023Z1432 230
023Z1433 230
023Z1434 230
023Z1435 230
023Z1436 230
023Z1437 230
023Z1438 230
023Z1439 230
023Z1440 230
023Z1441 226
023Z1442 226
023Z1443 226
023Z1444 226
023Z1445 226
023Z1446 226
023Z1447 226
023Z1448 226
023Z1449 226
023Z1451 226
023Z1452 230
023Z1453 226
023Z1455 226
023Z1457 226
023Z1458 230
023Z1459 226
023Z1461 226
023Z1462 230
023Z1463 230
023Z1464 230
023Z1465 230
023Z1466 230
023Z1467 230
023Z1468 230
023Z1469 230
023Z1470 230
023Z1471 226
023Z1472 226
023Z1473 226
023Z1474 226
023Z1475 226
023Z1476 226
023Z1477 226
023Z1478 226
023Z1479 226
023Z1481 226
023Z4500 203
023Z4501 203
023Z4502 203
023Z4503 203
023Z4504 203
023Z4505 203
023Z4506 203
023Z4507 203
023Z4508 203
023Z4509 203
023Z4510 203
023Z4511 203
023Z4512 203
023Z4513 203
023Z4514 203
023Z4515 203
023Z4516 203
023Z4517 203
023Z4518 203
023Z4519 203
023Z4521 203
023Z4522 203
023Z4523 203
023Z4524 203
023Z4525 203
023Z4526 203
023Z4527 203
023Z4528 203
023Z4529 203
023Z4530 203
023Z4531 203
023Z4532 203
023Z4533 203
023Z4534 203
023Z4535 203
023Z4536 203
023Z4538 203
023Z4539 203
023Z4540 203
023Z4541 203
023Z4542 203
023Z4544 203
023Z4545 203
023Z4546 203
023Z4548 203
023Z4549 203
023Z4550 203
023Z4551 209
023Z4552 209
023Z4553 209
023Z4554 209
023Z4555 209
023Z4556 209
023Z4557 209
023Z4558 209
023Z4559 209
023Z4560 209
023Z4561 209
023Z4562 209
023Z4562 757
023Z4562 757
023Z4562 757
023Z4562 757
023Z4562 757
023Z4562 757
023Z4562 757
023Z4562 757
023Z4562 757
023Z4562 758
023Z4562 758
023Z4562 758
023Z4562 758
023Z4563 209
023Z4564 209
023Z4565 209
023Z4566 209
023Z4567 209
023Z4569 209

023Z4570 209
023Z4571 209
023Z4572 209
023Z4572 758
023Z4572 758
023Z4572 758
023Z4572 758
023Z4572 758
023Z4572 758
023Z4572 758
023Z4572 758
023Z4572 758
023Z4572 758
023Z4572 758
023Z4572 758
023Z4572 758
023Z4572 759
023Z4573 209
023Z4574 209
023Z4575 209
023Z4577 209
023Z4578 209
023Z4579 209
023Z4580 209
023Z4581 209
023Z4581 757
023Z4581 757
023Z4581 759
023Z4581 759
023Z4581 759
023Z4581 759
023Z4582 209
023Z4583 209
023Z4584 209
023Z4585 209
023Z4586 209
023Z4587 209
023Z4588 209
023Z4589 209
023Z4590 209
023Z4591 209
023Z4592 209
023Z4593 209
023Z4594 209
023Z4595 209
023Z4596 209
023Z4597 209
023Z4598 209
023Z4599 209
023Z4600 209
023Z4601 209
023Z4602 209
023Z4603 209
023Z4604 209
023Z4605 209
023Z4606 209
023Z4607 209
023Z5000 201
023Z5001 201
023Z5002 201
023Z5003 201
023Z5004 201
023Z5005 201
023Z5006 201
023Z5007 201
023Z5008 201
023Z5009 201
023Z5010 201
023Z5011 201
023Z5013 202
023Z5014 202
023Z5015 202
023Z5016 202
023Z5018 202
023Z5019 202
023Z5020 202
023Z5022 202
023Z5023 202
023Z5024 202
023Z5025 202
023Z5026 202
023Z5027 202
023Z5028 202
023Z5029 202
023Z5030 202
023Z5031 202
023Z5032 202
023Z5033 202
023Z5034 202
023Z5035 207
023Z5036 207
023Z5037 207
023Z5038 207
023Z5039 207
023Z5039 820
023Z5039 822
023Z5039 826
023Z5040 207
023Z5040 788
023Z5040 788
023Z5040 791
023Z5040 791
023Z5040 791
023Z5040 791
023Z5040 791
023Z5040 791
023Z5040 793
023Z5040 820
023Z5040 820
023Z5040 820
023Z5040 820
023Z5040 820
023Z5040 820
023Z5040 820
023Z5040 821
023Z5040 822
023Z5040 822
023Z5040 822
023Z5040 822
023Z5040 822
023Z5040 822
023Z5040 823
023Z5040 826
023Z5041 207
023Z5041 787
023Z5041 787
023Z5041 787
023Z5041 787
023Z5041 787
023Z5041 787
023Z5041 788
023Z5041 788
023Z5041 789
023Z5041 789
023Z5041 789
023Z5041 789
023Z5041 789
023Z5041 789
023Z5041 789
023Z5041 790
023Z5041 790
023Z5041 790
023Z5041 790
023Z5041 790
023Z5041 791
023Z5041 791
023Z5041 791
023Z5041 793
023Z5041 822
023Z5041 823
023Z5041 823
023Z5041 823
023Z5041 823
023Z5041 823
023Z5041 823
023Z5041 823
023Z5041 826
023Z5042 207
023Z5043 207
023Z5044 207
023Z5044 787
023Z5044 788
023Z5044 788
023Z5044 789
023Z5044 790
023Z5044 790
023Z5044 790
023Z5044 790
023Z5044 790
023Z5044 793
023Z5044 821
023Z5044 821
023Z5044 826
023Z5045 207
023Z5045 823
023Z5045 824
023Z5045 824
023Z5045 824
023Z5045 824
023Z5045 826
023Z5045 841
023Z5045 841
023Z5045 841
023Z5045 842
023Z5046 207
023Z5046 821
023Z5046 821
023Z5046 824
023Z5046 824
023Z5046 826
023Z5048 208
023Z5049 208
023Z5050 208
023Z5051 208
023Z5052 208
023Z5053 208
023Z5054 208
023Z5055 208

Table of contents - Code numbers

023Z5057 208
023Z5058 208
023Z5059 208
023Z5060 208
023Z5061 208
023Z5063 208
023Z5064 208
023Z5065 208
023Z5066 208
023Z5067 208
023Z5068 208
023Z5069 208
023Z5070 202
023Z5071 208
023Z5072 208
023Z5073 207
023Z5075 201
023Z5089 201
023Z5090 207
023Z5101 208
023Z5117 208
023Z5121 208
023Z5145 202
023Z7000 235
023Z7001 235
023Z7002 235
023Z7003 235
023Z7004 235
023Z7007 753
023Z7012 753
023Z7012 753
023Z7012 753
023Z7013 753
023Z7013 753
023Z7013 753
023Z7019 233
023Z7020 233
023Z7021 233
023Z7022 233
023Z7023 233
023Z7024 233
023Z7026 233
023Z7027 233
023Z7028 233
023Z7029 233
023Z7030 233
023Z8250 208
023Z8253 208
023Z8255 202
023Z8402 211
023Z8405 211
023Z8406 211
023Z8407 211
023Z8408 211
023Z8409 211
023Z8410 211
023Z8411 211
023Z8412 211
023Z8415 211
023Z8416 211
023Z8417 211
023Z8418 211
023Z8419 211
027B0080 193
027B0087 193
027B0920 195
027B0921 195
027B0922 195
027B0930 195
027B0931 195
027B0940 195
027B0941 195
027B0980 195
027B1080 193
027B1100 193
027B1101 193
027B1102 193
027B1120 193
027B1120 195
027B1130 193
027B1130 195
027B1132 195
027B1139 193
027B1140 193
027B1141 193
027B1160 193
027B1161 193
027B1162 193
027B1164 193
027B1268 193
027F1047 193
027F1047 195
027F1090 193
027F1090 195
027F1091 193
027F1091 195
027F1159 193
027F1159 195
027F1160 193
027F1160 195
027H0159 113
027H0164 113
027H0169 114
027H0174 114
027H0179 114
027H0180 173
027H0181 173
027H0227 114
027H1020 172
027H1021 172
027H1022 172
027H1025 172
027H1030 172
027H1031 172
027H1032 172
027H1035 172
027H1036 172
027H1040 172
027H1041 172
027H1045 172
027H1046 172
027H1047 172
027H1050 172
027H1051 172
027H1052 172
027H1129 174
027H1132 174
027H1145 174
027H1148 174
027H1151 174
027H1154 174
027H1157 174
027H1160 174
027H1163 174
027H1166 174
027H1180 174
027H1181 174
027H1182 174
027H1186 174
027H1194 174
027H2000 172
027H2001 172
027H2002 172
027H2003 172
027H2004 172
027H2005 172
027H2006 172
027H2007 172
027H2008 172
027H2009 172
027H2010 172
027H2011 172
027H2012 172
027H2013 172
027H2014 172
027H2015 172
027H2016 172
027H2020 178
027H2021 178
027H2023 178
027H2024 178
027H2025 178
027H2026 178
027H2028 178
027H2029 178
027H2030 178
027H2031 178
027H2033 178
027H2034 178
027H2035 178
027H2036 178
027H2038 178
027H2039 178
027H2040 178
027H2041 178
027H2043 178
027H2044 178
027H2045 178
027H2046 178
027H2048 178
027H2049 178
027H2050 178
027H2051 178
027H2053 178
027H2054 178
027H2055 178
027H2056 178
027H2058 178
027H2059 178
027H2060 179
027H2061 179
027H2062 179
027H2063 179
027H2064 179
027H2065 179
027H2066 179
027H2068 179
027H2070 178
027H2071 178
027H2073 178
027H2074 178

027H2075 178
027H2076 178
027H2078 178
027H2079 178
027H2080 178
027H2081 178
027H2083 178
027H2084 178
027H2085 178
027H2086 178
027H2088 178
027H2089 178
027H2090 178
027H2091 178
027H2093 178
027H2094 178
027H2095 178
027H2096 178
027H2098 178
027H2099 178
027H2100 178
027H2101 178
027H2103 178
027H2104 178
027H2105 178
027H2106 178
027H2108 178
027H2109 178
027H2110 179
027H2111 179
027H2112 179
027H2113 179
027H2114 179
027H2115 179
027H2116 179
027H2118 179
027H2119 180
027H2120 113
027H2120 174
027H2120 181
027H2121 113
027H2121 174
027H2121 181
027H2122 113
027H2122 174
027H2122 181
027H2123 113
027H2123 174
027H2123 181
027H2124 113
027H2124 174
027H2124 181
027H2125 113
027H2125 174
027H2125 181
027H2126 113
027H2126 174
027H2126 181
027H2127 113
027H2127 174
027H2127 181
027H2128 113
027H2128 174
027H2128 181
027H2129 113
027H2129 174
027H2129 181
027H2130 113
027H2130 174
027H2130 181
027H2131 113
027H2131 174
027H2131 181
027H2132 113
027H2132 174
027H2132 181
027H2133 113
027H2133 174
027H2133 181
027H2134 113
027H2134 174
027H2134 181
027H2135 113
027H2135 174
027H2135 181
027H2140 178
027H2142 178
027H2143 178
027H2145 178
027H2146 178
027H2148 178
027H2172 181
027H2173 181
027H2180 174
027H2181 174
027H2190 174
027H2200 113
027H2200 181
027H2201 113
027H2201 181
027H2202 113
027H2202 181
027H2203 113
027H2203 181
027H2204 113
027H2204 181
027H2304 173
027H2307 112
027H2308 112
027H2309 112
027H3000 172
027H3001 172
027H3002 172
027H3003 172
027H3004 172
027H3005 172
027H3006 172
027H3007 172
027H3008 172
027H3012 172
027H3020 179
027H3021 179
027H3022 179
027H3023 179
027H3030 179
027H3031 179
027H3032 179
027H3033 179
027H3040 106
027H3041 106
027H3042 106
027H3120 107
027H3120 113
027H3120 175
027H3120 181
027H3121 107
027H3121 113
027H3121 175
027H3121 181
027H3122 107
027H3122 113
027H3122 175
027H3122 181
027H3123 107
027H3123 113
027H3123 175
027H3123 181
027H3125 107
027H3125 113
027H3125 175
027H3125 181
027H3126 107
027H3126 113
027H3126 175
027H3126 181
027H3127 107
027H3127 113
027H3127 175
027H3127 181
027H3128 107
027H3128 113
027H3128 175
027H3128 181
027H3129 180
027H3130 173
027H3131 173
027H3172 181
027H3173 181
027H3180 175
027H3181 175
027H3200 113
027H3200 181
027H3204 107
027H3309 112
027H3377 112
027H3378 112
027H4000 172
027H4001 172
027H4002 172
027H4003 172
027H4004 172
027H4005 172
027H4006 172
027H4007 172
027H4008 172
027H4009 172
027H4010 172
027H4020 179
027H4021 179
027H4022 179
027H4023 179
027H4024 179
027H4030 179
027H4031 179
027H4032 179
027H4033 179
027H4034 179
027H4040 106
027H4041 106
027H4042 106
027H4120 107

Table of contents - Code numbers

027H4120 114
027H4120 175
027H4120 182
027H4121 107
027H4121 114
027H4121 175
027H4121 182
027H4122 107
027H4122 114
027H4122 175
027H4122 182
027H4123 107
027H4123 114
027H4123 175
027H4123 182
027H4124 107
027H4124 114
027H4124 175
027H4124 182
027H4126 107
027H4126 114
027H4126 175
027H4126 182
027H4127 107
027H4127 114
027H4127 175
027H4127 182
027H4128 180
027H4129 173
027H4172 182
027H4173 182
027H4180 175
027H4181 175
027H4200 114
027H4200 182
027H4204 107
027H4307 112
027H4308 112
027H4309 112
027H5000 172
027H5001 172
027H5002 172
027H5003 172
027H5004 172
027H5005 172
027H5006 172
027H5007 172
027H5008 172
027H5020 179
027H5021 179
027H5022 179
027H5023 179
027H5030 179
027H5031 179
027H5032 179
027H5033 179
027H5040 106
027H5041 106
027H5042 106
027H5120 107
027H5120 114
027H5120 175
027H5120 182
027H5121 107
027H5121 114
027H5121 175
027H5121 182
027H5122 107
027H5122 114
027H5122 175
027H5122 182
027H5123 107
027H5123 114
027H5123 175
027H5123 182
027H5124 107
027H5124 114
027H5124 175
027H5124 182
027H5125 107
027H5125 114
027H5125 175
027H5125 182
027H5127 180
027H5128 173
027H5172 182
027H5173 182
027H5180 175
027H5181 175
027H5200 114
027H5200 182
027H5204 107
027H5307 112
027H5308 112
027H5309 112
027H6001 172
027H6003 172
027H6005 172
027H6007 172
027H6009 172
027H6010 172
027H6012 172
027H6020 179
027H6021 179
027H6023 179
027H6024 179
027H6025 179
027H6030 179
027H6031 179
027H6033 179
027H6034 179
027H6035 179
027H6040 106
027H6041 106
027H6042 106
027H6120 108
027H6120 114
027H6120 175
027H6120 182
027H6121 108
027H6121 114
027H6121 175
027H6121 182
027H6122 114
027H6122 175
027H6122 182
027H6123 108
027H6123 114
027H6123 175
027H6123 182
027H6124 108
027H6124 114
027H6124 175
027H6124 182
027H6125 108
027H6125 114
027H6125 175
027H6125 182
027H6126 108
027H6126 114
027H6126 175
027H6126 182
027H6127 108
027H6127 114
027H6127 175
027H6127 182
027H6128 180
027H6129 173
027H6172 182
027H6173 182
027H6180 175
027H6181 175
027H6200 114
027H6200 182
027H6204 108
027H6308 112
027H6309 112
027H6311 112
027H7120 179
027H7121 179
027H7122 179
027H7130 173
027H7131 173
027H7140 179
027H7141 179
027H7142 179
027H7147 106
027H7148 106
027H7150 173
027H7151 173
027H7157 106
027H7158 106
027H7160 179
027H7161 179
027H7162 179
027H7167 106
027H7168 106
027H7170 173
027H7171 173
027H7184 54
027H7185 54
027H7186 54
027H7187 54
027H7188 54
027H7200 58
027H7201 58
027H7202 58
027H7230 54
027H7230 58
027H7302 112
027H7303 112
027H8020 179
027H8021 179
027H8030 179
027H8031 179
027H8040 106
027H8042 106
027H8200 114
027H8200 182
027H9075 173
027H9077 173

027H9120 173
027H9122 173
027L1116 79
027L1116 84
027L1117 79
027L1117 84
027L1122 79
027L1122 84
027L1123 79
027L1123 84
027L1222 79
027L1222 84
027L1223 79
027L1223 84
027L1228 79
027L1228 84
027L1229 79
027L1229 84
027L3000 368
027L3002 368
027L3003 368
027L3004 368
027L3005 368
027L3007 368
027L3008 368
027L3009 368
027L3011 368
027L3012 368
027L3013 368
027L3014 368
027L3016 368
027L3017 368
027L3018 369
027L3021 369
027L3022 369
027L3023 369
027L3025 369
027L3026 369
027L3028 371
027L3029 371
027L3032 371
027L3033 371
027L3034 372
027L3036 372
027L3037 372
027L3038 372
027L3040 372
027L3042 372
027L3043 372
027L3045 372
027L3047 372
027L3048 372
027L3051 372
027L3052 372
027L3053 378
027L3055 379
027L3056 378
027L3058 379
027L3060 371
027L3061 371
027L3062 371
027L3064 371
027L3065 371
027L3073 370
027L3075 370
027L3076 370
027L3077 370
027L3078 370
027L3080 370
027L3081 370
027L3083 375
027L3084 375
027L3085 375
027L3087 375
027L3088 375
027L3089 373
027L3091 373
027L3092 375
027L3094 375
027L3095 373
027L3097 373
027L3099 373
027L3101 373
027L3103 373
027L3106 373
027L3108 373
027L3109 373
027L3112 373
027L3113 373
027L3121 378
027L3122 378
027L3123 379
027L3124 371
027L3127 372
027L3133 378
027L3134 378
027L3141 378
027L3144 378
027L3145 372
027L3147 372
027L3148 372
027L3149 372
027L3150 379
027L3151 372
027L3152 378
027L3153 372
027L3154 372
027L3155 378
027L3156 378
027L3157 371
027L3159 372
027L3160 372
027L3161 372
027L3322 372
027L3323 372
027L3325 372
027L3326 372
027L3328 372
027L3329 372
027L3330 372
027L3331 372
027L3345 375
027L3346 375
027L3348 375
027L3349 375
027L3353 375
027L3354 375
027L3355 375
027L3356 373
027L3357 379
027L3359 378
027L3360 378
027L3361 378
027L3362 379
027L3363 378
027L3364 378
027L3365 373
027L3366 371
027L3367 372
027L3368 378
027L3369 379
027L3371 378
027L3372 378
027L3373 368
027L3374 372
027L3375 378
027L3376 378
027L3377 379
027L3378 379
027L3379 378
027L3380 378
027L3383 370
027L3385 378
027L3386 378
027L3387 378
027L3388 372
027L3389 372
027L3390 372
027L3391 372
027L3392 372
027L3393 372
027L3394 373
027L3396 379
027L3397 378
027L3398 368
027L3400 370
027L3401 370
027L3402 370
027L3403 370
027L3404 370
027L3405 378
027L3406 368
027L3407 368
027L3408 368
027L3409 368
027L3410 368
027L3411 368
027L3412 368
027L3413 368
027L3414 369
027L3415 369
027L3416 369
027L3417 369
027L3418 369
027L3419 369
027L3420 378
027L3421 378
027L3422 368
027L3423 379
027L3424 378
027L3425 378
027L3426 379
027L3427 382
027L3428 380
027L3429 381
027L3430 369
027L3431 370
027L3432 372
027L3433 369
027L3434 371
027L3437 369

Table of contents - Code numbers

027L3438 375
027L3439 378
027L3440 380
027L3441 378
027L3443 381
027L3444 381
027L3445 380
027L3446 378
027L3447 378
027L3463 379
027L3464 379
027L3465 379
027L3483 379
027L3484 379
027L3485 379
027L3700 378
027L3701 378
027L4002 368
027L4003 368
027L4006 368
027L4008 368
027L4011 368
027L4012 368
027L4013 368
027L4016 368
027L4017 368
027L4020 369
027L4021 369
027L4024 369
027L4026 369
027L4029 369
027L4031 369
027L4034 369
027L4035 369
027L4038 372
027L4039 372
027L4042 372
027L4043 372
027L4044 372
027L4047 372
027L4049 372
027L4052 372
027L4053 372
027L4054 371
027L4059 371
027L4076 370
027L4077 370
027L4080 370
027L4081 370
027L4082 370
027L4085 370
027L4087 370
027L4090 370
027L4091 370
027L4094 375
027L4096 375
027L4099 375
027L4100 375
027L4103 373
027L4104 373
027L4107 373
027L4109 373
027L4112 373
027L4114 373
027L4117 373
027L4118 373
027L4121 371
027L4122 371
027L4126 371
027L4127 371
027L4130 371
027L4131 371
027L4132 372
027L4133 371
027L4135 368
027L4136 375
027L4137 375
027L4138 375
027L4140 373
027L4143 379
027L4148 372
027L4149 379
027L4151 379
027L4152 379
027L4153 379
027L4154 379
027L4155 373
027L4156 379
027L4157 379
027L4158 379
027L4159 379
027L4160 379
027L4161 379
027L4162 379
027L4164 375
027L4165 375
027L4166 379
027L4167 379
027L4168 379
027L4169 370
027L4170 372
027L4171 372
027L4172 372
027L4173 372
027L4174 372
027L4175 375
027L4176 379
027L4177 375
027L4178 379
027L4179 379
027L4180 379
027L4181 379
027L4182 373
027L4185 379
027L4186 379
027L4187 370
027L4188 373
027L4189 382
027L4190 381
027L4191 380
027L4192 379
027L4517 103
027L4518 103
027L4519 103
027L4520 371
027L4522 373
027L4523 375
027L4524 370
027L4525 373
027L4526 371
027L4528 373
027L4529 375
027L4530 370
027L4531 373
027L4532 371
027L4533 371
027L4534 371
027L4535 371
027L4536 371
027L4537 371
027L4539 375
027L4540 370
027L4542 375
027L4544 370
027L4545 370
027L4546 375
027L4547 375
027L4548 370
027L4549 370
027L4550 375
027L4551 373
027L4552 370
027L4553 373
027L4555 375
027L4556 373
027L4557 375
027L4558 375
027L4559 373
027L4560 373
027L4572 375
027L4573 373
027L4574 371
027L4575 375
027L4576 378
027L4577 379
027L4578 379
027L4579 371
027L4580 375
027L4581 378
027L4582 375
027L4583 373
027L4590 380
027L4700 380
027L4701 380
027L4702 380
027L4703 380
027L4704 381
027L4705 381
027L4706 381
027L4707 381
027L4708 381
027L4709 380
027L4710 381
027L4711 381
027L4712 381
027L4713 382
027L4714 381
027L4715 382
027L4716 382
027L4717 380
027L4718 381
027L4719 381
027L4720 381
027L4721 381
027L4722 381
027L4723 382
027L4724 380
027L4725 380
027L4726 381
027L4727 381
027L4728 381

027L4729 381
027L4730 381
027L4731 380
027L4732 380
027L4733 380
027L4734 380
027L4735 381
027L4740 382
027L4741 382
027L4742 382
027L4743 382
027L4746 382
027L4747 382
027L4748 382
027L4749 382
027L4750 382
027L4751 382
027L4752 382
027L4753 382
027L4754 381
027L4755 381
027L4756 381
027L4758 380
027L4759 380
027L4760 380
027L4761 380
027L4762 382
027L4763 382
027L4764 381
027L4765 381
027L4766 380
027L4767 382
027L4768 382
027L5001 376
027L5002 376
027L5003 376
027L5004 376
027L5005 376
027L5006 376
027L5007 376
027L5008 376
027L5009 376
027L5011 376
027L5012 376
027L5013 377
027L5014 377
027L5015 377
027L5016 377
027L5017 377
027L5018 377
027L5019 377
027L5020 377
027L5021 376
027L5022 376
027L5023 376
027L5024 376
027L5025 377
027L5026 377
027L5027 377
027L5028 377
027L5029 377
027L5030 377
027L5031 377
027L5032 377
027L5033 377
027L5034 377
027L5035 377
027L5036 377
027L5037 377
027L5038 377
027L5039 377
027L5040 377
027L5041 377
027L5042 377
027L5043 377
027L5044 377
027L5045 377
027L5046 377
027L5047 377
027L5048 377
027L6501 376
027L6502 376
027L6503 376
027L6504 376
027L6505 376
027L6506 376
027L6507 376
027L6508 376
027L6509 376
027L6510 376
027L6511 376
027L6512 376
027L6513 377
027L6514 377
027L6515 377
027L6516 377
027L6517 377
027L6518 377
027L6519 377
027L6520 377
027L6521 376
027L6522 376
027L6523 376
027L6524 376
027L6525 377
027L6526 377
027N1115 79
027N1115 84
027N1120 79
027N1120 84
027N1220 71
027N1220 79
027N1220 84
027N1225 71
027N1225 79
027N1225 84
027N3050 158
027N3065 158
027N3080 158
027N3100 158
032F1201 77
032F1201 82
032F1202 77
032F1202 82
032F1204 77
032F1204 82
032F1206 77
032F1206 82
032F1207 77
032F1207 82
032F1208 77
032F1208 82
032F3050 89
032F3080 87
032F3081 87
032F3082 87
032F3083 87
032F3084 87
032F3085 87
032F5437 87
032F5438 87
032F5673 61
032F5674 61
032F5678 61
032F5679 61
032F5683 61
032F5684 61
032F5685 61
032F6115 95
032F6210 89
032F6211 89
032F6214 89
032F6215 89
032F6216 89
032F6219 89
032F6220 89
032F6221 89
032F6225 89
032F6226 89
032F7100 77
032F7100 82
032F8056 78
032F8056 83
032F8107 78
032F8107 83
032F8116 78
032F8116 83
032F8200 93
032F8201 93
032F8202 93
032F8203 93
032F8204 93
032F8205 93
032F8206 93
032F8207 93
032F8208 93
032F8209 93
032F8210 93
032F8211 93
032F8227 93
032F8228 93
032F8229 93
032F8230 93
032F8231 93
032F8232 93
032F8233 93
032F8234 93
032F8235 93
032F8236 93
032F8237 93
032F8238 93
032F8245 93
032F8246 93
032F8247 93
032F8248 93
032F8249 93
032F8250 93
032F8251 93
032F8252 93
032F8253 93
032F8254 93

Table of contents - Code numbers

032F8255 93
032F8256 93
032F9506 93
032F9508 93
032F9510 93
032F9511 93
032F9512 93
032F9513 93
032F9514 93
032F9515 93
032F9516 93
032F9517 93
032F9518 93
032F9519 93
032F9521 93
032F9522 93
032F310231 89
032F310331 89
032F310332 89
032F620831 89
032F621231 89
032F621331 89
032F621332 89
032F621731 89
032F621732 89
032F621831 89
032F621832 89
032F622231 89
032F622331 89
032F622332 89
032F803432 89
032L1004 77
032L1004 82
032L1103 77
032L1103 82
032L1104 77
032L1104 82
032L1105 77
032L1105 82
032L1106 77
032L1106 82
032L1107 77
032L1107 82
032L1108 77
032L1108 82
032L1109 77
032L1109 82
032L1110 77
032L1110 82
032L1111 77
032L1111 82
032L1112 77
032L1112 82
032L1113 77
032L1113 82
032L1114 77
032L1114 82
032L1180 77
032L1180 82
032L1181 77
032L1181 82
032L1188 77
032L1188 82
032L1209 77
032L1209 82
032L1212 77
032L1212 82
032L1213 77
032L1213 82
032L1214 77
032L1214 82
032L1217 77
032L1217 82
032L1218 77
032L1218 82
032L1224 79
032L1224 84
032L1225 77
032L1225 82
032L1227 77
032L1227 82
032L1228 77
032L1228 82
032L1234 79
032L1234 84
032L1236 77
032L1236 82
032L1240 77
032L1240 82
032L1243 79
032L1243 84
032L1244 77
032L1244 82
032L1245 77
032L1245 82
032L1253 79
032L1253 84
032L1254 77
032L1254 82
032L1255 79
032L1258 79
032L1260 78
032L1260 83
032L1269 78
032L1269 83
032L1279 78
032L1279 83
032L1290 78
032L1290 83
032L1291 78
032L1291 83
032L1295 78
032L1295 83
032L1296 78
032L1296 83
032L1299 78
032L1299 83
032L2200 77
032L2200 82
032L2201 77
032L2201 82
032L2205 77
032L2205 82
032L2206 77
032L2206 82
032L2207 77
032L2207 82
032L2208 77
032L2208 82
032L3267 77
032L3267 82
032L3268 78
032L3268 83
032L3270 78
032L3270 83
032L7110 77
032L7110 82
032L7116 77
032L7116 82
032L7117 77
032L7117 82
032L7121 77
032L7121 82
032L7122 77
032L7122 82
032L7125 77
032L7125 82
032L7137 77
032L7137 82
032L7144 77
032L7144 82
032L7145 77
032L7145 82
032L7148 77
032L7148 82
032L7149 77
032L7149 82
032L8072 78
032L8072 83
032L8079 78
032L8079 83
032L8085 78
032L8085 83
032L8090 78
032L8090 83
032L8095 78
032L8095 83
032L8098 78
032L8098 83
032L8100 78
032L8100 83
032L8101 78
032L8101 83
034G0013 51
034G0013 54
034G0013 58
034G0501 50
034G0505 50
034G0507 50
034G0508 50
034G1704 50
034G1705 50
034G1706 50
034G1708 50
034G2600 50
034G2601 50
034G2602 50
034G2611 50
034G2850 168
034G2851 168
034G2852 168
034G2858 168
034G3500 50
034G3501 50
034G4200 50
034G4201 50
034G4202 50
034G4203 50
034G4204 50
034G4205 50
034G4206 50

034G4207 50
034G4208 50
034G4209 50
034G4210 50
034G4211 50
034G4212 50
034G4213 50
034G4214 50
034G4215 50
034G4252 168
034G4253 168
034G5005 45
034G5005 45
034G5015 45
034G5015 45
034G5026 45
034G5026 45
034G5035 45
034G5035 45
034G5055 45
034G5055 45
034G5065 45
034G5065 45
034G5095 45
034G5095 45
034G5105 46
034G5115 46
034G5135 46
034G5145 46
034G5175 46
034G5185 46
034G7073 42
034G7073 51
034G7073 58
034G7073 168
034G7074 42
034G7074 51
034G7074 58
034G7074 168
034G7500 42
034G7501 42
034G7502 42
034G7900 42
034G7901 42
034G7902 42
034L0021 147
034L0022 147
034L0023 147
034L0025 147
034L0026 147
034L0028 147
034L0029 147
034L0031 147
034L0032 147
034L0041 149
034L0042 149
034L0043 149
034L0045 149
034L0046 149
034L0048 149
034L0049 149
034L0051 149
034L0052 149
034L0091 145
034L0092 145
034L0093 145
034L0094 145
034L0095 145
034L0096 145
034L0097 145
034L0099 145
034L0100 145
034L0141 153
034L0142 153
034L0143 153
034L0144 153
034L0146 153
034L0147 153
034L0171 151
034L0172 151
034L0173 151
034L0176 151
034L0177 151
034N0081 155
034N0082 155
034N0083 155
034N0084 155
040B0010 385
040B0010 + 2 × 040B0132 385
040B0010 + 2 × 040B0134 385
040B0010 + 2 × 040B0136 385
040B0010 + 2 × 040B0140 385
040B0010 + 2 × 040B0142 385
040B0010 + 2 × 040B0144 385
040B0023 385
040B0029 385
040B0040 385
040B0040 + 2 × 040B0256 385
040B0040 + 2 × 040B0264 385
040B0040 + 2 × 040B0266 385
040B0040 + 2 × 040B0268 385
040B0040 + 2 × 040B0270 385
040B0040 + 2 × 040B0274 385
042H1126 89
042H1127 89
042H1128 89
042H1129 89
042H1131 89
042H1132 89
042H1140 89
042H1141 89
042H1142 89
042H1143 89
042H2020 67
042H2020 67
042H2021 67
042H2022 67
042H2022 67
042H2023 67
042H2024 67
042H2025 67
042H2026 67
042H2027 67
042H2027 67
042H2028 67
042H2029 67
042H2029 67
042H2030 67
042H2101 71
042H2102 71
042H2103 71
042H2104 71
042H2105 71
042N0156 61
042N0156 65
042N0156 95
042N0156 99
042N0265 61
042N4201 95
042N4202 61
042N4202 95
042N4203 95
042N4230 95
042N4233 95
042N7601 61
042N7601 94
042N7602 94
042N7608 94
042N7651 94
042N7662 94
042N7687 95
042N7696 95
042N7697 95
042N8201 95
042N8202 95
042N8203 95
042N8230 95
042N8233 95
042N8236 95
042N8651 94
042N8652 94
042N8686 95
042N8687 95
042N8696 95
042N8697 95
060-001066 123
060-1067 139
060-1090 139
060-1090 139
060-1096 139
060-5393 754
060-5393 754
060-5393 754
060-5393 754
060-5393 754
060-5393 754
060-5393 754
060-5393 754
060-5393 756
060-5393 756
060-5393 756
060-5393 756
060-5393 756
060-5393 756
060-5393 756
060-5393 756
060-5393 756
060-5393 756
060-5393 756
060-5393 756
060-5393 756
060-5393 756
060-5393 756
060-5393 756
060-5393 756
060-5393 756
060-5393 756
060-5393 756

Table of contents - Code numbers

060-5393 756
060-5393 756
060-5393 756
060-5393 756
060-017166 158
060-110166 123
060-110166 124
060-110366 123
060-110366 124
060-110966 123
060-110966 124
060-111066 124
060-111066 123
060-111166 123
060-111266 123
060-112066 123
060-112066 124
060-112366 124
060-112366 123
060-114166 123
060-114866 123
060-115366 125
060-115466 123
060-116066 125
060-116166 125
060-116266 125
060-117166 123
060-117366 123
060-117766 123
060-117966 123
060-118066 123
060-119066 124
060-119166 124
060-119266 124
060-120066 124
060-120366 124
060-120566 125
060-122066 123
060-123066 125
060-123166 125
060-124166 123
060-124366 123
060-124566 123
060-125466 123
060-126166 123
060-126466 123
060-126566 123
060-126766 124
060-126866 124
060-127466 124
060-127566 124
060-127666 124
060-128366 125
060-128466 123
060-129366 125
060-129466 125
060-129566 125
060-129666 125
060-129966 123
060-519066 124
060-519166 124
060-530066 125
060-530266 125
060-530466 125
060-530666 125
060-539766 757
060-539766 757
060-539766 757
060-539766 757
060-539766 757
060-539766 757
060-539766 757
060-539766 757
060-539766 757
060-539766 757
060-539766 757
060-539766 758
060-539766 758
060-539766 758
060-539766 758
060-539766 758
060-539766 758
060-539766 758
060-539766 758
060-539766 758
060-539766 758
060-539766 758
060-539766 758
060-539766 758
060-539766 758
060-539766 758
060-539766 758
060-539766 758
060-539766 758
060-539766 758
060-539766 759
060-539766 759
060-539766 759
060-539766 759
060-539766 759
060-539766 787
060-539766 787
060-539766 787
060-539766 787
060-539766 787
060-539766 787
060-539766 787
060-539766 788
060-539766 788
060-539766 788
060-539766 788
060-539766 788
060-539766 788
060-539766 788
060-539766 789
060-539766 789
060-539766 789
060-539766 789
060-539766 789
060-539766 789
060-539766 789
060-539766 789
060-539766 789
060-539766 790
060-539766 790
060-539766 790
060-539766 790
060-539766 790
060-539766 790
060-539766 790
060-539766 790
060-539766 790
060-539766 791
060-539766 791
060-539766 791
060-539766 791
060-539766 791
060-539766 791
060-539766 791
060-539766 791
060-539766 791
060-539766 791
060-539766 793
060-539766 124
060B013366 127
060B016666 127
060B016766 127
060B016866 127
060B016966 127
060B017066 127
060B017166 127
060B017266 127
060B017366 127
060B017466 127
060B017566 127
060B017666 127
060B017766 127
060B017866 127
060B017966 127
060B018266 127
060B018366 127
060B018466 127
060B018566 127
060B029666 127
060B029766 127
060B029866 127
060B029966 127
060B200266 127
060B200366 127
060B200666 127
060B200766 127
060B200866 127
060B201266 127
060B205066 127
060B205366 127
060B205466 127
060B205766 127
060B530066 128
060G0008 477
060G0090 477
060G1034 477
060G1036 427
060G1036 477
060G1038 477
060G1041 477
060G1066 477
060G1323 427
060G1323 477
060G1327 477
060G1896 477
060G2045 477
060G2048 477
060G2049 427
060G2049 477
060G2051 477
060G2069 477
060G2071 477
060G2104 477
060G2105 477
060G2107 477
060G3551 477

060G3552 477
060G3899 477
060G3958 477
060G5750 477
060G5751 477
060G5752 477
060G5846 477
060G5961 477
060G5962 477
060G6156 477
060G6157 477
060G6323 477
060G6339 477
060G6340 477
060G6341 477
060H1501 139
060H1502 139
060H1502 139
060H1503 139
060H1505 139
060H1506 139
060H1508 139
060H1605 139
060L110066 137
060L110166 137
060L110266 137
060L110366 137
060L110466 137
060L110566 137
060L110666 137
060L110766 137
060L110866 137
060L111066 137
060L111166 137
060L111266 137
060L111366 137
060L111566 137
060L111766 137
060L111866 137
060L112066 137
060L112166 137
060L112266 137
060L112566 137
060L112666 137
060L112866 137
060L113166 137
060L113766 137
060L113866 137
060L114066 137
060L114366 137
060L115566 137
060L116866 137
061F6701 753
061F6701 753
061F6701 753
061F6701 753
061F6701 753
061F6701 753
061F6701 753
061F7400 131
061F7402 131
061F7418 131
061F7504 131
061F7505 131
061F7506 131
061F7507 131
061F7508 131
061F7509 131
061F7510 131
061F7513 131
061F7514 131
061F7515 131
061F7516 131
061F7517 131
061F7518 131
061F7519 131
061F7520 131
061F7521 131
061F7522 131
061F7523 131
061F7524 131
061F7525 131
061F7526 131
061F7959 753
061F7959 753
061F7959 753
061F7959 753
061F7959 753
061F7959 753
061F7959 753
061F8333 131
061F8334 131
061F8490 131
061F8491 131
061F8492 131
061F8493 131
061F8494 131
061F8700 131
061F8701 131
061F8704 131
061F8705 131
061F8706 131
061F8707 131
061F8708 131
061F8710 131
061F9052 131
061F9053 131
061F9054 131
061F9055 131
061F9056 131
061F9057 131
061F9058 131
061F9102 131
061F9106 131
061F9242 131
061F9243 131
061F9522 131
061F9575 131
061F9703 131
061F9713 131
061F9714 131
061F9808 132
061F9809 132
061F9810 132
061F9811 132
061F9812 132
061F9813 132
061F9908 132
061F9909 132
061F9910 132
061H3003 403
061H3005 403
061H3006 403
061H3008 403
061H3009 403
061H3021 403
061H3022 403
061H3023 403
061H3028 403
061H3050 403
061H3102 403
061H3140 403
061H3140 787
061H3140 787
061H3140 787
061H3140 787
061H3140 787
061H3140 787
061H3140 787
061H3140 787
061H3140 788
061H3140 788
061H3140 788
061H3140 788
061H3140 788
061H3140 788
061H3140 789
061H3140 789
061H3140 789
061H3140 789
061H3140 789
061H3140 789
061H3140 789
061H3140 790
061H3140 790
061H3140 790
061H3140 790
061H3140 790
061H3140 790
061H3140 790
061H3140 790
061H3140 790
061H3140 791
061H3140 791
061H3140 791
061H3140 791
061H3140 791
061H3140 791
061H3140 791
061H3140 791
061H3140 791
061H3140 791
061H3140 793
061H3142 403
061H3142 787
061H3142 787
061H3142 787
061H3142 787
061H3142 787
061H3142 787
061H3142 788
061H3142 788
061H3142 788
061H3142 788
061H3142 788
061H3142 788
061H3142 789
061H3142 789

Table of contents - Code numbers

061H3142 789
061H3142 789
061H3142 789
061H3142 789
061H3142 789
061H3142 789
061H3142 789
061H3142 790
061H3142 790
061H3142 790
061H3142 790
061H3142 790
061H3142 790
061H3142 790
061H3142 790
061H3142 790
061H3142 791
061H3142 791
061H3142 791
061H3142 791
061H3142 791
061H3142 791
061H3142 791
061H3142 791
061H3142 791
061H3142 793
061H3144 403
061H3144 757
061H3144 757
061H3144 757
061H3144 757
061H3144 757
061H3144 757
061H3144 757
061H3144 757
061H3144 757
061H3144 757
061H3144 757
061H3144 758
061H3144 758
061H3144 758
061H3144 758
061H3144 758
061H3144 758
061H3144 758
061H3144 758
061H3144 758
061H3144 758
061H3144 758
061H3144 758
061H3144 758
061H3144 758
061H3144 758
061H3144 758
061H3144 759
061H3144 759
061H3144 759
061H3144 759
061H3144 759
061H3144 787
061H3144 787
061H3144 787
061H3144 787
061H3144 787
061H3144 787
061H3144 788
061H3144 788
061H3144 788
061H3144 788
061H3144 788
061H3144 788
061H3144 788
061H3144 789
061H3144 789
061H3144 789
061H3144 789
061H3144 789
061H3144 789
061H3144 789
061H3144 789
061H3144 789
061H3144 789
061H3144 790
061H3144 790
061H3144 790
061H3144 790
061H3144 790
061H3144 790
061H3144 790
061H3144 790
061H3144 790
061H3144 790
061H3144 790
061H3144 790
061H3144 791
061H3144 791
061H3144 791
061H3144 791
061H3144 791
061H3144 791
061H3144 791
061H3144 791
061H3144 793
061H3160 403
061H3162 403
061H3240 403
061H3242 403
061H3245 403
061H3246 403
061H3247 403
061H3260 403
061H5115 483
061H5116 483
061H5117 483
061H5118 483
061H5119 483
061H5132 483
061H5133 483
061H5134 483
061H5135 483
061H5136 483
061L1143 117
061L1144 117
061L1145 117
061L1146 117
061L1147 117
061L1148 117
061L1149 117
061L1151 117
061L1152 117
061L1154 117
061L1155 117
061L1156 117
061L1158 117
061L1160 117
061L1188 117
061L1195 117
061L1206 117
061L1207 117
061L1208 117
061L1209 117
061L1217 117
061L1218 117
061L1219 117
061L1223 117
061L1224 117
061L1225 117
061L1278 117
061L1279 117
061L1280 117
061L1281 117
061L1282 117
061L1284 117
061L1285 117
061L1286 117
061L1287 117
061L2038 117
061L2074 117
061L2092 117
061L2093 117
061L2094 117
061L2095 117
061L2125 117
067B2512 13
067B2708 14
067B2709 14
067B2710 14
067B2771 14
067B2773 14
067B2788 14
067B2789 14
067B2790 14
067B2791 14
067B2792 14
067B3207 12
067B3209 12
067B3210 12
067B3211 12
067B3212 12
067B3213 12
067B3225 12
067B3227 12
067B3232 12
067B3233 12
067B3238 11
067B3249 12
067B3250 12
067B3251 12
067B3252 13
067B3253 12
067B3263 12
067B3267 12
067B3273 12
067B3274 12
067B3275 12
067B3276 12
067B3277 12

067B3278 12
067B3286 12
067B3287 12
067B3290 12
067B3292 12
067B3293 12
067B3294 13
067B3297 12
067B3298 12
067B3342 11
067B3343 11
067B3344 11
067B3345 11
067B3346 11
067B3347 11
067B3348 11
067B3349 11
067B3350 11
067B3351 11
067B3352 11
067B3353 11
067B3354 11
067B3355 11
067B3356 11
067B3357 11
067B3358 11
067B3363 12
067B3366 12
067B3367 12
067B3368 11
067B3370 12
067B3371 12
067B3372 12
067B3380 11
067B3381 11
067B3384 11
067B3392 11
067B3420 12
067B3430 12
067B3501 13
067B3502 13
067B3503 13
067B3504 13
067B3531 13
067B3532 13
067B3533 13
067B3560 13
067B3561 13
067B3562 13
067B3600 13
067B3601 13
067B3602 13
067B3603 13
067B3651 13
067B3652 13
067B3680 13
067B3681 13
067B4002 15
067B4003 15
067B4004 15
067B4005 15
067B4007 15
067B4008 15
067B4009 15
067B4010 15
067B4011 15
067B4012 15
067B4013 15
067B4015 15
067B4016 15
067B4016 15
067B4017 15
067B4017 15
067B4020 15
067B4021 15
067B4021 15
067B4022 15
067B4023 15
067B4023 15
067B4025 15
067B4026 15
067B4027 15
067B4032 15
067B4033 15
067B4034 15
067B4035 15
067B4036 15
067B4037 15
067G2701 14
067G2704 14
067G2705 14
067G2707 14
067G2710 14
067G3205 12
067G3206 12
067G3207 12
067G3209 12
067G3217 12
067G3219 13
067G3220 12
067G3222 12
067G3223 12
067G3230 12
067G3240 12
067G3241 12
067G3301 11
067G3302 11
067G3303 11
067G3304 11
067G3305 11
067G3306 11
067G3500 13
067G3600 13
067G3601 13
067G4001 15
067G4002 15
067G4003 15
067G4004 15
067N0551 26
067N0557 13
067N0557 26
067N0559 13
067N0559 26
067N2000 18
067N2001 18
067N2002 18
067N2003 18
067N2005 18
067N2006 18
067N2007 18
067N2008 18
067N2009 18
067N2010 18
067N2011 18
067N2012 18
067N2013 18
067N2014 18
067N2015 18
067N2016 18
067N2017 18
067N2018 18
067N2019 18
067N2150 17
067N2151 17
067N2152 17
067N2153 17
067N2154 17
067N2155 17
067N2156 17
067N2157 17
067N2158 17
067N2159 17
067N2160 17
067N2161 17
067N2162 17
067N2163 17
067N2164 17
067N2165 17
067N2167 17
067N2168 17
067N2169 17
067N2194 17
067N2196 17
067N2197 17
067N2198 17
067N2200 17
067N2251 17
067N2255 17
067N2263 17
067N2281 17
067N2283 17
067N2460 17
067N2700 18
067N2701 18
067N2720 17
067N2721 17
067N2722 17
067N3000 24
067N3001 24
067N3002 24
067N3003 24
067N3005 24
067N3006 24
067N3007 24
067N3008 24
067N3009 24
067N3010 24
067N3011 24
067N3012 24
067N3013 24
067N3015 24
067N3018 24
067N3019 24
067N3135 24
067N3150 23
067N3151 23
067N3152 23
067N3153 23
067N3154 23
067N3155 23
067N3156 23

Table of contents - Code numbers

067N3157 23
067N3158 23
067N3159 23
067N3160 23
067N3161 23
067N3162 23
067N3163 23
067N3164 23
067N3165 23
067N3166 23
067N3168 23
067N3169 23
067N3231 23
067N3232 23
067N3234 23
067N3293 23
067N3296 23
067N3340 24
067N3341 24
067N3400 23
067N3401 24
067N3402 24
067N3410 23
067N3411 23
067N4000 22
067N4002 22
067N4003 22
067N4004 22
067N4006 22
067N4007 22
067N4009 22
067N4010 22
067N4011 22
067N4013 22
067N4015 22
067N4017 22
067N4019 22
067N4041 22
067N4046 22
067N4047 22
067N4151 21
067N4152 21
067N4153 21
067N4156 21
067N4157 21
067N4159 21
067N4161 21
067N4162 21
067N4163 21
067N4165 21
067N4167 21
067N4169 21
067N4191 21
067N4192 21
067N4193 21
067N4196 21
067N4197 21
067N4236 21
067N4400 22
067N4401 22
067N4410 21
067N4411 21
067N4700 22
067N4701 22
067N4702 22
067N4703 22
067N4704 22
067N5000 19
067N5002 19
067N5003 19
067N5005 19
067N5006 19
067N5007 19
067N5008 19
067N5009 19
067N5011 19
067N5013 19
067N5015 19
067N5018 19
067N5019 19
067N5043 19
067N5047 19
067N5150 19
067N5152 19
067N5153 19
067N5154 19
067N5156 19
067N5157 19
067N5159 19
067N5161 19
067N5162 19
067N5163 19
067N5165 19
067N5166 19
067N5167 19
067N5168 19
067N5169 19
067N5191 19
067N5192 19
067N5195 19
067N5196 19
067N5260 19
067N5700 19
067N5720 19
067N5721 19
067N6150 25
067N6151 25
067N6154 25
067N6155 25
067N6158 25
067N6161 25
067N6162 25
067N6167 25
067N6170 25
067N6172 25
067N6173 25
067N6175 25
067N6181 25
067N6186 25
067N6187 25
067N6188 25
067N6300 25
067N6301 25
067N7002 20
067N7003 20
067N7004 20
067N7008 20
067N7010 20
067N7012 20
067N7013 20
067N7015 20
067N7016 20
067N7017 20
067N7018 20
067N7019 20
067N7020 20
067N7021 20
067N7046 20
067N7150 20
067N7153 20
067N7154 20
067N7157 20
067N7158 20
067N7160 20
067N7161 20
067N7163 20
067N7164 20
067N7165 20
067N7166 20
067N7167 20
067N7168 20
067N7169 20
067N7171 20
067N7174 20
067N7176 20
067N7177 20
067N7181 20
067N7200 20
067N7201 20
067N7203 20
067N7210 20
067N7211 20
067N7212 20
067N7400 21
067N7401 21
067N7402 21
067N7403 21
067N8001 26
067N8002 26
067N8003 26
067N8004 26
067N8005 26
067N8301 165
067N8305 165
067N8311 165
067N8312 165
067N8315 165
067N9100 25
067N9103 25
067N9104 25
067N9105 25
067N9106 25
067N9107 25
067N9109 25
067N9200 24
067N9201 24
067N9202 24
067N9203 24
067N9206 24
067N9207 24
067N9209 24
067N9210 24
067N9212 24
067N9213 24
067N9215 24
067N9216 24
067N9218 24
067N9219 24
067N9287 24
067N9289 24
067N9404 18

067N9406 18
067N9407 18
067N9409 18
067N9412 18
067N9413 18
067N9415 18
067N9418 18
067N9419 18
067N9509 24
067N9512 24
068-0003 9
068-0015 9
068-2002 9
068-2003 9
068-2006 9
068-2007 9
068-2008 9
068-2009 9
068-2010 9
068-2015 9
068-2060 9
068-2061 9
068-2062 9
068-2063 9
068-2089 9
068-2090 9
068-2091 9
068-2092 9
068-2093 9
068-2094 9
068-2095 9
068-2096 9
068-4100 9
068-4101 9
068F3261 71
068F3262 71
068F3263 71
068F3264 71
068F3265 71
068F3266 71
068F3267 71
068F3268 71
068F3281 71
068F3282 71
068F3283 71
068F3284 71
068F3285 71
068F3286 71
068F4034 64
068F4035 64
068F4036 64
068F4037 64
068F4044 64
068F4045 64
068F4046 64
068F4047 64
068F5000 67
068F5001 67
068F5005 67
068F5006 67
068F5010 67
068F5010 67
068F5015 67
068F5016 67
068F5020 71
068F5023 71
068F5026 71
068F5029 71
068F5151 64
068F5152 64
068F5153 64
068F5154 64
068F5155 64
068F5156 64
068F5161 64
068F5174 64
068F5175 64
068F5176 64
068F5184 64
068F5185 64
068F5186 64
068F5200 64
068F5201 64
068F5202 64
068F5203 64
068F5204 64
068F5205 64
068F5206 64
068F5207 64
068F5210 64
068F5211 64
068F5212 64
068F5213 64
068F5214 64
068F5215 64
068F5216 64
068F5217 64
068F5220 64
068F5221 64
068F5222 64
068F5223 64
068F5224 64
068F5225 64
068F5226 64
068F5230 64
068F5231 64
068F5232 64
068F5233 64
068F5234 64
068F5235 64
068F5236 64
068U1030 31
068U1031 31
068U1032 31
068U1033 31
068U1034 31
068U1035 31
068U1036 31
068U1037 31
068U1038 31
068U1039 31
068U1131 31
068U1132 31
068U1133 31
068U1134 31
068U1135 31
068U1136 31
068U1137 31
068U1138 31
068U1139 31
068U1714 31
068U1901 36
068U1903 36
068U1904 36
068U1905 36
068U1906 36
068U1907 36
068U1908 36
068U1909 36
068U1912 36
068U1913 36
068U1914 36
068U1915 36
068U1916 36
068U1917 36
068U1918 36
068U1919 36
068U1935 36
068U1936 36
068U1937 36
068U1938 36
068U1939 36
068U1958 36
068U1959 36
068U1960 36
068U1961 36
068U1962 36
068U1963 36
068U1973 36
068U1974 36
068U1975 36
068U2000 38
068U2001 38
068U2002 38
068U2003 38
068U2004 38
068U2005 38
068U2009 38
068U2010 38
068U2011 38
068U2012 38
068U2013 38
068U2014 38
068U2015 38
068U2016 38
068U2017 38
068U2020 38
068U2021 38
068U2022 38
068U2023 38
068U2024 38
068U2025 38
068U2026 38
068U2027 38
068U2028 38
068U2029 38
068U2030 38
068U2031 38
068U2032 38
068U2057 36
068U2058 36
068U2059 36
068U2060 36
068U2061 36
068U2062 36
068U2063 36
068U2064 36
068U2071 36
068U2072 36
068U2073 36
068U2074 36

Table of contents - Code numbers

068U2075 36
068U2076 38
068U2077 38
068U2078 38
068U2079 38
068U2080 38
068U2086 38
068U2087 38
068U2088 38
068U2089 38
068U2090 38
068U2091 38
068U2092 38
068U2093 38
068U2094 38
068U2095 38
068U2096 38
068U2097 38
068U2098 38
068U2099 38
068U2103 38
068U2104 38
068U2105 38
068U2106 38
068U2107 38
068U2108 38
068U2109 38
068U2110 38
068U2111 38
068U2200 30
068U2201 30
068U2202 30
068U2203 30
068U2204 30
068U2205 30
068U2206 30
068U2207 30
068U2208 30
068U2211 30
068U2212 30
068U2213 30
068U2214 30
068U2215 30
068U2230 30
068U2231 30
068U2233 30
068U2234 30
068U2235 30
068U2236 30
068U2237 30
068U2241 30
068U2245 30
068U2280 30
068U2281 30
068U2282 30
068U2283 30
068U2284 30
068U2285 30
068U2286 30
068U2287 30
068U2292 30
068U2293 30
068U2295 30
068U2296 30
068U2299 30
068U2300 30
068U2303 30
068U2308 30
068U2309 30
068U2312 30
068U2315 30
068U2316 30
068U2317 30
068U2318 30
068U2319 30
068U2320 31
068U2321 31
068U2322 31
068U2323 31
068U2324 31
068U2325 31
068U2326 31
068U2327 31
068U2330 31
068U2331 31
068U2332 31
068U2333 31
068U2335 31
068U2414 31
068U2660 38
068U2780 31
068U2950 163
068U2951 163
068U2953 163
068U2954 163
068U2958 163
068U2959 163
068U2960 163
068U2961 163
068U2966 163
068U3507 9
068U3507 33
068U3508 9
068U3508 33
068U3701 37
068U3702 37
068U3703 37
068U3704 37
068U3705 37
068U3706 37
068U3707 37
068U3708 37
068U3709 37
068U3710 37
068U3712 37
068U3713 37
068U3714 37
068U3715 37
068U3716 37
068U3717 37
068U3718 37
068U3719 37
068U3720 37
068U3721 37
068U3731 37
068U3732 37
068U3733 37
068U3734 37
068U3735 37
068U3746 163
068U3747 163
068U3748 163
068U3749 163
068U3750 163
068U3751 163
068U4097 33
068U4098 33
068U4099 33
068U4100 33
068U4101 33
068U4102 33
068U4201 39
068U4202 39
068U4204 39
068U4205 39
068U4207 39
068U4213 39
068U4217 39
068U4218 39
068U4219 39
068U4225 39
068U4226 39
068U4231 39
068U4234 39
068U4235 39
068U4244 39
068U4246 39
068U4247 39
068U4249 39
068U4250 39
068U4251 39
068U4253 39
068U4254 39
068U4256 39
068U4257 39
068U4258 39
068U4259 39
068U4260 39
068U4261 39
068U4262 39
068U4263 39
068U4264 39
068U4265 39
068U4266 39
068U4267 39
068U4270 39
068U4273 39
068U4274 39
068U4275 39
068U4279 39
068U4280 32
068U4281 32
068U4283 32
068U4292 32
068U4293 32
068U4295 32
068U4296 32
068U4297 32
068U4299 32
068U4304 32
068U4305 32
068U4307 32
068U4308 32
068U4309 32
068U4310 32
068U4313 32
068U4314 32
068U4315 32
068U4317 32
068U4319 32
068U4321 32

068U4322 32
068U4324 32
068U4325 32
068U4326 32
068U4327 32
068U4328 32
068U4329 32
068U4331 32
068U4336 32
068U4337 32
068U4339 32
068U4341 32
068U4343 32
068U4383 39
068U4384 39
068U4385 39
068U4386 39
068U4387 39
068U4388 39
068U4528 163
068U4529 163
068U4530 163
068U4531 163
068U4534 163
068U4535 163
068U4537 163
068U4540 163
068U4546 163
068U4547 163
068U4548 163
068U4549 163
068U4558 163
068U4559 163
068U4560 163
068U4576 163
068U4577 163
068U4578 163
068U4579 163
068U4580 163
068U4581 163
068U4583 163
068U4584 163
068U4585 163
068U4586 163
068U4587 163
068U4588 163
068U4589 163
068Z3206 7
068Z3207 7
068Z3208 7
068Z3209 7
068Z3210 7
068Z3211 7
068Z3224 7
068Z3225 7
068Z3226 7
068Z3227 7
068Z3228 7
068Z3229 7
068Z3281 8
068Z3284 8
068Z3287 8
068Z3290 8
068Z3302 8
068Z3305 8
068Z3308 8
068Z3311 8
068Z3329 8
068Z3346 7
068Z3347 7
068Z3348 7
068Z3349 7
068Z3357 8
068Z3359 8
068Z3361 8
068Z3363 8
068Z3367 8
068Z3369 7
068Z3370 7
068Z3383 8
068Z3384 8
068Z3385 8
068Z3386 8
068Z3387 8
068Z3388 8
068Z3389 8
068Z3390 8
068Z3392 7
068Z3393 7
068Z3400 7
068Z3401 7
068Z3402 7
068Z3403 7
068Z3404 7
068Z3405 7
068Z3406 7
068Z3407 7
068Z3408 7
068Z3409 7
068Z3410 7
068Z3411 7
068Z3414 8
068Z3415 8
068Z3416 8
068Z3417 8
068Z3418 8
068Z3419 8
068Z3420 8
068Z3421 8
068Z3422 8
068Z3423 8
068Z3424 8
068Z3425 8
068Z3426 8
068Z3427 8
068Z3428 8
068Z3429 8
068Z3430 8
068Z3435 8
068Z3436 8
068Z3437 8
068Z3446 8
068Z3447 8
068Z3496 7
068Z3501 7
068Z3502 8
068Z3503 8
068Z3514 8
068Z3515 8
068Z3516 7
068Z3517 7
068Z3713 8
068Z3714 7
068Z3715 7
068Z3716 8
068Z3727 7
068Z3728 7
068Z3729 8
068Z3730 8
068Z3806 8
068Z3807 8
068Z3808 8
068Z3809 8
069G4001 155
069G4002 155
069G4003 155
069G4004 155
075G17012 478
075G17013 478
075G17014 478
075G17015 478
075G17016 478
075G17017 478
075G17018 478
075G17019 478
075G17020 478
075G17021 478
077B0020 141
077B0021 141
077B0025 141
077B0027 141
077B0028 141
077B0033 141
077B0102 141
077B0155 141
077B0220 141
077B2020 141
077B2077 141
077B6021 141
077B6208 141
077B6220 141
077B6321 141
077B6476 141
077B7001 141
077B7001 142
077B7002 142
077B7002 141
077B7003 141
077B7003 142
077B7004 141
077B7004 142
077B7005 141
077B7005 142
077B7006 141
077B7006 142
077B7007 142
077B7007 141
077B7008 141
077B7008 142
080G0073 429
080G0075 439
080G0075 441
080G0076 439
080G0076 441
080G0281 405
080G0281 439
080G0282 439
080G0283 405
080G0283 439
080G0288 439
080G0289 405

Table of contents - Code numbers

080G0289 437
080G0294 58
080G0294 425
080G0294 429
080G0294 431
080G0294 439
080G0294 441
080G0294 443
080G0294 445
080G0294 447
080G0294 449
080G0295 425
080G0295 449
080G0297 425
080G0297 449
080G0312 405
080G0312 441
080G3290 404
080G3290 435
080G3291 404
080G3291 435
080G3292 404
080G3292 435
080G3293 404
080G3293 435
080G3294 404
080G3294 435
080G3295 404
080G3295 435
080G5000 405
080G5000 431
080G5300 58
080G5300 404
080G5300 429
080G5350 58
080G5350 404
080G5350 429
080G5400 58
080G5400 404
080G5400 429
080Z0007 406
080Z0007 425
080Z0007 443
080Z0007 445
080Z0007 447
080Z0007 449
080Z0008 406
080Z0008 425
080Z0008 443
080Z0008 445
080Z0008 447
080Z0008 449
080Z0010 406
080Z0010 425
080Z0010 443
080Z0010 445
080Z0010 447
080Z0010 449
080Z0011 406
080Z0011 425
080Z0011 443
080Z0011 445
080Z0011 447
080Z0011 449
080Z0013 406
080Z0013 425
080Z0013 443
080Z0013 445
080Z0013 447
080Z0013 449
080Z0017 406
080Z0017 425
080Z0017 443
080Z0017 445
080Z0017 447
080Z0017 449
080Z0018 406
080Z0018 425
080Z0018 443
080Z0018 445
080Z0018 447
080Z0018 449
080Z0023 406
080Z0023 425
080Z0023 443
080Z0023 445
080Z0023 447
080Z0023 449
080Z0032 406
080Z0032 425
080Z0032 443
080Z0032 445
080Z0032 447
080Z0032 449
080Z0063 406
080Z0064 425
080Z0064 443
080Z0064 445
080Z0064 447
080Z0064 449
080Z0140 404
080Z0140 425
080Z0161 425
080Z0161 443
080Z0161 445
080Z0161 447
080Z0161 449
080Z0191 405
080Z0191 445
080Z0192 405
080Z0192 447
080Z0193 405
080Z0193 449
080Z0201 405
080Z0201 443
080Z2942 469
080Z2943 469
080Z2944 469
080Z2956 469
080Z2957 469
080Z2958 469
080Z2987 469
080Z2988 469
080Z2989 469
080Z2992 469
080Z2993 469
080Z2994 469
080Z2995 469
080Z2996 469
080Z2997 469
080Z2998 469
080Z2999 469
080Z3200 405
080Z3200 451
080Z3201 405
080Z3201 453
080Z3202 405
080Z3202 453
080Z3206 405
080Z3206 453
080Z3207 405
080Z3207 453
080Z4001 405
080Z4001 455
080Z4004 405
080Z4004 455
080Z4006 405
080Z4006 455
080Z4008 405
080Z4008 455
080Z4014 405
080Z4014 455
084B2238 168
084B4162 404
084B4162 413
084B4163 404
084B4163 413
084B4164 404
084B4164 413
084B4165 404
084B4165 419
084B7069 433
084B7079 404
084B7079 433
084B7085 427
084B7086 404
084B7086 427
084B7088 404
084B7124 427
084B7124 433
084B7128 427
084B7250 404
084B7299 820
084B7299 820
084B7299 820
084B7299 820
084B7299 820
084B7299 820
084B7299 821
084B7299 821
084B7299 821
084B7299 821
084B7299 821
084B7299 822
084B7299 822
084B7299 822
084B7299 822
084B7299 822
084B7299 822
084B7299 822
084B7299 822
084B7299 823
084B7299 823
084B7299 823
084B7299 823
084B7299 823
084B7299 823
084B7299 823

084B7299 823
084B7299 824
084B7299 824
084B7299 824
084B7299 824
084B7299 824
084B7299 824
084B7299 825
084B8022 404
084B8022 421
084B8030 404
084B8030 423
084B8040 404
084B8520 404
084B8520 415
084B8521 404
084B8521 409
084B8522 404
084B8522 409
084B8523 404
084B8523 409
084B8528 404
084B8528 417
084B8543 404
084B8543 409
084B8554 404
084B8554 411
084B8562 411
084B8562 415
084B8562 417
084B8562 419
084B8562 421
084B8562 423
084B8563 421
084B8563 423
084B8564 409
084B8564 411
084B8564 415
084B8565 409
084B8565 411
084B8565 415
084B8567 409
084B8567 411
084B8567 415
084B8567 417
084B8571 413
084B8571 421
084B8571 423
084B8571 820
084B8571 820
084B8571 820
084B8571 820
084B8571 820
084B8571 820
084B8571 820
084B8571 821
084B8571 821
084B8571 821
084B8571 821
084B8571 821
084B8571 822
084B8571 822
084B8571 822

Table of contents - Code numbers

084B8582 822
084B8582 822
084B8582 822
084B8582 822
084B8582 822
084B8582 823
084B8582 823
084B8582 823
084B8582 823
084B8582 823
084B8582 823
084B8582 823
084B8582 823
084B8582 823
084B8582 824
084B8582 824
084B8582 824
084B8582 824
084B8582 824
084B8582 824
084B8582 826
084B8583 421
084B8583 423
084B8584 820
084B8584 820
084B8584 820
084B8584 820
084B8584 820
084B8584 820
084B8584 820
084B8584 821
084B8584 821
084B8584 821
084B8584 821
084B8584 821
084B8584 822
084B8584 822
084B8584 822
084B8584 822
084B8584 822
084B8584 822
084B8584 822
084B8584 822
084B8584 823
084B8584 823
084B8584 823
084B8584 823
084B8584 823
084B8584 823
084B8584 823
084B8584 823
084B8584 824
084B8584 824
084B8584 824
084B8584 824
084B8584 824
084B8584 824
084B8584 826
084H4500 473
084H4501 473
084H4503 473
084H4504 473
084H4505 473
084H4506 473
084H4507 473
084H4508 473
084H4509 473
084H4510 473
084H4511 473
084H4512 473
084H4513 473
084H4514 473
084H4515 473
084H4516 473
084H4517 473
084H4518 473
084H4520 473
084H4521 473
084H4524 473
084H4525 473
084H4526 473
084H4527 473
084H4528 473
084H4529 473
084H4530 473
084H4531 473
084H4532 473
084H4533 473
084H4534 473
084H4535 473
084H4536 473
084H4537 473
084H4540 474
084H4541 474
084H4548 474
084H4550 473
084H4560 473
084H4561 473
084H4562 473
084H4563 473
084H4564 473
084H4565 473
084H4566 473
084H4567 473
084H4571 473
084H4580 473
084H4581 473
084H4582 473
084H4583 473
084H4584 473
084H4585 473
084H4586 473
084H4590 474
084H4598 474
084N0003 427
084N0003 481
084N0003 820
084N0003 820
084N0003 820
084N0003 820
084N0003 820
084N0003 820
084N0003 820
084N0003 821
084N0003 821
084N0003 821
084N0003 821
084N0003 821
084N0003 822
084N0003 822
084N0003 822
084N0003 822
084N0003 822
084N0003 822
084N0003 822
084N0003 822
084N0003 822
084N0003 822
084N0003 823
084N0003 823
084N0003 823
084N0003 823
084N0003 823
084N0003 823
084N0003 823
084N0003 823
084N0003 823
084N0003 824
084N0003 824
084N0003 824
084N0003 824
084N0003 824
084N0003 824
084N0003 824
084N0003 827
084N0003 841
084N0003 841
084N0003 841
084N0003 842
084N0005 481
084N0008 481
084N0036 409
084N0036 411
084N0036 413
084N0036 415
084N0036 417
084N0036 419
084N0036 481
084N0045 481
084N1007 481
084N1178 409
084N1178 411
084N1178 413
084N1178 415
084N1178 417
084N1178 419
084N1178 481
084N1179 481
084N1181 481
084N1182 481
084N1220 409
084N1220 411
084N1220 413
084N1220 415
084N1220 481
084N1221 481
084N2003 481
084N2007 481
084N2007 820
084N2007 820
084N2007 820
084N2007 820
084N2007 820
084N2007 820
084N2007 820
084N2007 821
084N2007 821
084N2007 821
084N2007 821
084N2007 822

084N2007 822
084N2007 822
084N2007 822
084N2007 822
084N2007 822
084N2007 822
084N2007 822
084N2007 822
084N2007 823
084N2007 823
084N2007 823
084N2007 823
084N2007 823
084N2007 823
084N2007 823
084N2007 823
084N2007 824
084N2007 824
084N2007 824
084N2007 824
084N2007 824
084N2007 824
084N2007 826
084N2007 841
084N2007 841
084N2007 841
084N2007 842
084N2008 481
084N2017 481
084N2024 481
084N2035 481
084N3206 409
084N3209 481
084N3210 481
101G0100 491
101G0202 491
101G0220 491
101G0221 491
101G0222 491
101G0250 491
101G0250 495
101G9100 497
101G9202 497
101H0360 509
101Z0200 485
101Z0200 /0204 /0205 /0206 486
101Z0203 485
101Z0204 485
101Z0205 485
101Z0211 485
101Z0211 486
101Z0216 485
101Z0280 485
101Z0280 486
101Z0401 485
101Z0401 486
101Z0403 485
101Z0403 486
101Z0405 485
101Z0405 486
101Z0406 485
101Z0406 486
101Z1220 485
101Z1220 /0203 486
102G3206 497
102G3255 497
102G3300 497
102G3304 497
102G3425 497
102G3431 497
102G3432 497
102G3460 497
102G4200 491
102G4251 491
102G4251 495
102G4300 491
102G4310 491
102G4325 491
102G4350 491
102G4350 495
102G4400 491
102G4410 491
102G4424 491
102G4433 491
102G4452 491
102G4452 495
102G4455 491
102G4455 495
102G4501 491
102G4510 491
102G4520 491
102G4524 491
102G4550 491
102G4550 495
102G4550 756
102G4573 491
102G4610 491
102G4620 491
102G4708 491
102G4708 495
102G4720 491
102G4724 491
102G4724 495
102H3453 509
102H3459 509
102H3482 507
102H3490 507
102H3582 507
102H3590 507
102H3659 509
102H3682 507
102H3792 507
102H4042 509
102H4050 509
102H4082 509
102H4159 509
102H4380 505
102H4436 509
102H4438 509
102H4442 509
102H4447 509
102H4460 505
102H4465 505
102H4490 505
102H4536 509
102H4542 509
102H4565 505
102H4579 509
102H4587 505
102H4588 505
102H4590 505
102H4596 509
102H4636 509
102H4642 509
102H4647 509
102H4653 505
102H4678 505
102H4694 509
102H4737 509
102H4742 509
102H4747 509
102H4765 505
102H4783 509
102H4834 509
102H4836 509
102H4838 509
102H4847 509
102H4853 505
102H4939 509
102H4947 509
102H4950 509
102H4952 509
102U2071 754
102U2114 503
102U2115 503
102Z3015 485
102Z3015 486
102Z3016 485
102Z3016 486
102Z3017 485
102Z3018 485
102Z3020 485
102Z3020 486
102Z3031 485
102Z3031 486
103G5680 497
103G5780 497
103G5880 497
103G5980 497
103G6660 491
103G6660 495
103G6660 756
103G6680 491
103G6680 495
103G6681 756
103G6683 491
103G6683 495
103G6780 491
103G6780 495
103G6780 756
103G6880 491
103G6880 495
103G6880 756
103G6980 491
103G6980 756
103N0011 491
103N0011 491
103N0011 491
103N0011 491
103N0011 491
103N0011 491
103N0011 491
103N0011 491
103N0011 491
103N0011 491
103N0011 491
103N0011 491
103N0011 491
103N0011 491
103N0011 491

Table of contents - Code numbers

103N0011 491
103N0011 491
103N0011 491
103N0011 491
103N0011 491
103N0011 491
103N0011 491
103N0011 491
103N0011 491
103N0011 491
103N0011 491
103N0011 491
103N0011 491
103N0011 491
103N0011 491
103N0011 491
103N0011 491
103N0011 491
103N0011 491
103N0011 491
103N0011 491
103N0011 491
103N0011 493
103N0011 493
103N0011 493
103N0011 493
103N0011 493
103N0011 493
103N0011 493
103N0011 493
103N0011 493
103N0011 493
103N0011 493
103N0011 493
103N0011 493
103N0011 493
103N0011 493
103N0011 493
103N0011 495
103N0011 495
103N0011 495
103N0011 495
103N0011 495
103N0011 495
103N0011 495
103N0011 495
103N0011 495
103N0011 495
103N0011 495
103N0011 495
103N0011 495
103N0011 495
103N0011 495
103N0011 495
103N0011 495
103N0011 495
103N0011 495
103N0011 495
103N0011 495
103N0011 495
103N0011 499
103N0011 505
103N0011 505
103N0011 505
103N0011 505
103N0011 505
103N0011 509
103N0011 509
103N0011 509

103N0018	493
103N0018	493
103N0018	493
103N0018	493
103N0018	493
103N0018	493
103N0018	493
103N0018	493
103N0018	493
103N0018	493
103N0018	495
103N0018	495
103N0018	495
103N0018	495
103N0018	495
103N0018	495
103N0018	495
103N0018	495
103N0018	495
103N0018	495
103N0018	495
103N0018	495
103N0018	495
103N0018	495
103N0018	495
103N0018	495
103N0018	499
103N0018	505
103N0018	505
103N0018	505
103N0018	505
103N0018	505
103N0018	509
103N0018	509
103N0018	509

Table of contents - Code numbers

103N0050 509
103N0050 509
103N0050 509
103N0050 509
103N0050 509
103N0050 509
103N0050 509
103N0050 509
103N0050 509
103N0050 509
103N0050 509
103N0050 509
103N0050 509
103N0050 509
103N0050 509
103N0050 509
103N0050 509
103N0050 509
103N0050 511
103N0050 511
103N0050 511
103N0050 511
103N0050 511
103N0050 511
103N0050 511
103N0050 511
103N0050 511
103N0050 511
103N0055 509
103N0055 509
103N0055 509
103N0055 509
103N0055 509
103N0055 509
103N0055 509
103N0055 509
103N0055 509
103N0055 511
103N0055 511
103N0055 511
103N0055 511
103N0491 491
103N0491 491
103N0491 491
103N0491 491
103N0491 491
103N0491 491
103N0491 495
103N0491 505
103N0491 505
103N0491 505
103N0491 505
103N0491 505
103N0491 505
103N0491 505
103N0491 505
103N0491 509
103N0491 509
103N0491 509
103N0491 509
103N0491 509
103N0491 509
103N0491 509
103N0491 509
103N0491 509
103N0492 497
103N0492 497
103N0492 507
103N0492 507
103N0492 507
103N0492 507
103N1004 493
103N1004 493
103N1004 493
103N1004 493
103N1004 493
103N1004 493
103N1004 493
103N1004 493
103N1004 493
103N1004 493
103N1004 493
103N1004 493
103N1004 493
103N1004 493
103N1004 493
103N1004 493
103N1004 493
103N1004 493
103N1004 493
103N1004 493
103N1004 493
103N1004 493
103N1004 493
103N1004 493
103N1004 493
103N1004 493
103N1004 493
103N1004 493
103N1004 495
103N1004 495
103N1004 495
103N1004 495
103N1004 495
103N1004 495
103N1004 495
103N1004 495
103N1004 495
103N1004 495
103N1004 495
103N1004 495
103N1004 495
103N1004 495
103N1004 495
103N1004 495
103N1004 495
103N1004 495
103N1004 495
103N1004 495
103N1004 495
103N1004 495
103N1004 495
103N1004 495
103N1004 497
103N1004 497
103N1004 497
103N1004 499
103N1004 499
103N1004 499

103N1010	491
103N1010	491
103N1010	491
103N1010	491
103N1010	491
103N1010	491
103N1010	491
103N1010	491
103N1010	491
103N1010	491
103N1010	491
103N1010	491
103N1010	491
103N1010	491
103N1010	491
103N1010	491
103N1010	491
103N1010	491
103N1010	491
103N1010	491
103N1010	491
103N1010	491
103N1010	493
103N1010	493
103N1010	493
103N1010	493
103N1010	493
103N1010	493
103N1010	493
103N1010	493
103N1010	493
103N1010	493
103N1010	493
103N1010	493
103N1010	493
103N1010	493
103N1010	493
103N1010	493
103N1010	493
103N1010	495
103N1010	495
103N1010	495
103N1010	495
103N1010	495
103N1010	495
103N1010	495
103N1010	495
103N1010	495
103N1010	495
103N1010	495
103N1010	495
103N1010	495
103N1010	495
103N1010	495
103N1010	495
103N1010	495
103N1010	495
103N1010	495
103N1010	495
103N1010	495
103N1010	497
103N1010	497
103N1010	497
103N1010	497
103N1010	497
103N1010	497
103N1010	499
103N1010	499
103N1010	499
103N1010	499
103N1010	499
103N1010	499
103N1010	499
103N1010	499
103N1010	499
103N1010	499
103N1010	499
103N1010	499
103N1010	501
103N1010	501
103N1010	505
103N1010	505
103N1010	505

Table of contents - Code numbers

103N2008 497
103N2008 497
103N2008 499
103N2008 499
103N2008 499
103N2008 499
103N2008 501
103N2008 501
103N2008 501
103N2008 501
103N2008 501
103N2008 501
103N2008 501
103N2008 501
103N2008 501
103N2008 501
103N2008 501
103N2008 501
103N2008 501
103N2008 501
103N2008 503
103N2008 503
103N2008 503
103N2008 505
103N2008 505
103N2008 505
103N2008 505
103N2008 507
103N2008 507
103N2009 493
103N2009 493
103N2009 493
103N2009 493
103N2009 493
103N2009 493
103N2009 493
103N2009 493
103N2009 493
103N2009 493
103N2009 493
103N2009 493
103N2009 493
103N2009 493
103N2009 493
103N2009 493
103N2009 493
103N2009 493
103N2009 493
103N2009 493
103N2009 495
103N2009 495
103N2009 495
103N2009 495
103N2009 495
103N2009 495
103N2009 495
103N2009 499
103N2009 499
103N2009 499
103N2009 499
103N2009 499
103N2009 499
103N2009 499
103N2009 499
103N2009 499
103N2009 499
103N2009 499
103N2009 499
103N2009 499
103N2009 499
103N2009 501
103N2009 503
103N2009 503
103N2009 503
103N2009 503
103N2009 503
103N2009 503
103N2009 505
103N2009 505
103N2009 505
103N2009 505
103N2009 505
103N2009 505
103N2009 505
103N2009 505
103N2010 491
103N2010 491
103N2010 491

103N2010 509
103N2010 509
103N2010 509
103N2010 509
103N2010 509
103N2010 509
103N2010 509
103N2010 509
103N2010 509
103N2010 509
103N2010 511
103N2010 511
103N2010 511
103N2010 511
103N2010 511
103N2010 511
103N2010 511
103N2010 511
103N2010 511
103N2010 511
103N2010 511
103N2010 511
103N2010 511
103N2010 511
103N2010 511
103N2011 491
103N2011 491
103N2011 491
103N2011 491
103N2011 491
103N2011 493
103N2011 493
103N2011 493
103N2011 495
103N2011 495
103N2011 495
103N2011 495
103N2011 495
103N2011 495
103N2011 495
103N2011 497
103N2011 497
103N2011 497
103N2011 497
103N2011 497
103N2011 499
103N2011 501
103N2011 501
103N2011 505
103N2011 505
103N2011 507
103N2011 507
103N2011 507
103N2011 507
103N2011 507
103N2011 507
103N2011 507
103N2011 511
103N2011 511
103U2680 756
104G7250 497
104G7505 497
104G7550 497
104G7800 497
104G8000 493
104G8000 495
104G8041 493
104G8041 495
104G8100 493
104G8105 493
104G8106 495
104G8120 493
104G8120 756
104G8140 493
104G8140 495
104G8140 756
104G8143 495
104G8180 493
104G8205 493
104G8205 495
104G8240 493
104G8240 495
104G8240 756
104G8245 495
104G8261 493
104G8261 495
104G8280 493
104G8500 493
104G8501 493
104G8505 493
104G8505 495
104G8520 493
104G8520 495
104G8525 756
104G8526 495
104G8561 493
104G8561 495
104G8580 493
104G8800 493
104G8804 493
104G8804 495
104G8805 493
104G8805 495
104G8820 493
104G8820 495
104G8823 495
104G8860 493
104G8861 493
104G8861 495
104G8880 493
104H7070 507
104H7178 507
104H7270 507
104H7570 507
104H7578 507
104H7579 507
104H7870 507
104H7878 507
104H7879 507
104H8065 505
104H8075 505
104H8160 505
104H8163 505
104H8166 505
104H8265 505
104H8266 505
104H8275 505
104H8565 505
104H8566 505
104H8575 505
104H8865 505
104H8866 505
104H8875 505
104L1503 503
104L1603 503
104L1606 503
104L1696 503
104L1805 503
104L1807 503
104L1853 503
104L2105 503
104L2123 754
104L2138 501
104L2139 756
104L2195 501
104L2198 503
104L2506 501
104L2506 501
104L2525 503
104L2533 501
104L2533 501
104L2606 501
104L2606 501
104L2625 503
104L2695 501
104L2697 501
104L2697 501
104L2697 754
104L2697 754
104L2699 501
104L2803 501
104L2854 501
104L2854 754
104L2856 503
104L2869 756
104L2897 501
104L4034 501
104L4091 503
104L4092 503
104L4093 503
105F1621 503
105F1721 503
105F3611 501
105F3611 501
105F3710 754
105F3720 501
105F3720 501
105F3721 756
105G5623 497
105G5628 497
105G5631 497
105G5720 497
105G5722 497
105G5723 497
105G5728 497
105G5916 497
105G5918 497
105G5920 497
105G5941 497
105G5945 497
105G6055 493
105G6059 493
105G6059 495
105G6156 493
105G6187 493
105G6188 493
105G6197 493
105G6387 493

Table of contents - Code numbers

105G6387 495
105G6388 493
105G6388 495
105G6606 491
105G6620 491
105G6621 491
105G6628 491
105G6628 495
105G6660 491
105G6660 495
105G6660 756
105G6706 491
105G6718 493
105G6726 491
105G6743 491
105G6743 495
105G6772 491
105G6772 495
105G6772 756
105G6802 493
105G6805 493
105G6822 493
105G6828 493
105G6841 491
105G6846 491
105G6846 495
105G6877 756
105G6879 493
105G6879 495
105G6885 493
105G6885 495
105G6888 493
105G6900 493
105G6944 491
105H5942 511
105H5949 511
105H5980 507
105H5981 507
105H6008 509
105H6009 509
105H6010 509
105H6011 509
105H6020 509
105H6071 509
105H6073 505
105H6090 507
105H6093 507
105H6094 507
105H6101 509
105H6104 509
105H6164 507
105H6173 509
105H6174 505
105H6175 505
105H6177 505
105H6179 505
105H6184 509
105H6193 509
105H6194 507
105H6198 509
105H6300 511
105H6304 511
105H6306 511
105H6372 511
105H6377 505
105H6378 505
105H6381 511
105H6502 511
105H6506 511
105H6533 511
105H6553 511
105H6554 511
105H6756 505
105H6790 507
105H6856 505
105H6867 509
105H6880 505
105H6929 511
105H6939 511
105H6948 509
105H6948 511
105H6952 509
105H6966 511
105H6968 511
105H6970 511
105H6977 511
107B0501 754
107B0502 756
107B0505 501
107B0506 501
107B0509 501
107B0700 493
107B0700 756
107B0701 493
107B0701 756
107B0702 493
107B9101 493
107B9101 493
107B9101 493
107B9101 499
107B9101 499
107B9101 499
107B9101 499
107B9101 499
107B9101 501
107B9101 501
107B9106 501
109Z0102 486
109Z0104 485
109Z0200 /0202 /0250 /0251 486
109Z0204 485
109Z0206 485
109Z0250 485
109Z0251 485
111B1817 399
111B1818 399
111B1819 399
111B1820 399
111B1821 399
111B1822 399
111B1823 399
111B1824 399
111B1825 399
111B1826 399
111B1827 399
111B1828 399
111B1829 399
111B1830 399
111B1831 399
111B1832 399
111B1833 399
111B1837 400
111B1838 400
111B1839 400
111B1840 400
111B1841 400
111B1842 400
111B1843 400
111B1844 400
111B1845 400
111B1846 400
111B1847 400
111B1848 400
111B1849 400
111B1850 400
111B1851 400
111B1852 400
111B1853 400
111B2112 398
111B2113 398
111B2114 398
111B2115 398
111B2116 398
111B2117 398
111B2118 398
111B2119 398
111B2120 398
111B2121 398
111B2122 398
111B2123 398
111B2124 398
111B2125 398
111B2126 399
111B2127 399
111B2128 399
111B2129 399
111B2130 399
111B2131 399
111B2132 399
111B2133 399
111B2134 399
111B2135 399
111B2136 399
111B2137 399
114F0201 750
114F0201 753
114F0202 750
114F0202 753
114F0203 750
114F0203 753
114F0204 750
114F0204 753
114F0205 750
114F0205 753
114F0206 750
114F0206 753
114F0307 750
114F0307 753
114F0308 750
114F0308 753
114F0309 750
114F0309 753
114F0410 750
114F0410 753
114F0411 750
114F0411 753
114F0412 750
114F0412 753
114F0413 750
114F0413 753
114F0414 750

114F0414 753
114F0415 750
114F0415 753
114F0416 750
114F0416 753
114F0417 750
114F0417 753
114F0418 750
114F0418 753
114F0619 750
114F0619 753
114F0620 750
114F0620 753
114F0621 750
114F0621 753
114F1201 750
114F1202 750
114F1203 750
114F1204 750
114F1205 750
114F1206 750
114F1307 750
114F1308 750
114F1309 750
114F1410 750
114F1411 750
114F1412 750
114F1413 750
114F1414 750
114F1415 750
114F1416 750
114F1417 750
114F1418 750
114F1419 750
114F1420 750
114F1421 750
114F1622 750
114F1623 750
114F1624 750
114F1625 750
114F1626 750
114F1627 750
114F1628 750
114F1629 750
114F1630 750
114F0202114F0203114F0201 714
114F0205114F0206114F0204 714
114F0308114F0309114F0307 714
114F0411114F0412114F0410 714
114F0414114F0415114F0413 714
114F0417114F0418114F0416 714
114F0620114F0621114F0619 714
114F1202114F1203114F1201 722
114F1205114F1206114F1204 722
114F1308114F1309114F1307 722
114F1411114F1412114F1410 722
114F1414114F1415114F1413 722
114F1417114F1418114F1416 722
114F1420114F1421114F1419 722
114F1623114F1624114F1622 722
114F1626114F1627114F1625 722
114F1629114F1630114F1628 722
114X0104 751
114X0104 756
114X0105 751
114X0105 756
114X0107 751
114X0107 756
114X0108 751
114X0108 756
114X0109 751
114X0109 756
114X0111 751
114X0111 756
114X0112 751
114X0112 756
114X0113 751
114X0113 756
114X0115 751
114X0115 756
114X0200 751
114X0200 756
114X0201 751
114X0201 756
114X0203 751
114X0203 756
114X0204 751
114X0204 756
114X0205 751
114X0205 756
114X0216 751
114X0216 756
114X0217 751
114X0217 756
114X0219 751
114X0219 756
114X0223 724
114X0223 751
114X0223 756
114X0224 751
114X0224 756
114X0225 751
114X0225 756
114X0227 751
114X0227 756
114X0228 723
114X0228 751
114X0228 756
114X0244 723
114X0244 751
114X0244 756
114X0301 751
114X0301 756
114X0302 751
114X0302 756
114X0303 751
114X0303 756
114X0336 751
114X0336 756
114X0337 751
114X0337 756
114X0339 751
114X0339 756
114X0340 751
114X0340 756
114X0341 751
114X0341 756
114X0343 751
114X0343 756
114X0352 724
114X0352 751
114X0352 756
114X0403 751
114X0403 756
114X0404 751
114X0404 756
114X0405 751
114X0405 756
114X0406 751
114X0406 756
114X0407 751
114X0407 756
114X0408 751
114X0408 756
114X0448 751
114X0448 756
114X0449 751
114X0449 756
114X0451 751
114X0451 756
114X0556 751
114X0556 756
114X0557 751
114X0557 756
114X0559 751
114X0559 756
114X0564 751
114X0564 756
114X0565 751
114X0565 756
114X0567 751
114X0567 756
114X0568 724
114X0568 751
114X0568 756
114X0702 751
114X0702 756
114X0703 751
114X0703 756
114X0773 724
114X0773 751
114X0773 756
114X0781 724
114X0781 751
114X0781 756
114X1208 751
114X1208 754
114X1209 751
114X1209 754
114X1211 751
114X1211 754
114X1216 751
114X1216 754
114X1217 751
114X1217 754
114X1219 751
114X1219 754
114X1221 715
114X1221 718
114X1221 751
114X1221 754
114X1301 751
114X1301 754
114X1302 751
114X1302 754
114X1304 751
114X1304 754
114X1324 751
114X1325 751
114X1327 751
114X1328 751

Table of contents - Code numbers

114X1328 754
114X1329 751
114X1329 754
114X1331 751
114X1331 754
114X1337 715
114X1337 718
114X1337 751
114X1337 754
114X1341 715
114X1341 718
114X1341 751
114X1341 754
114X1440 751
114X1440 754
114X1441 751
114X1441 754
114X1443 751
114X1443 754
114X1444 718
114X1444 751
114X1444 754
114X1449 715
114X1449 719
114X1449 751
114X1449 754
114X1548 751
114X1548 754
114X1549 751
114X1549 754
114X1551 751
114X1551 754
114X1556 751
114X1556 754
114X1557 751
114X1557 754
114X1559 751
114X1559 754
114X1569 715
114X1569 719
114X1569 751
114X1569 754
114X1573 715
114X1573 719
114X1573 751
114X1573 754
114X1600 751
114X1600 754
114X1601 751
114X1601 754
114X1602 751
114X1602 754
114X1673 719
114X1673 751
114X1673 754
114X1781 751
114X1781 754
114X1783 751
114X1783 754
114X2316 751
114X2316 756
114X2317 751
114X2317 756
114X2319 751
114X2319 756
114X2424 751
114X2424 756
114X2425 751
114X2425 756
114X2427 751
114X2427 756
114X2649 751
114X2649 756
114X2651 751
114X2651 756
114X2765 751
114X2765 756
114X2767 751
114X2767 756
114X3118 807
114X3118 808
114X3118 819
114X3118 820
114X3216 807
114X3216 808
114X3216 819
114X3216 820
114X3225 807
114X3225 808
114X3225 819
114X3225 820
114X3233 807
114X3233 808
114X3233 819
114X3233 820
114X3241 807
114X3241 808
114X3241 819
114X3241 820
114X3249 807
114X3249 808
114X3249 819
114X3249 820
114X3252 807
114X3252 808
114X3252 819
114X3252 820
114X3253 807
114X3253 808
114X3253 819
114X3253 821
114X3357 807
114X3357 808
114X3357 819
114X3357 821
114X3365 807
114X3365 808
114X3365 819
114X3365 821
114X3476 807
114X3476 808
114X3476 819
114X3476 821
114X3482 807
114X3482 808
114X3482 819
114X3482 821
114X4119 811
114X4119 817
114X4119 819
114X4119 822
114X4120 811
114X4120 817
114X4120 819
114X4120 822
114X4121 811
114X4121 817
114X4121 819
114X4121 822
114X4122 811
114X4122 817
114X4122 819
114X4122 822
114X4200 811
114X4200 813
114X4200 817
114X4200 819
114X4200 822
114X4212 811
114X4212 813
114X4212 817
114X4212 819
114X4212 822
114X4213 811
114X4213 813
114X4213 817
114X4213 819
114X4213 822
114X4220 809
114X4220 819
114X4220 822
114X4226 811
114X4226 813
114X4226 817
114X4226 819
114X4226 822
114X4227 811
114X4227 813
114X4227 817
114X4227 819
114X4227 823
114X4230 811
114X4230 813
114X4230 817
114X4230 819
114X4230 823
114X4261 809
114X4261 810
114X4261 811
114X4261 813
114X4261 815
114X4261 816
114X4261 817
114X4261 819
114X4261 823
114X4264 809
114X4264 810
114X4264 811
114X4264 813
114X4264 815
114X4264 816
114X4264 817
114X4264 819
114X4264 823
114X4281 809
114X4281 810
114X4281 811
114X4281 813
114X4281 815
114X4281 816
114X4281 817

114X4281 819
114X4281 823
114X4284 809
114X4284 810
114X4284 811
114X4284 813
114X4284 815
114X4284 816
114X4284 817
114X4284 819
114X4284 823
114X4290 809
114X4290 810
114X4290 812
114X4290 813
114X4290 815
114X4290 816
114X4290 818
114X4290 819
114X4290 823
114X4293 809
114X4293 810
114X4293 812
114X4293 813
114X4293 815
114X4293 816
114X4293 818
114X4293 819
114X4293 823
114X4300 841
114X4302 836
114X4302 837
114X4302 838
114X4302 841
114X4308 809
114X4308 810
114X4308 812
114X4308 813
114X4308 815
114X4308 816
114X4308 818
114X4308 819
114X4308 823
114X4311 809
114X4311 810
114X4311 812
114X4311 813
114X4311 815
114X4311 816
114X4311 818
114X4311 819
114X4311 824
114X4315 841
114X4316 836
114X4316 837
114X4316 838
114X4316 841
114X4321 809
114X4321 810
114X4321 812
114X4321 814
114X4321 815
114X4321 816
114X4321 818
114X4321 819
114X4321 824
114X4324 809
114X4324 810
114X4324 812
114X4324 814
114X4324 815
114X4324 816
114X4324 818
114X4324 819
114X4324 824
114X4333 841
114X4334 836
114X4334 837
114X4334 838
114X4334 841
114X4344 809
114X4344 810
114X4344 812
114X4344 814
114X4344 815
114X4344 816
114X4344 818
114X4344 819
114X4344 824
114X4414 809
114X4414 810
114X4414 812
114X4414 814
114X4414 815
114X4414 816
114X4414 818
114X4414 819
114X4414 824
114X4434 809
114X4434 810
114X4434 812
114X4434 814
114X4434 815
114X4434 816
114X4434 818
114X4434 819
114X4434 824
114X5721 725
114X5721 728
114X5721 731
114X5721 734
114X5721 737
114X5721 740
114X5721 743
114X5721 747
114X5721 758
114X5721 765
114X5722 725
114X5722 728
114X5722 731
114X5722 734
114X5722 737
114X5722 740
114X5722 743
114X5722 747
114X5722 758
114X5722 765
114X5723 725
114X5723 728
114X5723 731
114X5723 734
114X5723 737
114X5723 740
114X5723 743
114X5723 747
114X5723 758
114X5723 765
114X5724 725
114X5724 728
114X5724 731
114X5724 734
114X5724 737
114X5724 740
114X5724 743
114X5724 747
114X5724 758
114X5724 765
114X5726 725
114X5726 728
114X5726 731
114X5726 734
114X5726 737
114X5726 740
114X5726 743
114X5726 747
114X5726 758
114X5726 766
114X5728 725
114X5728 728
114X5728 731
114X5728 734
114X5728 737
114X5728 740
114X5728 743
114X5728 747
114X5728 758
114X5728 766
114X5729 725
114X5729 728
114X5729 731
114X5729 734
114X5729 737
114X5729 740
114X5729 743
114X5729 747
114X5729 758
114X5729 766
114X5731 725
114X5731 728
114X5731 731
114X5731 734
114X5731 737
114X5731 740
114X5731 743
114X5731 747
114X5731 758
114X5731 766
114X5732 726
114X5732 729
114X5732 732
114X5732 735
114X5732 738
114X5732 741
114X5732 744
114X5732 748
114X5732 758
114X5732 766
114X5734 726
114X5734 729
114X5734 732
114X5734 735

Table of contents - Code numbers

114X5734 738
114X5734 741
114X5734 744
114X5734 748
114X5734 758
114X5734 766
114X5735 726
114X5735 729
114X5735 732
114X5735 735
114X5735 738
114X5735 741
114X5735 744
114X5735 748
114X5735 758
114X5735 766
114X5737 726
114X5737 729
114X5737 732
114X5737 735
114X5737 738
114X5737 741
114X5737 744
114X5737 748
114X5737 758
114X5737 766
114X5739 726
114X5739 729
114X5739 732
114X5739 735
114X5739 738
114X5739 741
114X5739 744
114X5739 748
114X5739 758
114X5739 766
114X5740 726
114X5740 729
114X5740 732
114X5740 735
114X5740 738
114X5740 741
114X5740 744
114X5740 748
114X5740 758
114X5740 766
114X5743 726
114X5743 729
114X5743 732
114X5743 735
114X5743 738
114X5743 741
114X5743 744
114X5743 748
114X5743 758
114X5743 765
114X5744 727
114X5744 730
114X5744 733
114X5744 736
114X5744 739
114X5744 742
114X5744 745
114X5744 749
114X5744 758
114X5744 766
114X5746 727
114X5746 730
114X5746 733
114X5746 736
114X5746 739
114X5746 742
114X5746 745
114X5746 749
114X5746 758
114X5746 765
114X5747 727
114X5747 730
114X5747 733
114X5747 736
114X5747 739
114X5747 742
114X5747 745
114X5747 749
114X5747 758
114X5747 766
114X5749 727
114X5749 730
114X5749 733
114X5749 736
114X5749 739
114X5749 742
114X5749 745
114X5749 749
114X5749 759
114X5749 765
114X5750 727
114X5750 730
114X5750 733
114X5750 736
114X5750 739
114X5750 742
114X5750 745
114X5750 749
114X5750 759
114X5750 767
114X5753 727
114X5753 730
114X5753 733
114X5753 736
114X5753 739
114X5753 742
114X5753 745
114X5753 749
114X5753 759
114X5753 767
114X5754 727
114X5754 730
114X5754 733
114X5754 736
114X5754 739
114X5754 742
114X5754 745
114X5754 749
114X5754 759
114X5754 767
114X5757 727
114X5757 730
114X5757 733
114X5757 736
114X5757 739
114X5757 742
114X5757 745
114X5757 749
114X5757 759
114X5757 767
114X5758 716
114X5758 720
114X5758 757
114X5758 765
114X5759 716
114X5759 720
114X5759 757
114X5759 765
114X5761 716
114X5761 720
114X5761 757
114X5761 766
114X5762 716
114X5762 720
114X5762 720
114X5762 757
114X5762 766
114X5764 716
114X5764 757
114X5764 766
114X5766 716
114X5766 720
114X5766 757
114X5766 765
114X5768 717
114X5768 721
114X5768 757
114X5768 766
114X5769 717
114X5769 721
114X5769 757
114X5769 765
114X5771 717
114X5771 721
114X5771 757
114X5771 765
114X5772 717
114X5772 721
114X5772 757
114X5772 766
114X5774 717
114X5774 721
114X5774 757
114X5774 767
114X5776 717
114X5776 721
114X5776 757
114X5776 767
114X7061 786
114X7061 789
114X7062 786
114X7062 789
114X7063 786
114X7063 789
114X7064 786
114X7064 789
114X7065 786
114X7065 789
114X7066 786
114X7066 789
114X7067 786
114X7067 789
114X7068 786
114X7068 790
114X7069 786

114X7069 790
114X7070 786
114X7070 790
114X7071 786
114X7071 790
114X7072 786
114X7072 790
114X7075 786
114X7075 788
114X7083 786
114X7083 790
114X7084 786
114X7084 790
114X7085 786
114X7085 787
114X7086 786
114X7086 787
114X7087 786
114X7087 787
114X7088 786
114X7088 787
114X7089 786
114X7089 787
114X7090 786
114X7090 787
114X7091 786
114X7091 787
114X7092 786
114X7092 788
114X7093 786
114X7093 790
114X7094 786
114X7094 790
114X7095 786
114X7095 788
114X7096 786
114X7096 788
114X7097 786
114X7097 790
114X7097 114X7194 780
114X7099 786
114X7099 791
114X7100 786
114X7100 791
114X7101 786
114X7101 791
114X7102 786
114X7102 791
114X7103 786
114X7103 791
114X7104 786
114X7104 791
114X7106 786
114X7106 788
114X7107 786
114X7107 788
114X7108 786
114X7108 791
114X7109 786
114X7109 791
114X7110 786
114X7110 791
114X7111 786
114X7111 791
114X7129 786
114X7129 788
114X7130 786
114X7130 788
114X7131 786
114X7131 791
114X7132 786
114X7132 791
114X7133 786
114X7133 791
114X7134 786
114X7134 791
114X7135 786
114X7135 791
114X7136 786
114X7136 791
114X7161 786
114X7161 789
114X7161 114X7211 775
114X7161 114X7211 777
114X7161 114X7211 778
114X7161 114X7211 780
114X7161 114X7211 782
114X7161 114X7211 783
114X7161 114X7211 784
114X7162 786
114X7162 789
114X7162 114X7212 775
114X7162 114X7212 777
114X7162 114X7212 778
114X7162 114X7212 780
114X7162 114X7212 782
114X7162 114X7212 783
114X7162 114X7212 784
114X7179 786
114X7179 787
114X7180 786
114X7180 787
114X7181 786
114X7181 787
114X7182 786
114X7182 787
114X7183 786
114X7183 787
114X7184 786
114X7184 787
114X7185 786
114X7185 788
114X7186 786
114X7186 788
114X7187 786
114X7187 787
114X7188 786
114X7188 788
114X7189 786
114X7189 788
114X7190 786
114X7190 790
114X7191 786
114X7191 790
114X7192 786
114X7192 790
114X7193 786
114X7193 790
114X7194 786
114X7194 790
114X7195 786
114X7195 789
114X7196 786
114X7196 789
114X7197 786
114X7197 789
114X7198 786
114X7198 789
114X7199 786
114X7199 789
114X7200 786
114X7200 789
114X7201 786
114X7201 789
114X7202 786
114X7202 790
114X7203 786
114X7203 790
114X7204 786
114X7204 790
114X7205 786
114X7205 790
114X7206 786
114X7206 790
114X7207 786
114X7207 791
114X7208 786
114X7208 791
114X7209 786
114X7209 791
114X7210 786
114X7210 791
114X7211 786
114X7211 789
114X7212 786
114X7212 789
114X0104114X0105114X0107 723
114X0108114X0109114X0111 723
114X0112114X0113114X0115 723
114X0200114X0201114X0203 723
114X0204114X0205 723
114X0216114X0217114X0219 723
114X0224114X0225114X0227 723
114X0301114X0302114X0303 746
114X0336114X0337114X0339 724
114X0340114X0341114X0343 724
114X0403114X0404114X0405 746
114X0406114X0407114X0408 746
114X0448114X0449114X0451 724
114X0556114X0557114X0559 724
114X0564114X0565114X0567 724
114X0702114X0703 746
114X1208114X1209114X1211 718
114X1216114X1217114X1219 718
114X1304114X1301114X1302 718
114X1328114X1329114X1331 718
114X1440114X1441114X1443 718
114X1548114X1549114X1551 719
114X1556114X1557114X1559 719
114X1600114X1601114X1602 719
114X1781114X1783 719
114X2316114X2317114X2319 746
114X2424114X2425114X2427 746
114X2649114X2651 746
114X2765114X2767 746
114X7061114X7195 775
114X7061114X7195 777
114X7061114X7195 778
114X7061114X7195 780
114X7061114X7195 782
114X7061114X7195 783

Table of contents - Code numbers

114X7061114X7195 784
114X7062114X7196 775
114X7062114X7196 777
114X7062114X7196 778
114X7062114X7196 780
114X7062114X7196 782
114X7062114X7196 783
114X7062114X7196 784
114X7063114X7197 775
114X7063114X7197 777
114X7063114X7197 779
114X7063114X7197 780
114X7063114X7197 782
114X7063114X7197 783
114X7063114X7197 785
114X7064114X7198 775
114X7064114X7198 777
114X7064114X7198 778
114X7064114X7198 780
114X7064114X7198 782
114X7064114X7198 783
114X7064114X7198 784
114X7065114X7199 776
114X7065114X7199 777
114X7065114X7199 779
114X7065114X7199 780
114X7065114X7199 782
114X7065114X7199 783
114X7065114X7199 785
114X7066114X7200 775
114X7066114X7200 777
114X7066114X7200 779
114X7066114X7200 781
114X7066114X7200 782
114X7066114X7200 783
114X7066114X7200 785
114X7067114X7201 776
114X7067114X7201 777
114X7067114X7201 779
114X7067114X7201 781
114X7067114X7201 782
114X7067114X7201 783
114X7067114X7201 785
114X7068114X7202 776
114X7068114X7202 777
114X7068114X7202 779
114X7068114X7202 781
114X7068114X7202 782
114X7068114X7202 783
114X7068114X7202 785
114X7069114X7203 776
114X7069114X7203 777
114X7069114X7203 779
114X7069114X7203 781
114X7069114X7203 782
114X7069114X7203 783
114X7069114X7203 785
114X7070114X7204 776
114X7070114X7204 777
114X7070114X7204 779
114X7070114X7204 781
114X7070114X7204 782
114X7070114X7204 783
114X7070114X7204 785
114X7071114X7205 776
114X7071114X7205 777
114X7071114X7205 779
114X7071114X7205 781
114X7071114X7205 782
114X7071114X7205 783
114X7071114X7205 785
114X7072114X7206 776
114X7072114X7206 777
114X7072114X7206 779
114X7072114X7206 781
114X7072114X7206 782
114X7072114X7206 783
114X7072114X7206 785
114X7075114X7189 773
114X7075114X7189 774
114X7083114X7190 778
114X7083114X7190 780
114X7083114X7190 784
114X7084114X7191 778
114X7084114X7191 780
114X7084114X7191 784
114X7085114X7179 773
114X7085114X7179 774
114X7086114X7180 773
114X7086114X7180 774
114X7087114X7181 773
114X7087114X7181 774
114X7088114X7182 773
114X7088114X7182 774
114X7089114X7183 773
114X7089114X7183 774
114X7090114X7184 773
114X7090114X7184 774
114X7091114X7187 773
114X7091114X7187 774
114X7092114X7188 773
114X7092114X7188 774
114X7093114X7192 778
114X7093114X7192 780
114X7093114X7192 784
114X7094114X7193 778
114X7094114X7193 780
114X7094114X7193 784
114X7095114X7185 773
114X7095114X7185 774
114X7096114X7186 773
114X7096114X7186 774
114X7097114X7194 778
114X7097114X7194 784
114X7099114X7207 775
114X7100114X7208 775
114X7101114X7131 775
114X7102114X7132 775
114X7103114X7209 775
114X7104114X7210 775
114X7106114X7129 773
114X7106114X7129 774
114X7107114X7130 773
114X7107114X7130 774
114X7108114X7133 778
114X7108114X7133 784
114X7109114X7134 778
114X7109114X7134 784
114X7110114X7135 778
114X7110114X7135 784
114X7111114X7136 778
114X7111114X7136 780
114X7111114X7136 784
117-7025 505
117-7025 505
117-7027 493
117-7027 495
117-7027 499
117-7027 499
117-7027 499
117-7027 499
117-7027 499
117-7027 499
117-7027 501
117-7027 794
117-7027 827
117-7029 493
117-7029 493
117-7029 495
117-7029 499
117-7029 499
117-7029 503
117-7029 503
117-7029 791
117-7029 794
117-7031 505
117-7039 493
117-7039 493
117-7039 495
117-7039 495
117-7039 495
117-7039 495
117-7039 501
117-7039 501
117-7045 503
117-7045 503
117-7045 503
117-7045 503
117-7045 503
117-7052 505
117-7053 497
117-7053 503
117-7053 507
117-7053 507
117-7055 493
117-7056 493
117-7056 499
117-7056 499
117-7058 501
117-7066 501
117-7066 501
117-7070 493
117-7070 499
117-7072 499
117-7073 501
117-7073 501
117-7073 501
117-7074 499
117-7112 505
117-7112 505
117-7114 503
117-7114 503
117-7114 503
117-7114 503
117-7114 503
117-7114 507
117-7114 507
117-7114 507
117-7114 507
117-7117 491
117-7117 491

117-7117 491
117-7117 491
117-7117 491
117-7117 491
117-7117 491
117-7117 491
117-7117 493
117-7117 495
117-7117 495
117-7117 505
117-7117 505
117-7117 505
117-7117 509
117-7117 509
117-7117 509

Table of contents - Code numbers

117-7805 507
117-7806 505
117L0533 507
117L0533 507
117L0533 507
117L0534 507
117L0534 507
117L0585 495
117L0585 495
117L0586 507
117U0349 491
117U0349 491
117U0349 491
117U0349 491
117U0349 491
117U0349 495
117U0349 495
117U0349 497
117U0349 497
117U0349 497
117U0349 497
117U0349 497
117U0349 497
117U0349 497
117U0349 497
117U0349 497
117U0349 497
117U0349 497
117U0349 497
117U0349 497
117U0349 497
117U0349 499
117U0349 501
117U0349 501
117U0349 503
117U0349 503
117U1021 491
117U1021 491
117U1021 495
117U1021 497
117U1021 497
117U1021 497
117U1021 497
117U1021 497
117U1021 497
117U1021 497
117U1021 497
117U1021 497
117U1021 497
117U1021 497
117U1021 497
117U1021 497
117U1021 497
117U1021 497
117U1021 497
117U1021 499
117U1021 501
117U1021 501
117U1021 503
117U1021 503
117U1021 503
117U1021 503
117U1021 503
117U1021 503
117U1021 503
117U1021 503
117U1021 503
117U1021 503
117U1021 503
117U1021 507
117U1021 507
117U1021 507
117U1021 507
117U1021 507
117U1021 507
117U1021 507
117U1023 491
117U1023 491
117U1023 491
117U1023 495
117U1026 497
117U1028 505
117U1028 505
117U3306 497
117U4060 497
117U4061 497
117U4061 497
117U4061 497
117U4061 503
117U4123 497
117U4126 497
117U4127 497
117U4127 497
117U4129 497
117U4129 497
117U4129 497
117U4129 503
117U4132 497
117U4132 497
117U4139 491
117U4139 491
117U4139 495
117U4139 499
117U4139 501
117U4139 501
117U4139 827
117U4140 491
117U4140 491
117U4140 495
117U4151 497
117U5012 499
117U5012 499
117U5012 499
117U5012 505
117U5012 792
117U5012 827
117U5014 491
117U5014 491
117U5014 491

117U5015 499
117U5015 499
117U5015 499
117U5015 499
117U5015 499
117U5015 499
117U5015 499
117U5015 501
117U5015 501
117U5015 505
117U5015 505
117U5015 505
117U5015 505
117U5015 505
117U5015 505
117U5015 505
117U5015 505
117U5015 505
117U5015 505
117U5017 493
117U5017 493
117U5017 493
117U5017 493
117U5017 493
117U5017 493
117U5017 493
117U5017 493
117U5017 493
117U5017 493
117U5017 493
117U5017 493
117U5017 493
117U5017 493
117U5017 493
117U5017 493
117U5017 493
117U5017 493
117U5017 493
117U5017 493
117U5017 493
117U5017 495
117U5017 495
117U5017 495
117U5017 495
117U5017 495
117U5017 495
117U5017 495
117U5017 495
117U5017 495
117U5017 495
117U5017 495
117U5017 495
117U5017 495
117U5017 499
117U5017 499
117U5017 499

Table of contents - Code numbers

117U6000 495
117U6000 495
117U6000 495
117U6000 497
117U6000 497
117U6000 499
117U6001 491
117U6001 491
117U6001 493
117U6001 493
117U6001 493
117U6001 493
117U6001 495
117U6001 499
117U6001 499
117U6002 493
117U6002 493
117U6002 493
117U6002 493
117U6002 495
117U6002 499
117U6003 493
117U6003 493
117U6003 493
117U6003 493
117U6003 493
117U6003 493
117U6003 495
117U6003 495
117U6003 497
117U6003 497
117U6003 499
117U6003 499
117U6003 499
117U6003 499
117U6003 791
117U6003 794
117U6004 491
117U6004 491
117U6004 491
117U6004 491
117U6004 491
117U6004 491
117U6004 491
117U6004 495
117U6005 493
117U6005 493
117U6005 493
117U6005 493
117U6005 493
117U6005 493
117U6005 493
117U6005 493
117U6005 493
117U6005 495
117U6005 495
117U6005 495
117U6005 495
117U6005 495
117U6005 495
117U6005 499
117U6005 499
117U6005 499
117U6005 499
117U6005 499
117U6005 501
117U6005 501
117U6005 503
117U6005 503
117U6005 791
117U6005 794
117U6007 491
117U6007 491
117U6007 491
117U6007 495
117U6009 491
117U6009 491
117U6009 495
117U6010 491
117U6010 491
117U6010 495
117U6010 499
117U6010 499
117U6011 493
117U6011 493
117U6011 495
117U6011 495
117U6011 495
117U6011 495
117U6011 499
117U6011 499
117U6011 501
117U6011 501
117U6011 501
117U6011 501
117U6011 794
117U6011 827
117U6013 499
117U6013 499
117U6013 499
117U6013 794
117U6013 827
117U6015 491
117U6015 491
117U6015 493
117U6015 493
117U6015 495
117U6015 495
117U6015 495
117U6015 499
117U6016 491
117U6016 491
117U6016 491
117U6016 491
117U6016 493
117U6016 495
117U6016 495
117U6016 495
117U6016 495
117U6016 499
117U6019 493
117U6019 493
117U6019 493
117U6019 493
117U6019 493
117U6019 493
117U6019 493
117U6019 495
117U6019 495
117U6019 495
117U6019 499
117U6019 499
117U6019 499
117U6019 499
117U6019 499
117U6019 499
117U6019 499
117U6019 501
117U6019 501
117U6019 501
117U6019 501
117U6019 503
117U6019 503
117U6019 791
117U6019 794
117U6020 497
117U6020 497
117U6020 497
117U6020 503
117U6020 503
117U6020 503
117U6021 491
117U6021 491
117U6021 495
117U6022 493
117U6022 493
117U6022 495
117U6022 499
117U6022 501
117U6022 501
117U6102 497
117U7000 505
117U7000 505
117U7000 505
117U7001 505
117U7001 505
117U7002 505
117U7002 505
117U7002 505
117U7002 505
117U7002 505
117U7002 505
117U7002 505
117U7003 505
117U7003 505
117U7003 505
117U7003 505
117U7004 505
117U7004 505
117U7005 505
117U7005 505
117U7005 505
117U7005 507
117U7005 507
117U7011 505
117U7011 505
117U7011 505
117U7011 507
117U7011 507
117U7013 505
117U7013 507
117U7013 507
117U7013 507
117U7013 507
117U7014 507
117U7015 505
117U7016 505
117U7018 507
117U7019 505
117U7019 505
117U7020 507
117U7020 507

117U7020 507
117U7020 507
117U7020 507
117U7022 507
117U7050 505
118U0028 756
118U0028 756
118U0028 756
118U0029 753
118U0029 753
118U0029 754
118U0029 754
118U0029 754
118U0029 756
118U0029 756
118U0029 756
118U0029 756
118U0029 756
118U0029 756
118U0029 756
118U0030 753
118U0030 754
118U0030 754
118U0030 754
118U0030 754
118U0030 756
118U0030 756
118U0030 756
118U0030 756
118U0030 756
118U0031 753
118U0031 753
118U0031 753
118U0031 754
118U0031 754
118U0031 754
118U0031 754
118U0031 754
118U0031 754
118U0031 754
118U0031 754
118U0031 756
118U0031 756
118U0031 756
118U0031 756
118U0031 756
118U0031 756
118U0031 756
118U0032 754
118U0032 754
118U0032 754
118U0032 756
118U0032 756
118U0032 756
118U0032 756
118U0032 756
118U0032 756
118U0032 756
118U0032 756
118U0032 756
118U0033 754
118U0033 754
118U0033 754
118U0033 754
118U0033 756
118U0033 756
118U0033 756
118U0033 756
118U0034 754
118U0034 754
118U0034 754
118U0034 754
118U0034 754
118U0034 754
118U0034 754
118U0034 754
118U0034 756
118U0034 756
118U0034 756
118U0034 756
118U0034 756
118U0035 756
118U0041 756
118U0041 756
118U0041 756
118U0042 753
118U0042 753
118U0042 754
118U0042 754
118U0042 754
118U0042 756
118U0042 756
118U0042 756
118U0042 756
118U0042 756
118U0042 756
118U0043 753
118U0043 754
118U0043 754
118U0043 754
118U0043 754
118U0043 756
118U0043 756
118U0043 756
118U0044 753
118U0044 753
118U0044 753
118U0044 754
118U0044 754
118U0044 754
118U0044 754
118U0044 754
118U0044 754
118U0044 754
118U0044 754
118U0044 756
118U0044 756
118U0044 756
118U0044 756
118U0044 756
118U0045 754
118U0045 754
118U0045 754
118U0045 754
118U0045 754
118U0045 754
118U0045 754
118U0045 754
118U0045 754
118U0045 754
118U0045 754
118U0045 754
118U0045 756
118U0045 756
118U0045 756
118U0045 756
118U0045 756
118U0045 756
118U0045 756
118U0045 756
118U0045 756
118U0045 756
118U0045 756
118U0045 756
118U0045 756
118U0045 756
118U0045 756
118U0045 756
118U0045 756
118U0045 756
118U0045 756
118U0045 756
118U0047 754
118U0047 754
118U0047 754
118U0047 754
118U0047 754
118U0047 754
118U0047 754
118U0047 754
118U0047 756
118U0047 756
118U0047 756
118U0047 756
118U0051 826
118U0054 753
118U0054 754
118U0054 754
118U0055 756
118U0058 754
118U0058 754
118U0058 756
118U0058 756
118U0058 756
118U0066 753
118U0066 754
118U0066 756
118U0068 756
118U0069 754
118U0069 756
118U0069 756
118U0069 756
118U0079 754
118U0079 754
118U0079 754
118U0079 754
118U0079 754
118U0079 754
118U0079 754
118U0079 754
118U0079 754
118U0079 754
118U0079 754
118U0079 756
118U0079 756
118U0079 756
118U0079 756
118U0079 756
118U0079 756
118U0079 756

Table of contents - Code numbers

118U0079 756
118U0079 756
118U0079 756
118U0079 756
118U0079 756
118U0079 756
118U0079 756
118U0079 756
118U0079 756
118U0390 757
118U0390 757
118U0390 757
118U0390 757
118U0390 757
118U0390 758
118U0390 758
118U0390 758
118U0390 758
118U0390 758
118U0390 758
118U0390 759
118U0391 757
118U0391 757
118U0391 758
118U0391 758
118U0391 758
118U0391 758
118U0392 757
118U0392 757
118U0392 757
118U0392 758
118U0392 758
118U0392 758
118U0392 758
118U0392 758
118U0392 758
118U0393 757
118U0393 757
118U0393 759
118U0393 759
118U0393 759
118U0393 759
118U0407 756
118U0485 754
118U0485 756
118U0485 756
118U0485 756
118U0485 756
118U0517 754
118U0517 754
118U0517 754
118U0517 756
118U0517 756
118U0517 756
118U0517 756
118U0517 756
118U0517 756
118U0517 756
118U0517 756
118U0523 754
118U0523 754
118U0523 754
118U0523 754
118U0523 754
118U0523 754
118U0523 754
118U0523 754
118U0523 754
118U0523 756
118U0523 756
118U0523 756
118U0523 756
118U0523 756
118U0523 756
118U0523 756
118U0523 756
118U0523 756
118U0523 756
118U1004 757
118U1004 757
118U1004 757
118U1004 758
118U1004 758
118U1004 759
118U1008 753
118U1008 753
118U1008 753
118U1009 753
118U1009 753
118U1009 753
118U1009 756
118U1009 756
118U1010 753
118U1010 754
118U1010 756
118U3296 788
118U3296 788
118U3296 791
118U3296 791
118U3296 791
118U3296 791
118U3296 791
118U3296 791
118U3296 791
118U3296 793
118U3296 820
118U3296 822
118U3296 822
118U3296 822
118U3296 822
118U3296 826
118U3297 787
118U3297 787
118U3297 787
118U3297 787
118U3297 787
118U3297 787
118U3297 788
118U3297 788
118U3297 789
118U3297 789
118U3297 789
118U3297 789
118U3297 789
118U3297 789
118U3297 789
118U3297 790
118U3297 790
118U3297 790
118U3297 790
118U3297 791
118U3297 791
118U3297 791
118U3297 793
118U3297 820
118U3297 820
118U3297 820
118U3297 820
118U3297 820
118U3297 820
118U3297 821
118U3297 822
118U3297 822
118U3297 822
118U3297 822
118U3297 822
118U3297 823
118U3297 823
118U3297 823
118U3297 823
118U3297 823
118U3297 823
118U3297 823
118U3297 826
118U3414 788
118U3414 788
118U3414 788
118U3414 788
118U3414 791
118U3414 791
118U3414 791
118U3414 791
118U3414 791
118U3414 791
118U3414 791
118U3414 791
118U3414 791
118U3414 791
118U3414 791
118U3414 791
118U3414 791
118U3414 793
118U3465 820
118U3465 820
118U3465 820
118U3465 820
118U3465 820
118U3465 820
118U3465 820
118U3465 821
118U3465 821
118U3465 821
118U3465 821
118U3465 821
118U3465 822
118U3465 822
118U3465 822
118U3465 822
118U3465 822

118U3465 822
118U3465 822
118U3465 822
118U3465 822
118U3465 823
118U3465 823
118U3465 823
118U3465 823
118U3465 823
118U3465 823
118U3465 823
118U3465 823
118U3465 824
118U3465 824
118U3465 824
118U3465 824
118U3465 824
118U3465 826
118U3465 841
118U3465 841
118U3465 841
118U3465 842
118U3474 788
118U3474 788
118U3474 791
118U3474 791
118U3474 791
118U3474 791
118U3474 791
118U3474 791
118U3474 791
118U3474 794
118U3474 820
118U3474 822
118U3474 822
118U3474 822
118U3474 822
118U3474 826
118U3475 787
118U3475 787
118U3475 787
118U3475 787
118U3475 787
118U3475 787
118U3475 788
118U3475 788
118U3475 789
118U3475 789
118U3475 789
118U3475 789
118U3475 789
118U3475 789
118U3475 789
118U3475 790
118U3475 790
118U3475 790
118U3475 790
118U3475 790
118U3475 791
118U3475 791
118U3475 791
118U3475 794
118U3475 820
118U3475 820
118U3475 820
118U3475 820
118U3475 820
118U3475 821
118U3475 822
118U3475 822
118U3475 822
118U3475 822
118U3475 822
118U3475 822
118U3475 823
118U3475 823
118U3475 823
118U3475 823
118U3475 823
118U3475 823
118U3475 826
118U3476 787
118U3476 788
118U3476 788
118U3476 789
118U3476 790
118U3476 790
118U3476 790
118U3476 790
118U3476 790
118U3476 794
118U3476 821
118U3476 821
118U3476 823
118U3476 824
118U3476 824
118U3476 824
118U3476 824
118U3476 826
118U3476 841
118U3476 841
118U3476 841
118U3476 842
118U3477 788
118U3477 788
118U3477 791
118U3477 791
118U3477 791
118U3477 791
118U3477 791
118U3477 791
118U3477 791
118U3477 793
118U3477 820
118U3477 822
118U3477 822
118U3477 822
118U3477 822
118U3477 826
118U3480 788
118U3480 788
118U3480 791
118U3480 791
118U3480 791
118U3480 791
118U3480 791
118U3480 791
118U3480 793
118U3480 820
118U3480 822
118U3480 822
118U3480 822
118U3480 822
118U3480 826
118U3481 787
118U3481 787
118U3481 787
118U3481 787
118U3481 787
118U3481 787
118U3481 788
118U3481 788
118U3481 789
118U3481 789
118U3481 789
118U3481 789
118U3481 789
118U3481 789
118U3481 789
118U3481 789
118U3481 790
118U3481 790
118U3481 790
118U3481 790
118U3481 790
118U3481 791
118U3481 791
118U3481 791
118U3481 793
118U3481 820
118U3481 820
118U3481 820
118U3481 820
118U3481 820
118U3481 820
118U3481 821
118U3481 822
118U3481 822
118U3481 822
118U3481 822
118U3481 823
118U3481 823
118U3481 823
118U3481 823
118U3481 823
118U3481 823
118U3481 823
118U3481 826
118U3483 788
118U3483 788
118U3483 791
118U3483 791
118U3483 791
118U3483 791
118U3483 791
118U3483 793
118U3483 820
118U3483 822
118U3483 822
118U3483 822
118U3483 822

Table of contents - Code numbers

118U3483 826
118U3484 787
118U3484 787
118U3484 787
118U3484 787
118U3484 787
118U3484 787
118U3484 788
118U3484 788
118U3484 789
118U3484 789
118U3484 789
118U3484 789
118U3484 789
118U3484 789
118U3484 789
118U3484 789
118U3484 790
118U3484 790
118U3484 790
118U3484 790
118U3484 790
118U3484 791
118U3484 791
118U3484 791
118U3484 793
118U3484 820
118U3484 820
118U3484 820
118U3484 820
118U3484 820
118U3484 820
118U3484 821
118U3484 822
118U3484 822
118U3484 822
118U3484 822
118U3484 822
118U3484 823
118U3484 823
118U3484 823
118U3484 823
118U3484 823
118U3484 823
118U3484 823
118U3484 823
118U3484 826
118U3485 787
118U3485 788
118U3485 788
118U3485 789
118U3485 790
118U3485 790
118U3485 790
118U3485 790
118U3485 790
118U3485 793
118U3485 821
118U3485 821
118U3485 821
118U3485 821
118U3485 823
118U3485 824
118U3485 824
118U3485 824
118U3485 824
118U3485 824
118U3485 824
118U3485 826
118U3485 841
118U3485 841
118U3485 841
118U3485 842
118U3492 757
118U3492 757
118U3492 758
118U3492 758
118U3492 758
118U3492 758
118U3492 788
118U3492 788
118U3492 791
118U3492 791
118U3492 791
118U3492 791
118U3492 791
118U3492 791
118U3492 791
118U3492 792
118U3492 820
118U3492 822
118U3492 822
118U3492 822
118U3492 822
118U3492 825
118U3493 757
118U3493 757
118U3493 758
118U3493 758
118U3493 758
118U3493 758
118U3493 758
118U3493 758
118U3493 787
118U3493 787
118U3493 787
118U3493 787
118U3493 787
118U3493 787
118U3493 788
118U3493 788
118U3493 789
118U3493 789
118U3493 789
118U3493 789
118U3493 789
118U3493 789
118U3493 789
118U3493 790
118U3493 790
118U3493 790
118U3493 790
118U3493 790
118U3493 791
118U3493 791
118U3493 791
118U3493 792
118U3493 820
118U3493 820
118U3493 820
118U3493 820
118U3493 820
118U3493 820
118U3493 821
118U3493 822
118U3493 822
118U3493 822
118U3493 822
118U3493 822
118U3493 823
118U3493 823
118U3493 823
118U3493 823
118U3493 823
118U3493 823
118U3493 823
118U3493 823
118U3493 825
118U3494 757
118U3494 757
118U3494 757
118U3494 758
118U3494 758
118U3494 758
118U3494 758
118U3494 758
118U3494 758
118U3494 787
118U3494 788
118U3494 788
118U3494 789
118U3494 790
118U3494 790
118U3494 790
118U3494 790
118U3494 790
118U3494 792
118U3494 821
118U3494 821
118U3494 823
118U3494 824
118U3494 824
118U3494 824
118U3494 824
118U3494 825
118U3494 841
118U3494 841
118U3494 841
118U3494 842
118U3716 821
118U3716 821
118U3716 824
118U3716 824
118U3716 826
118U3717 757
118U3717 757
118U3717 759
118U3717 759
118U3717 759
118U3717 759
118U3717 821
118U3717 821
118U3717 824
118U3717 824
118U3717 825
118U3718 820
118U3718 820
118U3718 820
118U3718 820
118U3718 820

118U3718	820
118U3718	820
118U3718	821
118U3718	821
118U3718	821
118U3718	821
118U3718	821
118U3718	822
118U3718	822
118U3718	822
118U3718	822
118U3718	822
118U3718	822
118U3718	822
118U3718	822
118U3718	822
118U3718	822
118U3718	823
118U3718	823
118U3718	823
118U3718	823
118U3718	823
118U3718	823
118U3718	823
118U3718	823
118U3718	823
118U3718	824
118U3718	824
118U3718	824
118U3718	824
118U3718	824
118U3718	824
118U3718	826
118U3718	841
118U3718	841
118U3718	841
118U3718	842
118U3720	820
118U3720	820
118U3720	820
118U3720	820
118U3720	820
118U3720	820
118U3720	820
118U3720	821
118U3720	821
118U3720	821
118U3720	821
118U3720	821
118U3720	822
118U3720	822
118U3720	822
118U3720	822
118U3720	822
118U3720	822
118U3720	822
118U3720	823
118U3720	823
118U3720	823
118U3720	823
118U3720	823
118U3720	823
118U3720	823
118U3720	823
118U3720	824
118U3720	824
118U3720	824
118U3720	824
118U3720	824
118U3720	826
118U3720	841
118U3720	841
118U3720	841
118U3720	842
118U3721	820
118U3721	820
118U3721	820
118U3721	820
118U3721	820
118U3721	820
118U3721	820
118U3721	820
118U3721	821
118U3721	821
118U3721	821
118U3721	821
118U3721	821
118U3721	822
118U3721	822
118U3721	822
118U3721	822
118U3721	822
118U3721	822
118U3721	822
118U3721	823
118U3721	823
118U3721	823
118U3721	823
118U3721	823
118U3721	823
118U3721	824
118U3721	824
118U3721	824
118U3721	824
118U3721	824
118U3721	824
118U3721	827
118U3721	841
118U3721	841
118U3721	841
118U3721	842
118U3722	820
118U3722	820
118U3722	820
118U3722	820
118U3722	820
118U3722	820
118U3722	820
118U3722	821
118U3722	821
118U3722	821
118U3722	821
118U3722	821
118U3722	822
118U3722	822
118U3722	822
118U3722	822
118U3722	822
118U3722	822
118U3722	822
118U3722	823
118U3722	823
118U3722	823
118U3722	823
118U3722	823
118U3722	823
118U3722	823
118U3722	824
118U3722	824
118U3722	824
118U3722	824
118U3722	824
118U3722	826
118U3722	841
118U3722	841
118U3722	841
118U3722	842
118U3751	792
118U3751	825
118U3761	787
118U3761	787
118U3761	787
118U3761	787
118U3761	787
118U3761	787
118U3761	787
118U3761	787
118U3761	787
118U3761	788
118U3761	788
118U3761	788
118U3761	788
118U3761	789
118U3761	789
118U3761	789
118U3761	789
118U3761	789
118U3761	789
118U3761	789
118U3761	789
118U3761	790
118U3761	790
118U3761	790
118U3761	790
118U3761	790
118U3761	790
118U3761	790
118U3761	790
118U3761	790
118U3761	790
118U3761	790
118U3761	790
118U3761	790
118U3761	791
118U3761	791
118U3761	793

Table of contents - Code numbers

118U3762 787
118U3762 788
118U3762 788
118U3762 789
118U3762 789
118U3762 789
118U3762 789
118U3762 789
118U3762 789
118U3762 789
118U3762 789
118U3762 794
118U3763 789
118U3763 790
118U3763 790
118U3763 790
118U3763 790
118U3763 790
118U3763 794
118U3764 787
118U3764 787
118U3764 787
118U3764 787
118U3764 788
118U3764 788
118U3764 791
118U3764 791
118U3764 794
118U3769 792
118U3770 792
118U3770 825
118U3779 792
118U3779 825
118U3810 792
118U3810 825
118U3811 792
118U3811 825
118U3823 787
118U3823 787
118U3823 787
118U3823 787
118U3823 787
118U3823 787
118U3823 788
118U3823 788
118U3823 789
118U3823 789
118U3823 789
118U3823 789
118U3823 789
118U3823 789
118U3823 789
118U3823 790
118U3823 790
118U3823 790
118U3823 790
118U3823 790
118U3823 791
118U3823 791
118U3823 791
118U3823 793
118U3823 820
118U3823 820
118U3823 820
118U3823 820
118U3823 820
118U3823 820
118U3823 821
118U3823 822
118U3823 822
118U3823 822
118U3823 822
118U3823 822
118U3823 823
118U3823 823
118U3823 823
118U3823 823
118U3823 823
118U3823 823
118U3823 823
118U3823 823
118U3823 823
118U3823 826
118U3829 787
118U3829 787
118U3829 788
118U3829 788
118U3829 788
118U3829 788
118U3829 789
118U3829 789
118U3829 790
118U3829 790
118U3829 790
118U3829 790
118U3829 790
118U3829 790
118U3829 790
118U3829 790
118U3829 790
118U3829 790
118U3829 793
118U3829 821
118U3829 821
118U3829 821
118U3829 821
118U3829 823
118U3829 824
118U3829 824
118U3829 824
118U3829 824
118U3829 824
118U3829 824
118U3829 826
118U3829 841
118U3829 841
118U3829 841
118U3829 842
118U3845 820
118U3845 820
118U3845 820
118U3845 820
118U3845 820
118U3845 821
118U3845 822
118U3845 822
118U3845 822
118U3845 822
118U3845 822
118U3845 822
118U3845 822
118U3845 823
118U3845 823
118U3845 826
118U3846 820
118U3846 821
118U3846 822
118U3846 823
118U3846 823
118U3846 826
118U3847 821
118U3847 822
118U3847 823
118U3847 824
118U3847 824
118U3847 824
118U3847 826
118U3847 841
118U3847 841
118U3847 841
118U3847 842
118U3848 820
118U3848 821
118U3848 821
118U3848 823
118U3848 823
118U3848 824
118U3848 824
118U3848 826
118U3849 823
118U3849 823
118U3849 826
118U3850 824
118U3850 826
118U3851 787
118U3851 787
118U3851 788
118U3851 789
118U3851 789
118U3851 789
118U3851 791
118U3851 791
118U3851 793
118U3851 820
118U3851 820
118U3851 821
118U3851 822
118U3851 822
118U3851 822
118U3851 822
118U3851 823
118U3851 823
118U3851 826
118U3852 787
118U3852 787
118U3852 787
118U3852 788
118U3852 788
118U3852 789
118U3852 790
118U3852 790
118U3852 790
118U3852 790
118U3852 790
118U3852 790
118U3852 793
118U3852 820
118U3852 821
118U3852 822
118U3852 823
118U3852 823

118U3852 823
118U3852 824
118U3852 824
118U3852 826
118U3852 841
118U3852 841
118U3852 841
118U3852 842
118U3853 787
118U3853 788
118U3853 788
118U3853 790
118U3853 790
118U3853 791
118U3853 791
118U3853 793
118U3853 820
118U3853 820
118U3853 820
118U3853 821
118U3853 822
118U3853 822
118U3853 822
118U3853 822
118U3853 826
118U3854 787
118U3854 789
118U3854 790
118U3854 793
118U3854 820
118U3854 823
118U3854 824
118U3854 826
118U3854 841
118U3854 841
118U3854 841
118U3854 842
118U3855 788
118U3855 793
118U3855 824
118U3855 826
118U3856 789
118U3856 789
118U3856 789
118U3856 793
118U3856 821
118U3856 821
118U3856 823
118U3856 823
118U3856 824
118U3856 826
118U3857 789
118U3857 790
118U3857 793
118U3857 823
118U3857 824
118U3857 826
118U3858 793
118U3858 820
118U3858 820
118U3858 820
118U3858 820
118U3858 820
118U3858 820
118U3858 820
118U3858 821
118U3858 821
118U3858 821
118U3858 821
118U3858 821
118U3858 822
118U3858 822
118U3858 822
118U3858 822
118U3858 822
118U3858 822
118U3858 822
118U3858 822
118U3858 823
118U3858 823
118U3858 823
118U3858 823
118U3858 823
118U3858 823
118U3858 823
118U3858 823
118U3858 823
118U3858 824
118U3858 824
118U3858 824
118U3858 824
118U3858 824
118U3858 824
118U3858 824
118U3858 826
118U3858 841
118U3858 841
118U3858 841
118U3858 842
118U3867 789
118U3867 789
118U3867 789
118U3867 792
118U3868 789
118U3868 790
118U3868 792
118U3869 787
118U3869 789
118U3869 793
118U3870 788
118U3870 789
118U3870 789
118U3870 789
118U3870 793
118U3871 789
118U3871 790
118U3871 793
118U3872 787
118U3872 788
118U3872 789
118U3872 790
118U3872 790
118U3872 793
118U3873 787
118U3873 787
118U3873 789
118U3873 789
118U3873 789
118U3873 790
118U3873 793
118U3874 788
118U3874 788
118U3874 790
118U3874 790
118U3874 790
118U3874 793
118U3875 789
118U3875 793
118U3876 787
118U3876 787
118U3876 788
118U3876 789
118U3876 789
118U3876 791
118U3876 791
118U3876 791
118U3876 793
118U3877 787
118U3877 787
118U3877 787
118U3877 789
118U3877 790
118U3877 790
118U3877 790
118U3877 793
118U3878 788
118U3878 788
118U3878 790
118U3878 790
118U3878 790
118U3878 790
118U3878 793
118U3879 787
118U3879 789
118U3879 793
118U3880 788
118U3880 789
118U3880 789
118U3880 789
118U3880 789
118U3880 793
118U3881 790
118U3881 793
118U3882 787
118U3882 788
118U3882 788
118U3882 789
118U3882 789
118U3882 789
118U3882 789
118U3882 789
118U3882 789
118U3882 789
118U3882 789
118U3882 790
118U3882 790
118U3882 790
118U3882 790
118U3882 794
118U3893 787
118U3893 787
118U3893 787
118U3893 788
118U3893 789
118U3893 790
118U3893 790
118U3893 791
118U3893 791
118U3893 791

Table of contents - Code numbers

118U3893 791
118U3893 792
118U3894 787
118U3894 787
118U3894 788
118U3894 788
118U3894 790
118U3894 791
118U3894 791
118U3894 791
118U3894 791
118U3894 791
118U3894 793
118U3895 787
118U3895 788
118U3895 789
118U3895 789
118U3895 789
118U3895 789
118U3895 793
118U3896 787
118U3896 788
118U3896 788
118U3896 790
118U3896 790
118U3896 790
118U3896 790
118U3896 790
118U3896 790
118U3896 793
118U3898 793
118U3912 792
118U3912 825
118U3914 788
118U3914 792
118U3914 820
118U3914 825
118U3915 788
118U3915 792
118U3915 821
118U3915 825
118U3972 841
118U3972 841
118U3972 841
118U3972 842
118U3973 841
118U3973 841
118U3973 841
118U3973 842
118U3974 841
118U3974 841
118U3974 841
118U3974 842
118U3975 788
118U3975 788
118U3975 791
118U3975 791
118U3975 791
118U3975 793
118U3976 787
118U3976 787
118U3976 787
118U3976 790
118U3976 790
118U3976 790
118U3976 793
118U3978 787
118U3978 788
118U3978 788
118U3978 790
118U3978 790
118U3978 791
118U3978 793
118U3980 791
118U3980 793
118U3981 841
118U3981 841
118U3981 842
118U3982 841
118U3982 842
118U3988 791
118U3988 792
118U3988 823
118U3988 825
118U3989 790
118U3989 792
118U3989 823
118U3989 825
118U3990 787
118U3990 792
118U3991 790
118U3991 792
118U3991 822
118U3991 825
118U3992 787
118U3992 792
118U3992 820
118U3992 825
118U3993 790
118U3993 792
118U3993 822
118U3993 825
118U3994 790
118U3994 792
118U3994 822
118U3994 825
118U3995 790
118U3995 792
118U3995 822
118U3995 825
118U3996 791
118U3996 792
118U3996 822
118U3996 825
118U3997 791
118U3997 792
118U5117 787
118U5117 787
118U5117 787
118U5117 787
118U5117 787
118U5117 788
118U5117 788
118U5117 788
118U5117 788
118U5117 789
118U5117 789
118U5117 789
118U5117 789
118U5117 789
118U5117 789
118U5117 789
118U5117 789
118U5117 790
118U5117 790
118U5117 790
118U5117 790
118U5117 790
118U5117 791
118U5117 791
118U5117 791
118U5117 791
118U5117 791
118U5117 791
118U5117 791
118U5117 791
118U5117 791
118U5117 791
118U5117 793
118U5119 789
118U5119 790
118U5119 793
118U5120 787
118U5120 788
118U5120 788
118U5120 790
118U5120 790
118U5120 790
118U5120 790
118U5120 793
118U5121 820
118U5121 822
118U5121 822
118U5121 822
118U5121 822
118U5121 827
118U5122 820
118U5122 822
118U5122 822
118U5122 822
118U5122 822
118U5122 827
118U5123 820
118U5123 822
118U5123 822
118U5123 822
118U5123 822
118U5123 827
118U5124 820
118U5124 822
118U5124 822
118U5124 822
118U5124 822
118U5124 827
118U5125 820
118U5125 822
118U5125 822
118U5125 822
118U5125 822
118U5125 827
118U5126 820
118U5126 820
118U5126 820
118U5126 820
118U5126 820
118U5126 820
118U5126 821
118U5126 822
118U5126 822

118U5126	822
118U5126	822
118U5126	822
118U5126	823
118U5126	823
118U5126	823
118U5126	823
118U5126	823
118U5126	823
118U5126	823
118U5126	823
118U5126	827
118U5127	820
118U5127	820
118U5127	820
118U5127	820
118U5127	820
118U5127	820
118U5127	821
118U5127	822
118U5127	822
118U5127	822
118U5127	822
118U5127	822
118U5127	822
118U5127	823
118U5127	823
118U5127	823
118U5127	823
118U5127	823
118U5127	823
118U5127	823
118U5127	827
118U5128	820
118U5128	820
118U5128	820
118U5128	820
118U5128	820
118U5128	820
118U5128	821
118U5128	822
118U5128	822
118U5128	822
118U5128	822
118U5128	822
118U5128	823
118U5128	823
118U5128	823
118U5128	823
118U5128	823
118U5128	823
118U5128	823
118U5128	823
118U5128	827
118U5129	820
118U5129	820
118U5129	820
118U5129	820
118U5129	820
118U5129	820
118U5129	820
118U5129	821
118U5129	822
118U5129	822
118U5129	822
118U5129	822
118U5129	822
118U5129	823
118U5129	823
118U5129	823
118U5129	823
118U5129	823
118U5129	823
118U5129	823
118U5129	827
118U5130	820
118U5130	820
118U5130	820
118U5130	820
118U5130	820
118U5130	821
118U5130	822
118U5130	822
118U5130	822
118U5130	822
118U5130	822
118U5130	823
118U5130	823
118U5130	823
118U5130	823
118U5130	823
118U5130	823
118U5130	827
118U5131	821
118U5131	821
118U5131	823
118U5131	824
118U5131	824
118U5131	824
118U5131	824
118U5131	827
118U5131	841
118U5131	841
118U5131	841
118U5131	842
118U5132	821
118U5132	821
118U5132	823
118U5132	824
118U5132	824
118U5132	824
118U5132	824
118U5132	827
118U5132	841
118U5132	841
118U5132	841
118U5132	842
118U5133	821
118U5133	821
118U5133	823
118U5133	824
118U5133	824
118U5133	824
118U5133	824
118U5133	827
118U5133	841
118U5133	841
118U5133	841
118U5133	842
118U5134	821
118U5134	821
118U5134	823
118U5134	824
118U5134	824
118U5134	824
118U5134	824
118U5134	827
118U5134	841
118U5134	841
118U5134	841
118U5134	842
118U5135	821
118U5135	821
118U5135	823
118U5135	824
118U5135	824
118U5135	824
118U5135	824
118U5135	827
118U5135	841
118U5135	841
118U5135	841
118U5135	842
118U5136	821
118U5136	821
118U5136	824
118U5136	824
118U5136	827
118U5137	821
118U5137	821
118U5137	824
118U5137	824
118U5137	827
118U5138	821
118U5138	821
118U5138	824
118U5138	824
118U5138	827
118U5139	821
118U5139	821
118U5139	824
118U5139	824
118U5139	827
118U5140	821
118U5140	821
118U5140	824
118U5140	824
118U5140	827
118U5141	788
118U5141	788
118U5141	791
118U5141	791
118U5141	791
118U5141	791
118U5141	791
118U5141	791
118U5141	791
118U5141	791
118U5141	794
118U5142	788
118U5142	788
118U5142	791
118U5142	791
118U5142	791
118U5142	791
118U5142	791
118U5142	791
118U5142	791
118U5142	794

Table of contents - Code numbers

118U5143 788
118U5143 788
118U5143 791
118U5143 791
118U5143 791
118U5143 791
118U5143 791
118U5143 791
118U5143 791
118U5143 794
118U5144 788
118U5144 788
118U5144 791
118U5144 791
118U5144 791
118U5144 791
118U5144 791
118U5144 791
118U5144 791
118U5144 794
118U5146 787
118U5146 787
118U5146 787
118U5146 787
118U5146 787
118U5146 787
118U5146 788
118U5146 788
118U5146 789
118U5146 789
118U5146 789
118U5146 789
118U5146 789
118U5146 789
118U5146 789
118U5146 790
118U5146 790
118U5146 790
118U5146 790
118U5146 790
118U5146 791
118U5146 791
118U5146 791
118U5146 794
118U5147 787
118U5147 787
118U5147 787
118U5147 787
118U5147 787
118U5147 787
118U5147 788
118U5147 788
118U5147 789
118U5147 789
118U5147 789
118U5147 789
118U5147 789
118U5147 789
118U5147 789
118U5147 789
118U5147 790
118U5147 790
118U5147 790
118U5147 790
118U5147 791
118U5147 791
118U5147 791
118U5147 794
118U5148 787
118U5148 787
118U5148 787
118U5148 787
118U5148 787
118U5148 787
118U5148 788
118U5148 788
118U5148 789
118U5148 789
118U5148 789
118U5148 789
118U5148 789
118U5148 789
118U5148 789
118U5148 790
118U5148 790
118U5148 790
118U5148 790
118U5148 790
118U5148 791
118U5148 791
118U5148 791
118U5148 794
118U5149 787
118U5149 787
118U5149 787
118U5149 787
118U5149 787
118U5149 787
118U5149 788
118U5149 788
118U5149 789
118U5149 789
118U5149 789
118U5149 789
118U5149 789
118U5149 789
118U5149 789
118U5149 790
118U5149 790
118U5149 790
118U5149 790
118U5149 790
118U5149 791
118U5149 791
118U5149 791
118U5149 794
118U5151 787
118U5151 788
118U5151 788
118U5151 789
118U5151 790
118U5151 790
118U5151 790
118U5151 790
118U5151 790
118U5151 794
118U5152 787
118U5152 788
118U5152 788
118U5152 789
118U5152 790
118U5152 790
118U5152 790
118U5152 790
118U5152 790
118U5152 794
118U5153 787
118U5153 788
118U5153 788
118U5153 789
118U5153 790
118U5153 790
118U5153 790
118U5153 790
118U5153 790
118U5153 790
118U5153 794
118U5154 787
118U5154 788
118U5154 788
118U5154 789
118U5154 790
118U5154 790
118U5154 790
118U5154 790
118U5154 790
118U5154 790
118U5154 794
118U5156 788
118U5156 788
118U5156 791
118U5156 791
118U5156 791
118U5156 791
118U5156 791
118U5156 791
118U5156 791
118U5156 794
118U5157 787
118U5157 787
118U5157 787
118U5157 787
118U5157 787
118U5157 787
118U5157 788
118U5157 788
118U5157 789
118U5157 789
118U5157 789
118U5157 789
118U5157 789
118U5157 789
118U5157 789
118U5157 790
118U5157 790
118U5157 790
118U5157 790
118U5157 790
118U5157 791
118U5157 791
118U5157 791
118U5157 794
118U5158 787
118U5158 788
118U5158 788
118U5158 789
118U5158 790
118U5158 790

118U5158 790
118U5158 790
118U5158 790
118U5158 794
118U5162 793
118U5163 820
118U5163 822
118U5163 822
118U5163 822
118U5163 822
118U5163 827
118U5164 820
118U5164 820
118U5164 820
118U5164 820
118U5164 820
118U5164 820
118U5164 821
118U5164 822
118U5164 822
118U5164 822
118U5164 822
118U5164 822
118U5164 823
118U5164 823
118U5164 823
118U5164 823
118U5164 823
118U5164 823
118U5164 823
118U5164 827
118U5165 821
118U5165 821
118U5165 823
118U5165 824
118U5165 824
118U5165 824
118U5165 824
118U5165 827
118U5165 841
118U5165 841
118U5165 841
118U5165 842
118U5166 821
118U5166 821
118U5166 824
118U5166 824
118U5166 827
118U5167 788
118U5167 788
118U5167 791
118U5167 791
118U5167 791
118U5167 791
118U5167 791
118U5167 791
118U5167 791
118U5167 794
118U5168 787
118U5168 787
118U5168 787
118U5168 787
118U5168 787
118U5168 787
118U5168 788
118U5168 788
118U5168 789
118U5168 789
118U5168 789
118U5168 789
118U5168 789
118U5168 789
118U5168 789
118U5168 789
118U5168 790
118U5168 790
118U5168 790
118U5168 790
118U5168 790
118U5168 791
118U5168 791
118U5168 791
118U5168 794
118U5169 787
118U5169 788
118U5169 788
118U5169 789
118U5169 790
118U5169 790
118U5169 790
118U5169 790
118U5169 794
118U5191 787
118U5191 794
118U5191 820
118U5191 827
118U5192 787
118U5192 794
118U5192 827
118U5193 791
118U5193 794
118U5193 827
118U5194 791
118U5194 794
118U5194 822
118U5194 827
118U5195 790
118U5195 794
118U5195 822
118U5195 827
118U5196 790
118U5196 794
118U5196 822
118U5196 827
118U5197 791
118U5197 794
118U5197 823
118U5197 827
118U5198 790
118U5198 794
118U5198 822
118U5198 827
118U5199 788
118U5199 794
118U5199 820
118U5199 827
120B0001 559
120B0002 559
120B0003 559
120B0004 559
120B0005 559
120B0006 559
120B0029 560
120B0030 560
120B0031 560
120B0032 560
120B0052 559
120B0054 559
120B0054 559
120B0054 559
120B0054 559
120B0054 559
120B0054 559
120B0054 559
120B0054 559
120F0226 541
120F0226 757
120F0226 787
120F0226 792
120F0226 820
120F0226 825
120F0228 541
120F0228 757
120F0228 787
120F0228 792
120F0228 820
120F0228 825
120F0230 541
120F0230 757
120F0230 787
120F0230 792
120F0230 820
120F0230 825
120F0232 541
120F0232 757
120F0232 787
120F0232 792
120F0232 820
120F0232 825
120F0234 541
120F0234 757
120F0234 757
120F0234 821
120F0234 825
120F0236 541
120F0236 757
120F0236 757
120F0236 821
120F0236 825
120F0238 541
120F0238 757
120F0238 757
120F0240 541
120F0240 757
120F0242 541
120F0242 757
120F0279 541
120F0280 541
120F0281 541
120F0282 541
120F0283 541
120F0284 541
120F0285 541
120F0293 541
120F0294 541
120F0295 541
120F0296 541
120F0297 541
120F0302 541

Table of contents - Code numbers

120F0303 541
120F0304 541
120F0305 541
120F0306 541
120F0307 541
120G0059 691
120G0060 691
120G0061 691
120G0062 691
120G0063 691
120G0064 691
120G0072 691
120G0073 691
120G0075 691
120G0076 691
120G0123 691
120G0124 691
120G0125 691
120G0129 691
120G0130 691
120G0131 691
120G0135 691
120G0136 691
120G0137 691
120G0138 691
120G0139 691
120G0140 691
120G0141 691
120G0142 691
120G0143 691
120G0144 691
120G0145 691
120G0146 691
120G0147 691
120G0149 691
120G0150 691
120G0152 691
120G0156 681
120G0156 841
120G0156 842
120G0158 681
120G0159 681
120G0159 841
120G0159 842
120G0161 681
120G0162 681
120G0162 841
120G0162 842
120G0164 681
120G0165 681
120G0167 681
120G0168 681
120G0170 681
120G0171 681
120G0173 681
120H0001 637
120H0002 638
120H0003 637
120H0004 638
120H0007 637
120H0009 637
120H0010 638
120H0011 637
120H0012 638
120H0013 637
120H0014 638
120H0017 637
120H0019 637
120H0020 638
120H0021 637
120H0022 638
120H0023 637
120H0024 638
120H0027 637
120H0029 637
120H0030 638
120H0151 637
120H0152 637
120H0183 647
120H0183 647
120H0184 647
120H0184 648
120H0185 647
120H0185 647
120H0186 647
120H0186 648
120H0187 647
120H0187 647
120H0188 647
120H0188 648
120H0189 647
120H0189 647
120H0190 647
120H0190 648
120H0191 647
120H0191 647
120H0197 647
120H0197 647
120H0198 647
120H0198 648
120H0199 637
120H0200 638
120H0201 637
120H0202 638
120H0205 637
120H0207 637
120H0208 638
120H0209 637
120H0210 638
120H0211 637
120H0212 638
120H0215 637
120H0217 637
120H0218 638
120H0250 638
120H0252 638
120H0253 637
120H0254 638
120H0255 637
120H0256 638
120H0259 637
120H0261 637
120H0262 638
120H0263 637
120H0264 638
120H0265 637
120H0266 638
120H0267 637
120H0268 638
120H0271 637
120H0272 638
120H0273 637
120H0274 638
120H0275 637
120H0276 638
120H0277 637
120H0279 637
120H0280 638
120H0289 637
120H0290 638
120H0291 637
120H0292 638
120H0295 637
120H0296 638
120H0297 637
120H0298 638
120H0299 637
120H0300 638
120H0301 637
120H0303 637
120H0304 638
120H0311 647
120H0311 648
120H0359 637
120H0360 638
120H0361 637
120H0362 638
120H0365 637
120H0367 637
120H0368 638
120H0610 647
120H0610 648
120H0611 647
120H0611 647
120H0612 647
120H0612 648
120H0613 647
120H0614 647
120H0614 648
120H0825 637
120H0826 638
120H0827 637
120H0828 638
120H0835 637
120H0841 637
120H0842 638
120H0843 637
120H0844 638
120H0851 637
120H0852 638
120H0853 637
120H0854 638
120H0931 667
120H0932 667
120H0933 667
120H0934 667
120H0935 667
120H0936 667
120H0937 667
120H0938 667
120H0939 667
120H0940 667
120H0941 667
120H0942 667
120H0951 667
120H0952 667
120H0953 667
120H0954 667
120H0955 667
120H0956 667
120H0957 667

120H0958 667
120H0959 667
120H0960 667
120H0961 667
120H0962 667
120H0963 667
120H0964 667
120H0965 667
120H0966 667
120H0967 667
120H0968 667
120H0969 667
120H0970 667
120H0971 667
120H0972 667
120H0973 667
120H0974 667
120H0987 667
120H0988 667
120H0989 667
120H0990 667
120H0991 667
120H0992 667
120H0993 667
120H0994 667
120H0995 667
120H0996 667
120H0997 667
120H0998 667
120H1062 637
120H1063 638
120H1064 637
120H1065 638
120H1072 637
120H1073 638
120H1074 637
120H1075 638
120H1096 647
120H1096 648
120H1097 647
120H1097 649
120H1098 637
120H1102 663
120H1103 663
120H1104 629
120H1105 629
120H1115 647
120H1116 648
120H1117 625
120H1118 625
120H1119 629
120H1120 629
120H1121 629
120H1122 629
120H1123 629
120H1124 629
120H1125 629
120H1126 629
120H1127 629
120H1128 629
120H1129 629
120H1130 629
120H1131 629
120H1132 629
120H1133 629
120H1134 629
120H1135 629
120H1136 629
120H1137 629
120H1138 629
120H1139 629
120H1140 629
120H1141 629
120H1142 629
120H1143 629
120H1144 629
120H1145 629
120H1146 629
120H1147 629
120H1148 629
120H1149 629
120H1150 629
120H1151 629
120H1152 629
120H1153 629
120H1154 629
120H1155 629
120H1156 629
120H1157 629
120H1158 629
120H1159 629
120H1160 629
120H1161 629
120H1162 629
120H1163 629
120H1164 629
120H1165 629
120H1166 629
120H1167 629
120H1168 629
120H1169 629
120H1170 629
120H1171 663
120H1172 663
120H1172 663
120H1172 663
120H1179 648
120H1180 629
120H1181 629
120H1182 629
120H1183 629
120H1184 629
120H1185 629
120H1186 629
120H1187 629
120H1188 629
120H1189 629
120H1190 629
120H1191 629
120H1192 629
120H1193 629
120H1194 629
120H1195 629
120H1196 629
120H1197 629
120H1198 629
120H1199 629
120H1200 629
120H1201 629
120H1202 629
120H1203 629
120H1204 629
120H1205 629
120H1206 629
120H1207 629
120H1208 629
120H1209 629
120H1210 629
120H1211 629
120H1212 629
120H1213 629
120H1214 629
120H1215 629
120H1216 629
120H1217 629
120H1218 629
120H1219 629
120H1220 629
120H1221 629
120H1222 629
120H1223 629
120H1224 629
120H1225 629
120H1226 629
120H1227 629
120H1230 625
120H1231 625
120H1272 677
120H1273 677
120U0363 584
120U0366 583
120U0373 582
120U0376 581
120U0378 582
120U0381 581
120U0383 582
120U0386 581
120U0388 584
120U0391 583
120U0393 584
120U0396 583
120U0398 582
120U0401 581
120U0403 582
120U0406 581
120U0408 582
120U0411 581
120U0578 584
120U0581 583
120U0583 584
120U0586 583
120U0593 584
120U0596 583
120U0598 582
120U0601 581
120U0603 582
120U0606 581
120U0608 582
120U0611 581
120U0708 584
120U0711 583
120U0718 584
120U0721 583
120U0743 584
120U0746 583
120U0758 584
120U0761 583
120U0763 582
120U0766 581
120U0888 584
120U0891 583

Table of contents - Code numbers

120U0903 582
120U0906 581
120U0913 582
120U0916 581
120U0918 584
120U0921 583
120U0923 584
120U0926 583
120U0928 584
120U0931 583
120U0933 584
120U0936 583
120U0938 584
120U0941 583
120U0943 584
120U0946 583
120U0948 584
120U0951 583
120U0958 582
120U0961 581
120U0963 584
120U0966 583
120U0973 582
120U0976 581
120U0983 582
120U0986 581
120U0988 584
120U0991 583
120U0998 584
120U1001 583
120U1003 582
120U1006 581
120U1008 584
120U1011 583
120U1013 582
120U1016 581
120U1018 584
120U1021 583
120U1023 582
120U1026 581
120U1028 584
120U1031 583
120U1033 582
120U1036 581
120U1038 584
120U1041 583
120U1043 582
120U1046 581
120U1048 584
120U1051 583
120U1053 584
120U1056 583
120U1063 584
120U1066 583
120U1068 584
120U1071 583
120U1073 584
120U1076 583
120U1078 584
120U1081 583
120U1083 582
120U1086 581
120U1088 584
120U1091 583
120U1093 582
120U1096 581
120U1098 584
120U1101 583
120U1108 584
120U1111 583
120U1118 584
120U1121 583
120U1123 582
120U1126 581
120U1128 584
120U1131 583
120U1133 580
120U1136 579
120U1138 580
120U1141 579
120U1143 580
120U1146 579
120U1148 580
120U1151 579
120U1153 580
120U1156 579
120U1158 580
120U1161 579
120U1163 580
120U1166 579
120U1168 580
120U1171 579
120U1173 580
120U1176 579
120U1178 580
120U1181 579
120U1183 580
120U1186 579
120U1188 580
120U1191 579
120U1193 580
120U1196 579
120U1198 580
120U1201 579
120U1203 580
120U1206 579
120U1208 580
120U1211 579
120U1218 580
120U1221 579
120U1223 580
120U1226 579
120U1228 580
120U1231 579
120U1238 580
120U1241 579
120U1248 580
120U1251 579
120U1253 580
120U1256 579
120U1258 580
120U1261 579
120U1263 580
120U1266 579
120U1268 580
120U1271 579
120U1273 580
120U1276 579
120U1278 580
120U1281 579
120U1286 579
120U1288 580
120U1291 579
120U1293 580
120U1296 579
120U1298 580
120U1301 579
120U1306 579
120U1308 580
120U1311 579
120U1313 580
120U1316 579
120U1318 580
120U1321 579
120U1326 579
120U1328 580
120U1331 579
120U1336 579
120U1338 580
120U1341 579
120U1343 580
120U1346 579
120U1348 580
120U1351 579
120U1353 580
120U1356 579
120U1358 580
120U1361 579
120U1366 579
120U1371 579
120U1373 580
120U1376 579
120U1378 580
120U1381 579
120U1383 580
120U1386 579
120U1388 580
120U1391 579
120U1396 579
120U1398 580
120U1401 579
120U1403 580
120U1406 579
120U1421 579
120U1423 580
120U1426 579
120U1428 580
120U1431 579
120U1433 580
120U1436 579
120U1438 580
120U1441 579
120U1448 580
120U1451 579
120U1453 580
120U1456 579
120U1461 579
120U1466 579
120U1468 580
120U1471 579
120U1476 579
120U1478 580
120U1481 579
120U1486 579
120U1488 580
120U1491 579
120U1493 584
120U1496 583
120U1498 582
120U1501 581
120U1503 584

120U1506 583
120U1508 584
120U1511 583
120U1513 584
120U1516 583
120U1518 584
120U1521 583
120U1528 584
120U1531 583
120U1533 584
120U1536 583
120U1538 584
120U1541 583
120U1543 584
120U1546 583
120U1548 584
120U1551 583
120U1553 584
120U1556 583
120U1558 582
120U1561 581
120U1563 584
120U1566 583
120U1571 581
120U1573 584
120U1576 583
120U1583 584
120U1586 583
120U1588 582
120U1591 581
120U1593 582
120U1596 581
120U1603 582
120U1606 581
120U1608 584
120U1611 583
120U1618 582
120U1621 581
120U1628 582
120U1631 581
120U1633 584
120U1636 583
120U1648 582
120U1651 581
120U1653 582
120U1656 581
120U1658 582
120U1661 581
120U1663 584
120U1666 583
120U1668 584
120U1671 583
120U1673 584
120U1676 583
120U1678 582
120U1681 581
120U1688 582
120U1691 581
120U1693 584
120U1696 583
120U1698 582
120U1701 581
120U1708 584
120U1711 583
120U1716 584
120U1718 584
120U1721 583
120U1723 582
120U1726 581
120U1728 582
120U1731 581
120U1733 584
120U1736 583
120U1743 584
120U1746 583
120U1748 584
120U1751 583
120U1753 582
120U1756 581
120U1758 584
120U1761 583
120U1763 582
120U1766 581
120U1768 584
120U1771 583
120U1773 584
120U1776 583
120U1778 582
120U1781 581
120U1783 582
120U1786 581
120U1788 584
120U1791 583
120U1808 584
120U1811 583
120U1818 584
120U1821 583
120U1828 584
120U1831 583
120U1833 584
120U1836 583
120U1853 584
120U1856 583
120U1858 582
120U1861 581
120U1868 584
120U1871 583
120U1873 584
120U1876 583
120U1878 584
120U1881 583
120U1888 584
120U1891 583
120U1893 584
120U1896 583
120U1898 584
120U1901 583
120U1908 584
120U1911 583
120U1913 582
120U1916 581
120U1926 582
120U1929 581
120U2011 582
120U2014 581
120U2016 582
120U2019 581
120U2021 582
120U2024 581
120U2037 579
120U2039 580
120U2042 579
120U2044 580
120U2047 579
120U2052 579
120U2057 579
120U2062 579
120U2069 582
120U2072 581
120U2074 584
120U2077 583
120U2079 584
120U2082 583
120U2084 584
120U2087 583
120U2089 584
120U2092 583
120U2094 584
120U2097 583
120U2099 584
120U2102 583
120U2104 584
120U2107 583
120U2124 584
120U2127 583
120U2129 584
120U2132 583
120U2149 584
120U2152 583
120U2154 582
120U2157 581
120U2159 584
120U2162 583
120U2164 580
120U2167 579
120U2169 580
120U2172 579
120U2174 580
120U2177 579
120U2179 580
120U2182 579
120U2194 582
120U2197 581
120U2204 584
120U2207 583
120U2234 580
120U2237 579
120U2267 579
120U2272 579
120U2274 580
120U2277 579
120U2279 580
120U2282 579
120U2284 580
120U2287 579
120U2289 584
120U2292 583
120U2297 581
120U2297 582
120U2299 580
120U2302 579
120U2304 580
120U2307 579
120U2309 580
120U2312 579
120U2319 580
120U2322 579
120U2324 580
120U2327 579
120U2329 580
120U2332 579

Table of contents - Code numbers

120U2339 580
120U2342 579
120U2344 580
120U2347 579
120U2349 580
120U2352 579
120U2359 580
120U2362 579
120U2364 584
120U2367 583
120U2384 580
120U2387 579
120U2397 579
120U2404 580
120U2407 579
120U2414 580
120U2417 579
120U2419 580
120U2422 579
120U2424 580
120U2427 579
120U2443 579
120U2446 580
120U2450 579
120U2451 582
120U2454 581
120U2455 582
120U2458 581
120U2463 580
120U2466 579
120U2470 579
120U2471 580
120U2474 579
120U2475 580
120U2478 579
120U2479 580
120U2482 579
120U2483 580
120U2486 579
120U2487 580
120U2490 579
120U2491 580
120U2494 579
120U2495 580
120U2498 579
120U2499 580
120U2502 579
120U2503 584
120U2506 583
120U2510 579
120U2534 579
120U2535 580
120U2538 579
120U2542 579
120U2543 580
120U2546 579
120U2554 579
120U2558 579
120U2559 580
120U2562 579
120U2567 580
120U2570 579
120U2574 579
120U2575 580
120U2578 579
120U2579 580
120U2582 579
120U2599 584
120U2602 583
120U2647 580
120U2650 579
120U2658 579
120U2757 584
120U2760 583
120U3087 582
120U3088 581
120U8001 600
120U8002 600
120U8003 600
120U8004 600
120U8005 600
120U8006 600
120U8007 600
120U8008 600
120U8009 600
120U8010 600
120U8011 600
120U8012 600
120U8013 600
120U8014 600
120U8015 600
120U8016 600
120U8017 600
120U8018 600
120U8019 600
120U8020 600
120U8021 600
120U8022 600
120U8023 600
120U8024 600
120U8025 600
120U8026 600
120U8027 600
120U8028 600
120U8029 600
120U8030 600
120U8031 600
120U8032 600
120U8033 600
120U8034 600
120U8035 600
120U8035 600
120U8036 600
120U8036 600
120U8037 600
120U8038 600
120U8039 600
120U8040 600
120U8041 600
120U8042 600
120U8043 600
120U8044 600
120U8045 600
120U8046 600
120U8047 600
120U8048 600
120U8049 600
120U8050 600
120U8051 600
120U8052 600
120U8053 600
120U8054 600
120U8055 600
120U8056 600
120U8057 600
120U8058 600
120U8059 600
120U8060 600
120U8061 600
120U8062 600
120U8063 600
120U8064 600
120U8065 600
120U8066 600
120U8067 600
120U8068 600
120U8265 600
120U8266 600
120U8271 600
120U8272 600
120U8277 600
120U8278 600
120U8283 600
120U8284 600
120U8295 600
120U8296 600
120U8301 600
120U8302 600
120U8307 600
120U8308 600
120U8313 600
120U8314 600
120U8331 600
120U8332 600
120U8337 600
120U8338 600
120U8343 600
120U8344 600
120U8349 600
120U8350 600
120U8355 600
120U8356 600
120U8398 600
120U8399 600
120U8412 600
120U8413 600
120Z0040 823
120Z0040 827
120Z0051 789
120Z0051 789
120Z0051 789
120Z0051 794
120Z0051 823
120Z0051 823
120Z0051 826
120Z0057 787
120Z0057 787
120Z0057 790
120Z0057 793
120Z0057 826
120Z0393 789
120Z0393 789
120Z0393 789
120Z0393 789
120Z0393 794
120Z0393 823
120Z0393 823
120Z0393 823
120Z0393 827
120Z0394 789
120Z0394 794

120Z0394 823
120Z0394 827
120Z0395 790
120Z0395 794
120Z0395 824
120Z0395 827
120Z0399 789
120Z0399 789
120Z0399 789
120Z0399 789
120Z0399 794
120Z0399 823
120Z0399 823
120Z0399 823
120Z0399 827
120Z0400 789
120Z0400 794
120Z0459 757
120Z0459 757
120Z0459 757
120Z0459 757
120Z0459 757
120Z0459 757
120Z0459 757
120Z0459 757
120Z0459 757
120Z0459 757
120Z0459 757
120Z0459 758
120Z0459 758
120Z0459 758
120Z0459 758
120Z0459 758
120Z0459 758
120Z0459 758
120Z0459 758
120Z0459 758
120Z0459 758
120Z0459 758
120Z0459 758
120Z0459 758
120Z0459 759
120Z0459 759
120Z0459 759
120Z0459 759
120Z0459 759
120Z0459 787
120Z0459 787
120Z0459 787
120Z0459 787
120Z0459 788
120Z0459 788
120Z0459 791
120Z0459 791
120Z0459 793
120Z0459 820
120Z0459 820
120Z0459 820
120Z0459 820
120Z0459 820
120Z0459 821
120Z0459 821
120Z0459 821
120Z0459 826
120Z0550 642
120Z0551 642
120Z0569 642
120Z0575 787
120Z0575 787
120Z0575 787
120Z0575 787
120Z0575 792
120Z575 820
120Z575 820
120Z575 820
120Z575 820
120Z0575 825
120Z0578 642
120Z0616 663
120Z0638 793
120Z0638 826
120Z0639 793
120Z0639 826
120Z0640 643
120Z0648 793
120Z0648 826
120Z0648 841
120Z0648 841
120Z0648 841
120Z0672 636
120Z0673 636
120Z0673 636
120Z0673 643
120Z0673 643
120Z0684 636
120Z0685 636
120Z0686 636
120Z0686 643
120Z0688 636
120Z5034 841
120Z5034 841
120Z5034 841
120Z5040 787
120Z5040 788
120Z5040 788
120Z5040 789
120Z5040 789
120Z5040 789
120Z5040 789
120Z5040 789
120Z5040 789
120Z5040 790
120Z5040 790
120Z5040 790
120Z5040 790
120Z5040 793
120Z5040 821
120Z5040 821
120Z5040 823
120Z5040 823
120Z5040 823
120Z5040 823
120Z5040 823
120Z5040 823
120Z5040 823
120Z5040 824
120Z5040 824
120Z5040 824
120Z5040 824
120Z5040 824
120Z5040 826
120Z5040 841
120Z5040 841
120Z5040 841
120Z5040 842
120Z5043 789
120Z5043 789
120Z5043 789
120Z5043 789
120Z5043 789
120Z5043 789
120Z5043 789
120Z5043 789
120Z5043 792
120Z5043 823
120Z5043 823
120Z5043 823
120Z5043 823
120Z5043 823
120Z5043 823
120Z5043 825
120Z5043 841
120Z5043 841
120Z5043 841
120Z5043 842
120Z5044 789
120Z5044 790
120Z5044 790
120Z5044 790
120Z5044 790
120Z5044 790
120Z5044 792
120Z5044 823
120Z5044 824
120Z5044 824
120Z5044 824
120Z5044 824
120Z5044 825
120Z5045 792
120Z5045 824
120Z5045 824
120Z5045 825
120Z5052 787
120Z5052 788
120Z5052 788
120Z5052 792
120Z5052 825
121L0363 585
121L0366 585
121L0373 585
121L0376 585
121L0388 585
121L0391 585
121L0398 585
121L0401 585
121L0578 585
121L0581 585
121L0598 585
121L0601 585
121L1363 585

Table of contents - Code numbers

121L1366 585
121L1368 585
121L1371 585
121L1373 585
121L1376 585
121L1388 585
121L1391 585
121L1393 585
121L1396 585
121L1398 585
121L1401 585
121L1673 585
121L1676 585
121L1688 585
121L1691 585
121L1718 585
121L1721 585
121L1723 585
121L1726 585
121L1748 585
121L1751 585
121L1753 585
121L1756 585
121L1773 585
121L1776 585
121L1778 585
121L1781 585
121L1853 585
121L1856 585
121L1908 585
121L1911 585
121L2049 585
121L2052 585
121L2079 585
121L2082 585
121L2089 585
121L2092 585
121L2099 585
121L2102 585
121L2119 585
121L2122 585
121L2124 585
121L2127 585
121L2164 585
121L2167 585
121L2169 585
121L2172 585
121L2264 585
121L2267 585
121L2364 585
121L2367 585
121L2447 585
121L2450 585
121L2483 585
121L2486 585
121L2749 585
121L2752 585
121L2757 585
121L2760 585
121L2781 585
121L2784 585
121L2848 585
121L2851 585
121L2989 585
121L2992 585
121L3030 585
121L3033 585
121L3071 585
121L3072 585
121L3112 585
121L3113 585
121L3114 585
121L3115 585
121L3116 585
121L3117 585
121L3118 585
121L3119 585
121L3120 585
121L3121 585
121L3122 585
121L3123 585
121L3183 585
121L3184 585
121L5000 573
121L5001 573
121L5002 573
121L5003 573
121L5004 573
121L5005 573
121L5006 573
121L5007 573
121L5008 573
121L5009 573
121L5010 573
121L5011 573
121L5012 573
121L5013 573
121L5014 573
121L5015 573
121L5016 573
121L5017 573
121L5018 573
121L5019 573
121L5020 573
121L5021 573
121L5022 573
121L5023 573
121L5026 573
121L5027 573
121L5028 573
121L5029 573
121L5030 573
121L5031 573
121L5032 573
121L5033 573
121L5034 573
121L5035 573
121L5036 573
121L5037 573
121L5038 573
121L5039 573
121L5040 573
121L5041 573
121L5042 573
121L5043 573
121L5044 573
121L5045 573
121L5046 573
121L5047 573
121L5048 573
121L5049 573
121L8628 599
121L8629 599
121L8629 789
121L8629 792
121L8629 823
121L8629 825
121L8630 599
121L8631 599
121L8631 789
121L8631 792
121L8631 823
121L8631 825
121L8632 599
121L8633 599
121L8633 789
121L8633 792
121L8633 823
121L8633 825
121L8634 599
121L8635 599
121L8635 789
121L8635 792
121L8635 823
121L8635 825
121L8636 599
121L8637 599
121L8637 789
121L8637 792
121L8637 823
121L8637 825
121L8638 599
121L8639 599
121L8639 789
121L8639 792
121L8639 823
121L8639 825
121L8640 599
121L8641 599
121L8641 790
121L8641 792
121L8641 824
121L8641 825
121L8642 599
121L8643 599
121L8643 789
121L8643 792
121L8643 823
121L8643 825
121L8644 599
121L8645 599
121L8645 790
121L8645 792
121L8645 824
121L8645 825
121L8646 599
121L8647 599
121L8647 790
121L8647 792
121L8647 824
121L8647 825
121L8648 599
121L8649 599
121L8649 790
121L8649 792
121L8650 599
121L8651 599
121L8651 790
121L8651 792
121L8651 824
121L8651 825

121L8652 599
121L8653 599
121L8653 824
121L8653 825
121L8654 599
121L8655 599
121L8655 824
121L8655 825
121L8656 599
121L8657 599
121L8658 599
121L8659 599
121L8660 599
121L8661 599
121L8662 599
121L8663 599
121L8664 599
121L8665 599
121L8666 599
121L8667 599
121L8668 599
121L8669 599
121L8670 599
121L8671 599
121L8672 599
121L8673 599
121L8674 599
121L8675 599
121L8676 599
121L8677 599
121L8678 599
121L8679 599
121L8680 599
121L8681 599
121L8682 599
121L8683 599
121L8684 599
121L8685 599
121L8686 599
121L8687 599
121L8688 599
121L8689 599
121L8690 599
121L8691 599
121L8692 599
121L8693 599
121L8694 599
121L8695 599
121L8696 599
121L8697 599
121L8698 599
121L8699 599
121L8700 599
121L8701 599
121L8702 599
121L8703 599
121L8704 599
121L8705 599
121L8706 599
121L8707 599
121L9504 613
121L9505 613
121L9506 613
121L9507 613
121L9508 613
121L9509 613
121L9510 613
121L9511 613
121L9512 613
121L9513 613
121L9514 613
121L9515 613
121L9516 613
121L9517 613
121L9518 613
121L9519 613
121L9520 613
121L9521 613
121L9524 613
121L9525 613
121L9526 613
121L9527 613
121L9528 613
121L9529 613
121L9530 613
121L9531 613
121L9532 613
121L9533 613
121L9534 613
121L9535 613
121L9535 787
121L9535 792
121L9536 613
121L9537 613
121L9537 788
121L9537 792
121L9538 613
121L9539 613
121L9539 788
121L9539 792
121L9540 613
121L9541 613
121L9541 821
121L9541 825
121L9542 613
121L9543 613
121L9543 821
121L9543 825
121L9544 613
121L9545 613
121L9546 613
121L9547 613
121L9548 613
121L9549 613
121L9550 613
121L9551 613
121L9552 613
121L9553 613
121L9554 613
121L9555 613
121L9556 613
121L9557 613
121L9558 613
121L9559 613
121L9560 613
121L9561 613
121L9562 613
121L9563 613
121U8001 600
121U8002 600
121U8003 600
121U8004 600
121U8004 789
121U8005 600
121U8006 600
121U8007 600
121U8008 600
121U8009 600
121U8010 600
121U8011 600
121U8012 600
121U8013 600
121U8014 600
121U8015 600
121U8016 600
121U8017 600
121U8018 600
121U8019 600
121U8020 600
121U8021 600
121U8022 600
121U8023 600
121U8024 600
121U8025 600
121U8026 600
121U8026 789
121U8027 600
121U8028 600
121U8029 600
121U8030 600
121U8031 600
121U8032 600
121U8033 600
121U8034 600
121U8037 600
121U8038 600
121U8039 600
121U8040 600
121U8041 600
121U8042 600
121U8043 600
121U8044 600
121U8045 600
121U8046 600
121U8047 600
121U8048 600
121U8049 600
121U8050 600
121U8051 600
121U8052 600
121U8053 600
121U8054 600
121U8055 600
121U8056 600
121U8059 600
121U8060 600
121U8061 600
121U8062 600
121U8063 600
121U8064 600
121U8065 600
121U8066 600
121U8067 600
121U8068 600
121U8418 600
121U8419 600
121U8512 599
121U8513 599
121U8514 599
121U8515 599
121U8516 599

Table of contents - Code numbers

121U8517 599
121U8518 599
121U8519 599
121U8520 599
121U8521 599
121U8522 599
121U8523 599
121U8524 599
121U8525 599
121U8526 599
121U8527 599
121U8528 599
121U8529 599
121U8530 599
121U8531 599
121U8532 599
121U8533 599
121U8534 599
121U8535 599
121U8540 599
121U8541 599
121U8542 599
121U8543 599
121U8544 599
121U8545 599
121U8546 599
121U8547 599
121U8548 599
121U8549 599
121U8550 599
121U8551 599
121U8552 599
121U8553 599
121U8554 599
121U8555 599
121U8556 599
121U8557 599
121U8558 599
121U8559 599
121U8560 599
121U8561 599
121U8562 599
121U8563 599
121U8564 599
121U8565 599
121U8566 599
121U8567 599
121U8568 599
121U8569 599
121U8570 599
121U8571 599
121U8572 599
121U8573 599
121U8574 599
121U8575 599
121U8576 599
121U8577 599
121U8578 599
121U8579 599
121U8580 599
121U8581 599
121U8582 599
121U8583 599
121U8584 599
121U8585 599
121U8586 599
121U8587 599
121U8588 599
121U8589 599
121U8590 599
121U8591 599
121U8592 599
121U8593 599
121U8594 599
121U8595 599
121U8596 599
121U8597 599
121U8598 599
121U8599 599
121U8600 599
121U8601 599
121U8602 599
121U8603 599
121U8604 599
121U8605 599
121U8606 599
121U8607 599
121U8608 599
121U8609 599
121U8610 599
121U8611 599
121U8612 599
121U8613 599
121U8614 599
121U8615 599
121U8616 599
121U8617 599
121U8618 599
121U8619 599
121U8620 599
121U8621 599
121U8622 599
121U8623 599
121U8624 599
121U8625 599
121U8626 599
121U8627 599
121U9001 595
121U9002 595
121U9003 595
121U9004 595
121U9005 595
121U9006 595
121U9007 595
121U9008 595
121U9009 595
121U9010 595
121U9011 595
121U9012 595
121U9013 595
121U9014 595
121U9015 595
121U9016 595
121U9017 595
121U9018 595
121U9019 595
121U9020 595
121U9021 595
121U9022 595
121U9023 595
121U9024 595
121U9025 595
121U9026 595
123B1109 517
123B1110 517
123B1111 517
123B1112 517
123B1113 517
123B1113 526
123B1114 517
123B1115 517
123B1116 517
123B1117 517
123B1118 517
123B1118 526
123B1119 517
123B1119 526
123B1120 517
123B1120 526
123B1121 517
123B1122 517
123B1123 517
123B1124 517
123B1125 517
123B1125 526
123B1126 517
123B1126 526
123B1127 517
123B1127 526
123B1128 517
123B1129 517
123B1130 517
123B1131 517
123B1132 517
123B1132 526
123B1133 517
123B1133 526
123B1134 517
123B1134 526
123B1135 517
123B1136 517
123B1137 517
123B1138 517
123B1142 517
123B1142 526
123B1143 517
123B1145 517
123B1146 517
123B1148 517
123B1153 526
123B1154 526
123B1155 526
123B1156 526
123B1161 526
123B1162 526
123B1163 526
123B1165 517
123B1166 517
123B1167 517
123B1168 517
123B1169 517
123B1170 517
123B1171 517
123B1303 526
123B1304 526
123B1305 526
123B1307 526
123B1308 526
123B1309 526
123B1310 526
123B1311 526

123B1312 526
123B1313 517
123B1313 526
123B1314 517
123B1314 526
123B1513 518
123B1514 518
123B1515 518
123B1516 518
123B1517 518
123B1517 527
123B1518 518
123B1519 518
123B1520 518
123B1521 518
123B1522 518
123B1522 527
123B1523 519
123B1523 527
123B1524 518
123B1525 518
123B1526 518
123B1527 518
123B1528 518
123B1528 527
123B1529 519
123B1529 527
123B1530 518
123B1531 518
123B1532 518
123B1533 518
123B1534 518
123B1534 527
123B1535 519
123B1535 527
123B1536 518
123B1537 518
123B1539 518
123B1539 527
123B1540 518
123B1541 518
123B1542 518
123B1543 518
123B1544 519
123B1545 519
123B1545 527
123B1546 519
123B1547 519
123B1548 519
123B1548 527
123B1549 519
123B1550 519
123B1550 527
123B1551 519
123B1551 527
123B1552 519
123B1553 519
123B1553 527
123B1554 519
123B1568 527
123B1569 527
123B1570 527
123B1571 527
123B1572 527
123B1573 527
123B1574 527
123B1575 527
123B1576 527
123B1577 527
123B1578 527
123B1579 527
123B1580 527
123B1581 527
123B1584 527
123B1585 527
123B1588 527
123B1589 527
123B1590 527
123B1591 518
123B1599 527
123B1601 527
123B1608 518
123B1609 518
123B1610 518
123B1611 518
123B1612 518
123B1613 518
123B1614 519
123B1614 527
123B1617 519
123B1617 527
123B1618 519
123B1618 527
123B1704 518
123B1704 527
123B1705 518
123B1705 527
123B1706 518
123B1706 527
123B1707 518
123B1707 527
123B1708 518
123B1709 518
123B1710 518
123B1710 527
123B1711 518
123B1711 527
123B1712 518
123B1713 518
123B1714 518
123B1714 527
123B1715 518
123B1715 527
123B1716 519
123B1718 527
123B1719 518
123B1720 519
123B1720 527
123B2103 520
123B2104 520
123B2104 528
123B2105 520
123B2106 520
123B2106 754
123B2107 520
123B2108 520
123B2108 528
123B2109 520
123B2110 520
123B2110 754
123B2111 520
123B2112 520
123B2112 528
123B2113 520
123B2114 520
123B2115 520
123B2116 520
123B2116 528
123B2117 520
123B2118 520
123B2119 520
123B2120 520
123B2120 754
123B2121 520
123B2121 528
123B2122 520
123B2122 528
123B2123 520
123B2123 754
123B2124 520
123B2125 520
123B2125 528
123B2126 520
123B2126 754
123B2126 788
123B2126 792
123B2127 520
123B2127 788
123B2127 792
123B2127 820
123B2127 825
123B2128 520
123B2129 520
123B2130 520
123B2132 520
123B2134 520
123B2135 520
123B2135 528
123B2136 520
123B2136 528
123B2137 520
123B2138 520
123B2138 528
123B2139 520
123B2140 520
123B2140 528
123B2141 528
123B2142 528
123B2143 528
123B2144 528
123B2145 528
123B2146 528
123B2147 528
123B2148 528
123B2149 528
123B2150 528
123B2152 528
123B2153 528
123B2155 528
123B2156 528
123B2157 528
123B2158 528
123B2160 528
123B2174 528
123B2179 528
123B2180 528
123B2181 528
123B2182 528
123B2183 520
123B2183 528
123B2184 528

Table of contents - Code numbers

123B2185 528
123B2186 520
123B2186 528
123B2501 521
123B2502 521
123B2502 529
123B2503 521
123B2504 521
123B2504 529
123B2505 521
123B2506 521
123B2507 521
123B2508 521
123B2508 529
123B2509 521
123B2510 521
123B2510 822
123B2510 825
123B2511 521
123B2512 521
123B2512 529
123B2513 521
123B2514 521
123B2514 791
123B2514 792
123B2514 822
123B2514 825
123B2515 521
123B2516 521
123B2516 529
123B2518 521
123B2518 791
123B2518 792
123B2518 822
123B2518 825
123B2520 521
123B2520 529
123B2521 521
123B2522 521
123B2522 529
123B2523 521
123B2524 521
123B2524 529
123B2525 521
123B2525 529
123B2526 521
123B2526 529
123B2527 529
123B2528 529
123B2529 529
123B2530 529
123B2531 529
123B2532 521
123B2532 529
123B2540 521
123B2541 521
123B2541 529
123B2543 529
123B2544 529
123B2545 529
123B2546 521
123B2546 529
123B2547 529
123B2548 529
123B2550 521
123B2550 529
123B2551 521
123B2551 529
123B2703 521
123B2703 529
123B2704 521
123B2704 791
123B2704 792
123B2704 822
123B2704 825
123B2706 521
123B2707 521
123B2708 521
123B2710 521
123B2711 521
123B2711 529
123B2714 521
123B2714 529
123B3102 522
123B3103 522
123B3103 753
123B3104 522
123B3105 522
123B3106 522
123B3107 522
123B3107 753
123B3110 522
123B3111 522
123B3112 522
123B3113 522
123B3114 522
123B3115 522
123B3115 753
123B3116 522
123B3117 522
123B3118 522
123B3119 522
123B3120 522
123B3121 522
123B3121 753
123B3122 522
123B3123 522
123B3124 522
123B3124 753
123B3125 522
123B3126 522
123B3127 522
123B3128 522
123B3128 753
123B3129 530
123B3130 530
123B3131 530
123B3132 530
123B3133 530
123B3134 530
123B3137 530
123B3138 530
123B3141 522
123B3142 522
123B3143 522
123B3144 522
123B3145 522
123B3146 522
123B3147 530
123B3148 530
123B3149 530
123B3150 530
123B3151 530
123B3152 530
123B3153 522
123B3154 522
123B3155 530
123B3156 530
123B3157 522
123B3158 522
123B3159 522
123B3160 522
123B3163 522
123B3164 522
123B3165 530
123B3166 522
123B3167 522
123B3167 753
123B3170 530
123B3171 522
123B3173 522
123B3174 522
123B3301 530
123B3302 530
123B3303 530
123B3304 530
123B3305 522
123B3305 530
123B3306 522
123B3306 530
123B3307 522
123B3307 530
123B3308 522
123B3308 530
123B3309 530
123B3310 530
123B3314 530
123B3504 523
123B3505 523
123B3506 523
123B3507 523
123B3508 523
123B3509 523
123B3510 523
123B3511 523
123B3512 523
123B3513 523
123B3514 523
123B3515 523
123B3516 531
123B3517 531
123B3518 531
123B3519 531
123B3520 531
123B3521 531
123B3522 531
123B3523 531
123B3524 531
123B3525 531
123B3527 523
123B3528 523
123B3529 523
123B3530 523
123B3531 523
123B3531 531
123B3532 523
123B3532 531
123B3533 531
123B3701 523
123B3702 523
123B3703 523

123B3704 523
123B3705 523
123b3708 523
123B3712 523
123B4108 524
123B4109 524
123B4110 524
123B4111 524
123B4112 524
123B4113 524
123B4114 524
123B4115 524
123B4116 524
123B4116 531
123B4117 524
123B4117 531
123B4118 524
123B4119 524
123B4120 524
123B4120 531
123B4121 524
123B4121 531
123B4122 524
123B4123 524
123B4502 525
123B4503 525
123B4505 525
123B4506 525
123B4507 525
123B4508 525
123B4511 525
123B4512 525
123B4513 525
123B4514 525
123B4515 525
123B4516 525
123B4517 525
123B4518 525
123B4519 525
123B4520 525
123B8101 517
123B8102 517
123B8102 526
123B8103 517
123B8104 517
123B8104 526
123B8105 517
123B8105 526
123B8106 517
123B8107 526
123B8108 526
123B8109 526
123B8110 526
123B8111 526
123B8114 526
123B8115 518
123B8116 527
123B8117 518
123B8117 527
123B8118 518
123B8119 527
123B8120 518
123B8121 518
123B8122 527
123B8123 518
123B8124 527
123B8125 518
123B8125 518
123B8125 527
123B8126 527
123B8127 518
123B8301 522
123B8302 522
123B8303 522
123B8304 522
123B8305 522
123B8306 522
123B8309 523
123B8310 523
123B8311 530
123B8401 524
123B8402 524
123B8402 531
123B8403 524
123B8404 524
123B8405 524
123B8406 524
123B8407 524
123B8407 531
123B8408 524
123B8409 524
123B8410 524
123B8410 531
123B8411 524
123B8412 524
123B8413 524
123B8414 524
123B8415 531
123B8417 531
123B8418 531
123B8419 524
123B8419 531
123B8421 531
123B8422 531
123B8423 531
123B8424 531
123B8425 524
123B8425 531
123B9133 791
123B9133 794
123B9133 822
123B9133 822
123B9133 827
123B9139 791
123B9139 794
123B9139 822
123B9139 827
123B9151 788
123B9151 788
123B9151 791
123B9151 794
123B9151 820
123B9151 822
123B9151 827
123B9215 791
123B9215 822
123B9219 788
123B9219 794
123B9219 820
123B9219 827
123B9222 788
123B9222 791
123B9222 794
123B9222 822
123B9222 822
123B9222 827
123B9226 791
123B9226 794
123B9226 822
123B9226 827
123B9312 788
123B9315 791
123B9315 791
123B9315 791
123B9315 794
123B9315 822
123B9315 822
123B9315 822
123B9315 822
123B9315 827
123B9316 788
123B9316 794
123B9316 820
123B9316 827
123F3103 753
123F3107 753
123F3115 753
123F3121 753
123F3124 753
123F3128 753
123F3167 753
123G2114 754
131B3543 559
131B3544 559
131B3545 559
131B3546 559
131B3547 559
131B3548 559
131B3549 559
131B3550 559
131B3552 559
131B3553 559
131B3554 559
131B3555 559
131B3556 559
131B3557 559
131B3558 559
131B3559 559
131B3560 559
131B3561 559
131B3562 559
131B3563 559
131B3564 559
131B3565 559
131B3566 559
131B3567 559
131B3568 559
131B3569 559
131B3570 559
131B3571 559
131B3572 559
131B3573 559
131B3574 559
131B3575 559
131B3576 559
131B3577 559
131B3578 559
131B3580 559
131B3582 559
131B3583 559
131B3584 559

Table of contents - Code numbers

131B3585 559
131B3586 559
131B3587 559
131B3588 559
131B3589 559
131B3590 559
131B3591 559
131B5009 560
131B5347 560
131B5348 560
131B5349 560
131B5350 560
131B5351 560
131B5352 560
131B5354 560
131B5355 560
131B5356 560
131B5357 560
131B5358 560
131B5359 560
131B5360 560
131B5361 560
131B5362 560
131B5363 560
131B5364 560
131B5365 560
131B5367 560
131B5368 560
131B5369 560
131B5370 560
131B5371 560
131B5372 560
131X2198 559
131X2199 559
131X2200 559
134F9366 694
134F9368 694
134F9371 694
134G3576 694
134G3577 694
134G3578 694
134G3579 694
134G3580 694
134G3581 694
134G3582 694
134G3583 694
134G3584 694
134G4008 694
134G4010 694
134G4012 694
134G4013 694
134G4015 694
134G4016 694
134G4018 694
134G4019 694
134G4020 694
134G4021 694
134G4022 694
134G4023 694
134L7237 694
134L7239 694
134L7239 694
134N4261 681
134N4263 681
148B3740 301
148B3741 301
148B3742 301
148B3743 301
148B3744 301
148B3745 249
148B3745 260
148B3745 265
148B3745 301
148B3746 301
148B3747 301
148B3750 301
148B3768 302
148B3769 302
148B3778 302
148B4177 301
148B4179 301
148B4180 301
148B4181 301
148B4184 283
148B4210 302
148B4211 302
148B4216 301
148B4218 302
148B4219 302
148B4223 301
148B4223 302
148B4224 301
148B4225 301
148B4226 301
148B4227 301
148B4228 301
148B4229 301
148B4230 301
148B4232 302
148B4233 301
148B4245 283
148B4263 302
148B4264 302
148B4265 302
148B4266 302
148B4495 302
148B4564 301
148B4565 301
148B4566 301
148B4567 302
148B4568 301
148B4570 302
148B4572 301
148B4581 302
148B4582 302
148B4771 301
148B4772 301
148B5000 280
148B5001 280
148B5002 284
148B5003 284
148B5004 284
148B5005 284
148B5010 281
148B5011 281
148B5012 284
148B5013 284
148B5013 284
148B5014 284
148B5014 284
148B5020 280
148B5021 280
148B5030 281
148B5031 281
148B5032 280
148B5100 280
148B5101 280
148B5102 306
148B5103 307
148B5104 306
148B5105 307
148B5106 306
148B5107 307
148B5110 281
148B5111 281
148B5112 308
148B5113 308
148B5116 306
148B5117 307
148B5120 280
148B5121 280
148B5122 284
148B5122 308
148B5123 284
148B5123 308
148B5124 284
148B5124 308
148B5125 284
148B5125 308
148B5130 281
148B5131 281
148B5134 284
148B5134 308
148B5135 284
148B5135 308
148B5200 280
148B5201 280
148B5202 306
148B5203 307
148B5204 306
148B5205 307
148B5206 306
148B5207 307
148B5208 327
148B5209 327
148B5210 281
148B5211 281
148B5212 306
148B5213 307
148B5214 306
148B5215 307
148B5216 306
148B5217 307
148B5220 280
148B5221 280
148B5222 280
148B5223 280
148B5224 280
148B5225 280
148B5226 306
148B5227 307
148B5228 306
148B5229 307
148B5230 281
148B5231 281
148B5232 281
148B5233 281
148B5234 281
148B5235 281
148B5236 327
148B5237 327

148B5240 282
148B5241 282
148B5242 246
148B5243 246
148B5244 246
148B5245 246
148B5246 246
148B5247 246
148B5248 246
148B5249 246
148B5250 283
148B5251 283
148B5252 250
148B5252 284
148B5252 308
148B5252 329
148B5252 332
148B5253 250
148B5253 284
148B5253 308
148B5253 329
148B5253 332
148B5254 250
148B5254 284
148B5254 308
148B5254 329
148B5254 332
148B5255 250
148B5255 284
148B5255 308
148B5255 329
148B5255 332
148B5256 250
148B5256 284
148B5256 308
148B5256 329
148B5256 332
148B5257 250
148B5257 284
148B5257 308
148B5257 329
148B5257 332
148B5258 250
148B5258 284
148B5258 308
148B5258 329
148B5258 332
148B5259 250
148B5259 284
148B5259 308
148B5259 329
148B5259 332
148B5260 282
148B5261 282
148B5262 282
148B5263 282
148B5264 282
148B5265 282
148B5270 283
148B5271 283
148B5272 283
148B5273 283
148B5274 283
148B5275 283
148B5276 284
148B5276 285
148B5277 284
148B5277 285
148B5278 284
148B5278 285
148B5279 284
148B5279 285
148B5280 308
148B5280 309
148B5281 308
148B5281 309
148B5282 329
148B5282 329
148B5283 332
148B5283 332
148B5284 250
148B5284 250
148B5289 295
148B5290 295
148B5291 295
148B5292 295
148B5293 345
148B5294 345
148B5295 264
148B5296 264
148B5297 319
148B5298 319
148B5299 319
148B5300 280
148B5301 280
148B5302 306
148B5303 307
148B5304 306
148B5305 307
148B5306 306
148B5307 307
148B5308 327
148B5309 327
148B5310 281
148B5311 281
148B5312 306
148B5313 307
148B5314 306
148B5315 307
148B5316 306
148B5317 307
148B5320 280
148B5321 280
148B5322 280
148B5323 280
148B5324 280
148B5325 280
148B5326 306
148B5327 307
148B5328 306
148B5329 307
148B5330 281
148B5331 281
148B5332 281
148B5333 281
148B5334 281
148B5335 281
148B5336 327
148B5337 327
148B5340 282
148B5341 282
148B5342 246
148B5343 246
148B5344 246
148B5345 246
148B5346 246
148B5347 246
148B5348 246
148B5349 246
148B5350 283
148B5351 283
148B5352 250
148B5352 285
148B5352 309
148B5352 329
148B5352 332
148B5353 250
148B5353 285
148B5353 309
148B5353 329
148B5353 332
148B5354 250
148B5354 285
148B5354 309
148B5354 329
148B5354 332
148B5355 250
148B5355 285
148B5355 309
148B5355 329
148B5355 332
148B5356 250
148B5356 285
148B5356 309
148B5356 329
148B5356 332
148B5357 250
148B5357 285
148B5357 309
148B5357 329
148B5357 332
148B5358 250
148B5358 285
148B5358 309
148B5358 329
148B5358 332
148B5359 250
148B5359 285
148B5359 309
148B5359 329
148B5359 332
148B5360 282
148B5361 282
148B5362 282
148B5363 282
148B5364 282
148B5365 282
148B5370 283
148B5371 283
148B5372 283
148B5373 283
148B5374 283
148B5375 283
148B5377 295
148B5378 295
148B5379 295
148B5380 295
148B5381 345
148B5382 345
148B5383 264
148B5384 264

Table of contents - Code numbers

148B5385 319
148B5386 319
148B5387 319
148B5388 319
148B5389 319
148B5390 319
148B5391 250
148B5391 284
148B5391 308
148B5391 329
148B5391 332
148B5392 250
148B5392 284
148B5392 308
148B5392 329
148B5392 332
148B5393 250
148B5393 285
148B5393 309
148B5393 329
148B5393 332
148B5394 250
148B5394 285
148B5394 309
148B5394 329
148B5394 332
148B5395 295
148B5396 295
148B5397 295
148B5398 295
148B5399 295
148B5400 280
148B5401 280
148B5402 306
148B5403 307
148B5404 306
148B5405 307
148B5406 306
148B5407 307
148B5408 327
148B5409 327
148B5410 281
148B5411 281
148B5412 306
148B5413 307
148B5414 306
148B5415 307
148B5416 306
148B5417 307
148B5420 280
148B5421 280
148B5422 280
148B5423 280
148B5424 280
148B5425 280
148B5426 306
148B5427 307
148B5428 306
148B5429 307
148B5430 281
148B5431 281
148B5432 281
148B5433 281
148B5434 281
148B5435 281
148B5436 327
148B5437 327
148B5440 282
148B5441 282
148B5442 246
148B5443 246
148B5444 246
148B5445 246
148B5446 246
148B5447 246
148B5448 246
148B5449 246
148B5450 283
148B5451 283
148B5452 250
148B5452 285
148B5452 309
148B5452 329
148B5452 332
148B5453 250
148B5453 285
148B5453 309
148B5453 329
148B5453 332
148B5454 250
148B5454 285
148B5454 309
148B5454 329
148B5454 332
148B5455 250
148B5455 285
148B5455 309
148B5455 329
148B5455 332
148B5456 250
148B5456 285
148B5456 309
148B5456 329
148B5456 332
148B5457 250
148B5457 285
148B5457 309
148B5457 329
148B5457 332
148B5458 250
148B5458 285
148B5458 309
148B5458 329
148B5458 332
148B5459 250
148B5459 285
148B5459 309
148B5459 329
148B5459 332
148B5460 282
148B5461 282
148B5462 282
148B5463 282
148B5464 282
148B5465 282
148B5470 283
148B5471 283
148B5472 283
148B5473 283
148B5474 283
148B5475 283
148B5476 285
148B5476 285
148B5476 286
148B5477 285
148B5477 285
148B5477 286
148B5478 285
148B5478 285
148B5478 286
148B5479 285
148B5479 285
148B5479 286
148B5480 309
148B5480 309
148B5480 310
148B5481 309
148B5481 309
148B5481 310
148B5482 329
148B5482 330
148B5482 330
148B5483 332
148B5483 333
148B5483 333
148B5484 250
148B5484 251
148B5484 251
148B5486 295
148B5487 295
148B5488 295
148B5489 295
148B5490 345
148B5491 345
148B5492 264
148B5493 264
148B5494 319
148B5495 319
148B5496 319
148B5497 319
148B5498 285
148B5498 309
148B5498 329
148B5498 332
148B5499 285
148B5499 309
148B5499 329
148B5499 332
148B5500 280
148B5501 280
148B5502 306
148B5503 307
148B5504 306
148B5505 307
148B5506 306
148B5507 307
148B5508 327
148B5509 327
148B5510 281
148B5511 281
148B5512 306
148B5513 307
148B5514 306
148B5515 307
148B5516 306
148B5517 307
148B5520 280
148B5521 280
148B5522 280
148B5523 280
148B5524 280

148B5525 280
148B5526 307
148B5527 306
148B5528 306
148B5529 307
148B5530 281
148B5531 281
148B5532 281
148B5533 281
148B5534 281
148B5535 281
148B5536 327
148B5537 327
148B5539 327
148B5540 282
148B5541 282
148B5543 246
148B5544 247
148B5545 246
148B5546 246
148B5547 246
148B5548 247
148B5549 247
148B5550 283
148B5551 283
148B5552 247
148B5560 282
148B5561 282
148B5562 282
148B5563 282
148B5564 282
148B5565 282
148B5566 295
148B5567 295
148B5568 295
148B5569 295
148B5570 283
148B5571 283
148B5572 283
148B5573 283
148B5574 283
148B5575 283
148B5576 251
148B5576 285
148B5576 309
148B5576 330
148B5576 333
148B5577 251
148B5577 285
148B5577 309
148B5577 330
148B5577 333
148B5578 251
148B5578 285
148B5578 309
148B5578 330
148B5578 333
148B5579 251
148B5579 285
148B5579 309
148B5579 330
148B5579 333
148B5580 251
148B5580 285
148B5580 309
148B5580 330
148B5580 333
148B5581 251
148B5581 285
148B5581 309
148B5581 330
148B5581 333
148B5582 251
148B5582 285
148B5582 309
148B5582 330
148B5582 333
148B5583 251
148B5583 285
148B5583 309
148B5583 330
148B5583 333
148B5585 345
148B5586 345
148B5587 264
148B5588 264
148B5589 319
148B5590 319
148B5591 319
148B5592 319
148B5593 251
148B5593 285
148B5593 309
148B5593 330
148B5593 333
148B5594 251
148B5594 285
148B5594 309
148B5594 330
148B5594 333
148B5595 295
148B5596 295
148B5600 280
148B5601 280
148B5602 306
148B5603 307
148B5604 306
148B5605 307
148B5608 327
148B5609 327
148B5610 281
148B5611 281
148B5612 306
148B5613 307
148B5614 306
148B5615 307
148B5620 280
148B5621 280
148B5622 280
148B5623 280
148B5624 247
148B5625 247
148B5626 307
148B5627 306
148B5628 307
148B5629 306
148B5630 281
148B5631 281
148B5632 281
148B5633 281
148B5636 327
148B5637 327
148B5640 282
148B5641 282
148B5642 247
148B5643 247
148B5644 247
148B5645 247
148B5646 295
148B5647 295
148B5648 295
148B5649 295
148B5650 283
148B5651 283
148B5652 251
148B5652 286
148B5652 310
148B5652 330
148B5652 333
148B5653 251
148B5653 286
148B5653 310
148B5653 330
148B5653 333
148B5654 251
148B5654 286
148B5654 310
148B5654 330
148B5654 333
148B5655 251
148B5655 286
148B5655 310
148B5655 330
148B5655 333
148B5656 251
148B5656 286
148B5656 310
148B5656 330
148B5656 333
148B5657 251
148B5657 286
148B5657 310
148B5657 330
148B5657 333
148B5660 282
148B5661 282
148B5662 282
148B5663 282
148B5664 345
148B5665 345
148B5666 264
148B5667 264
148B5670 283
148B5671 283
148B5672 283
148B5673 283
148B5674 319
148B5675 319
148B5676 319
148B5677 319
148B5678 345
148B5679 345
148B5680 345
148B5681 251
148B5681 286
148B5681 310
148B5681 330
148B5681 333
148B5682 251
148B5682 286
148B5682 310

Table of contents - Code numbers

148B5682 330
148B5682 333
148B5683 295
148B5684 295
148B5685 319
148B5686 319
148B5687 345
148B5688 345
148B5700 280
148B5701 280
148B5702 327
148B5703 327
148B5704 327
148B5706 307
148B5710 281
148B5711 281
148B5712 247
148B5713 247
148B5714 247
148B5715 247
148B5716 247
148B5717 247
148B5720 280
148B5721 280
148B5722 280
148B5723 280
148B5724 307
148B5725 307
148B5726 307
148B5727 307
148B5728 286
148B5729 286
148B5730 281
148B5731 281
148B5732 281
148B5733 281
148B5734 310
148B5735 330
148B5736 327
148B5737 327
148B5740 327
148B5741 251
148B5741 286
148B5741 310
148B5741 330
148B5741 333
148B5742 251
148B5742 286
148B5742 310
148B5742 330
148B5742 333
148B5743 251
148B5743 286
148B5743 310
148B5743 330
148B5743 333
148B5744 251
148B5744 286
148B5744 310
148B5744 330
148B5744 333
148B5745 251
148B5745 286
148B5745 310
148B5745 330
148B5745 333
148B5746 251
148B5746 286
148B5746 310
148B5746 330
148B5746 333
148B5747 333
148B5748 251
148B5753 295
148B5754 295
148B5754 295
148B5755 295
148B5756 295
148B5756 295
148B5757 264
148B5758 264
148B5759 251
148B5759 286
148B5759 310
148B5759 330
148B5759 333
148B5760 251
148B5760 286
148B5760 310
148B5760 330
148B5760 333
148B5761 314
148B5762 314
148B5762 314
148B5763 315
148B5763 315
148B5763 315
148B5764 314
148B5765 314
148B5765 314
148B5766 315
148B5766 315
148B5766 315
148B5767 315
148B5768 316
148B5769 337
148B5769 337
148B5770 337
148B5770 338
148B5770 338
148B5771 338
148B5772 338
148B5773 338
148B5774 339
148B5775 339
148B5776 340
148B5776 340
148B5777 340
148B5777 340
148B5777 341
148B5778 341
148B5779 341
148B5780 341
148B5781 341
148B5782 342
148B5783 257
148B5783 257
148B5784 257
148B5784 257
148B5784 258
148B5785 258
148B5786 258
148B5787 258
148B5788 258
148B5789 259
148B5800 280
148B5801 280
148B5802 327
148B5803 327
148B5806 307
148B5809 307
148B5810 281
148B5811 281
148B5812 247
148B5813 247
148B5814 247
148B5815 247
148B5816 251
148B5816 251
148B5816 286
148B5816 286
148B5816 310
148B5816 310
148B5816 330
148B5816 330
148B5816 333
148B5816 333
148B5817 251
148B5817 251
148B5817 286
148B5817 286
148B5817 310
148B5817 310
148B5817 330
148B5817 330
148B5817 333
148B5817 333
148B5818 251
148B5818 286
148B5818 310
148B5818 330
148B5818 333
148B5819 251
148B5819 286
148B5819 310
148B5819 330
148B5819 333
148B5820 280
148B5821 280
148B5822 286
148B5823 286
148B5824 310
148B5825 330
148B5826 307
148B5827 333
148B5830 281
148B5831 281
148B5832 251
148B5837 327
148B5838 327
148B5847 295
148B5848 295
148B5849 295
148B5850 295
148B5851 264
148B5852 264
148B5900 280
148B5901 280
148B5902 327
148B5903 327
148B5905 247

148B5906 247
148B5907 247
148B5908 247
148B5910 281
148B5911 281
148B5912 252
148B5912 252
148B5912 287
148B5912 287
148B5912 331
148B5912 331
148B5912 334
148B5912 334
148B5913 252
148B5913 252
148B5913 287
148B5913 287
148B5913 331
148B5913 331
148B5913 334
148B5913 334
148B5914 252
148B5914 287
148B5914 331
148B5914 334
148B5915 252
148B5915 287
148B5915 331
148B5915 334
148B5916 287
148B5917 287
148B5918 331
148B5919 334
148B5920 280
148B5921 280
148B5922 252
148B5928 295
148B5928 295
148B5930 281
148B5931 281
148B5936 327
148B5937 327
148B6000 280
148B6001 280
148B6002 327
148B6004 327
148B6006 247
148B6007 247
148B6008 247
148B6009 247
148B6010 281
148B6011 281
148B6012 287
148B6014 252
148B6014 287
148B6014 331
148B6014 334
148B6015 252
148B6015 287
148B6015 331
148B6015 334
148B6016 252
148B6016 287
148B6016 331
148B6016 334
148B6017 252
148B6017 287
148B6017 331
148B6017 334
148B6018 287
148B6019 331
148B6020 280
148B6021 280
148B6022 334
148B6024 252
148B6030 281
148B6031 281
148B6032 295
148B6033 252
148B6033 287
148B6033 331
148B6033 334
148B6034 252
148B6034 287
148B6034 331
148B6034 334
148B6035 295
148B6036 327
148B6037 327
148B6100 280
148B6101 280
148B6102 327
148B6103 327
148B6105 247
148B6106 247
148B6107 247
148B6108 247
148B6110 281
148B6111 281
148B6112 252
148B6112 287
148B6112 331
148B6112 334
148B6113 252
148B6113 287
148B6113 331
148B6113 334
148B6114 252
148B6114 287
148B6114 331
148B6114 334
148B6115 252
148B6115 287
148B6115 331
148B6115 334
148B6116 287
148B6117 287
148B6118 331
148B6119 334
148B6120 280
148B6121 280
148B6122 252
148B6126 295
148B6130 281
148B6131 281
148B6133 252
148B6133 287
148B6133 331
148B6133 334
148B6134 252
148B6134 287
148B6134 331
148B6134 334
148B6136 327
148B6137 327
148B6200 280
148B6201 280
148B6202 247
148B6203 247
148B6204 247
148B6205 247
148B6206 247
148B6207 247
148B6210 281
148B6211 281
148B6220 280
148B6221 280
148B6230 281
148B6231 281
148B6240 280
148B6241 280
148B6250 281
148B6251 281
148B6300 280
148B6301 280
148B6302 247
148B6303 247
148B6304 247
148B6305 247
148B6310 281
148B6311 281
148B6320 280
148B6321 280
148B6330 281
148B6331 281
148B6400 302
148B6401 308
148B6401 309
148B6402 308
148B6402 309
148B6403 309
148B6403 309
148B6403 310
148B6404 309
148B6404 309
148B6404 310
148B6414 250
148B6414 284
148B6414 308
148B6414 329
148B6414 332
148B6415 250
148B6415 285
148B6415 309
148B6415 329
148B6415 332
148B6416 250
148B6416 285
148B6416 309
148B6416 329
148B6416 332
148B6417 251
148B6417 285
148B6417 309
148B6417 330
148B6417 333
148B6418 251
148B6418 286
148B6418 310
148B6418 330
148B6418 333

Table of contents - Code numbers

148B6419 251
148B6419 286
148B6419 310
148B6419 330
148B6419 333
148B6420 251
148B6420 286
148B6420 310
148B6420 330
148B6420 333
148B6421 252
148B6421 287
148B6421 331
148B6421 334
148B6422 252
148B6422 287
148B6422 331
148B6422 334
148B6423 252
148B6423 287
148B6423 331
148B6423 334
148B6424 250
148B6424 284
148B6424 308
148B6424 329
148B6424 332
148B6425 250
148B6425 285
148B6425 309
148B6425 329
148B6425 332
148B6426 250
148B6426 285
148B6426 309
148B6426 329
148B6426 332
148B6427 251
148B6427 285
148B6427 309
148B6427 330
148B6427 333
148B6428 251
148B6428 286
148B6428 310
148B6428 330
148B6428 333
148B6429 251
148B6429 286
148B6429 310
148B6429 330
148B6429 333
148B6430 251
148B6430 286
148B6430 310
148B6430 330
148B6430 333
148B6431 252
148B6431 287
148B6431 331
148B6431 334
148B6432 252
148B6432 287
148B6432 331
148B6432 334
148B6433 252
148B6433 287
148B6433 331
148B6433 334
148B6434 280
148B6435 280
148B6436 280
148B6437 280
148B6438 281
148B6439 281
148B6440 281
148B6441 281
148B6442 247
148B6443 247
148B6444 247
148B6445 247
148B6448 295
148B6449 295
148B6477 295
148B6479 319
148B6480 345
148B6481 345
148B6482 319
148B6483 319
148B6484 319
148B6485 319
148B6486 319
148B6487 319
148B6488 319
148B6489 345
148B6490 345
148B6491 345
148B6492 345
148B6493 264
148B6494 264
148B6495 264
148B6496 264
148B6497 264
148B6498 250
148B6498 264
148B6499 250
148B6499 264
148B6544 345
148B6545 302
148B6546 296
148B6547 296
148B6548 296
148B6549 296
148B6550 296
148B6551 296
148B6552 296
148B6553 296
148B6554 296
148B6555 296
148B6556 296
148B6557 296
148B6558 296
148B6559 296
148B6560 296
148B6561 296
148B6562 296
148B6563 296
148B6564 296
148B6565 296
148B6566 345
148B6581 328
148B6582 328
148B6583 328
148B6584 328
148B6585 328
148B6586 328
148B6587 328
148B6588 328
148B6589 328
148B6590 328
148B6591 328
148B6592 328
148B6593 328
148B6594 328
148B6595 328
148B6596 328
148B6597 328
148B6598 328
148B6599 328
148B6600 328
148B6601 328
148B6602 328
148B6603 328
148B6604 328
148B6605 328
148B6606 328
148B6608 345
148B6609 345
148B6610 345
148B6611 345
148B6612 257
148B6612 290
148B6612 314
148B6612 337
148B6612 340
148B6613 257
148B6613 290
148B6613 314
148B6613 337
148B6613 340
148B6614 257
148B6614 291
148B6614 315
148B6614 337
148B6614 340
148B6615 257
148B6615 291
148B6615 315
148B6615 338
148B6615 340
148B6616 258
148B6616 291
148B6616 315
148B6616 338
148B6616 341
148B6617 258
148B6617 291
148B6617 315
148B6617 338
148B6617 341
148B6618 292
148B6618 316
148B6618 338
148B6618 341
148B6619 258
148B6619 292
148B6619 338
148B6619 341
148B6620 258
148B6620 292
148B6620 339

148B6620 341
148B6621 259
148B6621 292
148B6621 339
148B6621 342
148B6622 257
148B6622 290
148B6622 314
148B6622 337
148B6622 340
148B6623 257
148B6623 290
148B6623 314
148B6623 337
148B6623 340
148B6624 257
148B6624 291
148B6624 315
148B6624 337
148B6624 340
148B6625 257
148B6625 291
148B6625 315
148B6625 338
148B6625 340
148B6626 258
148B6626 291
148B6626 315
148B6626 338
148B6626 341
148B6627 258
148B6627 291
148B6627 315
148B6627 338
148B6627 341
148B6628 292
148B6628 316
148B6628 338
148B6628 341
148B6629 258
148B6629 292
148B6629 338
148B6629 341
148B6630 258
148B6630 292
148B6630 339
148B6630 341
148B6631 259
148B6631 292
148B6631 339
148B6631 342
148B6632 257
148B6632 290
148B6632 314
148B6632 337
148B6632 340
148B6633 257
148B6633 290
148B6633 314
148B6633 337
148B6633 340
148B6634 257
148B6634 291
148B6634 315
148B6634 337
148B6634 340
148B6635 257
148B6635 291
148B6635 315
148B6635 338
148B6635 340
148B6636 291
148B6636 315
148B6636 338
148B6636 341
148B6637 258
148B6637 291
148B6637 315
148B6637 338
148B6637 341
148B6638 292
148B6638 316
148B6638 338
148B6638 341
148B6639 258
148B6639 292
148B6639 338
148B6639 341
148B6640 258
148B6640 292
148B6640 339
148B6640 341
148B6641 259
148B6641 292
148B6641 339
148B6641 342
148B6642 257
148B6642 290
148B6642 314
148B6642 337
148B6642 340
148B6643 257
148B6643 290
148B6643 314
148B6643 337
148B6643 340
148B6644 257
148B6644 291
148B6644 315
148B6644 337
148B6644 340
148B6645 257
148B6645 291
148B6645 315
148B6645 338
148B6645 340
148B6646 258
148B6646 291
148B6646 315
148B6646 338
148B6646 341
148B6647 258
148B6647 291
148B6647 315
148B6647 338
148B6647 341
148B6648 292
148B6648 316
148B6648 338
148B6648 341
148B6649 258
148B6649 292
148B6649 338
148B6649 341
148B6650 258
148B6650 292
148B6650 339
148B6650 341
148B6651 259
148B6651 292
148B6651 339
148B6651 342
148B6652 290
148B6652 290
148B6653 291
148B6653 291
148B6653 291
148B6654 291
148B6655 292
148B6656 292
148B6657 292
148B6658 292
148B6659 290
148B6659 290
148B6660 291
148B6660 291
148B6660 291
148B6665 293
148B6666 293
148B6667 293
148B6668 293
148B6673 293
148B6674 293
148B6675 293
148B6676 293
148B6687 290
148B6688 290
148B6688 314
148B6689 290
148B6690 290
148B6690 314
148B6691 290
148B6692 290
148B6692 314
148B6693 290
148B6694 290
148B6694 314
148B6695 290
148B6695 290
148F3005 355
148F3006 355
148F3007 355
148F3008 355
148F3009 355
148F3010 355
148F3011 355
148F3210 347
148F3211 347
148F3212 347
148F3213 347
148F3214 347
148F3215 347
148F3216 347
148F3217 347
148F3218 347
148F3219 347
148F3220 347
148F3221 347
148F3222 347
148F3223 347
148F3224 347

Table of contents - Code numbers

148F3225 347
148F3226 347
148F3227 347
148F3228 347
148F3229 347
148F3230 347
148F3231 347
148F3232 347
148F3233 347
148F3234 347
148F3235 347
148F3236 347
148F3237 347
148F3238 347
148F3239 347
148F3240 347
148F3310 349
148F3311 349
148F3312 349
148F3313 349
148F3314 349
148F3315 349
148F3316 349
148F3317 349
148F3318 349
148F3319 349
148F3320 349
148F3321 349
148F3322 349
148F3323 349
148F3324 349
148F3325 349
148F3326 349
148F3327 349
148F3328 349
148F3329 349
148F3330 349
148F3331 349
148F3332 349
148F3333 349
148F3334 349
148F3335 349
148F3336 349
148F3337 349
148F3338 349
148F3339 349
148F3340 349
148F4000 348
148F4001 348
148F4002 348
148F4003 348
148F4004 348
148F4005 348
148F4006 348
148F4007 348
148F4008 348
148F4009 348
148F4010 348
148F4011 348
148F4012 348
148F4013 348
148F4014 348
148F4015 348
148F4016 348
148F4017 348
148F4018 348
148F4019 348
148F4020 348
148F4021 348
148F4022 348
148F4023 348
148F4024 348
148F4025 348
148F4026 348
148F4027 348
148F4028 348
148F4029 348
148F4030 348
148F4100 349
148F4101 349
148F4102 349
148F4103 349
148F4104 349
148F4105 349
148F4106 349
148F4107 349
148F4108 349
148F4109 349
148F4110 349
148F4111 349
148F4112 349
148F4113 349
148F4114 349
148F4115 349
148F4116 349
148F4117 349
148F4118 349
148F4119 349
148F4120 349
148F4121 349
148F4122 349
148F4123 349
148F4124 349
148F4125 349
148F4126 349
148F4127 349
148F4128 349
148F4129 349
148F4130 349
148G3194 197
148G3195 197
148G3843 197
148H3119 248
148H3119 259
148H3120 248
148H3120 259
148H3121 248
148H3121 259
148H3122 248
148H3122 259
148H3122 264
148H3123 248
148H3123 259
148H3123 264
148H3124 248
148H3124 259
148H3124 264
148H3125 248
148H3125 259
148H3125 264
148H3126 248
148H3126 259
148H3126 264
148H3127 248
148H3127 259
148H3127 264
148H3128 248
148H3128 259
148H3128 264
148H3129 248
148H3129 259
148H3129 264
148H3130 248
148H3130 259
148H3130 264
148H3131 248
148H3131 259
148H3131 264
148H3132 248
148H3132 259
148H3133 248
148H3133 259
148H3134 248
148H3135 248
148H3136 248
148H3137 248
148H3138 248
148H3138 259
148H3138 264
148H3139 248
148H3139 259
148H3139 264
148H3140 248
148H3140 259
148H3141 248
148H3141 259
148H3142 248
148H3143 248
148H3144 248
148H3144 259
148H3144 264
148H3145 248
148H3145 259
148H3145 264
148H3146 248
148H3146 259
148H3147 248
148H3147 259
148H3148 248
148H3149 248
148H3150 249
148H3150 260
148H3150 265
148H3151 249
148H3151 260
148H3151 265
148H3152 249
148H3152 260
148H3153 249
148H3153 260
148H3154 249
148H3154 260
148H3155 249
148H3156 249
148H3157 248
148H3157 259
148H3157 264
148H3171 247
148H3172 247
148H3173 247
148H3174 247

148H3175 248
148H3176 248
148H3179 248
148H3179 259
148H3179 265
148H3180 248
148H3180 259
148H3180 265
148H3181 248
148H3181 259
148H3182 248
148H3182 259
148H3183 248
148H3183 259
148H3184 248
148H3184 259
148H3184 265
148H3185 248
148H3185 259
148H3185 265
148H3186 248
148H3186 259
148H3187 248
148H3187 259
148H3188 248
148H3188 259
148H3189 248
148H3189 259
148H3189 265
148H3190 248
148H3190 259
148H3190 265
148H3191 248
148H3191 259
148H3192 248
148H3192 259
148H3193 248
148H3193 259
148H3226 248
148H3269 248
148H3269 259
148H3269 265
148H3272 299
148H3273 299
148H3274 299
148H3293 248
148H3294 248
148H3297 248
148H3301 249
148H3301 260
148H3301 265
148H3302 249
148H3302 260
148H3302 265
148H3303 248
148H3303 259
148H3303 265
148H3304 248
148H3304 259
148H3304 265
148H3310 299
148H3311 299
148H3363 248
148H3363 259
148H3363 265
148H3447 249
148H3447 260
148H3448 249
148H3448 260
148H3450 249
148H3450 260
148H3450 265
148H3451 299
148H3452 299
148H6000 460
148H6001 460
148H6002 463
148H6003 463
148H6004 463
148H6005 463
148H6006 463
148H6007 463
148H6008 460
148H6009 460
148H6010 463
148H6011 463
148H6012 463
148H6013 463
148H6014 460
148H6015 460
148H6016 463
148H6017 463
148H6018 463
148H6019 463
148H6020 463
148H6021 463
148H6022 467
148H6023 460
148H6024 460
148H6025 463
148H6026 463
148H6027 463
148H6028 463
148H6029 463
148H6030 463
148H6031 467
148H6032 463
148H6033 463
148H6034 463
148H6035 467
148H6036 463
148H6037 463
148H6038 463
148H6039 467
148H6040 463
148H6041 463
148H6042 463
148H6043 463
148H6044 463
148H6045 460
148H6046 460
148H6047 463
148H6048 463
148H6049 463
148H6050 463
148H6051 463
148H6052 463
148H6053 463
148H6054 463
148H6055 463
148H6200 460
148H6200 464
148H6201 460
148H6201 464
148H6202 460
148H6202 464
148H6203 460
148H6203 464
148H6204 464
148H6205 464
148H6206 464
148H6207 464
148H6208 464
148H6209 464
148H6210 460
148H6210 464
148H6211 464
148H6212 464
148H6213 464
148H6214 464
148H6215 464
148H6216 464
148H6217 467
148H6218 467
148H6219 467
148H6220 467
148H6221 460
148H6221 464
148H6221 467
148H6222 460
148H6222 464
148H6222 467
148H6223 460
148H6223 464
148H6223 467
148H6224 460
148H6224 464
148H6224 467
148H6225 460
148H6225 464
148H6226 460
148H6226 464
148H6227 460
148H6227 464
148H6228 460
148H6228 464
148H6228 467
148H6229 467
148H6231 460
148H6231 464
148H6231 467
148H6232 460
148H6232 464
148H6233 464
148H6233 467
148H6234 464
148H6235 460
148H6235 464
148H6235 467
148H6236 460
148H6236 464
148H6237 464
148H6238 464
192H2096 788
192H2096 788
192H2096 790
192H2096 790
192H2096 790
192H2096 790
192H2096 791
192H2096 791

Table of contents - Code numbers

192H2096 791
192H2096 791
192H2096 791
192H2096 791
192H2096 791
192H2096 791
192H2096 793
192H2096 820
192H2096 820
192H2096 822
192H2096 822
192H2096 822
192H2096 822
192H2096 822
192H2096 822
192H2096 822
192H2096 822
192H2096 823
192H2096 823
195B0001 491
195B0002 497
195B0003 497
195B0004 491
195B0005 491
195B0006 491
195B0006 495
195B0008 491
195B0008 495
195B0009 491
195B0010 491
195B0011 491
195B0011 495
195B0021 499
195B0022 497
195B0023 491
195B0023 495
195B0024 491
195B0024 495
195B0026 491
195B0026 495
195B0027 491
195B0027 495
195B0028 491
195B0031 499
195B0032 499
195B0032 754
195B0038 499
195B0042 497
195B0043 493
195B0043 495
195B0047 493
195B0050 493
195B0050 495
195B0050 791
195B0050 792
195B0051 493
195B0052 493
195B0053 493
195B0053 495
195B0053 791
195B0053 792
195B0056 493
195B0057 493
195B0059 493
195B0059 495
195B0059 791
195B0059 792
195B0060 493
195B0061 503
195B0066 499
195B0074 499
195B0075 499
195B0075 503
195B0076 499
195B0077 499
195B0077 503
195B0090 491
195B0091 491
195B0092 493
195B0093 493
195B0098 491
195B0099 497
195B0108 499
195B0109 499
195B0111 499
195B0111 503
195B0112 499
195B0112 503
195B0117 491
195B0119 499
195B0121 497
195B0122 491
195B0122 495
195B0125 497
195B0142 493
195B0142 495
195B0144 495
195B0147 503
195B0151 499
195B0151 501
195B0151 501
195B0165 491
195B0166 499
195B0166 756
195B0167 491
195B0167 495
195B0176 491
195B0178 493
195B0182 493
195B0186 497
195B0191 491
195B0191 495
195B0192 491
195B0192 495
195B0193 491
195B0193 495
195B0194 491
195B0194 495
195B0195 491
195B0201 493
195B0201 495
195B0202 493
195B0214 491
195B0214 495
195B0216 491
195B0218 491
195B0219 491
195B0222 491
195B0222 495
195B0224 491
195B0241 491
195B0245 491
195B0245 495
195B0246 493
195B0247 501
195B0248 491
195B0248 495
195B0249 493
195B0249 495
195B0254 491
195B0255 491
195B0259 497
195B0265 505
195B0268 491
195B0274 493
195B0274 495
195B0275 493
195B0275 495
195B0277 491
195B0299 493
195B0300 497
195B0304 503
195B0313 493
195B0320 497
195B0323 499
195B0323 501
195B0323 501
195B0323 503
195B0323 825
195B0327 493
195B0330 497
195B0332 499
195B0332 825
195B0340 756
195B0341 509
195B0345 499
195B0345 501
195B0345 501
195B0345 756
195B0345 825
195B0346 505
195B0347 495
195B0348 503
195B0350 499
195B0351 756
195B0358 501
195B0359 509
195B0361 509
195B0366 509
195B0368 509
195B0370 491
195B0370 495
195B0371 493
195B0371 495
195B0371 756
195B0374 511
195B0375 503
195B0379 499
195B0379 501
195B0379 501
195B0386 509
195B0388 497
195B0391 499
195B0391 825
195B0396 491
195B0396 495
195B0398 499
195B0399 499
195B0405 509
195B0407 493

195B0407 495
195B0408 493
195B0408 495
195B0411 491
195B0411 495
195B0415 491
195B0415 495
195B0420 505
195B0427 499
195B0427 825
195B0428 501
195B0432 493
195B0433 493
195B0434 493
195B0435 493
195B0435 505
195B0435 825
195B0436 499
195B0437 499
195B0438 499
195B0438 825
195B0439 499
195B0443 499
195B0443 501
195B0443 501
195B0443 825
195B0444 511
195B0447 503
195B0450 505
195B0451 505
195B0453 495
195B0454 511
195B0455 511
195B0456 511
195B0457 495
195B0458 505
195B0459 505
195B0464 503
195B0465 499
195B0467 497
195B0481 499
195B0481 754
195B0487 493
195B0489 505
195B0491 503
195B0492 491
195B0496 491
195B0496 495
195B0498 491
195B0499 505
195B0500 497
195B0501 501
195B0501 754
195B0502 501
195B0503 501
195B0505 505
195B0514 493
195B0516 491
195B0526 509
195B0527 499
195B0530 497
195B0548 756
195B0552 497
195B0560 497
195B0570 756
195B0577 509
195B0577 511
195B0586 497
195B0589 505
195B0592 497
195B0599 499
195B0599 501
195B0599 501
195B0618 509
195B0624 825
195B0636 791
195B0636 792
195B0637 493
195B0640 499
195B0640 754
195B0641 499
195B0641 503
195B0642 499
195B0643 499
195B0643 503
195B0644 499
195B0645 505
195B0646 501
195B0648 493
195B0648 495
195B0649 505
195B0650 501
195B0651 495
195B0652 499
195B0653 499
195B0654 505
195B0655 505
195B0656 501
195B0659 495
195B0666 503
195B0667 503
195B0673 497
195B0676 505
195B0682 493
195B0692 505
195B0693 505
195B0694 497
195B0695 505
195B0701 503
195B0702 503
195B0706 507
195B0707 507
195B0708 507
195B0709 507
195B0710 507
195B0711 507
195B0716 505
195B0717 505
195B0718 505
195B0721 501
195B0726 505
195B0727 505
195B0728 505
195B0729 505
195B0730 505
195B0737 507
195B0738 507
195B0739 507
195B0740 507
195B0741 507
195B0749 505
195B0750 505
195B0751 505
195B0752 493
195B0752 495
2412+183 197
2412+184 197
2412+185 197
2412+186 197
2416+150 351
2416+151 351
2416+152 351
2416+153 351
2416+154 351
2416+155 351
2416+160 352
2416+161 352
2416+162 352
2416+163 352
2416+164 352
2416+165 352
2416+183 351
2416+184 351
2416+186 352
2416+187 352
2416+241 351
2416+242 351
2416+254 351
2416+255 351
2416+256 351
2416+257 351
2416+258 351
2416+259 351
2416+260 351
2416+261 351
2416+262 351
2416+263 351
2416+264 351
2416+265 351
2416+266 351
2416+267 351
2416+268 351
2416+269 351
2416+270 351
2416+271 351
2416+272 351
2416+273 351
2416+274 351
2416+275 351
2416+285 352
2416+286 352
2416+287 352
2416+288 352
2416+289 352
2416+290 352
2416+291 352
2416+292 352
2416+293 352
2416+294 352
2416+295 352
2416+296 352
2416+297 352
2416+298 352
2416+299 352
2416+300 352
2416+301 352
2416+302 352
2416+303 352
2416+304 352
2416+305 352
2416+306 352

Table of contents - Code numbers

2416+307 352
2416+308 352
2512+049 243
2512+050 243
2512+051 243
2512+052 243
2512+053 243
2512+054 243
2512+055 243
2512+056 243
2512+057 243
2512+058 243
2512+059 243
2512+060 243
2512+061 243
2512+062 243
2512+066 243
2512+067 243
2512+068 243
2512+069 243
2512+070 243
2512+071 243
2512+072 243
2512+078 243
2512+079 243
2512+080 243
2512+081 243
2512+082 243
2512+083 243
2512+084 243
163806_ 511
7701035 826
7703251 660
7703251 660
7703251 660
7703371 660
7703371 660
7703384 660
7703384 660
7703390 660
7703390 660
7703390 660
7703390 660
7703390 660
7750009 757
7750009 757
7750009 757
7750009 757
7750009 757
7750009 757
7750009 757
7750009 757
7750009 757
7750009 757
7750009 757
7750009 758
7750009 758
7750009 758

7968018 759
7968018 759
8168179 757
8168179 757
8168179 758
8168179 758
8168179 758
8168179 758
8168180 757
8168180 757
8168180 758
8168180 758
8168180 758
8168180 758
8168180 758
8168180 758
8168181 757
8168181 757
8168181 757
8168181 757
8168181 757
8168181 757
8168181 758
8168181 758
8168181 758
8168181 758
8168181 758
8168181 758
8168181 758
8168181 759
8168183 757
8168183 757
8168183 759
8168183 759
8168183 759
8168183 759
8173001 787
8173001 787
8173001 790
8173001 792
8173001 820
8173001 820
8173001 824
8173001 825
8173022 794
8173022 820
8173022 820
8173022 827
8173041 787
8173041 787
8173041 792
8173041 820
8173041 820
8173041 825
8173231 789
8173231 794
8173231 823
8173231 826
8173233 789
8173233 794
8173233 823
8173233 826
8173234 790
8173234 794
8173234 824
8173234 826
CDO00118 511
CDO00120 511
CDO00135 511
CDO00136 511
CDO00137 511
CDO00138 511
CP1 and CP3 643
CXH140 663
CXH140 663
Internal 647
MTZ18-1VI 542
MTZ18-1VI 543
MTZ18-1VM 543
MTZ18-3VI 542
MTZ18-3VI 543
MTZ18-3VM 543
MTZ18-4VI 542
MTZ18-4VI 543
MTZ18-4VI 758
MTZ18-4VM 543
MTZ18-5VI 542
MTZ18-5VI 543
MTZ18-5VI 758
MTZ18-5VM 543
MTZ22-1VI 542
MTZ22-1VI 543
MTZ22-1VM 543
MTZ22-3VI 542
MTZ22-3VI 543
MTZ22-3VM 543
MTZ22-4VI 542
MTZ22-4VI 543
MTZ22-4VI 758
MTZ22-4VM 543
MTZ22-5VI 542
MTZ22-5VI 543
MTZ22-5VI 758
MTZ22-5VM 543
MTZ22-6VI 542
MTZ22-6VI 543
MTZ22-9VI 542
MTZ22-9VI 543
MTZ22-9VM 543
MTZ28-1VI 542
MTZ28-1VI 543
MTZ28-1VM 543
MTZ28-3VI 542
MTZ28-3VI 543
MTZ28-3VM 543
MTZ28-4VI 542
MTZ28-4VI 543
MTZ28-4VI 758
MTZ28-4VM 543
MTZ28-5VI 542
MTZ28-5VI 543
MTZ28-5VI 758
MTZ28-5VM 543
MTZ28-6VI 542
MTZ28-6VI 543
MTZ28-9VI 542
MTZ28-9VI 543
MTZ28-9VM 543
MTZ32-1VI 542
MTZ32-1VI 543
MTZ32-1VM 543
MTZ32-3VI 542
MTZ32-3VI 543
MTZ32-3VM 543
MTZ32-4VI 542
MTZ32-4VI 543
MTZ32-4VI 758
MTZ32-4VM 543
MTZ32-5VI 542
MTZ32-5VI 543
MTZ32-5VI 758
MTZ32-5VM 543
MTZ32-6VI 542
MTZ32-6VI 543
MTZ32-7VI 542
MTZ32-9VI 542
MTZ32-9VM 543
MTZ36-1VI 542
MTZ36-1VI 543
MTZ36-1VM 543
MTZ36-3VI 542
MTZ36-3VI 543
MTZ36-3VM 543
MTZ36-4VI 542
MTZ36-4VI 543
MTZ36-4VI 758
MTZ36-4VM 543
MTZ36-5VI 542
MTZ36-5VI 543
MTZ36-5VI 758
MTZ36-5VM 543
MTZ36-6VI 542
MTZ36-6VI 543
MTZ36-7VI 542
MTZ36-9VI 542
MTZ36-9VI 543
MTZ36-9VM 543
MTZ40-1VI 542
MTZ40-1VI 543
MTZ40-1VM 543
MTZ40-3VI 542
MTZ40-3VI 543
MTZ40-3VM 543
MTZ40-4VI 542
MTZ40-4VI 543
MTZ40-4VI 758
MTZ40-4VM 543
MTZ40-6VI 542
MTZ40-6VI 543
MTZ44-1VI 542
MTZ44-1VM 543
MTZ44-3VI 542
MTZ44-3VI 543
MTZ44-3VM 543
MTZ44-4VI 542
MTZ44-4VI 543
MTZ44-4VM 543
MTZ44-6VI 542
MTZ44-7VI 542
MTZ44-9VI 542
MTZ44-9VI 543
MTZ44-9VM 543
MTZ50-1VI 542
MTZ50-1VI 543
MTZ50-1VM 543
MTZ50-3VI 542
MTZ50-3VI 543
MTZ50-3VM 543
MTZ50-4VI 542
MTZ50-4VI 543

Table of contents - Code numbers

MTZ50-4VI 758
MTZ50-4VM 543
MTZ50-6VI 542
MTZ50-6VI 543
MTZ50-7VI 542
MTZ50-9VI 542
MTZ50-9VI 543
MTZ50-9VM 543
MTZ56-1VI 542
MTZ56-1VI 543
MTZ56-1VM 543
MTZ56-3VI 542
MTZ56-3VI 543
MTZ56-3VM 543
MTZ56-4VI 542
MTZ56-4VI 543
MTZ56-4VI 758
MTZ56-4VM 543
MTZ56-6VI 542
MTZ56-6VI 543
MTZ56-7VI 542
MTZ56-7VI 543
MTZ56-9VI 542
MTZ56-9VI 543
MTZ56-9VM 543
MTZ64-1VI 542
MTZ64-1VI 543
MTZ64-1VM 543
MTZ64-3VI 542
MTZ64-3VI 543
MTZ64-3VM 543
MTZ64-4VI 542
MTZ64-4VI 543
MTZ64-4VI 758
MTZ64-4VI 758
MTZ64-4VM 543
MTZ64-6VI 542
MTZ64-6VI 543
MTZ64-9VI 542
MTZ64-9VI 543
MTZ64-9VM 543
MTZ72-3VI 542
MTZ72-3VI 543
MTZ72-3VM 543
MTZ72-4VI 542
MTZ72-4VI 543
MTZ72-4VI 758
MTZ72-4VI 758
MTZ72-4VM 543
MTZ72-6VI 542
MTZ72-9VI 542
MTZ72-9VI 543
MTZ72-9VM 543
MTZ80-3VI 542
MTZ80-3VI 543
MTZ80-3VM 543
MTZ80-4VI 542
MTZ80-4VI 543
MTZ80-4VI 758
MTZ80-4VI 759
MTZ80-4VM 543
MTZ80-6VI 542
MTZ80-6VI 543
MTZ80-9VI 542
MTZ80-9VI 543
MTZ80-9VM 543
MTZ100-3VI 542
MTZ100-3VI 543
MTZ100-3VM 543
MTZ100-4VI 542
MTZ100-4VI 543
MTZ100-4VI 759
MTZ100-4VM 543
MTZ100-6VI 542
MTZ100-6VI 543
MTZ100-7VI 542
MTZ100-7VI 543
MTZ100-9VI 542
MTZ100-9VI 543
MTZ100-9VM 543
MTZ125-3VI 542
MTZ125-3VI 543
MTZ125-3VM 543
MTZ125-4VI 542
MTZ125-4VI 543
MTZ125-4VI 759
MTZ125-4VM 543
MTZ125-6VI 542
MTZ125-6VI 543
MTZ125-7VI 542
MTZ125-7VI 543
MTZ125-9VI 542
MTZ125-9VI 543
MTZ125-9VM 543
MTZ144-3VI 542
MTZ144-3VI 543
MTZ144-3VM 543
MTZ144-4VI 542
MTZ144-4VI 543
MTZ144-4VI 759
MTZ144-4VM 543
MTZ144-7VI 542
MTZ144-7VI 543
MTZ144-9VI 542
MTZ144-9VI 543
MTZ144-9VM 543
MTZ160-3VI 542
MTZ160-3VI 543
MTZ160-3VM 543
MTZ160-4VI 542
MTZ160-4VI 543
MTZ160-4VI 759
MTZ160-4VM 543
MTZ160-6VI 542
MTZ160-6VI 543
MTZ160-7VI 542
MTZ160-7VI 543
MTZ160-9VI 542
MTZ160-9VI 543
MTZ160-9VM 543
SM084-4VI 647
SM084-4VM 648
SM090-3VI 647
SM090-3VM 648
SM090-4VI 647
SM090-4VM 648
SM090-9VM 648
SM100-3VI 647
SM100-3VM 648
SM100-4VI 647
SM100-4VM 648
SM100-9VI 647
SM100-9VM 648
SM110-3VI 647
SM110-3VM 648
SM110-4VI 647
SM110-4VM 648
SM110-9VI 647
SM110-9VM 648
SM120-3VI 647
SM120-3VM 648
SM120-4VI 647
SM120-4VM 648
SM120-9VI 647
SM120-9VM 648
SM148-3VAI 647
SM148-3VAM 648
SM148-4VAI 647
SM148-4VAM 648
SM148-9VAI 647
SM148-9VAM 648
SM161-3VAI 647
SM161-3VAM 648
SM161-4VAI 647
SM161-4VAM 648
SM161-9VAI 647
SM161-9VAM 648
SM175-3CAI 647
SM175-4CAI 647
SM175-4RI 647
SM175-4RM 648
SM185-3CAI 647
SM185-3CAM 648
SM185-3RI 647
SM185-3RM 648
SM185-4CAI 647
SM185-4CAM 648
SM185-4PCI 647
SM185-4PCM 648
SM185-4RI 647
SM185-4RM 648
SM185-4XCM 648
SM185-4YCI 647
SM185-4YCM 648
SM185-9CAI 647
SM185-9CAM 648
SM185-9RI 647
SM185-9RM 648
SM185-9YCI 647
SM185-9YCM 648
SY185-4CAI 647
SY185-4CAM 648
SY185-4RI 647
SY240A3CBI 647
SY240A3CBM 648
SY240A3PBM 648
SY240A4CAI 647
SY240A4CAM 648
SY240A4CBI 647
SY240A4CBM 648
SY240A4PAI 647
SY240A4PAM 648
SY240A4PBI 647
SY240A4PBM 648
SY240A9CBI 647
SY240A9CBM 648
SY240A9PBM 648
SY300A3CBI 647
SY300A3CBM 648
SY300A3PBM 648
SY300A4CAI 647

SY300A4CAM 648
SY300A4CBI 647
SY300A4CBM 648
SY300A4PAI 647
SY300A4PAM 648
SY300A4PBI 647
SY300A4PBM 648
SY300A9CBI 647
SY300A9CBM 648
SY300A9PBM 648
SY380A4CAI 647
SY380A4CAM 648
SY380A4CBI 647
SY380A4CBM 648
SZ084-4VI 648
SZ084-4VM 649
SZ090-3VI 648
SZ090-3VM 649
SZ090-4VI 648
SZ090-4VM 649
SZ090-9VI 648
SZ090-9VM 649
SZ100-3VI 648
SZ100-4VI 648
SZ100-4VM 649
SZ100-9VI 648
SZ100-9VM 649
SZ110-3VI 648
SZ110-3VM 649
SZ110-4VI 648
SZ110-4VM 649
SZ110-9VI 648
SZ110-9VM 649
SZ120-3VI 648
SZ120-3VM 649
SZ120-4VI 648
SZ120-4VM 649
SZ120-9VI 648
SZ120-9VM 649
SZ148-3VAI 648
SZ148-3VAM 649
SZ148-4VAI 648
SZ148-4VAM 649
SZ148-9VAI 648
SZ161-3VAI 648
SZ161-3VAM 649
SZ161-4VAI 648
SZ161-4VAM 649
SZ161-9VAI 648
SZ161-9VAM 649
SZ175-4CAI 648
SZ175-4RI 648
SZ175-4RM 649
SZ185-3CAI 648
SZ185-3CAM 649
SZ185-3RI 648
SZ185-4CAI 648
SZ185-4CAM 649
SZ185-4PCI 648
SZ185-4RI 648
SZ185-4RM 649
SZ185-4XCM 649
SZ185-9CAI 648
SZ185-9CAM 649
SZ185-9RI 648
SZ185-9RM 649

ENGINEERING
TOMORROW

REFRIGERATION & AIR CONDITIONING

Automatic Controls | Electronic Controllers | Compressors and Condensing Units

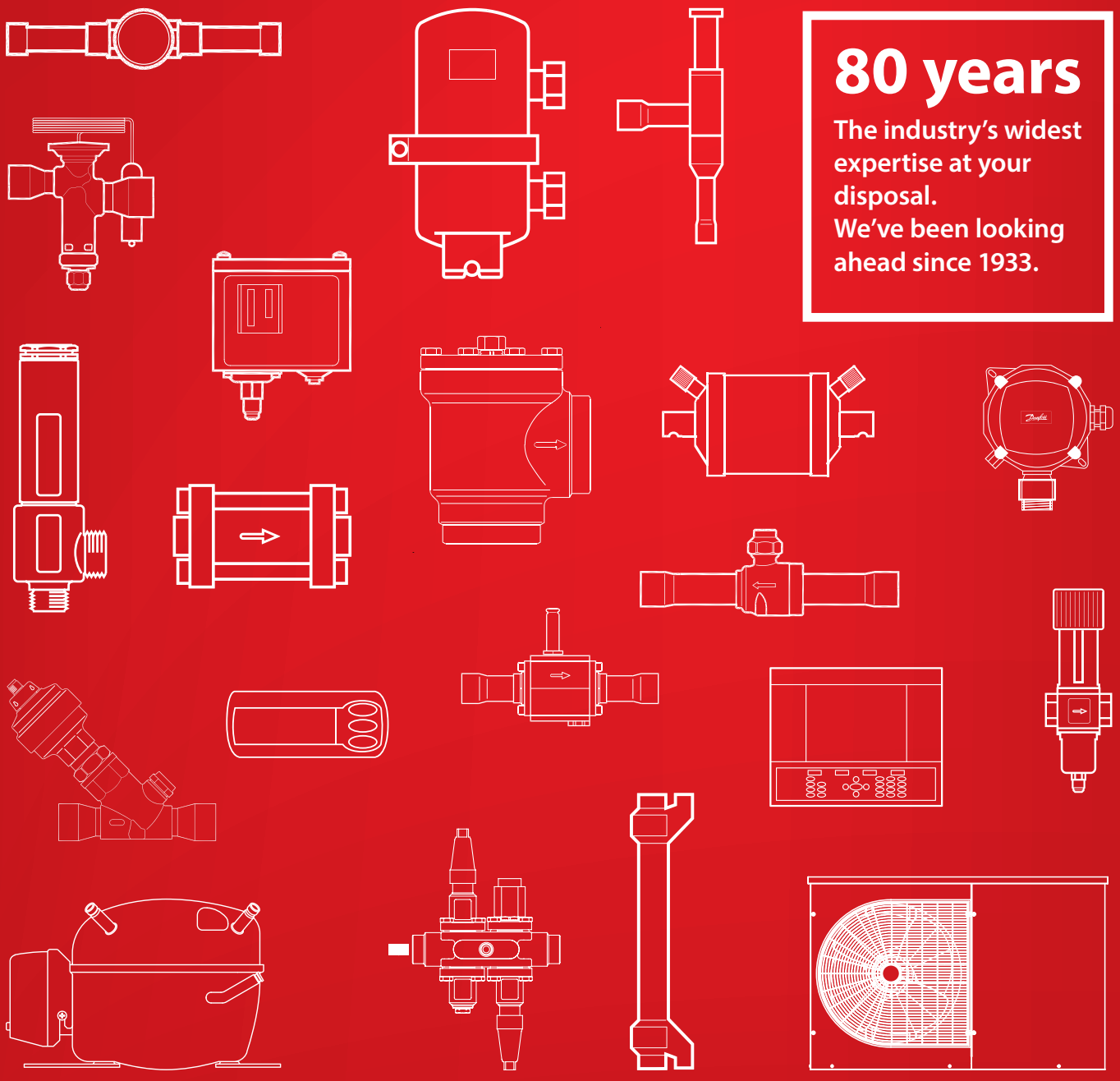

80 years

The industry's widest expertise at your disposal.
We've been looking ahead since 1933.

Danfoss can accept no responsibility for possible errors in catalogues, brochures and other printed material. Danfoss reserves the right to alter its products without notice. This also applies to products already on order provided that such alterations can be made without subsequential changes being necessary in specifications already agreed.
All trademarks in this material are property of the respective companies. Danfoss and the Danfoss logotype are trademarks of Danfoss A/S. All rights reserved.

AF189286419730en-GB0301

© Danfoss | DCS | 2019.02