Installation Guide

Solenoid Valve
Types EVR 32, EVR 40

032R9518

032R9518

Refrigerants:

**R744, R22/R407C, R404A/R507,
R410A, R134a, R407A, R23.
For other refrigerants, please contact Danfoss.**

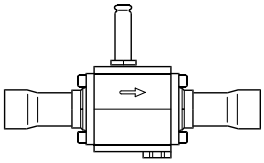

EVR 32, EVR 40

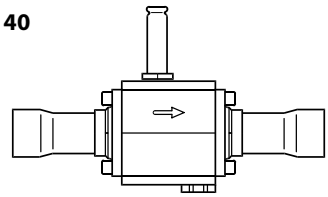

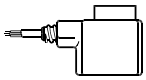

a.c. ~

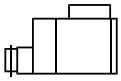

a.c. ~

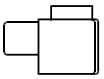

a.c. ~

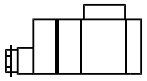

12 a.c. ~
20 W d.c. –

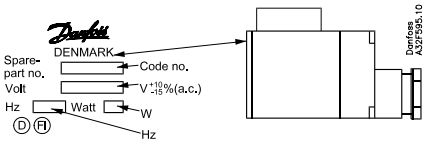

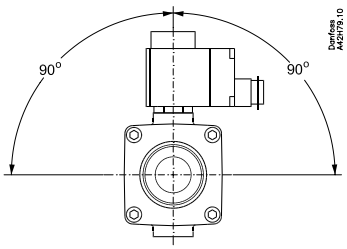

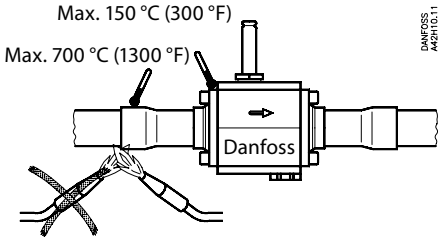

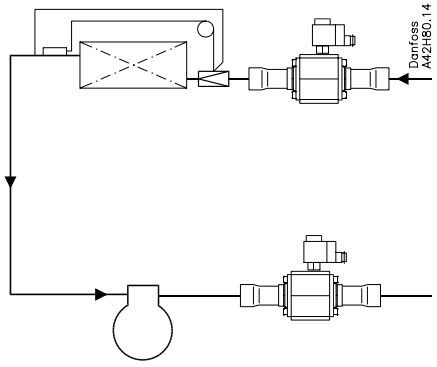

10 W a.c.		$t_{max.}$ = 80 °C (175 °F)
10/12 W a.c.		$t_{max.}$ = 80 °C (175 °F)
20 W d.c.		$t_{max.}$ = 50 °C (120 °F)
		$t_{min.}$ = -40 °C (-40 °F)

Min. medium temperature	-40 °C (-40 °F)
Max. medium temperature	105 °C (221°F)
Max. working pressure PS/MWP	32 bar / 464 psig
Max. opening diff. pressure MOPD	→

Previous version

[Nm]	[kpm]	[ft-lbs]
1.4	0.15	1

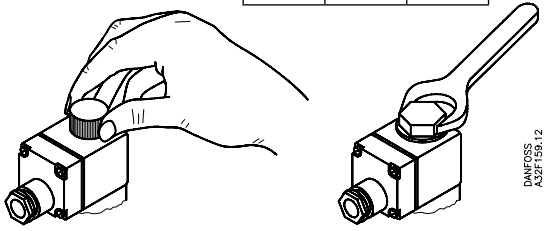

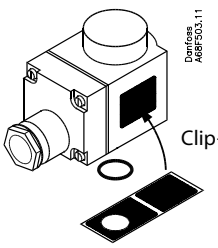

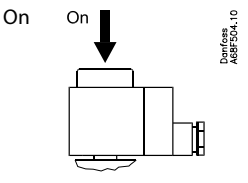

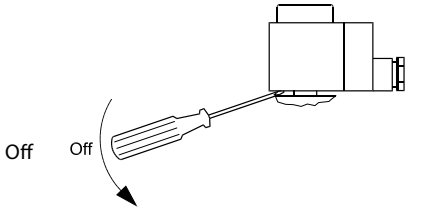

Warning

Never switch on power to the coil when the coil is dismounted from the valve. Otherwise the coil may be damaged and there is risk of injuries and burns.

© Danfoss A/S (AC-MCI / jmn), 2012-12

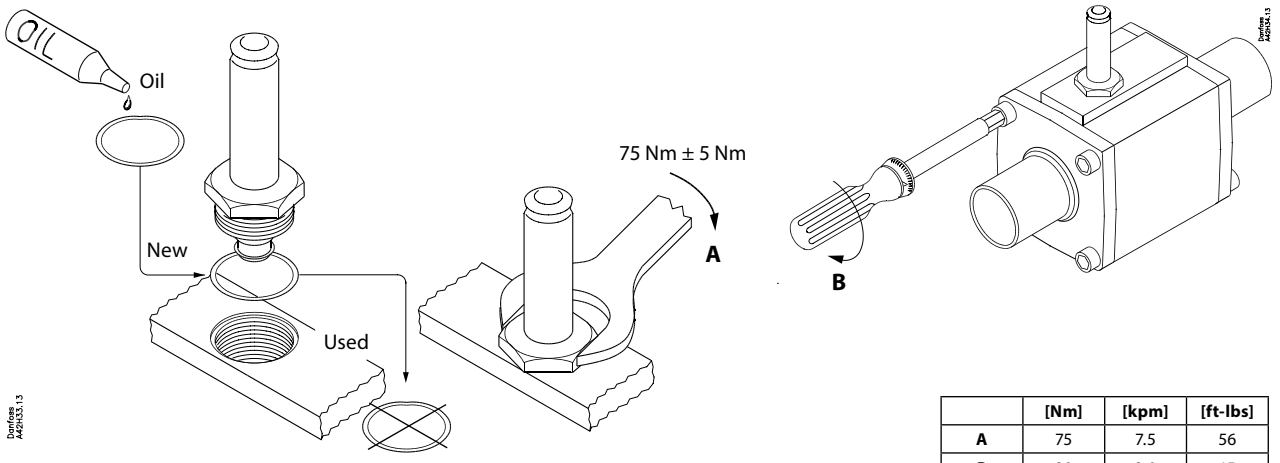

	[Nm]	[kpm]	[ft-lbs]
A	75	7.5	56
B	20	2.0	15

EVR 32, EVR 40

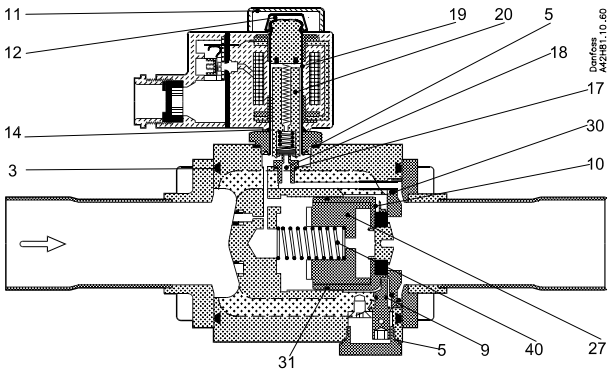

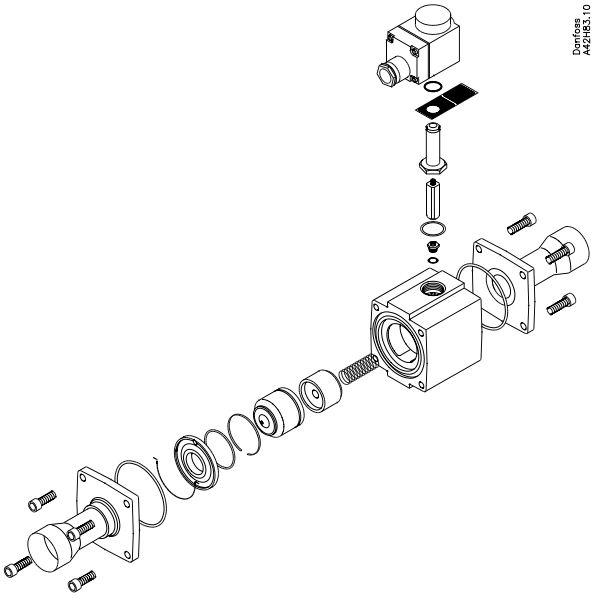

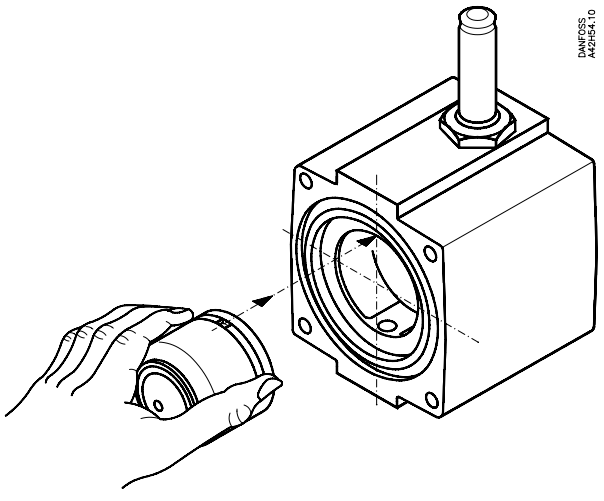

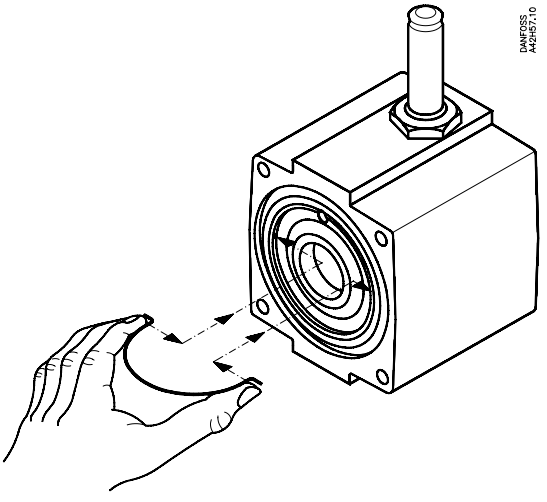

 © Danfoss A/S (AC-MCI / jmn), 2012-12